SIEMENS

Dimension Prints for Above NEMA Motors

Type CZ – Horizontal – Totally Enclosed Fan Cooled
Anti-Friction Bearing
Frame 5812 – 4 Pole & Slower – Free Standing Main Conduit Box

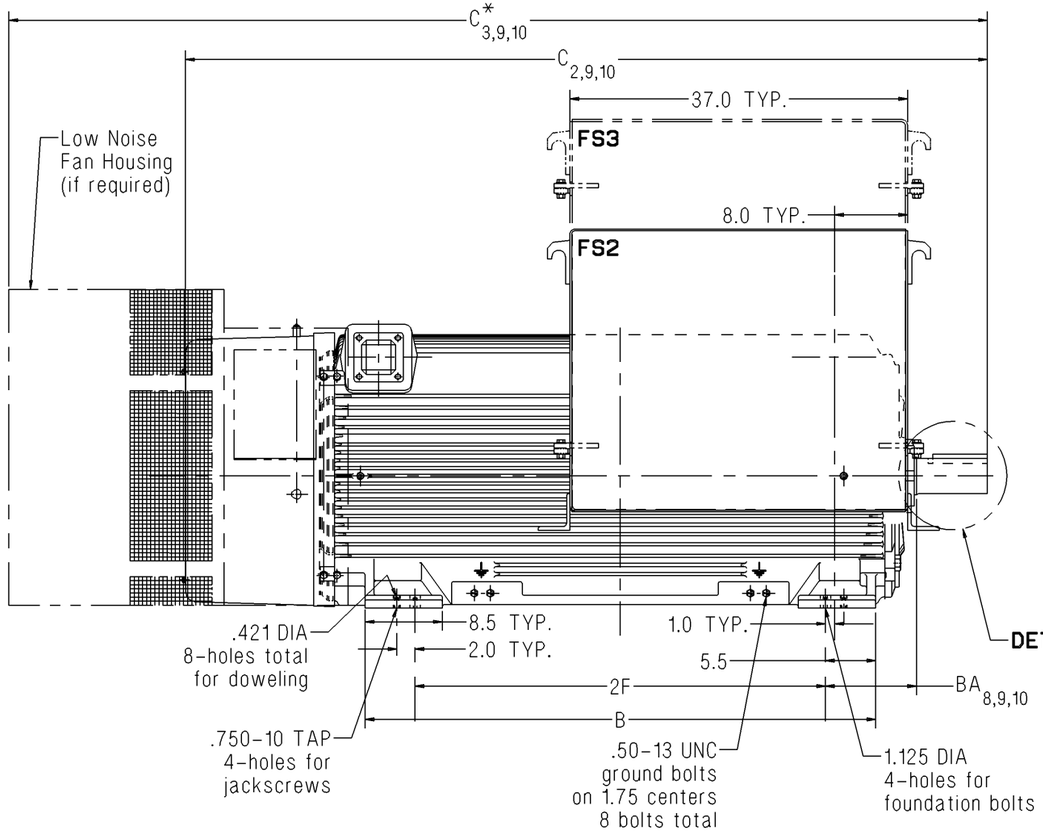

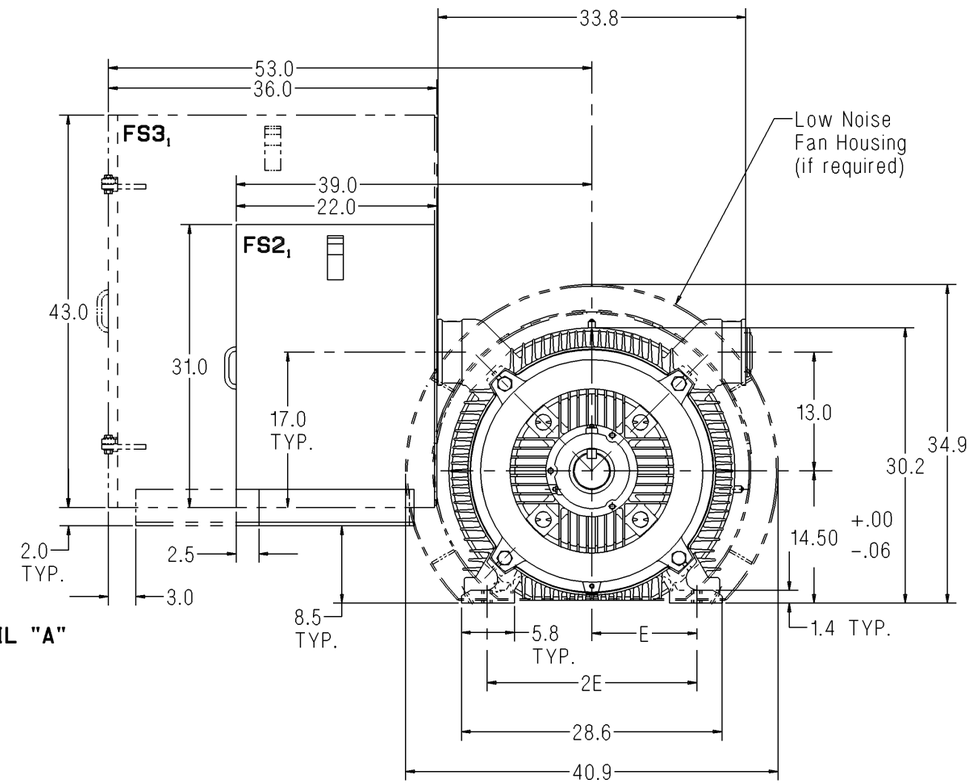

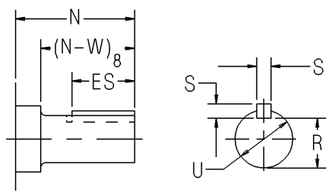

DETAIL "A"

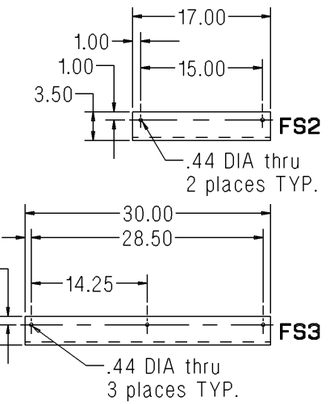

BOX FEET DIMENSIONS

Notes:

1. Main conduit box is free standing and must be supported from below by customer.
   Main conduit box is not level with motor feet.
   A removable bottom plate is supplied on the FS2 and FS3 conduit boxes.
2. C = Length of motor from drive end of shaft to end of standard fan housing.
3. C*= Length of motor from drive end of shaft to end of low noise fan housing.
4. V = (N-W)-0.25" = length of shaft available for coupling. Note: When adding a rotating labyrinth seal, (N-W) will change so V will change accordingly.
5. Machines may rotate in either direction.
6. Shims may be necessary under motor feet for direct connection.
7. Short shaft is for direct connection. Long shaft may be either belt drive or direct connection depending upon the bearing installed in the motor.
8. Adding a rotating labyrinth seal to the drive end increases BA and decreases (N-W) by:
   4 Pole & Slower: 0.28" Long Shaft 4 Pole & Slower: 0.28"
9. Adding a ground brush increases BA, C, and C* by:
   4 Pole & Slower: 2.50" Long Shaft 4 Pole & Slower: 2.50"
10. Adding a ground brush with rotating labyrinth seals increases BA, C, and C* by:
    4 Pole & Slower: 2.75" Long Shaft 4 Pole & Slower: 2.75"

Standard Dimensions in Inches

Shaft	Frame	Speed	B	$BA_{8,9,10}$	$C_{2,9,10}$	$C^*_{3,9,10}$	E	2F	N	$(N-W)_8$	R	S	U	V_4	ES	Approx. Ship Wt. (Lbs)
Short	5812S	4 Pole & Slower	56.0	10.00	88.0	108.4	11.5	45.0	8.00	7.75	3.309	1.000	3.875	7.50	6.0	8900
Long	5812	4 Pole & Slower	56.0	10.00	94.9	115.3	11.5	45.0	14.87	14.62	4.169	1.250	4.875	14.37	13.0	8900

Certification: Customer _____ P.O. _____ S.O. _____ Item _____

HP _____ RPM _____ Frame _____ PH/HZ/Volts 3/_____/_____ Terminal Box Size FS2☐ FS3☐

By _____ Date _____

Comments _____

Not for construction, installation or application purposes unless certified.

CZ_5812_4plusPL_AF_FS
Revision 00
07/10/08