SIEMENS
Ingenuity for life

SIPROTEC 5
Transformer Differential Protection
7UT8

Unrestricted © Siemens AG 2016

Agenda

- **General and device overview**
- Typical applications
- Functional improvements
- Appendix

Frei verwendbar © Siemens AG 2016

Transformer Differential Protection
You need powerful functionality and flexibility?

SIEMENS

Then you should go for SIPROTEC 5!

Powerful engineering with DIGSI5

Modular hardware

Basic module +

up to 4 expansion modules

Modular and flexible communication

Different plug-in modules

Different protocols

Security inside

Flexible Functionality

87T 87M 87N 49T 50 51 50N 51N 67 67N 27 59 81 25 32 21 24 90V • • •

SIPROTEC 5 series ▶

Frei verwendbar © Siemens AG 2016

SIPROTEC 5
Transformer differential protection devices

SIEMENS

Two winding transformers
(2 sides, 2 measuring points)

7UT82

Frei verwendbar © Siemens AG 2016

Transformer differential protection
7UT82 – Profile

SIEMENS

Applications

- Two winding differential protection
- 1 differential protection for standard and auto transformers
- 2 restricted earth fault protections
- Number of measuring points (MP)
  - only 2 three phase current MPs
  - only 2 single phase current MPs
- 1/3 Device with IO103

- 8 I, 7 BI, 7 BO (not expandable)

not expandable

Suitable device 7UT82

Device functions

- **Differential protection** with restraint characteristic and fast trip stage
- Flexible vector group adaptation
- Inrush and over excitation detection
- CT saturation detection
- **Restricted earth fault protection**
- Temperature monitoring
- Modular software
- IEC 61850 (Edition 1 and 2)
- Multiple communication
- SIPROTEC 5 standard functions for protection, control and monitoring

Frei verwendbar © Siemens AG 2016

SIPROTEC 5
Transformer differential protection devices

SIEMENS

Two winding transformers (3 sides, 5 measuring points)	**7UT85**	
Three winding transformers (4 sides, 6 measuring points)	**7UT86**	
Multiple winding transformers (5 sides, 9 measuring points)	**7UT87**	

Frei verwendbar © Siemens AG 2016

Transformer differential protection
7UT85 – Profile

SIEMENS

Applications

- Two winding differential protection (Expandable to 3 sides)
- 1 differential protection for standard and auto transformers
- 2 restricted earth fault protections
- Number of measuring points (MP)
  - 5 three phase current MPs
  - 3 single phase current MPs
  - 3 three phase voltage MPs
- 8 I, 7 BI, 7 BO (modular)

expandable

Suitable device 7UT85

Device functions

- **Differential protection** with restraint characteristic and fast trip stage
- Flexible vector group adaptation
- Inrush and over excitation detection
- CT saturation detection
- **Restricted earth fault protection**
- Flexibility due to number of MPs
- Temperature monitoring
- Phasor measurement unit PMU
- Modular software
- IEC 61850 (Edition 1 and 2)
- Multiple communication
- SIPROTEC 5 standard functions for protection, control and monitoring

Frei verwendbar © Siemens AG 2016

SIPROTEC 5
Transformer differential protection devices

SIEMENS

Two winding transformers (3 sides, 5 measuring points)	**7UT85**	
Three winding transformers (4 sides, 6 measuring points)	**7UT86**	
Multiple winding transformers (5 sides, 9 measuring points)	**7UT87**	

Frei verwendbar © Siemens AG 2016

Transformer differential protection
7UT86 – Profile

SIEMENS

Applications

- Three winding differential protection (Expandable to 4 sides)
- 1 differential protection for standard and 2 for autotransformers
- 3 restricted earth fault protections
- Number of measuring points (MP)
  - 6 three phase current MPs
  - 4 single phase current MPs
  - 4 three phase voltage MPs
- 12 I, 4U, 11 BI, 22 BO (modular)

expandable

Suitable device 7UT86

Device functions

- **Differential protection** with restraint characteristic and fast trip stage
- Flexible vector group adaptation
- Inrush and over excitation detection
- CT saturation detection
- **Restricted earth fault protection**
- Flexibility due to number of MPs
- Temperature monitoring
- Phasor measurement unit PMU
- Modular software
- IEC 61850 (Edition 1 and 2)
- Multiple communication
- SIPROTEC 5 standard functions for protection, control and monitoring

Frei verwendbar © Siemens AG 2016

SIPROTEC 5
Transformer differential protection devices

SIEMENS

Two winding transformers (3 sides, 5 measuring points)	**7UT85**	
Three winding transformers (4 sides, 6 measuring points)	**7UT86**	
Multiple winding transformers (5 sides, 9 measuring points)	**7UT87**	

Frei verwendbar © Siemens AG 2016

Transformer differential protection
7UT87 – Profile

SIEMENS

Applications

- Multiple winding differential protection (5 sides)
- 2 differential protection for standard and autotransformers
- 5 restricted earth fault protections
- Number of measuring points (MP)
  - 9 three phase current MPs
  - 5 single phase current MPs
  - 5 three phase voltage MPs
- 20 I, 4U, 51 BI, 18 BO (modular)

Suitable device 7UT87

Device functions

- **Differential protection** with restraint characteristic and fast trip stage
- Flexible vector group adaptation
- Inrush and over excitation detection
- CT saturation detection
- **Restricted earth fault protection**
- Flexibility due to number of MPs
- Temperature monitoring
- Phasor measurement unit PMU
- Modular software
- IEC 61850 (Edition 1 and 2)
- Multiple communication
- SIPROTEC 5 standard functions for protection, control and monitoring

Frei verwendbar © Siemens AG 2016

SIPROTEC 5
Transformer differential protection devices

SIEMENS

Two winding transformers
(2 sides, 2 measuring points)

7UT82

Two winding transformers
(3 sides, 5 measuring points)

7UT85

Frei verwendbar © Siemens AG 2016

SIPROTEC 5
Transformer differential protection devices

SIEMENS

Three winding transformers
(3 sides, 5 measuring points)

7UT86

Multiple winding transformers
(5 sides, 7 measuring points)

7UT87

Frei verwendbar © Siemens AG 2016

Transformer differential protection
Predefined HW variants

SIEMENS

For each 7UT8 device type two standard HW variants are defined

Type of device	Standard HW variants
7UT82	W1: 1/3 19’’; 8 I, 7 BI, 7 BO
7UT85	O1: 1/3 19’’; 8 I, 7 BI, 7 BO O2: 1/2 19’’; 8 I, 19 BI, 23 BO
7UT86	P1: 1/2 19’’; 12 I, 4 U, 11 BI, 18 BO P2: 2/3 19’’; 12 I, 4 U, 23 BI, 34 BO
7UT87	Q1: 2/3 19’’; 20 I, 4 U, 15 BI, 22 BO Q2: 5/6 19’’; 20 I, 4 U, 27 BI, 38 BO

Fast configuration of your HW

Frei verwendbar © Siemens AG 2016

Transformer differential protection
Online-Configurator – Define your device

SIEMENS

Define your own device according to your requirements!
Modify the standard variant by adding or changing modules according to the required number of currents inputs and binary IOs.
Example **7UT86:**

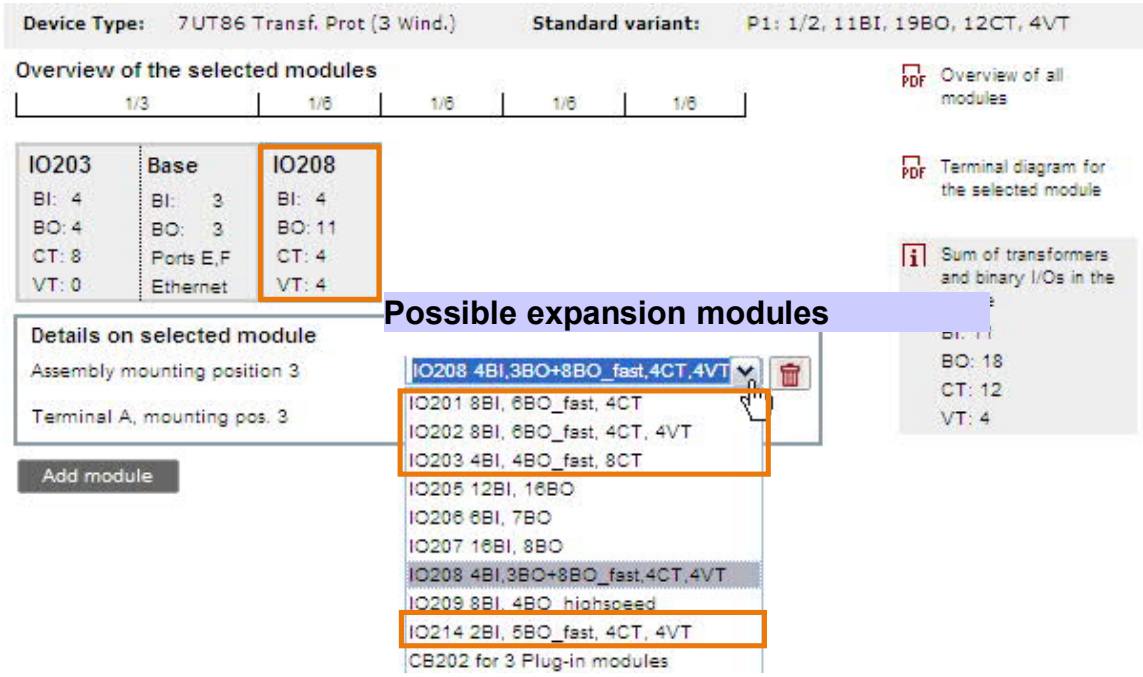

Frei verwendbar © Siemens AG 2016

Agenda

- General and device overview
- **Typical applications**
- Functional improvements
- Appendix

Frei verwendbar © Siemens AG 2016

Transformer differential protection 7UT8
Two winding transformer

SIEMENS

Customer requirement

- Two winding transformer differential protection with additional functions
- Protection with one device only
- Flexible hardware and communication

Siemens solution

- Transformer differential device **7UT82**
- Standard hardware (base module)
- Application template: Two winding basic
- Communication module

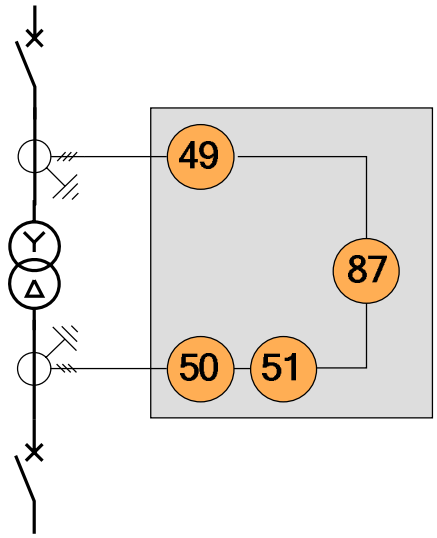

Device functions

- 87T (Differential protection) with additional functions (inrush, over excitation, Ct saturation detection)
- Flexible configuration of different transformer types (standard and autotransformer)

Benefits

- Reduced investment (one device for different application)
- Simplified parameterization
- Reduced wiring
- Shortened commissioning

Frei verwendbar © Siemens AG 2016

Application template:
Two winding transformer basic (87T)

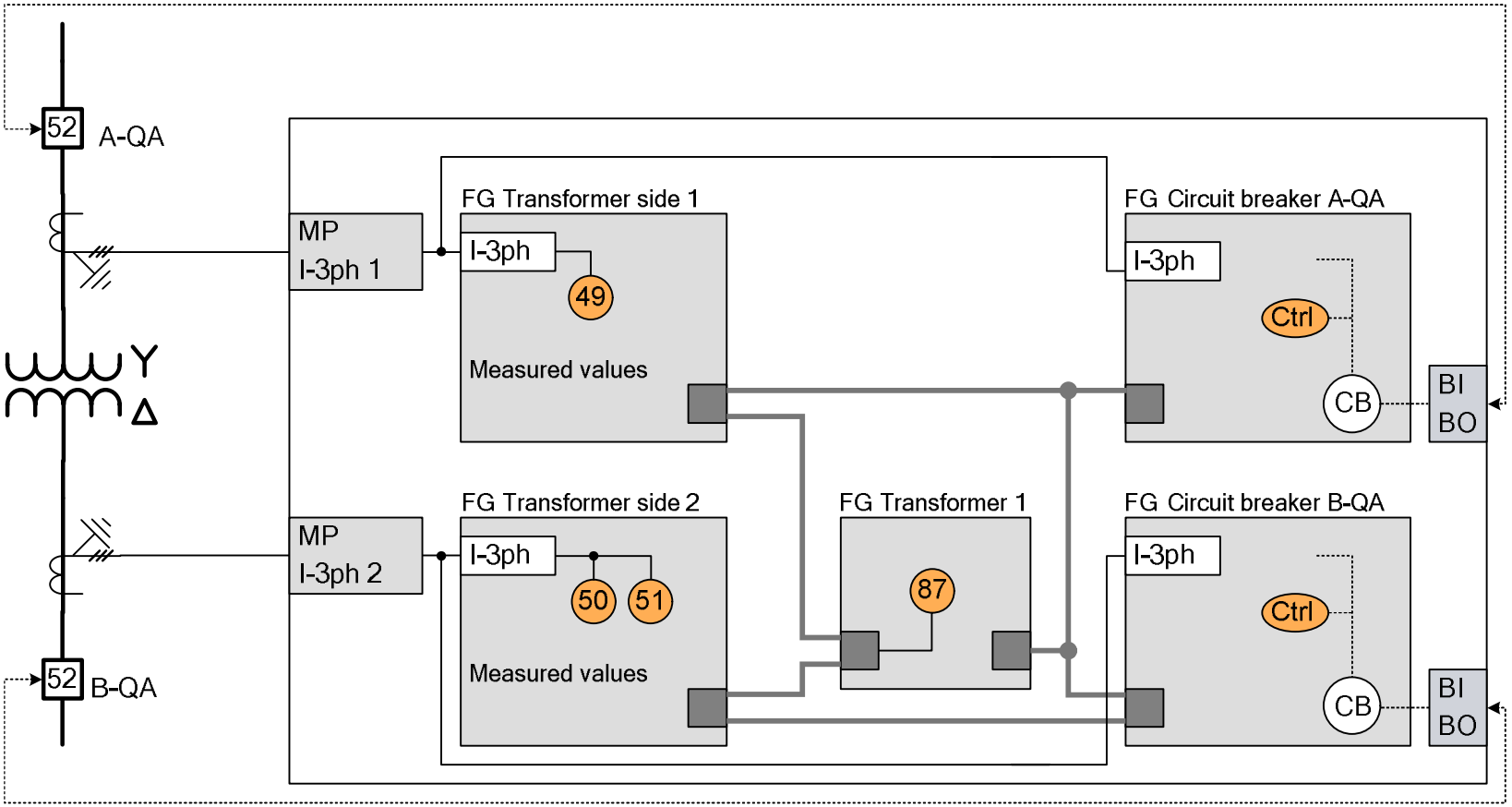

Frei verwendbar © Siemens AG 2016

Transformer differential protection 7UT8
Two winding transformer and REF

SIEMENS

Customer requirement

- Two winding transformer differential protection with additional functions
- High sensitivity at 1-phase ground faults
- Protection with one device only

Siemens solution

- Transformer differential device **7UT82**
- Functions 87T and 87T N
- Standard hardware (base module)
- Application template: Two winding with REF

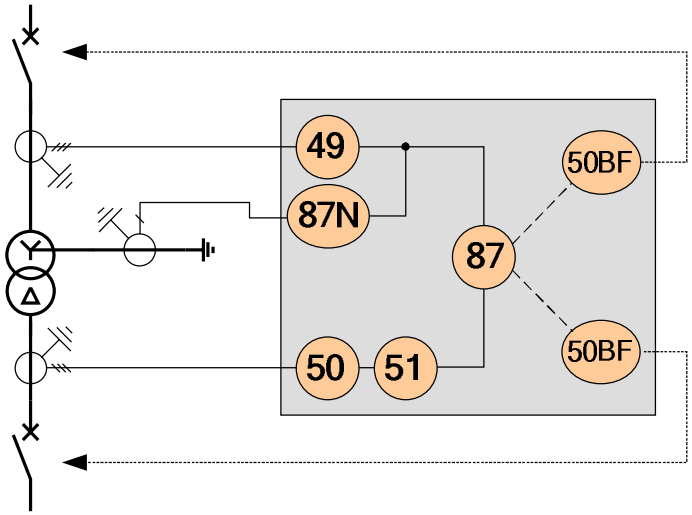

Device functions

- 87T (Differential protection) with additional functions (inrush, over excitation, Ct saturation detection)
- 87T N (restricted earth fault)
- Flexible configuration of different transformer types (standard and autotransformer)

Benefits

- Reduced investment (one device for different application)
- Simplified parameterization
- Reduced wiring
- Shortened commissioning

Frei verwendbar © Siemens AG 2016

Application template:
Two winding transformer (87,87N,50BF)

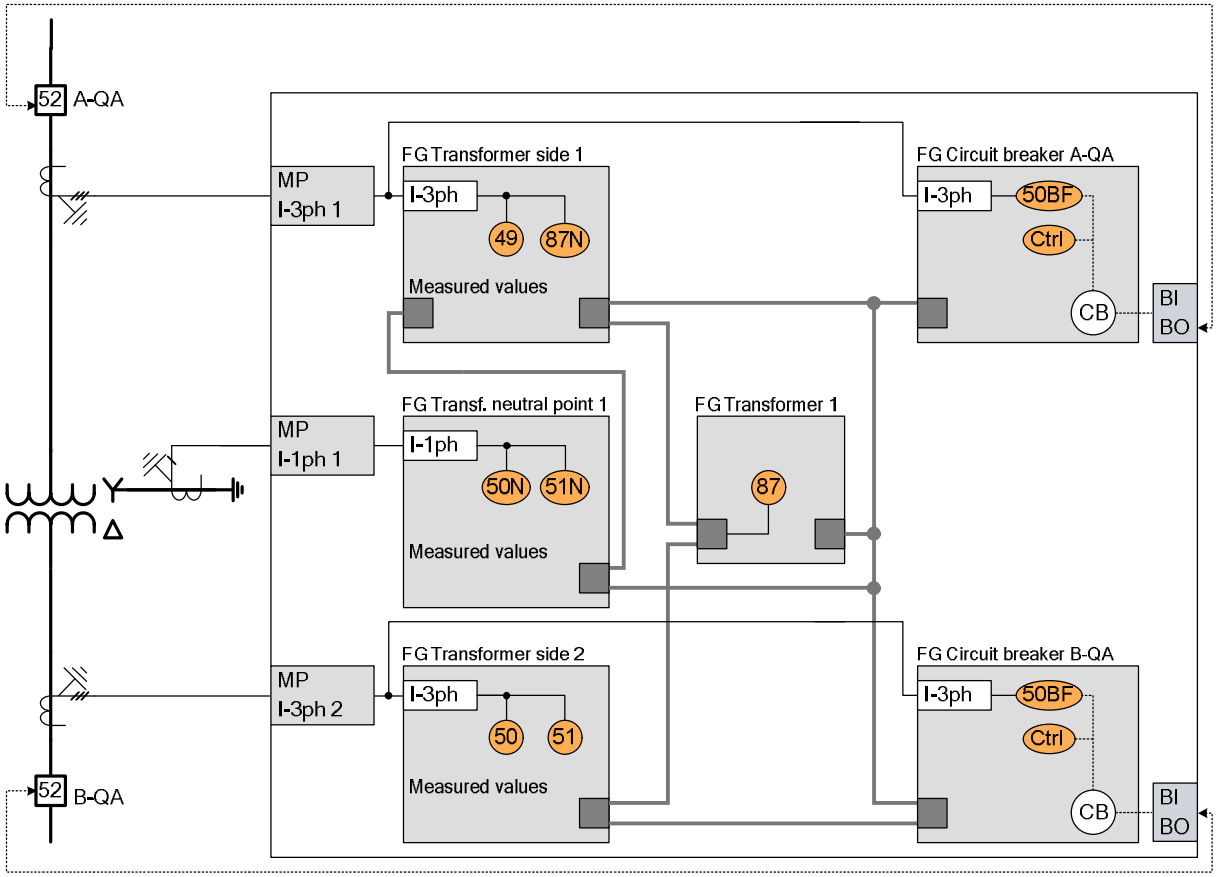

Frei verwendbar © Siemens AG 2016

Transformer differential protection 7UT8
Two winding transformer in 1.5 CB

SIEMENS

Customer requirement

- Two winding transformer differential protection in 1,5 CB application
- High sensitivity at 1-phase ground faults
- Protection with one device only

Siemens solution

- Transformer differential device **7UT85**
- Functions 87T and 87T N
- Standard hardware (base module)
- Application template: Two winding for 1,5 CB application

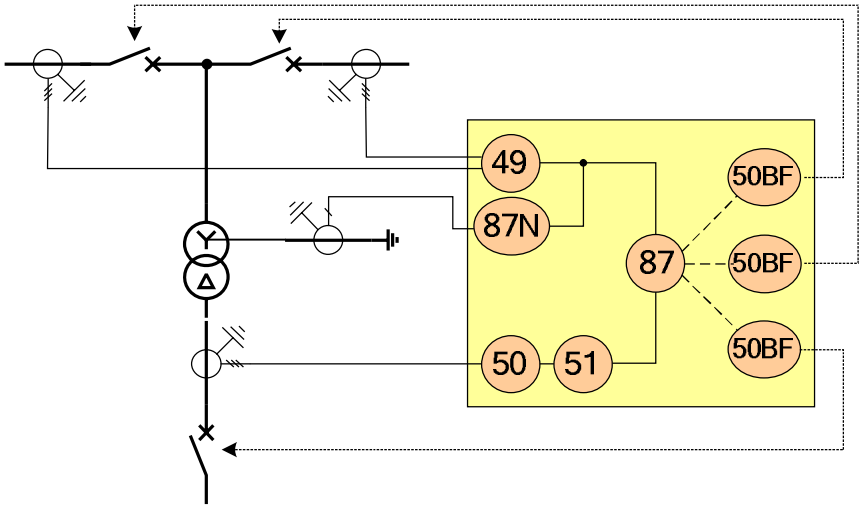

Device functions

- 87T (Differential protection) with additional functions (inrush, over excitation, Ct saturation detection)
- 87T N (restricted earth fault)
- Flexible configuration of different transformer types (standard and autotransformer)

Benefits

- Reduced investment (one device for different application)
- Simplified parameterization
- Reduced wiring
- Shortened commissioning

Frei verwendbar © Siemens AG 2016

Transformer differential protection 7UT8
Autotransformer

SIEMENS

Customer requirement

- Autotransformer bank with delta winding in 1,5 CB application
- High sensitivity at ground faults
- Protection with one device only
- Flexible hardware and communication

Siemens solution

- Transformer differential device **7UT86**
- Two differential protection function in parallel → **that's new**
- Application template: Autotransformer for 1,5 CB application

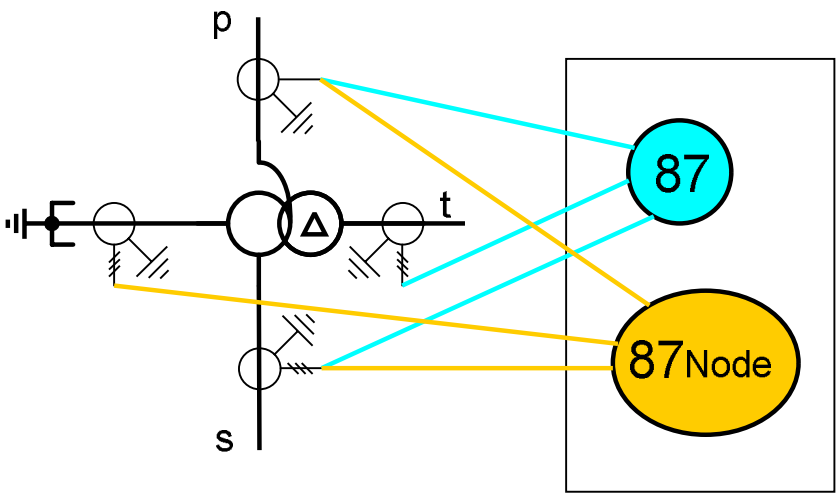

Device functions

- 87T (Differential protection) with additional functions (inrush, over excitation, Ct saturation detection)
- 87Node for auto transformer winding
- Flexible configuration of different transformer types (standard and autotransformer)

Benefits

- Reduced investment (one device for different application)
- High sensitivity at ground faults
- Simplified parameterization
- Reduced wiring
- Shortened commissioning

Frei verwendbar © Siemens AG 2016

7UT86 – Application template
Autotransformer with delta winding (compensation side) in 1,5 CB

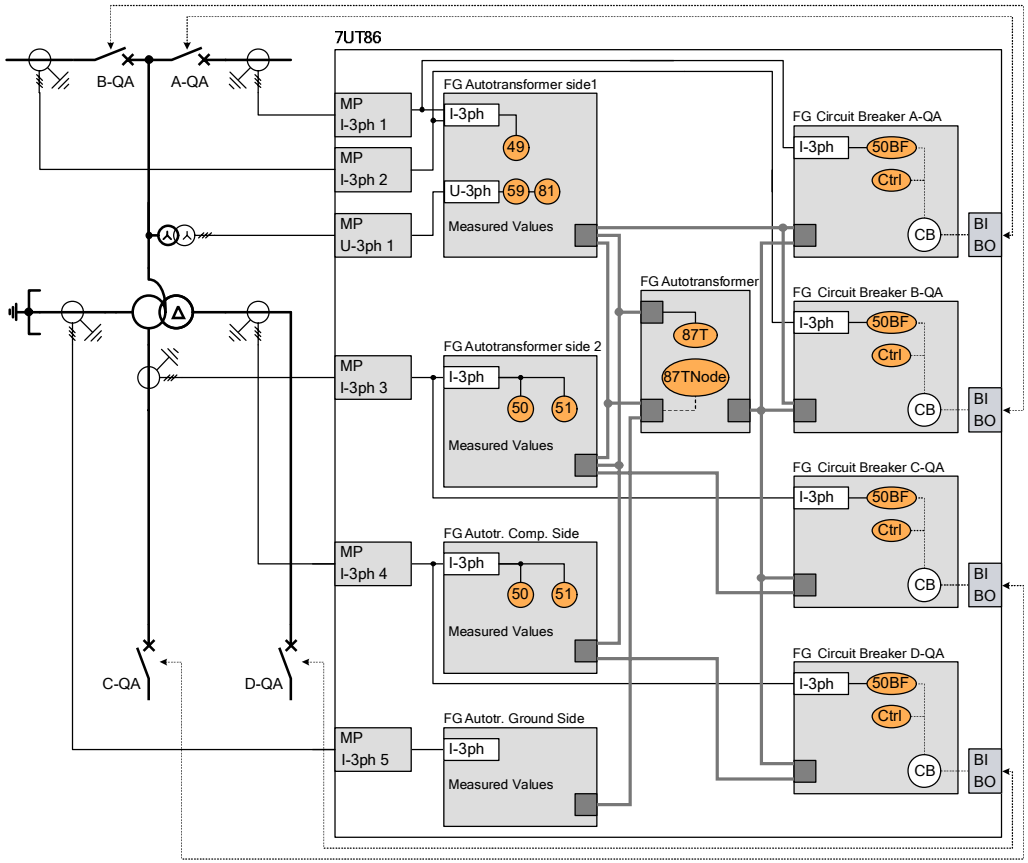

Frei verwendbar © Siemens AG 2016

7UT86 – autotransformer application
DIGSI with 2 x differential protection

SIEMENS

87T function (autotransformer + delta winding)

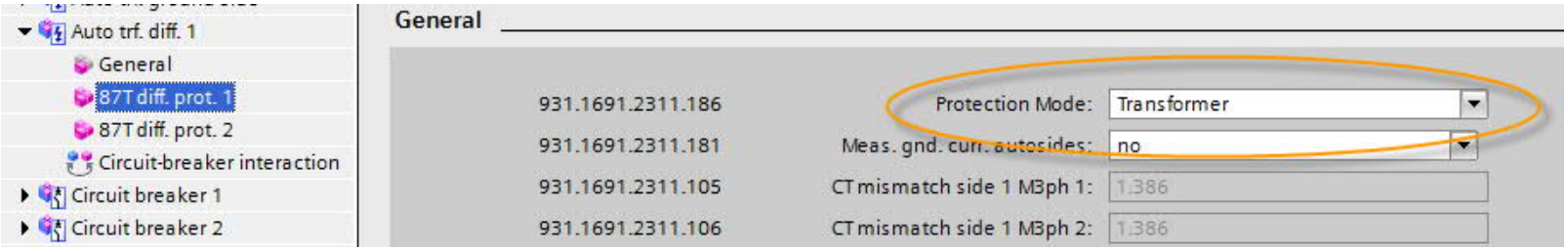

87Node function (only for autotransformer winding)

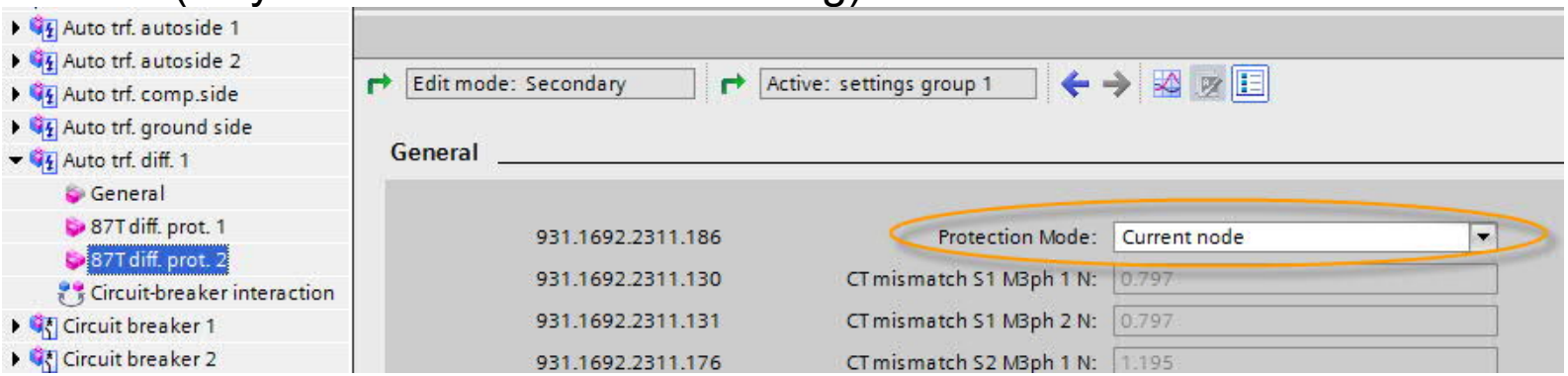

Frei verwendbar © Siemens AG 2016

Transformer differential protection 7UT8
Step-transformer with 6 measuring points

SIEMENS

Customer requirement

- Protection of step-transformer with 6 measuring points
- Protection with one device only
- Flexible hardware and communication

Siemens solution

- Transformer differential device **7UT87**
- Standard hardware (base + 2 expansion modules)
- Application template: Three winding for 1,5 CB application is the basis

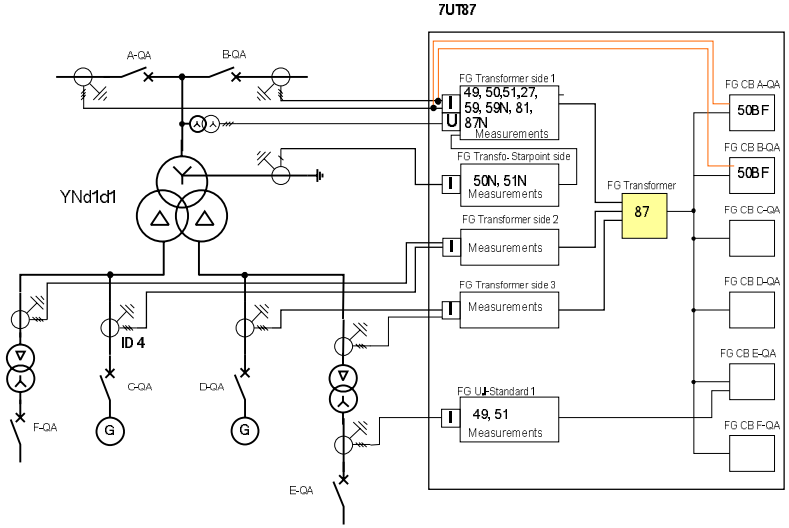

Device functions

- 87T (Differential protection) with additional functions (inrush, over excitation, Ct saturation detection)
- Handling up to 7 measuring points
- Flexible configuration of different transformer types (standard and autotransformer)

Benefits

- Reduced investment (one device for different application)
- Simplified parameterization
- Reduced wiring
- Shortened commissioning

Frei verwendbar © Siemens AG 2016

Transformer differential protection 7UT8
Converter transformer for HVDC

SIEMENS

Customer requirement

- Protection of converter transformer for HVDC applications
- Protection with one device only
- Flexible communication

Siemens solution

- Transformer differential device **7UT87**
- Standard hardware (base + 2 expansion modules)
- Application template: Three winding for 1,5 CB application is the basis

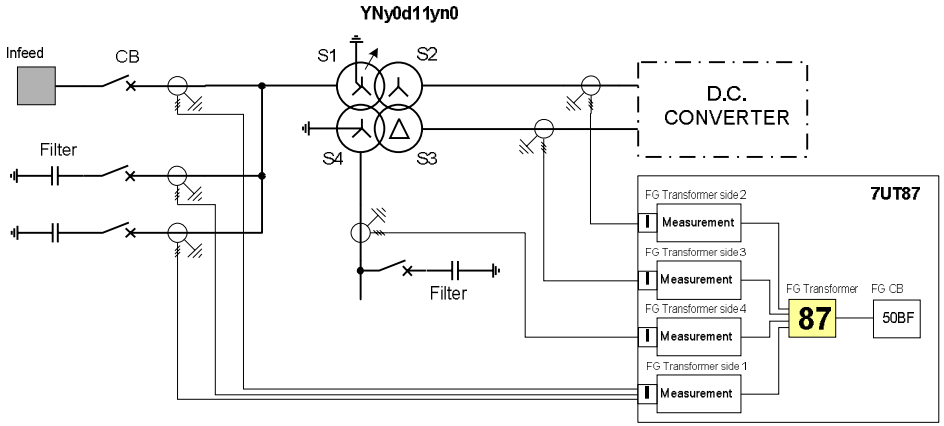

Device functions

- 87T (Differential protection) with additional functions (inrush, over excitation, Ct saturation detection)
- Handling up to 5 sides and 7 measuring points
- Flexible configuration of different transformer types

Benefits

- Reduced investment (one device for different application)
- Simplified parameterization
- Reduced wiring
- Shortened commissioning

Frei verwendbar © Siemens AG 2016

Transformer differential protection 7UT8 two transformers with one device

SIEMENS

Customer requirement

- Protection of two parallel transformers
- Protection with one device only
- Flexible hardware and communication

Siemens solution

- Transformer differential device 7UT87
- Standard hardware (base + 2 expansion modules)
- Application template: Two winding basic + REF is the basis

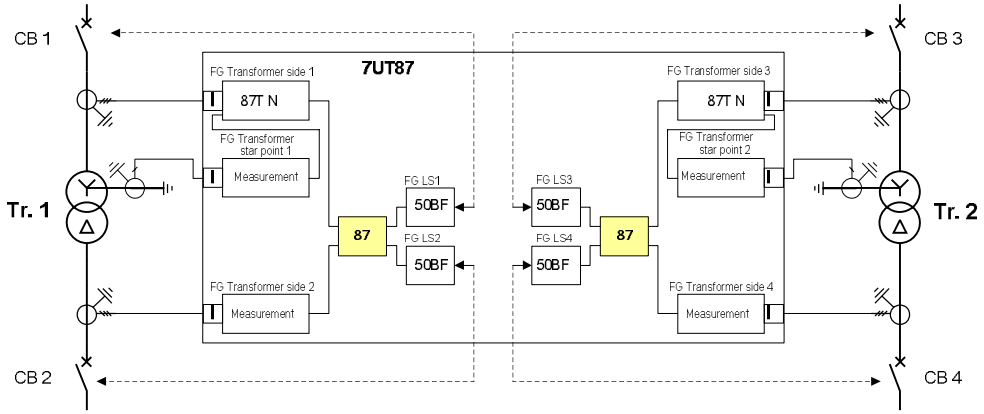

Device functions

- 87T (Differential protection) with additional functions (inrush, over excitation, Ct saturation detection)
- Handling of 2 FG transformer and up to 5 sides and 7 measuring points
- Flexible configuration of different transformer types

Benefits

- Reduced investment (one device for different application)
- Simplified parameterization
- Reduced wiring
- Shortened commissioning

Frei verwendbar © Siemens AG 2016

Transformer differential protection 7UT8
Voltage Control (ANSI 90V)

SIEMENS

Customer requirement

- Voltage control and protection of two winding transformer in one device
- Adaptive adjustment of differential protection on tap changer position

Siemens solution

- Transformer differential prot. **7UT85**
- Standard hardware (Basic + 1 expansion module)
- Application template: 2 winding transformer + voltage controller

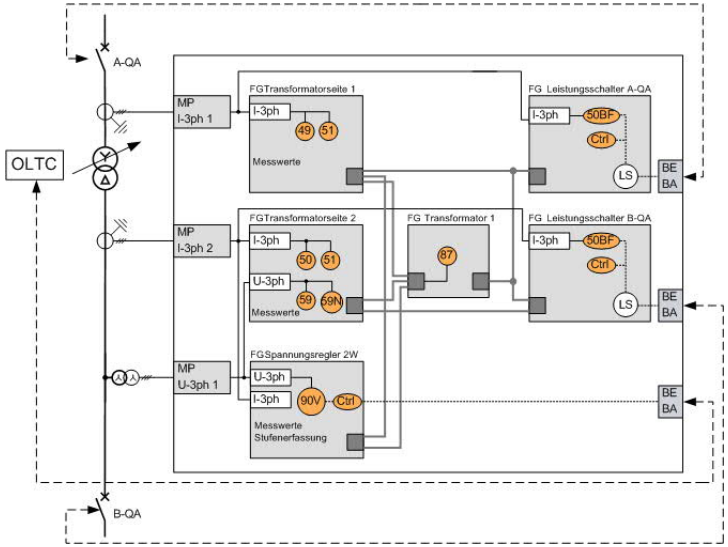

Device functions

- 90V (Voltage controller)
- 87T (Differential protection) with additional functions (inrush, over excitation, Ct saturation detection)
- Flexible configuration of different transformer types (standard and autotransformer)

Benefits

- Integrated Voltage controller function
- Tap position supervision and false differential current correction
- Reduced investment
  (one device for different application)
- Flexible operation

Frei verwendbar © Siemens AG 2016

Application template:
Two winding transformer with voltage controller

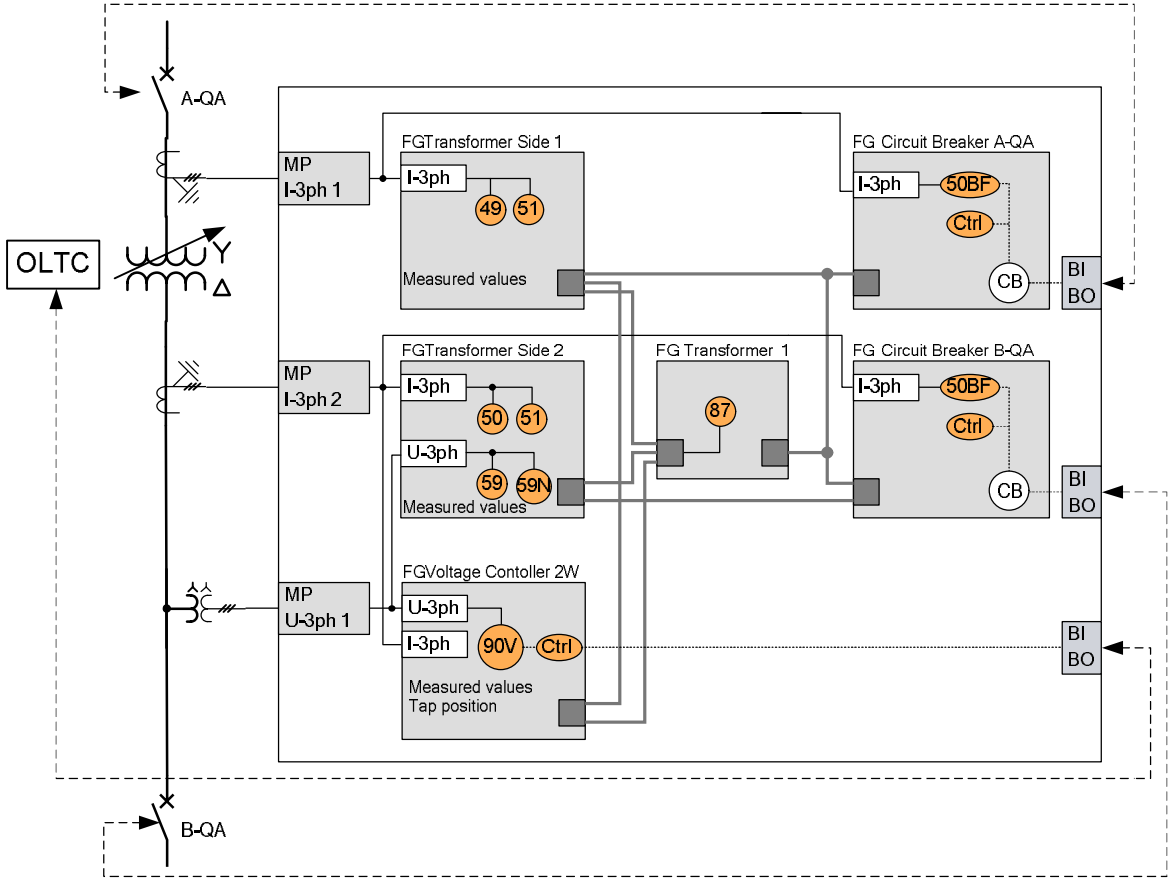

Frei verwendbar © Siemens AG 2016

Transformer differential protection 7UT8
Differential- and distance protection

SIEMENS

Customer requirement

- Transformer protection with additional distance protection for underlaid grids with only one device as backup protection

Siemens solution

- Transformer differential prot.7UT86
- Standard Hardware (Basic + 2 expansion modules)
- Application Template: 3wind. transformer (Diff+ REF+50BF+Dis.Prot.)

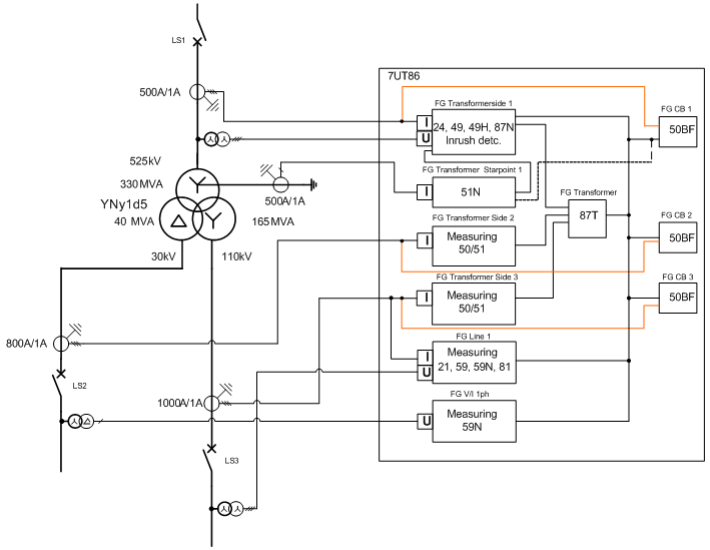

Device functions

- 87T (differential prot.) with additional blocking functions (Inrush current- , over fluxing-, CT saturation detection)
- ANSI 24 distance prot. with FG Line

Benefits

- Reduced Investment (one device for different applications)
- Distance protection known from the line differential protection
- Simplified parameterization
- Reduced wiring
- Shortened commissioning

Frei verwendbar © Siemens AG 2016

Transformer differential protection 7UT8
Motor differential protection (ANSI 87M)

SIEMENS

Customer requirement

- Motor differential prot. with additional protection functions
- The whole motor protection with one device
- Flexible hardware und communication

Siemens solution

- Transformer differential port. **7UT85**
- Standard hardware (basic module + 1 expansion module)
- Application template: Motor (DIFF, 50BF) communications module

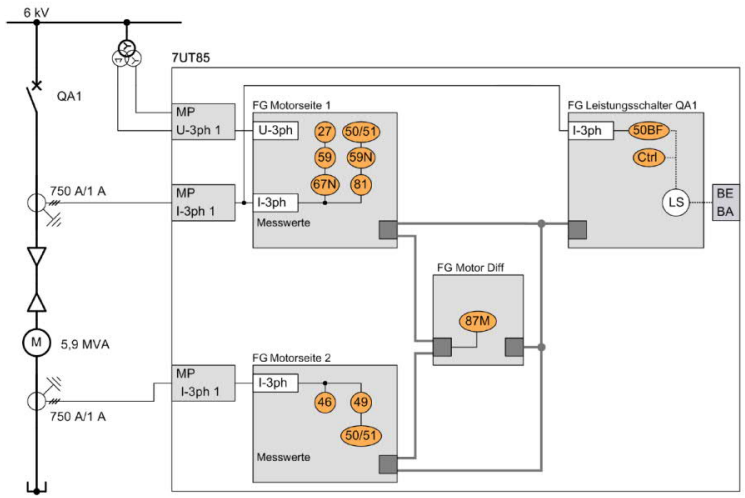

Device functions

- 87M (Motor-Differential prot.)
- FG Motor-Side and FG Motor-Diff
- Flexible configuration of different motors

Benefits

- Reduced investment
  (one device for different application)
- Simplified parameterization
- Reduced wiring
- Shortened commissioning

Frei verwendbar © Siemens AG 2016

Transformer differential protection 7UT8
Motor differential protection (ANSI 87M)

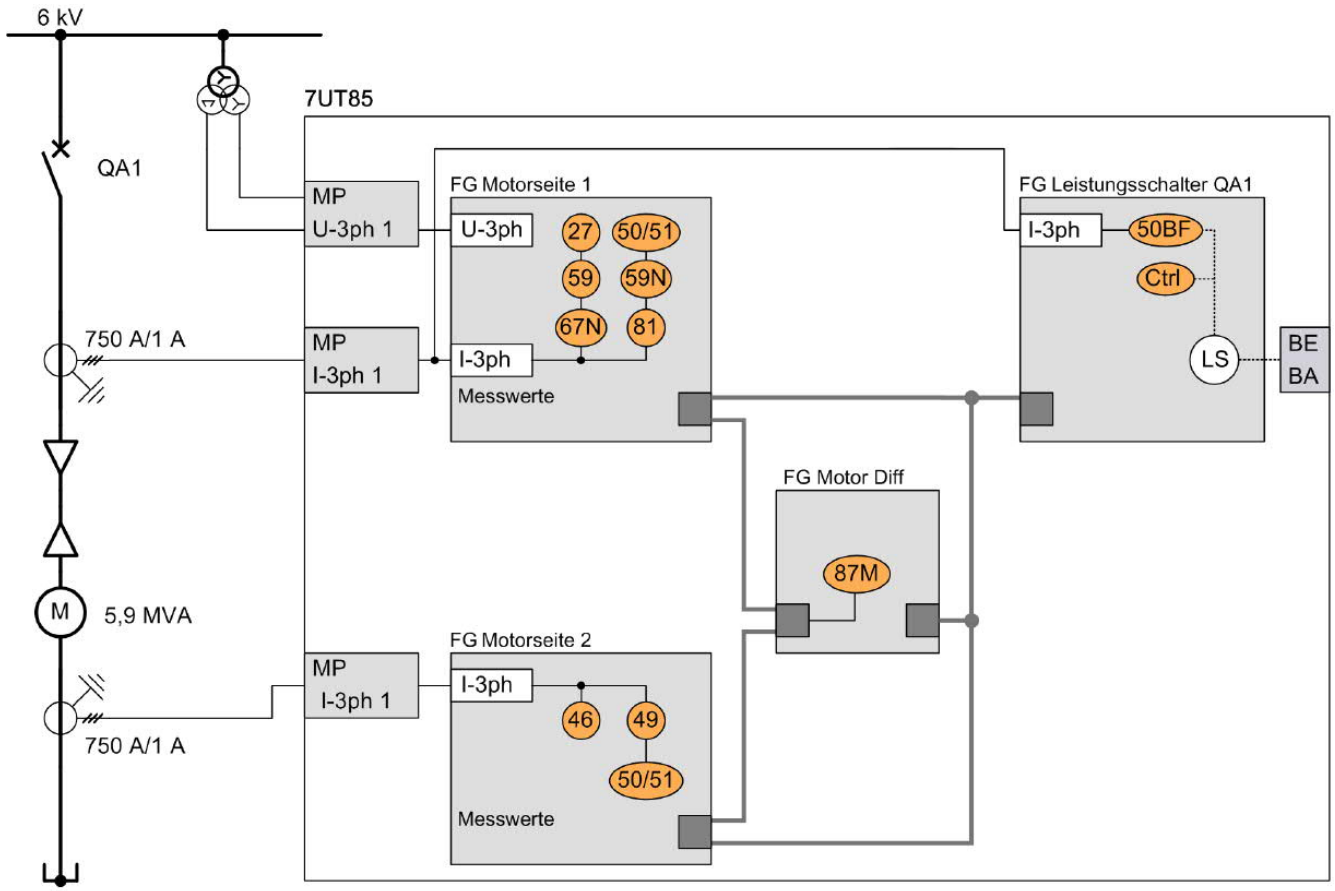

Frei verwendbar © Siemens AG 2016

Agenda

- General and device overview
- Typical applications
- **Functional improvements**
- Appendix

Frei verwendbar © Siemens AG 2016

Transformer differential protection 7UT8
Improved restraint algorithm

SIEMENS

Customer requirement

- High sensitivity also at low fault currents
- Sensitivity at 1,5 CB application with small power transformers
- High stability against external faults

Siemens solution

- 87T uses the conventional restraint characteristic with modified settings
- New is the calculation of the restraint current (Maximum of the phase currents)

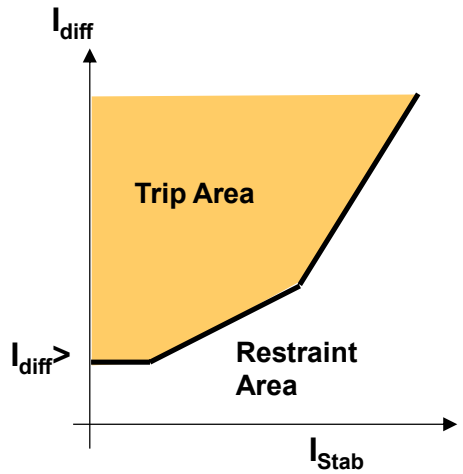

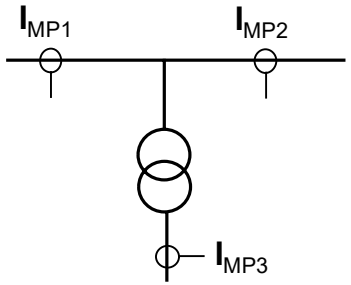

$I_{diff} = |\Sigma \underline{I_{MP}}|$

$I_{Stab} = \text{Max}\ |I_{MP}|$

Device functions

- 87T restraint characteristic has three straight lines
- Flexible setting of the characteristic

Benefits

- Higher sensitivity in 1,5 CB application
- More stability at signal distortion (e.g. CT saturation)
- Increased system availability

Frei verwendbar © Siemens AG 2016

Transformer differential protection 7UT8
Improved Idiff – fast stage

SIEMENS

Customer requirement

- Short tripping time at high internal fault currents
- Robust at CT saturation (internal faults)
- Stable at external faults in 1,5 CB appl.

Siemens solution

- 87T fast stage evaluates instantaneous values of the differential current
- New: Fast differentiation between internal and external fault based on few samples (proven busbar prot. method)

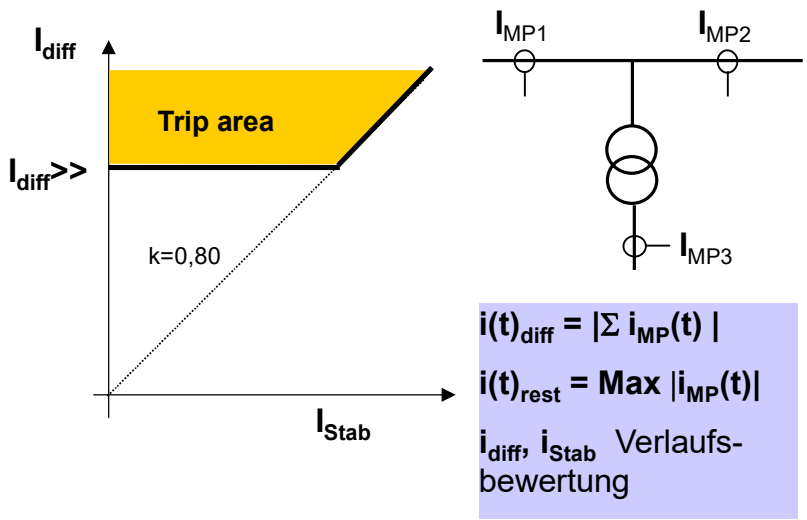

Device functions

- 87T fast stage in addition to the standard restraint characteristic
- Adaptive algorithm for differential current evaluation: first instantaneous values and after 1 cycle filtered values

Benefits

- Fast tripping time at internal faults also at saturated currents
- Stable at heavy external faults with CT saturation (transverse currents in 1,5 CB application)
  → Increased system availability

Frei verwendbar © Siemens AG 2016

Transformer differential protection 7UT8
Improved inrush stabilization

SIEMENS

Customer requirement

- Stable at inrush currents (switching ON of a transformer)
- Stable at sympathetic inrush currents (switching ON of a parallel transformer)

Siemens solution

- Inrush detection function blocks the differential protection
- New is the **one out of two** decision of **two different inrush algorithms**

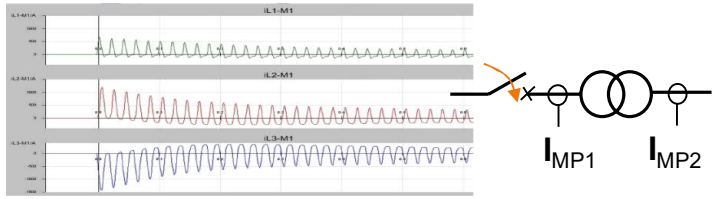

Method 1: $I_{2,Harm}/I_{1,Harm}$ > 15%

Method 2: **CWA** → Flat area evaluation

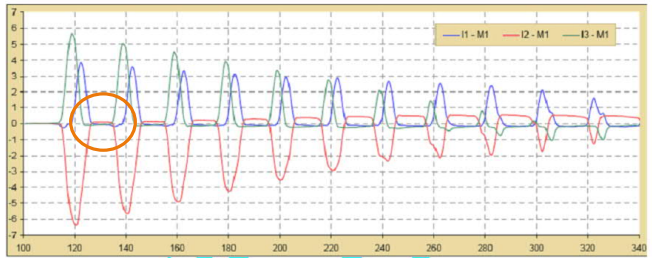

Device functions

- Inrush detection function with two different measuring principles
  - Second harmonic evaluation with the cross block option
  - Curve waveform analysis (CWA)
- At high VTR blocking of the differential protection with the 5th harm. current

Benefits

- Avoiding of false trip in the case of an inrush or sympathetic inrush
- Stable at higher differential currents caused by an overvoltage
- Increased system availability
  → Increased stability at inrush currents

Frei verwendbar © Siemens AG 2016

Transformer differential protection 7UT8
Faster detection of external faults

SIEMENS

Customer requirement

- Protection must be stable at external faults with CT saturation
- CT requirements regarding transient performance must low as possible

Siemens solution

- New algorithm based on instantaneous values detect very fast external faults
- Missing samples due to saturation are predicted via an estimation method

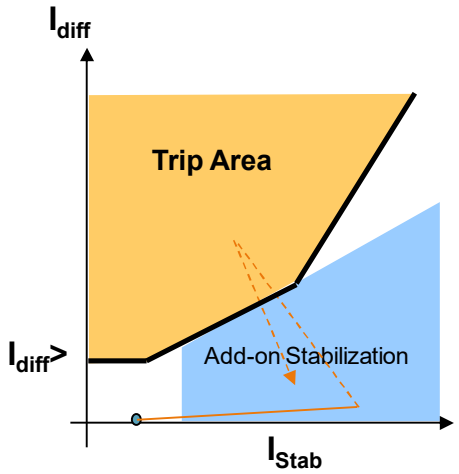

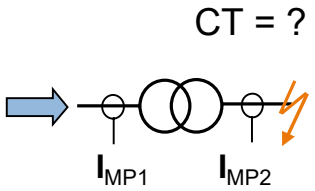

Device functions

- Add-on stabilization characteristic for external fault detection with CT saturation
- Handling of evolving faults (if after an external fault an internal occurs)
- Reduced transient dimensioning factor (**Ktd = 2**; SIP4-factor was 3)

Benefits

- Stable at external faults with CT
- Lower CT requirements
- Secure handling of evolving faults
- Increased system availability

Frei verwendbar © Siemens AG 2016

Transformer differential protection 7UT8
Wide range of CT mismatching

SIEMENS

Customer requirement

- Using of protection on 3-wind. with a low power tertiary winding or 2- wind. transf. with high ISC on the busbar
- Matching transformers must be avoided

Siemens solution

- High resolution of the measured phase currents via 24 ADC
- Each measured current can be adapted to a reference current

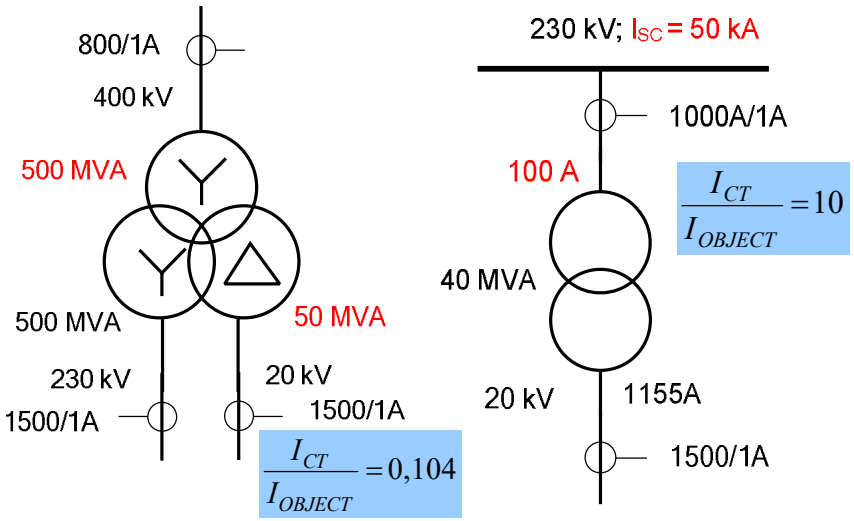

Device functions

- No limitation regarding CT mismatching

Benefits

- Improved transient CT performance via lower burden
  → No matching transformer
- Flexible applications

Frei verwendbar © Siemens AG 2016

Transformer differential protection 7UT8
Overexication U/f (ANSI 24)

SIEMENS

Customer requirement

- Protection for Transformers, Generators for unacceptable high induction values and excessive thermal loads

Siemens solution

- The induction is determine indirect via the relationship of $\frac{V / V_{rated,Object}}{f / f_{rated}}$
- 2 stages are available (user-defined and time-dependent characteristic)

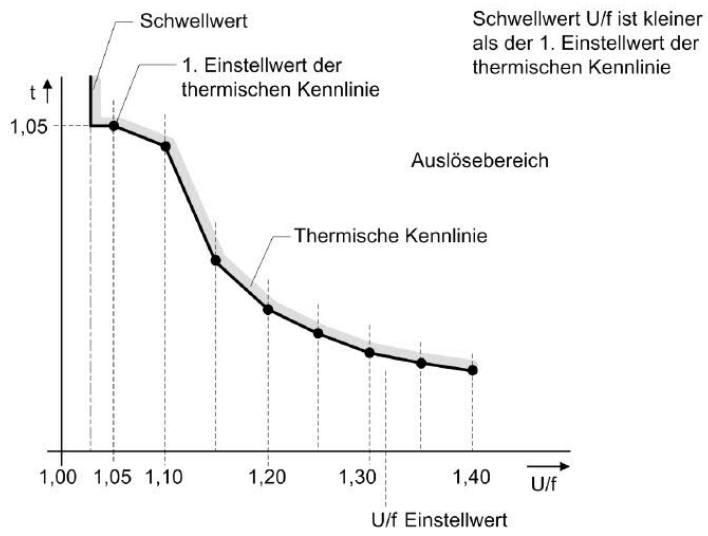

Device functions

- The terminal characteristic is define by max. 30 pairs of values V/f (related of nominal values) related to the tripping time t
- The predefine characteristic is related of a standard power transformer

Benefits

- The user defined characteristic considered the terminal behavior of the transformer
  → Increased application flexibility

Frei verwendbar © Siemens AG 2016

Transformer differential protection 7UT8
Voltage Controller (ANSI 90V)

SIEMENS

Customer requirement

- Voltage Control for autotransformer and power transformer with a motor driven tap changer
- Tap changer position capture

Siemens solution

- Voltage controller functions automatic mode and manual mode
- Linear and inverse control response
- Blocking conditions I>,I<, V>, V< and I-Diff >

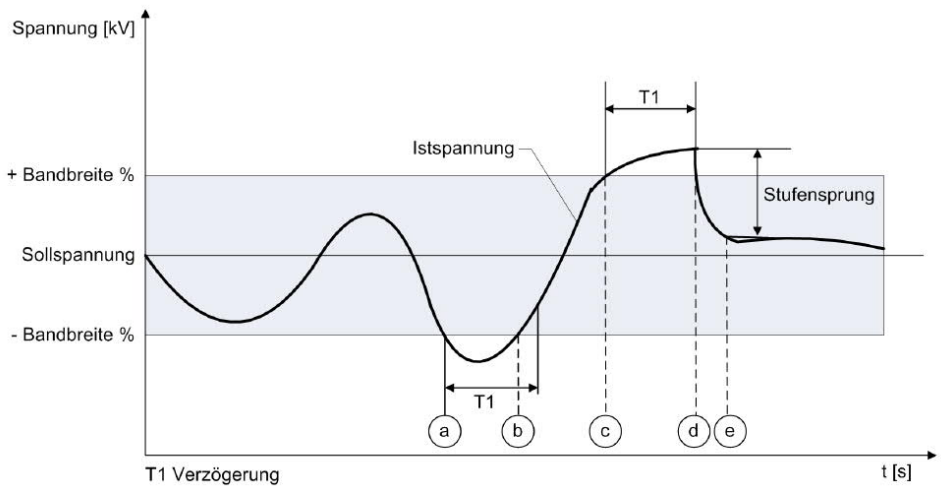

Device functions

- FG voltage control for two-winding transformer and autotransformer
- Supervision and control of the motor driven tap changer
- Line-Drop-Compensation
- Flexible communication

Benefits

- Integrated voltage controller functions
- Control and Protection in only one device
- Flexible applications

Frei verwendbar © Siemens AG 2016

Transformer differential protection 7UT8
Protection of phase shifting- and special transformer

SIEMENS

Customer requirement

- Differential protection of phase angle regulating transformer (Single Core, Two Core Design) with a flexible range of voltage- and phase angle regulation.

Siemens solution

- Differential protection of phase shifting and special transformer with an adaptive algorithm detecting the tap position and phase angle detection.
- Implementation of a special table for flexible vector group for the differential protection calculation

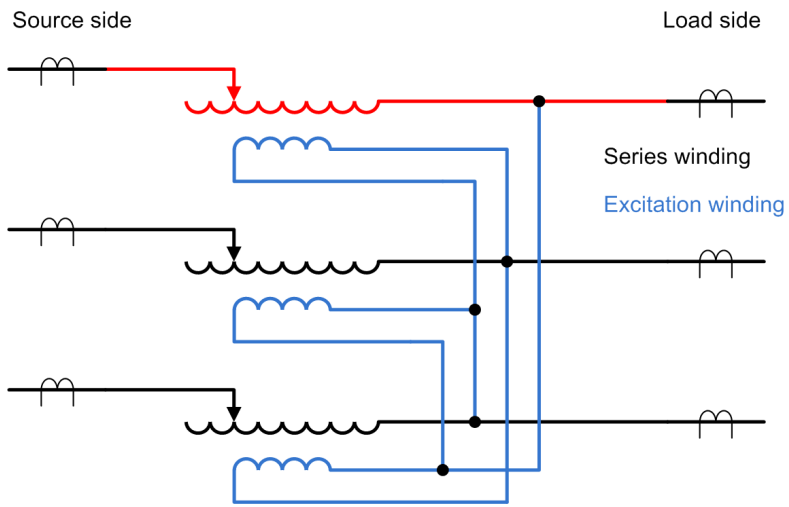

Device functions

- Standard transformer differential protection 87T and function expansion with additional function block for phase regulating transformer)

Benefits

- Optimal protection of a phase shifting - and special transformer due to the adaptive adjustments of differential protection characteristic due to tap changer position and the phase shifting angle

Frei verwendbar © Siemens AG 2016

Migration path
Transformer differential protection

SIEMENS

SIPROTEC 4

7UT612

7UT613

7UT63

7UM62

SIPROTEC 5

7UT82

Modular

7UT85

7UT86

7UT87

Frei verwendbar © Siemens AG 2016

Transformer differential protection 7UT8
Your benefits

SIEMENS

- + Comprehensive transformer protection
- + Increased system availability
- + Reduced investment
- + Adaptable to your application
- + Part of your smart grid through communication and automation

SIPROTEC 5

7UT85

7UT86

7UT87

Frei verwendbar © Siemens AG 2016

Agenda

- General and device overview
- Typical applications
- **Functional improvements**
- Appendix

Frei verwendbar © Siemens AG 2016

SIEMENS

Outlook functional expansion V7.0 – V8.0

Voltage controller Advanced function

- Parallel mode
  - Master- Follower mode
  - Circulated idle current minimization
  - Parallel control via Goose communication
- Tap position capture with ANA-I 4-20mA module and IEC61850 goose protocol
- up to 4 target voltages

Interturn fault protection for transformer

- Detection of transformer interturn faults, develop a new protection function for 7UT8x (Dr. Schiel → Uni Wrozlaw)

STUB-Protection

- Supervision of the feeder in case of the transformer is not energized

Frei verwendbar © Siemens AG 2016

Agenda

- General and device overview
- Typical applications
- Functional improvements
- **Appendix**

Frei verwendbar © Siemens AG 2016

Application template:
Two winding transformer basic (87)

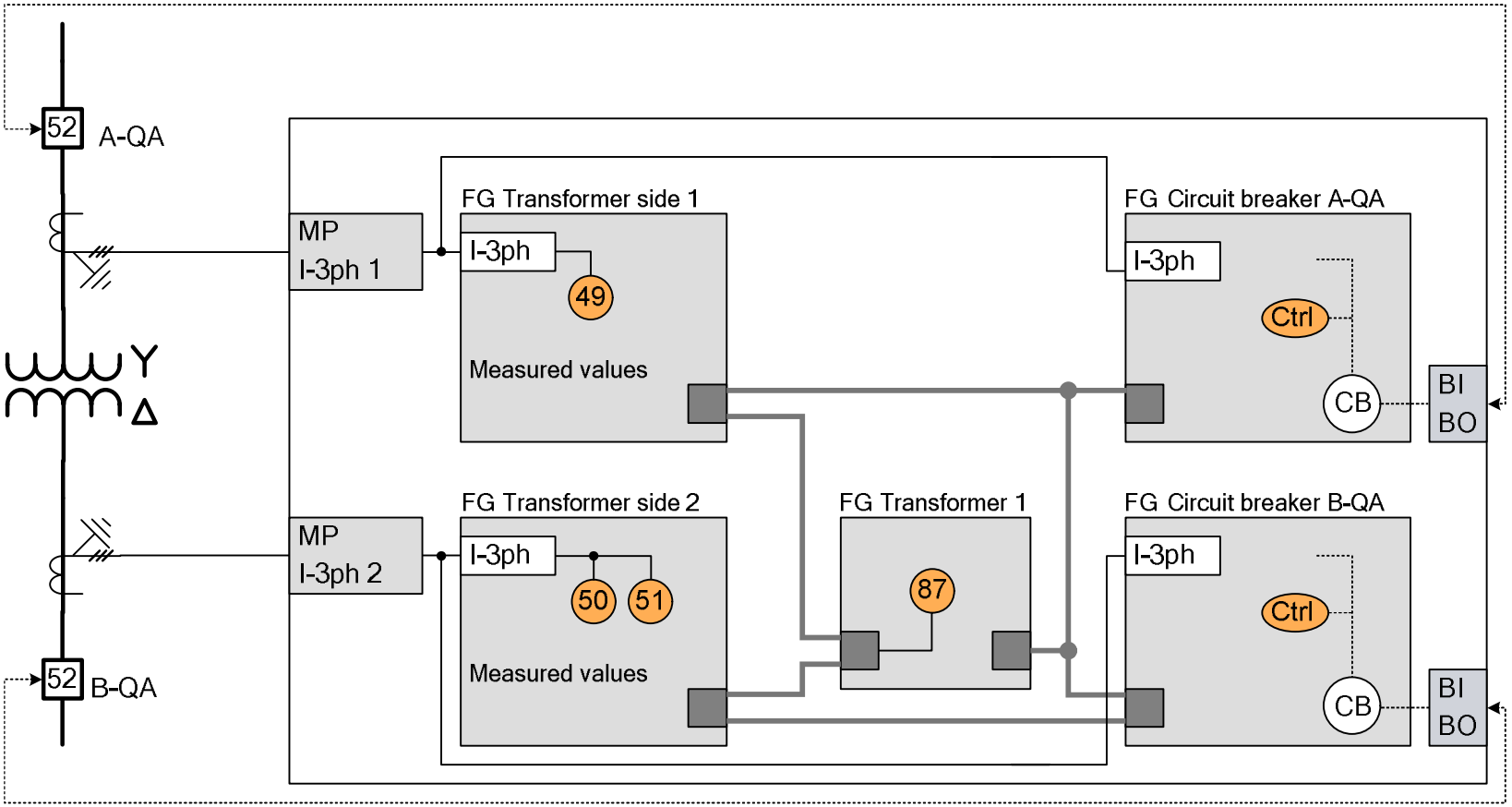

Frei verwendbar © Siemens AG 2016

Application template:
Two winding transformer (87, 87N, 50BF)

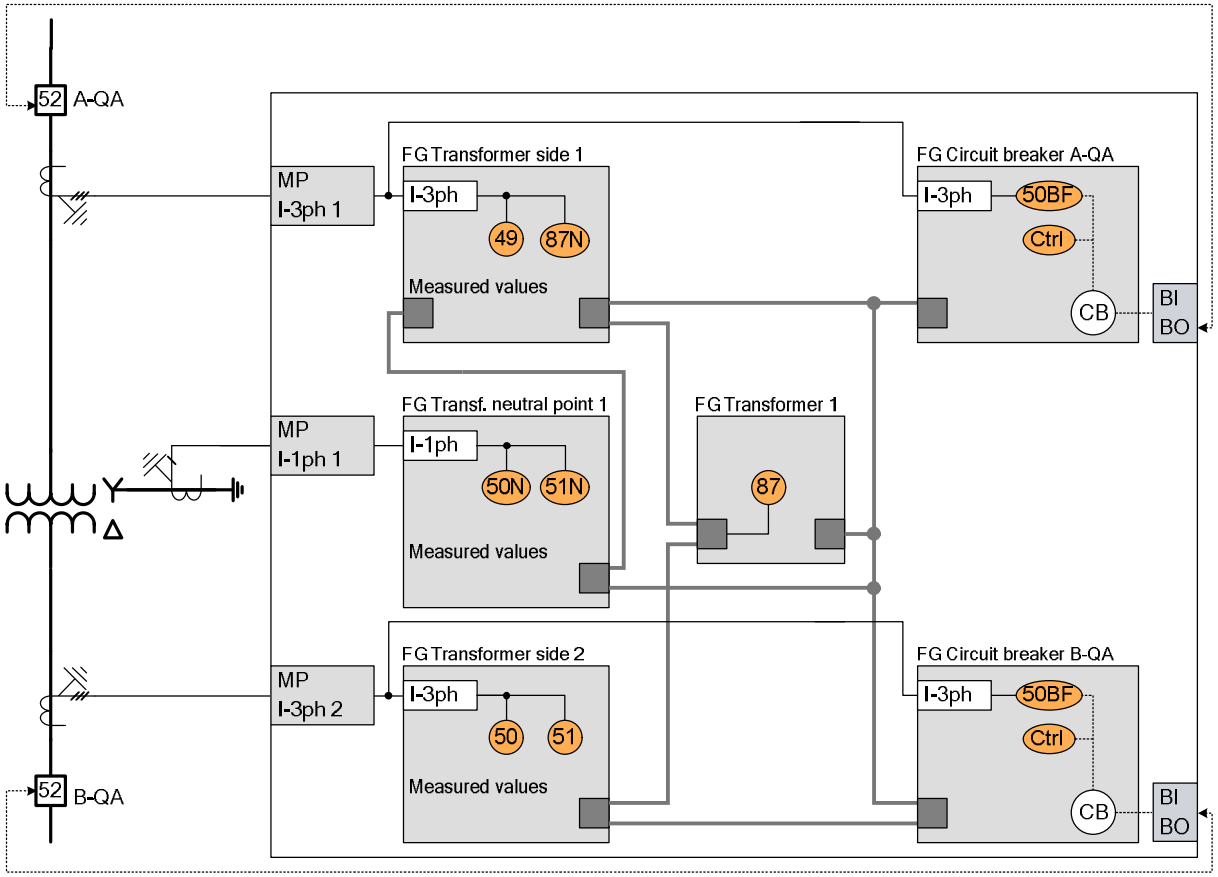

Frei verwendbar © Siemens AG 2016

Application template:
Two winding transformer 1,5 CB (87, 87N, 50BF)

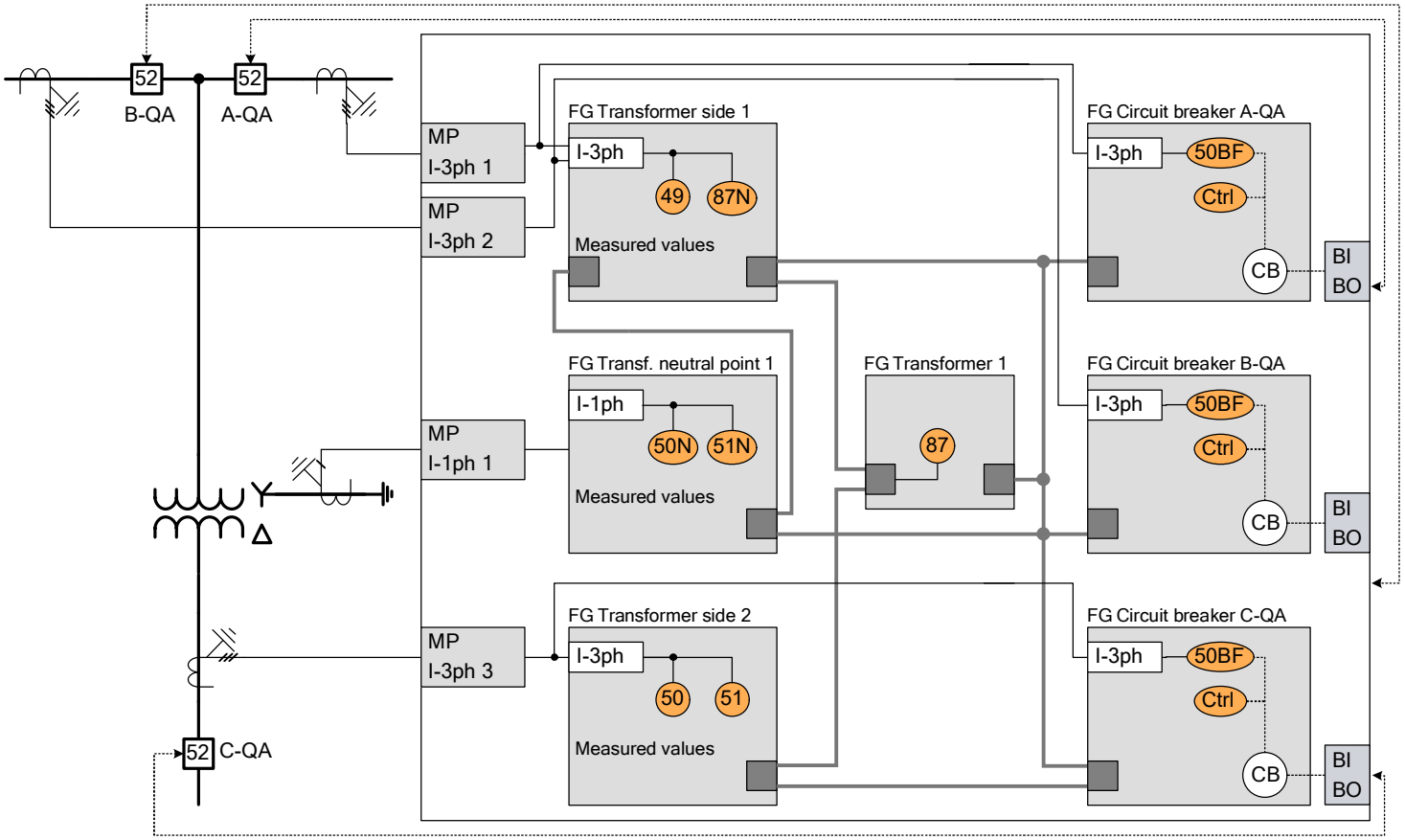

Frei verwendbar © Siemens AG 2016

7UT86 – Application template
Three winding transformer for 1,5 CB application

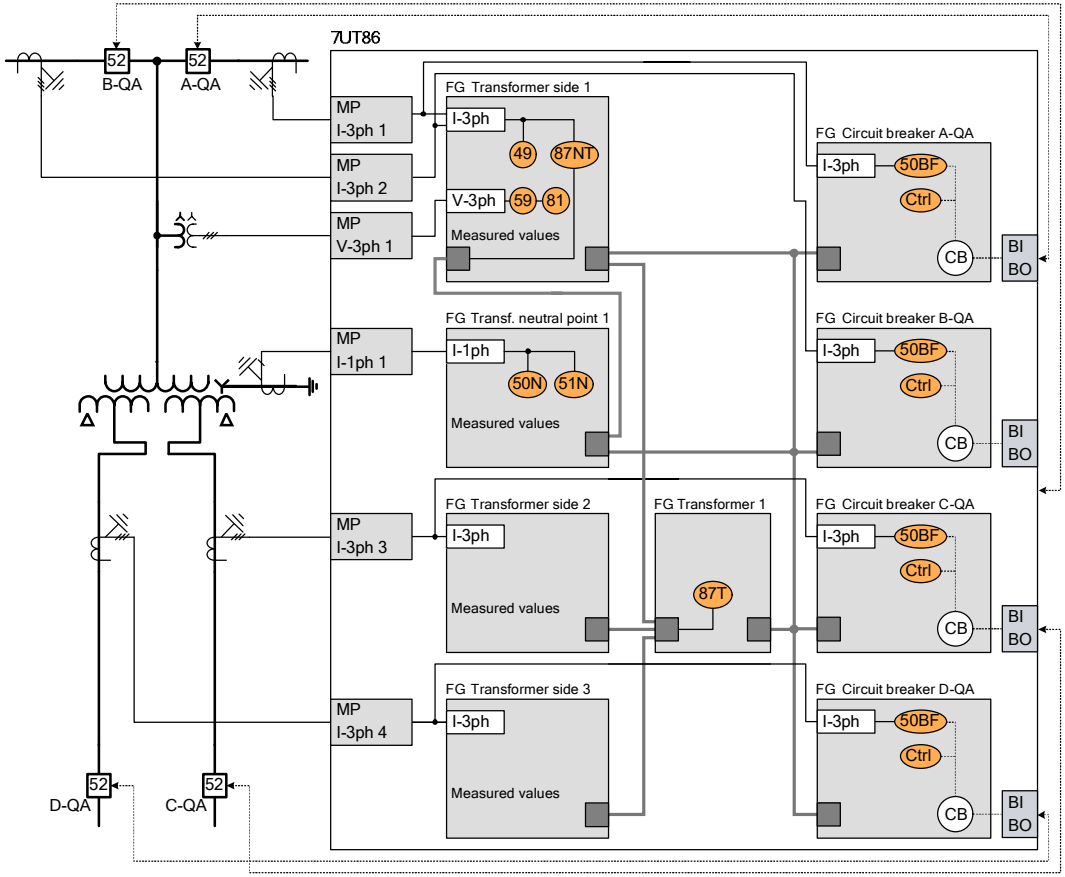

Frei verwendbar © Siemens AG 2016

7UT86 – Application template
Auto transformer with delta winding for 1,5 CB

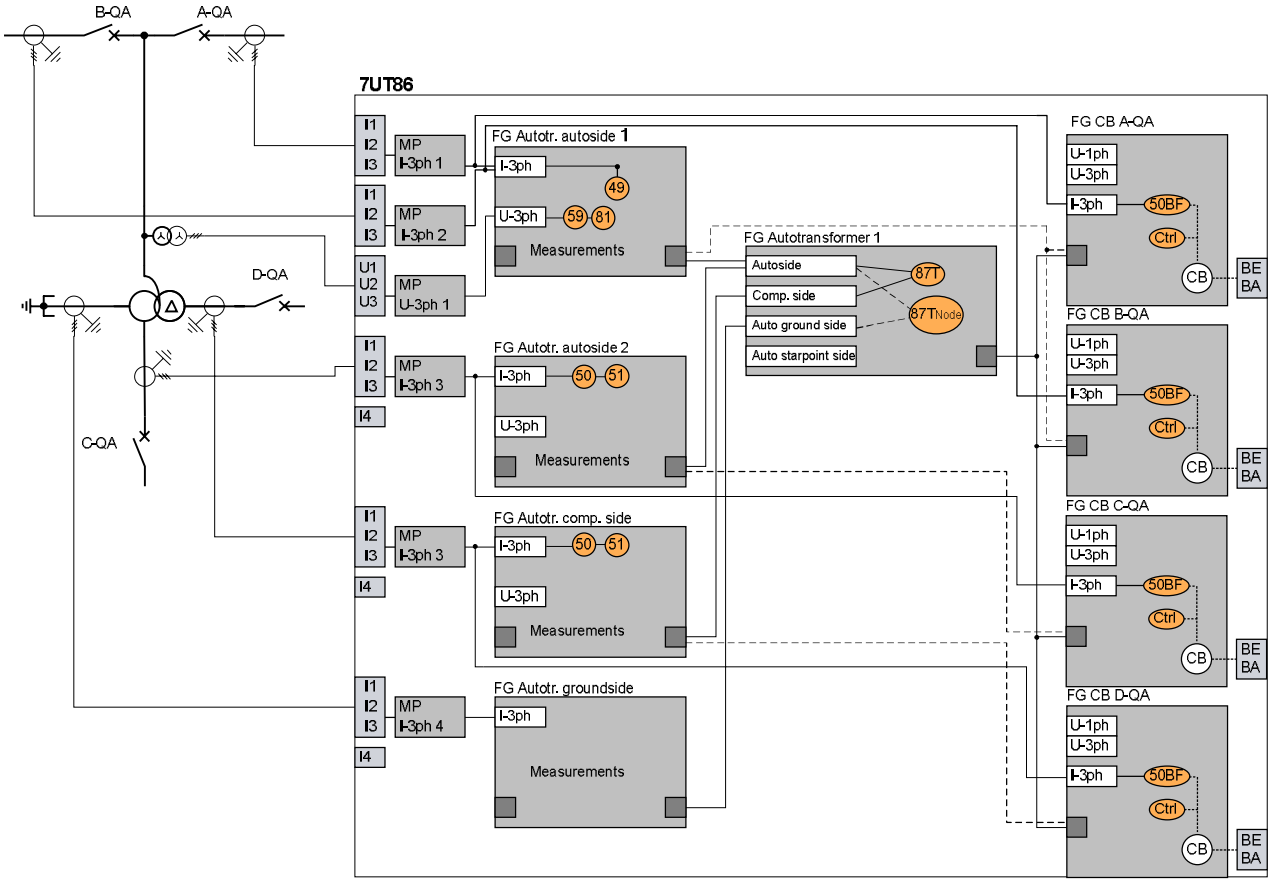

7UT87 – Start with application template
Three winding transformer for 1,5 CB application

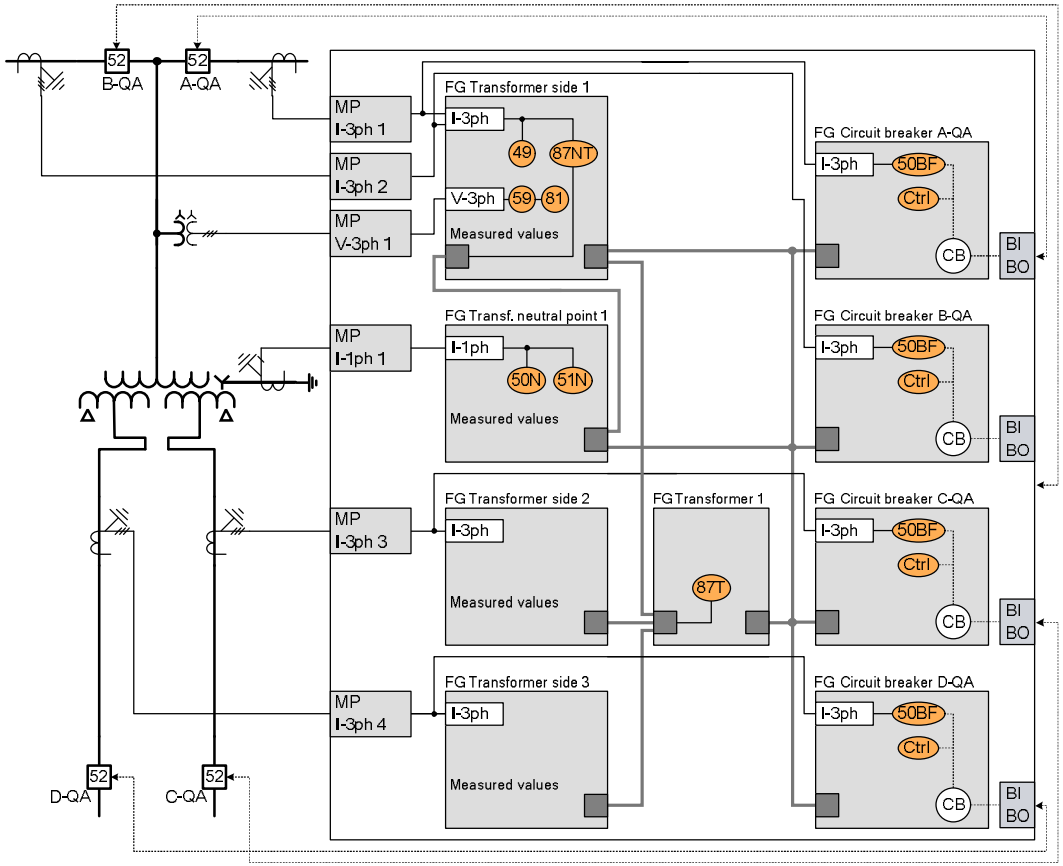

Engineering steps:

- Start with the application template
- Add the MPs
- Add the FGs
- Insert the necessary functions into the FGs

Frei verwendbar © Siemens AG 2016

7UT87 – Transformer for HVDC infeed (4 sides and 6 measuring points)

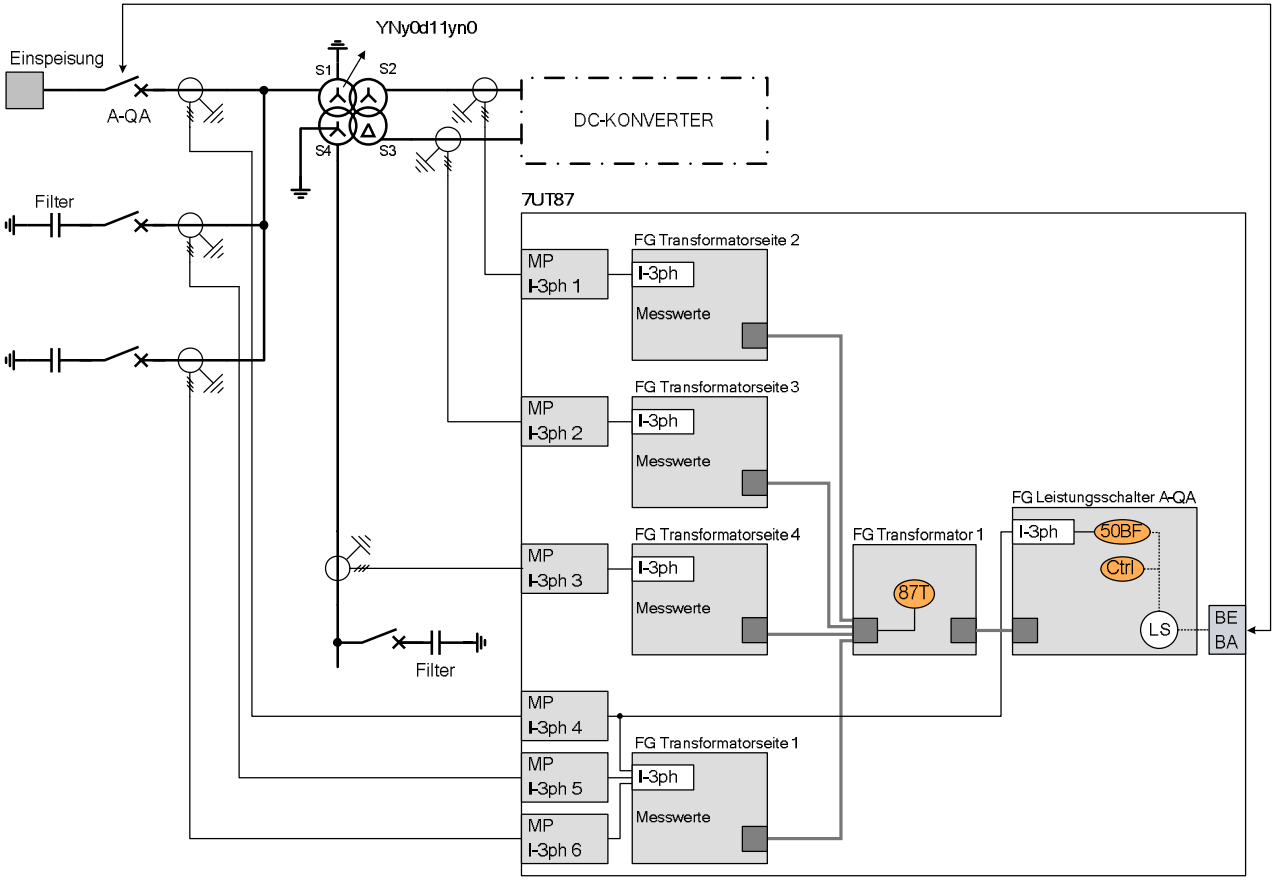

Frei verwendbar © Siemens AG 2016

Phase Regulating Transformer Single-Core Design

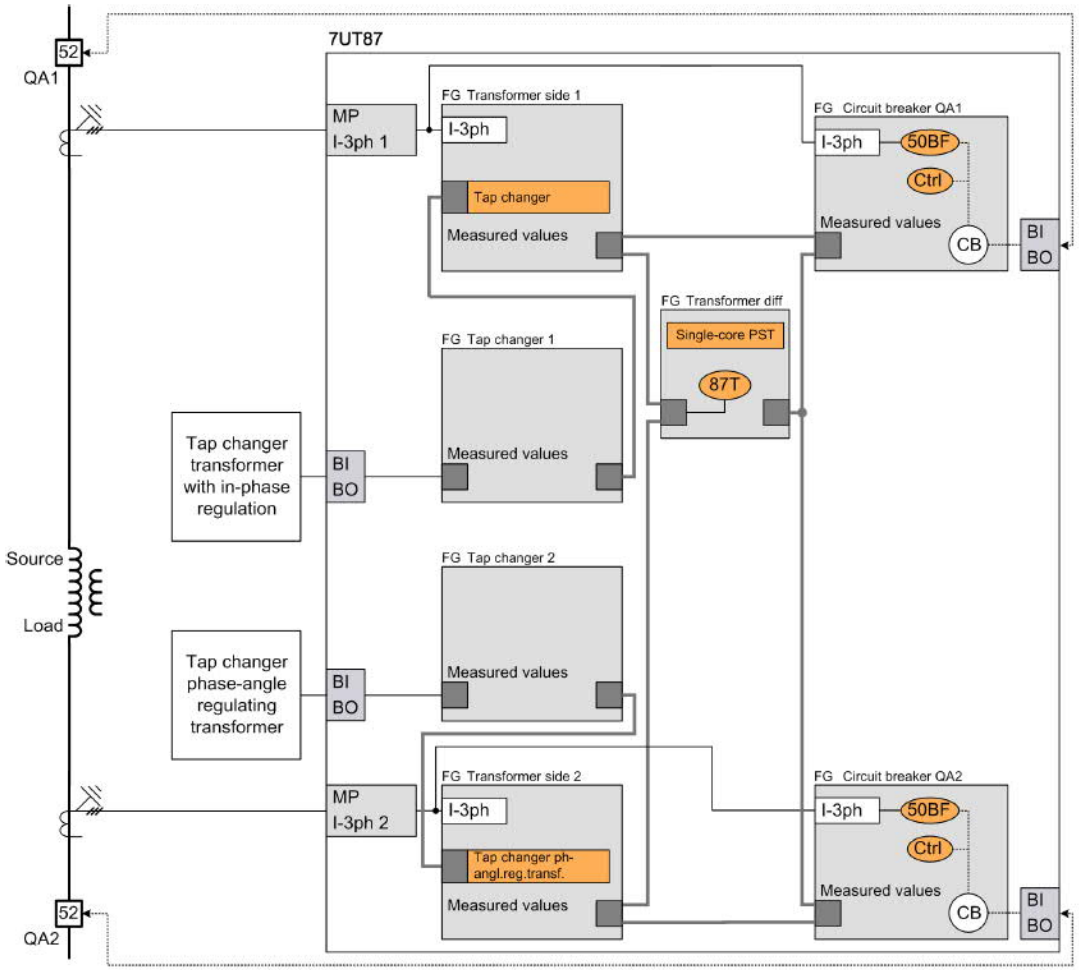

Frei verwendbar © Siemens A

Phase Regulating Transformer Two-Core Design

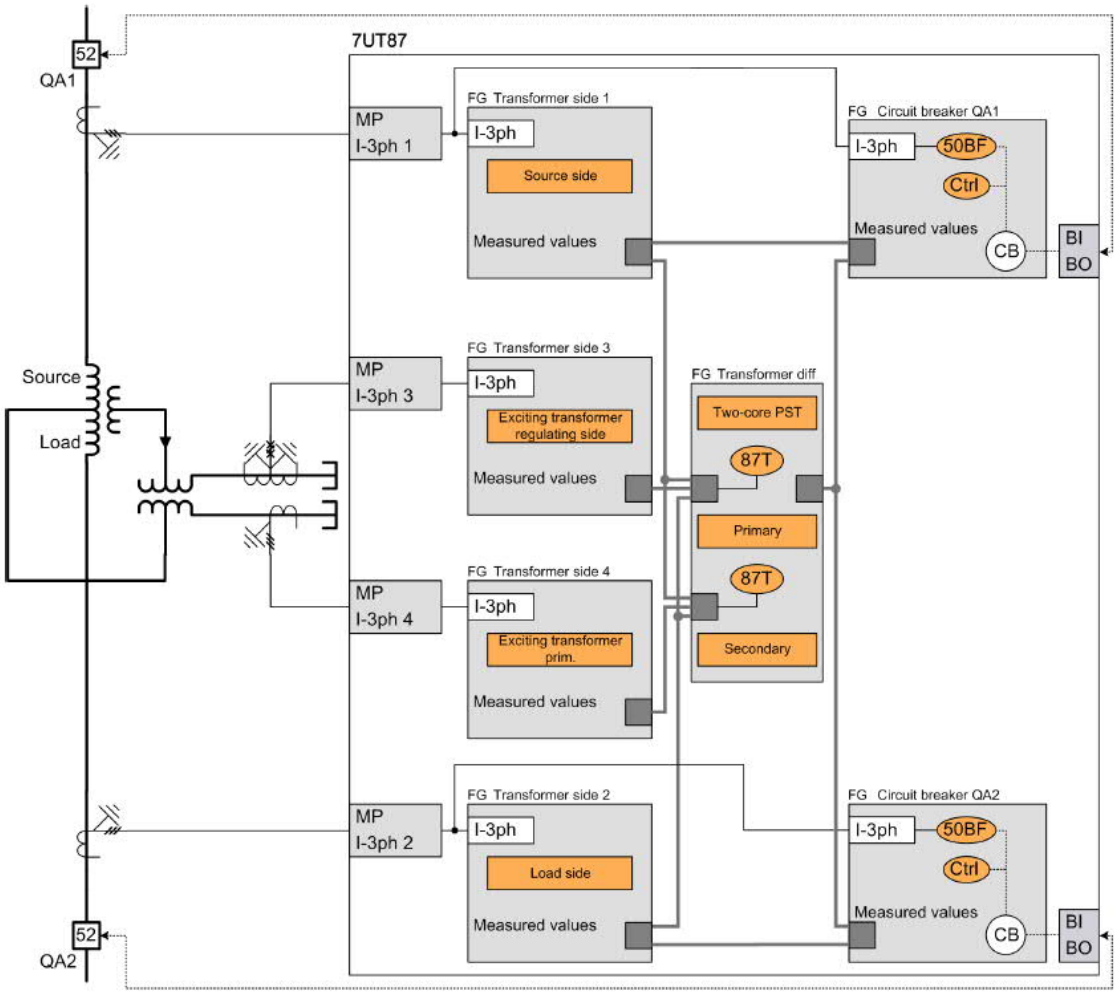

Frei verwendbar © Siemens AG

Special Transformator

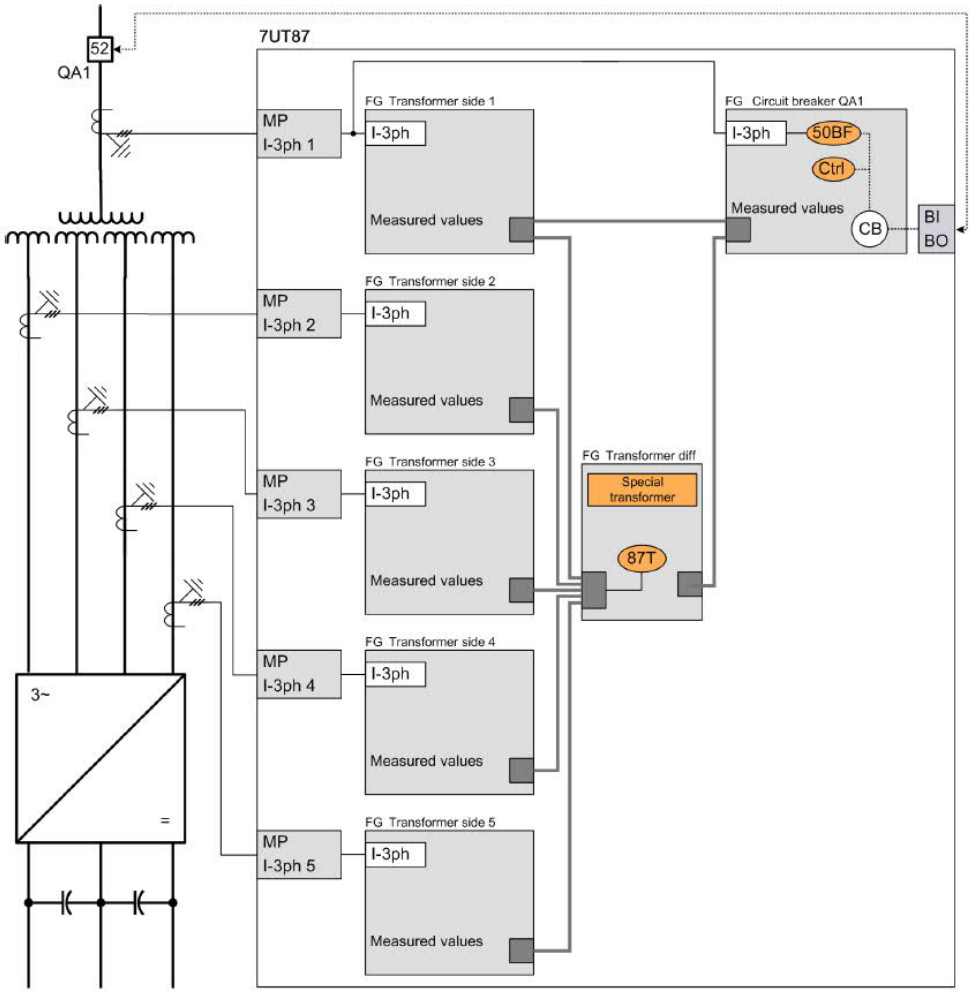

Frei verwendbar © Siemens AG 2016

SIEMENS

SIPROTEC 5 – the new SIPROTEC series

+ **Individually configurable devices –**
Cost-efficient solution over the entire life cycle

+ **Trendsetting system architecture –**
Flexibility and security for highly meshed systems

+ **Multilayered security mechanisms –**
Maximum possible security and availability

+ **Consistent engineering for system and devices –**
Efficient operation concepts, flexible engineering

SIPROTEC 5 – the new benchmark for protection, automation, and monitoring of grids

Frei verwendbar © Siemens AG 2016

SIPROTEC 5
Functional Integration

SIEMENS

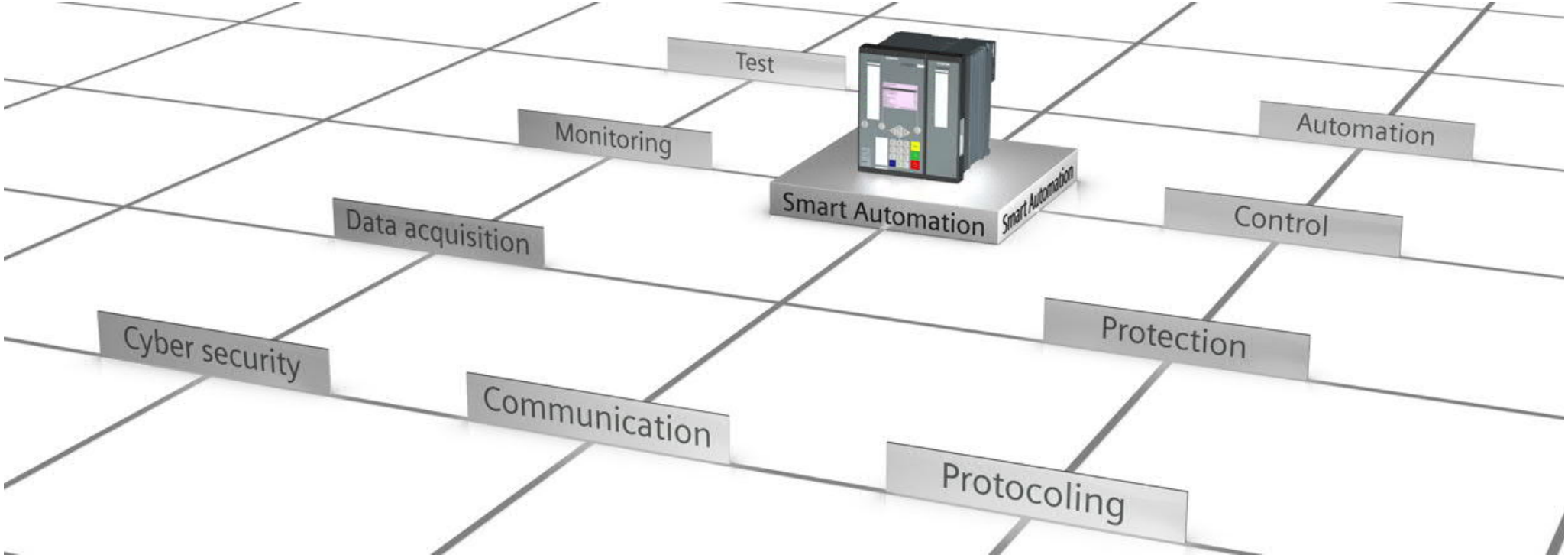

SIPROTEC 5 – 1 device for all tasks

Frei verwendbar © Siemens AG 2016

SIPROTEC 5 –
Proven solution for all application

SIEMENS

Distance protection	7SA8
Line differential protection	7SD8
Transformer differential protection	7UT8
Overcurrent and feeder protection	7SJ8
Combined line differential & distance protection	7SL8

7SS85	Busbar protection
7SK8	Motor protection
7VK8	Breaker management
7UM85	Generator protection
6MD8	Bay controller
7KE85	Fault recorder

Easy engineering and evaluation with DIGSI 5 and SIGRA

Frei verwendbar © Siemens AG 2016

SIPROTEC 5
Perfectly Tailored Fit

SIEMENS

- Flexible configurability of device hardware
- Flexible configurability of device functions

1 Base module (with main functions)

\+ optional expansion modules

\+ local operator control panels for base and expansion modules

\+ optional plug-in modules

= Your **individual** SIPROTEC 5 device supplied by Siemens as a completely mounted unit!

Frei verwendbar © Siemens AG 2016

SIPROTEC 5
Designed to communicate

SIEMENS

- Serial and Ethernet-based communication modules
- Electrical and optical versions
- Basic module with 2 slots for communication modules
- Expansion module CB202 with 2 additional slots
- In total up to 4 communication modules per SIPROTEC 5 device in any combination
- Flexible IEC 61850 Engineering
- **Full compatibility with IEC 61850 Edition 1 and 2**

Ideally equipped for the demands of today and the future

Frei verwendbar © Siemens AG 2016

SIPROTEC 5
Holistic Workflow

SIEMENS

Operation
- Documentation
- Testing
- Maintenance

Design
- Application
- Specification

Commissioning
- Test
- Documentation

Implementation
- Device selection
- Planning
- Engineering
- Settings

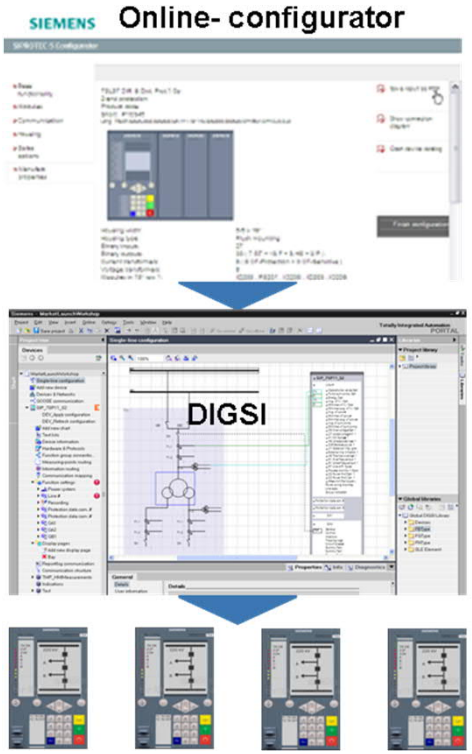

Streamlined workflow from system design to operation

Frei verwendbar © Siemens AG 2016

SIPROTEC 5
Smart automation of grids

SIEMENS

- Highly precise acquisition and processing of process values and Synchrophasor (PMU) for all SIPROTEC 5 devices
- Open, scalable architecture for IT Integration and new functions
- Intelligent functions, e.g. for network operation, analysis of faults or Power Quality
- **Latest and demanding standards in communication and Cyber Security**

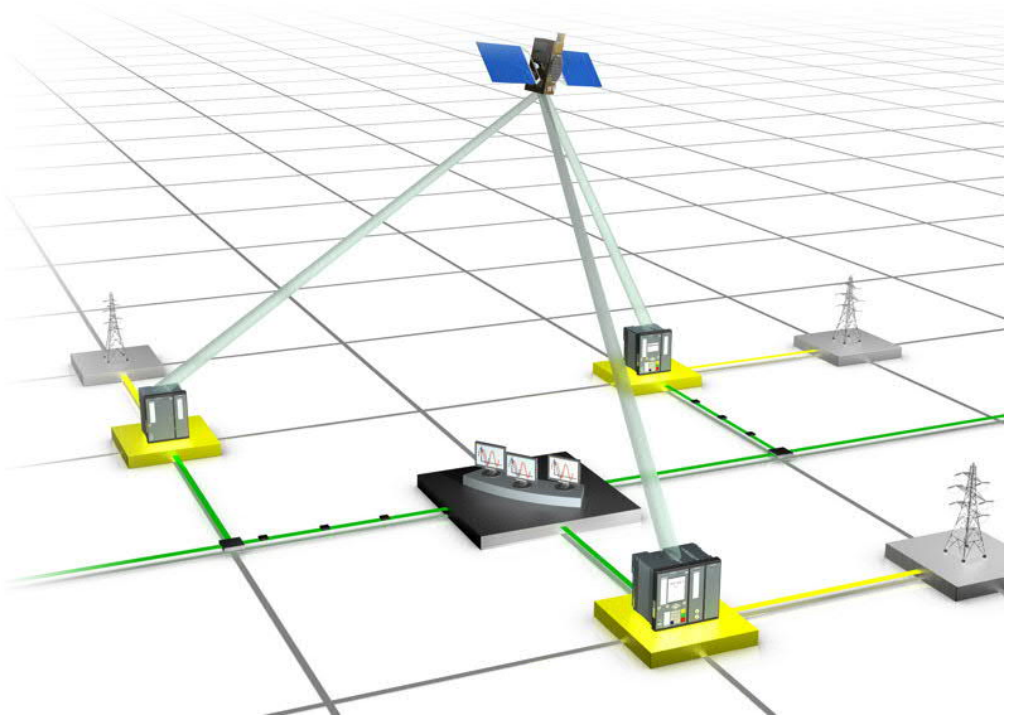

Platform for high grid stability and intelligent energy automation

Frei verwendbar © Siemens AG 2016

SIPROTEC 5
Safety and security inside

SIEMENS

- Durable and robust hardware and a sophisticated layout of the entire electronics
- Highest strength regarding voltage, EMC, climate and mechanical stress
- Safety CT-Plug
- Sophisticated self-monitoring routines
- Multilayered security mechanism in every link of the safety and security chain

Highest degree of safety, reliability and availability

Frei verwendbar © Siemens AG 2016

Contact

Sebastian Schneider
EM DG PRO LM PR

Humboldtstr. 59
90459 Nuremberg

Phone: +49 (911) 433-7170

E-Mail:
sebastian.schneider@siemens.com

siemens.com/energy-automation-products

Frei verwendbar © Siemens AG 2016