SIEMENS
Ingenuity for life

SIPROTEC 5
Line Protection

Unrestricted © Siemens AG 2015

siemens.com/siprotec5

Content

- **Overview Line Protection family** **3**
- Device Profiles 6
- Functions 11
- Applications 19
- Appendix 25

Frei verwendbar © Siemens AG 2016

SIPROTEC 5
The Line Protection family

SIEMENS

Different device types
→ One family with uniform properties

Distance Protection	• 7SA82 • 7SA86 • 7SA87
Differential Protection	• 7SD82 • 7SD86 • 7SD87
Differential and Distance Prot.	• 7SL86 • 7SL87
O/C Protection for O/H lines	• 7SJ86
Circuit-breaker Management	• 7VK87

Frei verwendbar © Siemens AG 2016

SIPROTEC 5
Scope of Line Protection Devices

SIEMENS

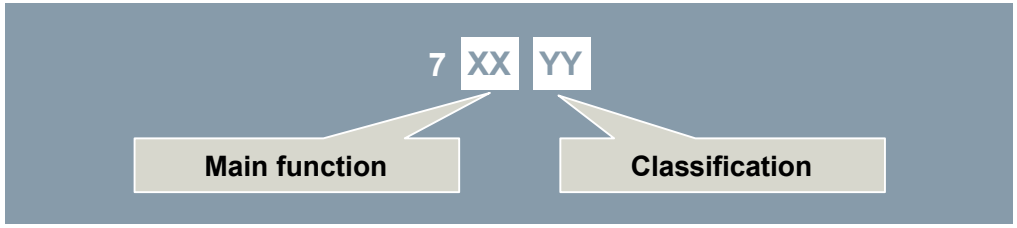

7	XX	82	• Exclusively 3-pole tripping • I/O quantity not expandable
7	XX	86	• Exclusively 3-pole tripping • I/Os completely flexible
7	XX	87	• 1- and 3-pole tripping • I/Os completely flexible

	7SA82	7SD82	7SA86	7SD86	7SL86	7SJ86	7SA87	7SD87	7SL87	7VK87
3-pole tripping	■	■	■	■	■	■				
1-/3-pole tripping							■	■	■	■
Flexible and configurable HW			■	■	■	■	■	■	■	■
Distance Protection	■		■				■			
Line Differential Protection		■		■				■		
O/C protection for O/H lines	■	■	■	■	■	■	■	■	■	
Line Differential and Distance Prot.					■				■	
Circuit-breaker Management										■

Next click ▸ next page

Frei verwendbar © Siemens AG 2016

SIPROTEC 5
<u>One</u> Line Protection family: What does it mean?

SIEMENS

Functional identity: Apart from 1-pole tripping and auto-reclosing the two device classes (7xx84/86 and 7xx87) have the same functionality

Two different manuals

One type test report

SIEMENS
Infrastructure & Cities Sector
Smart Grid Division
Energy Automation

TYPPRÜFUNG - *TYPE TEST*

PRÜFURKUNDE
TEST CERTIFICATE

Ausgabe Nr.: 04
Edition No.
Prüfbericht Nr.: TS0413-14
Test Report No.

Prüfgegenstand:
Tested equipment

Multifunktionsschutzgeräte SIPROTEC 5
Multifunction Protection Relays SIPROTEC 5
Produktgruppe: Digitaler Leitungsschutz
Product group: Numerical Line Protection
7SL87, 7SL86, 7SA87, 7SA86, 7SA84, 7SD87, 7SD86, 7SD84, 7SJ86, 7VK87

One device driver (DDD) → One FW version

Devices_LineProt_FW-V03.01_CFG-V03.01_DDD-V03.02.ddd

7SA84, 7SA86, 7SA87, 7SD84, 7SD86, 7SD87, 7SJ86, 7SL86, 7SL87, 7VK87, Device Drivers for DIGSI 5 - DDD, DIGSI 5

Benefits

- Effective training: "If you know a function in one device you know it in all devices"
- Ease of handling of the latest revisions
- Possibility of straightforward approval procedures

Next click ▸ next page

Frei verwendbar © Siemens AG 2016

Content

- Overview Line Protection family 3
- **Device Profiles 6**
- Functions 11
- Applications 19
- Appendix 25

Frei verwendbar © Siemens AG 2016

Distance protection for 3-pole tripping
7SA82 – Profile

SIEMENS

Applications

- Distance protection
- Multifunctional protection
- All network types, all voltage levels
- **Exclusively 3-pole tripping**
- **4 CT, 4 VT – not expandable**
- **11/23 BI, 9/16 BO – not expandable**
- Up to 2 plug-in modules

Same functionality as 7SA86, except minimal trip time

Not expandable

Suitable device 7SA82

Device functions

- **Minimal trip time 1.25 cycle**
- Distance protection with Z<, I, V/I and V/I/φ pickup methods; zone characteristic Quadrilateral or MHO
- Power Swing detection
- AR, Sync, Teleprotection functions
- Ground fault protection functions for grounded/comp./isolated networks
- V, I, f, P/Q, θ, BF functions
- Serial protection interface
- Phasor measurement unit PMU
- IEC 61850 (Edition 1 and 2)
- DNP3, IEC 60870-5-104
- Modbus TCP
- Multiple & redundant communication
- SIPROTEC 5 standard functions for protection, control and monitoring

Frei verwendbar © Siemens AG 2016

Distance protection for 3-pole tripping
7SA86 – Profile

SIEMENS

Applications

- Distance protection
- Multifunctional protection
- All network types, all voltage levels
- **Exclusively 3-pole tripping**
- 4 CT, 4 VT … (x CT, x VT)
- **7 BI, 14 BO ... 59 BI, 33 BO …more**
- Up to 5 plug-in modules
- Up to 9 expansion modules

Expandable

Suitable device 7SA86

Device functions

- **Minimal trip time <1 cycle**
- Distance protection with Z<, I[1)], V/I[1)] and V/I/φ[1)] - pickup methods; zone characteristic Quadrilateral or MHO
- Power Swing detection
- AR, Sync, Teleprotection functions
- Ground fault protection functions for grounded/comp./isolated networks
- V, I, f, P/Q, Q/V, θ, BF functions
- Serial protection interface
- Phasor measurement unit PMU
- IEC 61850 (Edition 1 and 2)
- DNP3, IEC 60870-5-104
- Multiple & redundant communication
- SIPROTEC 5 standard functions for protection, control and monitoring

1) Operate one-by-one or in parallel to Z<-pickup

Frei verwendbar © Siemens AG 2016

Distance protection for 1-/3-pole trip
7SA87 – Profile

SIEMENS

Applications

- Distance protection
- Multifunctional protection
- All network types, all voltage levels
- **1-/3-pole tripping**
- 4 CT, 4 VT … (x CT, x VT)
- **7 BI, 14 BO ... 59 BI, 33 BO …more**
- Up to 5 plug-in modules
- Up to 9 expansion modules

Same functionality as 7SA86, plus 1-pole trip ability

Expandable

Suitable device 7SA87

Device functions

- **Minimal trip time <1 cycle**
- Distance protection with Z<, I[1)], V/I[1)] and V/I/φ[1)] - pickup methods; zone characteristic Quadrilateral or MHO
- Power Swing detection
- AR, Sync, Teleprotection functions
- Ground fault protection functions for grounded/comp./isolated networks
- V, I, f, P/Q, Q/V, θ, BF functions
- Serial protection interface
- Phasor measurement unit PMU
- IEC 61850 (Edition 1 and 2)
- IEC 60870-5-103, IEC 60870-5-104
- DNP3, Modbus TCP
- Multiple & redundant communication
- SIPROTEC 5 standard functions for protection, control and monitoring

1) Operate one-by-one or in parallel to Z<-pickup

Frei verwendbar © Siemens AG 2016

Circuit-Breaker Management Device for 1-/3-pole trip 7VK87 – Profile

SIEMENS

Applications

- Universal device for automatic-reclosing and/or synchrocheck
- 2-stage circuit-breaker failure prot.
- Applicable with conventional and digital protection equipment
- Start and output signals via contacts or digital communication
- 4 CT, 4 VT … (x CT, x VT)
- **7 BI, 14 BO ... 59 BI, 33 BO …more**
- Up to 5 plug-in modules
- Up to 9 expansion modules

Expandable

Suitable device 7VK87

Device functions

- Automatic reclosing
- Circuit-breaker failure protection
- Synchrocheck, synchronizing function
- V, I, f functions
- Serial protection interface, PMU
- IEC 61850 (Edition 1 and 2)
- IEC 60870-5-103, IEC 60870-5-104
- DNP3, Modbus TCP
- Multiple & redundant communication
- SIPROTEC 5 standard functions for protection, control and monitoring

Frei verwendbar © Siemens AG 2016

Content

- Overview Line Protection family 3
- Device Profiles 6
- **Functions 11**
- Applications 19
- Appendix 25

Frei verwendbar © Siemens AG 2016

SIPROTEC 5
Distance protection (21/21N)

SIEMENS

Customers requirement

- Distance protection, trip time <1 cycle
- Quadrilateral or MHO characteristic
- Measures against load encroachment
- Parallel-line compensation
- Load current compensation for high fault resistances

Siemens solution

- Two algorithms: Classic method or RMD method
- Distance protection function with evaluation of all 6 impedance loops, configurable with 4 pickup methods Z<, I>[1], V</I>[1], V</I>/φ>[1]
- Zone charact. selectable as Quadrilateral or MHO
- Load cutout against load encroachment
- Configurable quantity of zones: 1 to >10, e.g. for ground-fault dependency of zone characteristic (Quad or MHO) or X-reach
- Applicable for all neutral grounding types: grounded or isolated/resonant
- Parallel-line compensation

Increased flexibility

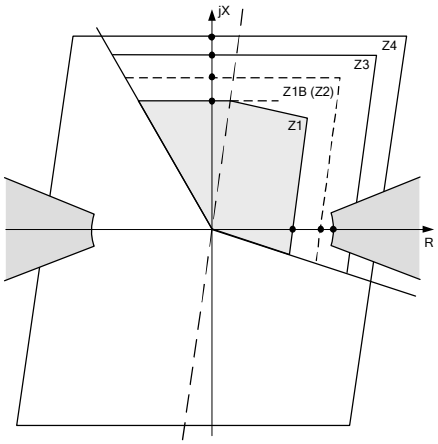

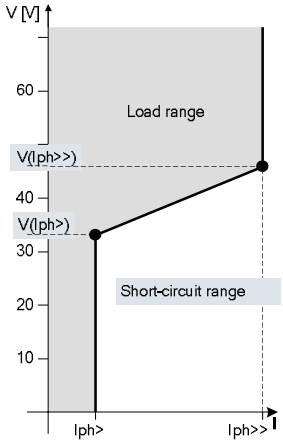

Benefits

- High-speed trip time: <1 cycle
- Classic distance prot. for all neutral grounding types
- RMD dist. prot. for grounded starpoint with load comp.
- Low/high-impedance set points for very short/long lines
- Collaboration with power-swing blocking, inrush-current detection
- Adequate operation in case of CT saturation and influence of CCVTs

1) Operate one-by-one or in parallel to Z<-pickup

Next click ▸ next page

Frei verwendbar © Siemens AG 2016

SIPROTEC 5
Distance zones more versatile

SIEMENS

Standard zone settings

Only 7SL8x

Only 7xx87

Expanded zone settings

Power Swing Blocking

Z 1

21.901.3571.1	Mode:	on
21.901.3571.2	Operate & flt.rec. blocked:	no
21.901.3571.121	Blocked if diff.prot.active:	no
21.901.3571.27	Blk. w. inrush curr. detect.:	no
21.901.3571.11	1-pole operate allowed:	yes
21.901.3571.101	Function mode:	ph-gnd and ph-ph
21.901.3571.114	Zone-spec. residu. comp.:	no
21.901.3571.109	Directional mode:	forward
21.901.3571.102	X reach:	2.500 Ω
21.901.3571.103	R (ph-g):	2.500 Ω
21.901.3571.104	R (ph-ph):	1.250 Ω
21.901.3571.113	Zone-inclination angle:	0 °
21.901.3571.110	Operate delay (1-phase):	0.00 s
21.901.3571.112	Operate delay (multi-ph.):	0.00 s
21.901.3571.105	Kr:	1.00
21.901.3571.106	Kx:	1.00

68 P.swing blk

21.5311.102	Zones to be blocked:	21 Distance prot. 1.Z 1 21 Distance prot. 1.Z 1B 21 Distance prot. 1.Z 3 21 Distance prot. 1.Z 4
21.5311.1	Mode:	on
21.5311.103	Max. blocking time:	oo s

Up to 15 zone instances

Inrush blocking (if applied)

no
yes

Function modes

ph-gnd and ph-ph
ph-gnd only
ph-ph only

Residual Compensation

no
yes

Zone type (from library)

Zone [polygon 1/3pol.]

Alternate zone type:

Zone [MHO 1/3 pol.]

P/S Blocking per zone

Similar settings per zone:

- SOTF
- Teleprotection
- AR zone

Next click ▸ next page

Frei verwendbar © Siemens AG 2016

SIPROTEC 5
STUB differential protection (87STUB)

One-and-a-half circuit breaker topology

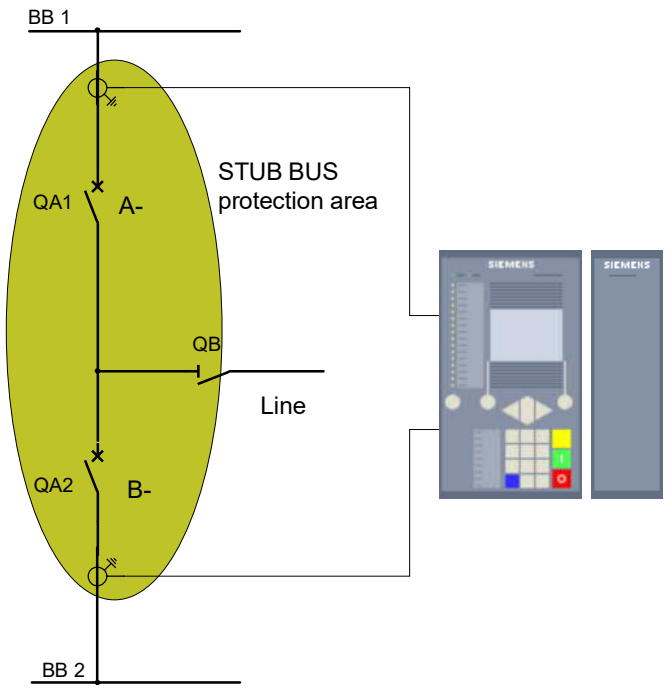

- Separate function for STUB protection, based on a differential protection principle
- Activation by status of line disconnector QB
- Both CTs connected to one protection device (HW configuration with min. 8 CTs required)
- High speed 3-pole tripping
- Available for 7SA, 7SD, 7SL
- Operating principle similar to 87L but without communication
- No PI communication required

Next click ▸ next page

Frei verwendbar © Siemens AG 2016

SIPROTEC 5
Power Swing / Out-of-step: Two functions

SIEMENS

Power Swing Blocking (68)

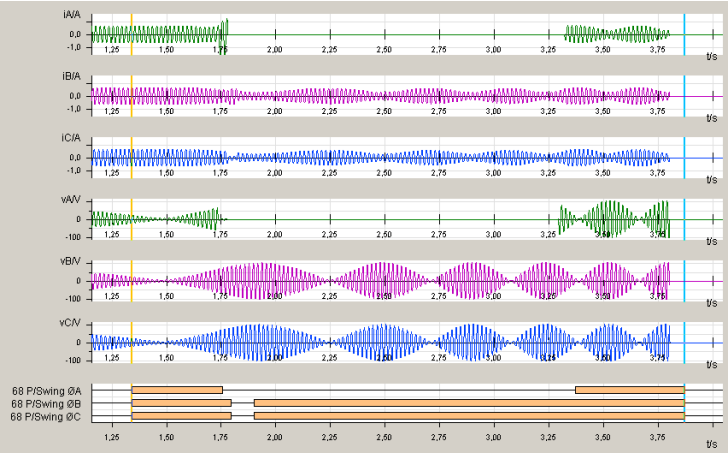

- Avoids uncontrolled tripping of the distance protection
- Operates under symmetrical load conditions as well as during single-pole auto-reclose cycles
- Requires no settings for P/S detection
- Setting to block each distance zone separately
- Settable maximum duration of zone blocking[1)]

Out-of-step protection (78)

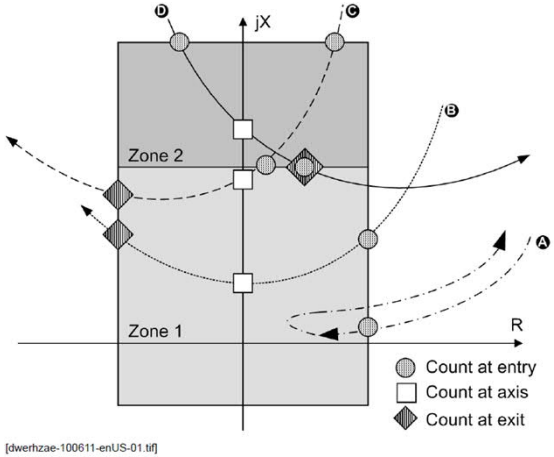

- Operates independently from settings of distance protection zones
- Increments counters depending on the point at which the impedance trajectory enters or exits the associated impedance zone
- Provides a response characteristic with up to 4 impedance zones in the R/X plane
- Evaluates the impedance trajectory of the positive sequence impedance

1) From version V04.00 on

Next click ▸ next page

Frei verwendbar © Siemens AG 2016

SIPROTEC 5
"True RMS" measurement precise up to 50th harmonic

SIEMENS

Customer requirement

- Detect and evaluate signals up to 50th harmonic, for protection and operational measured values

Siemens solution

- Sampling frequency of 8 kHz
- Example: Def. Time O/C
  30th harm: 1%, 50th harm: 3%,
  (with 33% harmonic in relation to fundamental, 50 Hz)

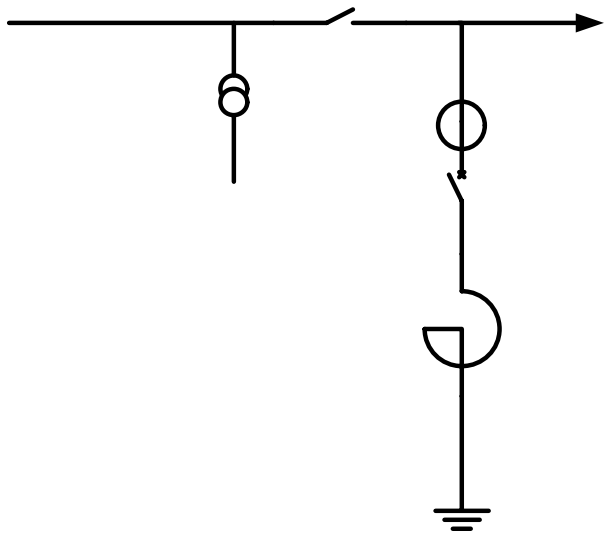

Device functions

- All O/C and some Voltage protection functions can be configured to operate either with the "fundamental" or the "True RMS" value
- Other functions which are related to thermal conditions (e.g. Thermal overload) also use True RMS values

Benefits

- Correct detection and evaluation of high harmonics
- Optimal O/C- and Overload protection
  → **Strongly improved True RMS measurement**

Next click ▸ next page

Frei verwendbar © Siemens AG 2016

SIPROTEC 5
Improved inrush stabilization

SIEMENS

Customer requirement

- Stable at inrush currents (energizing of power transformers or islanded network)
- Stable at sympathetic inrush currents, energizing of parallel transformers

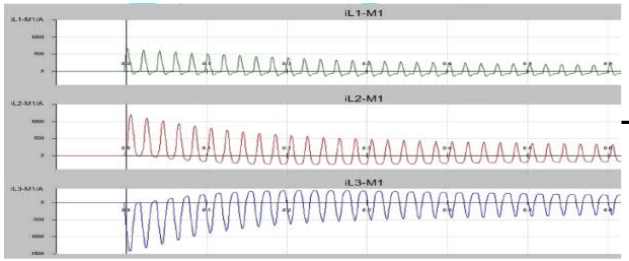

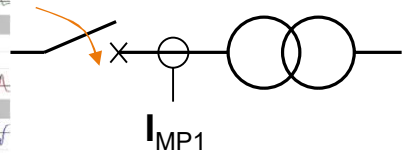

Siemens solution

- Inrush detection function blocks affected protection functions (configurable)
- New is the "one-out-of-two" decision of two different inrush algorithms

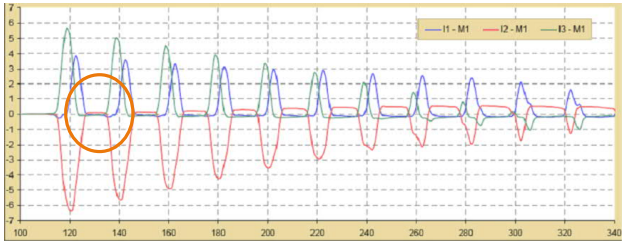

Method 1:
$I_{2,Harm} / I_{1,Harm}$ >15%

Method 2:
CWA → Flat area

Device functions

- Inrush detection function with two different measuring principles
  - Second harmonic evaluation with the cross block option
  - Curve Waveform Analysis (CWA)

Benefits

- Avoiding of false trip in the case of an inrush or sympathetic inrush, even when 2nd harmonics are quite low (CWA)
- Increased system availability
  → Increased stability at inrush currents

Next click ▸ next page

Frei verwendbar © Siemens AG 2016

SIPROTEC 5
Available functions per device: Where to find?

SIEMENS

Up-to-date list is available with the function-points calculator in the configurator

http://intranet.siemens.com/config-sip5/en

www.siemens.com/siprotec

Determine the function-points class:
Select one of the application templates and change the displayed functional scope if required:

DIFF/DIS overhead line, solid earth. Starpoint

Functional scope 7SL87 ANSI	Function	Abbr.	Always included	Add selected Qty. x	Value	=	Result Points	Qty.
	Protection functions for 3-pole tripping	3-pole	✔					✔
	Protection functions for 1-pole tripping	1-pole	✔					✔
	Hardware quantity structure expandable	I/O	✔					✔
21/21N	Distance protection	Z<, V/∠ (V,I)	1x	0 x	95	=		1x
87L	Line differential protection for 2 line ends	ΔI	✔					✔
87L	Line differential protection for 3 to 6 line ends (dependent on Significant properties)	ΔI	✔					✔
25	Synchrocheck, synchronizing function	Sync		1 x	60	=	60	1x
27	Undervoltage protection, 3-phase	V<		1 x	5	=	5	1x
27	Undervoltage protection, positive-sequence system	V1<		0 x	5	=		
27	Undervoltage protection, universal, Vx	Vx<		0 x	5	=		

Apply Cancel

Sum: 225
Function-points class: 225

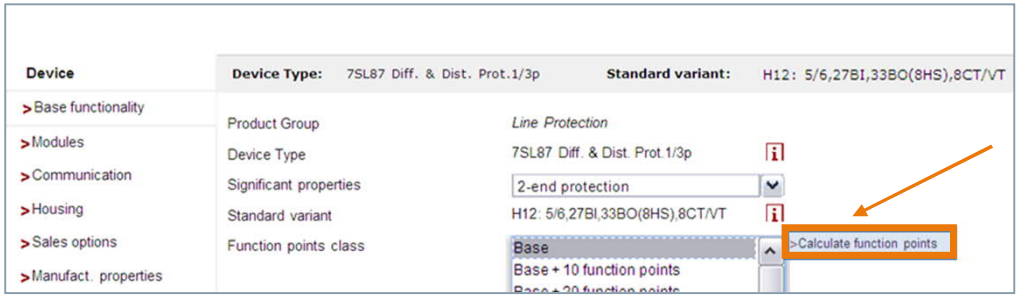

Further information about functions:

- Manuals
- DIGSI 5 Library
- Catalogs

http://www.siemens.com/downloads/siprotec-5

Frei verwendbar © Siemens AG 2016

Content

- Overview Line Protection family 3
- Device Profiles 6
- Functions 11
- **Applications 19**
- Appendix 25

Frei verwendbar © Siemens AG 2016

Application:
Line feeder – single busbar – one circuit breaker

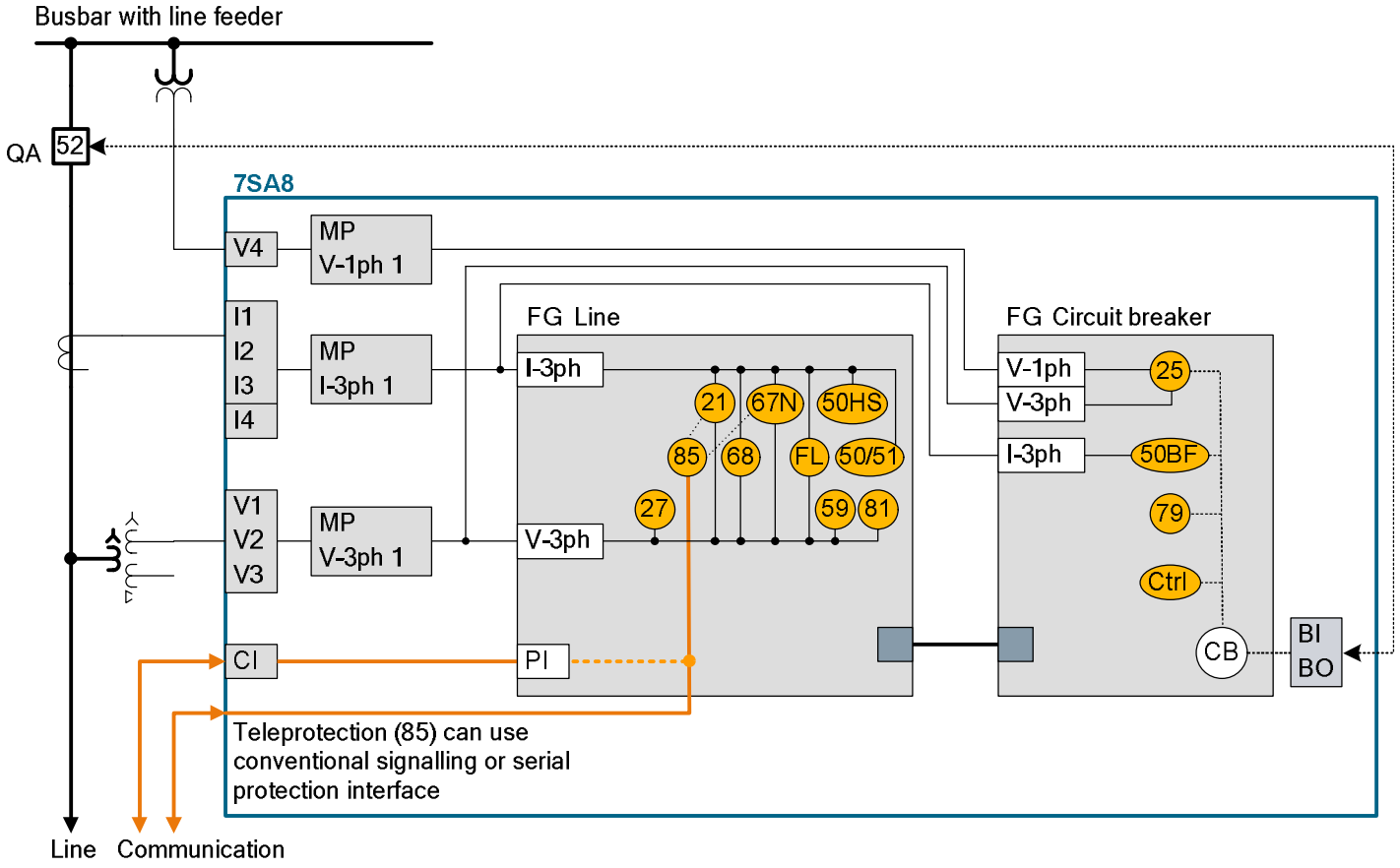

Frei verwendbar © Siemens AG 2016

Application: Line feeder with one-and-a-half circuit breaker configuration

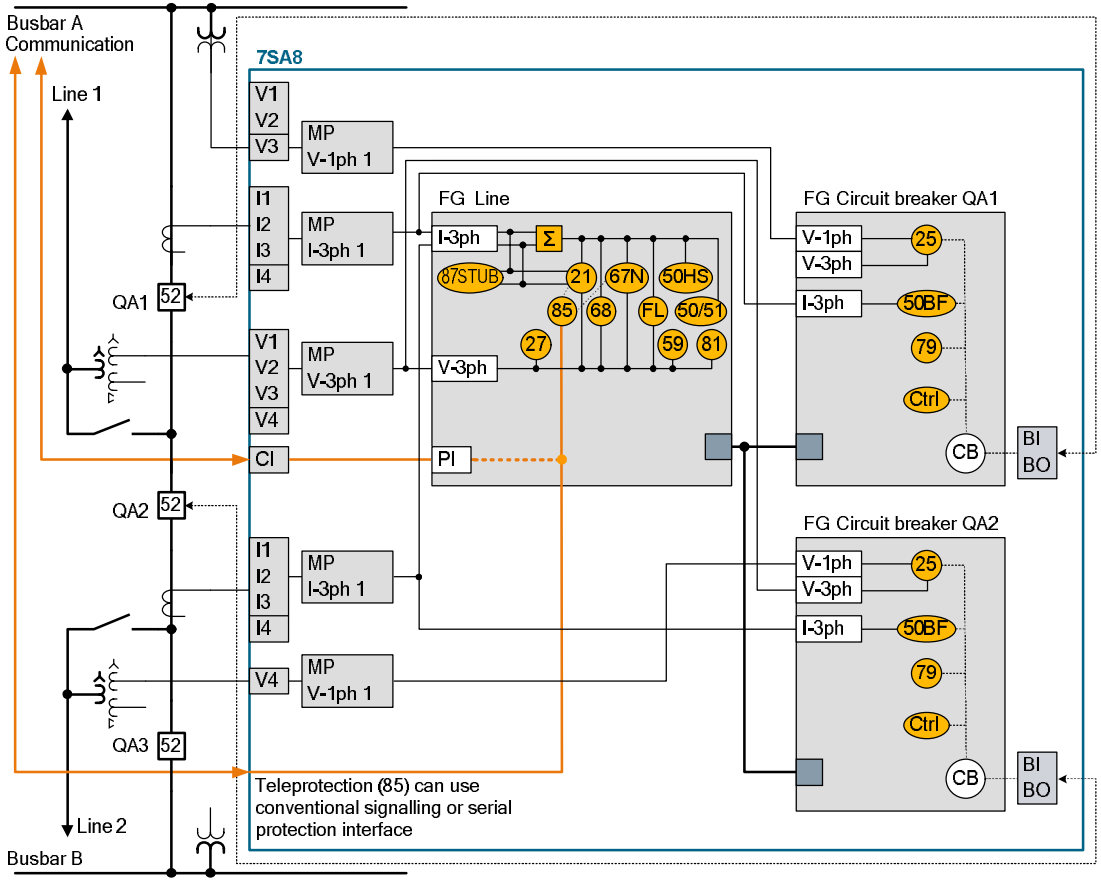

Frei verwendbar © Siemens AG 2016

Application: Cable feeder in networks with resonant-grounded or isolated starpoint

SIEMENS

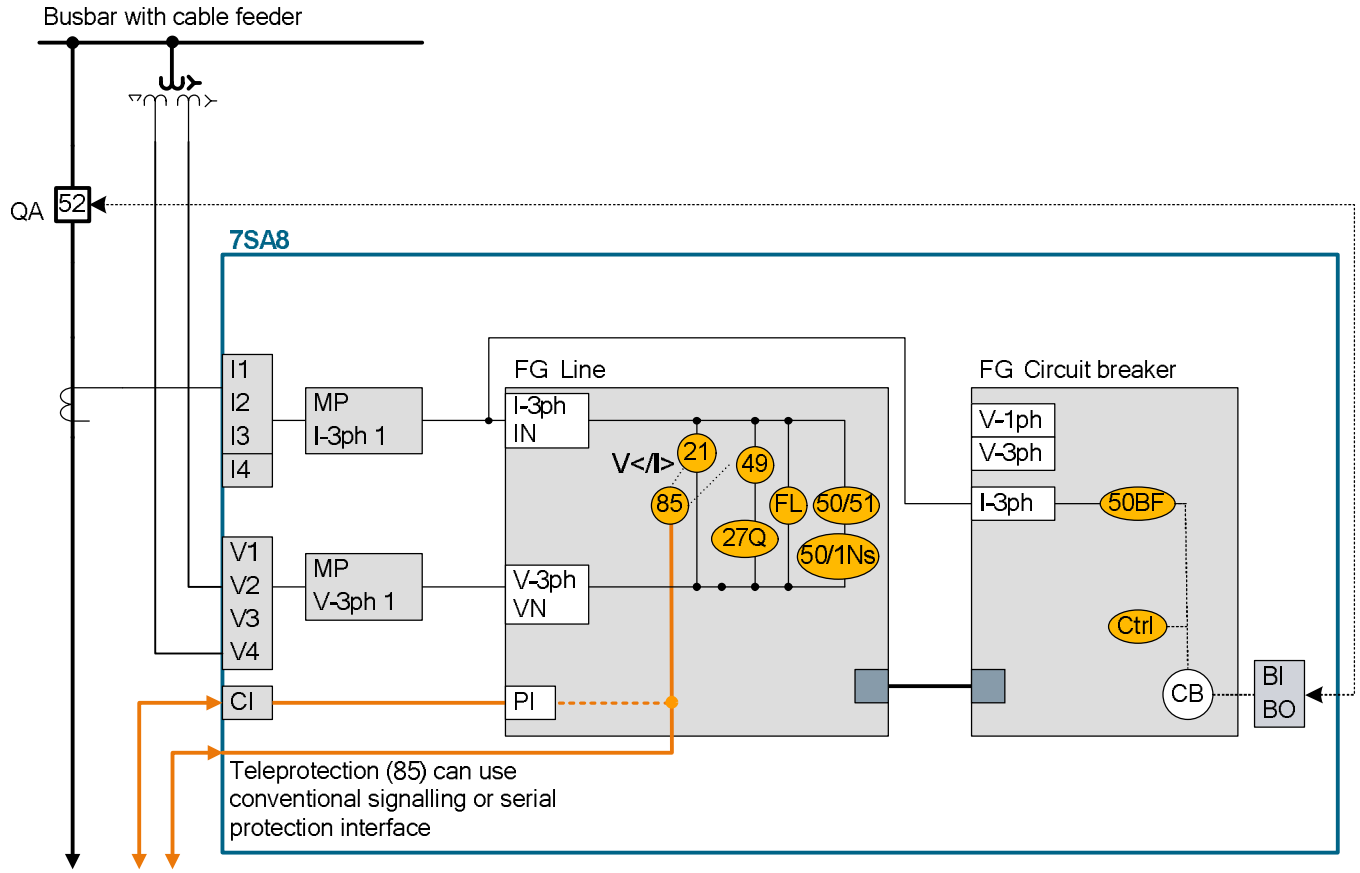

Frei verwendbar © Siemens AG 2016

Legend for Application figures

21	Distance protection
25	Synchrocheck, synchronization function
27	Undervoltage protection
27Q	Undervoltage controlled reactive power protection
49	Thermal overload protection
50/51	Overcurrent protection, phases, ground
50Ns/51Ns	Sensitive ground-current protection for comp./isol. starpoint
50HS	Instantaneous high-current tripping
50BF	Circuit-breaker failure protection
59	Overvoltage protection
67N	Directional overcurrent protection for ground faults
68	Power-swing blocking
79	Automatic reclosing
81	Frequency protection
85	Teleprotection schemes for 21 and/or 67 N
87STUB	STUB Differential protection
Ctrl	Control
FL	Fault locator
FG	Function group
MP	Measuring point
PI	Protection interface
CI	Communication interface
CB	Circuit breaker
BI	Binary input
BO	Binary output
Σ	Summation of currents

Frei verwendbar © Siemens AG 2016

SIEMENS

Available as separate PowerPoint Presentation “Line Differential Protection 7SD8”

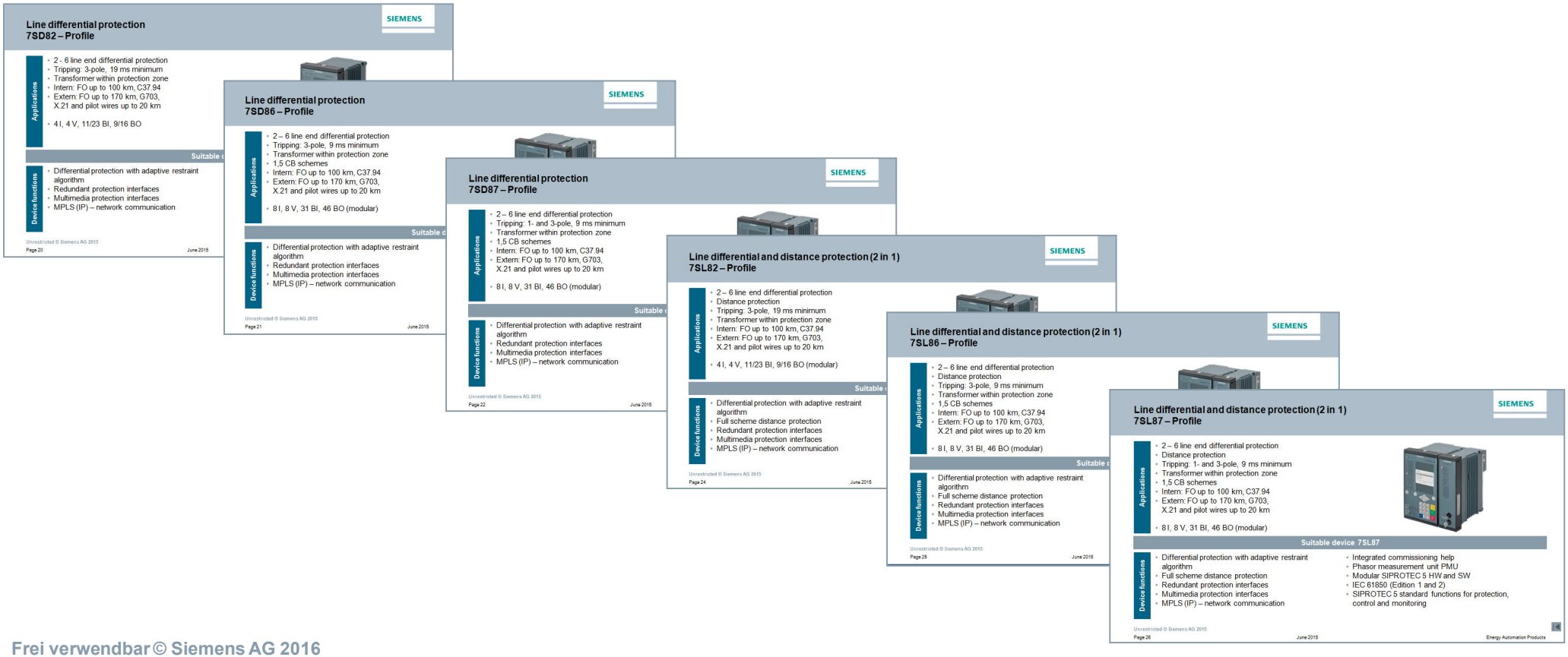

Frei verwendbar © Siemens AG 2016

SIPROTEC 5
Application Notes

SIEMENS

Several application notes are available for the following subjects:

- SIPROTEC 5 System
- Communication
- Protection
- System Engineering

How to find them:

http://www.siemens.com/downloads/siprotec-5

→ SIPROTEC5 General →Application Notes

SIPROTEC5 General

Application Notes

▶Communication

▶Control

▼Protection

Type & Size	Language ▲	Title	Status
<100 KB	de	Distanzschutz mit Schutzsignal-uebertragungsverfahren an einem Freileitungsabzweig (SIP5-APN-016)	2/8/2013
<100 KB	de	Eineinhalbleistungsschalterkonfiguration -Endfehlerschutz (SIP5-APN-017)	2/8/2013
<100 KB	de	Erdschlussüberwachung von 4 Abzweigen mit 7SJ82 oder 7SJ85 mit 4x I, 4x U (SIP5-APN-029)	1/14/2015
00 KB	de	Parametersatzumschaltung über CFC (SIP5-APN-023)	11/11/2013
00 KB	de	SIPROTEC 5 Einsatz für angezapfte Leitungen (SIP5-APN-003)	2/8/2013
00 KB	de	SIPROTEC 5 Leitungsschutz mit zwei FG Leitung (SIP5-APN-021)	8/29/2013
<100 KB	de	SIPROTEC 7SK85 Motorschutz für Asynchronmotoren mit Korndörfer Starter (SIP5-APN-033)	11/11/2015
<100 KB	de	SIPROTEC 7UT8 - Spartransformator Bank mit 2 Stromwandlersätzen innerhalb der Dreieckverschaltung der Ausgleichswicklung (SIP5-APN-025)	2/28/2014
<100 KB	de	Syncrocheck mit Spannungsauswahl und unterschiedlichen Spgs.wandlerübersetzungsverhältnissen (SIP5-APN-026)	5/7/2014

Frei verwendbar © Siemens AG 2016

SIPROTEC 5
Application Notes related to Line Protection

Protection

SIP5-APN-003	Tapped Line Application
SIP5-APN-016	Distance protection with tele-protection (pilot protection) on an OHL feeder
SIP5-APN-017	Stub-protection
SIP5-APN-021	Line Protection with two FG Line
SIP5-APN-023	Change setting groups via CFC

System Engineering

SIP5-APN-002	Breaker-and-a-half solutions
SIP5-APN-004	Sync Check with multiple voltage sources
SIP5-APN-012	Control of Breaker-and-a-half diameters and double busbar configurations and use of Phasor Measurement Unit (PMU)
SIP5-APN-018	Breaker-and-a-half – Automatic reclosing and leader follower

Frei verwendbar © Siemens AG 2016

Content

- Overview Line Protection family 3
- Device Profiles 6
- Functions 11
- Applications 19
- **Appendix** **25**

Frei verwendbar © Siemens AG 2016

Migration Path
Distance protection

SIEMENS

SIPROTEC 4

7SA610

7SA5

7SA6

SIPROTEC 5

7SA82 | 7SL82

Modular

7SA86 | 7SA87

7SL86 | 7SL87

Frei verwendbar © Siemens AG 2016

Contact

Michael Claus
EM DG PRO LM PR

Humboldtstr. 59
90459 Nuremberg

Tel: +49 (911) 433-8261

E-Mail:
michael.claus@siemens.com

siemens.com/energy-automation-products

Frei verwendbar © Siemens AG 2016