SIEMENS
Ingenuity for life

SIPROTEC 5
Overcurrent Protection 7SJ8 and Motor Protection 7SK8

Unrestricted © Siemens AG 2016

siemens.com/siprotec5

Agenda

Overcurrent Protection

- Devices 7SJ8
- Typical applications 7SJ8
- Functional improvements 7SJ8

Motor Protection

- Devices 7SK8
- Typical applications/Functional improvements 7SK8

Appendix

- New functions with FW V7.0
- Migration Path Overcurrent and Motor protection

Frei verwendbar © Siemens AG 2016

Overcurrent or Motor Protection
You need powerful functionality and flexibility?

SIEMENS

"Then you should go for SIPROTEC 5!"

Powerful engineering with DIGSI 5

Modular hardware

Basic module +

up to 4 expansion modules

Modular and flexible communication

Different plug-in modules

Different protocols

Security inside

Flexible functionality

51 67 50 51N 50N 67N 67Ns 79 49 27 59 81 25 32 • • •

SIPROTEC 5 Series

Frei verwendbar © Siemens AG 2016

SIPROTEC 5
Overcurrent and Motor Protection

SIEMENS

Overcurrent Protection
7SJ8

Motor Protection
7SK8

Frei verwendbar © Siemens AG 2016

Agenda

Overcurrent Protection

- **Devices 7SJ8**
- Typical applications 7SJ8
- Functional improvements 7SJ8

Motor Protection

- Devices 7SK8
- Typical applications/Functional improvements 7SK8

Appendix

- New functions with FW V7.0
- Migration Path Overcurrent and Motor protection

Frei verwendbar © Siemens AG 2016

SIPROTEC 5
Overcurrent protection devices

SIEMENS

OC protection (modular IO)	**7SJ85**	
OC protection (non-modular IO)	**7SJ82**	
OC protection, **as line protection backup** (modular IO)	**7SJ86**	

Frei verwendbar © Siemens AG 2016

Overcurrent protection
7SJ85 – Profile

SIEMENS

Application

- Feeder protection
- Multifunctional protection
- All network types, all voltage levels
- Multi feeder protection
- 4 I, 4 U … (x I, x V)
- 11 BI, 9 BO ... 59 BI, 33 BO …
- Up to 5 plug-in modules
- Up to 4 expansion modules in 1 row
- More IO in 2nd row

expandable

Suitable device 7SJ85

Device functions

- Directional OC protection with basic & advanced functionality
- Ground fault protection for comp./isolated networks
- V, f, P/Q protection functions
- AR, Sync function
- Capacitor bank protection
- Protection interface
- Phasor measurement unit PMU
- Modular software
- IEC 61850 (Edition 1 and 2)
- Multiple & redundant communication
- SIPROTEC 5 standard functions for control and monitoring

Frei verwendbar © Siemens AG 2016

SIPROTEC 5
Overcurrent protection devices

SIEMENS

OC protection (modular IO)	**7SJ85**	
OC protection (non-modular IO)	**7SJ82**	
OC protection, **as line protection backup** (modular IO)	**7SJ86**	

Frei verwendbar © Siemens AG 2016

Overcurrent protection
7SJ82 – Profile

SIEMENS

Application

- Feeder protection
- Multifunctional protection
- All network types, all voltage levels

- 4 I, 4 V
- 11 BI, 9 BO or 23 BI, 16 BO
- Up to 2 plug-in modules
- Non-expandable via 1/6 modules

Same functionality as 7SJ85

non-expandable

Suitable device 7SJ82

Device functions

- Dir. & Non-Dir. OC protection with basic & advanced functionality
- Protection interface
- Ground fault protection for comp./isolated networks
- V, f, P/Q protection functions
- AR, Sync function
- Phasor measurement unit PMU
- Modular software
- IEC 61850 (Edition 1 and 2)
- Multiple & redundant communication
- SIPROTEC 5 standard functions for control and monitoring

Frei verwendbar © Siemens AG 2016

SIEMENS

Differentiation of 7SJ82 and 7SJ85/86

	7SJ82	7SJ85/86

HW Modularity	• Base module not expandable with 1/6 expansion modules
	  • IO limited to 23 BI, 16 BO
	  • max. 4 I, 4 V
	  • max. 2 plug-in modules
	  • no keylock-switch option
	  • max. 16 LEDs
	• Standard and large display
		• Base module expandable with 1/6 expansion modules
		  • max. IO e.g.: 75 BI, 40 BO[1)]
		  • max. 24 analog inputs I or V
		  • max. 5 plug-in modules
		  • keylock switch option
		  • 32 / 48 / … LEDs
		• Standard and large display
		• Without display

Housing	• Flush mounting • Surface mounting via mounting rack possible	• Flush mounting • Surface panel mounting • Detached operation panel

1) 1/1 x 19" device

Frei verwendbar © Siemens AG 2016

SIEMENS

Differentiation of 7SJ82 and 7SJ85/86

	7SJ82	7SJ85/86

COM specifics	• Integrated port J:
	  • DIGSI 5
	  • IEC 61850 Reporting
	  • IEC 61850 GOOSE
		• Integrated port J:
		  • DIGSI 5
		  • IEC 61850 Reporting
		  • IEC 61850 GOOSE (only with CP300)

Application / FW	• Identical functionality • The same protection, supervision and automation functions are applied	

Frei verwendbar © Siemens AG 2016

SIPROTEC 5
Overcurrent protection devices

SIEMENS

OC protection (modular IO)	**7SJ85**	
OC protection (non-modular IO)	**7SJ82**	
OC protection, **as line protection backup** (modular IO)	**7SJ86**	

Frei verwendbar © Siemens AG 2016

Overcurrent protection, as line protection backup
7SJ86 – Profile

SIEMENS

Application

- Directional overcurrent protection as backup line protection
- Transmission networks

- 4 I, 4 V … (x I, x V)
- 11 BI, 9 BO ... 23 BI, 25 BO …
- max. 5 plug-in modules
- max. 4 expansion modules (1/6)

Same functionality as 7SJ82/85

expandable

Suitable device 7SJ86

Device functions

- Directional OC protection, configurable as **emergency function**
- **67N for high resistive gnd. faults** (same functions as in 7SA/7SL)
- **85/67N teleprotection schemes**
- AR, Sync function
- Phasor measurement unit PMU
- Modular software
- IEC 61850 (Edition 1 and 2)
- Multiple & redundant communication
- SIPROTEC 5 standard functions for control and monitoring

Frei verwendbar © Siemens AG 2016

Overcurrent protection
Predefined HW variants

SIEMENS

For each 7SJ8 device type several standard HW variants are predefined:

7SJ82

U1: 1/3 19’’,	4 I,	11 BI,	9 BO
U2: 1/3 19’’,	4 I,	23 BI,	16 BO
U3: 1/3 19’’,	4 I, 4 V,	11 BI,	9 BO
U4: 1/3 19’’,	4 I, 4 V,	23 BI,	16 BO

» Fast configuration of your HW

Frei verwendbar © Siemens AG 2016

Fast configuration of your HW
Predefined HW variants

SIEMENS

For each 7SJ8 device type several standard HW variants are predefined:

7SJ85

S1: 1/3 19’’,	4 I, 4 V,	11 BI,	9 BO
S2: 1/2 19’’,	4 I, 4 V,	17 BI,	16 BO
S3: 1/2 19’’,	4 I, 4 V,	27 BI,	17 BO
S4: 2/3 19’’,	4 I, 4 V,	43 BI,	25 BO
S5: 5/6 19’’,	4 I, 4 V,	59 BI,	33 BO

7SJ86

L1: 1/3 19’’,	4 I, 4 V,	11 BI,	9 BO
L2: 1/2 19’’,	4 I, 4 V,	17 BI,	16 BO
L3: 1/2 19’’,	4 I, 4 V,	23 BI,	25 BO

» Fast configuration of your HW

Frei verwendbar © Siemens AG 2016

Overcurrent protection
Online-Configurator – Define your device

SIEMENS

Define your own device according to your requirements!

Modify the standard variant by adding or changing modules according to the required number of currents & voltage inputs and binary Ios.

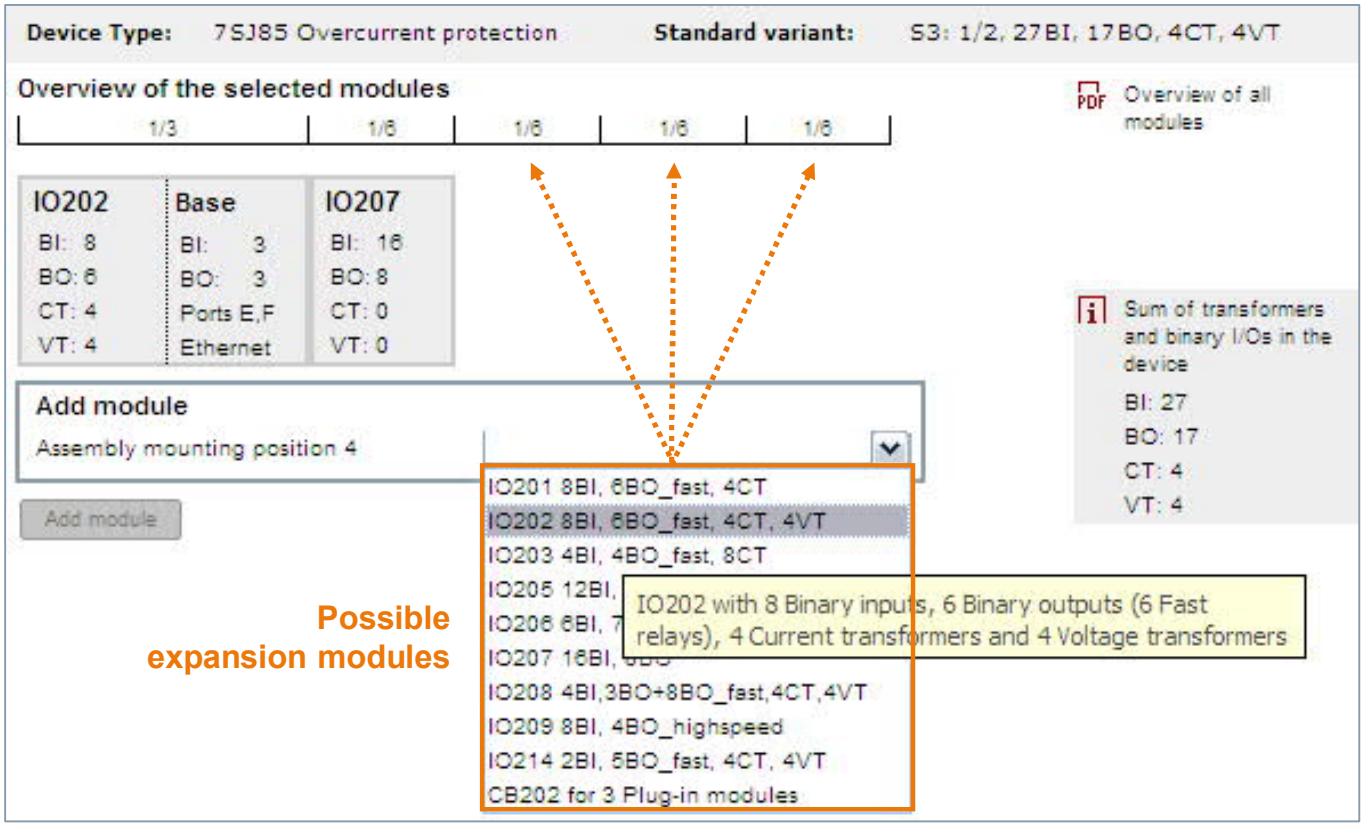

Frei verwendbar © Siemens AG 2016

Agenda

Overcurrent Protection

- Devices 7SJ8
- **Typical applications 7SJ8**
- Functional improvements 7SJ8

Motor Protection

- Devices 7SK8
- Typical applications/Functional improvements 7SK8

Appendix

- New functions with FW V7.0
- Migration Path Overcurrent and Motor protection

Frei verwendbar © Siemens AG 2016

Overcurrent protection 7SJ85
Protection of multiple feeders

SIEMENS

Customer requirement

- Protection of three feeders with only one device
- Flexible (expandable) hardware

Siemens solution

- OC protection device **7SJ85**
- Hardware:
  Standard Variant S1 + 1 x expansion module IO203
  -> 12 I, 4 V

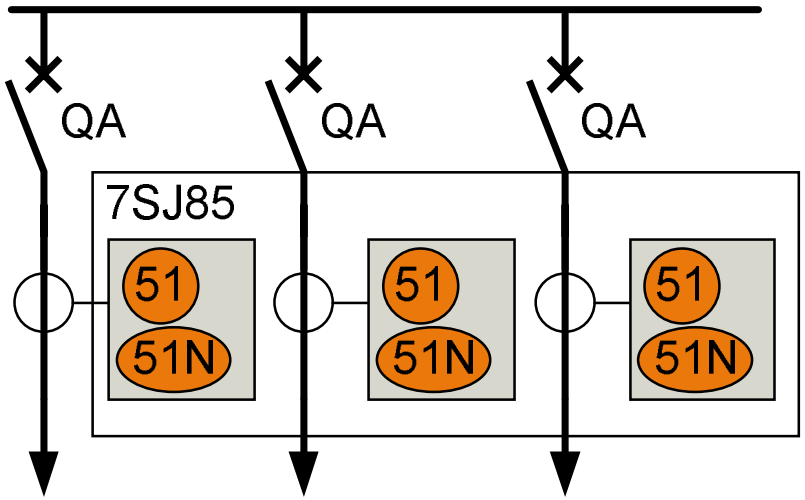

Device functions

- 3 function groups “V/I 3-phase", each connected to one 3-phase current measuring point
- 51, 51N (OC protection, phases & ground) per function group

Benefits

- Reduced investment:
  One device instead of three
- Simplified parameterization:
  Set one function and copy it
- Shortened commissioning
- Up to **7 feeders (50/51)** in one device (CP200)
- Up to **9 feeders (50/51/67)** in one device (CP300)

Frei verwendbar © Siemens AG 2016

Application template: protection of multiple feeders

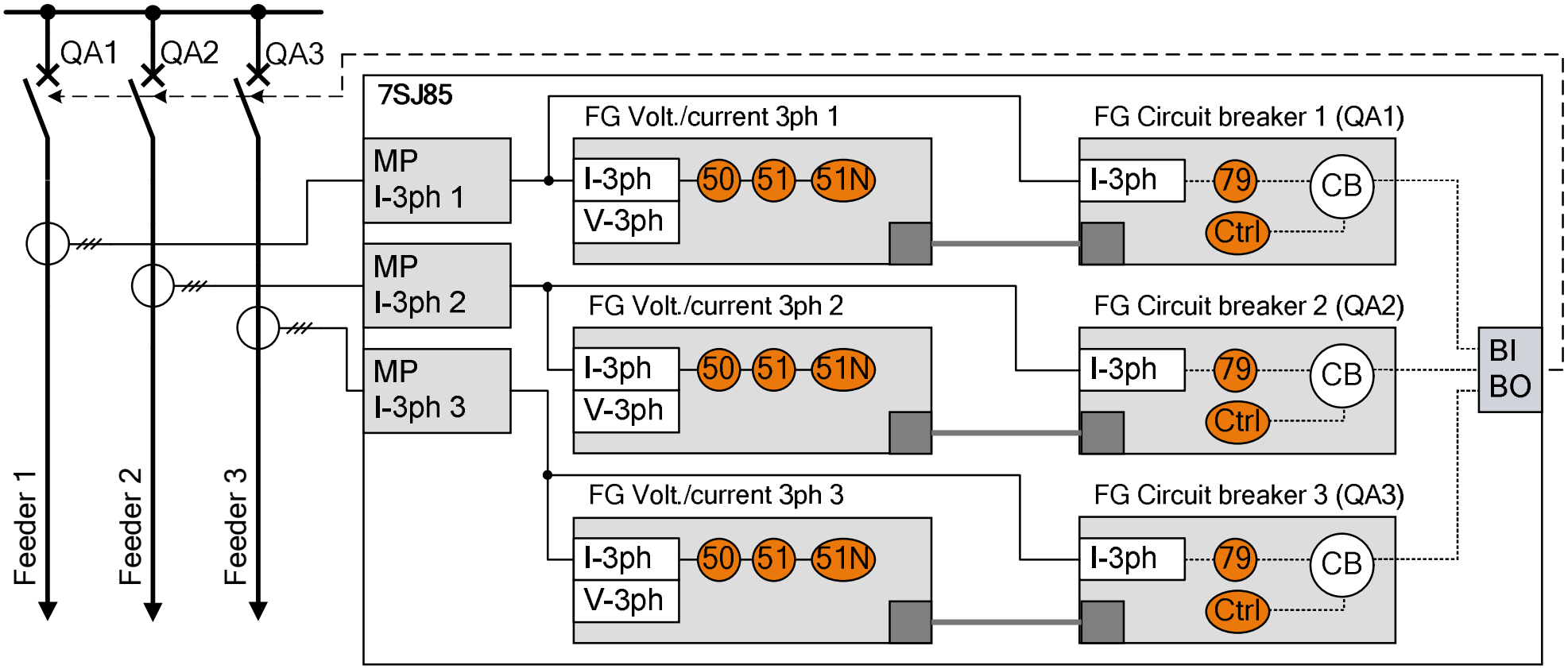

Frei verwendbar © Siemens AG 2016

Overcurrent protection 7SJ82, 7SJ85
Dir. Comparison of a line supplied from two sides

SIEMENS

Customer requirement

- Directional OC protection of a line supplied from two sides without time grading
- Supervised protection data communication via optical fiber

Siemens solution

- Integrated protection data interface
- Hardware: Std.Var S1: 4 I, 4 V
- App.Temp. "Dir. OC grounded"
- Communication: 1 plug-in module (2 x FO): protection data & station com.

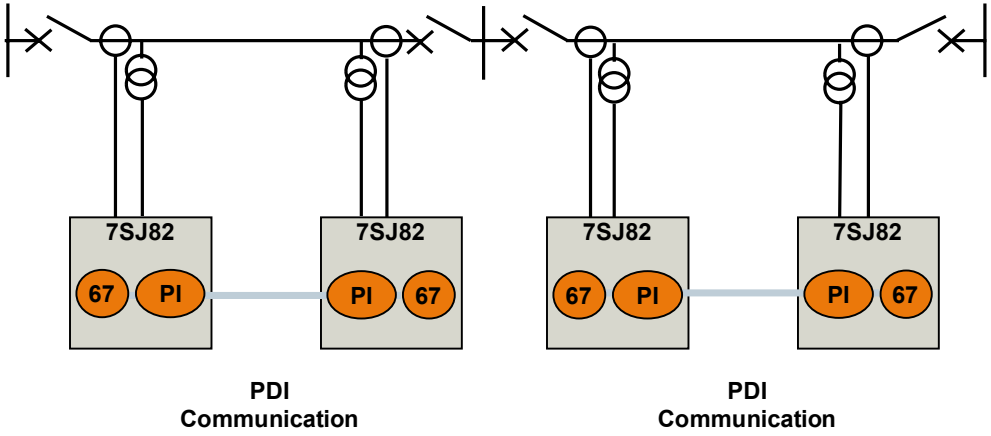

Device functions

- 1 function group “V/I 3-phase", connected to CTs and VTs, incl. fct. 67
- 1 FG "Prot. Data Communication" (PDI)
- Exchange of dir. information over the PDI for release (or blocking) the 67N
- Supervision of PDI link

Benefits

- Fast fault clearing
- Reduced investment (1 module)
- Adaptable to com. infrastructure
- Secure communication

Frei verwendbar © Siemens AG 2016

Application template:
Dir. Comparison for a line supplied from two sides

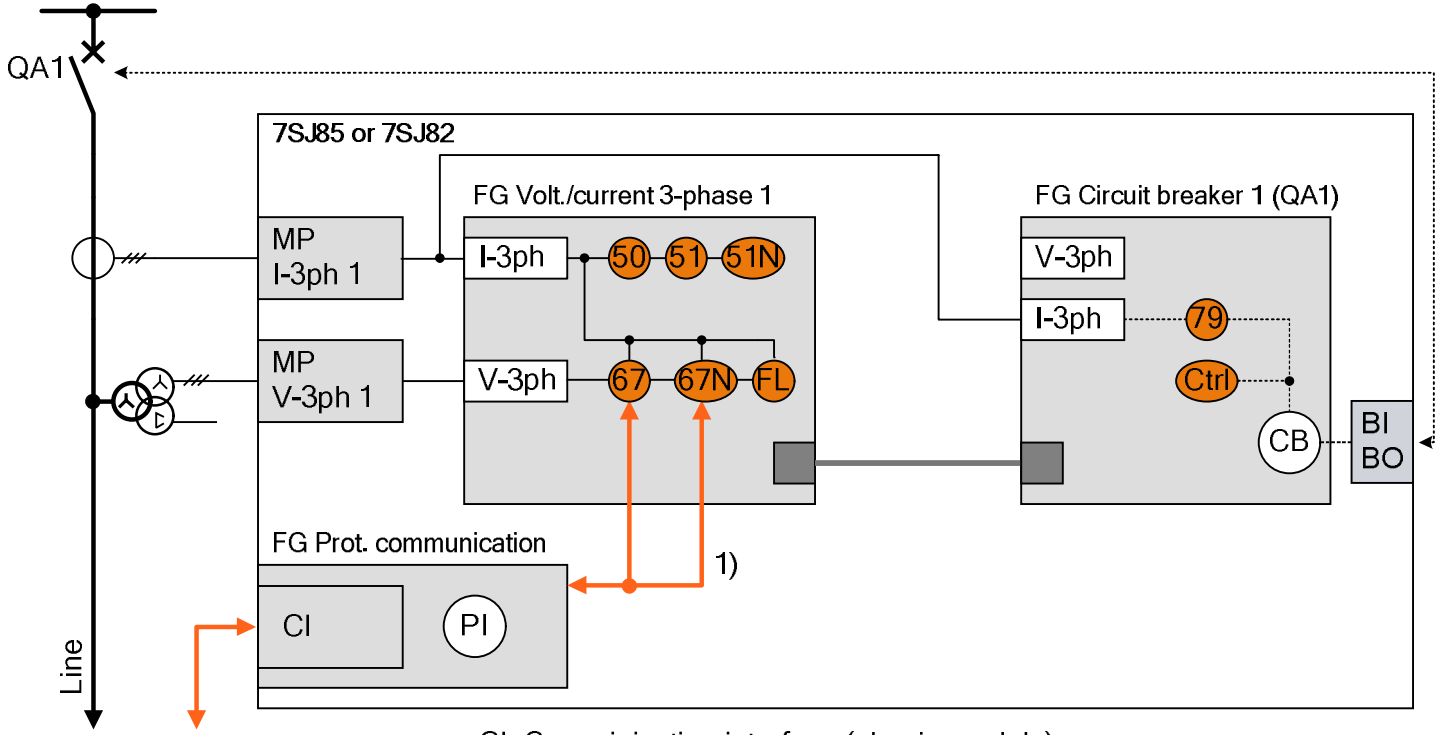

to remote end
of the line

CI: Comminication interface (plug-in module)
PI: Protection interface
1) Configuration via „Communication mapping„ in DIGSI

Frei verwendbar © Siemens AG 2016

Overcurrent protection 7SJ82, 7SJ85
Ground fault protection for transient and static faults

SIEMENS

Customer requirement

- Dir. protection against static ground faults in a resonant-grounded network
- Dir. detection of transient ground faults in a resonant-grounded network

Siemens solution

- Function for transient and static earth faults
- 4th CT input as sensitive input
- App.Temp. "Dir. OC comp./isol. network"

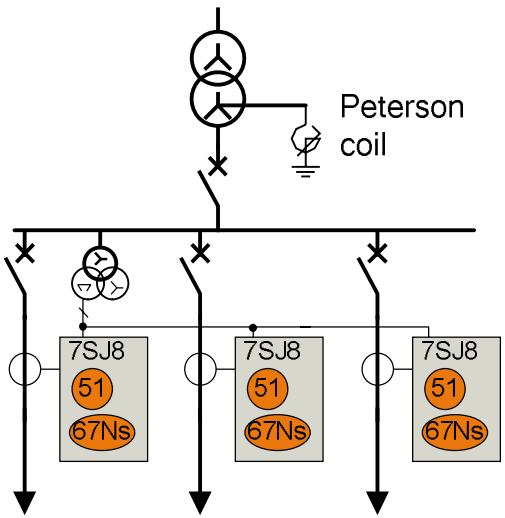

Device functions

- 1 function group “V/I 3-phase", connected to phase CTs, cable-type CT and broken delta voltage
- 67Ns function, with two elements:
  - ⇨ one "Watt-metric" element
  - ⇨ one "Transient" element

Benefits

- Reduced investment: **one** device instead of 7SJ62 and 7SN60
- Reduced engineering
- Higher sensitivity and stability of transient function compared to 7SN60

Frei verwendbar © Siemens AG 2016

Overcurrent protection 7SJ82, 7SJ85
Directional detection of intermittent ground faults

SIEMENS

Customer requirement

- Dir. detection of intermittent cable- or overhead line faults in networks with all grounding types (compensated, isolated, grounded)

Siemens solution

- 7SJ8 with one FG "VI 3-phase"
- Fct. "Dir. Interm. Grd. fault detection" in parallel to "Dir. Sens. Grd. fault detection" (for comp./isol. networks) and to 50N/67N (for grounded networks)

Device functions

Fct. "Dir. Interm. Ground fault detection":

- The direction of the ignition pulses is determined
- The pulses are counted
- Operation either via a) no. of directional pulses or b) fault current integration plus dir. criterion

Benefits

- Intermittent ground faults are detected selectively and safely
- No CFC solution required

Frei verwendbar © Siemens AG 2016

Overcurrent protection 7SJ82, 7SJ85
Restricted ground fault prot. (low impedance)

SIEMENS

Customer requirement

- Restricted earth fault protection for a transformer winding, as 7UT8 backup
- Low impedance principle required

Siemens solution

- All transformer backup protection functions in one 7SJ8 device
- Hardware: Std.Var S1: 4 I, 4 V
- App.Temp. "OC protection" + 87N T

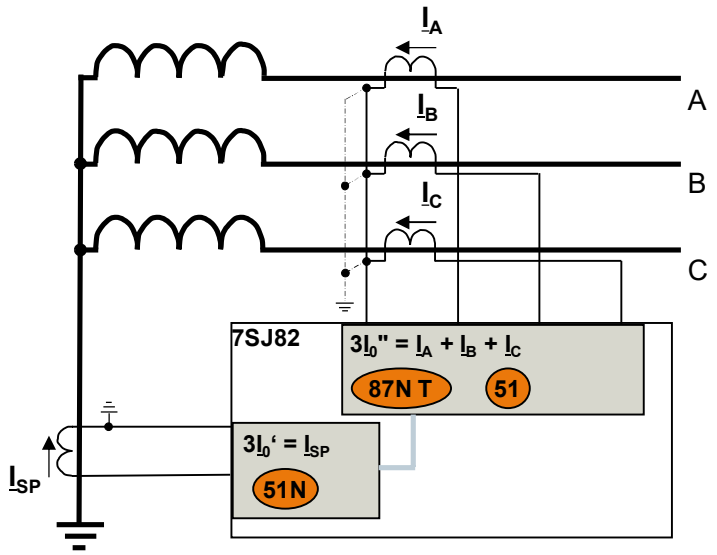

Device functions

- 1 function group “V/I 3-phase" connected to phase CTs, incl. 87N T
- 1 function group “V/I 1-phase" connected to the transformer star point
- FG “V/I 1-phase" connected to FG “V/I 3-phase"

Benefits

- Reduced investment
- Reduced engineering
- High sensitivity

Frei verwendbar © Siemens AG 2016

Application template:
Restricted ground fault protection (low impedance)

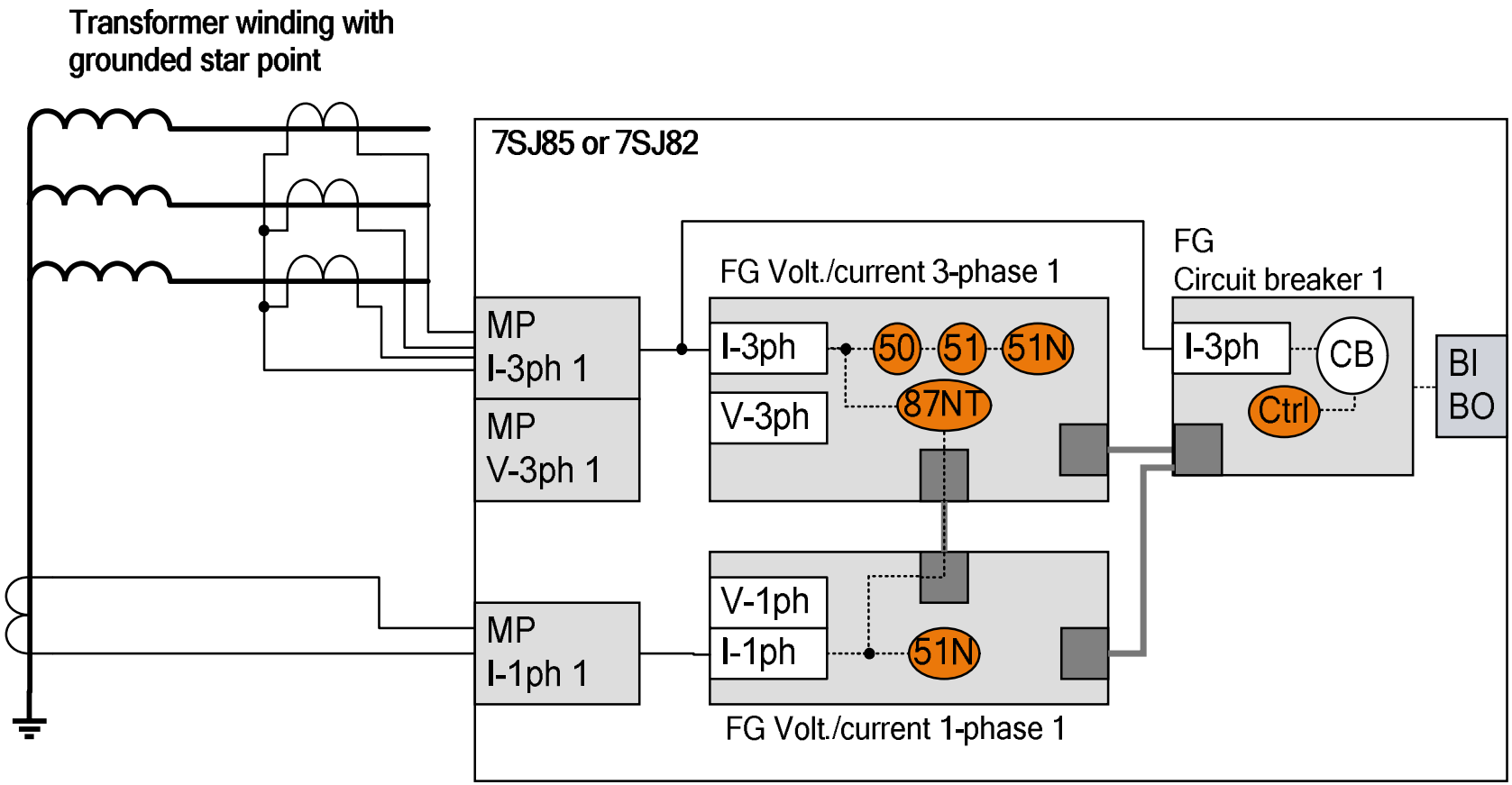

Frei verwendbar © Siemens AG 2016

Overcurrent protection 7SJ85
Protection of capacitor banks

SIEMENS

Customer requirement

- Capacitor banks in different designs (e.g. different no. of filter circuits) should be protected with one device

Siemens solution

- All required functions in one 7SJ85
- Hardware: Std.Var S1 + IO203: 12 I, 4 V
- Application temp. "Capacitor bank in H configuration"

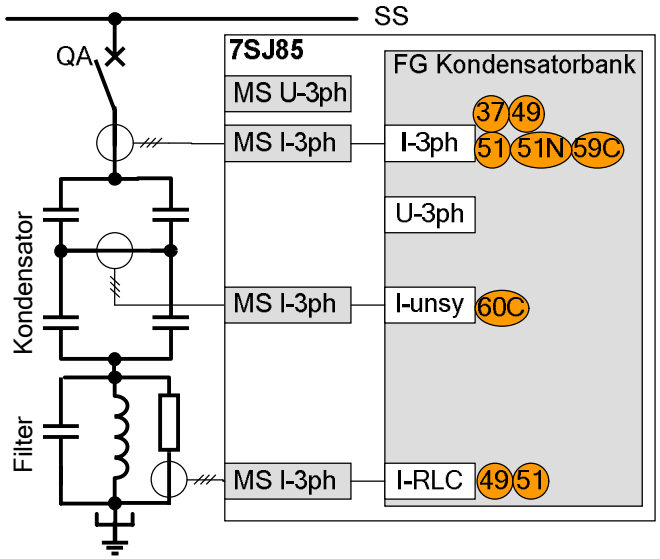

Device functions

- 1 function group "Capacitor bank"
- Specific functions for the cap. bank:
  - 59C Peak overvoltage protection
  - 60C Current unbalance protection
- Measurement up to the 50th harmonic
- Compensation of operational unbal.

Benefits

- All functions in one device -> reduced investment
- Optimal tailoring of HW and functionality to the specific cap. Bank
- Very high sensitivity of the unbalance measurement

Frei verwendbar © Siemens AG 2016

Overcurrent protection 7SJ86
Backup protection for Line protection devices

SIEMENS

Customer requirement

- Directional **emergency** OC protection of a line, as 7SA8 backup
- Backup protection by a redundant device

Siemens solution

- Hardware: Std.Var L1: 4 I, 4 V
- Communication: 1 plug-in module (2*FO): protection data & station com.

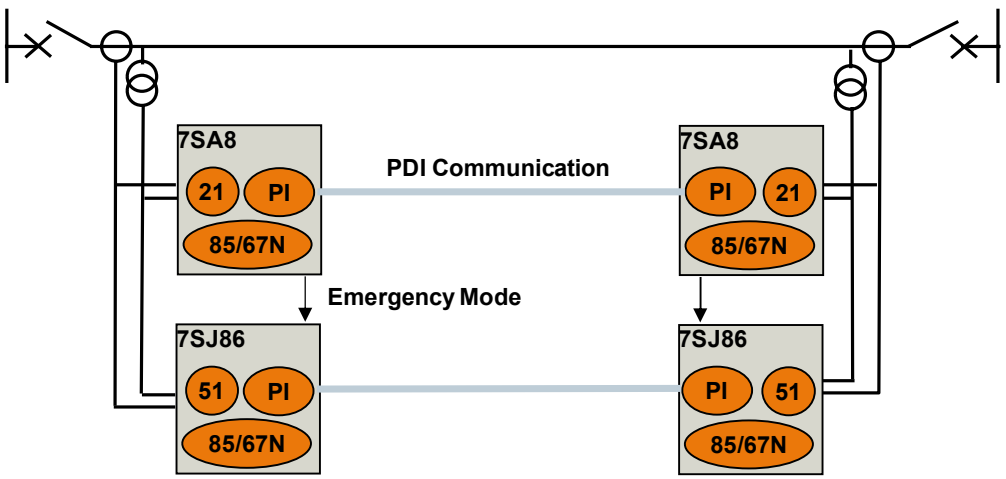

Device functions

- 1 function group "Line", incl. fct. 67, 67N (same fct. as in 7SA)
- Activation of 67 and 67N only in case of 7SA emergency
- 85/67N teleprotection schemes available if required (via PDI)

Benefits

- Optimal fault clearing
- Reduced training and engineering cost through harmonized functionality in 7SA8 and 7SJ86 (FG Line, 67N, 85/67N)
- Reduced engineering through integrated teleprotection function

Frei verwendbar © Siemens AG 2016

Overcurrent protection 7SJ8x
Phasor measurement unit (PMU)

SIEMENS

Customer requirement

- Dynamic ‚Wide Area Monitoring'
- Blackout prevention via over-regional control operation

Siemens solution

- Phasor measurement available in **each SIPROTEC 5 device**
- Data transmission to regional data concentrators (e.g. SIGUARD PDP) according C37.118

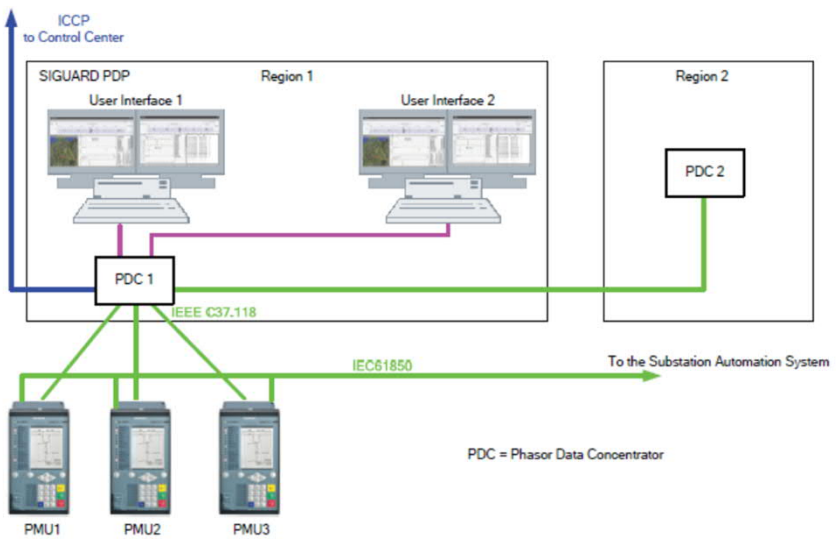

Device functions

- Phasor determination of local currents and voltages with 1% TVE[1)]
- GPS time synchronization
- Ethernet module: Protocol setting = SYNC/PMU

1) total vector error

Benefits

- Increased grid quality and stability
- Increased system availability
- Future save investment in new relay device technology

Frei verwendbar © Siemens AG 2016

Arc Protection

Customer requirement

- Very short tripping time required
- Instantaneous tripping: time grading can be bypassed in case of an arc

Siemens solution

- Plugin module for SIP 5 relays
- Connection of up to 3 optical sensors per plugin module
  → up to 15 sensors per relay (with CB202)
- Self supervision of the sensors

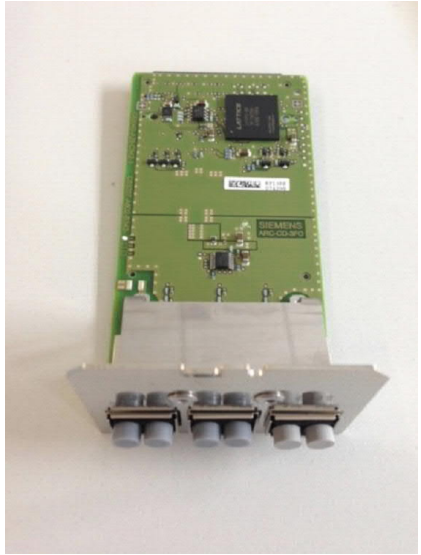

Device functions

- 2 methods to detect the arc:
  - Light only
  - Light + current (recommended)

Benefits

- Personal safety
- Minimized damages

Frei verwendbar © Siemens AG 2016

Arc-protection
Example: MV switchgear (NXAIR)

SIEMENS

Front and side view

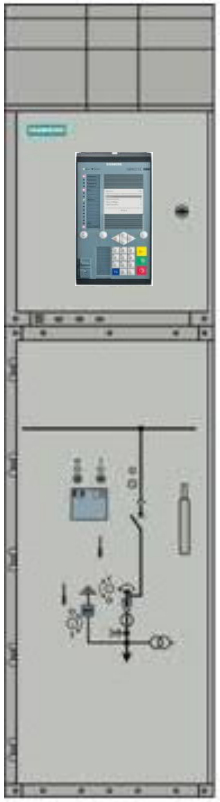

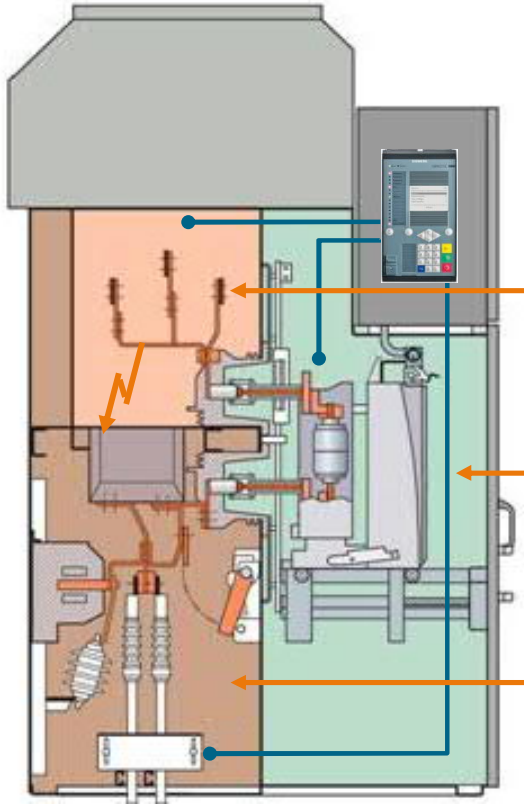

Optical sensors with wires

Busbar compartment

Breaker compartment

Connection compartment

Frei verwendbar © Siemens AG 2016

Arc-protection
Bypassing the time grading

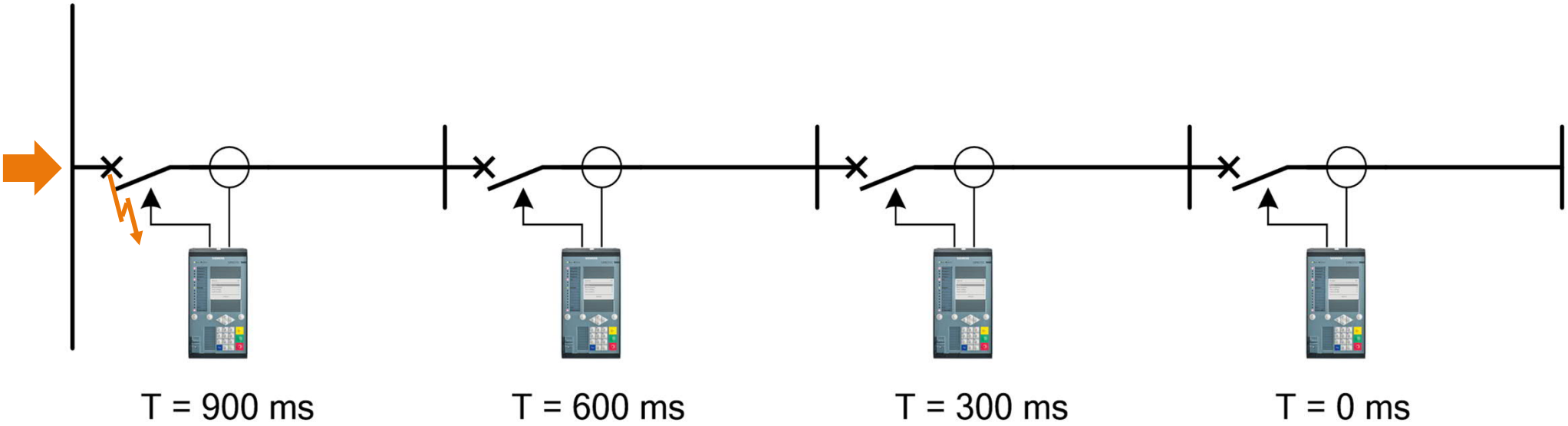

- Instead of the 900 ms time grading delay tripping takes place instantaneously
- This allows to minimize thermal damage which usually starts 100 ms after fault entry

Frei verwendbar © Siemens AG 2016

Agenda

Overcurrent Protection

- Devices 7SJ8
- Typical applications 7SJ8
- **Functional improvements 7SJ8**

Motor Protection

- Devices 7SK8
- Typical applications/Functional improvements 7SK8

Appendix

- New functions with FW V7.0
- Migration Path Overcurrent and Motor protection

Frei verwendbar © Siemens AG 2016

Overcurrent and Motor protection 7SJ8x, 7SK8x
Unified functions

SIEMENS

Customer requirement

- Get busy with one function only once
- Same behavior of one function in different devices

Siemens solution

- A system where one and the same function is applicable in different devices

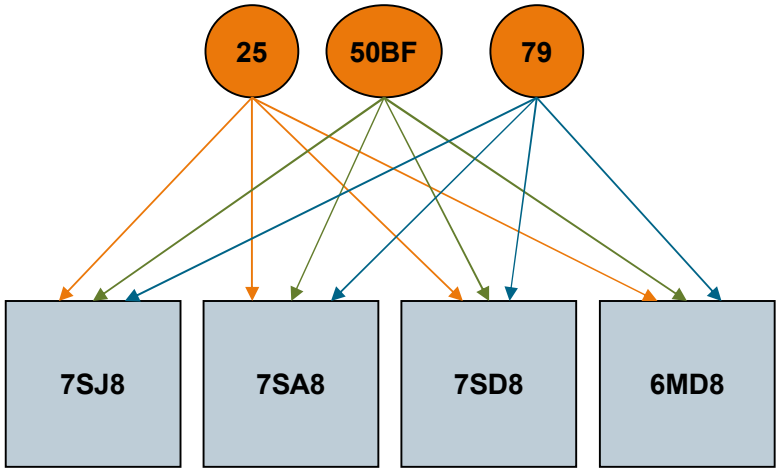

Device functions

- Most of your protection and supervision function are fully identically, no matter in which device they are applied
- Examples are: 25, 27, 46, 50HS, 51, 50BF, 59, 59N, 67, 67Ns, 81, FL, …

Benefits

- Less clarification efforts
- Less engineering effort
- Less chances for wrong function settings

Frei verwendbar © Siemens AG 2016

Overcurrent and Motor protection 7SJ8x, 7SK8x
Basic and Advanced overcurrent protection functions

SIEMENS

Customer requirement

- Reduce complexity for protection function settings
- Reduce the probability of setting functions wrong

Siemens solution

- For the standard OC application (80% case) the basic function is used
- For more complex applications the advanced function will be used

Device functions

- For each function 51, 51N, 67 and 67N an "basic" and "advanced" function type exist

Basic type

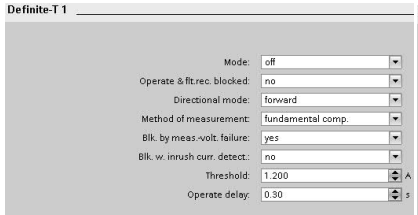

Advanced type

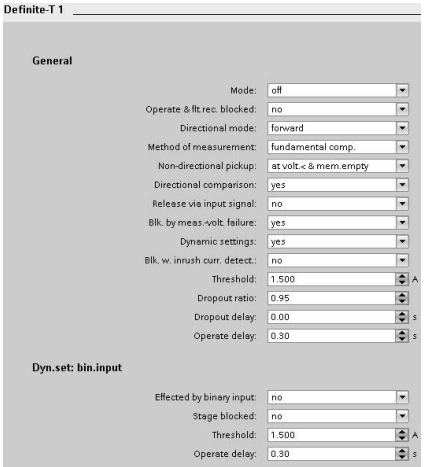

Benefits

- Avoiding wrong parameterization
- Reducing engineering and testing efforts

Frei verwendbar © Siemens AG 2016

Overcurrent protection 7SJ8x
"True RMS" measurement precise up to 50th harmonic

SIEMENS

Customer requirement

- Detect and evaluate signals up to 50th harmonic, for protection and operational measured values
- OC and Thermal overload protection for a capacitor bank

Siemens solution

- Sampling frequency of 8 kHz
- 30th harm: 1%, 50th harm: 3 %
  (with 33% harmonic in relation to fundamental, 50Hz)

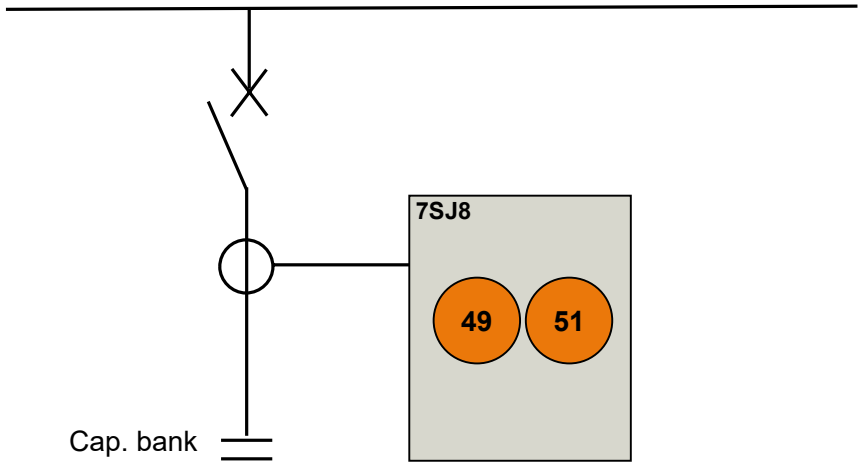

Device functions

- All functions which are related to thermal conditions (e.g. Thermal overload) use True RMS values.
- All OC protection functions can be configured to operate either with the "fundamental" or the "True RMS" value.

Benefits

- Correct detection and evaluation of high harmonics
- Optimal Overload protection for a capacitor bank

Frei verwendbar © Siemens AG 2016

Overcurrent & Motor protection 7SJ8x, 7SK8x "Watt-metric ground fault protection (67Ns)"

SIEMENS

Customer requirement

- Ground fault function for resonant-grounded networks
- Save distinction between faulty and non-faulty for all levels of ground fault rest currents

Siemens solution

- Use of one dir. characteristic for low-ohmic faults with reduced dir. sensitivity
- Use of another dir. characteristic for high-ohmic faults with max. dir. sensitivity

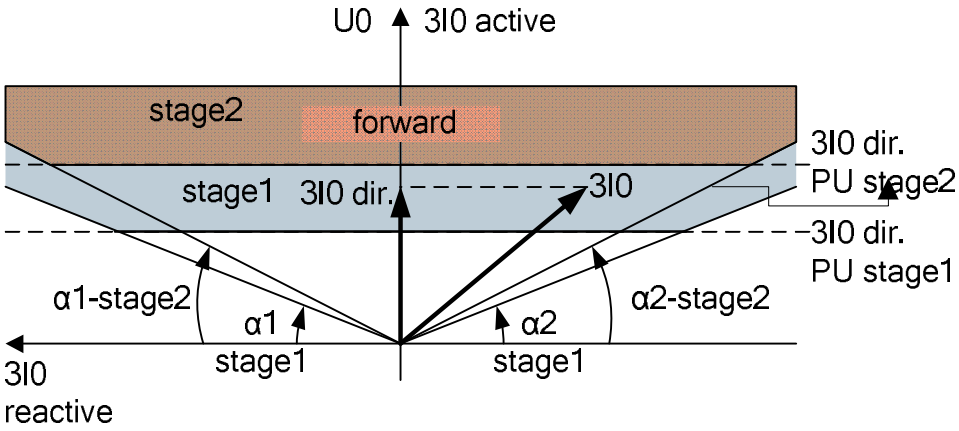

Device functions

- The 67Ns function allows to configure 2 watt-metric stages with independent dir.-characteristics
- The high-set stages bocks the low-set stage (via add. logic)

Benefits

- Improved stability in case of low-ohmic faults
- Maximum sensitivity in case of high-ohmic faults

Frei verwendbar © Siemens AG 2016

Overcurrent & Motor protection 7SJ8x, 7SK8x "Watt-metric ground fault protection (67Ns)"

SIEMENS

Customer requirement

- Ground fault function for resonant-grounded networks
- Maximum stability (no over-functioning) after the fault extinction

Siemens solution

- Detection of the decaying zero sequence system signals, after the fault extinction
- Blocking of possibly affected ground faults stages

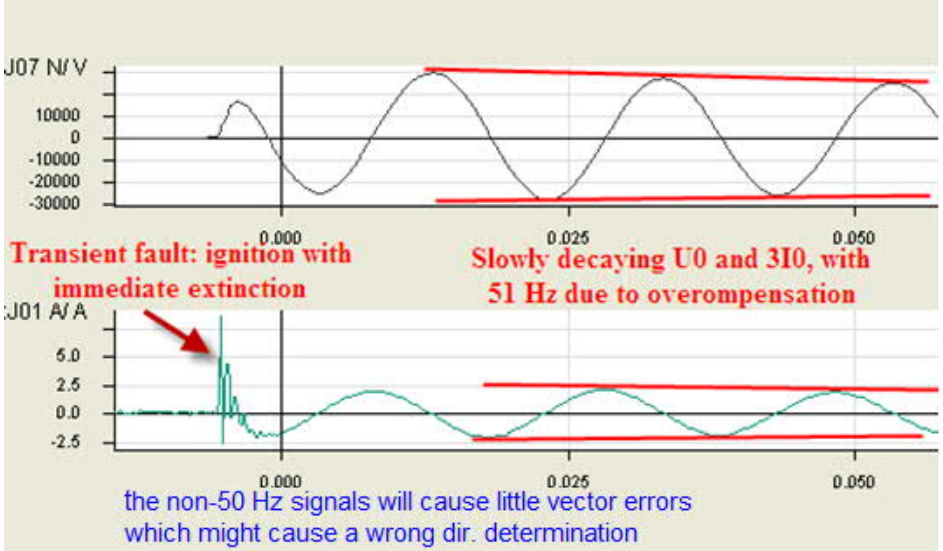

Device functions

- The 67Ns function offers a detection of the fault extinction (decaying V0 & 3I0)
- The 67Ns stages provide a blocking option in case of the fault extinction detection

Benefits

- Improved stability during the decaying of the zero-sequence system after the fault extinction

Frei verwendbar © Siemens AG 2016

Overcurrent protection 7SJ8x
Improved inrush stabilization

SIEMENS

Customer requirement

- Stable at inrush currents (switching ON of a transformer)
- Stable at sympathetic inrush currents (switching ON of a parallel transformer)

Siemens solution

- Inrush detection function blocks the overcurrent protection
- New is the **one out of two decision of two different inrush algorithms**

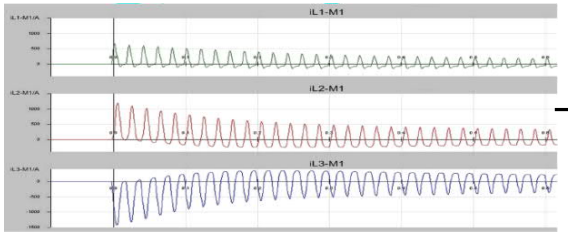

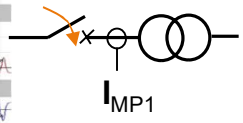

Method 1: $I_{2,Harm}/I_{1,Harm}$ > 15%

Method 2: **CWA** → Flat area evaluation

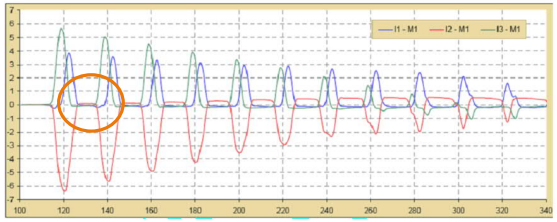

Device functions

- Inrush detection function with two different measuring principles
  - Second harmonic evaluation with the cross block option
  - Curve waveform analysis (CWA)

Benefits

- Avoiding of false trip in the case of an inrush or sympathetic inrush if 2nd harmonics are quite low
- Increased system availability

Frei verwendbar © Siemens AG 2016

SIPROTEC 5
Overcurrent and Motor Protection

SIEMENS

Overcurrent Protection
7SJ8

Motor Protection
7SK8

Frei verwendbar © Siemens AG 2016

Agenda

Overcurrent Protection

- Devices 7SJ8
- Typical applications 7SJ8
- Functional improvements 7SJ8

Motor Protection

- **Devices 7SK8**
- Typical applications/Functional improvements 7SK8

Appendix

- New functions with FW V7.0
- Migration Path Overcurrent and Motor protection

Frei verwendbar © Siemens AG 2016

SIPROTEC 5
Motor protection devices

SIEMENS

Motor protection
(modular IO)

7SK85

Motor protection
(non-modular IO)

7SK82

Frei verwendbar © Siemens AG 2016

Motorschutz
7SK85 – Profil

SIEMENS

Application

- Thermal motor protection functions
- Multifunctional protection
- Asynchronous motors of different sizes

- 4 I, 4 U … (x I, x V)
- 11 BI, 9 BO ... 23 BI, 25 BO …
- max. 5 plug-in modules + RTD box
- Up to 4 expansion modules in 1 row
- More IO in 2nd row

Same functionality as 7SJ82/85

expandable

Suitable device 7SK85

Device functions

- **Thermal motor protection functions for stator and rotor**
- External RTD box (temperature)
- Short circuit and ground fault protection
- U, f, P/Q protection functions
- Protection interface
- Phasor measurement unit PMU
- Modular software
- IEC 61850 (Edition 1 and 2)
- Multiple & redundant communication
- SIPROTEC 5 standard functions for control and monitoring

Frei verwendbar © Siemens AG 2016

SIPROTEC 5
Motor protection devices

SIEMENS

Motor protection
(modular IO)

7SK85

Motor protection
(non-modular IO)

7SK82

Frei verwendbar © Siemens AG 2016

Motor protection
7SK82 – Profile

SIEMENS

Application

- Thermal motor protection functions
- Multifunctional protection
- Asynchronous motors different size

- 4 I, 4 V
- 11 BI, 9 BO or 23 BI, 16 BO[1)]
- max. 2 plug-pn modules
- non-expandable via 1/6 modules

1) Variant with 12 internal RTDs is planned for 2014

Same functionality as 7SK85

non-expandable

Suitable device 7SK82

Device functions

- **Thermal motor protection functions for stator and rotor**
- Short circuit and ground fault protection
- U, f, P/Q protection functions
- Protection interface
- Phasor measurement unit PMU
- Modular software
- IEC 61850 (Edition 1 and 2)
- Multiple & redundant communication
- SIPROTEC 5 standard functions for control and monitoring

Frei verwendbar © Siemens AG 2016

SIEMENS

Differentiation of 7SK82 and 7SK85

Same as 7SJ8x

	7SK82	7SK85

HW Modularity	• Base module not expandable with 1/6 expansion modules
	  • IO limited to 23 BI, 16 BO
	  • max. 4 I, 4 V
	  • max. 2 plug-in modules
	  • no keylock-switch option
	  • max. 16 LEDs
	• Standard and large display
		• Base module expandable with 1/6 expansion modules
		  • max. IO e.g.: 75 BI, 40 BO 1)
		  • max. 24 analog inputs I or V
		  • max. 5 plug-in modules
		  • keylock switch option
		  • 32 / 48 / … LEDs
		• Standard and large display
		• Without display

Housing	• Flush mounting	• Flush mounting • Surface panel mounting • Detached operation panel
I dyn. Range	• 50 I-rated	• 100 I-rated

Frei verwendbar © Siemens AG 2016

Motor protection
Predefined HW variants

SIEMENS

For each 7SK8 device type several standard HW variants are predefined:

7SK82

T1: 1/3 19’’, 4 I,	11 BI,	9 BO
T2: 1/3 19’’, 4 I,	23 BI,	16 BO
T3: (reserved)		
T4: 1/3 19’’, 4 I, 4 V,	11 BI,	9 BO
T5: 1/3 19’’, 4 I, 4 V,	23 BI,	16 BO

7SK85

R1: 1/3 19’’, 4 I, 4 V,	11 BI,	9 BO
R2: 1/2 19’’, 4 I, 4 V,	17 BI,	16 BO
R3: 1/2 19’’, 4 I, 4 V,	27 BI,	17 BO

» Fast configuration of your HW

Frei verwendbar © Siemens AG 2016

Agenda

Overcurrent Protection

- Devices 7SJ8
- Typical applications 7SJ8
- Functional improvements 7SJ8

Motor Protection

- Devices 7SK8
- **Typical applications/Functional improvements 7SK8**

Appendix

- New functions with FW V7.0
- Migration Path Overcurrent and Motor protection

Frei verwendbar © Siemens AG 2016

Motor protection 7SK85
Protection of induction motors and control

SIEMENS

Customer requirement

- Thermal protection functions + additional functions
- Control function + large display
- Flexible (expandable) hardware and communication

Siemens solution

- Motor protection device **7SK85**
- Hardware: Standard Var. R2:
  4 I, 4 V (large display + key switch)
- Communication module

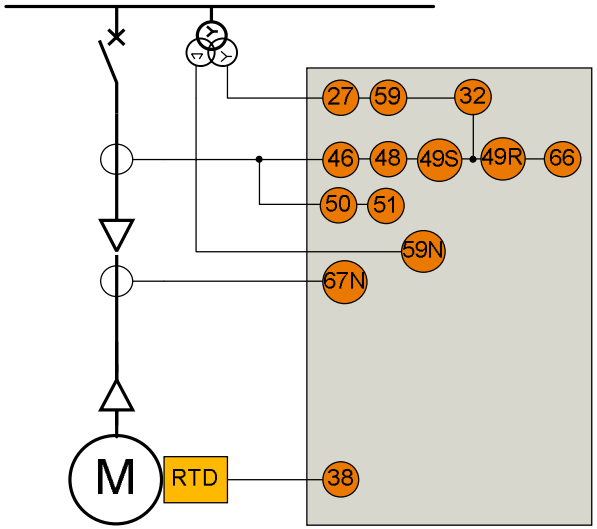

Device functions

- All thermal protections + temperature monitoring
- Additional functions (27, 32, 59, 67N…)
- Control functions
- Mimic diagram on graphic display

Benefits

- Reduced investment: one device for protection and control
- Simplified parameterization: set one function and copy it
- Shortened commissioning

Frei verwendbar © Siemens AG 2016

Application template:
Protection of induction motors and control

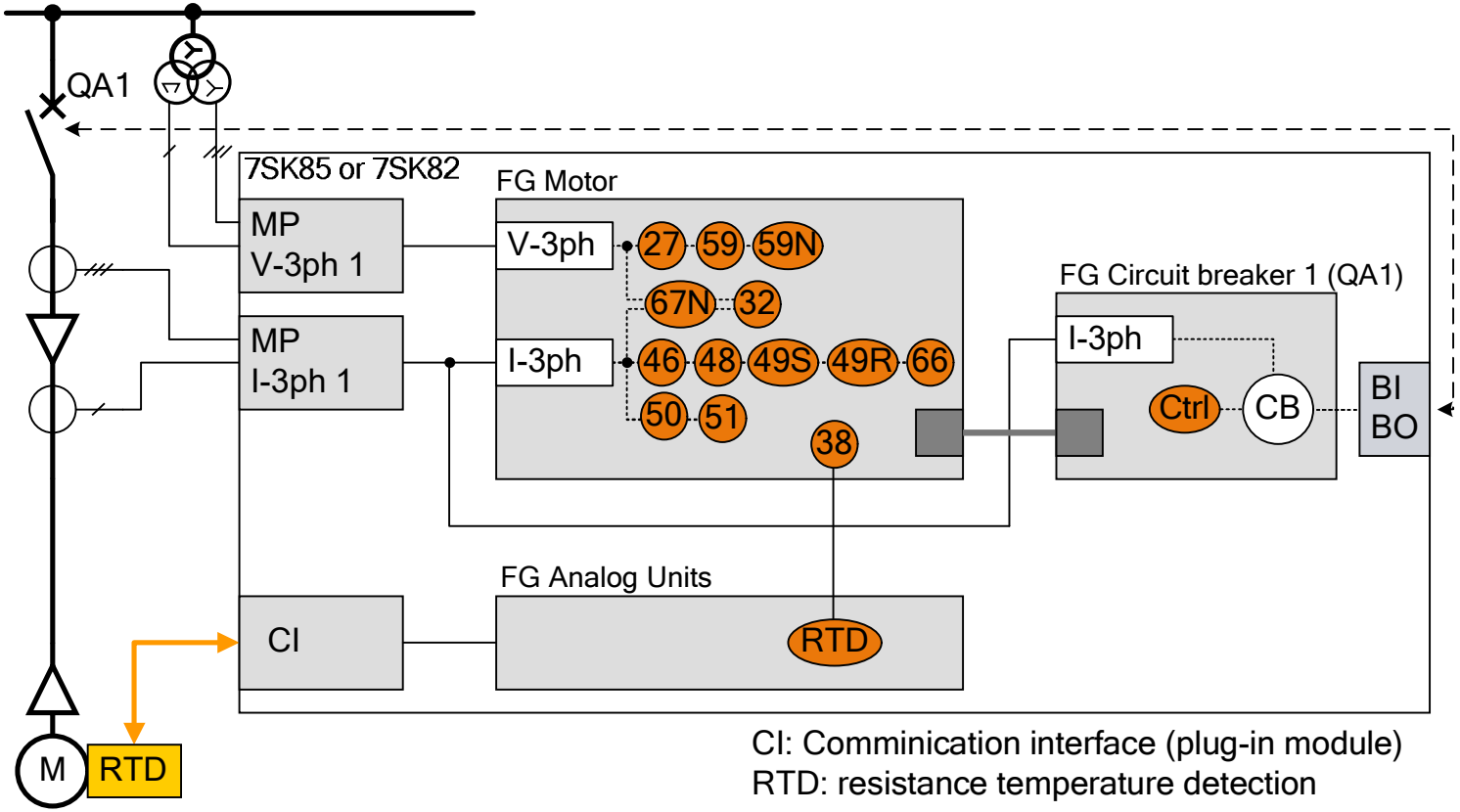

CI: Comminication interface (plug-in module)
RTD: resistance temperature detection

Frei verwendbar © Siemens AG 2016

Motor protection 7SK85
Differential protection (Diff. internal) via separate current inputs

SIEMENS

Customer requirement

- Thermal protection functions + additional functions
- Differential protection (Diff. current calculated by the device)
- Flexible (expandable) hardware

Siemens solution

- Motor protection device 7SK85
- Hardware: Standard Variant R1 + IO201: 8 I, 4 V
- Appl. template "Diff. protection"
- Communication module (for RTD)

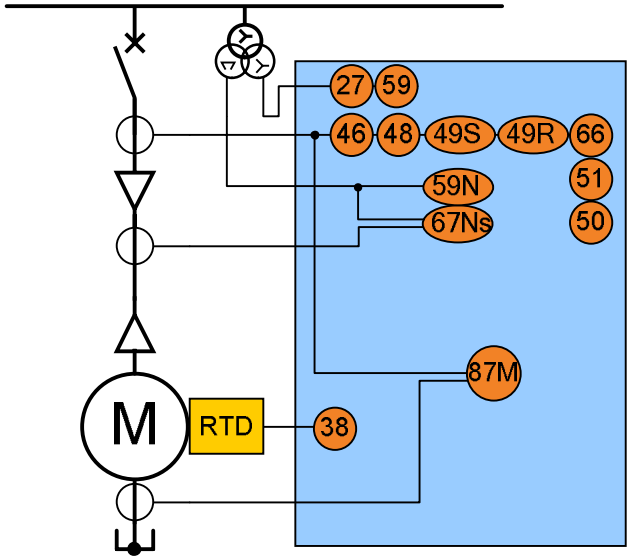

Device functions

- FG "Motor (stator)", "Motor side" and "Motor differential"
- Motor differential protection function 87M
- All thermal protections + temperature monitoring

Benefits

- Reduced investment: one device instead of two
- Simplified parameterization: set one function and copy it
- Shortened commissioning

Frei verwendbar © Siemens AG 2016

Application template:
Differential protection (Diff. internal) via separate current inputs

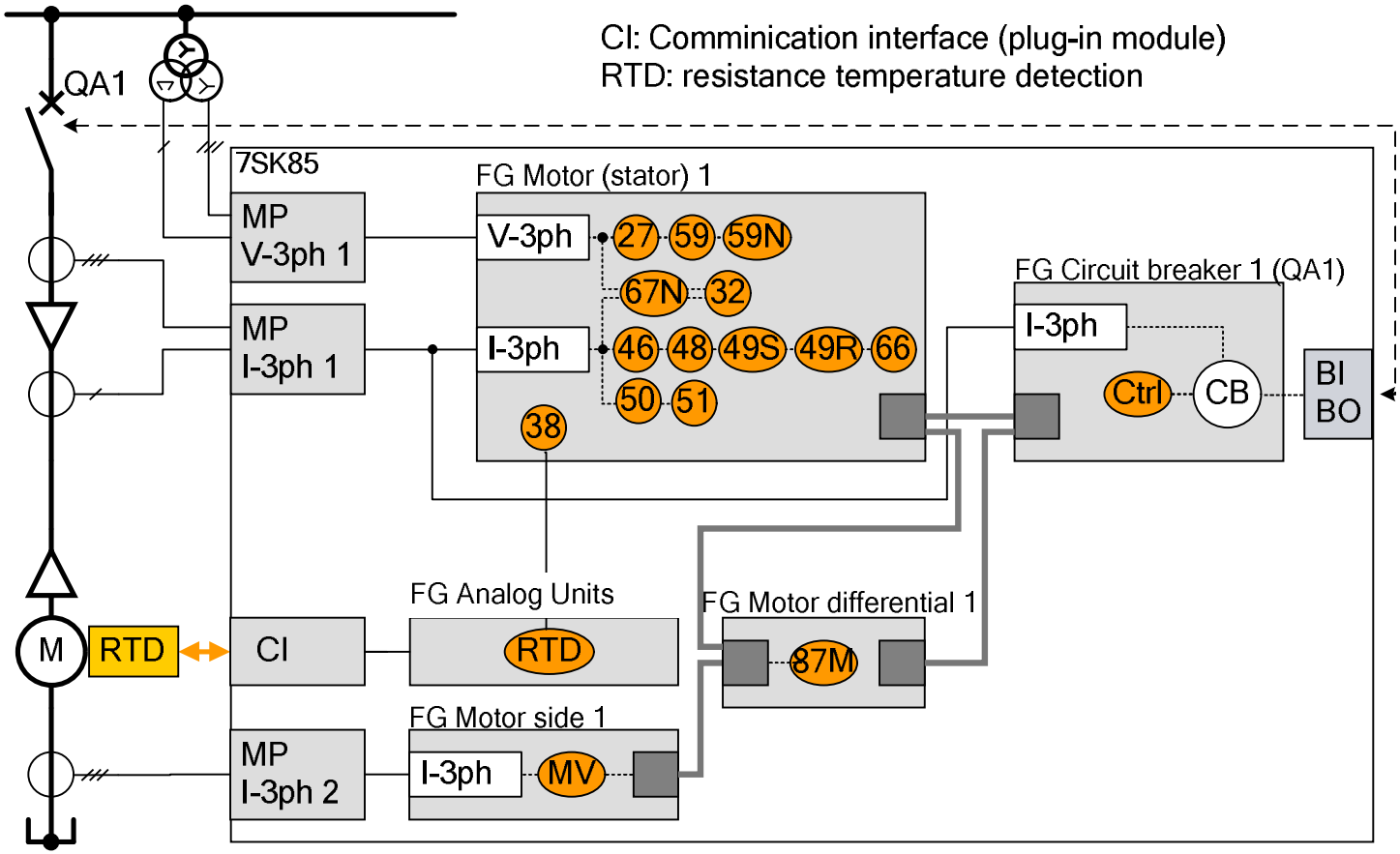

Frei verwendbar © Siemens AG 2016

Motor protection 7SK85
Differential protection (Diff. external) via separate current inputs

SIEMENS

Customer requirement

- Thermal protection functions + additional functions
- Simplified differential protection
- Flexible (expandable) hardware and communication

Siemens solution

- Motor protection device **7SK85**
- Hardware: Standard Variant R1 + IO201: 8 I, 4 V
- Communication module

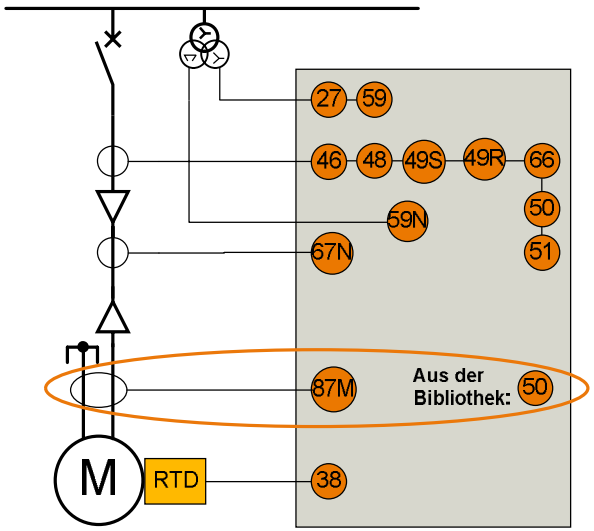

Device functions

- One Motor protection function group + 1 additional FG "Motor" (only I-3phase connected)
- All thermal protections + temperature monitoring
- 50 function is used for 87M application

Benefits

- Reduced investment: one device instead of two
- Simplified parameterization: set one function and copy it
- Shortened commissioning

Frei verwendbar © Siemens AG 2016

Application template:
Differential protection (Diff. external) via separate current inputs

SIEMENS

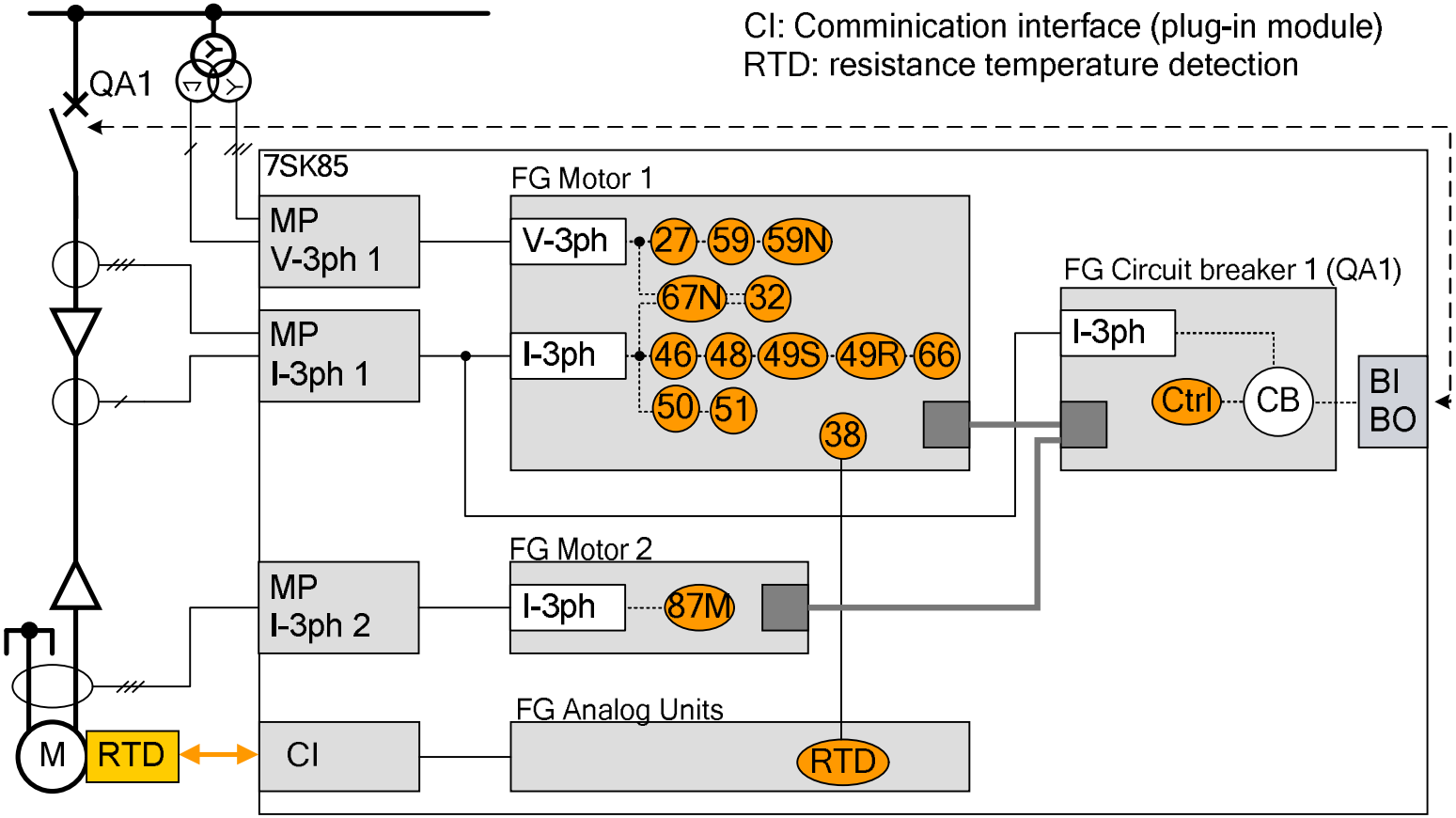

Frei verwendbar © Siemens AG 2016

Motor protection 7SK82, 7SK85
Critical motor starting behavior

SIEMENS

Customer requirement

- Thermal protection functions + additional functions
- Flexible motor starting curve
- Flexible hardware and communication

Siemens solution

- Motor protection devices **7SK82; 7SK85**
- Hardware: Standard Variant: 4 I, 4 V
- User defined starting time characteristic
- Communication module

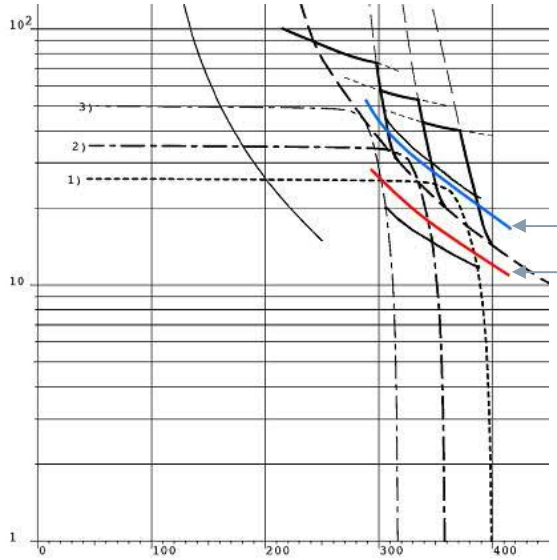

Accelerating

Locked rotor

Device functions

- One Motor protection function group
- All thermal protections + temperature monitoring
- Two user defined motor starting characteristics (acceleration; locked)
- All additional protection and monitoring functions

Benefits

- Reduced investment: one device
- Flexible adaption on special motor parameters

Frei verwendbar © Siemens AG 2016

Motor protection 7SK82, 7SK85
Restart inhibit function

SIEMENS

Customer requirement

- Thermal protection functions
- Simplified (non-thermal) Restart inhibit function

Siemens solution

- Motor protection devices **7SK82; 7SK85**
- Hardware: Standard Variant: 4 I, 4 V
- Application Template "4 I"

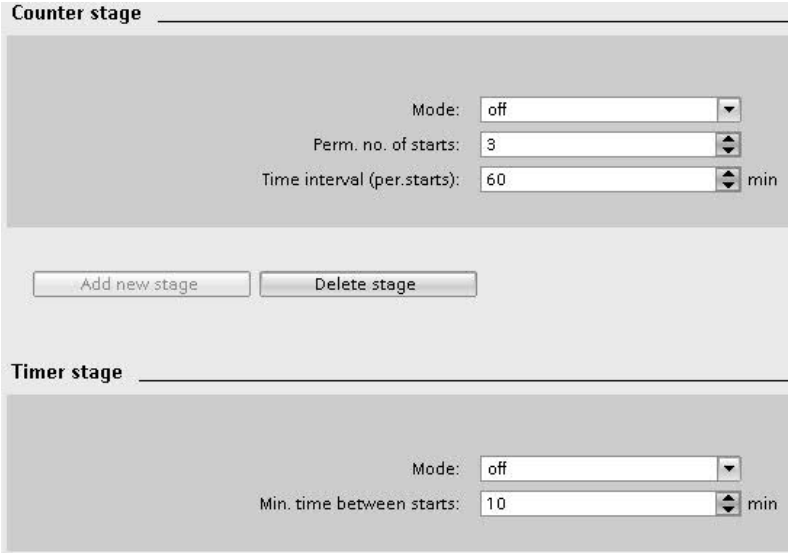

Device functions

- One Motor protection function group
- Restart inhibit function:
  → delete the predefined thermal stage
  → add the "counter" or "timer" stage
  from the DIGSI LIB

Benefits

- Reduced complexity & engineering
- Shortened commissioning

Frei verwendbar © Siemens AG 2016

Agenda

Overcurrent Protection

- Devices 7SJ8
- Typical applications 7SJ8
- Functional improvements 7SJ8

Motor Protection

- Devices 7SK8
- Typical applications/Functional improvements 7SK8

Appendix

- New functions with FW V7.0
- Migration Path Overcurrent and Motor protection

Frei verwendbar © Siemens AG 2016

OC and Motor protection
What is new with FW V 7.00

SIEMENS

- With CP300: support up to 9 feeders (9 * 3-phase current measuring points = 36 current channels, 1 * 3-phase voltage measuring point = 4 voltage channels) with directional OC protection (ANSI 51/51/67)
- Negative-sequence protection (ANSI 46): new stage type with inverse-time characteristic available
- Directional OC, ground (ANSI 67N): Option to choose between the quantities IN Measured and 3I0 Calculated in the case that both quantities are available
- Voltage/current 1-phase function group: the voltage interface of the 1-phase FG can be connected to the calculated zero-sequence voltage U0 or the measured residual voltage UN of a 3-phase voltage measuring point.
- Voltage measuring-point selection: The behavior for the condition “all disconnectors open” (ID = 0) has been changed. If ID 0 is selected, then all voltage values of the respective function-group interface are set to 0 V immediately.
- CFC Online Monitoring: DIGSI can be connected online to a device, then the status of all CFC variables can be displayed and monitored. This helps to debug complex CFC-Plans.

Frei verwendbar © Siemens AG 2016

Roadmap OC and Motor protection

SIEMENS

Device releases

04/12	11/12	05/13	11/13	06/14	12/14	05/15	12/15[1]
7SJ86	7SJ85 7SK85	7SJ85 IO204	7SJ82 7SJ85 7SK82 7SK85	7SJ82 7SJ85	7SJ82 7SJ85 7SK82 7SK85	7SJ82 7SJ85	7SJ82 7SJ85 7SK82 7SK85

V1.1

V2.0

ANSI	Function
FL	Fault locator
25	Synchrocheck, synchronizing function
27	Undervoltage protection, 3-phase
27	Undervoltage protection, positive sequence
27	Undervoltage protection, 1-phase
32, 37	Power protection active/reactive
38	Temperature supervision
46	Negative-sequence system protection, non-
46	Negative-sequence system protection, direc
46	Unbalanced load protection (thermal)
47	Phase sequence supervision
49	Thermal overload protection
50/51	Overcurrent protection, phases
50N/51N	Overcurrent protection, ground
50HS	High-current rapid tripping
50N/51N	Overcurrent protection, 1-phase
50Ns/51Ns	Sensitive ground current protection
50BF	Breaker failure protection
59	Overvoltage protection, 3-phase
59	Overvoltage protection, positive-sequence s
59	Overvoltage protection, negative-sequence
59	Overvoltage protection, 3-phase, universal,
59N	Overvoltage protection, zero-sequence syst
67	Directional time-overcurrent protection, pha
67N	Directional time-overcurrent protection, gro
67Ns	Sensitive ground fault detection for systems
67Ns*	Sensitive ground fault detection for resonan for static and transient ground faults (*trans
74TC	Trip circuit supervision
79	Auto-reclosing
81O	Overfrequency protection
81U	Underfrequency protection
81R*	Frequency change protection
86	Lockout
87N T	Low impedance restricted ground-fault prot
PMU	Synchrophasor measurement

,most standard protection functions

V3.0

- Transient gnd flt.
- df/dt
- Basic OC prot.
- Ux> 1-phase
- REF with I>>>

V4.0

- 27/Q Undervolt.contr. reactive power prot.
- 51V Voltage dependent OC prot.
- Intermittent ground fault prot.
- 49 Thermal overload in a transf. star point
- 59C Peak overvoltage prot. for cap.
- 60C Current unbalance prot. For cap.bank
- 37 I< Undercurrent
- 27 Vx< in 1-phase functtion group
- 87M Motor differential protection
- Motor statistics
- Voltage measuring point switching
- CB wear monitoring

Communication:

- T104

V5.0

- Arc-protection
- 87C Cap.bank diff.
- 60C: counter stage
- Restrike prot.
- App.templ. MSCDN
- 90V voltage control
- I0 elimination at 50/51

V6.0

- Dir. intermit. GF
- 60C Cap.bank 1-phase
- 87V Volt.diff.
- LN „ZCAP" (IEC 61850)
- 7SJ82: Cap.bank prot
- 24 Over excitation
- Statistics: op. h, CB open

V6.2

- Volt.prot. with inverse char.

V7.0

- New CPU 300 for modular devices (performance doubling)
- 46: inverse stage type
- V/I 1ph: V0 from 3-phase MP
- 67N: selection of IN-measured or 3I0 calculated

First release

1) Scheduled date

Frei verwendbar © Siemens AG 2016

Migration Path (functional coverage)
Overcurrent and Motor protection

SIEMENS

600er series

7SJ60

7SN60

SIPROTEC 4

7SJ61/62

7SJ63

7SJ64

Reyrolle

7SR11

7SR12

SIPROTEC Compact

7SJ80

7SK80

SIPROTEC 5

7SJ82

7SK82

Modular

7SJ85

7SJ86

7SK85

Frei verwendbar © Siemens AG 2016

Contact

Stefan Werben
EM DG PRO LM PR

Humboldtstr. 59
90459 Nuremberg

Phone: +49 (911) 433-8208

E-Mail:
stefan.werben@siemens.com

siemens.com/energy-automation-products

Frei verwendbar © Siemens AG 2015