SIEMENS
Ingenuity for life

SIPROTEC 5
Bay Controller 6MD8

Frei verwendbar © Siemens AG 2016

siemens.com/siprotec5

Agenda

Bay Controller

- Devices 6MD8
- Typical applications 6MD8
- Functional improvements 6MD8

Frei verwendbar © Siemens AG 2016

Bay Control
You need powerful functionality and flexibility?

SIEMENS

"Then you should go for SIPROTEC 5!"

Powerful engineering with DIGSI 5

Modular hardware

Basic module +

up to 4 expansion modules

Additionally 2nd Row with 5 more expansion modules

Modular and flexible communication

Different plug-in modules

Different protocols

Security inside

Flexible functionality

CTRL | CFC | 25 | 79 | 50BF | 50/51 | 46 | 51V | 81 | 32 • • •

SIPROTEC 5 Series

Frei verwendbar © Siemens AG 2016

SIPROTEC 5
Bay Controller devices

SIEMENS

Bay Controller for Distribution and Transmission systems	**6MD85**	
Bay Controller for Transmission systems	**6MD86**	

Frei verwendbar © Siemens AG 2016

SIPROTEC 5
Large IO Amount with Second Row and IO230 / IO231 (1/2)

SIEMENS

Base Module

PS203
Power Supply for
2nd Row

5 additional
extension modules

Frei verwendbar © Siemens AG 2016

SIPROTEC 5
Large IO Amount with Second Row and IO230 / IO231 (2/2)

SIEMENS

IO230: Extension module with 48 Binary Inputs
IO231: Extension module with 24 Binary Inputs and 24 Binary Outputs
Both contain 2 boards in 1 extension module → double density

Example 1: 1/1 device, 1 x IO202, 4 x IO230: 4 x U, 4 x I, 203 BI, 8 BO

Example 2: 2/1 device, 2 x IO202, 8 x IO231: 8 x U, 8 x I, 211 BI, 206 BO

Frei verwendbar © Siemens AG 2016

Agenda

Bay Controller

- **Devices 6MD8**
- Typical applications 6MD8
- Functional improvements 6MD8

Frei verwendbar © Siemens AG 2016

SIPROTEC 5
Bay Controller devices

SIEMENS

Functionality	6MD85	6MD86
Breaker Failure Protection	-	Optional
Autoreclosure	-	Optional
FB Switching sequences	Optional	☑
CFC Arithmetic	Optional	☑
CFC Measurement Processing	Optional	☑
Number of Switching Devices >4	Optional	☑
Synchrocheck	Optional	☑

A lot more functions are available – table shows only the features which are different between 6MD85 and 6MD86

Frei verwendbar © Siemens AG 2016

Bay Controller
6MD85 – Profile

SIEMENS

Application

- Bay Control
- Automation functions (CFC)
- Multifunctional protection
- All network types, all voltage levels
- 4 I, 4 U … (x I, x U)
- 11 BI, 9 BO ... 59 BI, 33 BO …
- Up to 5 plug-in modules
- Up to 4 expansion modules in 1 row
- More IO in 2nd row

expandable

Suitable device 6MD85

Device functions

- Sync function
- U, f, P/Q protection functions
- Protection interface
- Phasor measurement unit PMU
- Modular software
- IEC 61850 (Edition 1 and 2)
- Multiple & redundant communication
- SIPROTEC 5 standard functions for control and monitoring

Frei verwendbar © Siemens AG 2016

Bay Controller
6MD86 – Profile

SIEMENS

Application

- Bay Control
- Automation functions (CFC)
- Multifunctional protection
- All network types, all voltage levels
- 4 I, 4 U … (x I, x U)
- 11 BI, 9 BO ... 59 BI, 33 BO …
- Up to 5 plug-in modules
- Up to 4 expansion modules in 1 row
- More IO in 2nd row

expandable

Suitable device 6MD85

Device functions

- Sync function (no extra function points)
- Autoreclosure, Breaker Failure
- U, f, P/Q protection functions
- Protection interface
- Phasor measurement unit PMU
- Modular software
- IEC 61850 (Edition 1 and 2)
- Multiple & redundant communication
- SIPROTEC 5 standard functions for control and monitoring

Frei verwendbar © Siemens AG 2016

Local Control

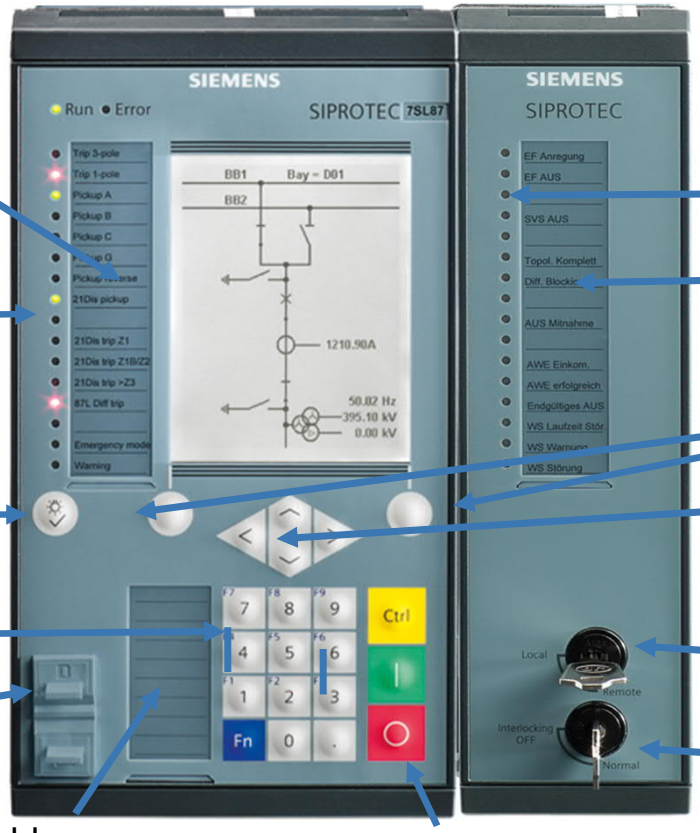

Frei verwendbar © Siemens AG 2016

Bay Controller
Online-Configurator – Define your device

SIEMENS

Define your own device according to your requirements!

Modify the standard variant by adding or changing modules according to the required number of currents & voltage inputs and binary IOs.

1) Select device type and standard variant

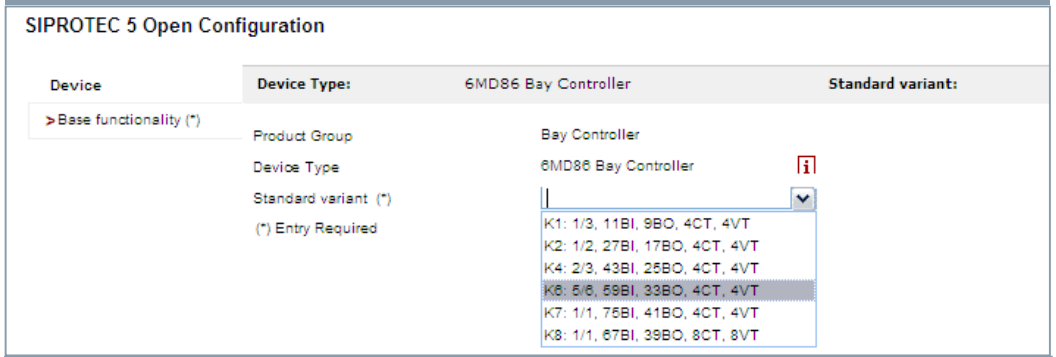

2) Edit device

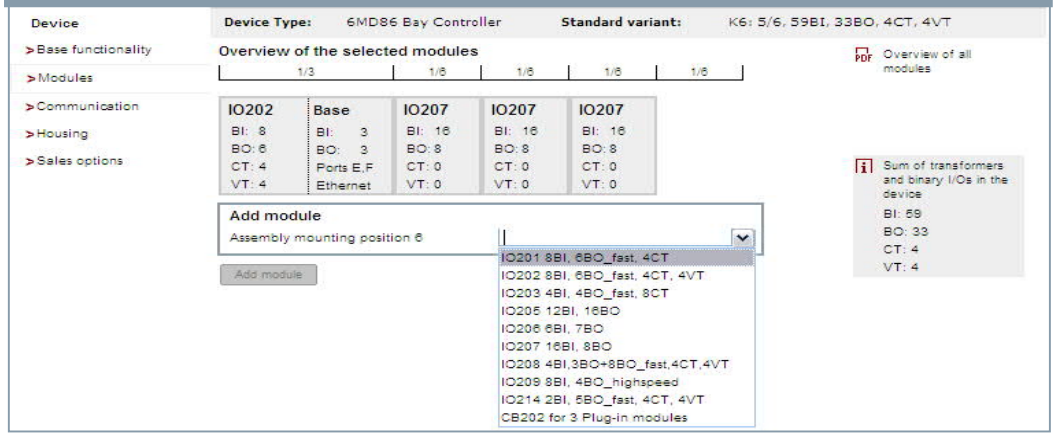

Frei verwendbar © Siemens AG 2016

Define your device with the Online Configurator

3) Save result with device picture, product code and detailed description

Product code
Short: P1G4558
Long: 6MD86-DAAA-AA0-0AAAA0-AF0112-23111B-AAA000-000AA0-CB3BA1-CG0CG0-CG0

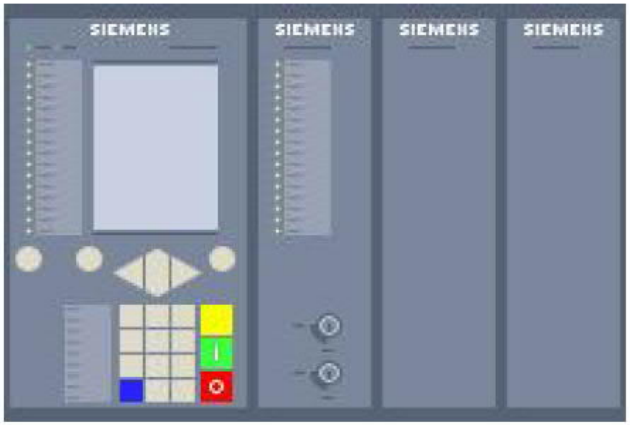

Housing width:	5/6 x 19"
Housing type:	Flush mounting
Binary inputs:	59
Binary outputs:	33 Relays (27 Standard, 6 Fast, 0 High-Speed, 0 Power)
Current transformers:	0 for protection, 4 for measurement and sensitive ground-current detection
Voltage transformers:	4

Frei verwendbar © Siemens AG 2016

Agenda

Bay Controller

- Devices 6MD8
- **Typical applications 6MD8**
- Functional improvements 6MD8

Frei verwendbar © Siemens AG 2016

Bay Control Unit – 6MD85
Substation Automation for Double Busbar Feeder

SIEMENS

Customer requirement

- Simple solution
- Modular extendable
- High measurement accuracy
- Look and Feel as protection
- Backup protection available

Siemens solution

- Bay Controller on SIPROTEC platform
- Modular IO and Functions
- Configurable with DIGSI5
- Measurement CT or Protection CT selectable

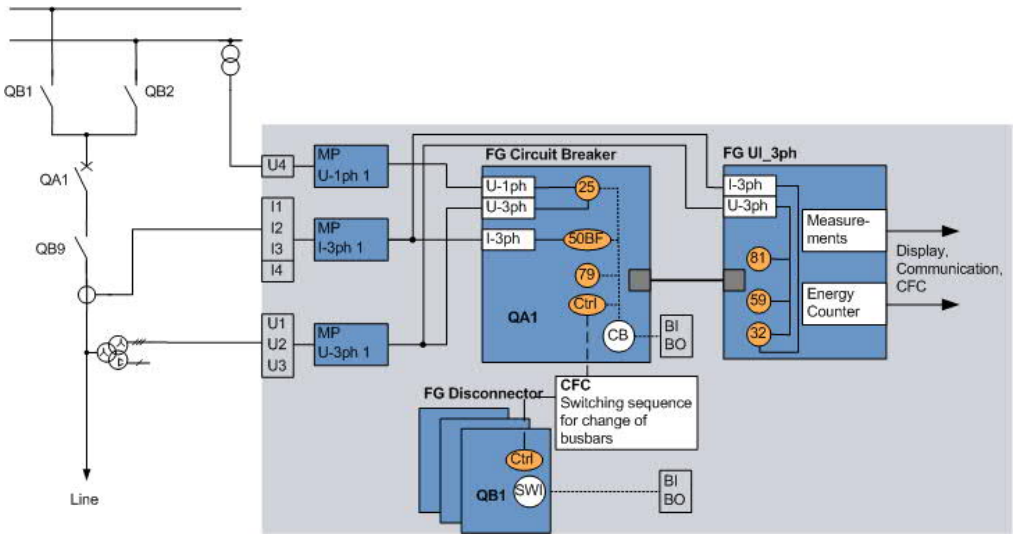

Device functions

- Powerful CFC for automation and switchgear interlocking
- Protection functions available
- Modular Hardware

Benefits

- Low training effort for engineering and operation (synergy with protection)
- Perfectly tailored device
- High availability
- **High functional integration saves money**

Frei verwendbar © Siemens AG 2016

Bay Control Unit 6MD86
Transmission application with backup protection

SIEMENS

Use the following protection functions as backup protection:

- Overcurrent Protection (50 / 51N)
- Overvoltage Protection (59)
- Undervoltage Protection (27)
- Overfrequency Protection (81O)
- Underfrequency Protection (81U)
- Thermal Overload Protection (49)
- Power Protection (active/reactive) (32/37)

Frei verwendbar © Siemens AG 2016

1 ½ circuit breaker schemes with SIPROTEC 5

Customer requirement

- 1 ½ CB = 2 feeders with 3 breakers
- Main and backup protection per feeder
- AR, SYN und BFP per each breaker
- Common bay control (diameter)

Siemens Solution

- Redundant protection per feeder (7SL8, OR 7SA8 + 7SD8) with differential and distance protection, AR, SYN and BFP
- Increased selectivity through separate CT measurement
- STUB protection at open disconnector
- One control device for the whole bay (6MD8) with synchrocheck, all currents and voltages get considered
- High amount of binary inputs/outputs
- Fast data exchange between all devices via the diameter bus IEC61850 GOOSE

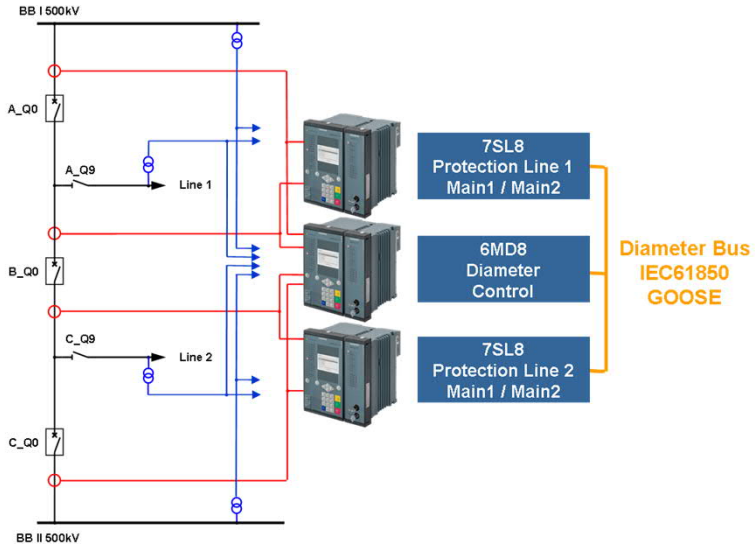

Benefits

- **Increased system availability**
- Reduced wiring
- Reduced commissioning effort
- Reduced investment (high integration and less devices)

Frei verwendbar © Siemens AG 2016

SIPROTEC5
Phasor measurement unit (PMU)

SIEMENS

Customer requirement

- Dynamic ‚Wide Area Monitoring'
- Blackout prevention via over-regional control operation

Siemens solution

- Phasor measurement available in **each SIPROTEC 5 device**
- Data transmission to regional data concentrators (e.g. SIGUARD PDP) according C37.118

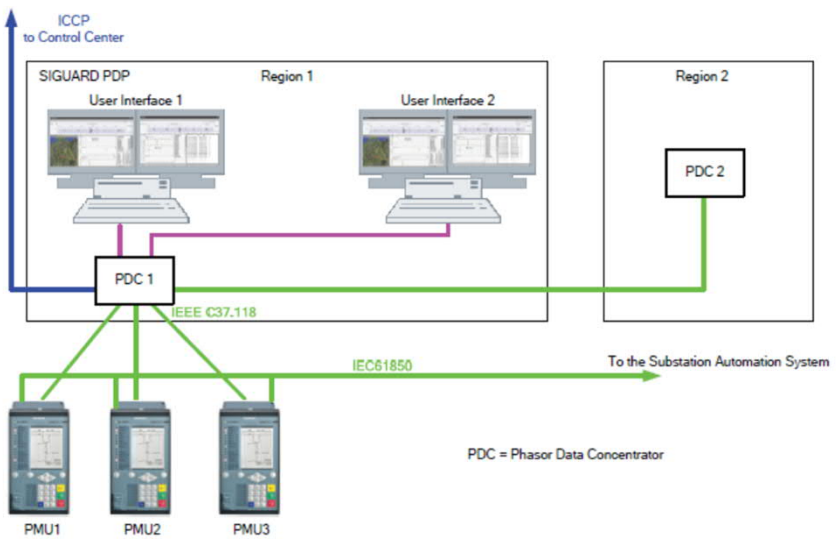

Device functions

- Phasor determination of local currents and voltages with 1% TVE[1)]
- GPS time synchronization
- Ethernet module: Protocol setting = IEEEC37.118/PMU

1) total vector error

Benefits

- Increased grid quality and stability
- Increased system availability
- Future save investment in new relay device technology

Frei verwendbar © Siemens AG 2016

Arc Protection

Customer requirement

- Very short tripping time required
- Instantaneous tripping: time grading can be bypassed in case of an arc

Siemens solution

- Plugin module for SIP 5 relays
- Connection of up to 3 optical sensors per plugin module
  → up to 15 sensors per relay (with CB202)
- Self supervision of the sensors

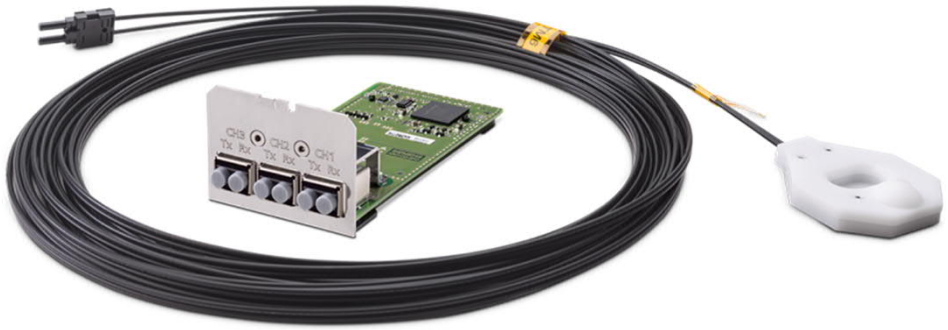

Device functions

- 2 methods to detect the arc:
  - Light only
  - Light + current (recommended)

Benefits

- Personal safety
- Minimized damages

Frei verwendbar © Siemens AG 2016

Arc-protection
Example: MV switchgear (NXAIR)

SIEMENS

Front and side view

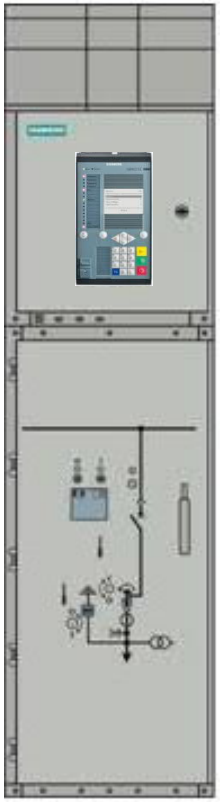

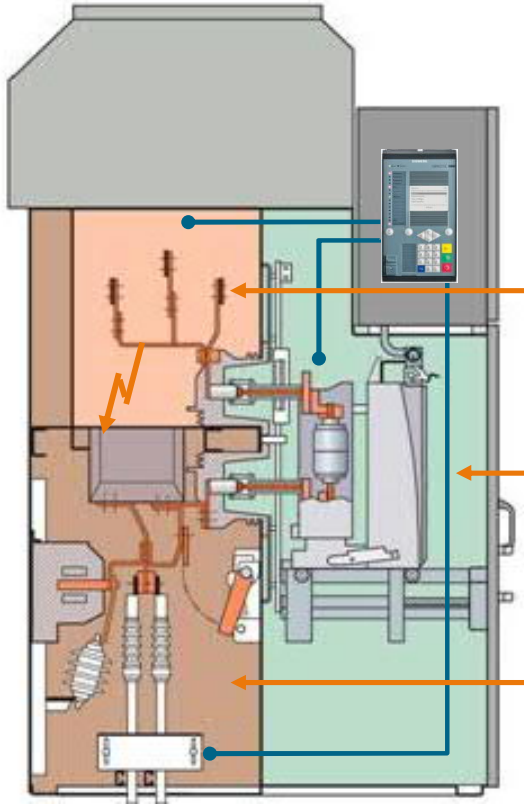

Optical sensors with wires

Busbar compartment

Breaker compartment

Connection compartment

Frei verwendbar © Siemens AG 2016

Arc-protection
Bypassing the time grading

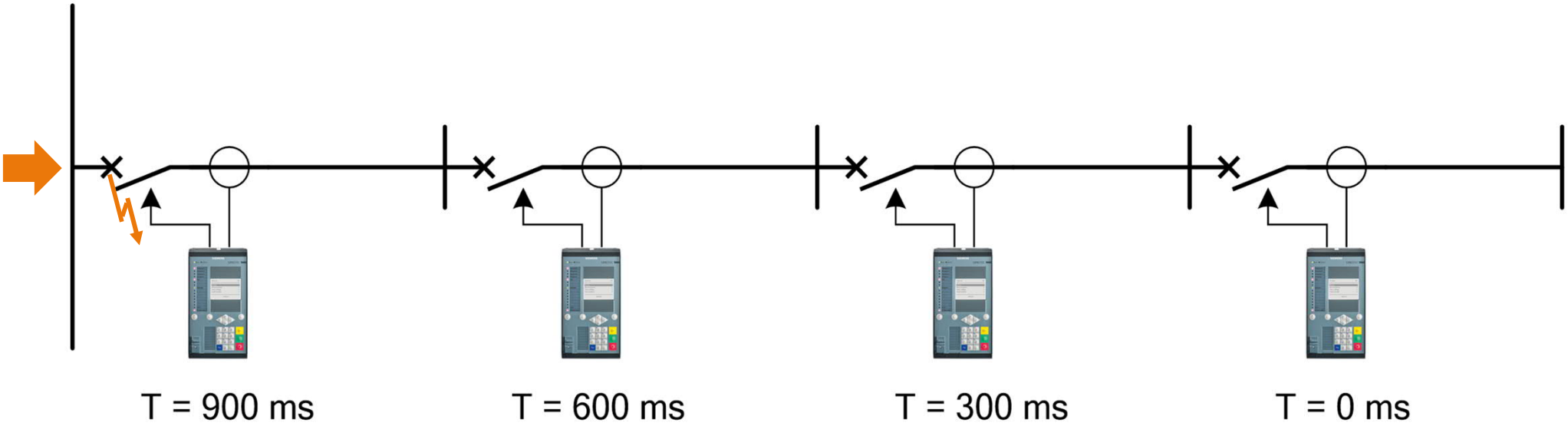

- Instead of the 900 ms time grading delay tripping takes place instantaneously
- This allows to minimize thermal damage which usually starts 100 ms after fault entry

Frei verwendbar © Siemens AG 2016

Bay Controller 6MD85, 6MD86
Unified functions

SIEMENS

Customer requirement

- Get busy with one function only once
- Same behavior of one function in different devices

Siemens solution

- A system where one and the same function is applicable in different devices

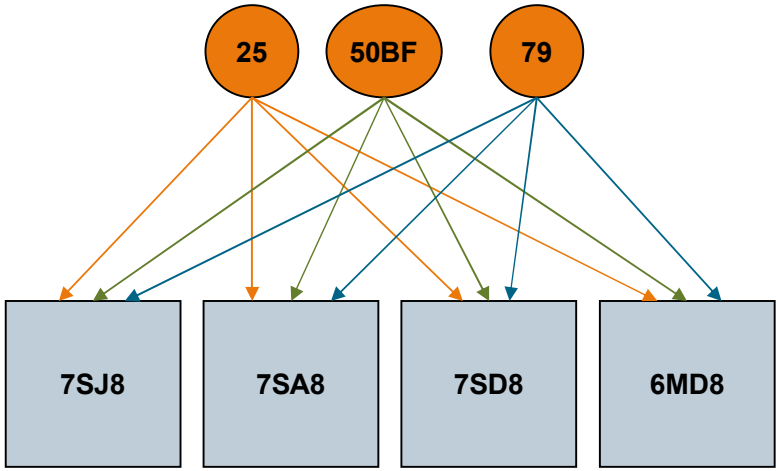

Device functions

- Most of your protection and supervision function are fully identically, no matter in which device they are applied
- Examples are: 25, 27, 46, 50HS, 51, 50BF, 59, 59N, 67, 67Ns, 81, FL, …

Benefits

- Less clarification efforts
- Less engineering effort
- Less chances for wrong function settings

Frei verwendbar © Siemens AG 2016

Agenda

Bay Controller

- Devices 6MD8
- Typical applications 6MD8
- **Functional improvements 6MD8**

Frei verwendbar © Siemens AG 2016

Bay Controller
Functional improvements

SIEMENS

V4.0

New Function Block „switching sequence“
Synchrocheck-Enhancements according to requirements from TERNA, Italy
(check for low frequency oscillations and delta f / delta t

V6.0

More than one switching authority „Remote“ allowed
Breaker Monitoring: Supervision of „Make“-Time

V6.20

PMU: Free labeling of Voltage and Current channels
PMU: Wildcards for IP adress of PDC
New user defined signal of type „ENS“
Control: CB position indication „TRIP“ can be supressed after succesful external automatic reclosing

Frei verwendbar © Siemens AG 2016

Bay Controller
Functional improvements

SIEMENS

V7.0:

- CFC Online Monitoring (Debug and monitor CFC plans in online device)
- Larger CFC plans
- Manual processing of quality in CFC-plans
- Check of switching authoring and check “position reached” is now also for user defined controllables SPC, DPC and INC possible (up to now, only for switching elements)
- Improvement in IEC61850 flexible engineering: Allowed number of user defined objects increased significantly to 50 FNs, 20 FGs and 200 FBs

Frei verwendbar © Siemens AG 2016

Bay Controller
Migration Strategy

SIEMENS

SIPROTEC 4

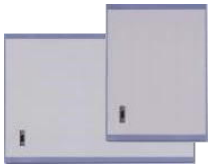

6MD61

6MD63

6MD66

SICAM BC

6MF19

Not necessary due to large IO-Amount of SIPROTEC 5

and option for devices without Operating Panel

SIPROTEC 5 (Modular)

6MD85

6MD86

6MD86 with 2nd row

Frei verwendbar © Siemens AG 2016

Contact

Dr. Markus Wache
EM DG PRO LM PA

Humboldtstr. 59
90459 Nuremberg

Phone: +49 (911) 433-8244

E-Mail:
markus.wache@siemens.com

siemens.com/energy-automation-products

Frei verwendbar © Siemens AG 2016