SIEMENS
Ingenuity for life

SIPROTEC 5
Generator Protection
7UM85

Unrestricted © Siemens AG 2016

Siemenes.com/siprotec5

Agenda

- **General and device overview**
- Typical applications
- Functional improvements

Frei verwendbar © Siemens AG 2016

Generator Protection
You need powerful functionality and flexibility?

SIEMENS

Then you should go for SIPROTEC 5!

Powerful engineering with DIGSI5

Modular hardware

Basic module +

up to 4 expansion modules

Modular and flexible communication

Different plug-in modules

Different protocols

Security inside

Flexible Functionality

87G 87T 40 49T 46 51 64S 51N 67 67Ns 27 59 81 25 32 21 24 • • •

SIPROTEC 5 series ▶

Frei verwendbar © Siemens AG 2016

SIPROTEC 5
Generator protection devices 7UM85 – Flexible hardware configuration

SIEMENS

Small units

Basic hardware
(4 I and 4 V)

7UM85

Small and medium sized units

Standard hardware
(e.g. 8I and 8 V)

7UM85

Larger units

Large hardware
(e.g. 16 I and 8V)

7UM85

Frei verwendbar © Siemens AG 2016

Generator protection
Predefined HW variants

SIEMENS

Different standard HW variants are defined to support the user - entry point for your configuration

Type of device	Standard HW variants
7UM85 (base device)	AA1: 1/3 19''; 3 I, 1I_{Ns}, 4 V, 11 BI, 9 BO AA2: 1/3 19''; 3 I, 1I_{Ns}, 4 V, 7 BI, 14 BO
7UM85	AA3: 1/2 19''; 6 I, 2I_{Ns}, 8 V, 15 BI, 20 BO
7UM85	AA4: 1/2 19''; 6 I, 2I_{Ns}, 7 V, 4 MT, 11 BI, 16 BO AA5: 2/3 19''; 14 I, 2I_{Ns}, 7 V, 4 MT, 15 BI, 20 BO

Fast configuration of your HW

Frei verwendbar © Siemens AG 2016

Generator protection
Online-Configurator – Define your device

Define your own device according to your requirements!
Modify the standard variant by adding or changing modules according to the required number of current and voltage inputs and binary IOs.
Example Type AA3**:**

Replacement of IO202 by IO201, as 4 VTs are sufficient for the application

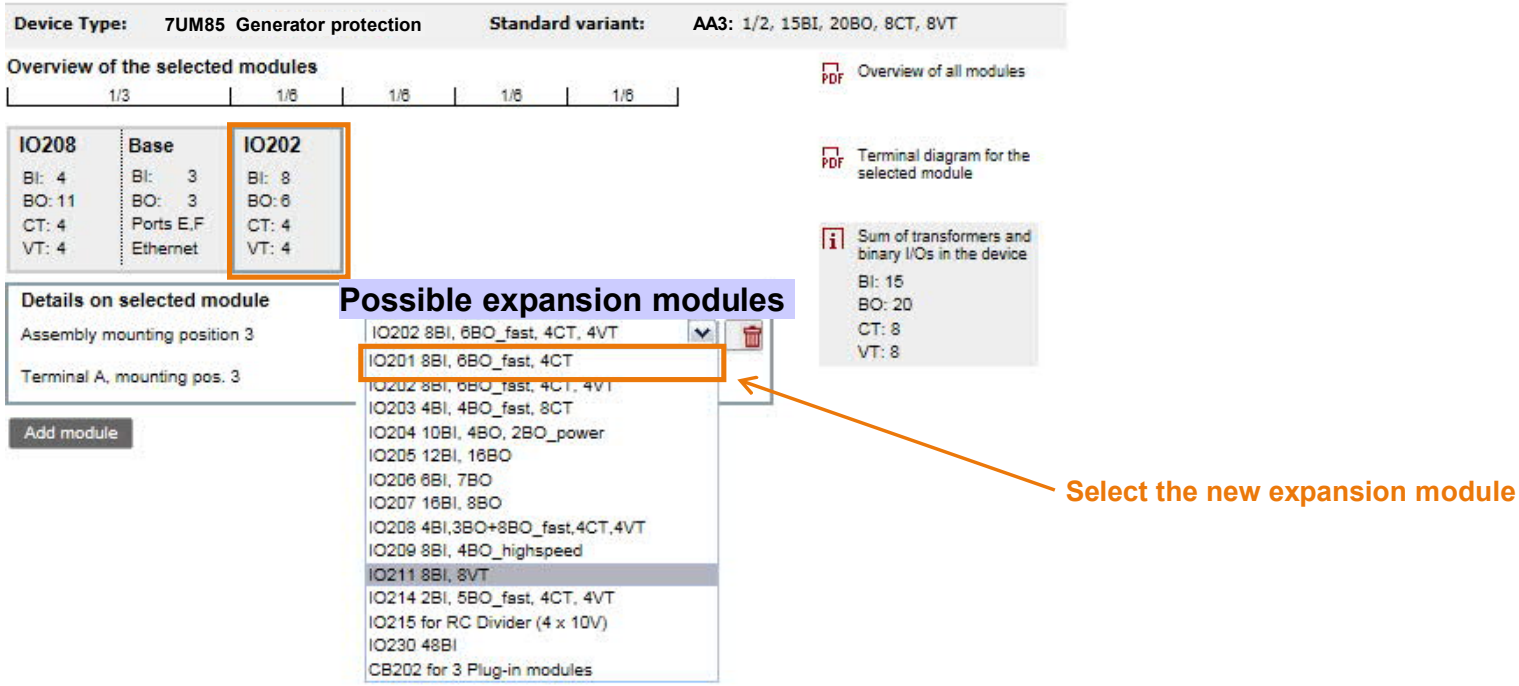

Frei verwendbar © Siemens AG 2016

Agenda

- General and device overview
- **Typical applications**
- Functional improvements

Frei verwendbar © Siemens AG 2016

Generator protection devices 7UM85
Functionality

The 7UM85 contains all necessary protection functions for all generator protection applications

Short circuit protection:

Differential (87G, 87T, 87TN, 87G(IT)), Impedance (21), Overcurrent (50, 50N, 51, 51V, 67),

Stator ground fault protection:

Unit connection (90%: 59N; 100% 3rd Harm. (27TH, 59TH, 59THD); 100% 20 Hz (64S))

Busbar connection: (approx. 90%: 67Ns)

Rotor ground fault protection:

fn in-coupling: 64F (I_{fault}>); 64F (R<); 1-3 Hz in-coupling: 64F

Asynchronous and out of step protection:

Loss of field (underexcitation): 40 (+U_{exc}<); Out-of-step: 78

Turbine and general generator protection functions:

Overload: (49S); Unbalanced Load: 46 (I_2^2 *t); Inadvertent energization (50, 27); Over- and Undervoltage (27, 59, (*different methods*)); Over- and Underfrequency: (81U, 81O); Rate of change of frequency: 81R (df/dt), Shaft current (51Ns (+ 3rd Harm.)); Reverse power: 32R (+32F); Overexcitation (U/f): (24); **.....**

Frei verwendbar © Siemens AG 2016

Generator protection devices 7UM85
High measuring accuracy

SIEMENS

- **High resolution of the data acquisition system (24 bit ADC)**
  - **Voltage**: 0,1 % (at 0,1-2 Un; fn +/- 1Hz)
  - **Current:** 0,1 % (at 0,1- 25 A; fn +/- 1Hz)
  - **Active Power** (P): 0,3% (at (0,8-1.2) Un, (0.1 – 2) In; fn +/- 1Hz)
  - **Reactive Power** (Q): 1% (at (0,8-1.2) Un, (0.1 – 2) In; fn +/- 1Hz)
  - **Apparent Power** (S): 0,3% (at (0,8-1.2) Un, (0.1 – 2) In; fn +/- 1Hz)
  - **Frequency**: +/- 5 mHz (fn +/- 0,2 Hz); +/- 10mHz (fn +/- 3 Hz)
- **Calibrated measuring system + terminals**
- **Wide operating range of functions due to frequency tracking (10 Hz to 80Hz)**
- **Special measuring and filtering technique for different protection functions**
- **Consideration of temporary phase shift rotation in pump storage stations (generator and motor operation) leads to a reduced amount of devices**

Frei verwendbar © Siemens AG 2016

Generator protection 7UM85
Protection of a small generator in unit connection

SIEMENS

Customer requirement

- Device that can be extended with functions and hardware
- Protection with one device only
- Flexible communication

Siemens solution

- Generator protection device **7UM85**
- Standard hardware (base module)
- Application template: Generator Basis
- Communication modules

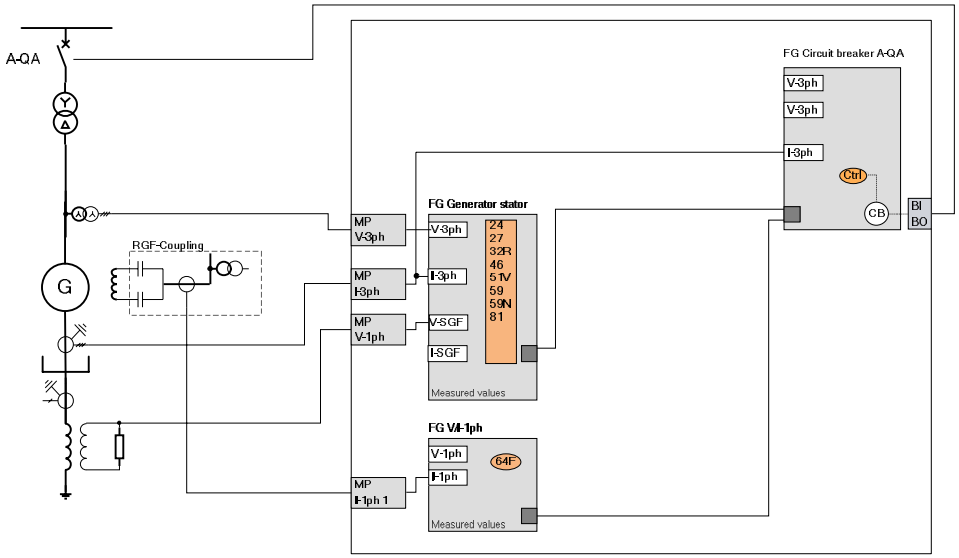

Device functions

- Configuration of necessary functions regarding specification
- Flexible configuration for different generator types

Benefits

- Reduced investment (one device for different applications)
- Easy parameterization
- Reduced wiring
- Faster commissioning

Frei verwendbar © Siemens AG 2016

Application template: Generator Basis

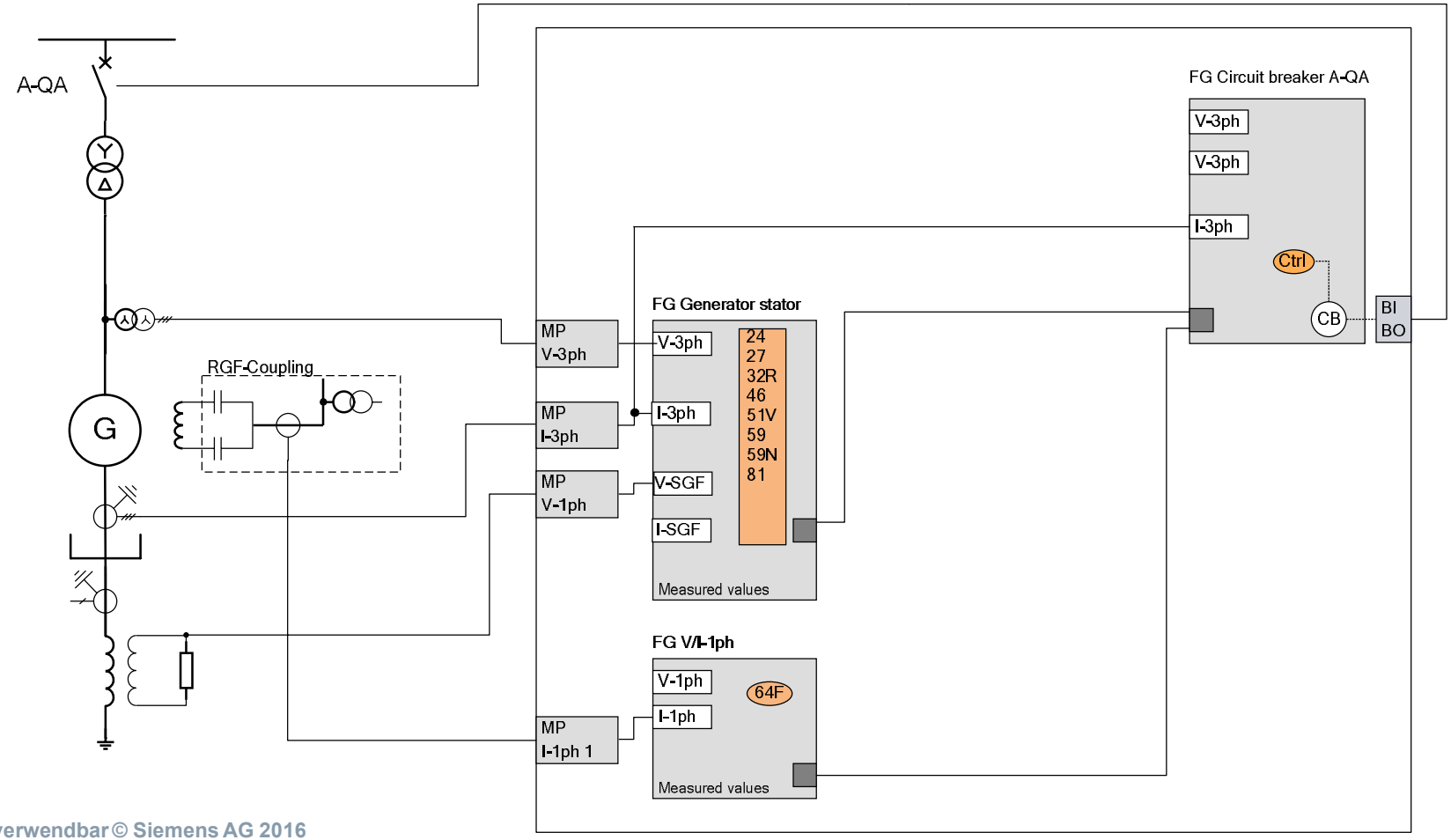

Frei verwendbar © Siemens AG 2016

Generator protection 7UM85
Protection of a generator in busbar connection

SIEMENS

Customer requirement

- Differential protection and necessary generator protection functions
- Protection with one device only
- Flexible communication

Siemens solution

- Generator protection device **7UM85**
- 87G and further functions (see template)
- Hardware (base module + 1 expansion module)
- Application template: Generator Busbar Connection Basis
- Communication modules

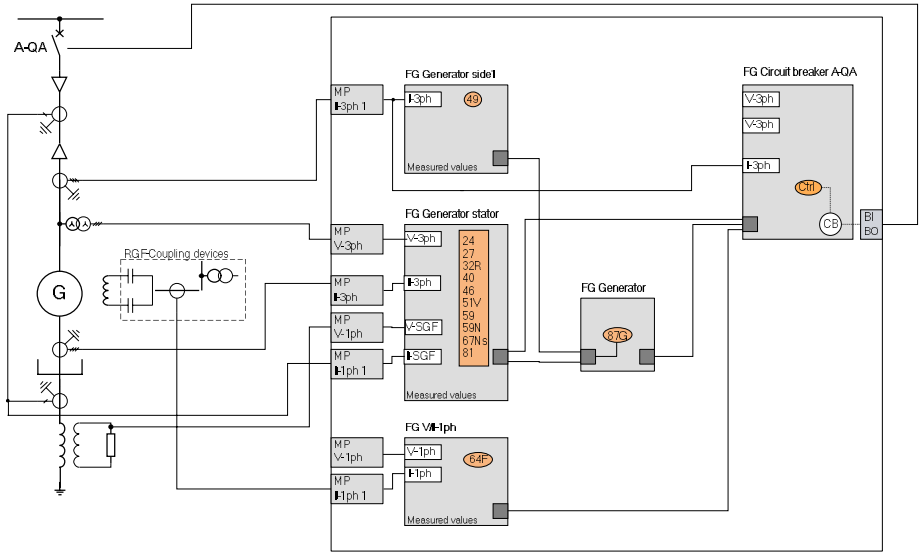

Device functions

- 87G (Differential protection) and additional generator protection functions
- Flexible configuration
- Flexible communication with the control system via different protocols (e.g. IEC61850)

Benefits

- Reduced investment (one device for different applications)
- Easy parameterization
- Reduced wiring
- Faster commissioning

Frei verwendbar © Siemens AG 2016

Application template:
Generator Busbar Connection Basis

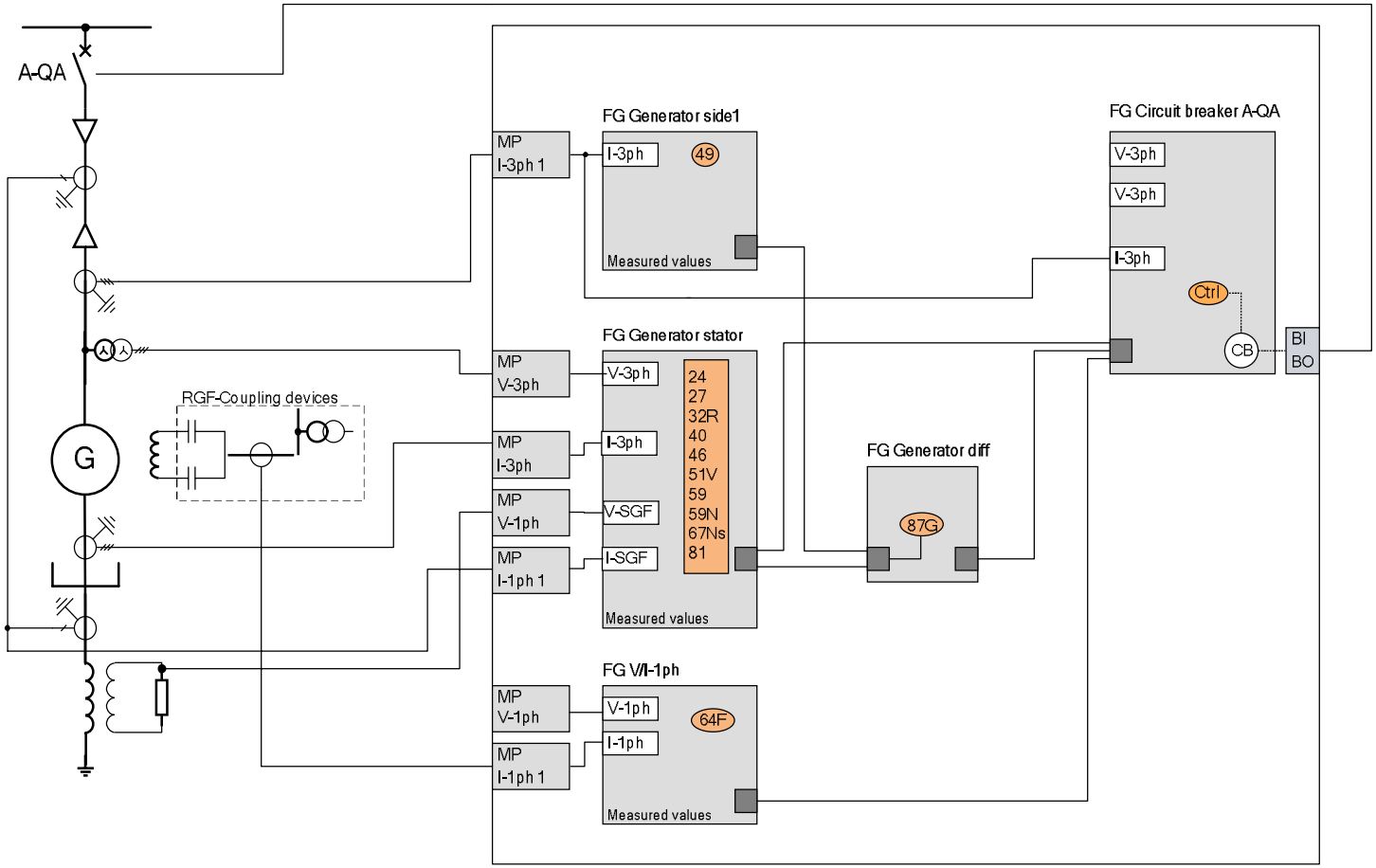

Frei verwendbar © Siemens AG 2016

Generator protection 7UM85
Protection of a medium sized generator in unit connection

SIEMENS

Customer requirement

- Overall differential protection (generator + transformer)
- Necessary generator protection functions
- Protection with one device only
- Flexible communication

Siemens solution

- Generator protection device **7UM85**
- 87T and further functions (see template)
- Hardware (base module + 1 expansion module)
- Application template: Generator Unit Connection Basis
- Communication modules

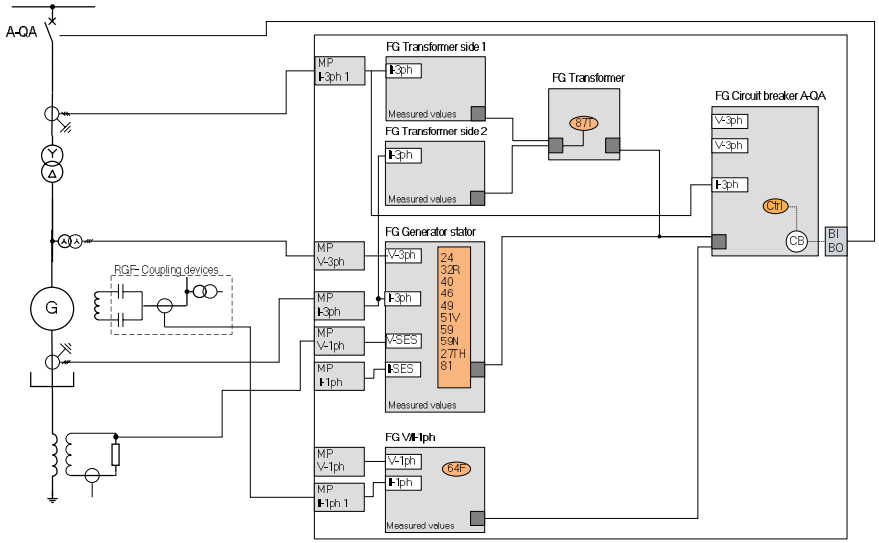

Device functions

- 87T (Overall differential protection) and additional generator protection functions
- Flexible configuration
- Flexible communication with the control system via different protocols (e.g. IEC61850)

Benefits

- Reduced investment (one device for different applications)
- Easy parameterization
- Reduced wiring
- Faster commissioning

Frei verwendbar © Siemens AG 2016

Application template:
Generator Unit Connection Basis

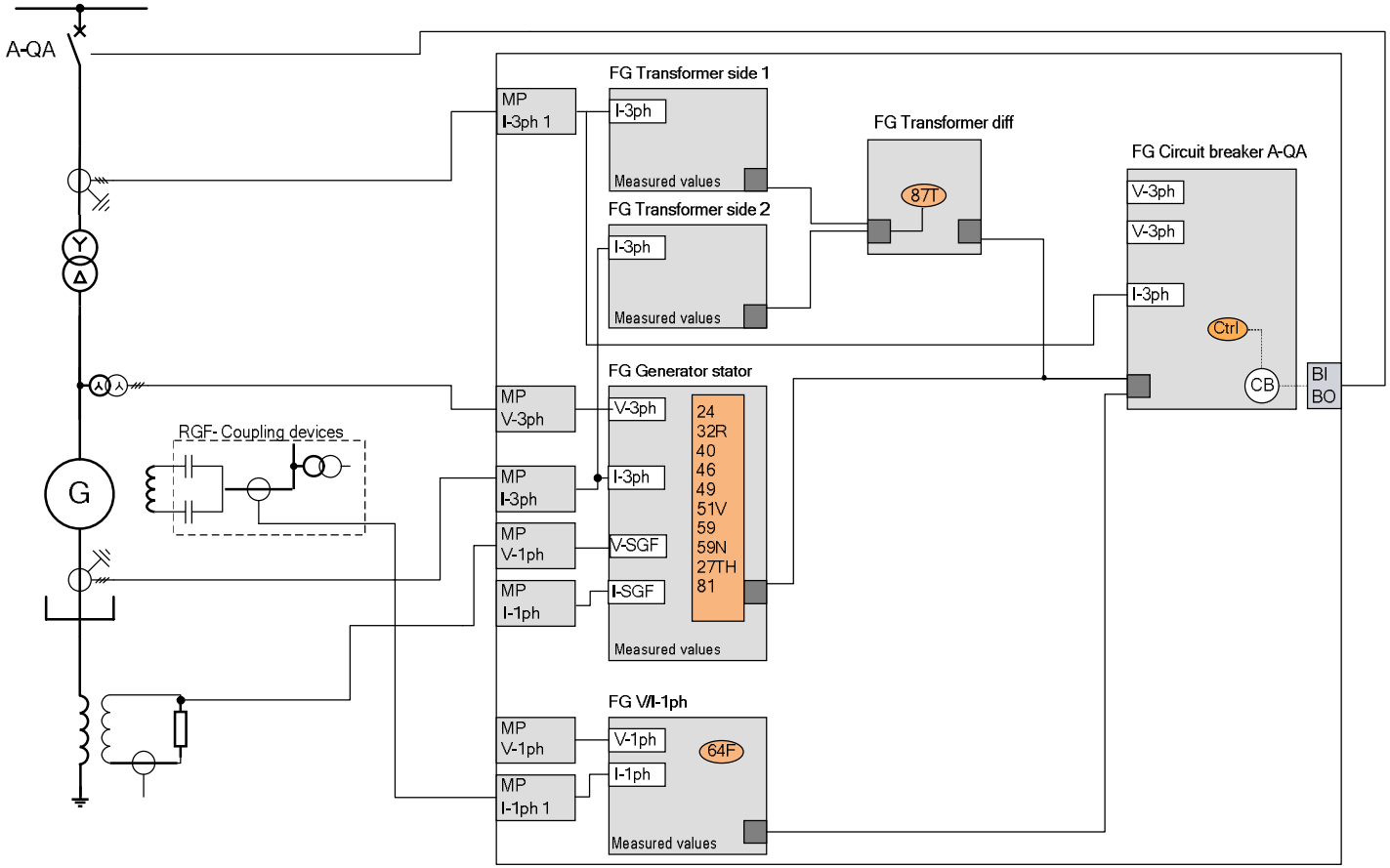

Frei verwendbar © Siemens AG 2016

Generator protection 7UM85
Protection of a large generator in unit connection

SIEMENS

Customer requirement

- Separate generator and transformer differential protection (87G, 87T)
- All necessary generator protection functions
- Protection with one device only
- Additional synch check for synchronization

Siemens solution

- Generator protection device **7UM85**
- Two differential protection functions in one device → **that's new**
- Hardware (base module + 2 expansion modules)
- Application template: Generator Unit Connection Extended
- Communication modules

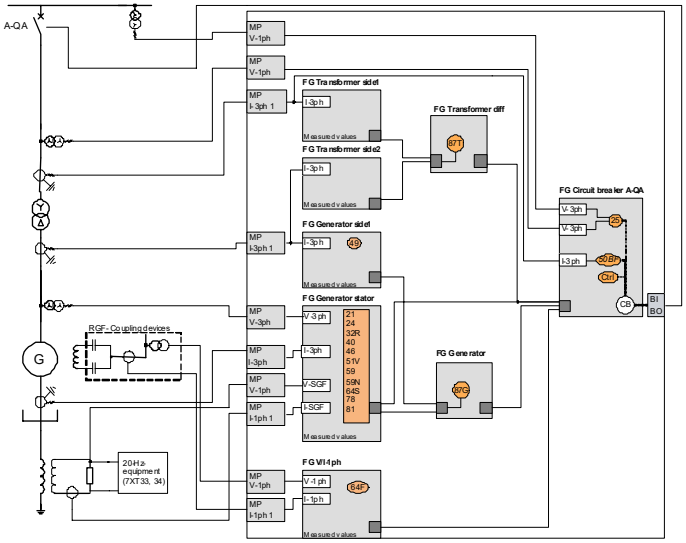

Device functions

- 87T and 87G (Differential protection)
- 87T with full functionality (max. 3 sides)
- Necessary generator protection functions
- Flexible configuration of different transformer types
- Flexible assignment of functions and interfaces

Benefits

- Reduced investment (one device for different applications)
- High sensitivity at ground faults (100% SGF with injection method (20Hz)
- Easy parameterization
- Reduced wiring
- Faster commissioning

Frei verwendbar © Siemens AG 2016

Application template:
Generator Unit Connection Extended

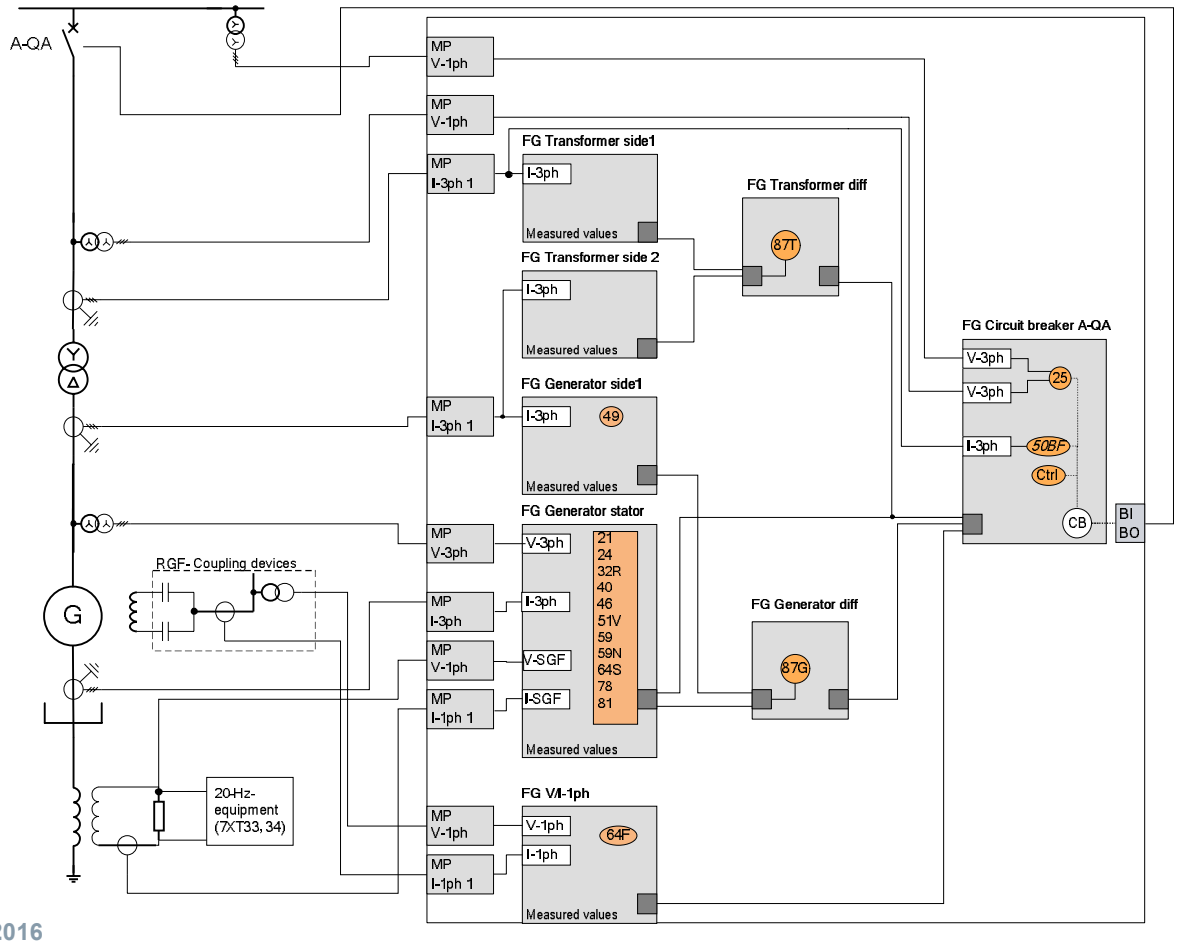

Frei verwendbar © Siemens AG 2016

Generator protection 7UM85
Protection of a large generator (complete generator package)

SIEMENS

Customer requirement

- Complete generator package for unit applications
- All necessary generator protection functions
- Protection with one device only
- Flexible communication

Siemens solution

- Generator protection device **7UM85**
- All necessary protection functions in one device (redundancy: duplication of devices)
- Application template: Generator Unit Connection Extended (can be modified and saved as customer device-template)
- Communication module

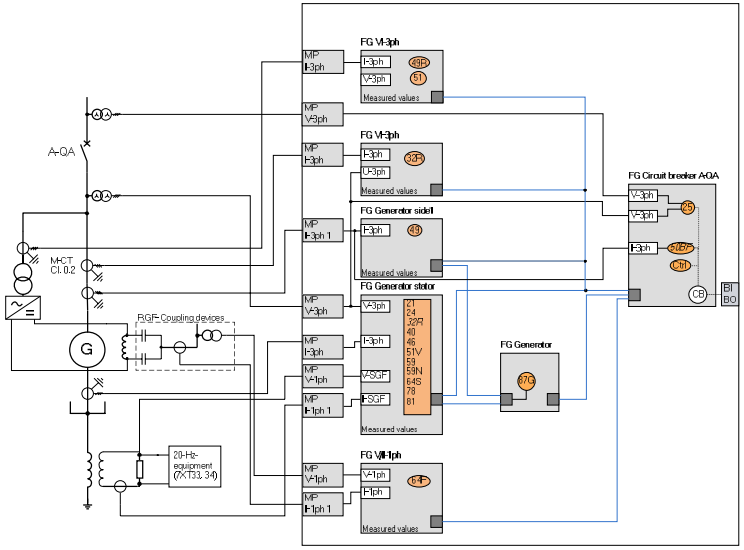

Device functions

- 87G (Differential protection)
- Separate overcurrent protection for the excitation system and separate reverse power protection
- Necessary generator protection functions
- Flexible configuration, assignment of functions and interfaces

Benefits

- Reduced investment (one device for different application)
- High sensitivity at ground faults (100% SGF with injection method (20Hz))
- Easy parameterization
- Reduced wiring
- Faster commissioning

Frei verwendbar © Siemens AG 2016

Application template:
Modification of application template Unit Connection Extended

SIEMENS

Requirement of V/I
14 I + 2 I_{Ns}
8 V

Hardware selection
Start with a predefined variant
AA3 (6 I + 2 I_{ns}, 8V)
add 1 expansion module:
IO203 (8I)

Device size:
2/3 19”
14 I, 2I_{Ns}, 8 V, 19 BI, 24 BO

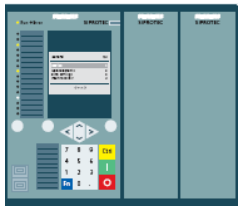

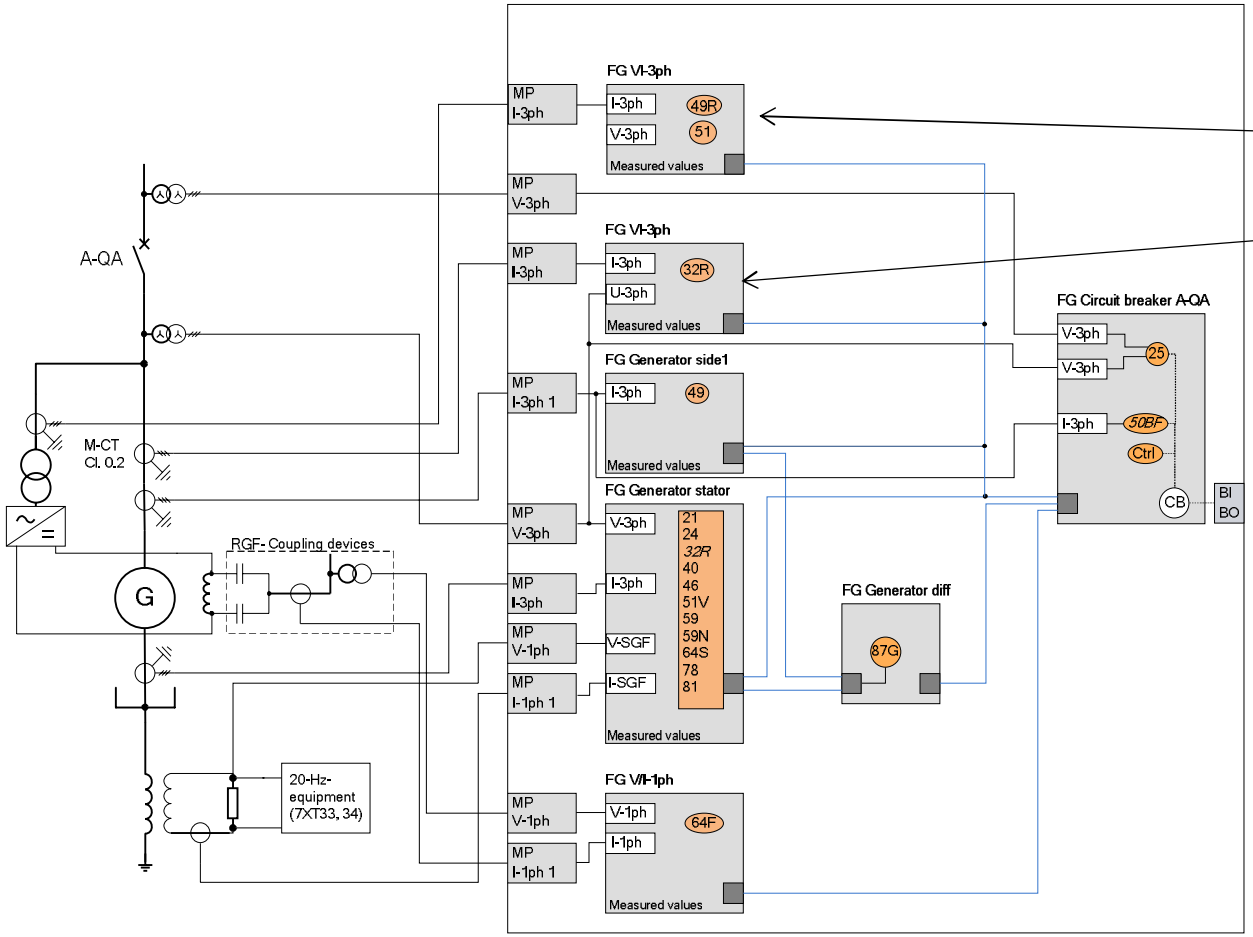

Protection of the excitation transformer

Separate reverse power protection connected to a measuring CT

Frei verwendbar © Siemens AG 2016

Generator protection 7UM85
Protection of a large generator (gas turbine with frequency starting converter)

SIEMENS

Customer requirement

- Generator protection as a complete package
- All necessary generator protection functions
- Protection with one device only
- Flexible communication

Siemens solution

- Generator protection device **7UM85**
- All necessary protection functions in one device (redundancy: duplication of devices)
- Hardware (base + 1 expansion module IO210)
- Application template: Generator large
- Communication module

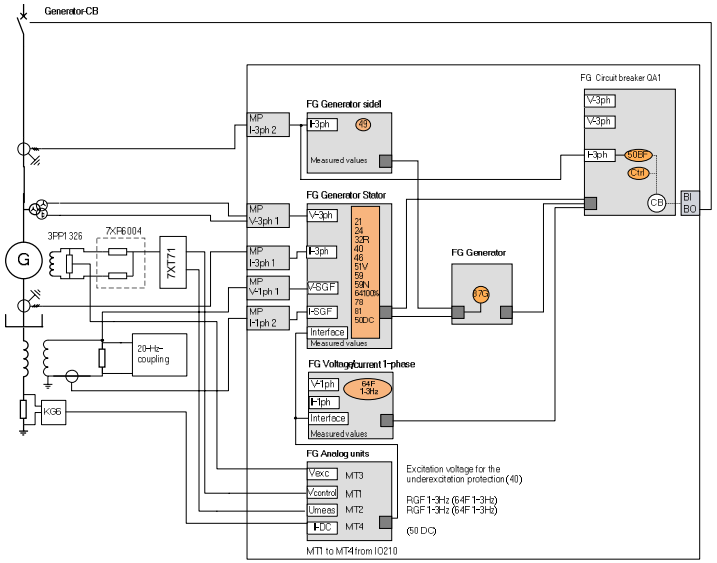

Device functions

- All necessary protection functions for protecting a generator with starting frequency converter
- Due to the fast measuring transducer extended functionality (1-3 Hz RGF, starting ground fault protection, excitation voltage supervision)
- Flexible assignment of functions and interfaces

Benefits

- Reduced investment (one device for different applications)
- All necessary function in one device with option extension
- Easy parameterization
- Reduced wiring
- Faster commissioning

Frei verwendbar © Siemens AG 2016

Application template: Generator large

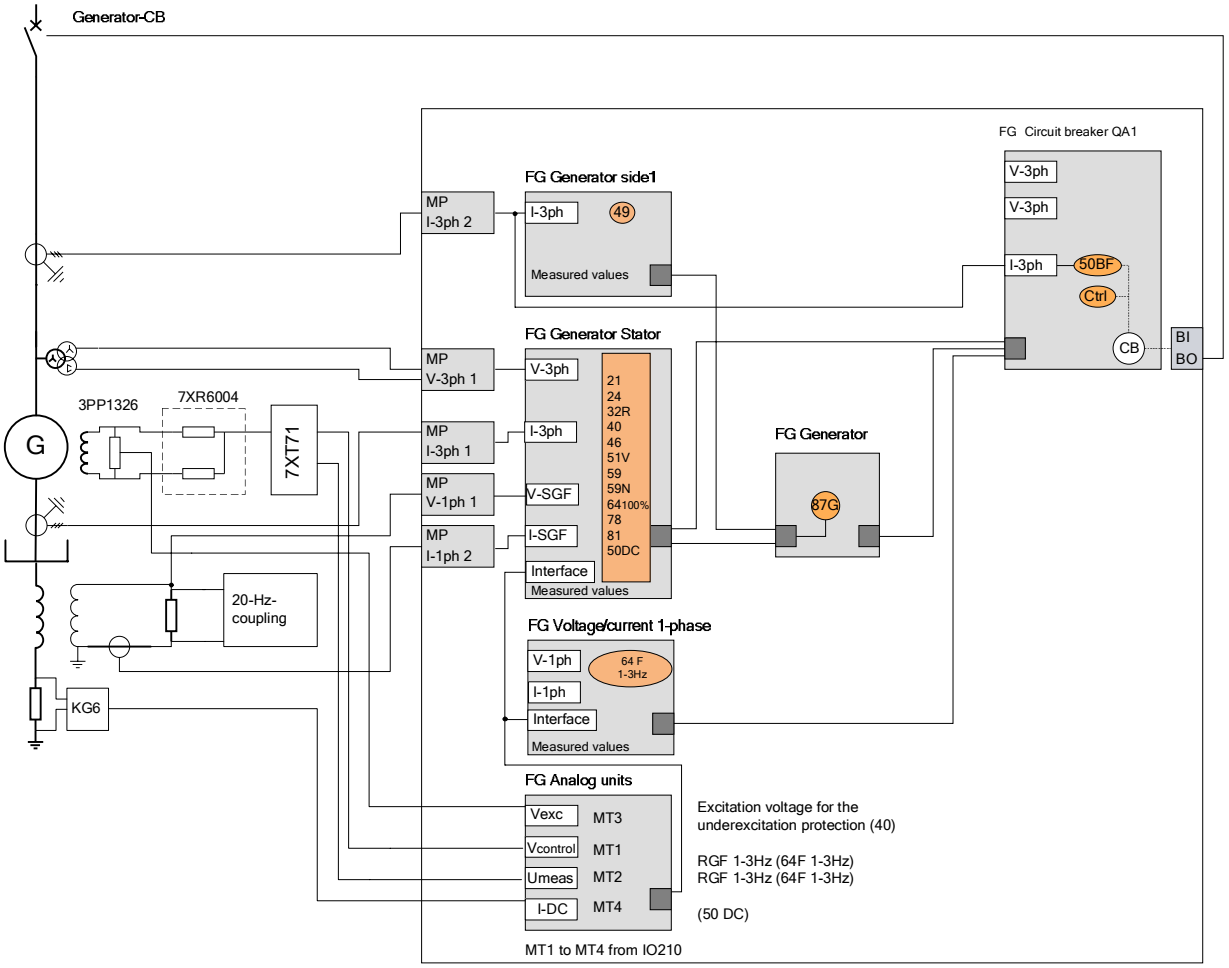

Frei verwendbar © Siemens AG 2016

7UM8
Protection of a Synchronous Motor

SIEMENS

Customer requirement

- All required protection functions for protecting a synchronous motor with one device
- Protection functions for starting of the motor (starts as an asynchronous motor)
- Flexible hardware und communication

Siemens solution

- Generator protection device **7UM85**
- Standard hardware (basic module + 1 expansion module)
- Application template: Generator Basis (adding the necessary FGs and functions)
- Communication module

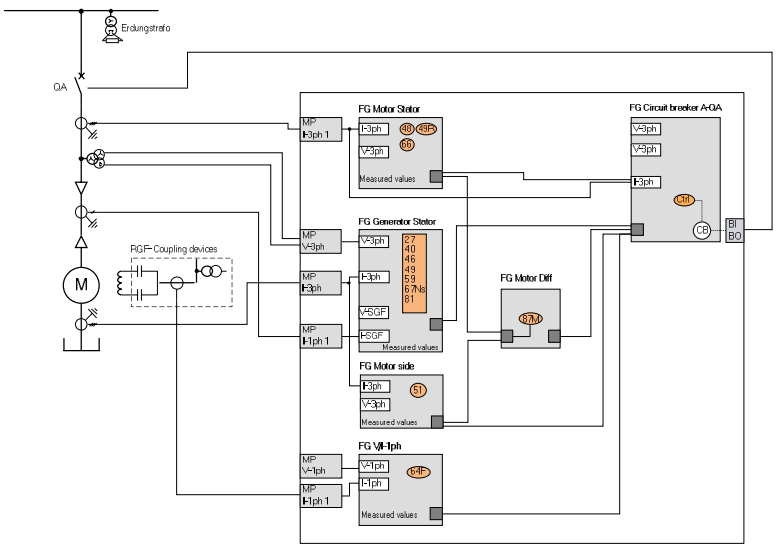

Device functions

- All necessary motor protection functions including the differential protection
- FGMotor, FG Motor stator, FG Motor Diff; FG Generator Stator
- Flexible configuration for different motors

Benefits

- Reduced investment (one device for different applications)
- Easy parameterization
- Reduced wiring
- Faster commissioning

Frei verwendbar © Siemens AG 2016

7UM85
Protection of a Synchronous Motor

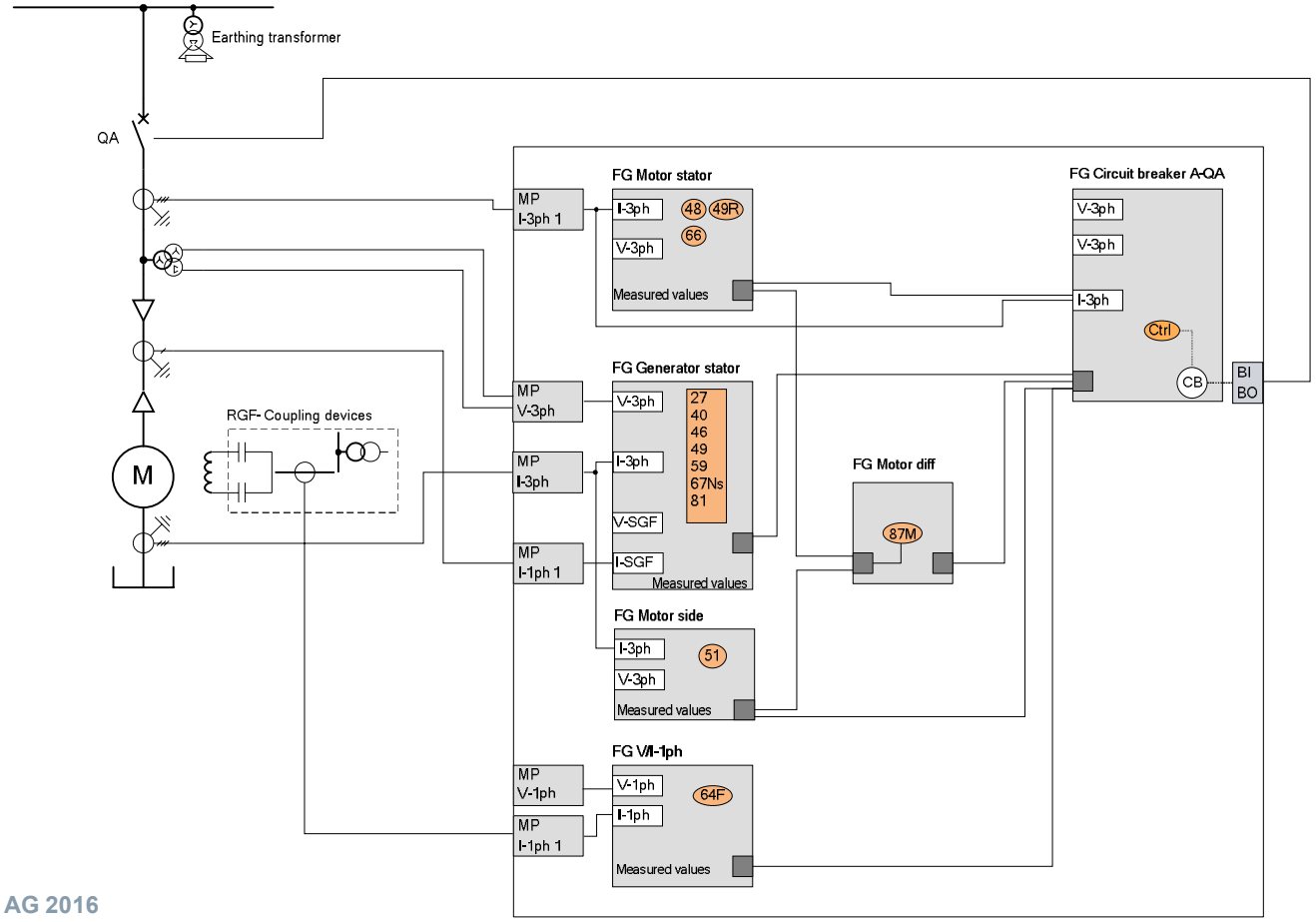

Frei verwendbar © Siemens AG 2016

Agenda

- General and device overview
- Typical applications
- **Functional improvements**

Frei verwendbar © Siemens AG 2016

Generator protection
High flexibility in hardware and functionality

SIEMENS

Customer requirement

- Flexible product with a modular hardware
- Selection of functions depending on the application
- Flexible allocation of functions to the voltage and current inputs
- Flexible communication interfaces and protocols

Siemens solution

- SIPROTEC 5 platform
- 7UM85: Hardware selection depending on the application and flexible allocation of functions
- Configure the device with the configurator: hardware and communication modules according to your needs; order the necessary function points (flexible loading of functions according your credit)

Device functions

- Hardware according to the application
- Definition of a standardized hardware and allowed functionality (function points) → **fix product code**
- Function points can be upgraded
- Adapt the application template according to the application and save this as **your device template**

Modular hardware
Flexible configuration (IOs)

Modular communication
different plug-in modules, protocols

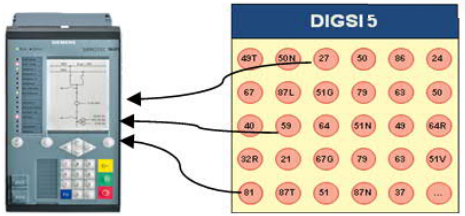

Expand the basic functionality according to your needs

Benefits

- Optimization of the hardware for your application
- Standardize your hardware and functionality
- Standardize your engineering

Cost saving

Frei verwendbar © Siemens AG 2016

Generator protection
Wide operating range of the functions

SIEMENS

Customer requirement

- Secure and accurate protection functions in a variable frequency operating range of the plant
- Active and accurate protection functions during starting with a static frequency converter (SFC)
- Following speed of hydro generators at load loss

Siemens solution

- 7UM85 with frequency tracking functionality
- **Frequency tracking method in the range of 10Hz to 80 Hz** (Adaption of sampling frequency)
- High accuracy of functions due to the adaption of measuring algorithms to the current generator frequency

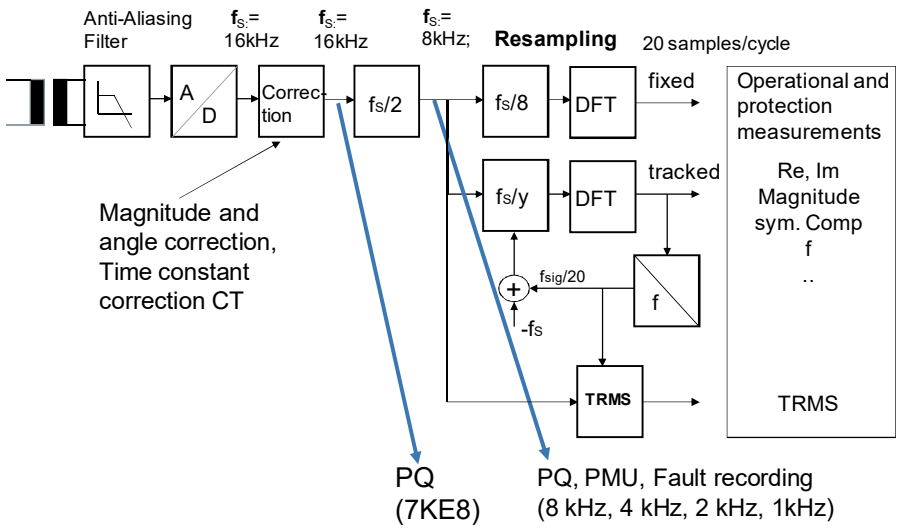

Device functions

- Frequency tracking with selected voltage and current inputs
- Allocation of necessary functions to the tracked sampled values
- High accuracy of the functions over a wide frequency range between 10Hz and 80 Hz

Benefits

- Secure and accurate protection functions over a wide frequency operating range
- High flexibility of the protection for different applications
- Reduction of live time costs due to standardized devices

Frei verwendbar © Siemens AG 2016

Generator protection
Powerful fault recording

SIEMENS

Customer requirement

- Fault recording of all currents and voltages inputs as well as binary signals
- Sampling frequency must be set, variable recording time, large number records
- Additional recording of function measured values

Siemens solution

- 7UM85 uses a powerful fault recording
- Sampling frequency (1, **2,** 4, 8 kHz) , max. setting of recording time: 80s; number of records (e.g. setting **10s**: 8 kHz→8 records, at **2** kHz → **32)**
- Function measured values can be displayed, send via protocol and routed to fault record

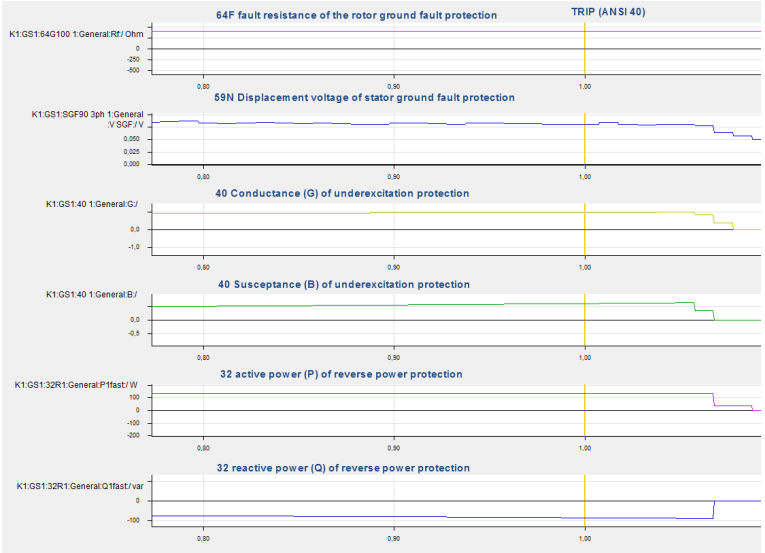

Device functions

- Generator protection functions have function measured values (these values are direct used by the protection functions)
- Function measured values are available in the routing matrix and under folder function measured values

Benefits

- Powerful fault recording supports the fault clearing
- Flexible routing of sampled measured values, function measured values and binary signals
- Flexible setting of the recorder according the application (sampling frequency, recording time)
- Large number of stored records

Frei verwendbar © Siemens AG 2016

Generator protection
Optimum adaption of underexcitation protection (Loss of field)

SIEMENS

Customer requirement

- Secure detection of an asynchronous generator operation (e.g. due to loss of field)
- Characteristics for static and dynamic limits
- Optimal adaption on the generator capability curve
- Simple settings

Siemens solution

- 7UM85 with underexcitation protection
- **Transformation of the generator capability curve into a per unit admittance diagram**
- **Evaluation of the admittance** guarantees a good adaption on different operating conditions ($V<V_{rated}$)
- **Simple setting via straight lines**

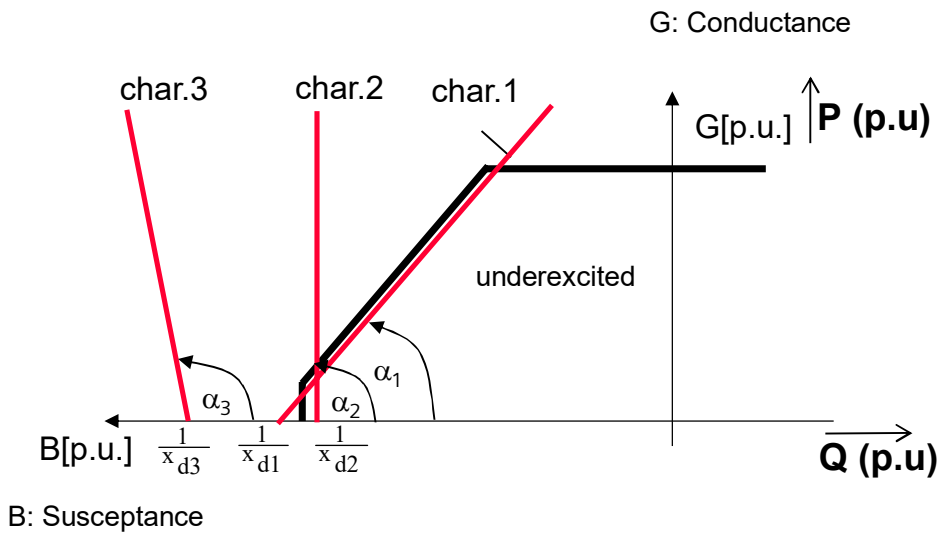

Device functions

- Selection of the underexcitation function (40)
- Allocation to the FG Generator stator
- Simple settings due to per unit values
- Additional consideration of the excitation voltage (influencing the tripping time, if the static stability is exceeded (char.1, 2))

Benefits

- Secure detection of asynchronous conditions due to problems in the rotor circuit (excitation, V-regulation)
- High sensitivity due to a perfect adaption on the generator capability curve and operating conditions
- Simple settings avoid mistakes and increases the security (reliability)

Frei verwendbar © Siemens AG 2016

Generator protection
Sensitive and accurate reverse power protection, flexible routing

SIEMENS

Customer requirement

- Sensitive reverse power protection for large steam turbines (P approx. (-0.5% to -1%) S_{rated})
- Correction of angle errors of the primary CT
- Allocation of the function to a measuring CT

Siemens solution

- 7UM85 with reverse power protection
- **Optimized measuring algorithm guarantees a high accuracy** (P_{min} = - 0.3% S_{rated})
- Compensation of angle error caused by primary CT
- Commissioning support via measured values
- Calibrated measuring inputs of the devices (angle error <0.1°)

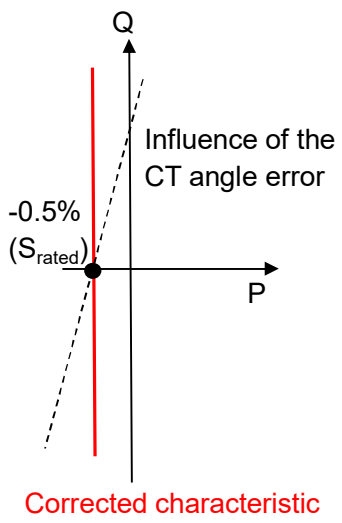

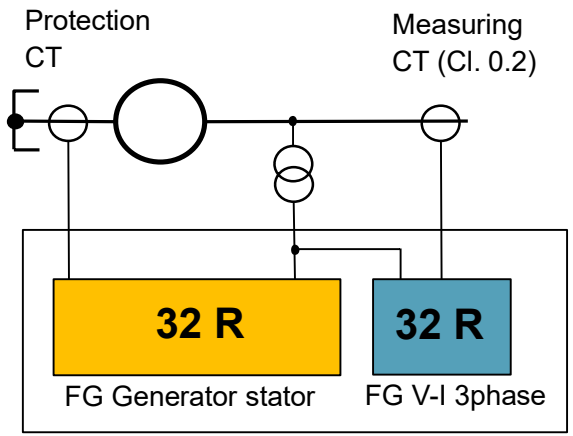

Device functions

- Selection of the reverse power protection function
- Allocation to FG Generator stator for smaller units
- Allocation of the function to the measuring CT for large units (reason: measurement to compensate the angle error is not possible)
- Simple settings due to per unit values

Benefits

- Secure detection of the reverse power (motor operation) and protection of the turbine
- High sensitivity due to the calibrated hardware and optimized measuring technique
- Increased system availability

Frei verwendbar © Siemens AG 2016

Generator protection
100% Stator ground fault protection with 20-Hz injection

SIEMENS

Customer requirement

- Secure detection of stator ground faults independent of the generator operation condition (at stand still and during starting)
- Redundant function to the 90% principle (V0>); function shall cover 100% of the stator winding

Siemens solution

- 7UM85 with 100% stator ground fault protection **Detection of stator ground faults** (100% of the stator winding – from the stator point to the lead)
- Consideration of different conditions during startup (dynamic blocking)
- Consideration of a **parallel load resistor** and a load dependent resistance

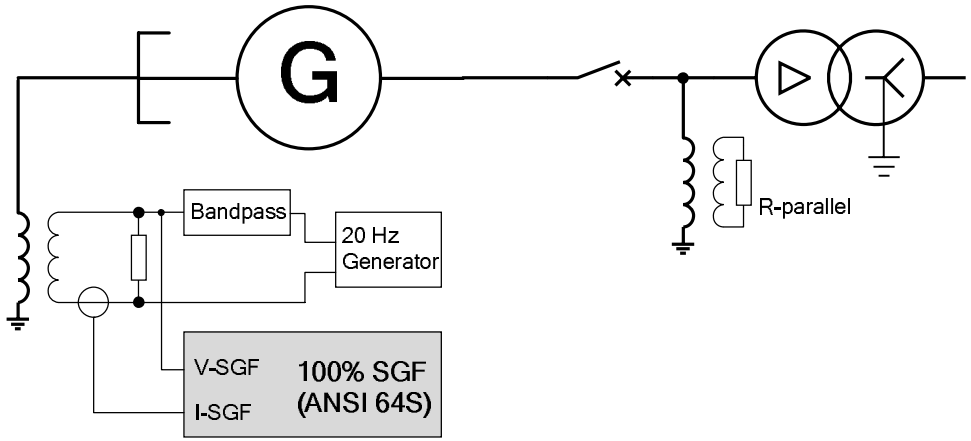

Device functions

- Selection of the 100% stator ground fault protection function (+ accessory 7XT33, 7XT34, CT 400A/5A)
- Allocation to the FG Generator stator
- High sophisticated measuring technique (compensation of stator ground capacitance, angle errors, parallel load resistors,..)
- Active during generator standstill (before starting)

Benefits

- Secure detection of stator ground faults (100% of stator winding)
- Independent measuring principle to the V0> measurement
- Active during generator start and consideration of different plant designs (e.g. parallel load resistor)
- Increased system availability

Frei verwendbar © Siemens AG 2016

Generator protection
Out of step protection for different fault cases
(Power swing inside generator unit)

SIEMENS

Customer requirement

- Detection of power swings in the generator – step-up transformer unit
- Detection of power swings for different fault cases (after a 3 phase short circuit or an interruption of 1 phase (CB problems))

Siemens solution

- 7UM85 with out of step protection
  Detection of power swings by evaluating the impedance trajectory (positive sequence)
- Selection of different zones with different settings (loss of phase: no I_2 blocking, wide impedance reach, higher number of power swings allowed)

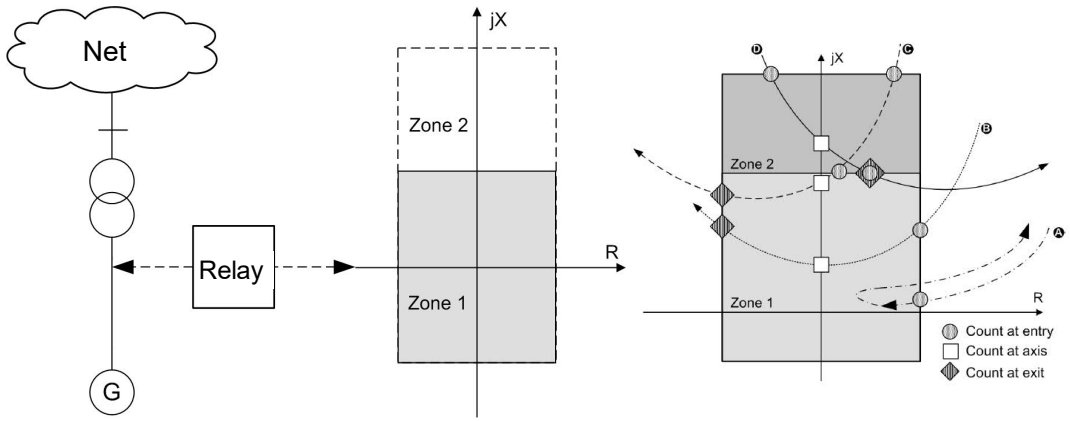

Device functions

- Selection of the out of step protection
- Allocation to the FG Generator stator
- Setting of different zones and reaches
- If necessary, two functions can operate in parallel
- Coordination of the number of allowed power swings with the generator/turbine manufacturer

Benefits

- Secure detection of power swings inside the plant and therefore protection of the primary equipment
- Consideration of different fault scenarios
- Increased system availability

Frei verwendbar © Siemens AG 2016

Differential protection functions (transformer and generator)
Improved restraint algorithm

SIEMENS

Customer requirement

- High sensitivity also for low fault currents
- Sensitive in 1,5 CB applications with small power transformers
- High stability against external faults

Siemens solution

- 87T, 87G use the conventional restraint characteristic with modified settings
- New is the calculation of the restraint current (Maximum of the phase currents)

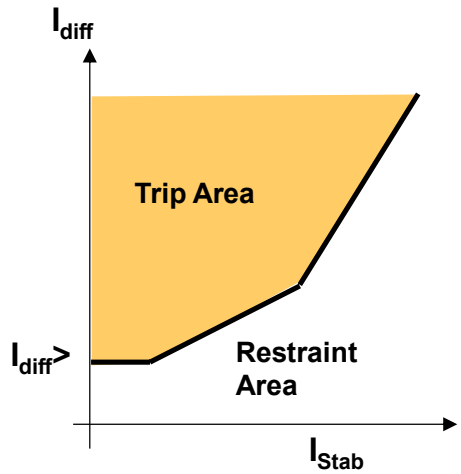

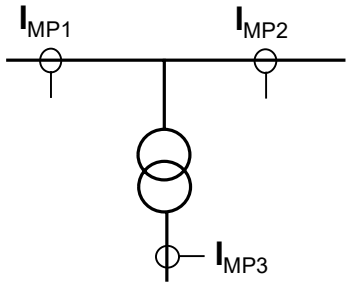

$I_{diff} = |\Sigma \underline{I_{MP}}|$

$I_{Stab} = \text{Max}\ |I_{MP}|$

Device functions

- 87T, 87G restraint characteristic has three straight lines
- Flexible setting of the characteristic

Benefits

- Higher sensitivity in 1,5 CB applications
- More stability against signal distortion (e.g. CT saturation)
- Increased system availability

Frei verwendbar © Siemens AG 2016

Differential protection functions (transformer and generator)
Improved Idiff – fast stage

SIEMENS

Customer requirement

- Short tripping time in case of high internal fault currents
- Robust in case of CT saturation (internal faults)
- Stable in case of external faults (in 1,5 CB appl.)

Siemens solution

- 87T, 87G fast stage evaluates instantaneous values of the differential current
- New: Fast differentiation between internal and external faults based on just a few samples (proven busbar prot. method)

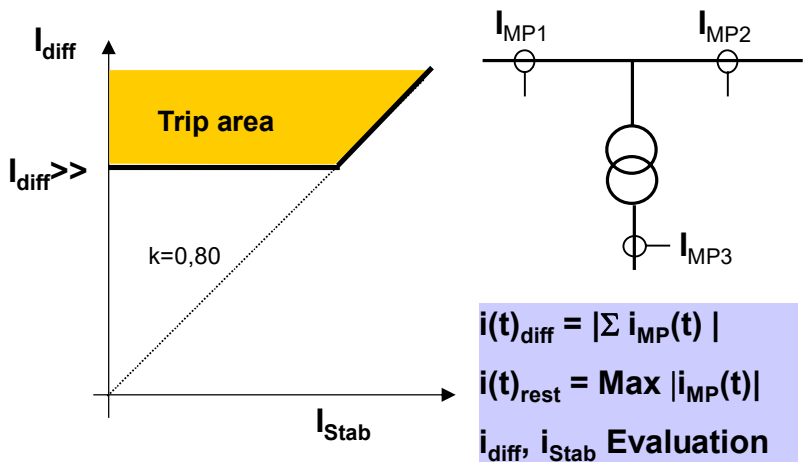

Device functions

- 87T, 87G fast stage in addition to the standard restraint characteristic
- Adaptive algorithm for differential current evaluation: first instantaneous values and after 1 cycle filtered values

Benefits

- Fast tripping time in case of internal faults also for saturated currents
- Stable in case of heavy external faults with CT saturation (transverse currents in 1,5 CB applications)
  → Increased system availability

Frei verwendbar © Siemens AG 2016

Transformer differential protection
Improved inrush stabilization

SIEMENS

Customer requirement

- Stable in case of inrush currents (switching ON of a transformer)
- Stable in case of sympathetic inrush currents (switching ON of a parallel transformer)

Siemens solution

- Inrush detection function blocks the differential protection
- New is the **one out of two** decision of **two different inrush algorithms**

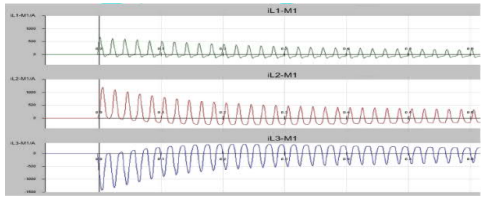

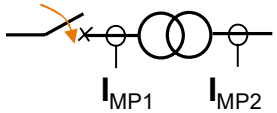

Method 1: $I_{2,Harm}/I_{1,Harm}$ > 15%

Method 2: **CWA** → Flat area evaluation

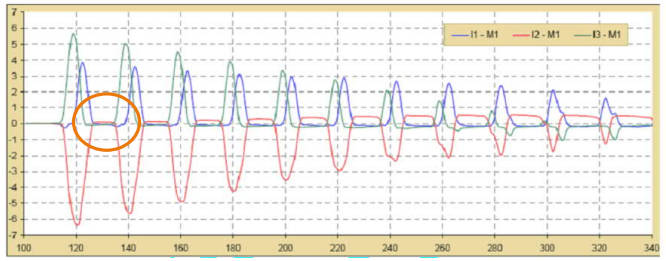

Device functions

- Inrush detection function with two different measuring principles
  - Second harmonic evaluation with cross block option
  - Curve waveform analysis (CWA)
- In case of high transformer voltage blocking of the differential protection with the 5th harm.

Benefits

- Avoiding a false trip in case of an inrush or a sympathetic inrush
- Stable in case of higher differential currents caused by an overvoltage
- Increased system availability
  → Increased stability against inrush currents

Frei verwendbar © Siemens AG 2016

Differential protection functions (transformer and generator)
Faster detection of external faults

SIEMENS

Customer requirement

- Protection must be stable in case of external faults with CT saturation
- CT requirements regarding transient performance must be as low as possible

Siemens solution

- New algorithm based on instantaneous values detects external faults very fast
- Missing samples due to saturation are determined via an estimation method

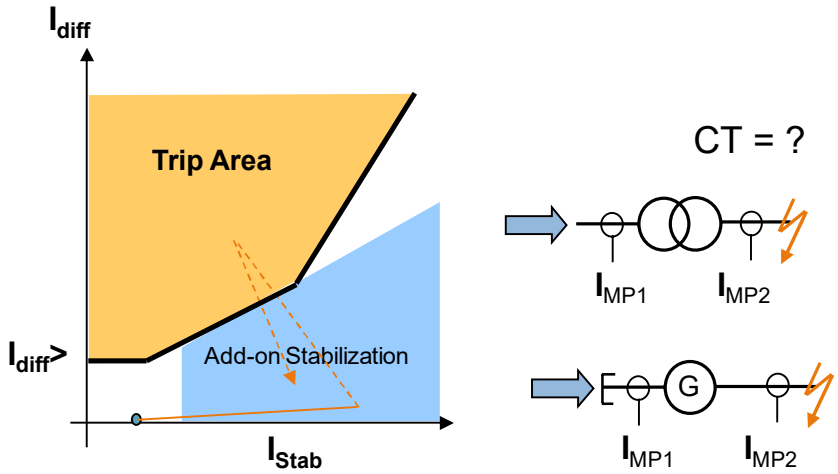

Device functions

- Add-on stabilization characteristic to detect external faults with CT saturation
- Handling of evolving faults (if an internal fault occurs after an external fault)
- Reduced transient dimensioning factor (transformers: **Ktd = 2** (Sip4 = 3); generators: (**Ktd = 4** (Sip4 = 5): reason larger DC time constant)

Benefits

- Stable in case of external faults with CT saturation
- Lower CT requirements
- Secure handling of evolving faults
- Increased system availability

Frei verwendbar © Siemens AG 2016

Differential protection functions (transformer and generator)
Wide permissible range of CT mismatching

SIEMENS

Customer requirement

- Using of the protection on 3-winding transformers with a low power tertiary winding or 2- winding transformers with high I_{SC} on the busbar
- Matching transformers must be avoided

Siemens solution

- High resolution of the measured phase currents via 24 ADC
- Each measured current can be adapted to the reference current

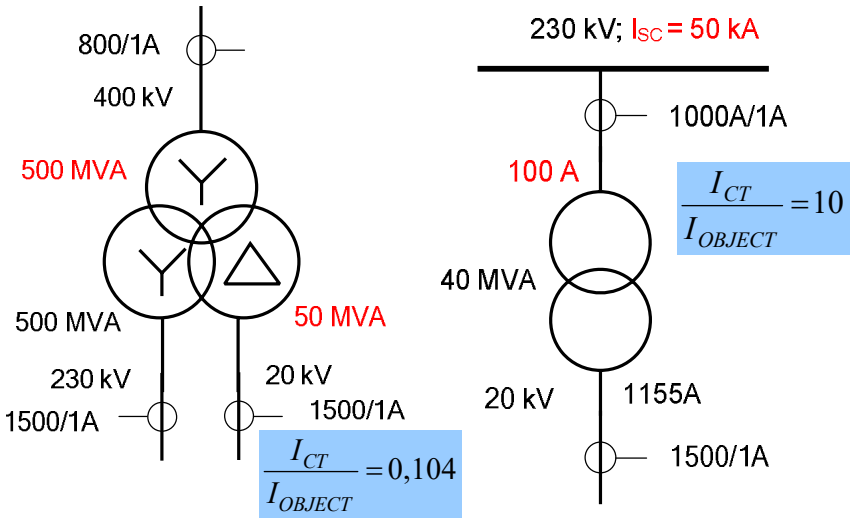

Device functions

- No limitation regarding CT mismatching

Benefits

- Improved transient CT performance via a lower burden
  → No matching transformer
- Flexible use of the protection devices

Frei verwendbar © Siemens AG 2016

Migration path
Generator protection

SIEMENS

SIPROTEC 4

7UM61x

7UT6x

7UM62

SIPROTEC 5

Modular

7UM85

Frei verwendbar © Siemens AG 2016

Generator protection 7UM85
Your benefits

SIEMENS

- + Powerful generator protection
- + Increased system availability
- + Reduced investment
- + Adaptable to your application
- + Part of smart grid through communication and automation

SIPROTEC 5

7UM85

Frei verwendbar © Siemens AG 2016

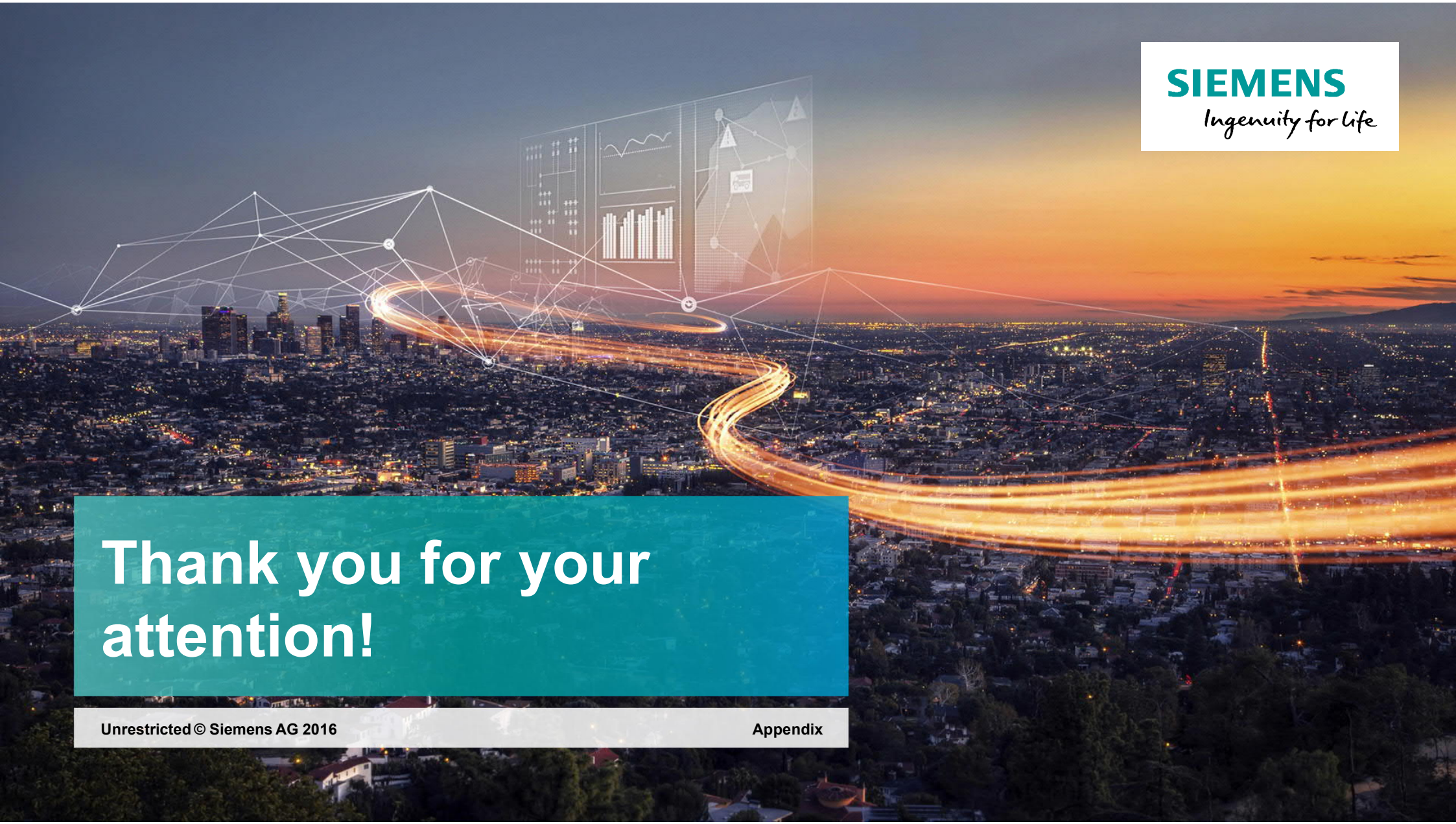

SIEMENS
Ingenuity for life

Thank you for your attention!

SIEMENS

SIPROTEC 5 – the new SIPROTEC series

+ **Individually configurable devices –**
Cost-efficient solution over the entire life cycle

+ **Trendsetting system architecture –**
Flexibility and security for highly meshed systems

+ **Multilayered security mechanisms –**
Maximum possible security and availability

+ **Consistent engineering for system and devices –**
Efficient operation concepts, flexible engineering

SIPROTEC 5 – the new benchmark for protection, automation, and monitoring of grids

Frei verwendbar © Siemens AG 2016

SIPROTEC 5
Functional Integration

SIEMENS

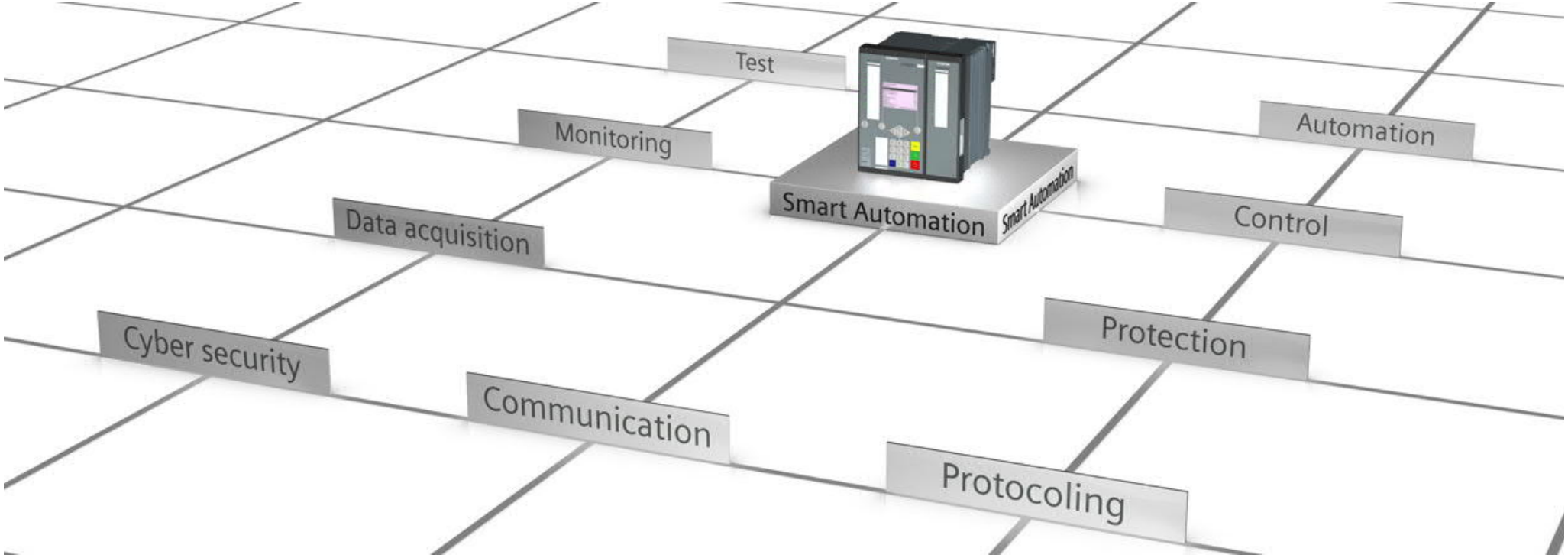

SIPROTEC 5 – 1 device for all tasks

Frei verwendbar © Siemens AG 2016

SIPROTEC 5 –
Proven solution for all application

SIEMENS

Distance protection	7SA8
Line differential protection	7SD8
Transformer differential protection	7UT8
Overcurrent and feeder protection	7SJ8
Combined line differential & distance protection	7SL8

7SS85	Busbar protection
7SK8	Motor protection
7VK8	Breaker management
7UM85	Generator protection
6MD8	Bay controller
7KE85	Fault recorder

Easy engineering and evaluation with DIGSI 5 and SIGRA

Frei verwendbar © Siemens AG 2016

SIPROTEC 5
Perfectly Tailored Fit

SIEMENS

- Flexible configurability of device hardware
- Flexible configurability of device functions

1 Base module (with main functions)

\+ optional expansion modules

\+ local operator control panels for base and expansion modules

\+ optional plug-in modules

= Your **individual** SIPROTEC 5 device supplied by Siemens as a completely mounted unit!

Frei verwendbar © Siemens AG 2016

SIPROTEC 5
Designed to communicate

SIEMENS

- Serial and Ethernet-based communication modules
- Electrical and optical versions
- Basic module with 2 slots for communication modules
- Expansion module CB202 with 2 additional slots
- In total up to 4 communication modules per SIPROTEC 5 device in any combination
- Flexible IEC 61850 Engineering
- **Full compatibility with IEC 61850 Edition 1 and 2**

Ideally equipped for the demands of today and the future

Frei verwendbar © Siemens AG 2016

SIPROTEC 5
Holistic Workflow

SIEMENS

Operation
- Documentation
- Testing
- Maintenance

Design
- Application
- Specification

Commissioning
- Test
- Documentation

Implementation
- Device selection
- Planning
- Engineering
- Settings

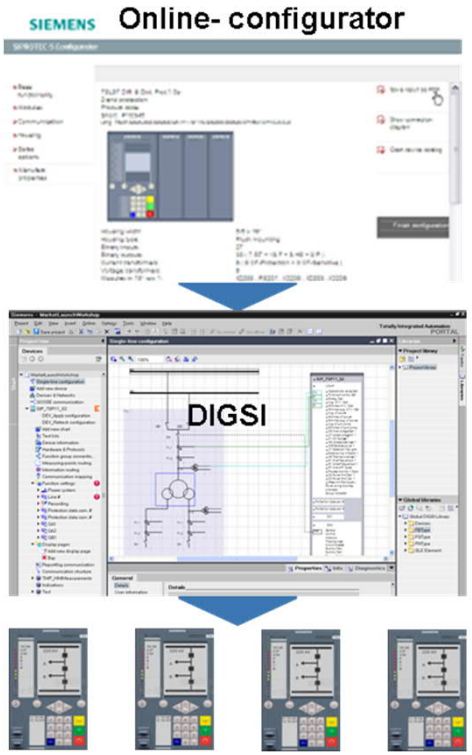

Streamlined workflow from system design to operation

Frei verwendbar © Siemens AG 2016

SIPROTEC 5
Smart automation of grids

SIEMENS

- Highly precise acquisition and processing of process values and Synchrophasor (PMU) for all SIPROTEC 5 devices
- Open, scalable architecture for IT Integration and new functions
- Intelligent functions, e.g. for network operation, analysis of faults or Power Quality
- **Latest and demanding standards in communication and Cyber Security**

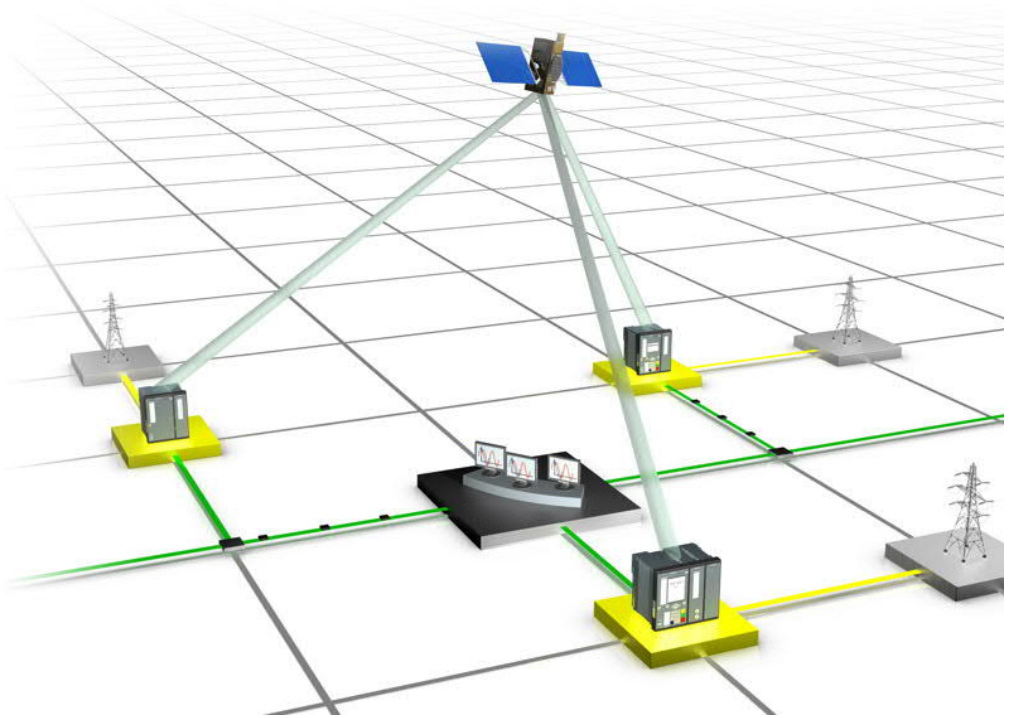

Platform for high grid stability and intelligent energy automation

Frei verwendbar © Siemens AG 2016

SIPROTEC 5
Safety and security inside

SIEMENS

- Durable and robust hardware and a sophisticated layout of the entire electronics
- Highest strength regarding voltage, EMC, climate and mechanical stress
- Safety CT-Plug
- Sophisticated self-monitoring routines
- Multilayered security mechanism in every link of the safety and security chain

Highest degree of safety, reliability and availability

Frei verwendbar © Siemens AG 2016