SIEMENS
Ingenuity for life

SIPROTEC 5 – Busbar Protection 7SS85 (and 6MU85)

Unrestricted © Siemens AG 2020

You need a powerful and compact busbar protection?

SIPROTEC 7SS85 should be your first choice!

Unrestricted © Siemens AG 2020

Migration Path
Busbar Protection

SIEMENS

600er series

7SS60

SIPROTEC 4

7UT6
“busbar”

7SS52

SIPROTEC 5

7SS85

7SS85,
6MU85,
SIP5 modular

Under construction

Centralized

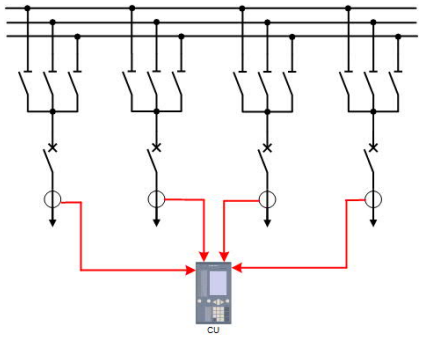

Distributed

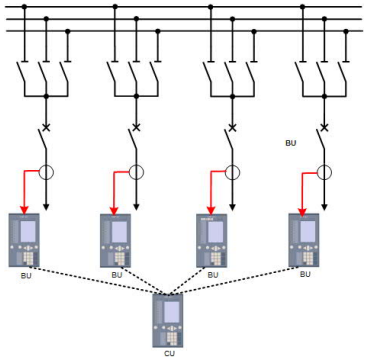

Unrestricted © Siemens AG 2020

Busbar protection
7SS85 – Profile

SIEMENS

Application range

- Single busbar
- Double busbar / single breaker
- Triple busbar
- Double busbar with combined bus
- Double busbar with transfer bus
- 1 ½ circuit-breaker arrangement
- Double busbar / double breaker (1 or 2 CT)
- H- and T-circuits arrangements
- Ring bus, meshed corner

Unrestricted © Siemens AG 2020

Busbar protection
7SS85 – Profile 1

SIEMENS

Protection functions

- 87B — Phase-selective differential protection
- 50BF — Breaker fail protection 1/3pole or 3pole
- 50EF — End fault protection for feeders and couplers
- 62BF — Breaker fail protection with no current monitoring
- 50/87B — Sensitive operate curve
- 50/74 — Current transformer supervision
- 74TC — Trip circuit supervision
- $50BF_{inh.}$ — Inherent breaker fail protection 3pole for busbar faults
- 27/59 — Under- / Overvoltage protection
- 81>< — Frequency protection
- 50/51(N) — Overcurrent protection 3 phase (ground) per bay

Unrestricted © Siemens AG 2020

Busbar protection
7SS85 – Profile 2

SIEMENS

Protection functions

- Cross stabilization
- Bus coupler differential protection
- 21T Impedance protection
- 67/67N Directional overcurrent protection phase/ground

Unrestricted © Siemens AG 2020

Busbar protection
7SS85 – Profile

SIEMENS

System features

- 20 current measuring points (3-ph CT sets)
- 26 bays (feeder, coupler, sectionalizer)
- 6 (4 until V7.5x) bus zones
- 4 coupler
- 4 voltage measuring points (3-ph VT sets)
- Very short tripping time (<10ms)
- Integrated check zone as additional trip criterion
- High stability for external faults
  (CT saturation-free time 2ms)
- Graphical engineering, configuration, and operation
  with DIGSI5
- Comprehensive supervision and control functions
- Online substation monitoring (Single-line based) via display
  or DIGSI5
- One 3-phase device for processing and HMI

Unrestricted © Siemens AG 2020

Distributed Busbar Protection (max. 20 bays)
7SS85 + Merging Units: Basics

SIEMENS

- 7SS85 SF9, A-E
  Central Unit for distributed busbar protection
  (same as centralized busbar protection)
- Time synchronization via IEEE1588v2/ PTP
- Distributed process data acquisition:
  - Merging Unit 6MU85
  - Every modular SIPROTEC 5 device
  - Third party Merging Unit
- Interoperable IEC 61850 busbar protection solution
- Open engineering through standard IEC 61850 configuration tools and DIGSI 5

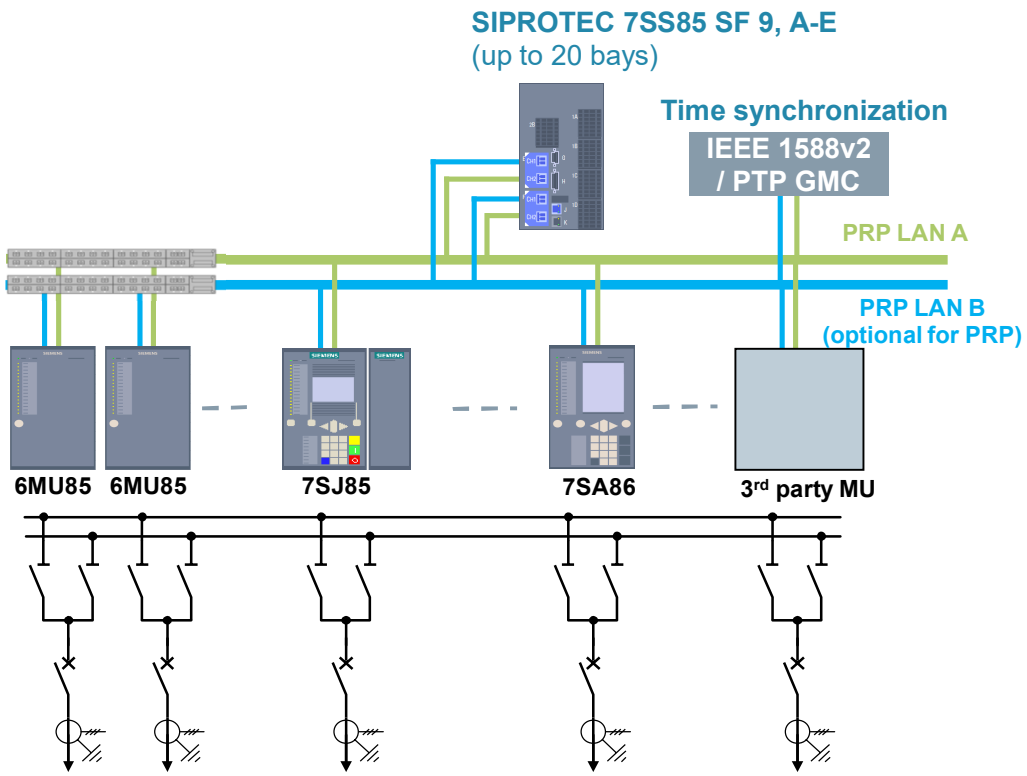

Unrestricted © Siemens AG 2020

Distributed Busbar Protection (max. 20 bays)
7SS85 + Merging Units: 7SS85 Selection

SIEMENS

- **Existing** central 7SS85 variants as Central Unit
- New hardware variant V4 as preferred variant for application as CU: IO207 in base module, 1 BD-Module
- Up to 14 current measuring points per BD-Module possible
- Selection according disconnector image, number bus zones, functions points as before (FPs for bays necessary)
- Process bus client functionality needs no additional function points.
- PRP is optional (but recommended)
- Don’t forget to calculate and order the switch(es)

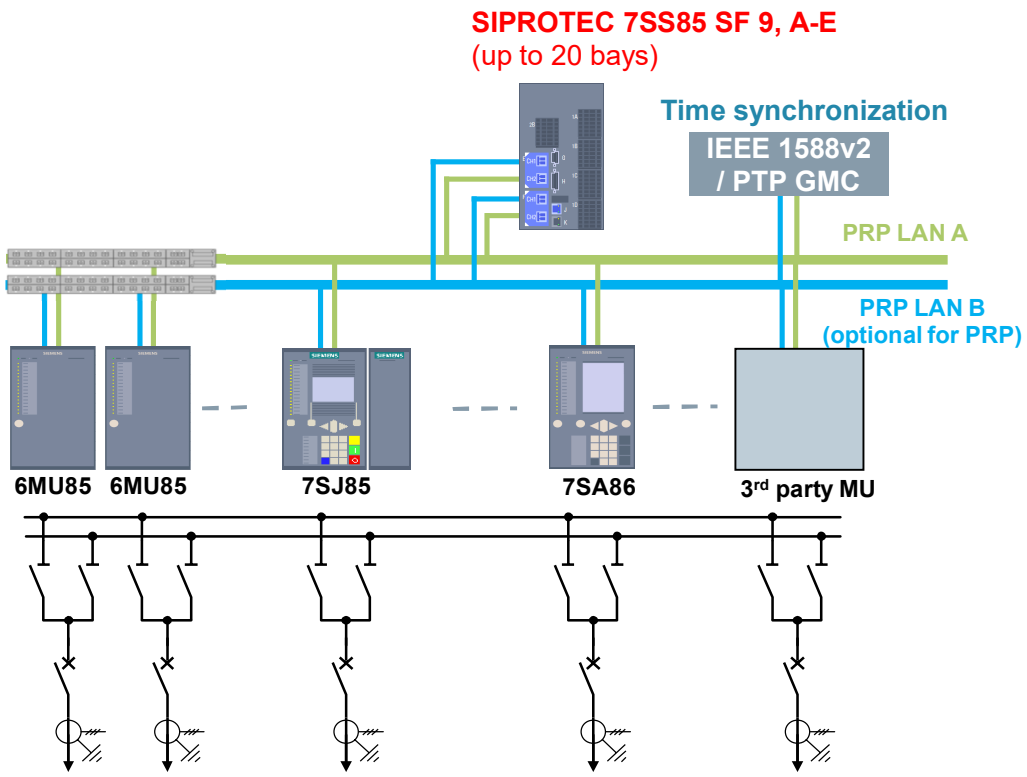

Unrestricted © Siemens AG 2020

Distributed Busbar Protection (max. 20 bays)
7SS85 + Merging Units: MU Selection

SIEMENS

- If a dedicated MU is requested, the 6MU85 is applied.
- 6MU85 Standard Variant AJ1 (IO201 base module): 1/3, 11BI, 9BO, 4CT, 1 BD-module, 1 Dataset
  ~ 7SS525
- 6MU85 Standard Variant AJ1 + IO205 + small Display: 1/2, 23BI, 25BO, 4CT, 1 BD-module, 1 Dataset
  ~ 7SS523

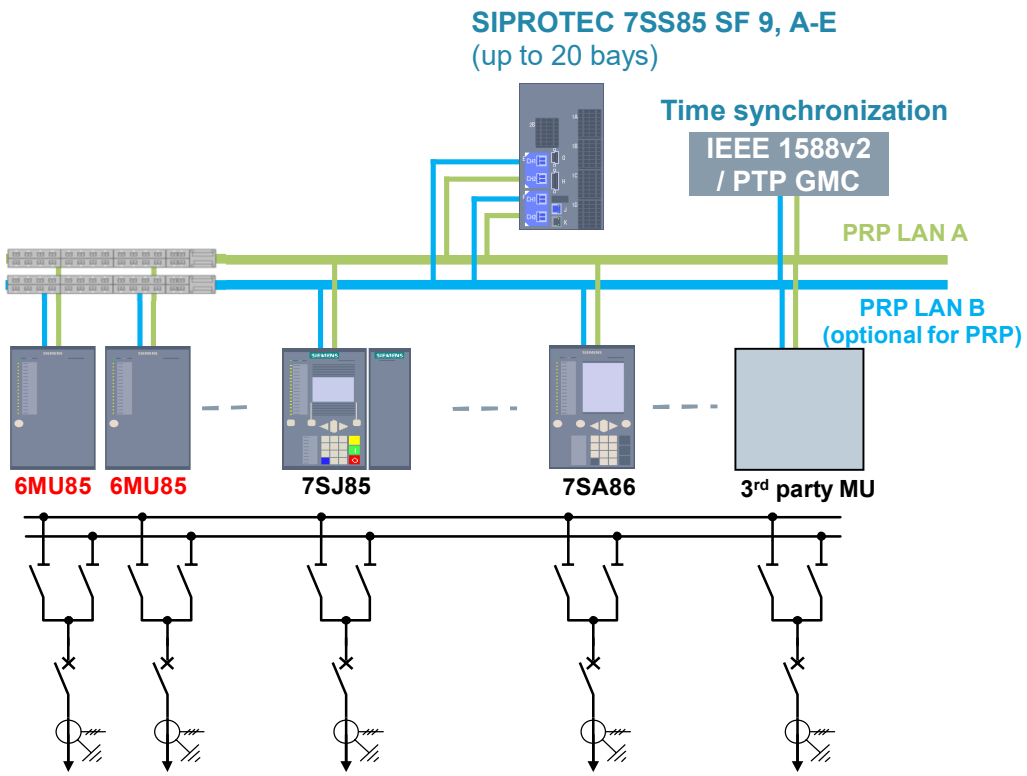

Unrestricted © Siemens AG 2020

Busbar protection
6MU85 – Profile

SIEMENS

Protection functions

- 50BF Breaker fail protection 1/3pole or 3pole
- 62BF Breaker fail protection with no current monitoring
- 50/74 Current transformer supervision
- 74TC Trip circuit supervision
- 27/59 Under- / overvoltage protection
- 25 Synchronization
- 79 Automatic reclosing function
- Arc protection
- 50/51(N) Overcurrent protection 3 phase (ground) per bay
- 67(N) Directional overcurrent protection 3 phase (ground)
- External Trip
- Etc.

Unrestricted © Siemens AG 2020

Distributed Busbar Protection (max. 20 bays)
7SS85 + Merging Units: Modular SIP5 protection device

SIEMENS

- Every modular SIP5 protection device can be equipped with MU functionality.

7SJ85

+

+

200 Function Points

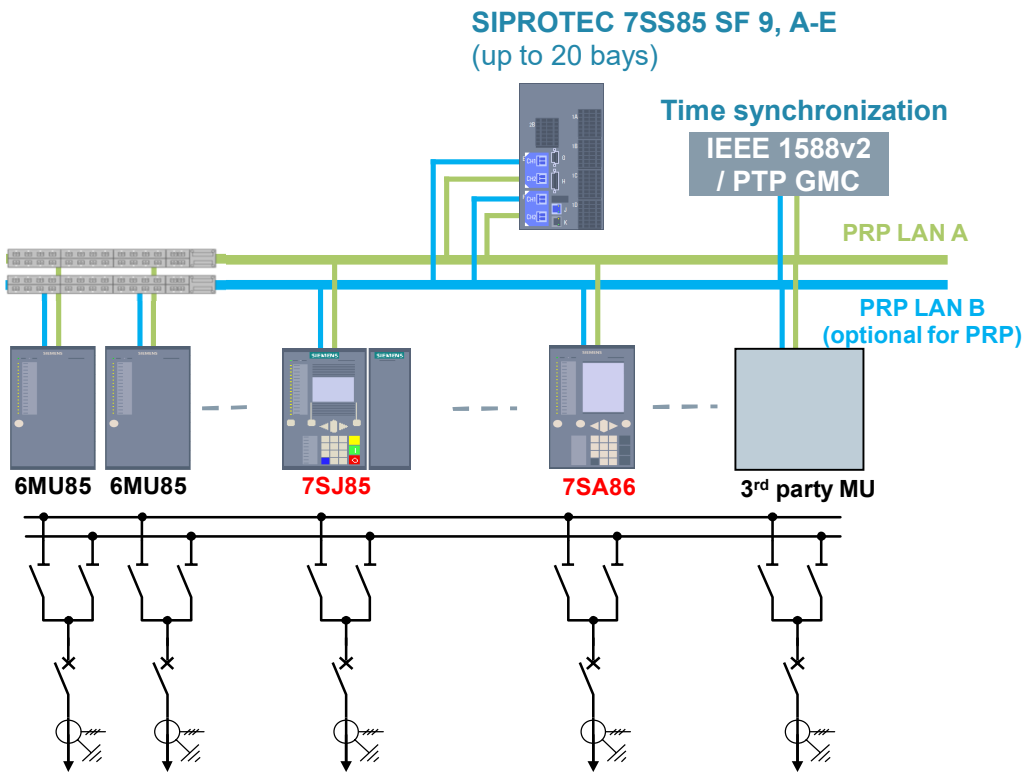

Unrestricted © Siemens AG 2020

Distributed Busbar Protection (max. 20 bays)
7SS85 + Merging Units: 3rd party Merging Unit

SIEMENS

- Interoperable IEC 61850 busbar protection solution must support Merging Units from other vendors.
- Configuration possible via IEC61850 configuration tools.
- Responsibility by customer
- Fault records show the SMVs of the 3rd party MU (Important in case of any trouble / maltripping)

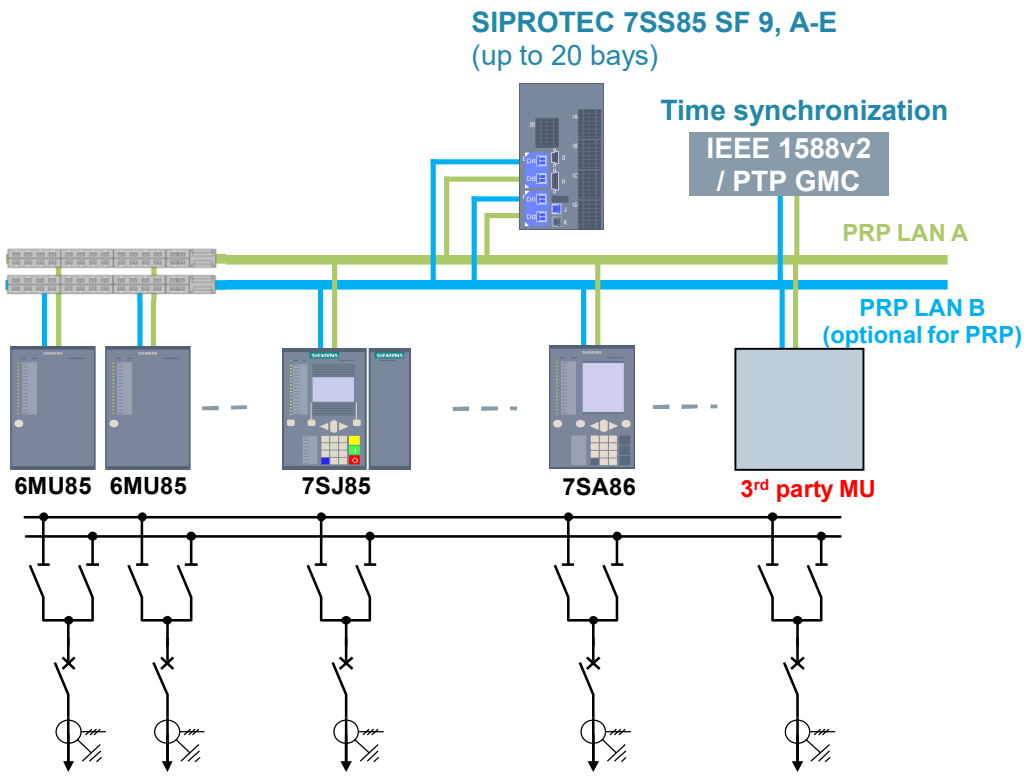

Unrestricted © Siemens AG 2020

Distributed Busbar Protection (max. 20 bays)
7SS85 + Merging Units: Engineering principle

SIEMENS

- Configure 7SS85 in Single Line Editor like centralized solution
- Current Measuring Points:
  Instead of routing the Measuring Points to IO-Board in the 7SS85, routing via IEC 61850 configuration tools and DIGSI 5 to IO-board in MU.
- Binary Signals (Disconnector- and Circuit Breaker-Positions, Tripping Commands, CBFP-Start / Trip T2, Bay out of Service etc.)
  Instead of routing the signals to/from IO-Board in the 7SS85, routing via IEC 61850 configuration tools and DIGSI 5 to/from IO-board.
  → GOOSE-Messages !

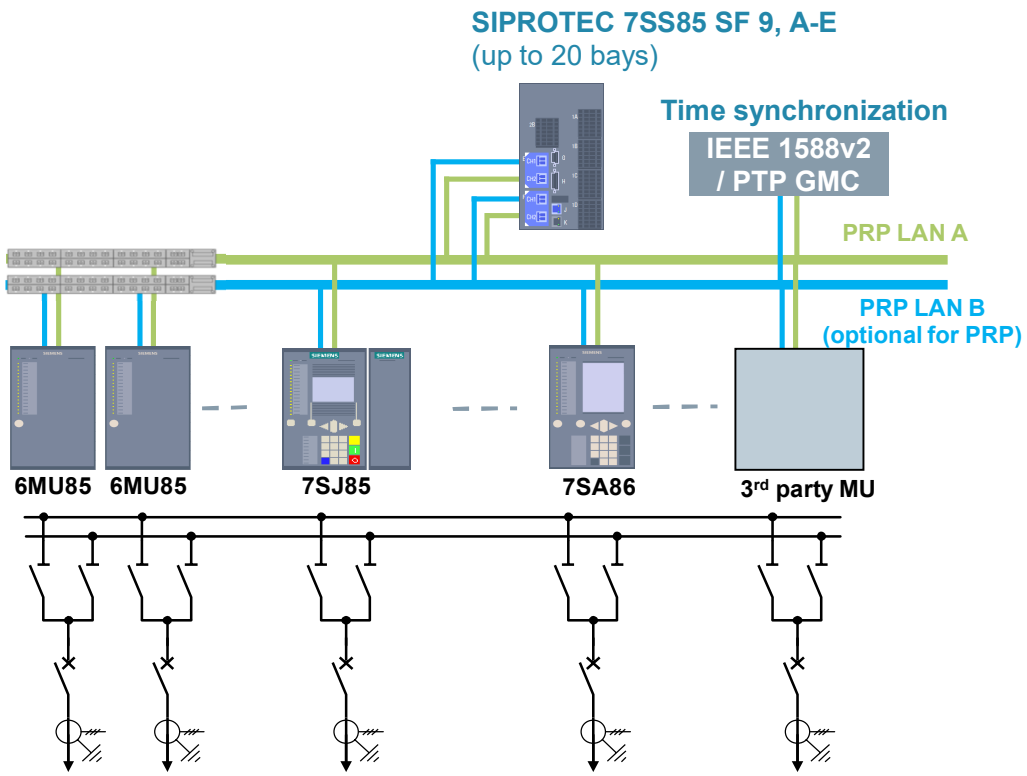

Unrestricted © Siemens AG 2020

Distributed Busbar Protection (max. 20 bays)
Configuration / Switches etc. : Without PRP

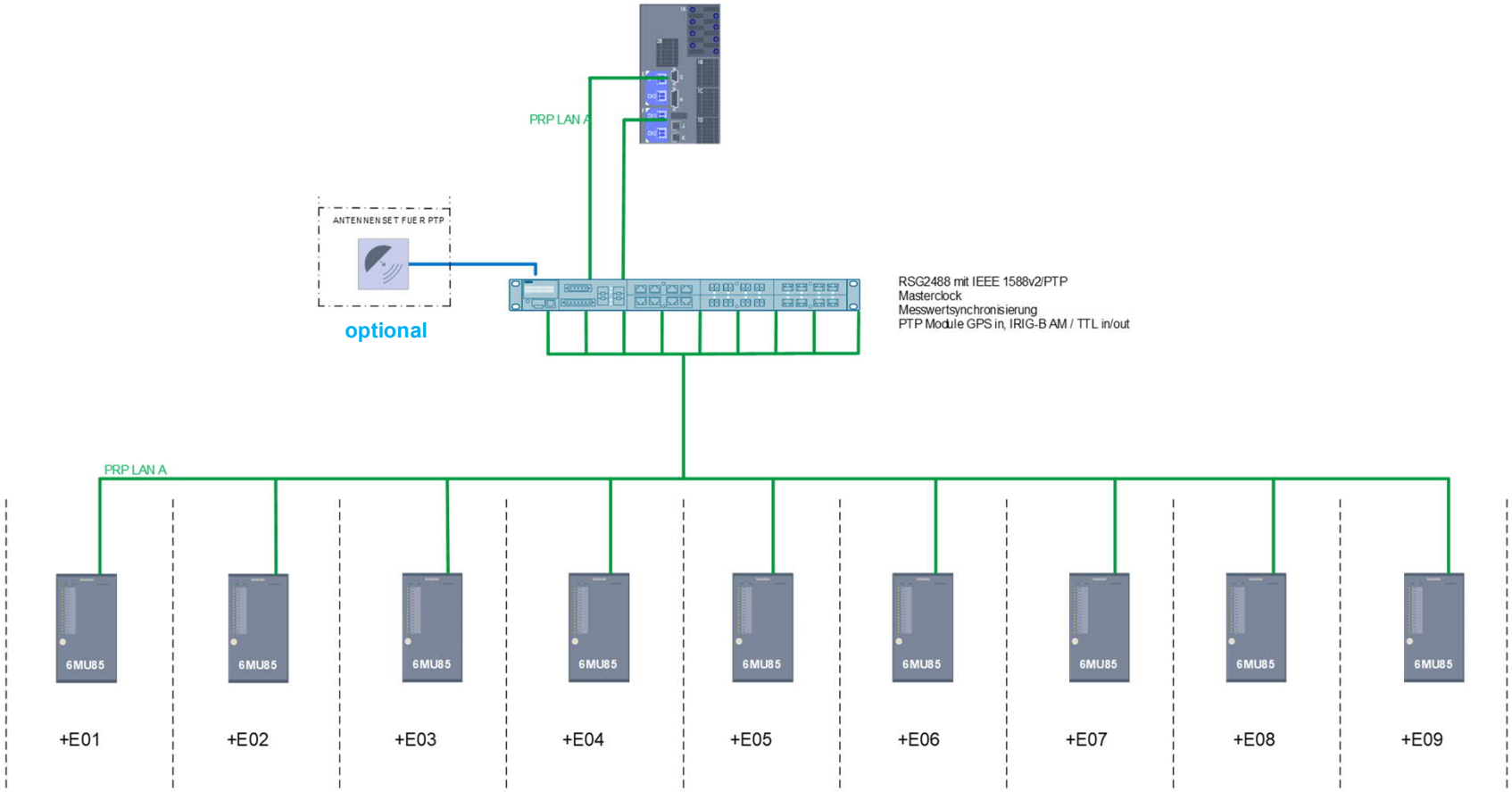

Unrestricted © Siemens AG 2020

Distributed Busbar Protection (max. 20 bays)
Configuration / Switches etc. : With PRP (1)

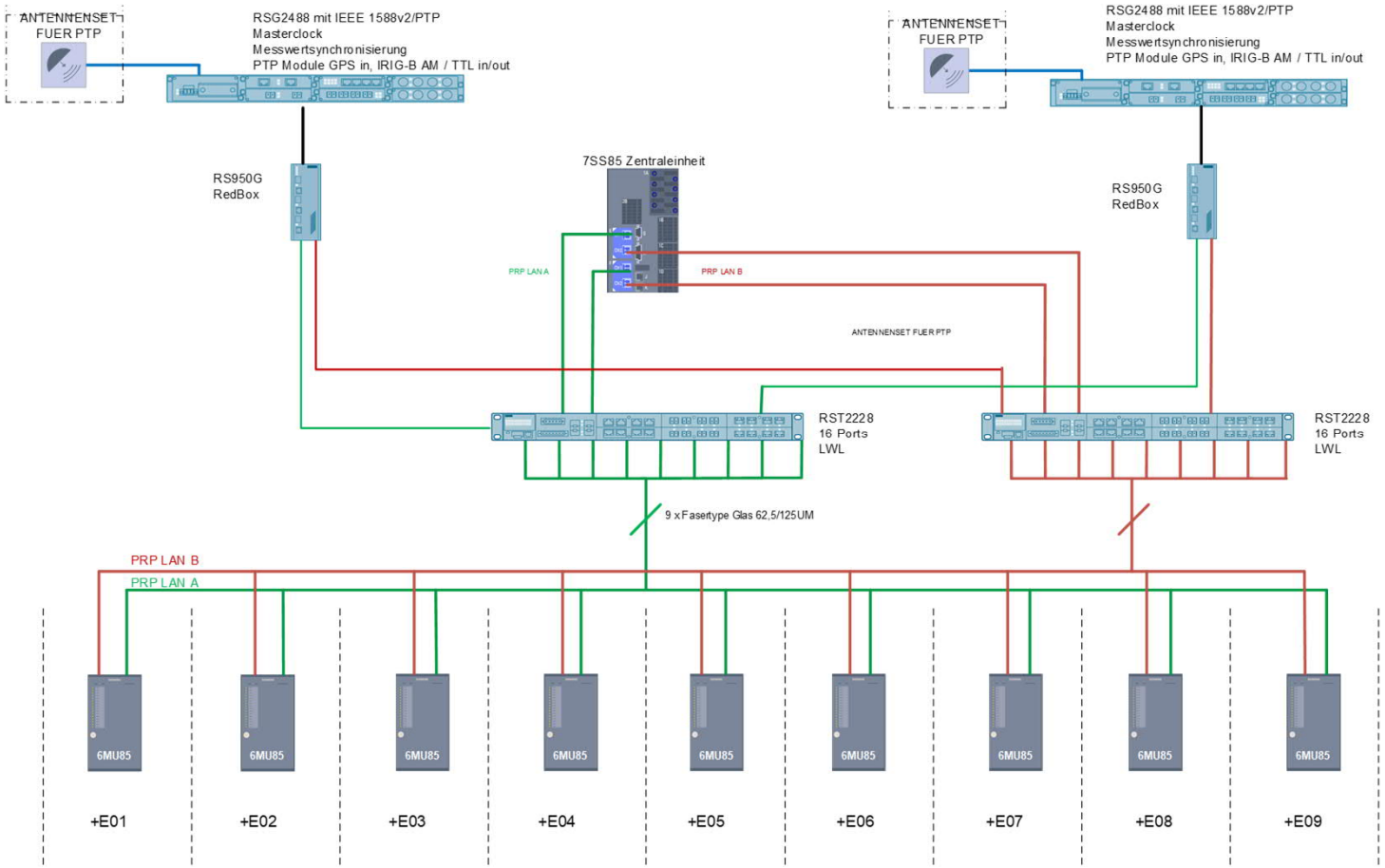

Unrestricted © Siemens AG 2020

Distributed Busbar Protection (max. 20 bays)
Configuration / Switches etc. : With PRP (2)

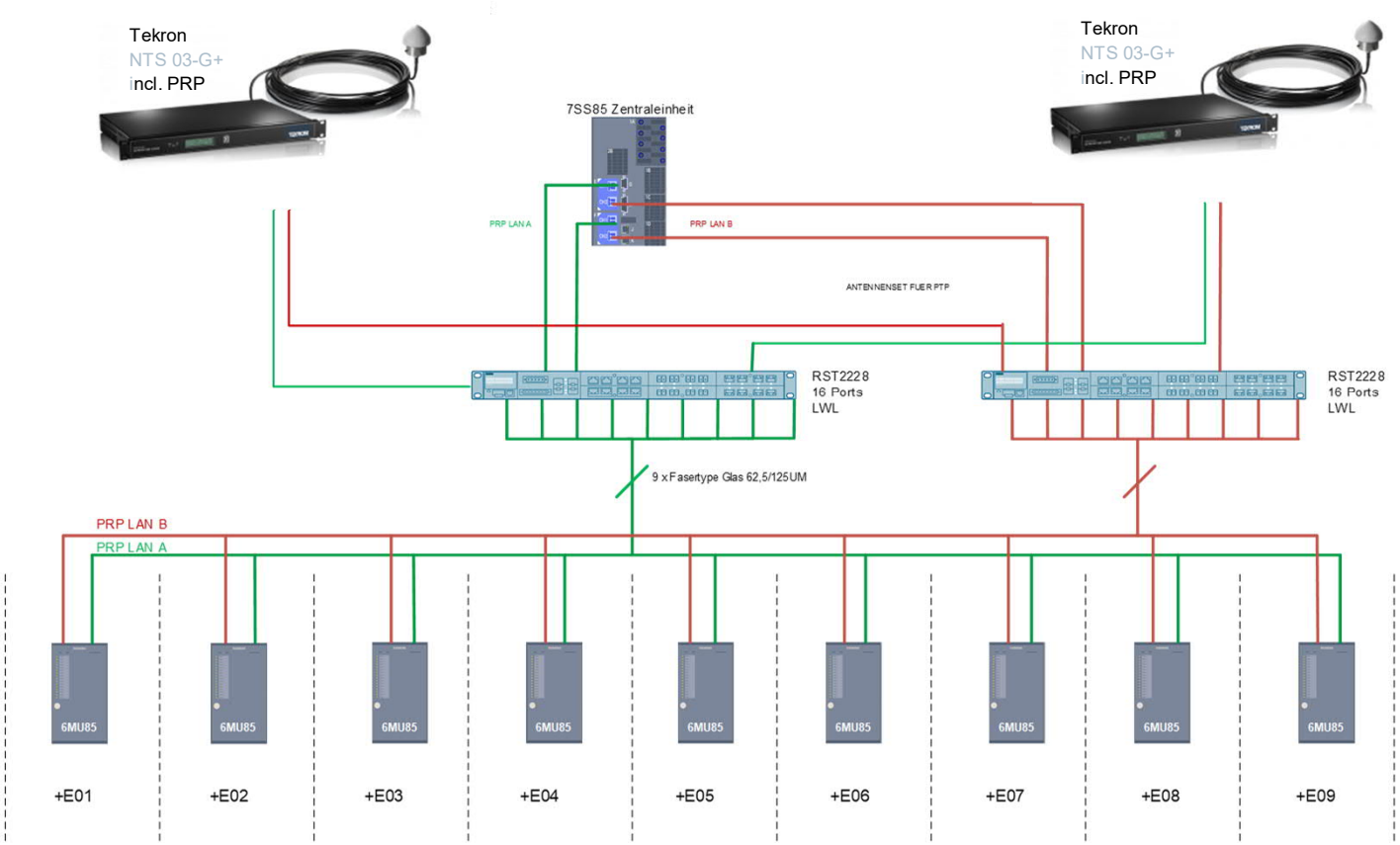

Unrestricted © Siemens AG 2020

Distributed Busbar Protection (max. 20 bays)
Configuration / Switches etc. : With PRP (3)

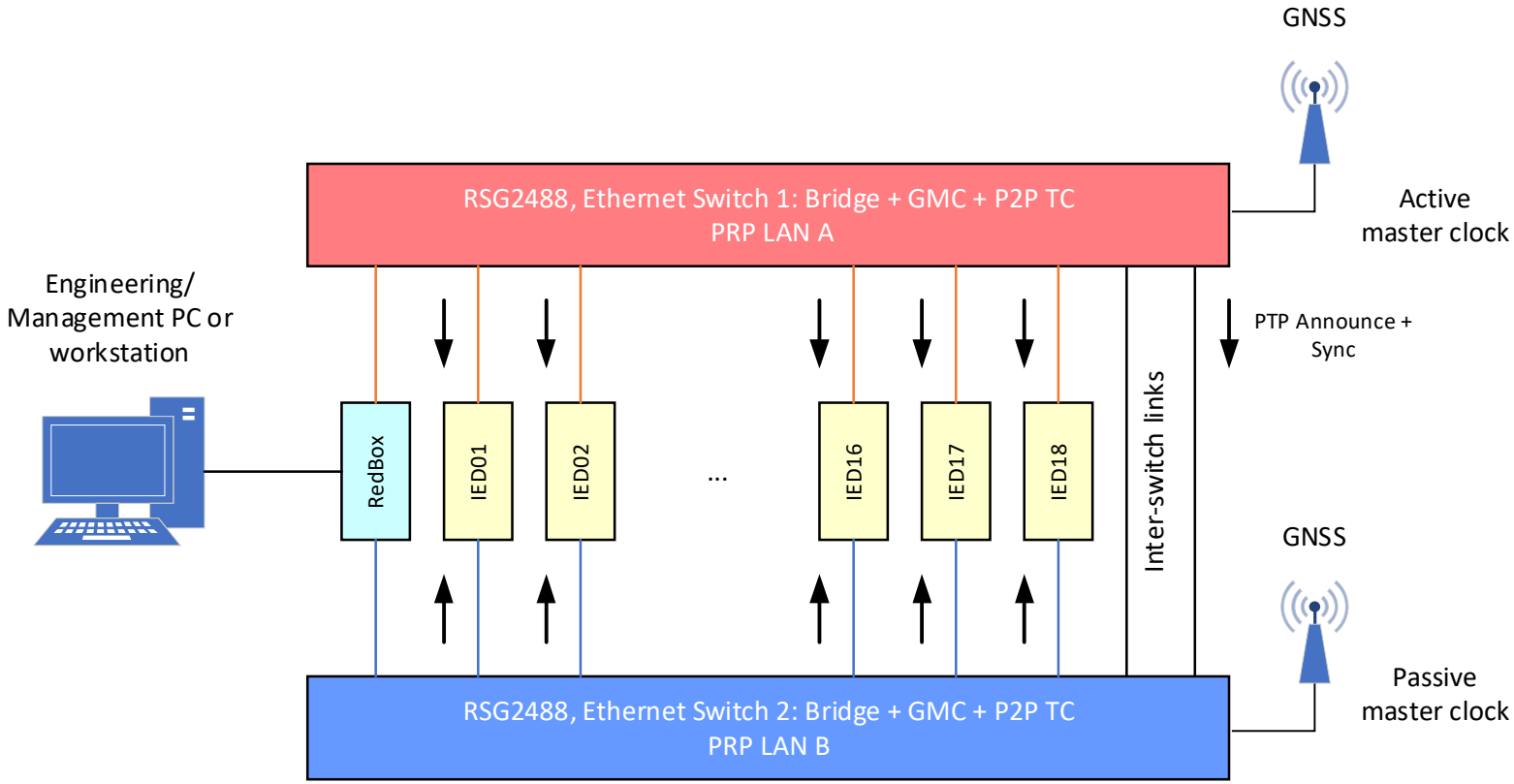

Unrestricted © Siemens AG 2020

Next Step (Approx. September 2020): Distributed Busbar Protection for up to 45 bays

SIEMENS

- 7SS85 SF F-K
  - Central unit distributed busbar protection.
  - Designed for distributed busbar protection only!
  - No more FPs for bays necessary
  - Up to 20 bus zones
- Distributed process data acquisition:
  - Merging Unit 6MU85
  - Every modular SIPROTEC 5 device
  - No Third party Merging Unit
- Easy Engineering (fully Single Line based) in DIGSI 5
- Up to 15 current measuring points per BD-Module possible
- Support of ring-structure with HSR (No more switches necessary)

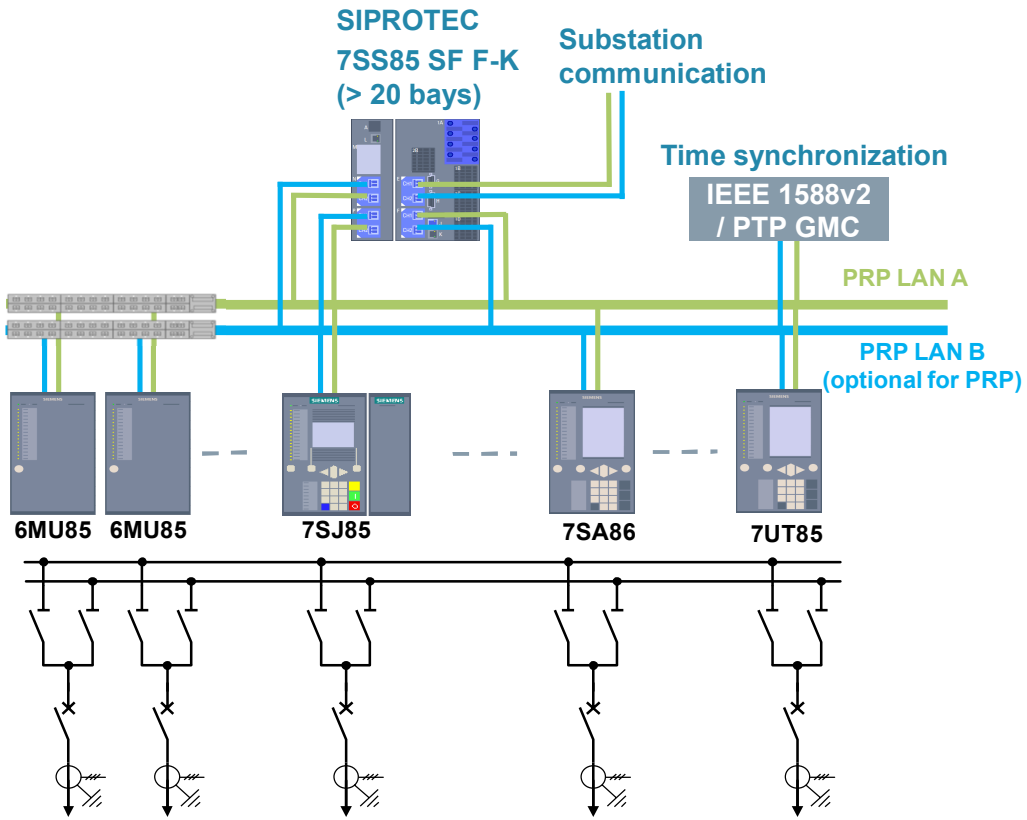

Unrestricted © Siemens AG 2020

Next Step:
Clients (Busbar protection Central Units)

SIEMENS

7SS85 (SF 9-E): Central Unit for Busbar protection (fully IEC61850 Bus complying)

Inclusive:

New hardware standard variant for Process bus application:

Display, Base unit with IO207, 19 BIs, 10 BOs and

ETH-BD-2FO in Mode = PB-Client

7SS85 (SF F-K): Central Unit of the distributed BBP (IEC61850 based)

Inclusive:

Display, Base unit with IO207, 19 BIs, 10 BOs and

ETH-BD-2FO in Mode = BB-Client

7SS85 (SF 9-E):

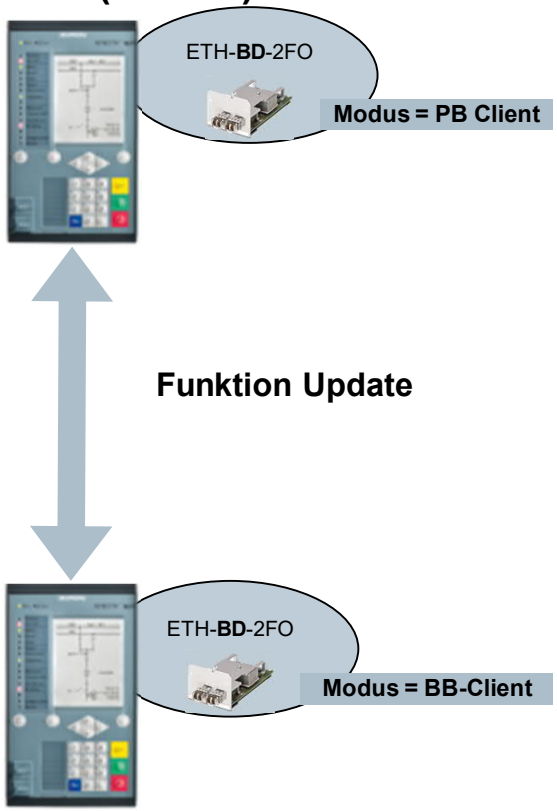

7SS85 (SF F-K)

Unrestricted © Siemens AG 2020

Next Step:
Distributed Busbar Protection for up 45 bays: Bay Units

SIEMENS

- Use 6MU85 as bay unit for 7SS85 SF F-K

6MU85

+ XY Function Points

- Use any modular SIP5 protection device as bay unit for 7SS85 SF F-K

7SJ85

+

+ 200 Function Points — 7SS85 as MU

+ XY Function Points — 7SS85 as BU

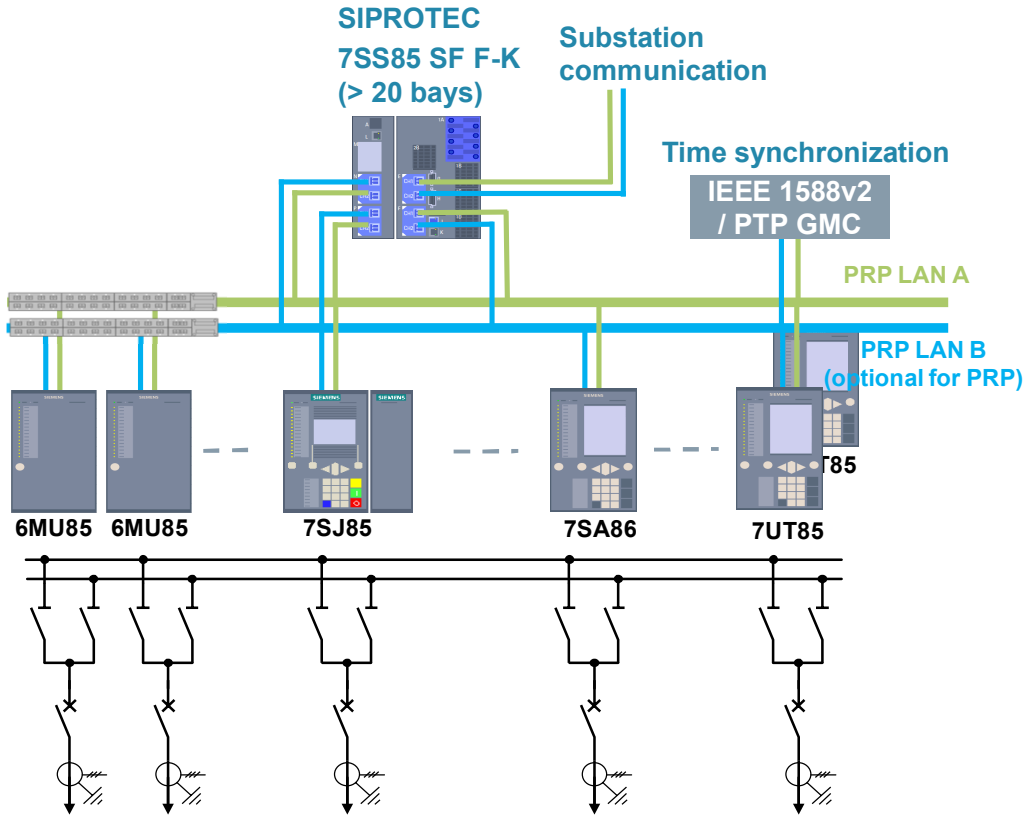

Unrestricted © Siemens AG 2020

Contact

Rainer Goblirsch
SI DG EA-P&R

Humboldtstr. 59
90459 Nuremberg

Phone: +49 173 2812 209

E-Mail:
rainer.goblirsch@siemens.com

siemens.com/energy-automation-products

Unrestricted © Siemens AG 2020