SIEMENS

INSTRUCTION MANUAL

# HEAD OF TRAIN DEVICE, CONSOLE UNIT, MODELS Q3465/R, V3465/R, Q3465/DME, V3465/DME, Q3465/SPM AND V3465/SPM

NOVEMBER 2016

DOCUMENT NO. OBE-00-12-05
VERSION F

Siemens Industry, Inc.
9568 Archibald Ave., Suite 100
Rancho Cucamonga, California 91730
1-800-793-SAFE

Copyright © 2013-2016 Siemens Industry, Inc.
All rights reserved

**PRINTED IN U.S.A.**

## PROPRIETARY INFORMATION

Siemens Industry, Inc. has a proprietary interest in the information contained herein and, in some instances, has patent rights in the systems and components described. It is requested that you distribute this information only to those responsible people within your organization who have an official interest.

This document or the information disclosed herein, shall not be reproduced or transferred to other documents or used or disclosed for manufacturing or for any other purpose except as specifically authorized in writing by **Siemens Industry, Inc**.

## TRANSLATIONS

The manuals and product information of Siemens Industry, Inc. are intended to be produced and read in English. Any translation of the manuals and product information are unofficial and can be imprecise and inaccurate in whole or in part. Siemens Industry, Inc. does not warrant the accuracy, reliability, or timeliness of any information contained in any translation of manual or product information from its original official released version in English and shall not be liable for any losses caused by such reliance on the accuracy, reliability, or timeliness of such information. Any person or entity that relies on translated information does so at his or her own risk.

## WARRANTY INFORMATION

Siemens Industry, Inc. warranty policy is as stated in the current Terms and Conditions of Sale document. Warranty adjustments will not be allowed for products or components which have been subjected to abuse, alteration, improper handling or installation, or which have not been operated in accordance with Seller's instructions. Alteration or removal of any serial number or identification mark voids the warranty.

## SALES AND SERVICE LOCATIONS

Technical assistance and sales information on **Siemens Industry, Inc.** products may be obtained at the following locations:

SIEMENS INDUSTRY, INC. RAIL AUTOMATION
2400 NELSON MILLER PARKWAY
LOUISVILLE, KENTUCKY 40223

| | |
|---|---|
| TELEPHONE: | (502) 618-8800 |
| FAX: | (502) 618-8810 |
| SALES & SERVICE: | (800) 626-2710 |
| WEB SITE: | www.siemens.com/rail-automation |

SIEMENS INDUSTRY, INC.RAIL AUTOMATION
939 S. MAIN STREET
MARION, KENTUCKY 42064

| | |
|---|---|
| TELEPHONE: | (270) 918-7800 |
| CUSTOMER SERVICE: | (800) 626-2710 |
| TECHNICAL SUPPORT: | (800) 793-7233 |
| FAX: | (270) 918-7830 |

## FCC RULES COMPLIANCE

The equipment covered in this manual has been tested and found to comply with the limits for a Class A digital device, pursuant to part 15 of the FCC Rules. These limits are designed to provide reasonable protection against harmful interference when the equipment is operated in a commercial environment. This equipment generates, uses, and can radiate radio frequency energy and, if not installed and used in accordance with the instruction manual, may cause harmful interference to radio communications. Operation of this equipment in a residential area is likely to cause harmful interference in which case the user will be required to correct the interference at his/her own expense.

## Table of contents


**1.0 INTRODUCTION AND PRODUCT FEATURES ..... 1**

1.1 Features of the Q3465/V3465 Head-of-Train Device ..... 2

**2.0 SYSTEM COMPONENTS ..... 3**

**3.0 Installation ..... 5**

3.1 Mounting the Q3465/V3465 ..... 5
3.2 Power/Locomotive Interface Cable ..... 5
3.3 Emergency Interface Module (EIM) ..... 5
3.4 UHF Antenna ..... 5
3.5 Serial Port ..... 5
3.6 Front Panel ..... 5

**4.0 Configuration ..... 7**

**5.0 Operation ..... 9**

5.1 Power-Up Sequence ..... 9
5.2 Disarming the Q3465/V3465 HOT ..... 9
5.3 Linking the Q3465/V3465 HOT to an EOT ..... 9
5.4 Performing a Communication (COMM) Test ..... 9
5.5 Arming the Q3465/V3465 HOT to an EOT ..... 9

**6.0 Functional Testing ..... 11**

6.1 Mounted on a Locomotive ..... 11
6.2 Bench Test ..... 13
6.2.1 Required Equipment ..... 13
6.2.2 Test Procedure ..... 13
6.3 Radio Tests ..... 15
6.3.1 Transmitting: ..... 15
6.3.2 Receiving: ..... 16

**7.0 Servicing ..... 17**

7.1 Required Equipment ..... 17
7.2 Circuit Description ..... 17
7.3 TestING ..... 17
7.4 RITRON TELEMETRY RADIOS ..... 18

**8.0 Maintenance ..... 19**

**9.0 Warranty and Repair ..... 21**

9.1 WARRANTY POLICY ..... 21
9.2 REPAIR POLICY ..... 21

**10.0 Drawings ..... 23**

**APPENDIX A - PUMP Program ..... 71**

Installation ..... 71
Operation ..... 71

**APPENDIX B - EOT/HOT Event Log Viewer ..... 74**

Installation ..... 74
Program Description ..... 74
Download ..... 75
Setup ..... 75
View ..... 76
Help ..... 76
Operation ..... 77
Download a Q3465/V3465 ..... 77
Loading a Data File for Viewing ..... 77
Data Display ..... 78

**APPENDIX C – ALIGNMENT ..... 80**

C.2 ALIGNMENT PROCEDURE ..... 81
C.2.1 RX FREQUENCY TRIM ..... 81
C.2.2 AUX OUT GAIN ..... 81
C.2.3 AUDIO PA GAIN ..... 82
C.2.4 CARRIER DETECT ON AND CARRIER DETECT OFF ..... 82
C.2.5 TX LOW POWER AND HIGH POWER ..... 83
C.2.6 AUX IN GAIN ..... 83
C.2.7 TX FREQUENCY TRIM ..... 83
C.2.8 DEVIATION AND BALANCE ..... 84

## CHANGE NOTICE

| Rev. | Date | Author | Description |
|---|---|---|---|
| A | 3/2002 | WWW | Initial release |
| B | 1/2004 | BEB | Unknown |
| C | 3/2005 | A | Unknown |
| D | 10/2005 | A | Unknown |
| D1 | 03/2012 | SO | Branding change (title page, proprietary information, throughout document)<br>1.) Change company references from Quantum to Invensys Rail.<br>2.) Update to Invensys Rail format.<br>3.) Specify lengths for all cables on pg. 3 and throughout the document.<br>4.) Add Invensys warranty on pg. 25.<br>5.) Add DME drawing.<br>6.) Update drawing format to Invensys Rail.<br>7.) Update drawing table to current rev's. |
| E | 8/2013 | DLW | Font change and reformat to add V3465 configuration, replace Invensys Rail Corp reference with Siemens Rail Automation Corp. |
| E.1 | 3/2016 | TP | Remove Invensys Branding |
| E.2 | 3/25/2016 | TP | Add new text Section 6.3.1 |
| F | 11/15/2016 | TP | Sec 6.3.1 changed deviation levels<br>Sec 6.3.2 changed SINAD info<br>SECTION 10 Update Drawings<br>Add Appendix C |

This Page Intentionally Left Blank

## 1.0 INTRODUCTION AND PRODUCT FEATURES

The Siemens Q3465/V3465 series of Head-of-Train Devices (HOT or HTD), when used with an End-of-Train Device (EOT or ETD), provides the Locomotive Engineer with information regarding conditions that are important to the operation of the train. These conditions include brake pipe pressure (PSI) and various status conditions. The status indications include:

- Arming status [emergency feature enabled/disabled]
- Communication status [good/comm-loss, rear-to-front or front-to-rear]
- motion detection [moving/stopped]
- highly visible marker (HVM) [on/off/defective]
- brake valve [normal/emergency/defective]
- battery status [good/low/dead]
- battery charge [percent depleted, in charge units]

The Q3465/V3465 also processes EOT/HOT communications tests, arm requests, and emergency brake commands resulting from an emergency switch activation or external emergency input.

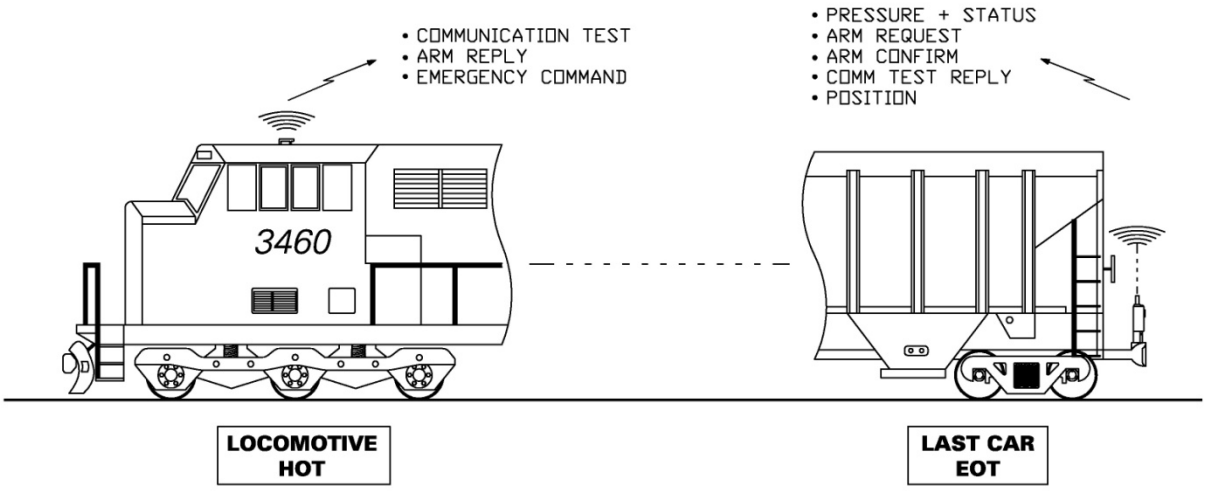


The Siemens Q3465/V3465 Head-of-Train console unit is intended for application to the top of the locomotive control stand or other suitable locations. The unit supports the AAR standard protocol on the frequency pairs of 457.9375 MHz and 452.9375 MHz.

## 1.1 FEATURES OF THE Q3465/V3465 HEAD-OF-TRAIN DEVICE

- Interchangeability – The Q3465/V3465 is a direct mechanical and electrical replacement for HOT equipment from other manufacturers.

- 12-Digit Key Pad – The key pad is used to allow easy entry of the EOT marker ID number, adjust the front panel display illumination level, and enter the locomotive wheel size.

- Accelerometer/Odometer – A 4-1/2 digit LED display is provided to display locomotive acceleration. The odometer function, accessible by a push button on the front panel of the Q3465/V3465, displays +/-19,999 feet of movement. True net distance is calculated and based on the locomotive reverser handle position.

- 16-Character Display – The 16-character display provides "plain text" messages regarding the state of communication between the HOT and EOT marker. The display is also used to prompt the operator for a new EOT marker ID and display information regarding the wheel size setting and axle drive type (20/60 Pole) configuration.

- Internal Event Recorder – The Q3465/V3465 provides an internal event recorder for the last 1600 HOT/EOT events. The data is accessible via a portable computer and the communication port located on the back of the Siemens HOT.

- External Event Recorder – The Q3465/V3465 is equipped with an event recorder communication port. Information regarding the operational status of the HOT/EOT system can be connected to any Siemens recorder. The Q3465/V3465 sends the information using industry standard protocols; therefore, event recorders from other manufacturers can also be connected to the Siemens HOT.

- Modular Design – The Q3465/V3465 is designed using modular components that allow maintenance personnel to quickly make routine inspections, test the radio, and effect repairs.

**Q3465/V3465 Head-of-Train Device**

## 2.0 SYSTEM COMPONENTS

The following table lists all components available from Siemens for the installation, interconnection, and servicing of the Siemens Q3465/V3465 Head-of-Train Device. A drawing of cable orientations a, b, c, d, and e is included on the following page.

**Table 1. Q3465/V3465 HOTs and Accessories**

| Siemens Part Number | Description |
|---|---|
| Q3465/SPM & V3465/SPM | Console Mount HOT (see chart below) |
| Q3465/R & V3465/R | Console Mount HOT (see chart below) |
| Q3465/DME & V3465/DME | Console Mount HOT (see chart below) |
| Q9077/15C | Locomotive Power and Signal Interconnection Cable, (15 designates the cable length in feet,) (a, b, c, d, or e) |
| Q9116/20 | HOTD to Event Recorder Communication Cable (20 indicates cable length in feet) |
| Q9198 | HOT Event Recorder Download and Service Port Adapter |
| QP-07030 | Wheel Size Configuration Key |
| QP-09654/10 | HOT Serial Cable, 10 feet long |
| QP-16371 | PUMP® Software Update Host Program |
| QP-16390 | HOTD Download and Event Viewing Software |
| OBE-00-12-05 | Service Manual (this manual) |

**Table 2. Q3465/V3465 Models and Features**

| Model | Radio | App Program | Wheel setting | Internal Recorder | Ext Recorder Emulation |
|---|---|---|---|---|---|
| Q3465/SPM | Ritron | 89055 | Keyswitch | 16k | LCU 05/07 |
| Q3465/R | Ritron | 16960 | Keyswitch | 16k | LCU 05/07 |
| Q3465/DME | Ritron | 89046 | Menu | 64k (GPS) | LCU 05/07, RX 03, Siemens |
| V3465/SPM | Ritron | 9VC38 | Keyswitch | 16k | LCU 05/07 |
| V3465/R | Ritron | 9VC12 | Keyswitch | 16k | LCU 05/07 |
| V3465/DME | Ritron | 9VC37 | Menu | 64k (GPS) | LCU 05/07, RX 03, Siemens |

## Cable Configuration

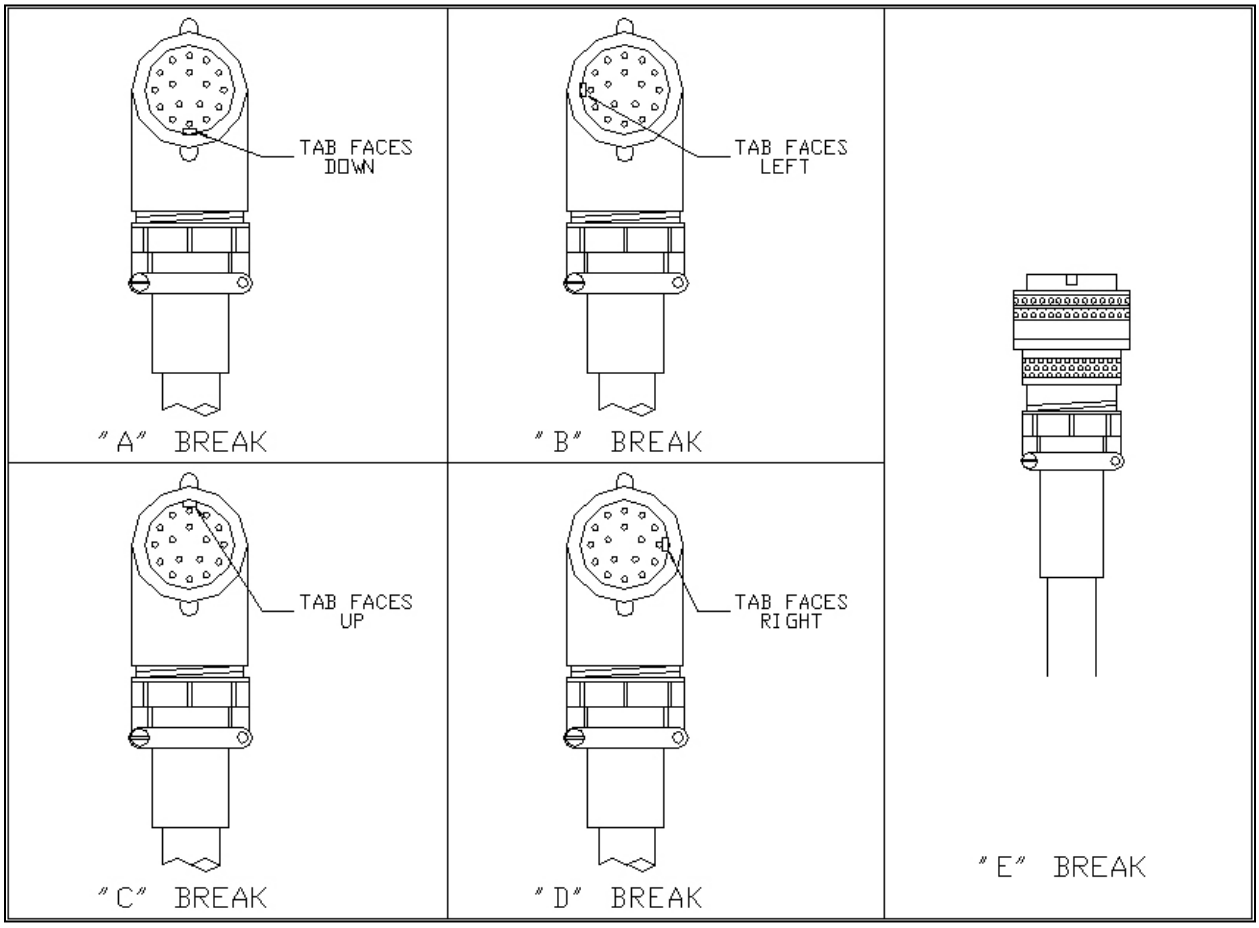


## Cable Orientation

# 3.0 INSTALLATION

## 3.1 MOUNTING THE Q3465/V3465

Normally, the Q3465/V3465 HOT is installed on top of the locomotive control stand using a HOT mounting plate, Siemens part number QP-52379 or a console HOT mounting plate supplied by other manufacturers.

## 3.2 POWER/LOCOMOTIVE INTERFACE CABLE

A single cable provides HOT power, axle drive, 20/60 pole selection, reverser (8T/9T) inputs, and the remote input for emergency activation of the EOT. Note that the odometer function requires either FORWARD (8T) or REVERSE (9T) to be active (+74 VDC) in order to increment or decrement.

If the locomotive is equipped with a 60 pole axle drive, connect the "axle drive select" wire to BP (+74). For 20 pole axle drives, the "axle drive select" wire is connected to BN or "tied back".

## 3.3 EMERGENCY INTERFACE MODULE (EIM)

If using an external switch for automatically initiating an EOT emergency, connect the EIM inputs as shown on Siemens drawing C3465, located in the Drawings Section of this manual.

## 3.4 UHF ANTENNA

One type PL-259 connector is provided for the connection of an external antenna.

## 3.5 SERIAL PORT

The rear of the unit has a connection for download of the internal event recorder. The same connector is also used to connect the HOT to an event recorder for recording of HOT/EOT activity. Please reference drawing C3465, located in the Drawings section of this service manual, for connection information between the Q3465/V3465 HOT and an event recorder. Refer to Appendix B of this manual regarding the connection of a portable computer to the serial port for copying data from the internal event recorder of the Q3465/V3465 HOT.

## 3.6 FRONT PANEL

User controls include three push buttons (**COMM TEST/ARM**, **MENU**, and accelerometer/ odometer functions), a guarded emergency EOT switch, and a 12-button keypad.

This Page Intentionally Left Blank.

## 4.0 CONFIGURATION

Configuration of the Q3465/V3465 series of Head-of-Train devices is limited to adjusting the wheel size setting to match the locomotive wheel size. The default wheel size setting, as shipped from Siemens, is 38.5" diameter.

For models V3465/R and V3465/SPM, a set-up key, Siemens part number QP-07030, is required to adjust the wheel size setting.

- Insert the setup key into the key lock and rotate the key 90° clockwise. The 16 character alpha-numeric display should indicate **ENTER DIAM XX.X** (XX = inches, .X = tenths of an inch).

- Enter the wheel diameter in inches and tenths of an inch, using the numeric keypad. The range of wheel size (diameter) supported by the Q3465/V3465 is from 36.0 to 52.0 inches.

- Press the **ENTER/YES** key on the numeric keypad.

- Rotate and remove the setup key. The setting is now stored in non-volatile memory.

Model V3465/DME does not require a key. To adjust the wheel setting:

- Press the **MENU** push button on the front panel three times. The 16 character alpha-numeric display should indicate **WHEEL = XX.X 20P** (XX = inches, .X = tenths of an inch, 20P indicates 20-pole axle drive, or 60P indicates 60-pole axle drive).

- Enter the wheel diameter in inches and tenths of an inch, using the numeric keypad. The range of wheel size (diameter) supported by the Q3465/V3465 is from 36.0 to 52.0 inches.

- Press the **ENTER/YES** key on the numeric keypad.

- The setting is now stored in non-volatile memory.

This Page Intentionally Left Blank

## 5.0 OPERATION

### 5.1 POWER-UP SEQUENCE

Upon power-up, the unit will light all status indicators; all digits in the rear pressure display, and display **Quantum Eng. Inc.** for a few seconds in the status display. The status display will change to **Q3465: xxxxx-Z** (or **V3465: xxxxx-Z**) for a few seconds, where **xxxxx** is the program part number and **Z** is the version (e.g., 16960-B). Then, the unit will enter normal operating mode.

**NOTE**

If the unit was last linked to an EOT, it will attempt to contact that EOT. If the unit was not linked to an EOT, the status display will show **00000 DISARMED**.

### 5.2 DISARMING THE Q3465/V3465 HOT

To disarm the Q3465/V3465 HOT, press the **MENU** button once and the status display will show **Enter EOT# nnnnn** (where **nnnnn** is the current EOT number entered). Press the **CLEAR/NO** button to clear the EOT number and then press the **ENTER/YES** button to accept. Alternately, enter **00000** and then press the **ENTER/YES** button to accept. The **EMERG DISABLED** indicator on the front panel of the Q3465/V3465 HOT will be illuminated.

### 5.3 LINKING THE Q3465/V3465 HOT TO AN EOT

Press the **MENU** button once. The status display should change to **Enter EOT# *****. Enter the EOT marker number and then press the **ENTER/YES** button on the numeric keypad. The Q3465/V3465 will display the EOT number entered and **DISARMED** in the 16-character display. The EMERG DISABLED indicator should be illuminated. The Q3465/V3465 will monitor and display messages received from the EOT.

### 5.4 PERFORMING A COMMUNICATION (COMM) TEST

Once the EOT marker number is entered, a COMM test can then be performed by pressing the **COMM TEST/ARM** button. The Q3465/V3465 HOT will transmit a COMM test message to the EOT. Results (**COMM TEST PASS** or **COMM TEST FAIL**) are displayed on the 16-character alpha-numeric display. EOT status information regarding rear pressure, marker light, and EOT motion will be displayed. It is recommended that a successful COMM test should be completed before attempting to arm the Q3465/V3465 to an EOT device.

### 5.5 ARMING THE Q3465/V3465 HOT TO AN EOT

Once a successful COMM test is completed, the EOT system can be armed for 2-way operation. The arming sequence is initiated from the EOT device by pressing the arming button on the EOT. When the EOT transmits a request to arm message, the Q3465/V3465 HOT device will display **xxxxx * ARM NOW *** (xxxxx is the EOT number) on the alpha-numeric display. Press the **COMM TEST/ARM** button on the front panel of the Q3465/V3465 to arm the HOT system. When armed, the HOT will display **xxxxx * ARMED ***. The **EMERG ENABLED**

indicator on the front panel of the Q3465/V3465 HOT will be illuminated. Two-way communication is established.

## 6.0 FUNCTIONAL TESTING

A functional EOT unit is required for these tests.

### 6.1 MOUNTED ON A LOCOMOTIVE

- Set up the EOT unit.

- Apply power to the Q3465/V3465. Upon power-up the unit will light all status indicators, all digits in the Rear Pressure display, and display **Quantum Eng. Inc.** for a few seconds in the status display. The status display will change to **Q3465: xxxxx-Z** (or **V3465: xxxxx-Z**) for a few seconds, where **xxxxx** is the program part number and **Z** is the version (e.g., 16960-B). Verify that the program part number and version are the current release. At the end of this 3 second display, the unit will assume the operating mode. If the unit was last linked to an EOT, it will attempt to contact that EOT. If the unit was not linked to an EOT, the status display will show **00000 DISARMED**.

- If necessary, disarm the HOT unit. To disarm, press the **MENU** button once. The status display will show **Enter EOT# nnnnn** (where **nnnnn** is the current EOT number entered), press the **CLEAR/NO** button to clear the EOT number and then press the **ENTER/YES** button to accept. Wait until the displays quit flashing (approximately 10 seconds) before proceeding to the next step.

- Verify that following status lights are lit at this time: **COMM LOSS** and **EMERG DISABLED**. The status display should read **00000 DISARMED**.

- Press the **MENU** button once, and the status display should change to **Enter EOT# *****. Press in sequence the number keys **1**, **2**, **3**, **4**, **5**, **6**, **7**, **8**, **9**, and **0**. Verify on the status display that each number can be entered and that there is an audible beep from the unit as each key is pressed (the beep happens on the key release). This verifies that the keypad is functional.

- Press the **MENU** button again. The status display shows the brightness level being used. There are four levels of brightness; press the keypad buttons **1** through **4** to test each of the brightness levels. Set the brightness to the desired level.

- Press the **MENU** button again. The status display shows the currently configured wheel size (diameter) and the axle drive pole (20P/60P) configuration. Verify all data displayed is correct.

- Press the **MENU** button again. The alpha numeric display should indicate the following: **HOT# XXXXXXXXX**, where **XXXXXXXXX** is the Siemens product serial number.

- Press the **MENU** button once again and the status display will return to the normal operational status display.

- Press the **MENU** button once and then enter the test EOT number using the keypad. When the number has been entered, press the **ENTER/YES** button.

- To arm the Q3465/V3465 HOT, the button on the EOT will have to be pressed as described in Section 5 – OPERATION under “Arming the Q3465/V3465 HOT to an EOT”. When the EOT has been successfully armed, the Q3465/V3465 will light the **EMERG ENABLED** status light. The far-right display character in the status display is used to provide a visual indication of message transmissions to/from the HOT. The diamond character (◊) will be displayed when the HOT is transmitting. The hourglass character will be displayed when a valid transmission is received from the selected EOT. Both characters are displayed only for approximately 1 second.

- With the EOT now armed to the Q3465/V3465, activate the **EMERGENCY** switch. After the EOT system recovers from this emergency application, test the external EIM input to the Q3465/V3465, if used. Usually, the EIM input can be tested by placing the train brake handle in the EMERGENCY position, if safe to do so.

- Information transmitted by the EOT will be displayed on the HOT. There is no need to test all the display combinations. The lighting of all displays at power-up provides a visual check to ensure that the appropriate displays will light when an EOT status message is received by the unit.

- Press the **COUNT/HOLD/DONE** button on the front panel of the Q3465/V3465 HOT. The accelerator/odometer indicator should display "0". Move the locomotive reverser handle to either the forward or reverse positions. If safe to do so, move the locomotive while observing the odometer. The odometer should increment, indicating the total distance traveled in feet. Stop the locomotive and move the reverser handle in the opposite direction. Move the locomotive again, observing the odometer. The odometer should now decrement. If the odometer performs as described in the steps above, both the reverser (8T and 9T) and the axle drive connections have been successfully tested. If the odometer fails to perform as described, check the reverser and axle drive connections and repeat the test sequence.

- When the tests are complete, unlink the unit by pressing the **MENU** button once to get the **Enter EOT # nnnnn** display. Press the **CLEAR/NO** button to clear the EOT number and then press the **ENTER/YES** button to accept the entry.

## 6.2 BENCH TEST

### 6.2.1 Required Equipment

- Siemens Q9077 interface cable or test fixture
- 72 VDC power supply
- Function generator
- Radio service monitor with SINAD and Watt meter
- PC computer running Windows® with an available serial port
- Functional EOT unit or EOT simulator

### 6.2.2 Test Procedure

- Remove the eight screws on the sides that hold the clamshell case on the unit, and then remove the top and bottom covers. This will provide access to test points and adjustment points for this procedure.

- Connect the 72 VDC power supply to the unit under test as per drawing C3465, located in the Drawings section of this manual. Connect a suitable antenna to the unit.

- Apply power and note the action of the LED's and displays on the unit. All LED's should light and the status display will read **Quantum Eng. Inc.** for a few seconds. The status display will then change to **Q3465: 16960-x** (or **V3465: 16960-x**)**,** where **x** is the version letter of the internal software of the Q3465/V3465. For instructions on updating the internal software of the Q3465/V3465, refer to Appendix A of this manual. After a few seconds elapse, the unit will begin normal operation.

- If necessary, disarm the HOT unit. To disarm, press the **MENU** button once. The status display will show **Enter EOT# nnnnn,** where **nnnnn** is the current EOT number entered. Press the **CLEAR/NO** button to clear the EOT number and then press the **ENTER/YES** button to accept. Wait until the displays stop flashing (approximately 10 seconds) before proceeding to the next step of the test procedure.

- Verify that following status lights are lit at this time: **HVM OFF**; **STP** (stopped); **COMM LOSS**; **EMERG DISABLED**. The **Rear Pressure** should display **0** (zero) and the status display should read **00000 DISARMED**.

- Press the **MENU** button once, the status display should change to **Enter EOT# *****. Press in sequence the number keys **1**, **2**, **3**, **4**, **5**, **6**, **7**, **8**, **9**, and **0**. Verify on the status display that you can enter each number and there is an audible beep from the unit as each key is pressed (the beep happens on the key release). This verifies that the keypad is functional.

- Press the **MENU** button again. The status display shows the brightness level being used. There are four levels of brightness; press the keypad buttons **1** through **4** to test each brightness level. Set the brightness to the desired level.

- Press the **MENU** button again. The status display shows the currently configured wheel size (diameter) and the axle drive pole (20P/60P) configuration.

- Press the **MENU** button again. The alpha-numeric display should indicate the following: **HOT# XXXXXXXXX**, where **XXXXXXXXX** is the Siemens product serial number.

- Press the **MENU** button once again and the status display will return to the normal status display.

- Press the **MENU** button once and then enter the test EOT number using the keypad. When the number has been entered, press the **ENTER/YES** button.

- Proceed with the arming of the EOT. To arm, the button on the EOT will have to be pressed as described in Section 5 – OPERATION under "Arming the Q3465/V3465 HOT to an EOT". After the EOT has been successfully armed, the unit will light the **EMERG ENABLED** status light. The far-right display character in the status display is used to provide a visual indication of message transmissions to/from the HOT. The diamond character (◊) will be displayed when the HOT is transmitting. The hourglass character will be displayed when a valid transmission is received from the selected EOT. Both characters are displayed only for approximately 1 second.

- With the EOT now armed to the unit, test the **EMERGENCY** switch and observe that the EOT dump valve opens. Reset the EOT's valve and test the remote emergency input to the Q3465/V3465 by shorting input pins I and J of the main power/locomotive interconnection cable to the Q3465/V3465 HOT.

- Connect the output of a function generator to the axle drive inputs of the Q3465/V3465 (polarity insensitive). Set the function generator to a triangular waveform, 500 mV P-P minimum, 45 Hz output frequency. Connect the forward input signal line (pin E) to the +72VDC source. Press the **COUNT/HOLD/DONE** button on the front panel of the Q3465/V3465 HOT. The odometer display should start counting and continue to increment. Disconnect the forward input signal line from the +72VDC source and connect the reverse input signal line (pin F) to the +72VDC source. The odometer display should decrement the count, and will indicate a negative distance if the user waits a sufficient time to do so. Press the **COUNT/HOLD/DONE** button again and the counter will halt. Press the **COUNT/HOLD/DONE** button a third time and the Acceleration display will be activated.

- Information transmitted by the EOT will be displayed on the HOT. There is no need to test all the display combinations. The lighting of all displays at power-up provides a visual check to ensure that the appropriate display will light when an EOT status message is received by the unit.

- After completing the tests, unlink the unit by pressing the **MENU** button once to get the **Enter EOT # *****  display. Press the **CLEAR/NO** button to clear the EOT number and then press the **ENTER/YES** button to accept the entry. The unit should now read **00000 DISARMED**.

## 6.3 RADIO TESTS

### 6.3.1 Transmitting:

- With the HOT displaying **00000 DISARMED**, enter **68179** on the keypad to enter radio test mode. The status display should display **RADIO TEST AAR**.
- Connect the radio service monitor to the UHF antenna port on the unit. Set the service monitor to receive on 452.9375 MHz.
- The keypad buttons **1**, **2**, **4**, and **5** can now be used to make the UHF radio transmit. The buttons will cause the following to be transmitted:

| Button | Effect |
|---|---|
| 1 | Low power 1800 Hz tone |
| 2 | Low power 1200 Hz tone |
| 4 | High power 1800 Hz tone |
| 5 | High power 1200 Hz tone |

NOTE: All test tones are transmitted at High power for the V3465 units.

Perform the following checks:

1. Press the **1** key on the keypad (1800 Hz, low power).
2. Verify the unit is transmitting on 452.9375 MHz, +/-100 Hz
3. Verify the transmit deviation is 2.4 KHz +/- 100 Hz
4. Verify transmit power is a minimum of 1.9W. (Note: The V3465 always operates in high power.)
5. Allow the radio to cool for 2 minutes. (Note: The radio has a built-in 20-second timeout for transmit duration.)
6. Press the **4** key on the keypad (1800 Hz, high power).
7. Verify the unit is transmitting on 452.9375 MHz, +/-100 Hz.
8. Verify the transmit deviation is 2.4 KHz +/- 100 Hz.
9. Verify a power measurement of 7.0 Watts nominal, not to exceed 9 Watts.
10. Allow the radio to cool for 2 minutes.
11. Press the **2** key on the keypad (1200 Hz, low power).
12. Verify the unit is transmitting on 452.9375 MHz, +/-100 Hz
13. Verify the transmit deviation is 2.4 KHz +/- 100 Hz
14. Verify transmit power is a minimum of 1.9W. (Note: The V3465 always operates in high power.)
15. Allow the radio to cool for 2 minutes.
16. Press the **5** key on the keypad (1200 Hz, high power).
17. Verify the unit is transmitting on 452.9375 MHz, +/-100 Hz.
18. Verify the transmit deviation is 2.4 KHz +/- 100 Hz.
19. Verify a power measurement of 7.0 Watts nominal, not to exceed 9 Watts.
20. Allow the radio to cool for 2 minutes.

Transmit deviation can be set by adjusting a potentiometer:

- For the Q3465 – R43 on the 60230 PCB
- For the V3465 – R5 on the 90405 PCB

If any parameters do not pass, perform radio alignment (see Appendix C).

### 6.3.2 Receiving:

- For Q3465 units, connect the SINAD meter to TP4 (radio Rx Audio) as shown on drawing C60230, found in the Drawings Section of this manual.
- For V3465 units, connect the SINAD meter to TP3 (radio RX audio) as shown on drawing A90405, found in the Drawings Section of this manual.
- Set the radio service monitor to transmit on 457.9375 MHz using an internal tone of 1 kHz with 2.5 kHz modulation. Set the generator level to -116 dBm (0.35µV).

- Verify that the SINAD reads > 12dB
- Verify the RX audio level is 354 mV RMS +/- 5%.

If any parameters do not pass, perform radio alignment (see Appendix C).

## 7.0 SERVICING

### 7.1 REQUIRED EQUIPMENT

The following equipment will be necessary for proper servicing of the Q3465/V3465.

- 72 VDC power supply
- 15 VDC variable power supply
- Radio service monitor with meter
- Bird Watt meter, or equivalent
- Multi-meter for both ohms and volts
- Signal generator
- Siemens Q9077 cable for test fixture
- Siemens Q9198 service port adapter
- Siemens program QP-16371 (PUMP)
- Siemens program QP-16390 Download and Event Viewing Software
- Ritron DTXP-MRM DTX Plus Maintenance Manual
- Ritron DTXP-PCPK 2.0 DTX Plus Programming Kit
- DataRadio 685-3230-001 JSLM cable and software
- DataRadio 001-2040-101 JSLM Service manual
- Desktop or laptop computer running Windows® with an available serial port
- Functional EOT unit or EOT simulator

### 7.2 CIRCUIT DESCRIPTION

Refer to the applicable board schematics and assembly drawings in the Drawings section of this manual.

### 7.3 TESTING

If replacing the main circuit board or any other major component of the Q3465/V3465 (such as a radio module), the unit must be retested to insure that it will function properly.

If installing a new circuit board, you must upload the application program into the unit. New application software can be loaded into the Q3465/V3465 through the use of the Siemens Rail software utility QP-16371 (PUMP). Software updates may be distributed in response to customer requests for new features. Likewise, if board level repairs have been made, it may be necessary to reload the application software. See Appendix A for the operation of the PUMP software. Refer to the Table 3 for application software part numbers for each model of Q3465/V3465. The bootloader firmware for all models is 9VC11. If bootloader installation is required, consult the factory.

**Table 3. Q3465/V3465 Application Software Part Number**

| Model | Application Software Part Number |
|---|---|
| Q3465/SPM | 89055 |
| Q3465/R | 16960 |
| Q3465/DME | 89046 |
| V3465/SPM | 9VC38 |
| V3465/R | 9VC12 |
| V3465/DME | 9VC37 |

- Connect the Q3465/V3465 to a 72 VDC power supply using the Siemens Q9077 cable.
- If installing a new circuit board, the radio module should not be connected to the circuit until the power supplies are checked.
- Apply 72 VDC to the unit.

Q3465 Measurements (on 60230 board):

- Measure +5.00 VDC (+/- 0.25 V) at TP7 to ground.
- Measure +5.00 VDC (+/- 0.25 V) at TP2 to ground. This is the High Current supply.
- Measure +5.00 VDC (+/- 0.25 V) between TP3 (+) and TP5 (-).
- Measure +V at TP10 to ground. This should be 8 - 9 volts for Q3465 (depends upon setting of R40). This should be +12.0 for Q3465/R or Q3465/DME.

V3465 Measurements (on 90405 board):

- Measure 5.0 VDC (+/- 0.25 V) at TP5, referenced to TP10
- Measure 3.3 VDC (+/- 0.15 V) at TP11, referenced to TP10
- Measure 12.0 VDC (+/- 0.5 V) at TP6, referenced to TP10
- Measure 5.0 VDC (+/- 0.25 V) at TP7, referenced to TP12

- If installing a new circuit board, you must upload the application program into the unit at this time.
- Remove power from the unit and connect the radio module if required

## 7.4 RITRON TELEMETRY RADIOS

The radio used in the Q3465/V3465 is a DTX-Plus radio transceiver (original part number DTX-454- 0BN9L, or 2nd generation radio part number DTX-460-0BN9L) manufactured by Ritron, Inc. Ritron may be reached at:

Ritron Inc.
Attn: sales department
505 West Carmel Drive
Carmel, IN 46032
Phone: 800-872-1872
Fax: 800-251-7329
Website: www.ritron.com

The DTX-Plus radio is a synthesized telemetry radio. Frequency settings are made through the use of a software program and cable which are available from Ritron.

## 8.0 MAINTENANCE

There are no components in the Q3465/V3465 which require annual calibration. Radio modules themselves are subject to FCC requirements, but do not explicitly require annual inspection. Additionally, the Ritron radio transceiver inside this product was granted an FRA waiver (FRA-2009-0015), and is therefore exempt from the requirements of 49CFR232.409 (d).

Verification of radio transceiver performance may be done on-locomotive with the use of a Siemens Q3430, Q3431 or Q3433 tester. This verification does not need to be performed by an electronics technician. Failure of any verification step, as indicated on the Q3430 or Q3431 tester, requires that the Q3465/V3465 HOT be serviced by a qualified technician.

This Page Intentionally Left Blank

## 9.0 WARRANTY AND REPAIR

To obtain expedited warranty claim service, expedited repair service, or if special shipping arrangements are required for the return of any Siemens product, please contact Siemens Customer Service to obtain a Return Material Authorization (RMA#).

### 9.1 WARRANTY POLICY

All Siemens Industry, Inc. equipment, excluding credit card memory or other similar devices that already carry a manufacturer's warranty, is warranted against failure due to materials or workmanship, for a period of two (2) years commencing on the month of manufacture. Replacement parts are warranted for a period of one (1) year, excluding customer-supplied material. Siemens Industry, Inc. will repair or replace, at our discretion, all defective material returned prepaid to our factory in Marion, Kentucky. The equipment will be fully repaired and tested to the original equipment specifications. Equipment will be returned at the equipment owners' expense with the existing warranty in effect. To determine the initiation of the warranty period for Siemens equipment, refer to the date on the "accepted by" sticker on the unit. However, if the unit has been repaired, the accepted by sticker is replaced by a "repaired by" sticker. In that case the warranty would be one year from the date of repair.

### 9.2 REPAIR POLICY

Equipment must be shipped to the address provided below. Equipment which has exceeded the warranty period must be shipped freight pre-paid to our factory, unless other arrangements have been previously negotiated. Repair charges will be estimated and charged upon determination of the extent of damage, current costs of parts, and labor. Return shipping is the responsibility of the equipment owner and will be charged accordingly.

Return all equipment to:

Siemens Industry, Inc.
Field Repair Department
939 S. Main St
Marion, KY 42064, USA

This Page Intentionally Left Blank

## 10.0 DRAWINGS

The following lists all applicable Siemens drawings and their corresponding revision levels for the Siemens Q3465/V3465 Head-of-Train Device. These drawings are included in this manual.

For Q3465:

| Drawing | Description | Revision |
|---|---|---|
| C3465 | Telemetry II Installation | D |
| C3465/SPM | Telemetry II Installation | A |
| C3465-WIR | Chassis wiring | B |
| | | |
| CS1216 | Schematic – Keypad | B |
| CS1229 | Schematic – HOT Display | B |
| CS1230 | Schematic – HOT CPU | G |
| C60229 | PCB Assy – HOT Display | A |
| C60230 | PCB Assy – HOT CPU | B |
| | | |
| C62122 | Assembly Front Panel | A |
| C62123 | Assembly Chassis | B |
| C62124 | Assembly Rear Panel | A |

For the V3465 the following additional drawings apply:

| Drawing | Description | Revision |
|---|---|---|
| V3465 | HOTD AAR Console | A |
| A90412 | Assembly Front Panel | A1 |
| A90413 | Assembly Chassis | A |
| A90414 | Assembly Rear Panel | A |
| | | |
| A90405 | Assembly AAR HOT Carrier Board | A1 |
| S90405 | Schematic AAR HOT Carrier Board | A1 |
| A90406 | Assembly HOT Console | B1 |
| S90406 | Schematic – HOT Console | B1 |
| A90410 | Assembly Integrated Locomotive CPU Common Module | A1 |
| S90410 | Schematic Integrated Locomotive CPU Common Module | A1 |

| REV | DATE | ECO | DESCRIPTION | DRN | CHKD | P.ENG | APPD |
|---|---|---|---|---|---|---|---|
| D | 10/03/01 | 2943 | ADDED QPN 52379 | KEH | | | |

UHF ANTENNA
(450 MHz)
(SEE NOTE 2)

## Q3465 HEAD OF TRAIN DEVICE

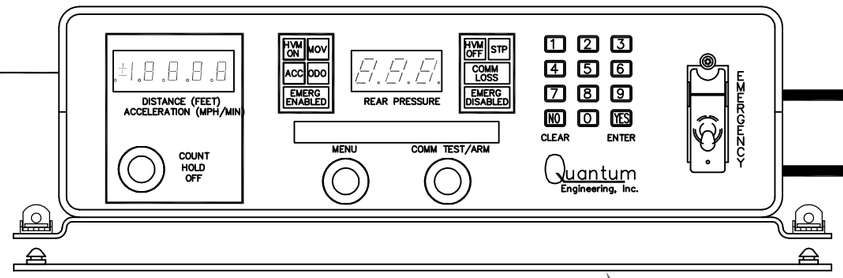


FRONT VIEW

QPN 52379
MOUNTING PLATE

Q9116 CABLE (OPTIONAL)

| | | |
|---|---|---|
| CLEAR | A | TxD |
| BLACK | C | COM |
| SHIELD | | |

QUANTUM
EVENT
RECORDER

Q9077 CABLE

| | | |
|---|---|---|
| RED | A | BP |
| BLACK | B | BN |
| WHITE | C | AXLE DRIVE |
| GREEN | D | AXLE DRIVE |
| ORANGE | E | FORWARD (8T) |
| BLUE | F | REVERSE (9T) |
| RED/BLACK | G | 60 POLE SELECT (SEE NOTE 1) |
| WHT/BLK | H | N/C |
| ORG/BLK | I | EIM |
| GRN/BLK | J | EIM |

ESS
BP
REMOTE EMERGENCY
BN

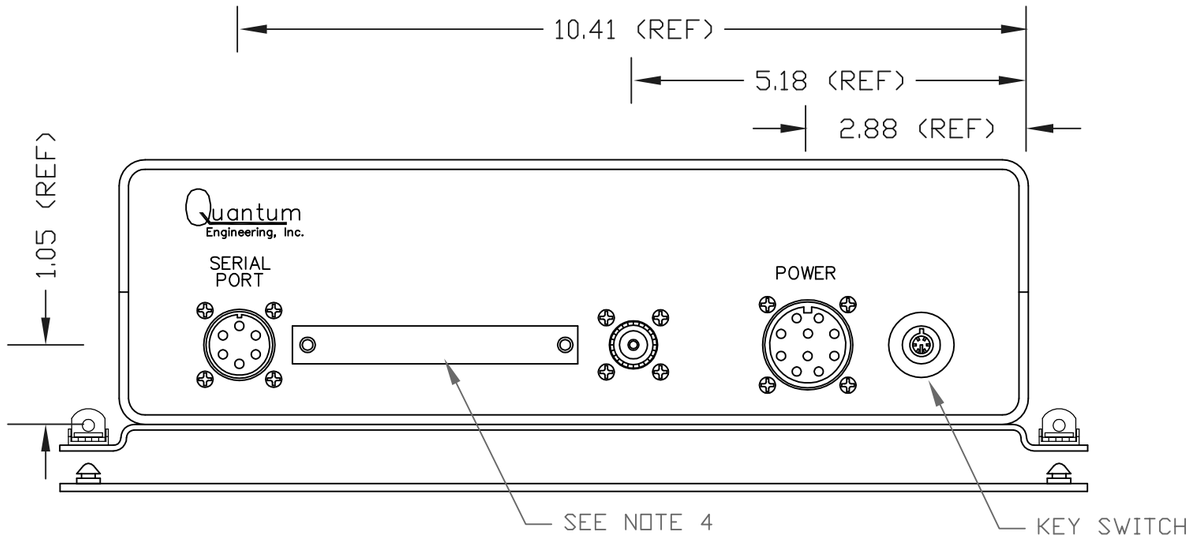


BACK VIEW

NOTES:

1) CONNECT RED/BLACK WIRE TO BN FOR 20-POLE AXLE DRIVE OR TO BP FOR 60-POLE AXLE DRIVE.
2) ANTENNA NOT SUPPLIED. MATING CONNECTION IS PL-259.
3) SPECIFY LENGTH ON ALL CABLES. STANDARD LENGTH IS 15 FEET.
4) CUSTOM OVERLAY PANEL FOR OWNER, CONSULT FACTORY.
5) CONNECT 74V REMOTE EMERGENCY INPUT THRU "EIM" LOW-VOLTAGE EMERGENCY INTERFACE MODULE. OTHERWISE LEAVE INPUTS DISCONNECTED.

| | | | |
|---|---|---|---|
| DRAWN BY : | KEH | DO NOT SCALE | Quantum Engineering, Inc. |
| DATE : | 11/1/99 | TOLERANCES | |
| CHECKED : | JBE | .XX = .030" | |
| APPROVED : | JFS | .XXX= .005" | |


PROPRIETARY INFORMATION

THIS DRAWING AND ALL INFORMATION CONTAINED HEREON IS THE PROPERTY OF QUANTUM ENGINEERING, INC. AND SHALL NOT BE DIVULGED, REPRODUCED, OR COPIED WITHOUT THE EXPRESS WRITTEN PERMISSION OF QUANTUM ENGINEERING, INC.


DIMENSIONS AND TOLERANCES

UNLESS OTHERWISE SPECIFIED ALL DIMENSIONS ARE IN INCHES AND INCLUDE PLATED AND/OR CHEMICALLY APPLIED FINISHES. ALL ITEMS TO BE FREE FROM BURRS AND SHARP EDGES. ALL BEND RELIEF = MINIMUM REQUIRED FOR MATERIAL USED.

# TELEMETRY II HOTD

| PART NO. | DWG NO. | PAGE 1 OF 1 | REV |
|---|---|---|---|
| | C3465 | | D |

| REV | DATE | ECO | DESCRIPTION | DRN | CHKD | P.ENG | APPD |
|---|---|---|---|---|---|---|---|
| | | 4054 | | | | | |

UHF ANTENNA
(450 MHz)
(SEE NOTE 2)

# Q3465/SP HEAD OF TRAIN DEVICE

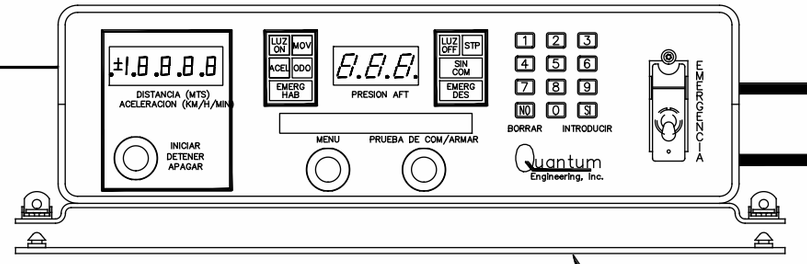


FRONT VIEW

QPN 52379
MOUNTING PLATE

Q9116 CABLE (OPTIONAL)

| | | |
|---|---|---|
| CLEAR | A | TxD |
| BLACK | C | COM |
| SHIELD | | |

QUANTUM
EVENT
RECORDER

Q9077 CABLE

| | | |
|---|---|---|
| RED | A | BP |
| BLACK | B | BN |
| WHITE | C | } AXLE DRIVE |
| GREEN | D | } AXLE DRIVE |
| ORANGE | E | FORWARD (8T) |
| BLUE | F | REVERSE (9T) |
| RED/BLACK | G | 60 POLE SELECT (SEE NOTE 1) |
| WHT/BLK | H | N/C |
| ORG/BLK | I | EIM → BP |
| GRN/BLK | J | EIM → BN |

EIM
ESS
REMOTE EMERGENCY

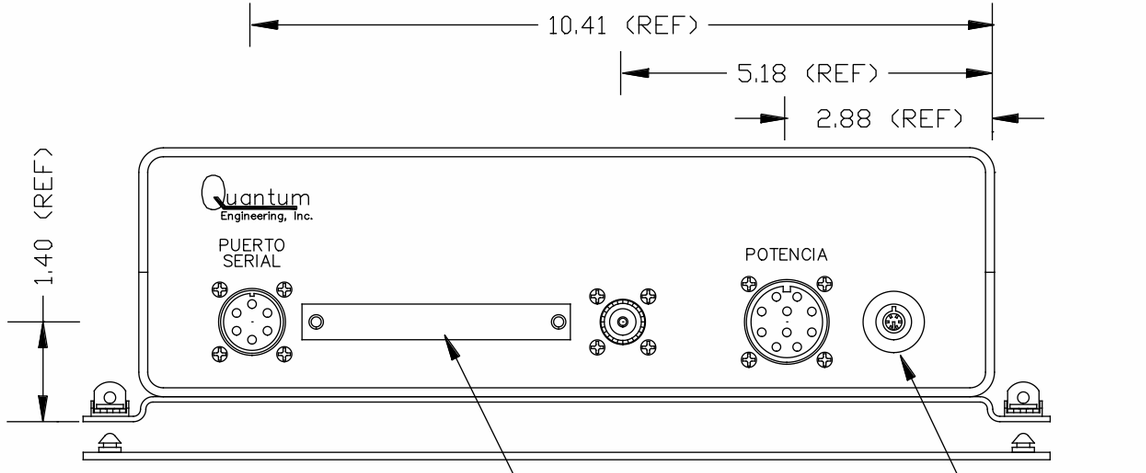


BACK VIEW

NOTES:

1) CONNECT RED/BLACK WIRE TO BN FOR 20-POLE AXLE DRIVE OR TO BP FOR 60-POLE AXLE DRIVE.
2) ANTENNA NOT SUPPLIED. MATING CONNECTION IS PL-259.
3) SPECIFY LENGTH ON ALL CABLES. STANDARD LENGTH IS 15 FEET.
4) CUSTOM OVERLAY PANEL FOR OWNER, CONSULT FACTORY.
5) CONNECT 74V REMOTE EMERGENCY INPUT THROUGH "EIM" LOW-VOLTAGE EMERGENCY INTERFACE MODULE. OTHERWISE LEAVE INPUTS DISCONNECTED.

| | | |
|---|---|---|
| DRAWN BY : GDB | DO NOT SCALE | Quantum Engineering, Inc. |
| DATE : 5/11/05 | TOLERANCES | |
| CHECKED : | .XX = .030" | |
| APPROVED : | .XXX= .005" | |


## PROPRIETARY INFORMATION

THIS DRAWING AND ALL INFORMATION CONTAINED HEREON IS THE PROPERTY OF QUANTUM ENGINEERING, INC. AND SHALL NOT BE DIVULGED, REPRODUCED, OR COPIED WITHOUT THE EXPRESS WRITTEN PERMISSION OF QUANTUM ENGINEERING, INC.


## DIMENSIONS AND TOLERANCES

UNLESS OTHERWISE SPECIFIED ALL DIMENSIONS ARE IN INCHES AND INCLUDE PLATED AND/OR CHEMICALLY APPLIED FINISHES. ALL ITEMS TO BE FREE FROM BURRS AND SHARP EDGES. ALL BEND RELIEF = MINIMUM REQUIRED FOR MATERIAL USED.

# HOTD TELEMETRY II

| PART NO. | DWG NO. | PAGE 1 OF 2 | REV |
|---|---|---|---|
| | C3465/SPM | | A |

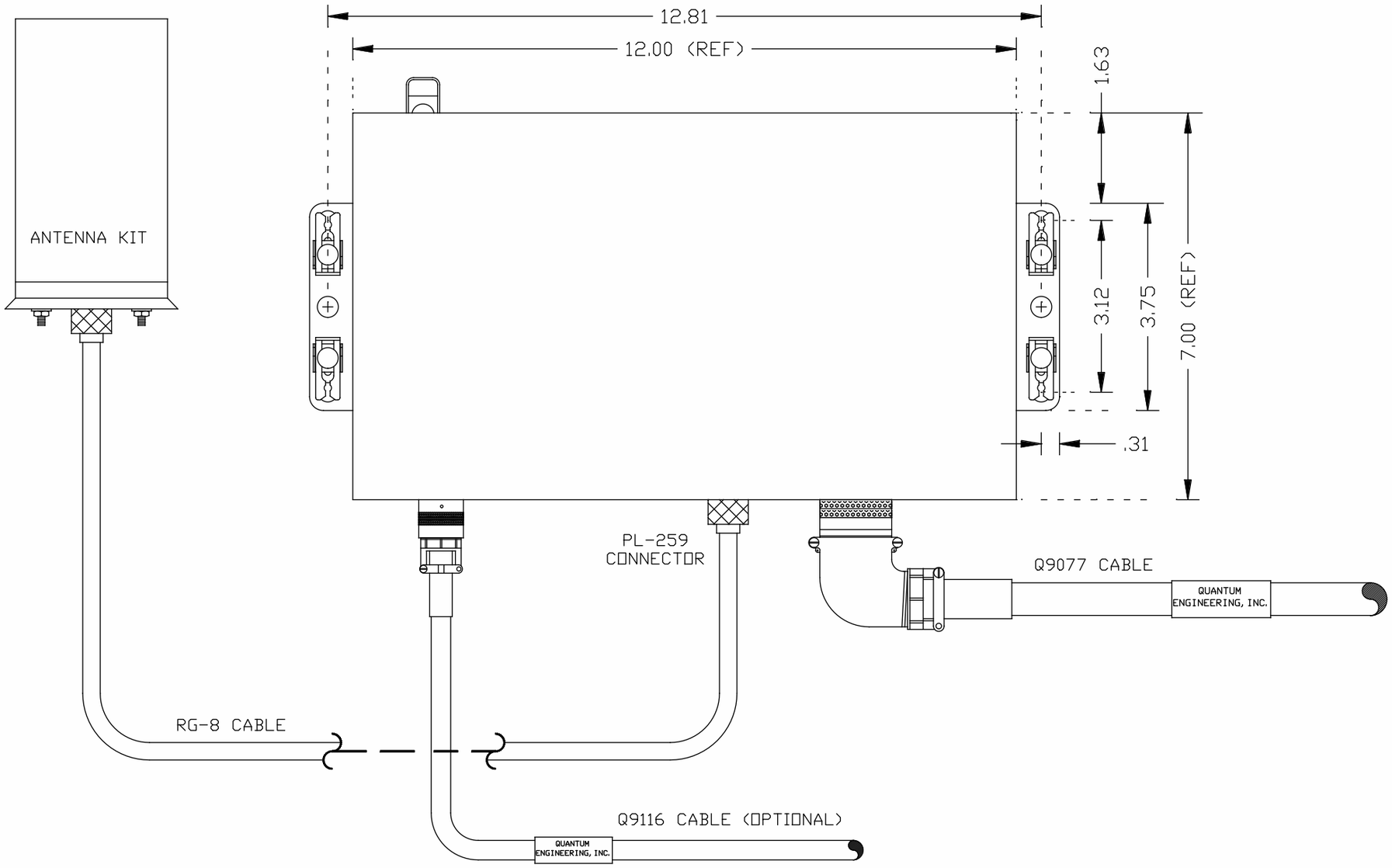


| | | |
|---|---|---|
| DRAWN BY : GDB<br>DATE : 5/11/05<br>CHECKED :<br>APPROVED : | DO NOT SCALE<br>TOLERANCES<br>.XX = .030"<br>.XXX= .005" | Quantum<br>Engineering, Inc. |

## PROPRIETARY INFORMATION

THIS DRAWING AND ALL INFORMATION CONTAINED HEREON IS THE PROPERTY OF QUANTUM ENGINEERING, INC. AND SHALL NOT BE DIVULGED, REPRODUCED, OR COPIED WITHOUT THE EXPRESS WRITTEN PERMISSION OF QUANTUM ENGINEERING, INC.

## DIMENSIONS AND TOLERANCES

UNLESS OTHERWISE SPECIFIED ALL DIMENSIONS ARE IN INCHES AND INCLUDE PLATED AND/OR CHEMICALLY APPLIED FINISHES. ALL ITEMS TO BE FREE FROM BURRS AND SHARP EDGES. ALL BEND RELIEF = MINIMUM REQUIRED FOR MATERIAL USED.

# HOTD TELEMETRY II

| PART NO. | DWG NO. | PAGE 2 OF 2 | REV |
|---|---|---|---|
| | C3465/SPM | | A |

| REV | DATE | ECO | DESCRIPTION | DRN | CHKD | P.ENG | APPD |
|---|---|---|---|---|---|---|---|
| B | 3/21/05 | 3993 | ADDED CHART | GDB | | | |

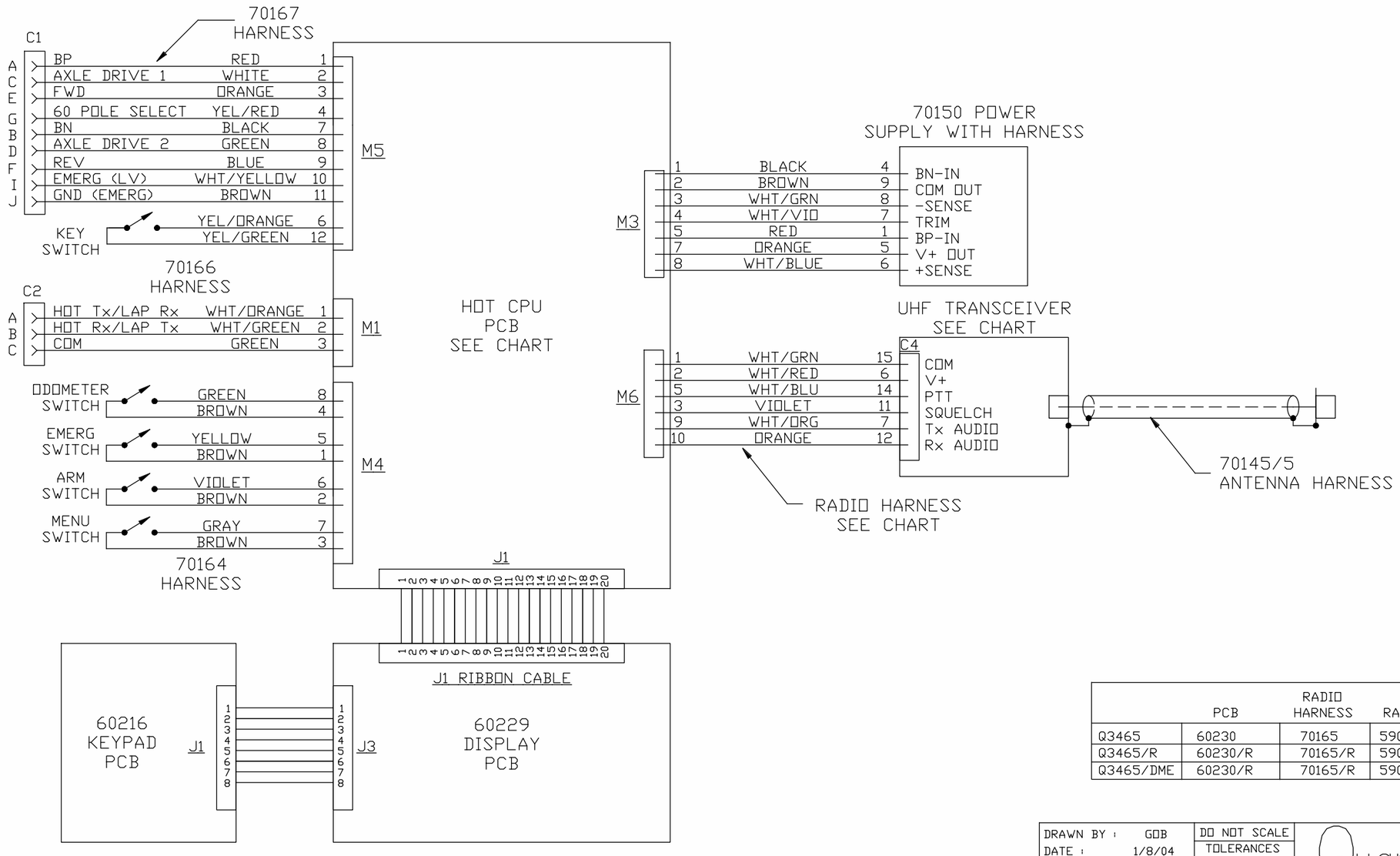


| | PCB | RADIO HARNESS | RADIO |
|---|---|---|---|
| Q3465 | 60230 | 70165 | 59019 |
| Q3465/R | 60230/R | 70165/R | 59019/RIT |
| Q3465/DME | 60230/R | 70165/R | 59019/RIT |

| | | | |
|---|---|---|---|
| DRAWN BY : | GDB | DO NOT SCALE | Quantum Engineering, Inc. |
| DATE : | 1/8/04 | TOLERANCES | |
| CHECKED : | JFS | .XX = .030" | |
| APPROVED : | JFS | .XXX= .005" | |


## PROPRIETARY INFORMATION

THIS DRAWING AND ALL INFORMATION CONTAINED HEREON IS THE PROPERTY OF QUANTUM ENGINEERING, INC. AND SHALL NOT BE DIVULGED, REPRODUCED, OR COPIED WITHOUT THE EXPRESS WRITTEN PERMISSION OF QUANTUM ENGINEERING, INC.


## DIMENSIONS AND TOLERANCES

UNLESS OTHERWISE SPECIFIED ALL DIMENSIONS ARE IN INCHES AND INCLUDE PLATED AND/OR CHEMICALLY APPLIED FINISHES. ALL ITEMS TO BE FREE FROM BURRS AND SHARP EDGES. ALL BEND RELIEF = MINIMUM REQUIRED FOR MATERIAL USED.

# Q3465 HOTD CHASSIS WIRING

| PART NO. | DWG NO. | REV |
|---|---|---|
| | C3465-WIR | B |

| REV | DATE | ECO | DESCRIPTION | DRN | CHKD | P.ENG | APPD |
|---|---|---|---|---|---|---|---|
| B | 4/19/01 | 2793 | REPLACE J1 | GOB | MKL | | JFS |

TO DISPLAY BD

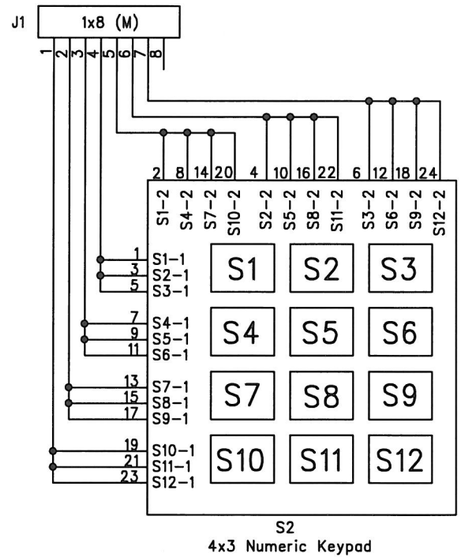


S2
4x3 Numeric Keypad

| | |
|---|---|
| DRAWN BY: | MKL |
| DATE: | 5/4/00 |
| CHECKED: | JE |
| APPROVED: | JFS |

Quantum Engineering, Inc.

DUAL MODE HOTD KEYPAD

| SHEET | OF | DWG. NO. | REV |
|---|---|---|---|
| 1 | 1 | 1216 | B |

| REV | DATE | ECO | DESCRIPTION | DRN | CHKD | P.ENG | APPD |
|---|---|---|---|---|---|---|---|
| B | 1/4/01 | 2667 | NEW DESIGN | GOB | | | |

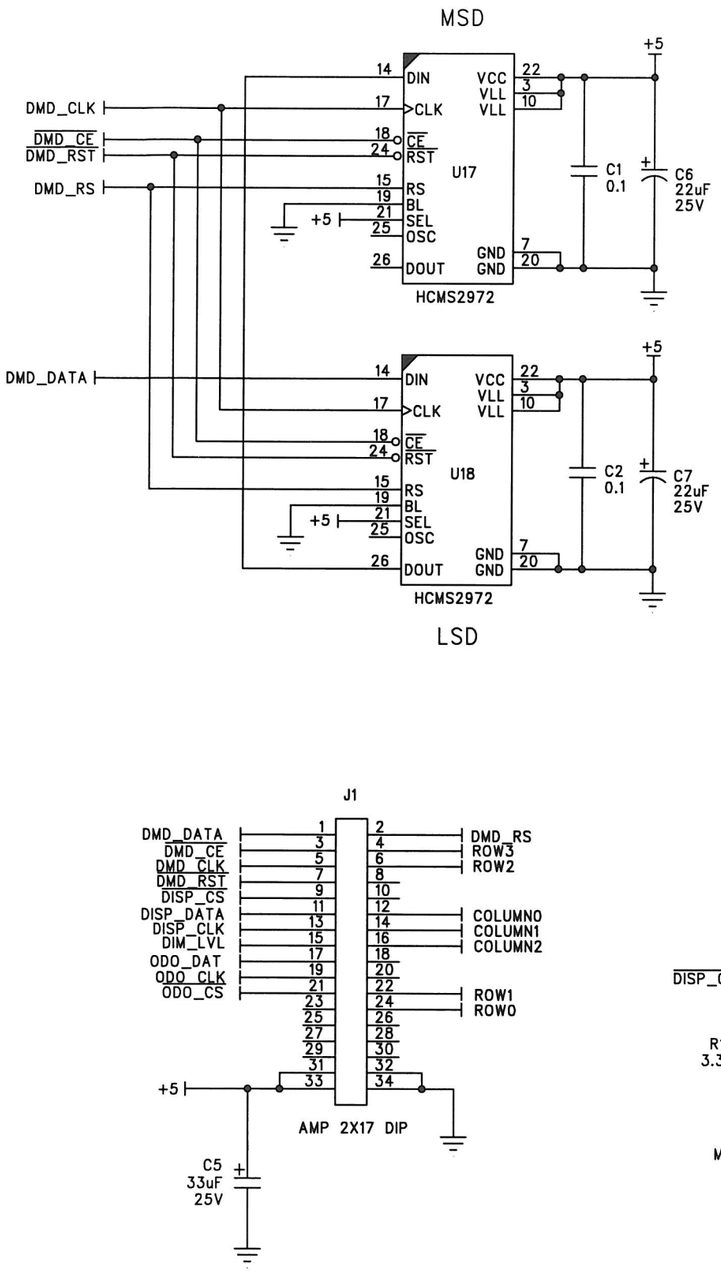


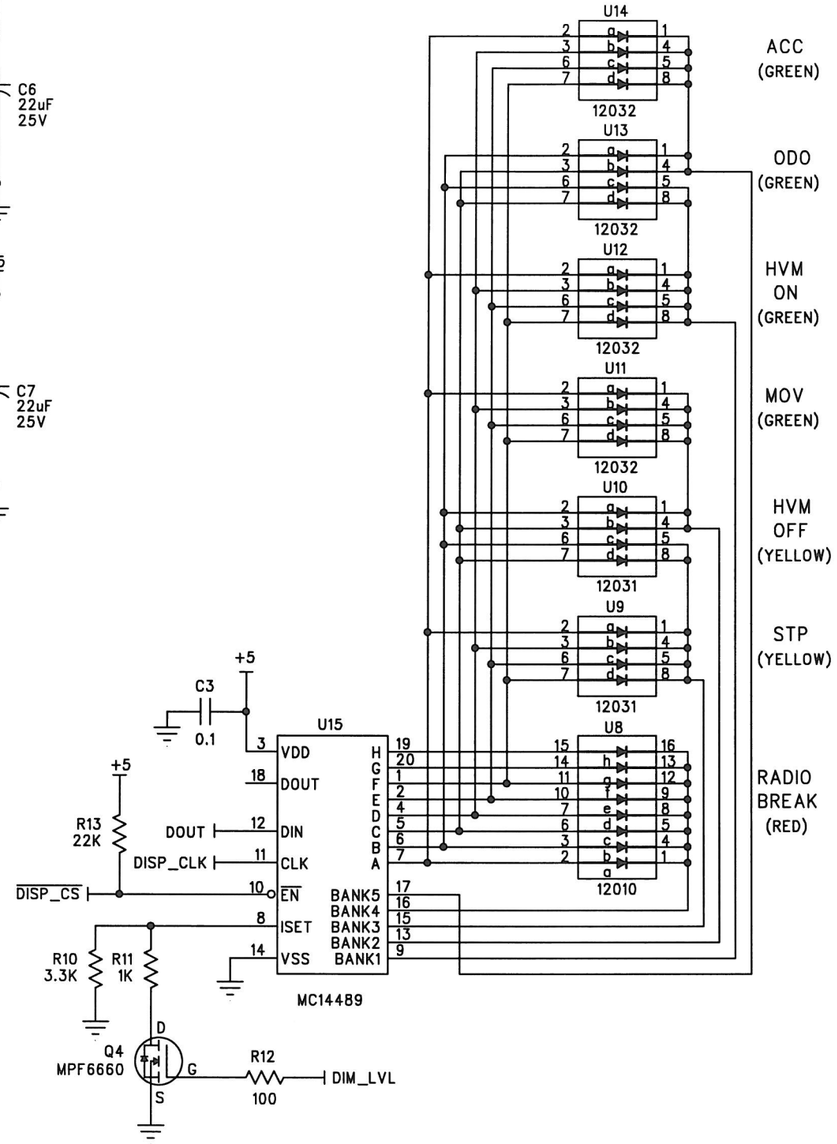


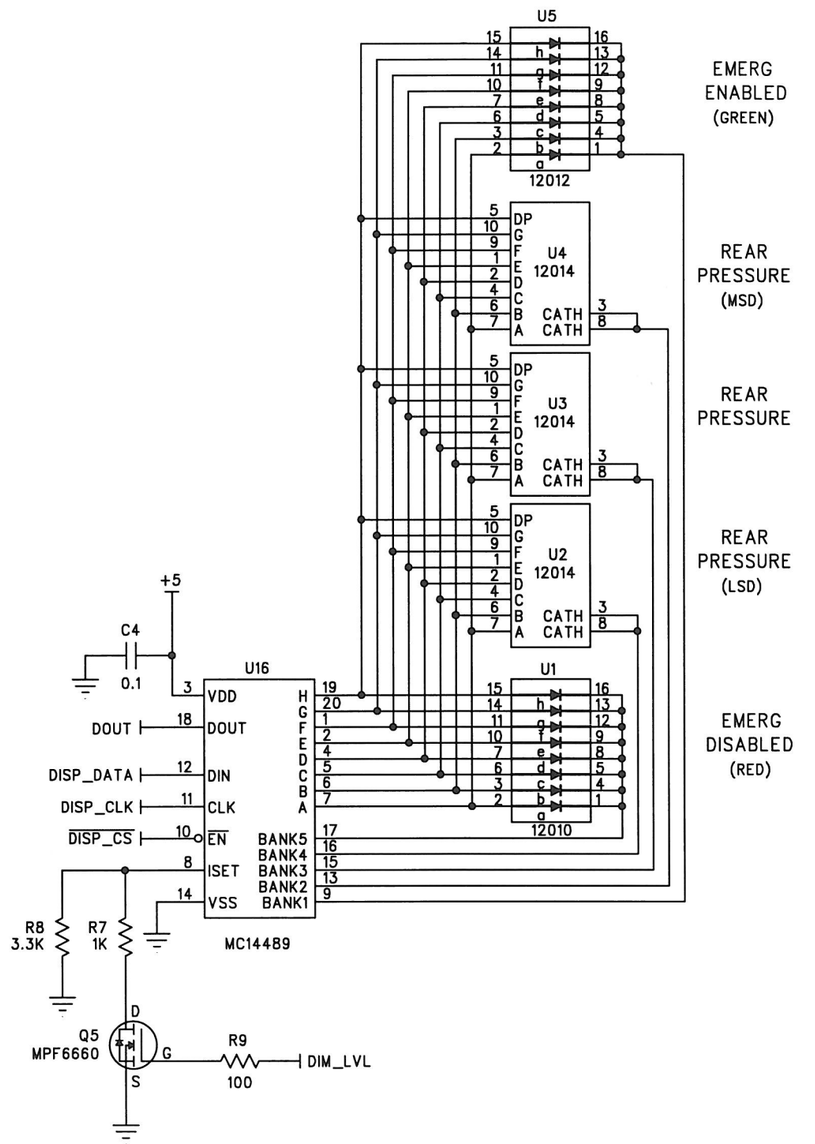


| | | | |
|---|---|---|---|
| DRAWN BY: | GOB | Quantum Engineering, Inc. | |
| DATE: | 11/21/00 | | |
| CHECKED: | jfs | | |
| APPROVED: | jfs | | |

# AAR HOT DISPLAY

| SHEET | OF | DWG. NO. | REV |
|---|---|---|---|
| 1 | 2 | 1229 | B |

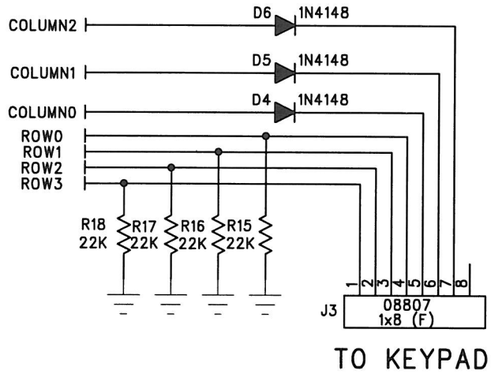


TO KEYPAD

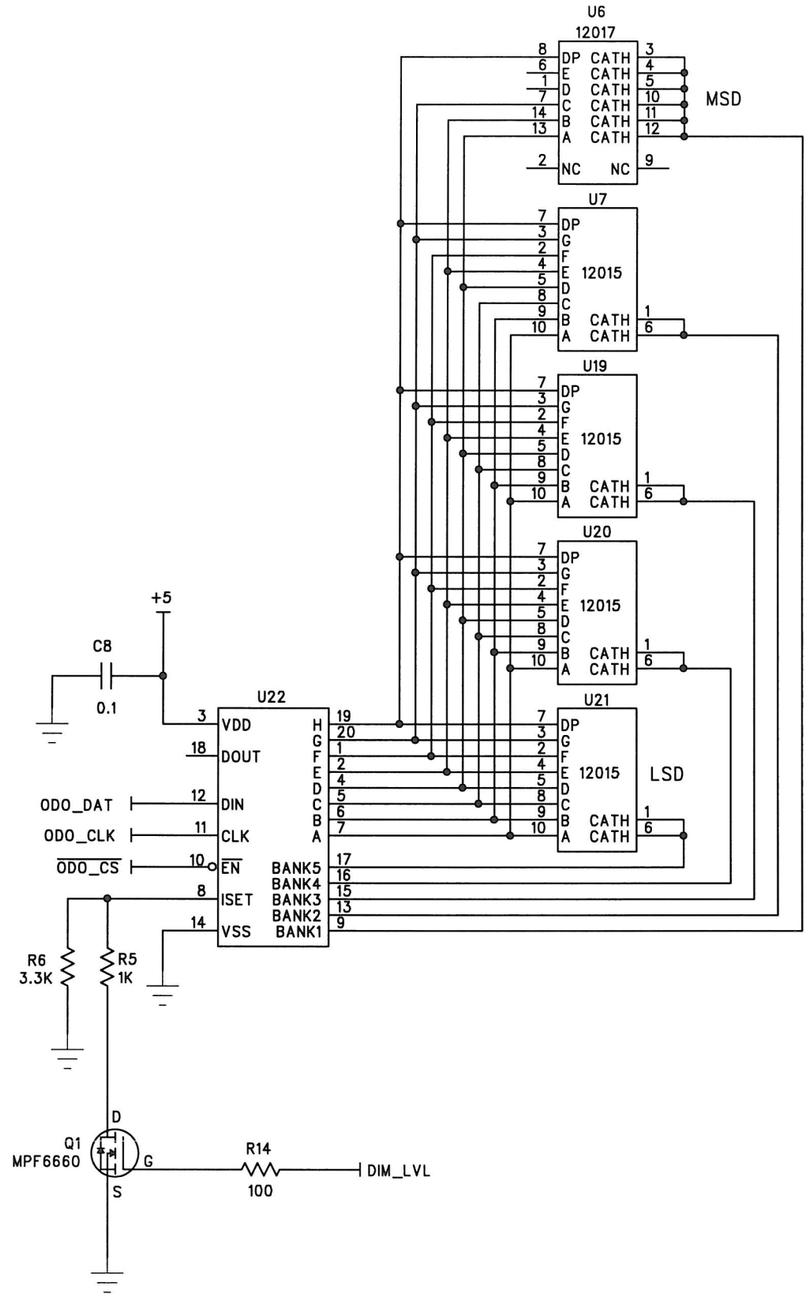


| | | | |
|---|---|---|---|
| DRAWN BY: | GOB | Quantum Engineering, Inc. | |
| DATE: | 11/21/00 | | |
| CHECKED: | | | |
| APPROVED: | | | |
| AAR HOT DISPLAY | | | |
| SHEET 2 OF 2 | DWG. NO. 1229 | REV B | |

| REV | DATE | ECO | DESCRIPTION | DRN | CHKD | P.ENG | APPD |
|---|---|---|---|---|---|---|---|
| G | 1/23/06 | 5151 | CHG U13 TO P/N 17010 | GOB | [illegible] | | JE |

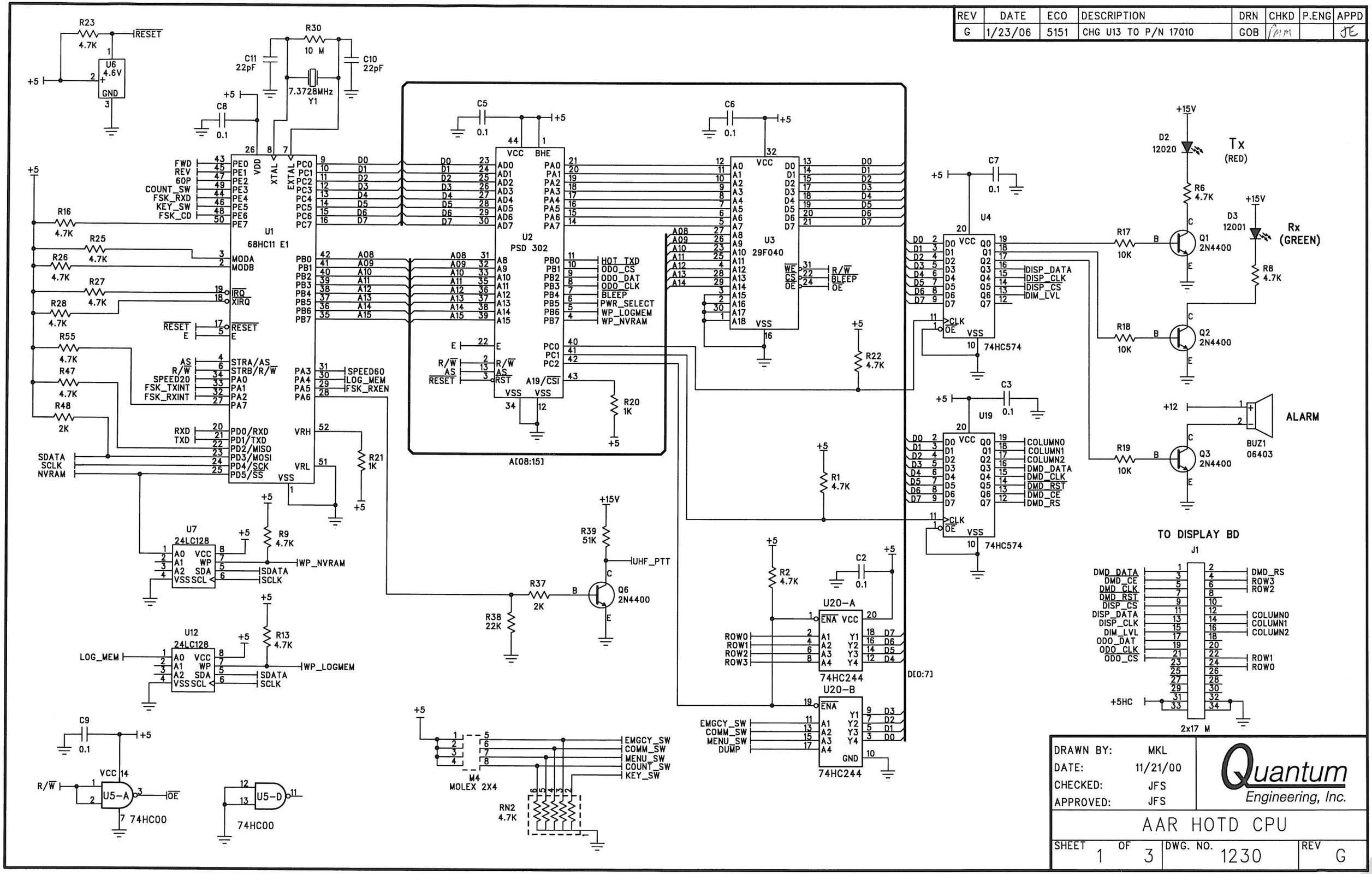


| | |
|---|---|
| DRAWN BY: | MKL |
| DATE: | 11/21/00 |
| CHECKED: | JFS |
| APPROVED: | JFS |

Quantum Engineering, Inc.

AAR HOTD CPU

| SHEET | OF | DWG. NO. | REV |
|---|---|---|---|
| 1 | 3 | 1230 | G |

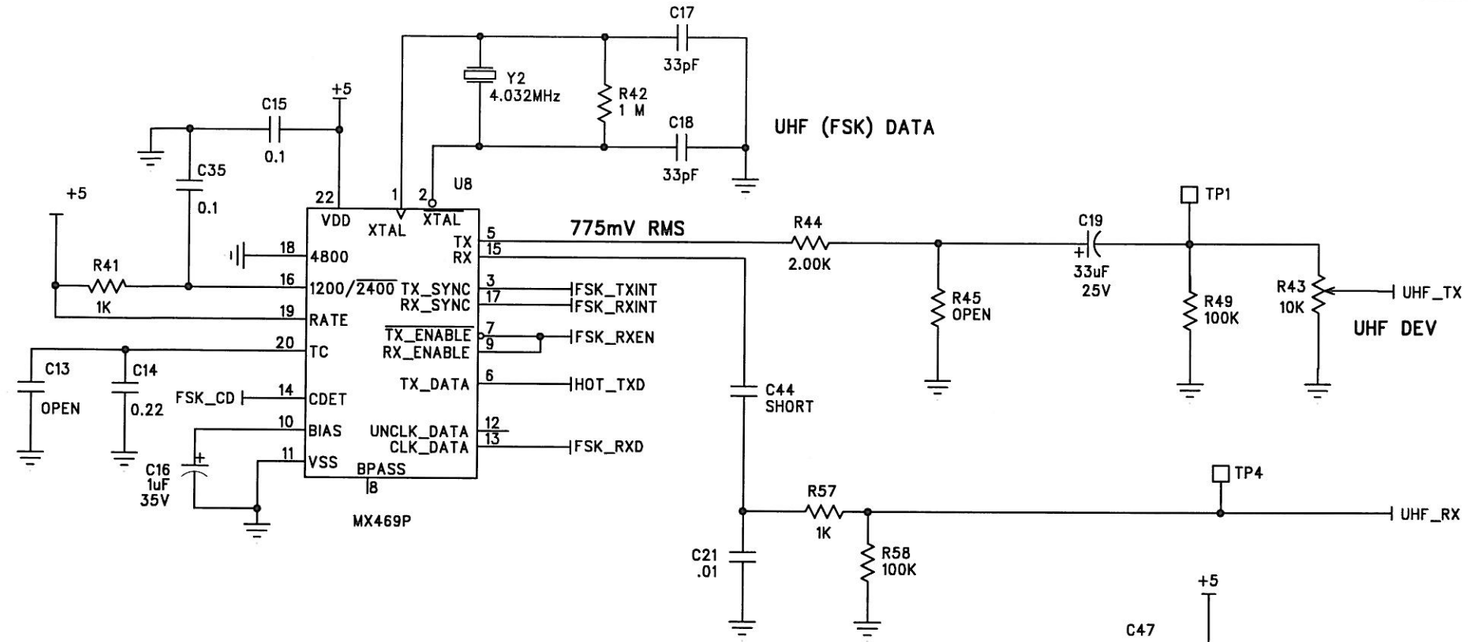


| | |
|---|---|
| DRAWN BY: | MKL |
| DATE: | 12/10/99 |
| CHECKED: | JFS |
| APPROVED: | JFS |

Quantum Engineering, Inc.

# AAR HOTD CPU

| SHEET | OF | DWG. NO. | REV |
|---|---|---|---|
| 2 | 3 | 1230 | G |

## ISOLATED RS232

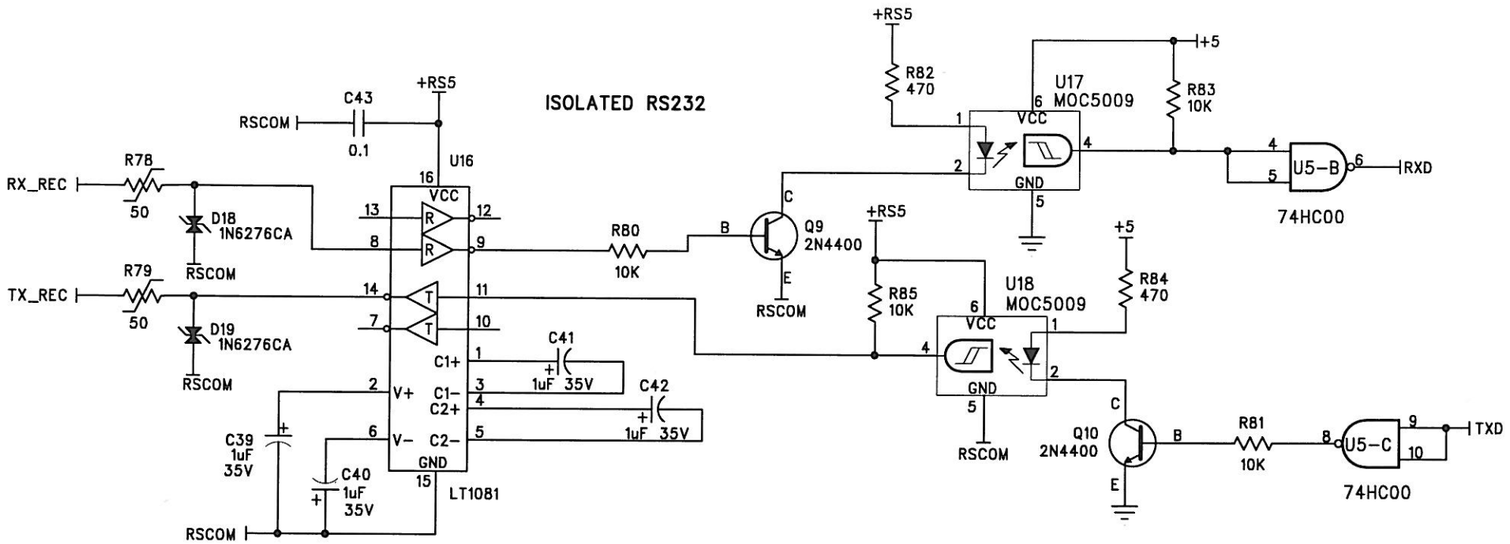


## INPUT CABLE

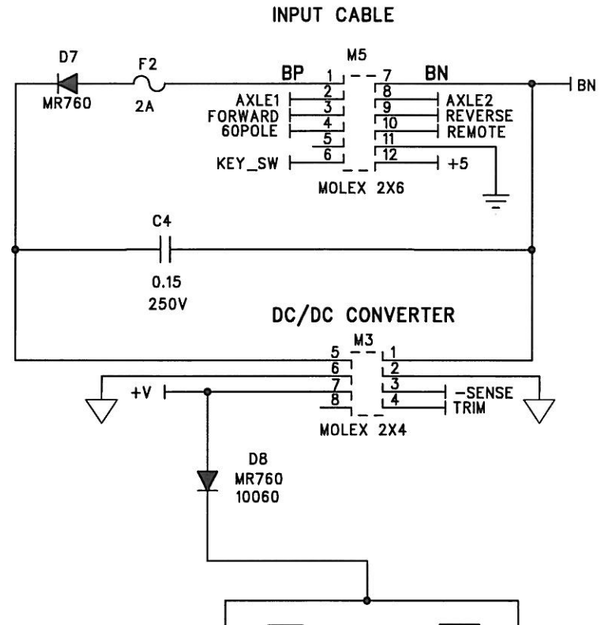


+8 to +15V FROM DC/DC

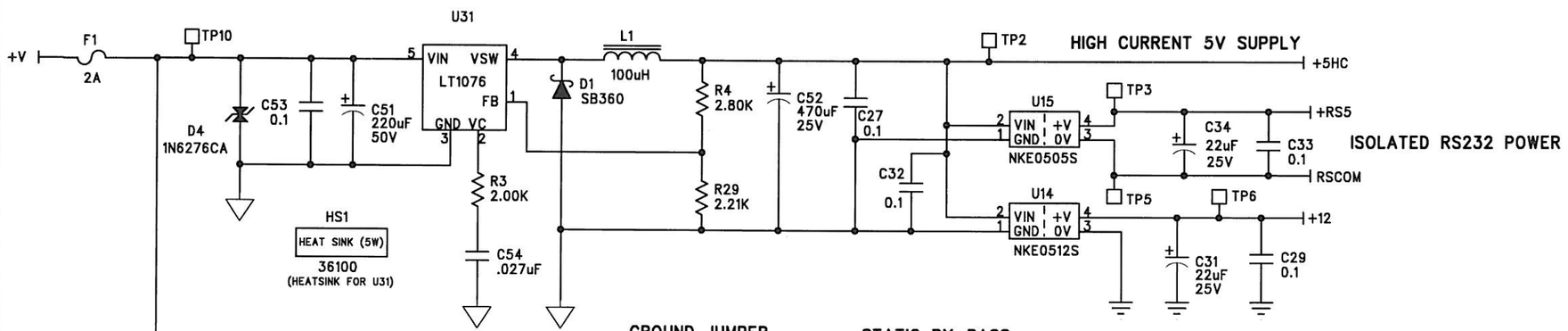


## ISO-232

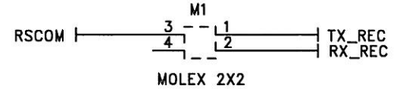


CHART "B"

| PWR_SELECT | DC/DC OUT | RADIO PWR |
|---|---|---|
| LOW | 12V | HIGH |
| HIGH | 8 to 9V | LOW |
| | 60230 | 60230/R |

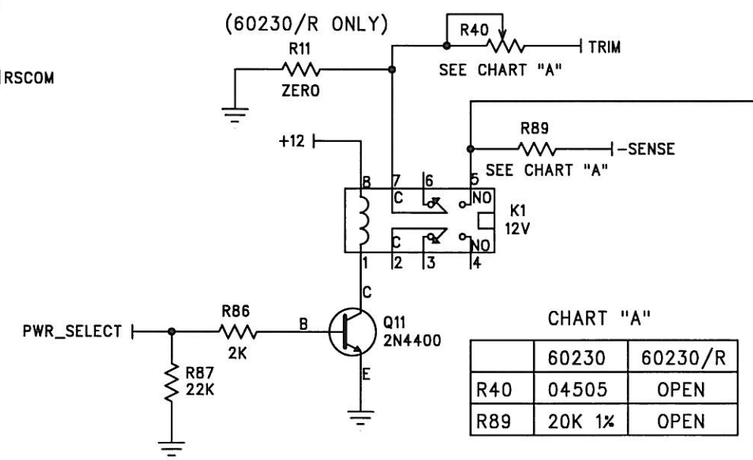


CHART "A"

| | 60230 | 60230/R |
|---|---|---|
| R40 | 04505 | OPEN |
| R89 | 20K 1% | OPEN |

| | |
|---|---|
| DRAWN BY: | MKL |
| DATE: | 12/10/99 |
| CHECKED: | JFS |
| APPROVED: | JFS |

Quantum Engineering, Inc.

# AAR HOTD CPU

| SHEET | OF | DWG. NO. | REV |
|---|---|---|---|
| 3 | 3 | 1230 | G |

| REV | DATE | ECO | DESCRIPTION | DRN | CHKD | P.ENG | APPD |
|---|---|---|---|---|---|---|---|
| | | 3521 | | | | | |

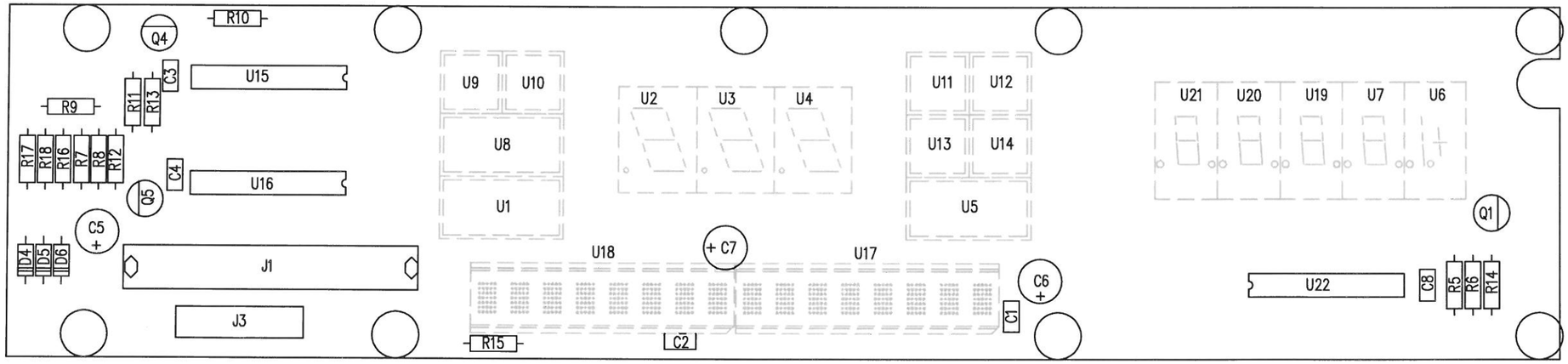



PROPRIETARY INFORMATION

THIS DRAWING AND ALL INFORMATION CONTAINED HEREON IS THE PROPERTY OF QUANTUM ENGINEERING, INC. AND SHALL NOT BE DIVULGED, REPRODUCED, OR COPIED WITHOUT THE EXPRESS WRITTEN PERMISSION OF QUANTUM ENGINEERING, INC.


DRAWN BY : GDB
DATE : 1/8/04
CHECKED :
APPROVED : jfs

DO NOT SCALE

TOLERANCES
.XX = .030"
.XXX= .005"

Quantum Engineering, Inc.

# ASY PCB – AAR HOT DISPLAY

| PART NO. | DWG NO. | REV |
|---|---|---|
| 60229 | C60229 | A |

| REV | DATE | ECO | DESCRIPTION | DRN | CHKD | P.ENG | APPD |
|---|---|---|---|---|---|---|---|
| B | 3/21/05 | 3993 | ADDED 60230/R TO TITLE BLOCK | GOB | JE | | JE |

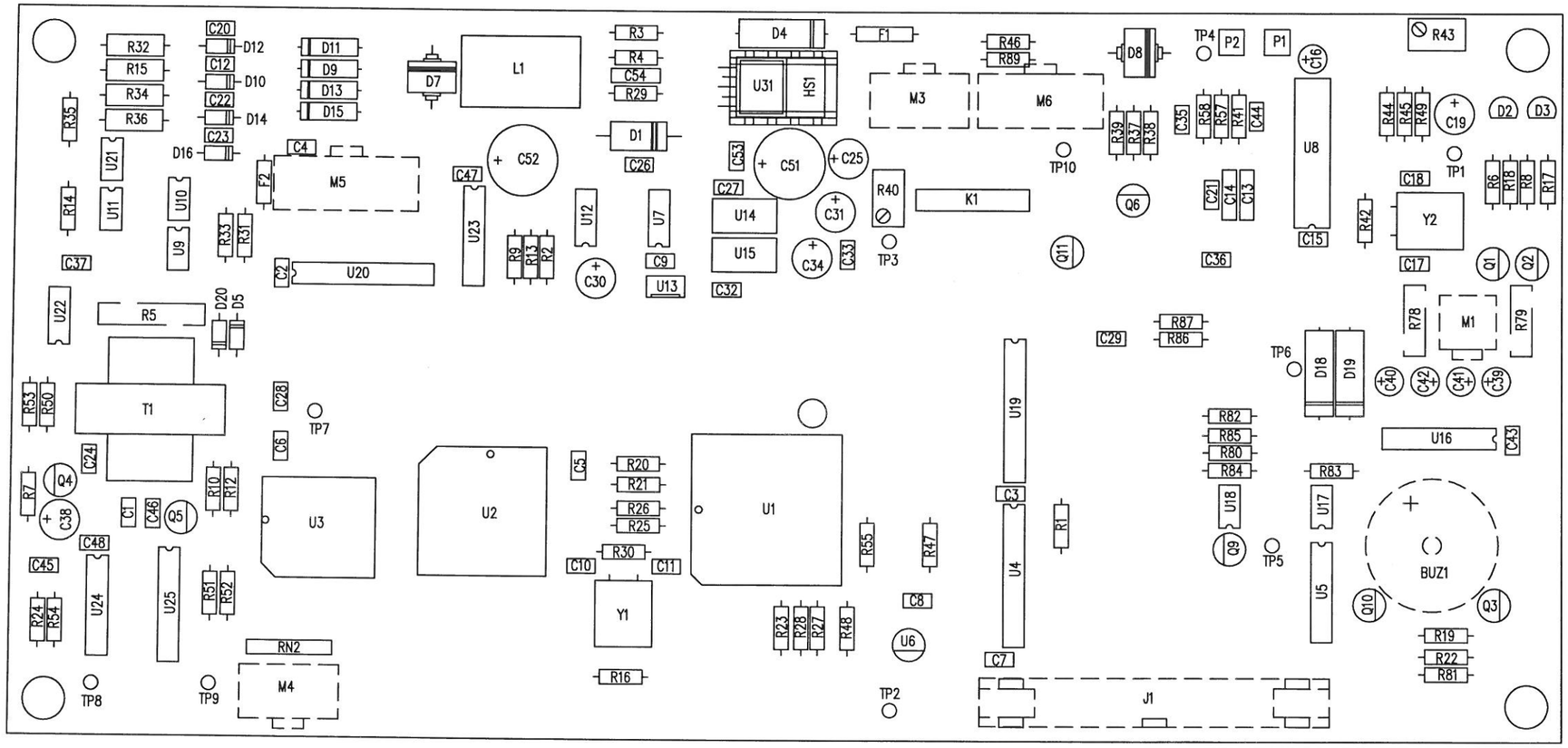


| | R40 | R89 | JUMPER |
|---|---|---|---|
| 60230 | 04505 | 20K 1% | NO |
| 60230/R | OPEN | OPEN | YES |


PROPRIETARY INFORMATION

THIS DRAWING AND ALL INFORMATION CONTAINED HEREON IS THE PROPERTY OF QUANTUM ENGINEERING, INC. AND SHALL NOT BE DIVULGED, REPRODUCED, OR COPIED WITHOUT THE EXPRESS WRITTEN PERMISSION OF QUANTUM ENGINEERING, INC.


| | | | |
|---|---|---|---|
| DRAWN BY : | GOB | DO NOT SCALE | Quantum Engineering, Inc. |
| DATE : | 1/8/04 | TOLERANCES | |
| CHECKED : | JFS | .XX = .030" | |
| APPROVED : | JFS | .XXX= .005" | |

ASY PCB – AAR HOT CPU

| PART NO. | DWG NO. | REV |
|---|---|---|
| 60230<br>60230/R | C60230 | B |

| REV | DATE | ECO | DESCRIPTION | DRN | CHKD | P.ENG | APPD |
|---|---|---|---|---|---|---|---|
| | | 3521 | | | | | JFS |

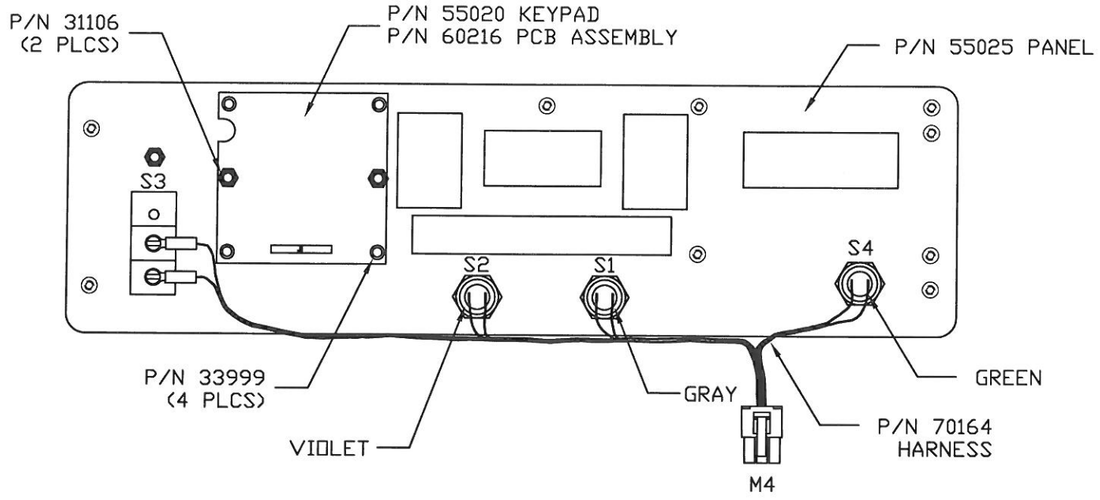


BACK VIEW

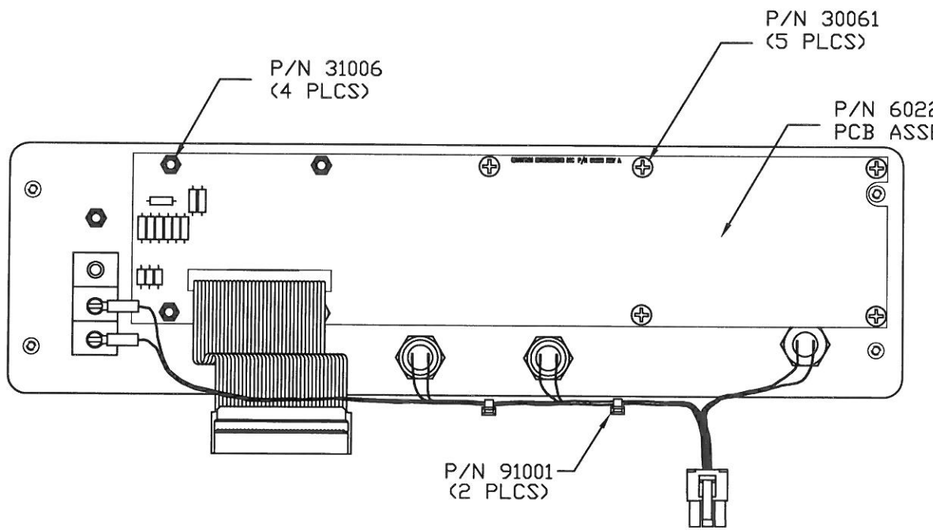


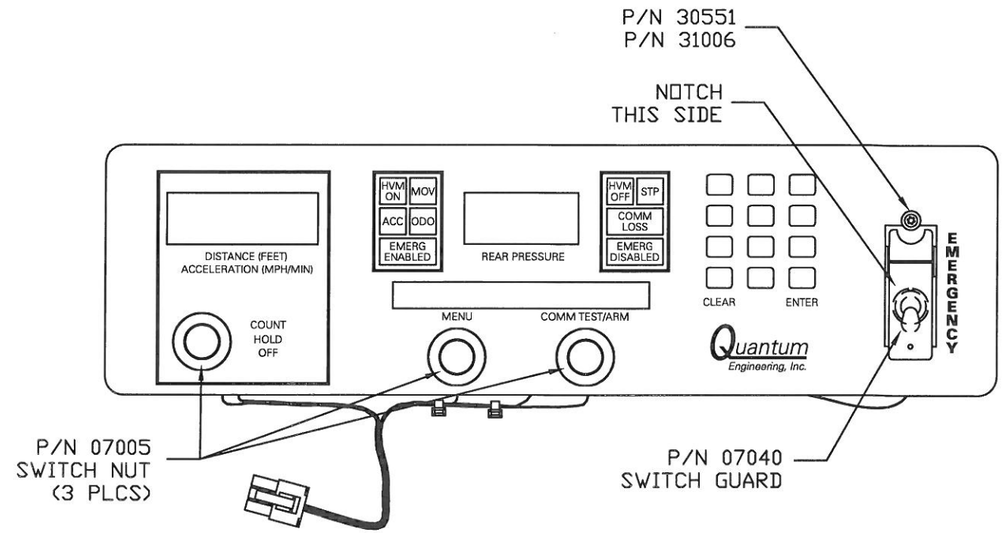


FRONT VIEW

## HARDWARE LIST

| P/N | QTY | DESCRPTION |
|---|---|---|
| 30061 | 5 | #6 x 3/8", SCREW |
| 30551 | 1 | #6 x 3/8", SCREW TORX |
| 31006 | 5 | #6 LOCKNUT |
| 31106 | 2 | #6 HEX NUT |
| 33999 | 4 | #6 x .187", NYLON SPACER |


PROPRIETARY INFORMATION

THIS DRAWING AND ALL INFORMATION CONTAINED HEREON IS THE PROPERTY OF QUANTUM ENGINEERING, INC. AND SHALL NOT BE DIVULGED, REPRODUCED, OR COPIED WITHOUT THE EXPRESS WRITTEN PERMISSION OF QUANTUM ENGINEERING, INC.


| | | |
|---|---|---|
| DRAWN BY : GOB | DO NOT SCALE | Quantum Engineering, Inc. |
| DATE : 1/8/04 | TOLERANCES | |
| CHECKED : | .XX = .030" | |
| APPROVED : JFS | .XXX= .005" | |

# ASY FRONT PANEL - HOTD Q3465

| PART NO. | DWG NO. | REV |
|---|---|---|
| 62122 | C62122 | A |

| REV | DATE | ECO | DESCRIPTION | DRN | CHKD | P.ENG | APPD |
|---|---|---|---|---|---|---|---|
| B | 3/21/05 | 3993 | ADDED CHART | GOB | JE | | JE |

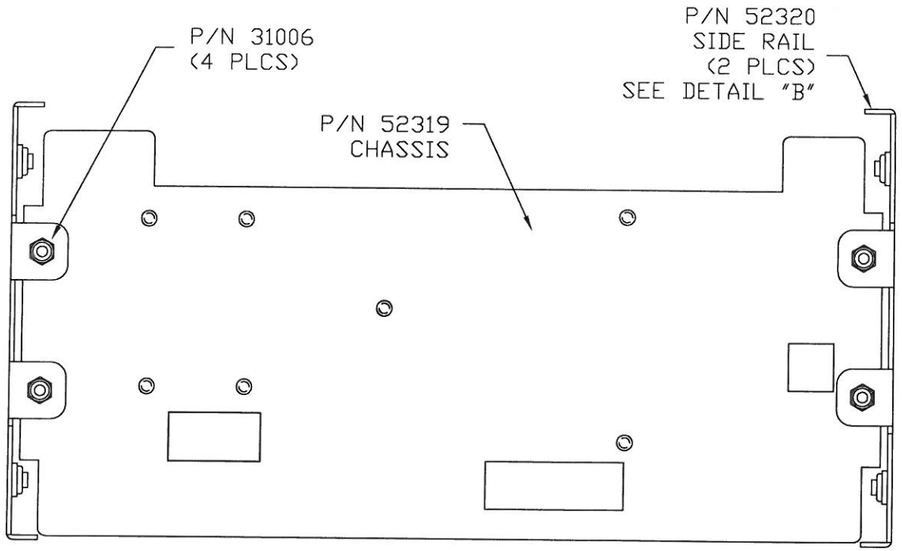


BOTTOM VIEW

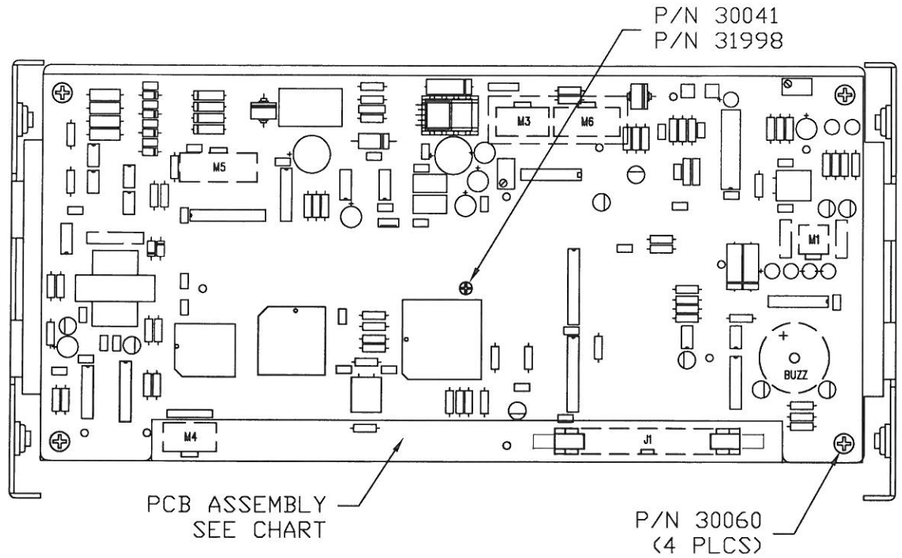


TOP VIEW

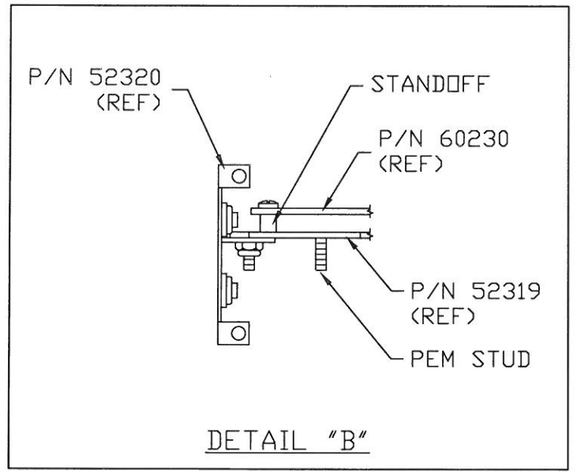


DETAIL "B"

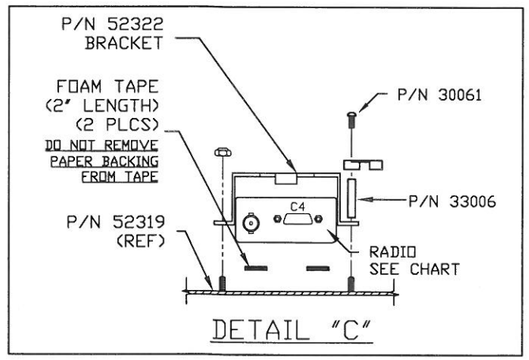


DETAIL "C"

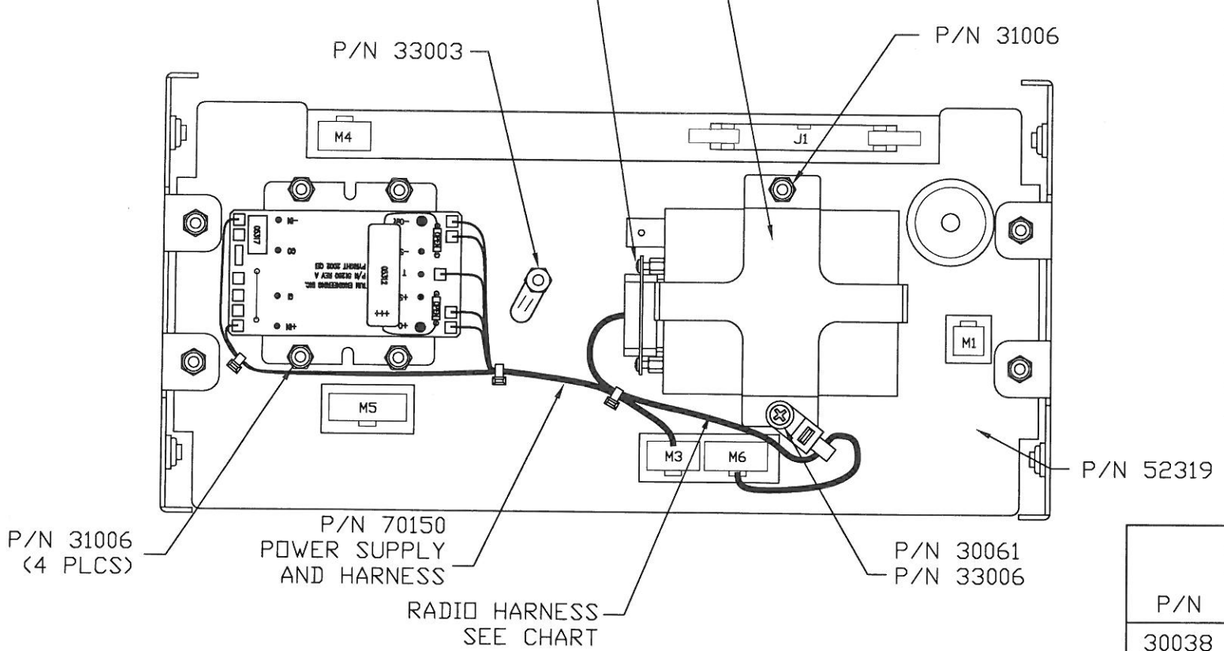


BOTTOM VIEW

| | PCB | APPLICATION SOFTWARE | RADIO HARNESS | RADIO |
|---|---|---|---|---|
| Q3465 | 60230 | 16960 | 70165 | 59019 |
| Q3465/R | 60230/R | 16960 | 70165/R | 59019/RIT |
| Q3465/DME | 60230/R | 89046 | 70165/R | 59019/RIT |

## HARDWARE LIST

| P/N | QTY | DESCRPTION |
|---|---|---|
| 30038 | 2 | #4 x 3/16 SCREW |
| 30041 | 1 | #4 x 3/8, SCREW |
| 30060 | 4 | #6 x 1/4 SCREW |
| 30061 | 1 | #6 x 3/8 SCREW |
| 31006 | 9 | #6 LOCKNUT |
| 31998 | 1 | #4 WASHER NYLON |
| 33003 | 1 | #6 x .69", STANDOFF |
| 33006 | 1 | #6 x .75", STANDOFF |


PROPRIETARY INFORMATION

THIS DRAWING AND ALL INFORMATION CONTAINED HEREON IS THE PROPERTY OF QUANTUM ENGINEERING, INC. AND SHALL NOT BE DIVULGED, REPRODUCED, OR COPIED WITHOUT THE EXPRESS WRITTEN PERMISSION OF QUANTUM ENGINEERING, INC.


| | | | |
|---|---|---|---|
| DRAWN BY : | GOB | DO NOT SCALE | |
| DATE : | 1/8/04 | TOLERANCES | |
| CHECKED : | JFS | .XX = .030" | Quantum Engineering, Inc. |
| APPROVED : | JFS | .XXX= .005" | |

# ASY CHASSIS - HOTD Q3465

| PART NO. | DWG NO. | REV |
|---|---|---|
| 62123<br>62123/R | C62123 | B |

| REV | DATE | ECO | DESCRIPTION | DRN | CHKD | P.ENG | APPD |
|---|---|---|---|---|---|---|---|
| | | 3521 | | | | | |

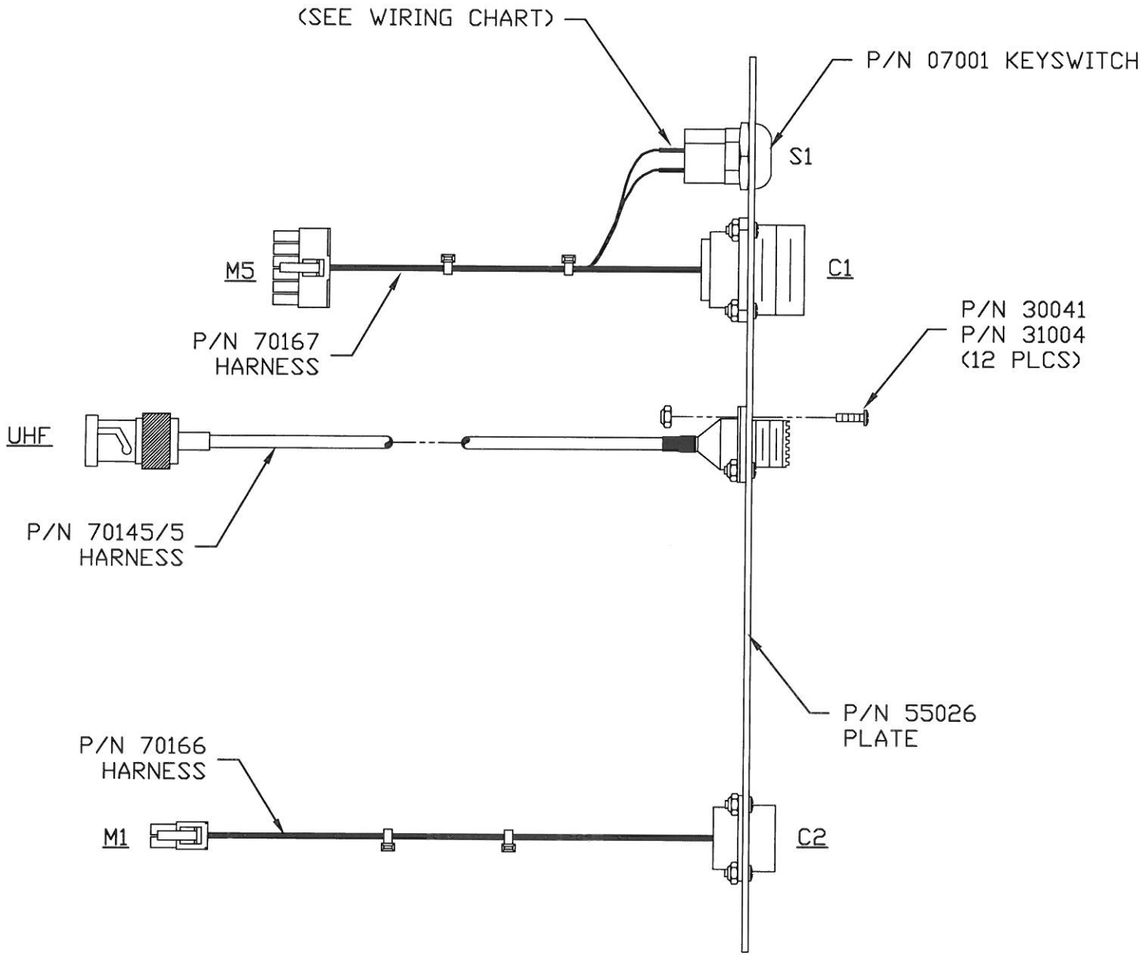


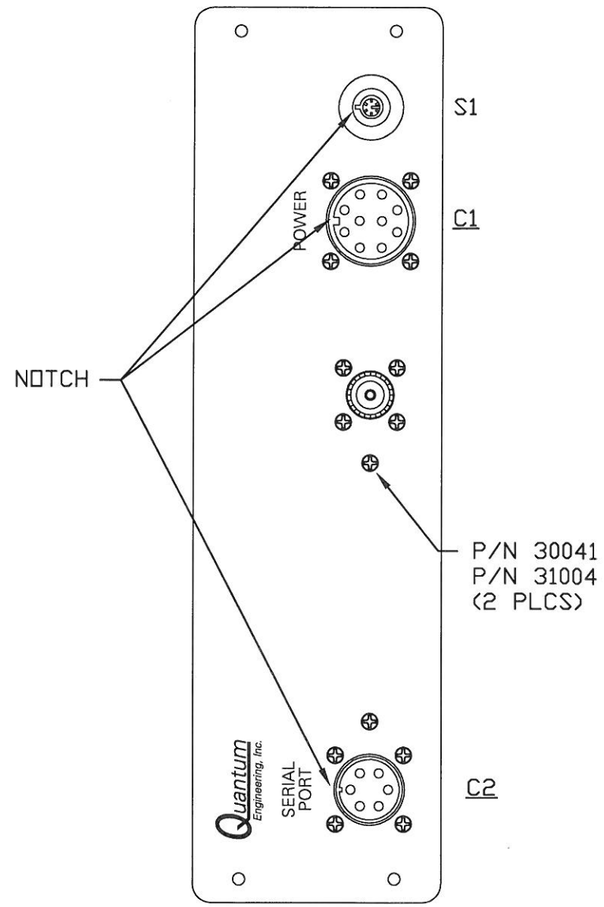


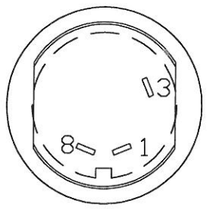


S1
WIRE SIDE VIEW

## WIRING CHART

| S1 | COLOR | FUNCTION/AREA |
|---|---|---|
| 1 | YELLOW/ORANGE | KEY SWITCH |
| 3 | YELLOW/GREEN | +5 |
| 8 | N/C | --- |

## HARDWARE LIST

| P/N | QTY | DESCRIPTION |
|---|---|---|
| 30041 | 14 | #4 x 3/8" SCREW |
| 31004 | 14 | #4 LOCKNUT |


## PROPRIETARY INFORMATION

THIS DRAWING AND ALL INFORMATION CONTAINED HEREON IS THE PROPERTY OF QUANTUM ENGINEERING, INC. AND SHALL NOT BE DIVULGED, REPRODUCED, OR COPIED WITHOUT THE EXPRESS WRITTEN PERMISSION OF QUANTUM ENGINEERING, INC.


| | | | |
|---|---|---|---|
| DRAWN BY : | GDB | DO NOT SCALE | Quantum Engineering, Inc. |
| DATE : | 1/8/04 | TOLERANCES | |
| CHECKED : | | .XX = .030" | |
| APPROVED : | jfs | .XXX= .005" | |

ASY - REAR PANEL HOTD Q3465

| PART NO. | DWG NO. | REV |
|---|---|---|
| 62124 | C62124 | A |

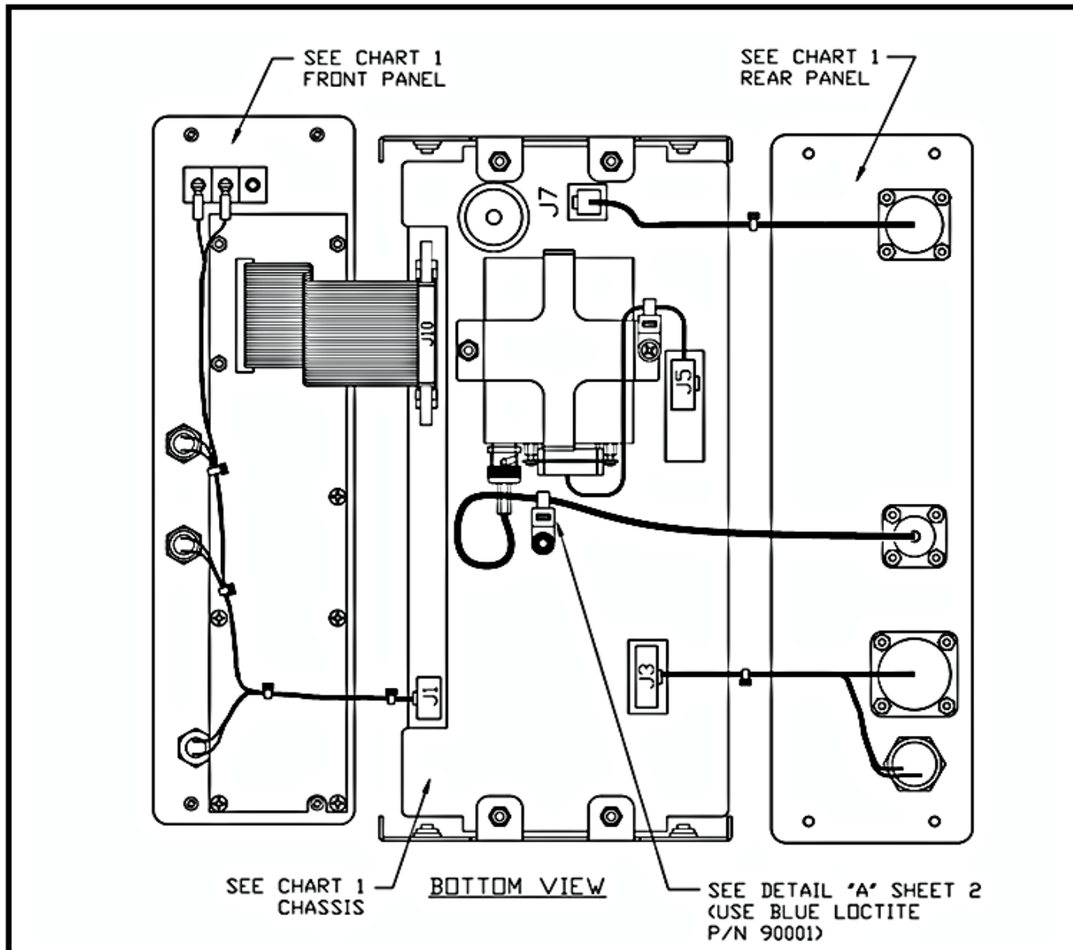


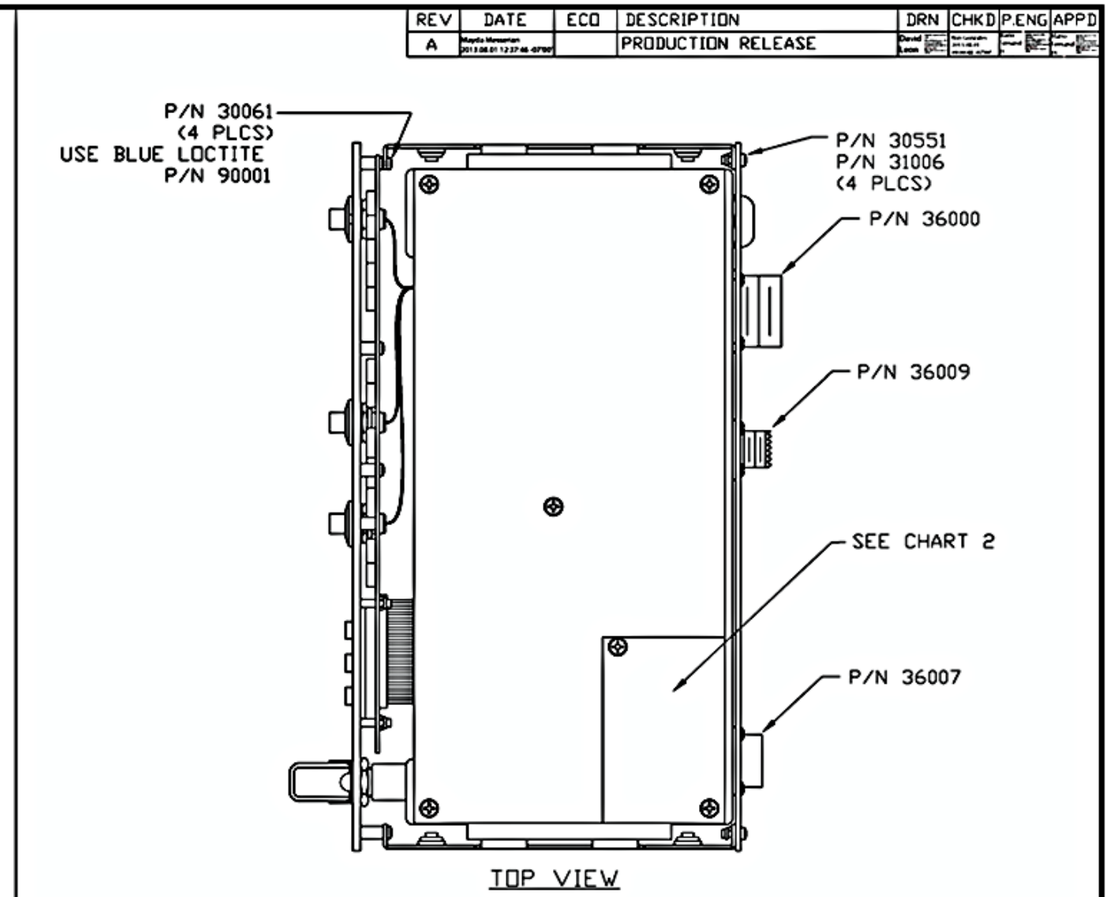


| REV | DATE | ECO | DESCRIPTION | DRN | CHKD | P.ENG | APPD |
|---|---|---|---|---|---|---|---|
| A | | | PRODUCTION RELEASE | | | | |

CHART 1

| | FRONT PANEL | REAR PANEL | CHASSIS |
|---|---|---|---|
| V3465/DME | 9000-90412-0001 | 9000-90414-0001 | 9000-90413-0001 (SEE NOTE 3, SH3) |
| V3465/R | 9000-90412-0001 | 9000-90414-0001 | 9000-90413-0001 |
| V3465/SPM | 9000-90412-0002 | 9000-90414-0002 | 9000-90413-0001 |

NOTES:
1) APPLY WORK ORDER STICKER INSIDE ENCLOSURE.
2) APPLY ACCEPTANCE STICKER AFTER T/I.
(NOTES CONTINUED ON SHEET 3)

CHART 2

| |
|---|
| BOOTLOADER Z224-9VC11-A010 FOR ALL APPLICATION |
| APPLICATION Z224-9VC12-A010 FOR V3465/R |
| APPLICATION Z224-9VC37-A010 FOR V3465/DME |
| APPLICATION Z224-9VC38-A010 FOR V3465/SPM |

PROPRIETARY INFORMATION
THIS DRAWING AND ALL INFORMATION CONTAINED HEREIN IS THE PROPERTY OF SIEMENS INDUSTRY, INC. AND SHALL NOT BE DEVULGED, REPRODUCED, OR COPIED WITHOUT THE EXPRESS WRITTEN PERMISSION OF SIEMENS INDUSTRY, INC.

DRAWN BY : David
DATE : Leon
CHECKED : Ron Gonzales
APPROVED : Mayda Messerian

DO NOT SCALE

SIEMENS

HOTD AAR CONSOLE

| PART NO. | DWG NO. | PAGE 1 OF 3 | REV |
|---|---|---|---|
| SEE CHART 1 | V3465 | | A |

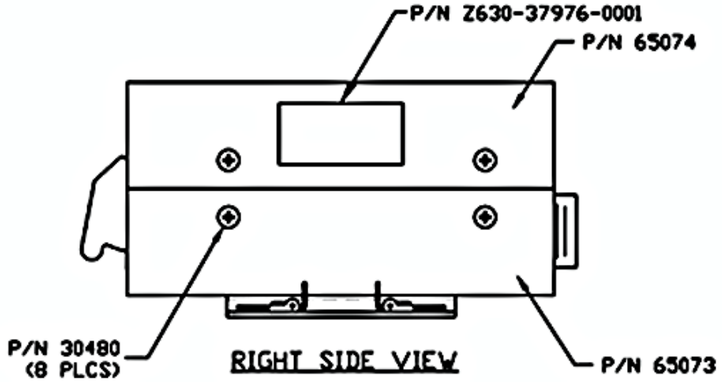


RIGHT SIDE VIEW

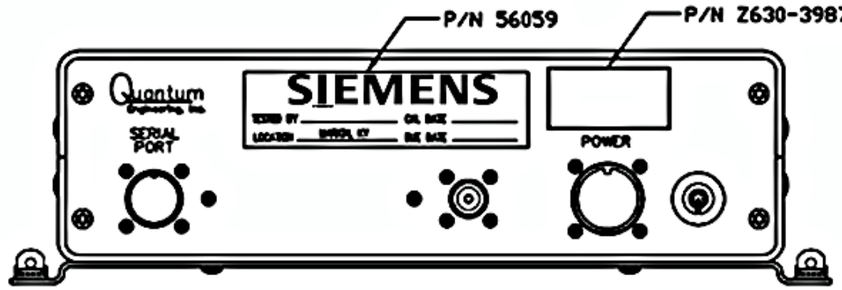


REAR SIDE VIEW

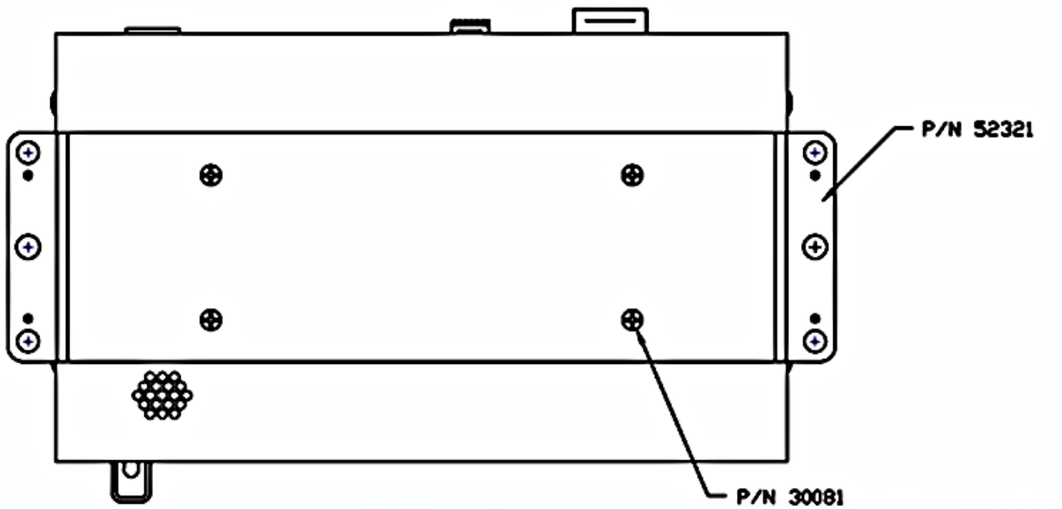


BOTTOM VIEW

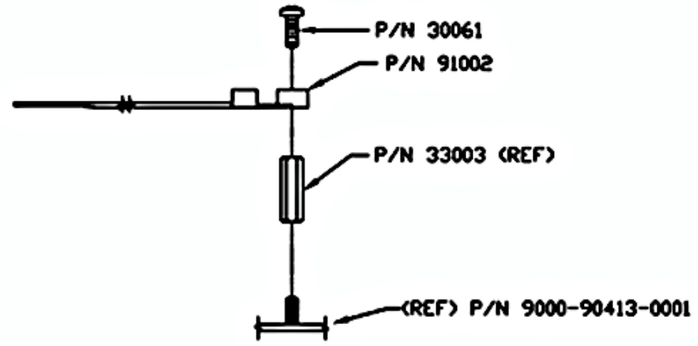


DETAIL "A"

PROPRIETARY INFORMATION
THIS DRAWING AND ALL INFORMATION CONTAINED HEREIN IS THE PROPERTY OF SIEMENS INDUSTRY, INC. AND SHALL NOT BE DEVULGED, REPRODUCED, OR COPIED WITHOUT THE EXPRESS WRITTEN PERMISSION OF SIEMENS INDUSTRY, INC.

SIEMENS

HOTD AAR CONSOLE

| PART NO. | DWG NO. | PAGE 2 OF 3 | REV |
|---|---|---|---|
| SEE CHART 1 | V3465 | | A |

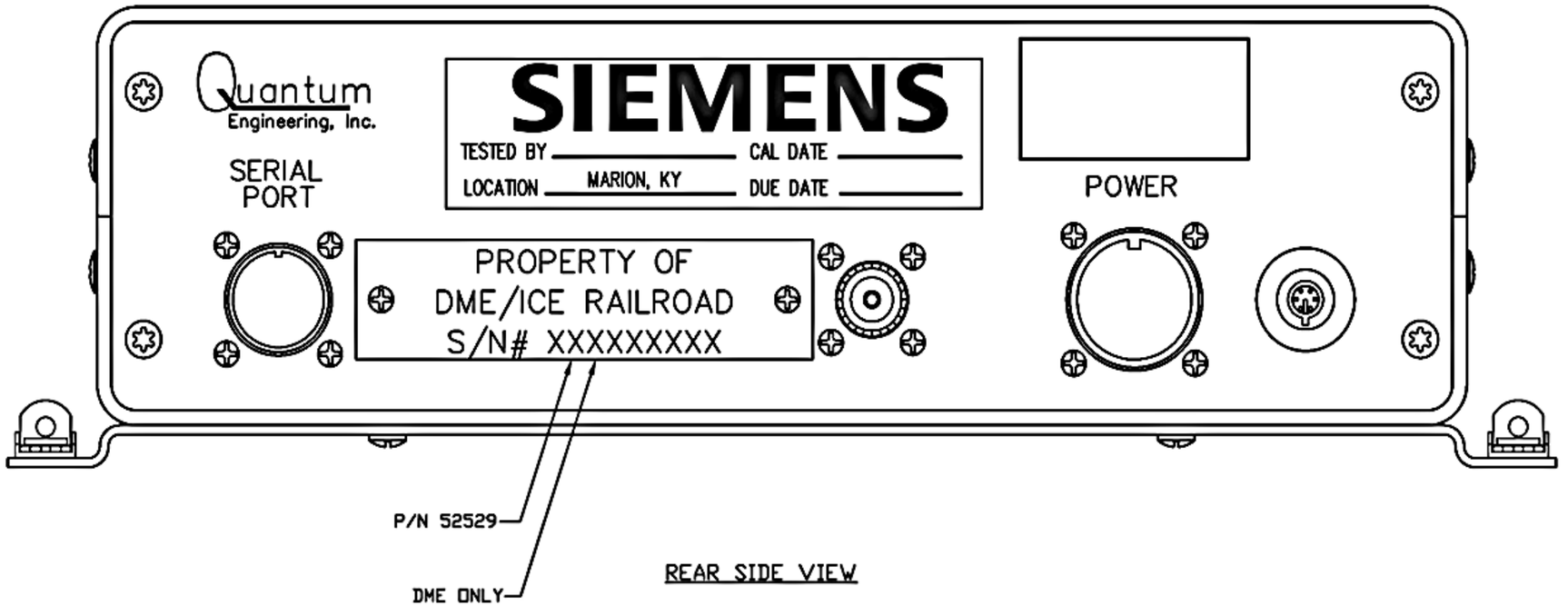


REAR SIDE VIEW

**PROPRIETARY INFORMATION**
**THIS DRAWING AND ALL INFORMATION CONTAINED HEREIN IS THE PROPERTY OF SIEMENS INDUSTRY, INC. AND SHALL NOT BE DEVULGED, REPRODUCED, OR COPIED WITHOUT THE EXPRESS WRITTEN PERMISSION OF SIEMENS INDUSTRY, INC.**

**SIEMENS**

HOTD AAR CONSOLE

| PART NO. | DWG NO. | PAGE 3 OF 3 | REV |
|---|---|---|---|
| SEE CHART 1 | V3465 | | A |

DRAWING CHANGE HISTORY

| | |
|---|---|
| Drawing Name: | Assembly Front Panel – HOTD V3465 |
| Drawing Number: | A90412 |
| Revision: | A1 |
| Reason For Change: | Add P/N 55020 To Drawing Callout |
| Drawing Changes: | See below |

BACK VIEW OF (9000-90412-0001) CALL OUT IS:

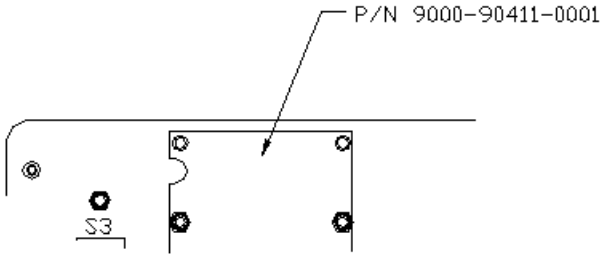


CHANGE TO:

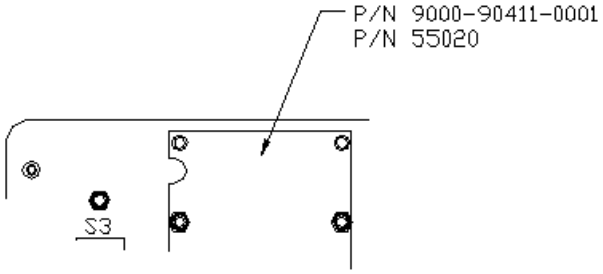

This Page Intentionally Left Blank

| REV | DATE | ECO | DESCRIPTION | DRN | CHKD | P.ENG | APPD |
|---|---|---|---|---|---|---|---|
| A | | | PRODUCTION RELEASE | | | | |

| CHART 1 | |
|---|---|
| ASSEMBLY | FRONT PANEL |
| 9000-90412-0001 | 55025 |
| 9000-90412-0002 | 55224 |

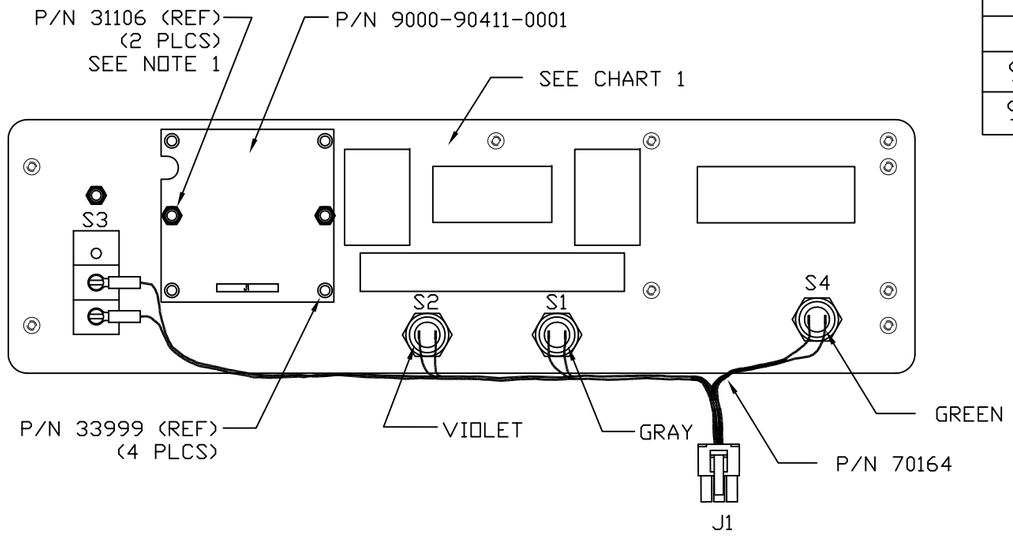


BACK VIEW

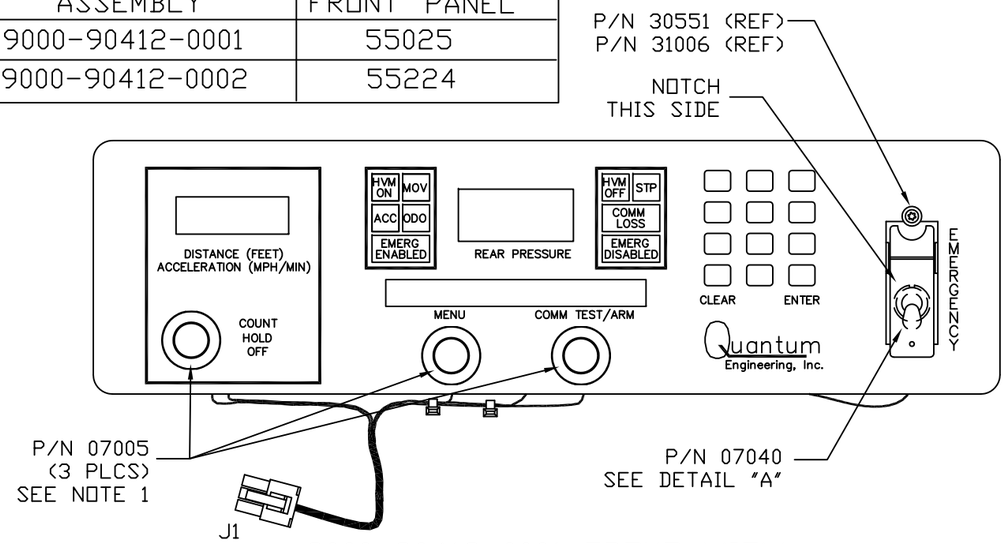


9000-90412-0001 FRONT VIEW

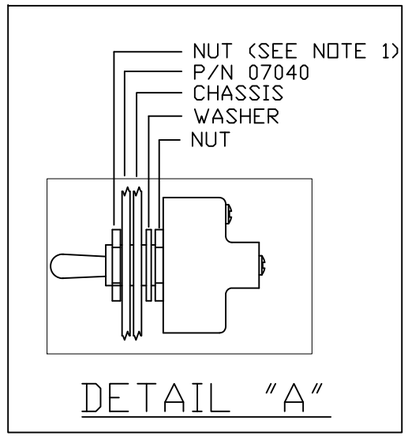


DETAIL "A"

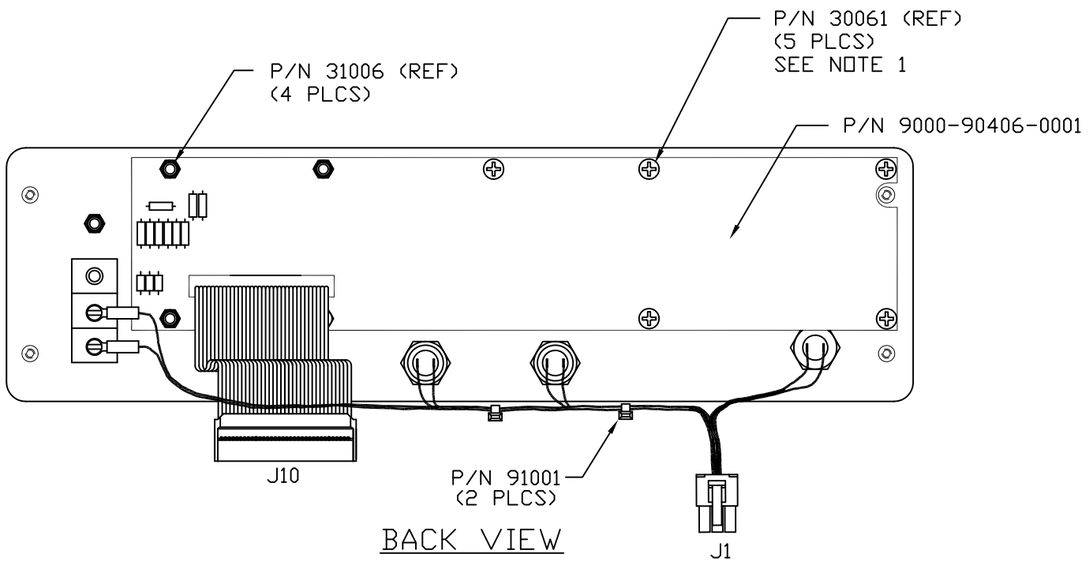


BACK VIEW

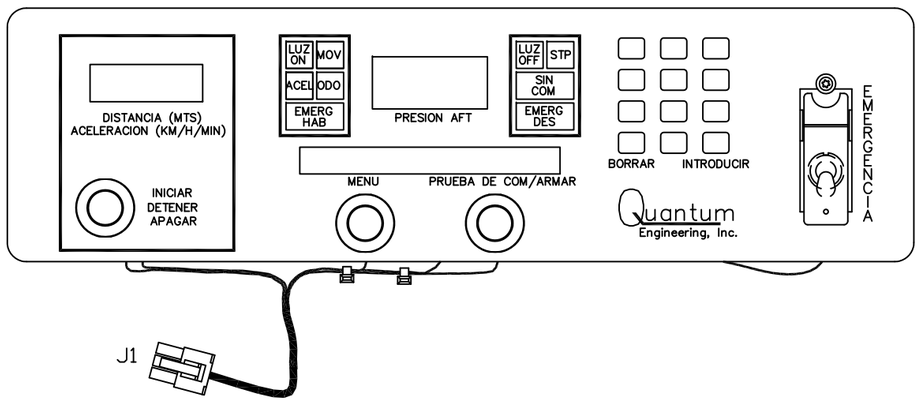


9000-90412-0002 FRONT VIEW

NOTES:

1) USE BLUE LOCTITE P/N 90001 THIS AREA.
2) APPLY WORK ORDER STICKER ON PLATE.
3) APPLY ACCEPTANCE STICKER AFTER T/I.

| HARDWARE LIST | | |
|---|---|---|
| P/N | QTY | DESCRPTION |
| 30061 | 5 | #6 x 3/8", SCREW |
| 30551 | 1 | #6 x 3/8", SCREW TORX |
| 31006 | 5 | #6 LOCKNUT |
| 31106 | 2 | #6 HEX NUT |
| 33999 | 4 | #6 x .187", NYLON SPACER |


PROPRIETARY INFORMATION

THIS DRAWING AND ALL INFORMATION CONTAINED HEREON IS THE PROPERTY OF AND SHALL NOT BE DIVULGED, REPRODUCED, OR COPIED WITHOUT THE EXPRESS WRITTEN PERMISSION OF


| | | |
|---|---|---|
| DRAWN BY :<br>DATE :<br>CHECKED :<br>APPROVED : | DO NOT SCALE | |

# ASY FRONT PANEL - HOTD V3465

| PART NO. | DWG NO. | REV |
|---|---|---|
| SEE CHART 1 | A90412 | A |

| REV | DATE | ECO | DESCRIPTION | DRN | CHKD | P ENG | APPD |
|---|---|---|---|---|---|---|---|
| A | | | PRODUCTION RELEASE | | | | |

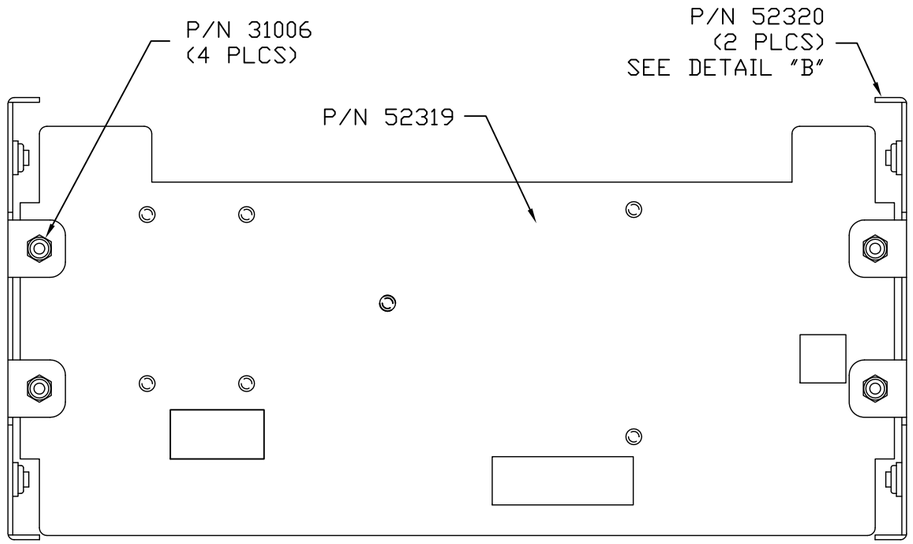


BOTTOM VIEW

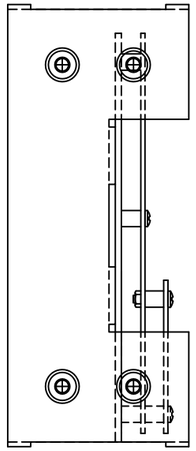

SIDE VIEW

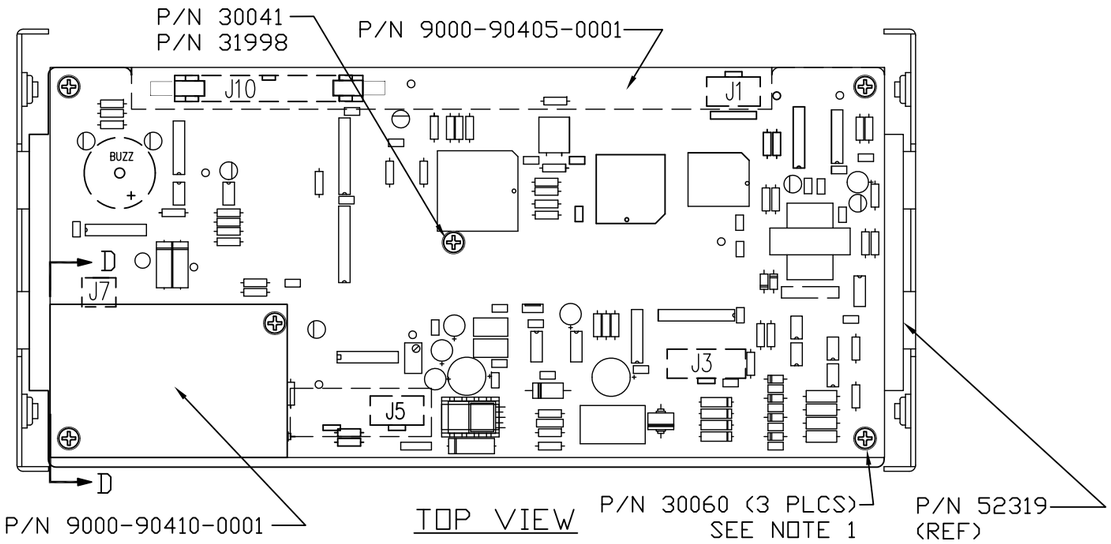


TOP VIEW

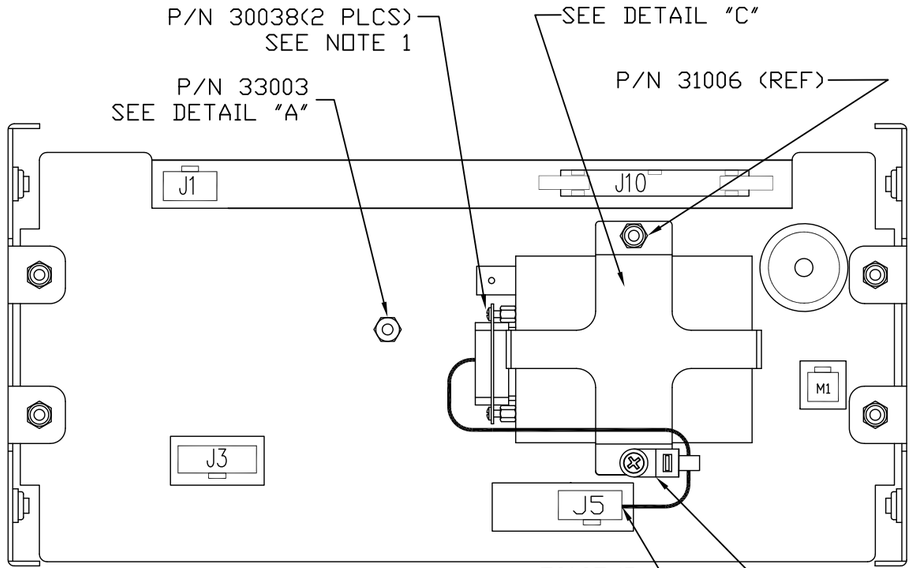


BOTTOM VIEW

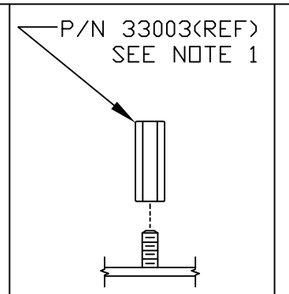


DETAIL "A"

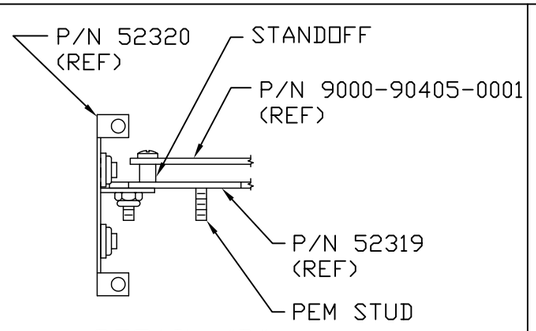


DETAIL "B"

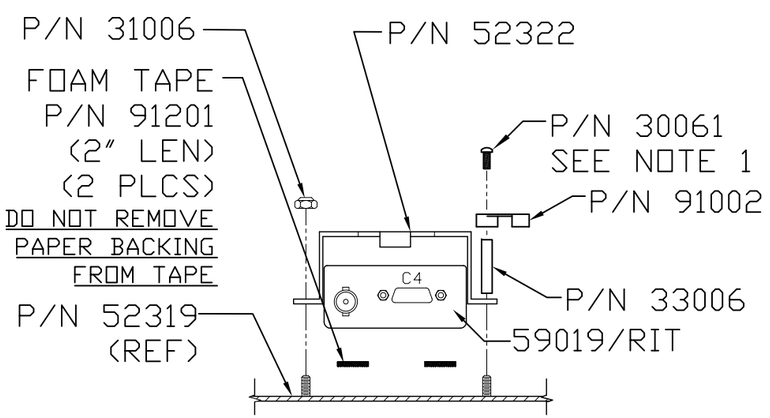


DETAIL "C"

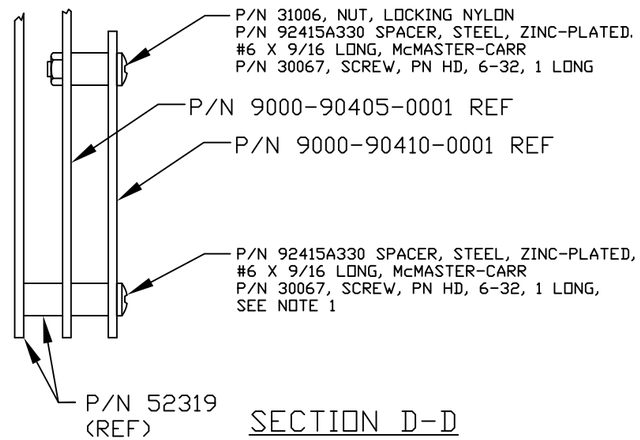


SECTION D-D

NOTES:

1) USE BLUE LOCTITE P/N 90001.
2) APPLY WORK ORDER STICKER ON PLATE.
3) APPLY ACCEPTANCE STICKER AFTER T/I.


PROPRIETARY INFORMATION

THIS DRAWING AND ALL INFORMATION CONTAINED HEREON IS THE PROPERTY OF AND SHALL NOT BE DIVULGED, REPRODUCED, OR COPIED WITHOUT THE EXPRESS WRITTEN PERMISSION OF


| | | |
|---|---|---|
| DRAWN BY :<br>DATE :<br>CHECKED :<br>APPROVED : | DO NOT SCALE | |

# ASY CHASSIS - HOTD V3465

| PART NO. | DWG NO. | REV |
|---|---|---|
| 9000-90413-0001 | A90413 | A |

| REV | DATE | ECO | DESCRIPTION | DRN | CHKD | P.ENG | APPD |
|---|---|---|---|---|---|---|---|
| A | | | PRODUCTION RELEASE | | | | |

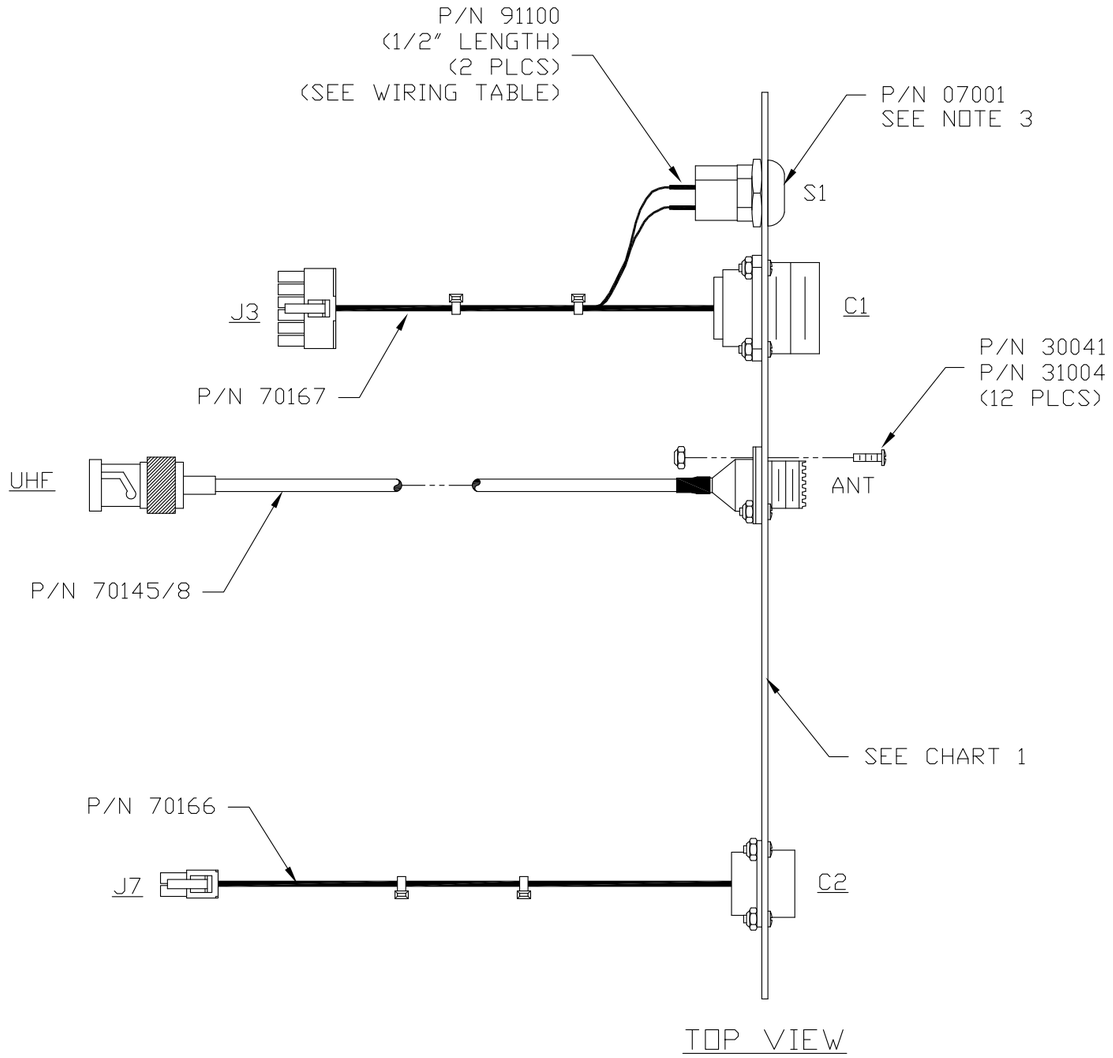


TOP VIEW

9000-90414-0001 VIEW

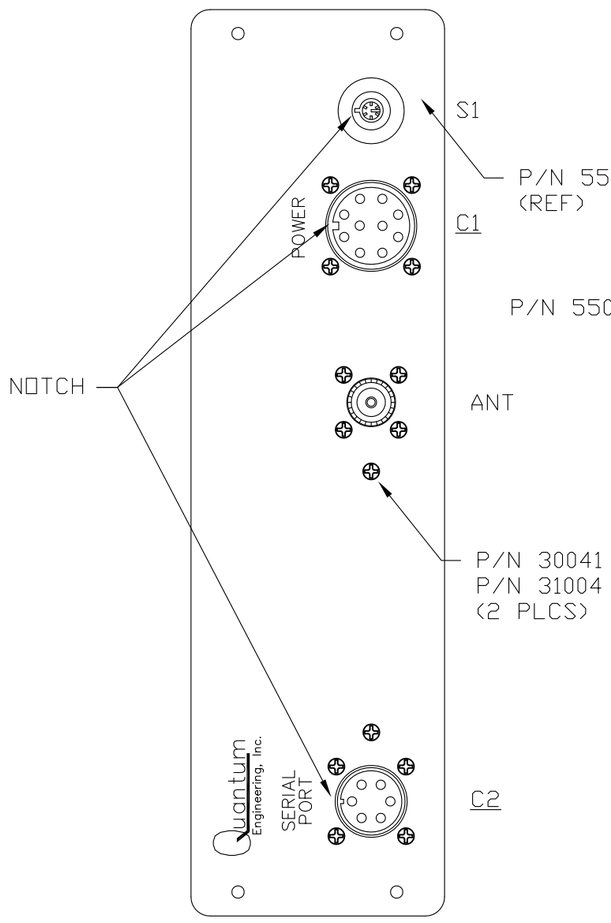


9000-90414-0002 VIEW

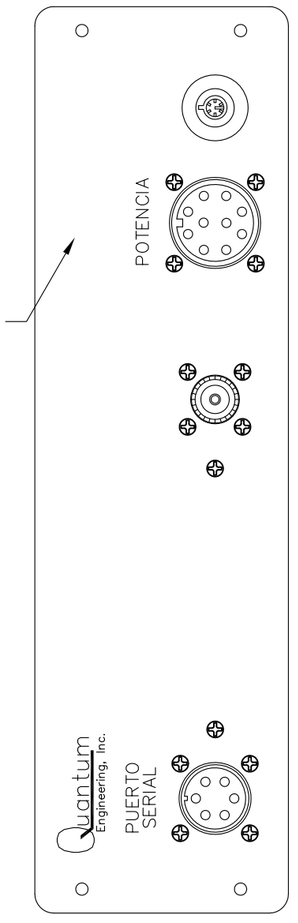


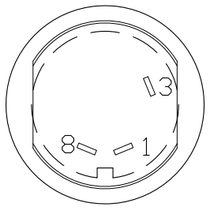


S1
WIRE SIDE VIEW

| WIRING TABLE | | |
|---|---|---|
| S1 | COLOR | FUNCTION/AREA |
| 1 | YELLOW/ORANGE | KEY SWITCH |
| 3 | YELLOW/GREEN | +5 |
| 8 | N/C | --- |

| CHART 1 | |
|---|---|
| ASSEMBLY | REAR PANEL |
| 9000-90414-0001 | 55026 |
| 9000-90414-0002 | 55026/SP |

NOTES:
1) APPLY WORK ORDER NUMBER ON PLATE.
2) APPLY ACCEPTANCE STICKER AFTER T/I
3) USE BLUE LOCTITE P/N 90001.


PROPRIETARY INFORMATION
THIS DRAWING AND ALL INFORMATION CONTAINED HEREON IS THE PROPERTY OF AND SHALL NOT BE DIVULGED, REPRODUCED, OR COPIED WITHOUT THE EXPRESS WRITTEN PERMISSION OF


| | | |
|---|---|---|
| DRAWN BY :<br>DATE :<br>CHECKED :<br>APPROVED : | DO NOT SCALE | |

# ASY REAR PANEL - HOTD V3465

| PART NO. | DWG NO. | REV |
|---|---|---|
| SEE CHART 1 | A90414 | A |

CORPORATION DISCLAIMS ANY LIABILITY OR OBLIGATION FOR ITS PRODUCTS WHICH HAVE BEEN ALTERED, REPAIRED OR TESTED BY PERSONS OTHER THAN PERSONNEL.

| REVISIONS | | | | | |
|---|---|---|---|---|---|
| ZONE | REV | DESCRIPTION | DATE | DFTG APPVL | DESIGN AUTH |
| | A | PRODUCTION RELEASE | | | |

| QTY. REQD. | ITEM NO. | EDP NO. | PART OR IDENTIFYING NO. | MATERIAL | NOMENCLATURE OR DESCRIPTION | DATA: SPECS, REF DES, SIZE, NOTES, VENDORS. |
|---|---|---|---|---|---|---|
| 1 | 1 | Z149-90405-0000 | D90405-00 LVL A | | BARE BOARD | |
| 1 | 2 | 06002 | 251002 | 2A | FUSE | R72 |
| 1 | 3 | 06403 | MSR516NR | | BUZZER | SN1 |
| 1 | 4 | 08057 | 71918-134 | | CONNECTOR | J10 |
| 1 | 5 | 08919 | 39-29-0043 | | CONNECTOR | J7 |
| 1 | 6 | 08921 | 39-29-0083 | | CONNECTOR | J1 |
| 1 | 7 | 08922 | 39-29-0123 | | CONNECTOR | J3 |
| 1 | 8 | 08925 | 39-29-0103 | | CONNECTOR | J5 |
| 1 | 9 | Z213-00215-0000 | 1.5KE150CA | 150V | TVS, BIDIR | CR2 |
| 1 | 10 | Z241-00004-0000 | 2N7002-7-F | | TRANSISTOR | Q1 |
| 8 | 11 | Z241-00035-0000 | NDS7002A | | TRANSISTOR | Q2 Q4 Q5 Q6 Q9 Q10 Q11 Q12 |
| 1 | 12 | Z241-00052-0000 | IRF9640STRLPBF | | TRANSISTOR | Q7 |
| 1 | 13 | Z241-00055-0000 | MMBFJ112 | | TRANSISTOR | Q3 |
| 1 | 14 | Z241-00056-0000 | FDB28N30TM | | TRANSISTOR | Q8 |
| 4 | 15 | Z243-00136-0000 | SFH690BT | | IC, OPTO | U3 U7 U9 U23 |
| 10 | 16 | Z243-00191-0000 | NC7S14M5X | | IC | U2 U4 U8 U10 U11 U13 U16 U19 U20 U21 |
| 1 | 17 | Z243-00332-0000 | TL431AIDBZR | 2.5V | IC | CR23 |
| 1 | 18 | Z243-00397-0000 | LMC7101AIM5 | | IC | U1 |
| 1 | 19 | Z243-00404-0000 | L6565DTR | | IC | U22 |
| 1 | 20 | Z243-00410-0000 | CMX469AD3 | | IC | U5 |
| 1 | 21 | Z243-00467-0000 | MIC5233-3.3YM5 | | IC | U18 |
| 1 | 22 | Z243-00487-0000 | LM2267BTJ-5.0 | | IC | U12 |
| 3 | 23 | Z243-00492-0000 | SN74LVC16T245DGGR | | IC | U6 U25 U26 |
| 1 | 24 | Z243-01135-0000 | LM2937ESX-5.0 | | IC | U24 |
| 2 | 25 | Z243-01166-0000 | HCPL-0630-500 | | IC, OPTO | U14 U15 |
| 1 | 26 | Z243-01248-0000 | MAX3232ESE | | IC | U17 |
| 3 | 27 | Z247-00001-0000 | BAS16LT1G | 75V | DIODE | CR1 CR3 CR22 |
| 1 | 28 | Z247-00017-0000 | MMSZ5227BT1G | 3.6V | DIODE | CR26 |
| 1 | 29 | Z247-00133-0000 | 1SMB5921BT3G | 6.8V | DIODE | CR24 |
| 1 | 30 | Z247-00136-0000 | MBRS1100T3G | 100V | DIODE | CR11 |
| 1 | 31 | Z247-00156-0000 | 1SMB5925BT3 | 10V | DIODE | CR7 |
| 3 | 32 | Z247-00157-0000 | 1SMB5937BT3 | 33V | DIODE | CR6 CR10 CR14 |
| 1 | 33 | Z247-00162-0000 | BAS416T/R | | DIODE | CR15 |
| 1 | 34 | Z247-00166-0000 | 1SMB5919BT3 | 5.6V | DIODE | CR25 |
| 2 | 35 | Z247-00171-0000 | STPS40L45CG | 45V | DIODE | CR20 CR21 |
| 1 | 36 | Z247-00172-0000 | STTH506B-TR | VOLT | DIODE | CR18 |
| 1 | 37 | Z247-00173-0000 | 1SMB5929BT3G | 15V | DIODE | CR27 |
| 8 | 38 | Z247-00185-0000 | MBR0560-TP | 60V | DIODE | CR28 CR29 CR30 CR31 CR32 CR33 CR34 CR35 |
| 4 | 39 | Z247-00192-0000 | S1M-E3/61T | 1000V | DIODE | CR4 CR8 CR12 CR16 |
| 2 | 40 | Z249-00001-0000 | SMBJ16CA-E3/52 | 16V | TVS, BIDIR | CR17 CR19 |
| 3 | 41 | Z249-00036-0000 | SMBJ45A | 45V | TVS | CR5 CR9 CR13 |
| 1 | 42 | Z302-00.01-U085 | 302H51W103MQ4 | 0.01uF, 20%, 3000VDC | CAPACITOR | C7 |
| 1 | 43 | Z341-.022U-0384 | 12061C223KAT2A | 0.022uF, 10%, 100V | CAPACITOR | C9 |
| 6 | 44 | Z341-0.01U-0164 | GRM39X7R103K050AD | 0.01uF, 10%, 50V | CAPACITOR | C10 C34 C42 C43 C69 C89 |
| 2 | 45 | Z341-0.01U-0394 | GRM31BR72J103KW01L | 0.01uF, 10%, 630V | CAPACITOR | C31 C47 |
| 4 | 46 | Z341-0.82U-0694 | 1825PC824KAT1A | 0.82uF, 10%, 250V | CAPACITOR | C27 C35 C46 C65 |
| 45 | 47 | Z341-00.1U-0264 | C0805C104K5RACTU | 0.1uF, 10%, 50V | CAPACITOR | C4 (C5 N/U) C8 C12 C17 C18 C19 C20 C22 C23 C24 C25 C26 C28 C29 C32 C36 C37 C39 C40 C53 C57 C59 C60 C62 C63 C67 C71 C74 C75 C78 C80 C81 C82 C83 C84 (C87 N/U) C88 C92 C93 C94 C95 C98 C99 C100 C101 C103 |
| 6 | 48 | Z341-0001U-0224 | C0805C105K4RACTU | 1uF, 10%, 16V | CAPACITOR | C1 C30 C50 C54 C55 C61 |
| 1 | 49 | Z341-1000P-0394 | GRM31BR72J102KW01L | 1000pF, 10%, 630V | CAPACITOR | C56 |
| 3 | 50 | Z341-2700P-0594 | 1812GC272KAT2E | 2700pF, 10%, 2000V | CAPACITOR | C21 C48 C96 |
| 4 | 51 | Z342-0033P-0163 | GRM39C0G330JD50AD | 33pF, 5%, 50V | CAPACITOR | C3 C11 C14 C38 |
| 0 | 52 | Z342-0047P-0263 | 08055A470JAT2E | 47pF, 5%, 50V | CAPACITOR | (C66 N/U) |
| 1 | 53 | Z342-0100P-0284 | 08051A101KAT2E | 100pF, 10%, 100V | CAPACITOR | C49 |
| 5 | 54 | Z342-1000P-0183 | GRM1885C2A102JA01D | 1000pF, 5%, 100V | CAPACITOR | C33 C41 C68 C79 C90 |
| 2 | 55 | Z343-0330U-0G55 | EEE-FP1V331AP | 330uF, 20%, 35V | CAPACITOR | C44 C58 |
| 14 | 56 | Z347-0010U-0454 | GMK325BJ106KN-T | 10uF, 20%, 35V | CAPACITOR | C2 (C6 N/U) C13 C15 C16 C51 C52 C72 C73 C76 C77 C85 C86 C97 C102 |
| 2 | 57 | Z352-00330-U065 | UCY2D331MHD | 330uF, 20%, 200V | CAPACITOR | C45 C64 |
| 2 | 58 | Z358-02700-U155 | ELXZ350ELL272ML35S | 2700uF, 20%, 35V | CAPACITOR | C70 C91 |

| QTY. REQD. | ITEM NO. | EDP NO. | PART OR IDENTIFYING NO. | MATERIAL | NOMENCLATURE OR DESCRIPTION | DATA: SPECS, REF DES, SIZE, NOTES, VENDORS. |
|---|---|---|---|---|---|---|
| 1 | 59 | Z442-00.2R-0991 | WSR3R2000FEA | 0.2R, 1%, 3W | RESISTOR | R70 |
| 3 | 60 | Z442-0000R-0112 | CRCW0603-000ZRT1 | 0, 5%, 0.063W | RESISTOR | R7 R53 R67 |
| 6 | 61 | Z442-0001K-0861 | CRCW25121K00FKEG | 1K, 1%, 1W | RESISTOR | R11 R12 R34 R49 R59 R69 |
| 1 | 62 | Z442-0001M-0221 | CRCW0805-1004FT | 1MEG, 1%, 100mW | RESISTOR | R18 |
| 24 | 63 | Z442-0010K-0111 | CRCW0603-1002FRT1 | 10K, 1%, 0.063W | RESISTOR | R2 R3 (R4 N/U) R20 R22 R23 (R24 N/U) R25 R32 R35 R50 R60 R62 R63 R79 R80 R89 R90 R95 R101 R103 R104 R105 R108 R109 R110 |
| 3 | 64 | Z442-0010K-0861 | CRCW2512-1002FT | 10K, 1%, 1W | RESISTOR | R57 R82 R83 |
| 19 | 65 | Z442-0033R-0121 | CRCW060333R0FKEA | 33, 1%, 100mW | RESISTOR | (R8 N/U) R17 R26 R27 R28 R29 R30 R36 R38 (R39 N/U) R40 (R41 N/U) R42 R43 R44 R45 R46 R47 R54 R55 R77 R78 |
| 8 | 66 | Z442-01.5K-0121 | CRCW06031K50FKEA | 1.50K, 1%, 100mW | RESISTOR | R14 R16 R37 R52 R61 R74 R84 R98 (R99 N/U) |
| 4 | 67 | Z442-0100K-0111 | CRCW0603-1003FRT1 | 100K, 1%, 0.063W | RESISTOR | R6 R13 R51 R64 (R66 N/U) (R68 N/U) |
| 1 | 68 | Z442-0100K-0751 | CRCW2010-1003FT | 100K, 1%, 500mW | RESISTOR | R9 |
| 7 | 69 | Z442-0270R-0121 | CRCW0603270RFKEA | 270, 1%, 100mW | RESISTOR | R73 R81 R85 R106 R107 R111 R112 |
| 1 | 70 | Z442-04.7R-0222 | 9C08052A4R70JLRT/R | 4.7, 5%, 100mW | RESISTOR | R75 |
| 2 | 71 | Z442-0475K-0751 | CRCW2010-4753FT | 475K, 1%, 500mW | RESISTOR | R96 R97 |
| 2 | 72 | Z442-16.2K-0221 | CRCW08051622FRT1 | 16.2K, 1%, 100mW | RESISTOR | R86 R100 |
| 5 | 73 | Z442-23.7K-0221 | CRCW0805-2372FT | 23.7K, 1%, 100mW | RESISTOR | R1 R10 R65 R76 R87 |
| 7 | 74 | Z442-4.99K-0121 | CRCW06034K99FKEA | 4.99K, 1%, 100mW | RESISTOR | R19 R21 R88 (R91 N/U) R92 R93 R94 R102 |
| 1 | 75 | Z442-41.2K-0221 | CRCW0805-4122FT | 41.2K, 1%, 100mW | RESISTOR | R15 |
| 1 | 76 | Z442-47.5K-0751 | CRCW201047K5FKEF | 47.5K, 1%, 500mW | RESISTOR | R56 |
| 7 | 77 | Z444-0010R-0902 | CAY10-100J4 | 10, 5%, 31mw | RESISTOR ARRAY | RN1 RN2 RN3 RN4 RN5 RN6 RN7 |
| 1 | 78 | Z455-0020R-0008 | SL08-20002 | 20, 20% | THERMISTOR | RT1 |
| 1 | 79 | Z464-0005K-0001 | RS2B-5K1% | 5K, 1%, 3W | RESISTOR | R31 |
| 4 | 80 | Z464-0010K-0001 | RS2B-10K1% | 10K, 1%, 3W | RESISTOR | R33 R48 R58 R71 |
| 1 | 81 | Z479-0010K-0003 | 3296W-1-103-LF | 10K, 10%, 500mW | RESISTOR | R5 |
| 1 | 82 | Z501-8M638-0001 | 8M638 01 | | TRANSFORMER | T1 |
| 1 | 83 | Z502-00199-0000 | ELF-17N030A | 800uH | INDUCTOR | L7 |
| 7 | 84 | Z541-00009-0000 | BLM41PG102SN1L | 1K@100MHZ | INDUCTOR | L5 L6 L10 L12 L13 L14 L15 |
| 4 | 85 | Z541-00013-0000 | BLM18HG102SN1D | 1000 | INDUCTOR | L16 L17 L18 L19 |
| 4 | 86 | Z541-00015-0969 | SMB2.5R-2 | 100-OHM@10MHz | INDUCTOR | L3 L4 L8 L9 |
| 7 | 87 | Z541-00018-0000 | BLA2AAG102SN4D | 1K@100MHZ | INDUCTOR | L20 L21 L22 L23 L24 L25 L26 |
| 2 | 88 | Z542-0082U-0055 | MSS1260T-823-ML | 82uH, 20% | INDUCTOR | L1 L2 |
| 1 | 89 | Z542-08.2U-0065 | MSS1260T-822MLD | 8.2uH, 20% | INDUCTOR | L11 |
| 1 | 90 | Z545-00026-0000 | HCM49 4.032MABJ | 4.032MHz | CRYSTAL | Y1 |
| 1 | 91 | Z547-00009-0000 | PA0907.050NLG | | TRANSFORMER | T2 |
| 3 | 92 | Z741-00025-0030 | SSM-115-S-DV-LC | | CONNECTOR | J2 J4 J6 |
| 12 | 93 | Z746-00001-0000 | 5015 | | TESTPOINT | TP1 TP2 TP3 TP4 TP5 TP6 TP7 TP8 TP9 TP10 TP11 TP12 |
| 1 | 94 | Z803-00159-0000 | ERZ-V20D151 | 125V | VARISTOR | RV1 |
| 1 | 95 | Z803-22715-0000 | 13832-N90 | 90V | SPARK GAP | E1 |
| 1 | 96 | Z842-00012-0005 | HSMC-C190 | GREEN | LED | DS2 |
| 1 | 97 | Z842-00014-0002 | HSMC-C190 | RED | LED | DS1 |
| 1 | 98 | Z932-01010-0509 | NMV0509SC | | POWER SUPPLY | U27 |
| 2 | 99 | F/S | PLT31 | | TY-WRAP | PANDUIT |

NOTES: UNLESS OTHERWISE SPECIFIED:

1. APPLY REMAINING PORTION OF PART NUMBER AND ASSY DRAWING REVISION LETTER OR LABELING SUCH AS BARCODE SHALL BE NON-CONDUCTIVE MATERIAL, AND SHALL BE APPLIED TO ANY AREA WITHOUT OBSCURING COMPONENTS ON THE TOP SIDE OF THE PCA.
2. USE DYMAX 984 OR EQUIVALENT AS SHOWN. CONFORMAL COAT BETWEEN 1-3 MILS IN THICKNESS. EXCEPT WHERE NOTED.
3. NO CONFORMAL COATING ON CONNECTORS AND ALL MOUNTING HOLES.
4. BEAD OF RTV 162 OR EQUIVALENT AS SHOWN.

| APPLICATION | | SIGNATURES | DATE |
|---|---|---|---|
| NEXT ASSY | USED ON | DRAWN | |
| A90405 | V3465 | CHECK | |
| | | DESIGNER | |
| | | REL DATE | |

9568 ARCHIBALD AVE
CUCAMONGA, CA 91730

# ASSEMBLY
# AAR HOT CARRIER BOARD

9000-90405-0001

SIZE D | A90405

SCALE NONE | SHEET 1 OF 4

A90405 A

CORPORATION DISCLAIMS ANY LIABILITY
OR OBLIGATION FOR ITS PRODUCTS WHICH HAVE BEEN ALTERED,
REPAIRED OR TESTED BY PERSONS OTHER THAN
PERSONNEL.

| REF DES. | ITEM NO. |
|---|---|
| C1 | 48 |
| C2 | 56 |
| C3 | 51 |
| C4 | 47 |
| C5 | 47 |
| C6 | 56 |
| C7 | 42 |
| C8 | 47 |
| C9 | 43 |
| C10 | 44 |
| C11 | 51 |
| C12 | 47 |
| C13 | 56 |
| C14 | 51 |
| C15 | 56 |
| C16 | 56 |
| C17 | 47 |
| C18 | 47 |
| C19 | 47 |
| C20 | 47 |
| C21 | 50 |
| C22 | 47 |
| C23 | 47 |
| C24 | 47 |
| C25 | 47 |
| C26 | 47 |
| C27 | 46 |
| C28 | 47 |
| C29 | 47 |
| C30 | 48 |
| C31 | 45 |
| C32 | 47 |
| C33 | 54 |
| C34 | 44 |
| C35 | 46 |
| C36 | 47 |
| C37 | 47 |
| C38 | 51 |
| C39 | 47 |
| C40 | 47 |
| C41 | 54 |
| C42 | 44 |
| C43 | 44 |
| C44 | 55 |
| C45 | 57 |
| C46 | 46 |
| C47 | 45 |
| C48 | 50 |
| C49 | 53 |
| C50 | 48 |
| C51 | 56 |
| C52 | 56 |
| C53 | 47 |
| C54 | 48 |
| C55 | 48 |
| C56 | 49 |
| C57 | 47 |
| C58 | 55 |
| C59 | 47 |
| C60 | 47 |
| C61 | 48 |

| REF DES. | ITEM NO. |
|---|---|
| C62 | 47 |
| C63 | 47 |
| C64 | 57 |
| C65 | 46 |
| C66 | 52 |
| C67 | 47 |
| C68 | 54 |
| C69 | 44 |
| C70 | 58 |
| C71 | 47 |
| C72 | 56 |
| C73 | 56 |
| C74 | 47 |
| C75 | 47 |
| C76 | 56 |
| C77 | 56 |
| C78 | 47 |
| C79 | 54 |
| C80 | 47 |
| C81 | 47 |
| C82 | 47 |
| C83 | 47 |
| C84 | 47 |
| C85 | 56 |
| C86 | 56 |
| C87 | 47 |
| C88 | 47 |
| C89 | 44 |
| C90 | 54 |
| C91 | 58 |
| C92 | 47 |
| C93 | 47 |
| C94 | 47 |
| C95 | 47 |
| C96 | 50 |
| C97 | 56 |
| C98 | 47 |
| C99 | 47 |
| C100 | 47 |
| C101 | 47 |
| C102 | 56 |
| C103 | 47 |
| CR1 | 27 |
| CR2 | 9 |
| CR3 | 27 |
| CR4 | 39 |
| CR5 | 41 |
| CR6 | 32 |
| CR7 | 31 |
| CR8 | 39 |
| CR9 | 41 |
| CR10 | 32 |
| CR11 | 30 |
| CR12 | 39 |
| CR13 | 41 |
| CR14 | 32 |
| CR15 | 33 |
| CR16 | 39 |
| CR17 | 40 |
| CR18 | 36 |
| CR19 | 40 |

| REF DES. | ITEM NO. |
|---|---|
| CR20 | 35 |
| CR21 | 35 |
| CR22 | 27 |
| CR23 | 17 |
| CR24 | 29 |
| CR25 | 34 |
| CR26 | 28 |
| CR27 | 37 |
| CR28 | 38 |
| CR29 | 38 |
| CR30 | 38 |
| CR31 | 38 |
| CR32 | 38 |
| CR33 | 38 |
| CR34 | 38 |
| CR35 | 38 |
| DS1 | 97 |
| DS2 | 96 |
| E1 | 95 |
| J1 | 6 |
| J2 | 92 |
| J3 | 7 |
| J4 | 92 |
| J5 | 8 |
| J6 | 92 |
| J7 | 5 |
| J10 | 4 |
| L1 | 88 |
| L2 | 88 |
| L3 | 86 |
| L4 | 86 |
| L5 | 84 |
| L6 | 84 |
| L7 | 83 |
| L8 | 86 |
| L9 | 86 |
| L10 | 84 |
| L11 | 89 |
| L12 | 84 |
| L13 | 84 |
| L14 | 84 |
| L15 | 84 |
| L16 | 85 |
| L17 | 85 |
| L18 | 85 |
| L19 | 85 |
| L20 | 87 |
| L21 | 87 |
| L22 | 87 |
| L23 | 87 |
| L24 | 87 |
| L25 | 87 |
| L26 | 87 |
| Q1 | 10 |
| Q2 | 11 |
| Q3 | 13 |
| Q4 | 11 |
| Q5 | 11 |
| Q6 | 11 |
| Q7 | 12 |
| Q8 | 14 |

| REF DES. | ITEM NO. |
|---|---|
| Q9 | 11 |
| Q10 | 11 |
| Q11 | 11 |
| Q12 | 11 |
| R1 | 73 |
| R2 | 63 |
| R3 | 63 |
| R4 | 63 |
| R5 | 81 |
| R6 | 67 |
| R7 | 60 |
| R8 | 65 |
| R9 | 68 |
| R10 | 73 |
| R11 | 61 |
| R12 | 61 |
| R13 | 67 |
| R14 | 66 |
| R15 | 75 |
| R16 | 66 |
| R17 | 65 |
| R18 | 62 |
| R19 | 74 |
| R20 | 63 |
| R21 | 74 |
| R22 | 63 |
| R23 | 63 |
| R24 | 63 |
| R25 | 63 |
| R26 | 65 |
| R27 | 65 |
| R28 | 65 |
| R29 | 65 |
| R30 | 65 |
| R31 | 79 |
| R32 | 63 |
| R33 | 80 |
| R34 | 61 |
| R35 | 63 |
| R36 | 65 |
| R37 | 66 |
| R38 | 65 |
| R39 | 65 |
| R40 | 65 |
| R41 | 65 |
| R42 | 65 |
| R43 | 65 |
| R44 | 65 |
| R45 | 65 |
| R46 | 65 |
| R47 | 65 |
| R48 | 80 |
| R49 | 61 |
| R50 | 63 |
| R51 | 67 |
| R52 | 66 |
| R53 | 60 |
| R54 | 65 |
| R55 | 65 |
| R56 | 76 |
| R57 | 64 |

| REF DES. | ITEM NO. |
|---|---|
| R58 | 80 |
| R59 | 61 |
| R60 | 63 |
| R61 | 66 |
| R62 | 63 |
| R63 | 63 |
| R64 | 67 |
| R65 | 73 |
| R66 | 67 |
| R67 | 60 |
| R68 | 67 |
| R69 | 61 |
| R70 | 59 |
| R71 | 80 |
| R72 | 2 |
| R73 | 69 |
| R74 | 66 |
| R75 | 70 |
| R76 | 73 |
| R77 | 65 |
| R78 | 65 |
| R79 | 63 |
| R80 | 63 |
| R81 | 69 |
| R82 | 64 |
| R83 | 64 |
| R84 | 66 |
| R85 | 69 |
| R86 | 72 |
| R87 | 73 |
| R88 | 74 |
| R89 | 63 |
| R90 | 63 |
| R91 | 74 |
| R92 | 74 |
| R93 | 74 |
| R94 | 74 |
| R95 | 63 |
| R96 | 71 |
| R97 | 71 |
| R98 | 66 |
| R99 | 66 |
| R100 | 72 |
| R101 | 63 |
| R102 | 74 |
| R103 | 63 |
| R104 | 63 |
| R105 | 63 |
| R106 | 69 |
| R107 | 69 |
| R108 | 63 |
| R109 | 63 |
| R110 | 63 |
| R111 | 69 |
| R112 | 69 |
| RN1 | 77 |
| RN2 | 77 |
| RN3 | 77 |
| RN4 | 77 |
| RN5 | 77 |
| RN6 | 77 |

| REF DES. | ITEM NO. |
|---|---|
| RN7 | 77 |
| RT1 | 78 |
| RV1 | 94 |
| SN1 | 3 |
| T1 | 82 |
| T2 | 91 |
| TP1 | 93 |
| TP2 | 93 |
| TP3 | 93 |
| TP4 | 93 |
| TP5 | 93 |
| TP6 | 93 |
| TP7 | 93 |
| TP8 | 93 |
| TP9 | 93 |
| TP10 | 93 |
| TP11 | 93 |
| TP12 | 93 |
| U1 | 18 |
| U2 | 16 |
| U3 | 15 |
| U4 | 16 |
| U5 | 20 |
| U6 | 23 |
| U7 | 15 |
| U8 | 16 |
| U9 | 15 |
| U10 | 16 |
| U11 | 16 |
| U12 | 22 |
| U13 | 16 |
| U14 | 25 |
| U15 | 25 |
| U16 | 16 |
| U17 | 26 |
| U18 | 21 |
| U19 | 16 |
| U20 | 16 |
| U21 | 16 |
| U22 | 19 |
| U23 | 15 |
| U24 | 24 |
| U25 | 23 |
| U26 | 23 |
| U27 | 98 |
| Y1 | 90 |

ASSEMBLY
AAR HOT CARRIER BOARD

SIZE D | A90405 | SCALE X:X | SHEET 2 OF 4

A90405 A

CORPORATION DISCLAIMS ANY LIABILITY
OR OBLIGATION FOR ITS PRODUCTS WHICH HAVE BEEN ALTERED,
REPAIRED OR TESTED BY PERSONS OTHER THAN
PERSONNEL.

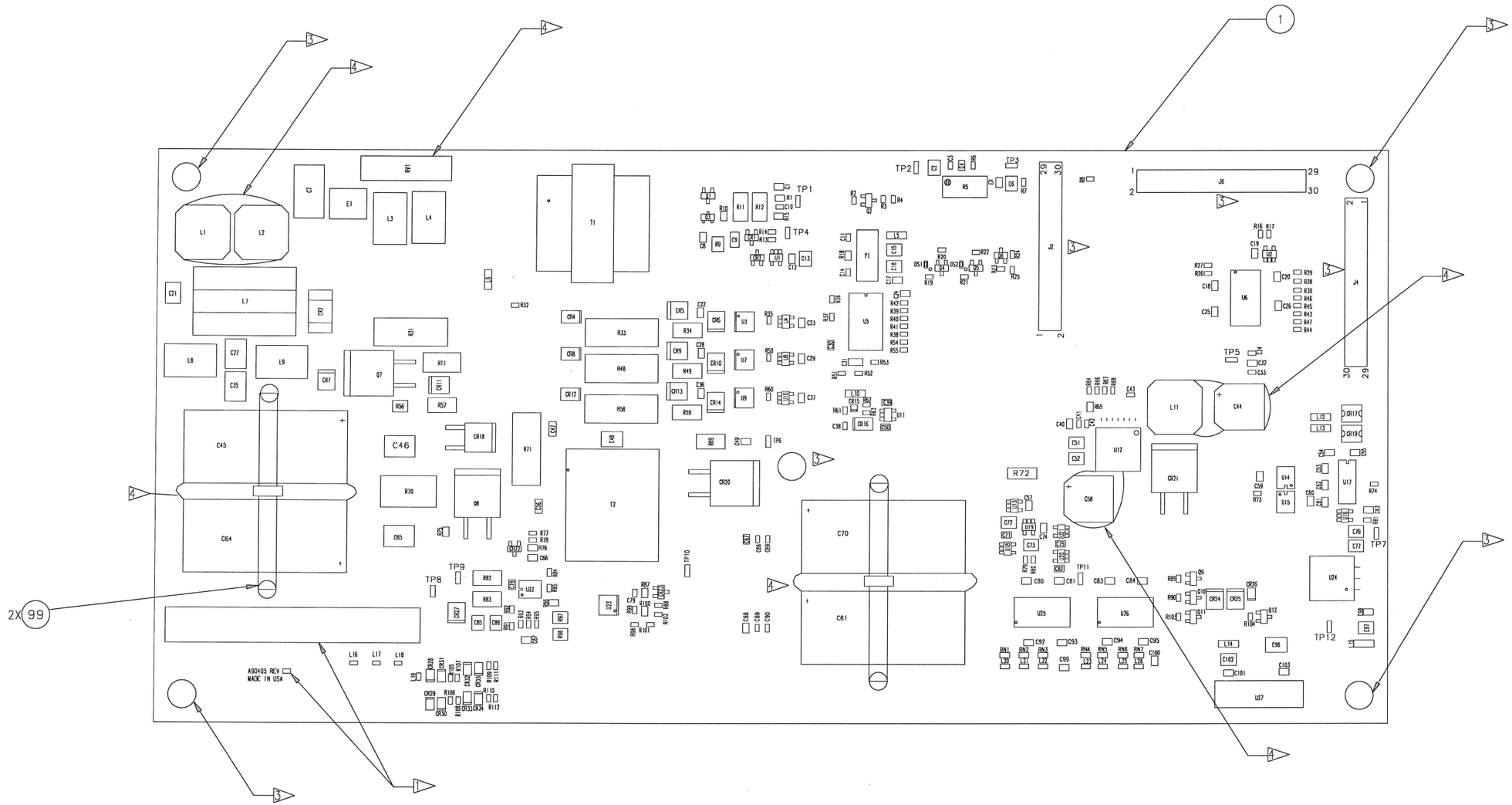


COMPONENT SIDE

| | |
|---|---|
| ASSEMBLY | |
| AAR HOT CARRIER BOARD | |
| SIZE D | A90405 |
| SCALE 2:1 | SHEET 3 OF 4 |

A90405 A

CORPORATION DISCLAIMS ANY LIABILITY
OR OBLIGATION FOR ITS PRODUCTS WHICH HAVE BEEN ALTERED,
REPAIRED OR TESTED BY PERSONS OTHER THAN
PERSONNEL.

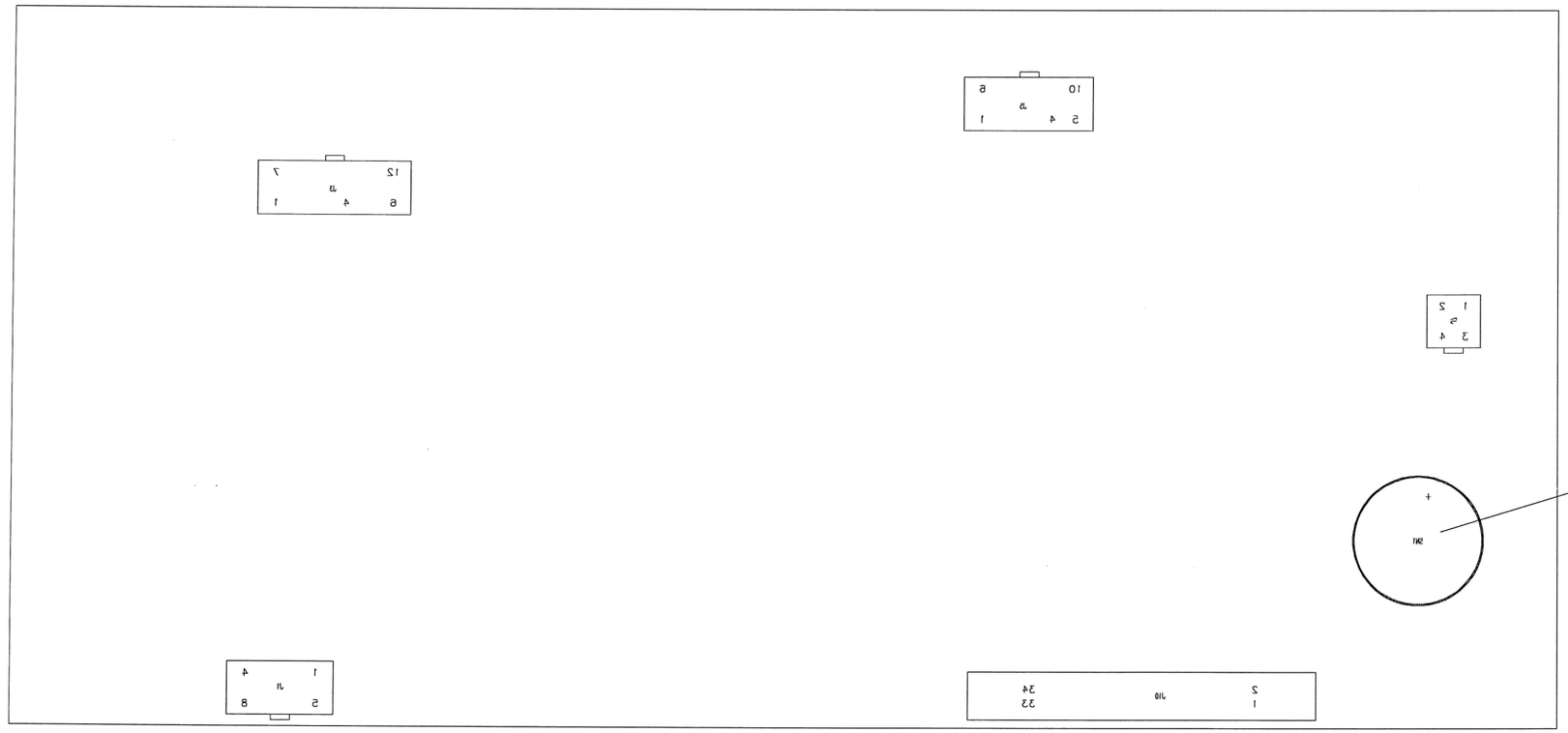


SOLDER SIDE

ASSEMBLY
AAR HOT CARRIER BOARD

| SIZE | |
|---|---|
| D | A90405 |
| SCALE 2:1 | SHEET 4 OF 4 |

A90405

CORPORATION DISCLAIMS ANY LIABILITY
OR OBLIGATION FOR ITS PRODUCTS WHICH HAVE BEEN ALTERED,
REPAIRED OR TESTED BY PERSONS OTHER THAN
PERSONNEL.

| REVISIONS | | | | | |
|---|---|---|---|---|---|
| ZONE | REV | DESCRIPTION | DATE | DFTG APPVL | DSGN AUTH |
| | A | PRODUCTION RELEASE | | | |
| | | | | | |

# UHF FSK MODEM

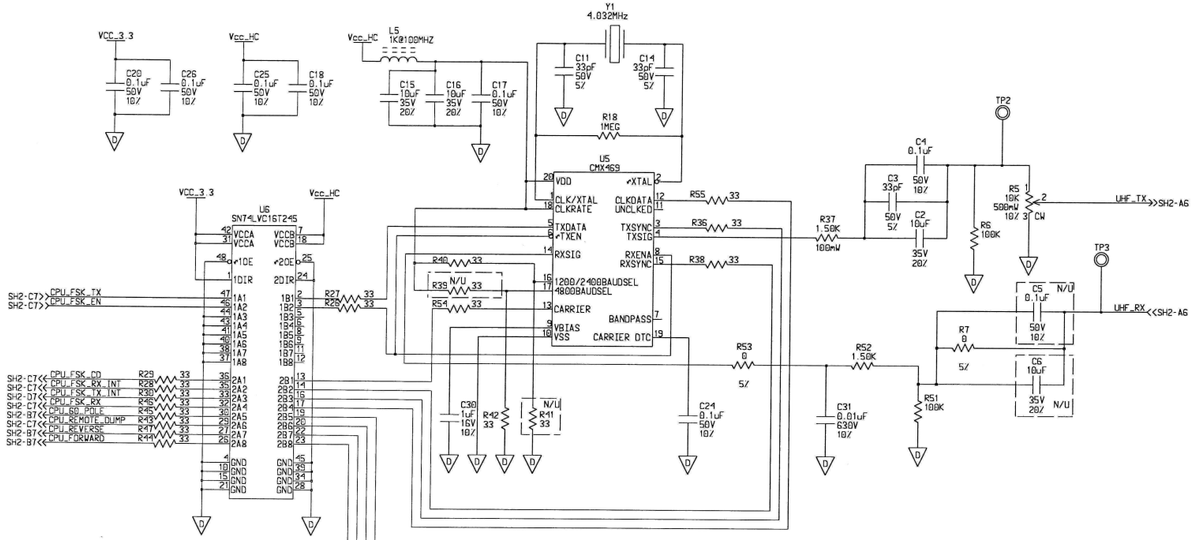


# ISOLATED RS-232

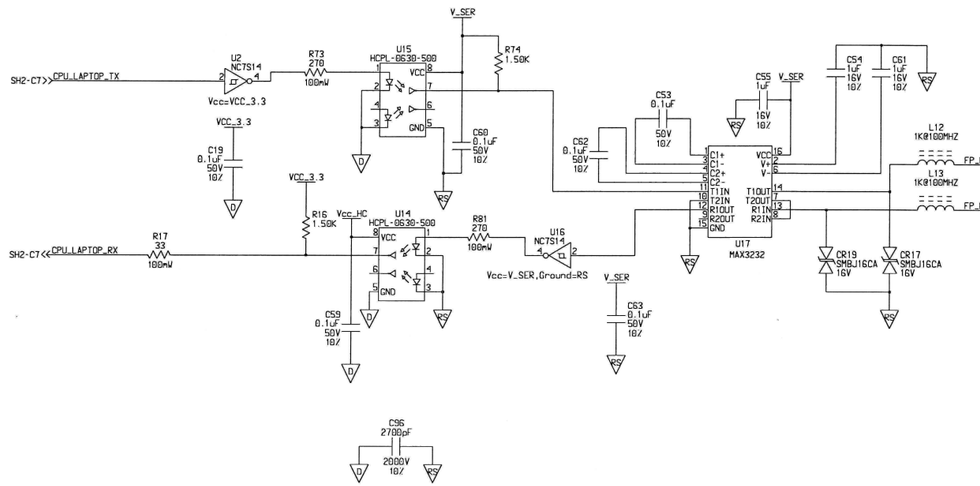


# I/O

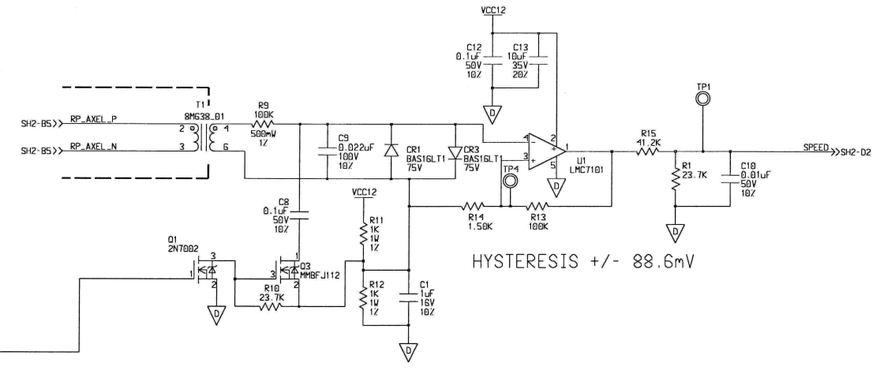


NOTES: UNLESS OTHERWISE SPECIFIED
1. LAST REF DES USED: C103 CR35 DS2 E1 J10 L26 Q12 R112 RN7 RT1 RV1 SN1 T2 TP12 U27 Y1
2. REF DES NOT USED: J8 J9
3. ALL RESISTORS 63mW 1% UNLESS OTHERWISE SPECIFIED
4. ALL CAPACITORS ARE IN MICROFARADS.

| APPLICATION | | SIGNATURES | DATE |
|---|---|---|---|
| NEXT ASSY | USED ON | DRAWN | |
| A90405 | V3465 | CHECK | |
| | | DESIGNER | |
| | | REL DATE | |


9568 ARCHIBALD AVE
CUCAMONGA, CA 91730


SCHEMATIC
AAR HOT CARRIER BOARD
9000-90405-0001

SIZE D | S90405

SCALE NONE | SHEET 1 OF 3

USE W/BOARD LVL A | A90405

CORPORATION DISCLAIMS ANY LIABILITY
OR OBLIGATION FOR ITS PRODUCTS WHICH HAVE BEEN ALTERED,
REPAIRED OR TESTED BY PERSONS OTHER THAN
PERSONNEL.

## M1

J10 — Vcc_HC

| | | | |
|---|---|---|---|
| 1K@100MHZ | L26 RN7B2 | 7 5% 1Ω | DIM_LVL |
| 1K@100MHZ | L26 RN7A1 | 8 5% 1Ω | DISP_ODD_B_EN_1 |
| 1K@100MHZ | L25 RN6D4 | 5 5% 1Ω | DMD_RS |
| 1K@100MHZ | L25 RN6C3 | 6 5% 1Ω | DMD_CS |
| 1K@100MHZ | L25 RN6B2 | 7 5% 1Ω | DMD_RST |
| 1K@100MHZ | L25 RN6A1 | 8 5% 1Ω | DMD_DATA |
| 1K@100MHZ | L24 RN5D4 | 5 5% 1Ω | DMD_CLK |
| 1K@100MHZ | L24 RN5C3 | 6 5% 1Ω | DISP_MISO |
| 1K@100MHZ | L24 RN5B2 | 7 5% 1Ω | DISP_DATA_MOSI |
| 1K@100MHZ | L24 RN5A1 | 8 5% 1Ω | DISP_ODD_B_EN_2 |
| 1K@100MHZ | L23 RN4D4 | 5 5% 1Ω | DISP_CS_LE |
| 1K@100MHZ | L23 RN4C3 | 6 5% 1Ω | DISP_CLK |
| 1K@100MHZ | L23 RN4B2 | 7 5% 1Ω | DISP_ODD_B_EN_3 |
| 1K@100MHZ | L23 RN4A1 | 8 5% 1Ω | DISP_ODD_B_EN_4 |
| 1K@100MHZ | L22 RN3D4 | 5 5% 1Ω | DISP_ODD_B_EN_5 |
| 1K@100MHZ | L22 RN3C3 | 6 5% 1Ω | ODD_CS_LE |
| 1K@100MHZ | L22 RN3B2 | 7 5% 1Ω | ODD_DATA_MOSI |
| 1K@100MHZ | L22 RN3A1 | 8 5% 1Ω | ODD_DATA_MISO |
| 1K@100MHZ | L21 RN2D4 | 5 5% 1Ω | ODD_CLK |
| 1K@100MHZ | L21 RN2C3 | 6 5% 1Ω | KP_ROW3 |
| 1K@100MHZ | L21 RN2B2 | 7 5% 1Ω | KP_ROW2 |
| 1K@100MHZ | L21 RN2A1 | 8 5% 1Ω | KP_ROW1 |
| 1K@100MHZ | L20 RN1D4 | 5 5% 1Ω | KP_ROW0 |
| 1K@100MHZ | L20 RN1C3 | 6 5% 1Ω | KP_COL0 |
| 1K@100MHZ | L20 RN1B2 | 7 5% 1Ω | KP_COL1 |
| 1K@100MHZ | L20 RN1A1 | 8 5% 1Ω | KP_COL2 |

J2 — Vcc_HC

| | | |
|---|---|---|
| P5.0 P5.1 P5.2 P5.3 | CPU_DISP_ODD_B_EN_1 | |
| | CPU_DISP_ODD_B_EN_2 | |
| | CPU_DISP_ODD_B_EN_3 | |
| | CPU_DISP_ODD_B_EN_4 | |
| P6.4 P6.5 | CPU_DISP_ODD_B_EN_5 | |
| P6.6 | CPU_LED_TX | |
| P6.7 | CPU_LED_RX | |
| P7.4 | CPU_DISP_CS_LE | |
| P7.5 | CPU_DMD_CS | |
| P7.6 P7.7 | CPU_ODD_CS_LE<br>CPU_ALARM_2 | |
| P1.0 | CPU_FSK_TX_INT | <SH1-C8 |
| P1.1 | CPU_FSK_RX_INT | <SH1-C8 |
| P1.4 | CPU_KP_ROW0 | |
| P1.5 | CPU_KP_COL1 | |
| P1.6 | CPU_KP_COL2 | |
| P1.7 | CPU_SPEED | |

R8 33 N/U

J6

| | | |
|---|---|---|
| P5.1 | KEY_SW | |
| P2.0 | CPU_REMOTE_DUMP | <SH1-C8 |
| P2.1 | CPU_MENU_SW | |
| P2.2 | CPU_COMM_SW | |
| P2.3 | CPU_EMER_SW | |
| P2.4 | CPU_KP_ROW3 | |
| P2.5 | CPU_KP_ROW2 | |
| P2.6 | CPU_KP_ROW1 | |
| P2.7 | CPU_KP_ROW0 | |
| P3.3_ACC_CLK | | |
| P3.2_ACC_MISO | | |
| P3.1_ACC_MOSI | | |
| P3.4 | CPU_LAPTOP_TX | >SH1-D4 |
| P3.5 | CPU_LAPTOP_RX | <SH1-C4 |
| P4.0 | CPU_FSK_CD | |
| P4.1 | CPU_FSK_RX | <SH1-C8 |
| P4.2 | CPU_FSK_TX | >SH1-C8 |
| P4.3 | CPU_FSK_EN | >SH1-C8 |
| P4.4 P4.5 | CPU_SPEED<br>CPU_ALARM_3 | |

J4

| | | |
|---|---|---|
| P4.7 P5.6 | CPU_CNT_SW | |
| P5.7 | CPU_ALARM_0 | |
| P7.3 | CPU_BYP | |
| P3.0 | CPU_ALARM_1 | |
| P9.1 | CPU_DISP_DATA_MOSI | |
| P9.2 | CPU_DISP_MISO | |
| P9.3 | CPU_DISP_CLK | |
| P9.4 | CPU_FORWARD | <SH1-C8 |
| P5.5 | CPU_REVERSE | <SH1-C8 |
| P5.6 | CPU_GO_POL | <SH1-C8 |
| P10.0 | CPU_ODD_CLK | |
| P10.1 | CPU_DMD_DATA | |
| P10.2 | CPU_DMD_RS | |
| P10.3 | CPU_DMD_CLK | |
| P10.4 | CPU_ODD_DATA_MOSI | |
| P10.5 | CPU_ODD_DATA_MISO | |
| P10.6 | CPU_DMD_RST | |
| P10.7 | CPU_PWR_SEL | |
| P5.2 | CPU_DISP_LVL | |

C59 0.1uF 50V 10% — C100 0.1uF 50V 10% — Vcc_HC

J7 — FP_LAPTOP_TX <SH1-C1; FP_LAPTOP_RX >SH1-C1

## M4

J1 — Vcc_HC

L16 1000 — L17 1000 — L18 1000 — L19 1000

CR30 CR33 CR35 CR31 — M8R056G

CR29 CR34 CR32 CR28 — M8R056G

R108 10K R110 10K R109 10K R105 10K

R106 270 100mW 1% — R112 270 100mW 1%

R111 270 100mW 1% — R107 270 100mW 1%

U21 NC7S14 — CPU_EMER_SW

U20 NC7S14 — CPU_COMM_SW

U19 NC7S14 — CPU_MENU_SW

U13 NC7S14 — CPU_CNT_SW

Vcc=VCC_3.3

## M5

J3 — BP — Vcc_HC

| | |
|---|---|
| RP_AXEL_P | |
| RP_FORWARD | >SH1-B4 |
| RP_GO_POL | >SH1-B8 |
| | >SH1-A6 |
| KEY_SW | |
| RP_AXEL_N | |
| RP_REVERSE | >SH1-B4 |
| RP_REMOTE | >SH1-A8 |
| | >SH1-A8 |

L6 1K@100MHZ — R32 10K

## M6

J5 — VCC12

UHF_PWR_SEL

UHF_TX <SH1-C5

UHF_RX >SH1-C5

## MOUNTING HOLES

#4 — M4 M5 M2 M3 M6

M1: DIGITAL GND CONNECTION THRU MOUNTING HOLE

U26 SN74LVC16T245 — A TO B — Vcc_HC — VCC_3.3

C84 0.1uF 50V 10% — C83 0.1uF 50V 10%

C94 0.1uF 50V 10% — C95 0.1uF 50V 10%

| | | | |
|---|---|---|---|
| CPU_DISP_ODD_B_EN_3 | 1A1 | 1B1 | DISP_ODD_B_EN_3 |
| CPU_DISP_CLK | 1A2 | 1B2 | DISP_CLK |
| CPU_DISP_CS_LE | 1A3 | 1B3 | DISP_CS_LE |
| CPU_DISP_ODD_B_EN_2 | 1A4 | 1B4 | DISP_ODD_B_EN_2 |
| CPU_DISP_DATA_MOSI | 1A5 | 1B5 | DISP_DATA_MOSI |
| CPU_DMD_CLK | 1A6 | 1B6 | DMD_CLK |
| CPU_DMD_DATA | 1A7 | 1B7 | DMD_DATA |
| CPU_DMD_RST | 1A8 | 1B8 | DMD_RST |
| CPU_DMD_CS | 2A1 | 2B1 | DMD_CS |
| CPU_DMD_RS | 2A2 | 2B2 | DMD_RS |
| CPU_DISP_ODD_B_EN_1 | 2A3 | 2B3 | DISP_ODD_B_EN_1 |
| CPU_DIM_LVL | 2A4 | 2B4 | DIM_LVL |

U25 SN74LVC16T245 — A TO B — B TO A — Vcc_HC — VCC_3.3

C80 0.1uF 50V 10% — C81 0.1uF 50V 10% — C93 0.1uF 50V 10% — C92 0.1uF 50V 10%

| | | | |
|---|---|---|---|
| CPU_KP_COL2 | 1A1 | 1B1 | KP_COL2 |
| CPU_KP_COL1 | 1A2 | 1B2 | KP_COL1 |
| CPU_KP_COL0 | 1A3 | 1B3 | KP_COL0 |
| CPU_ODD_CLK | 1A4 | 1B4 | ODD_CLK |
| CPU_ODD_DATA_MOSI | 1A5 | 1B5 | ODD_DATA_MOSI |
| CPU_CS_LE | 1A6 | 1B6 | ODD_CS_LE |
| CPU_DISP_ODD_B_EN_5 | 1A7 | 1B7 | DISP_ODD_B_EN_5 |
| CPU_DISP_ODD_B_EN_4 | 1A8 | 1B8 | DISP_ODD_B_EN_4 |
| CPU_KP_ROW0 | 2A1 | 2B1 | KP_ROW0 |
| CPU_KP_ROW1 | 2A2 | 2B2 | KP_ROW1 |
| CPU_KP_ROW2 | 2A3 | 2B3 | KP_ROW2 |
| CPU_KP_ROW3 | 2A4 | 2B4 | KP_ROW3 |
| CPU_ODD_DATA_MISO | 2A5 | 2B5 | ODD_DATA_MISO |
| CPU_DISP_MISO | 2A6 | 2B6 | DISP_MISO |
| CPU_SPEED | 2A7 | 2B7 | SPEED <SH1-B1 |
| | 2A8 | 2B8 | |

## ALARM WITH 4 STEP VOLUME CONTROL

VCC12 — SN1 MSR516NR

6.8V 1SMB5921BT3 CR24 — 5.6V 1SMB5919BT3 CR25 — 3.6V MMSZ5227BT1G CR26

Q11 Q10 Q9 Q12 NDS7002A

CPU_ALARM_0 CPU_ALARM_1 CPU_ALARM_2 CPU_ALARM_3

R103 10K R90 10K R89 10K R104 10K

## POWER SELECT

Vcc_HC — VCC12 — R3 10K — R1 10K N/U — Q2 NDS7002A — R2 10K

CPU_PWR_SEL — UHF_PWR_SEL

## PUSH TO TALK

VCC12 — Vcc_HC — N/U 10K R24 — 10K R25

Q6 NDS7002A — CPU_PTT — 10K R23

VCC12 — DS1 RED VF=1.9V — R19 1.99K 100mW — Q4 NDS7002A — R20 10K

VCC12 — DS2 GREEN VF=2.2V — R21 1.99K 100mW — Q5 NDS7002A — R22 10K

CPU_LED_TX CPU_LED_RX

VCC_3.3 — C82 C57 C74 C75 0.1uF 50V 10%

USE W/BOARD LVL A — S90405

| | |
|---|---|
| | SCHEMATIC<br>AAR HOT CARRIER BOARD |
| SIZE D | S90405 |
| SCALE NONE | SHEET 2 OF 3 |

CORPORATION DISCLAIMS ANY LIABILITY
OR OBLIGATION FOR ITS PRODUCTS WHICH HAVE BEEN ALTERED,
REPAIRED OR TESTED BY PERSONS OTHER THAN
PERSONNEL.

## SURGE

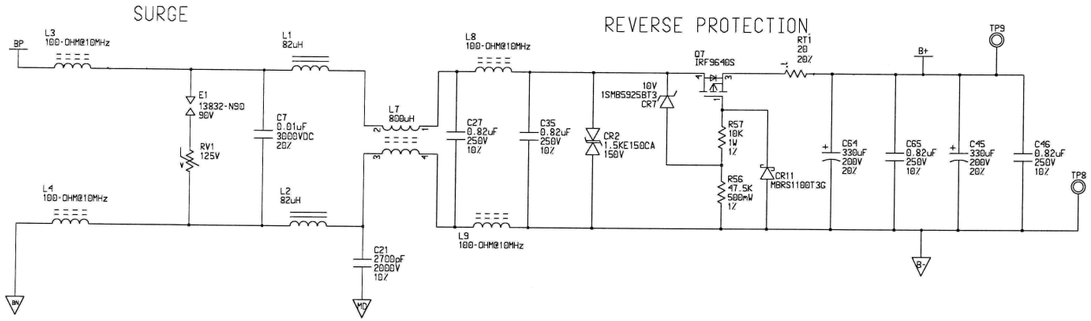


## REVERSE PROTECTION




## 5V HIGH CURRENT RAIL

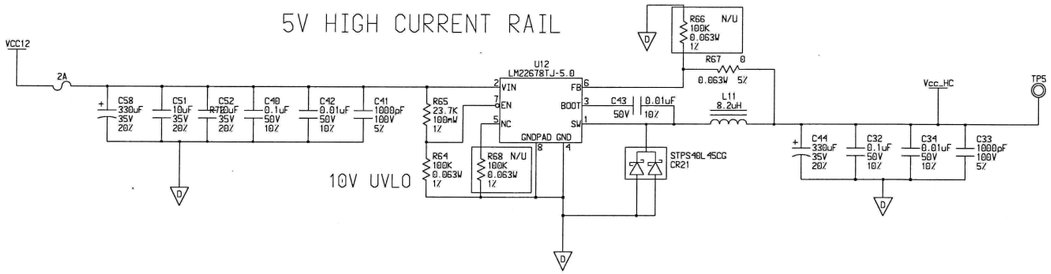


## QR MAINS SWITCHER

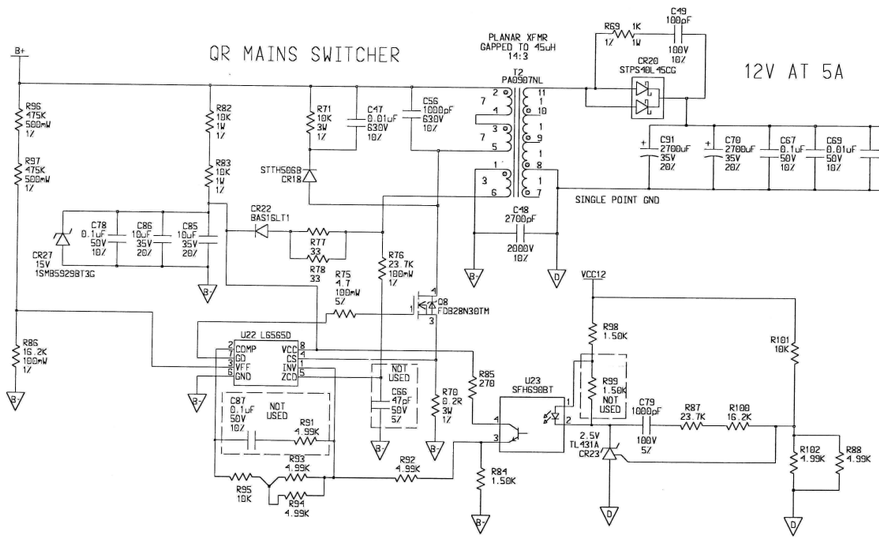


## ISOLATED 5V SERIAL RAIL

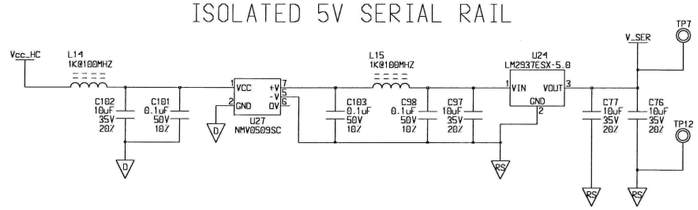


## 3.3V RAIL

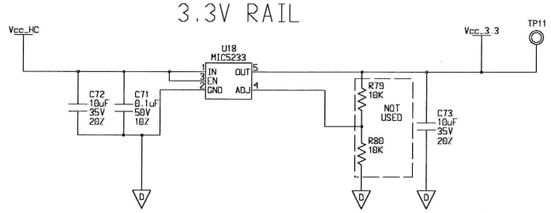


USE W/BOARD LVL A
S90405

SCHEMATIC
AAR HOT CARRIER BOARD

| SIZE | | |
|---|---|---|
| D | S90405 | |
| SCALE NONE | | SHEET 3 OF 3 |

This Page Intentionally Left Blank

# DRAWING CHANGE HISTORY

| | |
|---|---|
| Drawing Name: | Assembly AAR HOT Carrier Board |
| Drawing Number: | A90405 |
| Revision: | A1 |
| Reason For Change: | Change inductor to resistor to voltage divide 5V key-switch signal to micro-controller.<br>Change power supply input capacitors to short versions for better mechanical fit.<br>Remove digital input pull-up resistor. |
| Drawing Changes: | See below |

Change Bill of Materials:

IS:

| QTY | ITEM | EDP NO. | PART NO. | DESCRIPTION | MATERIAL | REF DES |
|---|---|---|---|---|---|---|
| 2 | 57 | Z352-00330-U065 | UCY2D331MHD | CAPACITOR | 300uF 20% 200v | C45 C64 |
| 24 | 63 | Z442-0010K-0111 | CRCW0603-1002FRT1 | RESISTOR | 10k Ohm 1% | ...R25 R32 R35... |
| 7 | 74 | Z442-4.99k-0121 | CRCW06034K99FKEA | RESISTOR | 4.99k 1% | ...R21 R88... |
| 1 | 79 | Z464-0005K-0001 | RS2B-5K1% | RESISTOR | 5k Ohm 3W 1% | R31 |
| 7 | 84 | Z541-00009-0000 | BLM41PG102SN1L | INDUCTOR | 1k@100MHz | L5 L6 L10.... |

CHANGE TO:

| QTY | ITEM | EDP NO. | PART | DESCRIPTION | REF DES |
|---|---|---|---|---|---|
| 2 | 57 | Z352-00330-U165 | EKXJ201ELL331MMN3S | CAPACITOR | C45 C64 |
| 23 | 63 | Z442-0010K-0111 | CRCW0603-1002FRT1 | RESISTOR | ...R25 R35... |
| 8 | 74 | Z442-4.99k-0121 | CRCW06034K99FKEA | RESISTOR | ...R21 R32 R88... |
| 0 | 79 | Z464-0005K-0001 | RS2B-5K1% | RESISTOR | R31 N/U |
| 6 | 84 | Z541-00009-0000 | BLM41PG102SN1L | INDUCTOR | L5 L10 L12 L13 L14 L15 |
| 1 | 100 | Z442-0002K-0551 | ERJ-12NF2001U | RESISTOR | L6 |

Change Schematic:

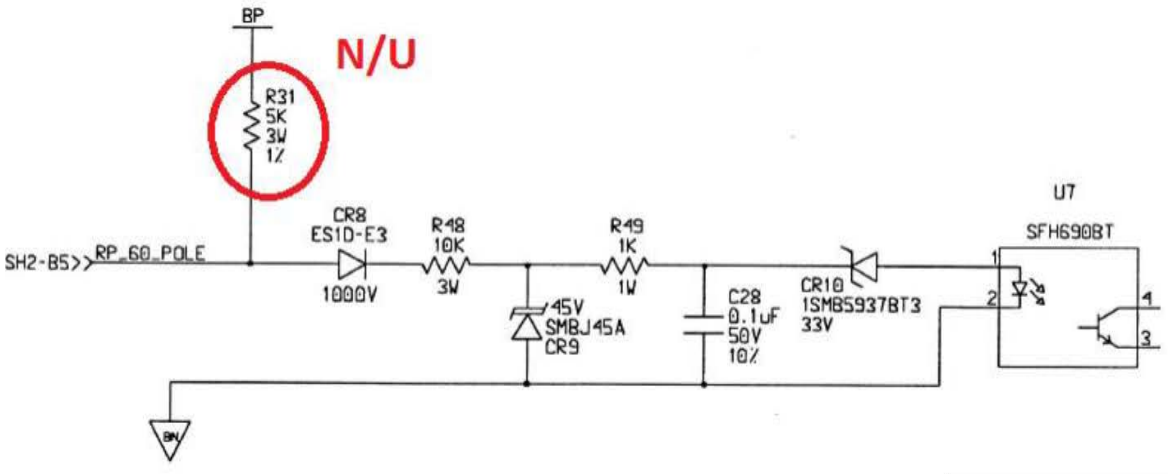

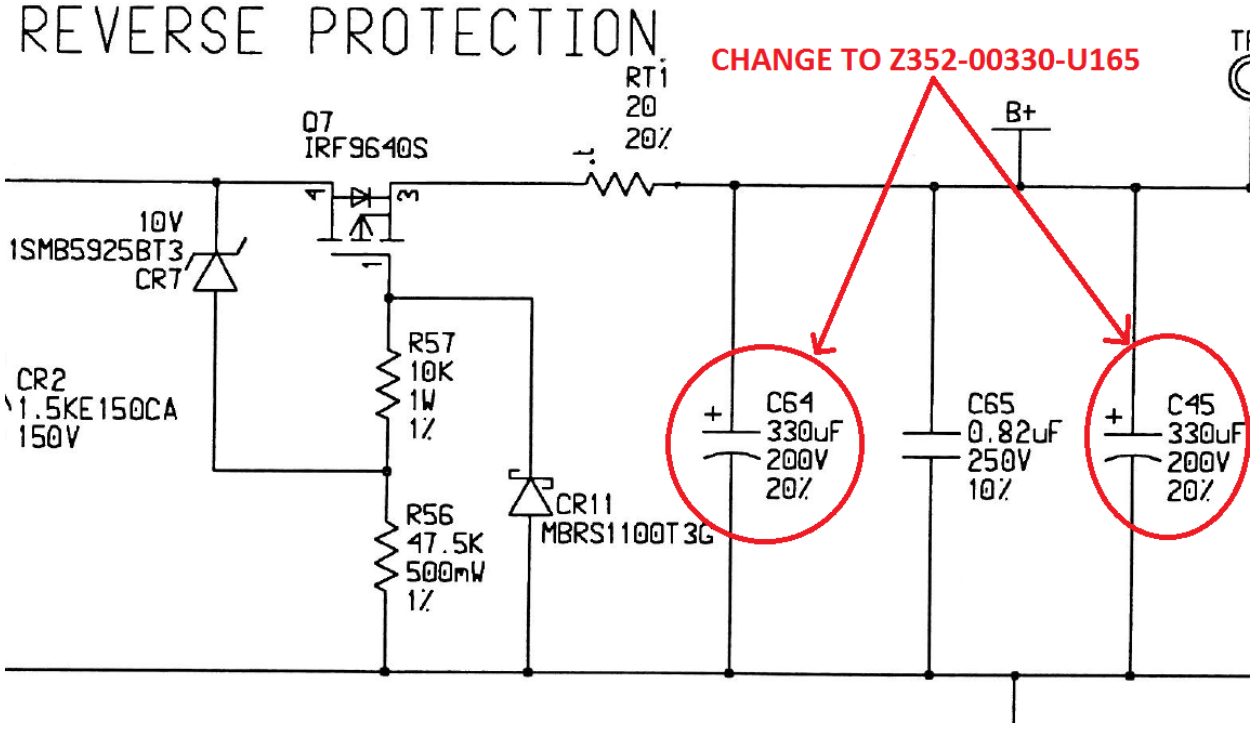
REVERSE PROTECTION
CHANGE TO Z352-00330-U165
RT1
20
20%
Q7
IRF9640S
B+
10V
1SMB5925BT3
CR7
CR2
1.5KE150CA
150V
R57
10K
1W
1%
R56
47.5K
500mW
1%
CR11
MBRS1100T3G
C64
330uF
200V
20%
C65
0.82uF
250V
10%
C45
330uF
200V
20%

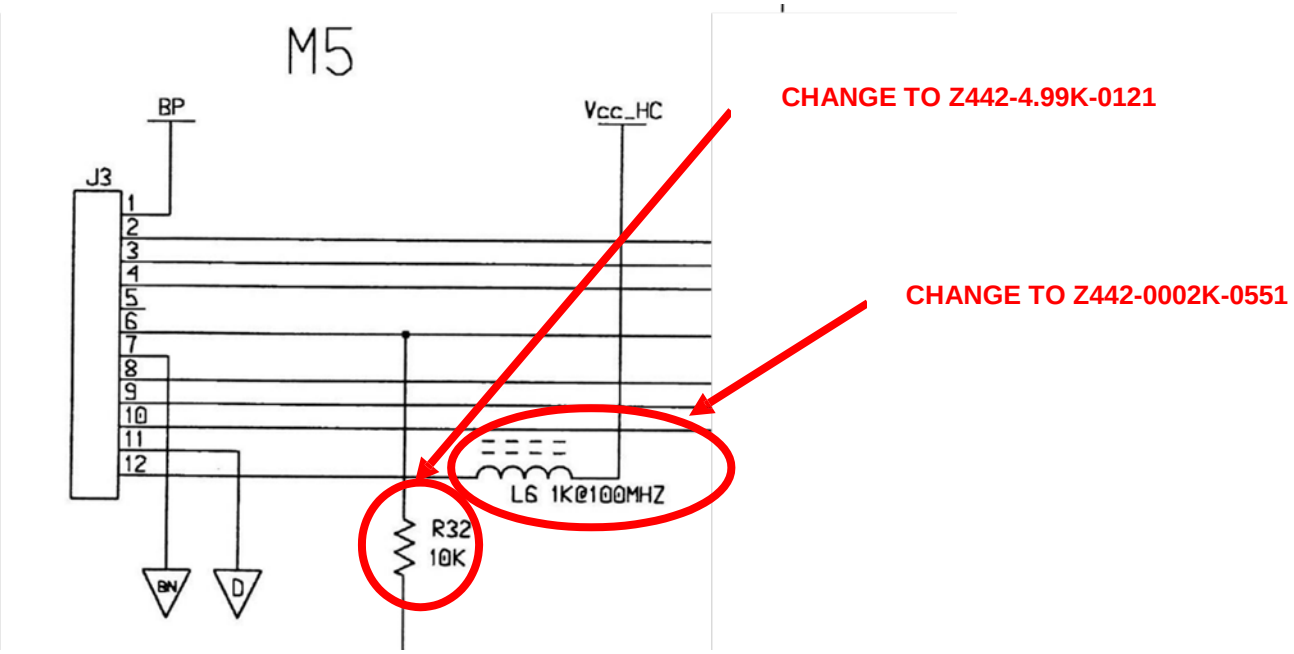
M5
CHANGE TO Z442-4.99K-0121
CHANGE TO Z442-0002K-0551
BP
Vcc_HC
J3
1
2
3
4
5
6
7
8
9
10
11
12
LG 1K@100MHZ
R32
10K
BN
D

Change C45 & C64 to
Z352-00330-U165

Do Not Populate R31

Change L6 to
Z442-0002K-0551

Change R32 to
Z442-4.99K-0121

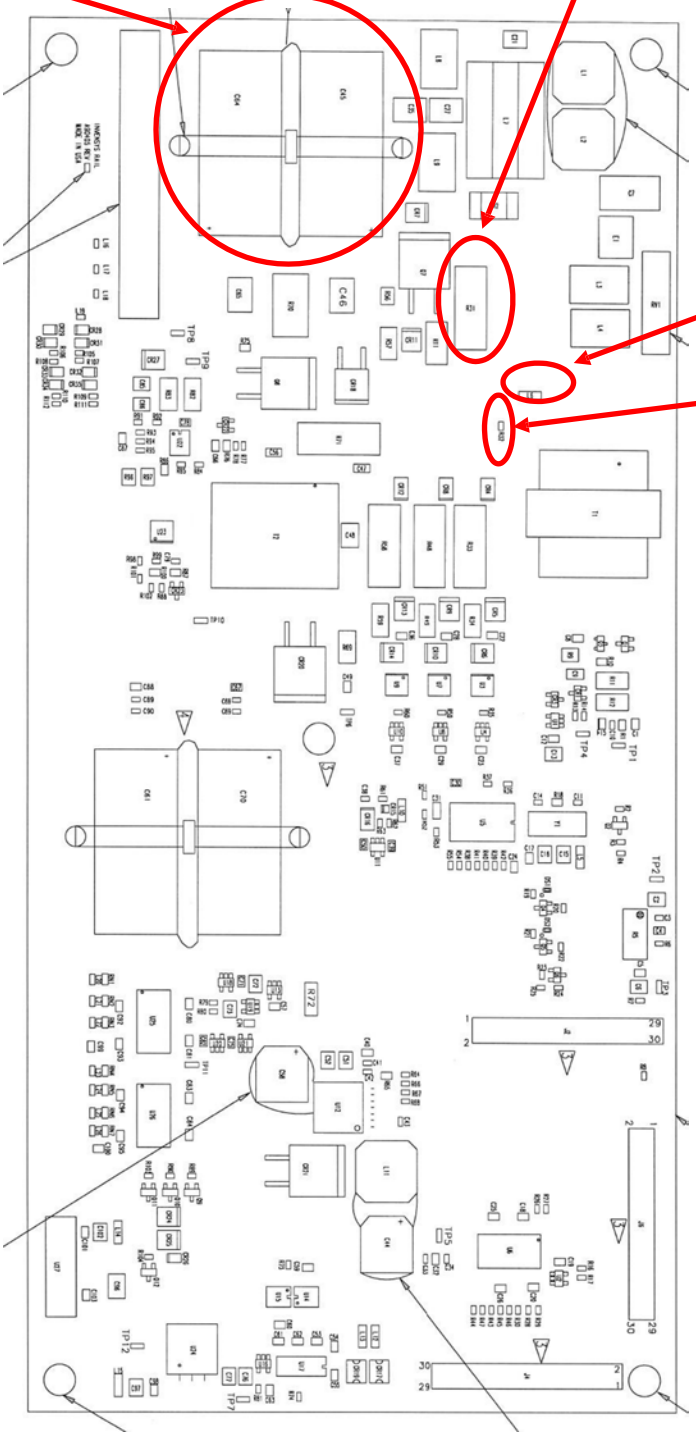

This Page Intentionally Left Blank

CORPORATION DISCLAIMS ANY LIABILITY
OR OBLIGATION FOR ITS PRODUCTS WHICH HAVE BEEN ALTERED,
REPAIRED OR TESTED BY PERSONS OTHER THAN
PERSONNEL.

| REVISIONS | | | | | |
|---|---|---|---|---|---|
| ZONE | REV | DESCRIPTION | DATE | DFTG APPVL | DESIGN AUTH |
| | A | PRODUCTION RELEASE | 1-23-13 | R GONZALES | M GREK |
| | B | CN26379 | | | |

| QTY. REQD. | ITEM NO. | EDP NO. | PART OR IDENTIFYING NO. | MATERIAL | NOMENCLATURE OR DESCRIPTION | DATA: SPECS, REF DES, SIZE, NOTES, VENDORS. |
|---|---|---|---|---|---|---|
| 1 | 1 | Z149-90406-0000 | D90406-00 LVL B | | BARE BOARD | |
| 1 | 2 | 08059 | 746610-8 | | CONNECTOR | J1 |
| 1 | 3 | 08807 | BSW-108-04-S-S | | CONNECTOR | J2 |
| 2 | 4 | 12010 | HLMP-2685 | RED | LED | DS24 DS25 |
| 1 | 5 | 12012 | HLMP-2885 | GREEN | LED | DS21 |
| 2 | 6 | 12031 | HLMP-2755 | YELLOW | LED | DS22 DS23 |
| 4 | 7 | 12032 | HLMP-2855 | GREEN | LED | DS11 DS12 DS13 DS14 |
| 2 | 8 | Z223-01229-0000 | HCMS-3972 | | DISPLAY | DS1 DS2 |
| 15 | 9 | Z241-00035-0000 | NDS7002A | | TRANSISTOR | Q1 Q2 Q3 Q4 Q5 Q6 Q7 Q8 Q9 Q10 Q11 Q12 Q13 Q14 Q15 |
| 10 | 10 | Z243-00316-0000 | NC7SZ125M5X | | IC | U1 U2 U3 U4 U5 U21 U22 U23 U24 U25 |
| 15 | 11 | Z243-00435-0000 | TLC5917IPWR | | IC | U6 U7 U8 U9 U10 U11 U12 U13 U14 U15 U16 U17 U18 U19 U20 |
| 3 | 12 | Z247-00001-0000 | BAS16LT1G | VOLT | DIODE | CR1 CR2 CR3 |
| 32 | 13 | Z341-00.1U-0124 | 0603YC104KAT2A | 0.1uF, 10%, 16V | CAPACITOR | C2 C3 C4 C5 C6 C15 C16 C17 C18 C19 C20 C21 C24 C25 C27 C28 C29 C30 C31 C32 C33 C34 C36 C37 C40 C42 C43 C46 C48 C50 C52 C53 |
| 1 | 14 | Z343-0330U-0G55 | EEE-FP1V331AP | 330uF, 20%, 35V | CAPACITOR | C39 |
| 20 | 15 | Z347-0022U-0225 | LMK212BJ226MG-T | 22uF, 20%, 10V | CAPACITOR | C1 C7 C8 C9 C10 C11 C12 C13 C14 C22 C23 C26 C35 C38 C41 C44 C45 C47 C49 C51 |
| 4 | 16 | Z442-0001K-0121 | CRCW06031K00FKEA | 1K, 1%, 0.063W | RESISTOR | R62 R63 R64 R65 |
| 10 | 17 | Z442-0047K-0122 | CRCW060347K0JNEA | 47K, 5%, 100mW | RESISTOR | R1 R3 R5 R8 R9 R67 R68 R69 R70 R71 |
| 30 | 18 | Z442-01.5K-0121 | CRCW06031K50FKEA | 1.50K, 1%, 100mW | RESISTOR | R11 R14 R15 R16 R17 R19 R20 R21 R22 R23 R25 R26 R28 R29 R30 R31 R36 R37 R45 R46 R47 R48 R50 R51 R53 R54 R57 R58 R60 R61 |
| 27 | 19 | Z442-30.1R-0121 | CRCW060330R1FKEA | 30.1, 1%, 100mW | RESISTOR | R2 R4 R6 R7 R10 R12 R13 R18 R24 R27 R32 R33 R34 R35 R38 R39 R40 R41 R42 R43 R44 R49 R52 R55 R56 R59 R66 |
| 7 | 20 | Z541-00018-0000 | BLA2AAG102SN4D | 1K@100MHZ | INDUCTOR | L1 L2 L3 L4 L5 L6 L7 |
| 4 | 21 | Z832-00273-0000 | HDSP-7501 | | DISPLAY | DS7 DS8 DS9 DS10 |
| 1 | 22 | Z832-00274-0000 | HDSP-7507 | | DISPLAY | DS6 |
| 3 | 23 | Z832-00275-0000 | HDSP-5501 | | DISPLAY | DS3 DS4 DS5 |
| 6 | 24 | Z832-00276-0000 | VLHW4100 | WHITE | LED | DS15 DS16 DS17 DS18 DS19 DS20 |
| | | | | | | |
| | | | | | | |

| REF DES. | ITEM NO. |
|---|---|
| C1 | 15 |
| C2 | 13 |
| C3 | 13 |
| C4 | 13 |
| C5 | 13 |
| C6 | 13 |
| C7 | 15 |
| C8 | 15 |
| C9 | 15 |
| C10 | 15 |
| C11 | 15 |
| C12 | 15 |
| C13 | 15 |
| C14 | 15 |
| C15 | 13 |
| C16 | 13 |
| C17 | 13 |
| C18 | 13 |
| C19 | 13 |
| C20 | 13 |
| C21 | 13 |
| C22 | 15 |
| C23 | 15 |
| C24 | 13 |
| C25 | 13 |
| C26 | 15 |
| C27 | 13 |
| C28 | 13 |
| C29 | 13 |
| C30 | 13 |
| C31 | 13 |
| C32 | 13 |
| C33 | 13 |
| C34 | 13 |
| C35 | 15 |
| C36 | 13 |
| C37 | 13 |
| C38 | 15 |
| C39 | 14 |
| C40 | 13 |
| C41 | 15 |
| C42 | 13 |
| C43 | 13 |
| C44 | 15 |
| C45 | 15 |
| C46 | 13 |
| C47 | 15 |
| C48 | 13 |
| C49 | 15 |
| C50 | 13 |
| C51 | 15 |
| C52 | 13 |
| C53 | 13 |
| CR1 | 12 |
| CR2 | 12 |
| CR3 | 12 |
| DS1 | 8 |
| DS2 | 8 |
| DS3 | 23 |
| DS4 | 23 |
| DS5 | 23 |
| DS6 | 22 |
| DS7 | 21 |
| DS8 | 21 |
| DS9 | 21 |
| DS10 | 21 |
| DS11 | 7 |
| DS12 | 7 |
| DS13 | 7 |
| DS14 | 7 |
| DS15 | 24 |
| DS16 | 24 |
| DS17 | 24 |
| DS18 | 24 |
| DS19 | 24 |
| DS20 | 24 |
| DS21 | 5 |
| DS22 | 6 |
| DS23 | 6 |
| DS24 | 4 |
| DS25 | 4 |
| J1 | 2 |
| J2 | 3 |
| L1 | 20 |
| L2 | 20 |
| L3 | 20 |
| L4 | 20 |
| L5 | 20 |
| L6 | 20 |
| L7 | 20 |
| Q1 | 9 |
| Q2 | 9 |
| Q3 | 9 |
| Q4 | 9 |
| Q5 | 9 |
| Q6 | 9 |
| Q7 | 9 |
| Q8 | 9 |
| Q9 | 9 |
| Q10 | 9 |
| Q11 | 9 |
| Q12 | 9 |
| Q13 | 9 |
| Q14 | 9 |
| Q15 | 9 |
| R1 | 17 |
| R2 | 19 |
| R3 | 17 |
| R4 | 19 |
| R5 | 17 |
| R6 | 19 |
| R7 | 19 |
| R8 | 17 |
| R9 | 17 |
| R10 | 19 |
| R11 | 18 |
| R12 | 19 |
| R13 | 19 |
| R14 | 18 |
| R15 | 18 |
| R16 | 18 |
| R17 | 18 |
| R18 | 19 |
| R19 | 18 |
| R20 | 18 |
| R21 | 18 |
| R22 | 18 |
| R23 | 18 |
| R24 | 19 |
| R25 | 18 |
| R26 | 18 |
| R27 | 19 |
| R28 | 18 |
| R29 | 18 |
| R30 | 18 |
| R31 | 18 |
| R32 | 19 |
| R33 | 19 |
| R34 | 19 |
| R35 | 19 |
| R36 | 18 |
| R37 | 18 |
| R38 | 19 |
| R39 | 19 |
| R40 | 19 |
| R41 | 19 |
| R42 | 19 |
| R43 | 19 |
| R44 | 19 |
| R45 | 18 |
| R46 | 18 |
| R47 | 18 |
| R48 | 18 |
| R49 | 19 |
| R50 | 18 |
| R51 | 18 |
| R52 | 19 |
| R53 | 18 |
| R54 | 18 |
| R55 | 19 |
| R56 | 19 |
| R57 | 18 |
| R58 | 18 |
| R59 | 19 |
| R60 | 18 |
| R61 | 18 |
| R62 | 16 |
| R63 | 16 |
| R64 | 16 |
| R65 | 16 |
| R66 | 19 |
| R67 | 17 |
| R68 | 17 |
| R69 | 17 |
| R70 | 17 |
| R71 | 17 |
| U1 | 10 |
| U2 | 10 |
| U3 | 10 |
| U4 | 10 |
| U5 | 10 |
| U6 | 11 |
| U7 | 11 |
| U8 | 11 |
| U9 | 11 |
| U10 | 11 |
| U11 | 11 |
| U12 | 11 |
| U13 | 11 |
| U14 | 11 |
| U15 | 11 |
| U16 | 11 |
| U17 | 11 |
| U18 | 11 |
| U19 | 11 |
| U20 | 11 |
| U21 | 10 |
| U22 | 10 |
| U23 | 10 |
| U24 | 10 |
| U25 | 10 |

NOTES: UNLESS OTHERWISE SPECIFIED:

1. APPLY REMAINING PORTION OF PART NUMBER AND ASSY DRAWING REVISION LETTER OR LABELING SUCH AS BARCODE SHALL BE NON-CONDUCTIVE MATERIAL, AND SHALL BE APPLIED TO ANY AREA WITHOUT OBSCURING COMPONENTS ON THE TOP SIDE OF THE PGA.

2. USE DYMAX 984 OR EQUIVALENT AS SHOWN. CONFORMAL COAT BETWEEN 1-3 MILS IN THICKNESS. EXCEPT WHERE NOTED.

3. NO CONFORMAL COATING ON CONNECTORS, LED'S, DISPLAYS AND ALL MOUNTING HOLES.

4. BEAD OF RTV OR EQUIVALENT AS SHOWN.

| APPLICATION | | SIGNATURES | | DATE |
|---|---|---|---|---|
| NEXT ASSY | USED ON | DRAWN | A. SAKAUE | 1-21-13 |
| A90406 | V3465 | CHECK | R GONZALES | 1-18-13 |
| | | DESIGNER | M. GREK | 1-22-13 |
| | | REL DATE | | 1-23-13 |

9568 ARCHIBALD AVE
CUCAMONGA, CA 91730

ASSEMBLY
HOT CONSOLE

9000-90406-0001

SIZE D | A90406

SCALE NONE | SHEET 1 OF 2

A90406 B

CORPORATION DISCLAIMS ANY LIABILITY
OR OBLIGATION FOR ITS PRODUCTS WHICH HAVE BEEN ALTERED,
REPAIRED OR TESTED BY PERSONS OTHER THAN
PERSONNEL.

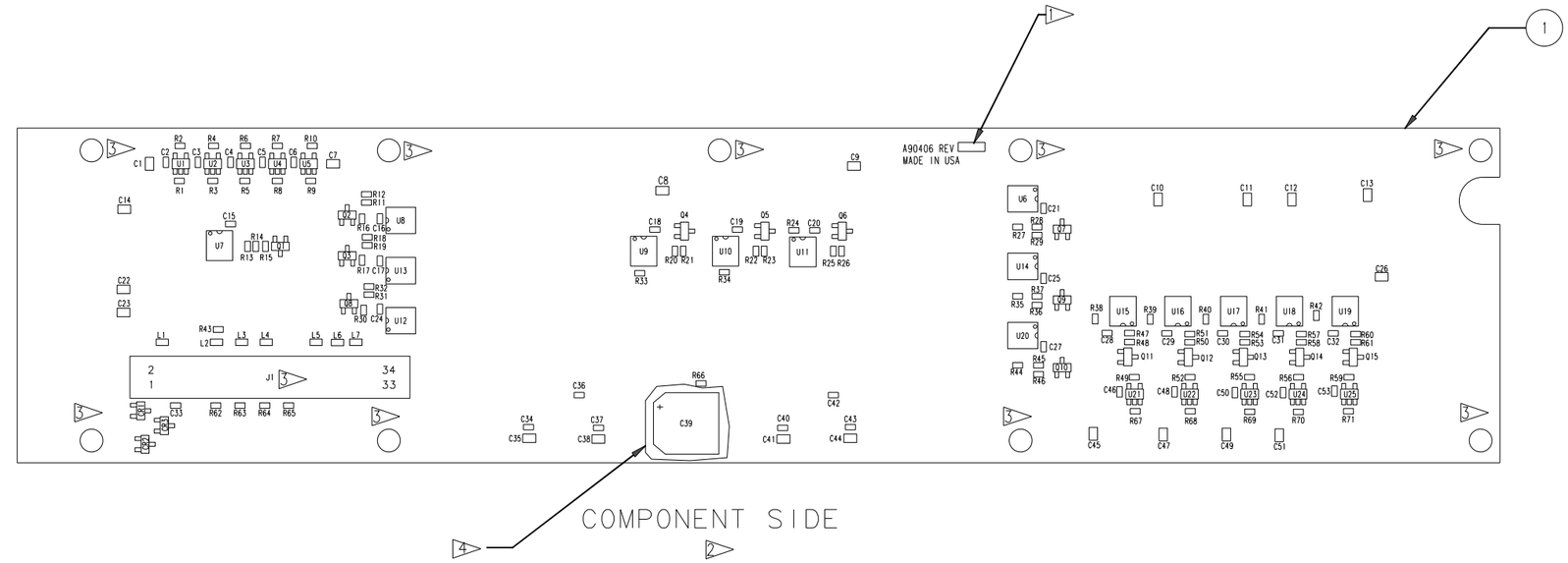


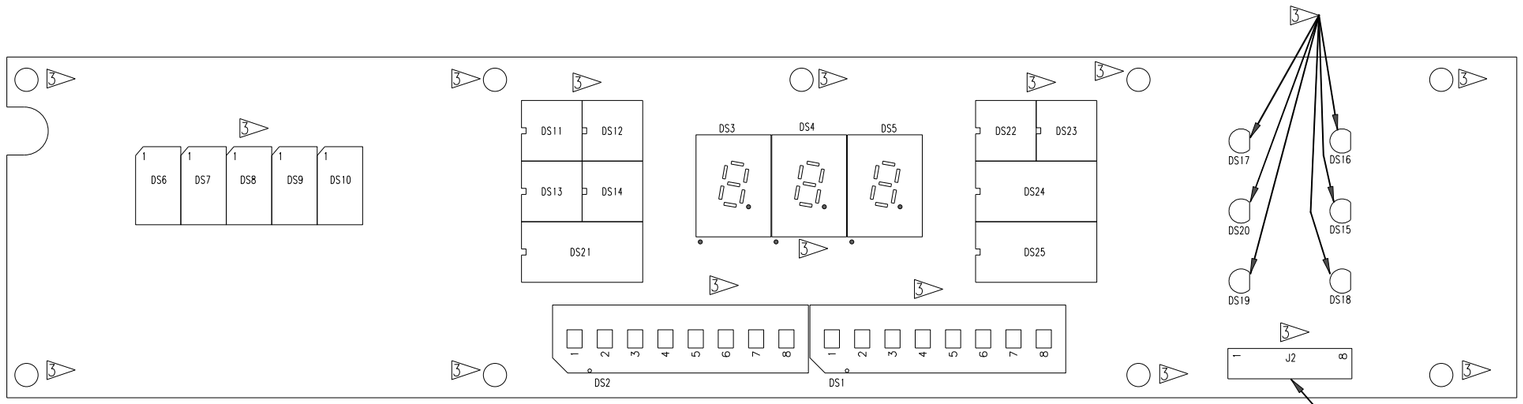


ASSEMBLY
HOT CONSOLE

| SIZE | | |
|---|---|---|
| D | A90406 | |
| SCALE 2:1 | | SHEET 2 OF 2 |

A90406 B

CORPORATION DISCLAIMS ANY LIABILITY
OR OBLIGATION FOR ITS PRODUCTS WHICH HAVE BEEN ALTERED,
REPAIRED OR TESTED BY PERSONS OTHER THAN
PERSONNEL.

| REVISIONS | | | | | |
|---|---|---|---|---|---|
| ZONE | REV | DESCRIPTION | DATE | DFTG APPVL | DSGN AUTH |
| | A | PRODUCTION RELEASE | 1-23-13 | M. GREK | M. GREK |
| | B | CN26379 | | | |

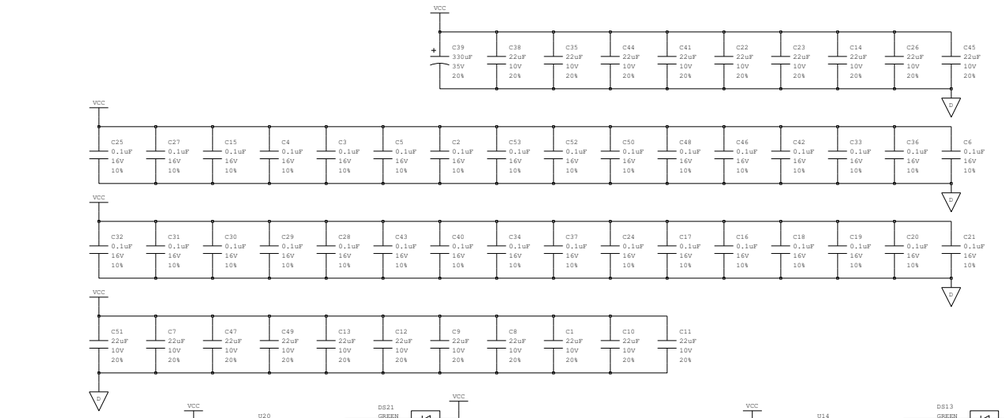


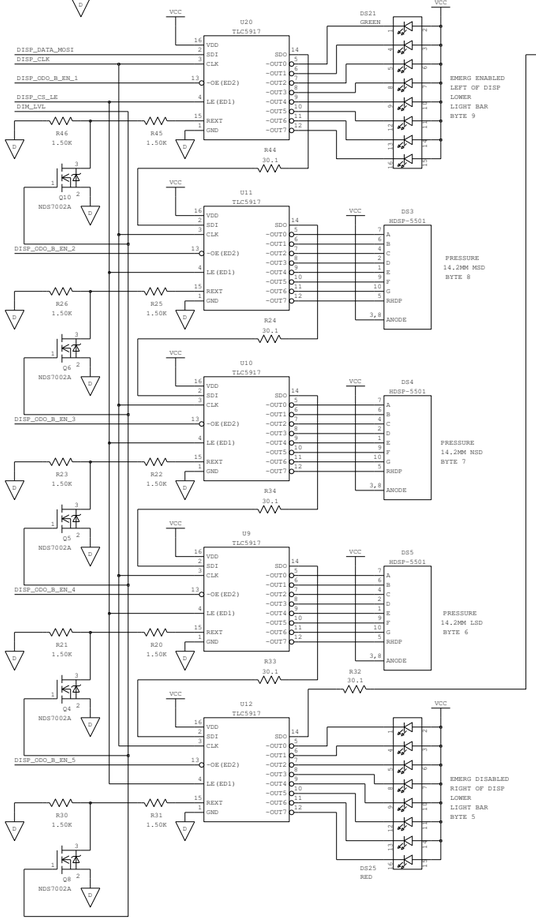


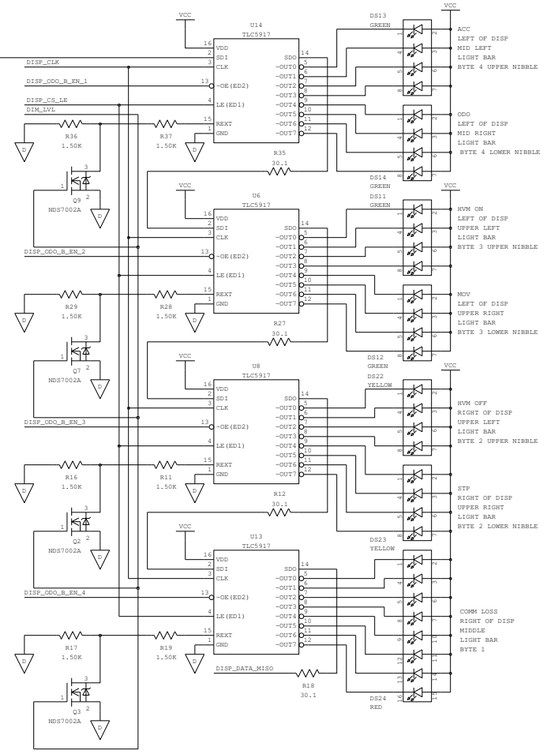


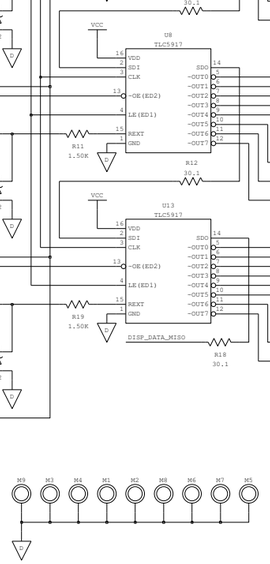


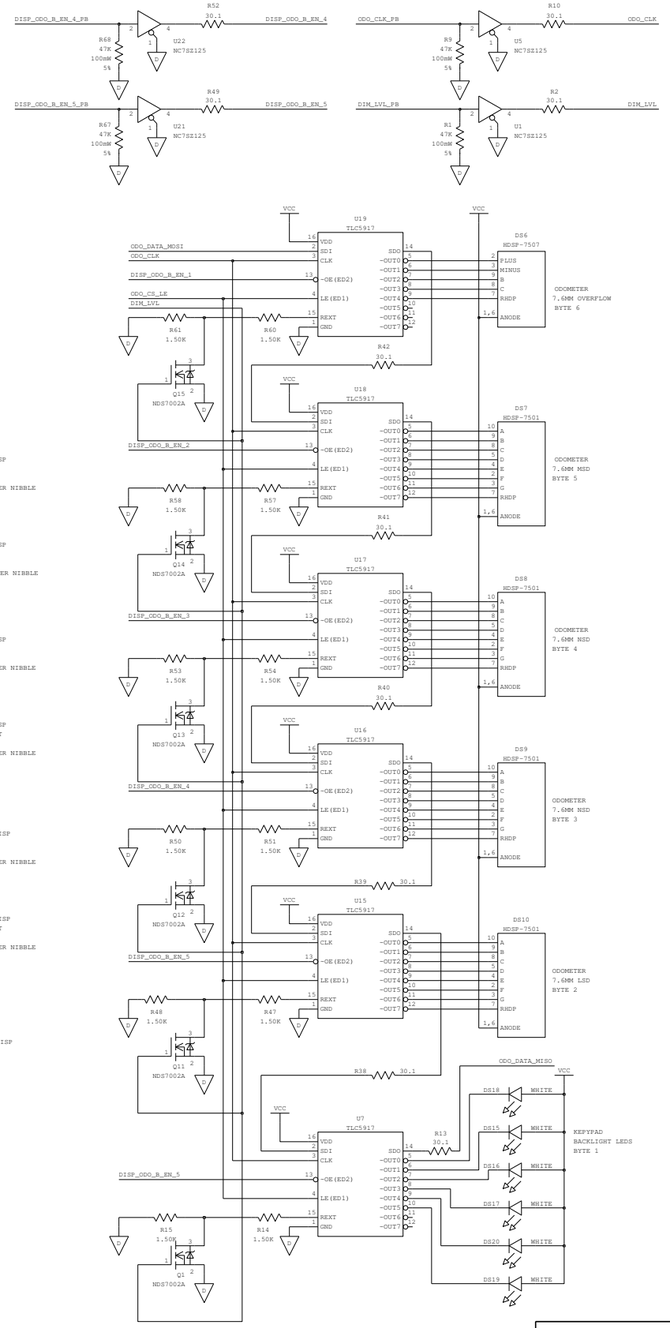


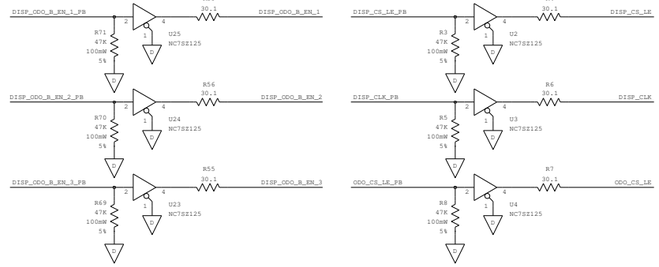


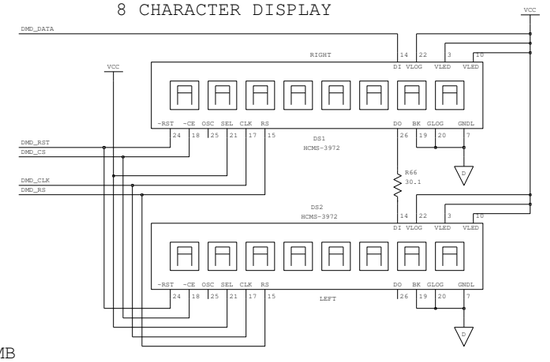


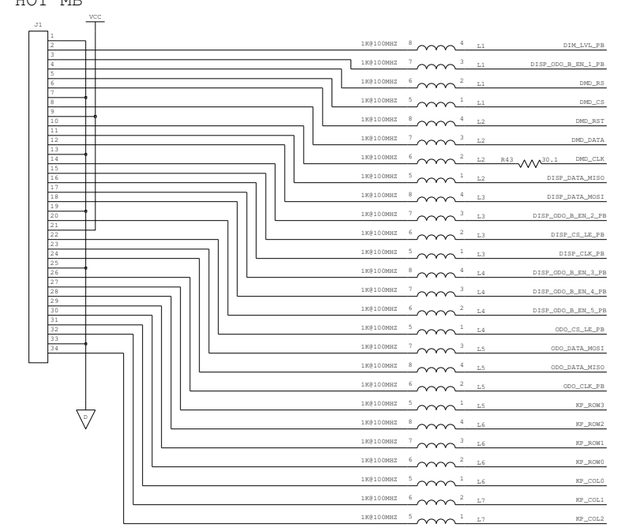


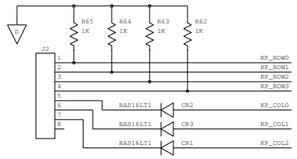


NOTES: UNLESS OTHERWISE SPECIFIED

1. ALL RESISTOR VALUES ARE IN 100mW, 1%.
2. ALL CAPACITORS ARE IN MICROFARADS.
3. LAST REF DES USED: C53 CR3 DS25 J2 L7 Q15 R71 U25

| APPLICATION | | SIGNATURES | | DATE |
|---|---|---|---|---|
| NEXT ASSY | USED ON | DRAWN | A. SAKAUE | 1-21-13 |
| A90406 | V3465 | CHECK | R. GONZALES | 1-18-13 |
| | | DESIGNER | M. GREK | 1-22-13 |
| | | REL DATE | | 1-23-13 |


9568 ARCHIBALD AVE
CUCAMONGA, CA 91730


SCHEMATIC

HOT CONSOLE

9000-90406-0001

| SIZE | | |
|---|---|---|
| D | S90406 | B |
| SCALE | | SHEET 1 OF 1 |

USE W/BOARD LVL B S90406

This Page Intentionally Left Blank

## DRAWING CHANGE HISTORY

| | |
|---|---|
| Drawing Name: | Assembly HOT Console |
| Drawing Number: | A90406 |
| Revision: | B |
| Reason For Change: | To correct LRD display locations to align with sheet metal |
| Drawing Changes: | Relocated DS1, DS2, DS3, DS4, DS5, DS6, DS7, DS8, DS9 AND DS10 for correct alignment with sheet metal cutouts |

| | |
|---|---|
| Drawing Name: | Assembly HOT Console |
| Drawing Number: | A90406 |
| Revision: | B1 |
| Reason For Change: | Change connector to cable assembly. |
| Drawing Changes: | See below |

IS:

| QTY REQD | ITEM NO | EDP NO. | PART OR IDENTIFYING NO. | NOMENCLATURE OR DESCRIPTION | DATA: SPECS, REF DES, ETC. |
|---|---|---|---|---|---|
| 1 | 2 | 08059 | 746610-8 | Connector | J1 |

CHANGE TO:

| QTY REQD | ITEM NO | EDP NO. | PART OR IDENTIFYING NO. | NOMENCLATURE OR DESCRIPTION | DATA: SPECS, REF DES, ETC. |
|---|---|---|---|---|---|
| 1 | 2 | Z706-00313-0000 | AV060413 | Cable Assembly | J1 |

This Page Intentionally Left Blank

CORPORATION DISCLAIMS ANY LIABILITY OR OBLIGATION FOR ITS PRODUCTS WHICH HAVE BEEN ALTERED, REPAIRED OR TESTED BY PERSONS OTHER THAN PERSONNEL.

| QTY. REQD. | ITEM NO. | EDP NO. | PART OR IDENTIFYING NO. | MATERIAL | NOMENCLATURE OR DESCRIPTION | DATA: SPECS, REF DES, SIZE, NOTES, VENDORS. |
|---|---|---|---|---|---|---|
| 1 | 1 | Z149-90410-0000 | D90410-00 LVL A | | BARE BOARD | |
| 6 | 2 | Z241-00035-0000 | NDS7002A | | TRANSISTOR | Q1 Q2 Q3 Q4 Q5 Q6 |
| 2 | 3 | Z243-00316-0000 | NC7SZ125M5X | | IC | U6 U9 |
| 1 | 4 | Z243-00446-0000 | LIS3DHTR | | ACCELEROMETER | U4 |
| 2 | 5 | Z243-00467-0000 | MIC5233-3.3YM5 | | IC | U1 U2 |
| 1 | 6 | Z243-00486-0000 | TPS3824-33DBVR | | IC | U3 |
| 1 | 7 | Z243-01270-0000 | LM4040AIM3X-2.5 | 2.5V | IC | CR3 |
| 1 | 8 | Z244-00147-0000 | SST25VF064C-80-4I-Q2AE | | IC PROGRAMMABLE | U5 |
| 1 | 9 | Z244-00148-0000 | MSP430F5438AIPZ | | IC | U8 |
| 3 | 10 | Z247-00162-0000 | BAS416T/R | | DIODE | CR2 CR4 CR5 |
| 1 | 11 | Z249-00003-0000 | 1SMB5.0AT3G | 5V | TVS | CR1 |
| 1 | 12 | Z341-0.01U-0044 | 04023C103KAT2A | 0.01uF, 10%, 25V | CAPACITOR | C30 |
| 1 | 13 | Z341-0.47U-0124 | GRM188R71C474KA88D | 0.47uF, 10%, 16V | CAPACITOR | C51 |
| 2 | 14 | Z341-04.7U-0464 | GRM32ER71H475KA88L | 4.7uF, 10%, 50V | CAPACITOR | C5 C12 |
| 7 | 15 | Z341-1500P-0064 | C0402C152K5RACTU | 1500pF, 10%, 50V | CAPACITOR | C18 C20 C35 C36 C43 C44 C49 |
| 0 | 16 | Z342-0015P-0063 | 04025A150JAT2A | 15pF, 5%, 50V | CAPACITOR | (C25 C26 N/U) |
| 25 | 17 | Z347-00.1U-0024 | 0402ZD104KAT2A | 0.1uF, 10%, 10V | CAPACITOR | C6 C7 C10 C14 C15 C16 C19 C21 C23 C27 C29 C31 C33 C34 C37 C38 C40 C42 C45 C46 C47 C48 C50 C53 C55 |
| 2 | 18 | Z347-00.1U-0064 | C1005X5R1H104KT | 0.1uF, 10%, 50V | CAPACITOR | C4 C11 |
| 8 | 19 | Z347-0010U-0115 | 06036D106MAT2A | 10uF, 20%, 6.3V | CAPACITOR | C13 C17 C22 C28 C32 C39 C41 C52 |
| 3 | 20 | Z347-0022U-0225 | LMK212BJ226MG-T | 22uF, 20%, 10V | CAPACITOR | C1 C24 C54 |
| 4 | 21 | Z347-02.2U-0124 | 0603ZD225KAT2A | 2.2uF, 10%, 10V | CAPACITOR | C2 C3 C8 C9 |
| 6 | 22 | Z442-0001K-0121 | CRCW06031K00FKEA | 1K, 1%, 0.063W | RESISTOR | R34 R89 R91 R92 R93 R94 (R95 N/U) |
| 10 | 23 | Z442-0010K-0111 | CRCW0603-1002FRT1 | 10K, 1%, 0.063W | RESISTOR | (R1 R2 R21 R22 N/U) R24 R29 R30 R31 R32 R33 R35 R45 R46 R90 |
| 69 | 24 | Z442-0033R-0121 | CRCW060333R0FKEA | 33, 1%, 100mW | RESISTOR | R3 R4 R5 R6 R7 R8 R9 R10 R11 R12 R13 R14 R15 R16 R17 R18 R19 R20 R23 R25 R26 R27 R28 R37 R38 R39 R40 R41 R42 R43 R44 R48 R49 R50 R51 R52 R53 R54 R55 R56 R57 R58 R59 R60 R61 R62 R63 R64 R65 R66 R67 R68 R69 R70 R71 R72 R73 R74 R75 R76 R77 R78 R79 R80 R81 R82 R83 R84 R85 |
| 1 | 25 | Z442-0047K-0011 | CRCW0402047K0FKED | 47K, 1%, 0.063W | RESISTOR | R47 |
| 4 | 26 | Z442-4.99K-0011 | CRCW0402-4991FRT7 | 4.99K, 1%, 0.063W | RESISTOR | R36 R86 R87 R88 |
| 8 | 27 | Z541-00014-0000 | BLM15HG102SN1D | 1400@1000MHZ | INDUCTOR | L1 L2 L3 L4 L5 L6 (L7 N/U) L8 L9 |
| 1 | 28 | Z545-00019-0000 | CM155-32.768KDZFTR | 32.768KHZ | CRYSTAL | Y1 |
| 1 | 29 | Z715-03323-0002 | CA-SO2-24C-44 | | CONNECTOR | JP1 |
| 1 | 30 | Z741-00053-0014 | CLH-107-L-DBE-K | | CONNECTOR | J3 |
| 3 | 31 | Z742-00012-0030 | HW-15-08-G-D-272-SM-A | | CONNECTOR | J1 J2 J4 |
| 2 | 32 | Z842-00013-0256 | HSMF-C114 | RED,GREEN,BLUE | LED | DS1 DS2 |

| REF DES. | ITEM NO. |
|---|---|
| C1 | 20 |
| C2 | 21 |
| C3 | 21 |
| C4 | 18 |
| C5 | 14 |
| C6 | 17 |
| C7 | 17 |
| C8 | 21 |
| C9 | 21 |
| C10 | 17 |
| C11 | 18 |
| C12 | 14 |
| C13 | 19 |
| C14 | 17 |
| C15 | 17 |
| C16 | 17 |
| C17 | 19 |
| C18 | 15 |
| C19 | 17 |
| C20 | 15 |
| C21 | 17 |
| C22 | 19 |
| C23 | 17 |
| C24 | 20 |
| C25 | 16 |
| C26 | 16 |
| C27 | 17 |
| C28 | 19 |
| C29 | 17 |
| C30 | 12 |
| C31 | 17 |
| C32 | 19 |
| C33 | 17 |
| C34 | 17 |
| C35 | 15 |
| C36 | 15 |
| C37 | 17 |
| C38 | 17 |
| C39 | 19 |
| C40 | 17 |
| C41 | 19 |
| C42 | 17 |
| C43 | 15 |
| C44 | 15 |
| C45 | 17 |
| C46 | 17 |
| C47 | 17 |
| C48 | 17 |
| C49 | 15 |
| C50 | 17 |
| C51 | 13 |
| C52 | 19 |
| C53 | 17 |
| C54 | 20 |
| C55 | 17 |
| CR1 | 11 |
| CR2 | 10 |
| CR3 | 7 |
| CR4 | 10 |
| CR5 | 10 |
| DS1 | 32 |
| DS2 | 32 |
| J1 | 31 |
| J2 | 31 |
| J3 | 30 |
| J4 | 31 |
| JP1 | 29 |
| L1 | 27 |
| L2 | 27 |
| L3 | 27 |
| L4 | 27 |
| L5 | 27 |
| L6 | 27 |
| L7 | 27 |
| L8 | 27 |
| L9 | 27 |

| REF DES. | ITEM NO. |
|---|---|
| Q1 | 2 |
| Q2 | 2 |
| Q3 | 2 |
| Q4 | 2 |
| Q5 | 2 |
| Q6 | 2 |
| R1 | 23 |
| R2 | 23 |
| R3 | 24 |
| R4 | 24 |
| R5 | 24 |
| R6 | 24 |
| R7 | 24 |
| R8 | 24 |
| R9 | 24 |
| R10 | 24 |
| R11 | 24 |
| R12 | 24 |
| R13 | 24 |
| R14 | 24 |
| R15 | 24 |
| R16 | 24 |
| R17 | 24 |
| R18 | 24 |
| R19 | 24 |
| R20 | 24 |
| R21 | 23 |
| R22 | 23 |
| R23 | 24 |
| R24 | 23 |
| R25 | 24 |
| R26 | 24 |
| R27 | 24 |
| R28 | 24 |
| R29 | 23 |
| R30 | 23 |
| R31 | 23 |
| R32 | 23 |
| R33 | 23 |
| R34 | 22 |
| R35 | 23 |
| R36 | 26 |
| R37 | 24 |
| R38 | 24 |
| R39 | 24 |
| R40 | 24 |
| R41 | 24 |
| R42 | 24 |
| R43 | 24 |
| R44 | 24 |
| R45 | 23 |
| R46 | 23 |
| R47 | 25 |
| R48 | 24 |
| R49 | 24 |
| R50 | 24 |
| R51 | 24 |
| R52 | 24 |
| R53 | 24 |
| R54 | 24 |
| R55 | 24 |
| R56 | 24 |
| R57 | 24 |
| R58 | 24 |
| R59 | 24 |
| R60 | 24 |
| R61 | 24 |
| R62 | 24 |
| R63 | 24 |
| R64 | 24 |
| R65 | 24 |
| R66 | 24 |
| R67 | 24 |
| R68 | 24 |
| R69 | 24 |
| R70 | 24 |

| REF DES. | ITEM NO. |
|---|---|
| R71 | 24 |
| R72 | 24 |
| R73 | 24 |
| R74 | 24 |
| R75 | 24 |
| R76 | 24 |
| R77 | 24 |
| R78 | 24 |
| R79 | 24 |
| R80 | 24 |
| R81 | 24 |
| R82 | 24 |
| R83 | 24 |
| R84 | 24 |
| R85 | 24 |
| R86 | 26 |
| R87 | 26 |
| R88 | 26 |
| R89 | 22 |
| R90 | 23 |
| R91 | 22 |
| R92 | 22 |
| R93 | 22 |
| R94 | 22 |
| R95 | 22 |
| U1 | 5 |
| U2 | 5 |
| U3 | 6 |
| U4 | 4 |
| U5 | 8 |
| U6 | 3 |
| U8 | 9 |
| U9 | 3 |
| Y1 | 28 |

| REVISIONS | | | | | |
|---|---|---|---|---|---|
| ZONE | REV | DESCRIPTION | DATE | DFTG APPVL | DESIGN AUTH |
| | A | PRODUCTION RELEASE | | | |

NOTES: UNLESS OTHERWISE SPECIFIED:

1. APPLY REMAINING PORTION OF PART NUMBER AND ASSY DRAWING REVISION LETTER
2. USE DYMAX 984 OR EQUIVALENT AS SHOWN. CONFORMAL COAT BETWEEN 1-3 MILS IN THICKNESS. EXCEPT WHERE NOTED.
3. NO CONFORMAL COATING ON DS1, DS2, J1-J4, JP1, AND ALL MOUNTING HOLES.

| APPLICATION | | SIGNATURES | DATE |
|---|---|---|---|
| NEXT ASSY | USED ON | DRAWN | |
| A90410 | V3452 | CHECK | |
| | | DESIGNER | |
| | | REL DATE | |

10655 7TH STREET
CUCAMONGA, CA 91730

ASSEMBLY
INTERGRATED LOCOMOTIVE CPU
COMMON MODULE
9000-90410-0001

SIZE D | A90410

SCALE NONE | SHEET 1 OF 2

A90410 A

CORPORATION DISCLAIMS ANY LIABILITY
OR OBLIGATION FOR ITS PRODUCTS WHICH HAVE BEEN ALTERED,
REPAIRED OR TESTED BY PERSONS OTHER THAN
PERSONNEL.

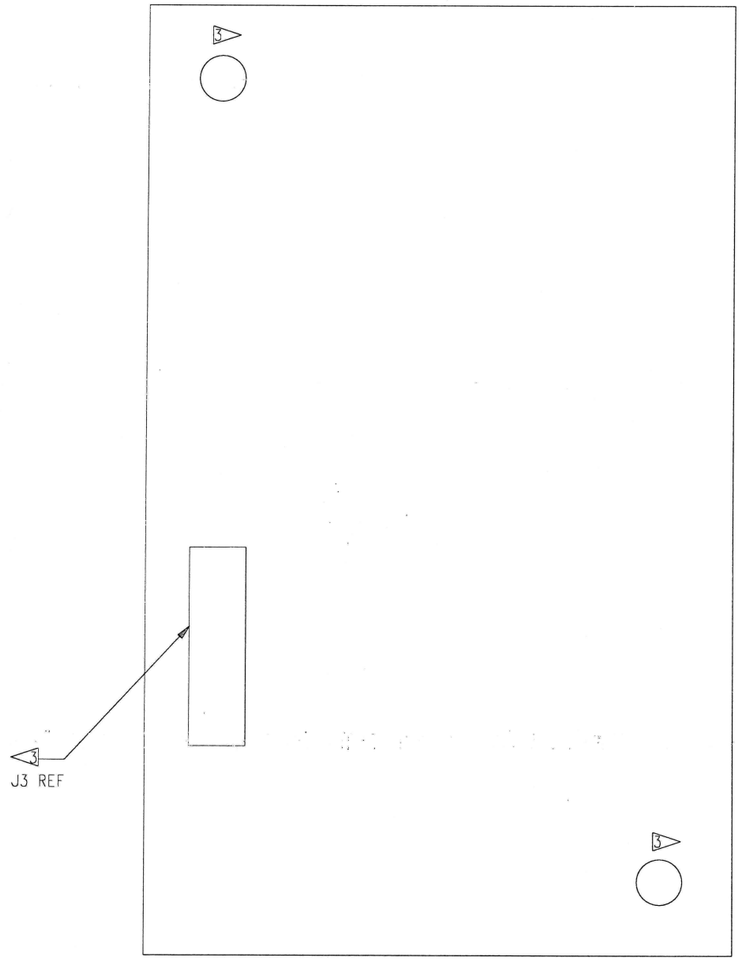


COMP SIDE

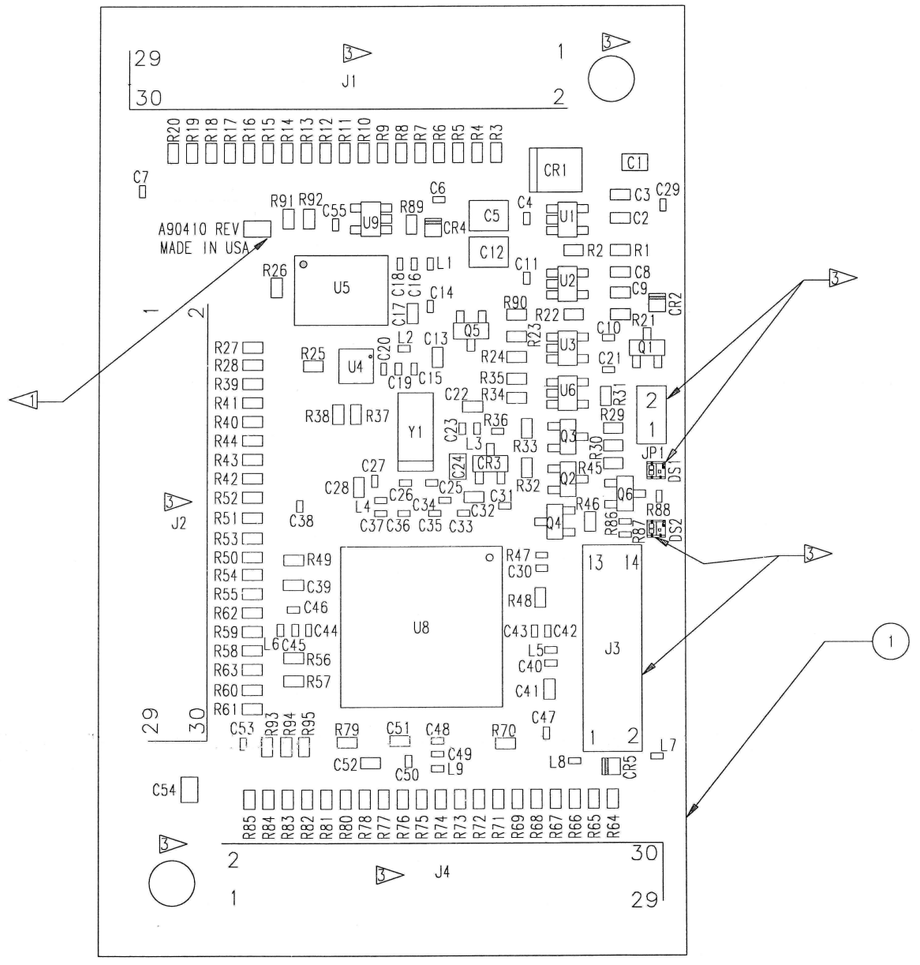


SOLDER SIDE

ASSEMBLY
INTERGRATED LOCOMOTIVE CPU
COMMON MODULE

SIZE D | A90410

SCALE 4:1 | SHEET 2 OF 2

A90410

CORPORATION DISCLAIMS ANY LIABILITY
OR OBLIGATION FOR ITS PRODUCTS WHICH HAVE BEEN ALTERED,
REPAIRED OR TESTED BY PERSONS OTHER THAN
PERSONNEL

| REVISIONS | | | | | |
|---|---|---|---|---|---|
| ZONE | REV | DESCRIPTION | DATE | DFTG APPVL | DSGN AUTH |
| | A | PRODUCTION RELEASE | | | |

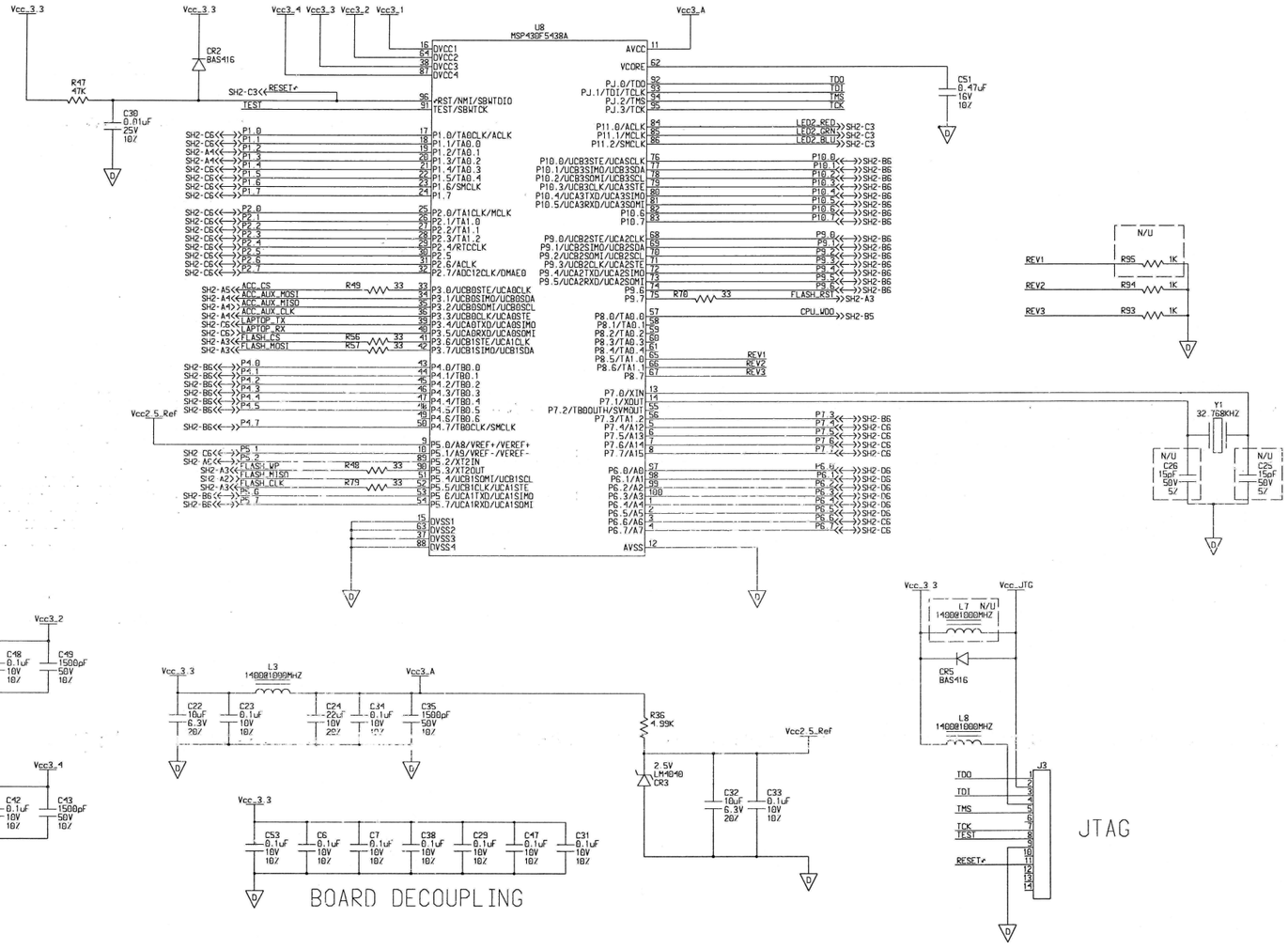


NOTES: UNLESS OTHERWISE SPECIFIED
1. LAST REF DES CR5 JP1 C55 DS2 J4 L9 Q6 R95 U9 Y1
2. REF DES NOT USED: U7
3. ALL RESISTORS 63mW 1% UNLESS OTHERWISE SPECIFIED
4. ALL CAPACITORS ARE IN MICROFARADS.

| APPLICATION | | SIGNATURES | DATE |
|---|---|---|---|
| NEXT ASSY | USED ON | DRAWN | |
| A90410 | V3452 | CHECK | |
| | | DESIGNER | |
| | | REL DATE | |

10655 7TH STREET
CUCAMONGA, CA 91730

SCHEMATIC
INTEGRATED LOCOMOTIVE CPU
COMMON MODULE
9000-90410-0001

SIZE D | S90410

SCALE NONE | SHEET 1 OF 2

CORPORATION DISCLAIMS ANY LIABILITY
OR OBLIGATION FOR ITS PRODUCTS WHICH HAVE BEEN ALTERED,
REPAIRED OR TESTED BY PERSONS OTHER THAN
PERSONNEL.

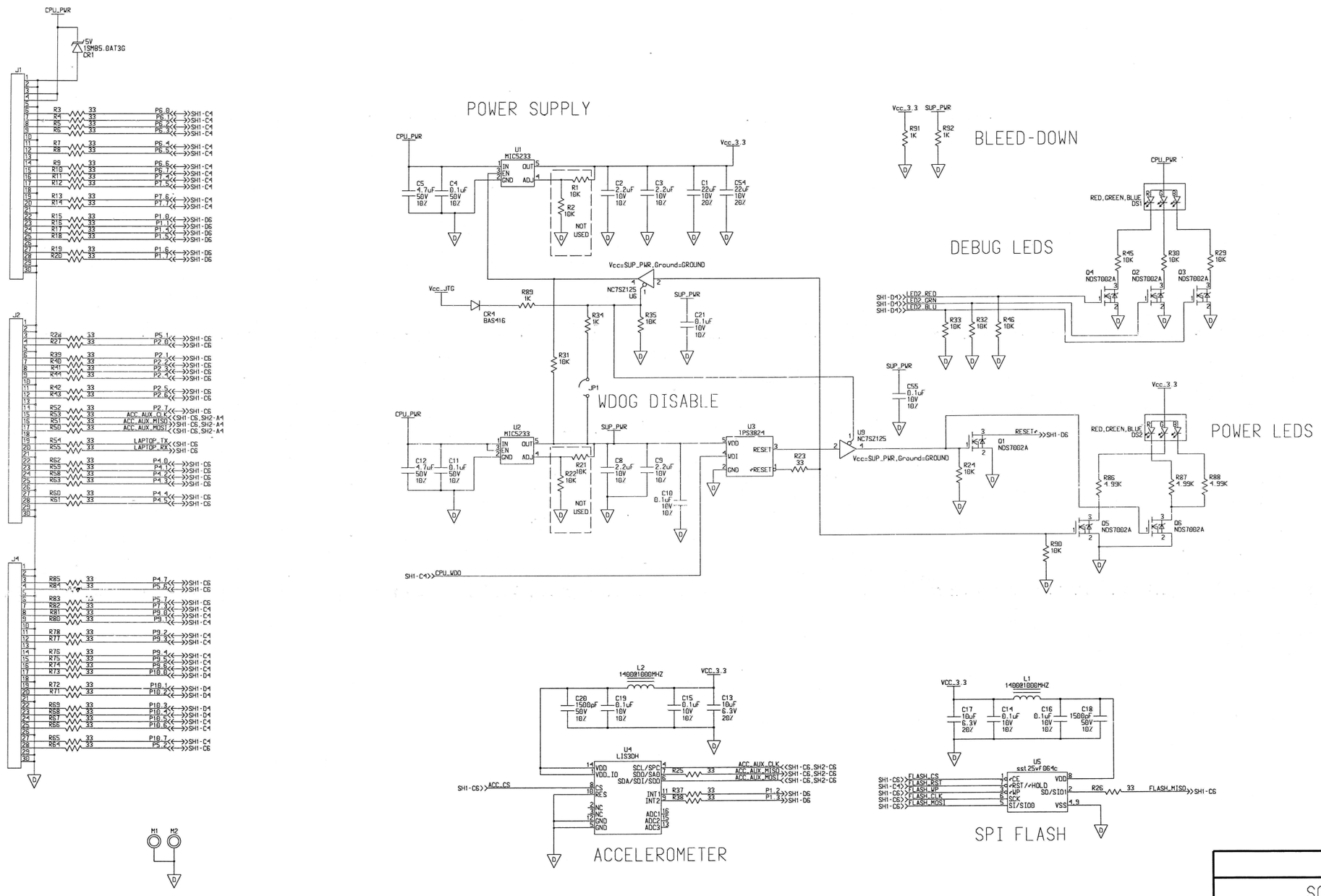


USE W/BOARD LVL A
S90410 A

SCHEMATIC
INTEGRATED LOCOMOTIVE CPU
COMMON MODULE

| SIZE | |
|---|---|
| D | S90410 |
| SCALE NONE | SHEET 2 OF 2 |

DRAWING CHANGE HISTORY

| | |
|---|---|
| Drawing Name: | Assembly Integrated Locomotive CPU Common Module |
| Drawing Number: | A90410 |
| Revision: | A1 |
| Reason For Change: | Remove pull-down resistor on output pin (not necessary) |
| Drawing Changes: | See below |

**IS:**

| QTY REQD | ITEM NO | EDP NO. | PART OR IDENTIFYING NO. | NOMENCLATURE OR DESCRIPTION | DATA: SPECS, REF DES, ETC. |
|---|---|---|---|---|---|
| 10 | 23 | Z442-0010K-0111 | CRCW0603-1002FRT1 | RESISTOR | (R1 R2 R21 R22 N/U) R24 R29 R30 R31 R32 R33 R35 R45 R46 R90 |

**CHANGE TO:**

| QTY REQD | ITEM NO | EDP NO. | PART OR IDENTIFYING NO. | NOMENCLATURE OR DESCRIPTION | DATA: SPECS, REF DES, ETC. |
|---|---|---|---|---|---|
| 9 | 23 | Z442-0010K-0111 | CRCW0603-1002FRT1 | RESISTOR | (R1 R2 R21 R22 N/U) R24 R29 R30 R31 R32 R33 R35 R45 R46 (R90 N/U) |

This Page Intentionally Left Blank

## APPENDIX A - PUMP PROGRAM

### INSTALLATION

The 16371 program is installed by running the SETUP.EXE program found on Disk 1. **It is recommended that you accept the defaults given for these options.**

### OPERATION

If the user did not change the default installation, the program will appear as *PUMP* in the *Start Menu* under *Siemens*. Upon execution, the program screen will appear as show below in Figure A1.

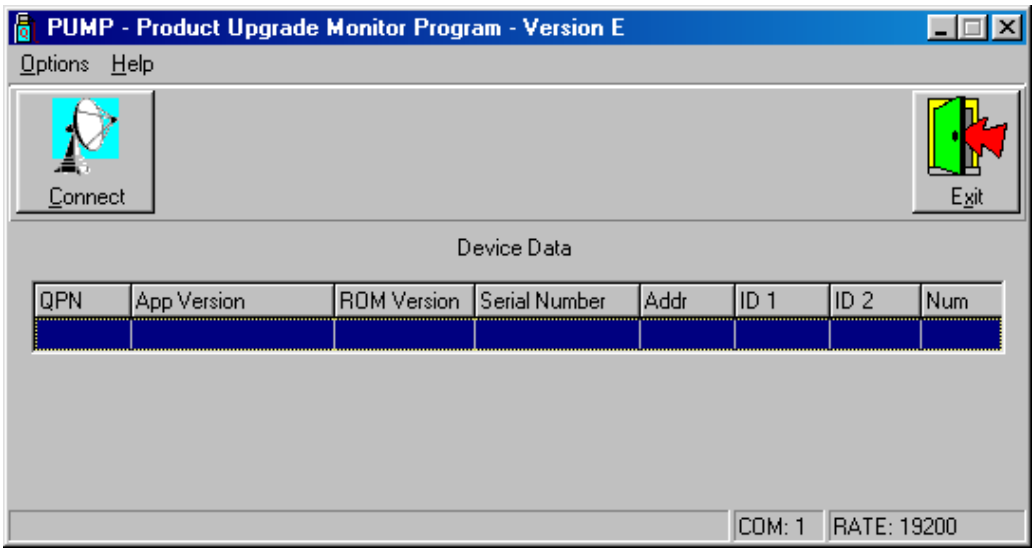


Figure A1 - PUMP

When running the program for the first time, use the *Options* menu choice and check the *Communications Setup* for the correct settings. The COM Port will depend upon the computer configuration. For V3465 and V3465/R *Baud Rate* should be **9600.** For V3465/DME *Baud Rate* should be **19200.** The program should be set to *Connect to* **1** *Device*.

Connect the serial cable and communication adapter to the portable computer and Siemens V3465 HOT device. Apply power to the V3465 HOT. After the device has powered up and commences with normal operations, click the *Connect* button on the PUMP screen. A dialog box, as shown in Figure A2, will appear while the program is attempting to connect to the HOT unit.

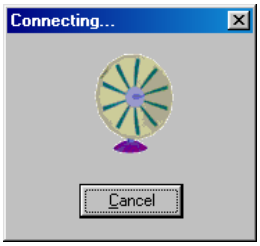


Figure A2 – Connecting

Once communication is established, the PUMP program will display the device data as shown in Figure A3. The *Upload* button should also be displayed on the computer screen.

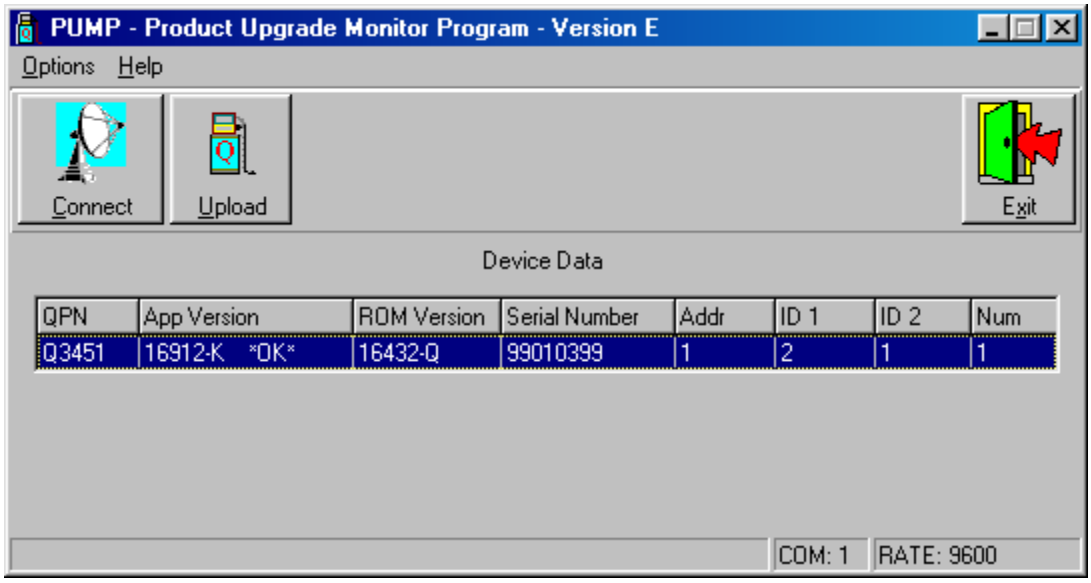


Figure A3 - PUMP connected

To upload the new application, click on the *Upload* button. A standard Windows™ file load dialog will appear. Select the application file supplied to you by Siemens and click the *Open* button. The dialog box as shown in Figure A4 will appear showing the selected file.

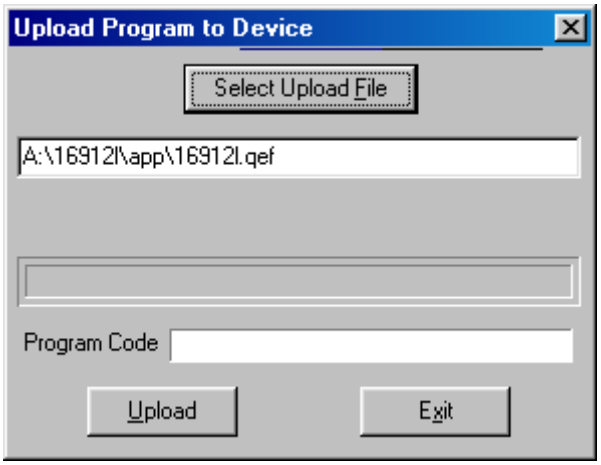


Figure A4 - PUMP file selected

Click the Upload button to begin the application update. The PUMP program will upload the application and when completed will display a dialog similar to Figure A5.

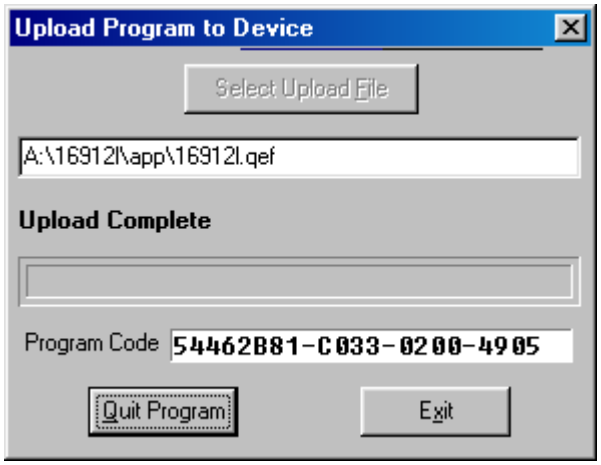


Figure A5 - PUMP Complete

*Select the* Exit *button and then* Exit *on the main screen to end the program.*

## APPENDIX B - EOT/HOT EVENT LOG VIEWER

### INSTALLATION

The 16390 program is installed by running the SETUP.EXE program found on Disk 1. During the installation you will be asked to accept the software license agreement and enter the serial number that is shown on a sticker applied to Disk 1. The installation program also allows you to select a different installation directory and to select a different program folder for the program's shortcut to reside in. **It is recommended that you accept the defaults given for these options.**

### PROGRAM DESCRIPTION

Once installed, the program will appear in the Start Menu program list in the Quantum Folder (if the default was selected). The installation also installs a Shortcut icon on the desktop which appears as:

EOT – HOT
Event Log Viewer

Run the program by double clicking the desktop icon or by finding it on the Start Menu tree. From the main program menu, you have the choice of the following menu items: **File**, **Download**, **Setup**, **View**, and **Help**. The underlined letters indicate the hot key for each menu item. To use the hot key, hold down the <**Alt**> button and then press the hot key.

The menu choices are described below.

**File**

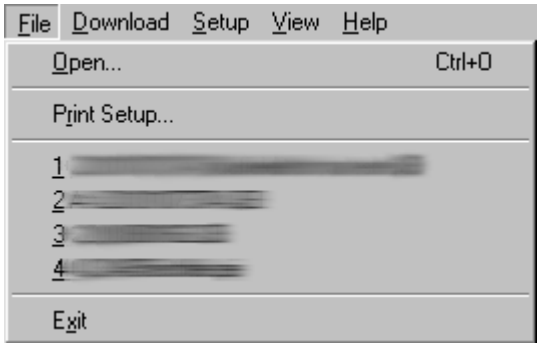


Opens a data file from disk

Printer setup and selection

List of the last 4 files opened by the program

Program exit

## Download

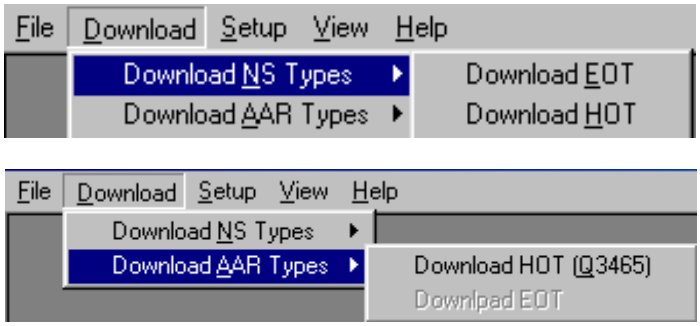


For downloading the event log you must select the unit type first. Select **Download > AAR Types** choice and then select Download HOT (Q3465/V3465).

## Setup

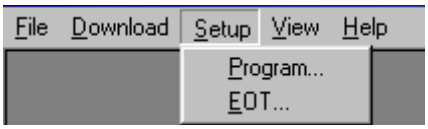


**Setup > Program** is used to change the setup of the 16390 program. Changes available include the path for downloaded files, the COM port used for downloading, and the colors used by the program.

The program setup is shown below.

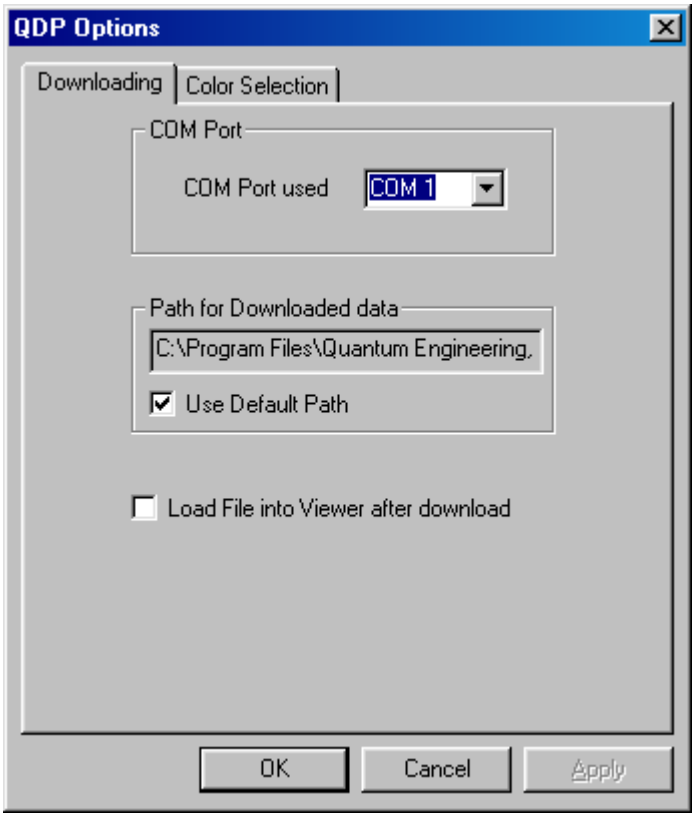


COM Port selects the serial port used to connect to the EOT or HOT.

Path for downloaded data points to the directory where the file will be created for downloaded data. Check the **Use Default Path** checkbox to point the data to the location expected by the program.

Check the **Load File into Viewer after Download** checkbox to automatically view the downloaded data.

Color selection is done with the dialog below.

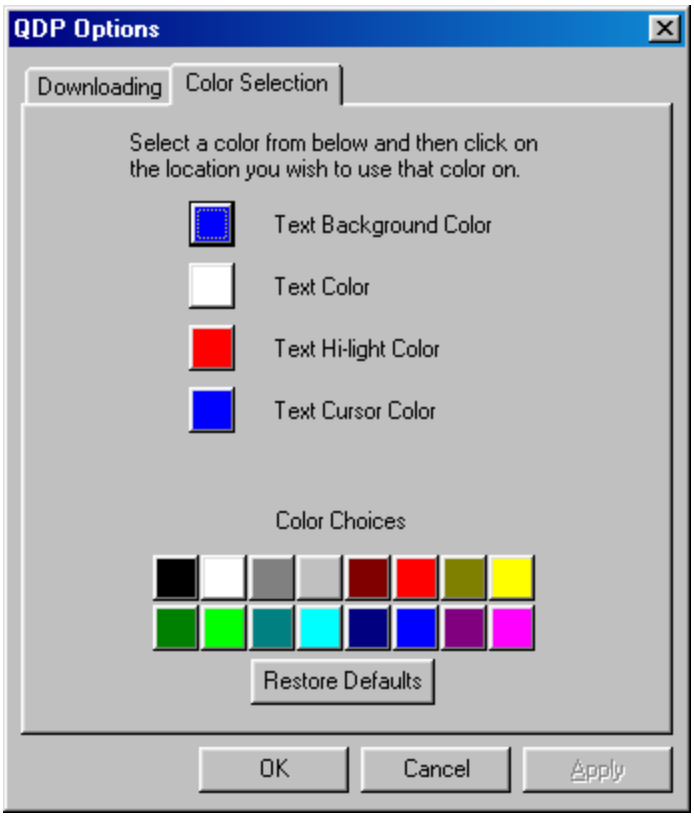


To change the colors, click on a color selection in the **Color Choices** at the bottom of the dialog. Then click on the location that you wish to use this color.

User protection against selecting white text on a white background is not provided by the software. The **Restore Defaults** button can be used to restore the color selections as originally set when the software was installed.

**View**

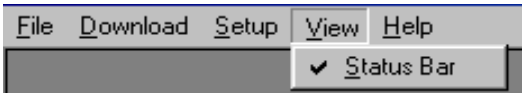


With this menu choice, the user can select to either show (checked state) or hide (uncheck) the status bar at the bottom of the window.

**Help**

**Help Topics** displays the online program help topic list.

**About EOT/HOT viewer…** menu choice provides information on the current software version installed.

## OPERATION

### Download a Q3465/V3465

- Connect a computer to the Q3465/V3465 using a Q9198 adapter and QP-09654 serial cable.
- On the program menu select **Download > Download AAR Types > Download HOT**.
- The program will prompt for the connection to the HOT unit. If the HOT unit is connected and operational, click **OK** to proceed.
- The program will now start the download process. The program will display a packet count as the download progresses. Data will be saved in a file created in the directory specified in the program setup (**Setup > Program**). If the default directory is used, this will be a **\DATA** directory created under the program directory. The filename is created using the serial number of the HOT unit with an extension of **.QEI** (e.g., 123456789.qei). If a file exists of the same name at the time of download, a single letter character (starting with "A") will be appended to the serial number (e.g., 123456789A.qei).
- When the download is complete, the program will display the complete name of the file created. Exit the download process by clicking the **OK** button in the dialog. If the "Load File into Viewer after Download" option was selected, the downloaded file will automatically be loaded into the program for viewing. If this option had not been selected, the program will return to the main window.

### Loading a Data File for Viewing

- On the program menu select **File > Open**.
- A standard Windows® file open dialog, shown in Figure B1, will be displayed. Find the file in the dialog box listing and click on the filename. The filename should then be displayed in the **File name:** edit box at the bottom of the dialog. Click the **Open** button to complete the process.

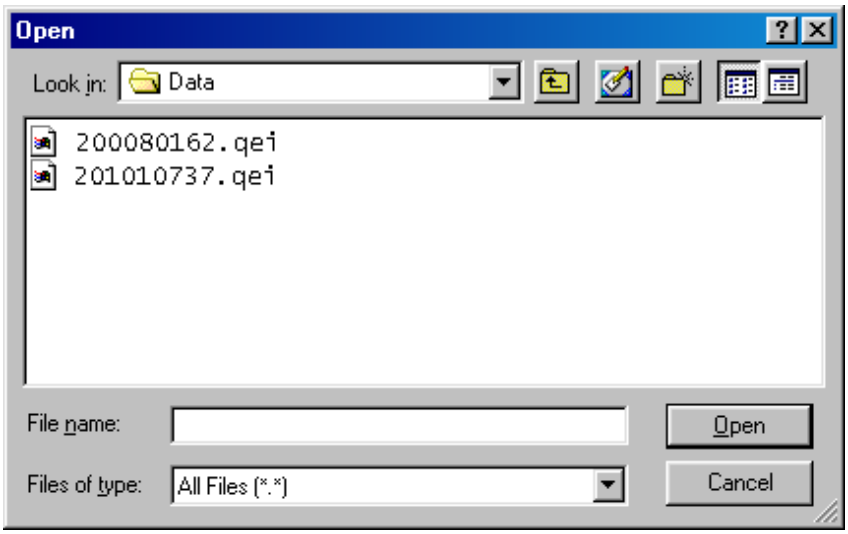


Figure B1 - File Open Dialog

**Data Display**

The data is displayed in text format in a scrollable window, a portion of which is shown in Figure B2. The oldest data is at the top of the window and the newest data is at the bottom.

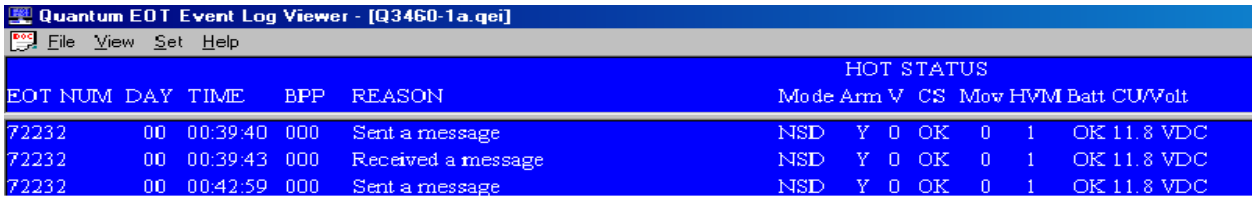


Figure B2 - Data Display

The following events are displayed:

**EOT NUM** This is the EOT unit that is being received by the HOT unit. This EOT number must have been entered into the V3465 HOT.

**DAY**, **TIME** Time is reported in days, hours, minutes, and seconds since either power-up or reset. A maximum of 278 hours (11 days, 13:46:39) can be reported, at which point the time will rollover to zero. As a maximum of 11 days can be recorded, the DAY field displays a range from zero (0) days to 11 days that the reported time relates to.

**BPP** This is the Brake Pipe Pressure as reported on the HOT unit.

**REASON** This is the reason this event has been recorded in the event log. Reason codes for the V3465 HOT are:

- Sent a message
- Received a message
- EOT ID code was archived (user entered a new EOT ID number)
- Comm protocol & armed status was archived
- Start of emergency
- End of emergency
- HOT emergency initiated by DUMP input
- HOT communications test passed
- HOT communications test failed
- HOT lost rear-to-front comms
- HOT lost front-to-rear comms
- Log has been erased
- Power up reset
- Watchdog timeout reset
- Archive memory was corrupted

**HOT Status** This is the status of the V3465 HOT at the time of the sample. The following status conditions are reported:

**Arm** Arm status. Possible values are: Y = yes, armed; N = no, not armed

**V** Valve status. Possible values are: 1 = OK, 0 = bad

**CS** Communication status. Possible values are: OK = Communication OK; FR = Front to Rear failure; RF = Rear to Front failure; NO = No communication

| | |
|---|---|
| **Mov** | EOT moving. Possible values are: 1 = moving, 0 = stopped |
| **HVM** | EOT light. Possible values are: 1 = On, 0 = Off |
| **Batt** | EOT battery status. Possible values are: 0 = OK, D = dead |
| **CU/Volt** | Charge units (0 - 100) or battery voltage of the EOT unit being received |

If the HOT unit has just been put in service, it is possible that the entire event log has not been populated with valid data records. In this case, a special event record will be displayed at the start of the file to indicate that that all the event data storage was not used. A sample of this event record is shown in Figure B3.

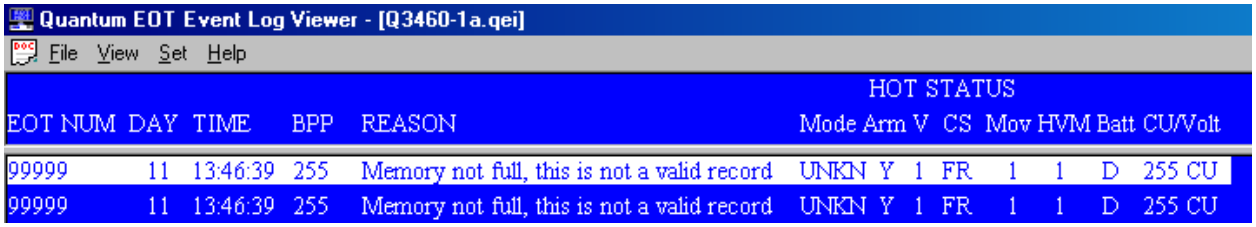


Figure B3 - Unused Event Log Records

## APPENDIX C – ALIGNMENT

**⚠ WARNING**

**WARNING**

**ALIGNMENT MUST ONLY BE PERFORMED BY QUALIFIED AND TRAINED SERVICE PERSONNEL.**

The DTX module is aligned at the factory before shipment and should need no further adjustment. It is possible that the gain settings for the audio input and output signal paths may need optimized. The frequency trim, deviation, and balance should not need adjustment. The procedure for performing all of the alignment steps is detailed below. The unit should not be opened for alignment; all adjustments are electronic and effected through the programmer software.

### C.1 REQUIRED TEST EQUIPMENT

Depending upon which alignment steps are to be performed, some or all of the following pieces of test equipment may be required:

DC Power Supply -capable of operating at the correct voltage for the module and capable of 2.5 Ampere minimum current.

RF Signal Generator-capable of operating at the carrier frequency of the module with an output level adjustment and able to be frequency modulated.

FM Demodulator/Deviation Meter-capable of operating at the carrier frequency of the module.

RF Frequency Counter-must operate at the RF frequency of the unit with a resolution of 10 Hz or better and an accuracy of +/-1 ppm (+/-150 Hz at VHF, +/-450 Hz at UHF) or better.

Audio Oscillator-must have sine wave output allow for output frequency and amplitude adjustment.

Oscilloscope

RF Power Attenuator or Dummy Load with coupled output-must be 50 ohms impedance at the operating frequency and rated for the output power of the module and have an output which can drive the FM demodulator at the correct level and the frequency counter.

RF Power Meter-capable of accurately indicating the RF output power of the module.

***NOTE***

**NOTE**

Except for the power supply, a two-way radio test set may include most, if not all, of the required equipment.

## C.2 ALIGNMENT PROCEDURE

It is not absolutely necessary to perform all of the alignment steps detailed below. However, some adjustments interact with others e.g. balance affects deviation, deviation affects AUX IN gain, and the output power AUX IN gain have a slight effect on TX frequency trim. It may be prudent to spot check all of the adjustments which interact. These will be indicated in the particular alignment step.

The programmer must be connected to the unit via the programming interface cable and the alignment screen selected. During alignment, the channel may be selected via the channeling control lines on the module or through the programmer. A channel pull-down menu allows for the selection. Also, the unit can be keyed through the programmer, if desired.

***NOTE***

**NOTE**

Interrupting the power supply to the unit while the programmer software is open will require exiting the software and re-opening it.

### C.2.1 RX FREQUENCY TRIM

The RX Frequency Trim trims the unit frequency during receive. This setting, if incorrect, may degrade receive sensitivity, distortion, and possible recovered audio level, which in turn affects AUX OUT (RX) Gain and Audio PA Gain. The receive frequency trim is not affected by any other alignment step.

To determine if the receiver is correctly trimmed to frequency, the 1st local oscillator frequency must be measured.

**⚠ WARNING**

**WARNING**

**DO NOT KEY THE UNIT DURING THIS PROCEDURE AS SERIOUS DAMAGE TO THE COUNTER MAY RESULT!**

A channel with a receive frequency programmed into it should be selected. The correct local oscillator will be displayed on the programmer channel box. The frequency on the counter should be observed and the RX Frequency Trim value adjusted for least error. Because of the very low local oscillator level at the antenna terminals, the frequency counter may not be able to read the frequency. If so, perform the TX Frequency Trim adjustment detailed later and set the RX Frequency Trim value to match that of the proper TX Frequency Trim value.

### C.2.2 AUX OUT GAIN

To set the AUX OUT gain, an RF signal generator must be connected to the DTX module. Its frequency should be set to that of a programmed channel. The generator should be modulated at the desired deviation, typically 60 % of maximum, with a 1 kHz tone. The RF output level is

not critical, but should be above any squelch threshold which may have been set. –70 dBm should be sufficient. If not, squelch can be disabled via the settings menu of the programmer for this procedure.

With an oscilloscope connected to the AUX OUT output, the AUX OUT Gain setting should be set to value which produces the desired output level.

***NOTE***

**NOTE**

The output impedance of the AUX OUT is about 600 ohms. If the load impedance of the load that will be connected to this output is less than 10 kΩ or so, a resistor of a value equal to the load impedance should be connected to the AUX OUT output when making the adjustment.

### C.2.3 AUDIO PA GAIN

To set the Audio PA gain, an RF signal generator must be connected to the DTX module. Its frequency should be set to that of a programmed channel. The generator should be modulated at the desired deviation, typically 60 % of maximum, with a 1 kHz tone. The RF output level is not critical, but should be above any squelch threshold which may have been set. A –70 dBm level should be sufficient. If not, squelch operation can be disabled via the settings menu of the programmer.

With an oscilloscope connected to the AUDIO OUT output, the AUDIO OUT Gain setting should be set to value which produces the desired output level.

### C.2.4 CARRIER DETECT ON AND CARRIER DETECT OFF

The Carrier Detect On and Carrier Detect Off settings control the RF level (or Signal-to-noise ratio) at which the DCD output goes true and what level at which it goes false. To prevent chattering on noise, these two settings are not normally the same. 3 to 5 dB of hysteresis is usually provided i.e. if the RF signal level is increased from zero, at some point, the DCD output will go from false to true. The RF level may then have to be decreased by several dB before the DCD output goes false again. This prevents chattering with signal levels near the carrier detect level. If squelch is enabled, the receive audio muting will follow the DCD output. The desired carrier detect levels can be directly entered via the alignment screen in dBm and then fine-tuned with a high quality signal generator, if necessary.

To determine the state of the DCD output, connect a DC coupled oscilloscope or DVM to the DCD output. It may help to disable the squelch via the Monitor input or Monitor button on the programmer so that the receive audio signal can be continuously observed i.e. not squelched when DCD is false.

### C.2.5 TX LOW POWER AND HIGH POWER

The transmitter output power level can be programmed on a per channel basis via the alignment page of the programmer. If RNet Compatibility has not been programmed on the settings page, both the low and high power levels can be set. If RNet Compatibility has been programmed, only high power can be set. The TX High Power and TX Low Power settings in the TX Power box act to select a common value for all channels. Individual values for each channel can be entered in the per channel boxes at the bottom of the screen. Power is set in watts with a resolution of 0.1 watt. The power level can be confirmed and fine-tuned, if desired, by connecting the radio to an accurate wattmeter.

### C.2.6 AUX IN GAIN

To set the Aux In gain, an audio oscillator or appropriate signal source (e.g. modem) should be connected to the Aux In input at the desired input level. An FM deviation meter should be connected to the antenna connector through a suitable attenuator or coupler. The unit should be keyed for transmit and the Aux In gain should be adjusted for the desired deviation, typically 60% of rated deviation.

### C.2.7 TX FREQUENCY TRIM

This setting is used to trim the transmitter to frequency. This value should not normally need adjustment. However, as the unit ages and/or if the transmitter power or the Aux In gain is changed significantly, slight corrections may be prudent.

***NOTE***

**NOTE**

Any adjustments must be made at a unit temperature of 25 ±2 °C (77 ±1.8 °F). Due to internal heating, this adjustment must not be made after the unit has been transmitting unless it has been allowed to cool to the correct temperature. Likewise, the adjustment itself should be made as quickly as possible.

The unit should be set to a channel which is at an output power which is close to what will be used the majority of the time. The RF output of the unit should be coupled to a frequency counter through a suitable attenuator or coupler. Ensure that no modulation source is connected to the MIC IN or AUX IN. The PTT should be activated and the TX Frequency Trim value adjusted for the correct frequency. The value can be changed while the unit is transmitting.

### C.2.8 DEVIATION AND BALANCE

The deviation adjustments are used to set the maximum limiting deviation of the transmitter. This must be set properly to ensure that the unit will meet the regulatory spurious emissions requirements, in particular, occupied bandwidth. The balance adjustment is used to ensure a proper relationship between the modulating signal to the reference and to the VCO. If the ratio i.e. balance is not correct, the transmit audio frequency response will not be correct which could result in a distorted data waveform.

The optimum values for deviation and balance vary in a predictable manner as a function of carrier frequency. In order to relieve the user of having to adjust deviation and balance each time a transmit frequency is entered or changed the radio calculates the required values based upon the correct values for two special alignment frequencies. These required values have already been determined at the factory and are stored in the unit. As transmit frequencies are entered or changed, new calculated values will appear in the per channel boxes at the bottom of the screen. These values can be changed on a channel by channel basis, if desired.

The procedure detailed here is for setting the deviation and balance at the special alignment frequencies so that the deviation and balance will be correct at any programmed frequency. This same procedure can be used to set any given channel values in the per channel boxes.

An FM demodulator should be connected to the RF output of the module through a suitable power attenuator or coupler. The demodulator filters should be set for no de-emphasis, as low a high pass cutoff as possible (<50 Hz, preferably down to DC), and a low pass cutoff of approximately 15 kHz. The demodulator output should be connected to an oscilloscope so that it can be observed.

An audio oscillator should be connected to the AUX IN input. The output waveform should be sine, the level at zero, and at a frequency of 500 Hz. Confirm that the Aux In Gain value is at least 10.

On the channel drop-down menu, select lower band edge. Activate the PTT, and while observing the demodulated waveform on the oscilloscope, begin increasing the audio oscillator's output level or the Aux In setting. The waveform should begin as a sine wave and at some point show clipping. The clipped portion may not necessarily be flat. The audio oscillator level should be set so that a substantial portion of the waveform is clipped, at least 50 %. Adjust the balance value so that the clipped portion is flat i.e. horizontal rather than tilted. Although the programmer can change values while transmitting, it is better to unkey between value entries. After the balance is set, the deviation should be set to a value of 1.2 kHz for a very narrow channel, 2.3 kHz for a 12.5 kHz channel or 4.6 kHz for a 25/30 kHz channel. Select the upper band edge on the channel menu and repeat. As a result of this procedure, the per channel balance and deviation values may have changed.

**NOTES**

## NOTES

**NOTES**

**Siemens Industry, Inc.**
2400 Nelson Miller Parkway
Louisville, Kentucky 40223
(502) 618-8800

**Siemens Industry, Inc.**
California R&D Division
9568 Archibald Ave., Suite 100
Rancho Cucamonga, California 91730
(909) 532-5300