SIEMENS
Ingenuity for life

Smart Metering: Spotlight CEZ Distributie Oltenia (Romania)

Lukas Gebhardt I Portfolio Manager
Cosmin Ghita | Director of Digitalization & Innovation

Major factors driving the revolution of energy systems…

SIEMENS
Ingenuity for life

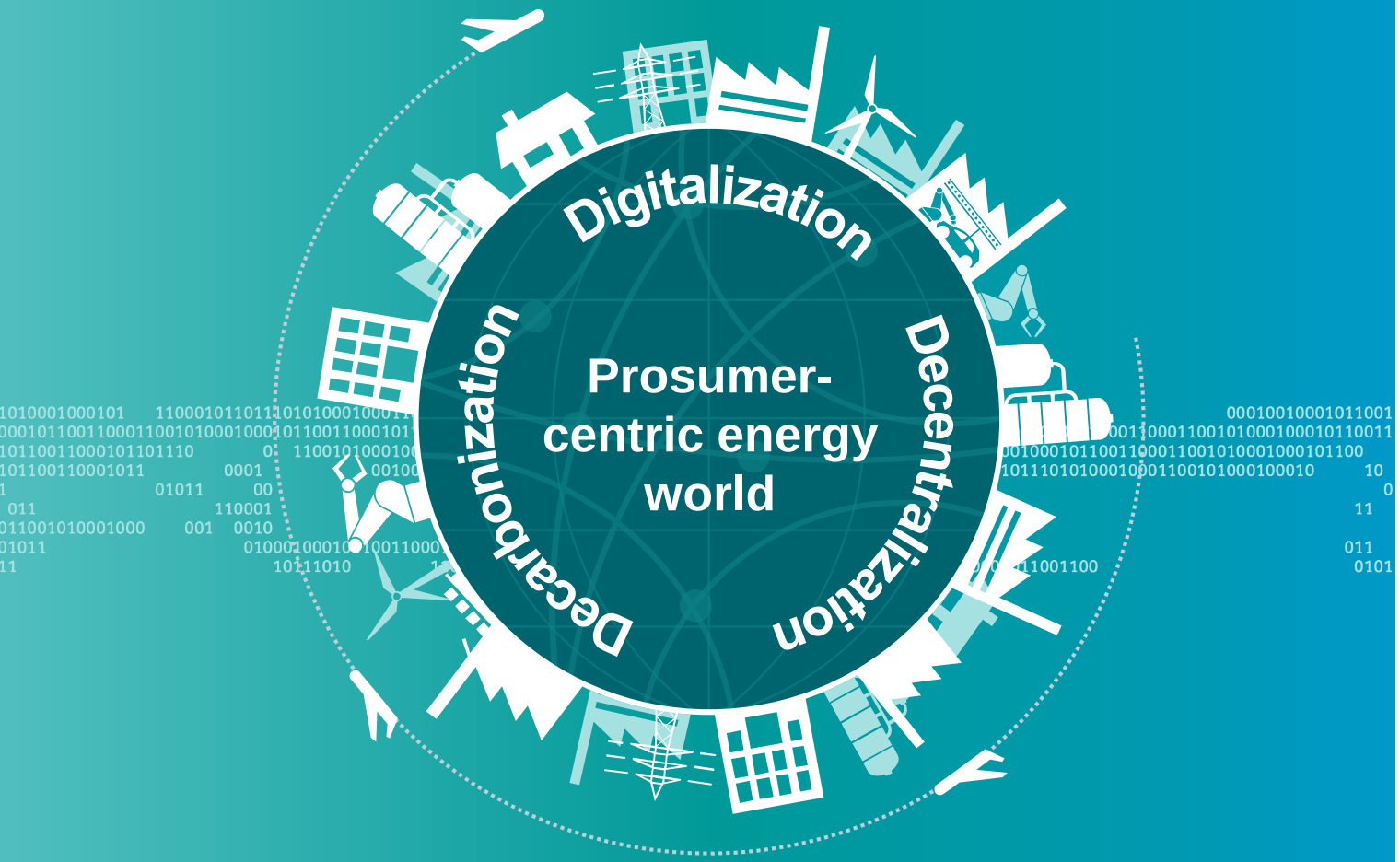

Decarbonization

"All electric world" - Fluctuating infeed – e-Mobility

CO2

Power production from renewables
Increases by over 300% between 2010 and 2030
Share of renewables goes up to 40% in 2030

Decentralization

Distributed generation – Microgrids – Energy autonomy

New installations distributed power generation
Increases by over 150% between 2010 and 2030
Share of distributed goes up to 67% in 2030

Digitalization

Connectivity - Grid edge - End-to-end

New installations global smart meters
Increases by 200% between 2015 and 2025
Reaches 100 million p.a. in 2025

Smart Metering is a major driver of the digital transformation of energy systems

Metering system architecture
Siemens supplies all system elements

SIEMENS
Ingenuity for life

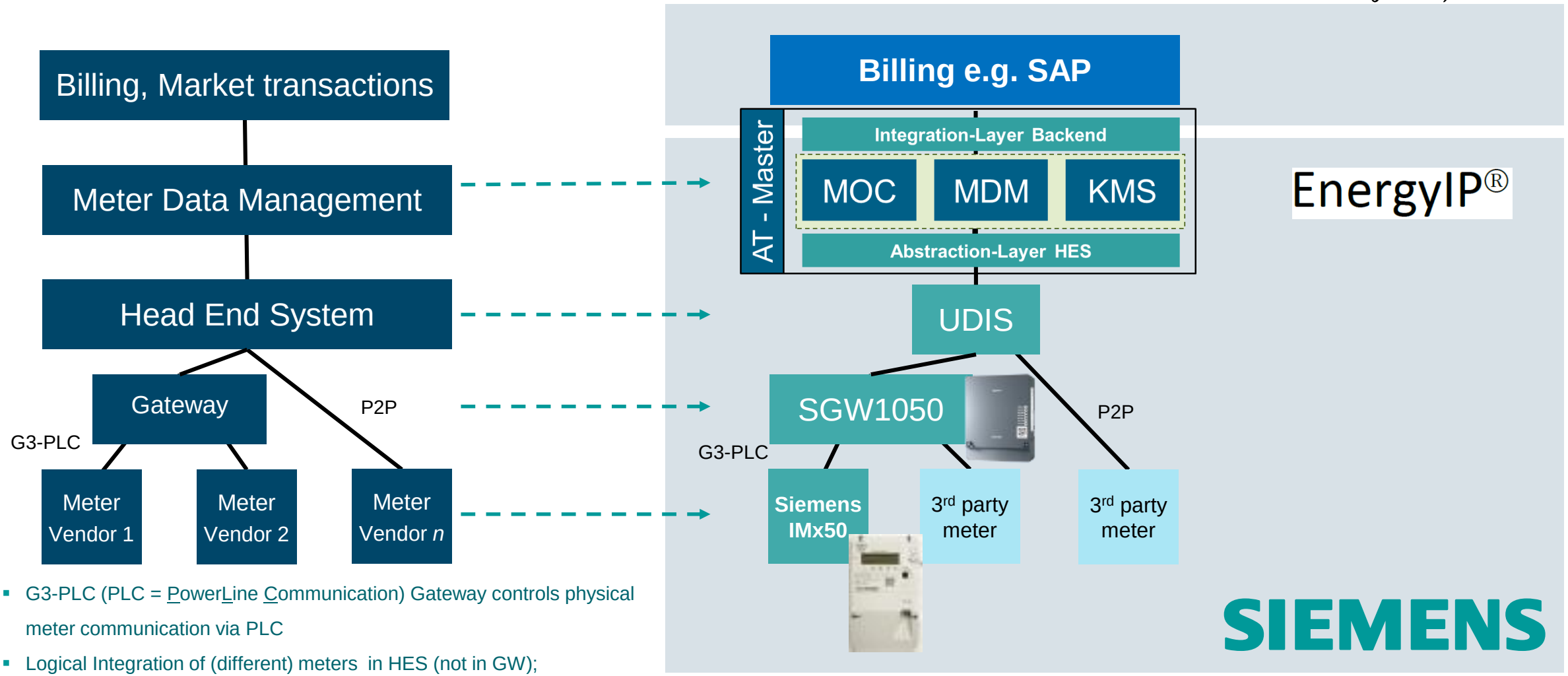

- G3-PLC (PLC = PowerLine Communication) Gateway controls physical meter communication via PLC
- Logical Integration of (different) meters in HES (not in GW);
- Secure E2E-communication between meters and HES

Siemens offers EnergyIP powered by MindSphere a future proof solution platform for the all electric digitalized energy world

EnergyIP powered by MindSphere – Flexible scalable platform for more and more smart grid applications

SIEMENS
Ingenuity for life

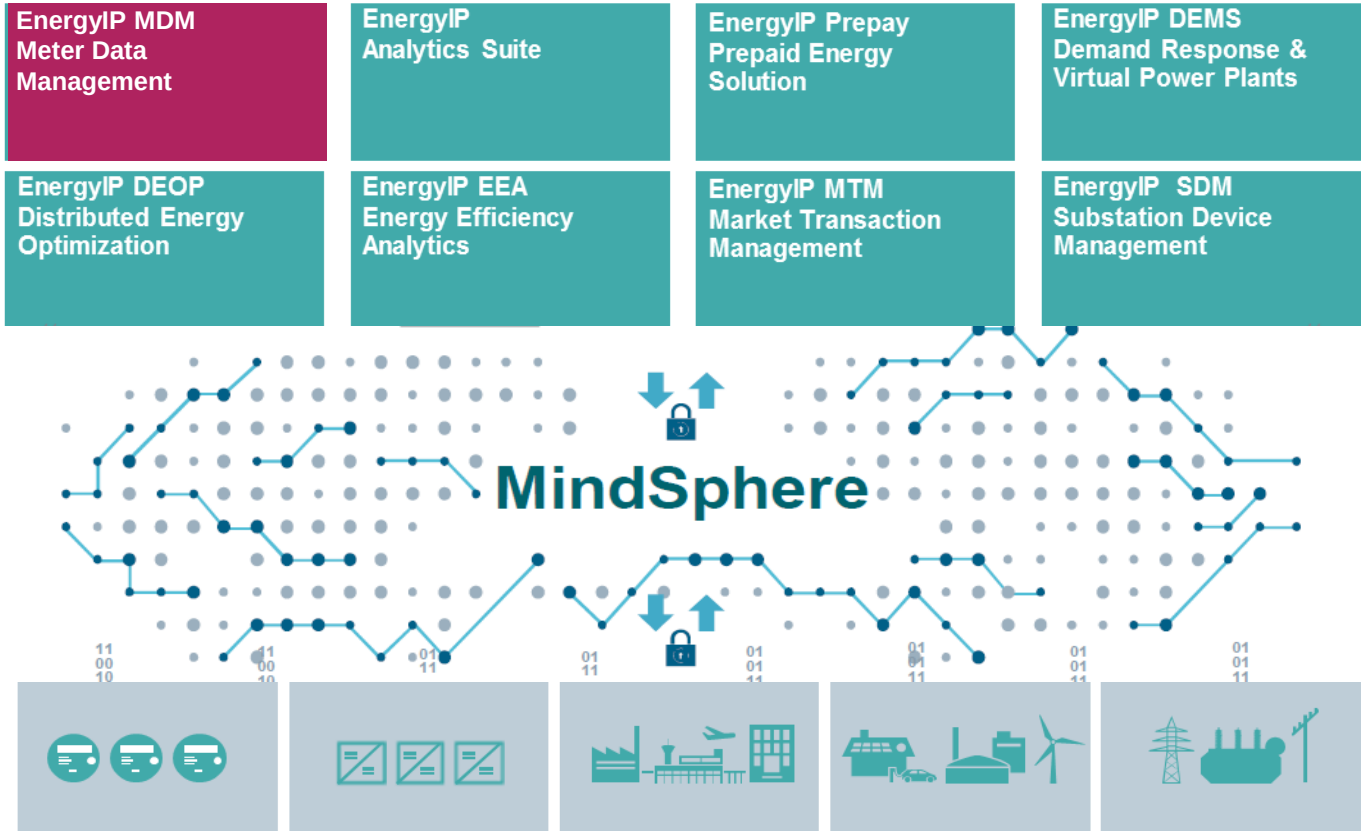

- Powerful IoT-platform for management of data from millions of distributed assets in near real time
- Efficient IT-OT integration between IT-applications and field devices
- Utility data model to interpret data from energy assets
- Bi-directional, closed-loop communication
- **No CAPEX, less risk with Software as a Service. Running in a virtualized public data center e.g. AWS**

EnergyIP MDM powered by MindSphere Highlights

SIEMENS
Ingenuity for life

- Process meter data from various smart meter vendors automatically to implement efficient processes for
- **Data validation and estimation** – automatically identify and correct device errors, wrong measurement values to ensure complete and accurate data sets
- **Meter to cash – automatically transfer billing relevant data to billing system (e.g., SAP)**
- Flexible application support via single point of integration to CIS and other systems
- Out of the box reporting and AMI vendor independent

Figure 1. Magic Quadrant for Meter Data Management Products

EnergyIP Grid Application Platform and applications are proven in 80 installations worldwide

SIEMENS
Ingenuity for life

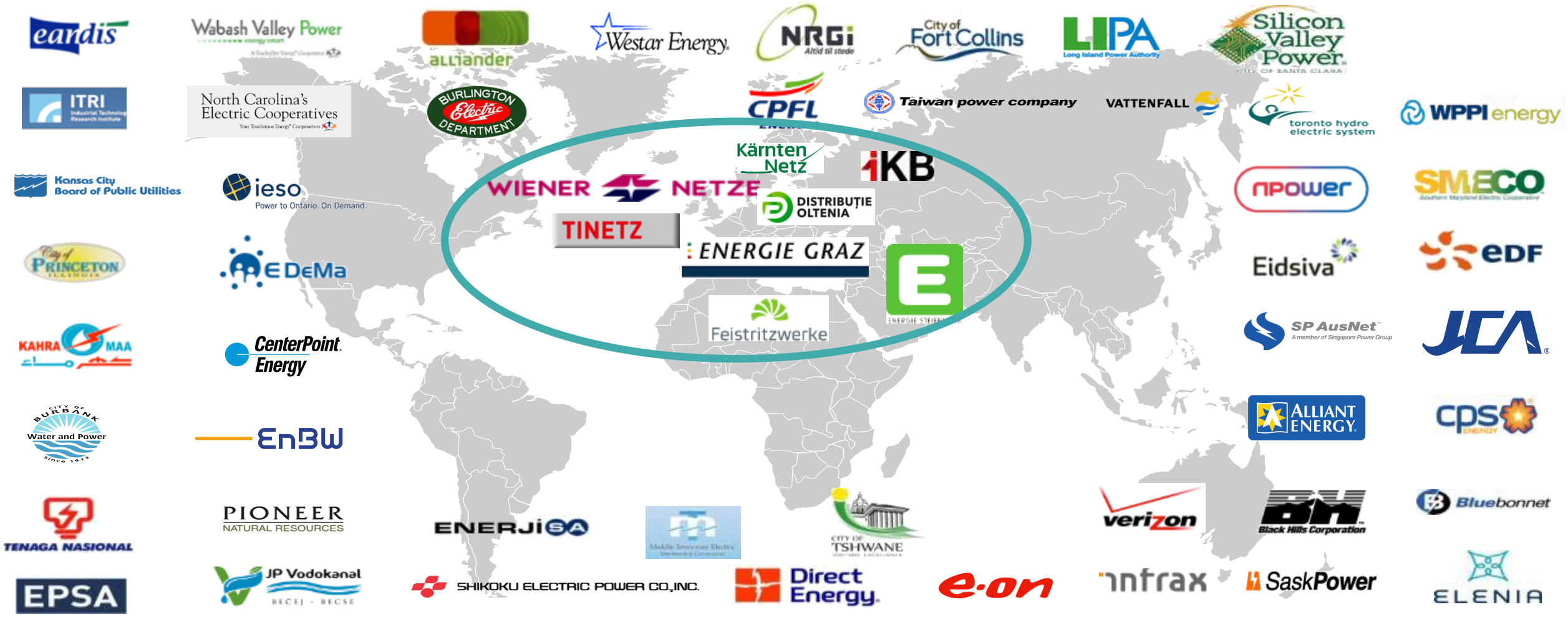

Actual Smart Meter projects with Siemens Austria participation
4’4 Mio meter points contracted with AT-Master

SIEMENS
Ingenuity for life

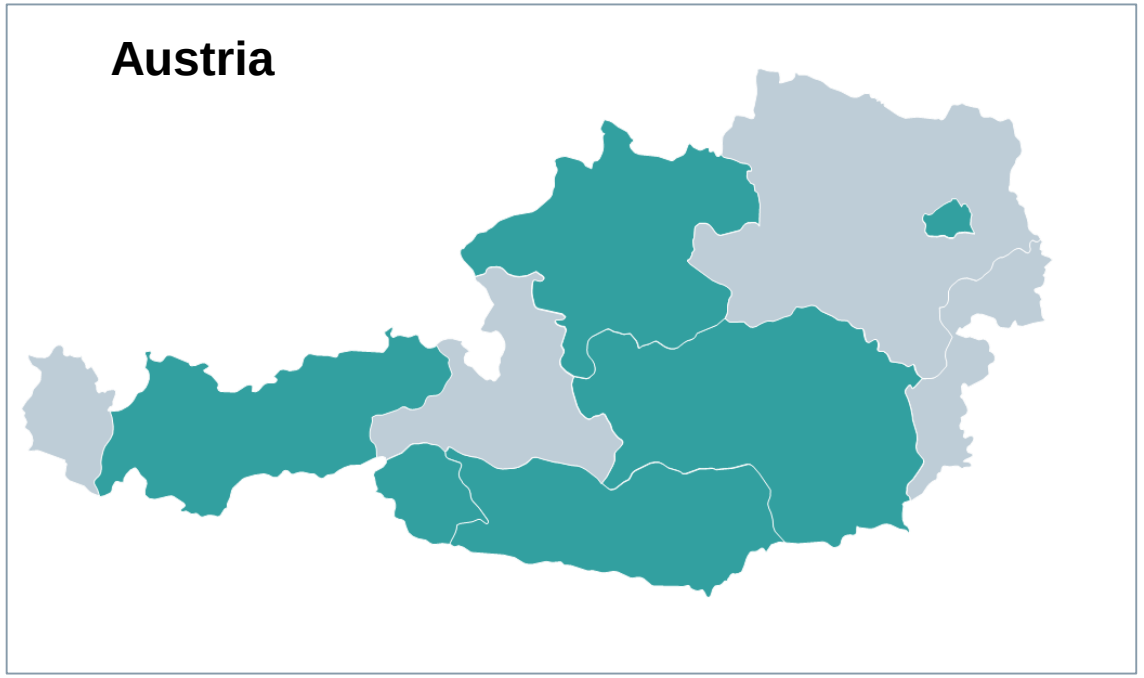

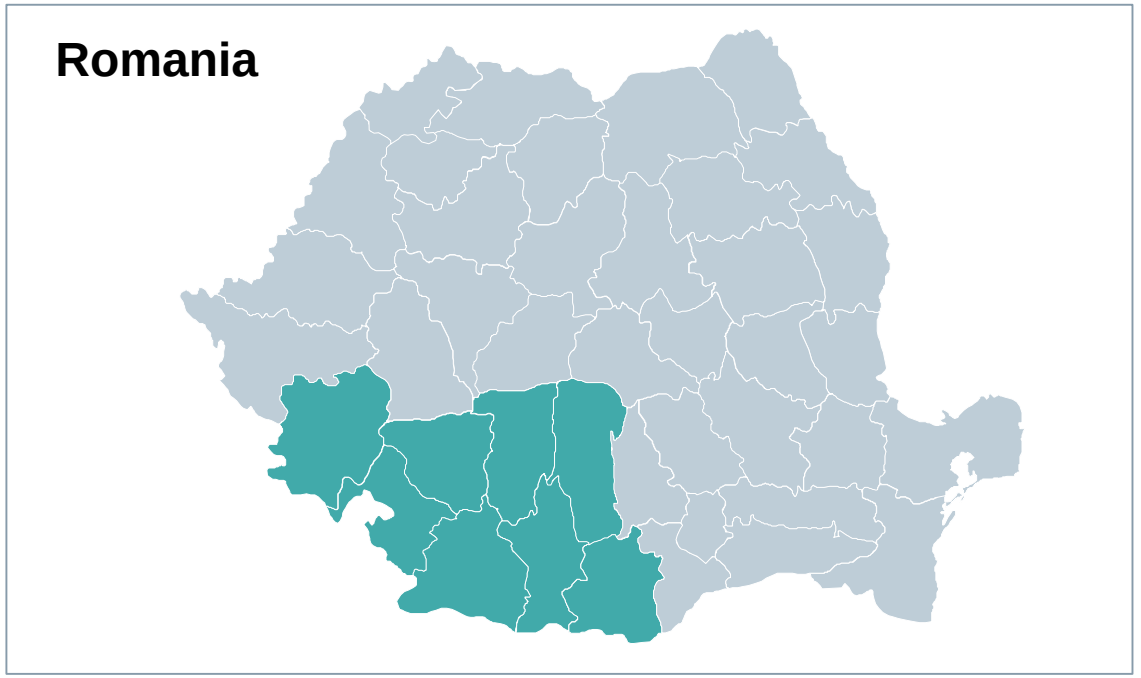

FOCUS TOPICS

Operational Efficiency | **End-to-End Security** | **Business Process Optimization**

Smart meter projects with Siemens participation

Operational Efficiency

Focus topics of Smart Metering
Operational Efficiency: MOC is our answer

SIEMENS
Ingenuity for life

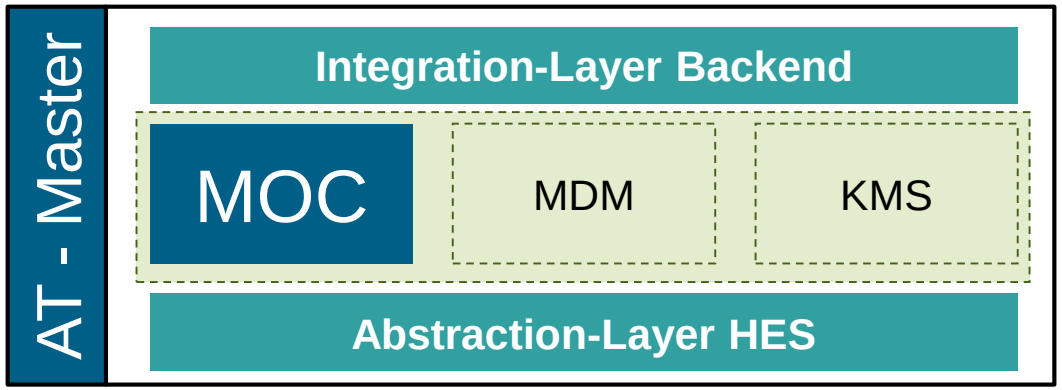

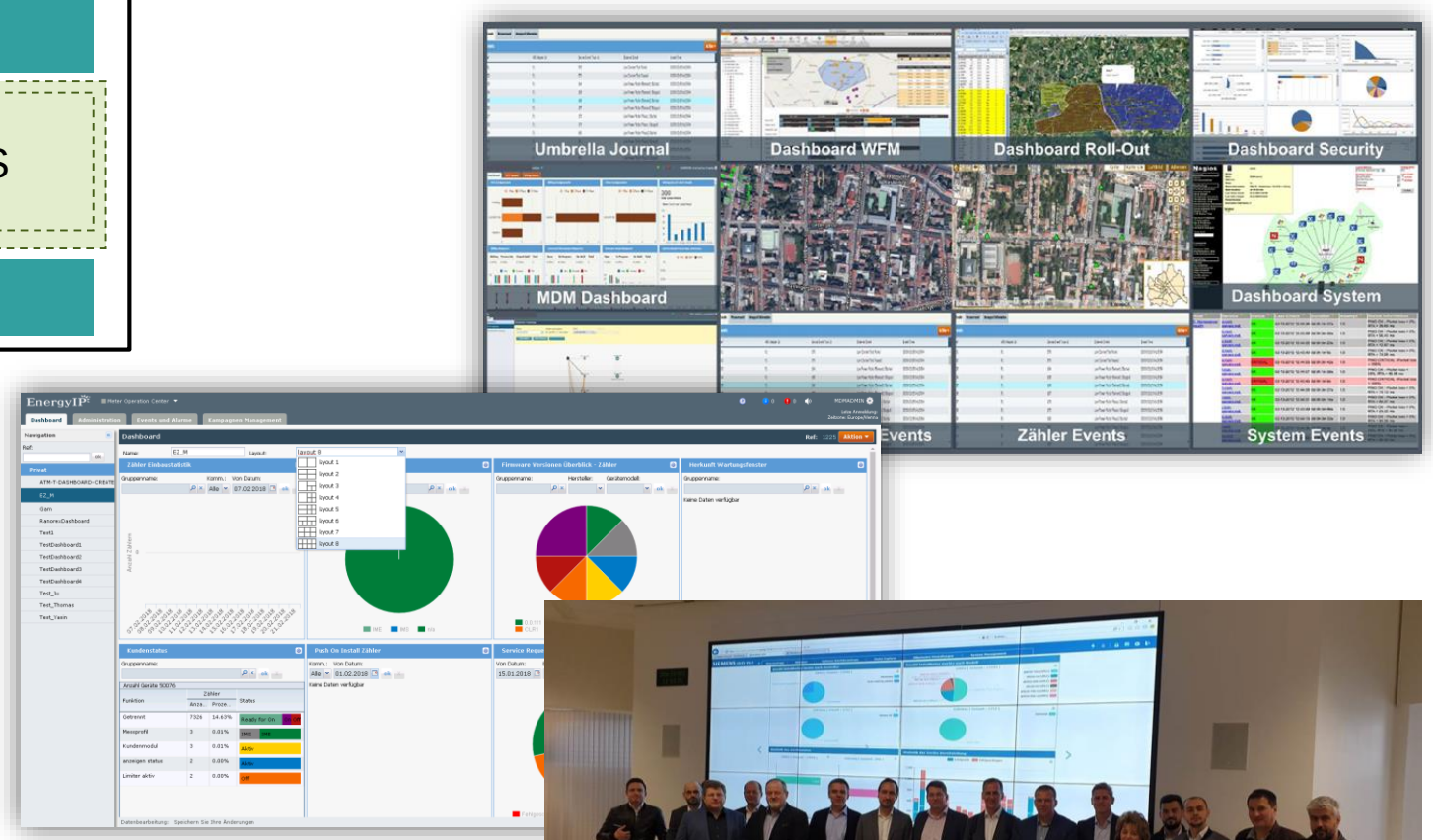

Metering Operation Center (MOC)

- Group Management
- Alarm & Event Correlation
- Campaign Controls
- Dashboards
- GIS Integrations

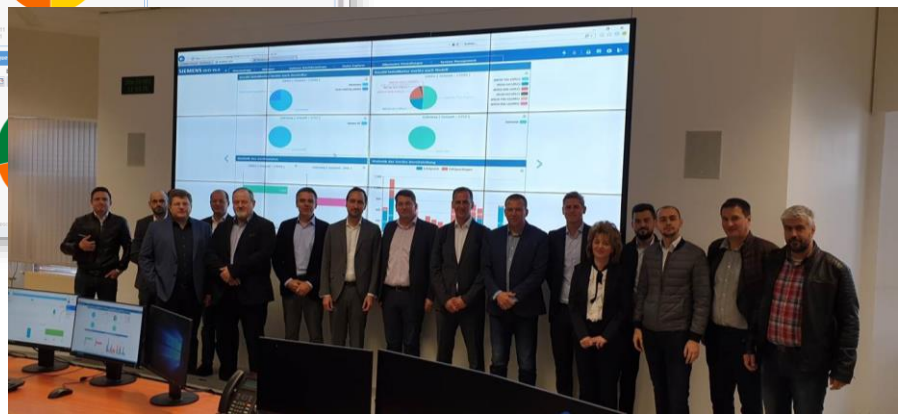

End-to-End Security

Focus topics of Smart Metering
End-to-End Security: KMS is our answer

SIEMENS
Ingenuity for life

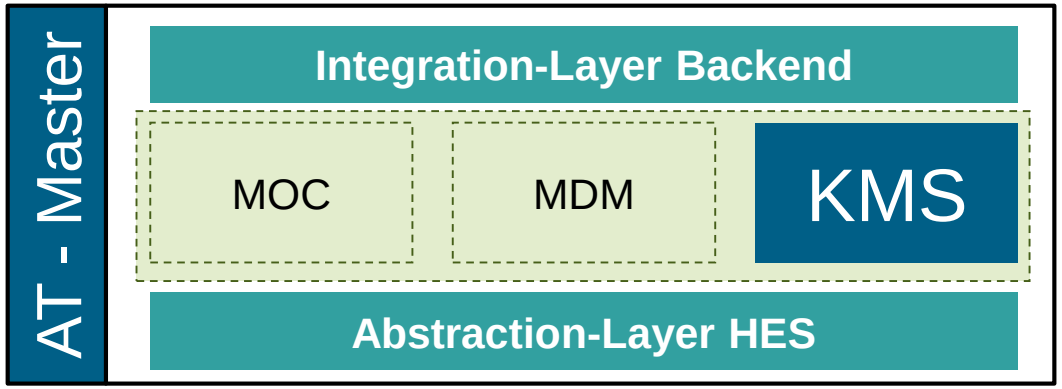

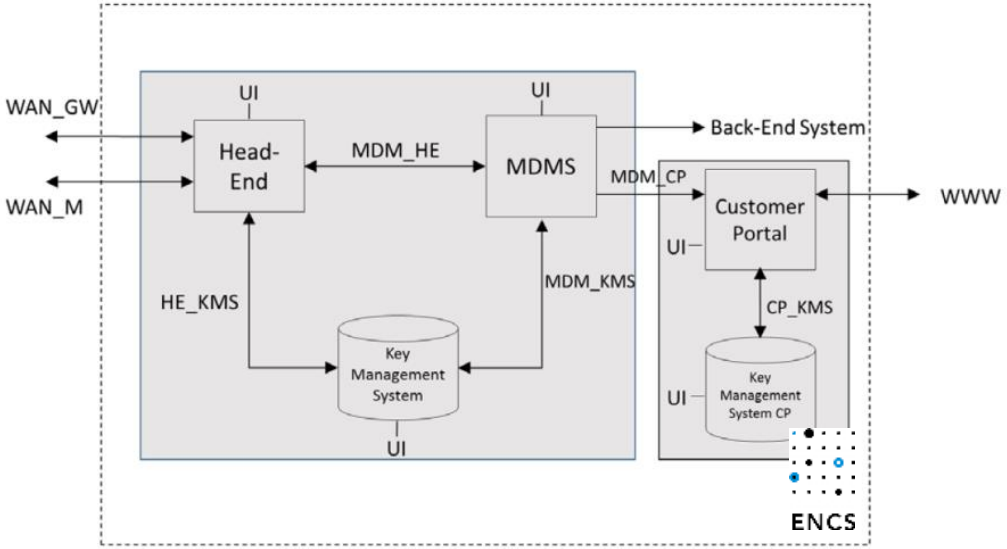

Key Management System (KMS)

Responsible for **Key Management**

- Secure Storage of device keys for each meter role
- Key life cycle management
- Backup & Recovery of symmetric device keys

Responsible for **Key Usage**

- Message de-/encryption, signing and signature validation

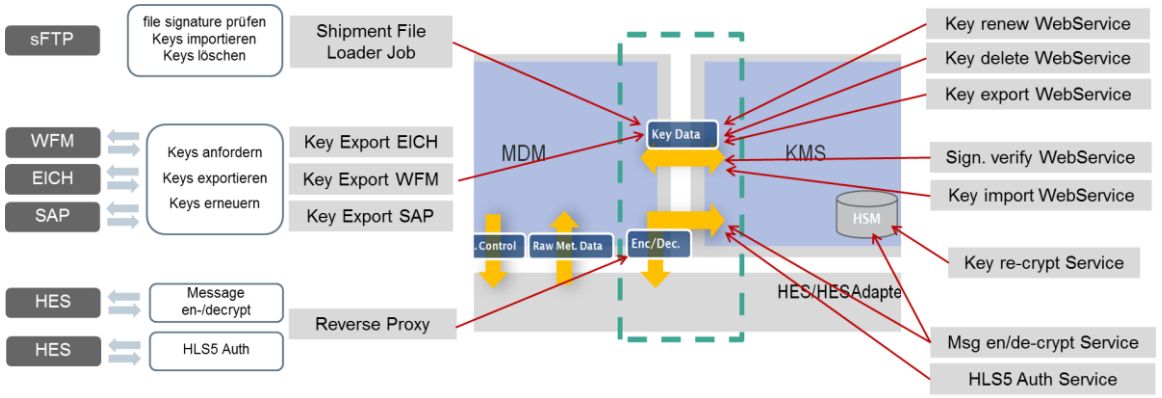

Business Process Optimization

Focus topics of Smart Metering
Business Process Optimization: AT-Master is our answer

SIEMENS
Ingenuity for life

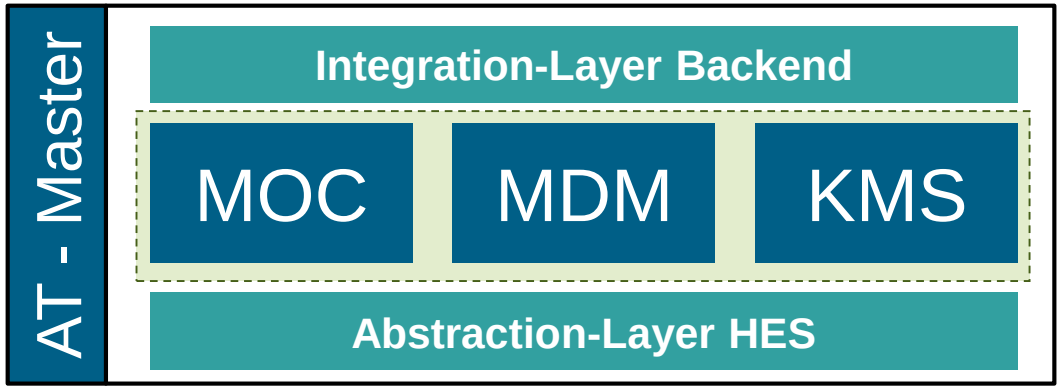

AT-Master = MDM + MOC + KMS + Interfaces

Template to cover the business needs of Smart Metering

In total 93 Use-Cases (IDIS, ÖE,…) clustered in 12 groups:

- Select
- Switch off / release for recommissioning
- Parameterization
- Firmware Upgrade
- Events/Alarm
- Calibration/Testing
- Gateway / Dataconcentrator
- Security
- Installation and Commissioning
- Measurement Data
- Master Data Synchronization
- Management
- Device Status
- On-site Use Cases
- Load Management

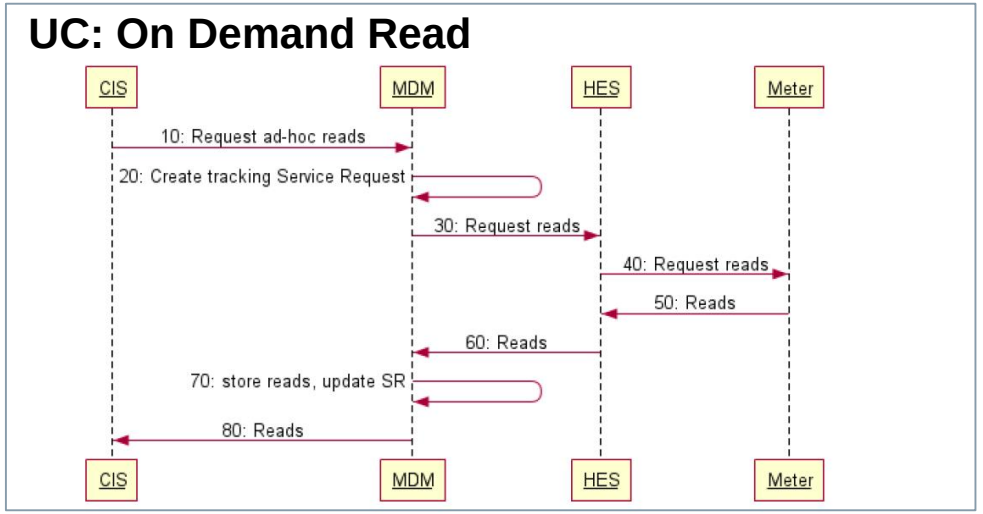

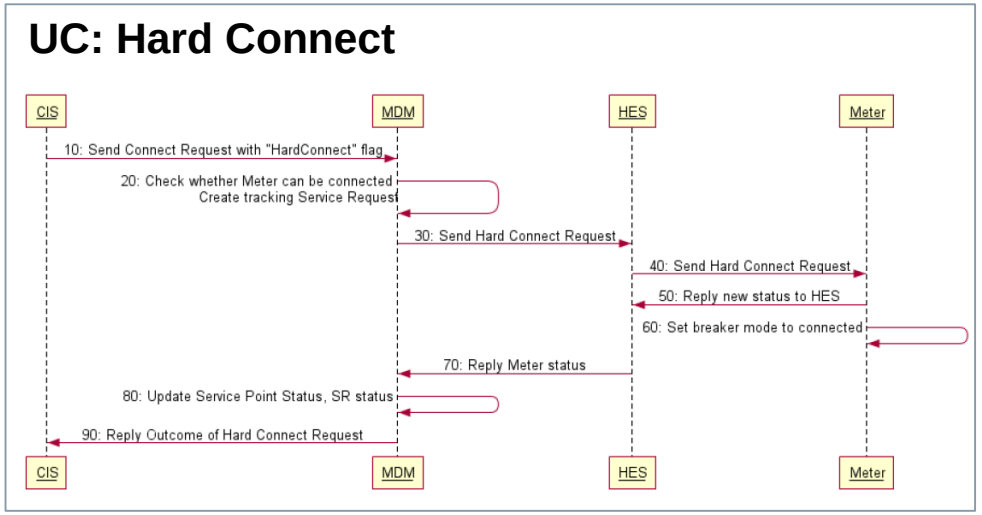

Smart Metering: Spotlight CEZ Distributie Oltenia (Romania)

DISTRIBUȚIE OLTENIA

SMART METERING IN ROMANIA

DEO presentation

June, 2019

Vienna

FROM A CZECH COMPANY TO A MULTINATIONAL GROUP – CEZ AS INVESTMENT IN ROMANIA

Hydroelectric system of **micro hydro-plants in Caraş Severin**

- 30 mill. Euros invested in the refurbished processes
- **Installed capacity**: 18 MW before the refurbishment and almost 22 MW after refurbishment

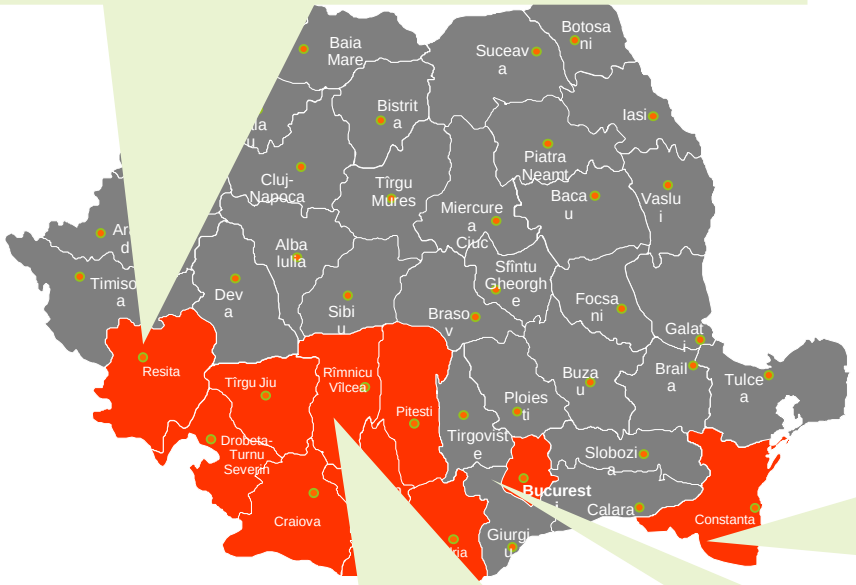

The **wind park** form Fântânele, Cogealac and Grădina

- 1,1 bln. Euros investment
- Installed capacity: **600 MW**

The CEZ wind park is the largest on shore wind park in Europe

Stage Fântânele:

- First stage of the project– **139 wind turbines**;
- Construction began in October 2008
- Was connected to the grid in June în 2010

Stage Cogealac:

- Second stage of the project - **101 wind turbines**;
- End of construction: Dec. 2012

Distribuţie Oltenia: energy distribution in 7 Counties (in the area of former Electrica Oltenia)

CEZ Vânzare: supplier for more than 1,3 mil. de clients (economical and house holders)

CEZ Trade: energy transaction (en-gros market)
CEZ România: management and services supplier for the companies of CEZ Group in Romania)

INITIAL NATIONAL SMART METERING IMPLEMENTATION PLAN WAS 80% DEPLOYMENT BY 2020

DISTRIBUȚIE OLTENIA

Smart metering implementation – high benefits estimated

2012 ATKearney study for Romania prepared for ANRE showed benefits in 80% deployment

Financial input	ATK case
Equipment lifetime	20 years for technical 15 years for WiMAX, fiber optics 5 years for IT&C
Comms. technology	**PLC 99%, GPRS 1%**
Inflation	Flat, at 4%
Discount rate	Flat, at 7.5%
CPT split	63% technical 37% non-technical
Decrease in non-technical CPT	**60% reduction from current level**
Decrease in OPEX	**100% decrease in disconn/ reconn. (process automation)**
Decrease in intervention time/cost	1% reduction of time to perform maintenance

Pilot projects were deployed by each DSO in order to confirm initial assumption and test PLC technology

DEO IMPLEMENTED SO FAR 34 THS. SMART METERS IN SEVERAL AREAS AND TESTED DIFFERENT PLC TECHNOLOGIES

DISTRIBUȚIE OLTENIA

Smart metering implementation – pilot projects

2012 DEO Pilot	▪ Upgrade network included: • Urban area, block of flats • Urban area, houses • Rural area • Rural isolated area	▪ DEO ~1.2 ths. meters: • Craiova • Carceni & Cordun • Satic
2013 Pilot ANRE Order	▪ Urban area, old network ▪ Urban area, modernized network ▪ Rural area, old network ▪ Rural area, modernized network	▪ DEO ~13 ths. meters: • Craiova • Carcea • Podari
2014 Pilot ANRE Order	▪ Urban area, modernized network ▪ Rural area, modernized network	▪ DEO ~20 ths. meters: • Craiova • Carcea
PRIME & G3 test	▪ Lab tests ▪ Urban area, modernized network ▪ Urban area, old network	▪ DEO 320 meters: • Craiova

ROLLOUT DEPLOYMENT STRATEGY WAS TAILORED TO FIT DEO SPECIFIC NEEDS AND MAXIMIZE BENEFITS

DISTRIBUȚIE OLTENIA

Smart Metering deployment prioritization and strategy

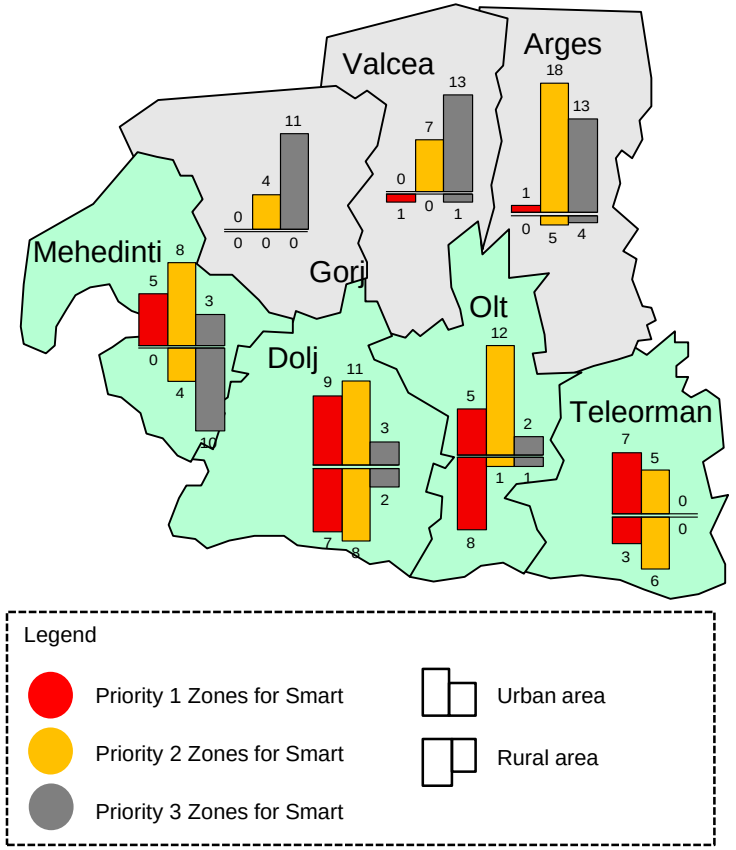

Prioritization strategy

- Multi-criteria analysis applied to SS's considers:
  - Losses (40%)
  - Periodic replacement (40%)
  - Depreciation(20%)
- SS's grouping by zones:
  - no. of consumers: limited at ~4000 consumers, depending on urban/rural environment
  - clearly defined physical limits (such as railways, rivers or boulevards)
  - SS's fully included in a zone (i.e. all consumers of a SS must be part of the same zone)
- Average score for each zone was obtained and used to prioritize.
- Zones were classified into three priority tiers:
  - Priority 1: <3,000
  - Priority 2: 3,000-4,000
  - Priority 3: >4,000

2020	2021	2022	2023	2024
41k meters	83k meters	83k meters	83k meters	98k meters

SMART TRANSFORMATION TARGET IS TO TRANSFORM DEO BUSINESS MODEL, ORGANIZATION & CULTURE

DISTRIBUȚIE OLTENIA

Smart Transformation introduction

Project background

- Multiple **regulatory constrains**
- **Problems** with key indicators: **CPT, SAIDI, SAIFI**
- Limited **resources**
- Necessity of **efficient system integration**

Expected results

- Manage **resources** more **effectively** using available **data for decision making**
- **Decrease paperwork** and **increase analytical** capabilities
- Become more **flexible**, **adaptable** and **compliant**

Status of activities

Completed activities

- Analysis of current and definition of target **processes**
- Scanning of **available IT solutions and vendors**
- Preparation of business & technical **requirements**
- Finalization of **new concepts** (incl. business cases)
- Initiation of **procurement processes** for new systems and services
- Implementation of **new systems**

Next steps

- Smart Metering IT systems **design**
- Solutions **Implementation**, **test and approval**
- **Training and full potential adoption**
- **Change management**

SMART PROGRAM HAS 7 INITIATIVES COVERING ALL MAJOR AREAS OF DISTRIBUTIE OLTENIA

Smart Transformation – Key project components

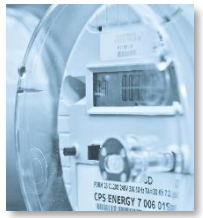

Smart Metering

Meter Data Management

GIS

Mobile Workforce Management

SCADA, sectionalizers & reclosers

Data governance

Enterprise architecture

SMART PROGRAM HAS STANDARD 3 LAYER ORGANIZATION SPLIT INTO 4 STREAMS

SMART Transformation program organization

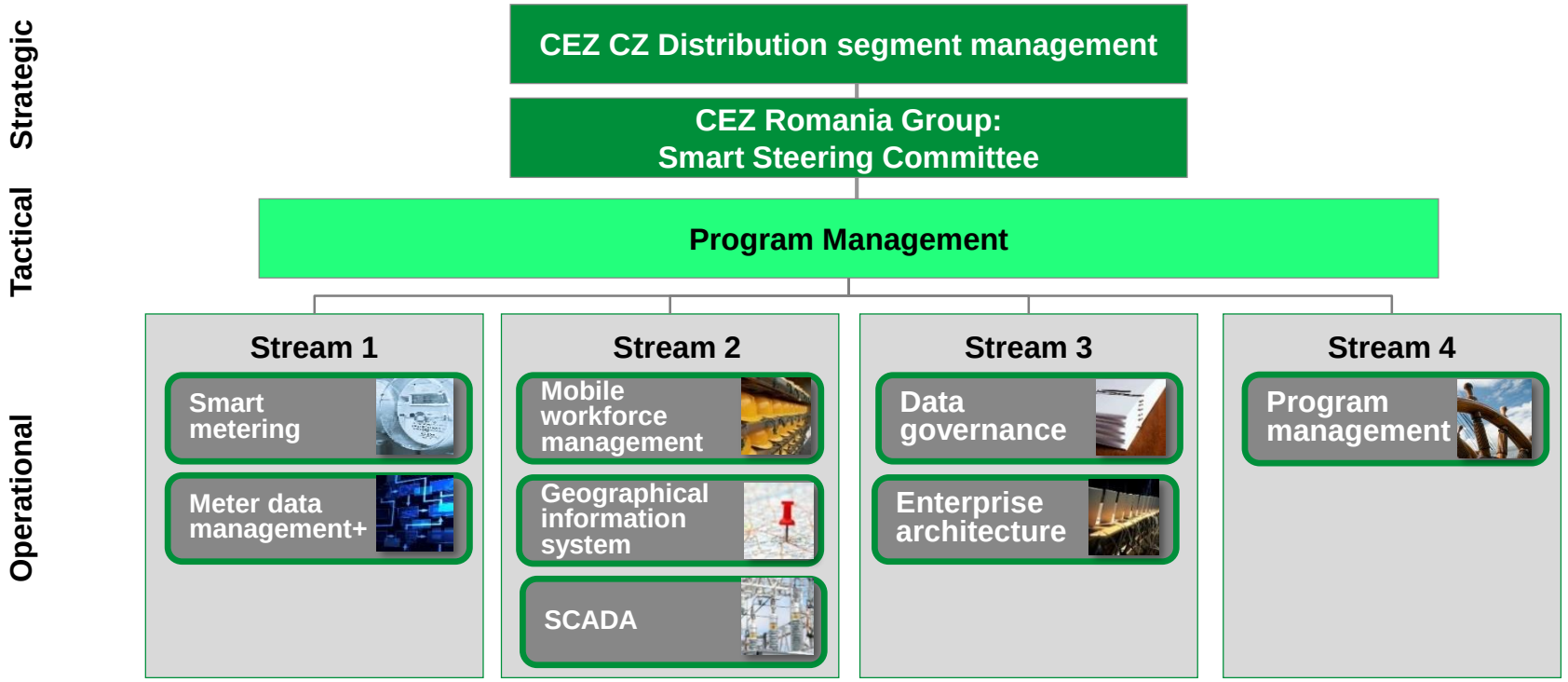

Smart Steering Committee takes place every 2-3 months. Key outputs from the Smart Transformation are presented on the Group Steering Committee

Siemens offers a future proof solution to support customers on their Smart Metering journey

Operational Efficiency

End-to-End Security

Business Process Optimization

Contact

SIEMENS
Ingenuity for life

Lukas Gebhardt
Portfolio Manager

RC-AT SI DG CS&D-APS

Siemensstraße 90
1210 Vienna

Mobile: +43 (664) 80117 83182

E-Mail:
lukas.gebhardt@siemens.com

Cosmin Ghita
Director Digitalization & Innovation

Distributie Oltenia

Cales Severinului 19
200768 Romania

Mobile: +40 (734) 455 886

E-Mail:
cosmin.ghita@distributieoltenia.ro

siemens.at/future-of-energy