© Siemens 2024

SIEMENS

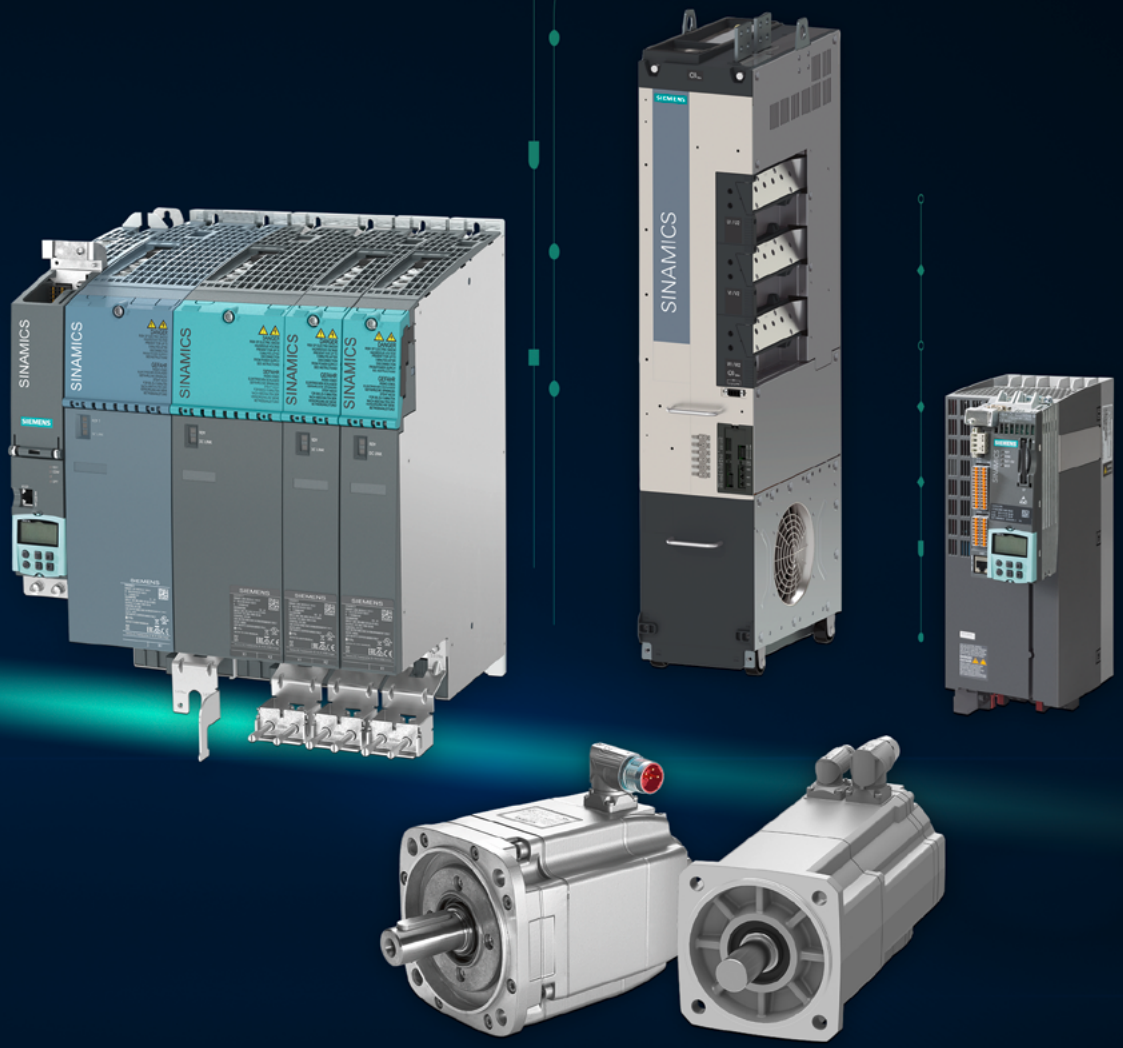

Catalog
D 21.4

Edition
2023

MOTION CONTROL DRIVES

SINAMICS S120, SINAMICS S220 and SIMOTICS

siemens.com/d21-4

© Siemens 2024

Related catalogs

Motion Control Drives D 31.1
SINAMICS Inverters for Single-Axis Drives
Built-In Units

PDF (E86060-K5531-A111-A4-7600)



Motion Control Drives D 31.2
SINAMICS Converters for Single-Axis Drives
Distributed Converters

PDF (E86060-K5531-A121-A3-7600)



Motion Control Drives D 31.5
SINAMICS Converters for Single-Axis Drives
SINAMICS G120X infrastructure converters for HVAC/Water/Wastewater

PDF (E86060-K5531-A151-A4-7600)



Motion Control Drives D 32
SINAMICS S210 Servo Drive System

PDF (E86060-K5532-A101-A9-7600)



Motion Control Drives D 33
SINAMICS V90
Basic Servo Drive System

PDF (E86060-K5533-A101-A3-7600)

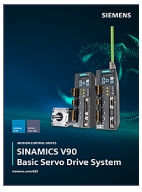

Motion Control Drives D 34
SIMATIC MICRO-DRIVE
Servo Drive System

PDF (E86060-K5534-A101-A3-7600)



SINAMICS S120 D 21.3
Chassis Format Converter Units
Chassis-2 Format Converter Units
Cabinet Modules, Cabinet Modules-2
SINAMICS S150
Converter Cabinet Units
PDF (E86060-K5521-A131-A8-7600)



Motion Control Drives D 37.1
SINAMICS S200 Servo drive system

PDF (E86060-K5537-A111-A2-7600)

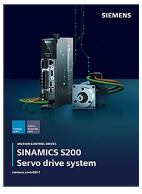

SIMOTICS S-1FG1 D 41
Servo geared motors
Helical, Parallel shaft, Bevel and Helical worm geared motors

PDF (E86060-K5541-A101-A6-7600)



Motion Control NC 63
SINUMERIK ONE
Equipment for Machine Tools

PDF (E86060-K4463-A101-A8-7600)



Motion Control NC 64
SINUMERIK MC
Equipment for woodworking, glass working and stone working machines, as well as special technologies

PDF (E86060-K4464-A101-A3-7600)



Motion Control NC 82
SINUMERIK 828
Equipment for Machine Tools

PDF (E86060-K4482-A101-B1-7600)



Motion Control System PM 21
SIMOTION
Equipment for Production Machines

E86060-K4921-A101-A4-7600



Industrial Controls IC 10
SIRIUS

PDF (E86060-K1010-A101-B5-7600)



Low-Voltage Power Distribution and Electrical Installation Technology LV 10
SENTRON • SIVACON • ALPHA

PDF (E86060-K8280-A101-B7-7600)



SIMATIC ST 70
Products for
Totally Integrated Automation

PDF (E86060-K4670-A101-C0-7600)

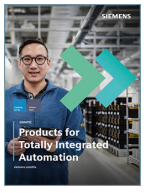

SIMATIC HMI / PC-based Automation ST 80/ST PC
Human Machine Interface Systems
PC-based Automation

PDF (E86060-K4680-A101-D1-7600)



SiePortal
Information and Ordering Platform on the Internet

sieportal.siemens.com



© Siemens 2024

SIEMENS

Catalog
D 21.4

Edition
2023

Combining the real and digital worlds ...
Transformation

MOTION CONTROL DRIVES

SINAMICS S120, SINAMICS S220 and SIMOTICS

siemens.com/d21-4

Dear Customer,

We are pleased to present you with the new Catalog D 21.4 · 2023. The catalog provides a comprehensive overview of the SINAMICS S120 drive system including the SINAMICS S220 Smart Line Modules in booksize format, the associated SIMOTICS motors, the MOTION-CONNECT connection systems and other components. The new edition of the catalog mainly contains updates and technical adjustments.

The products listed in this catalog are also included in SiePortal.

Please contact your local Siemens office for additional information.

Up-to-date information about SINAMICS S120 and SINAMICS S220 is available on the internet at
www.siemens.com/sinamics-s120

www.siemens.com/sinamics-s220

You can access SiePortal on the internet at
https://sieportal.siemens.com

Your personal contact will be happy to receive your suggestions and recommendations for improvement.
You can find your representative in our Personal Contact database at
www.siemens.com/automation-contact

We hope that you will often enjoy using Catalog D 21.4 · 2023 as a selection and ordering reference document and wish you every success with our products and solutions.

With kind regards,

Frank Golüke
Vice President
General Motion Control

© Siemens 2024

© Siemens 2024

SINAMICS S120, SINAMICS S220 and SIMOTICS

MOTION CONTROL DRIVES



Catalog D 21.4 · 2023

Supersedes:
Catalog D 21.4 · 2017
Catalog D 21.4 N · October 2017
Catalog D 21.4 N · April 2022

Refer to SiePortal for current updates of this catalog:
https://sieportal.siemens.com

© Siemens 2024

The products and systems described in this catalog are manufactured/distributed under application of a certified quality management system in accordance with EN ISO 9001 (Certified Registration No. 001258). The certificate is recognized by all IQNet countries.

System overview	1
Firmware functionality	2
Safety Integrated	3
Energy efficiency	4
Communication	5
Technology functions	6
SINAMICS drive system 7.1 SINAMICS S120 drive system 7.2 SINAMICS S220 drive system	7
SIMOTICS motors 8.1 SIMOTICS S servomotors 8.2 SINAMICS M main motors 8.3 SINAMICS L linear motors 8.4 SINAMICS T torque motors	8
Motion Control Encoder measuring system	9
MOTION-CONNECT connection systems	10
Digitalization in drive technology	11
Tools and engineering	12
Drive applications	13
Services and documentation	14
Appendix	15

© Siemens 2024

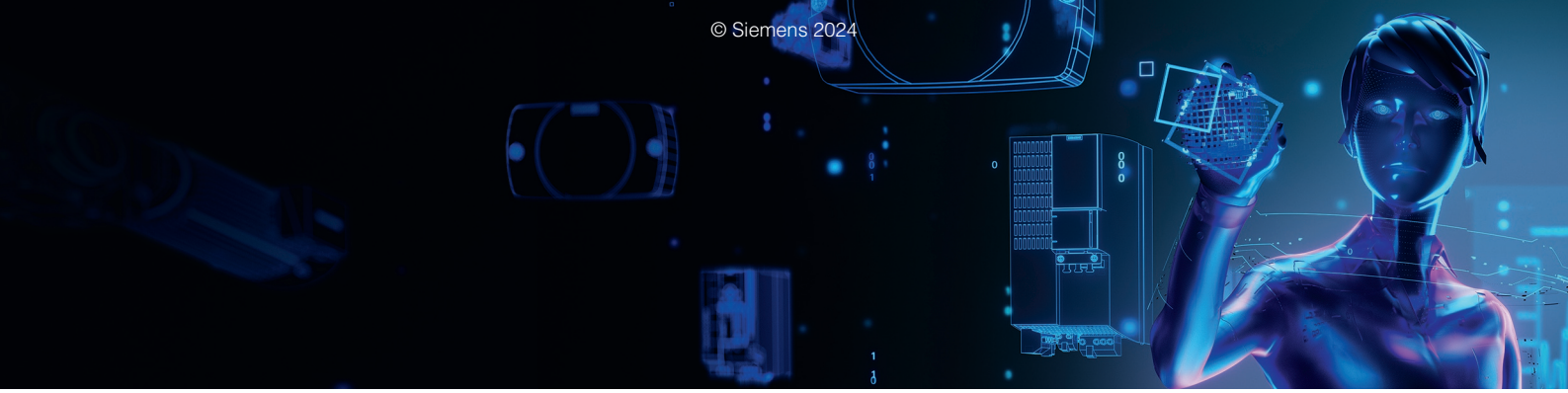

Digitalization in drive technology

From the digital world to the real world

siemens.com/digital-drives

Increase your transparency and productivity by digitalizing your drive technology

Many drives are used in the manufacturing and process industries. They produce lots of data anyway – why not use them to increase the availability and productivity of machines and plants?

Drive technology offers the ideal entry point into the world of digitalization – for plant and machine builders as well as for users.

The digitalization portfolio for the drive train spans over the complete life cycle – from the design phase to realization and optimization – in the digital and the real world.

Our portfolio contains drive simulation solutions and efficient engineering tools, comprehensive connectivity that allows drives to be easily linked to the relevant platforms as well as smart analytics (e.g. cloud and edge apps) and drive system services.

These solutions enable you to gain a better understanding of processes, states and utilization. The health status of the drive train can be monitored and analyzing drive data enables an early detection of anomalies and reduces downtimes.

This way, availability and productivity of machines and plants can be increased and the actual maintenance demand can be identified. Furthermore, data-based business models and service offerings are facilitated.

Our digitalization portfolio covers all phases of the life cycle: from the design phase to realization and optimization. It covers the digital and the real drive train.

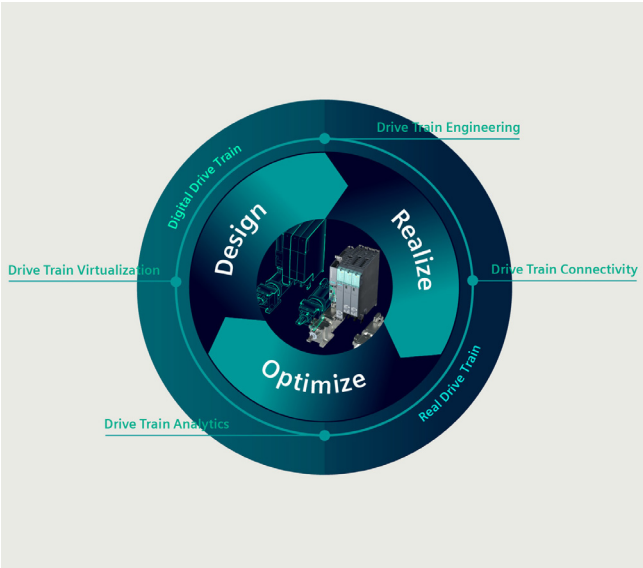

Design: By creating a digital twin of the drives, machine builders can shorten their time-to-market since they can design, simulate and optimize their machine before ordering any material or products. Together with other tools from the engineering box, simulation can also speed up the engineering phase of drives and entire machines, for example by virtual commissioning of the PLC.

Realize: Once the machine is in operation, the drives can be connected to other platforms, for example to the cloud and Industrial Edge. This creates transparency in terms of what is going on inside the drive train, e.g. with regard to the actual current, torque and speed.

Optimize: To understand the collected data, our drive train analytics portfolio provides algorithms and analysis tools to unlock the potential of the data and turn the gained transparency into insights and valuable knowledge. These insights can then again be used in the design phase of the next life cycle, thus closing the loop.

© Siemens 2024



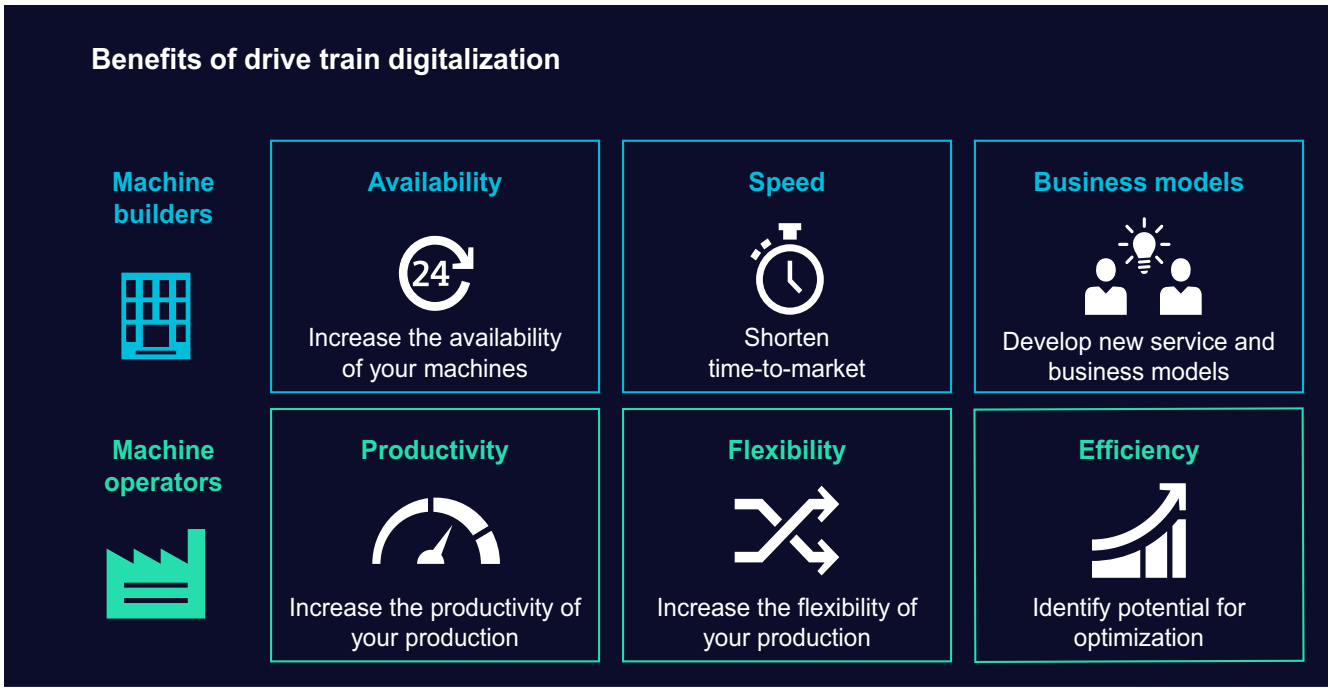

Benefits for machine and plant builders

- Increased availability of machines and plants – thanks to digital options for checking and implementing design improvements and comprehensive monitoring of drive systems
- Shorter time-to-market and faster development times – thanks to practical software tools and a continuous database for concurrent development processes as well as virtual simulations, tests, and commissioning of machines and plants
- New options for future service and business models – ranging from customized application solutions and digital services to contractually guaranteed availabilities of machines and plants

Benefits for machine and plant operators

- Increased availability and productivity of production, fewer unscheduled downtimes – through the early detection of deviations and emerging risks thanks to digital drive monitoring
- More flexible production down to batch size 1 – through more effective use of knowledge from existing production lines thanks to transparent utilization, states, locations, and capacities down to the drive level
- Identification of potential for optimization to make production faster, better, and more efficient thanks to data-based transparency – for example, for faster modifications, simpler quality control, and the early prediction of maintenance demand as well as demand-oriented maintenance

siemens.com/digital-drives

© Siemens 2024



TIA Selection Tool – quick, easy, smart configuration

For you to get the most out of our portfolio quickly and easily.

Do you always need the optimum configuration for planning your project?
For your application we offer the TIA Selection Tool to support all project planners, beginners and experts alike.
No detailed portfolio knowledge is necessary.
TIA Selection Tool is available for download as a free desktop version or a cloud variant.

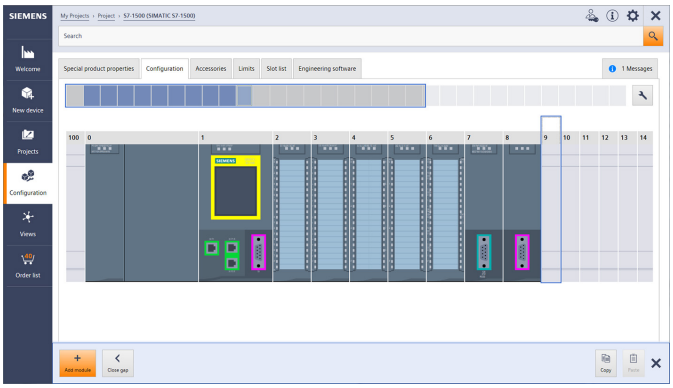

Your Advantages

Quick

- Configure a complete project with just a few entries – without a manual, without special knowledge
- Import and export of hardware configuration to TIA Portal or other systems
- Ideal visualization of the projects to be configured

Easy

- Tool download either as desktop version or web-based cloud version
- Technically always up-to-date about product portfolio and innovative approaches
- Highly flexible, secure, cross-team work in the cloud
- Direct ordering in SiePortal

Smart

- Smart selection wizard for error-free configuration and ordering
- Configuration options can be tested and simulated in advance
- Library for archiving sample configurations

The TIA Selection Tool is a completely paperless solution.
Download it now:
www.siemens.com/tst

For more information, scan the QR code

© Siemens 2024



Sustainability @Siemens

Transforming the everyday to create a better tomorrow.



For more information, see www.siemens.com/sustainabililty-figures

As a company, Siemens considers environmental, social and governance (ESG) criteria from all angles with its DEGREE framework (decarbonization, ethics, governance, resource efficiency, equity and employability). We are not only committed to reducing the carbon footprint in our own operations to net zero by 2030, but also helping our customers achieve their decarbonization and sustainability goals.

Mission & strategy

As a focused technology company, Siemens is committed to addressing the world's most profound challenges by leveraging the synergies between digitalization and sustainability.

Technology with aim and purpose

We develop technologies that connect the real and digital worlds and enable our customers to positively transform the industries that form the backbone of our economy: industry, infrastructure, transportation and healthcare.

Our contribution

Siemens makes an impact every day by providing innovative solutions in response to challenges relating to environmental protection, decarbonization, health and safety. Innovative solutions that have a clear goal: to make the world more sustainable, more integrative and a better place to live.

Sustainability facts

For almost 175 years, Siemens has been driven by the desire to improve the lives of people around the world with our technologies.

© Siemens 2024

© Siemens 2024

System overview

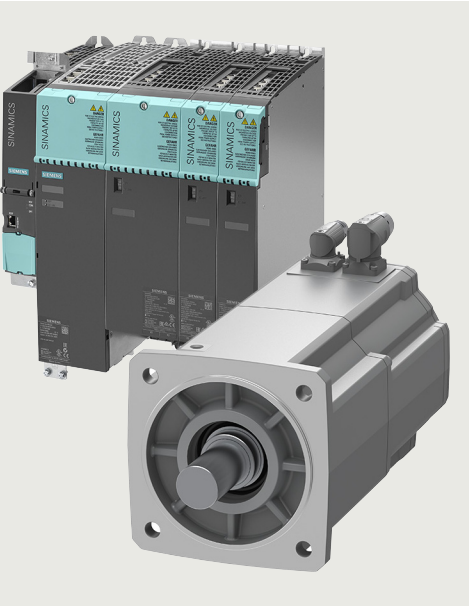

1/2	Excellence in Motion Control
1/3	The SINAMICS converter family
1/8	Drive selection
1/9	SINAMICS S120 drive system
1/14	SIMOTICS motors
1/15	SIMOTICS motors for motion control applications
1/17	Motion Control Encoder measuring system
1/18	MOTION-CONNECT connection systems

© Siemens 2024

Overview

Motion Control Solutions "Made by Siemens"

Thanks to our strong innovation capacity, sector know-how and outstanding customer benefits of our automation solutions for machine tools and production machines, Siemens is one of the leading suppliers of Motion Control Systems worldwide. For this reason, we can supply many references in different areas.



Innovative products, systems, solutions and services for each sector

Siemens Motion Control Systems satisfy very high requirements: All products stand out through the use of the latest technologies, high functionality and quality. In addition, the individual systems and products are optimally matched to one another so that they can be easily and consistently combined into an economic machine solution.

Examples of this are the SIMOTION Motion Control System, the SINAMICS drive system and the SIMOTICS motors. These products constitute an innovative system platform with which you can optimize the design of your machine to meet your own requirements. They provide you with optimized, economic and future-oriented motion control solutions for different sectors such as the packaging, plastics and glass, wood and metalworking, textile and printing industries, which can be easily expanded for increased requirements.



By offering you Mechatronic Support, Siemens is providing you with an intelligent alternative to developing expensive prototypes. Using virtual prototyping, it is possible to model and optimize all the mechanical, electronic and information technology systems for their functionality while they are still at the design stage. You don't then need to implement a prototype for real, but can immediately build the finished machine.

Application consulting: The safe path to top solutions

Our technical and application consultants accompany the projects on site from planning to commissioning, from the idea to the functioning machine. You will receive support from a number of different application centers, some of which are sited in Germany, Italy, the USA and China.

Application consulting includes:

- Planning and implementation of projects
- Technical verification with test configuration and simulation
- Development of requirements and functional specifications
- Application workshops and customer-specific training courses

Partnership for joint success

During this cooperation Siemens not only supports its customers, but also includes them as technology partners in the development process of systems and components which results in practical and future-oriented automation solutions.

In this way Siemens helps its customers increase their productivity, competitiveness and profitability over the long term.

© Siemens 2024

Overview

Integration in automation

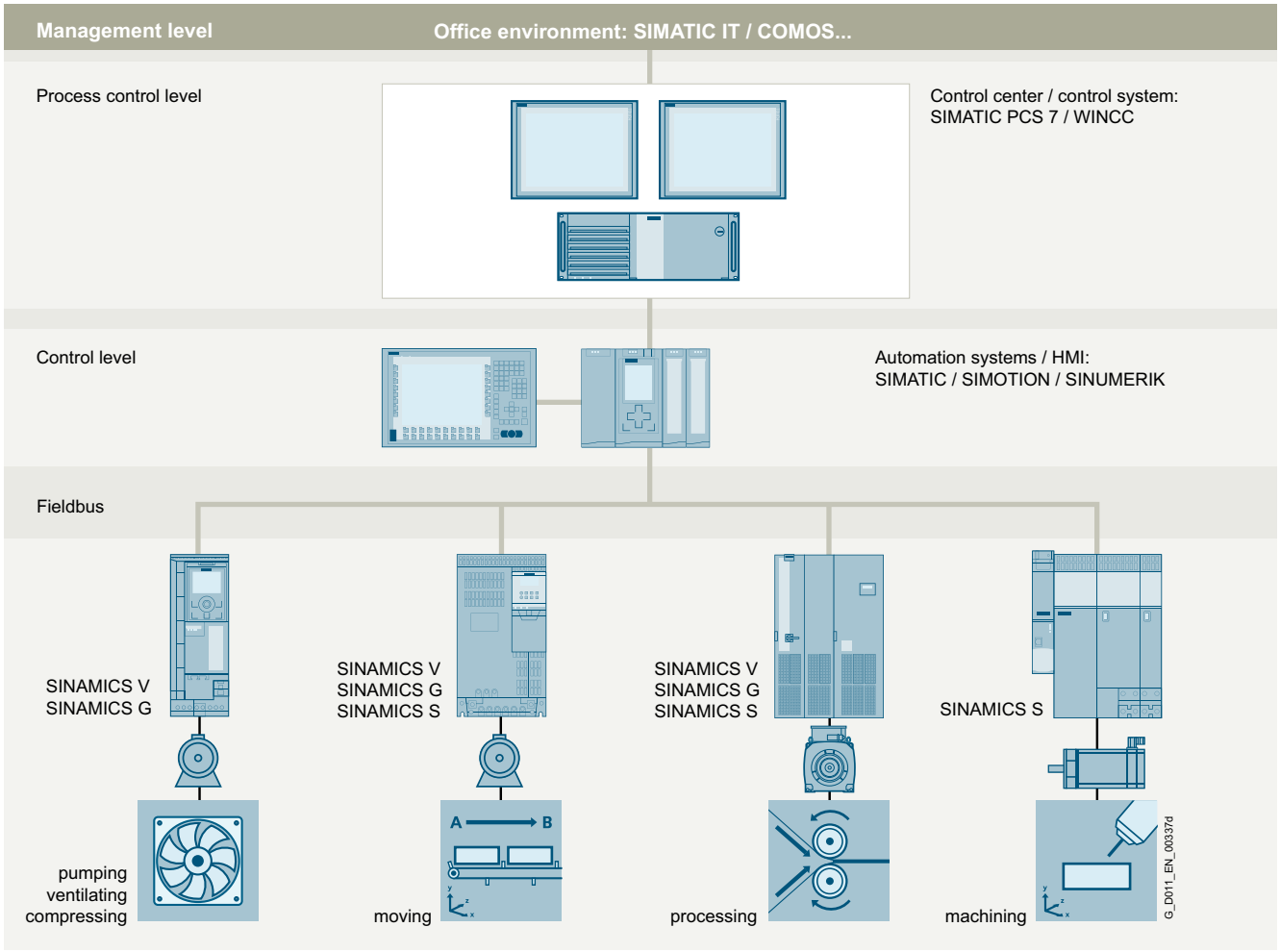

Totally Integrated Automation and communication

SINAMICS is an integral component of the Siemens "Totally Integrated Automation" concept. Integrated SINAMICS systems covering configuration, data storage, and communication at automation level ensure low-maintenance solutions with the SIMATIC, SIMOTION and SINUMERIK control systems.

Depending on the application, the appropriate variable frequency drives can be selected and incorporated in the automation concept. With this in mind, the drives are clearly subdivided into their different applications. A wide range of communication options (depending on the drive type) are available for establishing a communication link to the automation system:

- PROFINET
- PROFIBUS
- EtherNet/IP
- Modbus TCP
- Modbus RTU
- AS-Interface
- BACnet MS/TP

Applications

SINAMICS is the comprehensive converter family from Siemens designed for machine and plant engineering applications. SINAMICS offers solutions for all drive tasks:

- Simple pump and fan applications in the process industry
- Demanding single drives in centrifuges, presses, extruders, elevators, as well as conveyor and transport systems
- Drive line-ups in textile, plastic film, and paper machines as well as in rolling mill plants
- Highly dynamic servo drives for machine tools, as well as packaging and printing machines

© Siemens 2024

Overview

SINAMICS as part of the Siemens modular automation system



Innovative, energy-efficient and reliable drive systems and applications as well as services for the entire drive train

The solutions for drive technology place great emphasis on the highest productivity, energy efficiency and reliability for all torque ranges, performance and voltage classes.

Siemens offers not only the right innovative variable frequency drive for every drive application, but also a wide range of energy-efficient motors for combination with SINAMICS.

Furthermore, Siemens supports its customers with global pre-sales and after-sales services, with over 295 service points in 130 countries – and with special services e.g. application consulting or motion control solutions.

Energy efficiency

Energy management process

Efficient energy management consultancy identifies the energy flows, determines the potential for making savings and implements them with focused activities.

Almost two thirds of the industrial power requirement is from electric motors. This makes it all the more important to use drive technology permitting energy consumption to be reduced effectively even in the configuration phase, and consequently to optimize plant availability and process stability. With SINAMICS, Siemens offers powerful energy efficient solutions which, depending on the application, enable a significant reduction in electricity costs.

© Siemens 2024

Overview

Up to 70 % potential for savings using variable-speed operation

SINAMICS enables great potential for savings to be realized by controlling the motor speed. In particular, huge potential savings can be recovered from pumps, fans and compressors which are operated with mechanical throttle and valves. Here, changing to variable-speed drives brings enormous economic advantages. In contrast to mechanical control systems, the power consumption at partial load operation is always immediately adjusted to the demand at that time. So energy is no longer wasted, permitting savings of up to 60 % – in exceptional cases even up to 70 %. Variable-speed drives also offer clear advantages over mechanical control systems when it comes to maintenance and repair. Current spikes when starting up the motor and strong torque surges become things of the past – and the same goes for pressure waves in pipelines, cavitation or vibrations which cause sustainable damage to the plant. Smooth starting and ramp-down relieve the load on the mechanical system, ensuring a significantly longer service life of the entire drive train.

Regenerative feedback of braking energy

In conventional drive systems, the energy produced during braking is converted to heat using braking resistors. Energy produced during braking is efficiently recovered to the supply system by versions of SINAMICS G and SINAMICS S drives with regenerative feedback capability and these devices do not therefore need a braking resistor. This permits up to 60 % of the energy requirement to be saved, e.g. in lifting applications. Energy which can be reused at other locations on a machine. Furthermore, this reduced power loss simplifies the cooling of the system, enabling a more compact design.

SINAMICS in combination with energy-saving motors

Engineering integration stretches beyond the SINAMICS converter family to higher-level automation systems, and to a broad spectrum of energy-efficient motors with a wide range of performance classes, which, compared to previous motors, are able to demonstrate up to 10 % greater efficiency.

Variants

Depending on the application, the SINAMICS converter family offers the ideal variant for any drive task.

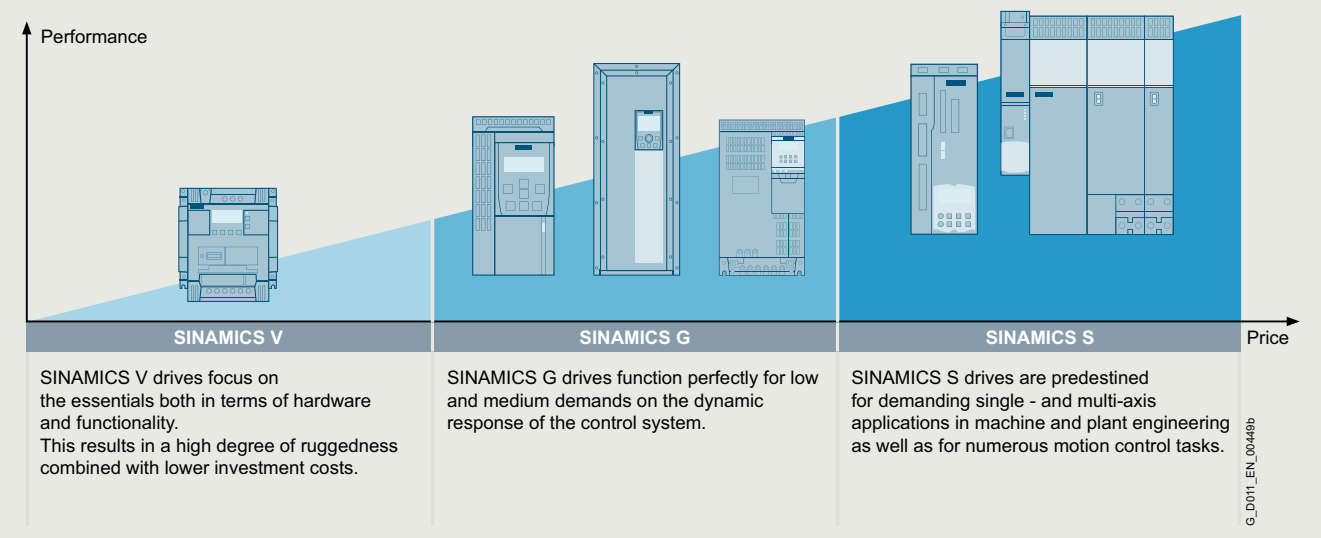

© Siemens 2024

Overview

Platform concept

All SINAMICS variants are based on a platform concept. Joint hardware and software components, as well as standardized tools for dimensioning, configuration, and commissioning tasks ensure high-level integration across all components. SINAMICS handles a wide variety of drive tasks with no system gaps. The different SINAMICS variants can be easily combined with each other.

Quality management according to EN ISO 9001

SINAMICS conforms to the most exacting quality requirements. Comprehensive quality assurance measures in all development and production processes ensure a consistently high level of quality.

Of course, our quality management system is certified by an independent authority in accordance with EN ISO 9001.

Industry Online Support app

With the Industry Online Support app, you can access more than 300000 documents for Siemens Industry products – any time and from anywhere.

Main functions at a glance:

- Scanning of product codes and EAN codes to directly display all of the technical and graphical data (e.g. CAx data) of the product
- Sending of product information or entries via e-mail to further process the information at the workstation
- Conveniently send inquiries to Technical Support. Detailed information can be conveniently completed using the scan or photo function
- Save the favorites on the device using the offline cache function. These articles, products and conferences can then be called even without network access.
- Transfer of PDF documents to an external library
- The contents and interfaces are available in six languages (German, English, French, Italian, Spanish and Chinese) - including a temporary switchover to English.

You can find additional information on the internet at:
www.siemens.com/sinamics-assistant

DRIVE-CLiQ – the digital interface between all components

All SINAMICS S120 components, including the motors and encoders, are interconnected by a shared serial interface called DRIVE-CLiQ. The standardized cables and connectors reduce the variety of different parts and cut storage costs. Converter boards (Sensor Modules) for converting standard encoder signals to DRIVE-CLiQ are available for third-party motors or retrofit applications.

Swift and automatic: The electronic rating plate

An important digital linkage element of the SINAMICS S120 drive system are the electronic rating plates integrated in every component. They allow all drive components to be detected automatically via a DRIVE-CLiQ link. As a result, data do not need to be entered manually during commissioning or component replacement – helping to ensure that drives are commissioned successfully! The electronic rating plates of the motors contain, for example, the parameters of the electrical equivalent circuit diagram and the characteristic data of the built-in motor encoder in addition to information such as order and identification numbers.

Integrated system configuration

Siemens offers perfectly matched drive components with which you can meet your requirements. The drive components reveal their true strengths over the full range from engineering and commissioning through to operation:
Integrated system configuration is performed using the Siemens Product Configurator: Just select a motor and a converter and design them with the SIZER for Siemens Drives (integrated in TIA Selection Tool) engineering tool. The STARTER and SINAMICS Startdrive commissioning tools integrate the motor data and at the same time simplify efficient commissioning.
All drive components are incorporated in the TIA Portal – this simplifies engineering, commissioning and diagnostics.

© Siemens 2024

Overview

Low voltage											Direct voltage
Standard performance frequency converters		Distributed frequency converters	Industry-specific frequency converters		Servo converters			High performance frequency converters			DC converters
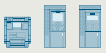	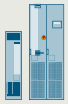										
SINAMICS V20 G120C G120	SINAMICS G130 G150	SINAMICS G115D G120D SIMATIC ET 200pro FC-2	SINAMICS G120X	SINAMICS G180	SINAMICS V90 S200	SINAMICS S110	SINAMICS S210 S210 (New)	SINAMICS G220	SINAMICS S120 S120M	SINAMICS S150	SINAMICS DCM DCP [1]
0.12 kW to 250 kW	75 kW to 2700 kW	0.37 kW to 7.5 kW	0.75 kW to 630 kW	2.2 kW to 6600 kW	0.05 kW to 7 kW	0.55 kW to 132 kW	0.05 kW to 7 kW	0.55 kW to 55 kW	0.55 kW to 5700 kW	75 kW to 1200 kW	6 kW to 30 MW
Pumps, fans, compressors, conveyor belts, mixers, mills, spinning machines, textile machines, refrigerated display counters, fitness equipment, ventilation systems, single-axis positioning applications in machine and plant engineering	Pumps, fans, compressors, conveyor belts, mixers, mills, extruders	Conveyor technology, single-axis positioning applications (G120D)	Pumps, fans, compressors, building management systems, process industry, HVAC, water/waste water industries	Pumps, fans, compressors, conveyor belts, extruders, mixers, mills, kneaders, centrifuges, separators	Handling machines, packaging machines, automatic assembly machines, metal forming machines, printing machines, winding and unwinding units	Single-axis positioning applications in machine and plant engineering	Packaging machines, handling equipment, feed and withdrawal devices, stacking units, automatic assembly machines, laboratory automation, wood, glass and ceramics industry, digital printing machines	Pumps, fans, compressors, conveyor belts, mixers, mills, spinning machines, textile machines, refrigerated display counters, fitness equipment, ventilation systems, single-axis positioning applications in machine and plant engineering	Production machines (packaging, textile and printing machines, paper machines, plastic processing machines), machine tools, plants, process lines and rolling mills, marine drives, test bays	Test bays, cross cutters, centrifuges	Rolling mill drives, wire-drawing machines, extruders and kneaders, cableways and lifts, test bay drives
Catalog D 31.1	Catalog D 11	Catalog D 31.2	Catalog D 31.5	Catalog D 18.1	Catalog D 33 D 37.1	Catalog D 31.1	Catalog D 32	Catalog D 36.1	Catalogs D 21.3, D 21.4 NC 62	Catalog D 21.3	Catalog D 23.1, SiePortal
Engineering tools (e.g. Siemens Product Configurator, TIA Selection Tool, DriveSim Designer/Engineer, STARTER and SINAMICS Startdrive)											

[1] DC/DC controllers, see SiePortal.

G_D011_EN_00450v

© Siemens 2024

Overview

Use	Requirements for torque accuracy/speed accuracy/position accuracy/coordination of axes/functionality					
	Continuous motion			Non-continuous motion		
	Basic	Medium	High	Basic	Medium	High
	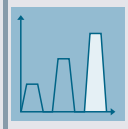	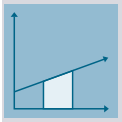	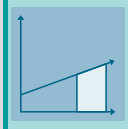	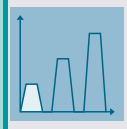	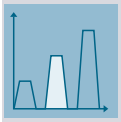	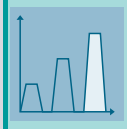
Pumping, ventilating, compressing	Centrifugal pumps Radial / axial fans Compressors	Centrifugal pumps Radial / axial fans Compressors	Eccentric screw pumps	Hydraulic pumps Metering pumps	Hydraulic pumps Metering pumps	Descaling pumps Hydraulic pumps
	V20 G120C G120X	G120X G130/G150 G180 [1] DCM	G220 **S120/S220**	G120/G220	S110	**S120/S220**
Moving 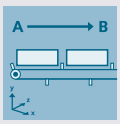	Conveyor belts Roller conveyors Chain conveyors	Conveyor belts Roller conveyors Chain conveyors Lifting/lowering devices Elevators Escalators/moving walkways Indoor cranes Marine drives Cable railways	Elevators Container cranes Mining hoists Excavators for open-cast mining Test bays	Acceleration conveyors Storage and retrieval machines	Acceleration conveyors Storage and retrieval machines Cross cutters Reel changers	Storage and retrieval machines Robotics Pick & place Rotary indexing tables Cross cutters Roll feeds Engagers/disengagers
	V20 G115D G120C ET 200pro FC-2 [2]	G120/G220 G120D G130/G150 G180 [1]	G220 **S120/S220** S150 DCM	V90 S200 G120/G220 G120D	S110 S210 DCM	**S120/S220** S210 DCM
Processing 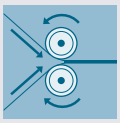	Mills Mixers Kneaders Crushers Agitators Centrifuges	Mills Mixers Kneaders Crushers Agitators Centrifuges Extruders Rotary furnaces	Extruders Winders/unwinders Lead/follower drives Calenders Main press drives Printing machines	Tubular bagging machines Single-axis motion control such as • Position profiles • Path profiles	Tubular bagging machines Single-axis motion control such as • Position profiles • Path profiles	Servo presses Rolling mill drives Multi-axis motion control such as • Multi-axis positioning • Cams • Interpolations
	V20 G120C	G120/G220 G130/G150 G180 [1]	G220 **S120/S220** S150 DCM	V90 S200 G120/G220	S110 S210	**S120/S220** S210 DCM
Machining 	Main drives for • Turning • Milling • Drilling	Main drives for • Drilling • Sawing	Main drives for • Turning • Milling • Drilling • Gear cutting • Grinding	Axis drives for • Turning • Milling • Drilling	Axis drives for • Drilling • Sawing	Axis drives for • Turning • Milling • Drilling • Lasering • Gear cutting • Grinding • Nibbling and punching
	S110	S110 **S120/S220**	**S120/S220**	S110	S110 **S120/S220**	**S120/S220**

Using the SINAMICS selection guide

The varying range of demands on modern variable frequency drives requires a large number of different types. Selecting the optimum drive has become a significantly more complex process. The application matrix shown simplifies this selection process considerably, by suggesting the ideal SINAMICS drive for examples of typical applications and requirements.

- The application type is selected from the vertical column
  - Pumping, ventilating, compressing
  - Moving
  - Processing
  - Machining
- The quality of the motion type is selected from the horizontal row
  - Basic
  - Medium
  - High

More information

Further information about SINAMICS is available on the internet at www.siemens.com/sinamics

Practical application examples and descriptions are available on the internet at www.siemens.com/sinamics-applications

[1] Industry-specific converters.

[2] Information on the SIMATIC ET 200pro FC-2 frequency converter is available in Catalog D 31.2 and at: www.siemens.com/et200pro-fc

© Siemens 2024

Overview

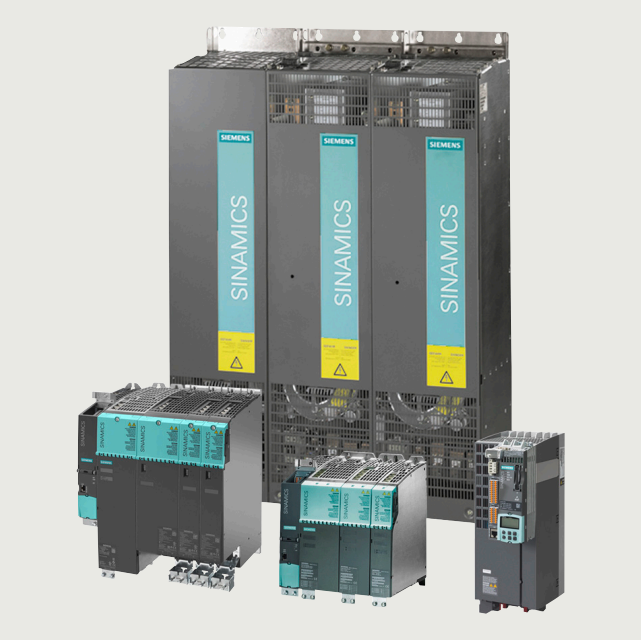

Flexibility for successful machine concepts

As part of the SINAMICS converter family, the SINAMICS S120 drive is a modular system for high-performance applications in machine and plant engineering. SINAMICS S120 offers high-performance single-axis and multi-axis drives for a very broad range of industrial applications. By virtue of its scalability and flexibility, SINAMICS S120 is the ideal system for satisfying the ever increasing demand for more axes and better performance. SINAMICS S120 supports flexible machine designs and speedy implementation of customized drive solutions.

The response to ever increasing demands

Modern machines must be built at ever lower cost, but deliver ever greater productivity. The SINAMICS S120 drive concept meets both these challenges! It is easy to configure and thus helps reduce project completion times. Its excellent dynamic response and accuracy permit higher cycle rates for maximum productivity.

Applications in machine and plant engineering

Regardless of whether the application involves continuous material webs or cyclic, highly dynamic processes – SINAMICS S120 means increased machine performance in many industries:

- Packaging machines
- Plastics processing machines
- Textile machines
- Printing machines
- Paper machines
- Woodworking machines
- Hoists and cranes
- Handling and assembly systems
- Machine tools
- Rolling mills
- Test stands
- Machinery associated with renewable energy applications

Modularity for mechanical engineering

SINAMICS S120 is designed to allow free combination of power and control performance. Multi-axis drives with higher-level motion control can be implemented with the SINAMICS S120 modular system as easily as single-drive solutions.

Greater flexibility with central control intelligence

On the SINAMICS S120, the drive intelligence is combined with closed-loop control functions into Control Units.

These units are capable of controlling drives in Vector, Servo and *V/f* modes. They also perform the speed and torque control functions plus other intelligent drive functions for all axes on the drive.

Free performance selection for Vector and Servo control modes

The use of a SINAMICS S120 Vector control is recommended for drive solutions with continuous material webs, for example, wire-drawing machines, film and paper machines, as well as for hoisting gear, centrifuges and marine drives with harmonic, circular motion.

Servo control with SINAMICS S120 is employed for cyclic processes with precise, highly dynamic position control and servo motors, e.g. in textile, packaging, printing machines and machine tools.

SINAMICS S120 – functions for better efficiency

- Basic functions: Speed control, torque control, positioning functions
- Intelligent starting functions for independent restart after power supply interruption
- BICO technology with interconnection of drive-related I/Os for easy adaptation of the drive system to its operating environment
- Integrated safety functions for rational implementation of safety concepts
- Regulated infeed/regenerative feedback functions for preventing undesirable reactions on the supply, allowing recovery of braking energy and ensuring greater stability against line fluctuations.

DRIVE-CLiQ – the digital interface between all components

All SINAMICS S120 components, including the motors and encoders, are interconnected by a shared serial interface called DRIVE-CLiQ. The standardized cables and connectors reduce the variety of different parts and cut storage costs. Converter boards (Sensor Modules) for converting standard encoder signals to DRIVE-CLiQ are available for third-party motors or retrofit applications.

Swift and automatic: The electronic rating plate

An important digital linkage element of the SINAMICS S120 drive system are the electronic type plates integrated in every component. They allow all drive components to be detected automatically via a DRIVE-CLiQ link. As a result, data do not need to be entered manually during commissioning or component replacement – helping to ensure that drives are commissioned successfully! The electronic rating plates of the motors contain, for example, the parameters of the electrical equivalent circuit diagram and the characteristic data of the built-in motor encoder in addition to information such as order and identification numbers.

© Siemens 2024

Overview

Modular design ensures flexibility and scalability

DC/AC units (Motor Modules) – available in compact booksize, booksize and chassis formats – are characterized by their modular design. All the drive intelligence is organized into Control Units. The Control Units perform all the closed-loop control functions for the drive line-up. They also handle all other drive functions such as the interconnection of drive-related I/Os, positioning functions, and feature PROFIBUS DP or PROFINET as the central interface for linking to higher-level automation systems.

Line Modules function as the central energy supply to the voltage-source DC link. Line Modules are optionally available with regulated infeed/regenerative feedback to provide a constant DC link voltage and high level of supply compatibility. Motor Modules supply the motors with energy from the DC link.

On AC/AC units, the infeed and motor power supply functions are combined in one device, the Power Module – available in blocksize and chassis formats. For single-axis applications, drive control functions are performed by a special Control Unit (CU310-2) mounted on the Power Module and for multi-axis applications, by a Control Unit (e.g. CU320-2) connected by a DRIVE-CLiQ link. In this case, a Control Unit Adapter is mounted on the Power Module in place of the Control Unit.

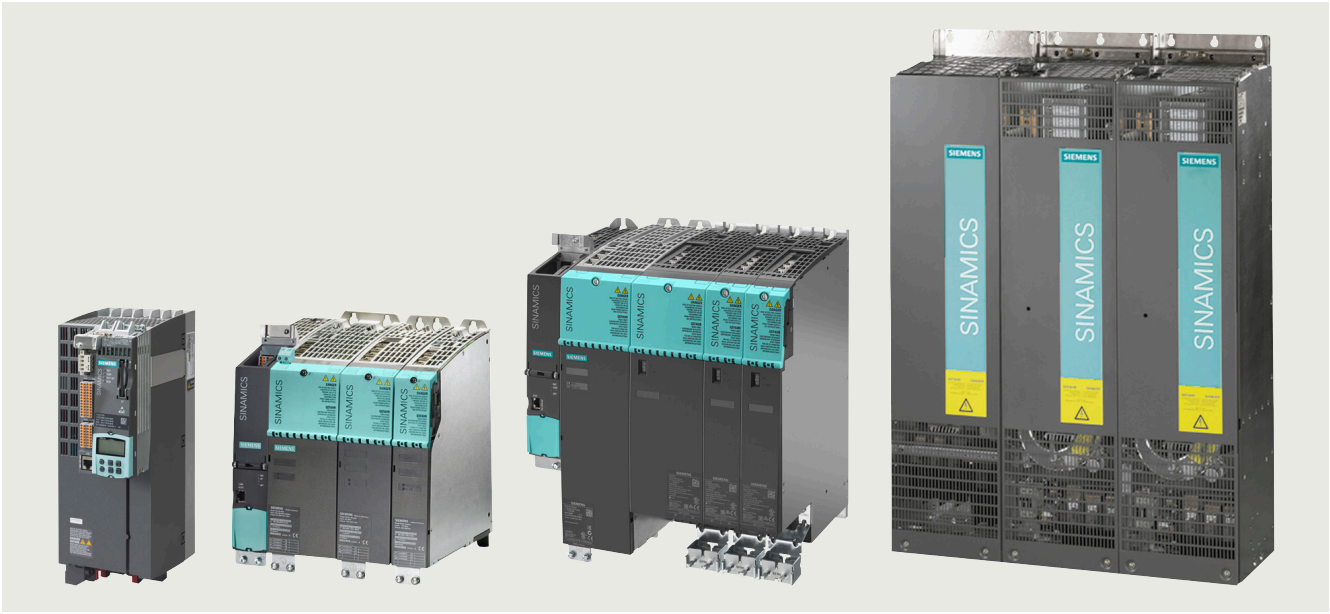

SINAMICS S120 blocksize, booksize compact, booksize and chassis formats

All formats can be combined as required

The different SINAMICS S120 formats can be combined freely thanks to their DRIVE-CLiQ interfaces, e.g. Line Modules in chassis format can be freely combined with Motor Modules in booksize format for multi-axis applications with high total output.

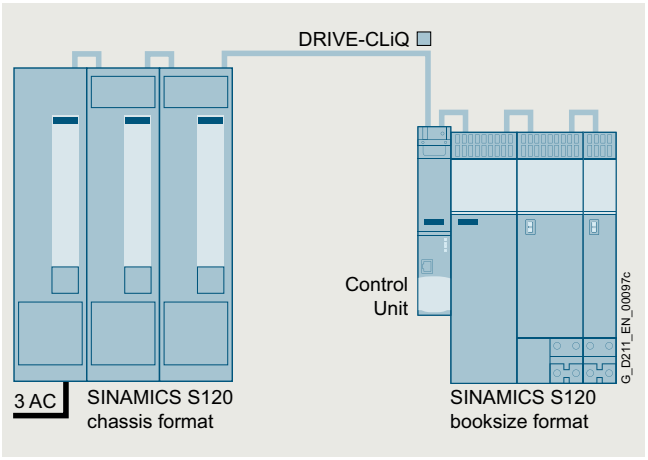

SINAMICS S120 Control Units in booksize and chassis formats

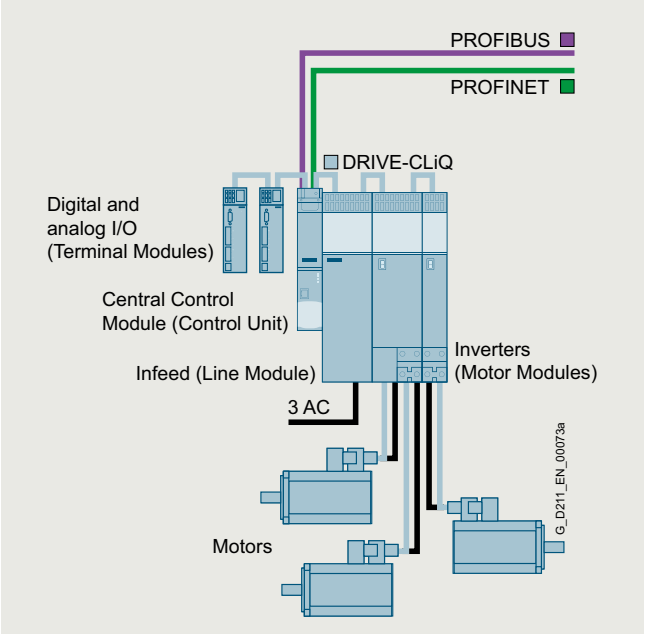

Example configuration of SINAMICS S120 booksize format

© Siemens 2024

Overview

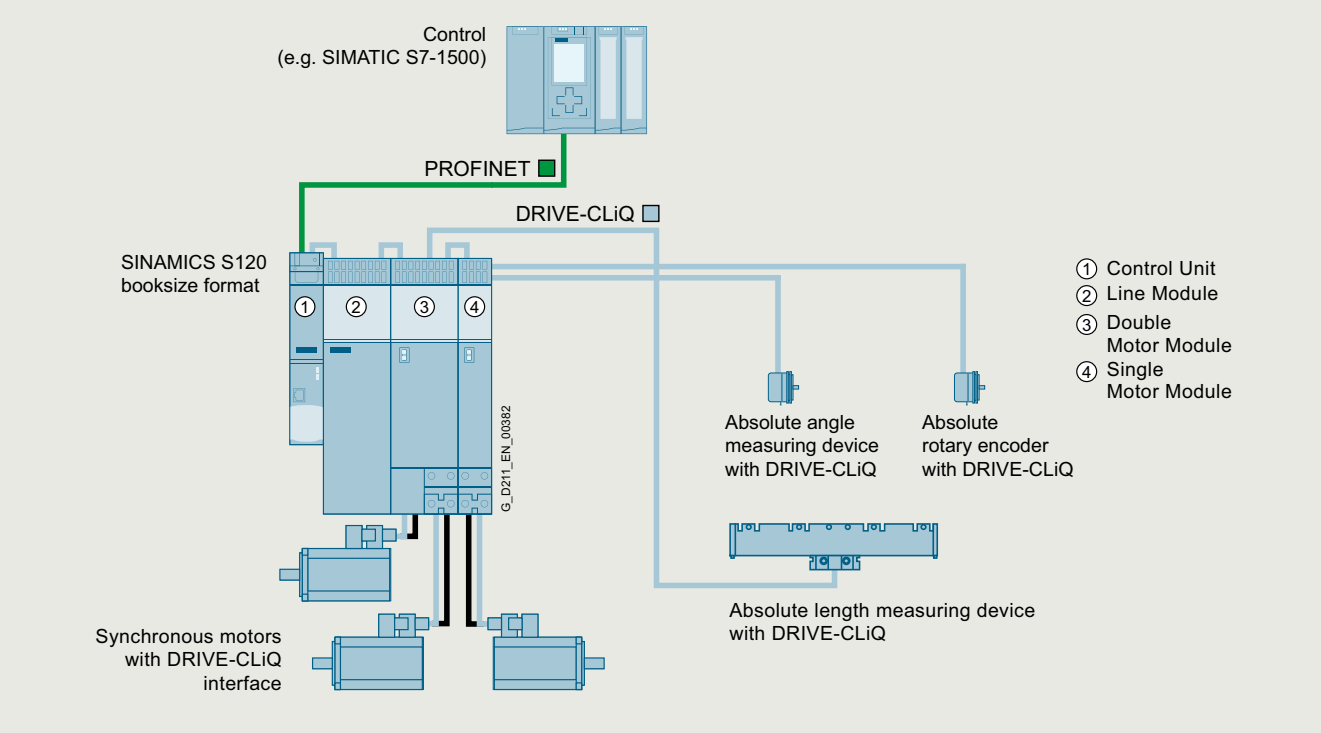

Configuration scheme SINAMICS S120 booksize format

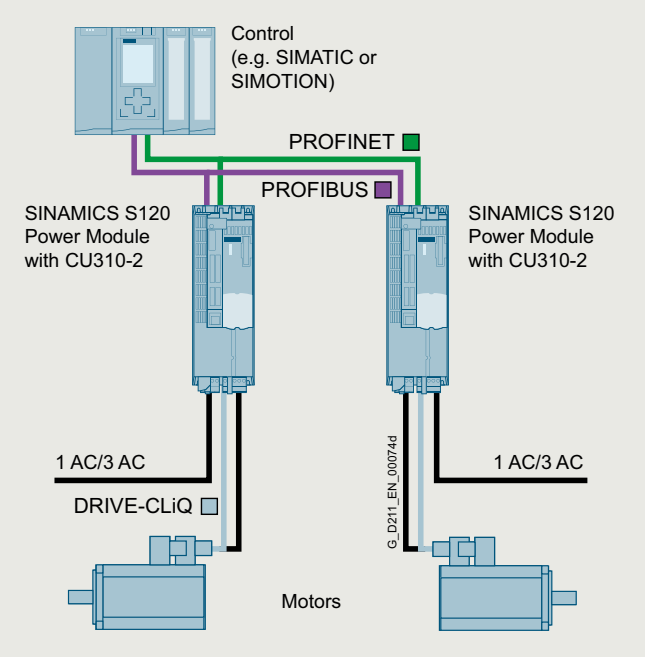

Example configuration of SINAMICS S120 blocksize format

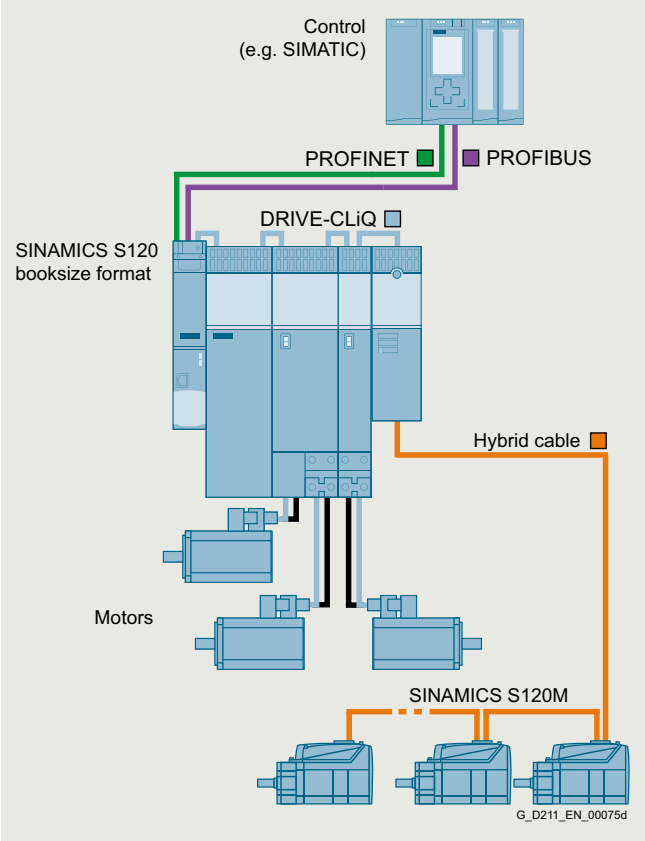

Example configuration of SINAMICS S120, integrated in control cabinet and distributed

© Siemens 2024

Overview

SINAMICS S120 can be scaled with respect to performance and technology. In the case of more exacting technological requirements, for example, the SINAMICS S120 Control Unit can be replaced by a drive-based controller for motion control. This is the SINUMERIK 840D sl for machine tools, or the SIMOTION D for production machinery and plant engineering. It is also easy to couple the SINAMICS S120 to a higher-level SIMATIC S7 with integral technology functions.

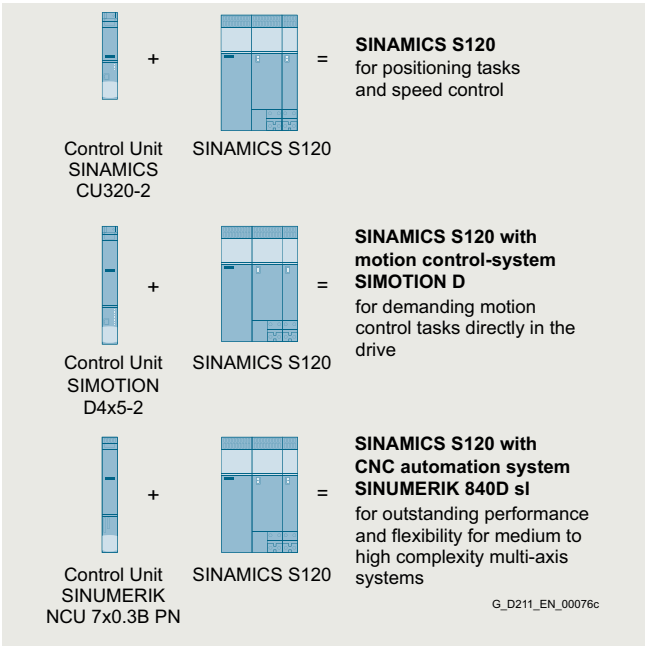

Scalable motion control functions

Totally Integrated Automation – the unique automation platform

With Totally Integrated Automation (TIA), Siemens is the only single-source provider to offer an integrated spectrum of products and systems for all industries. Tailored to meet individual customer requirements, industry-specific automation solutions can be implemented efficiently on the basis of TIA. Lower life-cycle costs for plant operation and a significant reduction in time to market result in a marked improvement in productivity and greater investment security.

Easy – Totally Integrated Automation with SINAMICS S120

Apart from SIMATIC, SIMOTION and SINUMERIK, SINAMICS is also one of the core components of TIA. The STARTER commissioning tool is therefore an integral element of the TIA platform. It is thus possible to parameterize, program and commission all components in the automation system using a standardized engineering platform and without any gaps. The system-wide data management functions ensure consistent data and simplify archiving of the entire plant project.

PROFINET – for enhanced performance and open IT communication

PROFINET, the standard fieldbus of the TIA system, is supported by all SINAMICS S120 variants. This Ethernet-based bus enables control data to be exchanged at high speed via PROFINET IO with IRT or RT and makes SINAMICS S120 a suitable choice for integration in top-performance multi-axis applications.

At the same time, PROFINET also uses standard IT mechanisms (TCP/IP) to transport information, e.g. operating and diagnostic data, to higher-level systems. A SINAMICS S120 with this interface can thus easily be integrated into factory IT networks.

PROFIBUS

SINAMICS S120 supports PROFIBUS DP. It provides a high-performance, system-wide communication network which links all automation components: HMI, controls, drives and I/O devices.

© Siemens 2024

Overview

The components of the SINAMICS S120 drive system

SINAMICS S120 drive system

Line-side components
Line reactors
Line filters
Active Interface Modules



Line Modules
Basic Line Modules
Smart Line Modules
Active Line Modules



Power supply
Information on suitable 24 V devices can be found in Catalog KT 10.1



DC link components
Braking Modules
Braking resistors
Capacitor Modules
Control Supply Modules



Control Units
CU310-2
CU320-2



Information about other Control Units can be found in the Catalogs
PM 21 (SIMOTION) and
NC 62 (SINUMERIK 840)
NC 63 (SINUMERIK ONE)
NC 64 (SINUMERIK MC)
NC 82 (SINUMERIK 828)



Motor Modules
Single Motor Modules
Double Motor Modules

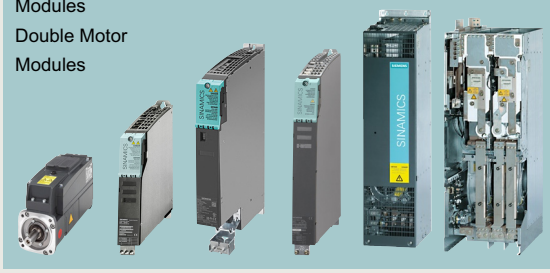

Supplementary system components



Power Modules



Load-side power components
Motor reactors
dv/dt filters
Sine-wave filters

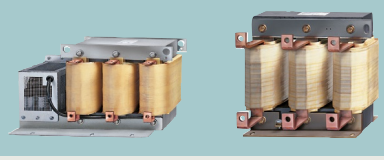

Motors for motion control

SIMOTICS
Servomotors
Main motors
Linear motors
Torque motors

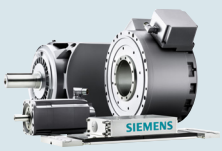

Measuring systems

Motion control encoders



Connection system

MOTION-CONNECT
Power cables
Signal cables



G_D211_EN_00077g

© Siemens 2024

Overview

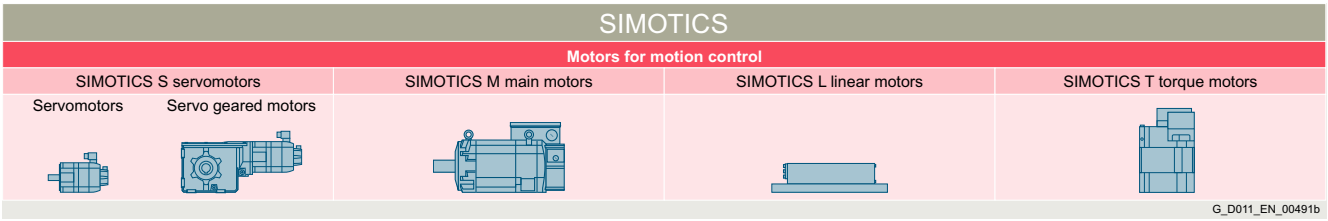

SIMOTICS stands for

- 150 years of experience in building electric motors
- The most comprehensive range of motors for motion control applications
- Optimum solutions in all industries, regions and power/ performance classes
- Innovative motor technologies of the highest quality and reliability
- Highest dynamic performance, precision and efficiency together with the optimum degree of compactness
- Our motors can be integrated into the drive train as part of the overall system
- A global network of skill sets and worldwide service around the clock

A clearly structured portfolio

The entire SIMOTICS product portfolio is transparently organized according to application-specific criteria in order to help users select the optimum motor for their application.

Whatever it is that you want to move – we can supply the right motor for the task.
www.siemens.com/simotics

An outstanding performance for any job

A key characteristic of all SIMOTICS motors is their quality. They are robust, reliable, dynamic and precise to assure the requisite performance level for any process and deliver exactly the capabilities demanded by the application in hand. Thanks to their compact design, they can be integrated as space-saving units into installations. Furthermore, their impressive energy efficiency makes them effective as a means of reducing operating costs and protecting the environment.

A dense network of skill sets and servicing expertise around the world

SIMOTICS offers not only a wealth of sound experience gleaned from a development history which stretches back over around 150 years, but also the know-how of hundreds of engineers. This knowledge and our worldwide presence form the basis for a unique proximity to industries which feeds through in tangible terms to the specific motor configuration which is tailored to suit your application.

Our specialists are available to answer all your queries regarding any aspect of motor technology. At any time – wherever you are in the world. When you choose SIMOTICS, therefore, you reap the benefits of a global service network which is continuously accessible, thereby helping to optimize response times and minimize downtimes.

Perfection of the complete drive train

SIMOTICS is perfectly coordinated with other Siemens product families. In combination with the SINAMICS integrated converter family and the SIRIUS complete portfolio of industrial controls, SIMOTICS fits seamlessly as part of the complete drive train into automation solutions which are based on the SIMATIC, SIMOTION and SINUMERIK control systems.

© Siemens 2024

Overview

Overview of motors for motion control applications

Motion control motors				
SIMOTICS S servomotors		SIMOTICS M main motors	SIMOTICS L linear motors	SIMOTICS T torque motors
Servomotors	Servo-geared motors			
	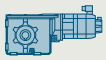	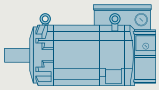	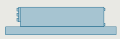	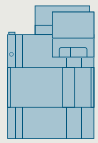
1FT2 1FK2 1FT7	1FG1	1PH8 1FE1 1FE2	1FN3	1FW3 1FW6
0.05 ... 45.5 kW	0.5 ... 7 kW	2.8 ... 1340 kW	1.7 ... 81.9 kW	1.7 ... 380 kW
0.08 ... 250 Nm	14 ... 8100 Nm	13 ... 12435 Nm	150 ... 10375 Nm	10 ... 7000 Nm
up to 10000 r/min	up to 1300 r/min	up to 40000 r/min	up to 836 r/min	up to 1200 r/min
Applications with high to very high demands regarding dynamic performance and precision, e.g. robots and handling systems, wood, glass, ceramics and stone working, packaging, plastics and textile machines and the machine tool area	In applications such as palletizers, storage and retrieval units with lifting, traversing and fork drives, dosing pumps and actuators	Precise turning, highly dynamic rotary axes, e.g. main drives in presses, printing machines, roller drives and winders in foil machines and other converting applications, main spindle drives in machine tools	Applications with stringent dynamic response and precision requirements for linear movements, e.g. machining centers, turning, grinding, laser machining, handling and machine tool applications	Rotary axis applications with stringent precision and force requirements, e.g. extruders, winders, roller drives, rotary axes in machine tools, rotary index tables, tool magazines
D 21.4 NC 62 NC 82	D 41	D 21.4 NC 62 NC 82	D 21.4 NC 62	D 21.4 NC 62

G_D011_EN_00492b

Whether it is a servomotor, a main motor, a torque motor or a linear motor – no other manufacturer anywhere in the world offers such an extensive portfolio of motors for motion control applications. Perfectly coordinated for operation with SINAMICS drives, all products in the portfolio impress with their compact dimensions, precision and dynamic response.

SIMOTICS S servomotors
Highly dynamic and extremely compact

Whether they are used for positioning in pick and place applications, as cyclic drives in packaging machines or for path control in handling systems and machine tools: Our permanent-magnet, highly energy efficient SIMOTICS servomotors are the first choice for any application which demands highly dynamic and precise motional sequences. Depending on the application, they are available with various different built-in encoders – from the simple resolver to the high-resolution absolute encoder. The SIMOTICS S product range is rounded off by the SIMOTICS servo geared motors.

SIMOTICS M main motors
Exact rotation at up to 40000 r/min

For applications where continuous, precise rotation of the axes is the primary concern. Thus they are ideally suited for the main drives for presses, as roller drives in printing and paper-making machines, textiles and plastics-processing machines. They can also be deployed as winder drives and in machine tool spindles and hoisting gear. With a power spectrum ranging from 2.8 kW to 1340 kW (3.75 to 1797 hp), they cover virtually every application.

SIMOTICS L linear motors
Improved dynamic response all along the line

The ideal solution for any application which requires linear movements to be performed with maximum dynamic response and precision. The reason: The effects of elasticity, backlash and friction as well as natural oscillation in the drive train are largely eliminated because no mechanical transmission elements such as ball screw, coupling and belt are needed when linear motors are used. This simplifies the machine design and reduces wear.

SIMOTICS T torque motors
Outstanding precision for rotary axes

Optimized for high torques at low rated speeds. With their excellent precision, dynamic response and low wear (they have no mechanical transmission elements), these motors have all the right credentials for use as built-in motors in rotary indexing machines, rotary tables or swivel and rotary axes, e.g. on machine tools. The same also applies to complete torque motors which are typically used as a roller and winder drive in converting applications.

© Siemens 2024

Overview

Individual solutions for special applications

There is sometimes no other option but to develop an application-specific solution. Based on our many years of experience, we are able to work with our customers to develop and implement application-specific motor solutions – with a design and performance that are perfectly tailored to meet individual requirements. These have the additional useful benefit that they are highly integrated into our converter and control system environment.

Optimally coordinated system solutions

SIMOTICS motors are perfectly coordinated with the drive systems of the SINAMICS family. They provide you with precisely tailored, state-of-the-art motion control solutions in all performance classes created using globally available standard components. Electronic rating plates and the ability to integrate the motors via the DRIVE-CLiQ system interface ensure quick commissioning as well as problem-free operation. Thanks to the integral encoders with redundant encoder tracks and safety functions which are integrated in the drive, modern safety concepts are easy to implement. As a result, external safety components are completely unnecessary. All components can be interconnected simply and reliably by means of pre-assembled MOTION-CONNECT signal and power cables.

Powerful tools and competent support

Siemens offers expert advice and efficient tools to help users select the right motor solution. Experienced specialists are always ready to lend a hand in designing mechanically integrated motor solutions.

Focused motor selection and dimensioning: SIZER for Siemens Drives engineering tool (integrated in the TIA Selection Tool)

The SIZER for Siemens Drives (integrated in the TIA Selection Tool) engineering tool is designed to help you configure a complete drive system including options, accessories and connection systems. The engineering tool allows you to handle any kind of drive – from single drives to complex multi-axis drives. Starting from the type of application in question, the software guides the user step by step through the motor dimensioning process. The advantage: SIZER for Siemens Drives not only provides a full list of components with their order data, but also offers an import function for easy transfer of the motor data into the CAD CREATOR.
www.siemens.com/sizer

Selection and configuring with the Siemens Product Configurator

The Siemens Product Configurator helps you select the optimum products for an application – from the motors to the converters and the associated options. You can also generate comprehensive documentation including data sheets, operating instructions, 2D and 3D dimension drawings, and certificates. You can order the products directly by transferring the selected components to the shopping cart of SiePortal.
www.siemens.com/spc

© Siemens 2024

Overview

Motion Control Encoder measuring systems								
Encoder type	Incremental encoders			Absolute encoders				
								
Interface	sin/cos 1 V_{pp}	RS422 (TTL)	HTL	DRIVE-CLiQ	SSI	EnDat 2.1	PROFIBUS DP-V2	PROFINET IO with RT/IRT
Resolution	1000 S/R 1024 S/R 2500 S/R	500 S/R 1000 S/R 1024 S/R 1250 S/R 1500 S/R 2000 S/R 2048 S/R 2500 S/R 3600 S/R 5000 S/R	100 S/R 500 S/R 1000 S/R 2500 S/R	Single-turn 24 bit Multi-turn 36 bit (24 bit Single-turn + 12 bit Multi-turn)	Single-turn 13 bit (8192 steps) Multi-turn 25 bit (8192 steps × 4096 revolutions)	Single-turn 13 bit (8192 steps) Multi-turn 25 bit (8192 steps × 4096 revolutions)	Single-turn 13 bit (8192 steps) Multi-turn 27 bit (8192 steps × 16384 revolutions)	Single-turn 13 bit/16 bit (8192/65536 steps) Multi-turn 27 bit/30 bit (8192/65536 steps × 16384 revolutions)
Catalog	D 21.4							

Motion control encoders are optoelectronic built-on encoders that detect the traversing distances, angles of rotation, speeds or positions of machine axes. Motion control encoders are direct measuring systems that are built-on to shafts, axes or motors. They can be used in conjunction with numerical and programmable logic controllers, drives and position displays. Motion control encoders are system-tested, certified components that have been harmonized for use with the following systems:

- SINUMERIK CNC controls
- SIMOTION Motion Control Systems
- SIMATIC programmable logic controllers
- SINAMICS drive systems

Motion control encoders are used with machine tools and production machines as additional external measuring systems. They are available as incremental or absolute encoders.

- In the case of incremental encoders, the machine must travel to a reference point after each power-off state, as the position is not usually stored in the controller, and movements of the machine while the power is off are not recorded.
- Absolute encoders, on the other hand, also record movements while the power is off and return the actual position after power on. Travel to a reference point is not necessary.

All motion control encoders are available as Synchro flange and clamp flange versions. The absolute encoders are also available with a hollow shaft and torque arm.

The motion control encoders are driven via a plug-in coupling or spring disk coupling. Alternatively, pulleys can also be used.

The motor control encoder supply voltage is 5 V DC or alternatively 10 V to 30 V DC. The 10 V to 30 V DC version supports longer cable lengths. Most control systems supply the voltage directly at the measuring circuit connector. With SINAMICS, the measuring systems are provided with power via the converters or the Sensor Modules.

For motion control encoders with cables, the cable length including the connector is 1 m.

The following bending radii must be observed for the cable to the built-on encoder:

- One-time bending: ≥ 20 mm
- Continuous bending: ≥ 75 mm

More information

- Internet:
  www.siemens.com/sensor-systems
  https://sieportal.siemens.com

© Siemens 2024

Overview

MOTION-CONNECT includes connection systems and components which are optimally tailored to individual areas of application. MOTION-CONNECT cables feature state-of-the-art connection systems to ensure fast, reliable connection of different components, and offer maximum quality as well as system-tested reliability.

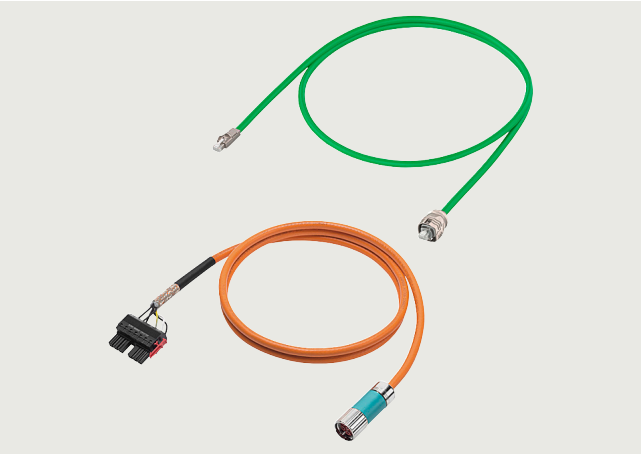

MOTION-CONNECT power cable and signal cable

MOTION-CONNECT cables are available as fully-assembled power and signal cables or sold by the meter. The pre-assembled cables can be ordered in length units of 10 cm (3.94 in) and can be extended, if necessary.

Whatever your machine requirements, MOTION-CONNECT offers the solution.

- **Robust, high-performance and easy to use**
  thanks to pre-assembled cables with a rugged metal connector in degree of protection IP67 and reliable SPEED-CONNECT quick-release lock
- **Outstanding and proven quality**
  achieved by consistent quality management and system-tested cables

Cables are available in two different qualities – MOTION-CONNECT 500 and MOTION-CONNECT 800PLUS.

MOTION-CONNECT 500	MOTION-CONNECT 800PLUS
• Cost-effective solution for predominantly fixed installation • Tested for travel distances up to 5 m (16.4 ft)	• Meets requirements for use in cable carriers • Oil-resistant • Tested for travel distances of up to 50 m (164 ft)

More information

- Internet:
  www.siemens.com/motion-connect
  https://sieportal.siemens.com

© Siemens 2024

Firmware functionality

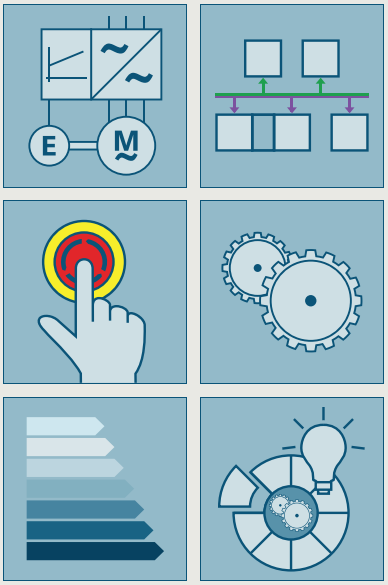

2/2 Firmware functionality
2/2 Introduction
2/2 Basic Drive Functions
2/4 Standard Technology Functions
2/5 Advanced Technology Functions
2/6 Common Engineering
2/6 Applications & Branch know-how

Further information about firmware functionality can be found on the internet at
www.siemens.com/sinamics-firmware

© Siemens 2024

Overview

The major part of the functionality of SINAMICS drives is implemented in software. This "embedded" **software** delivers the function of the product and is therefore a significant component of the overall product. The embedded software is also known as **firmware**, because it is firmly connected to specific hardware.

In the case of SINAMICS drives, the firmware is subdivided into the **operating system (OS)** with drivers for the hardware and the converter functions, which are also referred to as the **runtime (RT) functions**.

Introduction

The available firmware functions are so extensive that the overall functional scope has been structured into function groups corresponding to their main applications.

The 8 main groups are:

- Basic Drive Functions
- Standard Technology Functions
- Advanced Technology Functions
- Communication Functions
- Safety Integrated Functions
- Energy Efficiency Functions
- Common Engineering
- Applications & Branch know-how

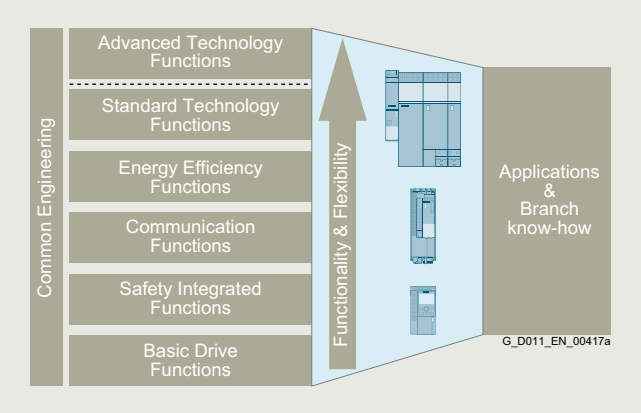

Functionality, including technology and configuration

Basic Drive Functions

The main groups, especially the "Basic Drive Functions", are divided up into further subgroups.

- Control modes
- Availability
- Setpoints and commands
- Limiters, timers and monitoring functions
- Diagnostics
- Protection

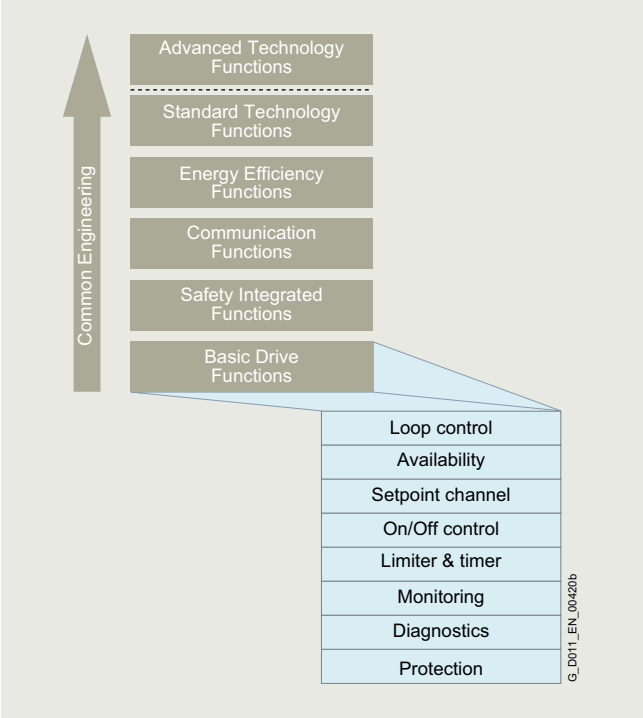

Basic Drive Functions - Control Functions

Control modes

The control methods are the core of the entire converter firmware. They are responsible for optimum movement of the connected motor and the attached machines. The better the control functions, the faster, better and more smoothly the machine operates, thereby significantly enhancing the quality of the production output.

A distinction is made between the following methods:

- V/f control (open-loop control)
- Vector control (closed-loop control)
- Servo control (closed-loop control)

Further classification refers to the control variables:

- Current control
- Speed control
- Torque control
- Position control
- Technological process control (pressure, flow rate, temperature, fill level, etc.)

© Siemens 2024

Overview

Availability

Availability refers to the frequency ratio, namely how often or seldom a single device restricts the entire production process due to a problem. That is why it is important in terms of availability that a drive enters the faulty state only when it is essential for self-protection. Moreover, it is important that the cause of the pending problem is identified and eliminated as quickly as possible.

Features and measures to increase availability:

- Parallel connections, for example, to maintain emergency operation (possibly also at a lower rating), if a power unit fails
- Automatic restart
- Flying restart
- V_{dc} control with kinetic buffering
- Redundancy (hardware, communication, etc.)

Setpoints and commands

The setpoint channel is the link between the setpoint source and the motor control. The converter has a special feature that supports simultaneous input of two setpoints. Generation and subsequent modification of the total setpoint (influencing the direction, skip frequency, up/down ramp) take place in the setpoint channel.

Different sources of command usually result from the requirements to operate a drive from different places (on-site/remote), in different situations (standard/emergency mode) and/or different operating. The BICO binector connector technology allows SINAMICS to configure and combine the command and setpoint sources completely individually.

The following can be used for switching:

- Dataset switchover
- Switching elements among the Free Function Blocks (FFB)
- Fixed values

Limiters and monitoring functions

Limiters or limits are used to constrain input and/or output variables as appropriate to the connected machine; this means that not all positioning variables are used over their full range but are limited judiciously to enhance the safety and quality of the production process.

Timers/runtime counters are used to obtain information or make statements about the temporal course of a process.

- Recording application information for manufacturers
- Recording operating times for users
- Configurable timers for monitoring intervals
- Configurable timers for triggering activities at certain intervals (e.g. maintenance work)

Monitoring is used for early detection of conditions that may be detrimental or even dangerous to the connected machine, so that they can be counteracted expediently. If an appropriate countermeasure is not initiated, a protective response of the converter with probable fault shutdown will ultimately result.

Diagnostics

The "Diagnostics" subgroup comprises all those functions that provide assistance with determining the possible causes of a problem.
If problems occur in a process, or in the driven machine, further interpretation of the measured variables in the converter is required. To this end, different signals should be correlated with respect to time and then observed.

This includes:

- Error and alarm buffer
- Diagnostic buffer
- List of missing signals that interrupt operation
- Tracing for temporal assignment of signal profiles
- I/O simulation
- Telegram content diagnoses
- Terminal status

Protection

All protection functions counteract any possible damage to the converter and/or motor. This is why the shutdown thresholds cannot be parameterized but are factory-tuned and permanently set to match the built-in components. Alarm thresholds may be parameterized as a relative variable for shutdown threshold of some monitoring processes. Thus, a countermeasure that is sensitive to the process may still be initiated upon occurrence of the alarm.

Apart from protection of the hardware, protection of the parameterization and therefore protection of the intellectual expertise of the customer from unauthorized access and copying is also an important part of the protection functions.

- Write protection
- Know-how protection
- Copy protection

© Siemens 2024

Overview

Standard Technology Functions

The Standard Technology Functions are not restricted to a specific SINAMICS product family, but they are available in full or at least partially in SINAMICS S120 as well as in SINAMICS G120.

- BICO technology
- Free function blocks (FFB)
- Basic positioner (EPOS)
- Technology controller (PID)

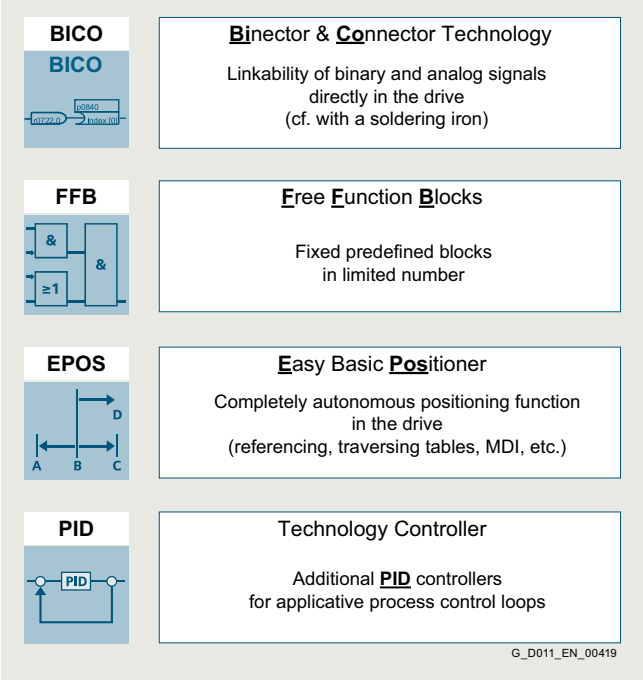

Standard Technology Functions

The Standard Technology Functions significantly expand the application spectrum of the SINAMICS drives because the functions are not permanently and unalterably interconnected; rather, they are interrupted at defined access points and can be connected or wired differently. The BICO technology makes it possible.

The FFBs enable additional, freely interpretable adaptations of the binary and analog signal flow to the given machine application. However, the FFBs are limited in terms of the absolute quantity and the computing intervals (sampling times) that can be selected. These blocks are NOT multi-instance capable.

With EPOS, comprehensive positioning tasks are autonomous in SINAMICS (i.e. their solution does not need a higher-level control). And moreover, this integrated functionality is also extremely flexible: It can be used for highly dynamic servo control as well as for simple applications with vector-controlled asynchronous motors. Up to 64 target positions, as well as the respective traversing speeds, can be permanently stored in the drive during commissioning. Axes can be positioned either absolutely or relatively.
It is, however, also possible to transfer these parameters as required from a higher-level controller. This means that target positions and velocities can even be changed on-the-fly during a positioning run.

The technology controller (PID controller) permits all types of simple process controls to be implemented. It can be used, for example, to control the line pressure, fill level, temperature, flow or also tension control or load balancing.

For more information, see section Technology functions.

© Siemens 2024

Overview

Advanced Technology Functions

The Advanced Technology Functions are the clear differentiating feature between the SINAMICS product families of SINAMICS G120 with the CU2xx-2 Control Units and SINAMICS S120 with the CU3x0-2 Control Units. The Advanced Technology Functions are only available for SINAMICS S120:

- SINAMICS Drive Control Chart (DCC)
- SINAMICS Technology Extensions (TEC)

The Advanced Technology Functions are characterized by maximum flexibility and performance whereby extremely individual and, at the same time, efficient solutions can be achieved.

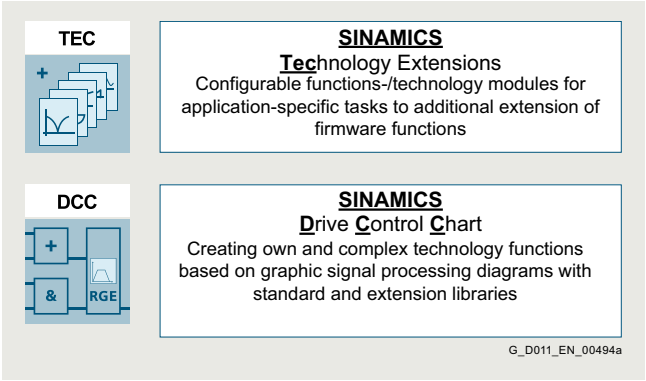

Advanced Technology Functions

SINAMICS DCC comprises the block library, so-called DCB Drive Control Blocks and the DCC Editor for graphical interconnection of blocks. SINAMICS DCC is primarily employed to solve arithmetic and control-related tasks or logic functions associated with complex applications.

In addition to the DCB Standard library, the DCB Extension library can also be used to create applications.
The DCB Extension library is comprised of freely programmable blocks which are created for specific applications using DCB Studio and are then graphically interconnected with the DCC Editor in a similar fashion to standard blocks.

SINAMICS Technology Extensions (TECs) are configurable firmware expansions that are specifically created for use in a customized application with special requirements. This functionality can therefore be subsequently installed as an add-on to the standard scope of firmware functions. One example of a SINAMICS TEC is the VIBX vibration extinction for storage and retrieval systems.

For more information, see section Technology functions.

The functional scope of Advanced Technology Functions is scalable and flexible. Depending on the task, you can choose between configurable solutions provided by Siemens or freely created proprietary solutions in the drive.

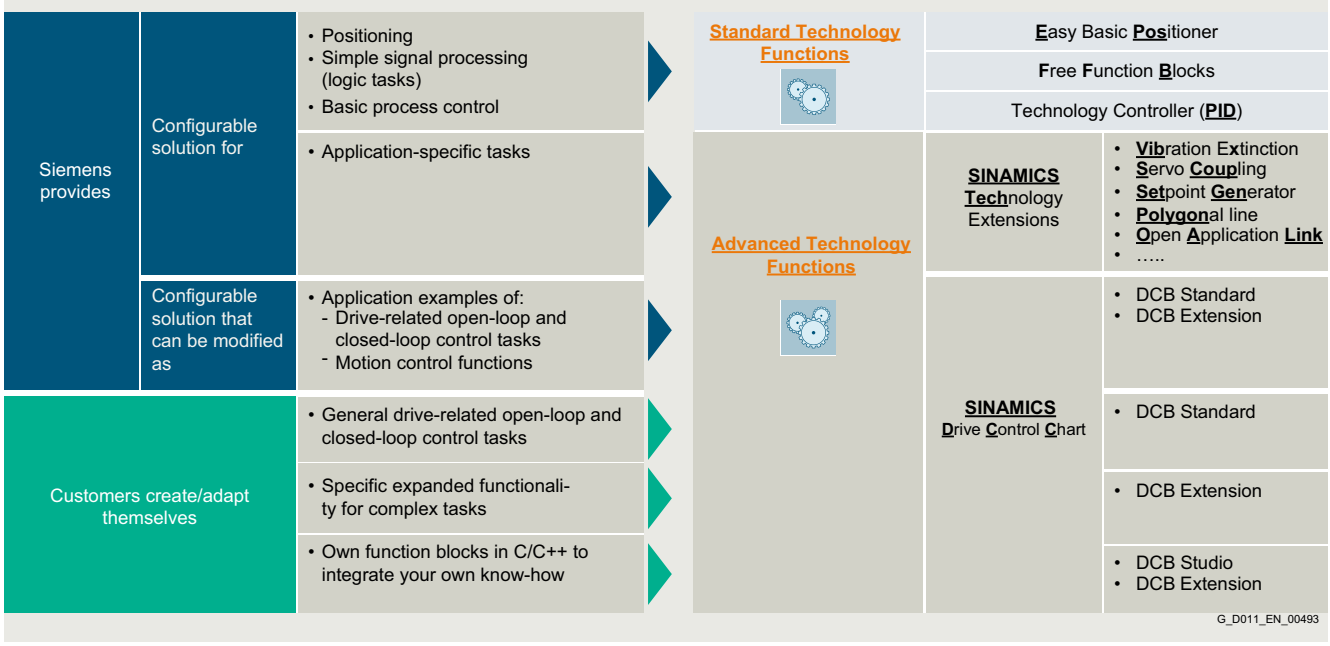

Depending on the technology function, a license may be required for the application.

© Siemens 2024

Firmware functionality

Overview

Safety Integrated Functions

See section Safety Integrated

Communication Functions

See section Communication

Energy Efficiency Functions

See section Energy efficiency

Common Engineering

All functions of the converters are implemented to enable a common engineering approach to their handling no matter which type of drive is selected; i.e. if a function is used in drive x, it can be configured intuitively and commissioned in the same way in drive y. Knowledge gained can therefore be reused easily and efficiently. The configuration and commissioning tools in particular (such as SIZER for Siemens Drives (integrated in TIA Selection Tool), STARTER and SINAMICS Startdrive) reflect this approach..

For more information, see section Engineering tools.

Applications & Branch know-how

Siemens has applied these technology functions (standard and/or advanced) to generate numerous application solutions. These applications can be downloaded from the Siemens application support website at
www.siemens.com/sinamics-applications

The STARTER and SINAMICS Startdrive commissioning tools can then be used to activate and configure the applications and download them to the Control Units.

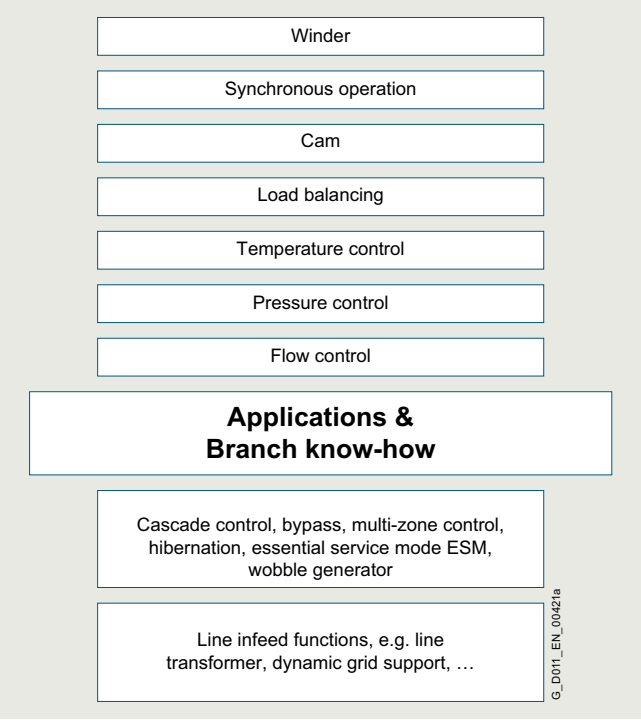

Applications & Branch know-how

Depending on the technology function, a license may be required for the application.

In some branch-specific Control Units (e.g. CU230P-2) branch-specific functions are also an integral part of the firmware.

For more information, see section Drive applications.

More information

Further information about firmware functionality can be found on the internet at
www.siemens.com/sinamics-firmware

© Siemens 2024

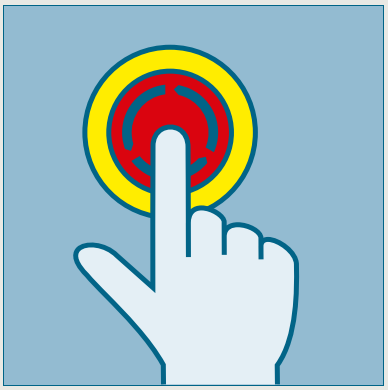

3/2 **Safety Integrated**
3/2 Overview
3/3 Function
3/13 Integration
3/13 More information

3/14 **Safety Integrated for SINAMICS S120 built-in units**
3/14 Overview
3/16 Function

The Safety Integrated Function Manual contains detailed information about the safety functions.
https://support.industry.siemens.com/cs/document/109781722

Further manuals pertaining to Safety Integrated in drive systems can be found on the internet at
https://support.industry.siemens.com/cs/ww/en/ps/13206/man

Further information about Safety Integrated in SINAMICS can be found on the internet at
www.siemens.com/safety-drives

© Siemens 2024

Overview

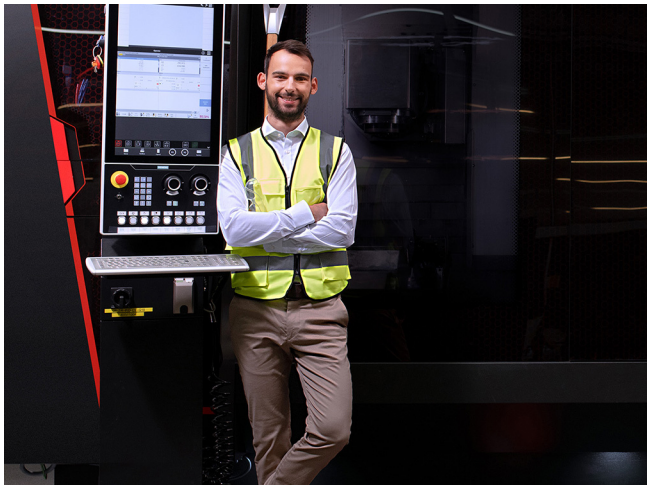

Legal framework

Machine manufacturers and plant construction companies must ensure that their machines or plants cannot cause danger due to malfunctions in addition to the general risks of electric shock, heat or radiation.

In Europe, for example, compliance with the Machinery Directive 2006/42/EC is legally stipulated by the EU framework directive for occupational safety. In order to ensure compliance with this directive, it is recommended that the corresponding harmonized European standards are applied. This triggers the "assumption of conformity" and gives manufacturers and operators the legal security in terms of compliance with both national regulations and EU directives. The machine manufacturer uses the CE marking to document compliance with all relevant directives and regulations in the free movement of goods.

Safety-related standards

Functional safety is specified in various standards. For example, ISO 12100 specifies standards pertaining to machine safety (risk assessment and risk reduction). IEC 61508 specifies basic requirements for electronic and programmable safety-related systems. IEC 62061 (only applicable for electrical and electronic control systems) and ISO 13849-1 define the functional and safety-related requirements of safety-oriented control systems.

The above-mentioned standards define different safety requirements that the machine has to satisfy in accordance with the risk, frequency of a dangerous situation, probability of occurrence and the opportunities for recognizing impending danger.

- ISO 13849-1:
  Performance Level PL a ... e;
  Category B, 1 ... 4
- IEC 62061:
  Safety Integrity Level SIL 1 ... 3

Trend toward integrated safety systems

The trend toward greater complexity and higher modularity of machines has seen a shift in safety functions away from the classical central safety functions (for example, shutdown of the complete machine using a main disconnecting means) and into the machine control system and the drives. This is often accompanied by a significant increase in productivity because the setup times are shortened. Depending on the type of machine, it may even be possible to continue manufacturing other parts while the setup is in progress.

Safety Integrated Functions act much faster than those of a conventional design. The safety of a machine is increased further with Safety Integrated. Furthermore, thanks to the faster method of operation, safety measures controlled by integrated safety systems are perceived as less of a hindrance by the machine operator, therefore significantly reducing the motivation to consciously bypass safety functions.

© Siemens 2024

Function

Safety functions integrated in SINAMICS drives

SINAMICS drives are characterized by a large number of Safety Integrated Functions. In combination with the sensors and safety control required for the safety functionality, they ensure that highly-effective protection for persons and machines is implemented in a practice-oriented manner.

They comply with the requirements of the following safety categories:

- PL d and Category 3 according to ISO 13849-1
- SIL 2 according to IEC 61508 and IEC 61800-5-2

Note:

The Safe Brake Test (SBT) diagnostic function meets the requirements for Category 2 according to ISO 13849-1.

The PM240-2 Power Modules, frame sizes FSD to FSG additionally offer STO acc. to IEC 61508 SIL 3 and ISO 13849-1 PL e and Category 3.

The Safety Integrated functions are generally certified by independent institutes. You can obtain the corresponding test certificates and manufacturer's declarations from your Siemens contacts.

The Safety Integrated Functions that are currently available are described below. Their functional safety satisfies the requirements defined in the international standard IEC 61800-5-2 for variable-speed drive systems.

The safety functions integrated into the SINAMICS drive system can be roughly divided into four categories:

- **Functions for safely stopping a drive**
  - Safe Torque Off (STO)
  - Safe Stop 1 (SS1)
  - Safe Stop 2 (SS2)
  - Safe Operating Stop (SOS)
- **Functions for safe brake management**
  - Safe Brake Control (SBC)
  - Safe Brake Test (SBT) (this diagnostic function exceeds the scope of IEC 61800-5-2)
- **Functions for safely monitoring the motion of a drive**
  - Safely-Limited Speed (SLS)
  - Safe Speed Monitor (SSM)
  - Safe Direction (SDI)
  - Safely-Limited Acceleration (SLA)
- **Functions for safely monitoring the position of a drive**
  - Safely-Limited Position (SLP)
  - Safe Position (SP) (this function exceeds the scope of IEC 61800-5-2)
  - Safe Cam (SCA)

Safe Torque Off (STO)

The STO function is the most common and basic drive-integrated safety function. It ensures that no torque-generating energy can continue to affect a motor and prevents unintentional start-ups.

Effect

This function is a mechanism that prevents the drive from restarting unexpectedly, in accordance with EN 60204-1, Section 5.4. The STO function suppresses the drive pulses (corresponds to Stop Category 0 according to EN 60204-1). The drive is reliably torque-free. This state is monitored internally in the drive.

Application

STO has the immediate effect that the drive cannot supply any torque-generating energy. STO can be used wherever the drive will naturally reach a standstill due to load torque or friction in a sufficiently short time or when "coasting down" of the drive will not have any relevance for safety.

STO makes it possible for persons to work safely when the protective door is open (restart interlock) and is used on machines/installations with moving axes, e.g. on handling or conveyor systems.

Customer benefits

Some of the advantages of the Safety Integrated Function STO over conventional safety technology with electromechanical switchgear include the elimination of separate components as well as of the work that would be required to wire and service them, i.e. no wearing parts as a result of the electronic shutdown. Because of the fast electronic switching times, the function provides a shorter reaction time than the conventional solution comprising electromechanical components. When STO is triggered, the converter remains connected to the network and can be fully diagnosed.

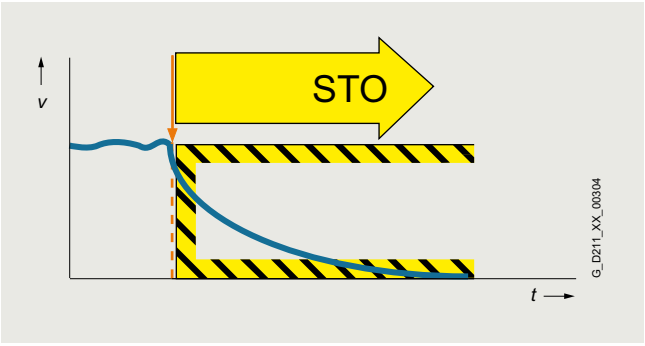

© Siemens 2024

3

Function

Safe Stop 1 (SS1)

The SS1 function causes a motor to stop rapidly and safely and switches the motor to torque-free mode after coming to a standstill by activating STO.

Effect

The SS1 function can safely stop the drive in accordance with EN 60204-1, Stop Category 1. When the SS1 function is selected, the drive brakes autonomously along a quick-stop ramp and automatically activates the Safe Torque Off and Safe Brake Control functions (if configured) when the parameterized safety delay time expires.

If the variant "SS1 with external stop (SS1E)" is parameterized, the drive does not brake autonomously when the function is selected. In this case, the higher-level control must bring the drive to a standstill within a parameterized STO transition time. The SBR (Safe Brake Ramp) and SAM (Safe Acceleration Monitor) functions are not active. SS1E is a useful function for drives that need to be stopped as a group by the Motion Control system in order to prevent potential damage to the machine or product.

Application

The SS1 function is used when, in the event of a safety-relevant incident, the drive must stop as quickly as possible with a subsequent transition into the STO state (e.g. EMERGENCY STOP). It is thus used to bring large centrifugal masses to a stop as quickly as possible for the safety of the operating personnel, or to brake motors at high speeds as quickly as possible. Examples of typical applications are saws, grinding machine spindles, centrifuges, winders and storage and retrieval machines.

Customer benefits

The targeted stopping of a drive by means of SS1 reduces the risk of danger, increases the productivity of a machine, and allows the safety clearances in a machine to be reduced. The principle is to bring the drive actively to a standstill, compared with just using the STO function. Complex mechanical brakes that are susceptible to wear are normally not required to brake the motor.

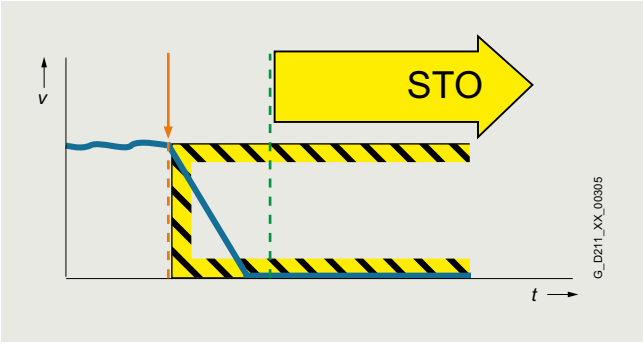

Safe Stop 2 (SS2)

The SS2 function brings the motor to a standstill quickly and safely and then activates the SOS function once the motor has stopped.

Effect

The Safe Stop 2 function can safely stop the drive in accordance with EN 60204-1, Stop Category 2. When the SS2 function is selected, the drive brakes autonomously along a quick stop ramp. In contrast to SS1, the drive control remains operational afterwards, i.e. the motor can supply the full torque required to maintain zero speed. Standstill is safely monitored (Safe Operating Stop function).

If the variant "SS2 with external stop (SS2E)" is parameterized, the drive does not brake autonomously when the function is selected. In this case, the higher-level control must bring the drive to a standstill within a parameterized Safe Operating Stop transition time. The SBR (Safe Brake Ramp) and SAM (Safe Acceleration Monitor) functions are not active. SS2E is a useful function for drives that need to be stopped as a group by the Motion Control system in order to prevent potential damage to the machine or product.

Application

As with SS1, the SS2 function ensures the quickest possible deceleration of the motor. However, the motor power is not switched off. Instead, a control system prevents it from leaving the standstill position – even if it is affected by external forces. Typical applications for SS2 include machine tools, for example.

Customer benefits

The SS2 function ensures a rapid axis stop. Because the control remains active, after the safety function is deselected, productive operation can continue without referencing. This ensures short setup and standstill times and high productivity.

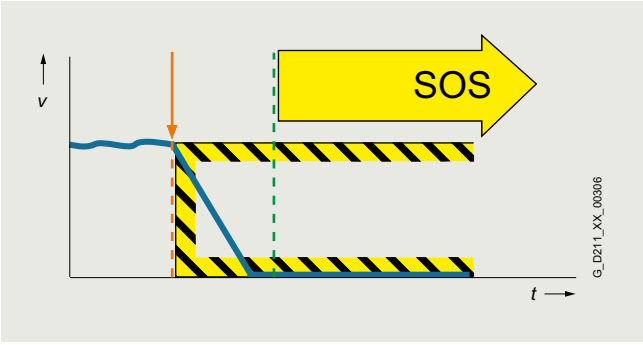

© Siemens 2024

Function

Safe Operating Stop (SOS)

With the SOS function, the stopped motor is held in position by the drive control system and its position is monitored.

Effect

The SOS function constitutes safe standstill monitoring. The drive control remains in operation. The motor can therefore deliver the full torque to hold the current position. The actual position is reliably monitored. In contrast to safety functions SS1 and SS2, the speed setpoint is not influenced autonomously. After SOS has been activated, the higher-level control must bring the drive to a standstill within a parameterized time and then hold the position setpoint.

Application

SOS is an ideal solution for all those applications for which the machine or parts of the machine must be at a safe standstill for certain steps, but the drive must also supply a holding torque. It is ensured that despite counter torque the drive remains in its current position. In contrast to SS1 and SS2, the drive does not brake autonomously in this case. It expects the higher-level controller to ramp down the relevant axes as a coordinated group within an adjustable delay time. This can be used to prevent any damage to the machine or product. Typical applications for SOS include winders, converting and packaging machines and machine tools.

Customer benefits

No mechanical components are necessary to keep the axis in position despite any counterforce that may occur. Due to the short switching times and the fact that the drive control always remains active, setup and downtimes are reduced. Recalibration of the axis after exiting the SOS function is not necessary. The axis can immediately be moved again after deactivation of the SOS function.

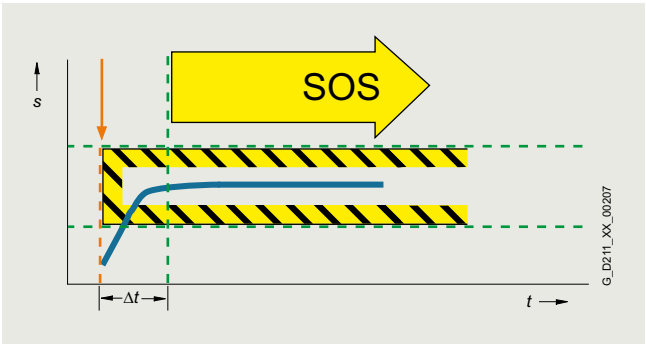

Safe Brake Control (SBC)

The SBC function permits the safe control of a holding brake. SBC is always activated in parallel with STO.

Effect

A holding brake which is active in a de-energized state is controlled and monitored using safe two-channel technology. Due to the two-channel control, the brake may still be activated in the event of an insulation fault in the control cable. Errors of this kind are detected early by means of test pulses.

Note:

Safe Brake Control does not detect mechanical faults in the brake itself, such as worn brake linings. For Motor Modules in booksize format, the terminals for the motor brake are integrated. An additional Safe Brake Relay is required for Power Modules in blocksize format. An additional Safe Brake Adapter is necessary for Power Modules in chassis format.

Application

The SBC function is used in conjunction with the functions STO or SS1 to prevent the movement of an axis in the torque-free state, e.g. because of gravity.

Customer benefits

Again, the function saves the use of external hardware and the associated wiring.

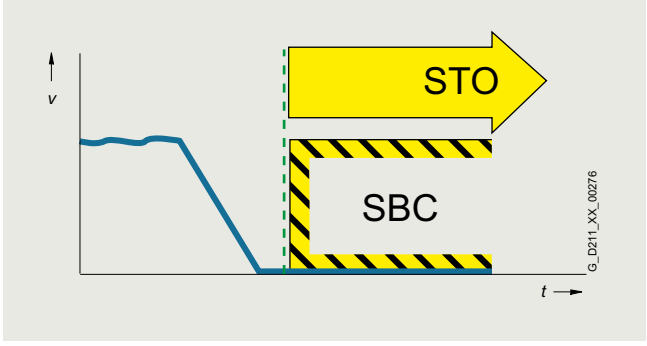

© Siemens 2024

3

Function

Safe Brake Test (SBT)

The SBT diagnostic function carries out a brake function test at regular intervals or before personnel enter the danger zone.

Effect

A good way to check the proper functioning of brakes that have become worn is to apply a torque to the closed brake. Drive systems that have two brakes, e.g. motor brake and external brake, can be tested with different torque values.

Application

The SBT diagnostic function is suitable for implementing a safe brake in combination with the SBC function.

Customer benefits

The function detects faults or wear in the brake mechanics. Automatically testing the effectiveness of brakes reduces maintenance costs and increases the safety and availability of the machine or plant.

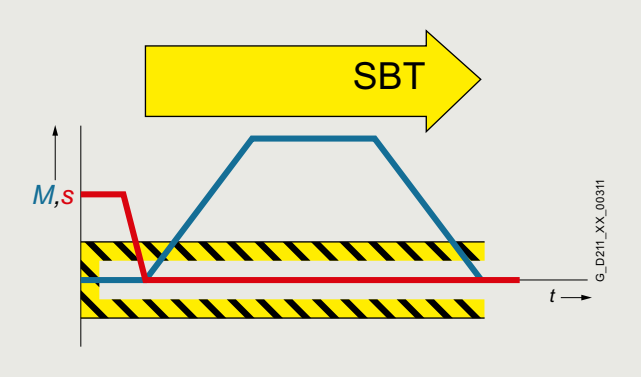

Safely-Limited Speed (SLS)

The SLS function monitors the drive to ensure that it does not exceed a preset speed or velocity limit.

Effect

The SLS function monitors the drive against a parameterized speed limit. Four different limit values can be selected. As in the case of SOS, the speed setpoint is not influenced independently. After SLS has been selected, the higher-level control must bring the drive down below the selected speed limit within a parameterizable time. If the speed limit is exceeded, a customizable drive-integrated fault reaction occurs.

The SLS limit stage 1 can be multiplied by a factor that is transferred in 16-bit resolution via PROFIsafe. This allows an almost unlimited number of limits to be specified.

Application

The SLS function is used if people are in the danger zone of a machine and their safety can only be guaranteed by reduced speed. Typical application cases include those in which an operator must enter the danger zone of the machine for the purposes of maintenance or setting up, such as a winder in which the material is manually threaded by the operator.
To prevent injury to the operator, the roller may only spin at a safely reduced speed. SLS is often also used as part of a two-stage safety concept. While a person is in a less critical zone, the SLS function is activated, and the drives are only stopped safely in a smaller area with higher potential risk. SLS can be used not only for operator protection, but also for machinery protection, e.g. if a maximum speed must not be exceeded.

Customer benefits

The SLS function can contribute to a significant reduction in downtime, or greatly simplify or even accelerate setup.
The overall effect achieved is a higher availability of the machine. Moreover, external components such as speed monitors can be omitted.

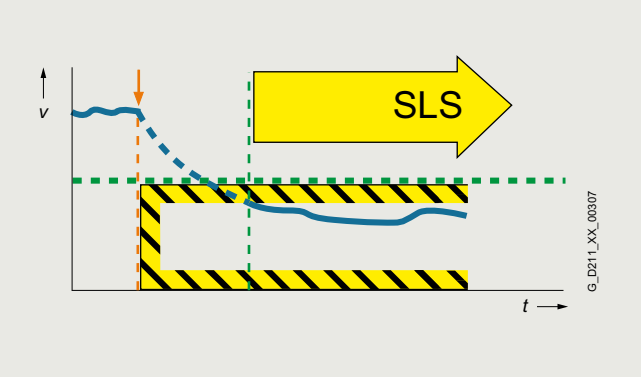

© Siemens 2024

Function

Safe Speed Monitor (SSM)

The SSM function warns when a drive is working below an adjustable speed limit. As long as it remains below the threshold, the function issues a safety-related signal.

Effect

If a speed value drops below a parameterized limit, a safety-related signal is generated. This can, for example, be processed in a safety control unit to respond to the event by programming, depending on the situation.

Application

With the SSM function, in the simplest case, a safety door can be unlocked if the speed drops below a non-critical level. Another typical example is that of a centrifuge that may be filled only when it is operating below a configured speed limit.

Customer benefits

Unlike SLS, there is no drive-integrated fault reaction when the speed limit is exceeded. The safe feedback can be evaluated in a safety control unit, allowing the user to respond appropriately to the situation.

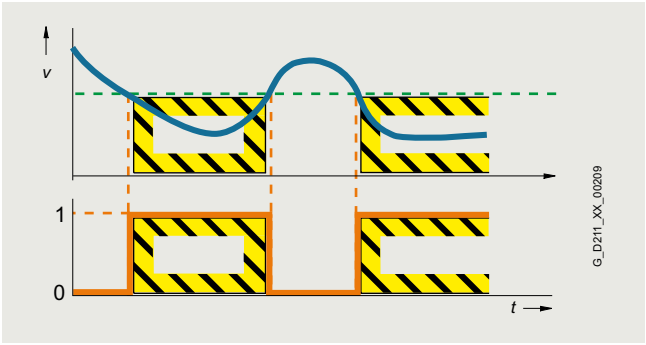

Safe Direction (SDI)

The SDI function ensures that the drive can only move in the selected direction.

Effect

Deviation from the direction of motion currently being monitored is detected reliably and the configured drive-integrated fault reaction is initiated. It is possible to select which direction of rotation is to be monitored.

Application

The SDI function is used when the drive may only move in one direction. A typical application is to permit the operator access to a danger zone, as long as the machine is rotating in the safe direction, i.e. away from the operator. In this state, the operator can feed material into the work zone or remove material from the work zone without danger.

Customer benefits

The function saves the use of external components such as speed monitors and the associated wiring. The release of a danger zone while the machine is moving away from the operator increases productivity. Without the SDI function, the machine must be safely stopped during material loading and removal.

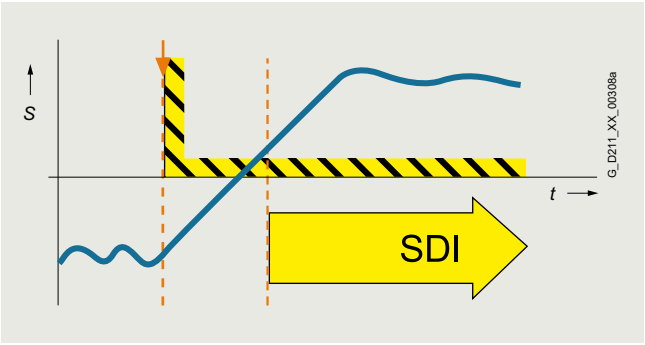

© Siemens 2024

3

Function

Safely-Limited Acceleration (SLA)

The SLA function monitors that the drive does not exceed a preset acceleration limit value.

Effect

The SLA function monitors that the motor does not violate the defined acceleration limit (e.g. in setup mode). SLA detects early on whether the speed is increasing at an inadmissible rate (the drive accelerates uncontrollably) and initiates the stop response.

Application

The SLA function is used, e.g., for SIMATIC Safe Kinematics.

Customer benefits

The function monitors for maximum permissible acceleration in setup mode and safe monitoring of the tool center point with different kinematics.



Safely-Limited Position (SLP)

The SLP function monitors the axis to ensure that it remains within the permissible traversing range.

Effect

When SLP is activated, the traversing range limited by the configured software limit switches is safely monitored. If the permitted traversing range is exited, a configurable fault reaction occurs. It is possible to toggle between two traversing ranges, even when the machine is in operation.

Application

SLP is used for applications in which machine operators have to enter a protection area, e.g. for feeding in and removing material. Safe monitoring of the axis position ensures that the axis cannot move into the protection area released for operators and so place them in danger, for example, on storage and retrieval machines, gantry cranes or machining centers.

Customer benefits

SLP can be used for highly-effective protection area monitoring. The function does away with the use of external components such as hardware limit switches and the associated wiring expense. Due to the short reaction time following a limit overshoot, safety clearances can be reduced.

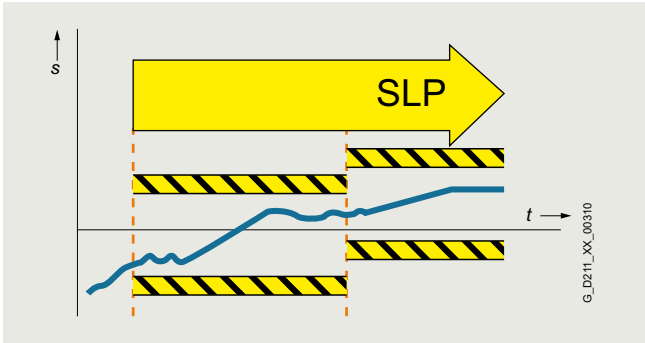

© Siemens 2024

Function

Safe Position (SP)

The SP function transfers the actual position values determined safely in the drive over safe PROFIsafe communication to a safety control.

Effect

In contrast to the SLP function that monitors the current actual position value against a limit and, in the case of an overshoot, activates a drive-integrated fault reaction, SP transfers the current actual position values to the safety control. Position monitoring is implemented in the safety program of the control. Extended PROFIsafe telegrams are available for transferring the position values. The position values can be transferred in 16-bit or 32-bit resolution, as required. A time stamp is also transferred with the position values.

Application

Tailor-made safety concepts can be created using the SP function. It is ideal for use on machines that require flexible safety functions. It is extremely versatile and can be used, for example, to implement safe, axis-specific range detection by means of safe cams. The SP function can also be used to implement multi-axis safety concepts, multi-dimensional protection areas and zone concepts.

Customer benefits

Position monitoring or speed monitoring is implemented in the safety program of the control, so the user has the flexibility for implementing tailor-made safety functions. The reaction to a limit overshoot must also be specified in the safety program. This means a higher initial programming outlay, but it does offer the opportunity for initiating different fault reactions depending on the situation.

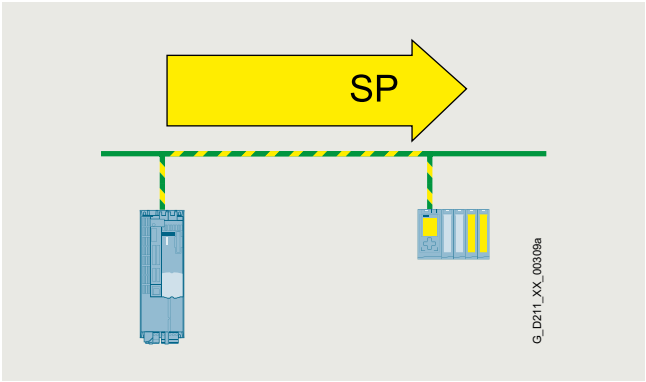

Safe Cam (SCA)

The SCA function enables safety-related monitoring of the position.

Effect

The SCA function outputs a safe signal if the drive is within a specified position range. It facilitates the realization of safe axis-specific range detection. Up to 30 safe cams can be parameterized per axis.

Application

It is only permissible that a protective door is opened if a drive is in a certain position range. The drive may only be traversed with reduced speed when it is located in a certain position range.

Customer benefits

The function enables safety-related switchover of safety functions. With SCA, safe electronic cam controllers can be implemented without additional hardware. With SCA, work and protection zone delimitations are reliably detected.

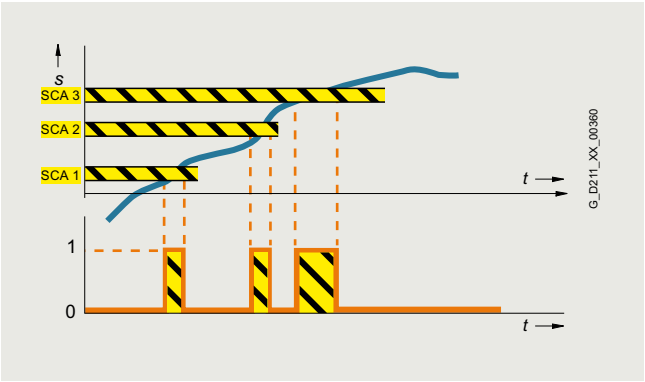

© Siemens 2024

Function

Basic Functions, Extended Functions, and Advanced Functions

With SINAMICS G converters, the safety functions are basically implemented without encoders.

With SINAMICS S drives, the safety functions are implemented with encoders – individual safety functions can also be operated without encoders.

The Safety Integrated Functions are grouped into Basic Functions, Extended Functions, and Advanced Functions.

The Basic Functions are included in the standard scope of supply.
The Extended Functions must be activated by a license [1]. The Advanced Functions for SINAMICS S120 must also be activated via a license.

The electronic Certificate of License is the paperless delivery form for runtime options for SINAMICS and contains information about the type of rights of use purchased for the software.

- Basic Functions
  - Safe Torque Off (STO)
  - Safe Brake Control (SBC)
  - Safe Stop 1 (SS1)
- Extended Functions
  - Safe Stop 1 (SS1) with SBR or SAM
  - Safe Stop 2 with external stop (SS2E)
  - Safe Stop 2 (SS2) with SBR or SAM
  - Safe Operating Stop (SOS)
  - Safely-Limited Speed (SLS)
  - Safe Speed Monitor (SSM)
  - Safe Direction (SDI)
  - Safely-Limited Acceleration (SLA)
  - Safe Brake Test (SBT) diagnostic function
- Advanced Functions
  - Safely-Limited Position (SLP)
  - Safe Position (SP)
  - Safe Cam (SCA)

The license for Safety Integrated Advanced Functions also includes the license for Safety Integrated Extended Functions.

For the Extended Functions SS1 and SS2 with SAM, Safe Acceleration Monitor (SAM) is performed during braking to identify any faults already during the braking phase.

With SS1 and SS2, a Safe Brake Ramp (SBR) can be configured as an alternative. SS1 can also be parameterized with an external stop (SS1E).

The Basic Functions – activated via on-board terminals on the device, TM54F Terminal Module (only for SINAMICS S) or via PROFIsafe – do not require an encoder.

Activation of the Safety Integrated Functions

The safety functions for SINAMICS drives can be activated via terminals, e.g. for use of a conventional safety circuit.

For standalone safety solutions for small to medium-sized applications, it is frequently sufficient that the various sensing components are directly hardwired to the drive.

For integrated safety solutions, the safety-relevant sequences are generally processed and coordinated in the fail-safe SIMATIC controller. Here, the system components communicate via the PROFINET or PROFIBUS fieldbus. The safety functions are controlled via the safe PROFIsafe communication protocol.

SINAMICS drives can be easily integrated into the plant or system topology.

PROFIsafe

SINAMICS drives support the PROFIsafe profile based on PROFINET as well as on PROFIBUS.

PROFIsafe is an open communications standard that supports standard and safety-related communication over the same communication path (wired or wireless). A second, separate bus system is therefore not necessary. The telegrams that are sent are continually monitored to ensure safety-relevant communication.

Possible errors such as telegrams that have been lost, repeated or received in the incorrect sequence are avoided. This is done by consecutively numbering the telegrams in a safety-relevant fashion, monitoring their reception within a defined time and transferring an ID for transmitter and receiver of a telegram. A CRC (cyclic redundancy check) data security mechanism is also used.

The operating principle of Safety Integrated

Two independent switch-off signal paths

Two independent switch-off signal paths are available. All switch-off signal paths are low active. This ensures that the system is always switched to a safe state if a component fails or in the event of cable breakage. If a fault is discovered in the switch-off signal paths, the STO or SS1 function (depending on parameter settings) is activated and a system restart inhibited.

Two-channel monitoring structure

All the main hardware and software functions for Safety Integrated are implemented in two independent monitoring channels (e.g. switch-off signal paths, data management, data comparison). A cyclic crosswise comparison of the safety-relevant data in the two monitoring channels is carried out.

The monitoring functions in each monitoring channel work on the principle that a defined state must prevail before each action is carried out and a specific acknowledgement must be made after each action. If these expectations of a monitoring channel are not fulfilled, the drive coasts to a standstill (two channel) and an appropriate message is output.

Forced dormant error detection using test stop

The functions and switch-off signal paths must be tested at least once within a defined time in order to meet requirements as per ISO 13849-1 and IEC 61508 in terms of timely fault detection. This must be implemented either in cyclic manual mode or the test stop must be automatically initiated as part of the process. The test stop cycle is monitored, and after a specific time has been exceeded, an alarm is output. A test stop does not require a POWER ON. The acknowledgment is set by canceling the test stop request.

Examples of when forced dormant error detection must be performed:

- When the drives are at a standstill after the system has been switched on
- Before the protective door is opened
- At defined intervals (e.g. every 8 hours)
- In automatic mode, time and event-driven

[1] Only applies to SINAMICS G Control Unit CU250S-2 and SINAMICS S. Available for SINAMICS G via hardware versions "-F".

© Siemens 2024

Function

Safe speed/position sensing without/with encoder

Safe actual value sensing without encoder

A drive monitor with encoder is necessary for operation of a series of safety functions.

For applications with encoderless mode or with encoders that have no safety capability, the safety functions can also be implemented without encoder. It is not possible to use all safety functions in this case.

In operation without encoder, the actual speed values are calculated from the measured electrical actual values. This means that speed monitoring is also possible during operation without an encoder.

Safe actual value sensing with encoder

Incremental encoders or absolute encoders can be used for safe sensing of the position values on a drive.

Safe actual value sensing relies on redundant evaluation of the incremental tracks A/B that supply sin/cos signals of 1 V_{pp}. Only encoders of the type whose A/B track signals are created and processed using purely analog techniques can be used.

HTL/TTL incremental encoders may also be used. In this case, safe actual value sensing is achieved by using two independent encoders. The minimum possible speed resolution must also be taken into account.

The encoder signals are input via Sensor Modules.

As an alternative, motors with an integrated DRIVE-CLiQ interface can be used. The speed or position actual values are generated directly in the motor as safe values and are transferred to the Control Unit over safe communication via DRIVE-CLiQ.

Certified built-on rotary encoders with DRIVE-CLiQ interface may also be used (see https://support.industry.siemens.com/cs/document/65402168).

The encoder must be mechanically attached in such a manner that the encoder shaft is unable to unplug or slide off. For notes on this, see IEC 61800-5-2: 2016, Table D.16.

A list of Siemens motors that fulfill the electrical and mechanical requirements is available at: https://support.industry.siemens.com/cs/document/33512621

The following can be used for safe speed/position sensing:

- Single-encoder systems or
- Dual-encoder systems

Single-encoder system

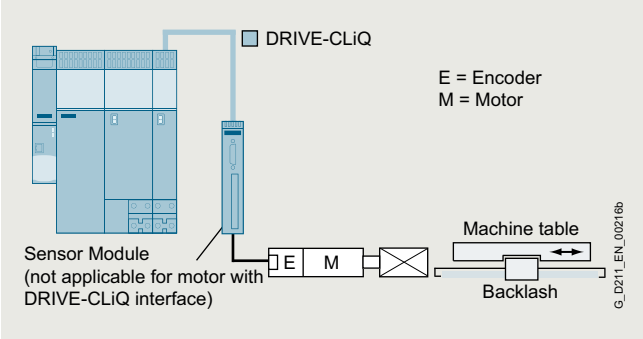

Example: Single-encoder system

In a single-encoder system, the motor encoder is used exclusively for safe actual value sensing.

Dual-encoder system

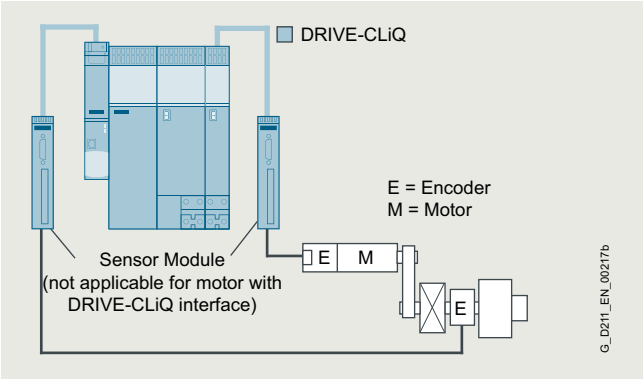

Example: Dual-encoder system

In the case of the dual-encoder system, the safe actual values for a drive are provided by two separate encoders. The actual values are transferred to the Control Unit over DRIVE-CLiQ. When motors without a DRIVE-CLiQ connection are used, a Sensor Module must be provided.

HTL/TTL incremental encoders can be used as an alternative with a dual-encoder system. Either two HTL/TTL encoders, one dual-HTL/TTL encoder or one HTL/TTL encoder and one sin/cos encoder can be used.

© Siemens 2024

Function

The safety functions are listed below with criteria for actual value sensing:

	Functions	Abbreviation	With encoder	Without encoder	Description
Basic Functions	Safe Torque Off	STO	Yes	Yes	Safe Torque Off
	Safe Stop 1	SS1	Yes	Yes [1]	Safe stopping process in accordance with stop category 1
	Safe Brake Control	SBC	Yes	Yes	Safe Brake Control
Extended Functions	Safe Torque Off	STO	Yes	Yes	Safe Torque Off
	Safe Stop 1	SS1	Yes	Yes [1]	Safe stopping process in accordance with stop category 1
	Safe Brake Control	SBC	Yes	Yes	Safe Brake Control
	Safe Operating Stop	SOS	Yes	No	Safe monitoring of the standstill position
	Safe Stop 2	SS2	Yes	No	Safe stopping process in accordance with stop category 2
	Safely-Limited Speed	SLS	Yes	Yes [1]	Safe monitoring of the maximum speed
	Safe Speed Monitor	SSM	Yes	Yes [1]	Safe monitoring of the minimum speed
	Safe Direction	SDI	Yes	Yes [1]	Safe monitoring of the direction of motion
	Safely-Limited Acceleration	SLA	Yes	No	Safely-Limited Acceleration
	Safe Brake Test	SBT	Yes	No	Diagnostic function for safe testing of the required holding torque of a brake
Advanced Functions	Safely-Limited Position	SLP	Yes	No	Safely-Limited Position
	Safe Position	SP	Yes	Yes [2]	Safe transfer of position values
	Safe Cam	SCA	Yes	No	Safe cams

[1] The use of this safety function without encoder is permitted with asynchronous (induction) motors, synchronous motors from the SIEMOSYN series, or with SIMOTICS reluctance motors.

[2] Only for the transmission of relative position values. An encoder is required to transmit absolute position values.

© Siemens 2024

Integration

The safety functions integrated in SINAMICS drives, including SIMATIC ET 200pro FC-2 frequency converters, are listed below.

Safety Integrated	Low voltage									
	Standard Performance frequency converters						Distributed frequency converters			
	SINAMICS						SINAMICS			SIMATIC
	V20	G120C	G120			G130 G150	G115D wall and motor-mounted	G120D		ET 200pro FC-2 [6]
			CU230P-2	CU240E-2	CU250S-2	CU320-2		CU240D-2	CU250D-2	
Functions										
STO	–	✓	–	✓	✓	✓	✓	✓	✓	✓
SS1	–	–	–	✓ [1]	✓ [2] [8]	✓ [2] [8]	–	✓ [1]	✓ [1]	–
SS2	–	–	–	–	–	✓ [1]	–	–	–	–
SOS	–	–	–	–	–	✓ [1]	–	–	–	–
SBC	–	–	–	–	✓	✓	–	–	–	–
SBT	–	–	–	–	–	✓ [1]	–	–	–	–
SLS	–	–	–	✓ [1]	✓ [2]	✓ [1]	✓ [2]	✓ [1]	✓ [1]	–
SSM	–	–	–	✓ [1]	✓ [2]	✓ [1]	–	✓ [1]	✓ [1]	–
SDI	–	–	–	✓ [1]	✓ [2]	✓ [1]	–	✓ [1]	✓ [1]	–
SLA	–	–	–	–	–	✓ [1]	–	–	–	–
SLP	–	–	–	–	–	✓ [3]	–	–	–	–
SP	–	–	–	–	–	✓ [3]	–	–	–	–
SCA	–	–	–	–	–	✓ [3]	–	–	–	–
Control										
PROFIsafe	–	✓	–	✓	✓	✓	✓	✓	✓	–
F-DI	–	✓	–	✓	✓	✓	✓	✓	✓	–

Safety Integrated	Low voltage									
	Industry-specific frequency converters			Servo converters				High performance frequency converters		
	SINAMICS									
	G120P	G120X	G180	V90	S110	S210	S210 (New)	S120 S120M		S150
	CU230P-2				CU305			CU310-2	CU320-2	CU320-2
Functions										
STO	–	✓ [7]	✓	✓	✓	✓	✓	✓	✓	✓
SS1	–	–	–	–	✓ [2] [8]	✓ [2] [8]	✓ [8] [9]	✓ [2] [8]	✓ [2] [8]	✓ [2] [8]
SS2	–	–	–	–	✓ [2]	✓ [2]	✓ [9]	✓ [2]	✓ [2]	✓ [2]
SOS	–	–	–	–	✓ [2]	✓ [2]	✓ [9]	✓ [2]	✓ [2]	✓ [2]
SBC	–	–	–	–	✓	✓	✓	✓	✓	✓
SBT	–	–	–	–	–	✓ [2]	✓ [9]	✓ [2]	✓ [2]	✓ [2]
SLS	–	–	–	–	✓ [2]	✓ [2]	✓ [9]	✓ [2]	✓ [2]	✓ [2]
SSM	–	–	–	–	✓ [2]	✓ [2]	✓ [9]	✓ [2]	✓ [2]	✓ [2]
SDI	–	–	–	–	✓ [2]	✓ [2]	✓ [9]	✓ [2]	✓ [2]	✓ [2]
SLA	–	–	–	–	–	✓ [2]	✓ [9]	✓ [2]	✓ [2]	✓ [2]
SLP	–	–	–	–	–	–	–	✓ [3]	✓ [3] [4]	✓ [5]
SP	–	–	–	–	–	–	–	✓ [3]	✓ [3] [4]	✓ [5]
SCA	–	–	–	–	–	–	–	✓ [3]	✓ [3] [4]	✓ [5]
Control										
PROFIsafe	–	–	–	–	✓	✓	✓	✓	✓	✓
F-DI	–	✓	✓	✓	✓	✓	✓	✓	✓	✓

More information

The Safety Integrated Function Manual contains detailed information about the safety functions
https://support.industry.siemens.com/cs/document/109781722

Further manuals pertaining to Safety Integrated in drive systems can be found on the internet at
https://support.industry.siemens.com/cs/ww/en/ps/13206/man

More information about Safety Integrated in SINAMICS can be found on the internet at
www.siemens.com/safety-drives

1) With fail-safe Control Unit.
2) With Safety Extended license.
3) With Safety Advanced license.
4) Safety Advanced license for cabinet modules on request.
5) Safety Advanced license on request.
6) Information on the SIMATIC ET 200pro FC-2 frequency converter – depending on the SIMATIC ET 200pro station – is available at: www.siemens.com/et200pro-fc
7) With external safety relay.
8) Safe Stop 1 time controlled (SS1-t) is also included in the Safety Integrated Basic functions.
9) The Extended Functions require a Safety license. The functions SS1, SLS, SDI and SSM are available with firmware V6.1. Further functions will be added in a subsequent version.

© Siemens 2024

Overview



The Safety Integrated functions of SINAMICS S120 provide highly effective application-oriented protection for personnel and machinery. They are suitable for machines and systems that require flexible safety functions and support the setup of tailored safety concepts.

SINAMICS S120 offers Extended Functions (SS1 with SBR/SAM, SS1E, SS2 with SBR/SAM, SS2E, SOS, SLS, SDI, SSM, SLA, SBT) as well as Advanced Functions (SLP, SP, SCA) in addition to Basic Functions (STO, SS1, SBC).

The SP function and the SBT diagnostic function go beyond the functional scope according to IEC 61800-5-2.

The Safety Integrated functions are completely integrated into the drive system. They can be activated as follows:

- Via safety-related inputs on the CU310-2 Control Unit
- Via safety-related inputs on the TM54F Terminal Module
- Via PROFIBUS or PROFINET with PROFIsafe

The Safety Integrated functions are implemented electronically and therefore offer short response times in comparison to solutions with externally implemented monitoring functions.

As an alternative to controlling via terminals and/or PROFIsafe, there is also the option to parameterize several Safety Integrated functions without selection. In this mode, after parameterization and a POWER ON, these functions are permanently selected.

Example:

"SLS without selection" can be used, for example, to monitor the maximum velocity to prevent the drive from exceeding a mechanical speed limit. For this purpose, using the "without selection" function, an F-DI does not have to be used; an F-CPU is also not required.

Safe speed/position sensing

Incremental encoders or absolute encoders can be used for safe sensing of the position values on a drive. Safe actual value sensing relies on redundant evaluation of the incremental tracks A/B that supply sin/cos signals of 1 V_{pp}. Only encoders of the type whose A/B track signals are created and processed using purely analog techniques can be used. The encoder signals can be input via the Sensor Modules.

HTL/TTL encoders can be used in a dual-encoder system to achieve safe actual value sensing. The minimum possible speed resolution must also be taken into account. The encoder signals are input via the SMC30 Sensor Module.

As an alternative, motors with an integrated DRIVE-CLiQ interface can be used. The speed or position actual values are generated directly in the motor as safe values and are transferred to the Control Unit over safe communication via DRIVE-CLiQ.

The encoder must be mechanically attached in such a manner that the encoder shaft is unable to unplug or slide off. For notes on this, see IEC 61800-5-2: 2017, Table D.8..

A list of Siemens motors that fulfill the electrical and mechanical requirements is available at:

https://support.industry.siemens.com/cs/document/33512621

The following can be used for safe speed/position sensing:

- Single-encoder systems or
- Dual-encoder systems

Single-encoder systems

In a single-encoder system, the motor encoder is used exclusively for safe actual value sensing.

Dual-encoder systems

The safe actual values for a drive are provided by two separate encoders. The actual values are transferred to the Control Unit over DRIVE-CLiQ. When motors without a DRIVE-CLiQ connection are used, a Sensor Module must be provided.

Safe actual value sensing without encoder

The Extended Functions Safe Stop 1 (SS1) with SAM/SBR, Safely-Limited Speed (SLS), Safe Speed Monitor (SSM) and Safe Direction (SDI) are also available for use without encoders (in combination with asynchronous motors, synchronous motors of the SIEMOSYN series or with SIMOTICS reluctance motors). An encoder that is used for the purposes of motor control has no significance for the safety function here.

The Safety Integrated Function Manual contains additional information about the encoderless safety functions.

https://support.industry.siemens.com/cs/document/109781722

The Extended Functions Safe Stop 2 (SS2), Safe Operating Stop (SOS) and Safe Brake Test (SBT) and the Advanced Functions Safely-Limited Position (SLP), Safe Position (SP) always require a safe encoder system.

Licensing

No license is required for the Basic Functions.

The Extended Functions and Advanced Functions each require a license. The Extended Functions are included in the Advanced Functions license. It is of no consequence here which Safety Integrated functions are used and how many. The license can be ordered as an option with the memory card. Alternatively, a single-user license can also be purchased.

© Siemens 2024

Overview

Safe Brake Control

The Safe Brake Control is integrated in power units in booksize format.

For the Safe Brake Control (SBC) function, a Safe Brake Relay is required for power units in blocksize format, and a Safe Brake Adapter for power units in chassis format.

The Safe Brake Relay/Safe Brake Adapter and the brake control that is integrated in the booksize/chassis format allows safe control of electro-mechanical motor brakes.

The Safe Brake Relay controls a 24 V DC brake; the Safe Brake Adapter controls a 230 V AC brake. When the STO function is active, the Safe Brake Relay/Safe Brake Adapter safely closes the connected brake. The SBC function monitors the control of the brake, however, not its mechanical functioning.

The converter controls the connected brake using the motor holding brake function.

External surge suppressors are not required. The cable harnesses for connection to the Power Module are supplied as standard with the Safe Brake Relay. A connecting cable is required to connect the Safe Brake Adapter.

With the Safe Brake Relay/Safe Brake Adapter functions, the brake is controlled in accordance with IEC 61508 SIL 2 and ISO 13849-1 PL d and Category 3.



Safe Brake Relay



Safe Brake Adapter

© Siemens 2024

Function

Function	Control	Underlying function	Reaction to limit overshoot	External setpoint input effective	Encoder required [1]	License required
Basic Functions						
STO	• EP terminals on the power unit or CUA31/CUA32 and a DI on the Control Unit • F-DI on TM54F • F-DI on CU310-2 • PROFIsafe	SBC (if activated)	–	No	No	No
SBC	• With STO (immediately or following expiry of the delay time with SS1)	–	–	–	No	No
SS1/SS1E time-controlled	• EP terminals on the power unit or CUA31/CUA32 and a DI on the Control Unit • F-DI on TM54F • F-DI on CU310-2 • PROFIsafe	STO following expiry of the parameterized delay time, SBC (if activated)	STO	Parameterizable	No	No
Extended Functions						
SS1 with SBR/SAM	• F-DI on TM54F • F-DI on CU310-2 • PROFIsafe	Safe Acceleration Monitor (SAM) or Safe Brake Ramp (SBR) during braking. STO and SBC (if activated) following expiry of the parameterized delay time or if the speed falls below the minimum speed limit	STO	Parameterizable	No	Yes
SS2 with SBR/SAM	• F-DI on TM54F • F-DI on CU310-2 • PROFIsafe	Safe Acceleration Monitor (SAM) or Safe Brake Ramp (SBR) during braking. Following expiry of the parameterized delay time SOS	SS1 → STO	No	Yes	Yes
SOS	• F-DI on TM54F • F-DI on CU310-2 • PROFIsafe	–	SS1 → STO	Yes	Yes	Yes
SLS encoderless	• F-DI on TM54F • F-DI on CU310-2 • PROFIsafe • Continuously activated	–	STO, SS1 (can be parameterized)	Yes	No	Yes
SLS	• F-DI on TM54F • F-DI on CU310-2 • PROFIsafe • Continuously activated	–	STO, SS1, SS2 or SOS (can be parameterized)	Yes	Yes	Yes
SDI	• F-DI on TM54F • F-DI on CU310-2 • PROFIsafe • Continuously activated	–	STO, SS1, SS2 or SOS (can be parameterized)	Yes	No	Yes
SSM	• Always active, if configured	–	Signals that the speed has fallen below a specified value (safe checkback signal switches to high)	Yes	No	Yes
SLA	• PROFIsafe	–	STO, SS1, SS2 or SOS (can be parameterized)	Yes	Yes	Yes
SBT	• Safety Control Channel • BICO signals • for test stop selection	–	Signals test result. Warning if test fails	Yes	Yes	Yes
Advanced Functions						
SLP	• F-DI on TM54F • F-DI on CU310-2 • PROFIsafe	–	STO, SS1, SS2 or SOS (can be parameterized)	Yes	Yes	Yes
SP	• Always active, if configured	–	–	Yes	Yes	Yes
SCA	• PROFIsafe	–	–	Yes	Yes	Yes

[1] Encoderless Safety Extended Functions can be implemented only on request for SINAMICS S120 converters.

© Siemens 2024



4/2 **Energy efficiency**
4/2 Success factor Energy Efficiency

4/3 **SIMATIC Energy Suite – integrated energy management**

4/4 **Energy-efficient drives**
4/5 Overview of the energy-saving functions for SINAMICS drives

4/7 **Energy efficiency classes in accordance with IEC 61800-9-2**

Further information about energy efficiency including references from industrial production can be found at
www.siemens.com/energy-efficiency
www.siemens.com/energysaving

© Siemens 2024

Energy efficiency

Overview

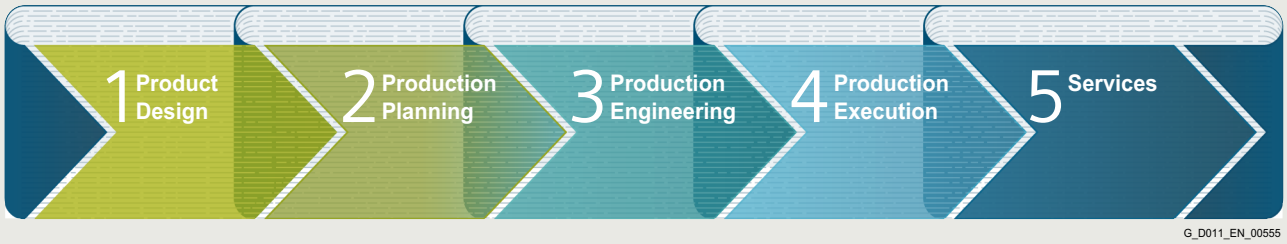

Success factor Energy Efficiency

Siemens helps you to optimize your energy demand, reduce your energy costs and increase your competitive advantage

Industry is facing enormous challenges:
Production processes need to be highly productive, energy-efficient, and resource-saving. Siemens is offering an energy efficiency concept that continually and systematically reduces the power consumption of machines and equipment and thereby boosts the competitive advantage of industrial producers. When implementing energy-efficient solutions, Siemens not only assesses the production process as a whole, but also evaluates each individual production step.

1 Produkt Design

Improve your confidence in planning outcomes! It is important to know the costs associated with the operation of a production machine so that these can be taken into account in the machine design. For example, the SinaSave software application can help you to calculate how soon you will recoup your investment if you purchase an energy-efficient drive. The Mechatronic Support simulation package will also provide you with the means to test and optimize your machine concept, Helping you to save time, energy and operating expenses. See also the SIZER for Siemens Drives engineering tool (integrated in the TIA Selection Tool).
SinaSave: www.siemens.com/sinasave
SIZER for Siemens Drives (integrated in the TIA Selection Tool): www.siemens.com/sizer

2 Production Planning

Make your plant more profitable! It is possible to carry out an on-screen simulation of individual machines and even the entire production process. By doing this, you can optimize the efficiency and productivity of production processes. For example, you can use the digital models and analysis functions provided by the Plant Simulation tool in order to optimize the motion sequences of your machines, prevent load peak overlaps, recover energy and optimize speeds.
Plant Simulation: www.siemens.com/tecnomatix

3 Production Engineering

Optimize the workflow! The SIMATIC Energy Manager PRO management tool helps you to achieve efficient control of energy and costs. But this requires perfectly coordinated communication and operation between hardware and software. Using the TIA Portal engineering framework, for example, it is easy to set up and optimize every single engineering process. You can then see at a glance the areas in your plant that can be made more productive and environmentally friendly. See also the STARTER commissioning tool and the SINAMICS Startdrive commissioning tool.
SIMATIC Energy Manager PRO:
www.siemens.com/energymanagerpro
TIA Portal: www.siemens.com/tia-portal
STARTER: www.siemens.com/starter
SINAMICS Startdrive: www.siemens.com/startdrive

4 Production Execution

Use innovative drive technology to reduce your energy consumption! The energy-efficient components and systems developed by Siemens can cut the energy consumption of a plant. Important components in an energy-efficient plant are, for example, frequency converters with regenerative feedback functions for applications with variable speeds or soft starters for fixed-speed drives. With its PROFIenergy system, Siemens is also offering solutions that permit centralized shutdown of loads or entire production units during production breaks – a vendor- and device-neutral interface for flexible use over short or long production breaks.

5 Services

Improve your productivity and efficiency while reducing total costs! With its Energy & Environmental Services, Siemens is offering a tailored consultancy that will provide you with the necessary support in designing and implementing systematic energy and environmental management solutions. It will give you the satisfaction of achieving maximum energy efficiency throughout your company.

© Siemens 2024

More information

Further information about energy efficiency including references from industrial production can be found at
www.siemens.com/energy-efficiency
www.siemens.com/energysaving

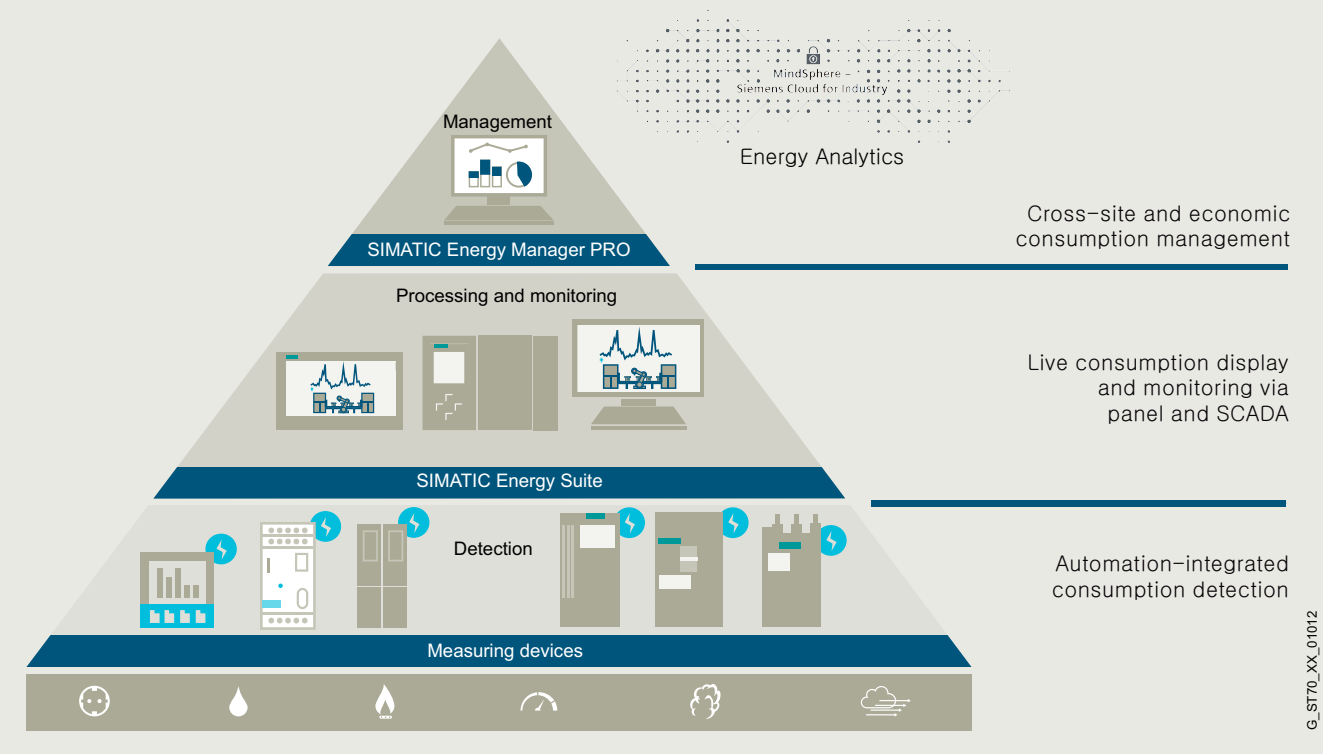

A high energy consumption and automated production are typical for many industries.

If you want to keep your energy costs under control in the long term and you are already focusing on the digital future, you will equip your plant with integrated energy measuring technology, thus anchoring your energy management in the automation of your production processes – which is where most energy is consumed. SIMATIC Energy Suite as an integrated option for the TIA Portal efficiently links energy management with automation, thus creating energy transparency in production. The considerably simplified configuration of energy measuring components from the product families[2] SIMATIC, SENTRON, SINAMICS, SIRIUS and SIMOCODE significantly reduces the configuration costs. Thanks to the end-to-end connection to SIMATIC Energy Manager PRO[1] or cloud-based Service Energy Analytics, you can seamlessly expand the recorded energy data to create a cross-site energy management system.

This additionally enables companies to satisfy all the required economic and energy management aspects – from the purchasing of energy and planning all the way to energy controlling.

The advantages at a glance:

- Automatic generation of energy management data
- Integration into TIA Portal and into automation
- Simple configuration

Highlights

- Simple and intuitive configuration instead of programming
- Automatic generation of the PLC energy program
- Convenient integration of measuring components from the Siemens portfolio and from the portfolio of other vendors
- Integrated into the TIA Portal and automation
- Archiving on WinCC Professional or PLC
- Seamless connection to Energy Manager PRO and Energy Analytics

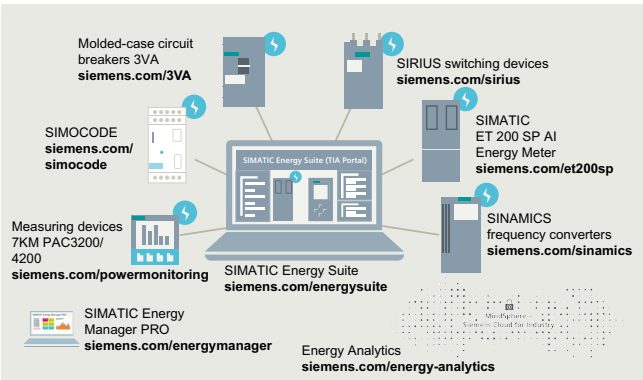

Ready for SIMATIC Energy Suite

Further information on SIMATIC Energy Suite:
www.siemens.com/energysuite

[1] SIMATIC Energy Manager PRO is the innovative successor to SIMATIC B.Data

[2] Products of the SIMATIC, SENTRON, SINAMICS, SIRIUS and SIMOCODE product families. You can find details on the currently supported devices here:
www.siemens.com/energysuite-hardware

© Siemens 2024

4

Overview

Energy-efficient SINAMICS drives save energy in an intelligent way

Exploit energy-saving potential and optimize energy consumption: You can - with intelligent SINAMICS drives. Depending on the application in question, energy consumption can be controlled by motor speed adjustment to suit the individual process and achieve the greatest possible energy savings. The energy consumption of drives for turbo machines can be cut by as much as 60 %. Regenerative feedback is also an option for many applications. Our portfolio of frequency converters is the most comprehensive and standardized range on the market and the first choice for anyone seeking an energy-efficient drive – at low-voltage or medium-voltage level.

Energy-efficient drives with intelligent functions

Depending on the application and load profile, the intelligent energy-saving functions of SINAMICS drives can cut energy consumption.

PROFIenergy



Provides energy-related status data for the system components to create transparency for the energy management; energy savings by selective shut-down of plants or plant sections.

ECO-Modus



In ECO mode, the operating point of the motor in the partial-load range is automatically adjusted and optimized. This reduces motor losses, for example, in machines that do not need a high torque over the entire operating range.

Hibernation mode



Variable-speed drives that are not required to operate continuously are switched to standby or "Hibernation mode". The drive is restarted again as soon as it is needed.

Bypass mode



In bypass mode it is possible to "bypass" the converter electrically as soon as the motor is frequently operating close to its rated speed. This solution helps reduce converter losses and so increase overall efficiency.

Cascading

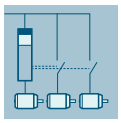

In pump, fan and compressor applications involving high outputs, the entire power demand is distributed among several motors. Phased connection and disconnection by means of partially or fully controlled cascades in combination with converters make a drive system more energy-efficient.

Energy balancing

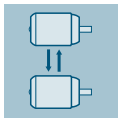

Through the use of converters with coupled drives, energy is exchanged through the common DC link. Through the direct energy exchange from one converter to the next, it is possible to minimize power losses in the system.

Reactive power compensation

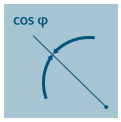

The use of SINAMICS converters with Active Line Modules reduces the capacitive and/or inductive reactive power in the machine. It is then possible to dispense with costly reactive power compensation systems.

Kinetic energy buffering

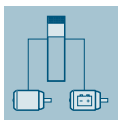

With dynamic reversing operations in single-axis and multi-axis systems, the kinetic energy available in the system is reused. A motor connected to the common DC link is used to buffer kinetic energy.

Electrical energy buffering

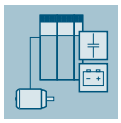

With dynamic reversing operations in single-axis and multi-axis systems, the kinetic energy available in the system is reused. A capacitor module connected to the common DC link is used to buffer electrical energy.

Optimized pulse patterns



Thanks to optimized clock frequency and pulse pattern, SINAMICS G and SINAMICS S are perfectly suited to SIMOTICS motors and SIMOGEAR geared motors. The benefits: Optimization of performance and system efficiency, reduced system losses as well as lower temperature and noise levels.

Energy usage counter/Energy saving counter



Actual energy usage can be displayed during operation. Furthermore, an energy saving counter can be installed to indicate the cumulative energy savings during machine operation as compared to a fixed-speed application.

Regenerative feedback

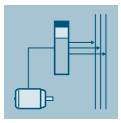

In conventional drive systems, the energy produced during braking is converted to heat using braking resistors. SINAMICS G and SINAMICSS converters with regenerative feedback capability need no braking resistor, and supply the resulting braking energy back into the line.

DC link coupling with SINAMICS V20

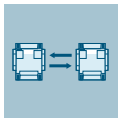

Applications with two SINAMICS V20 converters with the same power rating can share a common DC link in order to reuse regenerated energy.

© Siemens 2024

Integration

Overview of the energy-saving functions for SINAMICS drives including SIMATIC ET 200pro FC-2 frequency converters

Energy-saving function	Low voltage									
	Standard performance frequency converters						Distributed frequency converters			
	SINAMICS						SINAMICS			SIMATIC
	V20	G120C	G120			G130 G150	G115D wall and motor-mounted	G120D		ET 200pro FC-2 1)
			CU230P-2	CU240E-2	CU250S-2	CU320-2		CU240D-2	CU250D-2	
Functions										
ECO mode	✓	✓	✓	✓	✓	–	✓	✓	✓	✓
Hibernation mode	✓	–	✓	–	–	–	–	–	–	–
Bypass mode	–	–	✓	–	–	✓	–	–	–	–
Cascading	✓	–	✓	–	–	–	–	–	–	–
Energy balancing	✓	–	–	–	–	–	–	–	–	–
Reactive power compensation	–	–	–	–	–	–	–	–	–	–
Kinetic energy buffering	–	–	–	–	–	–	–	–	–	–
Electrical energy buffering	–	–	–	–	–	–	–	–	–	–
Optimized pulse patterns	–	–	–	–	–	✓	–	–	–	–
Energy usage counter/Energy saving counter	✓	✓	✓	✓	✓	✓	✓	✓	✓	✓
Regenerative feedback	–	–	✓ with PM250 Power Module	✓ with PM250 Power Module	✓ with PM250 Power Module	–	–	✓	✓	✓
Communication protocol and profile										
PROFINET	–	✓	✓	✓	✓	✓	✓	✓	✓	✓
• PROFIenergy	–	✓	✓	✓	✓	✓	✓	✓	✓	✓
Ready for SIMATIC Energy Suite										
Integrated energy management	–	✓	✓	✓	✓	–	✓	✓	✓	–

1) Information on the SIMATIC ET 200pro FC-2 frequency converter – depending on the SIMATIC ET 200pro station – is available at: www.siemens.com/et200pro-fc

© Siemens 2024

Energy-efficient drives

Integration

Energy-saving function	Low voltage								
	Industry-specific frequency converters			Servo converters			High performance frequency converters		
	SINAMICS								
	G120P	G120X	G180	V90	S110	S210	**S120 S120M**		S150
	CU230P-2				CU305		**CU310-2**	**CU320-2**	CU320-2
Functions									
ECO mode	✓	✓	–	–	✓	–	✓	✓	–
Hibernation mode	✓	✓	–	–	–	–	–	–	–
Bypass mode	✓	✓	✓	–	–	–	✓	✓	✓
Cascading	✓	✓	–	–	–	–	–	–	–
Energy balancing	–	–	–	–	–	–	✓ for multi-axis drives only	✓ for multi-axis drives only	–
Reactive power compensation	–	–	–	–	–	–	✓ with Active Line Module	✓ with Active Line Module	✓
Kinetic energy buffering	–	–	✓	–	–	–	✓ for multi-axis drives only	✓ for multi-axis drives only	–
Electrical energy buffering	–	–	–	–	–	–	✓ for multi-axis drives only	✓ for multi-axis drives only	–
Optimized pulse patterns	–	–	–	–	–	–	✓	✓	✓
Energy usage counter/Energy saving counter	✓	✓	–	–	–	–	✓	✓	✓
Regenerative feedback	–	–	–	–	–	–	✓ with Smart Line Module or Active Line Module	✓ with Smart Line Module or Active Line Module	✓
Communication protocol and profile									
PROFINET	✓	✓	✓	–	✓	–	✓	✓	✓
• PROFIenergy	✓	✓	–	–	–	–	✓	✓	✓
Ready for SIMATIC Energy Suite									
Integrated energy management	✓	✓	–	–	–	–	✓	–	–

More information

Information on the SIMATIC ET 200pro FC-2 frequency converter with PROFINET or PROFIBUS DP - depending on the SIMATIC ET 200pro station - is available at www.siemens.com/et200pro-fc

© Siemens 2024

Overview

Step by step to more efficiency

One of the core objectives of the European Union is a sustainable power industry. In industrial plants today, around 70 % of the power demand is from electrically driven systems. This high percentage contains huge potential for saving energy in electrical drives. For that reason, the European Union introduced minimum requirements for the energy efficiency of electric motors in the form of a statutory motor regulation as early as 2011.

These activities are extended by the 2019/1781 EU regulation dealing with stricter requirements for DOL (Direct On Line) motors and defining efficiency limits for frequency converters. The regulation provides a legal basis for technical content regarding the efficiency of specific products and services. Standardization, however, has played a leading role in determining the field and the available market technology.

Energy efficiency improvement is supported through a systematic selection of the most efficient converter and drive system technology via the IEC 61800-9 series of standards. Part 1 specifies the methodology to determine the energy efficiency index of an application based on the extended product approach (EPA) and semi analytical models (SAMs), while Part 2 provides indicators for assessing the energy efficiency performance and the classification of converters and drive systems. To take account of the different use cases, consideration of eight application-relevant operating points has been introduced as mandatory for the first time. Determination of loss values at these eight points and definition of efficiency classes are laid down by the standard in a uniform way. This enables data relevant to operation, such as application-specific load profiles, to now be taken into account more easily in the energy efficiency analysis.

The standard is especially important for variable-speed drives of the following types:

- for AC/AC converters without energy recovery functionality
- for motors with integrated converters
- for supply voltages of 100 V to 1000 V
- for power ratings of 0.12 kW to 1000 kW

To cover all applications of driven machines, the IEC 61800-9-2 standard defines operating points in full-load and partial-load operation, at which the losses of the motor and drive systems have to be determined. Based on the loss data at the operating points in partial-load operation, variable-speed drives can be explicitly considered in more detail. This makes their advantages especially clear.

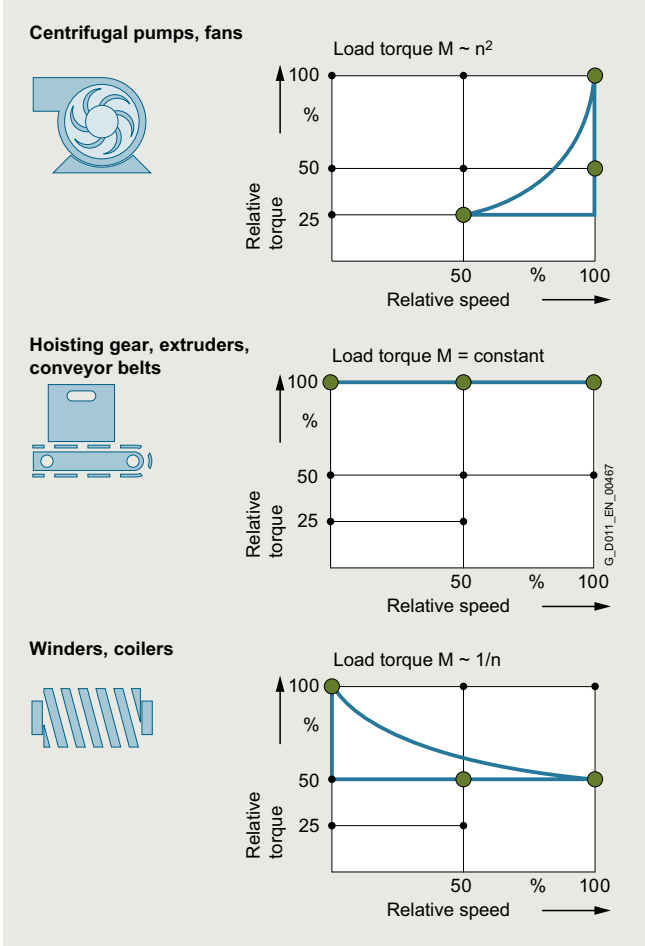

Duty cycles for different driven machines

Moreover, frequency converters and motor systems are classified in efficiency classes, which permit an initial rough estimate of the potential saving. Definition of reference systems is a key aspect of this because they provide standard reference values. The positioning of these reference systems defines the efficiency class. The relative distance from the reference system can be used as an absolute measure of the efficiency at the operating point in question.

© Siemens 2024

Energy efficiency classes in accordance with IEC 61800-9-2

Overview

Advantages of the detailed loss consideration of IEC 61800-9-2 over the previous consideration of efficiencies and maximum loss values

For motors, the efficiency consideration was previously only defined for operation without a converter at 50/60 Hz. It provides a good way of comparing the energy efficiency of motors from different manufacturers for this use case.

The more detailed loss analysis of IEC 61800-9-2, on the other hand, is aimed at speed-controlled operation and therefore now also includes motors especially designed for converter operation in the energy analysis. These were previously not covered by the applicable standards.
Moreover, a loss analysis over the entire setting and load range of the motor is possible. This is done in accordance with the standard IEC 61800-9-2 with typical values.

For holistic consideration, it is essential to include all the relevant components of a drive system. The IEC 61800-9-2 standard defines this in detail. The standardized expression of power loss data as a percentage makes comparison considerably easier and more transparent.

The method also makes it possible to consider a motor that produces a holding torque at speed zero, for example. In this case, the efficiency is zero, but a power loss from current producing magnetization and holding torque does occur. In summary, the key advantage of standard IEC 61800-9-2 is the ability to perform the energy analysis of an electrical drive system based on standardized load profiles in all operating ranges due to uniform general conditions. This provides the user with complete transparency irrespective of the manufacturer.

Establishing efficiency classes of frequency converters (Complete Drive Modules CDM)

To avoid overmodulation and to ensure comparability between makes, which cannot be achieved otherwise, the efficiency classes of CDMs refer to the 90/100 operating point (90 % motor stator frequency, 100 % torque current).

Standard IEC 61800-9-2 defines the relative losses of a CDM in efficiency classes IE0 to IE2. With reference to the value of a CDM of efficiency class IE1 (reference converter), a CDM of efficiency class IE2 has 25 % lower losses and a CDM of efficiency class IE0 has 25 % higher losses.

The publication of the 2019/1781 EU regulation has made mandatory the fulfillment of the ecodesign requirements for the declaration of product conformity.

AC/AC converters belonging to the aforementioned categories (specific voltage and power level without regenerative capability) have to fulfill efficiency class IE2 in order to be approved for installation/utilization within EU.

Operating points for CDMs

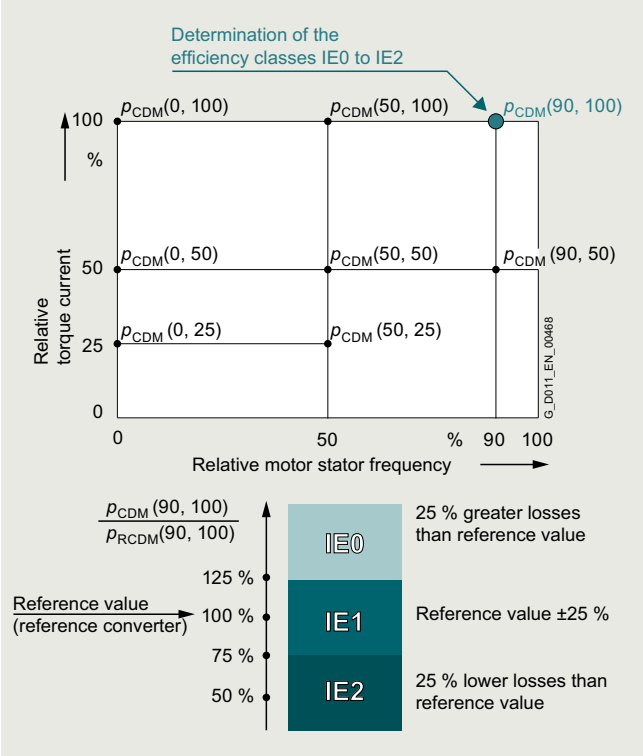

Complete Drive Module (CDM) – determining the efficiency class

Establishing the efficiency classes of drive systems (Power Drive Systems PDS)

What is possible for the individual systems, of course, also applies to the entire electrical PDS (frequency converter plus motor). Detailed comparisons are now possible at this level, too. The reference values for the reference system provide clear indications of the energy performance of the PDS.

Because targeted matching of the motor and CDM provides additional potential for optimization in electrical drive systems, it is especially important for the user to consider the entire drive system.

For the efficiency class of a PDS, too, a specific load point is defined. In this case, the reference point used is the 100/100 operating point (100 % motor stator frequency, 100 % torque).

Standard IEC 61800-9-2 defines the relative losses of a PDS in efficiency classes IES0 to IES2. With reference to the value of a PDS of efficiency class IES1 (reference drive), a PDS of efficiency class IES2 has 20 % lower losses and a PDS of efficiency class IES0 has 20 % higher losses.

© Siemens 2024

Overview

Operating points for PDS

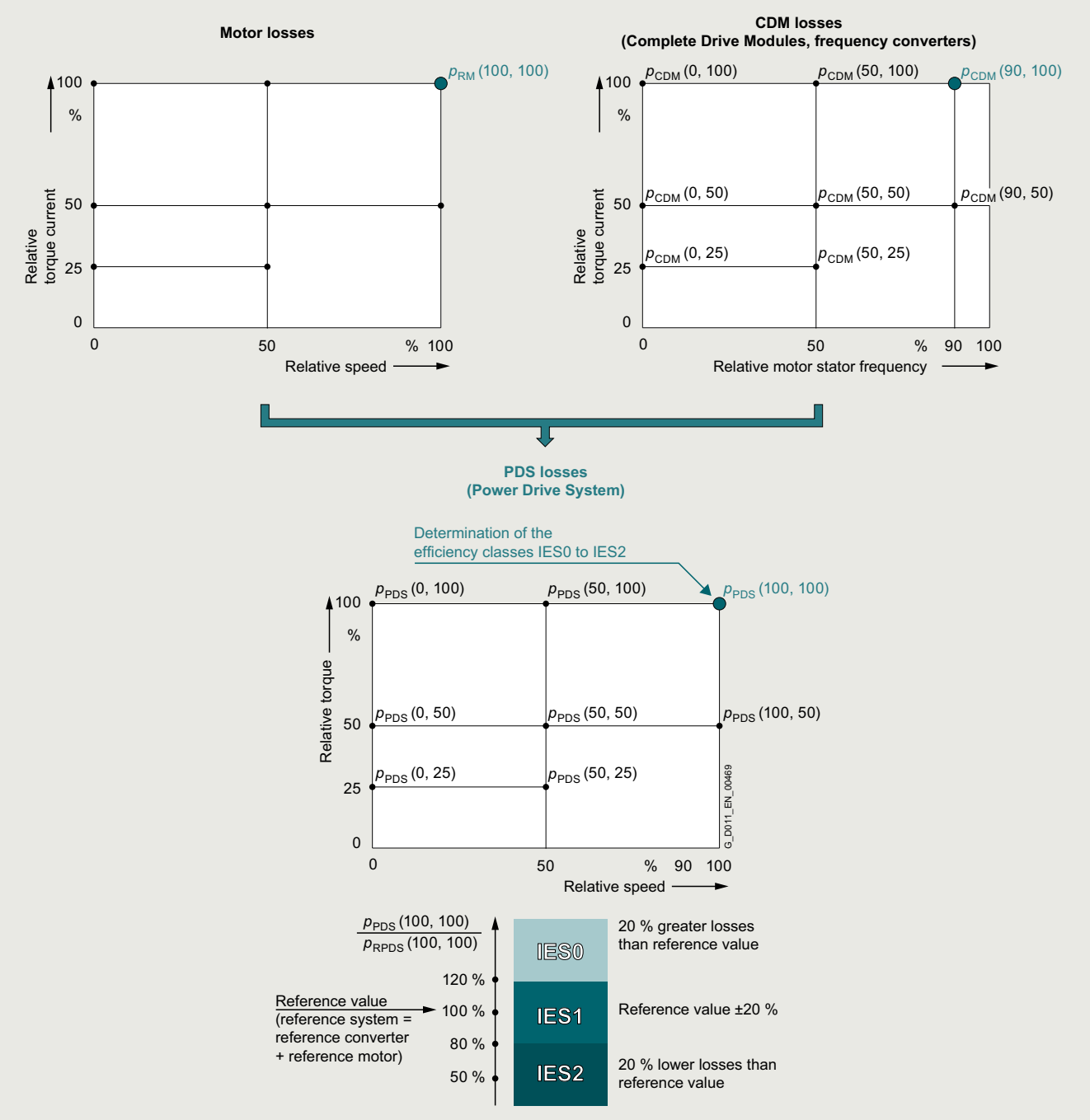

Power Drive System (PDS) – determining the efficiency class

More information

Power loss data of SINAMICS converters for single-axis drives are available

- for SINAMICS V20, SINAMICS G115D/G120/G120C/G120D/ G120P/G120X/G130/G150/G180 and SINAMICS S110/S120/S150 on the internet at https://support.industry.siemens.com/cs/document/94059311
- for SINAMICS G220 via ID-Link or Siemens Product Configurator in SiePortal at www.siemens.com/sinamics-g220/configuration

More information on current laws and standards, new standards, and mandatory guidelines is available on the internet at www.siemens.com/legislation-and-standards

© Siemens 2024

Notes

© Siemens 2024

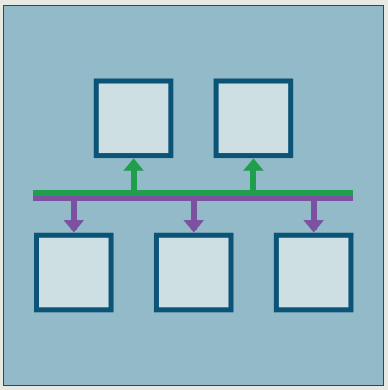

5/2	**Communication** Communication overview
5/2	
5/4	**PROFINET**
5/8	**PROFIdrive**
5/9	**PROFIBUS**
5/10	**Industrial Ethernet**
5/11	**EtherNet/IP**
5/11	**Modbus TCP**
5/11	**USS**

Further information regarding PROFINET and PROFIBUS can be found at www.profibus.com

© Siemens 2024

Overview

Communication overview

Digital bus systems are commonly used in industrial automation today. These handle communication between the control level, the machine control, the sensors and actuators. The SINAMICS product family offers integrated communication interfaces in all product groups – which can be used to connect the most important fieldbus systems in the simplest possible way.

The properties and special application areas of the various bus systems for SINAMICS converters incl. SIMATIC ET 200pro FC-2 frequency converters are briefly described in the following.

Protocol	Low voltage									
	Standard performance frequency converters						Distributed frequency converters			
	SINAMICS						SINAMICS			SIMATIC
	V20	G120C	G120			G130 G150	G115D	G120D		ET 200pro FC-2 [1]
			CU230P-2	CU240E-2	CU250S-2	CU320-2		CU240D-2	CU250D-2	
PROFINET	–	✓	✓	✓	✓	✓	✓	✓	✓	✓
- PROFINET RT	–	✓	✓	✓	✓	✓	✓	✓	✓	✓
- PROFINET IRT isochronous	–	–	–	–	–	–	–	–	–	–
- PROFINET IRT not isochronous	–	✓	✓	✓	✓	✓	✓	✓	✓	✓
- PROFINET Shared Device	–	✓	✓	✓	✓	✓	–	✓	✓	✓
- PROFINET media redundancy MRP (step-change)	–	✓	✓	✓	✓	✓	✓	✓	✓	✓
- PROFINET media redundancy MRPD (bumpless)	–	✓	✓	✓	✓	✓	✓	✓	✓	–
- System redundancy S2	–	–	–	–	–	✓	–	–	–	–
- PROFIsafe	–	✓	–	✓	✓	✓	✓	✓	✓	✓
- PROFIenergy	–	✓	✓	✓	✓	✓	✓	✓	✓	✓
- PROFIdrive application class 1	–	✓	✓	✓	✓	✓	✓	✓	–	✓
- PROFIdrive application class 3	–	–	–	–	✓	–	–	–	✓	–
- PROFIdrive application class 4	–	–	–	–	–	–	–	–	–	–
PROFIBUS DP	–	✓	✓	✓	✓	✓	–	✓	✓	✓
- PROFIBUS DP equidistance and isochronous mode	–	–	–	–	–	–	–	–	–	–
- PROFIBUS DP peer-to-peer communication	–	✓	✓	✓	✓	✓	–	✓	✓	–
EtherNet/IP	–	✓	✓	✓	✓	✓	✓	✓	✓	–
Modbus TCP	–	–	–	–	–	✓	–	–	–	–
Modbus RTU	✓	✓	✓	✓	✓	–	–	–	–	–
AS-Interface	–	–	–	–	–	–	✓	–	–	–
BACnet MS/TP	–	–	✓	–	–	–	–	–	–	–
CANopen	–	–	–	–	✓	–	–	–	–	–
USS	✓	✓	✓	✓	✓	✓	–	–	–	–
FLN P1	–	–	✓	–	–	–	–	–	–	–
Web server	✓ [2]	✓ [2]	✓ [2]	✓ [2]	✓ [2]	✓	✓ [2]	–	–	–

[1] Information on the SIMATIC ET 200pro FC-2 frequency converter with PROFINET, PROFIBUS DP or EtherNet/IP – depending on the SIMATIC ET 200pro station – is available at www.siemens.com/et200pro-fc

[2] Function possible with optional SINAMICS G120 Smart Access web server module.

© Siemens 2024

Overview

Protocol	Low voltage								
	Industry-specific frequency converters			Servo converters			High performance frequency converters		
	SINAMICS								
	G120P	G120X	G180	V90	S110	S210	S120 S120M		S150
	CU230P-2		CB08		CU305		CU310-2	CU320-2	CU320-2
PROFINET	✓	✓	✓ 2)	✓	✓	✓	✓	✓	✓
- PROFINET RT	✓	✓	✓ 2)	✓	✓	✓	✓	✓	✓
- PROFINET IRT isochronous	–	–	–	✓	✓	✓	✓	✓	✓
- PROFINET IRT not isochronous	✓	✓	–	✓	✓	✓	✓	✓	✓
- PROFINET Shared Device	✓	✓	–	–	✓	✓	✓	✓	✓
- PROFINET media redundancy MRP (step-change)	✓	✓	✓ 2)	–	✓	✓	✓	✓	✓
- PROFINET media redundancy MRPD (bumpless)	✓	✓	–	–	✓	✓	✓	✓	✓
- System redundancy S2	–	–	✓ 2)	–	–	–	✓	✓	✓
- PROFIsafe	–	–	–	–	✓	✓	✓	✓	✓
- PROFIenergy	✓	✓	–	–	–	✓	✓	✓	✓
- PROFIdrive application class 1	✓	✓	–	✓	✓	–	✓	✓	✓
- PROFIdrive application class 3	–	–	–	✓	✓	–	✓	✓	✓
- PROFIdrive application class 4	–	–	–	✓	✓	✓	✓	✓	✓
PROFIBUS DP	✓	✓	✓ 2)	–	✓	–	✓	✓	✓
- PROFIBUS DP equidistance and isochronous mode	–	–	–	–	✓	–	✓	✓	✓
- PROFIBUS DP peer-to-peer communication	✓	✓	–	–	✓	–	✓	✓	✓
EtherNet/IP	✓	✓	–	–	–	–	–	✓	✓
Modbus TCP	–	–	✓ 2)	–	–	–	✓	✓	✓
Modbus RTU	✓	✓	✓ 2)	✓	–	–	–	–	–
AS-Interface	–	–	–	–	–	–	–	–	–
BACnet MS/TP	✓	✓	–	–	–	–	–	–	–
CANopen	–	–	✓ 2)	–	–	–	–	–	–
USS	✓	✓	–	✓	✓	–	✓	✓	✓
FLN P1	✓	–	–	–	–	–	–	–	–
Web server	✓ 1)	✓ 1)	–	–	–	✓	✓	✓	✓

1) Function possible with optional SINAMICS G120 Smart Access web server module.

2) Function possible with optional communications modules (additional PCBs) for SINAMICS G180.

© Siemens 2024

Overview



PROFINET – the Ethernet standard for automation

PROFINET is the world's leading Industrial Ethernet standard for automation with more than 40 million nodes installed worldwide.

PROFINET makes companies more successful, because it speeds up processes and raises both productivity and plant availability.

Your advantages at a glance

Flexibility	Efficiency	Performance
Tailor-made plant concepts	Optimal use of resources	Increased productivity
Industrial Wireless LAN	One cable for everything	Speed
Safety	Device/network diagnostics	High precision
Flexible topologies	Energy efficiency	Large quantity structures
Open standard	Simple wiring	High transmission rate
Web tools	Fast device replacement	Redundancy
Expandability	Ruggedness/stability	Fast start-up

G_IK10_XX_10304

© Siemens 2024

Overview

Flexibility

Short response times and optimized processes are the basic requirements for competitiveness in global markets because the product lifecycles are becoming shorter and shorter.

PROFINET ensures maximum flexibility in plant structures and production processes, and it enables you to implement innovative machine and plant concepts. For example, mobile devices can also be integrated at locations that are difficult to access.

Flexible topologies

In addition to the linear structure characterized by the established fieldbuses, PROFINET also enables the use of star, tree and ring structures. This is made possible by switching technology via active network components, such as Industrial Ethernet switches and media converters, or by integrating switch functionality into the field devices. This results in increased flexibility in the planning of machines and plants, as well as savings in cabling.

The PROFINET network can be installed without any specialist knowledge at all and meets all requirements that are relevant to the industrial environment. The "PROFINET Installations Guidelines" assist manufacturers and users with network planning, installation and commissioning. Symmetrical copper cables or RFI-resistant fiber-optic cables are used, depending on the application. Devices from different manufacturers are easily connected via standardized and rugged plug-in connectors (up to IP65/IP67 degree of protection).

By integrating switch functionality into the devices, linear topologies can be created that are directly oriented toward an existing machine or plant structure. This reduces cabling overhead and cuts down on components such as external switches.

IWLAN

PROFINET also supports wireless communication with Industrial Wireless LAN, thus opening up new fields of application. For example, technologies subject to wear, such as trailing cables, can be replaced and automated guided vehicle systems and mobile operator panels can be used.

Safety

The PROFIsafe safety profile, which has been tried and tested with PROFIBUS and which permits the transmission of standard and safety-related data on a single bus cable, can also be used with PROFINET. No special network components are necessary for fail-safe communication, which means that standard switches and standard network transitions can continue to be used without any restrictions. In addition, fail-safe communication is equally possible via Industrial Wireless LAN (IWLAN).

Open standard

PROFINET, the open multi-vendor standard (IEC 61158/IEC 61784), is supported by PROFIBUS and PROFINET International (PI). It stands for maximum transparency, open IT communication, network security and simultaneous real-time communication.

Thanks to its openness, PROFINET provides the basis for a standardized automation network in the plant, to which all other machines and devices can be connected. Even the integration of existing plant components, for example using PROFIBUS, presents no problems due to the use of network transitions.

Use of web tools

Thanks to the unrestricted support of TCP/IP, PROFINET permits the use of standard web services such as web servers. Irrespective of the tool used, information from the automation level can be accessed from virtually any location using a commercially available internet browser. This considerably simplifies commissioning and diagnostics. Users can then decide for themselves how much openness to the IT world they want to allow for their machine or plant. This means that PROFINET can be used simply as an isolated plant network or connected via appropriate Security Modules, such as the SCALANCE S modules, to the office network or the internet. In this way, new remote maintenance concepts or the high-speed exchange of production data become possible.

Expandability

On the one hand, PROFINET facilitates the integration of existing systems and networks without any great effort. In this way, PROFINET safeguards investments in existing plant components that communicate via PROFIBUS and other fieldbuses such as AS-Interface. On the other hand, additional PROFINET nodes can be added at any time. By using additional network components, network infrastructures can be expanded using cabling or wireless methods – even while the plant is operating.

© Siemens 2024

Overview

Efficiency

Greater global competition means that companies must use their resources economically and efficiently. This applies in particular to production. This is where PROFINET ensures greater efficiency. Simple engineering guarantees fast commissioning, while reliable devices ensure a high level of plant availability. Comprehensive diagnostic and maintenance concepts help to reduce plant downtimes and keep maintenance costs to a minimum.

One cable for everything

PROFINET permits simultaneous fieldbus communication with isochronous mode and standard IT communication (TCP/IP) on one cable. This real-time communication for the transmission of user/process data and diagnostic data takes place on a single cable. Specific profile communication (PROFIsafe, PROFIdrive and PROFIenergy) can be integrated without any additional cabling. This solution offers a wide scope of functions at a low level of complexity.

Device and network diagnostics

By retaining the tried and tested PROFIBUS device model, the same diagnostics information is available with PROFINET. In addition, module-specific and channel-specific data can also be read out from the devices during device diagnostics, enabling faults to be located quickly and easily. Apart from the availability of device information, the reliability of network operation has top priority in the network management.

In existing networks the Simple Network Management Protocol (SNMP) has established itself as the de facto standard for the maintenance and monitoring of the network components and their functions. PROFINET uses this standard and gives users the opportunity to maintain their networks with tools that are familiar to them, such as the SINEMA Server network management software.

For easier maintenance of PROFINET devices, both on-site and remotely via a secure VPN connection, application-specific websites can be set up on the web server of the field devices using the familiar HTML standard.

Energy efficiency

Moving toward the green factory: PROFIenergy is a profile that provides functions and mechanisms for PROFINET field devices that support energy-efficient production.

The profile, which is defined by the PNO and is independent of any manufacturers or devices, enables energy demand and costs to be significantly reduced: Using PROFIenergy, any specific loads that are not currently being used can be switched off. This achieves a noticeable reduction in energy costs during breaks in production. PROFIenergy permits the simple, automated activation and deactivation of technologically related plant components. It is coordinated centrally by means of a higher-level controller and is networked via PROFINET. This ensures that as much energy as possible is saved during long breaks. Temporarily switching off plant components contributes to the even distribution and most efficient use of energy.

The use of PROFIenergy is made easy for the machine builder by its integration into familiar series of products. In addition, PROFIenergy is defined in such a way that the necessary function blocks can easily be integrated into existing automation systems at a later stage.

Simple wiring

Particularly stringent demands are made on the installation of cables in the industrial environment. In addition, there is a requirement to set up industry-standard networks in the shortest possible time without any special knowledge.

With FastConnect, Siemens offers a high-speed installation system that meets all of these requirements. FastConnect is the standard-compliant, industry-standard cabling system consisting of cables, connectors and assembly tools for PROFINET networks. The time required for connecting terminals is minimized by the simple installation method using just a single tool, while installation errors are prevented by the practical color-coding. Both copper cables and glass fiber optic cables can be easily assembled on site in this way.

Fast device replacement

PROFINET devices are identified by means of a name assigned during configuration. When replacing a defective device, a new device can be recognized from its topology information by the IO controller and a new name can be assigned to it automatically. This means that no engineering tool is necessary for the replacement of equipment.

This mechanism can even be used for the initial commissioning of a complete system. This speeds up commissioning, particularly in the case of series machines.

Ruggedness

An automation network must be able to withstand most external sources of interference. The use of Switched Ethernet prevents faults in one section of the network from affecting the entire plant network. For areas that are particularly prone to radio frequency interference (RFI), PROFINET allows the use of fiber optic cables.

Performance

Productivity and product quality determine the level of success in the market. Precise motion control, dynamic drives, high-speed controllers and the deterministic synchronization of devices are therefore key factors in achieving superior production. They facilitate high production rates and optimum product quality at the same time.

Speed and precision

Fast motion control applications demand precise and deterministic exchange of data. This is implemented by means of drive controllers using isochronous real time (IRT).

With IRT and isochronous mode, PROFINET permits fast and deterministic communication. This synchronizes the various cycles of a system (input, network, CPU processing and output), even in the case of parallel TCP/IP traffic. The short cycle times of PROFINET make it possible to raise the productivity of machines and plants and to guarantee the product quality and high level of precision.

The standardized PROFIdrive profile permits vendor-independent communication between CPUs and drives.

© Siemens 2024

Overview

Large quantity structures

The use of PROFINET makes it possible to overcome the existing restrictions regarding the scope of machines and systems that can be implemented. In one network, several different controllers can interact with their assigned field devices. The number of field devices per PROFINET network is virtually unlimited – the entire range of IP addresses is available.

High data rate

By using 100 Mbit/s in full duplex mode, PROFINET achieves a significantly higher data rate than previous fieldbuses. This means that other plant data can be transmitted over TCP/IP without any problems, in addition to the process data. PROFINET therefore meets the combined industrial demands for simultaneously transmitting high-speed IO data and large volumes of data for additional sections of the application. Even the transmission of large volumes of data, such as that from cameras, has no adverse effect on the speed and precision of the IO data transmission, thanks to PROFINET mechanisms.

Media redundancy

A higher plant availability can be achieved with a redundant installation (ring topology). The media redundancy can be implemented not only with the aid of external switches, but also by means of integrated PROFINET interfaces. Using the media redundancy protocol (MRP), reconfiguration times of 200 ms can be achieved. If the communication is interrupted in just one part of the ring installation this means that a plant standstill is prevented and any necessary maintenance or repair work can be performed without any time pressure.

For motion control applications, PROFINET with IRT in ring topologies offers extended media redundancy for planned duplication (MRPD) which operates in a bumpless mode without any reconfiguration time. If communication is interrupted (e.g. a cable break) the process can continue operating without interruption.

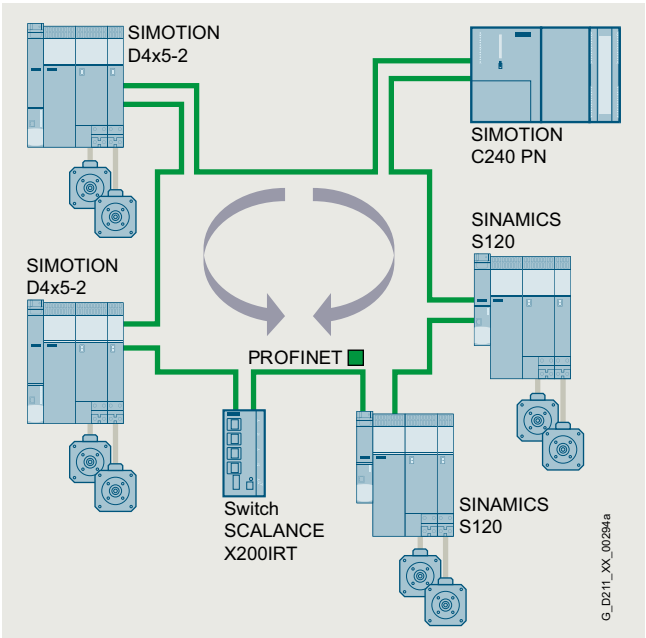

Bumpless media redundancy illustrated by example of SINAMICS S120 with SIMOTION and SCALANCE X200IRT

Benefits

- PROFINET is the open Industrial Ethernet standard for automation
- PROFINET is based on Industrial Ethernet
- PROFINET uses TCP/IP and IT standards
- PROFINET is real-time Ethernet
- PROFINET enables seamless integration of fieldbus systems
- PROFINET supports fail-safe communication via PROFIsafe and also via IWLAN

Integration

PROFINET – Functions of the SINAMICS S120

SINAMICS S120	CU320-2 PN	CU320-2 DP (CBE20)	CU310-2 PN
PROFINET with IRT (isochronous mode)	✓	✓	✓
Number of ports	2	4	2
Min. send clock in ms	0.25	0.5	0.25
Shared Device	✓	✓	✓
Bumpless media redundancy (MRPD)	✓	✓	✓
Step-change media redundancy (MRP)	✓	✓	✓
System redundancy S2	✓	–	✓
PROFIsafe	✓	✓	✓
PROFIenergy	✓	✓	✓
PROFIdrive	✓	✓	✓

System redundancy

SINAMICS S120 supports the PROFINET function "system redundancy":

SINAMICS S120 can now be connected to high-availability systems such as SIMATIC S7-400H with two controllers. No additional hardware is required to make the connection. Complex automation tasks in the process industry, in particular, where plant availability and redundancy of the control system are essential, require reliable communication with a high-availability system. Both controllers of the high-availability system always have access to the SINAMICS S120.

In the event of a cable break or failure of a CPU, the other controller takes over, thus ensuring uninterrupted communication.

More information

More information is available on the internet at:
www.siemens.com/profinet

© Siemens 2024

5

Overview

PROFIdrive – the standardized drive interface for PROFINET and PROFIBUS

PROFIdrive defines the device behavior and technique to access internal device data for electric drives connected to PROFINET and PROFIBUS – from basic frequency converters up to high-performance servo controllers.

It describes in detail the practical use of communication functions – device-to-device communication, equidistance and clock cycle synchronization (isochronous mode) in drive applications. In addition, it specifies all device characteristics which influence interfaces connected to a controller over PROFINET or PROFIBUS. This also includes the state machine (sequence control), the encoder interface, scaling of values, definition of standard telegrams, access to drive parameters, etc.

The PROFIdrive profile supports both central as well as distributed motion control concepts.

What are profiles?

For devices and systems used in automation technology, profiles define properties and modes of behavior. This allows manufacturers and users to define common standards. Devices and systems that comply with such a cross-manufacturer profile, are interoperable on a fieldbus and, to a certain degree, can be interchanged.

Are there different types of profiles?

A distinction is made between what are known as application profiles (general or specific) and system profiles:

- Application profiles (also device profiles) predominantly refer to devices (e.g. drives) and include an agreed selection regarding bus communication as well as specific device applications.
- System profiles describe classes of systems, including master functionality, program interfaces and integration resources.

Is PROFIdrive fit for the future?

PROFIdrive has been specified by the PROFIBUS and PROFINET International (PI) user organization, and is specified as a standard that is fit for the future through standard IEC 61800-7.

The basic philosophy: Keep it simple

The PROFIdrive profile tries to keep the drive interface as simple as possible and free from technology functions. As a result, referencing models as well as the functionality and performance of the PROFINET/PROFIBUS master have either no or only little influence on the drive interface.

One drive profile – different application classes

The integration of drives into automation solutions depends very strongly on the particular drive application. In order to be able to address the complete, huge bandwidth of drive applications – from basic frequency converters up to synchronized multi-axis systems with a high dynamic performance – using just one profile, PROFIdrive defines six application classes, to which most drive applications can be assigned:

- Class 1 – standard drives (pumps, fans, agitators, etc.)
- Class 2 – standard drives with technological functions
- Class 3 – positioning drives
- Class 4 – motion control drives with central, higher-level motion control intelligence and the patented "Dynamic Servo Control" positioning concept
- Class 5 – motion control drives with central, higher-level motion control intelligence and position setpoint interface
- Class 6 – motion control drives with distributed motion control intelligence integrated in the drives

Design

The device model of PROFIdrive

PROFIdrive defines a device model comprising function modules, which interoperate inside the device and which reflect the intelligence of the drive system. These modules have objects assigned to them which are described in the profile and are defined with respect to their functions. The overall functionality of a drive is therefore described through the sum of its parameters.

In contrast to other drive profiles, PROFIdrive defines only the access mechanisms to the parameters as well as a subset of profile parameters (approx. 30) such as the fault buffer, drive control and device identification.

All other parameters are vendor-specific which gives drive manufacturers great flexibility with respect to implementing control functions. The elements of a parameter are accessed acyclically over data records.

As a communication protocol, PROFIdrive uses DP-V0, DP-V1, and the DP-V2 expansions for PROFIBUS including the functions "Device-to-Device Communication" and "Isochronous Operation", or PROFINET IO with real-time classes RT and IRT.

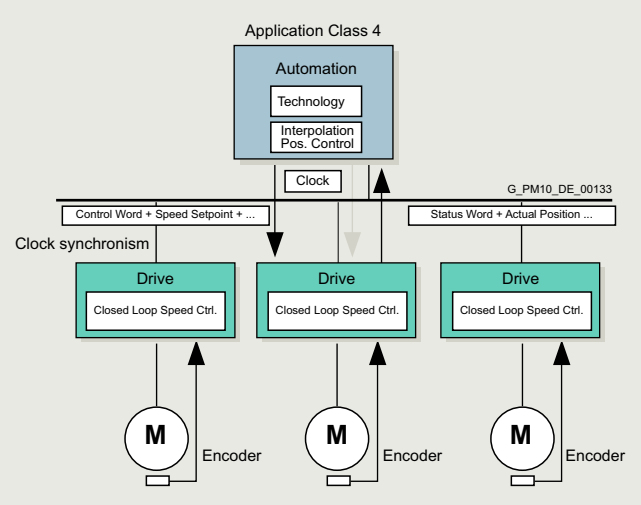

More information

More information on PROFINET and PROFIBUS is available at: www.profibus.com

© Siemens 2024

Overview



PROFIBUS – the proven, rugged bus system for automation engineering applications

The requirements of users for an open, non-proprietary communication system have resulted in the specification and standardization of the PROFIBUS protocol.

PROFIBUS defines the technical and functional features of a serial fieldbus system, with which the distributed field automation devices in the lower area (sensor/actuator level) can be networked up to the mid performance range (cell level).

Standardization according to IEC 61158/EN 50170 secures your investments for the future.

Using the conformity and interoperability test performed by the test laboratories authorized by PROFIBUS & PROFINET International (PI) and the certification of the devices by PI, users have the security of knowing that the quality and functionality is guaranteed, even in multi-vendor installations.

PROFIBUS versions

Two different PROFIBUS versions have been defined in order to comply with the widely varying requirements at field level:

- PROFIBUS PA (Process Automation) – the version for applications in process automation. PROFIBUS PA uses the intrinsically safe transmission technology specified in IEC 61158-2.
- PROFIBUS DP (Distributed Periphery) – this version, which is optimized for speed, is specifically tailored to the communication of automation systems with distributed I/O stations and drives. PROFIBUS DP sets itself apart as a result of very short response times and high noise immunity, and replaces cost-intensive, parallel signal transfer with 24 V and measured value transfer utilizing 0/4 … 20 mA technology.

Design

Bus participants on PROFIBUS DP

PROFIBUS DP makes a distinction between two different master classes and one device class:

DP master class 1

For PROFIBUS DP, DP master class 1 is the central component. In a defined and continually repeating message cycle the central master station exchanges information with distributed stations (DP devices).

DP master class 2

Devices of this type (programming, configuring or operator control devices) are used during commissioning, for configuring the DP system, for diagnostics or for operating the active plant or system. A DP master class 2 can, for example, read input, output, diagnostic and configuration data of the devices.

DP device

A DP device is an I/O device which receives output information or setpoints from the DP master, and as response, returns input information, measured values and actual values to the DP master. A DP device never sends data automatically, but only when requested by the DP master.

The quantity of input and output information depends on the device, and for each DP device in each send direction can be a maximum of 244 bytes.

Function

Functional scope in DP masters and DP devices

The functional scope can differ between DP masters and DP devices. The different functional scopes are classified as DP-V0, DP-V1 and DP-V2.

DP-V0 communication functions

The DP-V0 master functions consist of "Configuration", "Parameter Assignment" and "Reading Diagnostics Data", as well as cyclic reading of input data/actual values and writing output data/setpoints.

DP-V1 communication functions

The DP-V1 function expansions make it possible to perform acyclic read and write functions as well as processing cyclic data communication. This type of device must be supplied with extensive parameterization data during start-up and during normal operation. These acyclically transferred parameterization data are only rarely changed in comparison to the cyclic setpoints, actual values, and measured values, and are transferred at lower priority in parallel with the cyclic high-speed user data transfer. Detailed diagnostic information can be transferred in the same way.

DP-V2 communication functions

The extended DP-V2 master functions mainly comprise functions for isochronous operation and device-to-device communication between DP devices.

- Isochronous mode:
  Isochronous mode is implemented by means of an equidistant signal in the bus system. This cyclic, equidistant cycle is sent by the DP master to all bus nodes in the form of a Global Control Telegram. Master and devices can then synchronize their applications with this signal. The signal jitter between cycles is less than 1 µs.
- Device-to-device communication:
  The "publisher/subscriber" model is used to implement device-to-device communication. Devices declared as publishers make their input data/actual values and measured values available to other devices, the subscribers, for reading. This is performed by sending the response frame to the master as a broadcast. Device-to-device communication is therefore a cyclic process.

Integration

PROFIBUS with SINAMICS

SINAMICS uses the PROFIBUS DP protocol. SINAMICS drives can only be used as DP devices.

© Siemens 2024

Overview



Ethernet is the basic internet technology for worldwide networking. The many possibilities of intranet and internet, which have been available for office applications for a long time, are now utilized for production automation with Industrial Ethernet.

Apart from the use of information technology, the deployment of distributed automation systems is also on the increase. This entails breaking up complex control tasks into smaller, manageable and drive-based control systems. This increases the demand for communication and consequently a comprehensive and powerful communication system.

Industrial Ethernet provides a powerful area and cell network for the industrial field, compliant with the IEEE 802.3 (ETHERNET) standard.

Benefits

Ethernet enables a very fast data transfer (10/100 Mbit/s, 1/10 Gbit/s) and at the same time has full-duplex capability. It therefore provides an ideal basis for communication tasks in the industrial field. With a share of over 90 %, Ethernet is the number one network worldwide and offers important features which have essential advantages:

- Fast commissioning thanks to the simplest connection method
- High availability since existing networks can be extended without any adverse effects
- Almost unlimited communication performance because scalable performance is available through switching technology and high data rates when required
- Networking of different application areas such as office and production areas
- Company-wide communication based on WAN (Wide Area Network) technology or the internet
- Investment protection due to continuous compatibility with further developments
- Wireless communication using Industrial Wireless LAN

In order to make Ethernet suitable for industrial applications, considerable expansions with respect to functionality and design are required:

- Network components for use in harsh industrial environments
- Fast assembly of the RJ45 connectors
- Fail-safety through redundancy
- Expanded diagnostics and message concept
- Use of future-oriented network components (e.g. switches)

SIMATIC NET offers corresponding network components and products.

Integration

Industrial Ethernet with SINAMICS

SINAMICS provides Control Units and Communication Boards with PROFINET interface based on 100 Mbit/s Ethernet. This means that process communication in real-time, as well as engineering and HMI via standard TCP/IP are simultaneously possible.

It is also possible to access the web server in SINAMICS at the same time that process communication is in progress.

The CU310-2 and CU320-2 Control Units have an additional Ethernet interface at the front so that service and engineering tasks can be performed very easily.

Communication with SINAMICS over Industrial Ethernet

PG/PC/HMI communication

PG/PC/HMI communication is performed using protocols which are based on the basic TCP/IP protocol.

- Engineering and diagnostics with STARTER and SINAMICS Startdrive

IT communication

IT communication is performed using protocols which are based on the basic TCP/IP protocol. The most important IT protocols are:

- HTTP/HTTPS: Hypertext Transfer Protocol (Secure)
  Using a standard internet browser, it is possible to retrieve predefined web pages containing diagnostic information from the device. Furthermore, user-defined web pages containing information defined by the user can be stored in the device.
- SNMP: Simple Network Management Protocol

© Siemens 2024

EtherNet/IP

Overview

Ethernet Industrial Protocol (EtherNet/IP) is an open standard for industrial networks. EtherNet/IP is used to transmit cyclic I/O data and acyclic parameter data. EtherNet/IP was developed by the ODVA (Open DeviceNet Vendor Association) and belongs to the international standard series IEC 61158.

Modbus TCP

Overview

The Ethernet protocol Modbus TCP is an open standard for industrial networks. Modbus TCP is used to transmit acyclic register data. Modbus TCP has been standardized in the international series of standards IEC 61158 since 2007.

USS

Overview

As a simple fieldbus protocol, USS (**U**niversal **S**erial **I**nterface protocol of Siemens AG, 1992) can be used both cyclically and acyclically. Based on RS485 physical bus characteristics, up to 32 nodes can be networked to one bus segment and connected to a higher-level controller. This protocol is generally used when there are limited demands on data throughput.

© Siemens 2024

Notes

© Siemens 2024

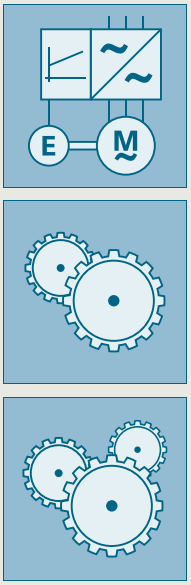

6/2 Basic positioner EPOS
6/2 Function module basic positioner EPOS
6/3 Functionality of the EPOS basic positioner

6/4 SINAMICS Technology Extensions (SINAMICS TEC)

© Siemens 2024

Overview

Function module basic positioner EPOS

The basic positioner EPOS is available as a standard technology function for the following SINAMICS Control Units and can be called as a function module that can be activated additionally.

- SINAMICS S120 CU310-2 and CU320-2 Control Units
- SINAMICS S110 CU305 Control Units
- SINAMICS G120 CU250S-2 Control Units
- SINAMICS G120D CU250D-2 Control Units

The basic positioner can be used to resolve basic motion control tasks without additional external technological outlay from the drive itself.

Integrated functionality for absolute and relative positioning of linear and rotary axes with motor encoders or machine encoders.

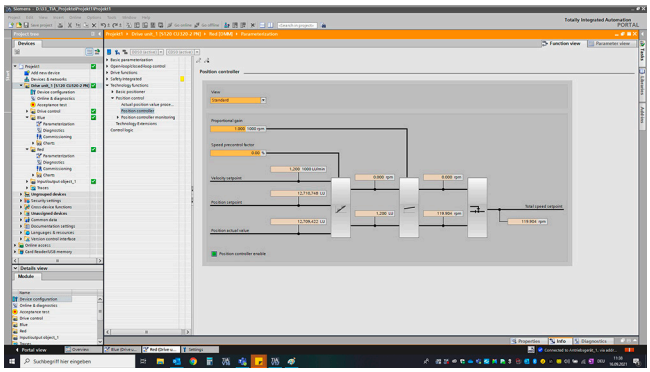

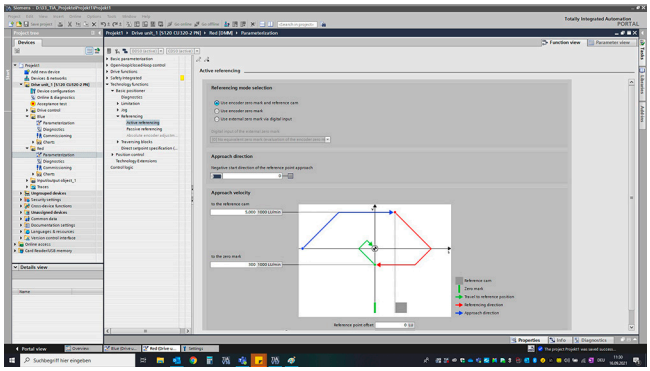

The EPOS basic positioner in the SINAMICS drive system provides powerful and precise positioning functions. Due to its flexibility and adaptability, the basic positioner can be used for a wide range of positioning tasks.

The functions are easy to handle both during commissioning and during operation, and the comprehensive monitoring functions are outstanding.

Many applications can be carried out without external position controllers.

The EPOS basic positioner is used to position linear and rotary axes (modulo) in absolute/relative terms with rotary as well as linear motor encoder or machine encoder (indirect or direct measuring system).

EPOS is a function module that can be activated additionally in Servo Control and in Vector Control.

User-friendly configuring and commissioning, including control panel (operation using PC) and diagnostics, are possible with the STARTER and SINAMICS Startdrive commissioning tools.

In addition to extremely flexible positioning functions, EPOS offers a high degree of user-friendliness and reliability thanks to integral monitoring and compensation functions.

Different operating modes and their functionality increase flexibility and plant productivity, for example, by means of "on-the-fly" and bumpless correction of the motion control.

Preconfigured PROFIdrive positioning frames are available which, when selected, automatically establish the internal "connection" to the basic positioner.

© Siemens 2024

Overview

Functionality of the EPOS basic positioner

Lower-level closed-loop position control with the following essential components

- Position actual value sensing (including the lower-level measuring probe evaluation and reference mark search)
- Position controller (including limits, adaptation and pre-control calculation)
- Monitoring functions (standstill, positioning and dynamic following error monitoring, cam signals)

Mechanical system

- Backlash compensation
- Modulo offset

Limitations

- Speed/acceleration/delay/jerk limitation
- Software limit switches (traversing range limitation by means of position setpoint evaluation)
- Stop cams (traversing range limitation using hardware limit switch evaluation)

Referencing or adjustment

- Set reference point (for an axis at standstill)
- Search for reference (separate mode including reversing cam functionality, automatic reversal of direction, homing to "output cam and encoder zero mark" or only "encoder zero mark" or "external zero mark (BERO)")
- Flying referencing (seamless referencing possible during "normal" traversing with the aid of the measuring input evaluation; generally evaluation, e.g. of a BERO. Subordinate function for the modes "jog", "direct setpoint input/MDI" and "traversing blocks")
- Absolute encoder alignment

Traversing block mode

- 64 traversing blocks for
  - SINAMICS S120 CU310-2 and CU320-2 Control Units
- 16 traversing blocks for
  - SINAMICS S110 CU305 Control Units
  - SINAMICS G120 CU250S-2 Control Units
  - SINAMICS G120D CU250D-2 Control Units
- Positioning using traversing blocks that can be stored in the drive unit including continuation conditions and specific jobs for a previously homed axis.
- Configuring traversing blocks using the traversing block editor in the relevant commissioning tool of the SINAMICS converter family
- A traversing block contains the following information:
  - Job number and job (e.g. positioning, waiting, GOTO block jump, setting of binary outputs, travel to fixed stop)
  - Motion parameters (target position, velocity, override for acceleration and deceleration)
  - Mode (e.g.: hide block, continuation conditions such as "Continue_with_stop", "Continue_flying" and "Continue_externally using high-speed measuring inputs")
  - Job parameters (e.g. wait time, block step conditions)

Direct setpoint specification (MDI) mode

- Positioning (absolute, relative) and setting-up (endless closed-loop position control) using direct setpoint inputs (e.g. via the PLC using process data)
- It is always possible to influence the motion parameters during traversing (on-the-fly setpoint acceptance) as well as for on-the-fly changes between the setup and positioning modes.
- The direct setpoint specification mode (MDI) can also be used in the relative positioning or setup mode if the axis is not referenced. This means that on-the-fly synchronization and re-referencing can be carried out using "flying referencing".

Jog mode

- Closed-loop position controlled traversing of the axis with "endless position controlled" or "jog incremental" modes (traverse through a "step width"), which can be toggled between

© Siemens 2024

Overview

The SINAMICS Technology Extensions are configurable functions or Siemens technologies that can be added onto firmware functions. The extensions are designed to allow implementation of highly complex, targeted application-specific tasks for various sectors such as test stands, storage and retrieval machines, transportation systems based on linear motors or multi-winding motors in machine manufacture.

The SINAMICS Technology Extensions are part of the Advanced Technology Function and are added to the existing firmware as self-contained software packages. They are easy to install using the SINAMICS Startdrive and STARTER commissioning tools and expand the existing device functionality by the application-specific functions contained in the software. The software is parameterized and diagnosed using SINAMICS Startdrive and STARTER.

Installing these extended functions customizes the functionality of the SINAMICS S120 converter so that it meets the specific requirements of the user.

SINAMICS Technology Extensions can be used for the following drive systems (the way in which they are used depends on the individual Technology Extension):

- SINAMICS G130
- SINAMICS G150
- SINAMICS S120
- SINAMICS S150
- SINAMICS DCM
- SINAMICS DCP
- SINAMICS GM150
- SINAMICS SM150
- SINAMICS SM120CM
- SINAMICS GL150
- SINAMICS SL150
- SINAMICS GH150
- SIMOTION D (SINAMICS Integrated)
- SIMATIC Drive Controller (SINAMICS Integrated)
- SINUMERIK 840D sl (SINAMICS Integrated)
- SINUMERIK 828D (SINAMICS Integrated)
- SINUMERIK ONE (SINAMICS Integrated)

The following SINAMICS Technology Extensions are available to download
https://support.industry.siemens.com

Simply enter your Article No. in "Search for product information".

Coupling of SERVO Motor Modules with SINAMICS Technology Extension SERVCOUP

The Technology Extension SERVCOUP (Servo Coupling) is an extension for the SERVO drive object of SINAMICS.
In the SERVO control mode, SERVCOUP allows motors to be operated, which as a result of their size and/or design format, cannot be operated from a single SINAMICS S120 power unit.
These motors are subdivided into several drive objects, each of which can be operated on a Motor Module, and can be coupled with one another. As a consequence, the individual drive objects can be considered as partial motors with their own winding and terminals.

Irrespective of the number of coupled drive objects, only one encoder is required for the operation of the motor because Technology Extension SERVCOUP implements a digital encoder splitter in the Control Unit. In this way, the actual encoder values together with the setpoint specifications are passed on to all encoderless drive objects.

SERVCOUP is generally released for the following SIMOTICS motors:

- 1FE2 (built-in spindle motor) as a built-in spindle drive for machine tools
- 1FN3 (linear motor) as milling centers with large rotary tables for machine tools or portal applications with linear motors
- 1FW4 (torque motor) for servo presses and test stands for high performances with superior dynamics
- 1FW6 (torque motor) for servo presses
- 1FW68 (segment motor) in milling centers with large rotary tables for machine tools

Fundamentally, operation is possible with the following motors:

- Segment motors (axial and radial)
- Direct drives (linear and rotary)
- Double and multi-winding motors (induction and synchronous)

Peak load management of the spindle for overload protection of the infeed of machine tools with SINAMICS Technology Extension DYNEGMA

The SINAMICS Technology Extension DYNEGMA (Dynamic Energy Management) from the Advanced Technology Functions is an extension for the infeed and SERVO drive objects of SINAMICS. The SINAMICS Technology Extensions are also known by the name SINAMICS Open Architecture.
The Technology Extension DYNEGMA is a peak load management and overload protection function for machine tool infeeds. The task of DYNEGMA is to protect the infeed unit during power peaks; these can occur when several drives/spindles simultaneously accelerate or brake, e.g. during tool change. DYNEGMA only intervenes when actually required in order to guarantee not only safe and reliable operation, but also maximum dynamic performance. To protect the infeed unit against overload, and in turn resulting machine downtimes or tool, material, or machine damage, when required DYNEGMA also limits the torque of individual spindles/drives.

For example, the following applications can be used with DYNEGMA:

- Overload protection of the infeed and peak load management of spindles for milling and turning machines, even during a forced EMERGENCY STOP
- Dynamic tool change for optimal utilization of the maximum infeed power of machine tools

© Siemens 2024

Overview

Vibration extinction for storage and retrieval machines with SINAMICS Technology Extension VIBX

The Technology Extension VIBX (Vibration Extinction) is an extension of the SINAMICS drive objects SERVO and VECTOR. A setpoint filter is implemented in VIBX. The objective of the setpoint filter is to change the setpoint of an axis so that there is as little vibration as possible caused in the natural frequency range of the moving mechanical components. This function is primarily deployed on storage and retrieval machines to significantly reduce mast vibrations caused by acceleration and braking. It has been demonstrated that reducing the mast vibrations will allow the mast to come to a standstill more quickly and so enable it to handle goods faster.

The SINAMICS Technology Extension Vibration Extinction implemented as setpoint filter can be used both in basic positioners (EPOS) and Dynamic Servo Controls (DSC) together with a controller in the drive. For this purpose, two modes of application are supported by the Technology Extension:

- EPOS and LR application mode
- DSC application mode

The filter characteristics can be set using frequency and damping (attenuation). The filter frequency can be linearly changed between two limit values via an input during operation. This means that the filter frequency can be tracked to follow the changing natural frequency of a mechanical system (e.g. as a result of different load states) (online frequency change).

The following applications can be implemented with VIBX:

- Sway control for storage and retrieval unit
- Vibration extinction of positioning applications with mechanical natural oscillations

Engineered DC-DC Converters with Standard Motor Modules with SINAMICS Technology Extension DCDCCONV

The SINAMICS Technology Extension DCDCCONV (DC-DC Converter) is an extension for the booksize and chassis formats of SINAMICS S120.
Using Technology Extension DCDCCONV, you can use the booksize or chassis design formats of the Motor Module - which normally control a 3-phase motor - as an engineered DC/DC converter. Additional components (e.g. energy storage reactor or smoothing capacitor) must be connected downstream from the Motor Module.

The following applications can be implemented with DCDCCONV:

- Integration of capacitors (Ultracapacitor Modules or electrolytic capacitors) as energy storage devices for the following applications:
  - Reduction of electrical connected power
  - Mains buffering
  - Storage for regenerated energy
- Integration of battery modules as energy storage devices for the following applications:
  - Reduction of electrical connected power
  - Mains buffering
  - Storage for regenerated energy
  - Provision of an island grid
  - Loading of connected battery modules with defined test cycles
- Supply of an electrolyzer for hydrogen production
  - Here, the DC-DC converter serves as the energy source for an electrolyzer to produce hydrogen.
- Supply of inverters:
  - Supply of a connected inverter with defined voltage level
  - Test stand for the complete vehicle drive system

In addition to the Function Manual for the SINAMICS Technology Extension DCDCCONV software, there are also application descriptions for the released applications available. The application descriptions include information on configuring an **engineered DC-DC converter** with the core element SINAMICS S120 Motor Module in conjunction with the DCDCCONV software in the respective applications. This application description should be observed in order to be able to reliably and safely configure the application.

The application description for DCDCCONV

- with capacitors is available at:
  https://support.industry.siemens.com/cs/document/109748701
- with battery modules is available at:
  https://support.industry.siemens.com/cs/document/109751796
- to supply an electrolyzer is available at:
  https://support.industry.siemens.com/cs/document/109813658
- to supply inverters is available at:
  https://support.industry.siemens.com/cs/document/109771893

Signal generator for test stands with SINAMICS Technology Extension POLYGON

The Technology Extension POLYGON (Polygonal Line) is an extension of the SINAMICS drive objects SERVO, VECTOR and HLA.
The polygonal line application makes it possible to create a master-value-dependent output signal based on a parameterized characteristic in the current controller sampling time (or an integer multiple of the current controller sampling time). The characteristic is defined by up to 10000 equidistantly distributed interpolation points between which linear interpolation is performed. The y values of the interpolation points can be taken from an Excel sheet using a script. By interconnecting the output signals to different connector inputs, it is possible to create various relationships via the characteristic functionality, e.g.:

- Position-position reference
- Position-speed reference
- Position-torque reference

Fast signal evaluation and processing with Technology Extension SIVALU (Signal Evaluation)

The SIVALU Technology Extension allows signals to be evaluated in the current controller sampling time of a drive object. Minimum value, maximum value, and mean value can be obtained, as well as arithmetic and logical evaluations executed. Evaluations are calculated in ascending order of indexes and can therefore be cascaded. In addition, additional fixed values for BICO interconnections are freely available.

The following applications can be implemented with SIVALU, for example:

- Applications with fast signal processing of logical and arithmetic functions, as well as conversions of signals up to the current controller cycle
- Logical and arithmetic functions for SINUMERIK ONE and SINUMERIK 840D sl in the drive
- Calculation of process torque using an arithmetic function

© Siemens 2024

Overview

Control of the Heat Exchanger Module for the dissipation of power loss of the converter with HEM Technology Extension (Heat Exchanger Module)

The HEM Technology Extension enables the control of the Heat Exchanger Module hardware and handles the following tasks:

- The Heat Exchanger Module is set up for the specific system using parameters
- Controlling the pumps
- Monitoring the motor circuit breaker, the pressure actual values and the temperature actual values
- Detecting leaks
- Controlling the intake temperature in the de-ionized water circuit using a control valve
- Displaying all system parameters
- Functionalities to avoid condensation

Quick recording of drive data together with Drive Connector SINAMICS and the Technology Extension TRCDATA (Trace Data)

The Technology Extension TRCDATA is necessary for the use of the Drive Connector SINAMICS with the High Speed adapter function (HS Adapter).
Together with the High Speed adapter (HS Adapter) in the Drive Connector SINAMICS, it is possible to continuously record drive data up to 8 kHz and provide the data to the Industrial Edge data bus.
The maximum sampling frequency of 8 kHz is dependent on the network and drive configuration.

Other properties of the Technology Extension TRCDATA in connection with the Drive Connector SINAMICS are available at:
https://sieportal.siemens.com/su/bjTFD

Point-to-point connection between two CUs with SINAMICS Technology Extension OALINK

The Technology Extension OALINK (Open Application Link) is a SINAMICS extension for the CU320-2 Control Unit.
The OALINK enables bidirectional communication between two Control Units based on DRIVE-CLiQ to facilitate the simple exchange of data. In this way, an additional Control Unit can be integrated as a technology extension for extensive drive-based technology with SINAMICS Drive Control Chart (DCC).

The following applications can be implemented with OALINK:

- Technology extension for the SINAMICS S120 (CU320-2 as replacement for the SIMATIC T400 technology module).
- Technology extension for the SINAMICS DCM (CU320-2 as replacement for the SIMATIC T400 technology module).
- Load distribution of physically coupled drives (leading/follower drive).
- General couplings between SINAMICS DCM and SINAMICS S120.
- General couplings between SINAMICS DCP and SINAMICS S120.
- General couplings between SINAMICS DCM and SINAMICS MV

Fast fault reaction of coupled axes with SINAMICS Technology Extension FASTBRK

The SINAMICS Technology Extension FASTBRK (Fast Brake Reaction for Coupled Axes) is a SINAMICS extension for SERVO drive objects.

Technology Extension FASTBRK is used on machines with coupled axes, such as gantry axes.
Previously, in cases of a drive-autonomous fault, braking was only applied to the affected axis. The coupled axes were only braked after the set gantry switch-off limit of the synchronism difference was exceeded, for example.
The FASTBRK Technology Extension on the other hand propagates the original fault reaction to the coupled axes. This means that in the event of a fault such as an encoder failure on a drive axis, the same fault reaction (e.g. encoderless braking) is initiated as quickly as possible on all mechanically coupled axes. In this way, the Technology Extension FASTBRK enables coupled drive objects to simultaneously and evenly brake to a standstill, thus minimizing the risk of damage to the machine.

The following applications can be implemented with FASTBRK:

- Fast fault reaction in the drive for SINUMERIK axis couplings, such as gantry and master/device axes.
- Propagation of the axis fault possible with a minimum reaction time from the current controller cycle (e.g. 125 µs)
- Grouping of up to three groups per Control Unit / NCU / NX

© Siemens 2024

Selection and ordering data

Description	Article No.
SINAMICS Technology Extensions **Runtime license per performance unit (of a Control Unit)** **All software products can be downloaded free of charge**	
SINAMICS Technology Extension SERVCOUP Usable from SINAMICS firmware V4.5 HF21 • CoL in electronic form	**6SL3077-0AA00-8AH0**
SINAMICS Technology Extension DYNEGMA Usable from SINAMICS firmware V4.7 • CoL in electronic form	**6SL3077-0AA03-0AH0**
SINAMICS Technology Extension VIBX Usable from SINAMICS firmware V4.4 • CoL in electronic form	**6SL3077-0AA00-5AH0**
SINAMICS Technology Extension HEM Usable from SINAMICS firmware V5.1 Included in SINAMICS S120 Cabinet Modules, Heat Exchanger Modules. • CoL in electronic form	**6SL3077-0AA05-2AH0**
SINAMICS Technology Extension POLYGON Usable from SINAMICS firmware V4.5 • CoL in electronic form	**6SL3077-0AA00-7AH0**
SINAMICS Technology Extension OALINK Usable from SINAMICS firmware V4.6 HF5 • CoL in electronic form	**6SL3077-0AA01-0AH0**
SINAMICS Technology Extension SIVALU Usable from SINAMICS firmware V5.2 • CoL in electronic form	**6SL3077-0AA01-4AH0**
SINAMICS Technology Extension FASTBRK Usable from SINAMICS firmware V4.5 • CoL in electronic form	**6SL3077-0AA01-7AH0**
SINAMICS Technology Extension DCDCCONV Usable from SINAMICS firmware V5.2 SP3 with DCDCCONV V2.1 or from SINAMICS firmware V4.8 HF4 with DCDCCONV V1.3 SP1 • CoL in electronic form	**6SL3077-0AA02-0AH0**
SINAMICS Technology Extension TRCDATA Usable from SINAMICS firmware V4.6 • CoL in electronic form	**6SL3077-0AA02-1AH0**

More information

Further SINAMICS Technology Extensions are available for the following applications:

- Signal generator or operating profiles for test stands with Technology Extension **SETPGEN** (Setpoint Generator)
- Specification of current setpoint and transformation angle with Technology Extension **EXLOOP** (External Loop Controller)
- Rotation detection to determine the speed with Technology Extension **ROTDTEC** (Rotation Detection)
- Detection of chatter during the machining process with Technology Extension **CHATDTEC** (Chatter Detection)
- Coupling of linear motors for transportation systems with Technology Extension **RAILCTRL** (Rail Control), see Multi-Carrier-System at: https://support.industry.siemens.com/cs/document/109784038

More information about SINAMICS Technology Extensions is available on the internet at www.siemens.com/sinamics-firmware (Section: Advanced Technology Functions)

© Siemens 2024

Notes

© Siemens 2024

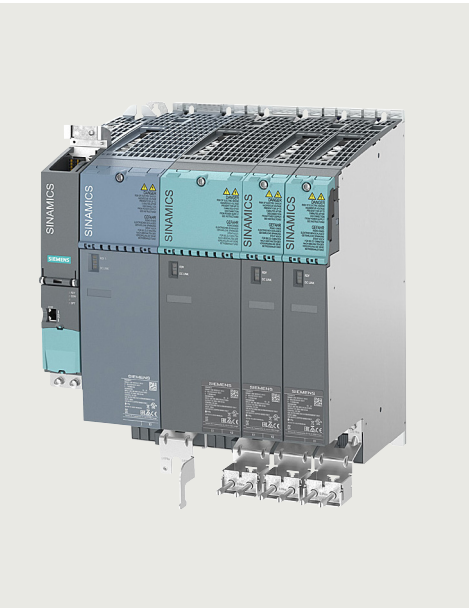

7/2 **SINAMICS drive system**
7/2 Drive selection
7.1/1 SINAMICS S120 drive system
7.2/1 SINAMICS S220 drive system

© Siemens 2024

Overview

SINAMICS selection guide – typical applications

Use	Requirements for torque accuracy/speed accuracy/position accuracy/coordination of axes/functionality					
	Continuous motion			Non-continuous motion		
	Basic	Medium	High	Basic	Medium	High
	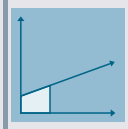	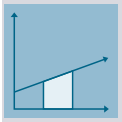	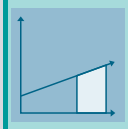	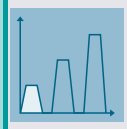	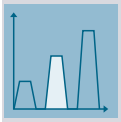	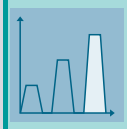
Pumping, ventilating, compressing	Centrifugal pumps Radial / axial fans Compressors	Centrifugal pumps Radial / axial fans Compressors	Eccentric screw pumps	Hydraulic pumps Metering pumps	Hydraulic pumps Metering pumps	Descaling pumps Hydraulic pumps
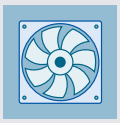	V20 G120C G120X	G120X G130/G150 G180 [1] DCM	**S120/S220**	G120	S110	**S120/S220**
Moving 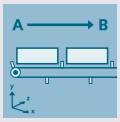	Conveyor belts Roller conveyors Chain conveyors	Conveyor belts Roller conveyors Chain conveyors Lifting/lowering devices Elevators Escalators/moving walkways Indoor cranes Marine drives Cable railways	Elevators Container cranes Mining hoists Excavators for open-cast mining Test bays	Acceleration conveyors Storage and retrieval machines	Acceleration conveyors Storage and retrieval machines Cross cutters Reel changers	Storage and retrieval machines Robotics Pick & place Rotary indexing tables Cross cutters Roll feeds Engagers/disengagers
	V20 G115D G120C ET 200pro FC-2 [2]	G120 G120D G130/G150 G180 [1]	**S120/S220** S150 DCM	V90 G120 G120D	S110 S210 DCM	**S120/S220** S210 DCM
Processing 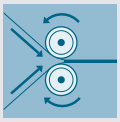	Mills Mixers Kneaders Crushers Agitators Centrifuges	Mills Mixers Kneaders Crushers Agitators Centrifuges Extruders Rotary furnaces	Extruders Winders/unwinders Lead/follower drives Calenders Main press drives Printing machines	Tubular bagging machines Single-axis motion control such as • Position profiles • Path profiles	Tubular bagging machines Single-axis motion control such as • Position profiles • Path profiles	Servo presses Rolling mill drives Multi-axis motion control such as • Multi-axis positioning • Cams • Interpolations
	V20 G120C	G120 G130/G150 G180 [1]	**S120/S220** S150 DCM	V90 G120	S110 S210	**S120/S220** S210 DCM
Machining 	Main drives for • Turning • Milling • Drilling	Main drives for • Drilling • Sawing	Main drives for • Turning • Milling • Drilling • Gear cutting • Grinding	Axis drives for • Turning • Milling • Drilling	Axis drives for • Drilling • Sawing	Axis drives for • Turning • Milling • Drilling • Lasering • Gear cutting • Grinding • Nibbling and punching
	S110	S110 **S120/S220**	**S120/S220**	S110	S110 **S120/S220**	**S120/S220**

Using the SINAMICS selection guide

The varying range of demands on modern variable frequency drives requires a large number of different types. Selecting the optimum drive has become a significantly more complex process. The application matrix shown simplifies this selection process considerably, by suggesting the ideal SINAMICS drive for examples of typical applications and requirements.

- The application type is selected from the vertical column
  - Pumping, ventilating, compressing
  - Moving
  - Processing
  - Machining
- The quality of the motion type is selected from the horizontal row
  - Basic
  - Medium
  - High

More information

Further information about SINAMICS is available on the internet at www.siemens.com/sinamics

Practical application examples and descriptions are available on the internet at www.siemens.com/sinamics-applications

[1] Industry-specific converters.

[2] Information on the SIMATIC ET 200pro FC-2 frequency converter is available in Catalog D 31.2 and at: www.siemens.com/et200pro-fc

© Siemens 2024

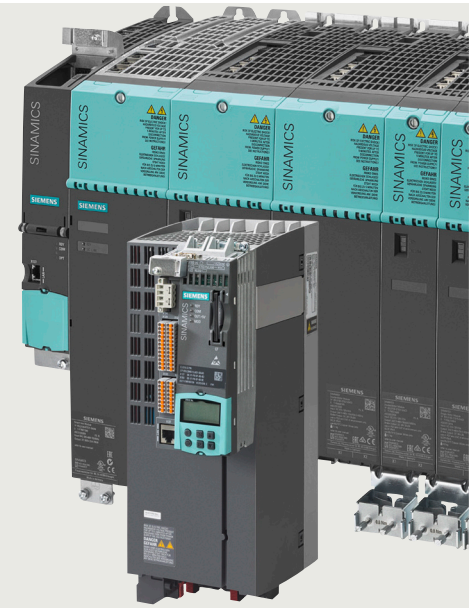

7.1/2 System overview

7.1/7 System data

7.1/8 Control Units
7.1/8 Overview
7.1/11 CU320-2 Control Units
7.1/15 CompactFlash Card for CU320-2
7.1/17 CU310-2 Control Units
7.1/21 CompactFlash Card for CU310-2
7.1/22 CUA31 Control Unit Adapter
7.1/24 CUA32 Control Unit Adapter

7.1/26 Booksize format
7.1/26 General technical specifications

Active Line Modules and components
7.1/28 Active Line Modules
7.1/33 Active Interface Modules
7.1/37 Basic Line Filters for Active Line Modules
7.1/38 Recommended line-side components

Smart Line Modules and components
7.1/39 Smart Line Module Compact
7.1/43 Smart Line Modules
7.1/49 Line reactors for Smart Line Modules
7.1/50 Line filters for Smart Line Modules
7.1/51 Recommended line-side components

Basic Line Modules and components
7.1/52 Basic Line Modules
7.1/59 Line reactors for Basic Line Modules
7.1/60 Line filters for Basic Line Modules
7.1/61 Recommended line-side components

Motor Modules
7.1/62 Single Motor Modules Compact
7.1/68 Single Motor Modules
7.1/81 Double Motor Modules Compact
7.1/87 Double Motor Modules

DC link components
7.1/95 Braking Module Compact
7.1/97 Braking Module
7.1/99 Braking resistors
7.1/101 Capacitor Module
7.1/102 Control Supply Module
7.1/104 DC link adapters

Motor-side power components
7.1/105 Motor reactors

7.1/108 SINAMICS S120M
distributed servo drive

7.1/114 Blocksize format
7.1/114 Air-cooled Power Modules
7.1/139 Line filters
7.1/141 Line Harmonics Filters
7.1/145 Line reactors
7.1/148 Recommended line-side components
7.1/150 Braking resistors
7.1/156 Output reactors
7.1/163 Sine-wave filters
7.1/166 dv/dt filters plus VPL
7.1/170 Safe Brake Relay
7.1/171 Shield connection kits

7.1/172 Supplementary system components
7.1/172 BOP20 Basic Operator Panel
7.1/173 CBE20 PROFINET Communication Board

7.1/174 DMC20 DRIVE-CLiQ Hub Module
7.1/175 DME20 DRIVE-CLiQ Hub Module

7.1/177 TM30 Terminal Board
7.1/179 TM15 Terminal Module
7.1/181 TM31 Terminal Module
7.1/184 TM41 Terminal Module
7.1/187 TM54F Terminal Module
7.1/190 TM120 Terminal Module
7.1/192 TM150 Terminal Module

7.1/194 VSM10 Voltage Sensing Module

7.1/196 SBA Safe Brake Adapter

7.1/198 Encoder system connection
7.1/199 SMC10 Sensor Module Cabinet-Mounted
7.1/200 SMC20 Sensor Module Cabinet-Mounted
7.1/201 SMC30 Sensor Module Cabinet-Mounted
7.1/202 SME20/SME25 Sensor Modules External
7.1/204 SME120/SME125 Sensor Modules External

Information on Chassis and Chassis-2 format is provided in catalog D 21.3 at: www.siemens.com/d21-3

© Siemens 2024

Overview

With its separate power unit and Control Unit, the SINAMICS S120 drive system can be perfectly adapted to a wide variety of different drive tasks.

The Control Unit is selected according to the number of drives to be controlled and the required performance level, while the power unit must be rated to meet the energy requirements of the system. The connection between the Control Unit and power unit is made very simply using the digital system interface DRIVE-CLiQ.

Control Units



CU310-2 PN Control Unit with BOP20 Basic Operator Panel



CU320-2 PN Control Unit with BOP20 Basic Operator Panel

CU310-2 DP and CU310-2 PN Control Units

The CU310-2 Control Unit is used to control a single drive. A PROFIBUS interface (CU310-2 DP) or a PROFINET interface (CU310-2 PN) and a TTL/HTL encoder evaluation circuit are standard features.

CU320-2 Control Unit

The CU320-2 Control Unit is designed to control several drives. In this case, the following can be operated on a CU320-2 Control Unit:

- Up to 12 drives in V/f control mode, or
- Up to 6 drives in Servo or Vector control mode.

The CU320-2 Control Unit can be used to establish links between individual drives and to implement simple technological functions.

Power Modules

The simplest version of a SINAMICS S120 drive system comprises a CU310-2 Control Unit and a Power Module. A line rectifier, a DC link and an inverter for supplying a motor are integrated in the Power Module.



Power Module in blocksize format with CU310-2 Control Unit and BOP20 Basic Operator Panel

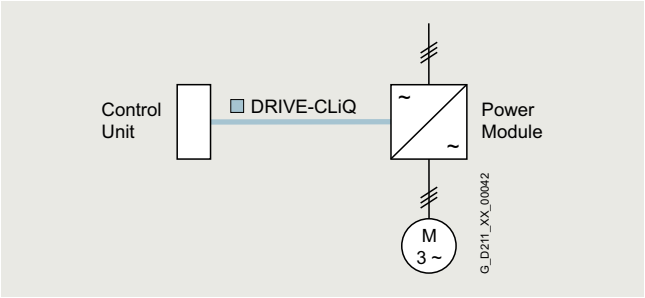

Power Modules are designed for single drives which are not capable of regenerating energy to the supply. Generated energy produced during braking is converted to heat via braking resistors.

Power Modules can also be operated via a CU320-2 Control Unit, a SIMOTION D4x5-2 or a CX32-2 Controller Extension, for example, if a single drive is added to a multi-axis grouping. In this case, the Power Modules in blocksize format must be equipped with the CUA31/CUA32 Control Unit Adapter. This is connected via DRIVE-CLiQ to the CU320-2 Control Unit, the SIMOTION D4x5-2 or the CX32-2 Controller Extension. Power Modules in chassis format can be directly connected to the Control Unit using a DRIVE-CLiQ cable.

© Siemens 2024

Overview

Motor Modules

A DC link and an inverter for supplying a motor are integrated in the Motor Module.

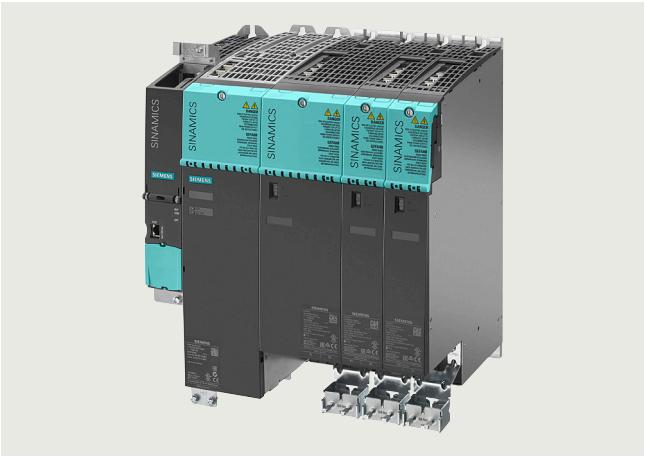

CU320-2 Control Unit, Line Module and three Motor Modules in booksize format

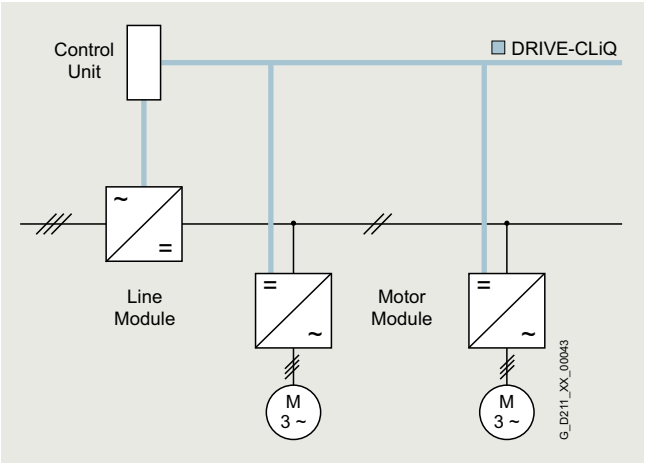

Motor Modules have been designed for multi-axis drives. Motor Modules are interconnected by means of a shared DC busbar. Since the Motor Modules share the same DC link, they can exchange energy with one another, i.e. if one Motor Module operating in the generator mode produces energy, the energy can be used by another Motor Module operating in the motor mode. The voltage-source DC link is supplied with mains voltage by a Line Module.

Line Modules

Line Modules generate a DC voltage from the line voltage and supply Motor Modules with energy via the voltage-source DC link.

Basic Line Modules

Basic Line Modules are designed only for infeed operation, i.e. they are not capable of recovering energy to the line supply. If regenerative energy is produced, e.g. when drives brake, it must be converted to heat by means of a Braking Module and a braking resistor. When a Basic Line Module is used as the infeed, the matching line reactor must be installed. A line filter can be optionally installed in order to ensure compliance with the limits stipulated for Category C2 in EN 61800-3.

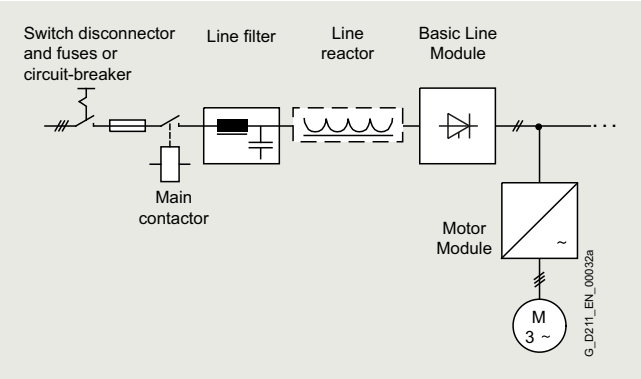

Smart Line Modules

Smart Line Modules can supply energy and return regenerative energy to the supply system. A Braking Module and braking resistor are required only if the drives need to be decelerated in a controlled manner after a power failure (i.e. when energy cannot be recovered to the supply). When a Smart Line Module is used as the infeed, the matching line reactor must be installed. A line filter can be optionally installed in order to ensure compliance with the limits stipulated for Category C2 in EN 61800-3.

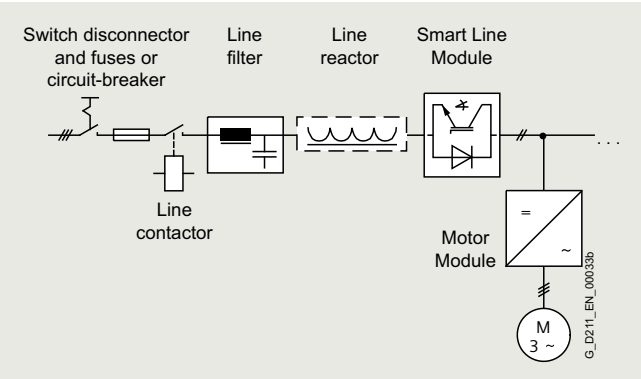

© Siemens 2024

Overview

Active Line Modules

Active Line Modules can supply energy and return regenerative energy to the supply system. A Braking Module and braking resistor are required only if the drives need to be decelerated in a controlled manner after a power failure (i.e. when energy cannot be recovered to the supply). In contrast to Basic Line Modules and Smart Line Modules, however, Active Line Modules generate a regulated DC voltage which remains constant despite fluctuations in the line voltage. In this case, the line voltage must remain within the permissible tolerance range. Active Line Modules draw a virtually sinusoidal current from the supply which limits any harmful harmonics.

In order to operate an Active Line Module, an Active Interface Module with the appropriate rating must be used. A line filter can be optionally installed in order to ensure compliance with the limits stipulated for Category C2 in EN 61800-3.

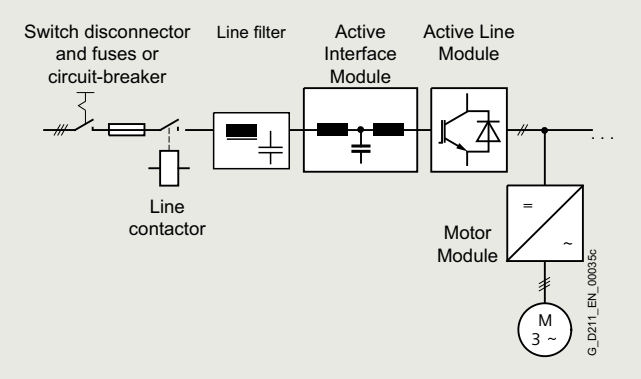

For further information about configuring a drive system with SINAMICS S120, refer to section Configuration notes.

Power Modules, Motor Modules and Line Modules are available in booksize, booksize compact, blocksize and chassis format:

- Power Modules in blocksize and chassis formats,
- Motor Modules and Line Modules in booksize, booksize compact and chassis formats.

Cooling methods

There are two cooling options available for Chassis format:

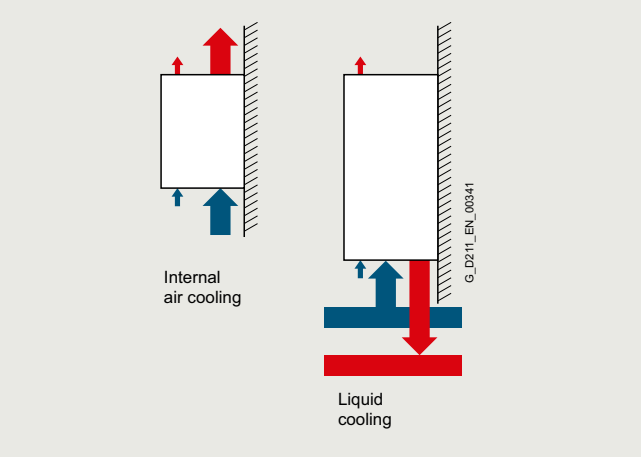

Internal air cooling

In this standard solution, the power loss from the electronics and power units of the drive components is removed by natural cooling or by a forced-ventilation system and routed to the interior of the control cabinet.

Liquid cooling

For liquid-cooled devices in chassis format, the power semiconductors are mounted on a heat sink through which the cooling medium flows. Most of the heat produced by the unit is absorbed by the cooling medium and can be dissipated outside the control cabinet.

Customized application

The devices can be purchased in the different formats as a complete system solution. Users profit from the know-how of the drive experts and need not spend valuable time calculating the thermal design requirements of the application. Especially in applications involving devices with liquid cooling in chassis format, users are provided with a technically sound solution and can reduce their engineering costs. The system solution extends up to complete control cabinets with cooling system and temperature/condensation control.

Further information is available on request.

Energy efficiency

The SINAMICS S120 drive system saves energy by recovering energy from the axes and using it within the DC link group of a multi-axis configuration and by feeding it back into the supply system. Even at full infeed capacity, no unnecessary heat is generated in the control cabinet. Because the Active Line Modules prevent capacitive and inductive reactive currents, SINAMICS S120 also ensures that no unnecessary power losses occur in the power supply and that no current harmonics occur. This not only prevents detrimental effects on other loads, but it also reduces the heat generated in the control cabinet.

System components

System components are divided into the following categories:

- **DC link components**
  e.g. Braking Modules and braking resistors
- **Load-side power components**
  e.g. motor reactors
- **Supplementary system components**
  e.g. Terminal Modules, Operator Panel and Communication Boards
- **Encoder system interface**
  for connecting various encoder types to SINAMICS S120

© Siemens 2024

Overview

Booksize format

Booksize format units are optimized for multi-axis applications and are mounted adjacent to one another. The connection for the common DC link is an integral feature. The units are cooled by an internal air cooling circuit.

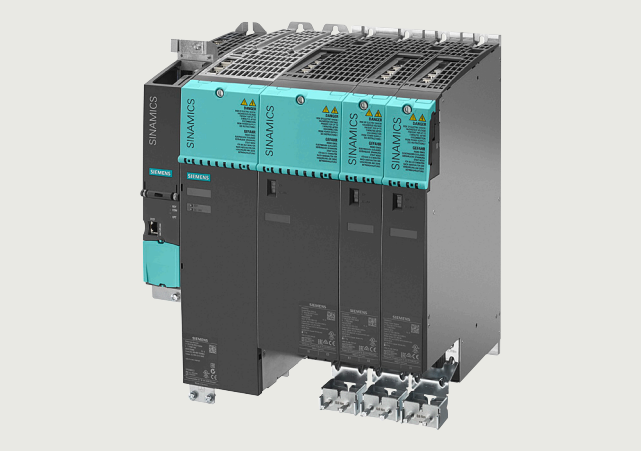

Booksize compact format

Derived from the booksize format we developed the booksize compact format for machines with particularly high requirements for the compactness of their drives. The booksize compact format offers virtually all of the advantages of the booksize format but with a reduced overall height and greater overload capability. The units are cooled by an internal air cooling circuit.



Blocksize format

Blocksize format units are optimized for single-axis applications and are available only as Power Modules.

The CU310-2 can be directly snap-mounted. The units are cooled by an internal air cooling circuit.



Chassis format

Higher-output units (approximately 100 kW and above) are constructed in chassis format. These are available as Line Modules, Power Modules and Motor Modules. Chassis format units are cooled by an internal air cooling circuit. Liquid-cooled devices can be ordered for special applications such as extrusion processes, forming technology or marine engineering. The CU310-2 Control Unit can be integrated in the Power Modules.

Additional information on Chassis format is provided in Catalog D 21.3 at:
www.siemens.com/d21-3

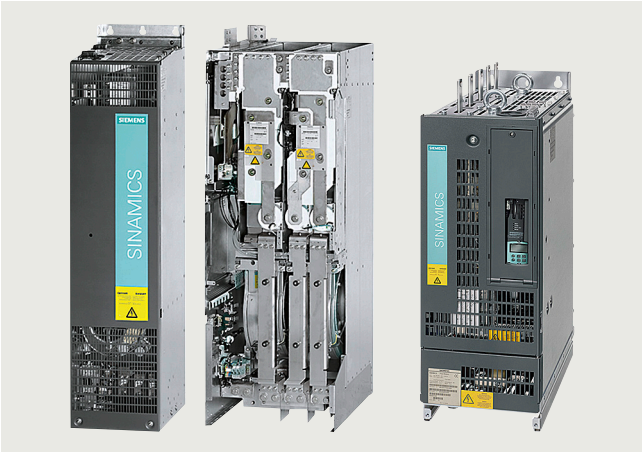

© Siemens 2024

Overview

Cabinet Modules

In addition to the converter chassis units listed in this catalog, SINAMICS S120 Cabinet Modules are available which are a modular cabinet system for multi-motor drives with a central supply infeed and a common DC busbar, for example, as used in paper machines, rolling mills, test bays, and hoisting gear. Cabinet Modules are available with a total power rating of up to 4500 kW in the air-cooled version and up to 5700 kW in the liquid-cooled version.

The main components of the system are as follows:

- Line Connection Modules
- Basic Line Modules
- Smart Line Modules
- Active Line Modules including Active Interface Modules
- Central Braking Modules
- Motor Modules
- Auxiliary Power Supply Modules



For additional information see Catalog D 21.3 at:
www.siemens.com/d21-3

© Siemens 2024

Technical specifications

The most important directives and standards are listed below. These are used as the basis for the SINAMICS S120 built-in units and they must be carefully observed to achieve an EMC-compliant configuration that is safe both functionally and in operation.

European standards	
EN 61508-1	Functional safety of electrical/electronic/ programmable electronic safety-related systems Part 1: General requirements
EN 60204-1	Electrical equipment of machines Part 1: General definitions
EN 61800-3	Adjustable speed electrical power drive systems Part 3: EMC product standard including specific test methods
IEC/EN 61800-5-1	Adjustable-speed electrical power drive systems Part 5: Safety requirements Main section 1: Electrical and thermal requirements
North American standards	
UL 508C	Power Conversion Equipment
UL 61800-5-1	Adjustable Speed Electrical Power Drive Systems
CSA C22.2 No. 14	Industrial Control Equipment
Certificates of suitability	
cULus	Testing by UL (Underwriters Laboratories, www.ul.com) according to UL and CSA standards

More information

For reliable operation of the drive system, original components of the SINAMICS drive system and the original Siemens accessories as described in this Catalog and the Configuration Manuals, in the functional descriptions or user manuals must be used.

The user must observe the configuring instructions.

Combinations that differ from the configuring instructions (also in conjunction with non-Siemens products) require a special agreement.

If no original components are used, for example, for repairs, approvals such as UL, EN and Safety Integrated can become invalid. This may also result in the operating authorization for the machine in which the non-Siemens components are installed becoming invalid.

All of the certificates of suitability, approvals, certificates, declarations of conformity, test certificates, e.g. CE, UL, Safety Integrated, have been performed with the associated system components as they are described in the Catalogs and Configuration Manuals. The certificates are only valid if the products are used with the described system components, are installed according to the Installation Guidelines and are used for their intended purpose. In other cases, the vendor of these products is responsible for arranging that new certificates are issued.

For further information about configuring a drive system with SINAMICS S120, refer to section Configuration notes.

© Siemens 2024

Overview

System architecture with a central Control Unit

Electronically coordinated individual drives work together to perform your drive tasks. In multi-axis drives, the individual drives are controlled from the higher-level control systems in such a way as to achieve the desired coordinated movement. This requires cyclic data exchange between the controller and the drives. A central Control Unit controls the drives for all connected axes and also establishes the technological links between the drives and/or axes. Since all the required data is stored in the central Control Unit, it does not need to be transferred. Inter-axis connections can be established within a Control Unit and easily configured in the SINAMICS Startdrive or STARTER commissioning tool using a mouse.

- The SINAMICS Control Unit can handle simple technological tasks by itself
- The **CU310-2 DP** or **CU310-2 PN** Control Units are used in conjunction with Power Modules and single-motor drives.
- The **CU320-2 DP** or **CU320-2 PN** Control Units are used in conjunction with all Motor Modules or Line Modules for single or multi-motor drives.
- Sophisticated motion control tasks can be implemented with the support of the more powerful **D410-2**, **D425-2**, **D435-2**, and **D445-2** Control Units of **SIMOTION D** (graded according to performance).

You can obtain more information about SIMOTION in SiePortal and Catalog PM 21.

Each of these Control Units is based on an object-oriented SINAMICS standard firmware, which contains all common control modes and can be scaled to meet even the most advanced performance requirements.

Drive objects

A drive object is a self-contained software function with its own parameters and, where appropriate, its own fault messages and alarms.

The drive controls are supplied as ready-to-configure drive objects:

- Infeed Control for mains infeed
- Vector control
  - Speed-controlled drives with high speed and torque stability in general machine and plant construction
  - Particularly suitable for asynchronous motors
  - Optimized pulse patterns for efficient motor/converter systems
- Servo control
  - Drives with highly dynamic motion control
  - Angular-locked synchronism with isochronous PROFIBUS/PROFINET
  - For use in machine tools and clocked production machines

The most commonly used v/f control modes are stored in the "Vector control" drive object and are ideal for implementing even simple applications such as group drives with SIEMOSYN motors.

CompactFlash card

The functions of the drives are stored on a CompactFlash card. This card contains the firmware and parameter settings for all drives in the form of a project. The CompactFlash card can also hold additional projects, which means that the correct project can be accessed immediately when series machines of different types are commissioned. When the Control Unit has booted, the data on the CompactFlash card is read and loaded to the work memory.

The firmware is organized in objects. Drive objects are used to implement open-loop and closed-loop control functions for Line Modules, Motor Modules, Power Modules and other system components connected by DRIVE-CLiQ.

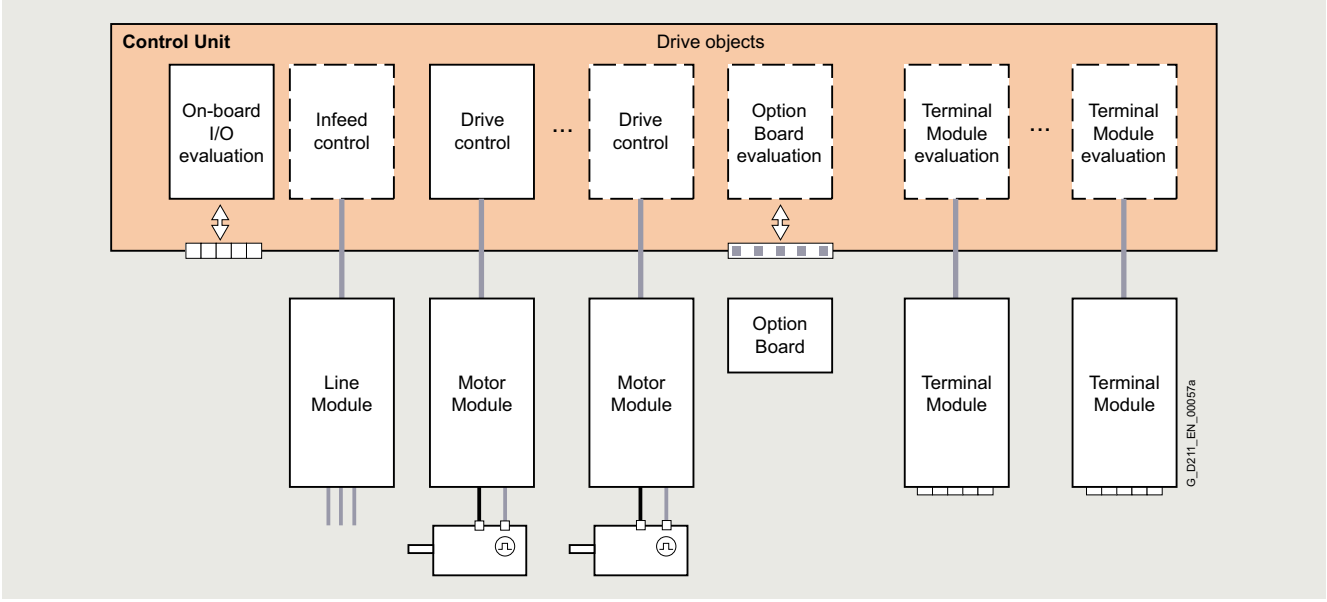

© Siemens 2024

Overview

Comprehensive package of open-loop and closed-loop control functions

A wide variety of standard functions such as setpoint input, data set changeover, controller optimization, kinetic buffering, etc. ensure a high degree of functional reliability and excellent flexibility when addressing the application.

Overview of key open-loop and closed-loop control functions

	Closed-loop control types S120	Open-loop control types S120	Main functions S120 for booksize/chassis	Comment, note
Infeed Control	• Booksize - Current control with/without mains sensor - V_{DC} control without/with mains sensor • Chassis - Current control with VSM10 - V_{DC} control with VSM10 - Network functionalities (island grids)	• Booksize/chassis - Basic Mode Rectification only - Smart Mode Rectification and regenerative feedback	• Mains identification • Controller optimization • Harmonics filter • Automatic restart	The mains sensor is the VSM10 Voltage Sensing Module; "Current" is the line current; 3-phase with line frequency
Vector control	• Asynchronous motor - Torque control with/without encoder - Speed control with/without encoder • Torque motor - Torque control with encoder - Speed control with/without encoder • Asynchronous motor, torque motor - Position control with encoder • Reluctance motor - Torque control with/without encoder - Speed control with/without encoder	• Linear/parabolic V/f characteristic • Constant-frequency V/f characteristic (textile) • Independent voltage setpoint input	• Data set changeover • Extended setpoint input • Motor identification • Current/speed controller optimization • Technology controller • Basic positioner • Automatic restart • Flying restart with/without encoder • Kinetic buffering • Synchronization • Droop • Brake control	Mixed operation with V/f control modes is possible; it is for this reason that the V/f control modes are stored only once in the "Vector control" drive object V/f is not possible with reluctance motors. More information on reluctance motors can be found in catalog D 81.1. Position control can be selected as a function module from both Servo and Vector mode Synchronous motors (1FK and 1FT) and linear motors can be operated only in Servo mode. Permanent-magnet 1FW4 synchronous motors can be operated over the complete operating range in Vector control.
Servo control	• Asynchronous motor - Torque control with/without encoder - Speed control with/without encoder • Synchronous motor, linear motor and torque motor - Torque control with encoder - Speed control with encoder • All motor types - Position control with encoder	• Linear/parabolic V/f characteristic • Constant-frequency V/f characteristic (textile) • Independent voltage setpoint input	• Data set changeover • Setpoint input • Motor identification • Damping application • Technology controller • Basic positioner • Brake control	Mixed operation with V/f control modes is possible; it is for this reason that the V/f control modes are stored only once in the "Vector control" drive object Position control can be selected as a function module from both Servo and Vector mode.

© Siemens 2024

Overview

Extended technology with SIMOTION

SIMOTION D Control Units support the coordinated motion control of multiple drives. Technology objects are implemented in addition to drive objects on these Control Units. These are grouped to form technology packages and make available extended Motion Control functions (e.g. synchronous operation, cam disk, path interpolation and others) or technological functions (e.g. a cam controller, a temperature or pressure control). The IEC 61131-3-compliant PLC integrated in SIMOTION D Control Units means that they are not just capable of controlling sequences of motions, but the entire machine including HMI and I/Os.

You can obtain more information about SIMOTION in SiePortal and Catalog PM 21.

BICO technology

Every drive object contains a large number of input and output variables which can be freely and independently interconnected using Binector Connector Technology (BICO). A binector is a logic signal which can assume the value 0 or 1. A connector is a numerical value, e.g. the actual speed or current setpoint.

Basic positioner (EPOS)

The EPOS basic positioner provides powerful and precise positioning functions. Due to its flexibility and adaptability, the EPOS basic positioner can be used for a wide range of positioning tasks. The functions are easy to use during both commissioning and operation, and the comprehensive monitoring functions are very powerful. Many applications can be implemented without external position control systems.

More information about the basic positioner (EPOS) is provided in the section Technology functions.

EPOS is only available for SINAMICS S120 booksize and booksize compact.

SINAMICS Drive Control Chart (SINAMICS DCC)

SINAMICS DCC expands the scope of device functions by means of freely available closed-loop control, arithmetic and logic blocks and offers a means by which proprietary technological functions can be graphically configured in the SINAMICS drive system. In addition, local data processing in the drive supports the implementation of modular machine concepts and results in an increase in the overall machine performance.

More information about the Drive Control Chart (DCC) is provided in section Engineering tools.

SINAMICS Technology Extensions (SINAMICS TEC)

The SINAMICS TEC are configurable functions or Siemens technologies that can be added to extend firmware functions. The extensions implement high-performance and targeted application-specific tasks for different areas, e.g. storage and retrieval machines.

More information about Technology Extensions (TEC) is provided in section Technology functions.

Integral safety functions (Safety Integrated)

The Control Units support comprehensive safety functions.

The integrated safety functions are the Safety Integrated Basic Functions

- STO = Safe Torque Off
- SBC = Safe Brake Control
- SS1 = Safe Stop 1 (Time controlled)

and the Safety Integrated Extended Functions that require a license

- STO = Safe Torque Off
- SS1 with SBR/SAM = Safe Stop 1 with Safe Brake Ramp/Safe Acceleration Monitor
- SS2 = Safe Stop 2
- SBC = Safe Brake Control
- SOS = Safe Operating Stop
- SLS = Safely-Limited Speed
- SSM = Safe Speed Monitor
- SDI = Safe Direction
- SLA = Safely-Limited Acceleration
- SBT = Safe Brake Test

and Safety Integrated Advanced Functions

- SLP = Safely-Limited Position
- SP = Safe Position transmission
- SCA = Safe Cam

(Abbreviations in accordance with IEC 61800-5-2)

If the integrated safety functions are used, licenses, supplementary system components such as TM54F Terminal Modules, or suitable safety controls will be necessary.

More information about the integrated safety functions is provided in section Safety Integrated.

Diagnostics optimally supported by trace function

The time characteristics of input and output variables associated with drive objects can be measured by the integrated trace function and displayed using the STARTER commissioning tool. Several signals can be simultaneously traced. A recording can be triggered dependent on freely selectable boundary conditions, e.g. the value of an input or output variable.

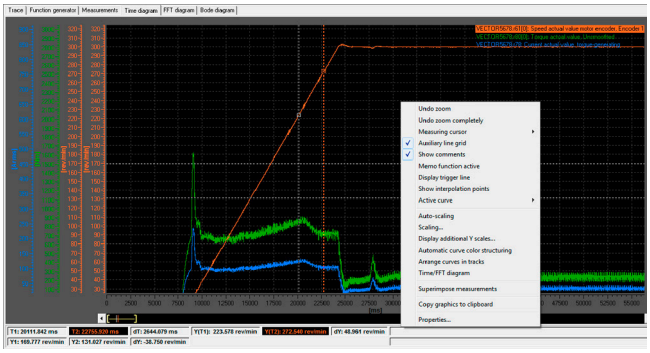

© Siemens 2024

Overview



CU320-2 PN Control Unit with BOP20 Basic Operator Panel



CU320-2 DP Control Unit

The communication, open-loop and closed-loop control functions for one or more Line Modules and/or Motor Modules are executed in a CU320-2 Control Unit. The CU320-2 Control Unit is essentially designed for multi-axis operation. Communication with the higher-level control system is performed either via PROFINET (PN) or PROFIBUS (DP).

Design

CU320-2 Control Units feature the following interfaces as standard:

- Fieldbus interface:
  - CU320-2 PN: 1 PROFINET interface with 2 ports (RJ45 sockets) with PROFIdrive V4 profile
  - CU320-2 DP: 1 PROFIBUS interface with PROFIdrive V4 profile
- 4 x DRIVE-CLiQ sockets for communication with other DRIVE-CLiQ nodes, e.g. Motor Modules, Active Line Modules, Sensor Modules, Terminal Modules
- 12 parameterizable digital inputs (isolated)
- 8 parameterizable bidirectional digital inputs/digital output (not isolated)
- 1 serial RS232 interface (e.g. to connect the AOP30 Advanced Operator Panel)
- 1 interface for the BOP20 Basic Operator Panel
- 1 slot for the CompactFlash card on which firmware and parameters are stored
- 1 slot for mounting an option module (e.g. TB30 Terminal Board)
- CU320-2 DP: 2 rotary coding switches for manually setting the PROFIBUS address
- 1 Ethernet interface for commissioning and diagnostics
- 3 measuring sockets and one reference ground for commissioning support
- 1 connection for the electronics power supply via the 24 V DC supply connector
- 1 PE/protective conductor connector
- 1 ground connection

A shield connection for the signal cable shield of the option module is located on the CU320-2 Control Unit.

The available option slot is used to expand the interfaces, for example, to include additional terminals or for communication purposes.

The status of the CU320-2 Control Unit is indicated via multi-color LEDs.

As the firmware and parameter settings are stored on a plug-in CompactFlash card, the Control Unit can be changed without the need for software tools.

The CU320-2 Control Unit can be mounted on the side of the Line Module via brackets integrated in a Line Module. The CU320-2 Control Unit can also be fixed to the wall of the control cabinet using the integrated fixing lugs. As the CU320-2 Control Unit is not as deep as the booksize Line Modules, suitable spacers are available to increase the depth of the CU320-2 Control Unit to 270 mm.

© Siemens 2024

Selection and ordering data

Description	Article No.
CU320-2 PN Control Unit Without CompactFlash card	**6SL3040-1MA01-0AA0**
CU320-2 DP Control Unit Without CompactFlash card	**6SL3040-1MA00-0AA0**
Accessories	
For CU320-2 PN: **Industrial Ethernet FC**	
• RJ45 Plug 145 (1 units)	**6GK1901-1BB30-0AA0**
• RJ45 Plug 145 (10 units)	**6GK1901-1BB30-0AB0**
• Stripping tool	**6GK1901-1GA00**
• Standard cable GP 2x2	**6XV1840-2AH10**
• Flexible cable GP 2x2	**6XV1870-2B**
• Trailing cable GP 2x2	**6XV1870-2D**
• Trailing cable 2x2	**6XV1840-3AH10**
• Marine cable 2x2	**6XV1840-4AH10**
For CU320-2 DP: **PROFIBUS connector**	
• Without PG/PC connection	**6ES7972-0BA42-0XA0**
• With PG/PC connection	**6ES7972-0BB42-0XA0**
Spacers (2 units) Increases the depth of the CU320-2 DP Control Unit to 270 mm (if the integrated brackets are not to be used, but the depth still has to be 270 mm)	**6SL3064-1BB00-0AA0**
STARTER commissioning tool [1] On DVD-ROM	**6SL3072-0AA00-0AG0**
Accessories for re-ordering	
Dust protection blanking plugs (50 units) For DRIVE-CLiQ port	**6SL3066-4CA00-0AA0**

For information on connectors and cables refer to the section MOTION-CONNECT connection system and in the internet at:
www.siemens.com/motion-connect
https://sieportal.siemens.com

Integration

DRIVE-CLiQ components, for example, Motor Modules and Active Line Modules, can be connected to a CU320-2 Control Unit. The number of modules depends on the performance required, including duty type and additional functions.

The BOP20 Basic Operator Panel can also be snapped onto the CU320-2 Control Unit during operation for diagnostic purposes.

The CU320-2 Control Unit and other connected components are commissioned and diagnosed with the SINAMICS Startdrive or STARTER commissioning tool with the installed SINAMICS Support Package or the AOP30 Advanced Operator Panel.

To operate the CU320-2 PN Control Unit, a CompactFlash card with firmware V4.4 or higher is required.

To operate the CU320-2 DP Control Unit, a CompactFlash card with firmware V4.3 or higher is required.

[1] For more information, see
https://support.industry.siemens.com/cs/document/104020669

© Siemens 2024

Integration

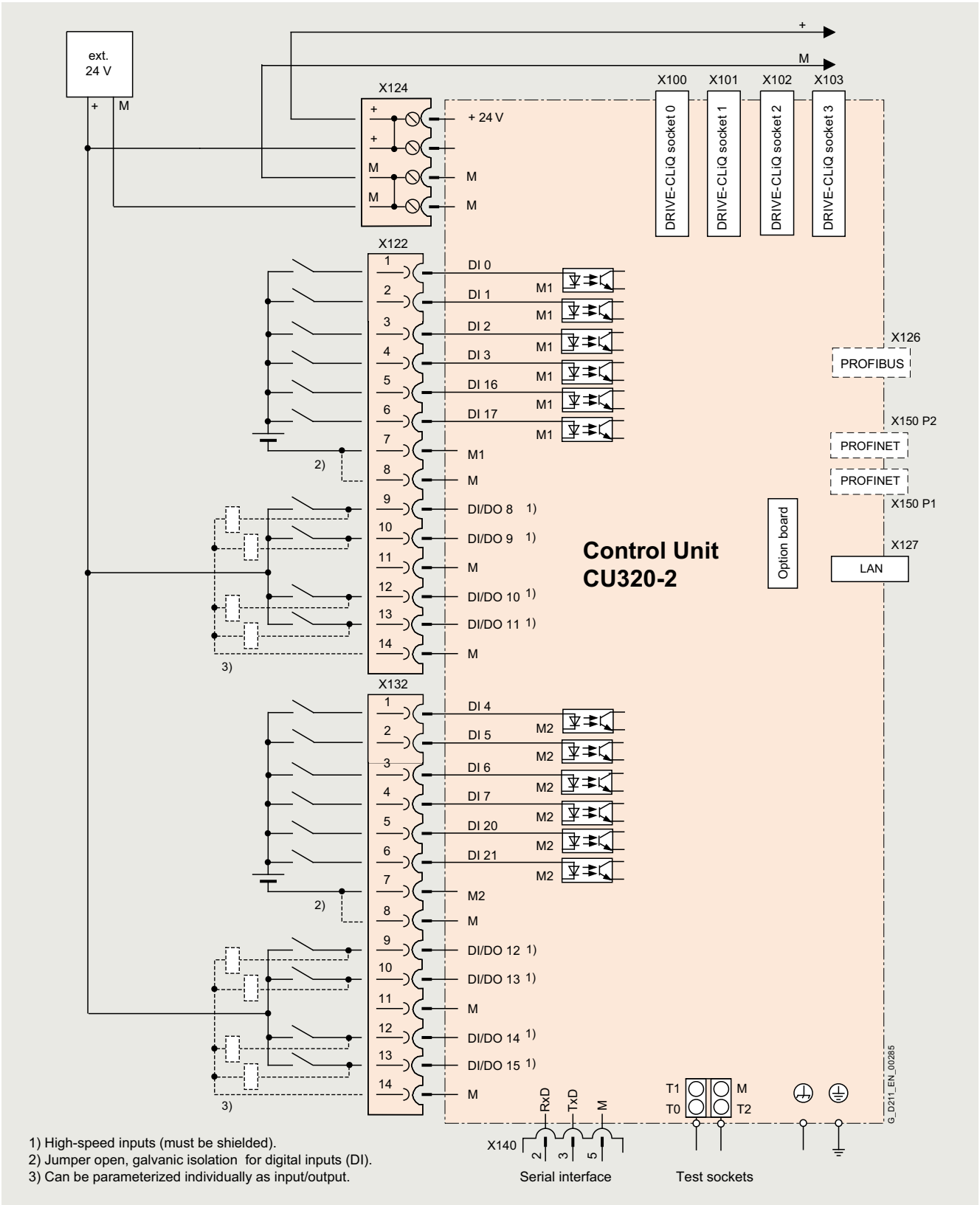

1) High-speed inputs (must be shielded).
2) Jumper open, galvanic isolation for digital inputs (DI).
3) Can be parameterized individually as input/output.

Connection example of a CU320-2 Control Unit

© Siemens 2024

Technical specifications

	CU320-2 Control Unit
PROFINET **PROFIBUS**	6SL3040-1MA01-0AA0 6SL3040-1MA00-0AA0
Power requirement, max. At 24 V DC, without taking account of digital outputs, expansion option slot and DRIVE-CLiQ supply	1 A
Conductor cross-section, max.	2.5 mm^2
Fuse protection, max.	20 A
Digital inputs	In accordance with IEC 61131-2 type 1 12 isolated digital inputs 8 bidirectional non-isolated digital inputs/digital outputs
• Voltage	-3 ... +30 V
• Low level (an open digital input is interpreted as "low")	-3 ... +5 V
• High level	15 ... 30 V
• Current consumption at 24 V DC, typ.	3.5 mA
• Delay time of digital inputs [1], approx.	
- L → H	50 µs
- H → L	100 µs
• Delay time of high-speed digital inputs [1], approx.	
- L → H	5 µs
- H → L	50 µs
• Conductor cross-section, max.	1.5 mm^2
Digital outputs (continuously short-circuit proof)	8 bidirectional non-isolated digital outputs/inputs
• Voltage	24 V DC
• Load current per digital output, max.	500 mA
• Delay time [1], typ./max.	
- L → H	150 µs/400 µs
- H → L	75 µs/100 µs
• Conductor cross-section, max.	1.5 mm^2
Power loss	24 W
PE connection	M5 screw
Ground connection	M5 screw
Dimensions	
• Width	50 mm (1.97 in)
• Height	300 mm (11.81 in)
• Depth	226 mm (8.90 in)
Weight, approx.	2.3 kg (5.07 lb)
Certificate of suitability	cULus

[1] The specified delay times refer to the hardware. The actual reaction time depends on the time slice in which the digital input or output is processed.

© Siemens 2024

Overview



The CompactFlash card contains the firmware and set parameters. The CompactFlash card is inserted into the appropriate slot of the CU320-2 Control Unit.

Design

A CU320-2 Control Unit can perform the communication, open-loop and closed-loop control functions for several power units. The computing capacity requirement increases in proportion to the number of power units and system components and in relation to the dynamic response required. The computing capacity requirement and utilization of the CU320-2 Control Unit can be calculated with the SIZER for Siemens Drives engineering tool (integrated in the TIA Selection Tool). The full computing capacity of the CU320-2 Control Unit is only available on systems with performance enhancement. For the CU320-2 Control Unit, the performance enhancement is necessary from the 4th axis.

In addition to the firmware, the CompactFlash card also contains licensing codes which are required to enable firmware options.

In addition to the Article No., the following firmware options can currently be ordered with or without performance enhancement:

- Safety Integrated Extended Functions, order code per axis **F01** to **F06**
- Safety Integrated Advanced Functions, order code per axis **A01** to **A06**
- High output frequency, order code **J01**
- DCB Extension, order code **U01**

Converter cabinets with a Control Unit already contain the CompactFlash card with the current firmware. The firmware options can be added as cabinet options.

The firmware options can also be enabled subsequently. You require the serial number of the CompactFlash card and the article number of the firmware option to be enabled. With this information, you can purchase the associated license code from a license database and enable the firmware option. The license code is only valid for the CompactFlash card declared and cannot be transferred to other CompactFlash cards.

Subsequent licensing is possible in the internet via the web license manager by generating a license key:
www.siemens.com/automation/license

Selection and ordering data

Description	Article No.
CompactFlash card for CU320-2 Control Unit without safety license	
• Without performance enhancement	**6SL3054-0❑❑❑0-1BA0**
• With performance enhancement firmware option	**6SL3054-0❑❑❑1-1BA0**
CompactFlash card for CU320-2 Control Unit with safety license for Extended Functions	
• For 1 axis	**6SL3054-0❑❑❑❑-1BA0-Z F01**
• For 2 axes	**6SL3054-0❑❑❑❑-1BA0-Z F02**
• For 3 axes	**6SL3054-0❑❑❑❑-1BA0-Z F03**
• For 4 axes	**6SL3054-0❑❑❑1-1BA0-Z F04**
• For 5 axes	**6SL3054-0❑❑❑1-1BA0-Z F05**
• For 6 axes	**6SL3054-0❑❑❑1-1BA0-Z F06**
CompactFlash card for CU320-2 Control Unit with/without safety license	
• With high output frequency [1]	**6SL3054-0❑❑❑❑-1BA0-Z J01**
• With DCB Extension license (firmware V4.6 and higher) (more information about DCB Extension and license upgrades can be found under Drive Control Chart (DCC) in the Engineering Tools section)	**6SL3054-0❑❑❑❑-1BA0-Z U01**
Firmware version	↑↑
V4.8	**E J**
V5.1	**F B**
V5.2	**F C**
	↑
Service Pack SP1 [2]	**1**
Service Pack SP3 [3]	**3**
	↑
Without performance enhancement	**0**
With performance enhancement firmware option	**1**

[1] For more information, see https://support.industry.siemens.com/cs/document/104020669

[2] Applies only to firmware version V5.1.

[3] Applies only to firmware version V5.2.

© Siemens 2024

CompactFlash card for CU320-2

More information

Description	Article No.
License upgrades	
Electronic Certificate of License (eCoL)	
• **Performance extension** for upgrading the license on a CompactFlash card	**6SL3074-0AA01-0AH0**
• **Safety Integrated Extended Function** License upgrade for one axis on a CompactFlash card. This option must be ordered once for each axis, e.g. a maximum of 6 for one CompactFlash card (**F01** - **F06**)	**6SL3074-0AA10-0AH0**
• **Safety Integrated Advanced Function** License upgrade for one axis on a CompactFlash card. This option must be ordered once for each axis, e.g. a maximum of 6 for one CompactFlash card (**A01 - A06**)	**6SL3074-0AA20-0AH0**
• **High output frequency** [1] Upgrading license to enable high output frequencies above 550 Hz for all axes on a CompactFlash card (**J01**)	**6SL3074-0AA02-0AH0**
• **SINAMICS DCB extension** Runtime license as of firmware V 4.6 for upgrading the license on a CompactFlash card (**U01**) (see Engineering Tools section, SINAMICS Drive Control Chart engineering software)	**6SL3077-0AA00-0AH0**
• **Cogging torque compensation** Option to compensate motor cogging torques at low speeds License for one axis is provided on a CompactFlash card.	**6SL3074-0AA15-0AH0**
• **Enhanced Vibration Suppression Support** (incl. Advanced Position Control (APC) and Active Vibration Suppression (AVS)) Option to dampen load oscillations by taking into account motor- and load-side state variables License for one axis is provided on a CompactFlash card.	**6SL3074-0AA05-0AH0**
• **SINAMICS Technology Extension HEM (Heat Exchanger Module)** Included in SINAMICS S120 Cabinet Modules, Heat Exchanger Modules.	**6SL3077-0AA05-2AH0**
Fault ride-through as a function of the Active Line Module format [2]	
- Booksize Active Line Module: 6SL3130-7TE..	**6SL3074-0AA07-1AH0**
- Chassis Active Line Module: with the hardware version for line formation	**6SL3074-0AA07-0AH0**

Description	Article No.
Line droop control dependent on the power of the Active Line Module [2]	
- 0 ... 50 kW Active Line Modules: 6SL3130-7TE21-6AA4, 6SL3130-7TE23-6AA3	**6SL3074-0AA08-8AH0**
- 51 ... 100 kW Active Line Modules: 6SL3130-7TE25-5AA3, 6SL3130-7TE28-0AA3	**6SL3074-0AA08-7AH0**
- 101 ... 200 kW Active Line Modules: 6SL3130-7TE31-2AA3, 2 x 6SL3130-7TE28-0AA3 (parallel connection)	**6SL3074-0AA08-6AH0**
- 201 ... 350 kW Active Line Modules: 2 × 6SL3130-7TE31-2AA3 (parallel connection), 6SL3330-7TE35-0AA4	**6SL3074-0AA08-5AH0**
- 351 ... 650 kW Active Line Modules: 6SL3330-7TE41-0AA4, 6SL3335-7TG35-8AA4, 6SL3335-7TG35-8AA8	**6SL3074-0AA08-4AH0**
- 651 ... 950 kW Active Line Module: 6SL3330-7TE41-4AA4	**6SL3074-0AA08-3AH0**
- 951 ... 1250 kW Active Line Module: 6SL3330-7TG41-0AA4	**6SL3074-0AA08-2AH0**
- 1251 ... 1600 kW Active Line Modules: 6SL3330-7TG41-3AA4, 6SL3335-7TG41-3AA4, 6SL3335-7TG41-3AA8	**6SL3074-0AA08-1AH0**
- 1601 ... 2000 kW Active Line Modules: 6SL3335-7TG41-6AA4, 6SL3335-7TG41-6AA8	**6SL3074-0AA08-0AH0**

More information

A firmware version as of V4.3 is required for the CU320-2 Control Unit.

The current firmware version at the time of publication of this catalog is Firmware V5.2 SP3.

The electronic Certificate of License is the paperless delivery form for runtime options for SINAMICS and contains information about the type of rights of use purchased for the software.
The electronic Certificate of License is supplied as a PDF file via the Online Software Delivery Portal (OSD).
This enables quick notification with a download link to the email address to be stated in the order.
The Web License Manager can also be called from the OSD to assign the runtime license to a memory card.
In this case, the data of the electronic Certificate of License are automatically transferred to the Web License Manager and do not have to be entered manually.
This ensures quick availability of the license key and simple and secure handling and management of the license certificates.
You will find information on the OSD at:
https://support.industry.siemens.com/cs/ww/en/view/109759444

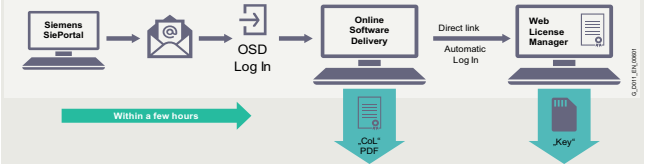

The Certificates of License are stored in directory "KEYS".

[1] For more information, see https://support.industry.siemens.com/cs/document/104020669

[2] For more information, see https://support.industry.siemens.com/cs/document/109781647

© Siemens 2024

Overview



CU310-2 PN and CU310-2 DP Control Units



CU310-2 PN Control Unit with BOP20 Basic Operator Panel

The CU310-2 Control Unit for the communication and open-loop/closed-loop control functions of a Power Module is combined with the Power Module [1] to create a powerful single drive. A PROFINET (PN) variant and a PROFIBUS (DP) variant are available for fieldbus communication.

Design

CU310-2 Control Units feature the following interfaces as standard:

- Fieldbus interface
  - CU310-2 PN: 1 PROFINET interface with 2 ports (RJ45 sockets) with PROFIdrive V4 profile
  - CU310-2 DP: 1 PROFIBUS interface with PROFIdrive V4 profile
- 1 DRIVE-CLiQ socket to allow communication with other DRIVE-CLiQ nodes
- 1 encoder evaluation for evaluating the following encoder signals
  - Incremental encoder TTL/HTL
  - SSI encoders without incremental signals
- 6 parameterizable digital inputs (isolated) or alternatively 3 parameterizable, fail-safe digital inputs (isolated, can be used with firmware V4.5 and higher).
  The fail-safe digital inputs can be routed, i.e. they can be routed via PROFIsafe to a higher-level controller.
- 5 parameterizable digital inputs (isolated)
- 1 digital output (isolated) or alternatively 1 parameterizable, fail-safe digital output (isolated, can be used with firmware V4.5 or higher)
- 8 parameterizable bidirectional digital inputs/digital outputs (non-isolated) [2]
- 1 analog input, either ± 10 V (resolution 12 bits + sign) or ± 20 mA (11 bits + sign)
- 1 Ethernet interface (RJ45 socket) for commissioning and diagnostics
- 1 serial RS232 interface
- 1 connection for the electronics power supply via the 24 V DC supply connector
- 1 temperature sensor input for KTY84-130, Pt1000 or PTC (Pt1000 can be used from firmware V4.7 HF17 and higher)
- 3 measuring sockets and one reference ground for commissioning support
- 1 slot for the CompactFlash card on which firmware and parameters are stored
- 1 PM-IF interface for communication with Power Modules in blocksize format
- 1 interface to the BOP20 Basic Operator Panel
- 1 PE/protective conductor connection

The status of the CU310-2 Control Unit is indicated via multi-color LEDs.

A BOP20 Basic Operator Panel can also be snapped directly onto the CU310-2 Control Unit for diagnostic procedures.

As the firmware and parameter settings are stored on a plug-in CompactFlash card, the Control Unit can be changed without the need for software tools.

[1] for PM240-2 Power Modules, usable with firmware V4.8 or later

[2] A 24-V supply voltage must be connected to terminal X124 for the digital outputs to be used.

© Siemens 2024

Selection and ordering data

Description	Article No.
CU310-2 PN Control Unit Without CompactFlash card	**6SL3040-1LA01-0AA0**
CU310-2 DP Control Unit Without CompactFlash card	**6SL3040-1LA00-0AA0**
Accessories	
For CU310-2 PN:	
Industrial Ethernet FC	
• RJ45 plug 180 (1 unit)	**6GK1901-1BB10-2AA0**
• RJ45 plug 180 (10 units)	**6GK1901-1BB10-2AB0**
• Stripping tool	**6GK1901-1GA00**
• Standard cable GP 2x2	**6XV1840-2AH10**
• Flexible cable GP 2x2	**6XV1870-2B**
• Trailing cable GP 2x2	**6XV1870-2D**
• Trailing cable 2x2	**6XV1840-3AH10**
• Marine cable 2x2	**6XV1840-4AH10**
For CU310-2 DP:	
PROFIBUS connector	
• Without PG/PC connection	**6ES7972-0BA42-0XA0**
• With PG/PC connection	**6ES7972-0BB42-0XA0**
Accessories for re-ordering	
Dust protection blanking plugs (50 units) For DRIVE-CLiQ port	**6SL3066-4CA00-0AA0**

For information on connectors and cables refer to the section MOTION-CONNECT connection system and in the internet at:
www.siemens.com/motion-connect
https://sieportal.siemens.com

Integration

The CU310-2 Control Unit drives Power Modules in blocksize format via the PM-IF interface. DRIVE-CLiQ motors or Sensor Modules (SMC) can also be connected to the integrated DRIVE-CLiQ socket to permit the operation of motors without a DRIVE-CLiQ interface.

Power Modules in chassis format are controlled by the CU310-2 Control Unit directly via the DRIVE-CLiQ interface. Sensor Modules and Terminal Modules must be connected to the free DRIVE-CLiQ sockets of the Chassis Power Module.

With the BOP20 Basic Operator Panel, parameters can be changed directly on the device. The BOP20 Basic Operator Panel can also be snapped onto the CU310-2 Control Unit during operation to perform diagnostics.

The CU310-2 Control Unit and other connected components are commissioned and diagnosed with the SINAMICS Startdrive or STARTER commissioning tool.

A CU310-2 DP Control Unit communicates with the higher-level control system using PROFIBUS and the PROFIdrive V4 profile.

A CU310-2 PN Control Unit communicates with the higher-level control system using PROFINET IO and the PROFIdrive V4 profile.

The SINAMICS S120 drive system with the CU310-2 PN Control Unit then assumes the function of a PROFINET IO device and can perform the following functions:

- PROFINET IO device
- 100 Mbps full duplex
- Supports real-time classes of PROFINET IO:
  - RT (Real-Time)
  - IRT (isochronous real-time), minimum send clock 250 µs
- Connects to controls as PROFINET IO devices using PROFIdrive compliant with Specification V4
- Standard TCP/IP communication for engineering with the SINAMICS Startdrive or STARTER commissioning tool
- Integrated 2-port switch with two RJ45 sockets based on the ERTEC ASIC. The optimum topology (line, star, tree) can therefore be configured without additional external switches.

A 24 V supply voltage must be connected to terminal X124 for the digital outputs to be used. To operate the CU310-2 Control Unit, a CompactFlash card with firmware V4.4 or higher is required.

[1] For more information, see
https://support.industry.siemens.com/cs/document/104020669

© Siemens 2024

Integration

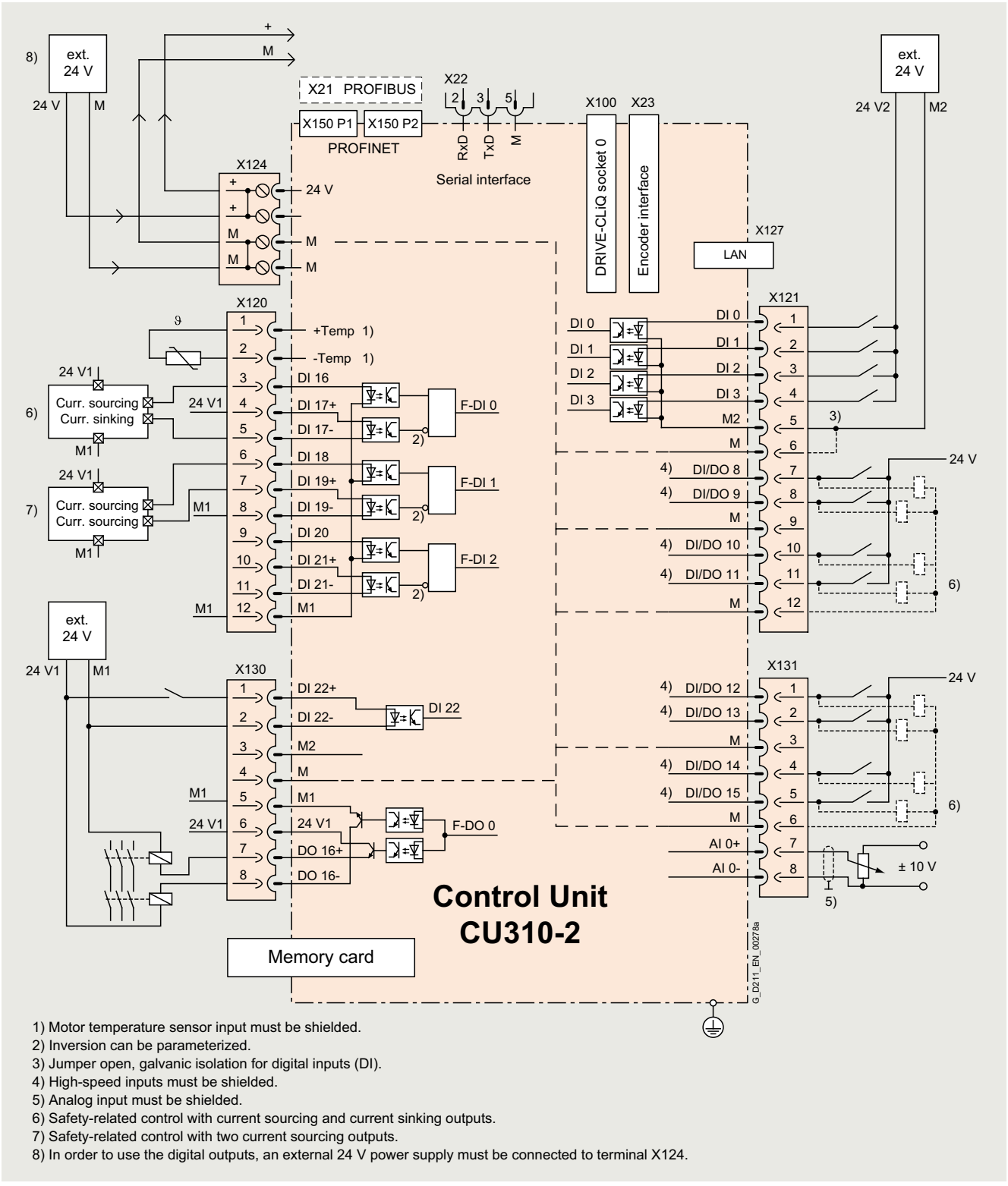

1) Motor temperature sensor input must be shielded.
2) Inversion can be parameterized.
3) Jumper open, galvanic isolation for digital inputs (DI).
4) High-speed inputs must be shielded.
5) Analog input must be shielded.
6) Safety-related control with current sourcing and current sinking outputs.
7) Safety-related control with two current sourcing outputs.
8) In order to use the digital outputs, an external 24 V power supply must be connected to terminal X124.

Connection example of CU310-2 Control Unit

© Siemens 2024

Technical specifications

	CU310-2 Control Unit
PROFINET	6SL3040-1LA01-0AA0
PROFIBUS	6SL3040-1LA00-0AA0
Power requirement, max. At 24 V DC, without taking into account the digital outputs and DRIVE-CLiQ supply	0.35 A for CU310-2 Control Unit + 0.5 A for Power Module
Conductor cross-section, max.	2.5 mm^2
Fuse protection, max.	20 A
Digital inputs	in accordance with IEC 61131-2 type 1 5 isolated digital inputs 8 bidirectional non-isolated digital inputs/digital outputs 3 parameterizable, fail-safe digital inputs (isolated) or alternatively 6 parameterizable digital inputs (isolated)
• Voltage	-3 ... +30 V
• Low level (an open digital input is interpreted as "low")	-3 ... +5 V
• High level	15 ... 30 V
• Current consumption at 24 V DC, typ.	3.5 mA
• Delay time of digital inputs [1], approx.	
- L → H	50 µs
- H → L	150 µs
• Delay time of high-speed digital inputs [1], approx. (high-speed digital inputs can be used for position detection)	
- L → H	5 µs
- H → L	50 µs
• Conductor cross-section, max.	1.5 mm^2
Digital outputs (continuously short-circuit proof)	8 bidirectional non-isolated digital inputs/digital outputs
• Voltage	24 V DC
• Load current per digital output [2], max.	500 mA
• Delay time [1], typ./max.	
- L → H	150 µs/400 µs
- H → L	75 µs/100 µs
• Conductor cross-section, max.	1.5 mm^2
Analog input	1 analog input for current or voltage input, switchable
• Common mode range	±12 V
• As voltage input	-10 ... +10 V; R_i > 100 Ω Resolution: 12 bits + sign (referred to the maximum range that can be resolved -11 ... +11 V)
• As current input	-20 ... +20 mA; R_i > 250 Ω Resolution: 11 bits + sign (referred to -22 ... +22 mA) Max. range that can be resolved: -44 ... +44 mA
Encoder evaluation	• Incremental encoder TTL/HTL • SSI encoders without incremental signals
• Input current range TTL/HTL	2 ... 10 mA (typ. 5 mA)
• Encoder supply	24 V DC / 0.35 A or 5 V DC / 0.35 A
• Encoder frequency, max.	300 kHz
• SSI baud rate	100 ... 1000 kBaud
• Resolution absolute position SSI	30 bits
• Cable length, max.	
- TTL encoder	100 m / 328 ft (only bipolar signals permitted) [3]
- HTL encoder	100 m (328 ft) for unipolar signals 300 m (984 ft) for bipolar signals [3]
- SSI encoder	100 m (328 ft)
Power loss	<20 W
PE connection	M5 screw
Dimensions	
• Width	73 mm (2.87 in)
• Height	
- CU310-2 PN	191 mm (7.52 in)
- CU310-2 DP	187 mm (7.36 in)
• Depth	75 mm (2.95 in)
Weight, approx.	0.95 kg (2.09 lb)
Certificate of suitability	cULus

[1] The specified delay times refer to the hardware. The actual reaction time depends on the time slice in which the digital input or output is processed.

[2] In order to use the digital outputs, an external 24 V power supply must be connected to terminal X124.

[3] Signal cables twisted in pairs and shielded.

© Siemens 2024

Overview



The CompactFlash card contains the firmware and set parameters. The CompactFlash card is plugged into the appropriate slot on the CU310-2 Control Unit.

Design

A CU310-2 Control Unit can perform the communication, open-loop and closed-loop control functions for one Power Module. The performance enhancement is not required in this case.

In addition to the firmware, the CompactFlash card also contains licensing codes which are required to enable firmware options.

In addition to the Article No., the following firmware options can currently be ordered:

- Safety Integrated Extended Functions, order code **F01**
- Safety Integrated Advanced Functions, order code **A01**
- High output frequency, order code **J01**
- DCB Extension, order code **U01**

The firmware options can also be enabled subsequently. You will need the serial number of the CompactFlash card and the Article No. of the firmware option to be enabled. With this information, you can purchase the associated license code from a license database and enable the firmware option. The license code is only valid for the CompactFlash card declared and cannot be transferred to other CompactFlash cards.

Subsequent licensing is possible in the internet via the web license manager by generating a license key:
www.siemens.com/automation/license

The electronic Certificate of License is the paperless delivery form for runtime options for SINAMICS and contains information about the type of rights of use purchased for the software.
The electronic Certificate of License is supplied as a PDF file via the Online Software Delivery Portal (OSD).
This enables quick notification with a download link to the email address to be stated in the order.
The Web License Manager can also be called from the OSD to assign the runtime license to a memory card.
In this case, the data of the electronic Certificate of License are automatically transferred to the Web License Manager and do not have to be entered manually.
This ensures quick availability of the license key and simple and secure handling and management of the license certificates.
You will find information on the OSD at:
https://support.industry.siemens.com/cs/ww/en/view/109759444

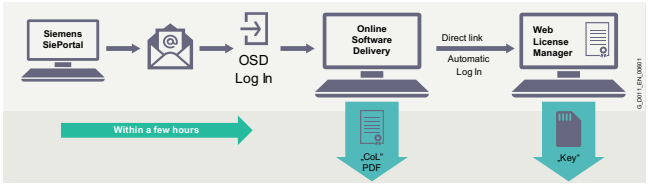

The Certificates of License are stored in directory "KEYS".

Selection and ordering data

Description	Article No.
CompactFlash card for CU310-2 Control Units without safety license	**6SL3054-0❑❑00-1BA0**
CompactFlash card for CU310-2 Control Units with safety license • including Certificate of License	**6SL3054-0❑❑00-1BA0-Z** **F01**
CompactFlash card for CU310-2 Control Units with/without safety license	
• With high output frequency [1]	**6SL3054-0❑❑❑0-1BA0-Z** **J01**
• With DCB Extension license (firmware V4.6 and higher) (more information about DCB Extension and license upgrades can be found under Drive Control Chart (DCC) in the Engineering Tools section)	**6SL3054-0❑❑❑0-1BA0-Z** **U01**
Firmware version	↑↑
V4.8	**E J**
V5.1	**F B**
V5.2	**F C**
	↑
Service Pack SP1 [2]	**1**
Service Pack SP3 [3]	**3**
License upgrades	
Electronic Certificate of License (eCoL)	
• **Safety Integrated Extended Functions** including Certificate of License Upgrading license for one axis on a CompactFlash card	**6SL3074-0AA10-0AH0**
• **Safety Integrated Advanced Functions** including Certificate of License Upgrading license for one axis on a CompactFlash card	**6SL3074-0AA20-0AH0**
• **High output frequency** [1] Upgrading license to enable high output frequencies above 550 Hz for all axes on a CompactFlash card	**6SL3074-0AA02-0AH0**
• **Cogging torque compensation** Option to compensate motor cogging torques at low speeds Axis license is provided on a CompactFlash card.	**6SL3074-0AA15-0AH0**
• **Enhanced Vibration Suppression Support** (incl. Advanced Position Control (APC) and Active Vibration Suppression (AVS)) Option to dampen load oscillations by taking into account motor- and load-side state variables License is provided on a CompactFlash card	**6SL3074-0AA05-0AH0**
• **SINAMICS Technology Extension HEM (Heat Exchanger Module)** Included in SINAMICS S120 Cabinet Modules, Heat Exchanger Modules.	**6SL3077-0AA05-2AH0**

[1] For more information, see https://support.industry.siemens.com/cs/document/104020669

[2] Applies only to firmware version V5.1

[3] Applies only to firmware version V5.2

© Siemens 2024

CUA31 Control Unit Adapter

Overview



CUA31 Control Unit Adapter

The CUA31 Control Unit Adapter converts the PM-IF interface to a DRIVE-CLiQ interface. The CUA31 Control Unit Adapter allows Power Modules in blocksize format to operate on a Control Unit, e.g. as a single axis next to a multi-axis drive. In this case, the CUA31 Control Unit Adapter should be the last device in the DRIVE-CLiQ link from the viewpoint of the Control Unit.

Design

The CUA31 Control Unit Adapter features the following connections and interfaces:

- 1 temperature sensor input for KTY84-130, Pt1000 or PTC (Pt1000 can be used from firmware V4.7 HF17)
- 3 DRIVE-CLiQ sockets
- 1 connection for the electronics power supply via the 24 V DC supply connector
- 1 Safe Stop input

The status of the CUA31 Control Unit Adapter is indicated via multi-color LEDs.

Selection and ordering data

Description	Article No.
CUA31 Control Unit Adapter Without DRIVE-CLiQ cable	**6SL3040-0PA00-0AA1**
Accessories for re-ordering	
Dust protection blanking plugs (50 units) For DRIVE-CLiQ port	**6SL3066-4CA00-0AA0**

Technical specifications

	CUA31 Control Unit Adapter 6SL3040-0PA00-0AA1
Current requirement, max. at 24 V DC without DRIVE-CLiQ supply • Conductor cross-section, max.	0.15 A for CUA31 + max. 0.5 A for PM240-2 Power Module 2.5 mm^2
Power loss, max.	2.4 W
PE connection	M4 screw
Dimensions • Width • Height • Depth	 73 mm (2.87 in) 165.8 mm (6.53 in) 37.3 mm (1.47 in)
Weight, approx.	0.31 kg (0.68 lb)
Certificate of suitability	cULus

© Siemens 2024

Integration

The CUA31 Control Unit Adapter is snapped onto the Power Module in blocksize format and communicates with a CU320-2 Control Unit, a SINUMERIK Control Unit or a SIMOTION D Control Unit via a DRIVE-CLiQ connection.

The CUA31 Control Unit Adapter's power is supplied by the Power Module via the PM-IF interface. If the CUA31 Control Unit Adapter needs to communicate when the Power Module is switched off, it must be supplied with 24 V DC from an external source.

Other DRIVE-CLiQ devices such as Sensor Modules or Terminal Modules can be connected to the CUA31 Control Unit Adapter.

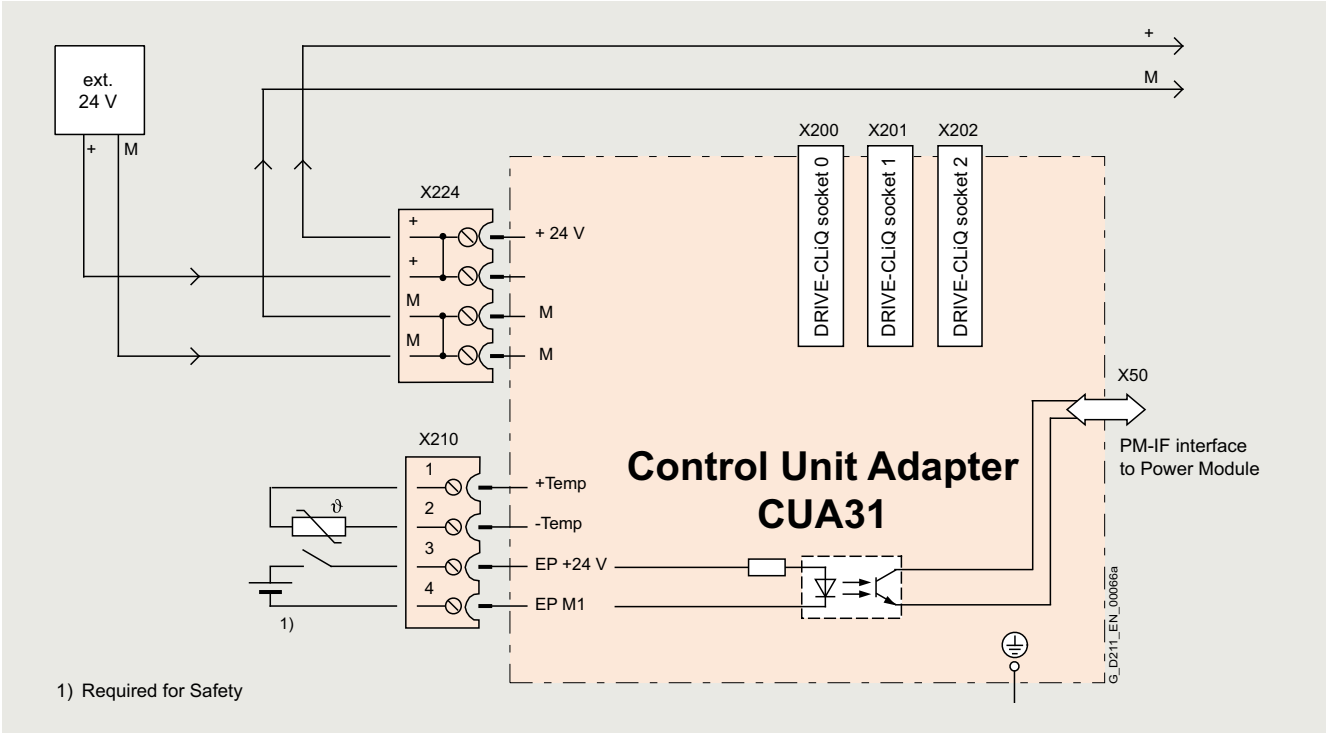

1) Required for Safety

© Siemens 2024

CUA32 Control Unit Adapter

Overview



CUA32 Control Unit Adapter

The CUA32 Control Unit Adapter converts the PM-IF interface to a DRIVE-CLiQ interface. The CUA32 Control Unit Adapter is also equipped with an integral encoder evaluation device which can be configured for an HTL/TTL or SSI encoder. The CUA32 Control Unit Adapter allows Power Modules in blocksize format to operate on a Control Unit, e.g. as a single axis next to a multi-axis drive. In this case, the CUA32 Control Unit Adapter should be the last device in the DRIVE-CLiQ link from the viewpoint of the Control Unit.

Design

The CUA32 Control Unit Adapter features the following connections and interfaces:

- 1 temperature sensor input for KTY84-130, Pt1000 or PTC (Pt1000 can be used from firmware V4.7 HF17)
- 3 DRIVE-CLiQ sockets
- 1 connection for the electronics power supply via the 24 V DC power supply connector
- 1 Safe Stop input
- 1 encoder evaluator for
  - Incremental encoder TTL/HTL
  - SSI encoder without incremental signals

The status of the CUA32 Control Unit Adapter is indicated via multi-color LEDs.

Selection and ordering data

Description	Article No.
CUA32 Control Unit Adapter Without DRIVE-CLiQ cable	**6SL3040-0PA01-0AA0**
Accessories for re-ordering	
Dust protection blanking plugs (50 units) For DRIVE-CLiQ port	**6SL3066-4CA00-0AA0**

Technical specifications

	CUA32 Control Unit Adapter 6SL3040-0PA01-0AA0
Current requirement, max. at 24 V DC without DRIVE-CLiQ supply or encoder supply	0.15 A for CUA32 + max. 0.5 A for PM240-2 Power Module
• Conductor cross-section, max.	2.5 mm^2
Encoder evaluation	• Incremental encoder TTL/HTL (can be parameterized) • SSI encoder without incremental signals
• Input current range TTL/HTL	4 ... 20 mA (typ. 10 mA)
• Encoder supply	24 V DC/0.35 A or 5 V DC/0.35 A
• Encoder frequency, max.	500 kHz
• SSI baud rate	100 ... 250 kbaud
• Resolution absolute position SSI	30 bit
• Cable length, max.	
- TTL encoder	100 m (328 ft) (only bipolar signals permitted) [1]
- HTL encoder	100 m (328 ft) for unipolar signals 300 m (984 ft) for bipolar signals [1]
- SSI encoder	100 m (328 ft)
Power loss, max.	2.6 W
PE connection	M4 screw
Dimensions	
• Width	73 mm (2.87 in)
• Height	165.8 mm (6.53 in)
• Depth	37.3 mm (1.47 in)
Weight, approx.	0.32 kg (0.71 lb)
Certificate of suitability	cULus

[1] Signal cables twisted in pairs and shielded.

© Siemens 2024

Integration

The CUA32 Control Unit Adapter is snapped onto the Power Module in blocksize format and communicates with a CU320-2 Control Unit, a SINUMERIK Control Unit or a SIMOTION D Control Unit via a DRIVE-CLiQ connection.

The CUA32 Control Unit Adapter's power is supplied by the Power Module via the PM-IF interface. If the CUA32 Control Unit Adapter needs to communicate when the Power Module is switched off, it must be supplied with 24 V DC from an external source.

Other DRIVE-CLiQ devices such as Sensor Modules or Terminal Modules can be connected to the CUA32 Control Unit Adapter.

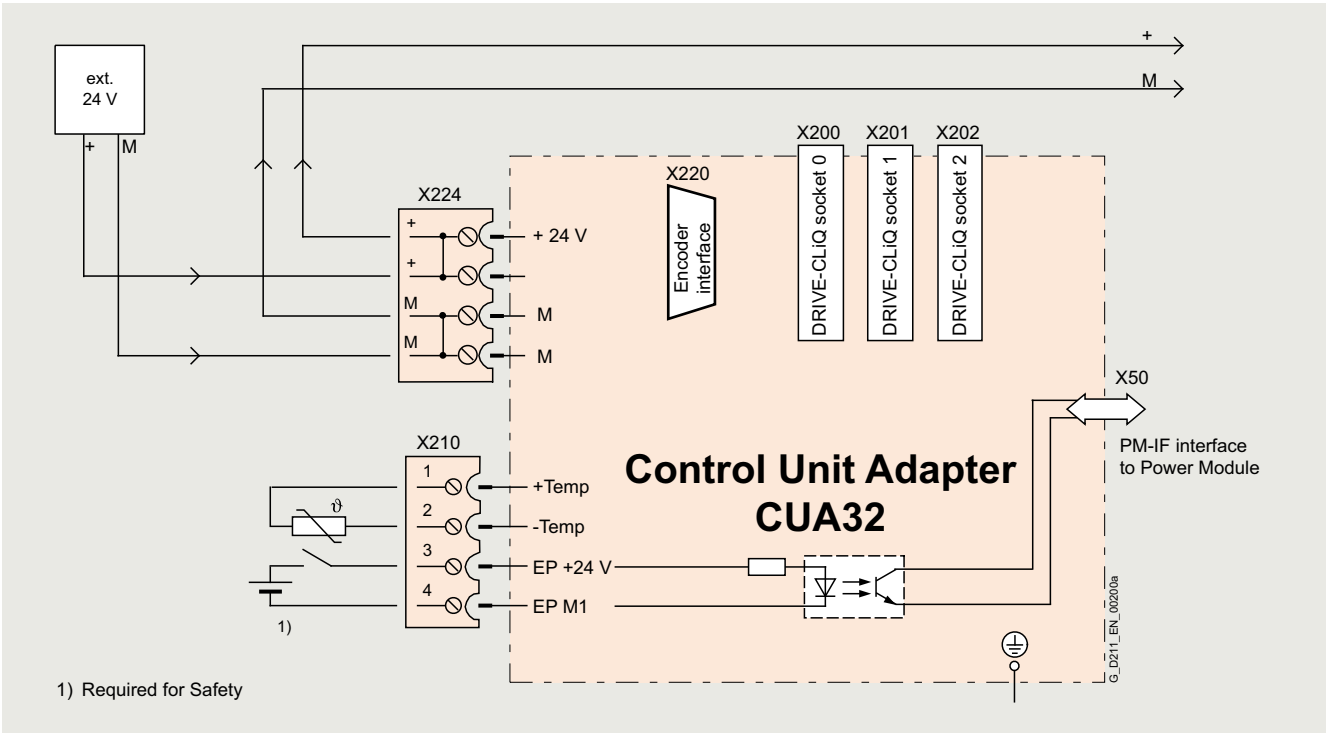

1) Required for Safety

© Siemens 2024

General technical specifications

Technical specifications

General technical specifications

Unless explicitly specified otherwise, the following technical specifications are valid for all components of the SINAMICS S120 booksize drive system.

Note:

When engineering the complete SINAMICS S120 drive, the system data of the associated Control Units, supplementary system components, DC link components and Sensor Modules must be taken into consideration.

Electrical specifications			
Line voltage	380 ... 480 V 3 AC ±10 % (-15 % <1 min)		
Line system configurations	Grounded TN/TT systems and non-grounded IT systems		
Line frequency	47 ... 63 Hz		
Electronics power supply	24 V DC -15 %/+20 %[1], safety extra low-voltage (PELV/SELV)		
Short-circuit current rating (SCCR) (Short Circuit Current Rating) acc. to UL 508C (up to 600 V)	1.1 ... 447 kW: 65 kA		
Electromagnetic compatibility acc. to EN 61800-3	Second environment, Category C2/C3 For more information, see section Engineering notes		
Overvoltage category acc. to IEC/EN 61800-5-1	III		
Mechanical specifications			
Degree of protection			
• According to EN 60529	IP20		
• According to UL 508C/UL 61800-5-1	Open type		
Protection class			
• Line circuits with protective conductor connection according to IEC 61800-5-1	I		
• Electronic circuits	Safety extra low-voltage PELV/SELV		
Ambient conditions			
	Storage	**Transport**	**Operation**
	In product packaging	In transport packaging	
Climatic conditions	Class 1K4 acc. to EN 60721-3-1: 1997 -25 ... +55 °C (-13 ... +131 °F)	Class 2K4 acc. to EN 60721-3-2: 1997 -40 ... +70 °C (-40 ... +158 °F)	Class 3K3 [3] acc. to EN 60721-3-3: 2002 In operation Without derating[4]: 0 ... +40 °C (32 ...104 °F) For operation with derating: >40 ... +55 °C (>104 ... 131 °F) Relative air humidity 5 ... 95 %
Environmental class/ harmful chemical substances	Class 1C2 acc. to EN 60721-3-1: 1997	Class 2C2 acc. to EN 60721-3-2: 1997	Class 3C2 Class 3C3 for H_2S and SO_2 acc. to EN 60721-3-3: 2002
Organic/biological influences	Class 1B1 acc. to EN 60721-3-1: 1997	Class 2B1 acc. to EN 60721-3-2: 1997	Class 3B1 acc. to EN 60721-3-3: 2002
Pollution degree [2] acc. to IEC/EN 61800-5-1	2		
Installation altitude			
• Up to 1000 m (3281 ft) above sea level	Without derating		
• From 1000 m (3281 ft) up to 2000 m (6562 ft) above sea level observe the derating characteristics	• Reduction of the output current by 10 % per 1000 m (3281 ft) or • Reduction of the ambient temperature by 5 K per 1000 m (3281 ft)		
• From 2000 m (6562 ft) up to 4000 m (13123 ft) above sea level observe the derating characteristics			
- Power components	• Reduction of the output current by 10 % per 1000 m (3281 ft) or • Reduction of the ambient temperature by 5 K per 1000 m (3281 ft) and additionally: • Operation on line supply systems with grounded neutral point, or • Operation with an isolating transformer with secondary grounded neutral point		
- Control Units	• Reduction of the ambient temperature by 5 K per 1000 m (3281 ft)		

[1] When using a motor holding brake, restricted voltage tolerances (24 V ±10 %) might need to be taken into account.

[2] The components must be protected against conductive pollution, e.g. by installing them in a control cabinet with degree of protection IP54 according to IEC 60529 or NEMA 12. If conductive pollution can be excluded at the installation site, a lower degree of cabinet protection is permissible.

[3] Better than 3K3 through increased ruggedness regarding the temperature range and air humidity. Oil mist, salt mist, ice formation, condensation, dripping water, spraying water, splashing water and water jets are not permitted.

[4] Also carefully observe the permissible temperatures for the Control Unit and operator panel.

© Siemens 2024

Technical specifications

Mechanical strength			
	Storage	**Transport**	**Operation**
	In product packaging	In transport packaging	
Vibratory load	Class 1M2 acc. to EN 60721-3-1: 1997	Class 2M3 acc. to EN 60721-3-2: 1997	Class 3M1 acc. to EN 60721-3-3: 2002 **Test values** acc. to EN 60068-2-6 : 10 oscillations per axis in the range: 10 ... 57 Hz constant deflection 0.075 mm 57 ... 150 Hz constant acceleration 9.81 m/s^2 (1 × *g*)
Shock load	Class 1M2 acc. to EN 60721-3-1: 1997	Class 2M3 acc. to EN 60721-3-2: 1997	Class 3M1 acc. to EN 60721-3-3: 2002 **Test values** acc. to EN 60068-2-27 : 3 shocks per axis in both directions Peak acceleration 49 m/s^2 (5 × *g*); duration 30 ms
Certificates			
Declarations of conformity	CE (Low Voltage, EMC and M?achinery Directive)		
Certificates of suitability	cULus		

© Siemens 2024

Active Line Modules in booksize format

Overview



Active Line Module in booksize format

Active Line Modules are self-commutated infeed/regenerative feedback units (with IGBTs in the infeed and regenerative feedback directions) that generate a controlled DC link voltage. This means that the connected Motor Modules are decoupled from the line voltage. Line voltage fluctuations within the permissible supply tolerances have no effect on the motor voltage. Active Line Modules are designed for connection to grounded star (TN, TT) and non-grounded symmetrical (IT) supply systems.

The DC link is pre-charged via integrated precharging resistors.

In order to operate an Active Line Module, an associated Active Interface Module is required.

Design

The Active Line Modules in booksize format feature the following connections and interfaces as standard:

- 1 power connection via screw-type terminals
- 1 connection for the 24 V DC electronics power supply via the 24 V terminal adapter included in the scope of supply
- 1 DC link connection via integrated DC link busbars
- 3 DRIVE-CLiQ sockets
- 2 PE (protective earth) connections
- 1 temperature sensor input for KTY84-130, Pt1000 or PTC (Pt1000 can be used from firmware V4.7 HF17)

The status of the Active Line Modules is indicated via two multi-color LEDs.

For the Active Line Module with a width of 100 mm (3.94 in), the shield of the power connection cable can be connected to the integrated shield connection plate by means of a shield connection clamp or hose clip, e.g. Weidmüller type KLBÜ CO 4. The shield connection clamp must not be used as a strain relief mechanism. Shield connection sets are available for the 150 mm (5.91 in), 200 mm (7.87 in) and 300 mm (11.81 in) wide Active Line Modules.

The signal cable shield can be connected to the Active Line Module by means of a shield connection clamp, e.g. Weidmüller type KLBÜ 3-8 SC.

The scope of supply of the Active Line Modules includes:

- DRIVE-CLiQ cable for connection to the adjacent Control Unit on the left for drive control, length 0.11 m (4.33 in)
- DRIVE-CLiQ cable (length depends on Active Line Module width) for connection to the adjacent Motor Module, length = width of Active Line Module + 0.11 m (4.33 in)
- 2 blanking plugs for sealing unused DRIVE-CLiQ sockets
- Jumper for connecting the 24 V DC busbar to the adjacent Motor Module
- 24 V terminal adapter (X24)
- Connector X21 for digital inputs
- Fan insert for Active Line Modules of 80 kW (100 hp) and 120 kW (150 hp) (the voltage for the fan unit is supplied by the Active Line Module)
- 1 set of warning labels in 36 languages

© Siemens 2024

Integration

The Active Line Module receives its control information via DRIVE-CLiQ from:

- CU320-2 Control Unit
- SINUMERIK 840D sl
- SINUMERIK ONE
- SINUMERIK MC
- SIMOTION D

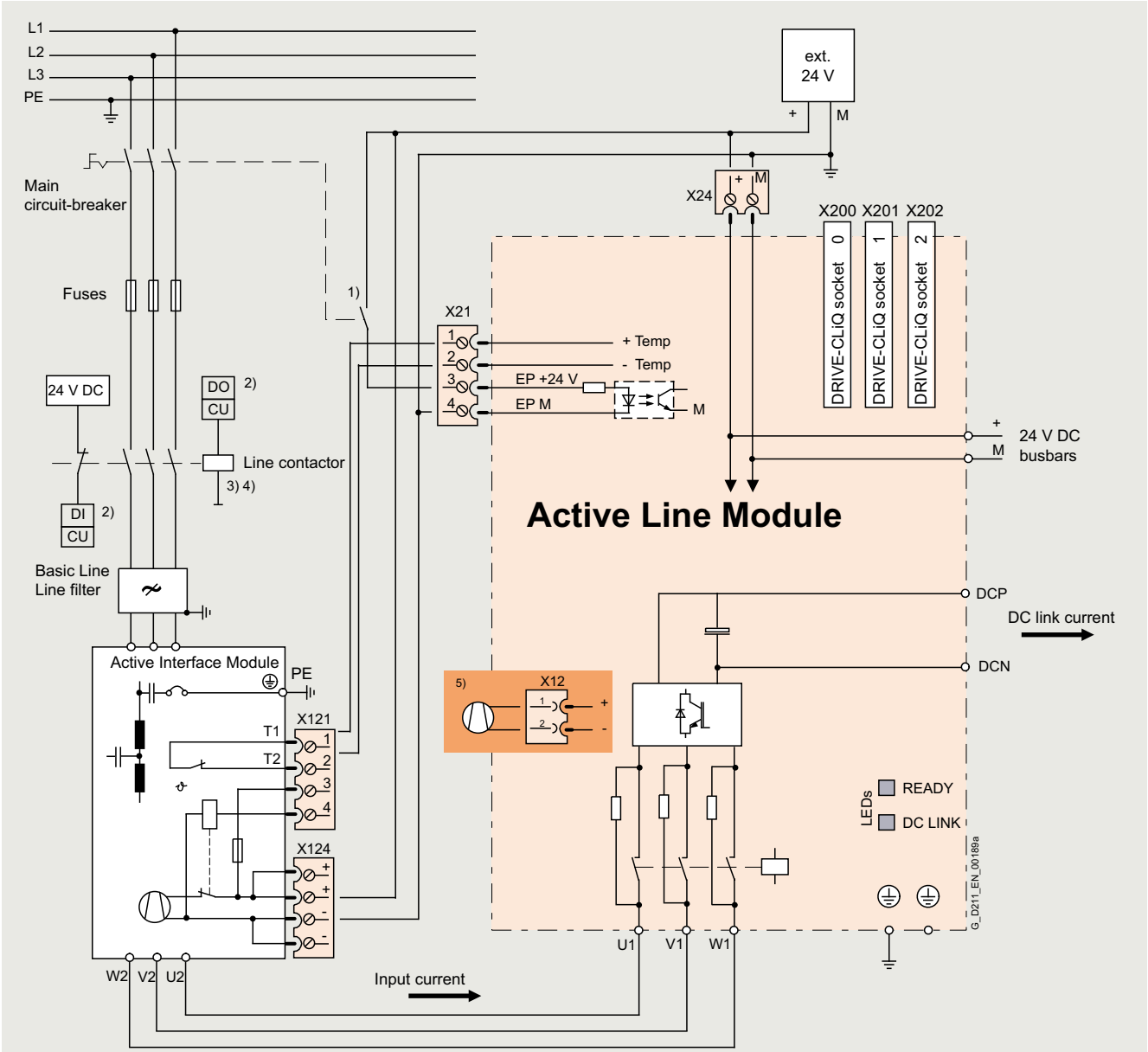

1) Leading NC contact t > 10 ms, 24 V DC and ground must be connected for operation.
2) Digital input (DI) or digital output (DO), controlled by the Control Unit.
3) No additional load permitted downstream of the line contactor.
4) The current carrying capacity of the digital output (DO) must be taken into account; an output interface element may have to be used.
5) Fan insert for Active Line Module of 80 kW (100 hp) and 120 kW (150 hp). The fan insert is supplied with the Active Line Module.

Connection example of Active Line Module in booksize format

© Siemens 2024

Active Line Modules in booksize format

Selection and ordering data

Rated power	Active Line Module in booksize format
kW (hp)	Article No.
Line voltage 380 ... 480 V 3 AC	
16 (18)	**6SL3130-7TE21-6AA4**
36 (40)	**6SL3130-7TE23-6AA3**
55 (60)	**6SL3130-7TE25-5AA3**
80 (100)	**6SL3130-7TE28-0AA3**
120 (150)	**6SL3130-7TE31-2AA3**

Description	Article No.
Accessories	
Shield connection plate For Line Modules and Motor Modules in booksize format with a width of	
• 150 mm (5.91 in)	**6SL3162-1AF00-0AA1**
• 200 mm (7.87 in)	**6SL3162-1AH01-0AA0**
• 300 mm (11.81 in)	**6SL3162-1AH00-0AA0**
DC link rectifier adapter For direct infeed of DC link voltage	
• Screw-type terminals 0.5 ... 10 mm^2 For Line Modules and Motor Modules in booksize format with a width of 50 mm (1.97 in), 75 mm (2.95 in) and 100 mm (3.94 in)	**6SL3162-2BD00-0AA0**
• Screw-type terminals 35 ... 95 mm^2 For Line Modules and Motor Modules in booksize format with a width of 150 mm (5.91 in), 200 mm (7.87 in) and 300 mm (11.81 in)	**6SL3162-2BM00-0AA0**
DC link adapter (2 units) For multi-tier configuration Screw-type terminals 35 ... 95 mm^2 For all Line Modules and Motor Modules in booksize format	**6SL3162-2BM01-0AA0**
Accessories for re-ordering	
24 V terminal adapter For all Line Modules and Motor Modules in booksize format	**6SL3162-2AA00-0AA0**
24 V jumper For connection of the 24 V busbars (for booksize format)	**6SL3162-2AA01-0AA0**
Terminal Kit (Plug-in terminals, DRIVE-CLiQ jumper (length = module width + 60 mm (2.36 in)), dust protection blanking plugs) For DRIVE-CLiQ port For Active Line Modules with a width of	
• 100 mm (3.94 in)	**6SL3163-8FD00-0AA0**
• 150 mm (5.91 in)	**6SL3163-8GF00-0AA0**
• 200 mm (7.87 in)	**6SL3163-8HH00-0AA0**
• 300 mm (11.8 in)	**6SL3163-8JM00-0AA0**
Warning labels in 36 languages This label set can be glued over the standard German or English labels to provide warnings in other languages. One set of labels is supplied with the devices. One sign in each of the following languages is provided in each set: BG, CZ, DE, DK, EE, ES, FI, FR, GB, GR, HU, IE, IS, IT, LT, LV, MT, NL, NO, PL, PT, RO, RU, SE, SI, SK, TR, CN, ID, IL, IR, JP, KR, SA, TH, TW	**6SL3166-3AB00-0AA0**
Dust protection blanking plugs (50 units) For DRIVE-CLiQ port	**6SL3066-4CA00-0AA0**

Technical specifications

	Active Line Module in booksize format
	6SL3130-7TE...
Line voltage (up to 2000 m (6562 ft) above sea level)	380 ... 480 V 3 AC ±10 % (in operation -15 % <1 min)
Line frequency	47 ... 63 Hz
SCCR (short-circuit current rating)	65 kA in conjunction with the recommended Class J fuse, or circuit breaker according to UL489 / CSA 22.2 No. 5-02 see recommended line-side components
Line power factor	
• Active mode	
- Fundamental power factor ($\cos \varphi_1$)	1 (factory setting), can be altered by inputting a reactive current setpoint
- Total (λ)	1 (factory setting)
• Smart Mode	
- Fundamental power factor	>0.96
- Overall	0.65 ... 0.9
Overvoltage category to EN 60664-1	Class III
DC link voltage V_d	In Active Mode, the DC link voltage is regulated and can be adjusted as a voltage decoupled from the line voltage. In Smart Mode, the DC link voltage is kept in proportion to the line voltage at the mean rectified line voltage value. Factory setting for DC link voltage: 380 ... 400 V 3 AC: 600 V (Active Mode) 400 ... 415 V 3 AC: 625 V (Active Mode) 416 ... 480 V 3 AC: 1.35 × line voltage (Smart Mode) [1]
Electronics power supply	24 V DC -15 %/+20 %
Radio interference suppression	
• Standard (Active Line Module + Active Interface Module)	Category C3 to EN 61800-3 up to 350 m (1148 ft) total cable length
• With line filter	Category C2 according to EN 61800-3 up to 350 m (1148 ft) total cable length Category C3 according to EN 61800-3 from 350 m to 1000 m (1148 ... 3281 ft) total cable length
Type of cooling	Internal air cooling (power units with increased air cooling by built-in fan)
Permissible ambient and coolant temperature (air) during operation for line-side components, Line Modules and Motor Modules	0 ... 40 °C (32 ... 104 °F) without derating, > 40 ... 55 °C (104 ... 131 °F), see derating characteristics
Installation altitude	Up to 1000 m (3281 ft) above sea level without derating, > 1000 ... 4000 m (3281 ... 13124 ft) above sea level, see derating characteristics
Declarations of conformity	CE (Low Voltage and EMC Directives)
Certificate of suitability	cULus

[1] Active Mode can also be selected if the connected motors are suitable for > 650 V DC.

© Siemens 2024

Technical specifications

Line voltage 380 ... 480 V 3 AC		Active Line Module in booksize format				
Internal air cooling		6SL3130-7TE21-6AA4	6SL3130-7TE23-6AA3	6SL3130-7TE25-5AA3	6SL3130-7TE28-0AA3	6SL3130-7TE31-2AA3
Infeed/regenerative feedback power						
• Rated power P_{rated}						
• At 380 V 3 AC	kW	**16**	**36**	**55**	**80**	**120**
• At 460 V 3 AC [5]	(hp)	(18)	(40)	(60)	(100)	(150)
• For S6 duty P_{S6} (40 %)	kW	21	47	71	106	145
• P_{max}	kW	35	70	91 (110 [1])	131	175
DC link current						
• At 600 V DC	A	27	60	92	134	200
• For S6 duty (40 %)	A	35	79	121	176	244
• Maximum	A	59	117	152 (176 [1])	218	292
Input current						
• Rated current at 380/400/480 V 3 AC	A	26/25/21	58/55/46	88/84/70	128/122/102	192/182/152
• For S6 duty (40 %) at 400 V	A	32	71	108	161	220
• At 400 V max.	A	54	107	139 (168 [1])	200	267
Current requirement 24 V DC electronics power supply, max.	A	1.1	1.5	1.9	2	2.5
Current carrying capacity						
• 24 V DC busbars	A	20	20	20	20	20
• DC link busbars	A	100	200	200	200	200
DC link capacitance						
• Active Line Module	µF	710	1410	1880	2820	3995
• Drive line-up, max.	µF	20000	20000	20000	20000	20000
Power loss [2]	kW	0.28	0.67	0.95	1.38	2.24
Cooling air requirement	m^3/s (ft^3/s)	0.016 (0.57)	0.031 (1.09)	0.044 (0.155)	0.144 (5.09)	0.144 (5.09)
Sound pressure level L_{pA} (1 m)	dB	<60	<65	<60	<73	<73
Line connection U1, V1, W1		Screw-type terminals (X1)	M6 screw studs (X1)	M8 screw studs (X1)	M8 screw studs (X1)	M8 screw studs (X1)
• Conductor cross-section, max.	mm^2	2.5 ... 10	2.5 ... 50	2.5 ... 95, 2 × 35	2.5 ... 120, 2 × 50	2.5 ... 120, 2 × 50
Shield connection		Integrated in the connector	See Accessories	See Accessories	See Accessories	See Accessories
PE connection		M5 screw	M6 screw	M6 screw	M8 screw	M8 screw
Cable length, max. Total of all motor cables and DC link						
• Shielded	m (ft)	630 (2067) [3]	630 (2067) [3]	1000 (3281)	1000 (3281)	1000 (3281)
• Unshielded	m (ft)	850 (2789)	850 (2789)	1500 (4922)	1500 (4922)	1500 (4922)
Degree of protection		IP20	IP20	IP20	IP20	IP20
Dimensions						
• Width	mm (in)	100 (3.94)	150 (5.91)	200 (7.87)	300 (11.81)	300 (11.81)
• Height	mm (in)	380 (14.96)	380 (14.96)	380 (14.96)	380 (14.96)	380 (14.96)
- With fan [4]	mm (in)	–	–	–	629 (24.76)	629 (24.76)
• Depth	mm (in)	270 (10.63)	270 (10.63)	270 (10.63)	270 (10.63)	270 (10.63)
Weight, approx.	kg (lb)	7 (15.4)	10 (22.0)	16 (35.3)	23 (50.7)	23 (50.7)

[1] Higher peak output is possible in combination with the Active Interface Module 6SL3100-0BE25-5AB0 (for operating cycle constraints, see SINAMICS S120 Manual).

[2] Power loss of Active Line Module at rated power including losses of 24 V DC electronics power supply.

[3] Max. cable lengths in combination with Active Interface Module and Basic Line Filter (Category C3 according to EN 61800-3).

[4] The fan is supplied together with the Active Line Module and must be installed before the Active Line Module is commissioned.

[5] Nominal hp ratings are provided for ease of assigning components only. The Line Module outputs are dependent on the Motor Module loading and are to be dimensioned accordingly.

© Siemens 2024

Characteristic curves

Overload capability

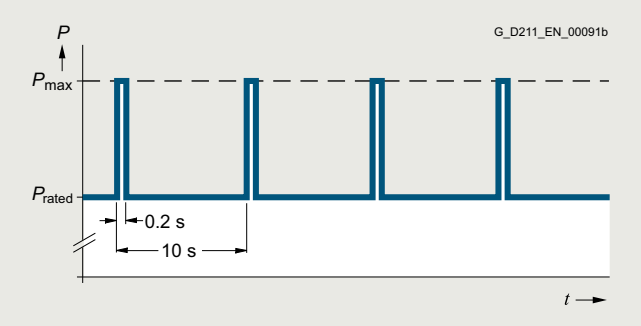

Duty cycle with previous load

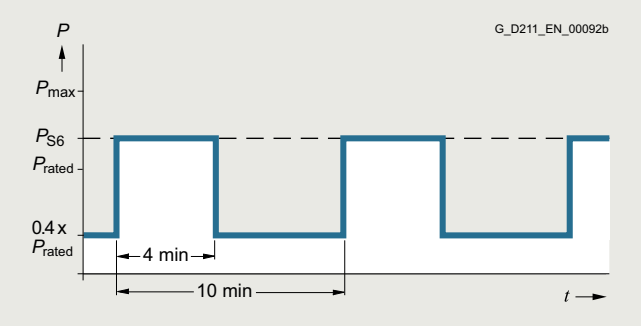

S6 duty cycle with previous load

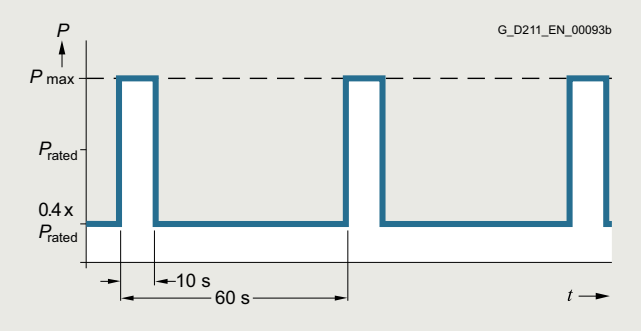

S6 duty cycle with previous load

55 kW Active Line Module only:

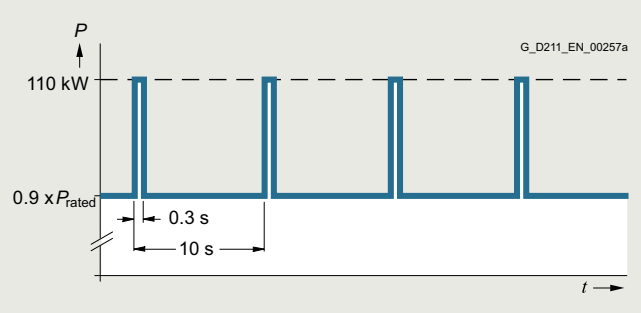

Peak power load duty cycle with previous load

Derating characteristics

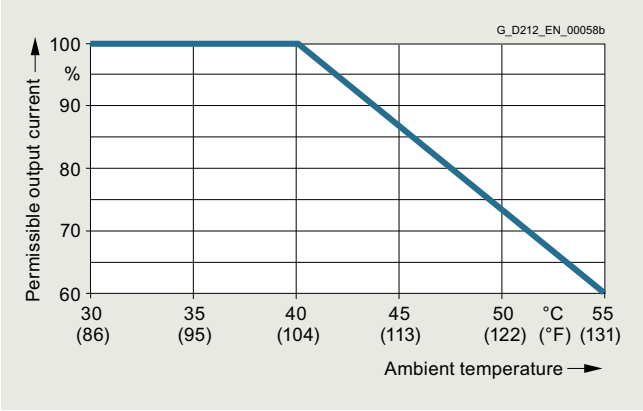

Output power as a function of ambient temperature

Installation altitude

- >1000 ... 4000 m (3281 ... 13124 ft) above sea level
  - Reduction of the output current by 10 % per 1000 m (3281 ft), or
  - Reduction of the ambient temperature by 5 °C (9 °F) per 1000 m (3281 ft)
- >2000 ... 4000 m (6562 ... 13124 ft) above sea level
  - Operation on line supply systems with grounded neutral point, or
  - Operation with an isolating transformer with secondary grounded neutral point

© Siemens 2024

Overview



Active Interface Modules for 16 kW, 36 kW, 55 kW and 80 kW/120 kW

The Active Interface Modules combine with the Active Line Modules to form a functional unit and are required for operation of the associated Active Line Module. The Active Interface Modules contain a Clean Power Filter and basic interference suppression to ensure compliance with Category C3 in accordance with EN 61800-3 with respect to emitted interference.

The Clean Power Filter protects the mains connection from switching-frequency harmonics. The drive system therefore draws a sinusoidal current from the supply and causes almost no harmonics.

The Active Line Modules in combination with the Active Interface Module can also be operated with supply systems with an isolated star point (IT supply systems).

Design

The scope of supply of the Active Interface Modules includes:

- Connector X21 for temperature evaluation and fan control
- Connector X24 for connecting the 24 V supply for the integrated fan
- DRIVE-CLiQ cable for connecting the Control Unit to the Active Line Module; length of the DRIVE-CLiQ cable = width of the Active Interface Module + 0.11 m (4.33 in)
- Shield connection plate for Active Interface Module 16 kW
- 1 set of warning signs in 36 languages

Selection and ordering data

Rated power of the Active Line Module kW (hp)	Suitable for Active Line Module in booksize format	**Active Interface Module** Article No.
Line voltage 380 ... 480 V 3 AC		
16 (18)	6SL3130-7TE21-6AA4	**6SL3100-0BE21-6AB0**
36 (40)	6SL3130-7TE23-6AA3	**6SL3100-0BE23-6AB0**
55 (60)	6SL3130-7TE25-5AA3	**6SL3100-0BE25-5AB0**
80 (100)	6SL3130-7TE28-0AA3	**6SL3100-0BE28-0AB0**
120 (150)	6SL3130-7TE31-2AA3	**6SL3100-0BE31-2AB0**

Description	Article No.
Accessories	
Shield connection plate [1]	
• For Active Interface Module 36 kW (40 hp)	**6SL3163-1AF00-0AA0**
• For Active Interface Module 55 kW (60 hp)	**6SL3163-1AH00-0AA0**
• For Active Interface Module 80 kW (100 hp) and 120 kW (150 hp)	**6SL3163-1AM00-0AA0**
DRIVE-CLiQ cable, pre-assembled	
Degree of protection of connector IP20/IP20	
• For Active Interface Module 16 kW (18 hp), 0.31 m (1.02 ft) in length	**6SL3060-4AK00-0AA0**
• For Active Interface Module 36 kW (40 hp), 0.41 m (1.35 ft) in length	**6SL3060-4AP00-0AA0**
• For Active Interface Module 55 kW (60 hp), 0.6 m (1.97 ft) in length	**6SL3060-4AU00-0AA0**
• For Active Interface Module 80 kW (100 hp) and 120 kW (150 hp), 0.95 m (3.12 ft) in length	**6SL3060-4AA10-0AA0**
Accessories for re-ordering	
Terminal Kit (plug-in terminals, DRIVE-CLiQ jumper)	
• For Active Interface Module 16 kW (18 hp)	**6SL3160-8CD10-0AA0**
• For Active Interface Module 36 kW (40 hp)	**6SL3160-8DF10-0AA0**
• For Active Interface Module 55 kW (60 hp)	**6SL3160-8EH10-0AA0**
• For Active Interface Modules 80 kW (100 hp) and 120 kW (150 hp)	**6SL3160-8FM10-0AA0**
Warning labels in 36 languages This label set can be glued over the standard German or English labels to provide warnings in other languages. One set of labels is supplied with the devices. One sign in each of the following languages is provided in each set: BG, CZ, DE, DK, EE, ES, FI, FR, GB, GR, HU, IE, IS, IT, LT, LV, MT, NL, NO, PL, PT, RO, RU, SE, SI, SK, TR, CN, ID, IL, IR, JP, KR, SA, TH, TW	**6SL3166-3AB00-0AA0**

[1] For Active Interface Module 16 kW, included in scope of supply.

© Siemens 2024

Integration

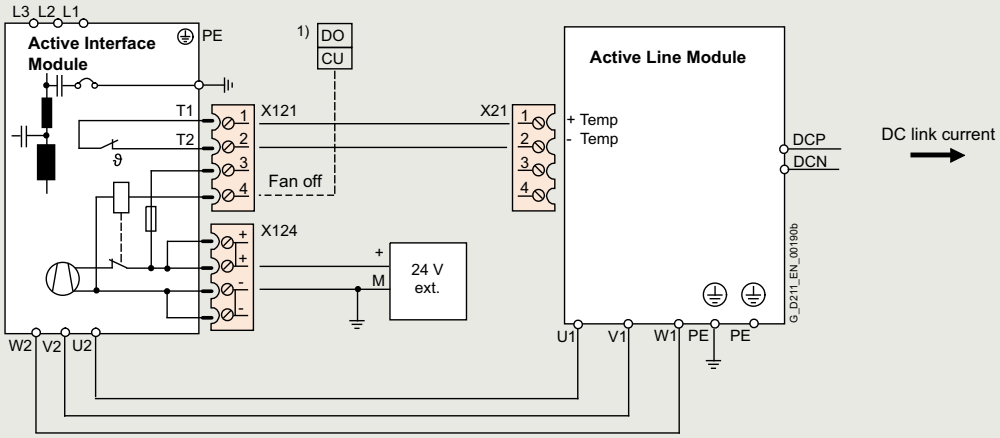

1) Digital input (DI) or digital output (DO), controlled by the Control Unit.
For Active Interface Modules 16 kW and 36 kW: The fan can be deactivated. The fan may only be switched off as long as the mains is disconnected via a main switch or a line contactor.
For Active Interface Modules 55 kW, 80 kW and 120 kW: The fan cannot be deactivated.

Connection example for Active Interface Module

The Active Interface Module requires a 24 V DC supply for operation of the integral fan.
The fan rotates after the 24 V DC supply is applied and can, if necessary (service life, noise), be disconnected from the Control Unit over the "Fan off" input. It is only permitted to switch off the fan when the infeed of the drive system is not operating, otherwise the Active Interface Module will overheat.

The thermostatic switch installed in the Active Interface Module is evaluated over the connected Active Line Module.

The power cables between the Active Interface Module and Active Line Module must be shielded if limit values for interference suppression are to be complied with. The cable shield can be routed over the shield connection plate (option) to the Active Interface Module or Active Line Module.

Depending on the position of the Active Interface Module in the drive system, additional DRIVE-CLiQ cables may be required. If it is separately installed next to the left side of the Control Unit and Active Line Module, no additional DRIVE-CLiQ cables are required. If the Active Interface Module is placed between the Control Unit and Active Line Module, the DRIVE-CLiQ cables supplied with the Active Line Modules are suitable for setting up a line topology, i.e. Active Line Module and all Motor Modules in series on one DRIVE-CLiQ line. If the Active Line Module is connected over a separate DRIVE-CLiQ line, the DRIVE-CLiQ cable marked with (1) must be ordered. A DRIVE-CLiQ cable suitable for connection (2) is included in the scope of supply of the Active Line Module.

For DRIVE-CLiQ cables for different configurations, see section MOTION-CONNECT connection systems.

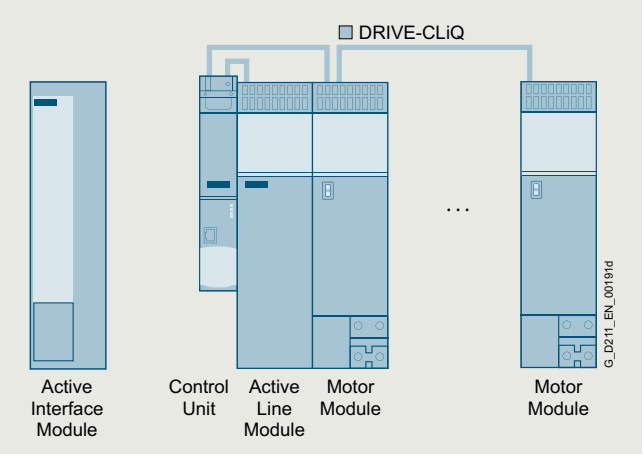

Separate Active Interface Module

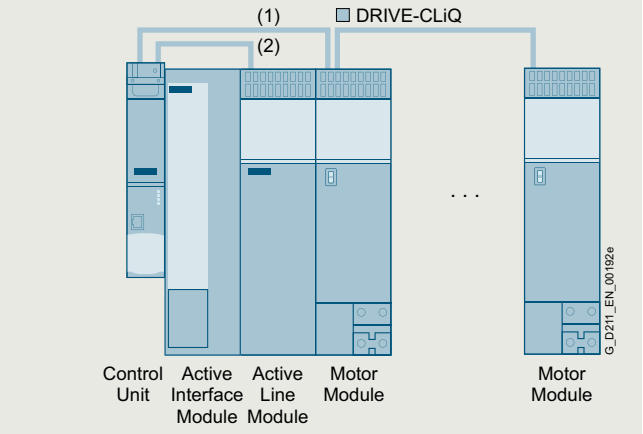

(1) DRIVE-CLiQ cable between Control Unit and Motor Module
Active Interface Module 16 kW: 0.31 m
Active Interface Module 36 kW: 0.41 m
Active Interface Module 55 kW: 0.60 m
Active Interface Module 80 kW and 120 kW: 0.95 m
(2) Included in scope of supply of Active Line Modules

Active Interface Module integrated in the drive line-up

© Siemens 2024

Technical specifications

Line voltage 380 ... 480 V 3 AC		**Active Interface Module**				
Internal air cooling		6SL3100-0BE21-6AB0	6SL3100-0BE23-6AB0	6SL3100-0BE25-5AB0	6SL3100-0BE28-0AB0	6SL3100-0BE31-2AB0
Rated current	A	26	58	88	128	192
Current requirement 24 V DC electronics power supply, max.	A	0.25	0.49	0.6	1.2	1.2
Internal resistance Digital input "Fan off" (X21/Pin 4)	Ω	1440 ±10 %	1440 ±10 %	1440 ±10 %	1440 ±10 %	1440 ±10 %
Power loss	kW	0.27	0.34	0.38	0.49	0.585
Cooling air requirement	m^3/s (ft^3/s)	0.03 (1.1)	0.04 (1.4)	0.083 (2.9)	0.167 (5.9)	0.167 (5.9)
Sound pressure level L_{pA} (1 m)	dB	57	60	66	68	68
Line supply/load connection L1, L2, L3/U2, V2, W2		Connector	Screw terminals	Screw terminals	M8 screw studs	M8 screw studs
• Conductor cross-section	mm^2	16	50	50	2.5 … 120 or 2 × 50	2.5 … 120 or 2 × 50
Thermostatic switch (NC contact)						
• Switching capacity		250 V AC/1.6 A 60 V DC/0.75 A	250 V AC/1.6 A 60 V DC/0.75 A	250 V AC/1.6 A 60 V DC/0.75 A	250 V AC/1.6 A 60 V DC/0.75 A	250 V AC/1.6 A 60 V DC/0.75 A
PE connection		M5 screw	M6 screw	M6 screw	M8 screw	M8 screw
Degree of protection		IP20	IP20	IP20	IP20	IP20
Dimensions						
• Width	mm (in)	100 (3.94)	150 (5.91)	200 (7.87)	300 (11.81)	300 (11.81)
• Height	mm (in)	380 (14.96)	380 (14.96)	380 (14.96)	380 (14.96)	380 (14.96)
• Depth	mm (in)	270 (10.63)	270 (10.63)	270 (10.63)	270 (10.63)	270 (10.63)
Weight, approx.	kg (lb)	11.6 (25.6)	19 (41.9)	23.2 (51.2)	31.9 (70.3)	36.6 (80.7)
Certificate of suitability		cURus	cURus	cURus	cURus	cURus
Suitable for Active Line Module in booksize format	Type	6SL3130-7TE21-6AA4	6SL3130-7TE23-6AA3	6SL3130-7TE25-5AA3	6SL3130-7TE28-0AA3	6SL3130-7TE31-2AA3
• Rated power of the Active Line Module	kW (hp)	16 (18)	36 (40)	55 (60)	80 (100)	120 (150)

© Siemens 2024

Characteristic curves

Overload capability

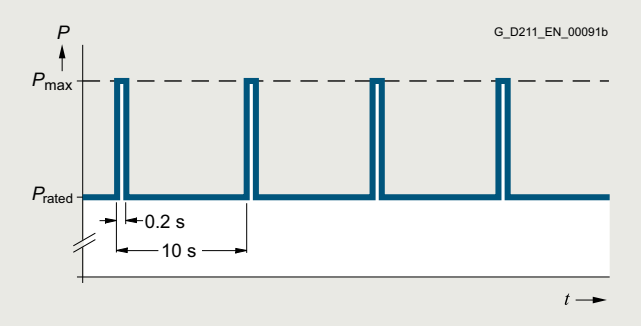

Duty cycle with previous load

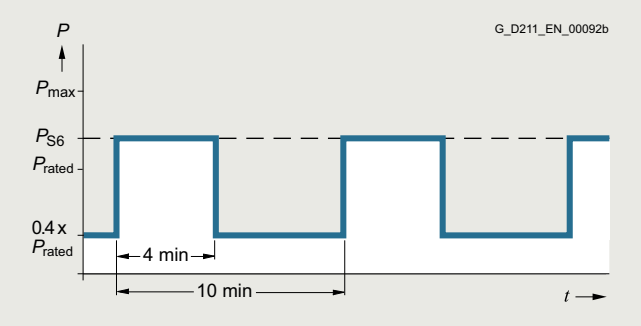

S6 duty cycle with previous load

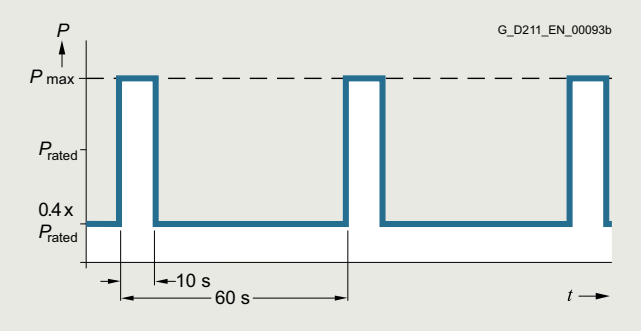

S6 duty cycle with previous load

55 kW Active Line Module only:

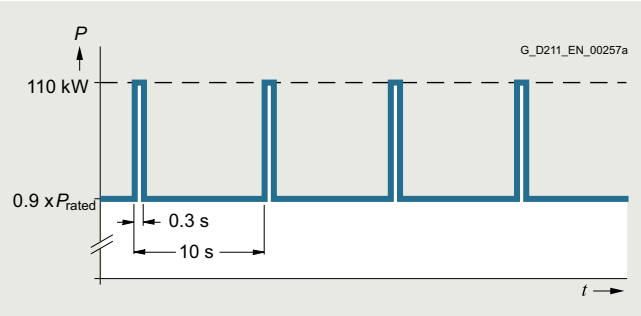

Peak power load duty cycle with previous load

Derating characteristics

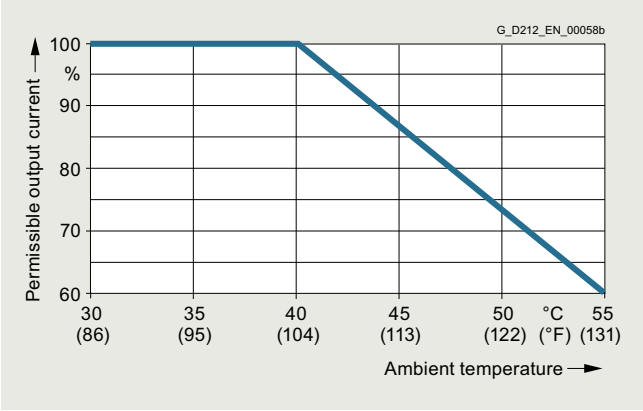

Output power as a function of ambient temperature

Installation altitude

- >1000 ... 4000 m (3281 ... 13124 ft) above sea level
  - Reduction of the output current by 10 % per 1000 m (3281 ft), or
  - Reduction of the ambient temperature by 5 °C (9 °F) per 1000 m (3281 ft)
- >2000 ... 4000 m (6562 ... 13124 ft) above sea level
  - Operation on line supply systems with grounded neutral point, or
  - Operation with an isolating transformer with secondary grounded neutral point

© Siemens 2024

Overview

In conjunction with Active Interface Modules and a logically consistent configuration of the plant or system, line filters limit the interference conducted by the power modules to the limit values of Category C2 acc. to EN 61800-3. Line filters are only suitable for direct connection to TN line systems.

Note:

According to product standard EN 61800-3, RFI suppression commensurate with the relevant rated conditions must be provided and is a legal requirement in the EU (EMC Directive). Line filters and line reactors are required for this purpose. The use of line filters of other makes can lead to limit value violations, resonance, overvoltages and irreparable damage to motors or other equipment. The machine manufacturer must provide verification that the machinery to be operated with the drive products and the installed suppression elements, e.g. line filters, are CE-EMC-compliant.

Optional Basic Line Filters that are coordinated with the power ranges in booksize format are available for the SINAMICS S120 drive system.

Basic Line Filter



Basic Line Filter

With the Basic Line Filters in combination with the Active Interface Modules, the limits for the interference voltages can be extended to Category C2 (EN 61800-3) or, retaining Category C3, longer total cable lengths are possible for the configuration.

Basic Line Filters are used on machines on which conducted interference emissions in the frequency range between 150 kHz and 30 MHz need to be damped in accordance with the requirements of CE-EMC legislation.

Selection and ordering data

Rated power of the Active Line Module kW (hp)	Suitable for Active Line Module in booksize format	**Basic Line Filter** Article No.
16 (18)	6SL3130-7TE21-6AA4	**6SL3000-0BE21-6DA0**
36 (40)	6SL3130-7TE23-6AA3	**6SL3000-0BE23-6DA1**
55 (60)	6SL3130-7TE25-5AA3	**6SL3000-0BE25-5DA0**
80 (100)	6SL3130-7TE28-0AA3	**6SL3000-0BE28-0DA0**
120 (150)	6SL3130-7TE31-2AA3	**6SL3000-0BE31-2DA0**

Technical specifications

Line voltage 380 ... 480 V 3 AC		**Basic Line Filter**				
		6SL3000-0BE21-6DA0	6SL3000-0BE23-6DA1	6SL3000-0BE25-5DA0	6SL3000-0BE28-0DA0	6SL3000-0BE31-2DA0
Rated current	A	36	74	105	132	192
Power loss	kW	0.016	0.02	0.043	0.056	0.073
Line supply/load connection L1, L2, L3 / U, V, W		Screw terminals	Screw terminals	Screw terminals	Screw terminals	Screw terminals
• Conductor cross-section	mm^2	10	35	50	95	95
PE connection		M6 screw studs according to DIN 46234	M6 screw studs according to DIN 46234	M8 screw studs according to DIN 46234	M10 screw studs according to DIN 46234	M10 screw studs according to DIN 46234
Degree of protection		IP20	IP20	IP20	IP20	IP20
Dimensions						
• Width	mm (in)	50 (1.97)	75 (2.95)	100 (3.94)	150 (5.91)	150 (5.91)
• Height	mm (in)	429 (16.89)	433 (17.05)	466 (18.35)	479 (18.86)	479 (18.86)
• Depth	mm (in)	226 (8.90)	226 (8.90)	226 (8.90)	226 (8.90)	226 (8.90)
Weight, approx.	kg (lb)	5 (11.0)	7.5 (16.5)	11.5 (25.4)	17.5 (38.6)	18.5 (40.8)
Certificate of suitability		cURus	cURus	cURus	cURus	cURus
Suitable for Active Line Module in booksize format	Type	6SL3130-7TE21-6AA4	6SL3130-7TE23-6AA3	6SL3130-7TE25-5AA3	6SL3130-7TE28-0AA3	6SL3130-7TE31-2AA3
• Rated power of the Active Line Module	kW (hp)	16 (18)	36 (40)	55 (60)	80 (100)	120 (150)

© Siemens 2024

Recommended line-side components for Active Line Modules

Selection and ordering data

Suitable line-side power components are assigned depending on the power rating of the Active Line Modules.

The tables below list recommended components.

Additional information about the line-side power components can be found in Catalogs LV 10 and IC 10 as well as SiePortal.

Assignment of line-side power components to Active Line Modules in booksize format

Rated power	Suitable for Active Line Module in booksize format	Line contactor	LV HRC fuse (gL/gG)			UL/CSA fuse, Class J [1] Available from: Mersen www.ep.mersen.com		
kW (hp)	6SL3130-...	Type	Rated current	Size	Article No.	Rated current	Size mm (in)	Reference No.
16 (18)	7TE21-6AA4	**3RT2028-....** *)	35 A	000	**3NA3814**	35 A	27 × 60 (1.06 x 2.36)	AJT35
36 (40)	7TE23-6AA3	**3RT2038-....** *)	80 A	000	**3NA3824**	80 A	29 × 117 (1.14 x 4.61)	AJT80
55 (60)	7TE25-5AA3	**3RT1054-....** *)	125 A	1	**3NA3132**	125 A	41 × 146 (1.61 x 5.75)	AJT125
80 (100)	7TE28-0AA3	**3RT1056-....** *)	160 A	1	**3NA3136**	175 A	41 × 146 (1.61 x 5.75)	AJT175
120 (150)	7TE31-2AA3	**3RT1065-....** *)	250 A	1	**3NA3144**	250 A	54 × 181 (2.13 x 7.13)	AJT250

Recommendations on further overcurrent protection devices are available at:
https://support.industry.siemens.com/cs/document/109749282

7
1

[1] Not suitable for 3NP and 3KL switch disconnectors.

*) See SiePortal for Article No. supplements.

© Siemens 2024

Overview



Smart Line Module in booksize compact format

Smart Line Modules are stall-protected, line-commutated infeed/regenerative feedback units (diode bridge for incoming supply; stall-protected, line-commutated regenerative feedback via IGBTs) with 100 % continuous regenerative feedback power. The regenerative capability of the modules can be deactivated by means of parameterization. Smart Line Modules are designed for connection to grounded TN/TT systems and non-grounded IT systems.

The DC link is pre-charged via integrated precharging resistors.

The associated line reactor is required for operating a Smart Line Module.

Design

The Smart Line Modules in booksize compact format feature the following connections and interfaces as standard:

- 1 power connection via screw-type terminals
- 1 connection for the 24 V DC electronics power supply via the 24 V terminal adapter included in the scope of supply
- 1 DC link connection via integrated DC link busbars
- 2 PE (protective earth) connections
- 3 DRIVE-CLiQ sockets

The status of the Smart Line Modules is indicated via two multi-color LEDs.

The signal cable shield can be connected to the Line Module by means of a shield connection clamp, e.g. Weidmüller type KLBÜ 3-8 SC.

The scope of supply of the Smart Line Modules includes:

- DRIVE-CLiQ cable for connection to the adjacent Control Unit on the left for drive control, length 0.11 m (4.33 in)
- 2 blanking plugs for sealing unused DRIVE-CLiQ sockets
- DRIVE-CLiQ cable for connecting to the adjacent Motor Module, length 0.21 m (8.3 in)
- Jumper for connecting the 24 V DC busbar to the adjacent Motor Module
- 24 V terminal adapter (X24)
- Connector X21 for digital inputs/outputs
- 1 set of warning signs in 36 languages
- 1 heat conducting foil

Selection and ordering data

Rated power kW (hp)	**Smart Line Module in booksize compact format** Article No.
Line voltage 380 ... 480 V 3 AC	
16 (18)	**6SL3430-6TE21-6AA1**

Description	Article No.
Accessories	
DC link rectifier adapter For direct infeed of DC link voltage Screw-type terminals 0.5 ... 10 mm^2 For Line Modules and Motor Modules in booksize format with a width of 50 mm (1.97 in), 75 mm (2.95 in) and 100 mm (3.94 in)	**6SL3162-2BD00-0AA0**
DC link adapter (2 units) For multi-tier configuration Screw-type terminals 35 ... 95 mm^2 For all Line Modules and Motor Modules in booksize format	**6SL3162-2BM01-0AA0**
Accessories for re-ordering	
24 V terminal adapter For all Line Modules and Motor Modules in booksize format	**6SL3162-2AA00-0AA0**
24 V jumper For connection of the 24 V busbars (for booksize format)	**6SL3162-2AA01-0AA0**
Warning labels in 36 languages This label set can be glued over the standard German or English labels to provide warnings in other languages. One set of labels is supplied with the devices. One sign in each of the following languages is provided in each set: BG, CZ, DE, DK, EE, ES, FI, FR, GB, GR, HU, IE, IS, IT, LT, LV, MT, NL, NO, PL, PT, RO, RU, SE, SI, SK, TR, CN, ID, IL, IR, JP, KR, SA, TH, TW	**6SL3166-3AB00-0AA0**
Dust protection blanking plugs (50 units) For DRIVE-CLiQ port	**6SL3066-4CA00-0AA0**

© Siemens 2024

Integration

The Smart Line Module receives its control information via DRIVE-CLiQ from:

- CU320-2 Control Unit
- SIMOTION D

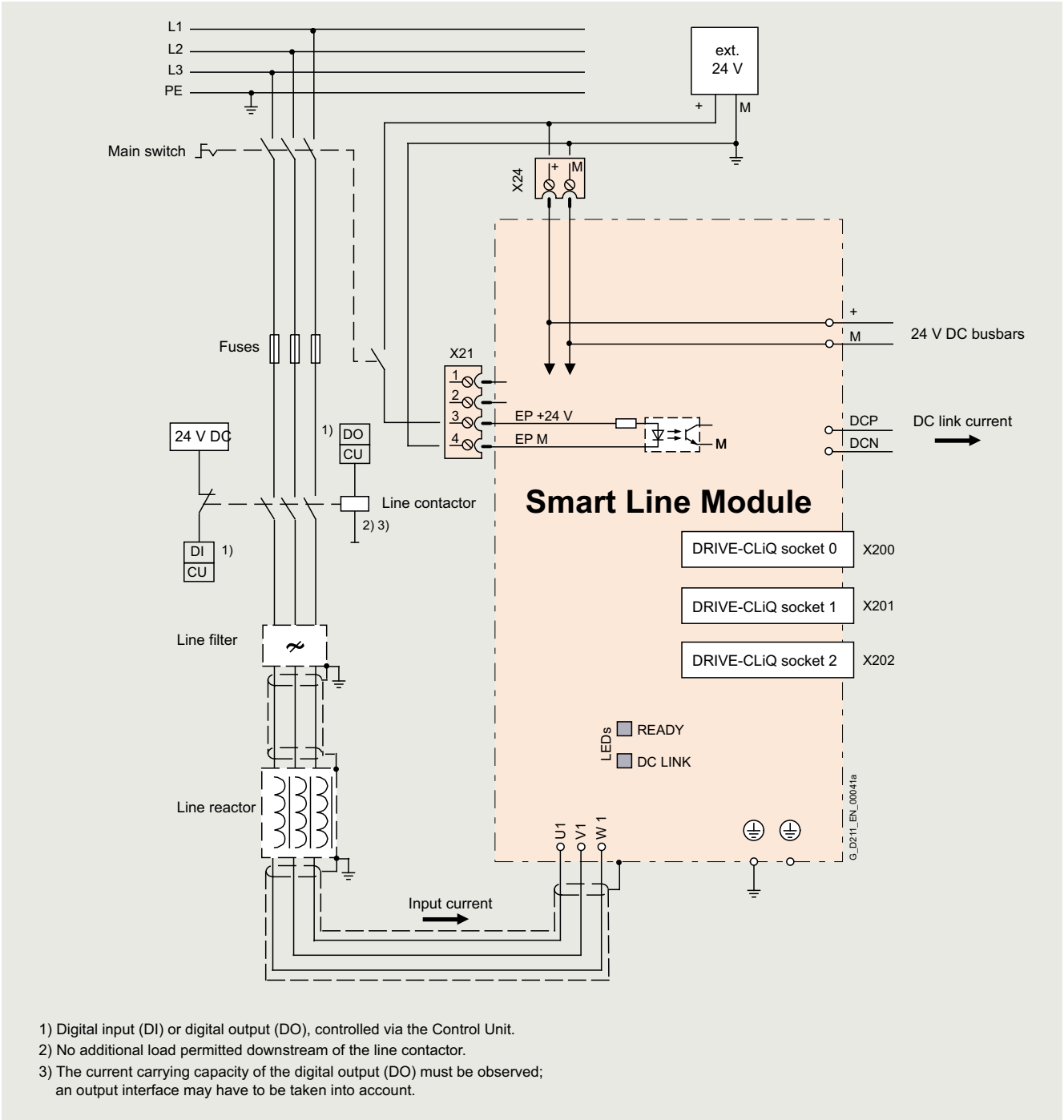

1) Digital input (DI) or digital output (DO), controlled via the Control Unit.
2) No additional load permitted downstream of the line contactor.
3) The current carrying capacity of the digital output (DO) must be observed; an output interface may have to be taken into account.

Connection example of Smart Line Module in booksize compact format

© Siemens 2024

Technical specifications

	Smart Line Module in booksize compact format
	6SL3430-6TE21-6AA1
Line voltage (up to 2000 m (6562 ft) above sea level)	380 ... 480 V 3 AC ±10 % (in operation -15 % <1 min)
Line frequency	47 ... 63 Hz
SCCR (short-circuit current rating)	65 kA in conjunction with the recommended Class J fuse, or circuit breaker according to UL489 / CSA 22.2 No. 5-02 see recommended line-side components
Line power factor at rated power	
• Fundamental (cos φ_1)	>0.96
• Total (λ)	0.65 ... 0.9
Overvoltage category according to EN 60664-1	Class III
DC link voltage, approx.	1.35 × line voltage [1]
Electronics power supply	24 V DC, -15 %/+20 %
Radio interference suppression	
• Standard	No radio interference suppression
• With line filter	Category C2 to EN 61800-3 Total cable length up to 350 m (1148 ft) (shielded)
Type of cooling	Internal air cooling (power units with increased air cooling by built-in fan)
Permissible ambient and coolant temperature (air) during operation for line-side components, Line Modules and Motor Modules	0 ... 40 °C (32 ... 104 °F) without derating, > 40 ... 55 °C (104 ... 131 °F), see derating characteristics
Installation altitude	Up to 1000 m (3281 ft) a bove sea level without derating, > 1000 ... 4000 m (3281 ... 13124 ft) above sea level, see derating characteristics
Declarations of conformity	CE (Low Voltage and EMC Directives)
Certificate of suitability	UL recognized

Line voltage 380 ... 480 V 3 AC	**Smart Line Module in booksize compact format**
Internal air cooling	6SL3430-6TE21-6AA1
Infeed/regenerative feedback power	
• Rated power P_{rated}	**16 kW**
- at 380 V 3 AC	**16 kW**
- at 460 V 3 AC [2]	(18 hp)
• For S6 duty (40 %) P_{S6}	21 kW
• P_{max}	35 kW
DC link current	
• At 600 V DC	27 A
• For S6 duty (40 %)	35 A
• Maximum	59 A
Input current	
• Rated current at 380 V 3 AC	29 A
• For S6 duty (40 %)	35 A
• Maximum	57.5 A
Current requirement 24 V DC electronics power supply, max.	1.1 A
Current carrying capacity	
• 24 V DC busbars	20 A
• DC link busbars	100 A
DC link capacitance	
• Smart Line Module	705 µF
• Drive line-up, max.	6000 µF
Power loss [2]	0.19 kW
Cooling air requirement	0.016 m^3/s (0.57 ft^3/s)
Sound pressure level L_{pA} (1 m)	<60 dB
Line connection U1, V1, W1	Screw-type terminals (X1)
• Conductor cross-section, max.	2.5 ... 10 mm^2
Shield connection	Cable shield connection plate integrated into the connector
PE connection	M5 screw
Cable length, max. (total of all motor cables and DC link)	
• Shielded	630 m (2067 ft)
• Unshielded	850 m (2788 ft)
Degree of protection	IP20
Dimensions	
• Width	100 mm (3.94 in)
• Height	270 mm (10.6 in)
• Depth	226 mm (8.90 in)
Weight, approx.	5.3 kg (12 lb)

[1] The DC link voltage is regulated to the mean value of the rectified line voltage. For further information, see section Configuration notes.

[2] Power loss of Smart Line Module at rated output including losses of 24 V DC electronics power supply.

[3] Nominal hp ratings are provided for ease of assigning components only. The Line Module outputs are dependent on the Motor Module loading and are to be dimensioned accordingly.

© Siemens 2024

Characteristic curves

Overload capability

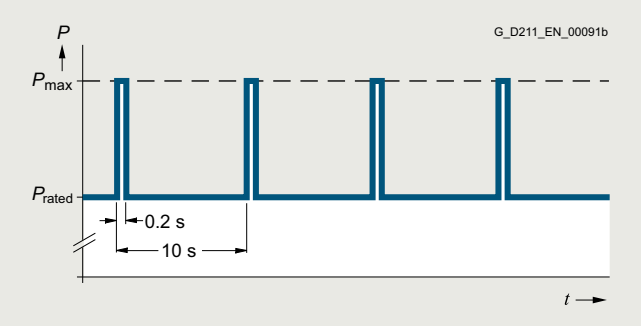

Duty cycle with previous load

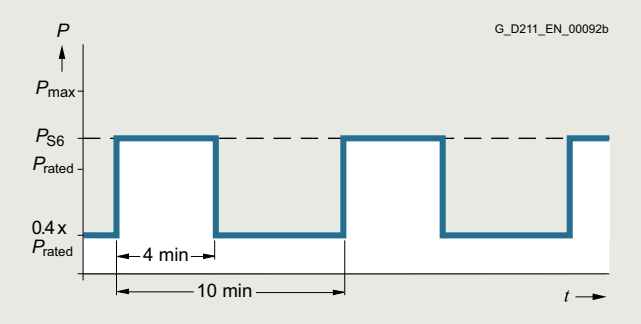

S6 duty cycle with previous load

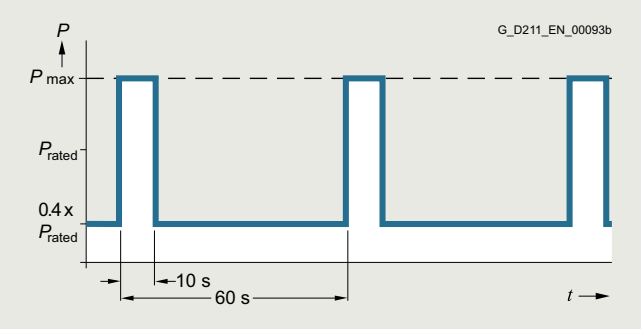

S6 duty cycle with previous load

Derating characteristics

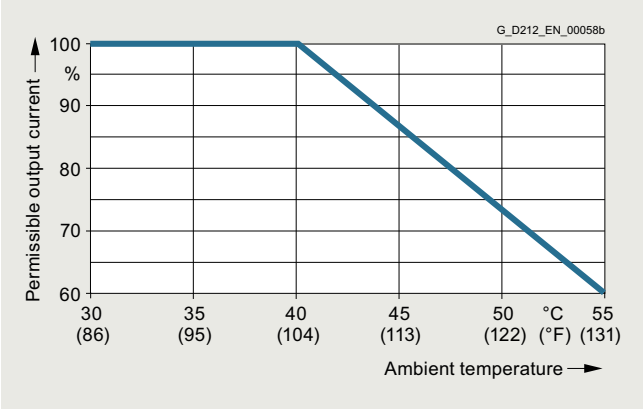

Output power as a function of ambient temperature

Installation altitude

- >1000 ... 4000 m (3281 ... 13124 ft) above sea level
  - Reduction of the output current by 10 % per 1000 m (3281 ft), or
  - Reduction of the ambient temperature by 5 °C (9 °F) per 1000 m (3281 ft)
- >2000 ... 4000 m (6562 ... 13124 ft) above sea level
  - Operation on line supply systems with grounded neutral point, or
  - Operation with an isolating transformer with secondary grounded neutral point

© Siemens 2024

Overview

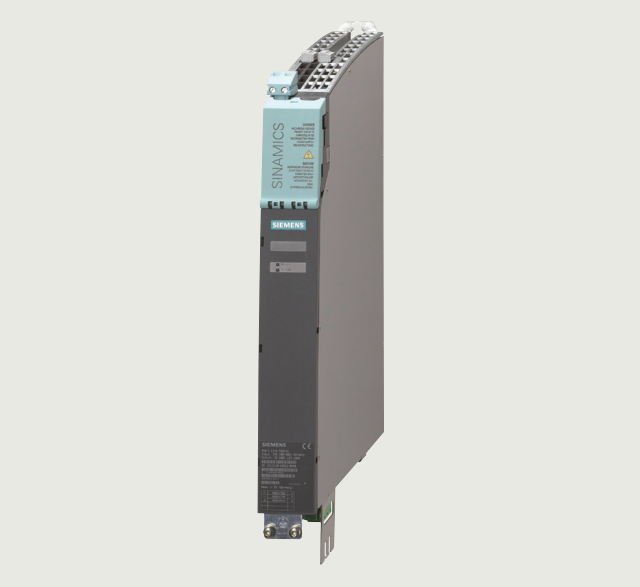

Smart Line Modules are stall-protected, line-commutated infeed/regenerative feedback units (diode bridge for incoming supply; stall-protected, line-commutated regenerative feedback via IGBTs) with 100 % continuous regenerative feedback power. The regenerative feedback capability of the modules can be deactivated by means of a digital input (Smart Line Modules 5 kW and 10 kW) or by means of parameterization (Smart Line Modules 36 kW and 55 kW). Smart Line Modules are designed for connection to grounded TN/TT systems and non-grounded IT systems.

The DC link is pre-charged via integrated precharging resistors.

The associated line reactor is required for operating a Smart Line Module.

Design

The Smart Line Modules in booksize format feature the following connections and interfaces as standard:

- 1 power connection via screw-type terminals
- 1 connection for the 24 V DC electronics power supply via the 24 V terminal adapter included in the scope of supply
- 1 DC link connection via integrated DC link busbars
- 2 PE (protective earth) connections
- 2 digital inputs
  (only for Smart Line Modules 5 kW and 10 kW)
- 1 digital output
  (only for Smart Line Modules 5 kW and 10 kW)
- 3 DRIVE-CLiQ sockets
  (only for Smart Line Modules 36 kW and 55 kW)
- 1 temperature sensor input for KTY84-130, Pt1000 or PTC
  (only for Smart Line Modules 36 kW and 55 kW, Pt1000 can be used from firmware V4.7 HF17)

The status of the Smart Line Modules is indicated via two multi-color LEDs.

The signal cable shield can be connected to the Line Module by means of a shield connection terminal, e.g. Weidmüller type KLBÜ 3-8 SC.

The scope of supply of the Smart Line Modules includes:

- DRIVE-CLiQ cable for connecting the module to the adjacent Control Unit on the left with the drive control, length 0.11 m (4.33 in)
  (only for Smart Line Modules 36 kW and 55 kW)
- 2 blanking plugs for closing unused DRIVE-CLiQ sockets
  (only for Smart Line Modules 36 kW and 55 kW)
- DRIVE-CLiQ cable (length depends on Smart Line Module width) for connection to the adjacent Motor Module,
  length = width of Smart Line Module + 0.11 m (4.33 in)
- Jumper for connecting the 24 V DC busbar to the adjacent Motor Module
- 24 V terminal adapter (X24)
- Connector X21 for digital inputs and outputs
- Connector X22 for digital inputs and outputs
  (only for Smart Line Modules 5 kW and 10 kW)
- Connector X1 for line connection
  (only for Smart Line Modules 5 kW and 10 kW)
- 1 set of warning labels in 36 languages

© Siemens 2024

Integration

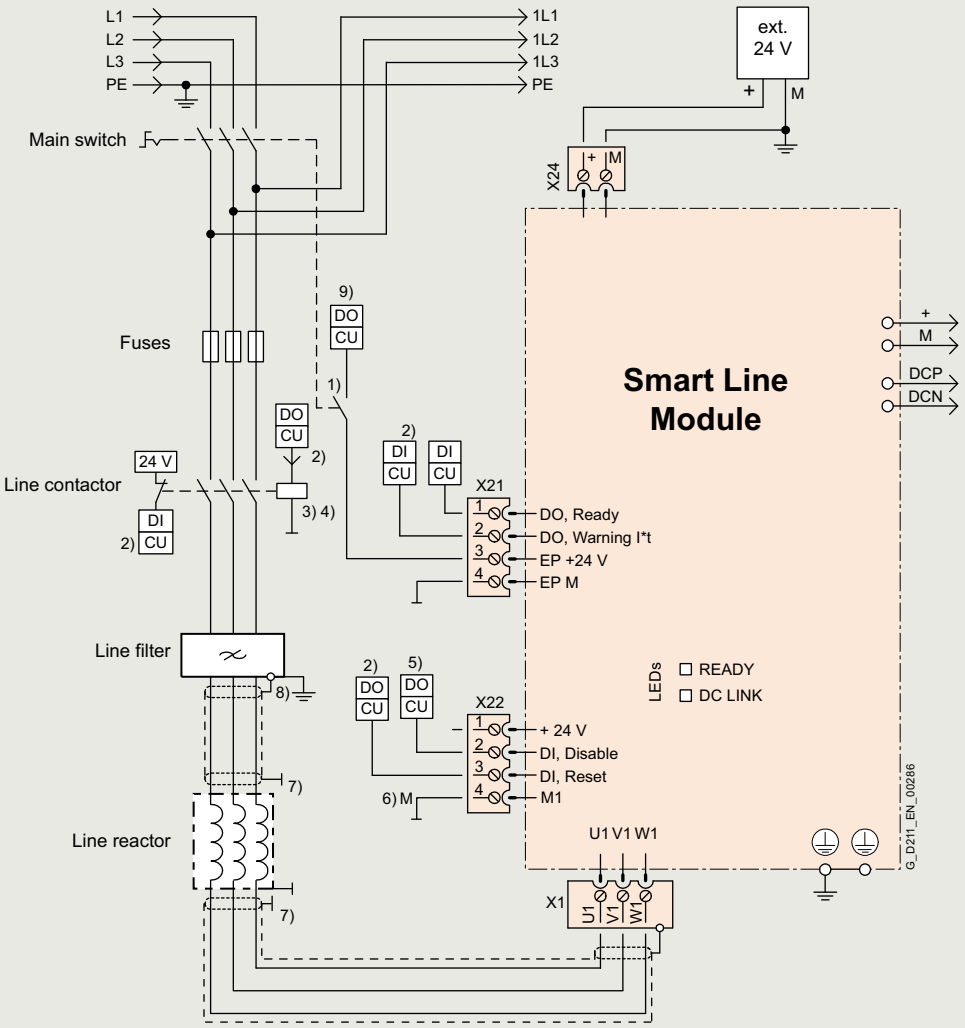

1) Leading NC contact t >10 ms, 24 V DC and ground must be connected for operation.
2) DI/DO, controlled by the Control Unit.
3) No additional load permitted downstream of the line contactor.
4) The current carrying capacity of the digital output (DO) must be taken into account; an output interface element may have to be used.
5) Digital output (DO) = High means: feedback deactivated (a jumper can be inserted between X22 pins 1 and 2 for permanent deactivation).
6) X22 pin 4 must be connected to ground (ext. 24 V).
7) Contacting via mounting back panel or shield panels according to EMC Installation Guidelines.
8) 5 kW and 10 kW line filters via shield connection
9) Signal output to prevent backlash of the DC 24 V supply on the EP terminal.

Connection example of 5 kW and 10 kW Smart Line Modules in booksize format

© Siemens 2024

Integration

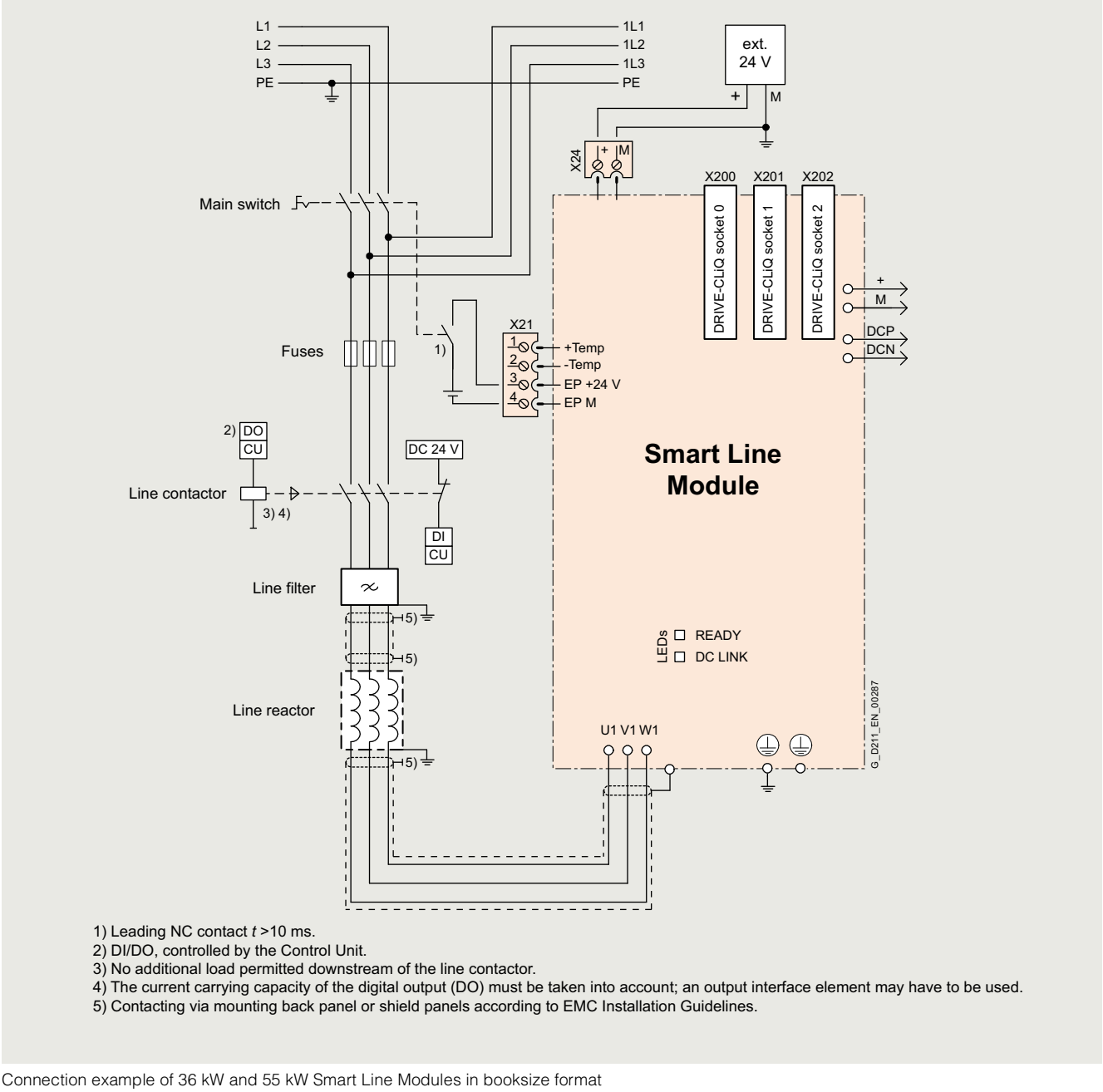

1) Leading NC contact *t* >10 ms.
2) DI/DO, controlled by the Control Unit.
3) No additional load permitted downstream of the line contactor.
4) The current carrying capacity of the digital output (DO) must be taken into account; an output interface element may have to be used.
5) Contacting via mounting back panel or shield panels according to EMC Installation Guidelines.

Connection example of 36 kW and 55 kW Smart Line Modules in booksize format

© Siemens 2024

Smart Line Modules in booksize format

Selection and ordering data

Rated power	Smart Line Module in booksize format	SINAMICS S220 Smart Line Module in booksize format	
kW (hp)	Article No.	C/D type	Article No.
Line voltage 380 ... 480 V 3 AC			
5 (5)	**6SL3130-6AE15-0AB1**		
10 (10)	**6SL3130-6AE21-0AB1**		
16 (18)	–	C type	**6SL5130-6UE21-6AC0**
	–	D type	**6SL5130-6UE21-6AD0**
24 (27)	–	C type	**6SL5130-6UE22-4AC0**
	–	D type	**6SL5130-6UE22-4AD0**
36 (40)	**6SL3130-6TE23-6AA3**		
55 (60)	**6SL3130-6TE25-5AA3**		

Further information (technical data, accessories, etc.) about SINAMICS S220 Smart Line Modules in booksize format can be found in the section SINAMICS S220 built-in units in booksize format.

Description	Article No.
Accessories	
Shield connection plate For Line Modules and Motor Modules in booksize format • with a width of 150 mm (5.91 in) • with a width of 200 mm (7.87 in)	 **6SL3162-1AF00-0AA1** **6SL3162-1AH01-0AA0**
DC link rectifier adapter For direct infeed of DC link voltage • Screw-type terminals 0.5 ... 10 mm^2 For Line Modules and Motor Modules in booksize format with a width of 50 mm (1.97 in), 75 mm (2.95 in) and 100 mm (3.94 in) • Screw-type terminals 35 ... 95 mm^2 For Line Modules and Motor Modules in booksize format with a width of 150 mm (5.91 in), 200 mm (7.87 in) and 300 mm (11.81 in)	 **6SL3162-2BD00-0AA0** **6SL3162-2BM00-0AA0**
DC link adapter (2 units) For multi-tier configuration Screw-type terminals 35 ... 95 mm^2 For all Line Modules and Motor Modules in booksize format	**6SL3162-2BM01-0AA0**
Accessories for re-ordering	
24 V terminal adapter For all Line Modules and Motor Modules in booksize format	**6SL3162-2AA00-0AA0**
24 V jumper For connection of the 24 V busbars (for booksize format)	**6SL3162-2AA01-0AA0**
Terminal Kit (Plug-in terminals, DRIVE-CLiQ jumper (length = module width + 60 mm (2.36 in)), dust protection blanking plugs) For DRIVE-CLiQ port For Smart Line Modules with a width of • 50 mm (1.97 in) • 150 mm (5.91 in) • 200 mm (7.87 in)	 **6SL3163-8KB00-0AA1** **6SL3163-8GF00-0AA0** **6SL3163-8HH00-0AA0**
Warning labels in 36 languages This label set can be glued over the standard German or English labels to provide warnings in other languages. One set of labels is supplied with the devices. One sign in each of the following languages is provided in each set: BG, CZ, DE, DK, EE, ES, FI, FR, GB, GR, HU, IE, IS, IT, LT, LV, MT, NL, NO, PL, PT, RO, RU, SE, SI, SK, TR, CN, ID, IL, IR, JP, KR, SA, TH, TW	**6SL3166-3AB00-0AA0**
Dust protection blanking plugs (50 units) For DRIVE-CLiQ port	**6SL3066-4CA00-0AA0**

Technical specifications

	Smart Line Module in booksize format 6SL313...
Line voltage (up to 2000 m (6562 ft) above sea level)	380 ... 480 V 3 AC ±10 % (in operation -15 % <1 min)
Line frequency	47 ... 63 Hz
SCCR **(short-circuit current rating)**	65 kA in conjunction with the recommended Class J fuse, or circuit breaker according to UL489 / CSA 22.2 No. 5-02 see recommended line-side components
Line power factor at rated power • Fundamental power factor (cos φ_1) • Total (λ)	 >0.96 0.65 ... 0.9
Overvoltage category according to EN 60664-1	Class III
DC link voltage, approx.	1.35 x line voltage[1)]
Electronics power supply	24 V DC -15 %/+20 %
Radio interference suppression • Standard • With line filter	 No radio interference suppression Category C2 to EN 61800-3 Total cable length up to 350 m (1148 ft) (shielded)
Type of cooling	Internal air cooling (power units with increased air cooling by built-in fan)
Permissible ambient and coolant temperature (air) during operation for line-side components, Line Modules and Motor Modules	0 ... 40 °C (32 ... 104 °F) without derating, > 40 ... 55 °C (104 ... 131 °F), see derating characteristics
Installation altitude	Up to 1000 m (3281 ft) above sea level without derating, > 1000 ... 4000 m (3281 ... 13124 ft) above sea level, see derating characteristics
Declarations of conformity	CE (Low Voltage and EMC Directives)
Certificate of suitability	cULus

1) The DC link voltage is maintained at the mean value of the rectified line voltage. For further information, see section Configuration notes.

© Siemens 2024

Technical specifications

Line voltage 380 ... 480 V 3 AC		Smart Line Module in booksize format			
Internal air cooling		6SL3130-6AE15-0AB1	6SL3130-6AE21-0AB1	6SL3130-6TE23-6AA3	6SL3130-6TE25-5AA3
Infeed/regenerative feedback power					
• Rated power P_{rated}					
- At 380 V 3 AC	kW	**5**	**10**	**36**	**55**
- At 460 V 3 AC [2]	(hp)	(5)	(10)	(40)	(60)
• For S6 duty (40 %) P_{S6}	kW	6.5	13	47	71
• P_{max}	kW	10	20	70	91
DC link current					
• At 540/600 V DC	A	9.3/8.3	18.5/16.6	67/60	105/92
• For S6 duty (40 %)	A	11	22	79	138
• Maximum	A	16.6	33.2	118	178
Input current					
• Rated current at 380/400/480 V 3 AC	A	8.6/8.1/6.7	17/16.2/12.8	62/59/51	94/90/77
• For S6 duty (40 %) at 400 V	A	10.6	21.1	76	106
• At 400 V max.	A	15.7	31.2	112	130
Current requirement 24 V DC electronics power supply, max.	A	0.8	0.9	1.5	1.9
Current carrying capacity					
• 24 V DC busbars	A	20	20	20	20
• DC link busbars	A	100	100	200	200
DC link capacitance					
• Smart Line Module	µF	220	330	1410	1880
• Drive line-up, max.	µF	6000	6000	20000	20000
Power loss [1]	kW	0.08	0.14	0.406	0.666
Cooling air requirement	m^3/s (ft^3/s)	0.008 (0.3)	0.008 (0.3)	0.031 (1.1)	0.044 (1.5)
Sound pressure level L_{pA} (1 m)	dB	<60	<60	<65	<60
Line connection U1, V1, W1		Screw-type terminals (X1)	Screw-type terminals (X1)	M6 screw studs (X1)	M6 screw studs (X1)
• Conductor cross-section	mm^2	2.5 ... 6	2.5 ... 6	2.5 ... 50	2.5 ... 95
Shield connection		Shield connection plate integrated into the connector	Shield connection plate integrated into the connector	See Accessories	See Accessories
PE connection		M5 screw	M5 screw	M6 screw	M6 screw
Cable length, max. (total of all motor power cables and DC link)					
• Shielded	m (ft)	350 (1148)	350 (1148)	630 (2067)	1000 (3281)
• Unshielded	m (ft)	560 (1837)	560 (1837)	850 (2789)	1500 (4922)
Degree of protection		IP20	IP20	IP20	IP20
Dimensions					
• Width	mm (in)	50 (1.97)	50 (1.97)	150 (5.91)	200 (7.87)
• Height	mm (in)	380 (14.96)	380 (14.96)	380 (14.96)	380 (14.96)
• Depth	mm (in)	270 (10.63)	270 (10.63)	270 (10.63)	270 (10.63)
Weight, approx.	kg (lb)	4.7 (10.4)	4.8 (10.6)	10 (22.0)	16 (35.3)

[1] Power loss of Smart Line Module at rated output including losses of 24 V DC electronics power supply.

[2] Nominal hp ratings are provided for ease of assigning components only. The Line Module outputs are dependent on the Motor Module loading and are to be dimensioned accordingly.

© Siemens 2024

Characteristic curves

Overload capability

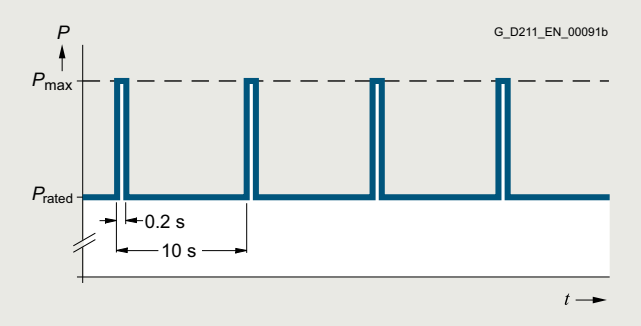

Duty cycle with previous load

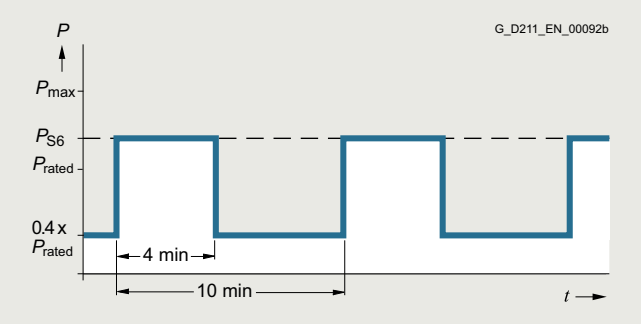

S6 duty cycle with previous load

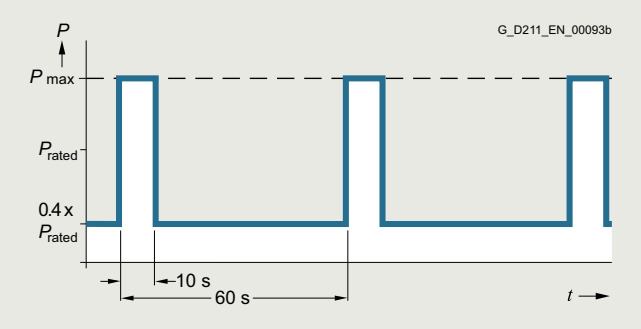

S6 duty cycle with previous load

Derating characteristics

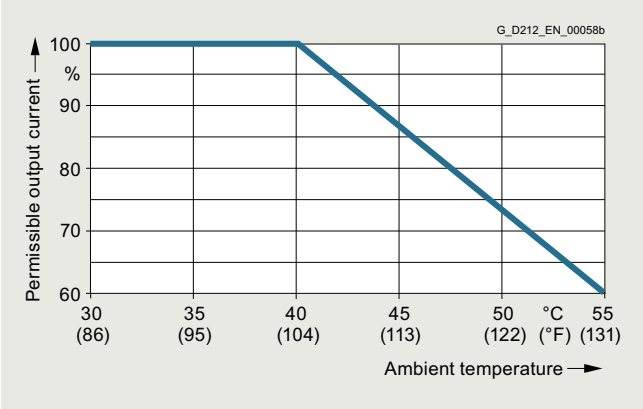

Output power as a function of ambient temperature

Installation altitude

- >1000 ... 4000 m (3281 ... 13124 ft) above sea level
  - Reduction of the output current by 10 % per 1000 m (3281 ft), or
  - Reduction of the ambient temperature by 5 °C (9 °F) per 1000 m (3281 ft)
- >2000 ... 4000 m (6562 ... 13124 ft) above sea level
  - Operation on line supply systems with grounded neutral point, or
  - Operation with an isolating transformer with secondary grounded neutral point

© Siemens 2024

Overview

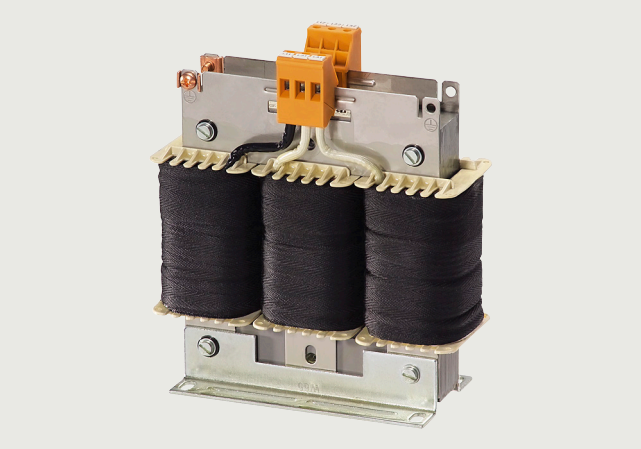

Line reactors are required in order for the Smart Line Modules to function. The use of other makes of line reactor can lead to malfunctions or irreparable damage to equipment.

Selection and ordering data

Rated power of the Smart Line Module kW (hp)	Suitable for Smart Line Module in booksize or booksize compact format	**Line reactor** Article No.
Line voltage 380 ... 480 V 3 AC		
5 (5)	6SL3130-6AE15-0AB1	**6SL3000-0CE15-0AA0**
10 (10)	6SL3130-6AE21-0AB1	**6SL3000-0CE21-0AA0**
16 (18)	6SL3430-6TE21-6AA1	**6SL3100-0EE21-6AA0**
36 (40)	6SL3130-6TE23-6AA3	**6SL3000-0CE23-6AA0**
55 (60)	6SL3130-6TE25-5AA3	**6SL3000-0CE25-5AA0**

Technical specifications

Line voltage 380 ... 480 V 3 AC		**Line reactor**				
		6SL3000-0CE15-0AA0	6SL3000-0CE21-0AA0	6SL3100-0EE21-6AA0	6SL3000-0CE23-6AA0	6SL3000-0CE25-5AA0
Rated current	A	14	28	28	69	103
Power loss	kW	0.062	0.116	0.075	0.17	0.19
Line/load connection 1U1, 1V1, 1W1 / 1U2, 1V2, 1W2		Screw-type terminals	Screw-type terminals	Screw-type terminals	Screw-type terminals	Screw-type terminals
• Conductor cross-section	mm^2	4	10	10	35	70
PE connection		M4 screw	M4 screw	M6 screw studs according to DIN 46234	M6 screw studs according to DIN 46234	M8 screw studs according to DIN 46234
Degree of protection		IP20	IP20	IP20	IP20	IP20
Dimensions						
• Width	mm (in)	150 (5.91)	177 (6.97)	219 (8.62)	225 (8.86)	300 (11.8)
• Height	mm (in)	175 (6.89)	196 (7.72)	176 (6.93)	235 (9.25)	280 (11.0)
• Depth	mm (in)	66.5 (2.62)	86 (3.39)	120 (4.72)	224 (8.82)	290 (11.42)
Weight, approx.	kg (lb)	3.7 (8.16)	7.5 (16.5)	10.7 (23.6)	17 (37.5)	36 (79.4)
Certificate of suitability		cURus	cURus	cURus	cURus	cURus
Suitable for Smart Line Module in booksize or booksize compact format	Type	6SL3130-6AE15-0AB1	6SL3130-6AE21-0AB1	6SL3430-6TE21-6AA1	6SL3130-6TE23-6AA3	6SL3130-6TE25-5AA3
• Rated power of the Smart Line Module	kW (hp)	5 (5)	10 (10)	16 (18)	36 (40)	55 (60)

© Siemens 2024

Line filters for Smart Line Modules

Overview



In plants with stringent EMC requirements, line filters work together with line reactors to restrict the conducted interference emanating from the Power Modules to the limit values of Class A1 as defined in EN 55011 and Category C2 as defined in EN 61800-3. Line filters are only suitable for direct connection to TN line systems.

Selection and ordering data

Rated power of the Smart Line Module kW (hp)	Suitable for Smart Line Module in booksize or booksize compact format	**Line filter** Article No.
Line voltage 380 ... 480 V 3 AC		
5 (5)	6SL3130-6AE15-0AB1	**6SL3000-0HE15-0AA0**
10 (10)	6SL3130-6AE21-0AB1	**6SL3000-0HE21-0AA0**
16 (18)	6SL3430-6TE21-6AA1	**6SL3000-0BE21-6DA0**
36 (40)	6SL3130-6TE23-6AA3	**6SL3000-0BE23-6DA1**
55 (60)	6SL3130-6TE25-5AA3	**6SL3000-0BE25-5DA0**

Technical specifications

Line voltage 380 ... 480 V 3 AC		**Line filter**				
		6SL3000-0HE15-0AA0	6SL3000-0HE21-0AA0	6SL3000-0BE21-6DA0	6SL3000-0BE23-6DA1	6SL3000-0BE25-5DA0
Rated current	A	12	24	36	74	105
Power loss	kW	0.02	0.02	0.016	0.026	0.043
Line/load connection L1, L2, L3 / U, V, W		Screw-type terminals	Screw-type terminals	Screw-type terminals	Screw-type terminals	Screw-type terminals
• Conductor cross-section	mm^2	10	10	10	35	50
PE connection		M6 screw studs according to DIN 46234	M6 screw studs according to DIN 46234	M6 screw studs according to DIN 46234	M6 screw studs according to DIN 46234	M8 screw studs according to DIN 46234
Degree of protection		IP20	IP20	IP20	IP20	IP20
Dimensions						
• Width	mm (in)	60 (2.36)	60 (2.36)	50 (1.97)	75 (2.95)	100 (3.94)
• Height	mm (in)	285 (11.22)	285 (11.22)	429 (16.89)	433 (17.05)	466 (18.35)
• Depth	mm (in)	122 (4.80)	122 (4.80)	226 (8.90)	226 (8.90)	226 (8.90)
Weight, approx.	kg (lb)	2.1 (4.63)	2.3 (5.07)	5 (11.0)	7.5 (16.5)	11.5 (25.4)
Certificate of suitability		cURus	cURus	cURus	cURus	cURus
Suitable for Smart Line Module in booksize or booksize compact format	Type	6SL3130-6AE15-0AB1	6SL3130-6AE21-0AB1	6SL3430-6TE21-6AA1	6SL3130-6TE23-6AA3	6SL3130-6TE25-5AA3
• Rated power of the Smart Line Module	kW (hp)	5 (5)	10 (10)	16 (18)	36 (40)	55 (60)

© Siemens 2024

Selection and ordering data

Suitable line-side power components are assigned depending on the power rating of the Smart Line Module.

The tables below list recommended components.

Additional information about the line-side power components can be found in Catalogs LV 10 and IC 10 as well as SiePortal.

Assignment of line-side power components to Smart Line Modules in booksize or booksize compact format

Rated power	Suitable for Smart Line Module in booksize or booksize compact format	Line contactor	LV HRC fuse (gL/gG)			UL/CSA fuse, Class J [1] Available from: Mersen www.ep.mersen.com		
kW (hp)	Type	Type	Rated current	Size	Article No.	Rated current	Size mm (in)	Reference No.
Line voltage 380 ... 480 V 3 AC								
5 (5)	6SL3130-6AE15-0AB1	**3RT2023...** *)	16 A	000	**3NA3805**	17.5 A	21 × 57 (0.83 x 2.24)	AJT17-1/2
10 (10)	6SL3130-6AE21-0AB1	**3RT2026...** *)	35 A	000	**3NA3814**	35 A	27 × 60 (1.06 x 2.36)	AJT35
16 (18)	6SL3430-6TE21-6AA1	**3RT2028...** *)	35 A	000	**3NA3814**	35 A	27 × 60 (1.06 x 2.36)	AJT35
36 (40)	6SL3130-6TE23-6AA3	**3RT2038...** *)	80 A	000	**3NA3824**	80 A	29 × 117 (1.14 x 4.61)	AJT80
55 (60)	6SL3130-6TE25-5AA3	**3RT1054...** *)	125 A	000	**3NA3132**	125 A	41 × 146 (1.61 x 5.75)	AJT125

Recommendations on further overcurrent protection devices are available at:
https://support.industry.siemens.com/cs/document/109749282

*) See SiePortal for Article No. supplements.

1) Not suitable for 3NP and 3KL switch disconnectors.

© Siemens 2024

Basic Line Modules in booksize format

Overview



Basic Line Modules in booksize format

Basic Line Modules are used for applications in which no energy is returned to the supply or where the energy exchange between motor and generator axes takes place in the DC link. Basic Line Modules can only feed energy from the supply system into the DC link, energy cannot be fed back into the supply system. The DC link voltage is directly derived from the 3-phase line voltage via a 6-pulse bridge circuit. Basic Line Modules are suitable for connection to grounded, star TN, TT and non-grounded symmetrical IT supply systems. The connected Motor Modules are pre-charged over the integrated pre-charging resistors (20 kW and 40 kW) or through activation of the thyristors (100 kW).

The 20 kW and 40 kW Basic Line Modules are equipped with an integrated brake chopper and can be directly used for applications in generating mode after connecting an external braking resistor.
A Braking Module is only required with a 100 kW Basic Line Module in generating mode.

Design

The Basic Line Modules in booksize format feature the following connections and interfaces as standard:

- 1 power connection
- 1 connection for the 24 V DC electronics power supply
- 1 DC link connection
- 3 DRIVE-CLiQ sockets
- 1 connection for braking resistor
  (20 kW (25 hp) and 40 kW (50 hp) Basic Line Modules only)
- 1 temperature sensor input for KTY84-130, Pt1000 or PTC
  (Pt1000 can be used from firmware V4.7 HF17)

The status of the Basic Line Modules is indicated via two multi-color LEDs.

The scope of supply of the Basic Line Modules includes:

- DRIVE-CLiQ cable for connection to the adjacent Control Unit on the left for drive control, length 0.11 m (4.33 in)
- DRIVE-CLiQ cable (length depends on Basic Line Module width) for connection to the adjacent Motor Module, length = width of Basic Line Module + 0.11 m (4.33 in)
- Jumper for connecting the 24 V DC busbar to the adjacent Motor Module
- 24 V terminal adapter (X24)
- Connector X21
- 2 blanking plugs for sealing unused DRIVE-CLiQ sockets
- 1 set of warning labels in 36 languages

© Siemens 2024

Integration

The Basic Line Module receives its control information via DRIVE-CLiQ from:

- CU320-2 Control Unit
- SINUMERIK 840D sl
- SINUMERIK ONE
- SINUMERIK MC
- SIMOTION D

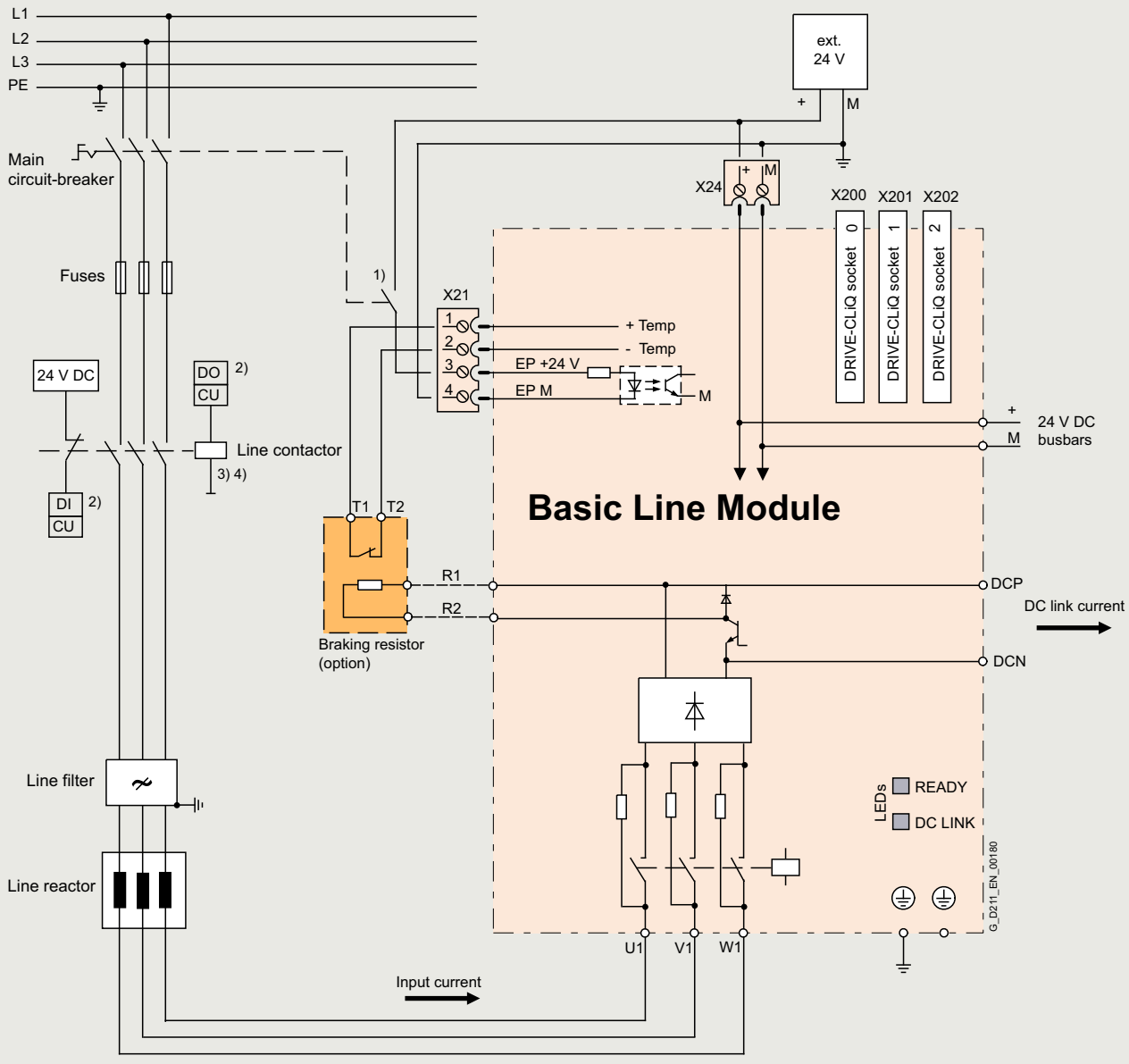

1) For operation, a 24 V DC voltage must be applied between terminals "EP +24 V" and "EP M"
2) Digital input (DI) or digital output (DO), controlled by the Control Unit.
3) No additional load permitted downstream of the line contactor.
4) The current carrying capacity of the digital output (DO) must be taken into account; an output interface element may have to be used.

Connection example of 20 kW and 40 kW Basic Line Modules in booksize format

Note:

The thermostatic switch built into the braking resistor must be looped into the shutdown chain of the drive to prevent thermal overloading of the system in the event of a fault. If a braking resistor is not connected, a jumper must be connected between X21.1 and X21.2.

© Siemens 2024

Integration

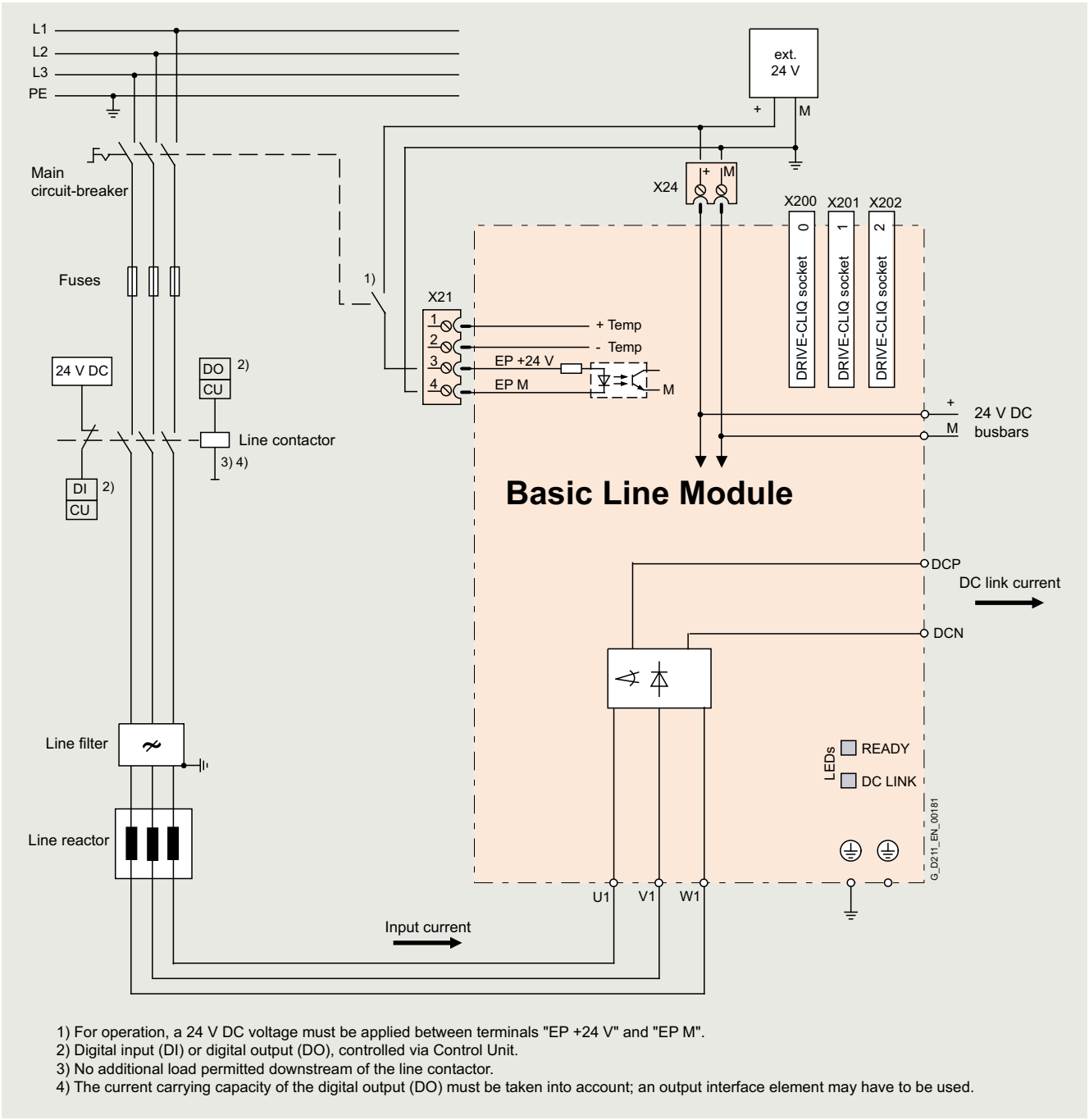

1) For operation, a 24 V DC voltage must be applied between terminals "EP +24 V" and "EP M".
2) Digital input (DI) or digital output (DO), controlled via Control Unit.
3) No additional load permitted downstream of the line contactor.
4) The current carrying capacity of the digital output (DO) must be taken into account; an output interface element may have to be used.

Connection example of 100 kW Basic Line Module in booksize format

© Siemens 2024

Selection and ordering data

Rated power	Basic Line Modules in booksize format
kW (hp)	Article No.
Line voltage 380 ... 480 V 3 AC	
20 (25)	**6SL3130-1TE22-0AA0**
40 (50)	**6SL3130-1TE24-0AA0**
100 (125)	**6SL3130-1TE31-0AA0**

Description	Article No.
Accessories	
Shield connection plate For Line Modules and Motor Modules in booksize format	
• With a width of 150 mm (5.91 in)	**6SL3162-1AF00-0AA1**
• With a width of 200 mm (7.87 in)	**6SL3162-1AH01-0AA0**
DC link rectifier adapter For direct infeed of DC link voltage	
• Screw-type terminals 0.5 ... 10 mm^2 For Line Modules and Motor Modules in booksize format with a width of 50 mm, 75 mm and 100 mm (1.97 in, 2.95 in and 3.94 in)	**6SL3162-2BD00-0AA0**
• Screw-type terminals 35 ... 95 mm^2 For Line Modules and Motor Modules in booksize format with a width of 150 mm, 200 mm and 300 mm (5.91 in, 7.87 in and 11.81 in)	**6SL3162-2BM00-0AA0**
DC link adapter (2 units) For multi-tier configuration Screw-type terminals 35 ... 95 mm^2 For all Line Modules and Motor Modules in booksize format	**6SL3162-2BM01-0AA0**
Accessories for re-ordering	
24 V terminal adapter For all Line Modules and Motor Modules in booksize format	**6SL3162-2AA00-0AA0**
24 V jumper For connection of the 24 V busbars (for booksize format)	**6SL3162-2AA01-0AA0**
Terminal Kit (plug-in terminals, DRIVE-CLiQ jumper (length = module width + 60 mm (2.36 in)), dust protection blanking plugs) For DRIVE-CLiQ port For Basic Line Modules with a width of	
• 100 mm (3.94 in)	**6SL3163-8LD00-0AA0**
• 150 mm (5.91 in)	**6SL3163-8GF00-0AA0**
• 200 mm (7.87 in)	**6SL3163-8HH00-0AA0**
Warning labels in 36 languages This label set can be glued over the standard English or German labels to provide warnings in other languages. One set of labels is supplied with the devices. One sign in each of the following languages is provided in each set: BG, CZ, DE, DK, EE, ES, FI, FR, GB, GR, HU, IE, IS, IT, LT, LV, MT, NL, NO, PL, PT, RO, RU, SE, SI, SK, TR, CN, ID, IL, IR, JP, KR, SA, TH, TW	**6SL3166-3AB00-0AA0**
Dust protection blanking plugs (50 units) For DRIVE-CLiQ port	**6SL3066-4CA00-0AA0**

Technical specifications

	Basic Line Module in booksize format 6SL313...
Line voltage (up to 2000 m (6562 ft) above sea level)	380 ... 480 V 3 AC ±10 % (-15 % <1 min)
Line frequency	47 ... 63 Hz
SCCR (short-circuit current rating)	65 kA in conjunction with the recommended Class J fuse, or circuit breaker according to UL489 / CSA 22.2 No. 5-02 see recommended line-side components
Line power factor at rated power	
• Fundamental (cos φ_1)	>0.96
• Total (λ)	0.75 ... 0.93
Overvoltage category according to EN 60664-1	Class III
DC link voltage, approx.	1.35 × line voltage [1]
Electronics power supply	24 V DC -15 %/+20 %
Radio interference suppression	
• Standard	
- 20 kW and 40 kW Basic Line Modules	No radio interference suppression
- 100 kW Basic Line Module	Category C3 to EN 61800-3 Total cable length up to 350 m (1148 ft) (shielded)
• With line filter	Category C2 to EN 61800-3 Total cable length up to 350 m (1148 ft) (shielded)
Type of cooling	Internal air cooling (power units with increased air cooling by built-in fan)
Permissible ambient and coolant temperature (air) during operation for line-side components, Line Modules and Motor Modules	0 ... 40 °C (32 ... 104 °F) without derating, > 40 ... 55 °C (104 ... 131 °F), see derating characteristics
Installation altitude	Up to 1000 m (3281 ft) above sea level without derating, > 1000 ... 4000 m (3281 ... 13124 ft) above sea level, see derating characteristics
Declarations of conformity	CE (Low Voltage and EMC Directives)
Certificate of suitability	cULus

[1] The DC link voltage is unregulated and load-dependent.
For further information, see section Configuration notes

© Siemens 2024

Basic Line Modules in booksize format

Technical specifications

Line voltage 380 ... 480 V 3 AC		Basic Line Modules in booksize format		
Internal air cooling		6SL3130-1TE22-0AA0	6SL3130-1TE24-0AA0	6SL3130-1TE31-0AA0
Power				
• Rated power P_{rated}				
- At 380 V 3 AC	kW	20	40	100
- At 460 V 3 AC [2]	(hp)	(25)	(50)	(125)
• For S6 duty (40 %) P_{S6}	kW	26	52	130
• P_{max}	kW	60	120	175
Braking power with external braking resistor				
• $P_{Bmax.}$ (=2 × P_{rated})	kW	40	80	–
• Continuous braking power P_d (=0.25 × P_{rated})	kW	5	10	–
DC link current				
• At 600 V DC	A	33.5	67	167
• For S6 duty (40 %)	A	43	87	217
• Maximum	A	100	200	292
Input current				
• Rated current at 380 V 3 AC	A	35	70	172
• Maximum	A	100	188	290
Activation threshold Braking module	V	774	774	–
Resistance value of the external braking resistor	Ω	≥14.8	≥7.4	–
Cable length, max. to braking resistor	m (ft)	15 (50)	15 (50)	–
Connection for braking resistor (X2)		Screw terminals	Screw terminals	–
• Conductor cross-section, max.	mm^2	0.5 ... 4	0.5 ... 10	–
Current requirement, max. 24 V DC electronic power supply	A	1	1.4	2
Current carrying capacity				
• 24 V DC busbars	A	20	20	20
• DC link busbars	A	100	200	200
DC link capacitance				
• Basic Line Module	µF	940	1880	4100
• Drive line-up, max.	µF	20000	20000	50000
Power loss [1]	kW	0.144	0.284	0.628
Cooling air requirement	m^3/s (ft^3/s)	0.016 (0.6)	0.031 (1.1)	0.05 (1.8)
Sound pressure level L_{pA} (1 m)	dB	<60	<65	<65
Line connection U1, V1, W1		Screw-type terminals	Screw-type terminals	M8 screw stud
• Conductor cross-section, max.	mm^2	0.5 … 16	10 ... 50	1 × 35 ... 120 or 2 × 50
Shield connection		Integrated into the power plug	See Accessories	See Accessories
PE connection		M5 screw	M6 screw	M6 screw
Cable length, max. (total of all motor power cables and DC link)				
• Shielded/unshielded	m (ft)	630/850 (2067/2789)	630/850 (2067/2789)	1000/1500 (3281/4922)
Degree of protection		IP20	IP20	IP20
Dimensions				
• Width	mm (in)	100 (3.94)	150 (5.91)	200 (7.87)
• Height	mm (in)	380 (14.96)	380 (14.96)	380 (14.96)
• Depth	mm (in)	270 (10.63)	270 (10.63)	270 (10.63)
Weight, approx.	kg (lb)	6.8 (14.9)	11.3 (24.9)	15.8 (34.8)

[1] Power loss of Basic Line Module at rated output including losses of 24 V DC electronics power supply.

[2] Nominal hp ratings are provided for ease of assigning components only. The Line Module outputs are dependent on the Motor Module loading and are to be dimensioned accordingly.

© Siemens 2024

Characteristic curves

Overload capability

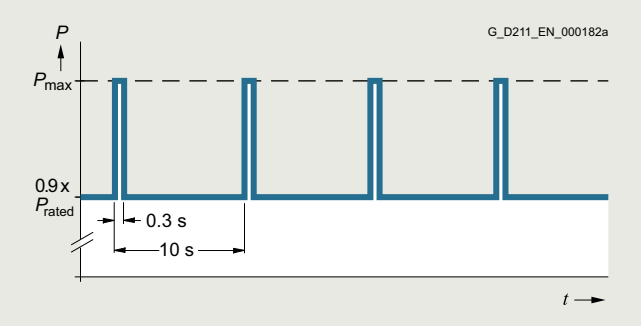

Duty cycle with previous load

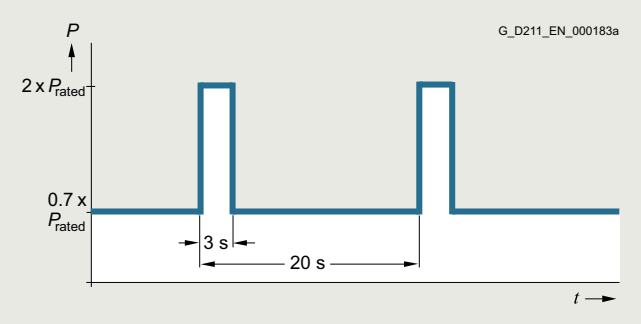

Duty cycle with previous load

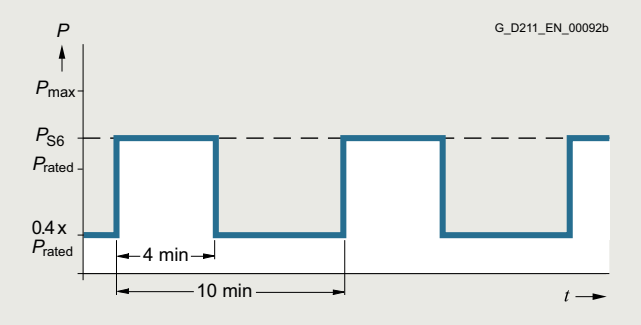

S6 duty cycle with previous load

20 kW (25 hp) and 40 kW (50 hp) Basic Line Modules only

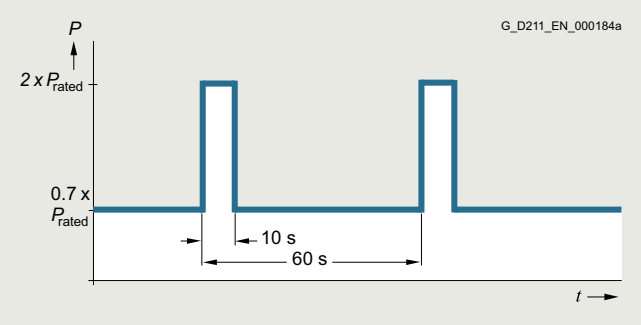

Duty cycle with previous load

Derating characteristics

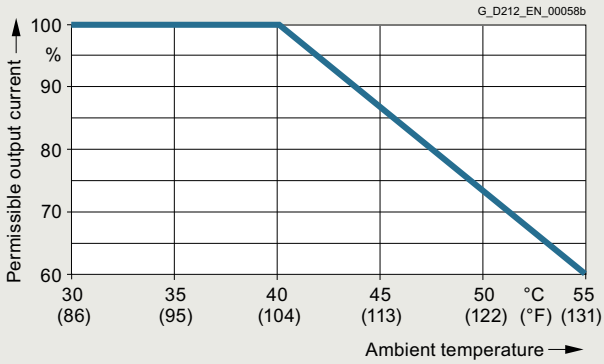

Output power as a function of ambient temperature

Installation altitude

- >1000 ... 4000 m (3281 ... 13124 ft) above sea level
  - Reduction of the output current by 10 % per 1000 m (3281 ft), or
  - Reduction of the ambient temperature by 5 °C (9 °F) per 1000 m (3281 ft)
- >2000 ... 4000 m (6562 ... 13124 ft) above sea level
  - Operation on line supply systems with grounded neutral point, or
  - Operation with an isolating transformer with secondary grounded neutral point

© Siemens 2024

Characteristic curves

Braking power with external braking resistor

The following duty cycles are defined for the braking modules of the 20 kW and 40 kW Basic Line Modules:

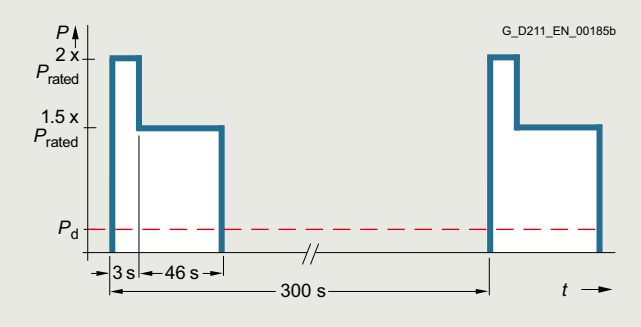

The maximum possible braking power P_{max} is calculated using the following formula:

$P_{max} = U^2/R$

U = Activation threshold

R = Resistance value of the external braking resistor

The maximum braking power is achieved with the smallest permissible resistance value. The maximum possible braking power falls at larger resistance values.

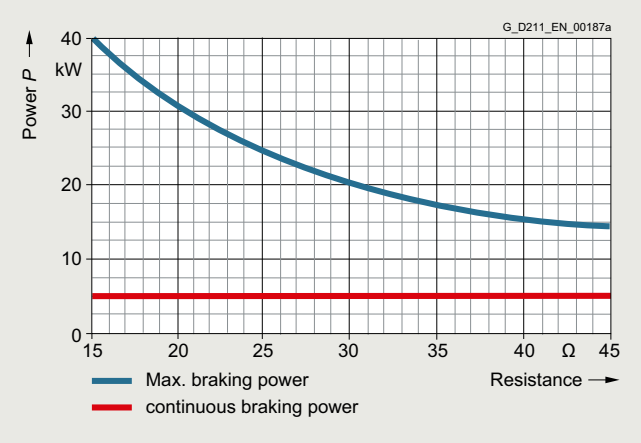

Braking power of the 20 kW Basic Line Modules depending on the connected braking resistor

When the recommended braking resistor is used, the following values result for the maximum braking power or continuous braking power:

Braking resistor 6SE7023-2ES87-2DC0
Resistance value = 20 Ω → max. braking power = 30 kW; continuous braking power = 5 kW

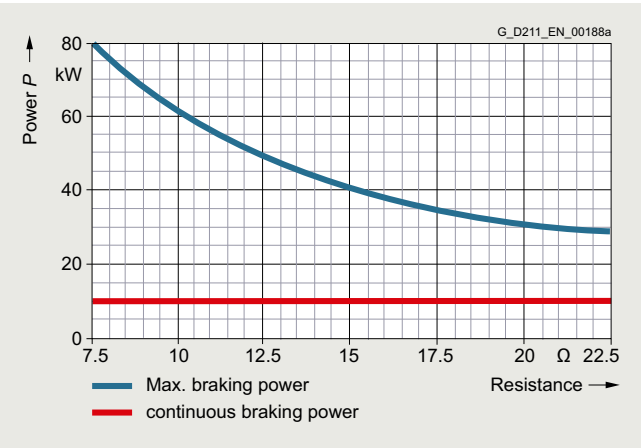

Braking power of the 40 kW Basic Line Modules depending on the connected braking resistor

When the recommended braking resistor is used, the following values result for the maximum braking power or continuous braking power:

Braking resistor 6SE7028-0ES87-2DC0
Resistance value = 8 Ω → max. braking power = 75 kW; continuous braking power = 10 kW (limited by braking module)

© Siemens 2024

Overview

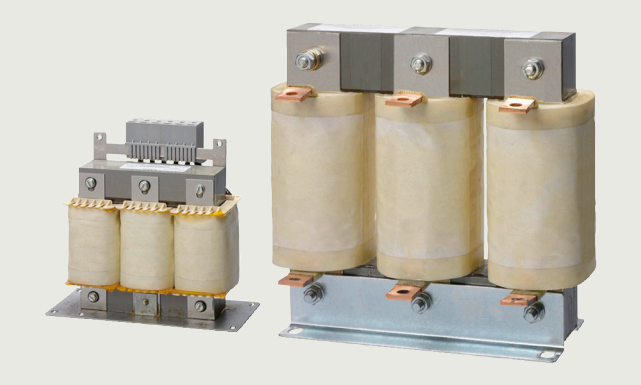

20 kW (25 hp) and 100 kW (125 hp) line reactors

Line reactors reduce low-frequency line harmonic distortions and offload the semiconductors of the Basic Line Module.

Selection and ordering data

Rated power of the Basic Line Module kW (hp)	Suitable for Basic Line Module in booksize format	**Line reactor** Article No.
Line voltage 380 ... 480 V 3 AC		
20 (25)	6SL3130-1TE22-0AA0	**6SL3000-0CE22-0AA0**
40 (50)	6SL3130-1TE24-0AA0	**6SL3000-0CE24-0AA0**
100 (125)	6SL3130-1TE31-0AA0	**6SL3000-0CE31-0AA0**

Technical specifications

Line voltage 380 ... 480 V 3 AC		**Line reactor**		
		6SL3000-0CE22-0AA0	6SL3000-0CE24-0AA0	6SL3000-0CE31-0AA0
Rated current	A	37	74	185 (7.28)
Power loss at 50/60 Hz	kW	0.13/0.154	0.27/0.32	0.48/0.565
Line/load connection		Screw-type terminals	Screw-type terminals	Flat connector for M8 screw
• Conductor cross-section	mm^2	0.5 … 16	2.5 ... 35	–
PE connection		M4 screw	M6 screw studs	M8 screw studs
Degree of protection		IP20	IP20	IP00
Dimensions				
• Width	mm (in)	178 (7.01)	210 (8.27)	261 (10.28)
• Height	mm (in)	165 (6.50)	239 (9.41)	228 (8.98)
• Depth	mm (in)	100 (3.94)	105 (4.13)	138 (5.43)
Weight, approx.	kg (lb)	5.2 (11.5)	11.2 (24.7)	21.7 (47.9)
Certificate of suitability		cURus	cURus	cURus
Suitable for Basic Line Module in booksize format	Type	6SL3130-1TE22-0AA0	6SL3130-1TE24-0AA0	6SL3130-1TE31-0AA0
• Rated power of the Basic Line Module	kW (hp)	20 (25)	40 (50)	100 (125)

© Siemens 2024

Line filters for Basic Line Modules

Overview



In plants with strict EMC requirements, line filters work together with line reactors to restrict the conducted interference emanating from the power modules to the limit values of Class A1 as defined in EN 55011 and Category C2 as defined in EN 61800-3. The line filters are suitable for TN and TT supply systems grounded at the neutral point.

Selection and ordering data

Rated power of the Basic Line Module kW (hp)	Suitable for Basic Line Module in booksize format	**Line filter** Article No.
Line voltage 380 ... 480 V 3 AC		
20 (25)	6SL3130-1TE22-0AA0	**6SL3000-0BE21-6DA0**
40 (50)	6SL3130-1TE24-0AA0	**6SL3000-0BE23-6DA1**
100 (125)	6SL3130-1TE31-0AA0	**6SL3000-0BE31-2DA0**

Technical specifications

Line voltage 380 ... 480 V 3 AC		**Line filter**		
		6SL3000-0BE21-6DA0	6SL3000-0BE23-6DA1	6SL3000-0BE31-2DA0
Rated current	A	36	74	192
Power loss	kW	0.016	0.026	0.043
Line/load connection L1, L2, L3 / U, V, W		Screw-type terminals	Screw-type terminals	Screw-type terminals
• Conductor cross-section	mm^2	10	35	95
PE connection		M6 screw stud	M6 screw stud	M10 screw stud
Degree of protection		IP20	IP20	IP20
Dimensions				
• Width	mm (in)	50 (1.97)	75 (2.95)	150 (5.91)
• Height	mm (in)	429 (16.89)	433 (17.05)	479 (18.86)
• Depth	mm (in)	226 (8.90)	226 (8.90)	226 (8.90)
Weight, approx.	kg (lb)	5 (11.3)	7.5 (16.5)	18.5 (40.8)
Certificate of suitability		cURus	cURus	cURus
Suitable for Basic Line Module in booksize format	Type	6SL3130-1TE22-0AA0	6SL3130-1TE24-0AA0	6SL3130-1TE31-0AA0
• Rated power of the Basic Line Module	kW (hp)	20 (25)	40 (50)	100 (125)

© Siemens 2024

Selection and ordering data

Suitable line-side power components are assigned depending on the power rating of the Basic Line Module.

The tables below list recommended components.

Additional information about the line-side power components can be found in Catalogs LV 10 and IC 10 as well as SiePortal.

Assignment of line-side power components to Basic Line Modules in booksize format

Rated power	Suitable for Basic Line Module in booksize format	Line contactor	LV HRC fuse (gL/gG)			UL/CSA fuse, Class J [1] Available from: Mersen www.ep.mersen.com		
kW (hp)	Type 6SL3130-...	Type	Rated current	Size	Article No.	Rated current	Size mm (in)	Reference No.
Line voltage 380 ... 480 V 3 AC								
20 (25)	1TE22-0AA0	**3RT2028-....** *)	63 A	000	**3NA3822**	60 A	27 × 60 (1.06 x 2.36)	AJT60
40 (50)	1TE24-0AA0	**3RT2038-....** *)	100 A	000	**3NA3830**	100 A	29 × 117 (1.14 x 4.61)	AJT100
100 (125)	1TE31-0AA0	**3RT2056-....** *)	250 A	1	**3NA3144**	250 A	54 × 181 (2.13 x 7.13)	AJT250

Recommendations on further overcurrent protection devices are available at:
https://support.industry.siemens.com/cs/document/109749282

[1] Not suitable for 3NP and 3KL switch disconnectors.

*) See SiePortal for Article No. supplements.

© Siemens 2024

Single Motor Modules in booksize compact format

Design



Single Motor Modules in booksize compact format

The Single Motor Modules in booksize compact format feature the following connections and interfaces as standard:

- 2 DC link connections via integrated DC link busbars
- 1 electronics power supply connection via integrated 24 V DC bars
- 3 DRIVE-CLiQ sockets
- 1 motor connection via connector
- 1 safe standstill input
- 1 safe motor brake control
- 1 temperature sensor input for KTY84-130, Pt1000 or PTC (Pt1000 can be used from firmware V4.7 HF17)
- 2 PE (protective earth) connections

The status of the Motor Modules is indicated via two multi-color LEDs.

The shield of the motor cable is routed over the connector to the motor connection.

The signal cable shield can be connected to the Motor Module by means of a shield connection clamp, e.g. Weidmüller type KLBÜ 3-8 SC.

The scope of supply of the Motor Modules includes:

- DRIVE-CLiQ cable appropriate to the width of the Motor Module for connection to the adjacent Motor Module, length 0.11 m (4.33 in) for Motor Modules with a width of 50 mm (1.97 in) or length 0.16 m (6.3 in) for Motor Modules with a width of 75 mm (2.95 in).
- 2 dust protection blanking plugs for sealing unused DRIVE-CLiQ sockets
- Jumper for connecting the 24 V DC busbar to the adjacent Motor Module
- Connector X21
- Connector X11 for motor brake connection
- Connector X1 for motor connection
- 1 set of warning labels in 36 languages

Selection and ordering data

Rated output current A	Type rating [1] kW (hp)	**Single Motor Module in booksize compact format** Article No.
DC link voltage 510 ... 720 V DC		
3	1.6 (1.5)	**6SL3420-1TE13-0AA1**
5	2.7 (3)	**6SL3420-1TE15-0AA1**
9	4.8 (5)	**6SL3420-1TE21-0AA1**
18	9.7 (10)	**6SL3420-1TE21-8AA1**

Description	Article No.
Accessories	
DC link rectifier adapter For direct infeed of DC link voltage Screw-type terminals 0.5 ... 10 mm^2 For Line Modules and Motor Modules in booksize format with a width of 50 mm (1.97 in), 75 mm (2.95 in) and 100 mm (3.94 in)	**6SL3162-2BD00-0AA0**
DC link adapter (2 units) For multi-tier configuration Screw-type terminals 35 ... 95 mm^2 For all Line Modules and Motor Modules in booksize format	**6SL3162-2BM01-0AA0**
24 V terminal adapter For all Line Modules and Motor Modules in booksize format	**6SL3162-2AA00-0AA0**
Spacing bolt (4 units) The mounting depth of modules in booksize compact format is increased when it is mounted on these spacing bolts by such an amount that it can be integrated into a drive line-up in booksize format. 2 spacing bolts are required to mount 50 mm (1.97 in) wide modules, and 4 spacing bolts for 75 mm (2.95 in) wide modules.	**6SL3462-1CC00-0AA0**
Accessories for re-ordering	
24 V jumper For connection of the 24 V busbars (for booksize format)	**6SL3162-2AA01-0AA0**
Warning labels in 36 languages This label set can be glued over the standard English or German labels to provide warnings in other languages. One set of labels is supplied with the devices. One sign in each of the following languages is provided in each set: BG, CZ, DE, DK, EE, ES, FI, FR, GB, GR, HU, IE, IS, IT, LT, LV, MT, NL, NO, PL, PT, RO, RU, SE, SI, SK, TR, CN, ID, IL, IR, JP, KR, SA, TH, TW	**6SL3166-3AB00-0AA0**
Dust protection blanking plugs (50 units) For DRIVE-CLiQ port	**6SL3066-4CA00-0AA0**

[1] Nominal hp ratings based on asynchronous (induction) motors. Match the motor nameplate current for specific sizing.

© Siemens 2024

Integration

The Single Motor Module receives its control information via DRIVE-CLiQ from:

- CU320-2 Control Unit
- SINUMERIK 840D sl
- SINUMERIK ONE
- SINUMERIK MC
- SIMOTION D

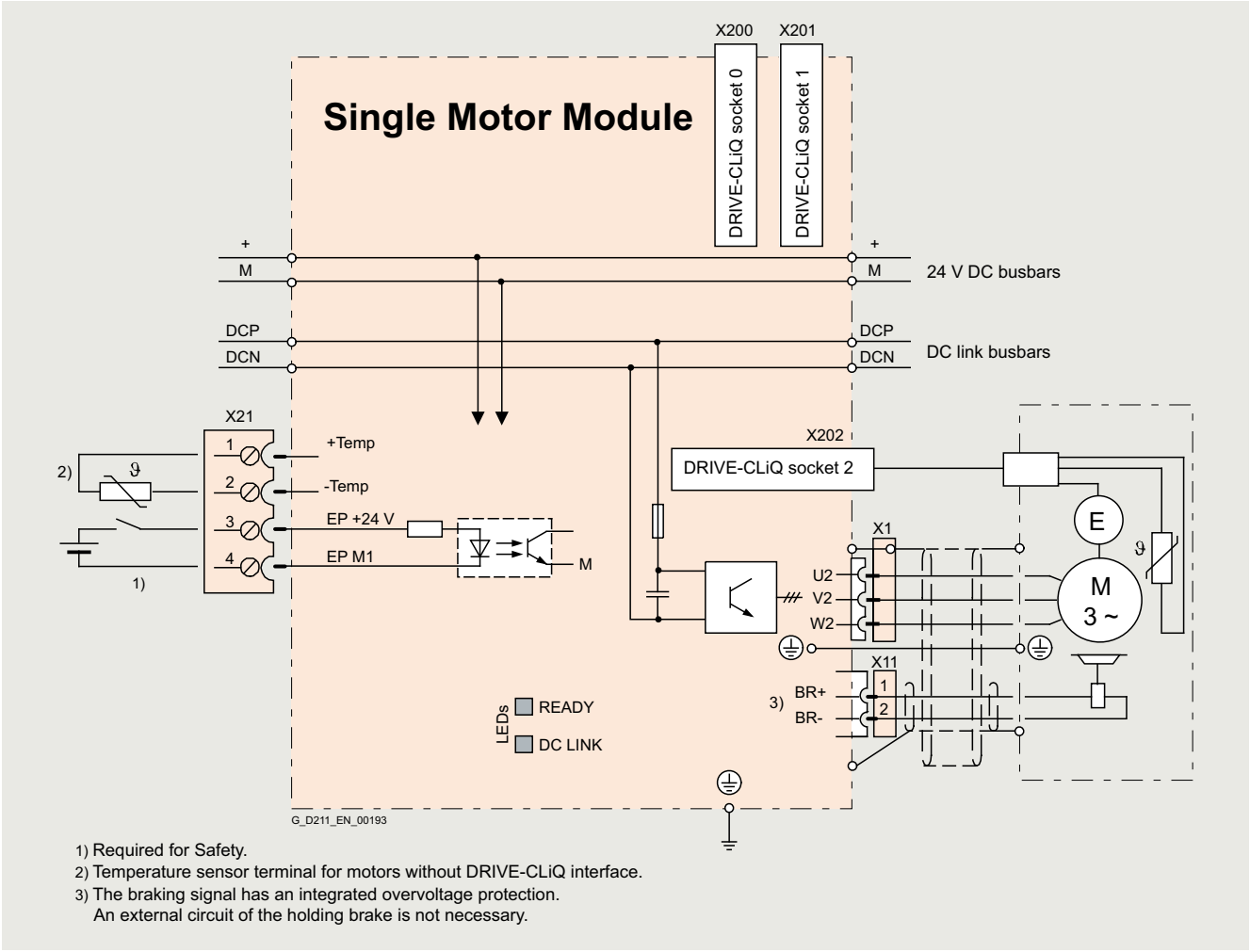

1) Required for Safety.
2) Temperature sensor terminal for motors without DRIVE-CLiQ interface.
3) The braking signal has an integrated overvoltage protection.
An external circuit of the holding brake is not necessary.

Connection example of Single Motor Module in booksize compact format

© Siemens 2024

Technical specifications

	Single Motor Module in booksize compact format 6SL3420-1TE...
DC link voltage (up to 2000 m (6562 ft) above sea level)	510 ... 720 V DC (line voltage 380 ... 480 V 3 AC)
Output frequency	
• Control mode Servo	0 ... 650 Hz [1) 2)]
• Control mode Vector	0 ... 300 Hz [1)]
• Control mode V/f	0 ... 600 Hz [1) 2)]
Electronics power supply	24 V DC -15 %/+20 %
Type of cooling	Internal air cooling (power units with increased air cooling by built-in fan)
Permissible ambient and coolant temperature (air) during operation for line-side components, Line Modules and Motor Modules	0 ... 40 °C (32 ... 104 °F) without derating, > 40 ... 55 °C (104 ... 131 °F), see derating characteristics
Installation altitude	Up to 1000 m (3281 ft) above sea level without derating, > 1000 ... 4000 m (3281 ... 13124 ft) above sea level, see derating characteristics
Declarations of conformity	CE (Low Voltage and EMC Directives)
Certificate of suitability	UL-recognized
Safety Integrated	Safety Integrity Level 2 (SIL 2) acc. to IEC 61508, Performance Level d (PL d) acc. to ISO 13849-1 and Control Category 3 acc. to ISO 13849-1 or EN 954-1 For further information, see section Safety Integrated.

1) Note the correlation between max. output frequency, pulse frequency and current derating. For further information, see section Configuration notes.

2) The output frequency is currently limited to 550 Hz. The specified values apply to systems with license for high output frequency.
For further information, see section Control Units and https://support.industry.siemens.com/cs/document/104020669

© Siemens 2024

Technical specifications

DC link voltage 510 ... 720 V DC		Single Motor Module in booksize compact format			
Internal air cooling		6SL3420-1TE13-0AA1	6SL3420-1TE15-0AA1	6SL3420-1TE21-0AA1	6SL3420-1TE21-8AA1
Output current					
• Rated current I_{rated}	A	3	5	9	18
• Base-load current I_H	A	2.6	4.3	7.7	15.3
• For S6 duty (40 %) I_{S6}	A	3.5	6	10	24
• I_{max}	A	9	15	27	54
Type rating [1]					
• Based on I_{rated}	kW (hp)	1.6 (1.5)	2.7 (3)	4.8 (5)	9.7 (10)
• Based on I_H	kW (hp)	1.4 (1)	2.3 (2.5)	4.1 (5)	8.2 (10)
Rated pulse frequency	kHz	8	8	4	4
DC link current I_d [2]	A	3.6	6	11	22
Current carrying capacity					
• DC link busbars	A	100	100	100	100
• 24 V DC busbars [3]	A	20	20	20	20
DC link capacitance	µF	110	110	110	235
Current requirement At 24 V DC, max.	A	0.85	0.85	0.85	0.85
Power loss	kW	0.07	0.1	0.1	0.18
Cooling air requirement	m^3/s (ft^3/s)	0.008 (0.3)	0.008 (0.3)	0.008 (0.3)	0.008 (0.3)
Sound pressure level L_{pA} (1 m/3.28 ft)	dB	<60	<60	<60	<60
Motor connection U2, V2, W2		Connector (X1) with screw-type terminals	Connector (X1) with screw-type terminals	Connector (X1) with screw-type terminals	Connector (X1) with screw-type terminals
• Conductor cross-section	mm^2	0.2 ... 6	0.2 ... 6	0.2 ... 6	0.2 ... 6
Shield connection		Integrated in connector (X1)	Integrated in connector (X1)	Integrated in connector (X1)	Integrated in connector (X1)
PE connection		M5 screw	M5 screw	M5 screw	M5 screw
Motor brake connection		Connector (X11), 24 V DC, 2 A	Connector (X11), 24 V DC, 2 A	Connector (X11), 24 V DC, 2 A	Connector (X11), 24 V DC, 2 A
Motor cable length, max.					
• Shielded	m (ft)	50 (164)	50 (164)	50 (164)	70 (230)
• Unshielded	m (ft)	75 (246)	75 (246)	75 (246)	100 (328)
Degree of protection		IP20	IP20	IP20	IP20
Dimensions					
• Width	mm (in)	50 (1.97)	50 (1.97)	50 (1.97)	75 (2.95)
• Height	mm (in)	270 (10.63)	270 (10.63)	270 (10.63)	270 (10.63)
• Depth	mm (in)	226 (8.90)	226 (8.90)	226 (8.90)	226 (8.90)
Weight, approx.	kg (lb)	2.7 (5.95)	2.7 (5.95)	2.7 (5.95)	3.4 (7.50)

[1] Rated power of a typical standard asynchronous (induction) motor at 600 V DC link voltage.

[2] Rated DC link current for dimensioning an external DC connection. For DC link current calculation for dimensioning the Line Module, see section Configuration notes.

[3] If, due to a number of Line Modules and Motor Modules being mounted side-by-side, the current carrying capacity exceeds 20 A, an additional 24 V DC connection using a 24 V terminal adapter is required (max. cross-section 6 mm^2, max. fuse protection 20 A).

[4] Power loss of Motor Module at rated power including losses of 24 V DC electronics power supply.

© Siemens 2024

Characteristic curves

Overload capability

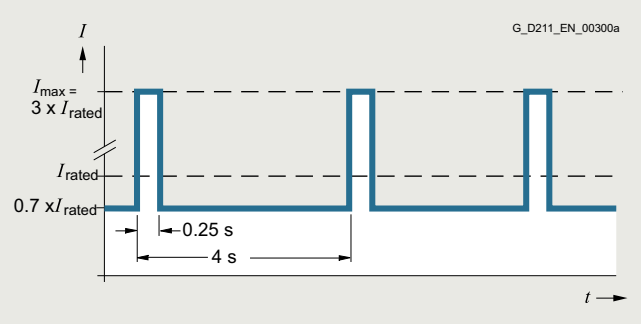

Peak current duty cycle with previous load (300 % overload)

Note:

I_{max} stands for 2 × I_{rated} in the following overload characteristics.

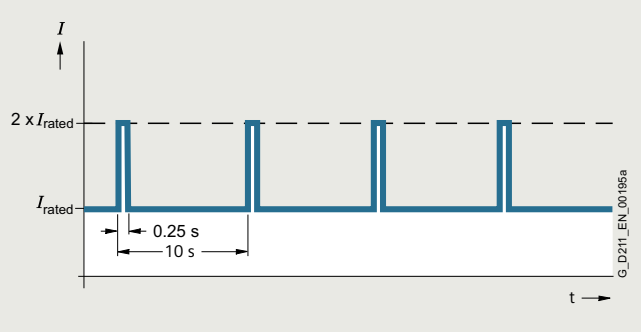

Duty cycle with previous load

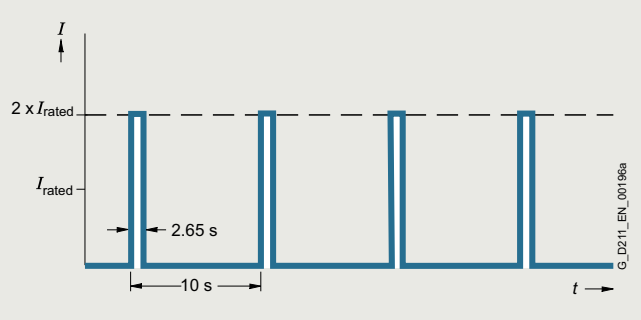

Duty cycle without previous load

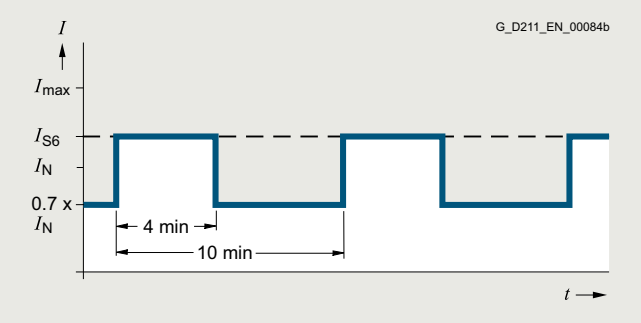

S6 duty cycle with previous load with a duty cycle duration of 600 s

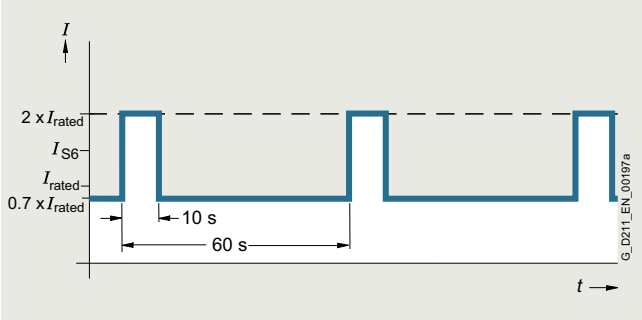

S6 duty cycle with previous load with a duty cycle duration of 60 s

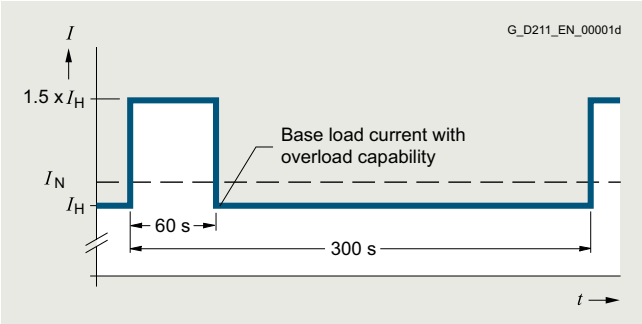

Duty cycle with 60 s overload with a duty cycle duration of 300 s

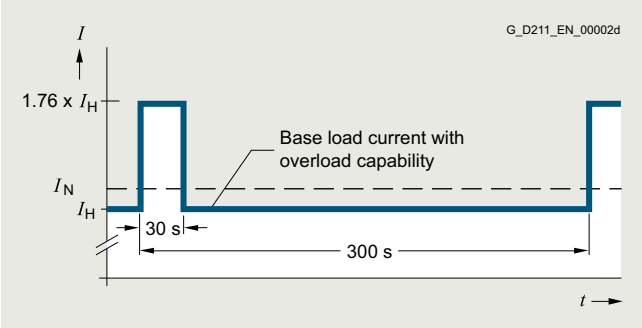

Duty cycle with 30 s overload with a duty cycle duration of 300 s

© Siemens 2024

Characteristic curves

Derating characteristics

3 A and 5 A Single Motor Modules in booksize compact format

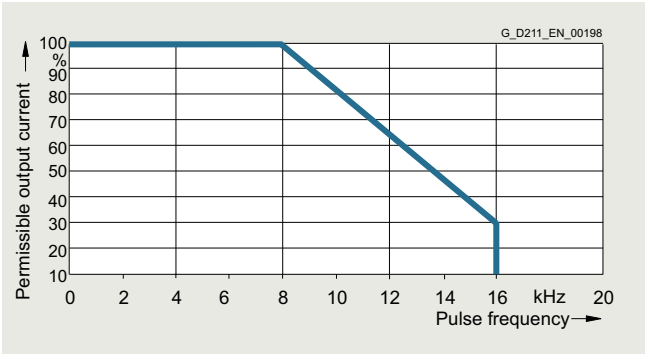

Output current as a function of pulse frequency

9 A and 18 A Single Motor Modules in booksize compact format

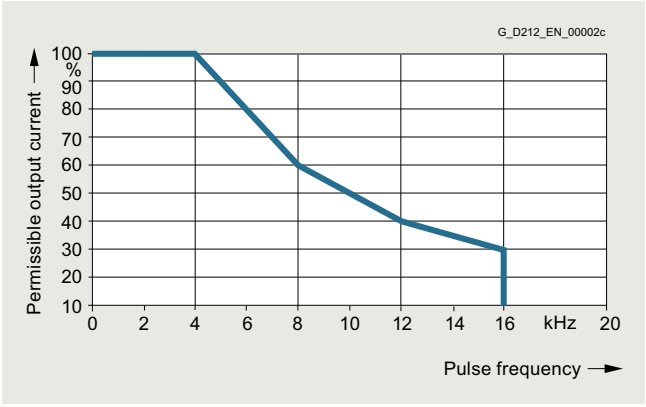

Output current a function of pulse frequency

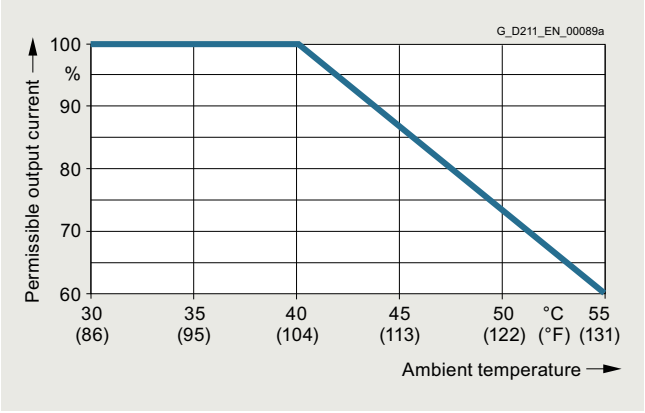

Output current a function of ambient temperature

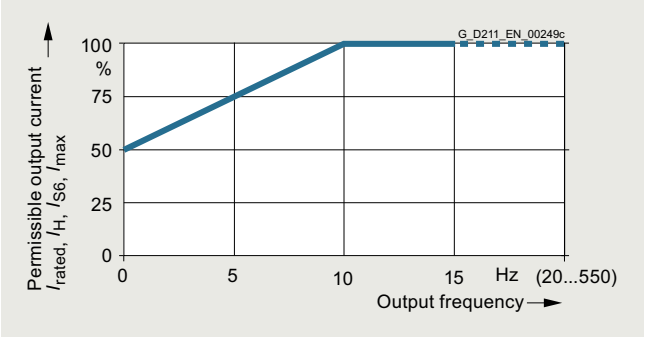

Output current a function of output frequency

Installation altitude

- >1000 ... 4000 m (3281 ... 13124 ft) above sea level
  - Reduction of the output current by 10 % per 1000 m (3281 ft), or
  - Reduction of the ambient temperature by 5 °C (9 °F) per 1000 m (3281 ft)
- >2000 ... 4000 m (6562 ... 13124 ft) above sea level
  - Operation on line supply systems with grounded neutral point, or
  - Operation with an isolating transformer with secondary grounded neutral point

© Siemens 2024

Single Motor Modules in booksize format

Design



Single Motor Module in booksize format C/D type, 3 A to 30 A

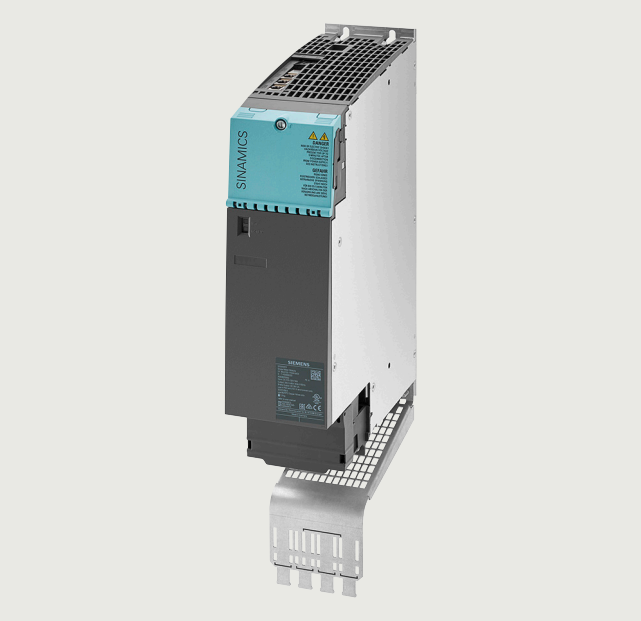

Single Motor Module in booksize format C type, 45 A and 60 A, with optional shield connection plate

The Single Motor Modules in booksize format feature the following connections and interfaces as standard:

- 2 DC link connections via integrated DC link busbars
- 1 electronics power supply connection via integrated 24 V DC bars
- 3 DRIVE-CLiQ sockets
- 1 motor connection via connector X1 for C/D type 3 A to 30 A (not included in the scope of delivery)
- 1 safe standstill input
- 1 safe motor brake control
- 1 temperature sensor input for KTY84-130, Pt1000 or PTC (Pt1000 can be used from firmware V4.7 HF17)
- 2 PE (protective earth) connections – a PE connection is integrated in the connector for C/D types 3 A to 30 A

The status of the Motor Modules is indicated via two multi-color LEDs.

Motor Modules 3 A to 30 A are supplied with a mounted shield connection plate. The associated shield connection clamp can be found in the Terminal Kit supplied. A shield connection plate is optionally available for Motor Modules 45 A to 200 A. On these modules, the motor cable shield can be connected using a shield connection clamp or a hose clip.

© Siemens 2024

Design

Motor Modules in booksize format C/D types, 3 A to 60 A

Rated current	3 A	5 A	9 A	18 A	24 A	30 A	45 A	60 A
	D types							
Single Motor Modules	**3 A / 9 A** 50 mm (1.97 in)	**5 A / 15 A** 50 mm (1.97 in)	**9 A / 27 A** 50 mm (1.97 in)	**18 A / 54 A** 50 mm (1.97 in)	**24 A / 72 A** 50 mm (1.97 in)	**30 A / 90 A** 100 mm (3.94 in)	–	–
Double Motor Modules	**2 x 3 A / 2 x 9 A** 50 mm (1.97 in)	**2 x 5 A / 2 x 15 A** 50 mm (1.97 in)	**2 x 9 A / 2 x 27 A** 50 mm (1.97 in)	**2 x 18 A / 2 x 54 A** 100 mm (3.94 in)	–	–	–	–
			C types					
			Single Motor Modules	**18 A / 36 A** 50 mm (1.97 in)	**24 A / 48 A** 50 mm (1.97 in)	**30 A / 56 A** 100 mm (3.94 in)	**45 A / 90 A** 100 mm (3.94 in)	**60 A / 120 A** 100 mm (3.94 in)
Rated current / maximum current in A 50 mm (1.97 in) or 100 mm (3.94 in) widths			Double Motor Module	**2 x 18 A / 2 x 36 A** 100 mm (3.94 in)	–	–	–	–

G_PM21_EN_00266a

Overview of available Single Motor Modules in booksize format C/D types

- C type: Optimized for continuous load with up to 200 % overload (continuous motion)
- D type: Optimized for highly dynamic, intermittent duty cycles with up to 300 % overload (discontinuous motion)

Devices in booksize format C/D types are optimized for multi-axis applications and are mounted next to one another. The connection for the common DC link is an integral feature. The device is internally air cooled.

The Motor Modules in booksize format C/D types have been developed to be fully compatible with the booksize series regarding spare parts and offer the following advantages:

- The portfolio is extended by Single Motor Modules 18 A (C type), 24 A (C/D types) and 30 A (D type), as well as by a Double Motor Module 18 A (D type).
- The width of Motor Modules 45 A and 60 A has been reduced from 150 mm to 100 mm, which makes a significant contribution toward saving space in the cabinet
- The amount of space required beneath the Motor Modules has been reduced thanks to improvements in the design and a new motor plug connector
- With the new motor plug connector design, the brake conductors and the PE connection are integrated directly in the plug connector
- The motor connections on the Double Motor Module are located side by side, resulting in a significantly improved level of accessibility
- The fan can be simply replaced without having to remove the Motor Module

The signal cable shield can be connected to the Motor Module by means of a shield connection clamp, e.g. Weidmüller type KLBUE 3-8 SC.

The scope of delivery of the Motor Modules includes:

- DRIVE-CLiQ cable appropriate to the width of the Motor Module for connection to the adjacent Motor Module, length = width of Motor Module + 0.06 m (0.20 ft)
- Jumper for connecting the 24 V DC busbar to the adjacent Motor Module
- Connector X21
- Connector X11 for the motor brake connection (for Motor Modules 45 A to 200 A)
- 2 blanking plugs for sealing unused DRIVE-CLiQ sockets
- Fan insert for the 132 A and 200 A Motor Modules (the voltage for the fan insert is supplied by the Motor Module)
- 1 shield connection plate with shield connection clamp (for Motor Modules 3 A to 30 A)
- 1 set of warning labels in 36 languages

© Siemens 2024

Single Motor Modules in booksize format

Selection and ordering data

Rated output current	Type rating [2]	Single Motor Module in booksize format		
			C type	**D type**
A	kW (hp)	Article No.	Article No.	Article No.
DC link voltage 510 ... 720 V DC				
3	1.6 (1.5)	–	–	**6SL3120-1TE13-0AD0**
5	2.7 (3)	–	–	**6SL3120-1TE15-0AD0**
9	4.8 (5)	–	–	**6SL3120-1TE21-0AD0**
18	9.7 (10)	–	**6SL3120-1TE21-8AC0**	**6SL3120-1TE21-8AD0**
24	12.9 (15)	–	**6SL3120-1TE22-4AC0**	**6SL3120-1TE22-4AD0**
30	16 (20)	–	**6SL3120-1TE23-0AC0**	**6SL3120-1TE23-0AD0**
45	24 (30)	–	**6SL3120-1TE24-5AC0**	–
60	32 (40)	–	**6SL3120-1TE26-0AC0**	–
85	46 (60)	**6SL3120-1TE28-5AA3**	–	–
132	71 (100)	**6SL3120-1TE31-3AA3**	–	–
200	107 (150)	**6SL3120-1TE32-0AA4**	–	–

Description	Article No.
Accessories	
Power connector (X1) with screw-type terminal At Motor Module end, with screw-type terminals 1.5 ... 6 mm² For Motor Modules in booksize format C/D types with rated output current of 3 ... 30 A	**6SL3162-2MA00-0AC0**
Power connector (X1) with push-in connection with snap-in actuators At Motor Module end, with spring-loaded terminals 1.5 ... 6 mm² For Motor Modules in booksize format C/D types with rated output current of 3 ... 30 A	**6SL3162-2MB00-0AC0**
Shield connection plate For Motor Modules in booksize format with a width of	
• 100 mm (3.94 in) (Motor Modules in booksize format C type 45 A/60 A)	**6SL3162-1AD00-0AA0**
• 200 mm (7.87 in)	**6SL3162-1AH01-0AA0**
• 300 mm (11.81 in)	**6SL3162-1AH00-0AA0**
Shield connection clamp For Motor Modules in booksize format C type with rated output current of 45 A/60 A	
• Diameter 3 ... 14 mm (0.12 ... 0.55 in)	**8WH9130-0MA00**
• Diameter 20 ... 35 mm (0.79 ... 1.38 in)	**8WH9130-0PA00**
DC link rectifier adapter For direct infeed of DC link voltage	
• Screw-type terminals 0.5 ... 10 mm² For Motor Modules in booksize format with a width of 50 mm (1.97 in) or 100 mm (3.94 in) [1]	**6SL3162-2BD00-0AA0**
• Screw-type terminals 35 ... 95 mm² For Motor Modules in booksize format with a width of 200 mm or 300 mm (7.87 in and 11.81 in)	**6SL3162-2BM00-0AA0**
DC link adapter (2 units) For multi-tier configuration Screw-type terminals 35 ... 95 mm² For all Line Modules and Motor Modules in booksize format	**6SL3162-2BM01-0AA0**
24 V terminal adapter For all Line Modules and Motor Modules in booksize format	**6SL3162-2AA00-0AA0**
Reinforced DC link bridge 6 mm (0.24 in) For replacement of the DC link bridge in Single Motor Modules 3 A ... 24 A Double Motor Modules 2 x 3 A ... 2 x 9 A	**6SL3162-2BB00-0AA0**

Description	Article No.
Accessories for re-ordering	
24 V jumper For connection of the 24 V busbars (for booksize format)	**6SL3162-2AA01-0AA0**
Terminal Kit for Motor Modules C/D types, 3 A to 30 A (24 V jumper, plug-in terminals, DRIVE-CLiQ jumper (length = module width + 60 mm (2.36 in)), shield connection clamp with pressure plate, dust protection blanking plugs, coding plug for X1) For Motor Modules with a width of	
• 50 mm (1.97 in), C/D type	**6SL3162-8AC00-0AA0**
• 100 mm (3.94 in), C/D type	**6SL3162-8BE00-0AA0**
Terminal Kit for Motor Modules 45 A to 200 A (24 V jumper, plug-in terminals, DRIVE-CLiQ jumper (length = module width + 60 mm (2.36 in)), dust protection blanking plugs) For Motor Modules with a width of	
• 100 mm (3.94 in), C type	**6SL3162-8BG00-0AA0**
• 200 mm (7.87 in)	**6SL3162-8DH00-0AA0**
• 300 mm (11.81 in)	**6SL3162-8EM00-0AA0**
Shield connection clamp For Single Motor Modules in booksize format C/D types with rated output current of 3 A to 30 A	**6SL3162-0AQ00-0AA0**
Warning labels in 36 languages This label set can be glued over the standard English or German labels to provide warnings in other languages. One set of labels is supplied with the devices. One sign in each of the following languages is provided in each set: BG, CZ, DE, DK, EE, ES, FI, FR, GB, GR, HU, IE, IS, IT, LT, LV, MT, NL, NO, PL, PT, RO, RU, SE, SI, SK, TR, CN, ID, IL, IR, JP, KR, SA, TH, TW	**6SL3166-3AB00-0AA0**
Dust protection blanking plugs (50 units) For DRIVE-CLiQ port	**6SL3066-4CA00-0AA0**
Replacement fan For Motor Modules with a width of	
• 50 mm (1.97 in), C/D type (3 A ... 18 A)	**6SL3162-0AN00-0AA0**
• 50 mm (1.97 in), C/D type (24 A)	**6SL3162-0AS00-0AA0**
• 100 mm (3.94 in), C/D type (30 A)	**6SL3162-0AP00-0AA0**
• 100 mm (3.94 in), C type (45 A and 60 A)	**6SL3162-0AT00-0AA0**
• 200 mm (7.87 in) (85 A)	**6SL3162-0AH00-0AA1**
• 300 mm (11.81 in) (132 A and 200 A)	**6SL3162-0AM00-0AA0**

[1] **NOTICE**: The DC link rectifier adapter must **not** be used for Motor Modules C type, 45 A and 60 A.
[2] Nominal hp ratings based on asynchronous (induction) motors. Match the motor nameplate current for specific sizing.

© Siemens 2024

Integration

The Single Motor Module receives its control information via DRIVE-CLiQ from:

- CU320-2 Control Unit
- SINUMERIK 840D sl
- SINUMERIK ONE
- SINUMERIK MC
- SIMOTION D

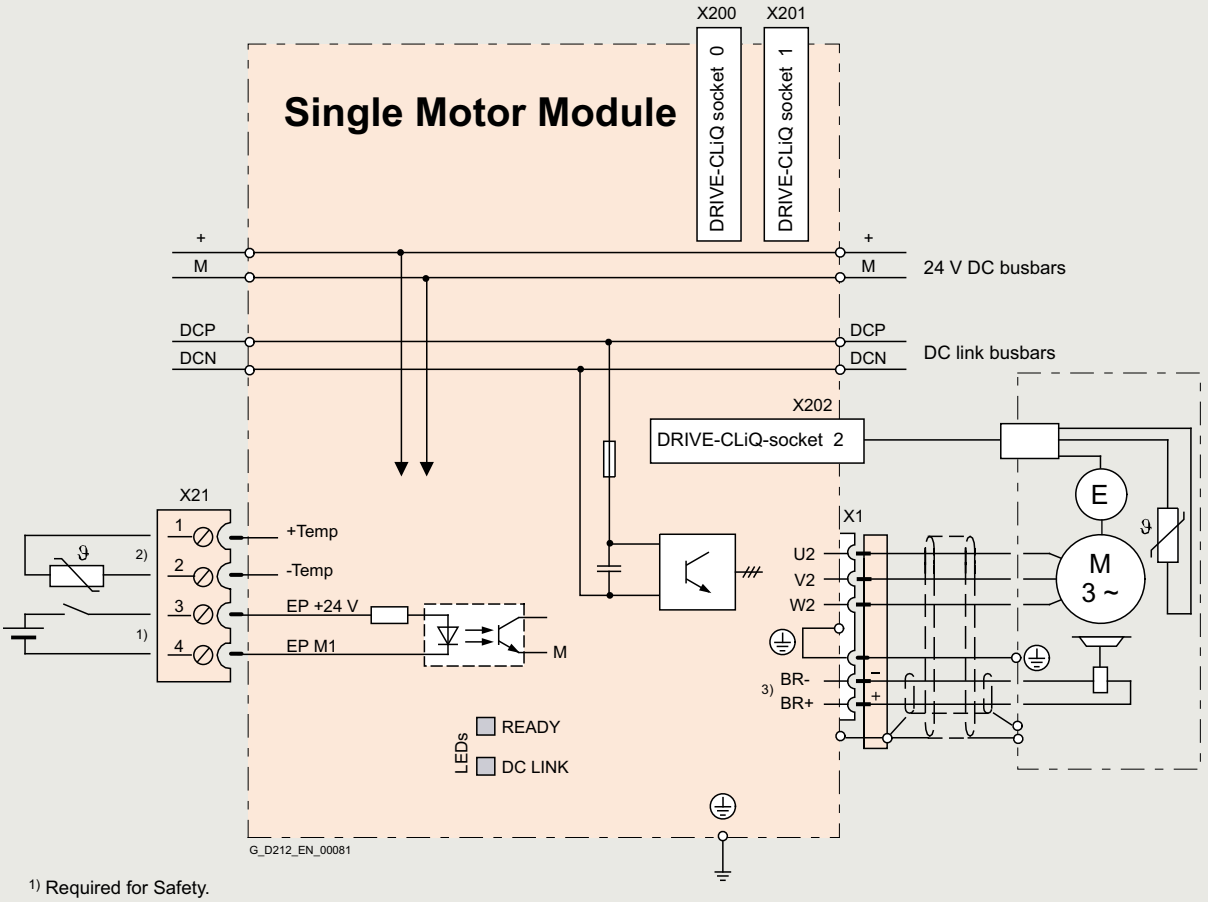

1) Required for Safety.
2) Temperature sensor terminal for motors without DRIVE-CLiQ interface.
3) The braking signal has an integrated overvoltage protection.
An external circuit of the holding brake is not necessary.

Connection example of Single Motor Modules in booksize format C/D types, 3 A to 30 A

© Siemens 2024

Integration

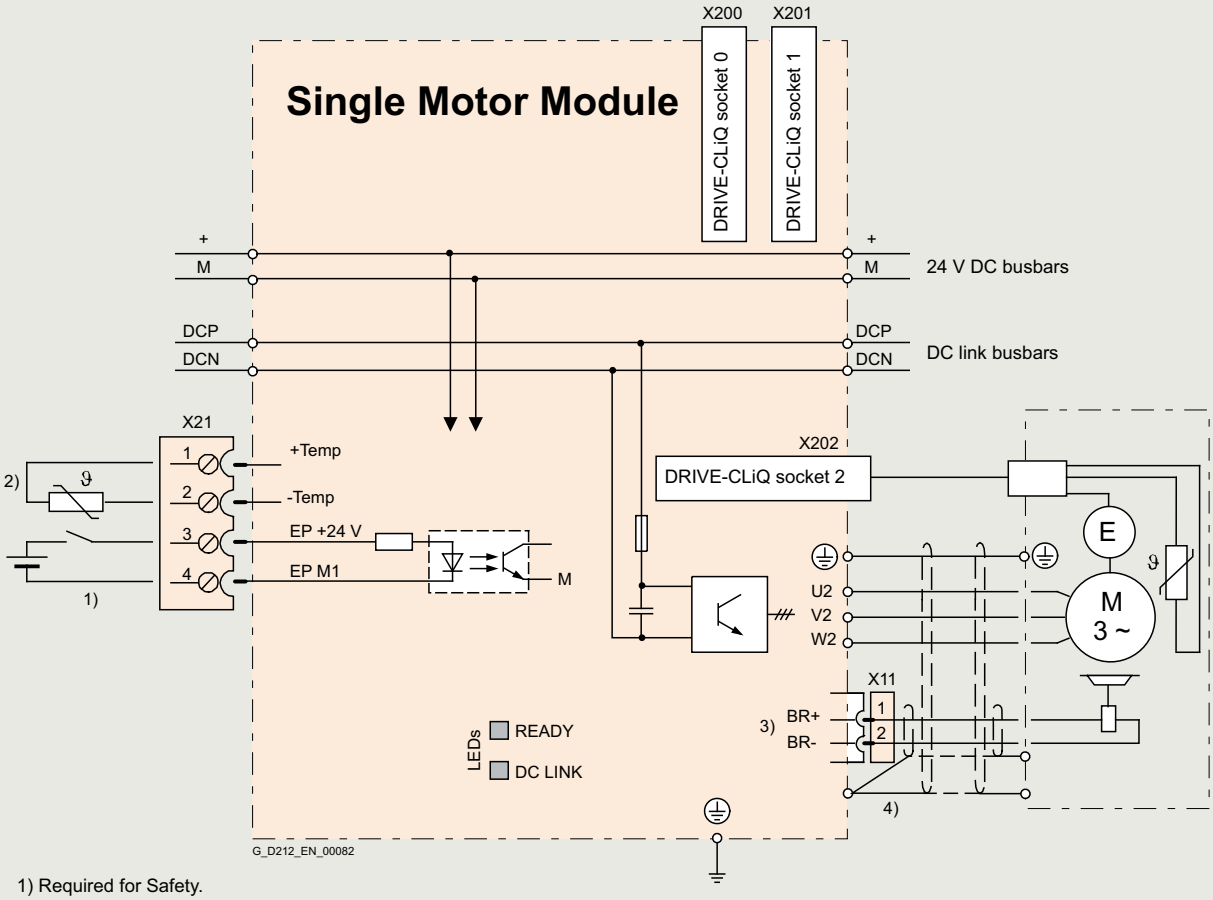

1) Required for Safety.
2) Temperature sensor terminal for motors without DRIVE-CLiQ interface.
3) The braking signal has an integrated overvoltage protection.
An external circuit of the holding brake is not necessary.
4) Contacting via shield plate.

Connection example of Single Motor Modules in booksize format C type, 45 A and 60 A

© Siemens 2024

Integration

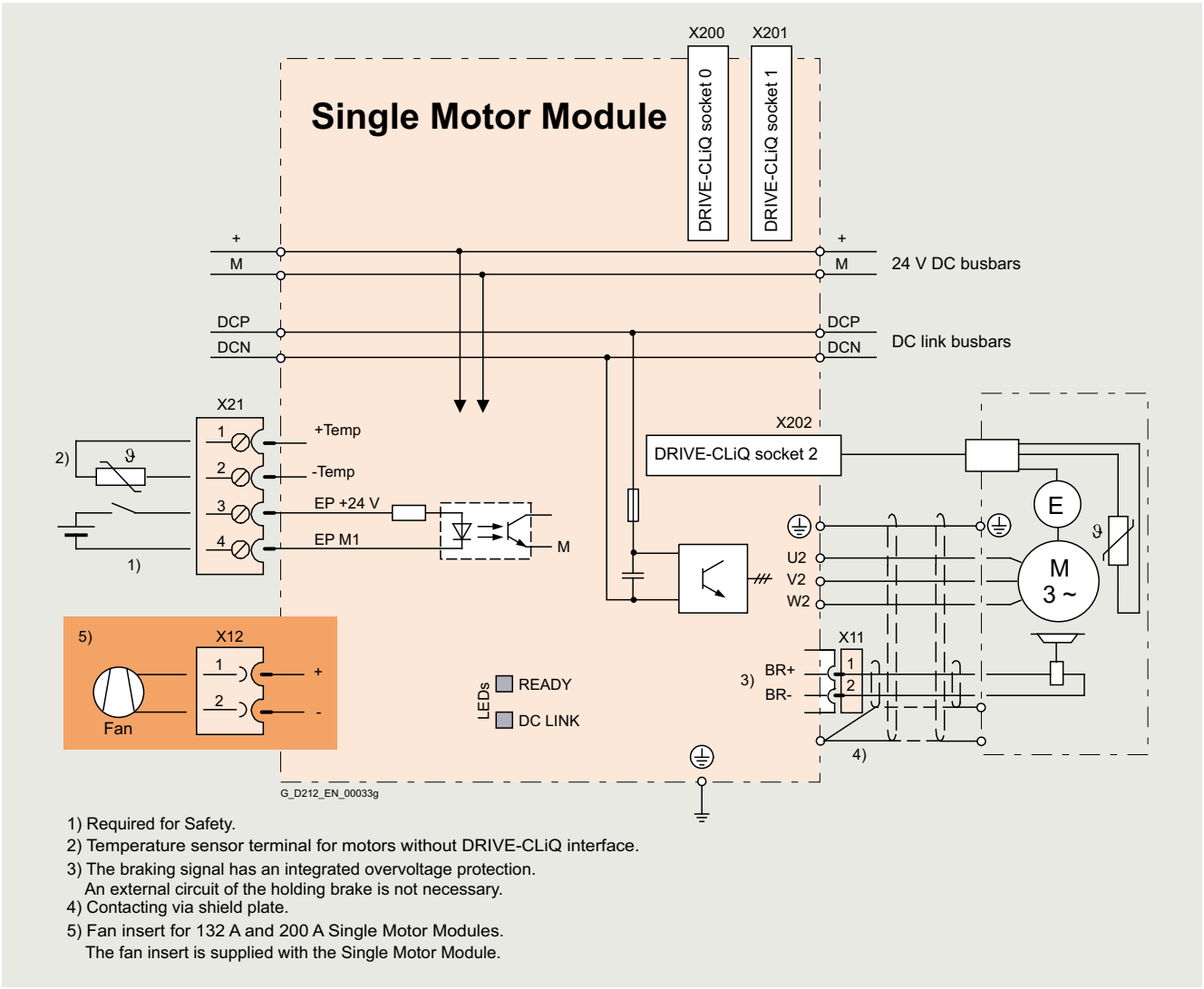

1) Required for Safety.
2) Temperature sensor terminal for motors without DRIVE-CLiQ interface.
3) The braking signal has an integrated overvoltage protection.
An external circuit of the holding brake is not necessary.
4) Contacting via shield plate.
5) Fan insert for 132 A and 200 A Single Motor Modules.
The fan insert is supplied with the Single Motor Module.

Connection example of Single Motor Modules in booksize format, 85 A to 200 A

© Siemens 2024

Technical specifications

	Single Motor Module in booksize format 6SL3120-1TE...
DC link voltage (up to 2000 m (6562 ft) above sea level)	510 ... 720 V DC (line voltage 380 ... 480 V 3 AC)
Output frequency	
• Control mode Servo	0 ... 650 Hz [1) 2) 3)]
• Control mode Vector	0 ... 300 Hz [2)]
• Control mode V/f	0 ... 600 Hz [2) 3)]
Electronics power supply	24 V DC -15 %/+20 %
Type of cooling	Internal air cooling (power units with increased air cooling by built-in fan)
Permissible ambient and coolant temperature (air) during operation for line-side components, Line Modules and Motor Modules	0 ... 40 °C (32 ... 104 °F) without derating, >40 ... 55 °C (104 ... 131 °F), see derating characteristics
Installation altitude	Up to 1000 m (3281 ft) above sea level without derating, > 1000 ... 4000 m (3281 ... 13124 ft) above sea level, see derating characteristics
Declarations of conformity	CE (Low-Voltage and EMC Directives)
Certificate of suitability	cULus
Safety Integrated	Safety Integrity Level 2 (SIL 2) according to IEC 61508, Performance Level d (PL d) and Category 3 according to ISO 13849-1 For further information, see section Safety Integrated.

[1)] At rated output current (max. output frequency 1300 Hz for 62.5 µs current control cycle, 8 kHz pulse frequency, 60 % permissible output current).

[2)] Note the correlation between max. output frequency, pulse frequency and current derating.
For further information, see section Configuration notes.

[3)] The output frequency is currently limited to 550 Hz. The specified values apply to systems with license for high output frequency.
For further information, see section Control Units and https://support.industry.siemens.com/cs/document/104020669

© Siemens 2024

Technical specifications

DC link voltage 510 ... 720 V DC		Single Motor Module in booksize format			
Internal air cooling C type	6SL3120-...	–	–	–	1TE21-8AC0
Internal air cooling D type	6SL3120-...	1TE13-0AD0	1TE15-0AD0	1TE21-0AD0	1TE21-8AD0
Output current					
• Rated current I_{rated}	A	**3**	**5**	**9**	**18**
• Base-load current I_H	A	2.6	4.3	7.7	15.3
• For S6 duty (40 %) I_{S6}	A	4	6.7	12	24
• I_{max}					
- C type	A	–	–	–	36
- D type	A	9	15	27	54
Type rating [1]					
• Based on I_{rated}	kW (hp)	1.6 (1.5)	2.7 (3)	4.8 (5)	9.7 (10)
• Based on I_H	kW (hp)	1.4 (1)	2.3 (2.5)	4.1 (5)	8.2 (10)
Rated pulse frequency	kHz	4	4	4	4
DC link current I_d [2]	A	3.6	6	11	22
Current carrying capacity					
• DC link busbars	A	100 [3]	100 [3]	100 [3]	100 [3]
• 24 V DC busbars [4]	A	20	20	20	20
DC link capacitance	µF	110	110	110	220
Current requirement At 24 V DC, max.	A	0.75	0.75	0.75	0.75
Power loss [5] typ. [6]/max.	kW	0.03/0.05	0.04/0.07	0.06/0.1	0.14/0.19
Cooling air requirement	m^3/s (ft^3/s)	0.009 (0.32)	0.009 (0.32)	0.009 (0.32)	0.009 (0.32)
Sound pressure level L_{pA} (1 m)	dB	<60	<60	<60	<60
Motor connection U2, V2, W2		Plug-in connector (X1) [7], 1.5 ... 6 mm^2	Plug-in connector (X1) [7], 1.5 ... 6 mm^2	Plug-in connector (X1) [7], 1.5 ... 6 mm^2	Plug-in connector (X1) [7], 1.5 ... 6 mm^2
PE connection		M5 screw	M5 screw	M5 screw	M5 screw
Motor brake connection		Integrated into the plug-in motor connector (X1), 24 V DC, 2 A	Integrated into the plug-in motor connector (X1), 24 V DC, 2 A	Integrated into the plug-in motor connector (X1), 24 V DC, 2 A	Integrated into the plug-in motor connector (X1), 24 V DC, 2 A
Motor cable length, max.					
• Shielded	m (ft)	50 (164)	50 (164)	50 (164)	70 (230)
• Unshielded	m (ft)	75 (246)	75 (246)	75 (246)	100 (328)
Degree of protection		IP20	IP20	IP20	IP20
Dimensions					
• Width	mm (in)	50 (1.97)	50 (1.97)	50 (1.97)	50 (1.97)
• Height	mm (in)	380 (14.96)	380 (14.96)	380 (14.96)	380 (14.96)
• Depth	mm (in)	270 (10.63)	270 (10.63)	270 (10.63)	270 (10.63)
Weight, approx.	kg (lb)	4.6 (10.1)	4.6 (10.1)	4.6 (10.1)	4.6 (10.1)

[1] Rated power of a typical standard asynchronous (induction) motor at 600 V DC link voltage.

[2] Rated DC link current for dimensioning an external DC connection.

[3] With reinforced DC link bridges, (Article No. 6SL3162-2BB00-0AA0) 200 A is possible (Accessories).

[4] If, due to a number of Line Modules and Motor Modules being mounted side by side, the current carrying capacity exceeds 20 A, an additional 24 V DC connection using a 24 V terminal adapter is required (max. cross-section 6 mm^2, max. fuse protection 20 A).

[5] Power loss of Motor Module at rated power including losses of 24 V DC electronics power supply.

[6] At max. motor cable length 30 m (98.43 ft), pulse frequency 4 kHz and DC link voltage 540 ... 600 V.

[7] Connector not included in scope of delivery, see Accessories.

© Siemens 2024

Technical specifications

DC link voltage 510 ... 720 V DC		Single Motor Module in booksize format			
Internal air cooling C type	6SL3120-...	1TE22-4AC0	1TE23-0AC0	1TE24-5AC0	1TE26-0AC0
Internal air cooling D type	6SL3120-...	1TE22-4AD0	1TE23-0AD0	–	–
Output current					
• Rated current I_{rated}	A	**24**	**30**	**45**	**60**
• Base-load current I_H	A	20.4	25.5	38	51
• For S6 duty (40 %) I_{S6}	A	32	40	60	80
• I_{max}					
- C type	A	48	56	90 [8]	120 [8]
- D type	A	72	90	–	–
Type rating [1]					
• Based on I_{rated}	kW (hp)	12.9 (15)	16 (20)	24 (30)	32 (40)
• Based on I_H	kW (hp)	10.9 (15)	13.7 (18)	21 (25)	28 (40)
Rated pulse frequency	kHz	4	4	4	4
DC link current I_d [2]	A	29	36	54	72
Current carrying capacity					
• DC link busbars	A	100 [3]	200	200	200
• 24 V DC busbars [4]	A	20	20	20	20
DC link capacitance	µF	390	705	1230	1410
Current requirement At 24 V DC, max.	A	1.0	0.8	0.9	0.9
Power loss [5] typ. [6]/max.	kW	0.19/0.20	0.26/0.31	0.34/0.36	0.46/0.48
Cooling air requirement	m^3/s (ft^3/s)	0.0147 (0.52)	0.0155 (0.55)	0.0233 (0.82)	0.0233 (0.82)
Sound pressure level L_{pA} (1 m)	dB	<68	<60	<71	<71
Motor connection U2, V2, W2		Plug-in connector (X1) [7], 1.5 ... 6 mm^2	Plug-in connector (X1) [7], 1.5 ... 6 mm^2	M6 screw studs (X1)	M6 screw studs (X1)
Shield connection		At the shield connection plate of the Motor Modules	At the shield connection plate of the Motor Modules	See Accessories	See Accessories
PE connection		M5 screw	M5 screw	M5 screw	M5 screw
Motor brake connection		Integrated into the plug-in motor connector (X1), 24 V DC, 2 A	Integrated into the plug-in motor connector (X1), 24 V DC, 2 A	Plug-in connector (X11), 24 V DC, 2 A	Plug-in connector (X11), 24 V DC, 2 A
Motor cable length, max.					
• Shielded	m (ft)	50 (164)	100 (328)	100 (328)	100 (328)
• Unshielded	m (ft)	75 (246)	150 (492)	150 (492)	150 (492)
Degree of protection		IP20	IP20	IP20	IP20
Dimensions					
• Width	mm (in)	50 (1.97)	100 (3.94)	100 (3.94)	100 (3.94)
• Height	mm (in)	380 (14.96)	380 (14.96)	380 (14.96)	380 (14.96)
• Depth	mm (in)	270 (10.63)	270 (10.63)	270 (10.63)	270 (10.63)
Weight, approx.	kg (lb)	4.7 (10.4)	7.9 (17.4)	8.5 (18.7)	8.6 (19)

[1] Rated power of a typical standard asynchronous (induction) motor at 600 V DC link voltage.

[2] Rated DC link current for dimensioning an external DC connection.

[3] With reinforced DC link bridges, (Article No. 6SL3162-2BB00-0AA0) 200 A is possible (Accessories).

[4] If, due to a number of Line Modules and Motor Modules being mounted side by side, the current carrying capacity exceeds 20 A, an additional 24 V DC connection using a 24 V terminal adapter is required (max. cross-section 6 mm^2, max. fuse protection 20 A).

[5] Power loss of Motor Module at rated power including losses of 24 V DC electronics power supply.

[6] At max. motor cable length 30 m (98.43 ft), pulse frequency 4 kHz and DC link voltage 540 ... 600 V.

[7] Connector not included in scope of delivery, see Accessories.

[8] The specified values are valid as from firmware V4.8.

© Siemens 2024

Technical specifications

DC link voltage 510 ... 720 V DC		Single Motor Module in booksize format		
Internal air cooling	6SL3120-...	1TE28-5AA3	1TE31-3AA3	1TE32-0AA4
Output current				
• Rated current I_{rated}	A	**85**	**132**	**200**
• Base-load current I_H	A	68	105	141
• For S6 duty (40 %) I_{S6}	A	110	150	230
• I_{max}	A	141	210	282
Type rating [1]				
• Based on I_{rated}	kW (hp)	46 (60)	71 (100)	107 (150)
• Based on I_H	kW (hp)	37 (50)	57 (75)	76 (100)
Rated pulse frequency	kHz	4	4	4
DC link current I_d [2]	A	102	158	200
Current carrying capacity				
• DC link busbars	A	200	200	200
• 24 V DC busbars [3]	A	20	20	20
DC link capacitance	µF	1880	2820	3995
Current requirement At 24 V DC, max.	A	1.5	1.5	1.5
Power loss [4] typ. [5]/max.	kW	0.77/0.79	1.26/1.29	2.03/2.09
Cooling air requirement	m^3/s (ft^3/s)	0.044 (1.6)	0.144 (5.1)	0.144 (5.1)
Sound pressure level L_{pA} (1 m)	dB	<60	<73	<73
Motor connection U2, V2, W2		M8 screw studs (X1)	M8 screw studs (X1)	M8 screw studs (X1)
• Conductor cross-section, max.	mm^2	2.5 ... 95, 2 × 35	2.5 ... 120, 2 × 50	2.5 ... 120, 2 × 50
Shield connection		See Accessories	See Accessories	See Accessories
PE connection		M6 screw	M8 screw	M8 screw
Motor brake connection		Plug-in connector (X11), 24 V DC, 2 A	Plug-in connector (X11), 24 V DC, 2 A	Plug-in connector (X11), 24 V DC, 2 A
Motor cable length, max.				
• Shielded	m (ft)	100 (328)	100 (328)	100 (328)
• Unshielded	m (ft)	150 (492)	150 (492)	150 (492)
Degree of protection		IP20	IP20	IP20
Dimensions				
• Width	mm (in)	200 (7.87)	300 (11.81)	300 (11.81)
• Height	mm (in)	380 (14.96)	380 (14.96)	380 (14.96)
- With fan [6]	mm (in)	–	629 (24.76)	629 (24.76)
• Depth	mm (in)	270 (10.63)	270 (10.63)	270 (10.63)
Weight, approx.	kg (lb)	14.8 (32.6)	21 (46.3)	21 (46.3)

[1] Rated power of a typical standard asynchronous (induction) motor at 600 V DC link voltage.

[2] Rated DC link current for dimensioning an external DC connection.

[3] If, due to a number of Line Modules and Motor Modules being mounted side-by-side, the current carrying capacity exceeds 20 A, an additional 24 V DC connection using a 24 V terminal adapter is required (max. cross-section 6 mm^2, max. fuse protection 20 A).

[4] Power loss of Motor Module at rated power including losses of 24 V DC electronics power supply.

[5] At max. motor cable length 30 m (98.43 ft), pulse frequency 4 kHz and DC link voltage 540 ... 600 V.

[6] The fan is supplied with the Motor Module and must be installed before the Motor Module is commissioned.

© Siemens 2024

Characteristic curves

Overload capability

Motor Modules in booksize format C type 3 A to 60 A and booksize format 85 A to 200 A

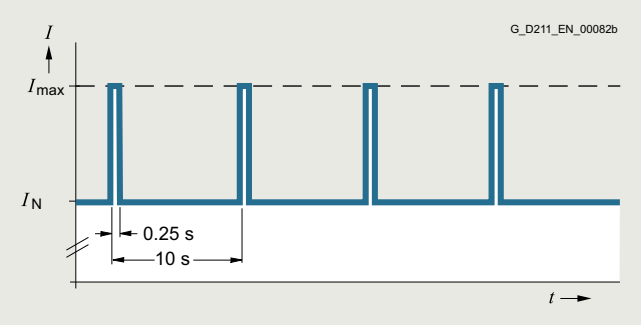

Duty cycle with previous load

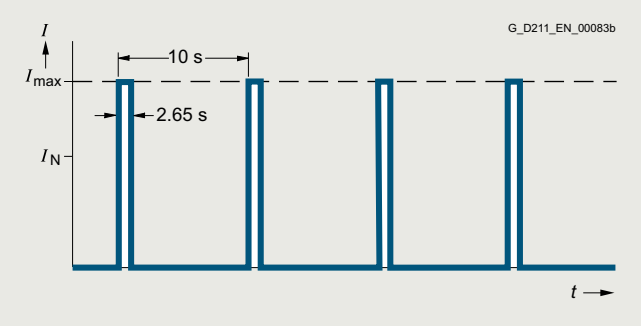

Duty cycle without previous load

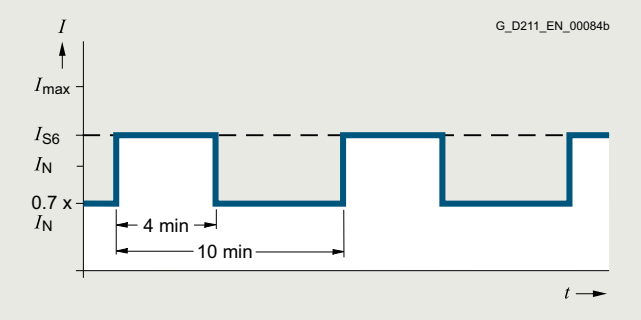

S6 duty cycle with previous load with a duty cycle duration of 600 s

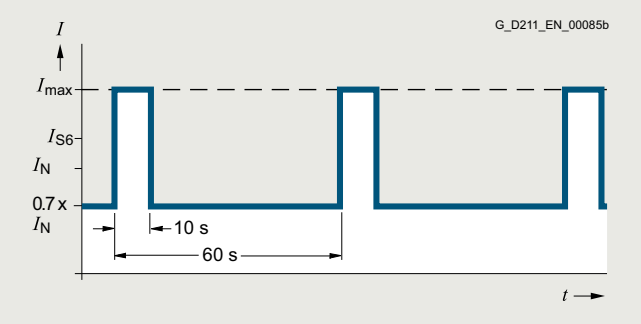

S6 duty cycle with previous load with a duty cycle duration of 60 s

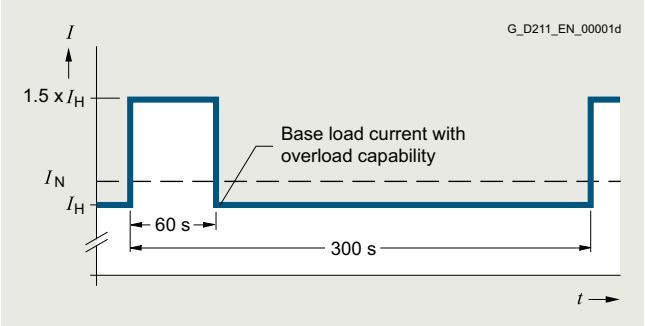

Duty cycle with 60 s overload with a duty cycle duration of 300 s

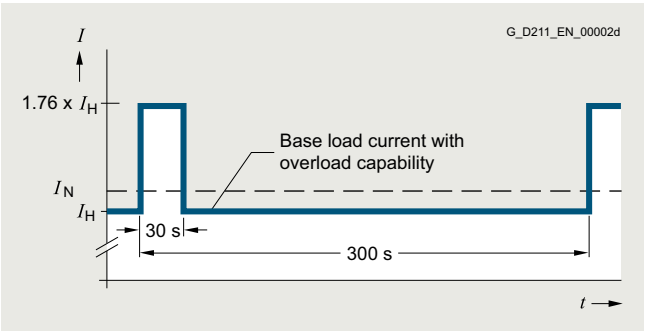

Duty cycle with 30 s overload with a duty cycle duration of 300 s

© Siemens 2024

Characteristic curves

Motor Modules in booksize format D type, 3 A to 30 A

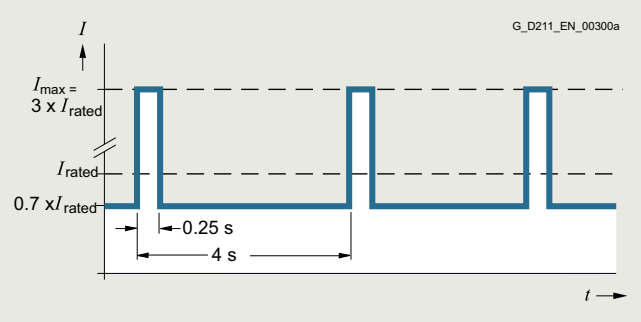

Peak current duty cycle with previous load (300 % overload)

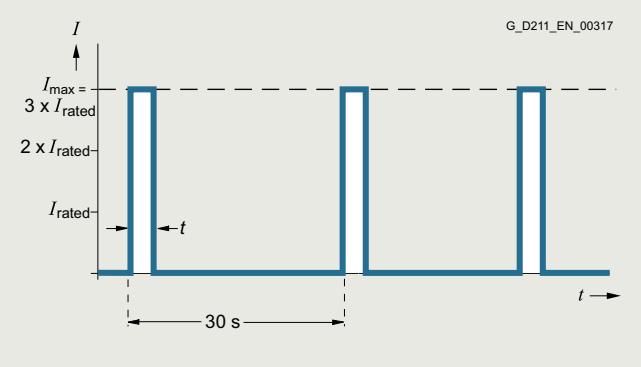

Peak current duty cycle without previous load (300 % overload)

Single Motor Module	Time t at I_{max}
3 A	0.5 s
5 A	0.5 s
9 A	0.5 s
18 A	1.25 s
24 A	1.25 s
30 A	3 s

Note:

The duty cycle shown above is not permissible for a pulse frequency of 16 kHz. The current must be derated for a pulse frequency of 8 kHz.

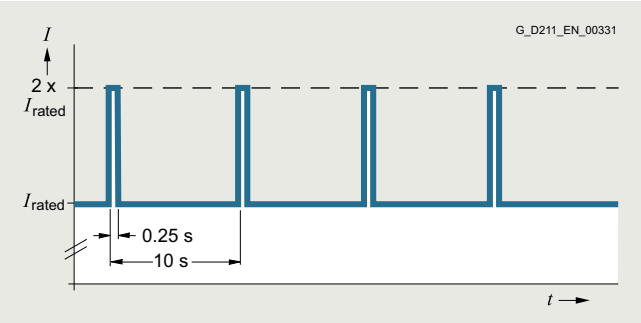

Duty cycle with previous load

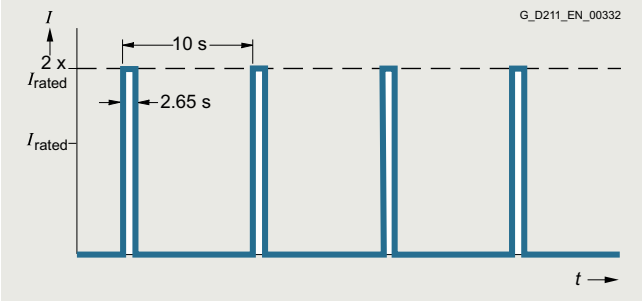

Duty cycle without previous load

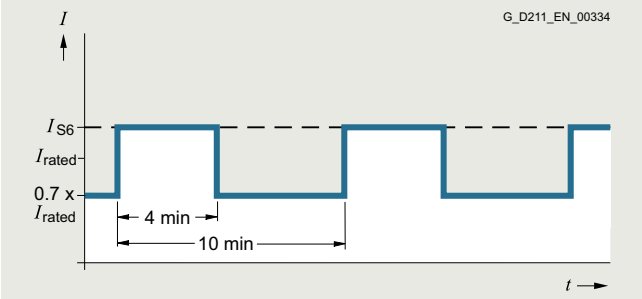

S6 duty cycle with previous load with a duty cycle duration of 600 s

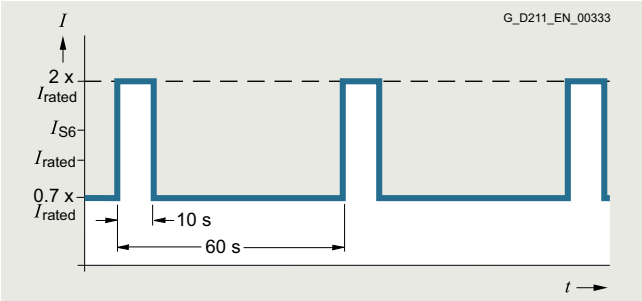

S6 duty cycle with previous load with a duty cycle duration of 60 s

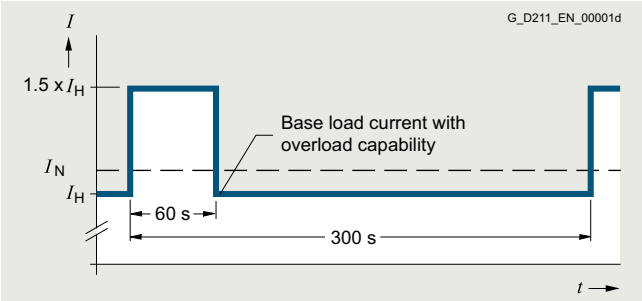

Duty cycle with 60 s overload with a duty cycle duration of 300 s

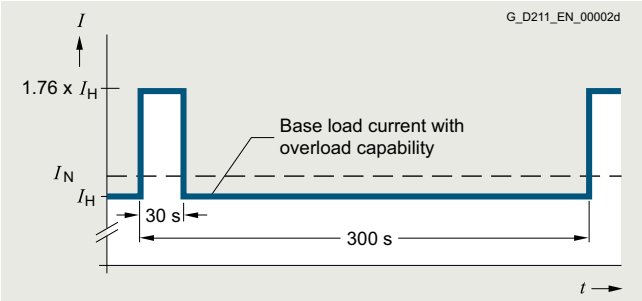

Duty cycle with 30 s overload with a duty cycle duration of 300 s

© Siemens 2024

Characteristic curves

Derating characteristics

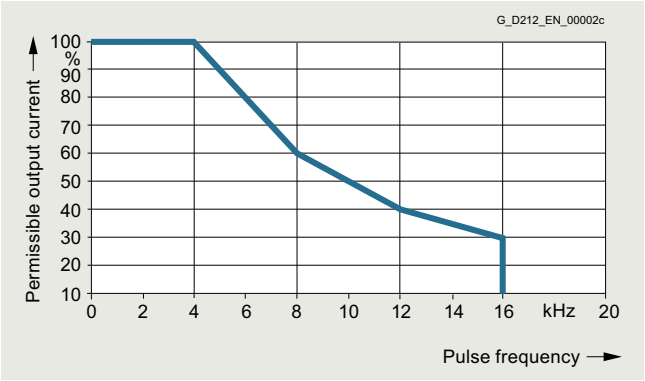

Output current as a function of pulse frequency
(Single Motor Modules, 3 A to 132 A)

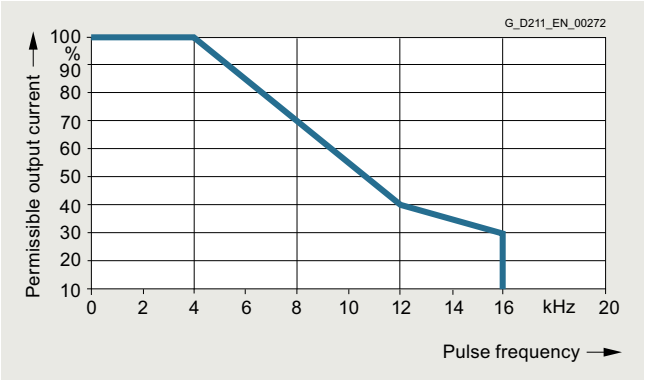

Output current as a function of pulse frequency
(Single Motor Modules, 200 A)

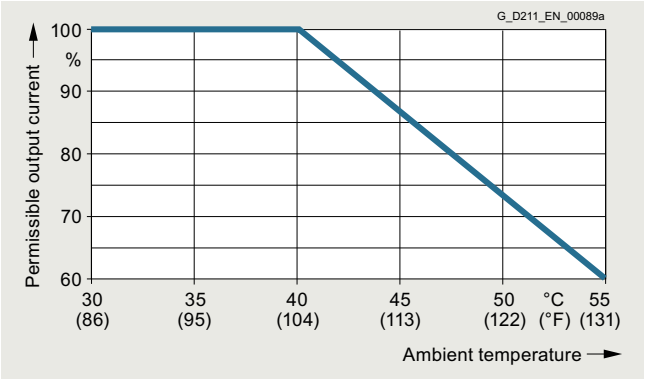

Output current as a function of ambient temperature

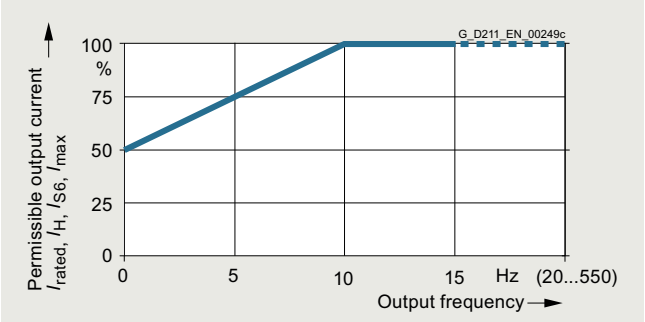

Output current as a function of output frequency
(Single Motor Modules in booksize format, 85 A to 200 A)

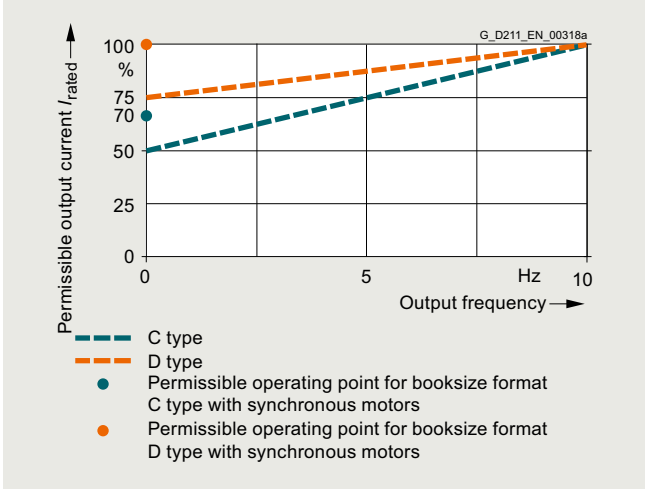

Output current at low output frequencies
(Single Motor Modules in booksize format C/D types, 3 A to 60 A)

Installation altitude

- >1000 ... 4000 m (3281 ... 13124 ft) above sea level
  - Reduction of the output current by 10 % per 1000 m (3281 ft), or
  - Reduction of the ambient temperature by 5 °C (9 °F) per 1000 m (3281 ft)
- >2000 ... 4000 m (6562 ... 13124 ft) above sea level
  - Operation on line supply systems with grounded neutral point, or
  - Operation with an isolating transformer with secondary grounded neutral point

© Siemens 2024

Design



Double Motor Module in booksize compact format

Double Motor Modules feature the following connections and interfaces as standard:

- 2 DC link connections via integrated DC link busbars
- 2 electronics power supply connections via integrated 24 V DC busbars
- 4 DRIVE-CLiQ sockets
- 2 motor connections via connector
- 2 safe standstill inputs (1 input per axis)
- 2 safe motor brake controls
- 2 temperature sensor inputs for KTY84-130, Pt1000 or PTC (Pt1000 can be used from firmware V4.7 HF17)
- 3 PE (protective earth) connections

The status of the Motor Modules is indicated via two multi-color LEDs.

The shield of the motor cables is routed over the connectors to the motor connection.

The signal cable shield can be connected to the Motor Module by means of a shield connection clamp, e.g. Weidmüller type KLBÜ 3-8 SC.

The scope of supply of the Motor Modules includes:

- DRIVE-CLiQ cable for connecting to the adjacent Motor Module, length 0.16 m (6.3 in)
- 2 blanking plugs for sealing unused DRIVE-CLiQ sockets
- Jumper for connecting the 24 V DC busbar to the adjacent Motor Module
- Connectors X21 and X22
- Connectors X1 and X2 for motor connection
- 1 set of warning labels in 36 languages

Selection and ordering data

Rated output current A	Type rating [1] kW (hp)	**Double Motor Module in booksize compact format** Article No.
DC link voltage 510 ... 720 V DC		
2 × 1.7 A	2 × 0.9 kW (2 × 0.75 hp)	**6SL3420-2TE11-7AA1**
2 × 3 A	2 × 1.6 kW (2 × 1.5 hp)	**6SL3420-2TE13-0AA1**
2 × 5 A	2 × 2.7 kW (2 × 3 hp)	**6SL3420-2TE15-0AA1**

Description	Article No.
Accessories	
DC link rectifier adapter For direct infeed of DC link voltage Screw-type terminals 0.5 ... 10 mm² For Line Modules and Motor Modules in booksize format with a width of 50 mm (1.97 in), 75 mm (2.95 in) and 100 mm (3.94 in)	**6SL3162-2BD00-0AA0**
DC link adapter (2 units) For multi-tier configuration Screw-type terminals 35 ... 95 mm² For all Line Modules and Motor Modules in booksize format	**6SL3162-2BM01-0AA0**
24 V terminal adapter For all Line Modules and Motor Modules in booksize format	**6SL3162-2AA00-0AA0**
Spacing bolt (4 units) The mounting depth of modules in booksize compact format is increased when it is mounted on these spacing bolts by such an amount that it can be integrated into a drive line-up in booksize format. 2 spacing bolts are required to mount 50 mm (1.97 in) wide modules, and 4 spacing bolts for 75 mm (2.95 in) wide modules.	**6SL3462-1CC00-0AA0**
Accessories for re-ordering	
24 V jumper For connection of the 24 V busbars (for booksize format)	**6SL3162-2AA01-0AA0**
Warning labels in 36 languages This label set can be glued over the standard English or German labels to provide warnings in other languages. One set of labels is supplied with the devices. One sign in each of the following languages is provided in each set: BG, CZ, DE, DK, EE, ES, FI, FR, GB, GR, HU, IE, IS, IT, LT, LV, MT, NL, NO, PL, PT, RO, RU, SE, SI, SK, TR, CN, ID, IL, IR, JP, KR, SA, TH, TW	**6SL3166-3AB00-0AA0**
Dust protection blanking plugs (50 units) For DRIVE-CLiQ port	**6SL3066-4CA00-0AA0**

[1] Nominal hp ratings based on asynchronous (induction) motors. Match the motor nameplate current for specific sizing.

© Siemens 2024

Double Motor Modules in booksize compact format

Integration

The Double Motor Module receives its control information via DRIVE-CLiQ from:

- CU320-2 Control Unit
- SINUMERIK 840D sl
- SINUMERIK ONE
- SINUMERIK MC
- SIMOTION D

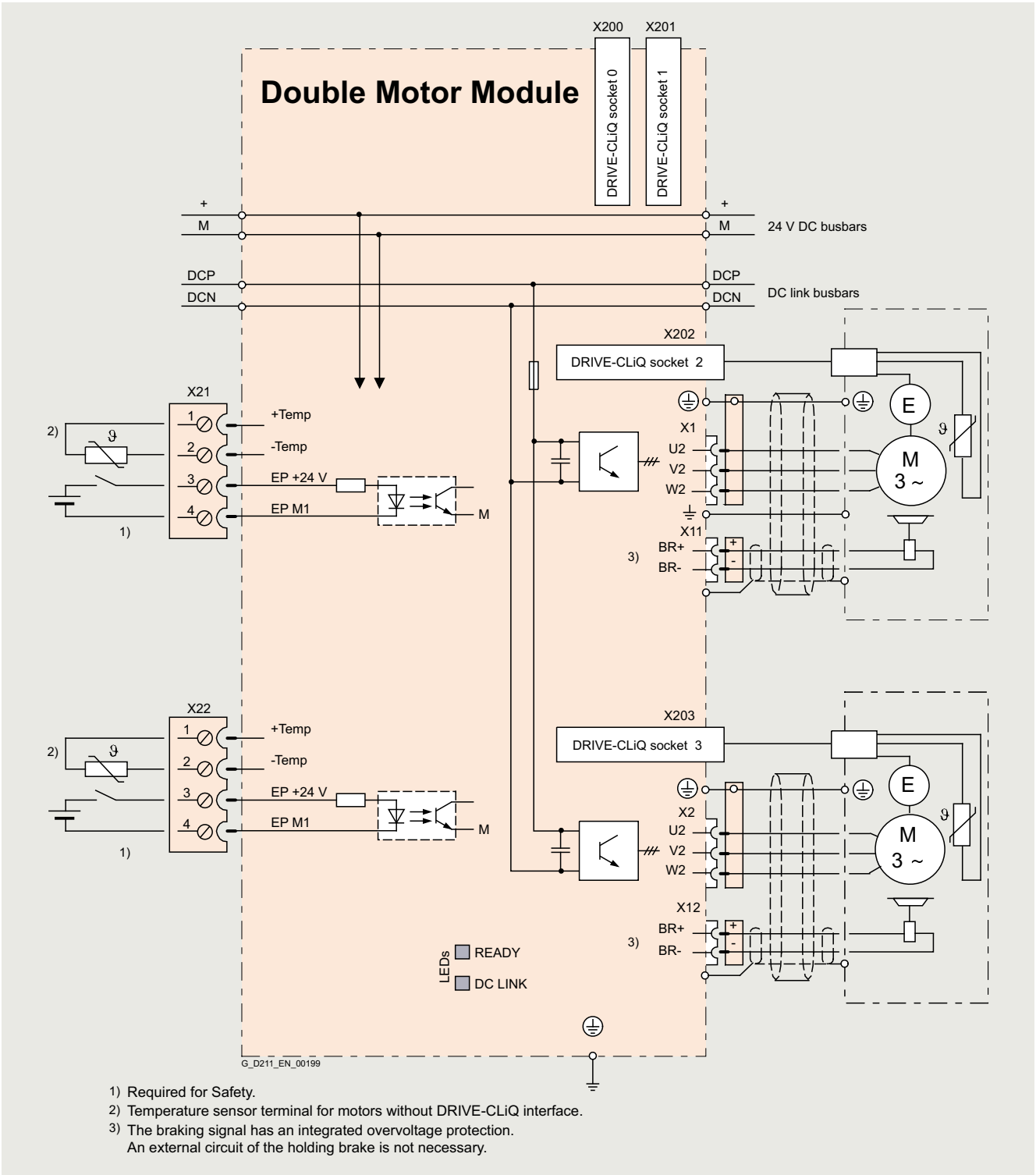

1) Required for Safety.
2) Temperature sensor terminal for motors without DRIVE-CLiQ interface.
3) The braking signal has an integrated overvoltage protection.
An external circuit of the holding brake is not necessary.

Connection example of Double Motor Modules in booksize compact format 2 × 3 A to 2 × 18 A

© Siemens 2024

Technical specifications

	Double Motor Module in booksize compact format 6SL3420-2TE1...
DC link voltage (up to 2000 m (6562 ft) above sea level)	510 ... 720 V DC (line voltage 380 ... 480 V 3 AC)
Output frequency • Control mode Servo • Control mode Vector • Control mode V/f	 0 ... 650 Hz [1) 2)] 0 ... 300 Hz [1)] 0 ... 600 Hz [1) 2)]
Electronics power supply	24 V DC -15 %/+20 %
Type of cooling	Internal air cooling (power units with increased air cooling by built-in fan)
Permissible ambient and coolant temperature (air) during operation for line-side components, Line Modules and Motor Modules	0 ... 40 °C (32 ... 104 °F) without derating, > 40 ... 55 °C (104 ... 131 °F), see derating characteristics
Installation altitude	Up to 1000 m (3281 ft) above sea level without derating, > 1000 ... 4000 m (3281 ... 13124 ft) above sea level, see derating characteristics
Declarations of conformity	CE (Low Voltage and EMC Directives)
Certificate of suitability	cURus
Safety Integrated	Safety Integrity Level 2 (SIL 2) acc. to IEC 61508, Performance Level d (PL d) acc. to ISO 13849-1 and Control Category 3 acc. to ISO 13849-1 or EN 954-1 For further information, see section Safety Integrated.

[1)] Note the correlation between max. output frequency, pulse frequency and current derating.
Further information, see section Configuration notes.

[2)] The output frequency is currently limited to 550 Hz. The specified values apply to systems with license for high output frequency.
For further information, see section Control Units and https://support.industry.siemens.com/cs/document/104020669

© Siemens 2024

Double Motor Modules in booksize compact format

Technical specifications

DC link voltage 510 ... 720 V DC		Double Motor Module in booksize compact format		
Internal air cooling		6SL3420-2TE11-7AA1	6SL3420-2TE13-0AA1	6SL3420-2TE15-0AA1
Output current				
• Rated current I_{rated}	A	2 × 1.7	2 × 3	2 × 5
• For S6 duty (40 %) I_{S6}	A	2 × 2	2 × 3.5	2 × 6
• Base-load current I_H	A	2 × 1.5	2 × 2.6	2 × 4.3
• I_{max}	A	2 × 5.1	2 × 9	2 × 15
Type rating [1]				
• Based on I_{rated}	kW (hp)	2 × 0.9 (0.75)	2 × 1.6 (1.5)	2 × 2.7 (3)
• Based on I_H	kW (hp)	2 × 0.8 (0.5)	2 × 1.4 (1)	2 × 2.3 (2.5)
Rated pulse frequency	kHz	8	8	8
DC link current I_d [2]	A	4.1	7.2	12
Current carrying capacity				
• DC link busbars	A	100	100	100
• 24 V DC busbars [3]	A	20	20	20
DC link capacitance	µF	165	165	165
Current requirement At 24 V DC, max.	A	1	1	1
Power loss [4]	kW	0.11	0.13	0.19
Cooling air requirement	m^3/s (ft^3/s)	0.008 (0.3)	0.008 (0.3)	0.008 (0.3)
Sound pressure level L_{pA} (1 m)	dB	<60	<60	<60
Motor connection U2, V2, W2		2 connectors (X1, X2) with screw-type terminals	2 connectors (X1, X2) with screw-type terminals	2 connectors (X1, X2) with screw-type terminals
• Conductor cross-section	mm^2	0.2 ... 6	0.2 ... 6	0.2 ... 6
Shield connection		Integrated in connector (X1, X2)	Integrated in connector (X1, X2)	Integrated in connector (X1, X2)
PE connection		M5 screw	M5 screw	M5 screw
Motor brake connection		Connector (X11, X12), 24 V DC, 2 A	Connector (X11, X12), 24 V DC, 2 A	Connector (X11, X12), 24 V DC, 2 A
Motor cable length, max.				
• Shielded	m (ft)	50 (164)	50 (164)	50 (164)
• Unshielded	m (ft)	75 (246)	75 (246)	75 (246)
Degree of protection		IP20	IP20	IP20
Dimensions				
• Width	mm (in)	75 (2.95)	75 (2.95)	75 (2.95)
• Height	mm (in)	270 (10.63)	270 (10.63)	270 (10.63)
• Depth	mm (in)	226 (8.90)	226 (8.90)	226 (8.90)
Weight, approx.	kg (lb)	3.4 (7.50)	3.4 (7.50)	3.4 (7.50)

[1] Rated power of a typical standard asynchronous (induction) motor at 600 V DC link voltage.

[2] Rated DC link current for dimensioning an external DC connection. For DC link current calculation for dimensioning the Line Module, see section Configuration notes.

[3] If, due to a number of Line Modules and Motor Modules being mounted side-by-side, the current carrying capacity exceeds 20 A, an additional 24 V DC connection using a 24 V terminal adapter is required (max. cross-section 6 mm^2, max. fuse protection 20 A).

[4] Power loss of Motor Module at rated power including losses of 24 V DC electronics power supply.

© Siemens 2024

Characteristic curves

Overload capability

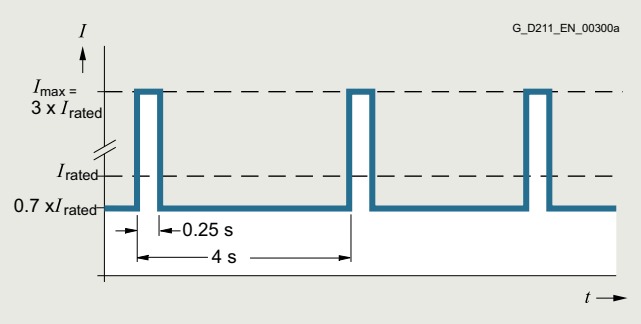

Peak current duty cycle with previous load (300 % overload)

Note:

I_{max} stands for 2 × I_{rated} in the following overload characteristics.

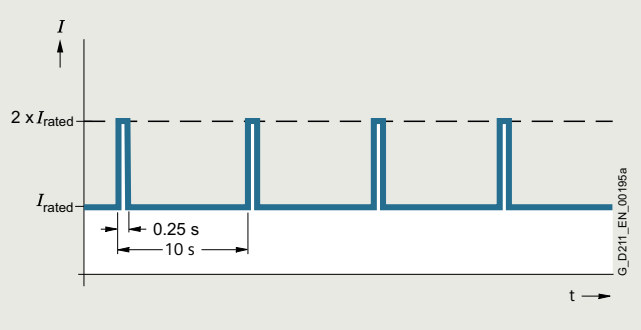

Duty cycle with previous load

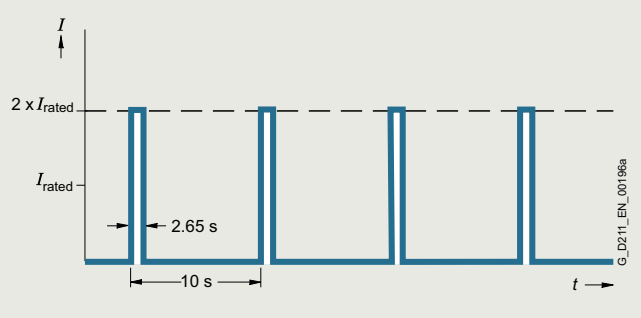

Duty cycle without previous load

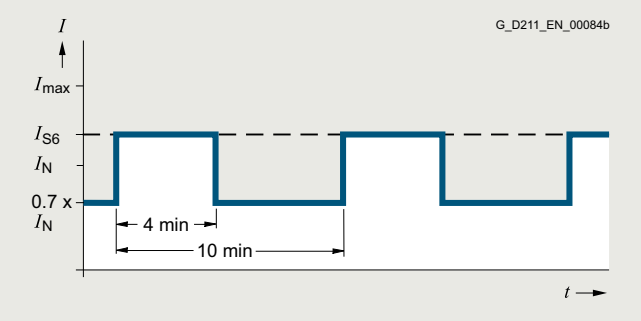

S6 duty cycle with previous load with a duty cycle duration of 600 s

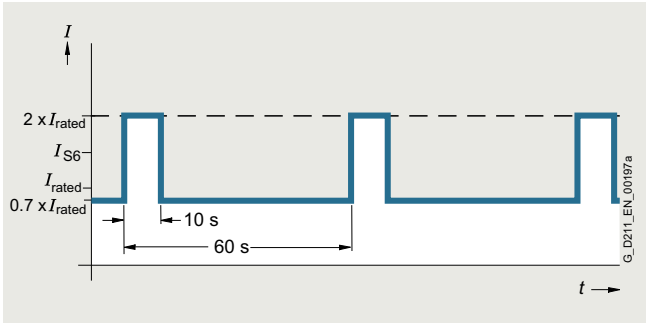

S6 duty cycle with previous load with a duty cycle duration of 60 s

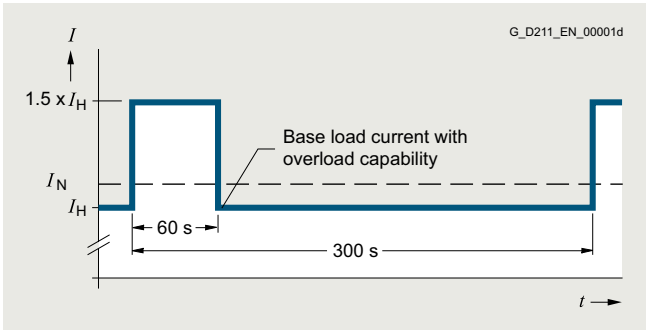

Duty cycle with 60 s overload with a duty cycle duration of 300 s

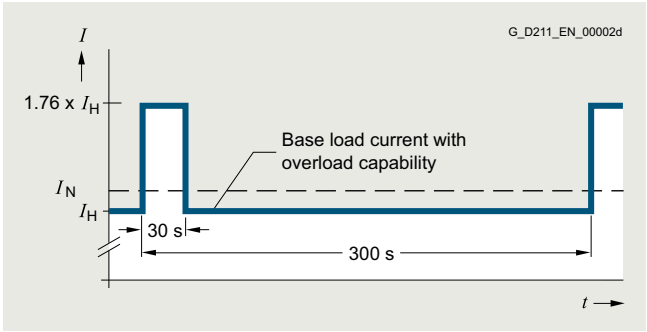

Dtuy cycle with 30 s overload with a duty cycle duration of 300 s

7
1

© Siemens 2024

Characteristic curves

Derating characteristics

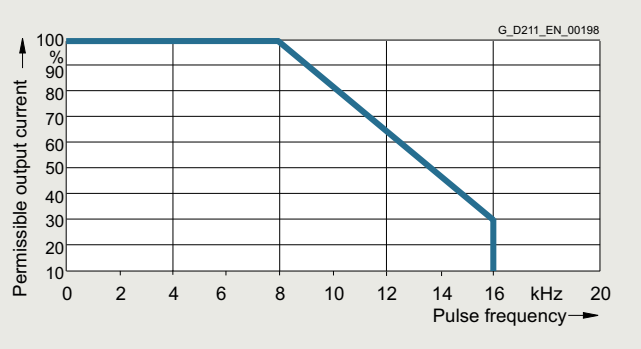

Output current as a function of pulse frequency

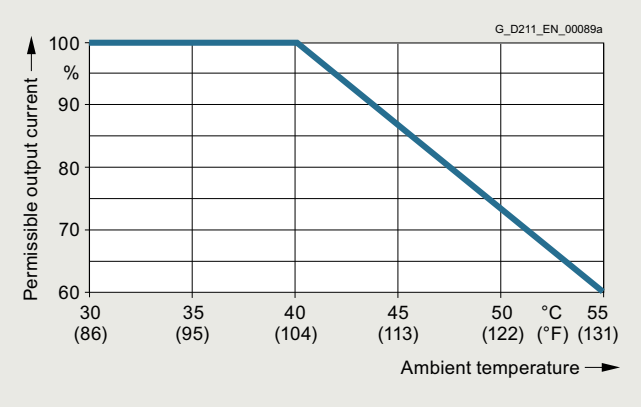

Output current as a function of ambient temperature

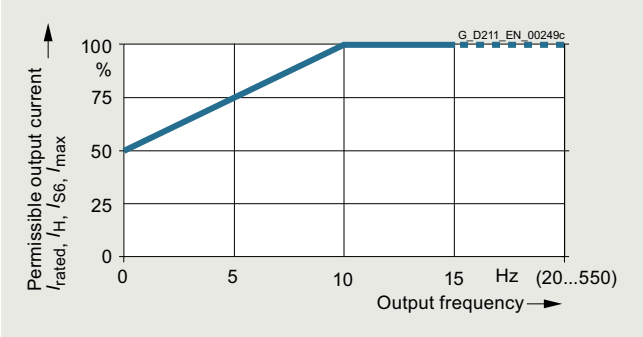

Current derating as a function of output frequency

Installation altitude

- >1000 ... 4000 m (3281 ... 13124 ft) above sea level
  - Reduction of the output current by 10 % per 1000 m (3281 ft), or
  - Reduction of the ambient temperature by 5 °C (9 °F) per 1000 m (3281 ft)
- >2000 ... 4000 m (6562 ... 13124 ft) above sea level
  - Operation on line supply systems with grounded neutral point, or
  - Operation with an isolating transformer with secondary grounded neutral point

© Siemens 2024

Design

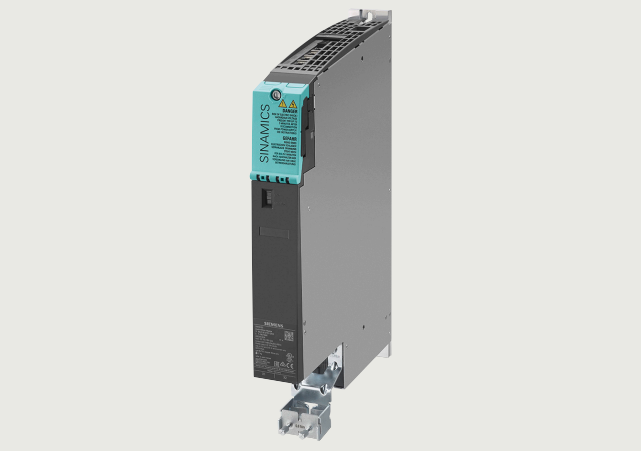

Double Motor Module in booksize format C/D type

Double Motor Modules feature the following connections and interfaces as standard:

- 2 DC link connections via integrated DC link busbars
- 2 electronics power supply connections via integrated 24 V DC busbars
- 4 DRIVE-CLiQ sockets
- 2 motor connections via connectors X1 and X2 (not included in the scope of delivery)
- 2 safe standstill inputs (1 input per axis)
- 2 safe motor brake controls
- 2 temperature sensor inputs for KTY84-130, Pt1000 or PTC (Pt1000 can be used from firmware V4.7 HF17)
- 1 PE (protective earth) connection

The status of the Motor Modules is indicated via two multi-color LEDs.

The Motor Modules are supplied with a mounted shield connection plate. The associated shield connection clamp can be found in the Terminal Kit supplied.

Motor Modules in booksize format C/D types, 2 × 3 A to 2 × 18 A

Rated current	3 A	5 A	9 A	18 A	24 A	30 A	45 A	60 A
	D types							
Single Motor Modules	**3 A / 9 A** 50 mm (1.97 in)	**5 A / 15 A** 50 mm (1.97 in)	**9 A / 27 A** 50 mm (1.97 in)	**18 A / 54 A** 50 mm (1.97 in)	**24 A / 72 A** 50 mm (1.97 in)	**30 A / 90 A** 100 mm (3.94 in)	–	–
Double Motor Modules	**2 x 3 A / 2 x 9 A** 50 mm (1.97 in)	**2 x 5 A / 2 x 15 A** 50 mm (1.97 in)	**2 x 9 A / 2 x 27 A** 50 mm (1.97 in)	**2 x 18 A / 2 x 54 A** 100 mm (3.94 in)	–	–	–	–
			C types					
			Single Motor Modules	**18 A / 36 A** 50 mm (1.97 in)	**24 A / 48 A** 50 mm (1.97 in)	**30 A / 56 A** 100 mm (3.94 in)	**45 A / 90 A** 100 mm (3.94 in)	**60 A / 120 A** 100 mm (3.94 in)
Rated current / maximum current in A 50 mm (1.97 in) or 100 mm (3.94 in) widths			Double Motor Module	**2 x 18 A / 2 x 36 A** 100 mm (3.94 in)	–	–	–	–

G_PM21_EN_00267a

Overview of available Double Motor Modules in booksize format C/D types

- C type: Optimized for continuous load with up to 200 % overload (continuous motion)
- D type: Optimized for highly dynamic, intermittent duty cycles with up to 300 % overload (discontinuous motion)

Devices in booksize format C/D types are optimized for multi-axis applications and are mounted next to one another. The connection for the common DC link is an integral feature. The device is internally air cooled.

The Motor Modules in booksize format C/D types have been developed to be fully compatible with the booksize series regarding spare parts and offer the following advantages:

- The amount of space required beneath the Motor Modules has been reduced thanks to improvements in the design and a new motor plug connector
- With the new motor plug connector design, the brake conductors and the PE connection are integrated directly in the plug connector
- The motor connections on the Double Motor Module are located side by side, resulting in a significantly improved level of accessibility
- The fan can be simply replaced without having to remove the Motor Module
- The Double Motor Module 2 x 18 A is available with double and treble overload

The signal cable shield can be connected to the Motor Module by means of a shield connection clamp, e.g. Weidmüller type KLBUE 3-8 SC.

The scope of delivery of the Motor Modules includes:

- DRIVE-CLiQ cable appropriate to the width of the Motor Module for connection to the adjacent Motor Module, length = width of Motor Module + 0.06 m (0.20 ft)
- 2 blanking plugs for sealing unused DRIVE-CLiQ sockets
- Jumper for connecting the 24 V DC busbar to the adjacent Motor Module
- Connectors X21 and X22
- Device fans supplied from the internal voltage levels for cooling the power unit
- 1 shield connection plate with shield connection clamp
- 1 set of warning labels in 36 languages

© Siemens 2024

Double Motor Modules in booksize format

Selection and ordering data

Rated output current	Type rating[1]	Double Motor Module in booksize format	
		C type	D type
A	kW (hp)	Article No.	Article No.
DC link voltage 510 ... 720 V DC			
2 × 3	2 × 1.6 (2 × 1.5)	–	**6SL3120-2TE13-0AD0**
2 × 5	2 × 2.7 (2 × 3)	–	**6SL3120-2TE15-0AD0**
2 × 9	2 × 4.8 (2 × 5)	–	**6SL3120-2TE21-0AD0**
2 × 18	2 × 9.7 (2 × 10)	**6SL3120-2TE21-8AC0**	**6SL3120-2TE21-8AD0**

Description	Article No.
Accessories	
Power connector (X1/X2) with screw-type terminal At Motor Module end, with screw-type terminals 1.5 ... 6 mm² For Motor Modules in booksize format C/D types with rated output current of 3 ... 30 A	**6SL3162-2MA00-0AC0**
Power connector (X1/X2) with push-in connection with snap-in actuators At Motor Module end, with spring-loaded terminals 1.5 ... 6 mm² For Motor Modules in booksize format C/D types with rated output current of 3 ... 30 A	**6SL3162-2MB00-0AC0**
DC link rectifier adapter For direct infeed of DC link voltage Screw-type terminals 0.5 ... 10 mm² For Motor Modules in booksize format with a width of 50 mm (1.97 in) or 100 mm (3.94 in)	**6SL3162-2BD00-0AA0**
DC link adapter (2 units) For multi-tier configuration Screw-type terminals 35 ... 95 mm² For all Line Modules and Motor Modules in booksize format	**6SL3162-2BM01-0AA0**
24 V terminal adapter For all Line Modules and Motor Modules in booksize format	**6SL3162-2AA00-0AA0**
Reinforced DC link bridge 6 mm (0.24 in) For replacement of the DC link bridge in Single Motor Modules 3 A ... 24 A Double Motor Modules 2 x 3 A ... 2 x 9 A	**6SL3162-2BB00-0AA0**

Description	Article No.
Accessories for re-ordering	
24 V jumper For connection of the 24 V busbars (for booksize format)	**6SL3162-2AA01-0AA0**
Terminal Kit (24 V jumper, plug-in terminals, DRIVE-CLiQ jumper (length = module width + 60 mm (2.36 in)), shield connection clamp with pressure plate, dust protection blanking plugs, coding plug for X1 and X2) For Motor Modules with a width of	
• 50 mm (1.97 in), C/D type	**6SL3162-8AD00-0AA0**
• 100 mm (3.94 in), C/D type	**6SL3162-8BF00-0AA0**
Shield connection clamp For Double Motor Modules in booksize format C/D types	**6SL3162-0AR00-0AA0**
Warning labels in 36 languages This label set can be glued over the standard English or German labels to provide warnings in other languages. One set of labels is supplied with the devices. One sign in each of the following languages is provided in each set: BG, CZ, DE, DK, EE, ES, FI, FR, GB, GR, HU, IE, IS, IT, LT, LV, MT, NL, NO, PL, PT, RO, RU, SE, SI, SK, TR, CN, ID, IL, IR, JP, KR, SA, TH, TW	**6SL3166-3AB00-0AA0**
Dust protection blanking plugs (50 units) For DRIVE-CLiQ port	**6SL3066-4CA00-0AA0**
Replacement fan For Motor Modules with a width of	
• 50 mm (1.97 in), C/D type	**6SL3162-0AN00-0AA0**
• 100 mm (3.94 in), C/D type	**6SL3162-0AP00-0AA0**

[1] Nominal hp ratings based on asynchronous (induction) motors. Match the motor nameplate current for specific sizing.

© Siemens 2024

Integration

The Double Motor Module receives its control information via DRIVE-CLiQ from:

- CU320-2 Control Unit
- SINUMERIK 840D sl
- SINUMERIK ONE
- SINUMERIK MC
- SIMOTION D

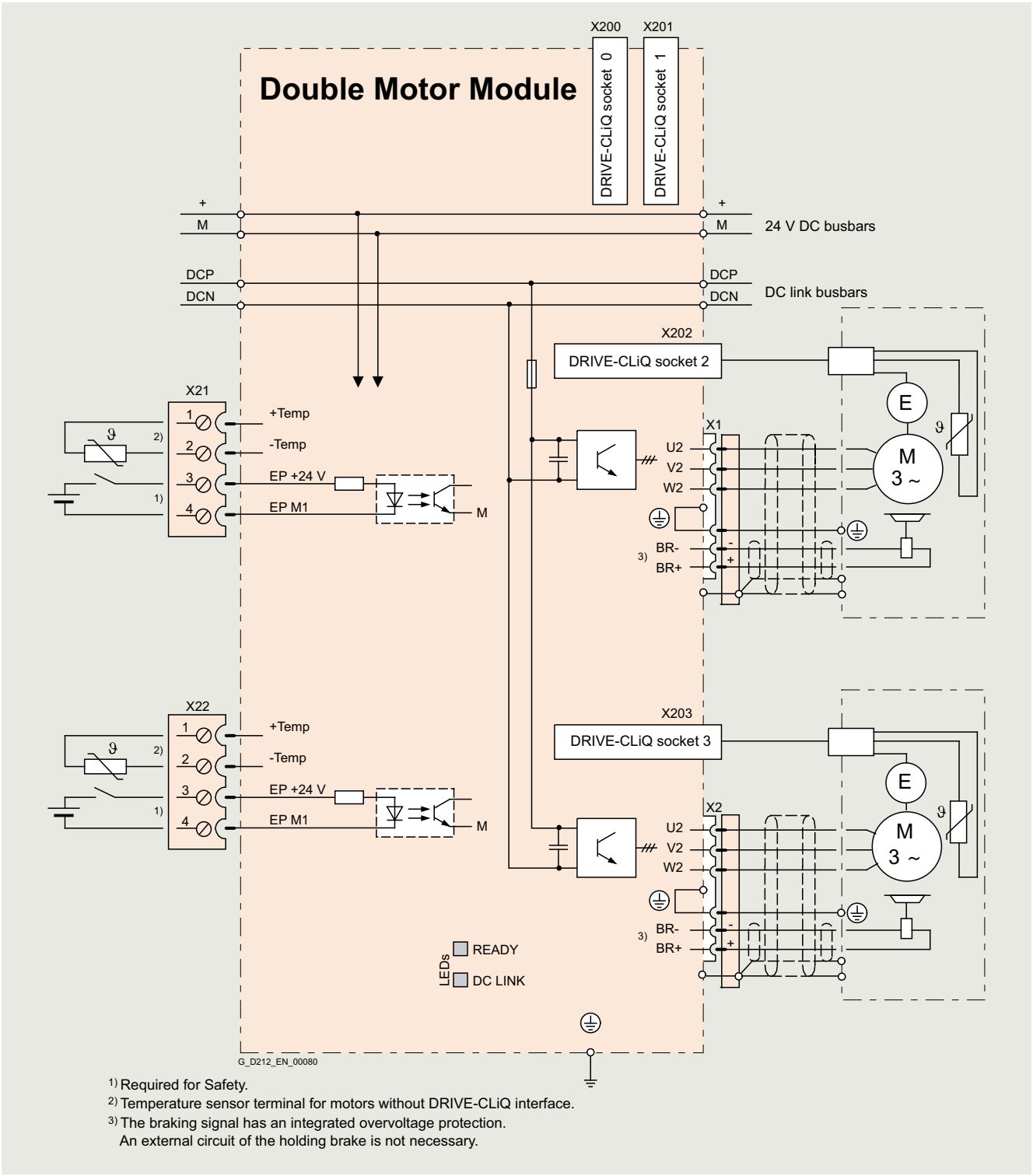

Connection example of Double Motor Modules in booksize format C/D types, 2 × 3 A to 2 × 18 A

© Siemens 2024

Double Motor Modules in booksize format

Technical specifications

	Double Motor Module in booksize format 6SL3120-2TE...
DC link voltage (up to 2000 m (6562 ft) above sea level)	510 ... 720 V DC (line voltage 380 ... 480 V 3 AC)
Output frequency	
• Control mode Servo	0 ... 650 Hz [1) 2) 3)]
• Control mode Vector	0 ... 300 Hz [2)]
• Control mode V/f	0 ... 600 Hz [2) 3)]
Electronics power supply	24 V DC -15 %/+20 %
Type of cooling	Internal air cooling (power units with increased air cooling by built-in fan)
Permissible ambient and coolant temperature (air) during operation for line-side components, Line Modules and Motor Modules	0 ... 40 °C (32 ... 104 °F) without derating, >40 ... 55 °C (104 ... 131 °F), see derating characteristics
Installation altitude	Up to 1000 m (3281 ft) above sea level without derating, > 1000 ... 4000 m (3281 ... 13124 ft) above sea level, see derating characteristics
Declarations of conformity	CE (Low-Voltage and EMC Directives)
Certificate of suitability	cULus
Safety Integrated	Safety Integrity Level 2 (SIL 2) according to IEC 61508, Performance Level d (PL d) and Category 3 according to ISO 13849-1 For further information, see section Safety Integrated.

1) At rated output current (max. output frequency 1300 Hz for 62.5 µs current control cycle, 8 kHz pulse frequency, 60 % permissible output current).

2) Note the correlation between max. output frequency, pulse frequency and current derating.
For further information, see section Configuration notes.

3) The output frequency is currently limited to 550 Hz. The specified values apply to systems with license for high output frequency.
For further information, see section Control Units and https://support.industry.siemens.com/cs/document/104020669

© Siemens 2024

Technical specifications

DC link voltage 510 ... 720 V DC		Double Motor Module in booksize format			
Internal air cooling C type	6SL3120-...	–	–	–	2TE21-8AC0
Internal air cooling D type	6SL3120-...	2TE13-0AD0	2TE15-0AD0	2TE21-0AD0	2TE21-8AD0
Output current					
• Rated current I_{rated}	A	2 × 3	2 × 5	2 × 9	2 × 18
• For S6 duty (40 %) I_{S6}					
- C type	A	–	–	–	2 × 24
- D type	A	2 × 4	2 × 6.7	2 × 12	2 × 24
• Base-load current I_H	A	2 × 2.6	2 × 4.3	2 × 7.7	2 × 15.3
• I_{max}					
- C type	A	–	–	–	2 × 36
- D type	A	2 × 9	2 × 15	2 × 27	2 × 54
Type rating [1]					
• Based on I_{rated}	kW (hp)	2 × 1.6 (1.5)	2 × 2.7 (3)	2 × 4.8 (5)	2 × 9.7 (10)
• Based on I_H	kW (hp)	2 × 1.4 (1)	2 × 2.3 (2.5)	2 × 4.1 (5)	2 × 8.2 (10)
DC link current I_d [2]	A	7.2	12	22	43
Current carrying capacity					
• DC link busbars	A	100	100	100	100
• 24 V DC busbars [3]	A	20	20	20	20
DC link capacitance	µF	220	220	220	705
Current requirement At 24 V DC, max.	A	0.9	0.9	0.9	1.1
Power loss [4] typ. [5]/max.	kW	0.05/0.1	0.08/0.13	0.15/0.19	0.28/0.35
Cooling air requirement	m^3/s (ft^3/s)	0.009 (0.32)	0.009 (0.32)	0.009 (0.32)	0.0155 (0.55)
Sound pressure level L_{pA} (1 m)	dB	<60	<60	<60	<60
Motor connection U2, V2, W2		2 × plug-in connector (X1, X2) [6], 2 × (1.5 ... 6 mm^2)	2 × plug-in connector (X1, X2) [6], 2 × (1.5 ... 6 mm^2)	2 × plug-in connector (X1, X2) [6], 2 × (1.5 ... 6 mm^2)	2 × plug-in connector (X1, X2) [6], 2 × (1.5 ... 6 mm^2)
PE connection		M5 screw	M5 screw	M5 screw	M5 screw
Motor brake connection		Integrated into the plug-in motor connector (X1, X2), 24 V DC, 2 A	Integrated into the plug-in motor connector (X1, X2), 24 V DC, 2 A	Integrated into the plug-in motor connector (X1, X2), 24 V DC, 2 A	Integrated into the plug-in motor connector (X1, X2), 24 V DC, 2 A
Motor cable length, max.					
• Shielded	m (ft)	50 (164)	50 (164)	50 (164)	70 (230)
• Unshielded	m (ft)	75 (246)	75 (246)	75 (246)	100 (328)
Degree of protection		IP20	IP20	IP20	IP20
Dimensions					
• Width	mm (in)	50 (1.97)	50 (1.97)	50 (1.97)	100 (3.94)
• Height	mm (in)	380 (14.96)	380 (14.96)	380 (14.96)	380 (14.96)
• Depth	mm (in)	270 (10.63)	270 (10.63)	270 (10.63)	270 (10.63)
Weight, approx.	kg (lb)	4.7 (10.4)	4.7 (10.4)	4.7 (10.4)	7.7 (17.0)

1) Rated power of a typical standard asynchronous (induction) motor at 600 V DC link voltage.

2) Rated DC link current for dimensioning an external DC connection. For DC link current calculation for dimensioning the Line Module, see section Configuration notes.

3) If, due to a number of Line Modules and Motor Modules being mounted side-by-side, the current carrying capacity exceeds 20 A, an additional 24 V DC connection using a 24 V terminal adapter is required (max. cross-section 6 mm^2, max. fuse protection 20 A).

4) Power loss of Motor Module at rated power including losses of 24 V DC electronics power supply.

5) At max. motor cable length 30 m (98.43 ft), pulse frequency 4 kHz and DC link voltage 540 ... 600 V.

6) Connector not included in scope of delivery, see Accessories.

© Siemens 2024

Characteristic curves

Overload capability

Motor Modules in booksize format C type

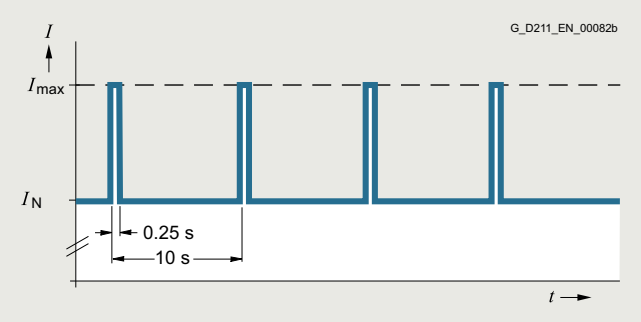

Duty cycle with previous load

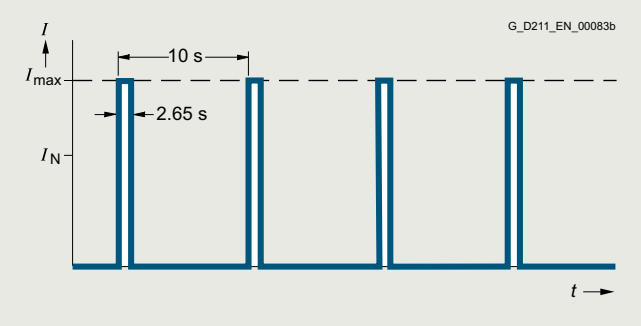

Duty cycle without previous load

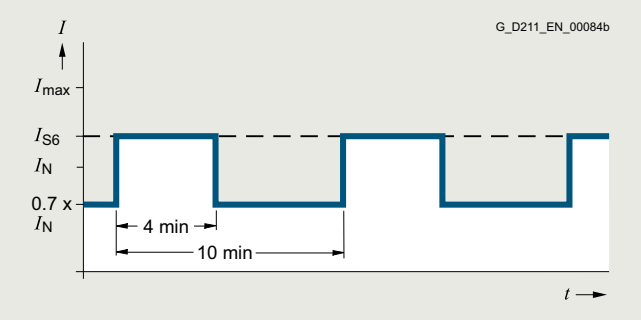

S6 duty cycle with previous load with a duty cycle duration of 600 s

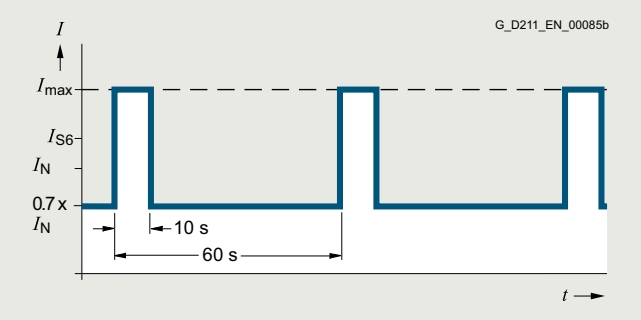

S6 duty cycle with previous load with a duty cycle duration of 60 s

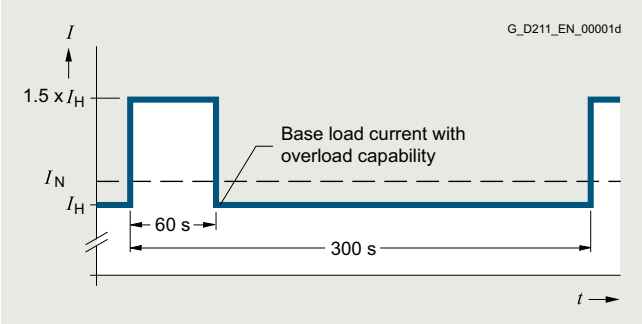

Duty cycle with 60 s overload with a duty cycle duration of 300 s

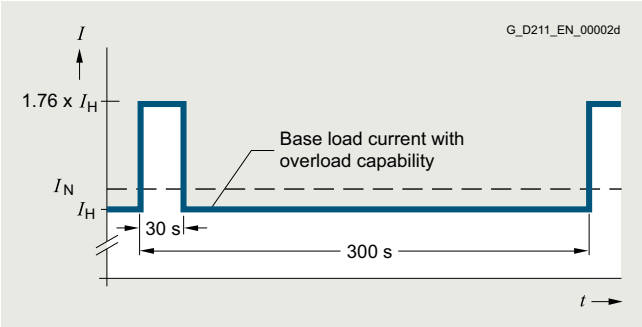

Duty cycle with 30 s overload with a duty cycle duration of 300 s

© Siemens 2024

Characteristic curves

Motor Modules in booksize format D type

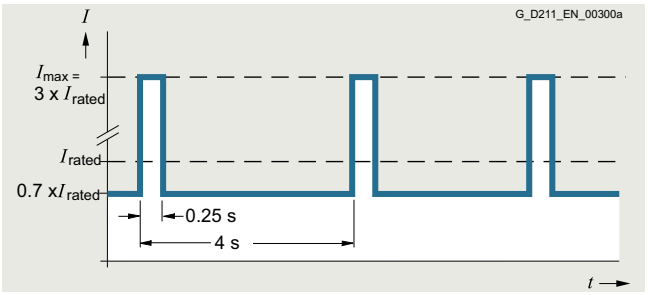

Peak current duty cycle with previous load (300 % overload)

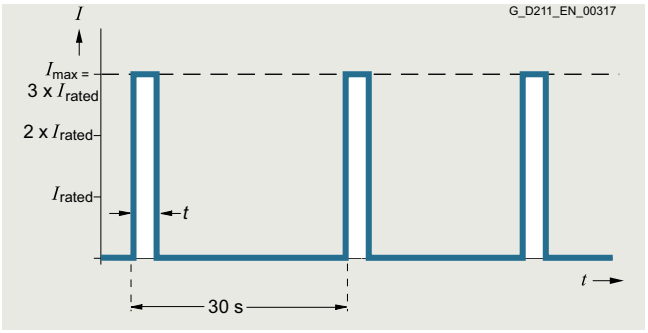

Peak current duty cycle without previous load (300 % overload)

Double Motor Module	Time t at I_{max}
2 × 3 A	0.5 s
2 × 5 A	0.5 s
2 × 9 A	0.5 s
2 × 18 A	1.25 s

Note:

The duty cycle shown above is not permissible for a pulse frequency of 16 kHz. The current must be derated for a pulse frequency of 8 kHz.

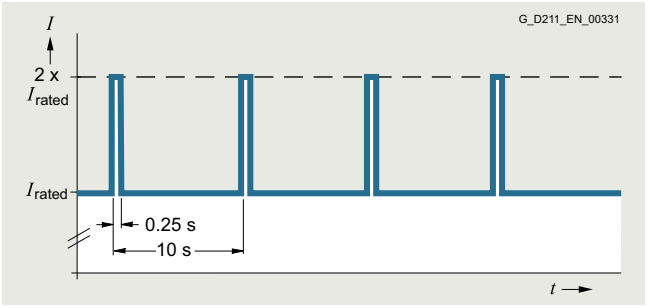

Duty cycle with previous load

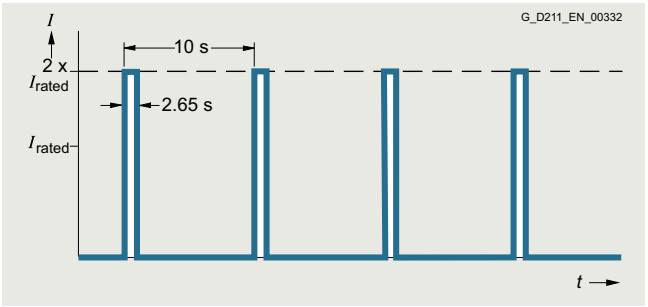

Duty cycle without previous load

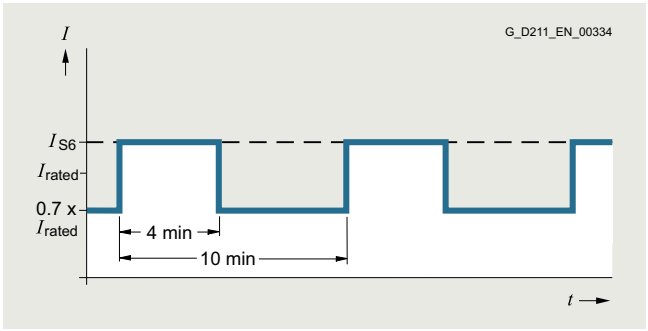

S6 duty cycle with previous load with a duty cycle duration of 600 s

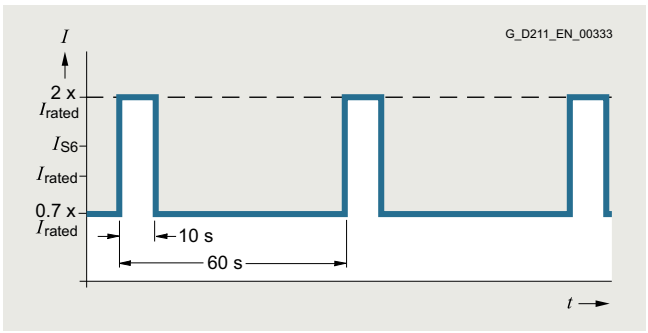

S6 duty cycle with previous load with a duty cycle duration of 60 s

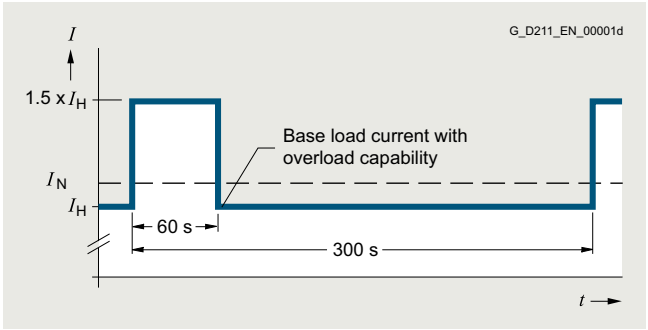

Duty cycle with 60 s overload with a duty cycle duration of 300 s

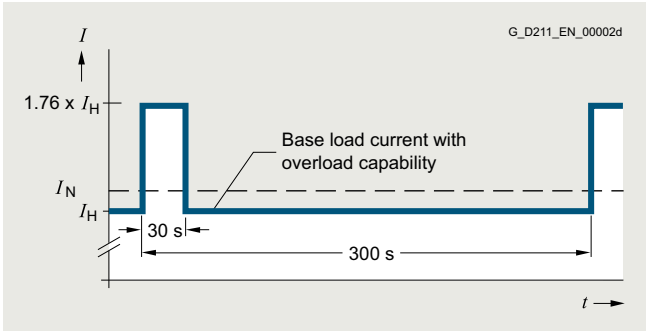

Duty cycle with 30 s overload with a duty cycle duration of 300 s

© Siemens 2024

Characteristic curves

Derating characteristics

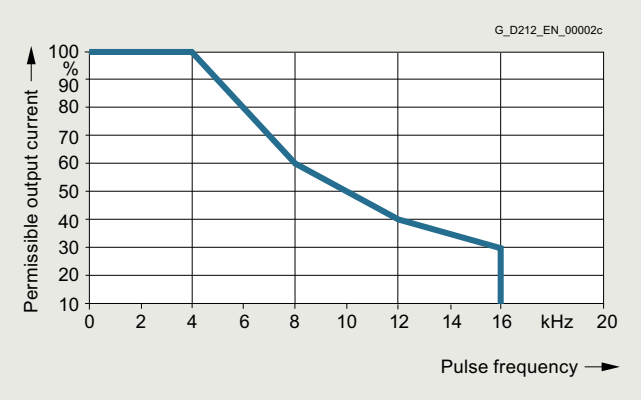

Output current as a function of pulse frequency

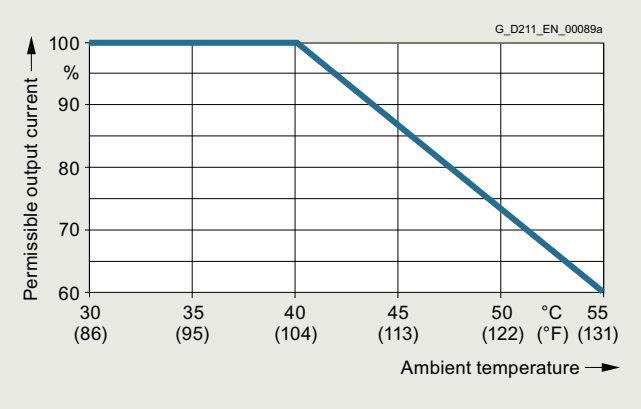

Output current as a function of ambient temperature

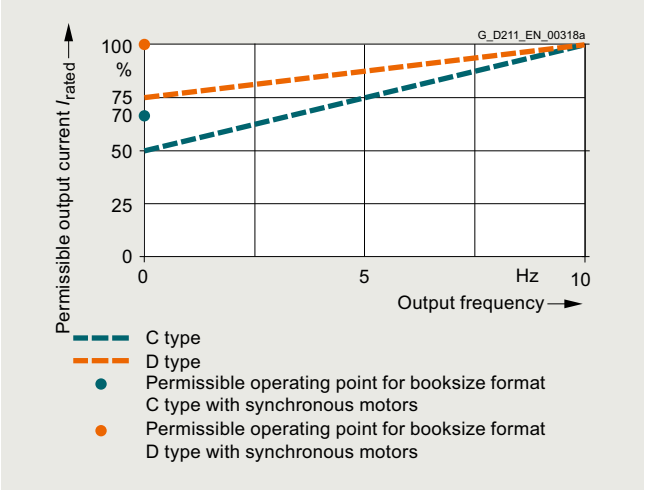

Output current at low output frequencies

Installation altitude

- >1000 ... 4000 m (3281 ... 13124 ft) above sea level
  - Reduction of the output current by 10 % per 1000 m (3281 ft), or
  - Reduction of the ambient temperature by 5 °C (9 °F) per 1000 m (3281 ft)
- >2000 ... 4000 m (6562 ... 13124 ft) above sea level
  - Operation on line supply systems with grounded neutral point, or
  - Operation with an isolating transformer with secondary grounded neutral point

© Siemens 2024

Overview



Braking Module booksize compact format

A Braking Module and the matching external braking resistor are required to bring drives to a controlled standstill in the event of a power failure (e.g. emergency retraction or EMERGENCY OFF category 1) or limit the DC link voltage for brief periods of generator operation, e.g. when the regenerative feedback capability of the Line Module is deactivated. The Braking Module includes the power electronics and the associated control circuit. During operation, the DC link power is converted into heat loss in an external braking resistor. Braking Modules function autonomously. Several Braking Modules in booksize compact format can be operated in parallel. In this case, each Braking Module must have its own braking resistor. Braking Modules in booksize compact format can also be used for rapid discharge of the DC link.

Design

The Braking Modules in booksize compact format can be integrated in drive line-ups in booksize and booksize compact formats.

The Braking Module in booksize compact format features the following connections and interfaces as standard:

- 2 DC link connections via integrated DC link busbars
- 2 electronics power supply connections via integrated 24 V DC busbars
- Connector X1 for connecting the braking resistor
- Connection for thermostatic switch for monitoring the braking resistor
- 4 DIP switches for setting the operating threshold, selecting the braking resistor and the cooling method for the Braking Module
- 2 digital inputs (disable Braking Module/acknowledge faults and rapid discharge of DC link)
- 3 digital outputs (Braking Module disabled, prewarning from $I \times t$ monitor and set activation threshold)
- 2 PE (protective earth) connections

The status of the Braking Module is indicated via two 2-color LEDs.

Selection and ordering data

Description	Article No.
DC link voltage 510 ... 720 V DC	
Braking Module in booksize compact format	**6SL3400-1AE31-0AA1**
Accessories	
Spacing bolt (4 units) The mounting depth of modules in booksize compact format is increased when it is mounted on these spacing bolts by such an amount that it can be integrated into a drive line-up in booksize format. 2 spacing bolts are needed to mount 50 mm (1.97 in) wide modules.	**6SL3462-1CC00-0AA0**
Warning labels in 36 languages This label set can be glued over the standard English or German labels to provide warnings in other languages. One set of labels is supplied with the devices. One sign in each of the following languages is provided in each set: BG, CZ, DE, DK, EE, ES, FI, FR, GB, GR, HU, IE, IS, IT, LT, LV, MT, NL, NO, PL, PT, RO, RU, SE, SI, SK, TR, CN, ID, IL, IR, JP, KR, SA, TH, TW	**6SL3166-3AB00-0AA0**

© Siemens 2024

Braking Module in booksize compact format

Integration

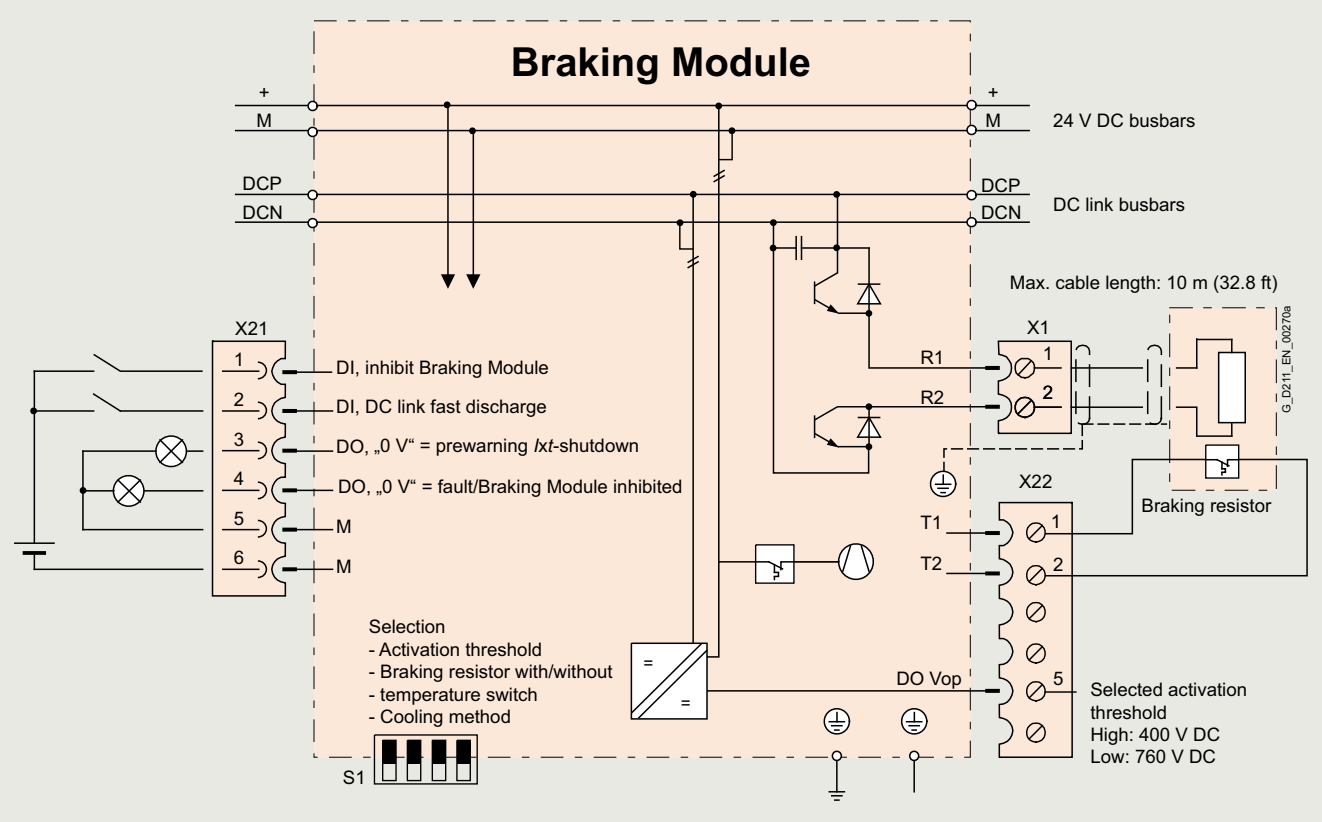

Connection example of Braking Module in booksize compact format

Technical specifications

DC link voltage 510 ... 720 V DC	Braking Module in booksize compact format Internal air cooling 6SL3400-1AE31-0AA1
Rated power P_{DB}	5 kW (2.5 kW) [1) 2)]
Peak power P_{max}	100 kW (50 kW) [1) 2)]
Activation threshold	760 V (400 V) [1)]
Cable length to braking resistor, max.	10 m (32.8 ft)
DC link capacitance	6 µF
Current requirement with 24 V DC, max.	0.5 A
Digital inputs In accordance with IEC 61131-2 Type 1	
• Voltage	-3 ... +30 V
• Low level (an open digital input is interpreted as "low")	-3 ... +5 V
• High level	15 ... 30 V
• Current consumption at 24 V DC, typ.	10 mA
• Conductor cross-section, max.	1.5 mm²

DC link voltage 510 ... 720 V DC	Braking Module in booksize compact format Internal air cooling 6SL3400-1AE31-0AA1
Digital outputs (sustained-short-circuit-proof)	
• Voltage	24 V DC
• Load current per digital output, max.	100 mA
• Conductor cross-section, max.	1.5 mm²
Current carrying capacity	
• 24 V DC busbars	20 A
• DC link busbars	100 A
PE connection	M5 screw
Dimensions	
• Width	50 mm (1.97 in)
• Height	270 mm (10.63 in)
• Depth	226 mm (8.90 in)
Weight, approx.	2.7 kg (5.95 lb)
Certificate of suitability	cURus

[1)] The activation threshold of the Braking Module in booksize compact format can be set on a DIP switch. The higher values for peak or rated braking power apply in operation at the upper activation threshold 760 V DC (factory setting). The outputs specified in parentheses are possible at the lower activation threshold 400 V DC.

[2)] Several Braking Modules in the booksize format can be operated in parallel, typically up to 4 modules.

© Siemens 2024

Overview

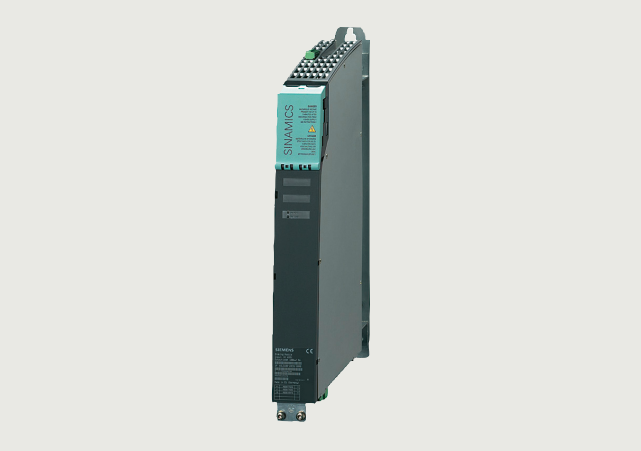

Braking Module in booksize format

A Braking Module and the matching external braking resistor are required to bring drives to a controlled standstill in the event of a power failure (e.g. emergency retraction or EMERGENCY STOP category 1) or limit the DC link voltage for brief periods of generator operation, e.g. when the regenerative feedback capability of the Line Module is deactivated. The Braking Module includes the power electronics and the associated control circuit. During operation, the DC link energy is converted into heat loss in an external braking resistor. Braking Modules function autonomously.

Braking Modules in booksize format can also be used for rapid discharge of the DC link.

Design

The Braking Module in booksize format features the following connections and interfaces as standard:

- 2 DC link connections via integrated DC link busbars
- 2 electronics power supply connections via integrated 24 V DC bars
- Terminals for connecting the braking resistor
- 2 digital inputs (disable Braking Module/acknowledge faults and rapid discharge of DC link)
- 2 digital outputs (Braking Module disabled and prewarning – $I \times t$ monitoring)
- 2 PE (protective earth) connections

The status of the Braking Module is indicated via two 2-color LEDs.

Selection and ordering data

Description	Article No.
DC link voltage 510 ... 720 V DC	
Braking Module in booksize format	**6SL3100-1AE31-0AB1**
Accessories	
Warning labels in 36 languages This label set can be glued over the standard English or German labels to provide warnings in other languages. One set of labels is supplied with the devices. One sign in each of the following languages is provided in each set: BG, CZ, DE, DK, EE, ES, FI, FR, GB, GR, HU, IE, IS, IT, LT, LV, MT, NL, NO, PL, PT, RO, RU, SE, SI, SK, TR, CN, ID, IL, IR, JP, KR, SA, TH, TW	**6SL3166-3AB00-0AA0**

Technical specifications

DC link voltage 510 ... 720 V DC	**Braking Module in booksize format Internal air cooling** 6SL3100-1AE31-0AB1
Rated power P_{DB}	1.5 kW [1]
Peak power P_{max}	100 kW [1]
Activation threshold	770 V
Cable length to braking resistor, max.	10 m (32.81 ft)
DC link capacitance	110 µF
Current requirement with 24 V DC, max.	0.5 A
Digital inputs In accordance with IEC 61131-2 Type 1	
• Voltage	-3 V ... +30 V
• Low level (an open digital input is interpreted as "low")	-3 V ... +5 V
• High level	15 ... 30 V
• Current consumption at 24 V DC, typ.	10 mA
• Conductor cross-section, max.	1.5 mm²
Digital outputs (continuously short-circuit proof)	
• Voltage	24 V DC
• Load current per digital output, max.	100 mA
• Conductor cross-section, max.	1.5 mm²
Current carrying capacity	
• 24 V DC busbars	20 A
• DC link busbars	100 A
PE connection	M5 screw
Dimensions	
• Width	50 mm (1.97 in)
• Height	380 mm (14.96 in)
• Depth, with spacer (included in scope of supply)	270 mm (10.63 in)
Weight, approx.	4.1 kg (9 lb)
Certificate of suitability	cURus

[1] Connecting Braking Modules in the booksize format in parallel should be avoided, as it cannot be guaranteed that the power will be evenly divided between the modules.

© Siemens 2024

Integration

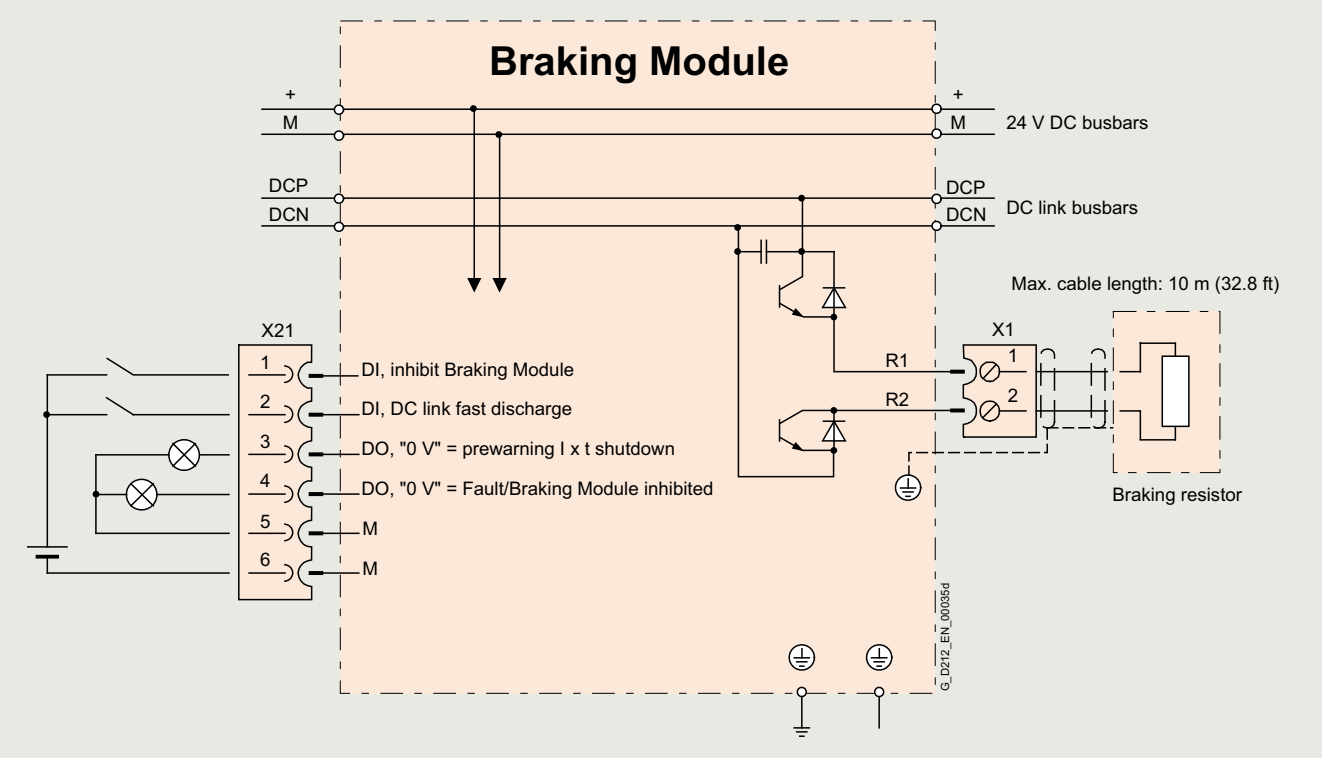

Connection example of Braking Module in booksize format

© Siemens 2024

Overview



The excess energy of the DC link is dissipated via the braking resistor.

The corresponding braking resistor is connected to a Braking Module or Basic Line Module. Mounting the braking resistor outside the control cabinet or switchgear room allows the power losses to be dissipated, thereby allowing a corresponding reduction in the level of air conditioning required.

Selection and ordering data

Power P_{DB}/P_{max}	Suitable for	**Braking resistor** Article No.
DC link voltage 510 ... 720 V DC		
0.3 kW/25 kW	Braking Module 6SL3100-1AE31-0AB0	**6SN1113-1AA00-0DA0**
1.5 kW/100 kW	Braking Module 6SL3100-1AE31-0AB0	**6SL3100-1BE31-0AA0**
5 kW/30 kW	Basic Line Module 20 kW 6SL3130-1TE22-0AA0	**6SE7023-2ES87-2DC0**
12.5 kW/75 kW	Basic Line Module 40 kW 6SL3130-1TE24-0AA0	**6SE7028-0ES87-2DC0**

© Siemens 2024

Braking resistors for booksize format

Technical specifications

DC link voltage 510 V ... 720 V DC		Braking resistor for Braking Module in booksize and booksize compact format			
		6SN1113-1AA00-0DA0		6SL3100-1BE31-0AA0	
Resistance	Ω	17		5.7	
Rated power P_{DB}	kW	0.3		1.5	
Peak power P_{max}	kW	25		100	
Load duration for peak output t_a	s	0.1	0.4	1	2
Cycle duration of braking duty cycle t	s	11.5	210	68	460
Degree of protection		IP54 Braking resistor with connected 1.5 mm^2 cable (shielded), 3 m (9.84 ft) long		IP20	
Dimensions					
• Width	mm (in)	80 (3.15)		193 (7.60)	
• Height	mm (in)	210 (8.27)		410 (16.1)	
• Depth	mm (in)	53 (2.09)		240 (9.45)	
Weight, approx.	kg (lb)	3.4 (7.50)		5.6 (12.3)	
Certificate of suitability		cULus		–	

DC link voltage 510 V ... 720 V DC		Braking resistor	
		6SE7023-2ES87-2DC0	6SE7028-0ES87-2DC0
Resistance	Ω	20	8
Rated power P_{DB}	kW	5	12.5
Peak power P_{max}	kW	30	75
Load duration for peak output t_a	s	15	15
Cycle duration of braking duty cycle t	s	90	90
Degree of protection		IP20	IP20
Power connection		M6 screw stud	M6 screw stud
PE connection		M6 screw stud	M6 screw stud
Thermostatic switch (NC contact)		Screw-type terminals	Screw-type terminals
• Switching capacity		250 V AC/max. 10 A 42 V/0.2 A DC	250 V AC/max. 10 A 42 V/0.2 A DC
• Conductor cross-section	mm^2	2.5	1.5
Dimensions			
• Width	mm (in)	450 (17.72)	745 (29.33)
• Height	mm (in)	305 (12.01)	305 (12.01)
• Depth	mm (in)	485 (19.09)	485 (19.09)
Weight, approx.	kg (lb)	17 (37.5)	27 (59.5)
Certificate of suitability		UL, CSA	UL, CSA
Suitable for			
Basic Line Module in booksize format	Type	6SL3130-1TE22-0AA0	6SL3130-1TE24-0AA0
Braking Module in booksize compact format	Type	6SL3400-1AE31-0AA0	–

Characteristic curves

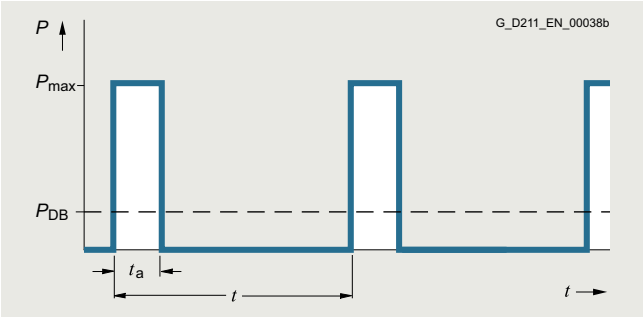

Load diagram for Braking Module in booksize format and braking resistors for booksize format

© Siemens 2024

Overview



Capacitor Module in booksize format

Capacitor Modules are used to increase the DC link capacitance to bridge momentary power losses.

Capacitor Modules are connected to the DC link voltage via the integrated DC link busbars. Capacitor Modules function autonomously.

Several Capacitor Modules can be operated in parallel.

Design

Capacitor Modules feature the following connections and interfaces as standard:

- 2 DC link connections via integrated DC link busbars
- 2 PE (protective earth) connections

Selection and ordering data

Description	Article No.
Capacitor Module	**6SL3100-1CE14-0AA0**
Accessories	
Warning labels in 36 languages This label set can be glued over the standard English or German labels to provide warnings in other languages. One set of labels is supplied with the devices. One sign in each of the following languages is provided in each set: BG, CZ, DE, DK, EE, ES, FI, FR, GB, GR, HU, IE, IS, IT, LT, LV, MT, NL, NO, PL, PT, RO, RU, SE, SI, SK, TR, CN, ID, IL, IR, JP, KR, SA, TH, TW	**6SL3166-3AB00-0AA0**

Technical specifications

DC link voltage 510 ... 720 V DC	**Capacitor Module Internal air cooling** 6SL3100-1CE14-0AA0
Capacitance	4000 µF
Current carrying capacity	
• 24 V DC busbars	20 A
• DC link busbars	100 A
PE connection	M5 screw
Dimensions	
• Width	100 mm (3.94 in)
• Height	380 mm (14.96 in)
• Depth, with spacer (included in scope of supply)	270 mm (10.63 in)
Weight, approx.	7.2 kg (16 lb)
Certificate of suitability	cULus

© Siemens 2024

Control Supply Module in booksize format

Overview



Control Supply Module in booksize format

The Control Supply Module in booksize format provides a 24 V to 28.8 V DC power supply that can be set using an integrated poteniomenter via the line or DC link. The Control Supply Module can either be operated individually or in a parallel connection with a maximum of 10 devices. A DIP switch on the top of the module is used to change over in the de-energized state (details of connection for parallel operation are given in the manual for booksize modules).

Using the Control Supply Module, it is possible for example to make specific emergency retraction movements in the event of a power failure, provided that the DC link voltage is available.

Design

Control Supply Modules feature the following connections and interfaces as standard:

- 1 line connection
- 2 DC link connections via integrated DC link busbars
- 2 electronics power supply connections via integrated 24 V DC bars
- 1 connection for the electronics power supply for Control Units, Terminal Modules, Sensor Modules, etc., via the 24 V terminal adapter provided in the scope of supply (max. cross-section 6 mm^2, max. fuse protection 20 A)
- 1 integrated potentiometer for setting the output voltage
- 1 digital output to signal the error-free state
- 1 DIP switch to change over between single and parallel mode
- 2 PE (protective earth) connections

The status of the Control Supply Modules is indicated via two multi-color LEDs.

Selection and ordering data

Description	Article No.
Control Supply Module in booksize format	**6SL3100-1DE22-0AA1**
Accessories	
Warning labels in 36 languages This label set can be glued over the standard English or German labels to provide warnings in other languages. One set of labels is supplied with the devices. One sign in each of the following languages is provided in each set: BG, CZ, DE, DK, EE, ES, FI, FR, GB, GR, HU, IE, IS, IT, LT, LV, MT, NL, NO, PL, PT, RO, RU, SE, SI, SK, TR, CN, ID, IL, IR, JP, KR, SA, TH, TW	**6SL3166-3AB00-0AA0**

Technical specifications

DC link voltage 510 ... 720 V DC **Line voltage 380 ... 480 V 3 AC**	**Control Supply Module in booksize format Internal air cooling** 6SL3100-1DE22-0AA1
Rated input current	
• At 400 V 3 AC	≤2 A
• At 600 V DC	1.1 A
DC link voltage range	300 … 882 V DC (operation in 300 … 430 V DC range is permitted temporarily for < 1 min)
Radio interference suppression (standard)	Category C2 to EN 61800-3
Rated output voltage	24 V ... 28.8 V DC (adjustable via potentiometer)
Rated output current	20 A
Current carrying capacity	
• 24 V DC busbars	20 A
• DC link busbars	100 A
Line connection L1, L2, L3 (X1)	Screw-type terminals
• Conductor cross-section	0.2 ... 4 mm^2
PE connection	M5 screw
Dimensions	
• Width	50 mm (1.97 in)
• Height	380 mm (14.96 in)
• Depth, with spacer (included in scope of supply)	270 mm (10.63 in)
Weight, approx.	4.8 kg (10.6 lb)
Certificate of suitability	cULus

© Siemens 2024

Integration

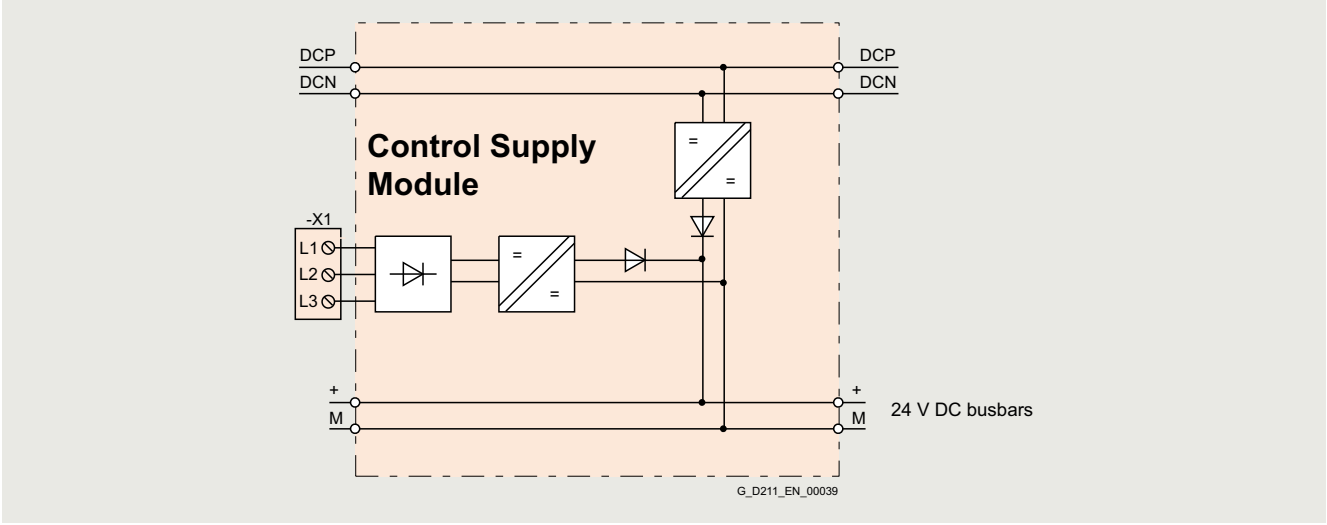

Connection example of Control Supply Module

© Siemens 2024

DC link adapters for booksize and booksize compact formats

Overview

DC link rectifier adapter



DC link rectifier adapter for unit widths of 50 mm (1.97 in) and 100 mm (3.94 in)

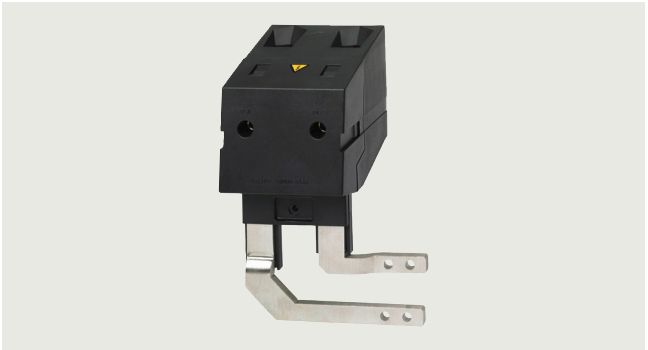

DC link rectifier adapter for unit widths of 150 mm ... 300 mm (5.91 in ... 11.81 in)

If the internal DC link busbars of the Motor Modules are not used, the DC link voltage must be supplied externally through a DC link rectifier adapter, e.g. when devices of booksize format are coupled with devices of chassis format via an external DC busbar. The DC link rectifier adapter is mounted on the DC link busbars of the Motor Module. The DC link cables are routed from above.

DC link adapter



DC link adapter (multi-tier) for all unit widths

If a multi-tier Motor Module configuration is used, a DC link adapter can be provided for linking the DC links of two drive line-ups. The DC link adapter is mounted sideways on the DC link busbars of the Motor Module. Installation is possible on the right or left side of the Motor Module. The marking of the poles (DCN and DCP) at the DC link adapter matches the side chosen for installation. The DC link cables are routed from behind. The DC link adapter (multi-tier) cannot be used in combination with the reinforced DC link busbars for Motor Modules ≤ 100 mm wide. DC link adapters are supplied in sets of 2 units.

Selection and ordering data

Description	Article No.
DC link rectifier adapter	
For direct infeed of DC link voltage	
For Line Modules and Motor Modules in the booksize and booksize compact format with a width of	
• 50 mm (1.97 in) and 100 mm (3.94 in)	**6SL3162-2BD00-0AA0**
• 100 mm (3.94 in), 150 mm (5.91 in), 200 mm (7.87 in) and 300 mm (11.81 in)	**6SL3162-2BE00-0AA0**
• 150 mm (5.91 in), 200 mm (7.87 in) and 300 mm (11.81 in)	**6SL3162-2BM00-0AA0**
DC link adapter set (2 units)	
For multi-tier configuration	
• For all Line Modules and Motor Modules in booksize and booksize compact format	**6SL3162-2BM01-0AA0**

Technical specifications

		DC link rectifier adapter			DC link adapter set
		6SL3162-2BD00-0AA0	6SL3162-2BE00-0AA0	6SL3162-2BM00-0AA0	6SL3162-2BM01-0AA0
Connection		Screw-type terminals	Screw-type terminals	Screw-type terminals	Screw-type terminals
• Conductor cross-section	mm^2	0.5 ... 10	35	35 ... 95	35 ... 95
Current carrying capacity	A	43	75	200	200
Weight, approx.	kg (lb)	0.06 (0.13)	0.12 (0.26)	0.48 (1.06)	0.76 (1.68)
Certificate of suitability		cURus	cURus	cURus	cURus
Suitable for Line Modules and Motor Modules	Formats	Booksize and booksize compact	Booksize	Booksize	Booksize and booksize compact

© Siemens 2024

Overview

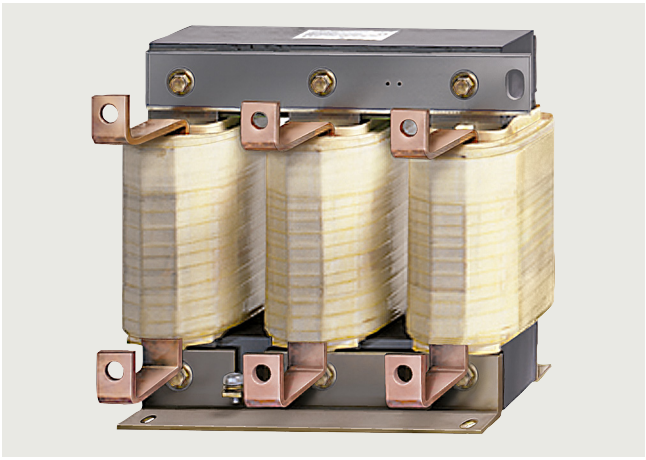

Motor reactors reduce the voltage loading on the motor windings. At the same time, the capacitive charge/discharge currents that place an additional load on the power unit when long motor cables are used are reduced. The maximum permissible output frequency when a motor reactor is used is 120 Hz.

The motor reactors are designed for a pulse frequency of 4 kHz. Higher pulse frequencies are not permissible.

The motor reactor must be installed as close as possible to the Motor Module.

Selection and ordering data

Rated output current of Motor Module	Suitable for Motor Module in booksize format	**Motor reactor** Article No.
3 A and 2 × 3 A	6SL3120-1TE13-0AD0 6SL3120-2TE13-0AD0	**6SE7021-0ES87-1FE0**
5 A and 2 × 5 A	6SL3120-1TE15-0AD0 6SL3120-2TE15-0AD0	**6SE7021-0ES87-1FE0**
9 A and 2 × 9 A	6SL3120-1TE21-0AD0 6SL3120-2TE21-0AD0	**6SL3000-2BE21-0AA0**
18 A and 2 × 18 A	6SL3120-1TE21-8AC0 6SL3120-1TE21-8AD0 6SL3120-2TE21-8AC0 6SL3120-2TE21-8AD0	**6SE7022-6ES87-1FE0**
24 A	6SL3120-1TE22-4AC0 6SL3120-1TE22-4AD0	**6SE7024-7ES87-1FE0**
30 A	6SL3120-1TE23-0AC0 6SL3120-1TE23-0AD0	**6SE7024-7ES87-1FE0**
45 A	6SL3120-1TE24-5AC0	**6SE7027-2ES87-1FE0**
60 A	6SL3120-1TE26-0AC0	**6SL3000-2BE26-0AA0**
85 A	6SL3120-1TE28-5AA3	**6SE7031-5ES87-1FE0**
132 A	6SL3120-1TE31-3AA3	**6SE7031-8ES87-1FE0**
200 A	6SL3120-1TE32-0AA4	**6SE7032-6ES87-1FE0**

© Siemens 2024

Motor reactors for booksize format

Technical specifications

DC link voltage 510 ... 720 V DC or Line voltage 380 ... 480 V 3 AC		Motor reactor (for a 4 kHz pulse frequency)									
		6SE7021-0ES87-1FE0				6SL3000-2BE21-0AA0		6SE7022-6ES87-1FE0			
Rated current	A	5				9		18			
Maximum current	A	10				18		36			
Rated inductance	µH	1243				1000		332			
Power loss	kW	0.08				0.09		0.11			
Connection Motor Module/Motor		Screw-type terminals 4 mm²				Screw-type terminals 16 mm²		Screw-type terminals 16 mm²			
PE connection		M6 screw stud				M6 screw stud		M6 screw stud			
Cable length between motor reactor and motor, max.											
(number of reactors in series)		(1)				(1)		(1)		(2)	
• Shielded	m (ft)	100 (328)				135 (443)		160 (525)		320 (1050)	
• Unshielded	m (ft)	150 (492)				200 (656)		240 (787)		480 (1575)	
Degree of protection		IP00				IP00		IP00			
Dimensions											
• Width	mm (in)	178 (7.01)				178 (7.01)		219 (8.62)			
• Height	mm (in)	153 (6.02)				159 (6.26)		180 (7.09)			
• Depth	mm (in)	88 (3.46)				111 (4.37)		119 (4.69)			
Weight, approx.	kg (lb)	5.5 (12.13)				4.8 (10.6)		7.8 (17.2)			
Certificate of suitability		cURus				cURus		cURus			
Suitable for Motor Module in booksize format	Type	6SL3120-1TE13-0AD0 6SL3120-2TE13-0AD0		6SL3120-1TE15-0AD0 6SL3120-2TE15-0AD0		6SL3120-1TE21-0AD0 6SL3120-2TE21-0AD0		6SL3120-1TE21-8AC0 6SL3120-1TE21-8AD0 6SL3120-2TE21-8AC0 6SL3120-2TE21-8AD0			
• Rated current of the Motor Module	A	3		5		9		18			

DC link voltage 510 ... 720 V DC or Line voltage 380 ... 480 V 3 AC		Motor reactor (for a 4 kHz pulse frequency)									
		6SE7024-7ES87-1FE0				6SE7027-2ES87-1FE0			6SL3000-2BE26-0AA0		
Rated current	A	30				45			60		
Maximum current	A	60				90			120		
Rated inductance	µH	180				59			62		
Power loss	kW	0.165		0.19		0.2			0.1		
Connection Motor Module/Motor		Flat connector for M8 screw				Flat connector for M8 screw			Flat connector for M8 screw		
PE connection		M6 screw stud				M6 screw stud			M6 screw stud		
Cable length between motor reactor and motor, max.											
(number of reactors in series)		(1)	(2)	(1)	(2)	(1)	(2)	(3)	(1)	(2)	(3)
• Shielded	m (ft)	190 (623)	375 (1230)	190 (623)	375 (1230)	200 (656)	400 (1312)	600 (1969)	200 (656)	400 (1312)	600 (1969)
• Unshielded	m (ft)	280 (919)	560 (1837)	280 (919)	560 (1837)	300 (984)	600 (1969)	900 (2953)	300 (984)	600 (1969)	900 (2953)
Degree of protection		IP00				IP00			IP00		
Dimensions											
• Width	mm (in)	197 (7.76)				267 (10.51)			267 (10.51)		
• Height	mm (in)	220 (8.66)				221 (8.70)			220 (8.66)		
• Depth	mm (in)	104 (4.09)				107 (4.21)			126 (4.96)		
Weight, approx.	kg (lb)	13 (28.7)				11 (24.3)			10.5 (23.2)		
Certificate of suitability		cURus				cURus			cURus		
Suitable for Motor Module in booksize format	Type	6SL3120-1TE22-4AC0 6SL3120-1TE22-4AD0		6SL3120-1TE23-0AC0 6SL3120-1TE23-0AD0		6SL3120-1TE24-5AC0			6SL3120-1TE26-0AC0		
• Rated current of the Motor Module	A	24		30		45			60		

© Siemens 2024

Technical specifications

DC link voltage 510 ... 720 V DC or Line voltage 380 ... 480 V 3 AC		**Motor reactor (for a 4 kHz pulse frequency)**								
		6SE7031-5ES87-1FE0			6SE7031-8ES87-1FE0			6SE7032-6ES87-1FE0		
Rated current	A	85			132			200		
Rated inductance	µH	29			23			16		
Power loss	kW	0.22			0.29			0.29		
Connection Motor Module/Motor		Flat connector for M8 screw			Flat connector for M10 screw			Flat connector for M10 screw		
PE connection		M6 screw			M6 screw			M6 screw		
Cable length between motor reactor and motor, max.										
(number of reactors in series)		(1)	(2)	(3)	(1)	(2)	(3)	(1)	(2)	(3)
• Shielded	m (ft)	200 (656)	400 (1312)	600 (1969)	200 (656)	400 (1312)	600 (1969)	200 (656)	400 (1312)	600 (1969)
• Unshielded	m (ft)	300 (984)	600 (1969)	900 (2953)	300 (984)	600 (1969)	900 (2953)	300 (984)	600 (1969)	900 (2953)
Degree of protection		IP00			IP00			IP00		
Dimensions										
• Width	mm (in)	197 (7.76)			281 (11.06)			281 (11.06)		
• Height	mm (in)	220 (8.66)			250 (9.84)			250 (9.84)		
• Depth	mm (in)	128 (5.04)			146 (5.75)			146 (5.75)		
Weight, approx.	kg (lb)	20.5 (45.2)			27.2 (60)			30.6 (67.5)		
Certificate of suitability		cURus			cURus			cURus		
Suitable for Motor Module in booksize format	Type	6SL3120-1TE28-5AA3			6SL3120-1TE31-3AA3			6SL3120-1TE32-0AA4		
• Rated current of the Motor Module	A	85			132			200		

© Siemens 2024

SINAMICS S120M distributed servo drive

Overview



SINAMICS S120M

SINAMICS S120M is the distributed version of the modular SINAMICS S120 drive system. This drive is a compact and turnkey drive unit that comprises

- AM600 Adapter Module for supplying the distributed drive unit
- Distributed drive unit (synchronous servomotor with integrated power unit and encoder)
- Hybrid cable for power and communication

The power unit is not integrated in the control cabinet, as is normally the case, but in the motor for the driven axis. This brings advantages and freedoms for existing or new machine concepts.

Benefits

- Reduced heat losses in the control cabinet thanks to distributed configuration
- Reduced air conditioning in the control cabinet thanks to the power unit integrated into the motor
- Reduced control cabinet volume thanks to the power unit integrated into the motor
- Increased degree of flexibility for modernizations/retrofits thanks to specified control cabinet sizes
- Less time spent on cabling, because the pre-assembled hybrid cable contains all signal and power cables
- Reduction in overall cable length, because the pre-assembled hybrid cable contains all signal and power cables
- Up to 12 distributed drive units can be operated on one AM600 Adapter Module, depending on their power ratings
- Any number of AM600 Adapter Modules can be operated on one appropriately dimensioned infeed
- Drive-integrated DI/DOs for easy adaptation to the machine environment
- All safety variants and communication variants of the SINAMICS S120 system are also available in SINAMICS S120M
- With the Terminal Module (TM54F), all of the safety functions available in the SINAMICS S120 drive system are available
- Optimum integration into the SIMOTION and SINUMERIK system landscape

Application

Typical SINAMICS S120M applications include the packaging, printing, glass and textile industries.

Design

The SINAMICS S120M distributed drive system comprises the following units:

- AM600 Adapter Module
- Distributed drive unit (1FK7 synchronous servomotor with integrated Motor Module and multi-turn absolute encoder)
- MOTION-CONNECT hybrid cable
  Additional information on cables is provided in Section, MOTION-CONNECT connection systems.
- DRIVE-CLiQ Extension (necessary with more than 6 distributed drive units)
- Hybrid Cabinet Bushing, optional
- Terminating connector (essential for achieving the degree of protection; included in scope of supply of AM600 Adapter Module)

© Siemens 2024

Function

- The 24 V electronics power supply is either provided from an external supply or from a Control Supply Module (CSM). The supply can also be taken from the central drive line-up using the 24 V terminal connector
- Use of Line Modules (Active Line Module, Basic Line Module and Smart Line Module) from the SINAMICS S120 product family
- The AM600 Adapter Module opens a line of distributed drive units. It feeds the DC link, auxiliary voltage, and DRIVE-CLiQ in a hybrid cable.
- If several drive units are to be operated, then the possible number depends on the central Control Unit. If an additional Control Unit is used, the closed-loop control signals are fed into the DRIVE-CLiQ line via a DRIVE-CLiQ Extension
- AM600 Adapter Module, DRIVE-CLiQ Extension and Hybrid Cabinet Bushing are not "visible" DRIVE-CLiQ nodes in the topology. The number of DRIVE-CLiQ Extensions is not restricted.
- As Control Unit or control, all multi-axis Control Units in the SINAMICS/SIMOTION/SINUMERIK range can generally be used (CU320-2, D4xx-2, CX32-2, NCUxx). The releases of SINAMICS S120M for the corresponding systems are published via SiePortal: https://support.industry.siemens.com

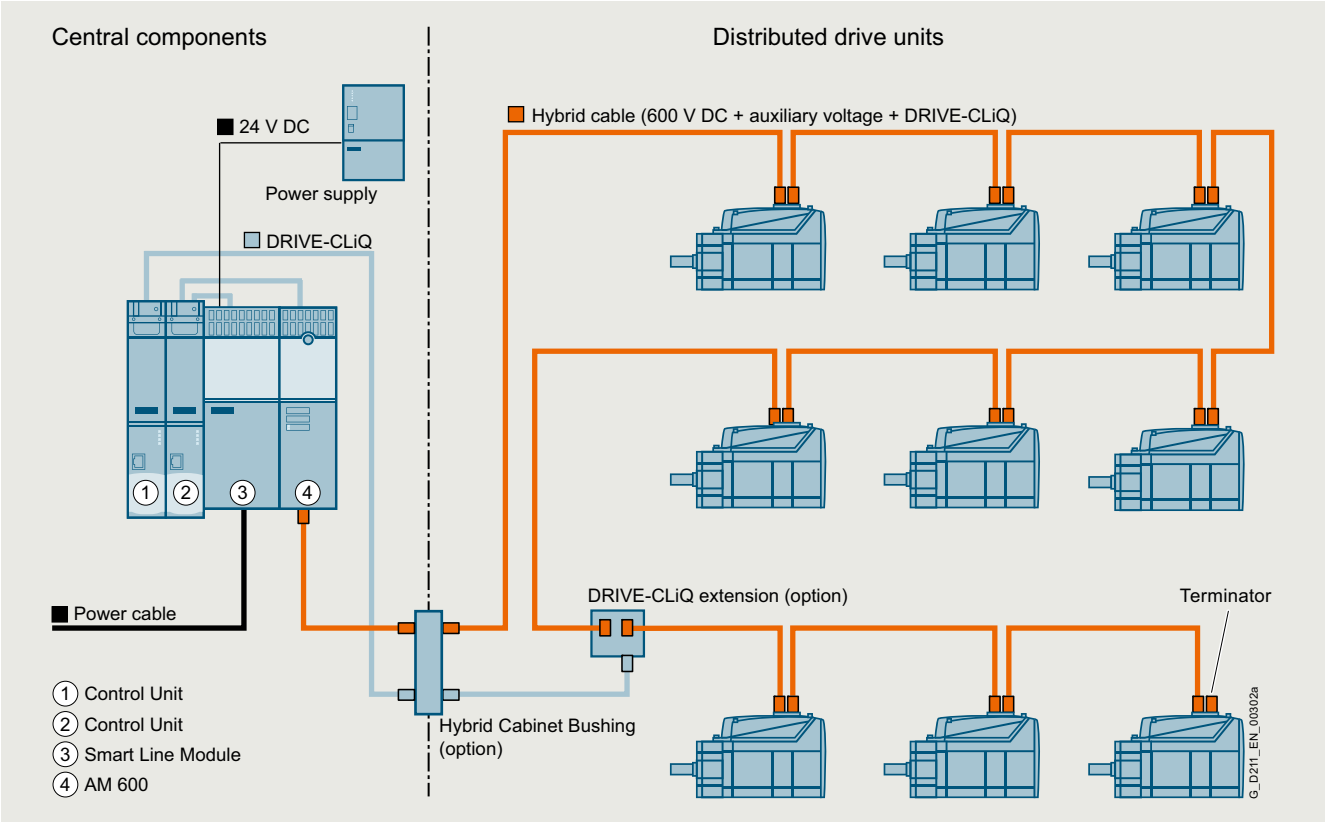

Principle of a SINAMICS S120M topology

© Siemens 2024

Integration

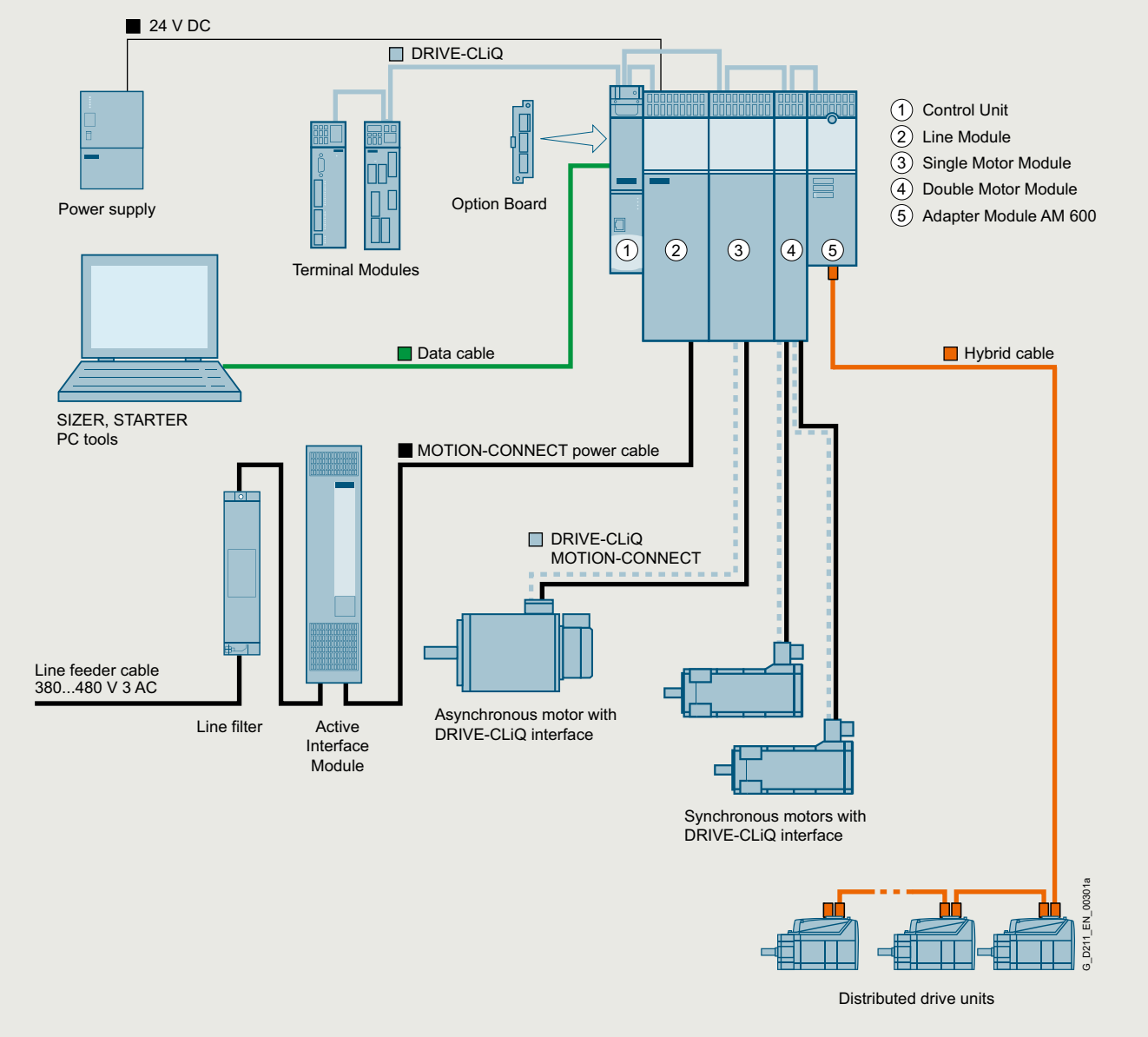

Integration of SINAMICS S120M into the SINAMICS S120 drive system

Modular system for complex drive tasks

SINAMICS S120 solves complex drive tasks for a very wide range of industrial applications and is, therefore, designed as a modular system. Users can choose from many different harmonized components and functions to create a solution that best meets their requirements.

The powerful SIZER for Siemens Drives (integrated in the TIA Selection Tool) configuration tool makes it easier to choose and determine the optimum drive configuration.

SINAMICS S120 optimally supports:

- Synchronous and asynchronous motors
- Linear and torque motors
- SINAMICS S120M

System architecture with a central Control Unit:

On the SINAMICS S120, the drive intelligence is combined with closed-loop control functions into Control Units. These units are capable of controlling drives in the vector, servo and V/f modes. They also perform the speed and torque control functions plus other intelligent drive functions for all axes on the drive. Inter-axis connections can be established within a component and easily configured in the STARTER commissioning tool using a mouse.

© Siemens 2024

Integration

Functions for higher efficiency

- Basic functions: Speed control, torque control, positioning functions
- Intelligent starting functions for independent restart after power supply interruption
- BICO technology with interconnection of drive-specific DI/DOs for easy adaptation of the drive system to its machine environment
- Integrated safety functions for rational implementation of safety concepts
- Regulated infeed/regenerative feedback functions for preventing undesirable reactions on the supply, allowing recovery of braking energy and ensuring greater stability against line fluctuations.

DRIVE-CLiQ – the digital interface between SINAMICS components

The SINAMICS S120 components, including the motors and encoders, are interconnected via a joint serial interface called DRIVE-CLiQ. The standardized cables and connectors reduce the variety of different parts and cut storage costs. Encoder evaluations for converting standard encoder signals to DRIVE-CLiQ are available for third-party motors or retrofit applications.

Electronic rating plates in all components

An important digital linkage element of the SINAMICS S120 drive system are the electronic rating plates integrated in every component. They allow all drive components to be detected automatically via DRIVE-CLiQ wiring. As a result, data do not need to be entered manually during commissioning or component replacement – helping to ensure that drives are commissioned successfully!

The electronic rating plate contains all the relevant technical data about that particular component. In the motors, for example, this data includes the parameters of the electric equivalent circuit diagram and characteristic values for the built-in motor encoder. In addition to the technical data, the electronic rating plate includes logistical data (manufacturer ID, article number, and ID). Since this data can be called up electronically on site or remotely, all the components used in a machine can always be individually identified, which helps simplify servicing.

Selection and ordering data

Designation		Article No.
AM600 Adapter Module		**6SL3555-2BC10-0AA0**
For connecting SINAMICS S120M to SINAMICS S120		
Distributed drive unit		
Comprising 1FK7 synchronous servomotor with integrated Motor Module and multi-turn absolute encoder		
• Shaft height 48 short		**6SL3540-6DF71-0R❑❑**
• Shaft height 48 long		**6SL3542-6DF71-0R❑❑**
• Shaft height 63 short		**6SL3562-6DF71-0R❑❑**
• Shaft height 63 long		**6SL3563-6DF71-0R❑❑**
Feather key	Without holding brake	**A**
	with holding brake	**B**
Plain shaft	Without holding brake	**G**
	with holding brake	**H**
Degree of protection	IP65	**1**
	and shaft sealing ring IP67	**2**
MOTION-CONNECT hybrid cable		**6FX8002-7HY❑❑-....** *)
Containing signal and power cables		
Outlet direction	NDE (rear) / NDE (rear)	**00**
	NDE (rear) / DE (front)	**11**
	DE (front) / DE (front)	**22**
Accessories		
Hybrid Cabinet Bushing		**6SL3555-2DA00-0AA0**
Cabinet bushing		
DRIVE-CLiQ Extension		**6SL3555-0AA00-6AB0**
Necessary for more than six distributed drive units and a second Control Unit		
Spacing bolts (4 units)		**6SL3462-1CC00-0AA0**
The mounting depth of the AM600 Adapter Module in booksize compact format is increased when it is mounted on these spacing bolts by such an amount that it can be integrated into a drive line-up in booksize format.		

*) Article No. supplement for length code required.

Description	Article No. supplement			
Length code for pre-assembled cables	**6FX8002-7HY..-** ❑	❑	❑	❑
0 m (0 ft) 100 m (328 ft)	**1** **2**			
0 m (0 ft) 10 m (32.8 ft) 20 m (65.6 ft) 30 m (98.4 ft) 40 m (131 ft) 50 m (164 ft) 60 m (197 ft) 70 m (230 ft) 80 m (262 ft) 90 m (295 ft)		**A** **B** **C** **D** **E** **F** **G** **H** **J** **K**		
0 m (0 ft) 1 m (3.28 ft) 2 m (6.56 ft) 3 m (9.84 ft) 4 m (13.1 ft) 5 m (16.4 ft) 6 m (19.7 ft) 7 m (22.9 ft) 8 m (26.3 ft) 9 m (29.5 ft)			**A** **B** **C** **D** **E** **F** **G** **H** **J** **K**	
0 m (0 in) 0.1 m (3.94 in) 0.2 m (7.87 in) 0.3 m (11.81 in) 0.4 m (15.75 in) 0.5 m (19.96 in) 0.6 m (23.62 in) 0.7 m (27.56 in) 0.8 m (31.5 in)				**0** **1** **2** **3** **4** **5** **6** **7** **8**
Examples:	1.0 m (3.28 ft) 2.2 m (7.22 ft) 8.0 m (26.3 ft)	1 1 1	A A A	B 0 C 2 J 0

Definition of lengths for pre-assembled cables

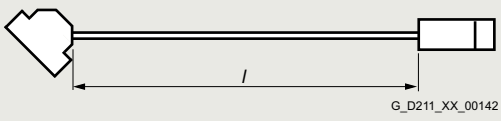

Cable with pre-assembled connectors at both ends

Tolerance:

- Cable lengths up to 10 m (32.8 ft): ± 2 %
- Cable lengths of 10 m (32.8 ft) and longer: ± 1 %

© Siemens 2024

Technical specifications

AM600 Adapter Module	6SL3555-2BC10-0AA0
Line connection voltage	380 ... 480 V 3 AC ±10 % (in operation -15 % <1 min)
Line frequency	47 ... 63 Hz
Electronics power supply (input)	
• Electronics voltage	24 V DC -15 ... +20 %
• Electronics current	20 A
• 24 V busbar current-carrying capacity	20 A
Electronics line supply (output)	
• Electronics power supply	48 V DC
• Rated power P_{out} [1]	0.45 kW
• Output current	10 A
DC link supply	
• DC link voltage	510 ... 720 V DC
• Output current I_{rated}	25 A
• Base-load current I_{base}	21.3 A
• S6 current I_{S6} 40 %	30 A
• Peak current I_{max}	50 A
• DC link capacitance	705 µF ±20 %
• DC link busbar current-carrying capacity	100 A

AM600 Adapter Module	6SL3555-2BC10-0AA0
Rated power, electrical For a DC link voltage of 600 V DC	14.7 kW
Total power loss Including electronics losses	0.06 kW
Minimum cable length to the 1st axis	3 m (9.84 ft)
Format	Booksize compact
Degree of protection	IP20
Ambient temperature during operation, perm.	0 ... 40 °C (32 ... 104 °F) >40 ... 55 °C (104 ... 131 °F) see derating characteristics of the Line Modules
Dimensions	
• Width	75 mm (2.95 in)
• Height	270 mm (10.63 in)
• Depth	224 mm (8.82 in)
Weight, approx.	3.2 kg (7.05 lb)

7
1

Distributed drive unit (synchronous servomotor with Motor Module and encoder)		6SL3540-6DF71-0R..	6SL3542-6DF71-0R..	6SL3562-6DF71-0R..	6SL3563-6DF71-0R..
Type of construction		IM B5 IM V1 IM V3	IM B5 IM V1 IM V3	IM B5 IM V1 IM V3	IM B5 IM V1 IM V3
Cooling method		Surface convection	Surface convection	Surface convection	Surface convection
Ambient temperature during operation, perm.	°C (°F)	-15 ... +40 (5 ... 104) >40 ... 55 °C (104 ... 131) with derating	-15 ... +40 (5 ... 104) >40 ... 55 °C (104 ... 131) with derating	-15 ... +40 (5 ... 104) >40 ... 55 °C (104 ... 131) with derating	-15 ... +40 (5 ... 104) >40 ... 55 °C (104 ... 131) with derating
Installation altitude, max.	m (ft)	1000 (3281) [2]	1000 (3281) [2]	1000 (3281) [2]	1000 (3281) [2]
Sound pressure level L_{pA} (1 m) acc. to DIN EN ISO 1680, max. Tolerance +3 dB	dB	55	55	65	65
Vibrational load in operation Acc. to IEC 68-2-6, DIN EN 60721 Part 3-0 and Part 3-3		Class 3M3	Class 3M3	Class 3M3	Class 3M3
• Constant deflection in frequency range 2 … 9 Hz	mm (in)	1.5 (0.06)	1.5 (0.06)	1.5 (0.06)	1.5 (0.06)
• Constant deflection in frequency range 10 … 200 Hz		0.5 × *g*	0.5 × *g*	0.5 × *g*	0.5 × *g*
Shock load in operation Acc. to DIN EN 60721 Part 3-0 and Part 3-3		Class 3M3	Class 3M3	Class 3M3	Class 3M3
• Max. peak acceleration		7 × *g*	7 × *g*	7 × *g*	7 × *g*
• Shock duration	ms	22	22	22	22
Degree of protection					
• Standard		IP65	IP65	IP65	IP65
• Optional		IP67	IP67	IP67	IP67
Weight, approx.					
• Without brake	kg (lb)	6 (13.2)	7.4 (16.3)	11.9 (26.2)	13.9 (30.6)
• With brake	kg (lb)	6.4 (14.1)	7.7 (17.0)	13.3 (29.3)	15.3 (33.7)

[1] Only applies for an electronics input voltage > 26.5 V.

[2] From 1000 m (3281 ft) to 4000 m (13124 ft) above sea level: - Reduction of the output current by 10 % per 1000 m (3281 ft) or - Reduction of the ambient temperature by 5 K per 1000 m (3281 ft) from 2000 m (6562 ft) to 4000 m (13124 ft) above sea level additionally - Operation on line supply systems with grounded neutral point or - Operation with an isolating transformer with secondary grounded neutral point

© Siemens 2024

Technical specifications

Distributed drive unit (synchronous servomotor with Motor Module and encoder)		6SL3540-6DF71-0R..	6SL3542-6DF71-0R..	6SL3562-6DF71-0R..	6SL3563-6DF71-0R..
Synchronous servomotor					
Shaft height		48 short	48 long	63 short	63 long
Rated speed	r/min	3000	3000	3000	3000
Max. speed	r/min	9000	6400	5600	6400
Rated torque	Nm (lb_f-ft)	1.05 (0.77)	1.8 (1.33)	2.7 (1.99)	2.2 (1.62)
Torque, max.	Nm (lb_f-ft)	4.9 (3.61)	10 (7.38)	19.3 (14.2)	27 (19.9)
Static torque	Nm (lb_f-ft)	1.3 (0.96)	2.5 (1.84)	5 (3.69)	7.1 (5.24)
Stall current	A	1.9	1.8	3.15	5
Moment of inertia					
• Without brake	kgm^2 (lb_f-in-s^2)	0.16 (1.42) × 10^{-3}	0.29 (2.57) × 10^{-3}	1.12 (9.91) × 10^{-3}	1.47 (13.01) × 10^{-3}
• With brake	kgm^2 (lb_f-in-s^2)	0.192 (1.70) × 10^{-3}	0.32 (2.83) × 10^{-3}	1.22 (10.8) × 10^{-3}	1.57 (13.9) × 10^{-3}
Shaft torsional stiffness	Nm/rad (lb_f-ft/rad)	13000 (9589)	11400 (8409)	26500 (19546)	25000 (18440)
Motor Module					
Electronics power supply	V DC	48	48	48	48
Power consumption, max. Electronics power supply	W	12	12	12	12
Power consumption, brake	W	15	15	20	20
Rated DC link voltage	V DC	600	600	600	600
DC link voltage	V DC	510 ... 720	510 ... 720	510 ... 720	510 ... 720
Output voltage	V AC	0 ... 0.717 × DC-link voltage	0 ... 0.717 × DC-link voltage	0 ... 0.717 × DC-link voltage	0 ... 0.717 × DC-link voltage
Overvoltage trip	V DC	820 ±2 %	820 ±2 %	820 ±2 %	820 ±2 %
Undervoltage trip	V DC	380 ±2 %	380 ±2 %	380 ±2 %	380 ±2 %
Current-carrying capacity of the DC link	A	25	25	25	25
DC link capacitance	µF	24	24	48	48
Pulse frequency	kHz	4	4	4	4
Output current					
• Output current I_{rated}	A	1.7	1.4	1.9	2
• Base-load current I_{base}	A	2.5	2	1.4	1.5
• S6 current I_{S6} 40 %	A	1.3	1.1	2.8	2.9
• Peak current I_{max}	A	7.7	7.6	14	21
Surface temperature	°C (°F)	<100 (212)	<100 (212)	<100 (212)	<100 (212)
Encoder (absolute encoder AM20DQI)					
Resolution within one revolution	bit	20	20	20	20
Traversing range (multi-turn)	Revolutions	4096	4096	4096	4096

Hybrid cable		6FX8002-7HY..-....
Cross-section	mm^2	4
Max. line length per AM600 Adapter Module	m (ft)	100 (328)
Max. current-carrying capacity	A	25

More information

Additional information is available at
www.siemens.com/sinamics-s120m

© Siemens 2024

Air-cooled Power Modules in blocksize format

Overview

PM240-2 Power Modules – 0.55 kW to 250 kW (0.75 hp to 400 hp), IP20 degree of protection



PM240-2 Power Modules, frame sizes FSA to FSG, with CU310-2 PN Control Unit and BOP20 Basic Operator Panel

The PM240-2 Power Modules are based on a hardware platform, which permits an increase in power density.

Furthermore, the PM240-2 Power Module is also suitable for use in safety-oriented applications. In conjunction with a fail-safe Control Unit, the drive can be transformed into a Safety Integrated Drive.

The PM240-2 Power Modules in frame sizes FSA to FSF are available both with and without an integrated line filter class A of compact design for 200 V, 400 V and 690 V line voltages (except PM240-2 frame sizes FSD to FSF: 200 V). The PM240-2 Power Modules in frame size FSG are available with an integrated line filter Category C3 of compact design for 400 V and 690 V line voltages, also with integrated line filter Category C2 for a line voltage of 400 V. In addition, a DC link reactor is integrated in the PM240-2 Power Modules, frame sizes FSD to FSG, and therefore no line reactor is required.

The PM240-2 Power Modules with integrated line filter class A are suitable for connection to TN supply systems. Power Modules without integrated line filter can be connected to grounded TN/TT systems and non-grounded IT systems.

The PM240-2 Power Module has an integrated braking chopper. In generating mode, the excess energy of the DC link can be dissipated by means of an optional braking resistor.

The permissible cable lengths between converter and motor are limited. Longer cables can be used if output reactors are connected.

Shield plates and shield connection kits are available for use in the wiring installation of Power Modules to ensure that it complies with EMC guidelines.
For more information, see shield connection kits for blocksize format.

Additional options

Further selected accessories are available from "Siemens Product Partner for Drives Options":
www.siemens.com/drives-options-partner

© Siemens 2024

Integration

All Power Modules have the following connections and interfaces:

- PM-IF interface to connect the Power Module to the Control Unit. The Power Module also supplies power to the Control Unit using an integrated power supply
- Motor connection using screw terminals or screw studs
- 2 PE/protective conductor connections
- Shield connection plate

The PM240-2 Power Modules together with the CU310-2 and CU320-2 Control Units, which are responsible for the communication and open-loop/closed-loop control functions, create powerful SINAMICS S120 drives.

PM240-2 Power Modules in blocksize format communicate via the PM-IF interface with:

- the CU310-2 Control Unit
- the SIMOTION D410-2 Control Unit
- CUA31 or CUA32 Control Unit Adapter

With a CUA31/CUA32 Control Unit Adapter snapped on, the PM240-2 Power Module communicates via a DRIVE-CLiQ connection with:

- CU320-2 Control Unit
- SINUMERIK 840D sl
- SINUMERIK ONE
- SINUMERIK MC
- SIMOTION D4x5-2 Control Unit

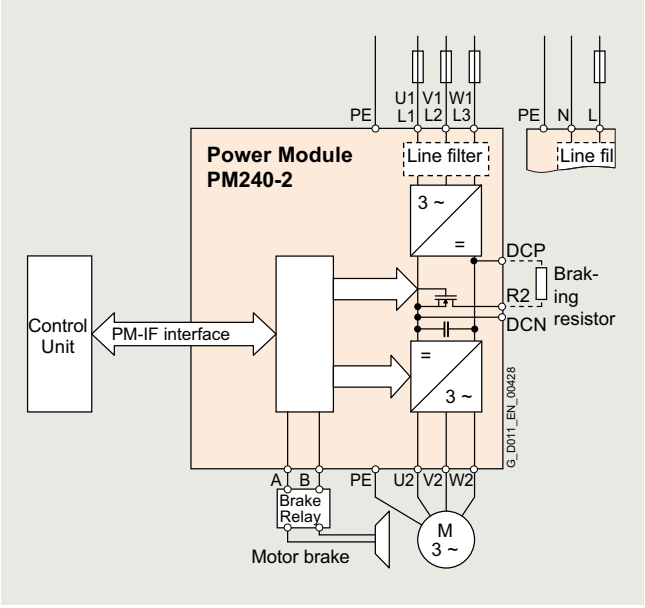

Connection example for PM240-2 Power Modules, frame sizes FSA to FSC, with or without integrated line filter

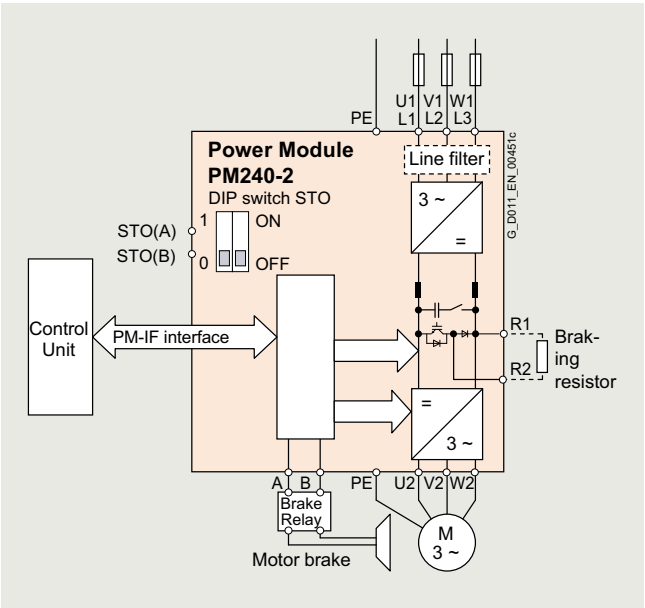

Connection example for PM240-2 Power Modules, frame sizes FSD to FSG, with or without integrated line filter

© Siemens 2024

Integration

Power and DC link components that are optionally available depending on the Power Module used

The following line-side components, DC link components and load-side power components are optionally available in the appropriate frames sizes for the Power Modules:

	Frame size						
	FSA	**FSB**	**FSC**	**FSD**	**FSE**	**FSF**	**FSG**
PM240-2 Power Module with integrated braking chopper							
• 200 V versions	✓	✓	✓	✓ 1)	✓ 1)	✓ 1)	–
• 400 V versions	✓	✓	✓	✓	✓	✓	✓
• 690 V versions	–	–	–	✓	✓	✓	✓
Line-side components							
Line filter class A	**F**	**F**	**F**	**F** 1)	**F** 1)	**F** 1)	–
Line filter class B (only for 400 V versions)	**U**	**U**	**U**	–	–	–	–
Line filters of Category C2 or C3 (for 400 V versions frame size FSG)	–	–	–	–	–	–	**I** 2)
Line filters of Category C3 (for 690 V versions frame size FSG)	–	–	–	–	–	–	**I** 2)
Line Harmonics Filters (only for 400 V versions, frame sizes FSD to FSG)	–	–	–	**S**	**S**	**S**	**S**
Line reactor (only for 3 AC versions 3))	**S** 4)	**S** 4)	**S** 4)	**I**	**I**	**I**	**I**
DC link components							
Braking resistor	**S**	**S**	**S**	**S**	**S**	**S**	**S**
Load-side power components							
Output reactor	**S**	**S**	**S**	**S**	**S**	**S**	**S**
Sine-wave filters (only for 400 V versions)	**S**	**S**	**S**	–	–	–	–
dv/dt filters plus VPL (only for 400 V versions)	–	–	–	**S**	**S**	**S**	–
dv/dt filters plus VPL (only for 690 V versions 5))	–	–	–	**S**	**S**	**S**	**S**

U = Base component
S = Lateral mounting
I = Integrated
F = Power Modules available with and without integrated filter class A
– = Not possible

1) The 200 V versions of the PM240-2 Power Modules, frame sizes FSD to FSF, are only available without integrated line filter.

2) The PM240-2 Power Modules frame size FSG with an integrated Category C3 filter can also be operated on TN systems with a grounded line conductor. To do so, the grounding screw must be removed. Then Category C3 can no longer be adhered to.

3) With the appropriate wiring, the line reactors for 200 V 3 AC can be used for the 200 V versions for 200 V 1 AC. More information can be found on the internet at:
https://support.industry.siemens.com/cs/document/109486005
https://support.industry.siemens.com/cs/document/109482011

4) For frame sizes FSA to FSC, for lines with u_k < 1 %, it is recommended that you use a line reactor or the next more powerful Power Module. More information can be found on the internet at:
https://support.industry.siemens.com/cs/document/109482011

5) The 690 V versions of the PM240-2 Power Modules require motors with a suitable isolating system for 690 V converter operation (IVIC-C premium).

© Siemens 2024

Integration

General design information

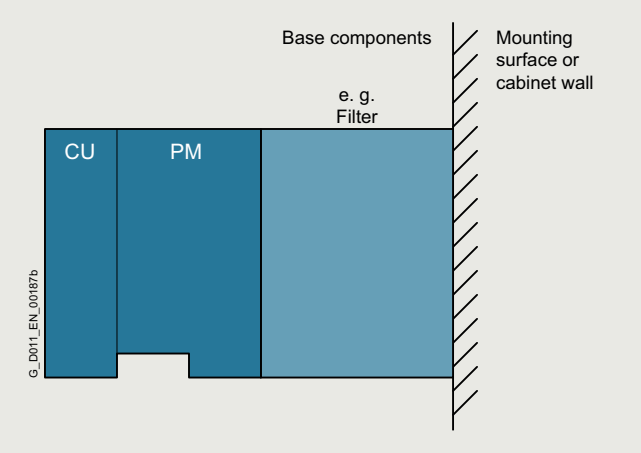

Converter comprising a Power Module (PM), a Control Unit (CU), and base components (side view)

- If at all possible, the line filter should be mounted directly below the converter.
- With lateral mounting, the line-side components have to be mounted on the left side of the converter, and the load-side components on the right side.
- Braking resistors have to be mounted directly on the control cabinet wall due to heating issues.

Recommended installation combinations of the converter and optional power and DC link components

Power Module Frame size	Base	Lateral mounting **Left of the converter (for line-side components)**	**Right of the converter (for load-side power components and DC link components)**
FSA and FSB	Line filters, sine-wave filters	Line reactor	Output reactor and/or braking resistor
FSC	Line filters, sine-wave filters	Line reactor	Output reactor and/or braking resistor
FSD and FSE	–	Line filters, Line Harmonics Filters	Output reactor or sine-wave filter or dv/dt filter plus VPL and/or braking resistor
FSF and FSG	–	Line filters, Line Harmonics Filters	Output reactor or sine-wave filter or dv/dt filter plus VPL and/or braking resistor

© Siemens 2024

Selection and ordering data

To ensure that a suitable Power Module is selected, the following currents should be used for applications:

- Rated output current for applications with low overload (LO)
- Base-load current for applications with high overload (HO)

With reference to the rated output current, the modules support at least 2-pole to 6-pole low-voltage motors. The rated power is merely a guide value. For a description of the overload performance, please refer to the general technical specifications of the Power Modules.

PM240-2 Power Modules standard variant

Rated power [1]		Rated output current I_N [2]	Power based on the base-load current [3]		Base-load current I_H [3]	Frame size	PM240-2 Power Module standard variant without integrated line filter	PM240-2 Power Module standard variant with integrated line filter class A
kW	hp	A	kW	hp	A		Article No.	Article No.
200 ... 240 V 1 AC/3 AC								
0.55	0.75	3.2	**0.37**	0.5	2.3	FSA	**6SL3210-1PB13-0UL0**	**6SL3210-1PB13-0AL0**
0.75	1	4.2	**0.55**	0.75	3.2	FSA	**6SL3210-1PB13-8UL0**	**6SL3210-1PB13-8AL0**
1.1	1.5	6	**0.75**	1	4.2	FSB	**6SL3210-1PB15-5UL0**	**6SL3210-1PB15-5AL0**
1.5	2	7.4	**1.1**	1.5	6	FSB	**6SL3210-1PB17-4UL0**	**6SL3210-1PB17-4AL0**
2.2	3	10.4	**1.5**	2	7.4	FSB	**6SL3210-1PB21-0UL0**	**6SL3210-1PB21-0AL0**
3	4	13.6	**2.2**	3	10.4	FSC	**6SL3210-1PB21-4UL0**	**6SL3210-1PB21-4AL0**
4	5	17.5	**3**	4	13.6	FSC	**6SL3210-1PB21-8UL0**	**6SL3210-1PB21-8AL0**
200 ... 240 V 3 AC								
5.5	7.5	22	**4**	5	17.5	FSC	**6SL3210-1PC22-2UL0**	**6SL3210-1PC22-2AL0**
7.5	10	28	**5.5**	7.5	22	FSC	**6SL3210-1PC22-8UL0**	**6SL3210-1PC22-8AL0**
11	15	42	**7.5**	10	35	FSD	**6SL3210-1PC24-2UL0**	–
15	20	54	**11**	15	42	FSD	**6SL3210-1PC25-4UL0**	–
18.5	25	68	**15**	20	54	FSD	**6SL3210-1PC26-8UL0**	–
22	30	80	**18.5**	25	68	FSE	**6SL3210-1PC28-0UL0**	–
30	40	104	**22**	30	80	FSE	**6SL3210-1PC31-1UL0**	–
37	50	130	**30**	40	104	FSF	**6SL3210-1PC31-3UL0**	–
45	60	154	**37**	50	130	FSF	**6SL3210-1PC31-6UL0**	–
55	75	178	**45**	60	154	FSF	**6SL3210-1PC31-8UL0**	–
380 ... 480 V 3 AC [4]								
0.55	0.75	1.7	**0.37**	0.5	1.3	FSA	**6SL3210-1PE11-8UL1**	**6SL3210-1PE11-8AL1**
0.75	1	2.2	**0.55**	0.75	1.7	FSA	**6SL3210-1PE12-3UL1**	**6SL3210-1PE12-3AL1**
1.1	1.5	3.1	**0.75**	1	2.2	FSA	**6SL3210-1PE13-2UL1**	**6SL3210-1PE13-2AL1**
1.5	2	4.1	**1.1**	1.5	3.1	FSA	**6SL3210-1PE14-3UL1**	**6SL3210-1PE14-3AL1**
2.2	3	5.9	**1.5**	2	4.1	FSA	**6SL3210-1PE16-1UL1**	**6SL3210-1PE16-1AL1**
3	4	7.7	**2.2**	3	5.9	FSA	**6SL3210-1PE18-0UL1**	**6SL3210-1PE18-0AL1**
4	5	10.2	**3**	4	7.7	FSB	**6SL3210-1PE21-1UL0**	**6SL3210-1PE21-1AL0**
5.5	7.5	13.2	**4**	5	10.2	FSB	**6SL3210-1PE21-4UL0**	**6SL3210-1PE21-4AL0**
7.5	10	18	**5.5**	7.5	13.2	FSB	**6SL3210-1PE21-8UL0**	**6SL3210-1PE21-8AL0**
11	15	26	**7.5**	10	18	FSC	**6SL3210-1PE22-7UL0**	**6SL3210-1PE22-7AL0**
15	20	32	**11**	15	26	FSC	**6SL3210-1PE23-3UL0**	**6SL3210-1PE23-3AL0**
18.5	25	38	**15**	20	32	FSD	**6SL3210-1PE23-8UL0**	**6SL3210-1PE23-8AL0**
22	30	45	**18.5**	25	38	FSD	**6SL3210-1PE24-5UL0**	**6SL3210-1PE24-5AL0**
30	40	60	**22**	30	45	FSD	**6SL3210-1PE26-0UL0**	**6SL3210-1PE26-0AL0**
37	50	75	**30**	40	60	FSD	**6SL3210-1PE27-5UL0**	**6SL3210-1PE27-5AL0**
45	60	90	**37**	50	75	FSE	**6SL3210-1PE28-8UL0**	**6SL3210-1PE28-8AL0**
55	75	110	**45**	60	90	FSE	**6SL3210-1PE31-1UL0**	**6SL3210-1PE31-1AL0**
75	100	145	**55**	75	110	FSF	**6SL3210-1PE31-5UL0**	**6SL3210-1PE31-5AL0**
90	125	178	**75**	100	145	FSF	**6SL3210-1PE31-8UL0**	**6SL3210-1PE31-8AL0**
110	150	205	**90**	125	178	FSF	**6SL3210-1PE32-1UL0**	**6SL3210-1PE32-1AL0**
132	200	250	**110**	150	205	FSF	**6SL3210-1PE32-5UL0**	**6SL3210-1PE32-5AL0**

[1] Rated power based on the rated output current I_N. The rated output current I_N is based on the duty cycle for low overload (LO).

[2] The rated output current I_N is based on the duty cycle for low overload (LO). These current values are valid for 200 V, 400 V or 690 V and are specified on the rating plate of the Power Module.

[3] The base-load current I_H is based on the duty cycle for high overload (HO).

[4] SIPLUS components for extreme requirements are available. More information is available on the internet at www.siemens.com/siplus-drives

© Siemens 2024

Selection and ordering data

Rated power [1]		Rated output current I_N [2]	Power based on the base-load current [3]		Base-load current I_H [3]	Frame size	PM240-2 Power Module standard variant without integrated line filter	PM240-2 Power Module standard variant with integrated line filter class A
kW	hp	A	kW	hp	A		Article No.	Article No.
500 ... 690 V 3 AC								
11	10	14	**7.5**	7.5	11	FSD	**6SL3210-1PH21-4UL0**	**6SL3210-1PH21-4AL0**
15	15	19	**11**	10	14	FSD	**6SL3210-1PH22-0UL0**	**6SL3210-1PH22-0AL0**
18.5	20	23	**15**	15	19	FSD	**6SL3210-1PH22-3UL0**	**6SL3210-1PH22-3AL0**
22	25	27	**18.5**	20	23	FSD	**6SL3210-1PH22-7UL0**	**6SL3210-1PH22-7AL0**
30	30	35	**22**	25	27	FSD	**6SL3210-1PH23-5UL0**	**6SL3210-1PH23-5AL0**
37	40	42	**30**	30	35	FSD	**6SL3210-1PH24-2UL0**	**6SL3210-1PH24-2AL0**
45	50	52	**37**	40	42	FSE	**6SL3210-1PH25-2UL0**	**6SL3210-1PH25-2AL0**
55	60	62	**45**	50	52	FSE	**6SL3210-1PH26-2UL0**	**6SL3210-1PH26-2AL0**
75	75	80	**55**	60	62	FSF	**6SL3210-1PH28-0UL0**	**6SL3210-1PH28-0AL0**
90	100	100	**75**	75	80	FSF	**6SL3210-1PH31-0UL0**	**6SL3210-1PH31-0AL0**
110	100	115	**90**	100	100	FSF	**6SL3210-1PH31-2UL0**	**6SL3210-1PH31-2AL0**
132	125	142	**110**	100	115	FSF	**6SL3210-1PH31-4UL0**	**6SL3210-1PH31-4AL0**

Rated power [1]		Rated output current I_N [2]	Power based on the base-load current [3]		Base-load current I_H [3]	Frame size	PM240-2 Power Module standard variant with integrated line filter Category C3	PM240-2 Power Module standard variant with integrated line filter Category C2
kW	hp	A	kW	hp	A		Article No.	Article No.
380 ... 480 V 3 AC [4]								
160	250	302	**132**	200	250	FSG	**6SL3210-1PE33-0CL0**	**6SL3210-1PE33-0AL0**
200	300	370	**160**	250	302	FSG	**6SL3210-1PE33-7CL0**	**6SL3210-1PE33-7AL0**
250	400	477	**200**	300	370	FSG	**6SL3210-1PE34-8CL0**	**6SL3210-1PE34-8AL0**
500 ... 690 V 3 AC								
160	150	171	**132**	150	142	FSG [4]	**6SL3210-1PH31-7CL0**	–
200	200	208	**160**	150	171	FSG [4]	**6SL3210-1PH32-1CL0**	–
250	250	250	**200**	200	208	FSG [4]	**6SL3210-1PH32-5CL0**	–

Shield connection kit for Power Modules

The shield connection kit makes it easier to connect the shields of supply and control cables, provides mechanical strain relief and thus ensures optimum EMC performance.

A shield connection kit is supplied as standard with PM240-2 Power Modules in frame sizes FSA to FSC. A set of shield plates is included in the scope of delivery for the motor and signal cables corresponding to the frame size for the frame sizes FSD to FSG. For the electromagnetically compatible connection of an optionally connectable braking resistor, the corresponding shield connection kit is to be ordered for frame sizes FSD to FSG.

For more information, see shield connection kits for Power Modules in the section Supplementary system components.

[1] Rated power based on the rated output current I_N. The rated output current I_N is based on the duty cycle for low overload (LO).

[2] The rated output current I_N is based on the duty cycle for low overload (LO). These current values are valid for 200 V, 400 V or 690 V and are specified on the rating plate of the Power Module.

[3] The base-load current I_H is based on the duty cycle for high overload (HO).

[4] The 690 V versions of the PM240-2 Power Modules frame size FSG are only available with an integrated Category C3 filter. To operate the converter also within TN systems with grounded outer conductor, you must remove the grounding screw. If the grounding screw is removed, the EMC property according to Category C3 is no longer given.

© Siemens 2024

Technical specifications

General technical specifications

Note:
When engineering the complete SINAMICS S120 drive, the system data of the associated Control Units, supplementary system components, DC link components and Sensor Modules must be taken into consideration.

Power Modules	PM240-2
System operating voltage	FSA ... FSC: 200 … 240 V 1 AC/3 AC ±10 % 380 … 480 V 3 AC ±10 % FSD ... FSG: 200 … 240 V 3 AC ±10 % (in operation -20 % < 1 min) 380 ... 480 V 3 AC ±10 % (in operation -20 %) 500 … 690 V 3 AC ±10 % (in operation -20 % < 1 min)
Line supply requirements **Short-circuit power ratio R_{SC}**	200 V: >25 With RSC >50 it is advisable for FSA to FSC to install a line reactor, or alternatively, to select a Power Module with the next-higher power rating. 400 V: >25 With RSC >100 it is advisable for FSA to FSC to install a line reactor, or alternatively, to select a Power Module with the next-higher power rating. 690 V: No restriction
Input frequency	47 ... 63 Hz
Output frequency	
• Control mode V/f	0 ... 550 Hz
• Control mode Vector	0 ... 240 Hz
Pulse frequency	200 V: 4 kHz 400 V: ≤90 kW: 4 kHz; >90 kW: 2 kHz 690 V: 2 kHz For higher pulse frequencies, see derating data
Power factor λ	FSA ... FSC: 0.7 ... 0.85 FSD ... FSG: - 200 V: >0.95 - 400 V and 690 V: >0.9
Offset factor cos φ	FSA ... FSC: >0.96 FSD ... FSG: 0.98 ... 0.99
Converter efficiency According to IEC 61800-9-2	200 V: >96.2 ... 97.1 % 400 V: >96.0 ... 98.0 % 690 V: >97.3 ... 98.2 %
Efficiency class According to IEC 61800-9-2	IE2
Output voltage, max. as % of input voltage	95 %
Overload capability	
• Low overload (LO) Note: No reduction in rated current I_N for use of overload.	1.5 × rated current I_N (i.e. 150 % overload) for 3 s **plus** 1.1 × rated current I_N (i.e. 110 % overload) for 57 s within a cycle time of 300 s
• High overload (HO) Note: No reduction in base-load current I_H for use of overload.	2 × base-load current I_H (i.e. 200 % overload) for 3 s **plus** 1.5 × base-load current I_H (i.e. 150 % overload) for 57 s within a cycle time of 300 s

For more information on overload capability, see in section characteristic curves.

© Siemens 2024

Technical specifications

Power Modules	PM240-2
Possible braking methods	DC braking Compound braking Dynamic braking with integrated braking chopper
Degree of protection	IP20 (standard)
Operating temperature	
• Low overload (LO)	Frame sizes FSA ... FSC: -10 ... +40 °C (14 ... 104 °F) without derating >40 ... 60 °C (>104 ... 140 °F) see derating characteristics Frame sizes FSD ... FSG: -20 ... +40 °C (-4 ... +104 °F) without derating >40 ... 60 °C (>104 ... 140 °F) see derating characteristics
• High overload (HO)	Frame sizes FSA ... FSC: -10 ... +50 °C (14 ... 122 °F) without derating >50 ... 60 °C (>122 ... 140 °F) see derating characteristics Frame sizes FSD ... FSG: -20 ... +50 °C (-4 ... +122 °F) without derating >50 ... 60 °C (>122 ... 140 °F) see derating characteristics
Relative humidity	< 95 % RH, condensation not permissible
Cooling	200 V, 400 V from 1.5 kW, 690 V: Internal air cooling, power units with increased air cooling by built-in fans 400 V 0.55 kW to 1.1 kW: Convection cooling
Installation altitude	Up to 1000 m (3281 ft) above sea level without derating, > 1000 m (3281 ft) see derating characteristics
Protection functions	• Undervoltage • Overvoltage • Overload • Ground fault • Short-circuit • Stall protection • Motor blocking protection • Motor overtemperature • Converter overtemperature • Parameter locking
Short-Circuit Current Rating SCCR according to UL (Short-Circuit Current Rating) [1]	200 V: 100 kA 400 V: 100 kA 690 V: 100 kA
Compliance with standards	CE, UKCA, cULus, RCM, SEMI F47, RoHS, EAC KC (only with internal or external line filters Category C2) For frame size FSD ... FSG also: WEEE (Waste Electrical & Electronic Equipment)
CE marking, according to	Low-Voltage Directive 2014/35/EU Ecodesign requirements of the EU Directive 2019/1781 EMC Directive 2014/30/EU

[1] Applies to industrial control panel installations to NEC Article 409 or UL 508A.

© Siemens 2024

Air-cooled Power Modules in blocksize format

Technical specifications

PM240-2 Power Modules standard variant

Line voltage 200 ... 240 V 1 AC/3 AC		**PM240-2 Power Modules standard variant**				
Without integrated line filter		6SL3210-1PB13-0UL0	6SL3210-1PB13-8UL0	6SL3210-1PB15-5UL0	6SL3210-1PB17-4UL0	6SL3210-1PB21-0UL0
With integrated line filter class A		6SL3210-1PB13-0AL0	6SL3210-1PB13-8AL0	6SL3210-1PB15-5AL0	6SL3210-1PB17-4AL0	6SL3210-1PB21-0AL0
Output current at 50 Hz 230 V 1 AC						
• Rated current I_N [1]	A	3.2	4.2	6	7.4	10.4
• For S6 duty (40 %) I_{S6}	A	3.3	4.3	6.1	8.2	11.5
• Base-load current I_H [2]	A	2.3	3.2	4.2	6	7.4
• Maximum current I_{max}	A	4.6	6	8.3	11.1	15.6
Rated power						
• Based on I_N	kW (hp)	0.55 (0.75)	0.75 (1)	1.1 (1.5)	1.5 (2)	2.2 (3)
• Based on I_H	kW (hp)	0.37 (0.50)	0.55 (0.75)	0.75 (1)	1.1 (1.5)	1.5 (2)
Rated pulse frequency	kHz	4	4	4	4	4
Efficiency η According to IEC 61800-9-2	%	>96.2	>96.4	>96.7	>96.4	>96.3
Power loss [3] According to IEC 61800-9-2 At rated current	kW	0.037	0.046	0.061	0.082	0.118
Cooling air requirement	m^3/s (ft^3/s)	0.005 (0.18)	0.005 (0.18)	0.0092 (0.325)	0.0092 (0.325)	0.0092 (0.325)
Sound pressure level L_{pA} (1 m)	dB	<50	<50	<62	<62	<62
Input current [4]						
• Rated input current 1 AC/3 AC	A	7.5/4.2	9.6/5.5	13.5/7.8	18.1/9.7	24/13.6
• Based on I_H 1 AC/3 AC	A	6.6/3	8.4/4.2	11.8/5.5	15.8/7.8	20.9/9.7
Line supply connection U1/L1, V1/L2, W1/L3		Terminal connector	Terminal connector	Terminal connector	Terminal connector	Terminal connector
• Conductor cross-section	mm^2	1.5 ... 2.5	1.5 ... 2.5	1.5 ... 6	1.5 ... 6	1.5 ... 6
Motor connection U2, V2, W2		Terminal connector	Terminal connector	Terminal connector	Terminal connector	Terminal connector
• Conductor cross-section	mm^2	1.5 ... 2.5	1.5 ... 2.5	1.5 ... 6	1.5 ... 6	1.5 ... 6
PE connection		Included in terminal connector	Included in terminal connector	Included in terminal connector	Included in terminal connector	Included in terminal connector
Motor cable length, max.						
• Shielded	m (ft)	50 (164)	50 (164)	50 (164)	50 (164)	50 (164)
• Unshielded	m (ft)	100 (328)	100 (328)	100 (328)	100 (328)	100 (328)
Degree of protection		IP20	IP20	IP20	IP20	IP20
Dimensions						
• Width	mm (in)	73 (2.87)	73 (2.87)	100 (3.94)	100 (3.94)	100 (3.94)
• Height	mm (in)	196 (7.72)	196 (7.72)	292 (11.5)	292 (11.5)	292 (11.5)
• Depth without operator panel	mm (in)	165 (6.50)	165 (6.50)	165 (6.50)	165 (6.50)	165 (6.50)
Frame size		FSA	FSA	FSB	FSB	FSB
Weight, approx.						
• Without integrated line filter	kg (lb)	1.4 (3.09)	1.4 (3.09)	2.8 (6.17)	2.8 (6.17)	2.8 (6.17)
• With integrated line filter	kg (lb)	1.6 (3.53)	1.6 (3.53)	3.1 (6.84)	3.1 (6.84)	3.1 (6.84)

[1] The rated output current I_N is based on the duty cycle for low overload (LO).

[2] The base-load current I_H is based on the duty cycle for high overload (HO).

[3] Typical values. You can find more information on the internet at: https://support.industry.siemens.com/cs/document/94059311

[4] The input current depends on the motor load and line impedance. The input currents apply for a load at rated power (based on I_N) for a line impedance corresponding to u_K = 1 %. The current values are specified on the rating plate of the Power Module.

© Siemens 2024

Technical specifications

Line voltage 200 ... 240 V 1 AC/3 AC		**PM240-2 Power Modules standard variant**	
Without integrated line filter		6SL3210-1PB21-4UL0	6SL3210-1PB21-8UL0
With integrated line filter class A		6SL3210-1PB21-4AL0	6SL3210-1PB21-8AL0
Output current at 50 Hz 230 V 1 AC			
• Rated current I_N [1]	A	13.6	17.5
• For S6 duty (40 %) I_{S6}	A	15	19.3
• Base-load current I_H [2]	A	10.4	13.6
• Maximum current I_{max}	A	20.8	27.2
Rated power			
• Based on I_N	kW (hp)	3 (4)	4 (5)
• Based on I_H	kW (hp)	2.2 (3)	3 (4)
Rated pulse frequency	kHz	4	4
Efficiency η According to IEC 61800-9-2	%	>96.7	>96.7
Power loss [3] According to IEC 61800-9-2 At rated current	kW	0.137	0.176
Cooling air requirement	m^3/s (ft^3/s)	0.0185 (0.65)	0.0185 (0.65)
Sound pressure level L_{pA} (1 m)	dB	<65	<65
Input current [4]			
• Rated input current 1 AC/3 AC	A	35.9/17.7	43/22.8
• Based on I_H 1 AC/3 AC	A	31.3/13.6	37.5/17.7
Line supply connection U1/L1, V1/L2, W1/L3		Terminal connector	Terminal connector
• Conductor cross-section	mm^2	6 ... 16	6 ... 16
Motor connection U2, V2, W2		Terminal connector	Terminal connector
• Conductor cross-section	mm^2	6 ... 16	6 ... 16
PE connection		Included in terminal connector	Included in terminal connector
Motor cable length, max.			
• Shielded	m (ft)	50 (164)	50 (164)
• Unshielded	m (ft)	100 (328)	100 (328)
Degree of protection		IP20	IP20
Dimensions			
• Width	mm (in)	140 (5.51)	140 (5.51)
• Height	mm (in)	355 (13.98)	355 (13.98)
• Depth without operator panel	mm (in)	165 (6.50)	165 (6.50)
Frame size		FSC	FSC
Weight, approx.			
• Without integrated line filter	kg (lb)	5 (11)	5 (11)
• With integrated line filter	kg (lb)	5.2 (11.5)	5.2 (11.5)

[1] The rated output current I_N is based on the duty cycle for low overload (LO).

[2] The base-load current I_H is based on the duty cycle for high overload (HO).

[3] Typical values. You can find more information on the internet at: https://support.industry.siemens.com/cs/document/94059311

[4] The input current depends on the motor load and line impedance. The input currents apply for a load at rated power (based on I_N) for a line impedance corresponding to u_K = 1 %. The current values are specified on the rating plate of the Power Module.

© Siemens 2024

Air-cooled Power Modules in blocksize format

Technical specifications

Line voltage 200 ... 240 V 3 AC		**PM240-2 Power Modules standard variant**				
Without integrated line filter		6SL3210-1PC22-2UL0	6SL3210-1PC22-8UL0	6SL3210-1PC24-2UL0	6SL3210-1PC25-4UL0	6SL3210-1PC26-8UL0
With integrated line filter class A		6SL3210-1PC22-2AL0	6SL3210-1PC22-8AL0	–	–	–
Output current at 50 Hz 230 V 3 AC						
• Rated current I_N [1]	A	22	28	42	54	68
• For S6 duty (40 %) I_{S6}	A	24.2	30.8	50	64	81
• Base-load current I_H [2]	A	17.5	22	35	42	54
• Maximum current I_{max}	A	35	44	70	84	108
Rated power						
• Based on I_N	kW (hp)	5.5 (7.5)	7.5 (10)	11 (15)	15 (20)	18.5 (25)
• Based on I_H	kW (hp)	4 (5)	5.5 (7.5)	7.5 (10)	11 (15)	15 (20)
Rated pulse frequency	kHz	4	4	4	4	4
Efficiency η According to IEC 61800-9-2	%	>97.0	>96.9	>96.7	>96.5	>96.3
Power loss [3] According to IEC 61800-9-2 At rated current	kW	0.217	0.282	0.463	0.626	0.843
Cooling air requirement	m^3/s (ft^3/s)	0.0185 (0.65)	0.0185 (0.65)	0.055 (1.94)	0.055 (1.94)	0.055 (1.94)
Sound pressure level L_{pA} (1 m)	dB	<65	<65	45 ... 65 [4]	45 ... 65 [4]	45 ... 65 [4]
Input current [5]						
• Rated input current	A	28.6	36.4	40	51	64
• Based on I_H	A	22.8	28.6	36	43	56
Line supply connection U1/L1, V1/L2, W1/L3		Terminal connector	Terminal connector	Screw terminals	Screw terminals	Screw terminals
• Conductor cross-section	mm^2	6 ... 16	6 ... 16	10 ... 35	10 ... 35	10 ... 35
Motor connection U2, V2, W2		Terminal connector	Terminal connector	Screw terminals	Screw terminals	Screw terminals
• Conductor cross-section	mm^2	6 ... 16	6 ... 16	10 ... 35	10 ... 35	10 ... 35
PE connection		Included in terminal connector	Included in terminal connector	Screw terminals	Screw terminals	Screw terminals
Motor cable length, max.						
• Shielded	m (ft)	50 (164)	50 (164)	200 (656)	200 (656)	200 (656)
• Unshielded	m (ft)	100 (328)	100 (328)	300 (984)	300 (984)	300 (984)
Degree of protection		IP20	IP20	IP20	IP20	IP20
Dimensions						
• Width	mm (in)	140 (5.51)	140 (5.51)	200 (7.87)	200 (7.87)	200 (7.87)
• Height	mm (in)	355 (13.98)	355 (13.98)	472 (18.58)	472 (18.58)	472 (18.58)
• Depth without operator panel	mm (in)	165 (6.50)	165 (6.50)	237 (9.33)	237 (9.33)	237 (9.33)
Frame size		FSC	FSC	FSD	FSD	FSD
Weight, approx.						
• Without integrated line filter	kg (lb)	5 (11)	5 (11)	17 (37.5)	17 (37.5)	17 (37.5)
• With integrated line filter	kg (lb)	5.2 (11.5)	5.2 (11.5)	–	–	–

1) The rated output current I_N is based on the duty cycle for low overload (LO).
2) The base-load current I_H is based on the duty cycle for high overload (HO).
3) Typical values. You can find more information on the internet at: https://support.industry.siemens.com/cs/document/94059311
4) Values dependent on ambient temperature and utilization.
5) The input current depends on the motor load and line impedance. The input currents apply for a load at rated power (based on I_N) for a line impedance corresponding to u_K = 1 %. The current values are specified on the rating plate of the Power Module.

© Siemens 2024

Technical specifications

Line voltage 200 ... 240 V 3 AC		**PM240-2 Power Modules standard variant**				
Without integrated line filter		6SL3210-1PC28-0UL0	6SL3210-1PC31-1UL0	6SL3210-1PC31-3UL0	6SL3210-1PC31-6UL0	6SL3210-1PC31-8UL0
With integrated line filter class A		–	–	–	–	–
Output current at 50 Hz 230 V 3 AC						
• Rated current I_N [1]	A	80	104	130	154	178
• For S6 duty (40 %) I_{S6}	A	96	124	156	184	213
• Base-load current I_H [2]	A	68	80	104	130	154
• Maximum current I_{max}	A	136	160	208	260	308
Rated power						
• Based on I_N	kW (hp)	22 (30)	30 (40)	37 (50)	45 (60)	55 (75)
• Based on I_H	kW (hp)	18.5 (25)	22 (30)	30 (40)	37 (50)	45 (60)
Rated pulse frequency	kHz	4	4	4	4	4
Efficiency η According to IEC 61800-9-2	%	>96.5	>96.2	>96.7	>96.5	>96.4
Power loss [3] According to IEC 61800-9-2 At rated current	kW	0.937	1.31	1.45	1.81	2.20
Cooling air requirement	m^3/s (ft^3/s)	0.083 (2.93)	0.083 (2.93)	0.153 (5.40)	0.153 (5.40)	0.153 (5.40)
Sound pressure level L_{pA} (1 m)	dB	44 ... 62 [4]	44 ... 62 [4]	56 ... 68 [4]	56 ... 68 [4]	56 ... 68 [4]
Input current [5]						
• Rated input current	A	76	98	126	149	172
• Based on I_H	A	71	83	110	138	164
Line supply connection U1/L1, V1/L2, W1/L3		Screw terminals	Screw terminals	M10 screw stud	M10 screw stud	M10 screw stud
• Conductor cross-section	mm^2	25 ... 70	25 ... 70	35 ... 2 × 120	35 ... 2 × 120	35 ... 2 × 120
Motor connection U2, V2, W2		Screw terminals	Screw terminals	M10 screw stud	M10 screw stud	M10 screw stud
• Conductor cross-section	mm^2	25 ... 70	25 ... 70	35 ... 2 × 120	35 ... 2 × 120	35 ... 2 × 120
PE connection		Screw terminals	Screw terminals	M10 screw stud	M10 screw stud	M10 screw stud
Motor cable length, max.						
• Shielded	m (ft)	200 (656)	200 (656)	300 (984)	300 (984)	300 (984)
• Unshielded	m (ft)	300 (984)	300 (984)	450 (1476)	450 (1476)	450 (1476)
Degree of protection		IP20	IP20	IP20	IP20	IP20
Dimensions						
• Width	mm (in)	275 (10.83)	275 (10.83)	305 (12.01)	305 (12.01)	305 (12.01)
• Height	mm (in)	551 (21.69)	551 (21.69)	708 (27.87)	708 (27.87)	708 (27.87)
• Depth without operator panel	mm (in)	237 (9.33)	237 (9.33)	357 (14.06)	357 (14.06)	357 (14.06)
Frame size		FSE	FSE	FSF	FSF	FSF
Weight, approx.						
• Without integrated line filter	kg (lb)	26 (57.3)	26 (57.3)	57 (126)	57 (126)	57 (126)
• With integrated line filter	kg (lb)	–	–	–	–	–

1) The rated output current I_N is based on the duty cycle for low overload (LO).

2) The base-load current I_H is based on the duty cycle for high overload (HO).

3) Typical values. You can find more information on the internet at: https://support.industry.siemens.com/cs/document/94059311

4) Values dependent on ambient temperature and utilization.

5) The input current depends on the motor load and line impedance. The input currents apply for a load at rated power (based on I_N) for a line impedance corresponding to u_K = 1 %. The current values are specified on the rating plate of the Power Module.

© Siemens 2024

Air-cooled Power Modules in blocksize format

Technical specifications

Line voltage 380 ... 480 V 3 AC		PM240-2 Power Modules standard variant					
Without integrated line filter		6SL3210-1PE11-8UL1	6SL3210-1PE12-3UL1	6SL3210-1PE13-2UL1	6SL3210-1PE14-3UL1	6SL3210-1PE16-1UL1	6SL3210-1PE18-0UL1
With integrated line filter class A		6SL3210-1PE11-8AL1	6SL3210-1PE12-3AL1	6SL3210-1PE13-2AL1	6SL3210-1PE14-3AL1	6SL3210-1PE16-1AL1	6SL3210-1PE18-0AL1
Output current at 50 Hz 400 V 3 AC							
• Rated current I_N [1]	A	1.7	2.2	3.1	4.1	5.9	7.7
• For S6 duty (40 %) I_{S6}	A	2.0	2.5	3.5	4.5	6.5	8.5
• Base-load current I_H [2]	A	1.3	1.7	2.2	3.1	4.1	5.9
• Maximum current I_{max}	A	2.6	3.4	4.7	6.2	8.9	11.8
Rated power							
• Based on I_N	kW (hp)	0.55 (0.75)	0.75 (1)	1.1 (1.5)	1.5 (2)	2.2 (3)	3 (4)
• Based on I_H	kW (hp)	0.37 (0.50)	0.55 (0.75)	0.75 (1)	1.1 (1.5)	1.5 (2)	2.2 (3)
Rated pulse frequency	kHz	4	4	4	4	4	4
Efficiency η According to IEC 61800-9-2	%	>96.0	>96.7	>97.1	>97.3	>97.3	>97.3
Power loss [3] According to IEC 61800-9-2 At rated current	kW	0.032	0.037	0.047	0.057	0.080	0.103
Cooling air requirement	m^3/s (ft^3/s)	0.005 (0.18)	0.005 (0.18)	0.005 (0.18)	0.005 (0.18)	0.005 (0.18)	0.005 (0.18)
Sound pressure level L_{pA} (1 m)	dB	<50	<50	<50	<50	<57	<57
Input current [4]							
• Rated input current	A	2.3	2.9	4.1	5.5	7.7	10.1
• Based on I_H	A	2	2.6	3.3	4.7	6.1	8.8
Line supply connection U1/L1, V1/L2, W1/L3		Terminal connector	Terminal connector	Terminal connector	Terminal connector	Terminal connector	Terminal connector
• Conductor cross-section	mm^2	1 ... 2.5	1 ... 2.5	1 ... 2.5	1 ... 2.5	1 ... 2.5	1 ... 2.5
Motor connection U2, V2, W2		Terminal connector	Terminal connector	Terminal connector	Terminal connector	Terminal connector	Terminal connector
• Conductor cross-section	mm^2	1 ... 2.5	1 ... 2.5	1 ... 2.5	1 ... 2.5	1 ... 2.5	1 ... 2.5
PE connection		Included in terminal connector	Included in terminal connector	Included in terminal connector	Included in terminal connector	Included in terminal connector	Included in terminal connector
Motor cable length, max.							
• Without filter, shielded/unshielded	m (ft)	150/150 (492/492)	150/150 (492/492)	150/150 (492/492)	150/150 (492/492)	150/150 (492/492)	150/150 (492/492)
• With integrated filter class A, shielded/unshielded	m (ft)	50/100 (164/328)	50/100 (164/328)	50/100 (164/328)	50/100 (164/328)	50/100 (164/328)	50/100 (164/328)
Degree of protection		IP20	IP20	IP20	IP20	IP20	IP20
Dimensions							
• Width	mm (in)	73 (2.87)	73 (2.87)	73 (2.87)	73 (2.87)	73 (2.87)	73 (2.87)
• Height	mm (in)	196 (7.72)	196 (7.72)	196 (7.72)	196 (7.72)	196 (7.72)	196 (7.72)
• Depth without operator panel	mm (in)	165 (6.50)	165 (6.50)	165 (6.50)	165 (6.50)	165 (6.50)	165 (6.50)
Frame size		FSA	FSA	FSA	FSA	FSA	FSA
Weight, approx.							
• Without integrated line filter	kg (lb)	1.3 (2.87)	1.3 (2.87)	1.3 (2.87)	1.4 (3.09)	1.4 (3.09)	1.4 (3.09)
• With integrated line filter	kg (lb)	1.5 (3.31)	1.5 (3.31)	1.5 (3.31)	1.6 (3.53)	1.6 (3.53)	1.6 (3.53)

[1] The rated output current I_N is based on the duty cycle for low overload (LO).

[2] The base-load current I_H is based on the duty cycle for high overload (HO).

[3] Typical values. You can find more information on the internet at: https://support.industry.siemens.com/cs/document/94059311

[4] The input current depends on the motor load and line impedance. The input currents apply for a load at rated power (based on I_N) for a line impedance corresponding to u_K = 1 %. The current values are specified on the rating plate of the Power Module.

© Siemens 2024

Technical specifications

Line voltage 380 ... 480 V 3 AC		**PM240-2 Power Modules standard variant**				
Without integrated line filter		6SL3210-1PE21-1UL0	6SL3210-1PE21-4UL0	6SL3210-1PE21-8UL0	6SL3210-1PE22-7UL0	6SL3210-1PE23-3UL0
With integrated line filter class A		6SL3210-1PE21-1AL0	6SL3210-1PE21-4AL0	6SL3210-1PE21-8AL0	6SL3210-1PE22-7AL0	6SL3210-1PE23-3AL0
Output current at 50 Hz 400 V 3 AC						
• Rated current I_N [1]	A	10.2	13.2	18	26	32
• For S6 duty (40 %) I_{S6}	A	11.2	14.5	19.8	28.6	37.1
• Base-load current I_H [2]	A	7.7	10.2	13.2	18	26
• Maximum current I_{max}	A	15.4	20.4	27	39	52
Rated power						
• Based on I_N	kW (hp)	4 (5)	5.5 (7.5)	7.5 (10)	11 (15)	15 (20)
• Based on I_H	kW (hp)	3 (4)	4 (5)	5.5 (7.5)	7.5 (10)	11 (15)
Rated pulse frequency	kHz	4	4	4	4	4
Efficiency η According to IEC 61800-9-2	%	>97.4	>97.6	>97.7	>97.8	>97.9
Power loss [3] According to IEC 61800-9-2 At rated current	kW	0.135	0.175	0.229	0.313	0.365
Cooling air requirement	m^3/s (ft^3/s)	0.0092 (0.325)	0.0092 (0.325)	0.0092 (0.325)	0.0185 (0.65)	0.0185 (0.65)
Sound pressure level L_{pA} (1 m)	dB	<62	<62	<62	<65	<65
Input current [4]						
• Rated input current	A	13.3	17.2	22.2	32.6	39.9
• Based on I_H	A	11.6	15.3	19.8	27	36
Line supply connection U1/L1, V1/L2, W1/L3		Terminal connector	Terminal connector	Terminal connector	Terminal connector	Terminal connector
• Conductor cross-section	mm^2	1.5 ... 6	1.5 ... 6	1.5 ... 6	6 ... 16	6 ... 16
Motor connection U2, V2, W2		Terminal connector	Terminal connector	Terminal connector	Terminal connector	Terminal connector
• Conductor cross-section	mm^2	1.5 ... 6	1.5 ... 6	1.5 ... 6	6 ... 16	6 ... 16
PE connection		Included in terminal connector	Included in terminal connector	Included in terminal connector	Included in terminal connector	Included in terminal connector
Motor cable length, max.						
• Without filter, shielded/unshielded	m (ft)	150/150 (492/492)	150/150 (492/492)	150/150 (492/492)	150/150 (492/492)	150/150 (492/492)
• With integrated filter class A, shielded/unshielded	m (ft)	100/100 (328/328) [5]	100/100 (328/328) [5]	100/100 (328/328) [5]	150/150 (492/492) [5]	150/150 (492/492) [5]
Degree of protection		IP20	IP20	IP20	IP20	IP20
Dimensions						
• Width	mm (in)	100 (3.94)	100 (3.94)	100 (3.94)	140 (5.51)	140 (5.51)
• Height	mm (in)	292 (11.5)	292 (11.5)	292 (11.5)	355 (13.98)	355 (13.98)
• Depth without operator panel	mm (in)	165 (6.50)	165 (6.50)	165 (6.50)	165 (6.50)	165 (6.50)
Frame size		FSB	FSB	FSB	FSC	FSC
Weight, approx.						
• Without integrated line filter	kg (lb)	2.9 (6.39)	2.9 (6.39)	3 (6.62)	4.7 (10.4)	4.8 (10.6)
• With integrated line filter	kg (lb)	3.1 (6.84)	3.1 (6.84)	3.2 (7.06)	5.3 (11.7)	5.4 (11.9)

[1] The rated output current I_N is based on the duty cycle for low overload (LO).

[2] The base-load current I_H is based on the duty cycle for high overload (HO).

[3] Typical values. You can find more information on the internet at: https://support.industry.siemens.com/cs/document/94059311

[4] The input current depends on the motor load and line impedance. The input currents apply for a load at rated power (based on I_N) for a line impedance corresponding to u_K = 1 %. The current values are specified on the rating plate of the Power Module.

[5] The values apply with low-capacitance CY cables – the max. permissible motor cable length is 50 m (164 ft) (shielded) and 100 m (328 ft) (unshielded) as standard.

© Siemens 2024

Air-cooled Power Modules in blocksize format

Technical specifications

Line voltage 380 ... 480 V 3 AC		**PM240-2 Power Modules standard variant**					
Without integrated line filter		6SL3210-1PE23-8UL0	6SL3210-1PE24-5UL0	6SL3210-1 PE26-0UL0	6SL3210-1PE27-5UL0	6SL3210-1PE28-8UL0	6SL3210-1PE31-1UL0
With integrated line filter class A		6SL3210-1PE23-8AL0	6SL3210-1PE24-5AL0	6SL3210-1PE26-0AL0	6SL3210-1PE27-5AL0	6SL3210-1PE28-8AL0	6SL3210-1PE31-1AL0
Output current at 50 Hz 400 V 3 AC							
• Rated current I_N [1]	A	38	45	60	75	90	110
• For S6 duty (40 %) I_{S6}	A	45	54	72	90	108	132
• Base-load current I_H [2]	A	32	38	45	60	75	90
• Maximum current I_{max}	A	64	76	90	120	150	180
Rated power							
• Based on I_N	kW (hp)	18.5 (25)	22 (30)	30 (40)	37 (50)	45 (60)	55 (75)
• Based on I_H	kW (hp)	15 (20)	18.5 (25)	22 (30)	30 (40)	37 (50)	45 (60)
Rated pulse frequency	kHz	4	4	4	4	4	4
Efficiency η According to IEC 61800-9-2	%	>97.2	>97.2	>97.5	>97.3	>97.4	>97.3
Power loss [3] According to IEC 61800-9-2 At rated current							
• Without integrated line filter	kW	0.584	0.713	0.848	1.12	1.31	1.69
• With integrated line filter	kW	0.587	0.716	0.854	1.13	1.32	1.70
Cooling air requirement	m^3/s (ft^3/s)	0.055 (1.94)	0.055 (1.94)	0.055 (1.94)	0.055 (1.94)	0.083 (2.93)	0.083 (2.93)
Sound pressure level L_{pA} (1 m)	dB	45 ... 65 [4]	45 ... 65 [4]	45 ... 65 [4]	45 ... 65 [4]	44 ... 62 [4]	44 ... 62 [4]
Input current [5]							
• Rated input current	A	36	42	57	70	86	104
• Based on I_H	A	33	38	47	62	78	94
Line supply connection U1/L1, V1/L2, W1/L3		Screw terminals	Screw terminals	Screw terminals	Screw terminals	Screw terminals	Screw terminals
• Conductor cross-section	mm^2	10 ... 35	10 ... 35	10 ... 35	10 ... 35	25 ... 70	25 ... 70
Motor connection U2, V2, W2		Screw terminals	Screw terminals	Screw terminals	Screw terminals	Screw terminals	Screw terminals
• Conductor cross-section	mm^2	10 ... 35	10 ... 35	10 ... 35	10 ... 35	25 ... 70	25 ... 70
PE connection		Screw terminals	Screw terminals	Screw terminals	Screw terminals	Screw terminals	Screw terminals
Motor cable length, max.							
• Shielded	m (ft)	200 (656)	200 (656)	200 (656)	200 (656)	200 (656)	200 (656)
• Unshielded	m (ft)	300 (984)	300 (984)	300 (984)	300 (984)	300 (984)	300 (984)
Degree of protection		IP20	IP20	IP20	IP20	IP20	IP20
Dimensions							
• Width	mm (in)	200 (7.87)	200 (7.87)	200 (7.87)	200 (7.87)	275 (10.83)	275 (10.83)
• Height	mm (in)	472 (18.58)	472 (18.58)	472 (18.58)	472 (18.58)	551 (21.69)	551 (21.69)
• Depth without operator panel	mm (in)	237 (9.33)	237 (9.33)	237 (9.33)	237 (9.33)	237 (9.33)	237 (9.33)
Frame size		FSD	FSD	FSD	FSD	FSE	FSE
Weight, approx.							
• Without integrated line filter	kg (lb)	16 (35.3)	16 (35.3)	17 (37.5)	17.5 (38.6)	26 (57.3)	26 (57.3)
• With integrated line filter	kg (lb)	17.5 (38.6)	17.5 (38.6)	18.5 (40.8)	18.5 (40.8)	28 (61.7)	28 (61.7)

[1] The rated output current I_N is based on the duty cycle for low overload (LO).

[2] The base-load current I_H is based on the duty cycle for high overload (HO).

[3] Typical values. You can find more information on the internet at: https://support.industry.siemens.com/cs/document/94059311

[4] Values dependent on ambient temperature and utilization.

[5] The input current depends on the motor load and line impedance. The input currents apply for a load at rated power (based on I_N) for a line impedance corresponding to u_K = 1 %. The current values are specified on the rating plate of the Power Module.

© Siemens 2024

Technical specifications

Line voltage 380 ... 480 V 3 AC		**PM240-2 Power Modules standard variant**			
Without integrated line filter		6SL3210-1PE31-5UL0	6SL3210-1PE31-8UL0	6SL3210-1PE32-1UL0	6SL3210-1PE32-5UL0
With integrated line filter class A		6SL3210-1PE31-5AL0	6SL3210-1PE31-8AL0	6SL3210-1PE32-1AL0	6SL3210-1PE32-5AL0
Output current at 50 Hz 400 V 3 AC					
• Rated current I_N [1]	A	145	178	205	250
• For S6 duty (40 %) I_{S6}	A	174	213	246	300
• Base-load current I_H [2]	A	110	145	178	205
• Maximum current I_{max}	A	220	290	356	410
Rated power					
• Based on I_N	kW (hp)	75 (100)	90 (125)	110 (150)	132 (200)
• Based on I_H	kW (hp)	55 (75)	75 (100)	90 (125)	110 (150)
Rated pulse frequency	kHz	2	2	2	2
Efficiency η According to IEC 61800-9-2	%	>97.6	>97.4	>97.9	>97.8
Power loss [3] According to IEC 61800-9-2 At rated current					
• Without integrated line filter	kW	1.97	2.56	2.37	3.10
• With integrated line filter	kW	1.98	2.58	2.39	3.14
Cooling air requirement	m^3/s (ft^3/s)	0.153 (5.40)	0.153 (5.40)	0.153 (5.40)	0.153 (5.40)
Sound pressure level L_{pA} (1 m)	dB	56 ... 68 [4]	56 ... 68 [4]	56 ... 68 [4]	56 ... 68 [4]
Input current [5]					
• Rated input current	A	140	172	198	242
• Based on I_H	A	117	154	189	218
Line supply connection U1/L1, V1/L2, W1/L3		M10 screw stud	M10 screw stud	M10 screw stud	M10 screw stud
• Conductor cross-section	mm^2	35 ... 2 × 120	35 ... 2 × 120	35 ... 2 × 120	35 ... 2 × 120
Motor connection U2, V2, W2		M10 screw stud	M10 screw stud	M10 screw stud	M10 screw stud
• Conductor cross-section	mm^2	35 ... 2 × 120	35 ... 2 × 120	35 ... 2 × 120	35 ... 2 × 120
PE connection		M10 screw stud	M10 screw stud	M10 screw stud	M10 screw stud
Motor cable length, max.					
• Shielded	m (ft)	300 (984)	300 (984)	300 (984)	300 (984)
• Unshielded	m (ft)	450 (1476)	450 (1476)	450 (1476)	450 (1476)
Degree of protection		IP20	IP20	IP20	IP20
Dimensions					
• Width	mm (in)	305 (12.01)	305 (12.01)	305 (12.01)	305 (12.01)
• Height	mm (in)	708 (27.87)	708 (27.87)	708 (27.87)	708 (27.87)
• Depth without operator panel	mm (in)	357 (14.06)	357 (14.06)	357 (14.06)	357 (14.06)
Frame size		FSF	FSF	FSF	FSF
Weight, approx.					
• Without integrated line filter	kg (lb)	57 (126)	57 (126)	61 (135)	61 (135)
• With integrated line filter	kg (lb)	63 (139)	63 (139)	65 (143)	65 (143)

[1] The rated output current I_N is based on the duty cycle for low overload (LO).

[2] The base-load current I_H is based on the duty cycle for high overload (HO).

[3] Typical values. You can find more information on the internet at: https://support.industry.siemens.com/cs/document/94059311

[4] Values dependent on ambient temperature and utilization.

[5] The input current depends on the motor load and line impedance. The input currents apply for a load at rated power (based on I_N) for a line impedance corresponding to u_K = 1 %. The current values are specified on the rating plate of the Power Module.

© Siemens 2024

Air-cooled Power Modules in blocksize format

Technical specifications

Line voltage 380 ... 480 V 3 AC		**PM240-2 Power Modules standard variant**		
With integrated line filter Category C2		6SL3210-1PE33-0AL0	6SL3210-1PE33-7AL0	6SL3210-1PE34-8AL0
With integrated line filter Category C3		6SL3210-1PE33-0CL0	6SL3210-1PE33-7CL0	6SL3210-1PE34-8CL0
Output current at 50 Hz 400 V 3 AC				
• Rated current I_N [1]	A	302	370	477
• For S6 duty (40 %) I_{S6}	A	362	444	572
• Base-load current I_H [2]	A	250	302	370
• Maximum current I_{max}	A	500	604	740
Rated power				
• Based on I_N	kW (hp)	160 (250)	200 (300)	250 (400)
• Based on I_H	kW (hp)	132 (200)	160 (250)	200 (300)
Rated pulse frequency	kHz	2	2	2
Efficiency η According to IEC 61800-9-2	%	>97.9	>97.8	>97.7
Power loss [3] According to IEC 61800-9-2 At rated current	kW	3.66	4.61	6.17
Cooling air requirement	m^3/s (ft^3/s)	0.21 (7.42)	0.21 (7.42)	0.21 (7.42)
Sound pressure level L_{pA} (1 m)	dB	<74.7	<74.7	<74.7
Input current [4]				
• Rated input current	A	300	365	470
• Based on I_H	A	275	330	400
Line supply connection U1/L1, V1/L2, W1/L3		M10 screw stud	M10 screw stud	M10 screw stud
• Conductor cross-section	mm^2	35 ... 2 × 185	35 ... 2 × 185	35 ... 2 × 185
Motor connection U2, V2, W2		M10 screw stud	M10 screw stud	M10 screw stud
• Conductor cross-section	mm^2	35 ... 2 × 185	35 ... 2 × 185	35 ... 2 × 185
PE connection		M10 screw stud	M10 screw stud	M10 screw stud
Motor cable length, max.				
• Shielded	m (ft)	300 (984)	300 (984)	300 (984)
• Unshielded	m (ft)	450 (1476)	450 (1476)	450 (1476)
Degree of protection		IP20	IP20	IP20
Dimensions				
• Width	mm (in)	305 (12.01)	305 (12.01)	305 (12.01)
• Height	mm (in)	1000 (39.37)	1000 (39.37)	1000 (39.37)
• Depth without operator panel	mm (in)	357 (14.06)	357 (14.06)	357 (14.06)
Frame size		FSG	FSG	FSG
Weight, approx.				
• With integrated line filter Category C2	kg (lb)	107 (236)	114 (251)	122 (269)
• With integrated line filter Category C3	kg (lb)	105 (231)	113 (249)	120 (265)

[1] The rated output current I_N is based on the duty cycle for low overload (LO).

[2] The base-load current I_H is based on the duty cycle for high overload (HO).

[3] Typical values. You can find more information on the internet at: https://support.industry.siemens.com/cs/document/94059311

[4] The input current depends on the motor load and line impedance. The input currents apply for a load at rated power (based on I_N) for a line impedance corresponding to u_K = 1 %. The current values are specified on the rating plate of the Power Module.

© Siemens 2024

Technical specifications

Line voltage 500 ... 690 V 3 AC		**PM240-2 Power Modules standard variant**					
Without integrated line filter		6SL3210-1PH21-4UL0	6SL3210-1PH22-0UL0	6SL3210-1PH22-3UL0	6SL3210-1PH22-7UL0	6SL3210-1PH23-5UL0	6SL3210-1PH24-2UL0
With integrated line filter class A		6SL3210-1PH21-4AL0	6SL3210-1PH22-0AL0	6SL3210-1PH22-3AL0	6SL3210-1PH22-7AL0	6SL3210-1PH23-5AL0	6SL3210-1PH24-2AL0
Output current at 50 Hz 690 V 3 AC							
• Rated current I_N [1]	A	14	19	23	27	35	42
• For S6 duty (40 %) I_{S6}	A	16	22	27	32	42	50
• Base-load current I_H [2]	A	11	14	19	23	27	35
• Maximum current I_{max}	A	22	29	38	46	54	70
Rated power							
• Based on I_N	kW (hp)	11 (10)	15 (15)	18.5 (20)	22 (25)	30 (30)	37 (40)
• Based on I_H	kW (hp)	7.5 (7.5)	11 (10)	15 (15)	18.5 (20)	22 (25)	30 (30)
Rated pulse frequency	kHz	2	2	2	2	2	2
Efficiency η According to IEC 61800-9-2	%	>97.3	>97.5	>97.6	>97.6	>97.6	>97.6
Power loss [3] According to IEC 61800-9-2 At rated current							
• Without integrated line filter	kW	0.359	0.452	0.533	0.614	0.797	0.971
• With integrated line filter	kW	0.360	0.453	0.535	0.617	0.802	0.980
Cooling air requirement	m^3/s (ft^3/s)	0.055 (1.94)	0.055 (1.94)	0.055 (1.94)	0.055 (1.94)	0.055 (1.94)	0.055 (1.94)
Sound pressure level L_{pA} (1 m)	dB	45 ... 65 [4]	45 ... 65 [4]	45 ... 65 [4]	45 ... 65 [4]	45 ... 65 [4]	45 ... 65 [4]
Input current [5]							
• Rated input current	A	14	18	22	25	33	40
• Based on I_H	A	11	14	20	24	28	36
Line supply connection U1/L1, V1/L2, W1/L3		Screw terminals	Screw terminals	Screw terminals	Screw terminals	Screw terminals	Screw terminals
• Conductor cross-section	mm^2	10 ... 35	10 ... 35	10 ... 35	10 ... 35	10 ... 35	10 ... 35
Motor connection U2, V2, W2		Screw terminals	Screw terminals	Screw terminals	Screw terminals	Screw terminals	Screw terminals
• Conductor cross-section	mm^2	10 ... 35	10 ... 35	10 ... 35	10 ... 35	10 ... 35	10 ... 35
PE connection		Screw terminals	Screw terminals	Screw terminals	Screw terminals	Screw terminals	Screw terminals
Motor cable length, max.							
• Shielded	m (ft)	200 (656)	200 (656)	200 (656)	200 (656)	200 (656)	200 (656)
• Unshielded	m (ft)	300 (984)	300 (984)	300 (984)	300 (984)	300 (984)	300 (984)
Degree of protection		IP20	IP20	IP20	IP20	IP20	IP20
Dimensions							
• Width	mm (in)	200 (7.87)	200 (7.87)	200 (7.87)	200 (7.87)	200 (7.87)	200 (7.87)
• Height	mm (in)	472 (18.58)	472 (18.58)	472 (18.58)	472 (18.58)	472 (18.58)	472 (18.58)
• Depth without operator panel	mm (in)	237 (9.33)	237 (9.33)	237 (9.33)	237 (9.33)	237 (9.33)	237 (9.33)
Frame size		FSD	FSD	FSD	FSD	FSD	FSD
Weight, approx.							
• Without integrated line filter	kg (lb)	17 (37.5)	17 (37.5)	17 (37.5)	17 (37.5)	17 (37.5)	17 (37.5)
• With integrated line filter	kg (lb)	18.5 (40.8)	18.5 (40.8)	18.5 (40.8)	18.5 (40.8)	18.5 (40.8)	18.5 (40.8)

1) The rated output current I_N is based on the duty cycle for low overload (LO).

2) The base-load current I_H is based on the duty cycle for high overload (HO).

3) Typical values. You can find more information on the internet at: https://support.industry.siemens.com/cs/document/94059311

4) Values dependent on ambient temperature and utilization.

5) The input current depends on the motor load and line impedance. The input currents apply for a load at rated power (based on I_N) for a line impedance corresponding to u_K = 1 %. The current values are specified on the rating plate of the Power Module.

© Siemens 2024

Air-cooled Power Modules in blocksize format

Technical specifications

Line voltage 500 ... 690 V 3 AC		**PM240-2 Power Modules standard variant**					
Without integrated line filter		6SL3210-1PH25-2UL0	6SL3210-1PH26-2UL0	6SL3210-1PH28-0UL0	6SL3210-1PH31-0UL0	6SL3210-1PH31-2UL0	6SL3210-1PH31-4UL0
With integrated line filter class A		6SL3210-1PH25-2AL0	6SL3210-1PH26-2AL0	6SL3210-1PH28-0AL0	6SL3210-1PH31-0AL0	6SL3210-1PH31-2AL0	6SL3210-1PH31-4AL0
Output current at 50 Hz 690 V 3 AC							
• Rated current I_N [1]	A	52	62	80	100	115	142
• For S6 duty (40 %) I_{S6}	A	62	74	96	120	138	170
• Base-load current I_H [2]	A	42	52	62	80	100	115
• Maximum current I_{max}	A	84	104	124	160	200	230
Rated power							
• Based on I_N	kW (hp)	45 (50)	55 (60)	75 (75)	90 (100)	110 (100)	132 (125)
• Based on I_H	kW (hp)	37 (40)	45 (50)	55 (60)	75 (75)	90 (100)	110 (100)
Rated pulse frequency	kHz	2	2	2	2	2	2
Efficiency η According to IEC 61800-9-2	%	>97.8	>97.8	>98.2	>98.1	>98.2	>98.1
Power loss [3] According to IEC 61800-9-2 At rated current							
• Without integrated line filter	kW	1.11	1.35	1.41	1.80	2.02	2.59
• With integrated line filter	kW	1.12	1.36	1.41	1.82	2.04	2.62
Cooling air requirement	m^3/s (ft^3/s)	0.083 (2.93)	0.083 (2.93)	0.153 (5.40)	0.153 (5.40)	0.153 (5.40)	0.153 (5.40)
Sound pressure level L_{pA} (1 m)	dB	44 ... 62 [4]	44 ... 62 [4]	56 ... 68 [4]	56 ... 68 [4]	56 ... 68 [4]	56 ... 68 [4]
Input current [5]							
• Rated input current	A	50	59	78	97	111	137
• Based on I_H	A	44	54	66	85	106	122
Line supply connection U1/L1, V1/L2, W1/L3		Screw terminals	Screw terminals	M10 screw stud	M10 screw stud	M10 screw stud	M10 screw stud
• Conductor cross-section	mm^2	25 ... 70	25 ... 70	35 ... 2 × 120	35 ... 2 × 120	35 ... 2 × 120	35 ... 2 × 120
Motor connection U2, V2, W2		Screw terminals	Screw terminals	M10 screw stud	M10 screw stud	M10 screw stud	M10 screw stud
• Conductor cross-section	mm^2	25 ... 70	25 ... 70	35 ... 2 × 120	35 ... 2 × 120	35 ... 2 × 120	35 ... 2 × 120
PE connection		Screw terminals	Screw terminals	M10 screw stud	M10 screw stud	M10 screw stud	M10 screw stud
Motor cable length, max.							
• Shielded	m (ft)	200 (656)	200 (656)	300 (984)	300 (984)	300 (984)	300 (984)
• Unshielded	m (ft)	300 (984)	300 (984)	450 (1476)	450 (1476)	450 (1476)	450 (1476)
Degree of protection		IP20	IP20	IP20	IP20	IP20	IP20
Dimensions							
• Width	mm (in)	275 (10.83)	275 (10.83)	305 (12.01)	305 (12.01)	305 (12.01)	305 (12.01)
• Height	mm (in)	551 (21.69)	551 (21.69)	708 (27.87)	708 (27.87)	708 (27.87)	708 (27.87)
• Depth without operator panel	mm (in)	237 (9.33)	237 (9.33)	357 (14.06)	357 (14.06)	357 (14.06)	357 (14.06)
Frame size		FSE	FSE	FSF	FSF	FSF	FSF
Weight, approx.							
• Without integrated line filter	kg (lb)	26 (57.3)	26 (57.3)	60 (132)	60 (132)	60 (132)	60 (132)
• With integrated line filter	kg (lb)	28 (61.7)	28 (61.7)	64 (141)	64 (141)	64 (141)	64 (141)

[1] The rated output current I_N is based on the duty cycle for low overload (LO).

[2] The base-load current I_H is based on the duty cycle for high overload (HO).

[3] Typical values. You can find more information on the internet at: https://support.industry.siemens.com/cs/document/94059311

[4] Values dependent on ambient temperature and utilization.

[5] The input current depends on the motor load and line impedance. The input currents apply for a load at rated power (based on I_N) for a line impedance corresponding to u_K = 1 %. The current values are specified on the rating plate of the Power Module.

© Siemens 2024

Technical specifications

Line voltage 500 ... 690 V 3 AC		**PM240-2 Power Modules standard variant**		
With integrated line filter Category C3		6SL3210-1PH31-7CL0	6SL3210-1PH32-1CL0	6SL3210-1PH32-5CL0
Output current at 50 Hz 690 V 3 AC				
• Rated current I_N [1]	A	171	208	250
• For S6 duty (40 %) I_{S6}	A	205	250	300
• Base-load current I_H [2]	A	144	171	208
• Maximum current I_{max}	A	288	342	416
Rated power				
• Based on I_N	kW (hp)	160 (150)	200 (200)	250 (250)
• Based on I_H	kW (hp)	132 (150)	160 (150)	200 (200)
Rated pulse frequency	kHz	2	2	2
Efficiency η According to IEC 61800-9-2	%	>98.2	>98.2	>98.1
Power loss [3] According to IEC 61800-9-2 At rated current	kW	2.93	3.70	4.63
Cooling air requirement	m^3/s (ft^3/s)	0.21 (7.42)	0.21 (7.42)	0.21 (7.42)
Sound pressure level L_{pA} (1 m)	dB	<74.7	<74.7	<74.7
Input current [4]				
• Rated input current	A	170	205	250
• Based on I_H	A	160	185	225
Line supply connection U1/L1, V1/L2, W1/L3		M10 screw stud	M10 screw stud	M10 screw stud
• Conductor cross-section	mm^2	35 ... 2 × 185	35 ... 2 × 185	35 ... 2 × 185
Motor connection U2, V2, W2		M10 screw stud	M10 screw stud	M10 screw stud
• Conductor cross-section	mm^2	35 ... 2 × 185	35 ... 2 × 185	35 ... 2 × 185
PE connection		M10 screw stud	M10 screw stud	M10 screw stud
Motor cable length, max.				
• Shielded	m (ft)	300 (984)	300 (984)	300 (984)
• Unshielded	m (ft)	450 (1476)	450 (1476)	450 (1476)
Degree of protection		IP20	IP20	IP20
Dimensions				
• Width	mm (in)	305 (12.01)	305 (12.01)	305 (12.01)
• Height	mm (in)	1000 (39.37)	1000 (39.37)	1000 (39.37)
• Depth without operator panel	mm (in)	357 (14.06)	357 (14.06)	357 (14.06)
Frame size		FSG	FSG	FSG
Weight, approx.	kg (lb)	114 (251)	114 (251)	114 (251)

[1] The rated output current I_N is based on the duty cycle for low overload (LO).

[2] The base-load current I_H is based on the duty cycle for high overload (HO).

[3] Typical values. You can find more information on the internet at: https://support.industry.siemens.com/cs/document/94059311

[4] The input current depends on the motor load and line impedance. The input currents apply for a load at rated power (based on I_N) for a line impedance corresponding to u_K = 1 %. The current values are specified on the rating plate of the Power Module.

© Siemens 2024

Characteristic curves

Overload capability

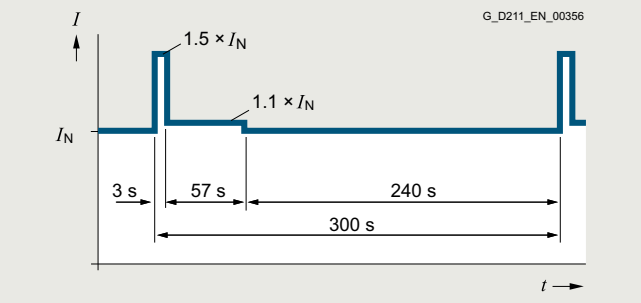

300 s duty cycle based on low overload

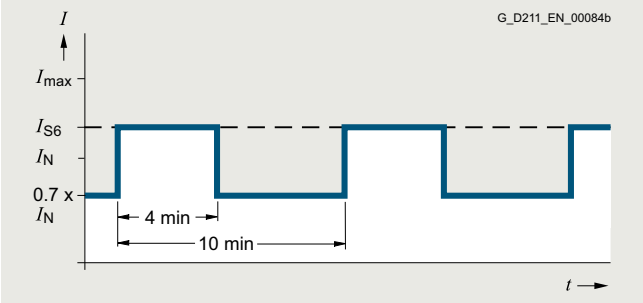

S6 duty cycle with initial load with a duty cycle duration of 600 s

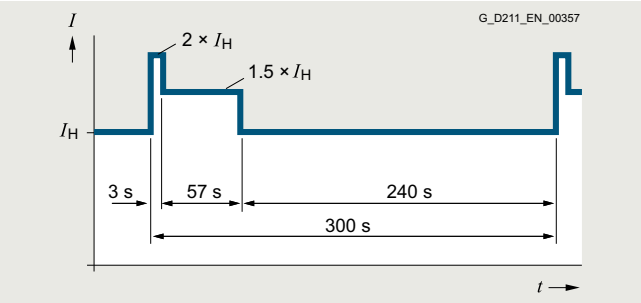

300 s duty cycle based on high overload

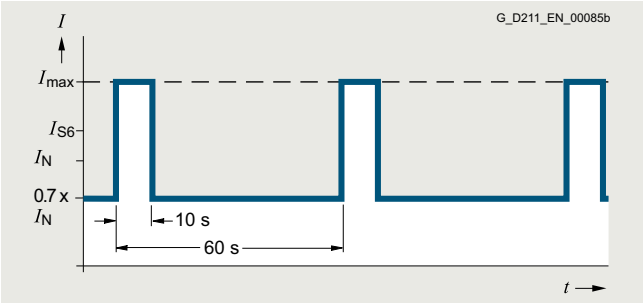

S6 duty cycle with initial load with a duty cycle duration of 60 s

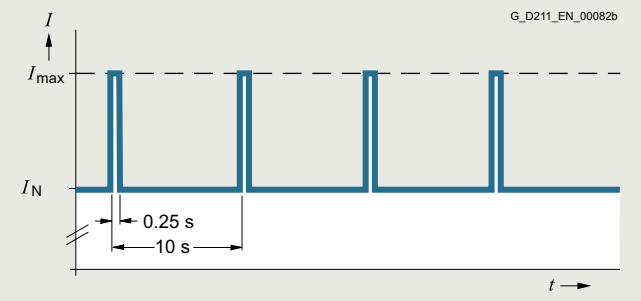

Duty cycle with initial load

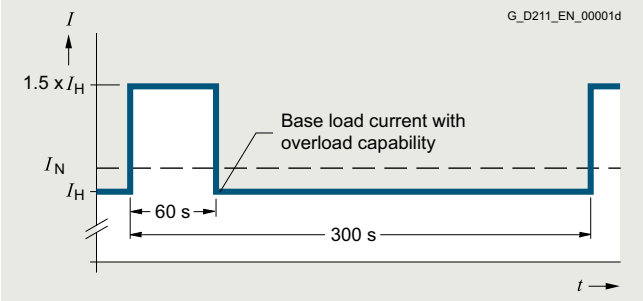

Duty cycle with 60 s overload with a duty cycle duration of 300 s

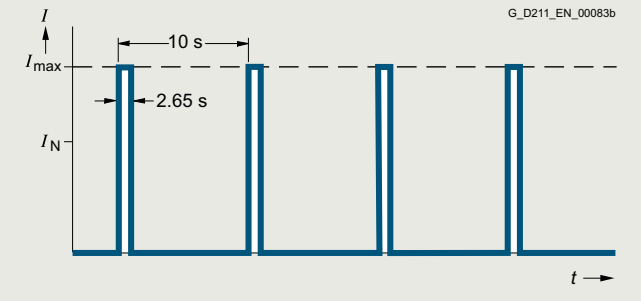

Duty cycle without initial load

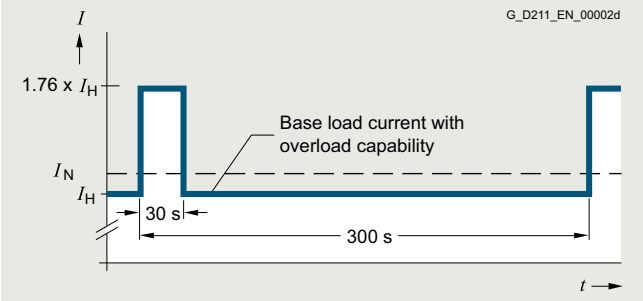

Duty cycle with 30 s overload with a duty cycle duration of 300 s

© Siemens 2024

Characteristic curves

Derating data, PM240-2 Power Modules

Pulse frequency

Rated power [1] at 50 Hz 200 V 1 AC/3 AC		**Rated output current in A** for a pulse frequency of							
kW	hp	2 kHz	4 kHz	6 kHz	8 kHz	10 kHz	12 kHz	14 kHz	16 kHz
0.55	0.75	3.2	3.2	2.7	2.2	1.9	1.6	1.4	1.3
0.75	1	4.2	4.2	3.6	2.9	2.5	2.1	1.9	1.7
1.1	1.5	6	6	5.1	4.2	3.6	2.3	2.7	2.4
1.5	2	7.4	7.4	6.3	5.2	4.4	3.7	3.3	3
2.2	3	10.4	10.4	8.8	7.3	6.2	5.2	4.7	4.2
3	4	13.6	13.6	11.6	9.5	8.2	6.8	6.1	5.4
4	5	17.5	17.5	14.9	12.3	10.5	8.8	7.9	7
5.5	7.5	22	22	18.7	15.4	13.2	11	9.9	8.8
7.5	10	28	28	23.8	19.6	16.8	14	12.6	11.2
11	15	42	42	35.7	29.4	25.2	21	18.9	16.8
15	20	54	54	45.9	37.8	32.4	27	24.3	21.6
18.5	25	68	68	57.8	47.6	40.8	34	30.6	27.2
22	30	80	80	68	56	48	40	36	32
30	40	104	104	88.4	72.8	62.4	52	46.8	41.6
37	50	130	130	110.5	91	–	–	–	–
45	60	154	154	130.9	107.8	–	–	–	–
55	75	178	178	151.3	124.6	–	–	–	–

Rated power [1] at 50 Hz 400 V 3 AC		**Rated output current in A** for a pulse frequency of							
kW	hp	2 kHz	4 kHz	6 kHz	8 kHz	10 kHz	12 kHz	14 kHz	16 kHz
0.55	0.75	1.7	1.7	1.4	1.2	1	0.9	0.8	0.7
0.75	1	2.2	2.2	1.9	1.5	1.3	1.1	1	0.9
1.1	1.5	3.1	3.1	2.6	2.2	1.9	1.6	1.4	1.2
1.5	2	4.1	4.1	3.5	2.9	2.5	2.1	1.8	1.6
2.2	3	5.9	5.9	5	4.1	3.5	3	2.7	2.4
3	4	7.7	7.7	6.5	5.4	4.6	3.9	3.5	3.1
4	5	10.2	10.2	8.7	7.1	6.1	5.1	4.6	4.1
5.5	7.5	13.2	13.2	11.2	9.2	7.9	6.6	5.9	5.3
7.5	10	18	18	15.3	12.6	10.8	9	8.1	7.2
11	15	26	26	22.1	18.2	15.6	13	11.7	10.4
15	20	32	32	27.2	22.4	19.2	16	14.4	12.8
18.5	25	38	38	32.3	26.6	22.8	19	17.1	15.2
22	30	45	45	38.3	31.5	27	22.5	20.3	18
30	40	60	60	51	42	36	30	27	24
37	50	75	75	63.8	52.5	45	37.5	33.8	30
45	60	90	90	76.5	63	54	45	40.5	36
55	75	110	110	93.5	77	–	–	–	–
75	100	145	145	123.3	101.5	–	–	–	–
90	125	178	178	151.3	124.6	–	–	–	–
110	150	205	143.5	102.5	82	–	–	–	–
132	200	250	175	125	100	–	–	–	–
160	250	302	211.4	151	120.8	–	–	–	–
200	300	370	259	185	148	–	–	–	–
250	400	477	333.9	238.5	190.8	–	–	–	–

[1] Rated power based on the rated output current I_N. The rated output current I_N is based on the duty cycle for low overload (LO).

© Siemens 2024

Characteristic curves

Derating data, PM240-2 Power Modules (continued)

Rated power [1] at 50 Hz 690 V 3 AC		**Rated output current in A** for a pulse frequency of							
kW	hp	2 kHz	4 kHz	6 kHz	8 kHz	10 kHz	12 kHz	14 kHz	16 kHz
11	10	14	8.4	–	–	–	–	–	–
15	15	19	11.4	–	–	–	–	–	–
18.5	20	23	13.8	–	–	–	–	–	–
22	25	27	16.2	–	–	–	–	–	–
30	30	35	21	–	–	–	–	–	–
37	40	42	25.2	–	–	–	–	–	–
45	50	52	31.2	–	–	–	–	–	–
55	60	62	37.2	–	–	–	–	–	–
75	75	80	48	–	–	–	–	–	–
90	100	100	60	–	–	–	–	–	–
110	100	115	69	–	–	–	–	–	–
132	125	142	85.2	–	–	–	–	–	–
160	150	171	102.6	–	–	–	–	–	–
200	200	208	124.8	–	–	–	–	–	–
250	250	250	150	–	–	–	–	–	–

The permissible motor cable length depends on the cable type and the pulse frequency.

Ambient temperature

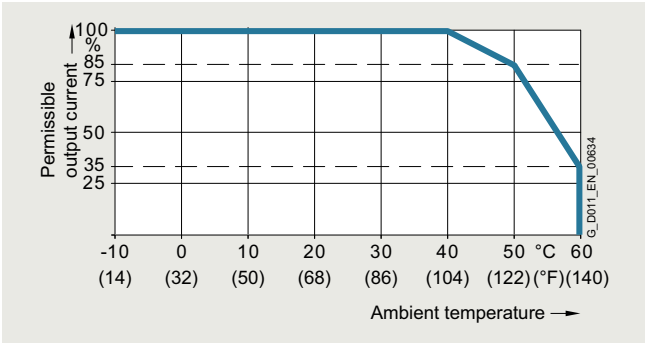

Permissible output current as a function of ambient temperature for low overload (LO) for PM240-2 Power Modules
FSA to FSC at 200 V and 400 V
FSD to FSF at 690 V
FSG at 400 V and 690 V

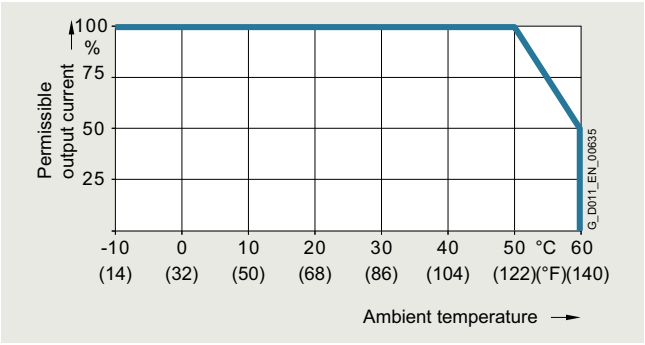

Permissible output current as a function of ambient temperature for high overload (HO) for PM240-2 Power Modules
FSA to FSC at 200 V and 400 V
FSD to FSF at 690 V
FSG at 400 V and 690 V

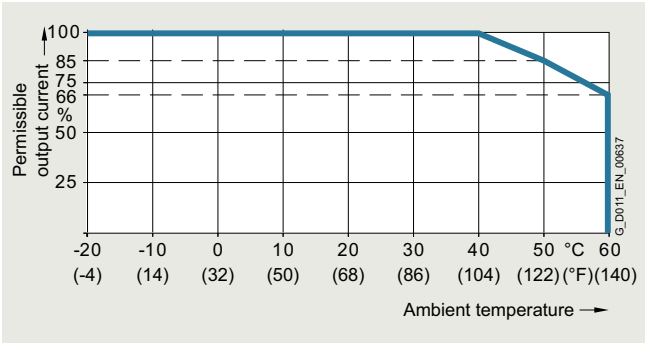

Permissible output current as a function of ambient temperature for low overload (LO) for PM240-2 Power Modules
FSD to FSF at 200 V and 400 V

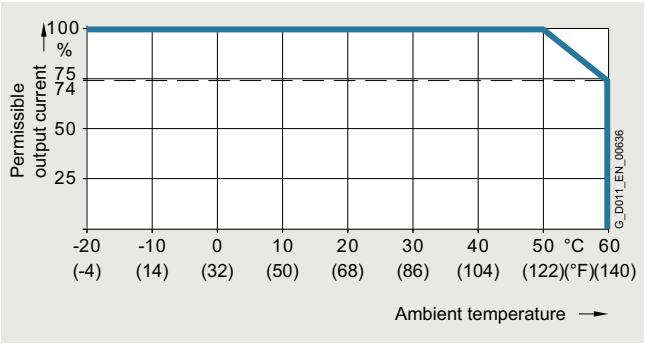

Permissible output current as a function of ambient temperature for high overload (HO) for PM240-2 Power Modules
FSD to FSF at 200 V and 400 V

The operating temperature ranges of the Control Units should be taken into account. The temperature ranges are specified in the section Technical specifications under Control Units.

[1] Rated power based on the rated output current I_N. The rated output current I_N is based on the duty cycle for low overload (LO).

© Siemens 2024

Characteristic curves

Derating data, PM240-2 Power Modules (continued)

Installation altitude

Permissible line supplies as a function of the installation altitude

- Installation altitude up to 2000 m (6562 ft) above sea level
  - Connection to every supply system permitted for the converter
- Installation altitudes between 2000 m (6562 ft) and 4000 m (13124 ft) above sea level
  - Connection only to a TN system with grounded neutral point
  - TN systems with grounded line conductor are not permitted
  - The TN line system with grounded neutral point can also be supplied using an isolation transformer
  - The phase against phase voltage does not have to be reduced

The connected motors, power elements and components must be considered separately.

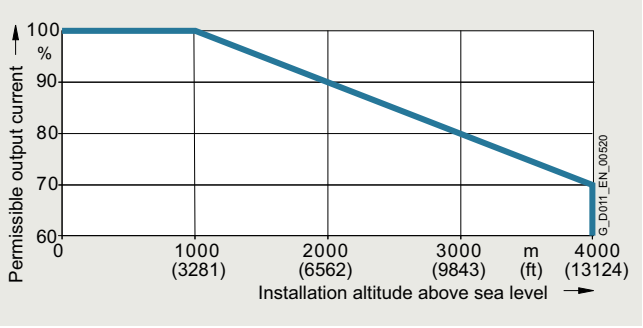

Permissible output current as a function of the installation altitude for PM240-2 Power Modules at 40 °C for low overload (LO)

System operating voltage

The rated output current is constant within the respective supply voltage range.

More information on the derating data of the PM240-2 Power Modules is available in the Hardware Installation Manual on the internet at:
www.siemens.com/sinamics-g120/documentation

© Siemens 2024

Dimensional drawings

PM240-2 Power Modules, standard variant

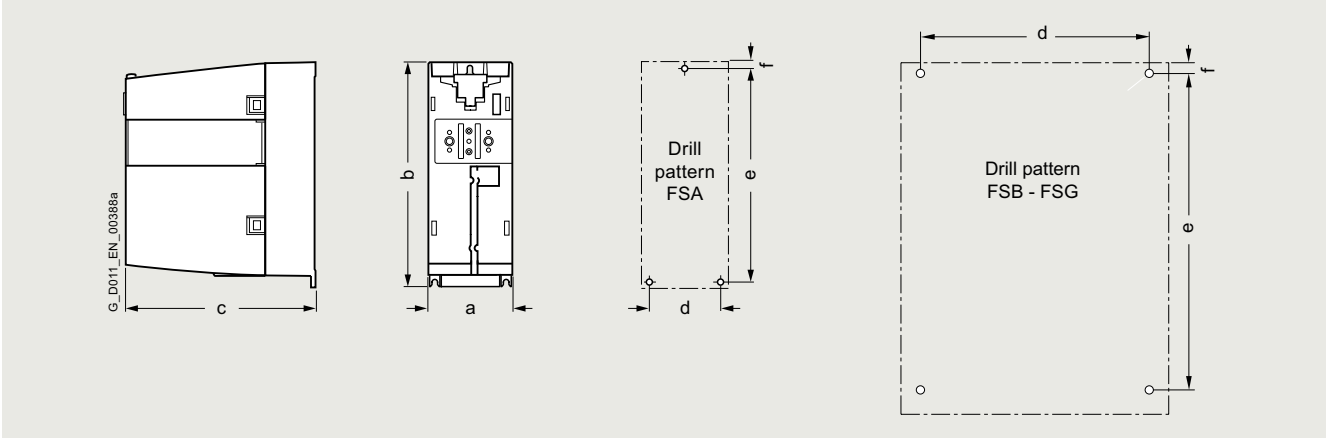

Principle dimension drawing and drill pattern for PM240-2 Power Modules, standard variant, with/without integrated line filter

Frame size	**Dimensions** in mm (inches)			**Drilling dimensions** in mm (inches)			**Cooling clearance** [1] in mm (inches)			**Mounting**
	a (width)	b (height)	c (depth)	d	e	f	top	bottom	front	With bolts
PM240-2 Power Modules, standard variant, with/without integrated line filter										
FSA	73 (2.87)	196 (7.72)	165 (6.5)	62.3 (2.45)	186 (7.32)	6 (0.24)	80 (3.15)	100 (3.94)	0 (0)	3 × M4
FSB	100 (3.94)	292 (11.5)	165 (6.5)	80 (3.15)	281 (11.06)	6 (0.24)	80 (3.15)	100 (3.94)	0 (0)	4 × M4
FSC	140 (5.51)	355 (13.98)	165 (6.5)	120 (4.72)	343 (13.5)	6 (0.24)	80 (3.15)	100 (3.94)	0 (0)	4 × M5
FSD	200 (7.87)	472 (18.58)	237 (9.33)	170 (6.69)	430 (16.93)	7 (0.28)	300 (11.81)	350 (13.78)	100 (3.94)	4 × M5
FSE	275 (10.83)	551 (21.69)	237 (9.33)	230 (9.06)	509 (20.04)	8.5 (0.33)	300 (11.81)	350 (13.78)	100 (3.94)	4 x M6
FSF	305 (12.01)	708 (27.87)	357 (14.06)	270 (10.63)	680 (26.77)	13 (0.51)	300 (11.81)	350 (13.78)	100 (3.94)	4 × M8
FSG	305 (12.01)	1000 (39.37)	357 (14.06)	265 (10.43)	970.5 (38.21)	15 (0.59)	300 (11.81)	350 (13.78)	100 (3.94)	4 × M10

[1] The Power Modules can be mounted side by side. A side clearance of 1 mm (0.04 in) is recommended for tolerance-related reasons.

© Siemens 2024

Overview



Line filters for PM240-2 Power Modules, frame size FSA

With one of the additional line filters, the Power Module reaches a higher radio interference class.

Integration

Line filters that are optionally available depending on the Power Module used

	Frame size						
	FSA	**FSB**	**FSC**	**FSD**	**FSE**	**FSF**	**FSG**
PM240-2 Power Module with integrated braking chopper							
• 200 V versions	✓	✓	✓	✓ 1)	✓ 1)	✓ 1)	–
• 400 V versions	✓	✓	✓	✓	✓	✓	✓
• 690 V versions	–	–	–	✓	✓	✓	✓
Line-side components							
Line filter class A	**F**	**F**	**F**	**F** 1)	**F** 1)	**F** 1)	–
Line filter class B (only for 400 V versions)	**U**	**U**	**U**	–	–	–	–
Line filters of Category C2 or C3 (for 400 V versions frame size FSG)	–	–	–	–	–	–	**I** 2)
Line filters of Category C3 (for 690 V versions frame size FSG)	–	–	–	–	–	–	**I** 2)

U = Base component
S = Lateral mounting
I = Integrated
F = Power Modules available with and without integrated filter class A
– = Not possible

1) PM240-2 200 V versions, frame sizes FSD to FSF are only available without integrated line filter.

2) The PM240-2 Power Modules frame size FSG with an integrated Category C3 filter can also be operated on TN systems with a grounded line conductor. To do so, the grounding screw must be removed. Then Category C3 can no longer be adhered to.

© Siemens 2024

Line filters for blocksize format

Selection and ordering data

Rated power		PM240-2 Power Module Standard variant		Line filter class B according to EN 55011
kW	hp	Type 6SL3210-...	Frame size	Article No.
380 ... 480 V 3 AC				
0.55	0.75	1PE11-8UL1	FSA	**6SL3203-0BE17-7BA0**
0.75	1	1PE12-3UL1		
1.1	1.5	1PE13-2UL1		
1.5	2	1PE14-3UL1		
2.2	3	1PE16-1UL1		
3	4	1PE18-0UL1		
4	5	1PE21-1UL0	FSB	**6SL3203-0BE21-8BA0**
5.5	7.5	1PE21-4UL0		
7.5	10	1PE21-8UL0		
11	15	1PE22-7UL0	FSC	**6SL3203-0BE23-8BA0**
15	20	1PE23-3UL0		

Technical specifications

Line voltage 380 ... 480 V 3 AC		**Line filter class B**		
		6SL3203-0BE17-7BA0	6SL3203-0BE21-8BA0	6SL3203-0BE23-8BA0
Rated current	A	11.4	23.5	49.4
Pulse frequency	kHz	4 ... 16	4 ... 16	4 ... 16
Line supply connection L1, L2, L3		Screw terminals	Screw terminals	Screw terminals
• Conductor cross-section	mm^2	1 ... 2.5	2.5 ... 6	6 ... 16
Load connection U, V, W		Shielded cable	Shielded cable	Shielded cable
• Cable cross-section	mm^2	1.5	4	10
• Length	m (ft)	0.45 (1.48)	0.5 (1.64)	0.54 (1.77)
PE connection		On housing via M5 screw stud	On housing via M5 screw stud	On housing via M6 screw studs
• Conductor cross-section	mm^2	1 ... 2.5	2.5 ... 6	6 ... 16
Degree of protection		IP20	IP20	IP20
Dimensions				
• Width	mm (in)	73 (2.87)	100 (3.94)	140 (5.51)
• Height	mm (in)	202 (7.95)	297 (11.7)	359 (14.1)
• Depth	mm (in)	65 (2.56)	85 (3.35)	95 (3.74)
Possible as base component		Yes	Yes	Yes
Weight, approx.	kg (lb)	1.75 (3.86)	4 (8.82)	7.3 (16.1)
Suitable for **PM240-2 Power Module** **standard variant** **380 ... 480 V 3 AC**	Type	6SL3210-1PE11-8UL1 6SL3210-1PE12-3UL1 6SL3210-1PE13-2UL1 6SL3210-1PE14-3UL1 6SL3210-1PE16-1UL1 6SL3210-1PE18-0UL1	6SL3210-1PE21-1UL0 6SL3210-1PE21-4UL0 6SL3210-1PE21-8UL0	6SL3210-1PE22-7UL0 6SL3210-1PE23-3UL0
• Frame size		FSA	FSB	FSC

© Siemens 2024

Overview

Using a Line Harmonics Filter (only for PM240-2 Power Modules, frame sizes FSD to FSG) makes for a substantial reduction in unwanted harmonics. In this way, a THD(I) value less than 5 % can be achieved and observance of the limit values according to IEC 61000-3-12, IEC 61000-2-2 and IEEE 519 is possible independently of the line impedance.

A line reactor is not required for a Line Harmonics Filter.

The permissible line voltage is 380 V to 415 V 3 AC.
For Line Harmonics Filters for higher line voltages up to 480 V see:
www.schaffner.com

Integration

Line Harmonics Filters that are optionally available depending on the Power Module used

	Frame size						
	FSA	**FSB**	**FSC**	**FSD**	**FSE**	**FSF**	**FSG**
PM240-2 Power Module with integrated braking chopper							
• 200 V versions	✓	✓	✓	✓	✓	✓	–
• 400 V versions	✓	✓	✓	✓	✓	✓	✓
• 690 V versions	–	–	–	✓	✓	✓	✓
Line-side components							
Line Harmonics Filters (only for 400 V versions)	–	–	–	**S**	**S**	**S**	**S**

S = Lateral mounting
– = Not possible

© Siemens 2024

Line Harmonics Filters for blocksize format

Selection and ordering data

Rated power		PM240-2 Power Module Standard variant		Line Harmonics Filters (The prefix **"UAC:"** is part of a Siemens internal order code, which does not belong to the product number of the original equipment manufacturer Schaffner EMV AG)
kW	hp	Type 6SL3210-...	Frame size	Article No.
380 ... 480 V 3 AC				
18.5	25	1PE23-8 . L0	FSD	**UAC:FN344019113E2FAJRX**
22	30	1PE24-5 . L0		**UAC:FN344022115E2FAJRX**
30	40	1PE26-0 . L0		**UAC:FN344030115E2FAJRX**
37	50	1PE27-5 . L0		**UAC:FN344037115E2FAJRX**
45	60	1PE28-8 . L0	FSE	**UAC:FN344045115E2FAJRX**
55	75	1PE31-1 . L0		**UAC:FN344055115E2FAJRX**
75	100	1PE31-5 . L0	FSF	**UAC:FN344075116E2FAJRX**
90	125	1PE31-8 . L0		**UAC:FN344090116E2FAJRX**
110	150	1PE32-1 . L0		**UAC:FN3440110118E2FAJRX**
132	200	1PE32-5 . L0		**UAC:FN3440132118E2FAJXX**
160 [1]	250	1PE33-0 . L0	FSG	**UAC:FN3440160118E2FAJXX**
200 [1]	300	1PE33-7 . L0		**UAC:FN3440200118E2FAJXX**
250 [1] [2]	400	1PE34-8 . L0		**UAC:FN3440132118E2FAJXX**

Note:

The permissible line voltage is 380 V to 415 V 3 AC. For Line Harmonics Filters for higher line voltages up to 480 V see:
www.schaffner.com

[1] 160 kW to 250 kW Power Modules with Line Harmonics Filters can only be operated with Vector control. U/f control is not permitted.

[2] Two Line Harmonics Filters must be ordered for 250 kW, which must be connected in parallel.

© Siemens 2024

Technical specifications

Line voltage 380 ... 480 V 3 AC [1]		**Line Harmonics Filters**			
		UAC: FN344019113E2FAJRX	UAC: FN344022115E2FAJRX	UAC: FN344030115E2FAJRX	UAC: FN344037115E2FAJRX
Rated current	A	28.2	32.5	44.4	54.8
Line supply connection L1, L2, L3		Threaded screw M6	Threaded screw M8	Threaded screw M8	Threaded screw M8
Load connection L1', L2', L3'		Threaded screw M6	Threaded screw M8	Threaded screw M8	Threaded screw M8
PE connection		Threaded bolt M8	Threaded bolt M8	Threaded bolt M8	Threaded bolt M8
Degree of protection		IP20	IP20	IP20	IP20
Dimensions					
• Width	mm (in)	260 (10.24)	290 (11.42)	290 (11.42)	290 (11.42)
• Height	mm (in)	560 (22.05)	705 (27.76)	705 (27.76)	705 (27.76)
• Depth	mm (in)	252 (9.92)	319 (12.56)	319 (12.56)	319 (12.56)
Possible as base component		No	No	No	No
Weight, approx.	kg (lb)	37 (81.6)	53 (117)	55 (121)	66 (146)
Suitable for PM240-2 Power Module standard variant 380 ... 480 V 3 AC	Type	6SL3210-1PE23-8 . L0	6SL3210-1PE24-5 . L0	6SL3210-1PE26-0 . L0	6SL3210-1PE27-5 . L0
• Frame size		FSD	FSD	FSD	FSD

Line voltage 380 ... 480 V 3 AC [1]		**Line Harmonics Filters**			
		UAC: FN344045115E2FAJRX	UAC: FN344055115E2FAJRX	UAC: FN344075116E2FAJRX	UAC: FN344090116E2FAJRX
Rated current	A	66.7	81.6	111	134
Line supply connection L1, L2, L3		Threaded screw M8	Threaded screw M8	Threaded screw M8	Threaded screw M8
Load connection L1', L2', L3'		Threaded screw M8	Threaded screw M8	Threaded screw M8	Threaded screw M8
PE connection		Threaded bolt M8	Threaded bolt M8	Threaded bolt M10	Threaded bolt M10
Degree of protection		IP20	IP20	IP20	IP20
Dimensions					
• Width	mm (in)	290 (11.42)	290 (11.42)	353 (13.90)	353 (13.90)
• Height	mm (in)	705 (27.76)	705 (27.76)	960 (37.80)	960 (37.80)
• Depth	mm (in)	319 (12.56)	319 (12.56)	386 (15.20)	386 (15.20)
Possible as base component		No	No	No	No
Weight, approx.	kg (lb)	73 (161)	75 (165)	126 (278)	147 (324)
Suitable for PM240-2 Power Module standard variant 380 ... 480 V 3 AC	Type	6SL3210-1PE28-8 . L0	6SL3210-1PE31-1 . L0	6SL3210-1PE31-5 . L0	6SL3210-1PE31-8 . L0
• Frame size		FSE	FSE	FSF	FSF

[1] The permissible line voltage amounts to 380 V to 415 V 3 AC.
For Line Harmonics Filters for higher line voltages up to 480 V see:
www.schaffner.com

© Siemens 2024

Line Harmonics Filters for blocksize format

Technical specifications

Line voltage 380 ... 480 V 3 AC [1]		Line Harmonics Filters			
		UAC: FN3440110118E2FAJRX	UAC: FN3440132118E2FAJXX	UAC: FN3440160118E2FAJXX	UAC: FN3440200118E2FAJXX
Rated current	A	164	197	240	300
Line supply connection L1, L2, L3		Threaded screw M10	Threaded screw M10	Threaded screw M10	Threaded screw M10
Load connection L1', L2', L3'		Threaded screw M10	Threaded screw M10	Threaded screw M10	Threaded screw M10
PE connection		Threaded bolt M10	Threaded bolt M10	Threaded bolt M10	Threaded bolt M10
Degree of protection		IP20	IP20	IP20	IP20
Dimensions					
• Width	mm (in)	462 (18.19)	462 (18.19)	462 (18.19)	462 (18.19)
• Height	mm (in)	1150 (45.28)	1150 (45.28)	1150 (45.28)	1150 (45.28)
• Depth	mm (in)	456 (17.95)	456 (17.95)	456 (17.95)	456 (17.95)
Possible as base component		No	No	No	No
Weight, approx.	kg (lb)	175 (386)	194 (428)	219 (483)	267 (589)
Suitable for PM240-2 Power Module standard variant 380 ... 480 V 3 AC	Type	6SL3210-1PE32-1 . L0	6SL3210-1PE32-5 . L0 6SL3210-1PE34-8 . L0 (for 250 kW (FSG) two Line Harmonics Filters must be connected in parallel)	6SL3210-1PE33-0 . L0	6SL3210-1PE33-7 . L0
• Frame size		FSF	FSF/FSG	FSG	FSG

[1] The permissible line voltage amounts to 380 V to 415 V 3 AC.
For Line Harmonics Filters for higher line voltages up to 480 V see:
www.schaffner.com

© Siemens 2024

Overview

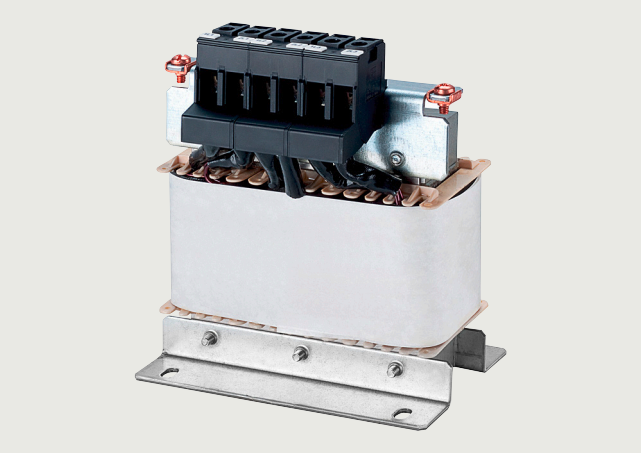

Line reactor for PM240-2 Power Modules, frame size FSA

Line reactors smooth the current drawn by the converter and thus reduce harmonic components in the line current. Through the reduction of the current harmonics, the thermal load on the power components in the rectifier and in the DC link capacitors is reduced as well as the harmonic effects on the supply. The use of a line reactor increases the service life of the converter.

Integration

A DC link reactor is integrated in the PM240-2 Power Modules, frame sizes FSD to FSG, and therefore no line reactor is required.

Line reactors that are optionally available depending on the Power Module used

	Frame size						
	FSA	**FSB**	**FSC**	**FSD**	**FSE**	**FSF**	**FSG**
PM240-2 Power Module with integrated braking chopper							
• 200 V versions	✓	✓	✓	✓	✓	✓	–
• 400 V versions	✓	✓	✓	✓	✓	✓	✓
• 690 V versions	–	–	–	✓	✓	✓	✓
Line-side components							
Line reactors (only for 3 AC versions [1])	**S** [2]	**S** [2]	**S** [2]	**I**	**I**	**I**	**I**

S = Lateral mounting
I = Integrated
– = Not possible

[1] With the appropriate wiring, the line reactors for 200 V 3 AC can be used for the 200 V versions for 200 V 1 AC.
More information can be found on the internet at:
https://support.industry.siemens.com/cs/document/109486005
https://support.industry.siemens.com/cs/document/109482011

[2] For frame sizes FSA to FSC, for lines with u_k < 1 %, it is recommended that you use a line reactor or the next more powerful Power Module.
More information can be found on the internet at:
https://support.industry.siemens.com/cs/document/109482011

© Siemens 2024

Line reactors for blocksize format

Selection and ordering data

Rated power		PM240-2 Power Module Standard variant		Line reactor
kW	hp	Type 6SL3210-...	Frame size	Article No.
200 … 240 V 3 AC [1]				
0.55	0.75	1PB13-0 . L0	FSA	**6SL3203-0CE13-2AA0**
0.75	1	1PB13-8 . L0		
1.1	1.5	1PB15-5 . L0	FSB	**6SL3203-0CE21-0AA0**
1.5	2	1PB17-4 . L0		
2.2	3	1PB21-0 . L0		
3	4	1PB21-4 . L0	FSC	**6SL3203-0CE21-8AA0**
4	5	1PB21-8 . L0		
5.5	7.5	1PC22-2 . L0	FSC	**6SL3203-0CE23-8AA0**
7.5	10	1PC22-8 . L0		
380 ... 480 V 3 AC				
0.55	0.75	1PE11-8 . L1	FSA	**6SL3203-0CE13-2AA0**
0.75	1	1PE12-3 . L1		
1.1	1.5	1PE13-2 . L1		
1.5	2	1PE14-3 . L1	FSA	**6SL3203-0CE21-0AA0**
2.2	3	1PE16-1 . L1		
3	4	1PE18-0 . L1		
4	5	1PE21-1 . L0	FSB	**6SL3203-0CE21-8AA0**
5.5	7.5	1PE21-4 . L0		
7.5	10	1PE21-8 . L0		
11	15	1PE22-7 . L0	FSC	**6SL3203-0CE23-8AA0**
15	20	1PE23-3 . L0		

[1] With the appropriate wiring, the line reactors for 200 V 3 AC can be used for the 200 V versions for 200 V 1 AC. More information can be found on the internet at:
https://support.industry.siemens.com/cs/document/109486005
https://support.industry.siemens.com/cs/document/109482011

© Siemens 2024

Technical specifications

Line voltage 200 … 240 V 3 AC [1] or 380 ... 480 V 3 AC		**Line reactor**			
		6SL3203-0CE13-2AA0	6SL3203-0CE21-0AA0	6SL3203-0CE21-8AA0	6SL3203-0CE23-8AA0
Rated current	A	4	11.3	22.3	47
Power loss at 50/60 Hz	W	23/26	36/40	53/59	88/97
Line supply/load connection 1L1, 1L2, 1L3 2L1, 2L2, 2L3		Screw terminals	Screw terminals	Screw terminals	Screw terminals
• Conductor cross-section	mm^2	4	4	10	16
PE connection		M4 × 8; U washer; spring lock washer	M4 × 8; U washer; spring lock washer	M5 × 10; U washer; spring lock washer	M5 × 10; U washer; spring lock washer
Degree of protection		IP20	IP20	IP20	IP20
Dimensions					
• Width	mm (in)	125 (4.92)	125 (4.92)	125 (4.92)	190 (7.48)
• Height	mm (in)	120 (4.72)	140 (5.51)	145 (5.71)	220 (8.66)
• Depth	mm (in)	71 (2.8)	71 (2.8)	91 (3.58)	91 (3.58)
Weight, approx.	kg (lb)	1.1 (2.43)	2.1 (4.63)	2.95 (6.5)	7.8 (17.2)
Suitable for PM240-2 Power Module standard variant 200 ... 240 V 3 AC [1]	Type	6SL3210-1PB13-0 . L0 6SL3210-1PB13-8 . L0	6SL3210-1PB15-5 . L0 6SL3210-1PB17-4 . L0 6SL3210-1PB21-0 . L0	6SL3210-1PB21-4 . L0 6SL3210-1PB21-8 . L0	6SL3210-1PC22-2 . L0 6SL3210-1PC22-8 . L0
• Frame size		FSA	FSB	FSC	FSC
Suitable for PM240-2 Power Module standard variant 380 ... 480 V 3 AC	Type	6SL3210-1PE11-8 . L1 6SL3210-1PE12-3 . L1 6SL3210-1PE13-2 . L1	6SL3210-1PE14-3 . L1 6SL3210-1PE16-1 . L1 6SL3210-1PE18-0 . L1	6SL3210-1PE21-1 . L0 6SL3210-1PE21-4 . L0 6SL3210-1PE21-8 . L0	6SL3210-1PE22-7 . L0 6SL3210-1PE23-3 . L0
• Frame size		FSA	FSA	FSB	FSC

[1] With the appropriate wiring, the line reactors for 200 V 3 AC can be used for the 200 V versions for 200 V 1 AC. Further information can be found on the internet at:
https://support.industry.siemens.com/cs/document/109486005
https://support.industry.siemens.com/cs/document/109482011

© Siemens 2024

Recommended line-side overcurrent protection devices for blocksize format

Selection and ordering data

Overcurrent protection devices are absolutely necessary for the operation of the converters. The following tables list recommendations for fuses.

- Siemens fuses of type 3NA3 and 3NE1 for use in the area of validity of IEC
- UL-listed fuses Class J or Siemens 3NE1 fuses for use in the USA and Canada

Recommendations on further overcurrent protection devices are available at:
www.siemens.com/sinamics-g120/ocpd

The Short-Circuit Current Rating (SCCR) according to UL for industrial control panel installations to NEC Article 409 or UL 508A/508C or UL 61800-5-1 is as follows for Class J fuses for

- PM240-2 Power Modules for SINAMICS S120 blocksize: 100 kA

SCCR and ICC values for combination with further overcurrent protection devices are available at:
www.siemens.com/sinamics-g120/ocpd

Notes for installations in Canada:

The converters are intended for line supply systems with overvoltage category III. Additional information is available in the technical documentation on the internet at:
https://support.industry.siemens.com/cs/document/109771795

Additional information about the listed Siemens fuses is available in Catalog LV 10 as well as in SiePortal.

Rated power [1]		**PM240-2 Power Module**		**IEC-compliant**		**UL/cUL-compliant**	
		Standard variant		**Fuse**		**Fuse type** Rated voltage 600 V AC	
		Type		Current			Current
kW	hp	6SL3210-...	Frame size	A	Article No.	Class	A
200 ... 240 V 1 AC/3 AC							
0.55	0.75	1PB13-0 . L0	FSA	16	**3NA3805**	J	15
0.75	1	1PB13-8 . L0	FSA	16	**3NA3805**	J	15
1.1	1.5	1PB15-5 . L0	FSB	32	**3NA3812**	J	35
1.5	2	1PB17-4 . L0	FSB	32	**3NA3812**	J	35
2.2	3	1PB21-0 . L0	FSB	32	**3NA3812**	J	35
3	4	1PB21-4 . L0	FSC	50	**3NA3820**	J	50
4	5	1PB21-8 . L0	FSC	50	**3NA3820**	J	50
200 ... 240 V 3 AC							
5.5	7.5	1PC22-2 . L0	FSC	50	**3NA3820**	J	50
7.5	10	1PC22-8 . L0	FSC	50	**3NA3820**	J	50
11	15	1PC24-2UL0	FSD	63	**3NA3822**	J	60
15	20	1PC25-4UL0	FSD	80	**3NA3824**	J	70
18.5	25	1PC26-8UL0	FSD	100	**3NA3830**	J	90
22	30	1PC28-0UL0	FSE	100	**3NA3830**	J	100
30	40	1PC31-1UL0	FSE	160	**3NA3836**	J	150
37	50	1PC31-3UL0	FSF	200	**3NA3140**	J	175
45	60	1PC31-6UL0	FSF	200	**3NA3140**	J	200
55	75	1PC31-8UL0	FSF	224	**3NA3142**	J	250

[1] Rated power based on the rated output current I_N. The rated output current I_N is based on the duty cycle for low overload (LO).

© Siemens 2024

Selection and ordering data

Rated power [1]		PM240-2 Power Module Standard variant		IEC-compliant Fuse		UL/cUL-compliant Fuse type Rated voltage 600 V AC	
		Type		Current			Current
kW	hp	6SL3210-...	Frame size	A	Article No.	Class	A
380 ... 480 V 3 AC							
0.55	0.75	1PE11-8 . L1	FSA	10	**3NA3803**	J	10
0.75	1	1PE12-3 . L1	FSA	10	**3NA3803**	J	10
1.1	1.5	1PE13-2 . L1	FSA	16	**3NA3805**	J	15
1.5	2	1PE14-3 . L1	FSA	16	**3NA3805**	J	15
2.2	3	1PE16-1 . L1	FSA	16	**3NA3805**	J	15
3	4	1PE18-0 . L1	FSA	16	**3NA3805**	J	15
4	5	1PE21-1 . L0	FSB	32	**3NA3812**	J	35
5.5	7.5	1PE21-4 . L0	FSB	32	**3NA3812**	J	35
7.5	10	1PE21-8 . L0	FSB	32	**3NA3812**	J	35
11	15	1PE22-7 . L0	FSC	50	**3NA3820**	J	50
15	20	1PE23-3 . L0	FSC	50	**3NA3820**	J	50
18.5	25	1PE23-8 . L0	FSD	63	**3NA3822**	J	60
22	30	1PE24-5 . L0	FSD	80	**3NA3824**	J	70
30	40	1PE26-0 . L0	FSD	100	**3NA3830**	J	90
37	50	1PE27-5 . L0	FSD	100	**3NA3830**	J	100
45	60	1PE28-8 . L0	FSE	125	**3NA3832**	J	125
55	75	1PE31-1 . L0	FSE	160	**3NA3836**	J	150
75	100	1PE31-5 . L0	FSF	200	**3NA3140**	J	200
90	125	1PE31-8 . L0	FSF	224	**3NA3142**	J	250
110	150	1PE32-1 . L0	FSF	300	**3NA3250**	J	300
132	200	1PE32-5 . L0	FSF	315	**3NA3252**	J	350
160	250	1PE33-0 . L0	FSG	355	**3NA3254**	J	400
200	300	1PE33-7 . L0	FSG	400	**3NA3260**	J	500
250	400	1PE34-8 . L0	FSG	630	**3NA3372**	J	600
500 ... 690 V 3 AC							
11	10	1PH21-4 . L0	FSD	20	**3NA3807-6**	J	20
15	15	1PH22-0 . L0	FSD	25	**3NA3810-6**	J	25
18.5	20	1PH22-3 . L0	FSD	32	**3NA3812-6**	J	30
22	25	1PH22-7 . L0	FSD	40	**3NA3817-6KJ**	J	35
30	30	1PH23-5 . L0	FSD	50	**3NA3820-6KJ**	J	50
37	40	1PH24-2 . L0	FSD	63	**3NA3822-6**	J	60
45	50	1PH25-2 . L0	FSE	80	**3NA3824-6**	J	80
55	60	1PH26-2 . L0	FSE	80	**3NA3824-6**	J	80
75	75	1PH28-0 . L0	FSF	100	**3NA3830-6**	J	110
90	100	1PH31-0 . L0	FSF	125	**3NA3132-6**	J	150
110	100	1PH31-2 . L0	FSF	160	**3NA3136-6**	J	150
132	125	1PH31-4 . L0	FSF	200	**3NA3140-6**	J	200
				IEC and UL-compliant			
				Fuse		**Fuse**	
				Current		Current	
				A	Article No.	A	Article No.
160	150	1PH31-7CL0	FSG	250	**3NE1227-0**	250	**3NE1227-0**
200	200	1PH32-1CL0	FSG	315	**3NE1230-0**	315	**3NE1230-0**
250	250	1PH32-5CL0	FSG	355	**3NE1331-0**	355	**3NE1331-0**

[1] Rated power based on the rated output current I_N. The rated output current I_N is based on the duty cycle for low overload (LO).

© Siemens 2024

Braking resistors for blocksize format

Overview

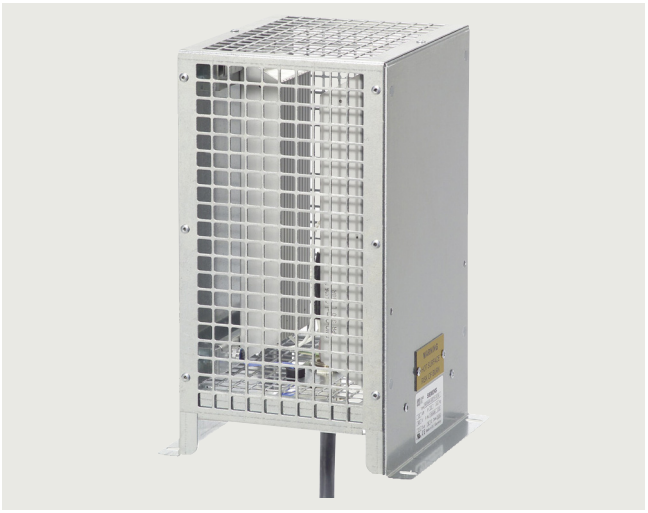

Braking resistor for PM240-2 Power Modules, frame size FSD

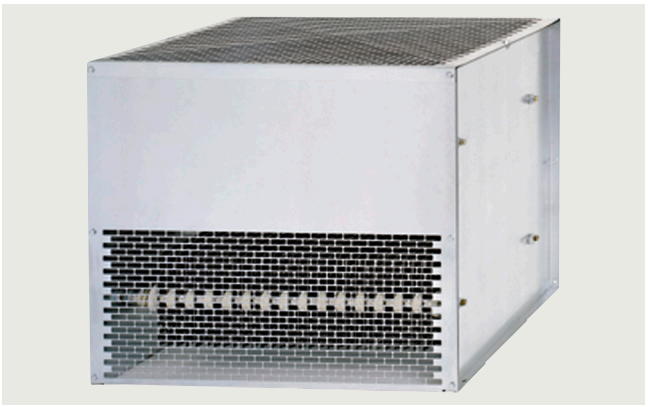

Braking resistor for PM240-2 Power Modules, frame size FSG

Excess energy in the DC link is dissipated in the braking resistor. The braking resistors are intended for use with PM240-2 Power Modules which feature an integrated braking chopper, but cannot regenerate energy to the supply system. For regenerative operation, e.g. the braking of a rotating mass with high moment of inertia, a braking resistor must be connected to convert the resulting energy into heat.

The braking resistors can be installed laterally next to the PM240-2 Power Modules. The braking resistors for the Power Modules, frame sizes FSD to FSG, should be placed outside the control cabinet or outside the switchgear room so that the heat is dissipated away from the Power Modules. The level of air conditioning required is therefore reduced.

Every braking resistor has a temperature switch (UL-listed). The temperature switch should be evaluated to prevent consequential damage if the braking resistor overheats.

Note:

For the electromagnetically compatible connection of an optionally connectable braking resistor, the corresponding shield connection kit is to be ordered for frame sizes FSD to FSG.

For more information, see shield connection kits for blocksize format.

Integration

Braking resistors that are optionally available depending on the Power Module used

	Frame size						
	FSA	**FSB**	**FSC**	**FSD**	**FSE**	**FSF**	**FSG**
PM240-2 Power Module with integrated braking chopper							
• 200 V versions	✓	✓	✓	✓	✓	✓	–
• 400 V versions	✓	✓	✓	✓	✓	✓	✓
• 690 V versions	–	–	–	✓	✓	✓	✓
DC link components							
Braking resistor	**S**	**S**	**S**	**S**	**S**	**S**	**S**

S = Lateral mounting
– = Not possible

© Siemens 2024

Selection and ordering data

Rated power		**PM240-2 Power Module** **Standard variant**		**Braking resistor** (The prefix **"JJY:"** is part of a Siemens internal order code which does not belong to the product number of the original equipment manufacturer Heine Resistor GmbH)
kW	hp	Type 6SL3210-...	Frame size	Article No.
200 ... 240 V 1 AC/3 AC				
0.55	0.75	1PB13-0 . L0	FSA	**JJY:023146720008**
0.75	1	1PB13-8 . L0		
1.1	1.5	1PB15-5 . L0	FSB	**JJY:023151720007**
1.5	2	1PB17-4 . L0		
2.2	3	1PB21-0 . L0		
3	4	1PB21-4 . L0	FSC	**JJY:023163720018**
4	5	1PB21-8 . L0		
200 ... 240 V 3 AC				
5.5	7.5	1PC22-2 . L0	FSC	**JJY:023433720001**
7.5	10	1PC22-8 . L0		
11	15	1PC24-2UL0	FSD	**JJY:023422620002**
15	20	1PC25-4UL0		
18.5	25	1PC26-8UL0		
22	30	1PC28-0UL0	FSE	**JJY:023423320001**
30	40	1PC31-1UL0		
37	50	1PC31-3UL0	FSF	**JJY:023434020003**
45	60	1PC31-6UL0		
55	75	1PC31-8UL0		
380 ... 480 V 3 AC				
0.55	0.75	1PE11-8 . L1	FSA	**6SL3201-0BE14-3AA0**
0.75	1	1PE12-3 . L1		
1.1	1.5	1PE13-2 . L1		
1.5	2	1PE14-3 . L1		
2.2	3	1PE16-1 . L1	FSA	**6SL3201-0BE21-0AA0**
3	4	1PE18-0 . L1		
4	5	1PE21-1 . L0	FSB	**6SL3201-0BE21-8AA0**
5.5	7.5	1PE21-4 . L0		
7.5	10	1PE21-8 . L0		
11	15	1PE22-7 . L0	FSC	**6SL3201-0BE23-8AA0**
15	20	1PE23-3 . L0		
18.5	25	1PE23-8 . L0	FSD	**JJY:023422620001**
22	30	1PE24-5 . L0		
30	40	1PE26-0 . L0	FSD	**JJY:023424020001**
37	50	1PE27-5 . L0		
45	60	1PE28-8 . L0	FSE	**JJY:023434020001**
55	75	1PE31-1 . L0		
75	100	1PE31-5 . L0	FSF	**JJY:023454020001**
90	125	1PE31-8 . L0		
110	150	1PE32-1 . L0	FSF	**JJY:023464020001**
132	200	1PE32-5 . L0		
160	250	1PE33-0 . L0	FSG	**6SL3000-1BE32-5AA0**
200	300	1PE33-7 . L0		
250	400	1PE34-8 . L0		

© Siemens 2024

Braking resistors for blocksize format

Selection and ordering data

Rated power		PM240-2 Power Module Standard variant		Braking resistor (The prefix **"JJY:"** is part of a Siemens internal order code which does not belong to the product number of the original equipment manufacturer Heine Resistor GmbH)
kW	hp	Type 6SL3210-...	Frame size	Article No.
500 ... 690 V 3 AC				
11	10	1PH21-4 . L0	FSD	**JJY:023424020002**
15	15	1PH22-0 . L0		
18.5	20	1PH22-3 . L0		
22	25	1PH22-7 . L0		
30	30	1PH23-5 . L0		
37	40	1PH24-2 . L0		
45	50	1PH25-2 . L0	FSE	**JJY:023434020002**
55	60	1PH26-2 . L0		
75	75	1PH28-0 . L0	FSF	**JJY:023464020002**
90	100	1PH31-0 . L0		
110	100	1PH31-2 . L0		
132	125	1PH31-4 . L0		
160	150	1PH31-7CL0	FSG	**6SL3000-1BH32-5AA0**
200	200	1PH32-1CL0		
250	250	1PH32-5CL0		

© Siemens 2024

Technical specifications

Line voltage 200 ... 240 V 1 AC/3 AC		Braking resistor		
		JJY:023146720008	JJY:023151720007	JJY:023163720018
Resistance	Ω	200	68	37
Rated power P_{DB} (Continuous braking power)	kW	0.0375	0.11	0.2
Peak power P_{max} (load duration t_a = 12 s with period t = 240 s)	kW	0.75	2.2	4
Power connection		Cable	Cable	Cable
Thermostatic switch		Integrated	Integrated	Integrated
Degree of protection		IP20	IP20	IP20
Dimensions				
• Width	mm (in)	60 (2.36)	60 (2.36)	60 (2.36)
• Height	mm (in)	167 (6.57)	217 (8.54)	337 (13.27)
• Depth	mm (in)	30 (1.18)	30 (1.18)	30 (1.18)
Weight, approx.	kg (lb)	0.5 (1.10)	0.7 (1.54)	1.1 (2.43)
Suitable for PM240-2 Power Module standard variant	Type	6SL3210-1PB13-0 . L0 6SL3210-1PB13-8 . L0	6SL3210-1PB15-5 . L0 6SL3210-1PB17-4 . L0 6SL3210-1PB21-0 . L0	6SL3210-1PB21-4 . L0 6SL3210-1PB21-8 . L0
• Frame size		FSA	FSB	FSC

Line voltage 200 ... 240 V 3 AC		Braking resistor			
		JJY:023433720001	JJY:023422620002	JJY:023423320001	JJY:023434020003
Resistance	Ω	20	7.5	4.5	2.5
Rated power P_{DB} (Continuous braking power)	kW	0.375	0.93	1.5	2.75
Peak power P_{max} (load duration t_a = 12 s with period t = 240 s)	kW	7.5	18.5	30	55
Power connection		Cable	Cable	Cable	Cable
Thermostatic switch		Integrated	Integrated	Integrated	Integrated
Degree of protection		IP20	IP21	IP21	IP21
Dimensions					
• Width	mm (in)	337 (13.27)	220 (8.66)	220 (8.66)	350 (13.78)
• Height	mm (in)	120 (4.72)	470 (18.5)	560 (22.05)	630 (24.8)
• Depth	mm (in)	30 (1.18)	180 (7.09)	180 (7.09)	180 (7.09)
Weight, approx.	kg (lb)	2 (4.41)	7 (15.4)	8.5 (18.7)	13.5 (29.8)
Suitable for PM240-2 Power Module standard variant	Type	6SL3210-1PC22-2 . L0 6SL3210-1PC22-8 . L0	6SL3210-1PC24-2UL0 6SL3210-1PC25-4UL0 6SL3210-1PC26-8UL0	6SL3210-1PC28-0UL0 6SL3210-1PC31-1UL0	6SL3210-1PC31-3UL0 6SL3210-1PC31-6UL0 6SL3210-1PC31-8UL0
• Frame size		FSC	FSD	FSE	FSF

© Siemens 2024

Braking resistors for blocksize format

Technical specifications

Line voltage 380 ... 480 V 3 AC		Braking resistor			
		6SL3201-0BE14-3AA0	6SL3201-0BE21-0AA0	6SL3201-0BE21-8AA0	6SL3201-0BE23-8AA0
Resistance	Ω	370	140	75	30
Rated power P_{DB} (Continuous braking power)	kW	0.075	0.2	0.375	0.925
Peak power P_{max} (load duration t_a = 12 s with period t = 240 s)	kW	1.5	4	7.5	18.5
Power connection		Terminal block	Terminal block	Terminal block	Terminal block
• Conductor cross-section	mm^2	2.5	2.5	4	6
Thermostatic switch		NC contact	NC contact	NC contact	NC contact
• Contact load, max.		250 V AC/2.5 A	250 V AC/2.5 A	250 V AC/2.5 A	250 V AC/2.5 A
• Conductor cross-section	mm^2	2.5	2.5	2.5	2.5
PE connection					
• Via terminal block		Yes	Yes	Yes	Yes
• PE connection on housing		M4 screw	M4 screw	M4 screw	M4 screw
Degree of protection		IP20	IP20	IP20	IP20
Dimensions					
• Width	mm (in)	105 (4.13)	105 (4.13)	175 (6.89)	250 (9.84)
• Height	mm (in)	295 (11.61)	345 (13.58)	345 (13.58)	490 (19.29)
• Depth	mm (in)	100 (3.94)	100 (3.94)	100 (3.94)	140 (5.51)
Weight, approx.	kg (lb)	1.48 (3.26)	1.8 (3.97)	2.73 (6.02)	6.2 (13.7)
Suitable for PM240-2 Power Module standard variant	Type	6SL3210-1PE11-8 . L1 6SL3210-1PE12-3 . L1 6SL3210-1PE13-2 . L1 6SL3210-1PE14-3 . L1	6SL3210-1PE16-1 . L1 6SL3210-1PE18-0 . L1	6SL3210-1PE21-1 . L0 6SL3210-1PE21-4 . L0 6SL3210-1PE21-8 . L0	6SL3210-1PE22-7 . L0 6SL3210-1PE23-3 . L0
• Frame size		FSA	FSA	FSB	FSC

Line voltage 380 ... 480 V 3 AC		Braking resistor				
		JJY:023422620001	JJY:023424020001	JJY:023434020001	JJY:023454020001 [1]	JJY:023464020001 [2]
Resistance	Ω	25	15	10	7.1	5
Rated power P_{DB} (Continuous braking power)	kW	1.1	1.85	2.75	3.85	5.5
Peak power P_{max} (load duration t_a = 12 s with period t = 240 s)	kW	22	37	55	77	110
Power connection		Cable	Cable	Cable	Cable	Cable
Thermostatic switch		Integrated	Integrated	Integrated	Integrated	Integrated
Degree of protection		IP21	IP21	IP21	IP21	IP21
Dimensions						
• Width	mm (in)	220 (8.66)	220 (8.66)	350 (13.78)	[1]	[2]
• Height	mm (in)	470 (18.5)	610 (24.02)	630 (24.8)	[1]	[2]
• Depth	mm (in)	180 (7.09)	180 (7.09)	180 (7.09)	[1]	[2]
Weight, approx.	kg (lb)	7 (15.4)	9.5 (20.9)	13.5 (29.8)	20.5 (45.2)	27 (59.5)
Suitable for PM240-2 Power Module standard variant	Type	6SL3210-1PE23-8 . L0 6SL3210-1PE24-5 . L0	6SL3210-1PE26-0 . L0 6SL3210-1PE27-5 . L0	6SL3210-1PE28-8 . L0 6SL3210-1PE31-1 . L0	6SL3210-1PE31-5 . L0 6SL3210-1PE31-8 . L0	6SL3210-1PE32-1 . L0 6SL3210-1PE32-5 . L0
• Frame size		FSD	FSD	FSE	FSF	FSF

[1] This braking resistor consists of the two braking resistors, JJY:023422620001 and JJY:023434020001, which must be connected in parallel on the plant/system side.

[2] This braking resistor consists of two JJY:023434020001 braking resistors, which must be connected in parallel on the plant/system side.

© Siemens 2024

Technical specifications

Line voltage 500 ... 690 V 3 AC		Braking resistor		
		JJY:023424020002	JJY:023434020002	JJY:023464020002 [1]
Resistance	Ω	31	21	10.5
Rated power P_{DB} (Continuous braking power)	kW	1.85	2.75	5.5
Peak power P_{max} (load duration t_a = 12 s with period t = 240 s)	kW	37	55	110
Power connection		Cable	Cable	Cable
Thermostatic switch		Integrated	Integrated	Integrated
Degree of protection		IP21	IP21	IP21
Dimensions				
• Width	mm (in)	220 (8.66)	350 (13.78)	[1]
• Height	mm (in)	610 (24.02)	630 (24.8)	[1]
• Depth	mm (in)	180 (7.09)	180 (7.09)	[1]
Weight, approx.	kg (lb)	9.5 (20.9)	13.5 (29.8)	27 (59.5)
Suitable for PM240-2 Power Module	Type	6SL3210-1PH21-4 . L0 6SL3210-1PH22-0 . L0 6SL3210-1PH22-3 . L0 6SL3210-1PH22-7 . L0 6SL3210-1PH23-5 . L0 6SL3210-1PH24-2 . L0	6SL3210-1PH25-2 . L0 6SL3210-1PH26-2 . L0	6SL3210-1PH28-0 . L0 6SL3210-1PH31-0 . L0 6SL3210-1PH31-2 . L0 6SL3210-1PH31-4 . L0
• Frame size		FSD	FSE	FSF

Line voltage 380 ... 480 V 3 AC or 500 ... 690 V 3 AC		Braking resistor	
		6SL3000-1BE32-5AA0	6SL3000-1BH32-5AA0
Resistance	Ω	2.2	4.9
Rated power P_{DB} (Continuous braking power for operation with PM240-2)	kW	12.5	12.5
Peak power P_{max} (load duration t_a = 12 s with period t = 240 s)	kW	250	250
Power connection		M10 screw stud	M10 screw stud
Thermostatic switch		NC contact	NC contact
• Contact load, max.		250 V AC/2.5 A	250 V AC/2.5 A
Degree of protection		IP20	IP20
Dimensions			
• Width	mm (in)	810 (31.89)	810 (31.89)
• Height	mm (in)	1325 (52.17)	1325 (52.17)
• Depth	mm (in)	485 (19.09)	485 (19.09)
Weight, approx.	kg (lb)	120 (265)	120 (265)
Suitable for PM240-2 Power Module	Type	400 V: 6SL3210-1PE33-0 . L0 6SL3210-1PE33-7 . L0 6SL3210-1PE34-8 . L0	690 V: 6SL3210-1PH31-7CL0 6SL3210-1PH32-1CL0 6SL3210-1PH32-5CL0
• Frame size		FSG	FSG

Characteristic curves

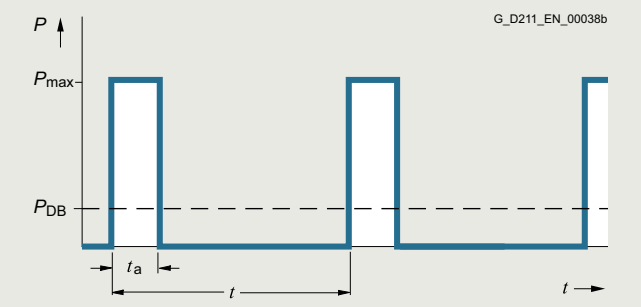

Load diagram for the braking resistors

t_a = 12 s
t = 240 s

[1] This braking resistor consists of two JJY:023434020002 braking resistors, which must be connected in parallel on the plant/system side.

© Siemens 2024

Output reactors for blocksize format

Overview

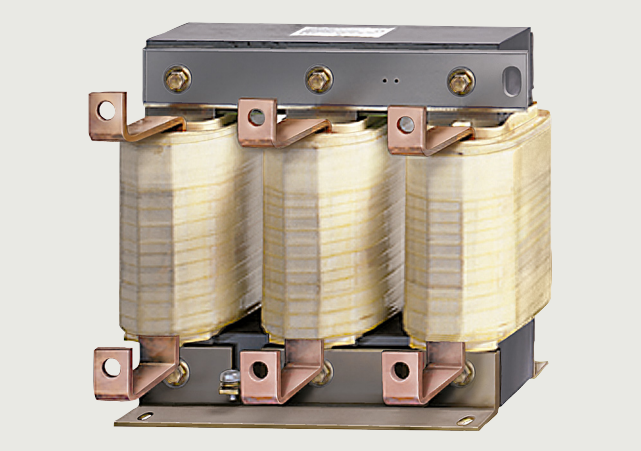

Output reactor for PM240-2 Power Modules, frame size FSG

Output reactors reduce the rate of voltage rise (*dv/dt*) and the height of the current peaks, and enable longer motor cables to be connected.

Owing to the high rates of voltage rise of the fast-switching IGBTs, the capacitance of long motor cables reverses polarity very quickly with every switching operation in the inverter. As a result, the inverter is loaded with additional current peaks of substantial magnitude.

Output reactors reduce the magnitude of these additional peaks because the cable capacitance reverses polarity more slowly across the reactor inductance, thereby attenuating the amplitudes of the current peaks.

When using output reactors, the following should be observed:

- Max. permissible output frequency 150 Hz
- Max. permissible pulse frequency 4 kHz
- The output reactor must be installed as close as possible to the Power Module

Integration

Output reactors that are optionally available depending on the Power Module used

	Frame size						
	FSA	**FSB**	**FSC**	**FSD**	**FSE**	**FSF**	**FSG**
PM240-2 Power Module with integrated braking chopper							
• 200 V versions	✓	✓	✓	✓	✓	✓	–
• 400 V versions	✓	✓	✓	✓	✓	✓	✓
• 690 V versions	–	–	–	✓	✓	✓	✓
Load-side power components							
Output reactor	**S**	**S**	**S**	**S**	**S**	**S**	**S**

S = Lateral mounting
– = Not possible

© Siemens 2024

Selection and ordering data

Rated power		PM240-2 Power Module Standard variant		Output reactor (The prefix **"JTA:"** is part of a Siemens internal order code which does not belong to the product number of the original equipment manufacturer Mdexx Magnetronic Devices s. r. o.)
kW	hp	Type 6SL3210-...	Frame size	Article No.
200 ... 240 V 1 AC/3 AC				
0.55	0.75	1PB13-0 . L0	FSA	**6SL3202-0AE16-1CA0**
0.75	1	1PB13-8 . L0		
1.1	1.5	1PB15-5 . L0	FSB	**6SL3202-0AE16-1CA0**
1.5	2	1PB17-4 . L0	FSB	**6SL3202-0AE18-8CA0**
2.2	3	1PB21-0 . L0	FSB	**6SL3202-0AE21-8CA0**
3	4	1PB21-4 . L0	FSC	**6SL3202-0AE21-8CA0**
4	5	1PB21-8 . L0		
200 ... 240 V 3 AC				
5.5	7.5	1PC22-2 . L0	FSC	**6SL3202-0AE23-8CA0**
7.5	10	1PC22-8 . L0		
11	15	1PC24-2UL0	FSD	**6SE6400-3TC07-5ED0**
15	20	1PC25-4UL0		
18.5	25	1PC26-8UL0		
22	30	1PC28-0UL0	FSE	**6SE6400-3TC14-5FD0**
30	40	1PC31-1UL0		
37	50	1PC31-3UL0	FSF	**6SE6400-3TC14-5FD0**
45	60	1PC31-6UL0		
55	75	1PC31-8UL0		
380 ... 480 V 3 AC				
0.55	0.75	1PE11-8 . L1	FSA	**6SL3202-0AE16-1CA0**
0.75	1	1PE12-3 . L1		
1.1	1.5	1PE13-2 . L1		
1.5	2	1PE14-3 . L1		
2.2	3	1PE16-1 . L1		
3	4	1PE18-0 . L1	FSA	**6SL3202-0AE18-8CA0**
4	5	1PE21-1 . L0	FSB	**6SL3202-0AE21-8CA0**
5.5	7.5	1PE21-4 . L0		
7.5	10	1PE21-8 . L0		
11	15	1PE22-7 . L0	FSC	**6SL3202-0AE23-8CA0**
15	20	1PE23-3 . L0		
18.5	25	1PE23-8 . L0	FSD	**6SE6400-3TC07-5ED0**
22	30	1PE24-5 . L0		
30	40	1PE26-0 . L0		
37	50	1PE27-5 . L0		
45	60	1PE28-8 . L0	FSE	**6SE6400-3TC14-5FD0**
55	75	1PE31-1 . L0		
75	100	1PE31-5 . L0	FSF	**6SE6400-3TC14-5FD0**
90	125	1PE31-8 . L0		
110	150	1PE32-1 . L0	FSF	**6SL3000-2BE32-1AA0**
132	200	1PE32-5 . L0	FSF	**6SL3000-2BE32-6AA0**
160	250	1PE33-0 . L0	FSG	**6SL3000-2BE33-2AA0**
200	300	1PE33-7 . L0	FSG	**6SL3000-2BE33-8AA0**
250	400	1PE34-8 . L0	FSG	**6SL3000-2BE35-0AA0**

© Siemens 2024

Output reactors for blocksize format

Selection and ordering data

Rated power		PM240-2 Power Module Standard variant		Output reactor (The prefix **"JTA:"** is part of a Siemens internal order code which does not belong to the product number of the original equipment manufacturer Mdexx Magnetronic Devices s. r. o.)
kW	hp	Type 6SL3210-...	Frame size	Article No.
500 ... 690 V 3 AC				
11	15	1PH21-4 . L0	FSD	**JTA:TEU2532-0FP00-4EA0**
15	20	1PH22-0 . L0		
18.5	25	1PH22-3 . L0		
22	30	1PH22-7 . L0	FSD	**JTA:TEU9932-0FP00-4EA0**
30	40	1PH23-5 . L0		
37	50	1PH24-2 . L0		
45	60	1PH25-2 . L0	FSE	**JTA:TEU9932-0FS00-0EA0**
55	75	1PH26-2 . L0		
75	75	1PH28-0 . L0	FSF	**JTA:TEU9932-1FC00-1BA0**
90	100	1PH31-0 . L0		
110	100	1PH31-2 . L0	FSF	**JTA:TEU9932-0FV00-1BA0**
132	125	1PH31-4 . L0		
160	150	1PH31-7CL0	FSG	**JTA:TEU4732-0FA00-0BA0**
200	200	1PH32-1CL0		
250	250	1PH32-5CL0		

© Siemens 2024

Technical specifications

Line voltage 200 ... 240 V 1 AC/3 AC or 380 ... 480 V 3 AC		**Output reactor (for a 4 kHz pulse frequency)**			
		6SL3202-0AE16-1CA0	6SL3202-0AE18-8CA0	6SL3202-0AE21-8CA0	6SL3202-0AE23-8CA0
Rated current	A	6.1	9	18.5	39
Power loss	kW	0.09	0.08	0.08	0.11
Connection to the Power Module/ motor connection		Screw terminals	Screw terminals	Screw terminals	Screw terminals
• Conductor cross-section	mm^2	4	4	10	16
PE connection		M4 screw stud	M4 screw stud	M5 screw stud	M5 screw stud
Cable length, max. between output reactor and motor					
• 200 -10 % ... 240 V +10 % 3 AC and 380 -10 % ... 415 V +10 % 3 AC					
- Shielded	m (ft)	150 (492)	150 (492)	150 (492)	150 (492)
- Unshielded	m (ft)	225 (738)	225 (738)	225 (738)	225 (738)
• 440 ... 480 V 3 AC +10 %					
- Shielded	m (ft)	100 (328)	100 (328)	100 (328)	100 (328)
- Unshielded	m (ft)	150 (492)	150 (492)	150 (492)	150 (492)
Dimensions					
• Width	mm (in)	207 (8.15)	207 (8.15)	247 (9.72)	257 (10.12)
• Height	mm (in)	175 (6.89)	180 (7.09)	215 (8.46)	235 (9.25)
• Depth	mm (in)	72.5 (2.85)	72.5 (2.85)	100 (3.94)	114.7 (4.52)
Degree of protection		IP20	IP20	IP20	IP20
Weight, approx.	kg (lb)	3.4 (7.5)	3.9 (8.6)	10.1 (22.3)	11.2 (24.7)
Suitable for PM240-2 Power Module standard variant 200 ... 240 V 1 AC/3 AC	Type	6SL3210-1PB13-0 . L0 FSA 6SL3210-1PB13-8 . L0 FSA 6SL3210-1PB15-5 . L0 FSB	6SL3210-1PB17-4 . L0 FSB	6SL3210-1PB21-0 . L0 FSB 6SL3210-1PB21-4 . L0 FSC 6SL3210-1PB21-8 . L0 FSC	6SL3210-1PC22-2 . L0 FSC 6SL3210-1PC22-8 . L0 FSC
Suitable for PM240-2 Power Module standard variant 380 ... 480 V 3 AC	Type	6SL3210-1PE11-8 . L1 FSA 6SL3210-1PE12-3 . L1 FSA 6SL3210-1PE13-2 . L1 FSA 6SL3210-1PE14-3 . L1 FSA 6SL3210-1PE16-1 . L1 FSA	6SL3210-1PE18-0 . L1 FSA	6SL3210-1PE21-1 . L0 FSB 6SL3210-1PE21-4 . L0 FSB 6SL3210-1PE21-8 . L0 FSB	6SL3210-1PE22-7 . L0 FSC 6SL3210-1PE23-3 . L0 FSC

© Siemens 2024

Output reactors for blocksize format

Technical specifications

Line voltage 200 ... 240 V 3 AC or 380 ... 480 V 3 AC		Output reactor (for a 4 kHz pulse frequency)			
		6SE6400-3TC07-5ED0	6SE6400-3TC14-5FD0	6SL3000-2BE32-1AA0	6SL3000-2BE32-6AA0
Rated current	A	90	178	210	260
Power loss, max.	kW	0.27	0.47	0.49	0.5
Connection to the Power Module/ motor connection		Flat connector for M6 screw	Flat connector for M8 screw	Flat connector for M10 screw	Flat connector for M10 screw
PE connection		M6 screw	M8 screw	M8 screw	M8 screw
Cable length, max. between output reactor and motor					
• Shielded	m (ft)	200 (656)	200 (656)	300 (984)	300 (984)
• Unshielded	m (ft)	300 (984)	300 (984)	450 (1476)	450 (1476)
Dimensions					
• Width	mm (in)	270 (10.63)	350 (13.78)	300 (11.81)	300 (11.81)
• Height	mm (in)	248 (9.76)	321 (12.64)	285 (11.22)	315 (12.40)
• Depth	mm (in)	209 (8.23)	288 (11.34)	257 (10.12)	277 (10.91)
Degree of protection		IP00	IP00	IP00	IP00
Weight, approx.	kg (lb)	27 (59.5)	57 (126)	60 (132)	66 (146)
Suitable for PM240-2 Power Module standard variant 200 ... 240 V 3 AC	Type	6SL3210-1PC24-2UL0 6SL3210-1PC25-4UL0 6SL3210-1PC26-8UL0 FSD	6SL3210-1PC28-0UL0 6SL3210-1PC31-1UL0 FSE 6SL3210-1PC31-3UL0 6SL3210-1PC31-6UL0 6SL3210-1PC31-8UL0 FSF	–	–
Suitable for PM240-2 Power Module standard variant 380 ... 480 V 3 AC	Type	6SL3210-1PE23-8 . L0 6SL3210-1PE24-5 . L0 6SL3210-1PE26-0 . L0 6SL3210-1PE27-5 . L0 FSD	6SL3210-1PE28-8 . L0 6SL3210-1PE31-1 . L0 FSE 6SL3210-1PE31-5 . L0 6SL3210-1PE31-8 . L0 FSF	6SL3210-1PE32-1 . L0 FSF	6SL3210-1PE32-5 . L0 FSF

© Siemens 2024

Technical specifications

Line voltage 380 ... 480 V 3 AC		Output reactor (for a 4 kHz pulse frequency)		
		6SL3000-2BE33-2AA0	6SL30V00-2BE33-8AA0	6SL3000-2BE35-0AA0
Rated current	A	310	380	490
Power loss	kW	0.47	0.5	0.5
Connection to the Power Module		1 × hole for M10	1 × hole for M10	1 × hole for M12
PE connection		M6 screw	M6 screw	M6 screw
Cable length, max. between output reactor and motor				
• Shielded	m (ft)	300 (984)	300 (984)	300 (984)
• Unshielded	m (ft)	450 (1476)	450 (1476)	450 (1476)
Dimensions				
• Width	mm (in)	300 (11.81)	300 (11.81)	300 (11.81)
• Height	mm (in)	285 (11.22)	285 (11.22)	365 (14.37)
• Depth	mm (in)	257 (10.12)	277 (10.91)	277 (10.91)
Degree of protection		IP00	IP00	IP00
Weight, approx.	kg (lb)	66 (146)	73 (161)	100 (220)
Suitable for PM240-2 Power Module standard variant	Type	6SL3210-1PE33-0 . L0 FSG	6SL3210-1PE33-7 . L0 FSG	6SL3210-1PE34-8 . L0 FSG

Line voltage 500 ... 690 V 3 AC		Output reactor (for a 4 kHz pulse frequency)		
		JTA:TEU2532-0FP00-4EA0	JTA:TEU9932-0FP00-4EA0	JTA:TEU9932-0FS00-0EA0
Rated current	A	24	44	64
Power loss, max.	kW	0.13	0.3	0.4
Connection to the Power Module/ motor connection		Screw terminals	Screw terminals	Screw terminals
• Conductor cross-section	mm^2	16	35	70
PE connection		Screw terminals	Screw terminals	Screw terminals
• Conductor cross-section	mm^2	16	35	70
Cable length, max. between output reactor and motor				
• Shielded	m (ft)	350 (1148)	350 (1148)	350 (1148)
• Unshielded	m (ft)	525 (1723)	525 (1723)	525 (1723)
Dimensions				
• Width	mm (in)	264 (10.39)	264 (10.39)	310 (12.20)
• Height	mm (in)	255 (10.04)	270 (10.63)	370 (14.57)
• Depth	mm (in)	131 (5.16)	159 (6.26)	182 (7.17)
Degree of protection		IP00	IP00	IP00
Weight, approx.	kg (lb)	18 (39.7)	26 (57.3)	42 (92.6)
Suitable for PM240-2 Power Module standard variant	Type	6SL3210-1PH21-4 . L0 6SL3210-1PH22-0 . L0 6SL3210-1PH22-3 . L0 FSD	6SL3210-1PH22-7 . L0 6SL3210-1PH23-5 . L0 6SL3210-1PH24-2 . L0 FSD	6SL3210-1PH25-2 . L0 6SL3210-1PH26-2 . L0 FSE

© Siemens 2024

Output reactors for blocksize format

Technical specifications

Line voltage 500 ... 690 V 3 AC		Output reactor (for a 4 kHz pulse frequency)		
		JTA:TEU9932-1FC00-1BA0	JTA:TEU9932-0FV00-1BA0	JTA:TEU4732-0FA00-0BA0
Rated current	A	103	146	260
Power loss, max.	kW	0.42	0.52	0.86
Connection to the Power Module/ motor connection		Flat connector for M8 cable lug	Flat connector for M10 cable lug	Flat connector for M10 cable lug
• Conductor cross-section	mm^2	95	120	185 or 2 × 120
PE connection		Cable lug for M6 screw	Cable lug for M6 screw	Cable lug for M6 screw
• Conductor cross-section	mm^2	50	70	95
Cable length, max. between output reactor and motor				
• Shielded	m (ft)	525 (1723)	525 (1723)	525 (1723)
• Unshielded	m (ft)	800 (2625)	800 (2625)	800 (2625)
Dimensions				
• Width	mm (in)	400 (15.75)	400 (15.75)	460 (18.11)
• Height	mm (in)	320 (12.60)	355 (13.98)	430 (16.93)
• Depth	mm (in)	235 (9.25)	258 (10.16)	310 (12.20)
Degree of protection		IP00	IP00	IP00
Weight, approx.	kg (lb)	66 (146)	90 (198)	162 (357)
Suitable for PM240-2 Power Module standard variant	Type	6SL3210-1PH28-0 . L0 6SL3210-1PH31-0 . L0 FSF	6SL3210-1PH31-2 . L0 6SL3210-1PH31-4 . L0 FSF	6SL3210-1PH31-7 . L0 6SL3210-1PH32-1 . L0 6SL3210-1PH32-5 . L0 FSG

© Siemens 2024

Overview

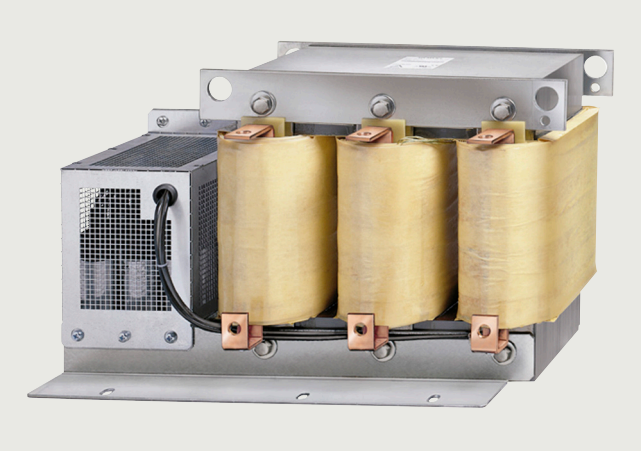

Sine-wave filter

Sine-wave filters limit the rate of voltage rise (*dv/dt*) and the peak voltages on the motor winding. Similar to an output reactor, they enable the connection of longer motor cables.

Bearing currents are also reduced significantly. Using these filters therefore allows standard motors with standard insulation and without insulated bearings to be operated on SINAMICS. As a result, the voltage load on the motor winding is virtually identical to the load on windings of directly mains-fed motors.

Owing to the very low rates of voltage rise on the motor cable, the sine-wave filter also has a positive impact in terms of electromagnetic compatibility which means that it is not absolutely essential to use shielded cables for short motor cables to achieve the required standard of EMC.

Since the voltage applied to the motor is not pulsed, the converter-related stray losses and additional noise in the motor are also reduced considerably and the noise level of the motor is similar to the level produced by directly mains-fed motors.

When using sine-wave filters, the following should be observed:

- Pulse frequencies of between 4 kHz and 8 kHz are permissible for rated outputs up to and including 90 kW
- The output frequency is limited to 150 Hz.
- Operation and commissioning may only be performed with the motor connected as the sine-wave filter is not no-load proof
- It must be ensured that the automatic pulse frequency reduction functions are also deactivated

Integration

Sine-wave filters that are optionally available depending on the Power Module used

	Frame size						
	FSA	**FSB**	**FSC**	**FSD**	**FSE**	**FSF**	**FSG**
PM240-2 Power Module with integrated braking chopper							
• 200 V versions	✓	✓	✓	✓	✓	✓	–
• 400 V versions	✓	✓	✓	✓	✓	✓	✓
• 690 V versions	–	–	–	✓	✓	✓	✓
Load-side power components							
Sine-wave filter (only for 400 V versions)	**S**	**S**	**S**	–	–	–	–

S = Lateral mounting
– = Not possible

© Siemens 2024

Sine-wave filters for blocksize format

Selection and ordering data

Rated power		PM240-2 Power Module Standard variant		Sine-wave filter
kW	hp	Type 6SL3210-...	Frame size	Article No.
380 ... 480 V 3 AC				
0.55	0.75	1PE11-8 . L1	FSA	**6SL3202-0AE20-3SA0**
0.75	1	1PE12-3 . L1		
1.1	1.5	1PE13-2 . L1		
1.5	2	1PE14-3 . L1	FSA	**6SL3202-0AE20-6SA0**
2.2	3	1PE16-1 . L1		
3	4	1PE18-0 . L1	FSA	**6SL3202-0AE21-1SA0**
4	5	1PE21-1 . L0	FSB	**6SL3202-0AE21-4SA0**
5.5	7.5	1PE21-4 . L0		
7.5	10	1PE21-8 . L0	FSB	**6SL3202-0AE22-0SA0**
11	15	1PE22-7 . L0	FSC	**6SL3202-0AE23-3SA0**
15	20	1PE23-3 . L0		

Technical specifications

Line voltage 380 ... 480 V 3 AC		**Sine-wave filter**		
		6SL3202-0AE20-3SA0	6SL3202-0AE20-6SA0	6SL3202-0AE21-1SA0
Rated current	A	3.5	6	9
Power loss	kW	–	–	–
Connection to the Power Module		Cable	Cable	Cable
• Conductor cross-section, max.	mm^2	6	6	6
• Length, approx.	m (ft)	0.5 (1.64)	0.5 (1.64)	0.5 (1.64)
Motor connection		Screw terminals	Screw terminals	Screw terminals
• Conductor cross-section, max.	mm^2	6	6	6
PE connection		Screw studs	Screw studs	Screw studs
Cable length, max. between sine-wave filter and motor				
• Shielded	m (ft)	200 (656)	200 (656)	200 (656)
• Unshielded	m (ft)	300 (984)	300 (984)	300 (984)
Dimensions				
• Width	mm (in)	76.5 (3.01)	76.5 (3.01)	153 (6.02)
• Height	mm (in)	200 (7.87)	200 (7.87)	270 (10.63)
• Depth	mm (in)	110 (4.33)	110 (4.33)	100 (3.94)
Possible as base component		No	No	No
Degree of protection		IP00	IP00	IP00
Weight, approx.	kg (lb)	2.6 (5.73)	3 (6.62)	6 (13.2)
Suitable for PM240-2 Power Module	Type	6SL3210-1PE11-8 . L1 (FSA, 0.55 kW, 1.7 A) 6SL3210-1PE12-3 . L1 (FSA, 0.75 kW, 2.2 A) 6SL3210-1PE13-2 . L1 (FSA, 1.1 kW, 3.1 A)	6SL3210-1PE14-3 . L1 (FSA, 1.5 kW, 4.1 A) 6SL3210-1PE16-1 . L1 (FSA, 2.2 kW, 5.9 A)	6SL3210-1PE18-0 . L1 (FSA, 3 kW, 7.7 A)

© Siemens 2024

Technical specifications

Line voltage 380 ... 480 V 3 AC		Sine-wave filter		
		6SL3202-0AE21-4SA0	6SL3202-0AE22-0SA0	6SL3202-0AE23-3SA0
Rated current	A	14	20	33
Power loss	kW	–	0.099	0.151
Connection to the Power Module		Cable	Cable	Cable
• Conductor cross-section, max.	mm^2	6	10	10
• Length, approx.	m (ft)	0.5 (1.64)	0.5 (1.64)	0.5 (1.64)
Motor connection		Screw terminals	Screw terminals	Screw terminals
• Conductor cross-section, max.	mm^2	6	10	10
PE connection		Screw studs	M5 screw stud	M5 screw stud
Cable length, max. between sine-wave filter and motor				
• Shielded	m (ft)	200 (656)	200 (656)	200 (656)
• Unshielded	m (ft)	300 (984)	300 (984)	300 (984)
Dimensions				
• Width	mm (in)	153 (6.02)	189 (7.44)	189 (7.44)
• Height	mm (in)	270 (10.63)	336 (13.23)	336 (13.23)
• Depth	mm (in)	100 (3.94)	140 (5.51)	140 (5.51)
Possible as base component		No	No	No
Degree of protection		IP00	IP00	IP00
Weight, approx.	kg (lb)	10 (22.1)	12 (26.5)	23 (50.7)
Suitable for PM240-2 Power Module	Type	6SL3210-1PE21-1 . L0 (FSB, 4 kW, 10.2 A) 6SL3210-1PE21-4 . L0 (FSB, 5.5 kW, 13.2 A)	6SL3210-1PE21-8 . L0 (FSB, 7.5 kW, 18 A)	6SL3210-1PE22-7 . L0 (FSC, 11 kW, 26 A) 6SL3210-1PE23-3 . L0 (FSC, 15 kW, 32 A)

© Siemens 2024

dv/dt filters plus VPL for blocksize format

Overview

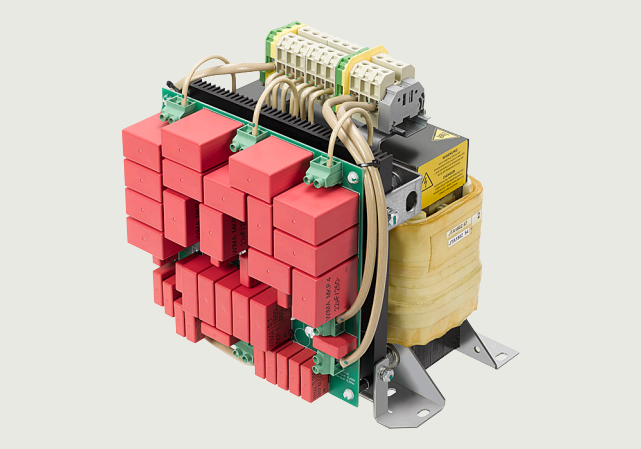

dv/dt filter plus VPL

dv/dt filters plus VPL (**V**oltage **P**eak **L**imiter) limit the voltage rate-of-rise *dv/dt* to values < 500 V/µs and the typical voltage peaks to the following values according to the limit value curve to IEC/TS 60034-17: 2006:

- < 1350 V phase/phase at the motor terminals with a nominal DC link voltage of 935 V
- < 1100 V phase/ground at the motor terminals with a nominal DC link voltage of 935 V

Standard motors with standard insulation and without insulated bearings can be used for converter operation if a dv/dt filter plus VPL is used.

JTA dv/dt filters can be operated with SINAMICS S120 blocksize firmware V4.7 SP10 or higher.

Design

In terms of function, the dv/dt filter plus VPL consists of two components:

- dv/dt reactor
- Voltage limiting network, which cuts off the voltage peaks and feeds the energy back into the DC link.

Integration

dv/dt filters plus VPL that are available depending on the Power Module used

	Frame size						
	FSA	**FSB**	**FSC**	**FSD**	**FSE**	**FSF**	**FSG**
PM240-2 Power Module with integrated braking chopper							
• 200 V versions	✓	✓	✓	✓	✓	✓	–
• 400 V versions	✓	✓	✓	✓	✓	✓	✓
• 690 V versions	–	–	–	✓	✓	✓	✓
Load-side power components							
dv/dt filters plus VPL [1] (for 400 V and 690 V versions only)	–	–	–	**S**	**S**	**S**	**S**

S = Lateral mounting
– = Not possible

[1] The 690 V versions of the PM240-2 Power Modules require motors with a suitable isolating system for 690 V converter operation (IVIC-C premium).

© Siemens 2024

Selection and ordering data

Rated power		**PM240-2 Power Module** **Standard variant**		**dv/dt filter plus VPL** (The prefix **"JTA:"** is part of a Siemens internal order code which does not belong to the product number of the original equipment manufacturer Mdexx Magnetronic Devices s. r. o.)
kW	hp	Type 6SL3210-...	Frame size	Article No.
380 ... 480 V 3 AC				
18.5	25	1PE23-8 . L0	FSD	**JTA:TEF1203-0HB**
22	30	1PE24-5 . L0	FSD	**JTA:TEF1203-0JB**
30	40	1PE26-0 . L0		
37	50	1PE27-5 . L0	FSD	**JTA:TEF1203-0KB**
45	60	1PE28-8 . L0	FSE	
55	75	1PE31-1 . L0	FSE	**JTA:TEF1203-0LB**
75	100	1PE31-5 . L0	FSF	
90	125	1PE31-8 . L0	FSF	**JTA:TEF1203-0MB**
110	150	1PE32-1 . L0	FSF	
132	200	1PE32-5 . L0	FSF	
500 ... 690 V 3 AC				
11	10	1PH21-4 . L0	FSD	**JTA:TEF1203-0GB**
15	15	1PH22-0 . L0		
18.5	20	1PH22-3 . L0		
22	25	1PH22-7 . L0	FSD	**JTA:TEF1203-0HB**
30	30	1PH23-5 . L0		
37	40	1PH24-2 . L0		
45	50	1PH25-2 . L0	FSE	**JTA:TEF1203-0JB**
55	60	1PH26-2 . L0		
75	75	1PH28-0 . L0	FSF	**JTA:TEF1203-0KB**
90	100	1PH31-0 . L0		
110	100	1PH31-2 . L0	FSF	**JTA:TEF1203-0LB**
132	125	1PH31-4 . L0		
160	150	1PH31-7CL0	FSG	**JTA:TEF1203-0MB**
200	200	1PH32-1CL0		
250	250	1PH32-5CL0		

© Siemens 2024

dv/dt filters plus VPL for blocksize format

Technical specifications

Line voltage 380 ... 480 V 3 AC or 500 ... 690 V 3 AC		**dv/dt filters plus VPL** (for rated pulse frequency 2 kHz – max. pulse frequency 4 kHz – max. output frequency 150 Hz)		
		JTA:TEF1203-0GB	JTA:TEF1203-0HB	JTA:TEF1203-0JB
Rated current	A	24	44	64
$I_{th\ max}$	A	38	70	104
Power loss at 150 Hz 690 V	kW	0.125	0.303	0.404
Power connection input and output side		Screw terminals	Screw terminals	Screw terminals
• Conductor cross-section, max.	mm^2	16	35	50
DC link connection [1] DCPS, DCNS		Screw terminals	Screw terminals	Screw terminals
• Conductor cross-section, max.	mm^2	16	16	16
PE connection		Screw terminals	Screw terminals	Screw terminals
• Conductor cross-section, max.	mm^2	16	35	50
Motor cable length, max.				
• Shielded	m (ft)	350 (1148)	350 (1148)	350 (1148)
• Unshielded	m (ft)	525 (1723)	525 (1723)	525 (1723)
Cable length, max. between the dv/dt filter plus VPL and the Power Module	m (ft)	5 (16.4)	5 (16.4)	5 (16.4)
Ambient temperature	°C (°F)	-20 ... +40 (-4 ... +104) 40 ... 50 (104 ... 122) with current derating 1.5 % per 1 K 50 ... 60 (122 ... 140) with current derating 1.9 % per 1 K	-20 ... +40 (-4 ... +104) 40 ... 50 (104 ... 122) with current derating 1.5 % per 1 K 50 ... 60 (122 ... 140) with current derating 1.9 % per 1 K	-20 ... +40 (-4 ... +104) 40 ... 50 (104 ... 122) with current derating 1.5 % per 1 K 50 ... 60 (122 ... 140) with current derating 1.9 % per 1 K
Degree of protection		IP00	IP00	IP00
Dimensions				
• Width	mm (in)	264 (10.39)	264 (10.39)	310 (12.20)
• Height	mm (in)	260 (10.24)	275 (10.83)	375 (14.76)
• Depth	mm (in)	220 (8.66)	245 (9.65)	280 (11.02)
Weight, approx.	kg (lb)	20 (44.1)	29 (63.9)	46 (101)
Conformity		CE, UKCA	CE, UKCA	CE, UKCA
Certificates of suitability		cURus, EAC	cURus, EAC	cURus, EAC
Suitable for PM240-2 Power Module standard variant 380 ... 480 V 3 AC	Type	–	6SL3210-1PE23-8 . L0 FSD	6SL3210-1PE24-5 . L0 6SL3210-1PE26-0 . L0 FSD
Suitable for PM240-2 Power Module 500 ... 690 V 3 AC	Type	6SL3210-1PH21-4 . L0 6SL3210-1PH22-0 . L0 6SL3210-1PH22-3 . L0 FSD	6SL3210-1PH22-7 . L0 6SL3210-1PH23-5 . L0 6SL3210-1PH24-2 . L0 FSD	6SL3210-1PH25-2 . L0 6SL3210-1PH26-2 . L0 FSE

[1] Short-circuit-proof cables are required.

© Siemens 2024

Technical specifications

Line voltage 380 ... 480 V 3 AC or 500 ... 690 V 3 AC		**dv/dt filters plus VPL** (for rated pulse frequency 2 kHz – max. pulse frequency 4 kHz – max. output frequency 150 Hz)		
		JTA:TEF1203-0KB	JTA:TEF1203-0LB	JTA:TEF1203-0MB
Rated current	A	103	146	260
$I_{th\ max}$	A	160	230	416
Power loss at 150 Hz 690 V	kW	0.415	0.520	0.857
Power connection input and output side		Flat connector for M8 cable lug	Flat connector for M10 cable lug	Flat connector for M10 cable lug
• Conductor cross-section, max.	mm^2	95	120	2 × 120 or 1 × 185
DC link connection [1] DCPS, DCNS		M8 cable lug	M8 cable lug	M8 cable lug
• Conductor cross-section, max.	mm^2	25	25	50
PE connection		M6 screw studs	M6 screw studs	M6 screw studs
• Conductor cross-section, max.	mm^2	50	70	95
Motor cable length, max.				
• Shielded	m (ft)	450/525 (1476/1723) [2]	450/525 (1476/1723) [2]	450/525 (1476/1723) [2]
• Unshielded	m (ft)	650/800 (2133/2625) [2]	650/800 (2133/2625) [2]	650/800 (2133/2625) [2]
Cable length, max. between the dv/dt filter plus VPL and the Power Module	m (ft)	5 (16.4)	5 (16.4)	5 (16.4)
Ambient temperature	°C (°F)	-20 ... +40 (-4 ... +104) 40 ... 50 (104 ... 122) with current derating 1.5 % per 1 K 50 ... 60 (122 ... 140) with current derating 1.9 % per 1 K	-20 ... +40 (-4 ... +104) 40 ... 50 (104 ... 122) with current derating 1.5 % per 1 K 50 ... 60 (122 ... 140) with current derating 1.9 % per 1 K	-20 ... +40 (-4 ... +104) 40 ... 50 (104 ... 122) with current derating 1.5 % per 1 K 50 ... 60 (122 ... 140) with current derating 1.9 % per 1 K
Degree of protection		IP00	IP00	IP00
Dimensions				
• Width	mm (in)	400 (15.75)	400 (15.75)	460 (18.11)
• Height	mm (in)	325 (12.80)	360 (14.17)	435 (17.13)
• Depth	mm (in)	355 (13.98)	380 (14.96)	445 (17.52)
Weight, approx.	kg (lb)	77 (170)	97 (214)	172 (379)
Conformity		CE, UKCA	CE, UKCA	CE, UKCA
Certificates of suitability		cURus, EAC	cURus, EAC	cURus, EAC
Suitable for PM240-2 Power Module standard variant 380 ... 480 V 3 AC	Type	6SL3210-1PE27-5 . L0 FSD 6SL3210-1PE28-8 . L0 FSE	6SL3210-1PE31-1 . L0 FSE 6SL3210-1PE31-5 . L0 FSF	6SL3210-1PE31-8 . L0 6SL3210-1PE32-1 . L0 6SL3210-1PE32-5 . L0 FSF
Suitable for PM240-2 Power Module 500 ... 690 V 3 AC	Type	6SL3210-1PH28-0 . L0 6SL3210-1PH31-0 . L0 FSF	6SL3210-1PH31-2 . L0 6SL3210-1PH31-4 . L0 FSF	6SL3210-1PH31-7CL0 6SL3210-1PH32-1CL0 6SL3210-1PH32-5CL0 FSG

[1] Short-circuit-proof cables are required.

[2] Maximum overvoltage at the motor terminals <1350 V with cable lengths up to 450 m (1476 ft) shielded or 650 m (2133 ft) unshielded – maximum overvoltage at the motor terminals <1500 V with cable lengths up to 525 m (1723 ft) shielded or 800 m (2625 ft) unshielded.

© Siemens 2024

Safe Brake Relay for blocksize format

Overview

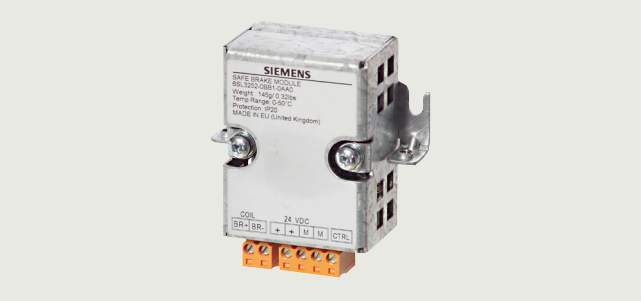

Safe Brake Relay

With the Safe Brake Relay, the brake is controlled in accordance with IEC 61508 SIL 2 and ISO 13849-1 PL d and Category 3.

Design

The Safe Brake Relay can be installed below the Power Module on the shield connection plate.

The Safe Brake Relay has the following connections and interfaces:

- 1 two-channel transistor output stage to control the motor brake solenoid
- 1 connection for the cable harness (CTRL) to the Power Module in blocksize format
- 1 connection for the 24 V DC power supply

The connection between the 24 V DC power supply and the Safe Brake Relay must be kept as short as possible.

The scope of supply of a Safe Brake Relay includes the following:

- 4 cable harnesses for connecting to the CTRL socket of the Power Module
  - Length 0.32 m (1.05 ft) for frame sizes FSA to FSC
  - Length 0.55 m (1.80 ft) for frame sizes FSD and FSE
  - Length 0.8 m (2.62 ft) for frame size FSF
  - Length 1.1 m (3.61 ft) for frame size FSG

Selection and ordering data

Description	Article No.
Safe Brake Relay Including cable harness for connection to Power Module	**6SL3252-0BB01-0AA0**

Technical specifications

	Safe Brake Relay 6SL3252-0BB01-0AA0
Power supply	20.4 ... 28.8 V DC Recommended rated supply voltage 26 V DC (to compensate for voltage drop in feeder cable to 24 V DC motor brake solenoid)
Current requirement, max.	
• Motor brake	2.5 A
• At 24 V DC	0.05 A + the current requirement of motor brake
Conductor cross-section, max.	2.5 mm^2
Dimensions	
• Width	69 mm (2.72 in)
• Height	63 mm (2.48 in)
• Depth	33 mm (1.30 in)
Weight, approx.	0.17 kg (0.37 lb)

Integration

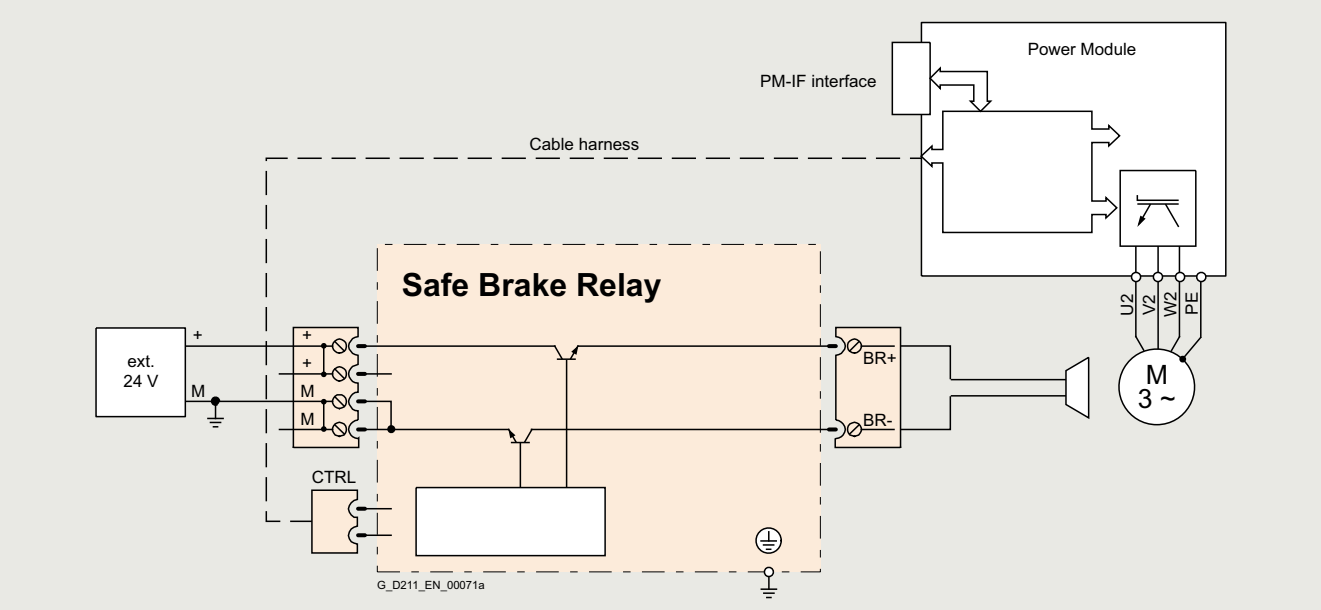

Connection example of a Safe Brake Relay

The 24 V DC solenoid of the motor brake is directly connected to the Safe Brake Relay. External overvoltage limiters are not required.

© Siemens 2024

Overview

The shield connection kit

- makes it easier to connect the shields of supply and control cables
- provides mechanical strain relief
- ensures optimum EMC performance
- is used to attach the Brake Relay

The shield connection kit includes

- a shield connection plate for the required Power Module
- connection elements and clamps for mounting
- mounting device for Brake Relay, frame sizes FSD to FSG

A shield connection kit is supplied as standard with PM240-2 Power Modules in frame sizes FSA to FSC.

A set of shield plates is included in the scope of delivery for the motor and signal cables corresponding to the frame size for the frame sizes FSD to FSG. For the electromagnetically compatible connection of an optionally connectable braking resistor, the corresponding shield connection kit is to be ordered for frame sizes FSD to FSG.

Selection and ordering data

Description	Article No.
Shield connection kit for PM240-2 Power Modules	
• Frame sizes FSA to FSC	Supplied with the Power Modules, available as a spare part
• Frame sizes FSD to FSG • A set of shield plates is included in the scope of delivery for the motor and signal cables corresponding to the frame size. For the electromagnetically compatible connection of an optionally connectable braking resistor, the corresponding shield connection kit is to be ordered.	
• Frame size FSD	**6SL3262-1AD01-0DA0**
• Frame size FSE	**6SL3262-1AE01-0DA0**
• Frame size FSF	**6SL3262-1AF01-0DA0**
• Frame size FSG	**6SL3262-1AG01-0DA0**

© Siemens 2024

BOP20 Basic Operator Panel

Overview



BOP20 Basic Operator Panel

Parameters can be set, diagnostics information (e.g. alarm and fault messages) read out and faults acknowledged using the BOP20 Basic Operator Panel.

Design

The BOP20 Basic Operator Panel has a backlit two-line display area with six keys.

The integrated plug connector on the rear of the BOP20 Basic Operator Panel provides its power and establishes communication with the Control Unit.

Selection and ordering data

Description	Article No.
BOP20 Basic Operator Panel	**6SL3055-0AA00-4BA0**

Integration

The BOP20 Basic Operator Panel can be inserted on the following Control Units:

- SINAMICS S110
  - CU305
- SINAMICS S120
  - CU310-2
  - CU320-2



Control Unit CU305 with attached BOP20 Basic Operator Panel



CU310-2 PN Control Unit with inserted BOP20 Basic Operator Panel



CU320-2 PN Control Unit with inserted BOP20 Basic Operator Panel

© Siemens 2024

Overview

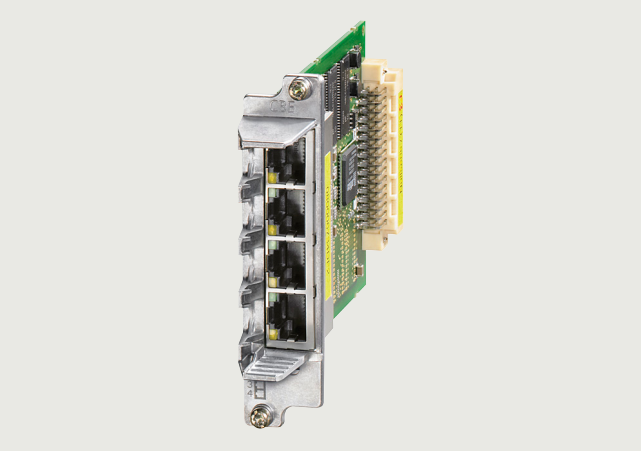

CBE20 Communication Board

The CBE20 Communication Board can be used to connect to a PROFINET IO network via a CU320-2 Control Unit.

The SINAMICS S120 or SINAMICS S150 drive system then assumes the function of a PROFINET IO device and can perform the following functions:

- PROFINET IO device
- 100 Mbps full duplex
- Supports real-time classes of PROFINET IO:
  - RT (Real-Time)
  - IRT (Isochronous Real-Time), minimum send cycle 500 µs
- Connection to control systems as PROFINET IO devices in accordance with PROFIdrive, Specification V4
- Standard TCP/IP communication for engineering processes using the Startdrive or STARTER commissioning tools
- Integrated 4-port switch with four RJ45 sockets based on the PROFINET ASIC ERTEC400. The optimum topology (line, star, tree) can therefore be configured without additional external switches
- Supports the functions "media redundancy" and "shared device"

The CBE20 Communication Board is required if:

- a SINAMICS S120 or SINAMICS S150 converter with a CU320-2 DP Control Unit (PROFIBUS) should be connected to a PROFINET-IO network
- SINAMICS Link is to be used to directly exchange data between several CU320-2 DP (PROFIBUS) or CU320-2 PN (PROFINET) Control Units without using a higher-level control system
- EtherNet/IP in a CU320-2 DP should be used
- Modbus TCP in a CU320-2 DP should be supported

Integration

The CBE20 Communication Board plugs into the option slot on the CU320-2 Control Unit.

SINAMICS Link

SINAMICS Link can be used to directly exchange data between several CU320-2 DP (PROFIBUS) or CU320-2 PN (PROFINET) Control Units without using a higher-level control system. In this case, the CBE20 Communication Board is required. Possible applications for the SINAMICS Link include:

- Torque distribution for several drives
- Setpoint cascading for several drives
- Load distribution for drives coupled through a material web
- Couplings between SINAMICS G or SINAMICS S with the CU320-2 Control Unit and SINAMICS DC Master with CUD Control Units.

Participants other than CU320-2 Control Units and/or CUD Control Units of the SINAMICS DC Master cannot be integrated into this communication.

SINAMICS Link is activated by appropriately parameterizing the Control Units of the participants.

Selection and ordering data

Description	Article No.
CBE20 Communication Board	**6SL3055-0AA00-2EB0**
Accessories	
Industrial Ethernet FC	
• RJ45 Plug 180 (1 unit)	**6GK1901-1BB10-2AA0**
• RJ45 Plug 180 (10 units)	**6GK1901-1BB10-2AB0**
• Stripping tool	**6GK1901-1GA00**
• Standard cable GP 2x2	**6XV1840-2AH10**
• Flexible cable GP 2x2	**6XV1870-2B**
• Trailing cable GP 2x2	**6XV1870-2D**
• Trailing cable 2x2	**6XV1840-3AH10**
• Marine cable 2x2	**6XV1840-4AH10**

For the SINAMICS G150, SINAMICS S150 and SINAMICS S120 Cabinet Modules, the CBE20 Communication Board can be ordered as an option by specifying order code **G33**.

For information on connectors and cables refer to the section MOTION-CONNECT connection system and in the internet at:
www.siemens.com/motion-connect
https://sieportal.siemens.com

Technical specifications

	CBE20 Communication Board 6SL3055-0AA00-2EB0
Current requirement at 24 V DC	0.16 A
Power loss	2.4 W
Weight, approx.	0.1 kg (0.22 lb)
Certificate of suitability	cULus

© Siemens 2024

DMC20 DRIVE-CLiQ Hub Module

Overview

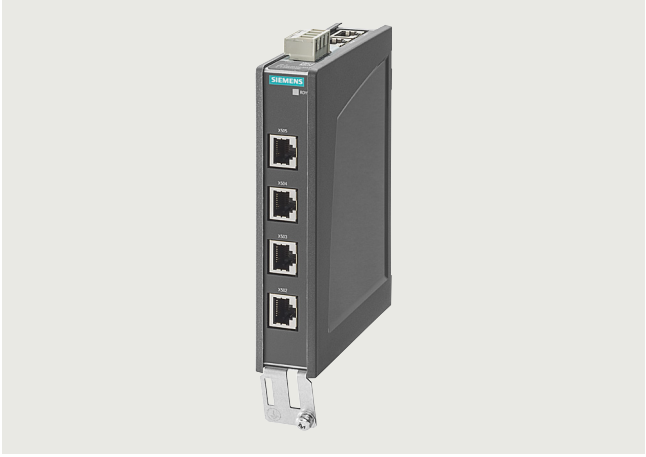

DMC20 DRIVE-CLiQ Hub Module

The DMC20 DRIVE-CLiQ Hub Module is used to implement a star-shaped topology of a DRIVE-CLiQ line. Two DMC20 DRIVE-CLiQ Hub Modules can be connected in series (cascaded).

Design

The DMC20 DRIVE-CLiQ Hub Module in degree of protection IP20 is designed for mounting in control cabinets.

The following are located on the DMC20 DRIVE-CLiQ Hub Module:

- 6 DRIVE-CLiQ sockets for connecting 5 DRIVE-CLiQ devices
- 1 connection for the electronics power supply via the 24 V DC supply connector

The status of the DMC20 DRIVE-CLiQ Hub Module is indicated via a multi-color LED.

The DMC20 DRIVE-CLiQ Hub Module can be snapped onto a TH 35 standard mounting rail according to EN 60715 (IEC 60715).

Selection and ordering data

Description	Article No.
DMC20 DRIVE-CLiQ Hub Module Without DRIVE-CLiQ cable	**6SL3055-0AA00-6AA1**
Accessories for re-ordering	
Dust protection blanking plugs (50 units) For DRIVE-CLiQ port	**6SL3066-4CA00-0AA0**

Technical specifications

	DMC20 DRIVE-CLiQ Hub Module 6SL3055-0AA00-6AA1
Power requirement, max. at 24 V DC without DRIVE-CLiQ supply	0.15 A
• Conductor cross-section, max.	2.5 mm^2
Degree of protection	IP20
Dimensions	
• Width	30 mm (1.18 in)
• Height	151 mm (5.94 in)
• Depth	110 mm (4.33 in)
Weight, approx.	0.36 kg (0.79 lb)
Certificate of suitability	cULus

Integration

Signals from more than one encoder can be collected with one DRIVE-CLiQ Hub Module and forwarded to the Control Unit through a single DRIVE-CLiQ cable.

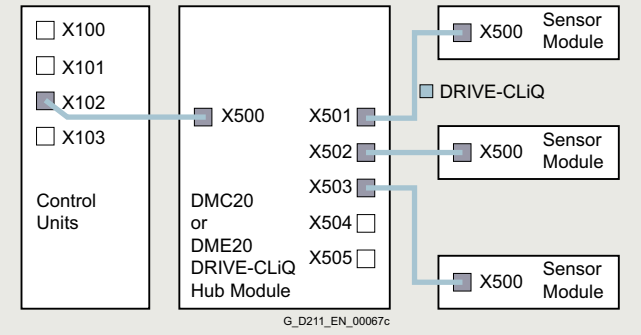

With a DRIVE-CLiQ Hub Module, individual DRIVE-CLiQ nodes can be removed without interrupting the data exchange with the remaining devices in the DRIVE-CLiQ line.

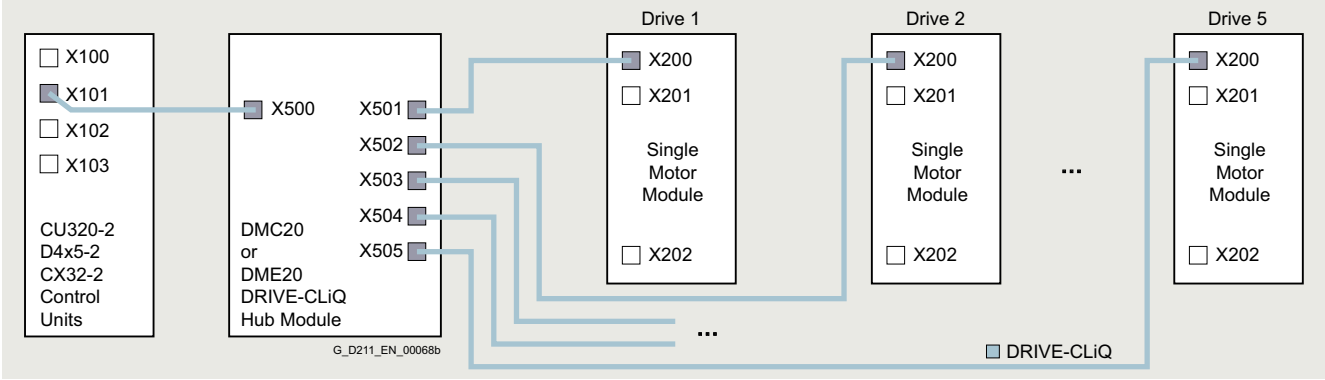

© Siemens 2024

Overview



DME20 DRIVE-CLiQ Hub Module

The DME20 DRIVE-CLiQ Hub Module is used to implement a star-shaped topology of a DRIVE-CLiQ line. Two DME20 DRIVE-CLiQ Hub Modules can be connected in series (cascaded).

Design

The following are located on the DME20 DRIVE-CLiQ Hub Module:

- 6 DRIVE-CLiQ sockets for connecting 5 DRIVE-CLiQ devices
- 1 connection for the electronics power supply via the 24 V DC circular supply connector with conductor cross-section 4 × 0.75 mm^2 (pins 1+2 internally bridged; pins 3+4 internally bridged)

The scope of supply of the DME20 DRIVE-CLiQ Hub Modules includes:

- 6 blanking plugs for sealing unused DRIVE-CLiQ sockets

Selection and ordering data

Description	Article No.
DME20 DRIVE-CLiQ Hub Module Without DRIVE-CLiQ cable; without electronics power supply cable and circular connector for 24 V DC	**6SL3055-0AA00-6AB0**
Accessories	
24 V DC power supply cable	Ordering and delivery Phoenix Contact www.phoenixcontact.de
• Shielded connector, 5-pole, can be assembled by the user	1508365
• Unshielded connector, 4-pole, can be assembled by the user, Speedcon rapid interlock	1521601
Accessories for re-ordering	
SINAMICS dust-proof blanking plugs IP67 (6 units) For DRIVE-CLiQ port	**6SL3066-4CA01-0AA0**

Technical specifications

	DME20 DRIVE-CLiQ Hub Module 6SL3055-0AA00-6AB0
Power requirement, max. at 24 V DC without DRIVE-CLiQ supply	0.15 A
• Conductor cross-section, max.	4 × 0.75 mm^2
Degree of protection	IP67
Dimensions	
• Width	99 mm (3.90 in)
• Height	149 mm (5.87 in)
• Depth	55.7 mm (2.19 in) (without connector)
Weight, approx.	0.8 kg (1.76 lb)
Certificate of suitability	cULus

Integration

Signals from more than one encoder can be collected with one DRIVE-CLiQ Hub Module and forwarded to the Control Unit through a single DRIVE-CLiQ cable.

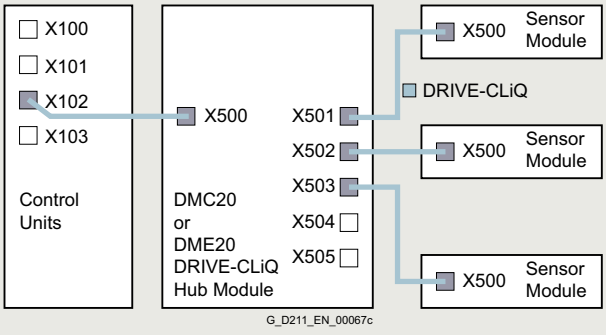

© Siemens 2024

DME20 DRIVE-CLiQ Hub Module

Integration

With a DRIVE-CLiQ Hub Module, individual DRIVE-CLiQ nodes can be removed without interrupting the data exchange with the remaining devices in the DRIVE-CLiQ line.

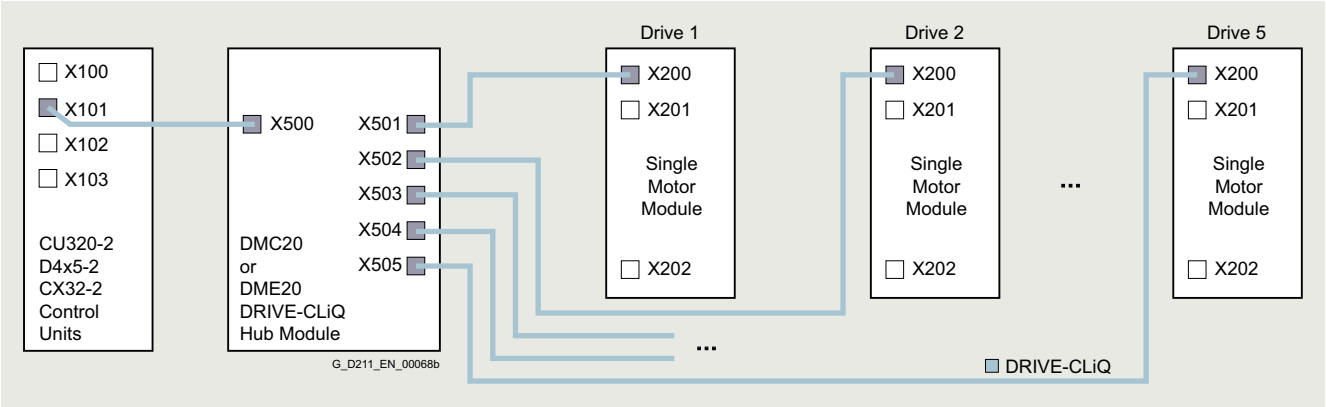

The DME20 DRIVE-CLiQ Hub Module in degree of protection IP67 is suitable for installation outside control cabinets.

© Siemens 2024

Overview

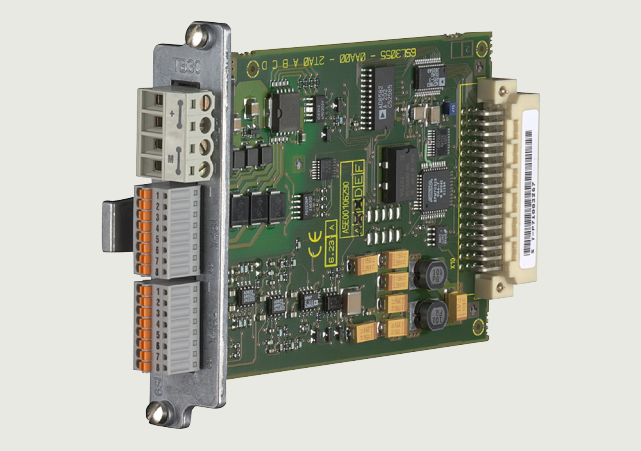

TB30 Terminal Board

The TB30 Terminal Board supports the addition of digital inputs/digital outputs and analog inputs/analog outputs to a Control Unit.

Design

The following are located on the TB30 Terminal Board:

- Power supply for digital inputs/digital outputs
- 4 digital inputs
- 4 digital outputs
- 2 analog inputs
- 2 analog outputs

A shield connection for the signal cable shield is located on the Control Unit.

Selection and ordering data

Description	Article No.
TB30 Terminal Board	**6SL3055-0AA00-2TA0**

For the SINAMICS G150, SINAMICS S150 and SINAMICS S120 Cabinet Modules, the TB30 Terminal Board can be ordered as an option by specifying order code **G62**.

Technical specifications

	TB30 Terminal Board 6SL3055-0AA00-2TA0
Power requirement, max. at 24 V DC via Control Unit CU320-2 without taking account of digital outputs	0.05 A
• Conductor cross-section, max.	2.5 mm^2
• Fuse protection, max.	20 A
Digital inputs In accordance with IEC 61131-2 Type 1	
• Voltage	-3 ... +30 V
• Low level (an open digital input is interpreted as "low")	-3 ... +5 V
• High level	15 ... 30 V
• Current consumption at 24 V DC, typ.	6 mA
• Delay time of digital inputs [1], approx.	
- L → H	50 µs
- H → L	100 µs
• Conductor cross-section, max.	0.5 mm^2
Digital outputs (continuously short-circuit proof)	
• Voltage	24 V DC
• Load current per digital output, max.	500 mA
• Delay time of digital outputs [1], approx.	150 µs
• Conductor cross-section, max.	0.5 mm^2
Analog inputs (difference)	
• Voltage range (an open analog input is interpreted as 0 V)	-10 ... +10 V
• Internal resistance R_i	65 kΩ
• Resolution [2]	13s bits + sign
• Conductor cross-section, max.	0.5 mm^2
Analog outputs (continuously short-circuit proof)	
• Voltage range	-10 ... +10 V
• Max. load current	-3 ... +3 mA
• Resolution	11 bits + sign
• Settling time, approx.	200 µs
• Conductor cross-section, max.	0.5 mm^2
Power loss, max.	3 W
Weight, approx.	0.1 kg (0.22 lb)
Certificate of suitability	cULus

[1] The specified delay times refer to the hardware. The actual reaction time depends on the time slice in which the digital input/output is processed.

[2] If the analog input is to be operated in the signal processing sense with continuously variable input voltage, the sampling frequency $f_a = 1/t_{\text{time slice}}$ must be at least twice the value of the highest signal frequency f_{max}.

© Siemens 2024

Integration

The TB30 Terminal Board is inserted in the slot to optionally expand the CU320-2 Control Unit.

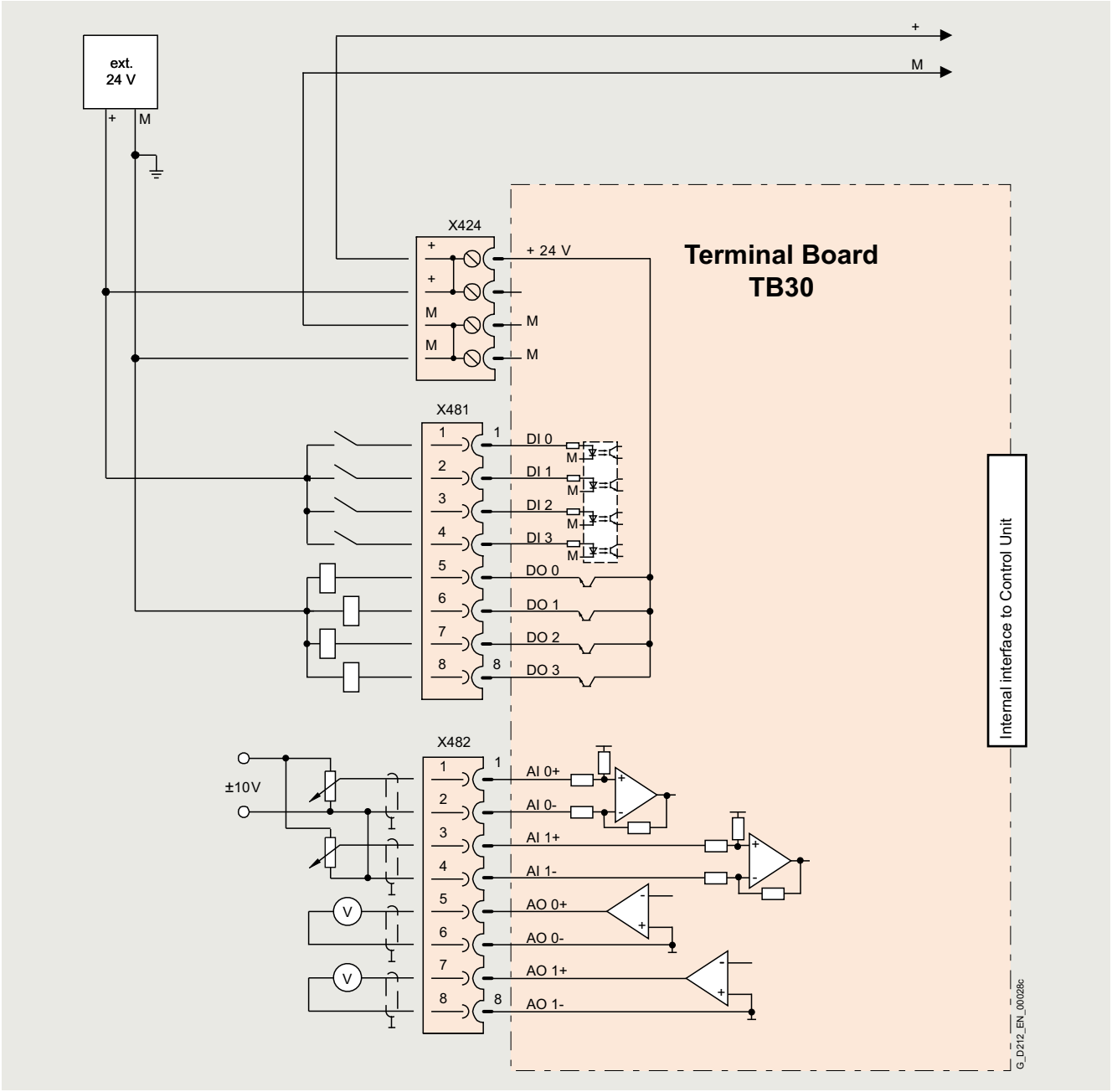

Connection example of a TB30 Terminal Board

© Siemens 2024

Overview



TM15 Terminal Module

The number of available digital inputs and outputs within a drive system can be expanded with the TM15 Terminal Module.

Design

The TM15 Terminal Module is equipped with the following:

- 24 bidirectional digital inputs/outputs (galvanic isolation in 3 groups with 8 channels per group)
- 24 green status LEDs for indicating the logical signal state of the corresponding terminal
- 2 DRIVE-CLiQ sockets
- 1 connection for the electronics power supply via the 24 V DC supply connector
- 1 PE/protective conductor connection

The status of the TM15 Terminal Module is indicated via a multi-color LED.

The TM15 Terminal Module can be snapped onto a TH 35 standard mounting rail in accordance with EN 60715 (IEC 60715).

The signal cable shield can be connected to the TM15 Terminal Module by means of a shield connection terminal, e.g. Phoenix Contact type SK8 or Weidmüller type KLBÜ CO 1. The shield connection terminal must not be used as a strain relief mechanism.

Selection and ordering data

Description	Article No.
TM15 Terminal Module Without DRIVE-CLiQ cable	**6SL3055-0AA00-3FA0**
Accessories for re-ordering	
Dust protection blanking plugs (50 units) For DRIVE-CLiQ port	**6SL3066-4CA00-0AA0**

Technical specifications

	TM15 Terminal Module 6SL3055-0AA00-3FA0
Power requirement, max. at 24 V DC without load	0.15 A
• Conductor cross-section, max.	2.5 mm^2
• Fuse protection, max.	20 A
Number of DRIVE-CLiQ sockets	2
I/O	
• Digital inputs/outputs	Parameterizable channel-by-channel as DI or DO
• Number of digital inputs/outputs	24
• Galvanic solation	Yes, in groups of 8
• Cables and connections	Plug-in screw-type terminals
• Conductor cross-section, max.	1.5 mm^2
Digital inputs	
• Voltage	-30 ... +30 V
• Low level (an open digital input is interpreted as "low")	-30 ... +5 V
• High level	15 ... 30 V
• Current consumption at 24 V DC	9 mA
• Delay times of digital inputs, typ. [1]	
- L → H	50 µs
- H → L	100 µs
Digital outputs (continuously short-circuit proof)	
• Voltage	24 V DC
• Load current per digital output, max.	0.5 A
• Delay times (resistive load) [1]	
- L → H, typ.	50 µs
- L → H, max.	100 µs
- H → L, typ.	150 µs
- H → L, max.	225 µs
• Total current of outputs (per group), max.	
- To 60 °C (140 °F)	2 A
- To 50 °C (122 °F)	3 A
- To 40 °C (104 °F)	4 A
Power loss, max.	3 W
PE connection	M4 screw
Dimensions	
• Width	50 mm (1.97 in)
• Height	150 mm (5.91 in)
• Depth	111 mm (4.37 in)
Weight, approx.	1 kg (2.20 lb)
Certificate of suitability	cULus

[1] The specified delay times refer to the hardware. The actual reaction time depends on the time slice in which the digital input/output is processed.

© Siemens 2024

Integration

The TM15 Terminal Module can communicate with the following Control Units via DRIVE-CLiQ:

- CU310-2 Control Unit
- CU320-2 Control Unit
- SINUMERIK Control Unit
- SIMOTION D Control Unit
- SINAMICS DCM Advanced CUD

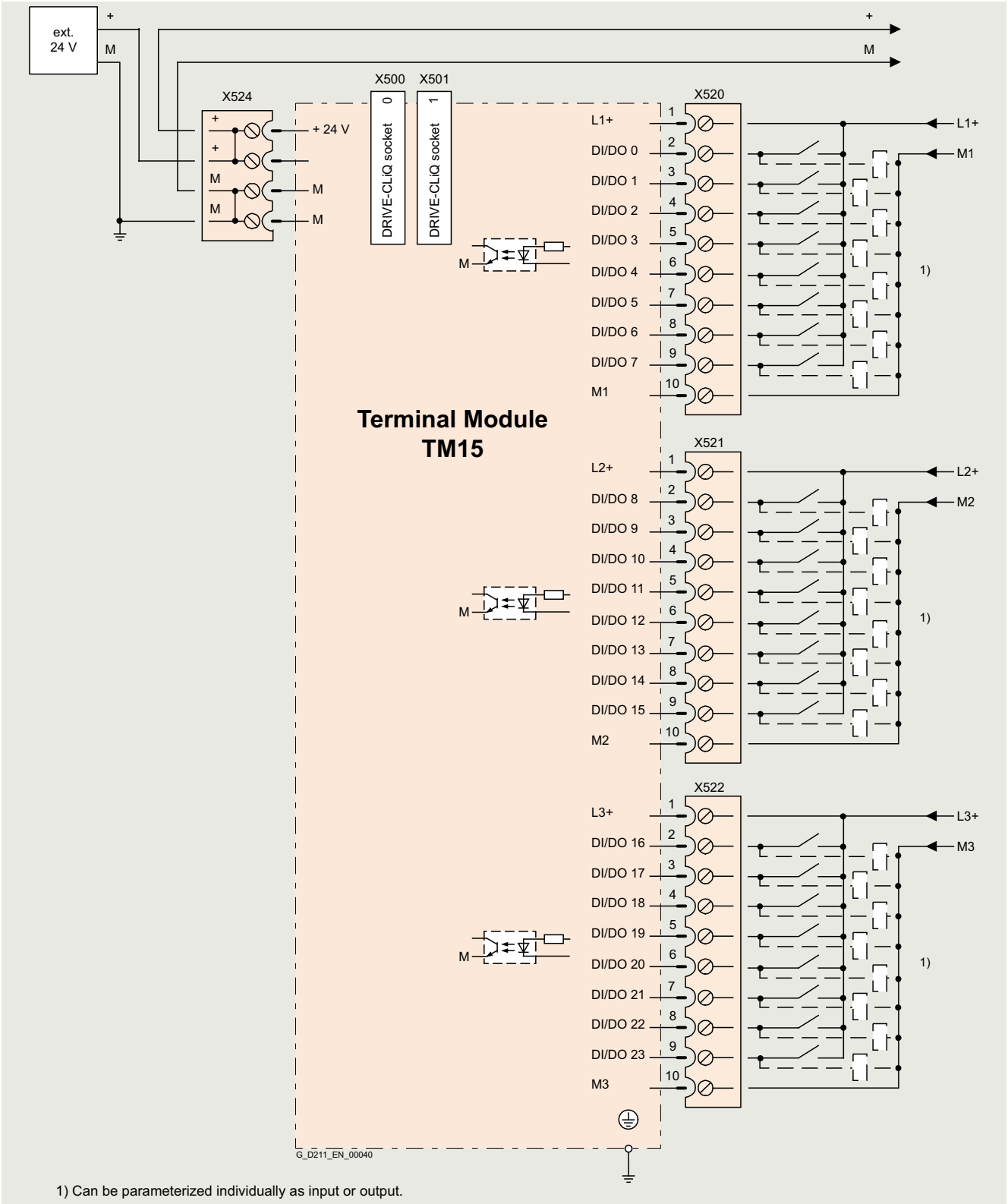

1) Can be parameterized individually as input or output.

Connection example of TM15 Terminal Module

© Siemens 2024

Overview



TM31 Terminal Module

With the TM31 Terminal Module, the number of available digital inputs and outputs and the number of analog input and outputs within a drive can be expanded.

The TM31 Terminal Module also features relay outputs with changeover contact and a temperature sensor input.

Design

The following are located on the TM31 Terminal Module:

- 8 digital inputs
- 4 bidirectional digital inputs/outputs
- 2 relay outputs with changeover contact
- 2 analog inputs
- 2 analog outputs
- 1 temperature sensor input for KTY84-130, Pt1000 or PTC (Pt1000 can be used from firmware V4.7 HF17 and higher)
- 2 DRIVE-CLiQ sockets
- 1 connection for the electronics power supply via the 24 V DC supply connector
- 1 PE/protective conductor connection

The status of the TM31 Terminal Module is indicated via a multi-color LED.

The TM31 Terminal Module can be snapped onto a TH 35 standard mounting rail in accordance with EN 60715 (IEC 60715).

The signal cable shield can be attached to the TM31 Terminal Module via a shield connection terminal, e.g. type SK8 supplied by Phoenix Contact or type KLBÜ CO 1 supplied by Weidmüller. The shield connection terminal must not be used as a strain relief mechanism.

Selection and ordering data

Description	Article No.
TM31 Terminal Module Without DRIVE-CLiQ cable	**6SL3055-0AA00-3AA1**
Accessories for re-ordering	
Dust protection blanking plugs (50 units) For DRIVE-CLiQ port	**6SL3066-4CA00-0AA0**

For the SINAMICS G150, SINAMICS S150 and SINAMICS S120 Cabinet Modules, the TM31 Terminal Module can be ordered as an option by specifying order code **G60** or **G61**.

© Siemens 2024

Integration

The TM31 Terminal Module can communicate via DRIVE-CLiQ with the following Control Units.

- CU310-2 Control Unit
- CU320-2 Control Unit
- SINUMERIK Control Unit
- SIMOTION D Control Unit
- SINAMICS DCM Advanced CUD

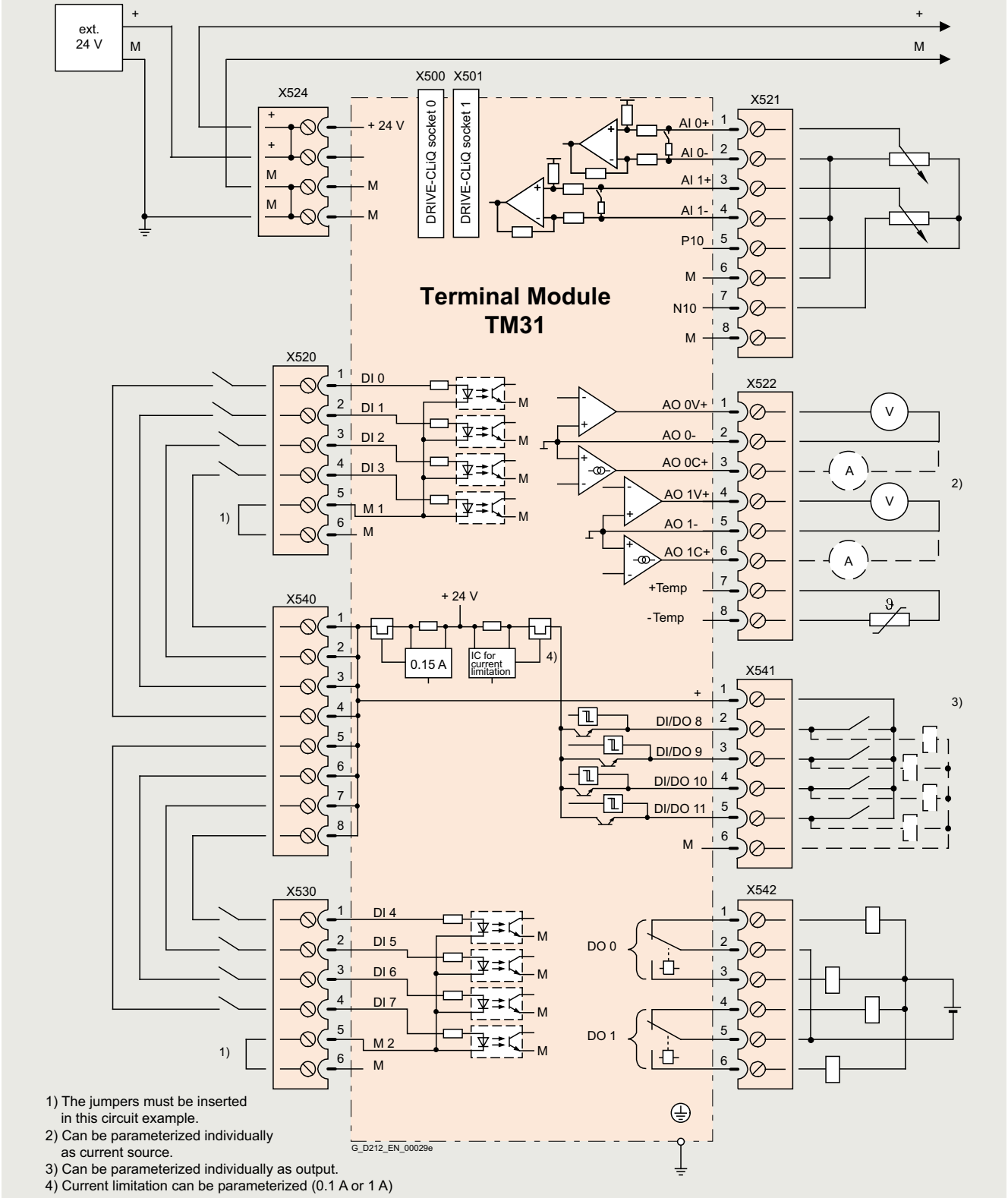

1) The jumpers must be inserted in this circuit example.
2) Can be parameterized individually as current source.
3) Can be parameterized individually as output.
4) Current limitation can be parameterized (0.1 A or 1 A)

Connection example of TM31 Terminal Module

© Siemens 2024

Technical specifications

	TM31 Terminal Module 6SL3055-0AA00-3AA1
Power requirement, max. At 24 V DC without taking account of the digital outputs and DRIVE-CLiQ supply	0.5 A
• Conductor cross-section, max.	2.5 mm^2
• Fuse protection, max.	20 A
Digital inputs In accordance with IEC 61131-2 Type 1	
• Voltage	-3 ... +30 V
• Low level (an open digital input is interpreted as "low")	-3 ... +5 V
• High level	15 ... 30 V
• Current consumption at 24 V DC, typ.	9 mA
• Delay times of digital inputs [1], approx.	
- L → H	50 µs
- H → L	100 µs
• Conductor cross-section, max.	1.5 mm^2
Digital outputs (continuously short-circuit proof)	
• Voltage	24 V DC
• Load current per digital output, max.	100 mA
• Total current of digital outputs, max.	400 mA
• Delay times of digital outputs [1]	
- Typ.	150 µs with 0.5 A resistive load
- Max.	500 µs
• Conductor cross-section, max.	1.5 mm^2
Analog inputs a switch is used to toggle between voltage and current input	
• As voltage input	
- Voltage range	-10 ... +10 V
- Internal resistance R_i	100 kΩ
- Resolution [2]	11 bits + sign
• As current input	
- Current ranges	4 ... 20 mA, -20 ... +20 mA, 0 ... 20 mA
- Internal resistance R_i	250 Ω
- Resolution [2]	10 bits + sign
• Conductor cross-section, max.	1.5 mm^2

	TM31 Terminal Module 6SL3055-0AA00-3AA1
Analog outputs (continuously short-circuit proof)	
• Voltage range	-10 ... +10 V
• Max. load current	-3 ... +3 mA
• Current ranges	4 ... 20 mA, -20 ... +20 mA, 0 ... 20 mA
• Load resistance, max.	500 Ω in the range -20 ... +20 mA
• Resolution	11 bits + sign
• Conductor cross-section, max.	1.5 mm^2
Relay outputs CO contacts	
• Max. load current	8 A
• Operational voltage, max.	250 V AC, 30 V DC
• Switching capacity, max.	
- At 250 V AC	2000 VA (cos φ = 1) 750 VA (cos φ = 0.4)
- At 30 V DC	240 W (resistive load)
• Required minimum current	100 mA
• Conductor cross-section, max.	2.5 mm^2
Power loss, max.	10 W
PE connection	M4 screw
Dimensions	
• Width	50 mm (1.97 in)
• Height	150 mm (5.91 in)
• Depth	111 mm (4.37 in)
Weight, approx.	0.49 kg (1.08 lb)
Certificate of suitability	cULus

[1] The specified delay times refer to the hardware. The actual reaction time depends on the time slice in which the digital input/output is processed.

[2] If the analog input is to be operated in the signal processing sense with continuously variable input voltage, the sampling frequency $f_a = 1/t_{time\ slice}$ must be at least twice the value of the highest signal frequency f_{max}.

© Siemens 2024

TM41 Terminal Module

Overview

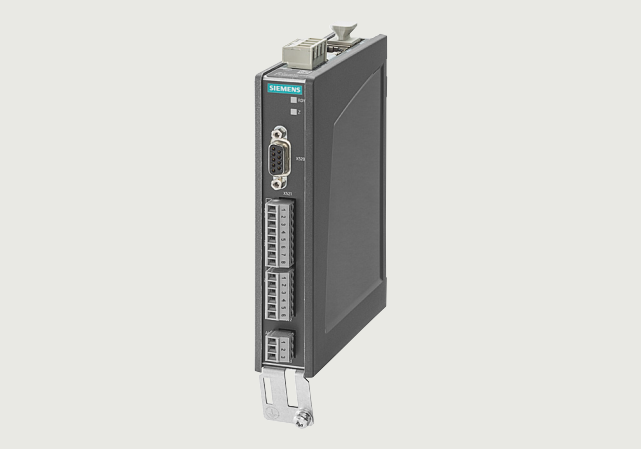

TM41 Terminal Module

The TM41 Terminal Module supplies TTL signals which emulate an incremental encoder, e.g. to a higher-level control. The encoder interface (incremental encoder emulation) can be linked to an encoder signal from the Control Unit, e.g. incremental encoder sin/cos, by parameter assignment.

The TM41 Terminal Module increases the number of digital inputs/outputs and analog inputs that are available in the drive system.

Design

The following are located on the TM41 Terminal Module:

- 4 bidirectional digital inputs/outputs
- 4 digital inputs (with galvanic isolation)
- 1 analog input
- 1 interface for emulation of TTL incremental encoder (RS422)
- 1 LED for signaling zero mark detection for encoder interface
- 2 DRIVE-CLiQ sockets
- 1 connection for the electronics power supply and to supply the digital outputs via the 24 V DC supply connector
- 1 PE/protective conductor connection

The status of the TM41 Terminal Module is indicated via a multi-color LED.
An LED next to the interface for TTL pulse encoder emulation is illuminated as soon as a zero mark is detected.

The TM41 Terminal Module can be snapped onto a TH 35 standard mounting rail in accordance with EN 60715 (IEC 60715).

The signal cable shield can be attached to the TM41 Terminal Module via a shield connection terminal, e.g. type SK8 supplied by Phoenix Contact or type KLBÜ CO 1 supplied by Weidmüller. The shield connection terminal must not be used as a strain relief mechanism.

Selection and ordering data

Description	Article No.
TM41 Terminal Module Without DRIVE-CLiQ cable	**6SL3055-0AA00-3PA1**
Accessories for re-ordering	
Dust protection blanking plugs (50 units) For DRIVE-CLiQ port	**6SL3066-4CA00-0AA0**

© Siemens 2024

Integration

The TM41 Terminal Module can communicate via DRIVE-CLiQ with the following Control Units.

- CU310-2 Control Unit
- CU320-2 Control Unit
- SINUMERIK Control Unit
- SIMOTION D Control Unit

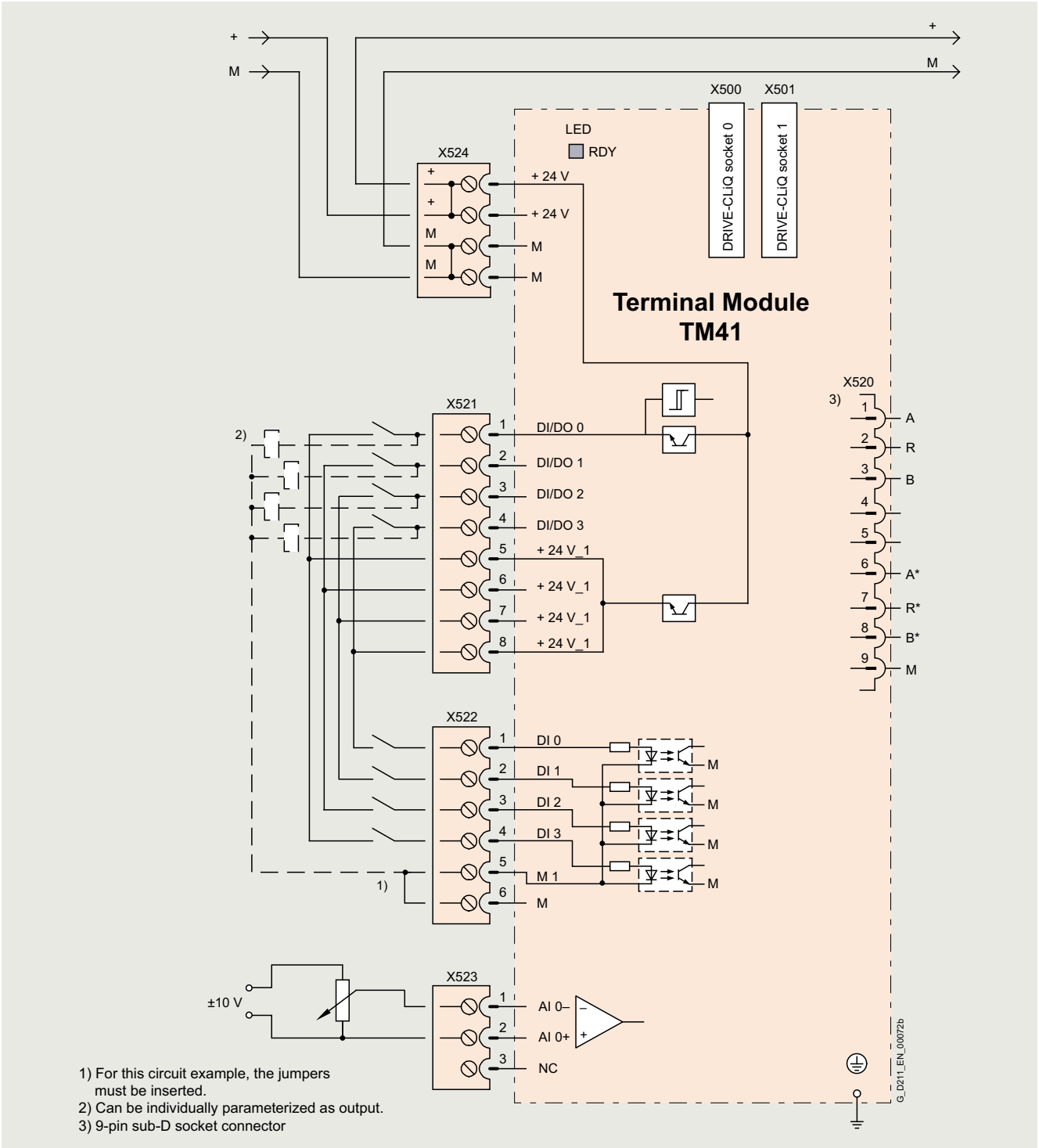

Connection example of TM41 Terminal Module

© Siemens 2024

TM41 Terminal Module

Technical specifications

	TM41 Terminal Module 6SL3055-0AA00-3PA1
Current requirement (X524 at 24 V DC) without DRIVE-CLiQ supply or digital outputs (X514)	0.5 A
• Conductor cross-section, max.	2.5 mm^2
• Fuse protection, max.	20 A
I/O	
• Digital inputs/outputs	Individually parameterizable as DI or DO
• Number of digital inputs/outputs	4
• Number of digital input/outputs (with galvanic isolation)	4
• Cables and connections	Plug-in screw-type terminals
• Conductor cross-section, max.	1.5 mm^2
Digital inputs	
• Voltage	
- Without galvanic isolation	-3 ... +30 V
- With galvanic isolation	-30 ... +30 V
• Low level (an open digital input is interpreted as "low")	
- Without galvanic isolation	-3 ... +5 V
- With galvanic isolation	-30 ... +5 V
• High level	15 ... 30 V
• Current consumption at 24 V DC, typ.	<9 mA
• Delay times of digital inputs, max. [1]	
- L → H	3 ms
- H → L	3 ms
Digital outputs (continuously short-circuit proof)	
• Voltage	24 V DC
• Load current per digital output, max.	0.5 A
• Delay times (resistive load) [1]	
- L → H, typ.	50 µs
- L → H, max.	100 µs
- H → L, typ.	75 µs
- H → L, max.	150 µs

	TM41 Terminal Module 6SL3055-0AA00-3PA1
Analog input (difference)	
• Voltage range	-10 ... +10 V
• Internal resistance	≥100 kΩ
• Resolution [2]	12 bits + sign
Pulse encoder emulation	
• Level	TTL (RS422), A+, A-, B+, B-, zero track N+, N-
• Limit frequency $f_{max.}$	512 kHz
• Ratio Encoder pulses: Encoder emulation	Any number of ratio/ reduction ratio of pulses
Power loss, max.	12 W
PE connection	M4 screw
Dimensions	
• Width	30 mm (1.18 in)
• Height	151 mm (5.94 in)
• Depth	110 mm (4.33 in)
Weight, approx.	0.32 kg (0.71 lb)
Certificate of suitability	cULus

[1] The specified delay times refer to the hardware. The actual reaction time depends on the time slice in which the digital input/output is processed.

[2] If the analog input is to be operated in the signal processing sense with continuously variable input voltage, the sampling frequency $f_a = 1/t_{time\ slice}$ must be at least twice the value of the highest signal frequency f_{max}.

© Siemens 2024

Overview



TM54F Terminal Module

The TM54F Terminal Module is a dual-processor I/O interface with four fail-safe digital outputs and ten fail-safe digital inputs for utilization of the Safety Integrated functions of the SINAMICS drive system via external actuators and sensors.

Every available safety function integrated in the drive can be controlled via the fail-safe digital inputs on the TM54F Terminal Module. In the event that the parameterized safety functions of several drives operated together on a Control Unit are to be executed together, then these drives can be grouped in the TM54F Terminal Module. The advantage of this approach is that only one fail-safe digital input needs to be connected for these drives.

The fail-safe digital inputs and outputs have two channels and are redundantly configured with an internal data cross-check using the two processors. A fail-safe digital output consists of one P-switching and one M-switching output as well as one digital input to read back the switching state. A fail-safe digital input consists of two digital inputs.

Safety sensors can be connected over two switchable 24 V sensor supplies and can be evaluated over the fail-safe digital inputs. The switchable 24 V sensor supply ensures that the fail-safe digital inputs can be dynamized to detect dormant errors (this dynamization is used to check the shutdown paths). An unswitchable 24 V sensor supply is additionally provided by the TM54F Terminal Module for connecting undynamizable safety sensors.

The TM54F Terminal Module must be directly connected to a Control Unit via a DRIVE-CLiQ cable. Only one TM54F Terminal Module can be assigned to each Control Unit. It is not permissible to make the TM54F connection via another DRIVE-CLiQ device, e.g. a Power Module, a Motor Module or a Line Module.

Design

The following are located on the TM54F Terminal Module:

- 4 fail-safe digital outputs
- 10 fail-safe digital inputs
- 4 LEDs, single color for indicating the status of the read back channel of the fail-safe digital outputs
- 4 LEDs, dual-color for indicating the status of the fail-safe digital outputs
- 20 LEDs, dual-color for indicating the status of the fail-safe digital inputs
- 3 LEDs, single color for indicating the status of the 24 V sensor supplies
- 2 DRIVE-CLiQ sockets
- 2 connections for 24 V sensor supply, switchable
- 1 connection for 24 V sensor supply, not switchable
- 1 connection for the electronics power supply via the 24 V DC supply connector
- 1 connection for the 24 V power supply to digital outputs and sensors
- 1 PE/protective conductor connection

The status of the TM54F Terminal Module is indicated via a multi-color LED.

The TM54F Terminal Module can be snapped onto a TH 35 standard mounting rail in accordance with EN 60715 (IEC 60715).

The signal cable shield can be attached to the TM54F Terminal Module via a shield connection terminal, e.g. type SK8 supplied by Phoenix Contact or type KLBÜ CO 1 supplied by Weidmüller. The shield connection terminal must not be used as a strain relief mechanism.

Pins for connector coding are included in the TM54F Terminal Module scope of supply.

Selection and ordering data

Description	Article No.
TM54F Terminal Module Without DRIVE-CLiQ cable	**6SL3055-0AA00-3BA0**
Accessories for re-ordering	
Dust protection blanking plugs (50 units) For DRIVE-CLiQ port	**6SL3066-4CA00-0AA0**

For the SINAMICS G150, SINAMICS S150 and SINAMICS S120 Cabinet Modules, the TM54F Terminal Module can be ordered as an option by specifying order code **K87**.

Integration

The TM54F Terminal Module can communicate via DRIVE-CLiQ with the following Control Units.

- CU310-2 Control Unit
- CU320-2 Control Unit
- SINUMERIK 828D
  - Numeric Control Extensions NX10.3
  - Numeric Control Extensions NX15.3
- SIMOTION D Control Unit or Controller Extension

© Siemens 2024

Integration

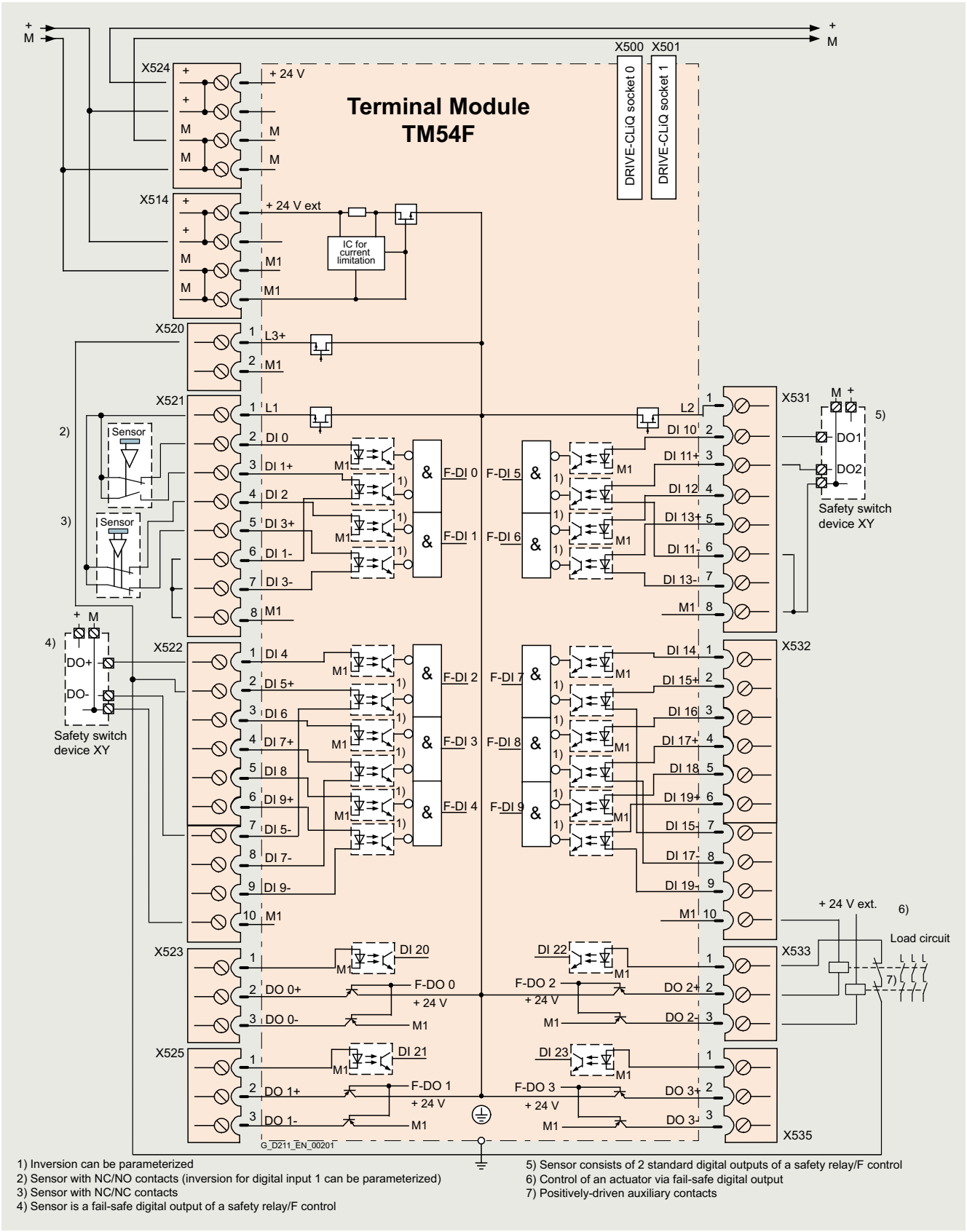

1) Inversion can be parameterized
2) Sensor with NC/NO contacts (inversion for digital input 1 can be parameterized)
3) Sensor with NC/NC contacts
4) Sensor is a fail-safe digital output of a safety relay/F control
5) Sensor consists of 2 standard digital outputs of a safety relay/F control
6) Control of an actuator via fail-safe digital output
7) Positively-driven auxiliary contacts

Connection example of TM54F Terminal Module

© Siemens 2024

Technical specifications

	TM54F Terminal Module 6SL3055-0AA00-3BA0
Current requirement (X524 at 24 V DC) without DRIVE-CLiQ supply	0.2 A
• Conductor cross-section, max.	2.5 mm^2
• Fuse protection, max.	20 A
Max. current requirement ext. 24 V for supplying the digital outputs and 24 V sensor supply (X514 at 24 V DC)	4 A
• Conductor cross-section, max.	2.5 mm^2
• Fuse protection, max.	20 A
I/O	
• Number of fail-safe digital inputs	10
• Number of fail-safe digital outputs	4
• 24 V sensor supply	3, of which 2 can be temporarily shut down using an internal test routine for dynamizing fail-safe digital inputs, current carrying capacity 0.5 A each
• Cables and connections	Plug-in screw-type terminals
• Conductor cross-section, max.	1.5 mm^2
Digital inputs in accordance with IEC 61131-2 Type 1, with galvanic isolation	
• Voltage	-3 ... +30 V
• Low level (an open digital input is interpreted as "low")	-3 ... +5 V
• High level	15 ... 30 V
• Current consumption at 24 V DC, typ.	>3.2 mA
• Delay time of digital inputs, approx. [1]	
- L → H, typ.	30 µs
- H → L, typ.	60 µs
• Safe state	Low level (for inputs that can be inverted: without inversion)

	TM54F Terminal Module 6SL3055-0AA00-3BA0
Digital outputs (continuously short-circuit proof)	
• Voltage	24 V DC
• Load current per fail-safe digital output, max. [2]	0.5 A
• Delay times (resistive load) [1]	
- L → H, typ.	300 µs
- H → L, typ.	350 µs
• Safe state	Output switched off
Scanning cycle t_{SI} for fail-safe digital inputs or fail-safe digital outputs	4 ... 25 ms (adjustable)
Power loss, max. At 24 V	4.5 W
PE connection	M4 screw
Dimensions	
• Width	50 mm (1.97 in)
• Height	151 mm (5.94 in)
• Depth	110 mm (4.33 in)
Weight, approx.	0.9 kg (1.98 lb)
Certificate of suitability	cULus
Safety Integrated	Acc. to IEC 61508 SIL 2 and ISO 13849-1 PL d and Category 3

[1] The specified delay times refer to the hardware. The actual reaction time depends on the time slice in which the digital input/output is processed.

[2] The total current of all fail-safe digital outputs must not exceed 5.33 A.

© Siemens 2024

TM120 Terminal Module

Overview



TM120 Terminal Module

Four temperature sensors can be evaluated via the TM120 Terminal Module. The temperature sensor inputs are safely electrically isolated from the evaluation electronics in the TM120 Terminal Module and are suitable for evaluating the temperature of special motors, e.g. SIMOTICS L-1FN linear motors and SIMOTICS T-1FW6 built-in torque motors.

Design

The following are located on the TM120 Terminal Module:

- 4 temperature sensor inputs for KTY84-130, Pt1000 or PTC (Pt1000 can be used from firmware V4.7 HF17 and higher)
- 2 DRIVE-CLiQ sockets
- 1 connection for the electronics power supply via the 24 V DC supply connector
- 1 PE/protective conductor connection

The status of the TM120 Terminal Module is indicated using a multi-color LED.

The TM120 Terminal Module can be snapped onto a TH 35 standar mounting rail in accordance with EN 60715 (IEC 60715).

Selection and ordering data

Description	Article No.
TM120 Terminal Module Without DRIVE-CLiQ cable	**6SL3055-0AA00-3KA0**
Accessories for re-ordering	
Dust protection blanking plugs (50 units) For DRIVE-CLiQ port	**6SL3066-4CA00-0AA0**

Technical specifications

	TM120 Terminal Module 6SL3055-0AA00-3KA0
Power requirement, max. at 24 V DC	0.5 A
• Conductor cross-section, max.	2.5 mm^2
• Fuse protection, max.	20 A
Temperature sensor inputs The inputs can be individually parameterized to evaluate sensors of type KTY84-130, Pt1000, PTC or temperature switches	
• Conductor cross-section	0.2 ... 6 mm^2
• Constant current per sensor, approx.	2 mA
• Safe electrical separation up to line voltage, max.	480 V AC
Power loss, typically	2.4 W
PE connection	M4 screw
Dimensions	
• Width	30 mm (1.18 in)
• Height	150 mm (5.91 in)
• Depth	111 mm (4.37 in)
Weight, approx.	0.41 kg (0.90 lb)

© Siemens 2024

Integration

The TM120 Terminal Module can communicate via DRIVE-CLiQ with the following Control Units with SINAMICS firmware version V4.3 and higher:

- CU310-2 Control Unit
- CU320-2 Control Unit
- SINUMERIK Control Unit
- SIMOTION D Control Unit or Controller Extension

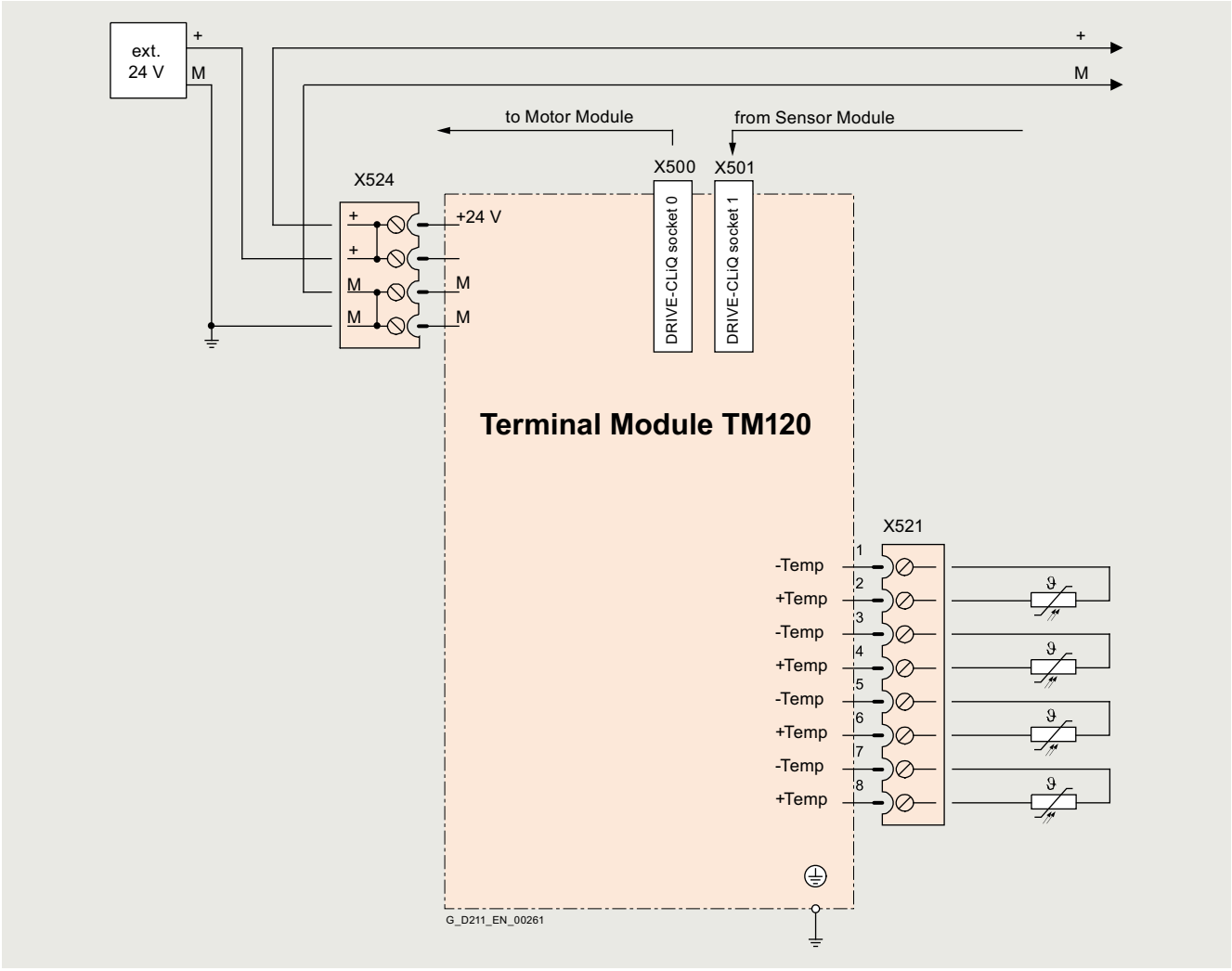

Example connection of a TM120 Terminal Module

© Siemens 2024

TM150 Terminal Module

Overview



TM150 Terminal Module

The TM150 Terminal Module is a DRIVE-CLiQ component for temperature evaluation. The temperature is measured in a temperature range from -99 °C to +250 °C for the following temperature sensors:

- Pt100 (with monitoring for wire breaks and short-circuits)
- Pt1000 (with monitoring for wire breaks and short-circuits)
- KTY84 (with monitoring for wire breaks and short-circuits)
- PTC (with monitoring for short-circuit)
- Bimetallic NC contact (without monitoring)

For the temperature sensor inputs, for each terminal block the evaluation can be parameterized for 1×2-wire, 2×2-wire, 3-wire or 4-wire. There is no galvanic isolation in the TM150 Terminal Module.

The temperature channels of a TM150 can be subdivided into 3 groups and evaluated together.

Design

The following are located on the TM150 Terminal Module:

- 6 ... 12 temperature sensor inputs
- 2 DRIVE-CLiQ sockets
- 1 connection for the electronics power supply via the 24 V DC supply connector
- 1 PE/protective conductor connection

The status of the TM150 Terminal Module is indicated via a multi-color LED.

The TM150 Terminal Module can be snapped onto a TH 35 standard mounting rail in accordance with EN 60715 (IEC 60715).

Selection and ordering data

Description	Article No.
TM150 Terminal Module Without DRIVE-CLiQ cable	**6SL3055-0AA00-3LA0**
Accessories for re-ordering	
Dust protection blanking plugs (50 units) For DRIVE-CLiQ port	**6SL3066-4CA00-0AA0**

For the SINAMICS G150, SINAMICS S150 and SINAMICS S120 Cabinet Modules, the TM150 Terminal Module can be ordered as an option by specifying order code **G51** or **G51** to **G54**.

Technical specifications

	TM150 Terminal Module 6SL3055-0AA00-3LA0
Power requirement, max. at 24 V DC	0.5 A
• Conductor cross section, max.	2.5 mm^2
• Fuse protection, max.	20 A
Temperature sensor inputs The inputs can be parameterized individually for the evaluation of sensors	
• Conductor cross section, max.	1.5 mm^2
• Measuring current per sensor, approx.	0.8 mA
Power loss	1.6 W
PE connection	M4 screw
Dimensions	
• Width	30 mm (1.18 in)
• Height	150 mm (5.91 in)
• Depth	111 mm (4.37 in)
Weight, approx.	0.41 kg (0.90 lb)
Certificate of suitability	cULus

© Siemens 2024

Integration

The TM150 Terminal Module can communicate via DRIVE-CLiQ with the following Control Units.

- CU310-2 Control Unit
- CU320-2 Control Unit
- SINAMICS DCM Advanced CUD

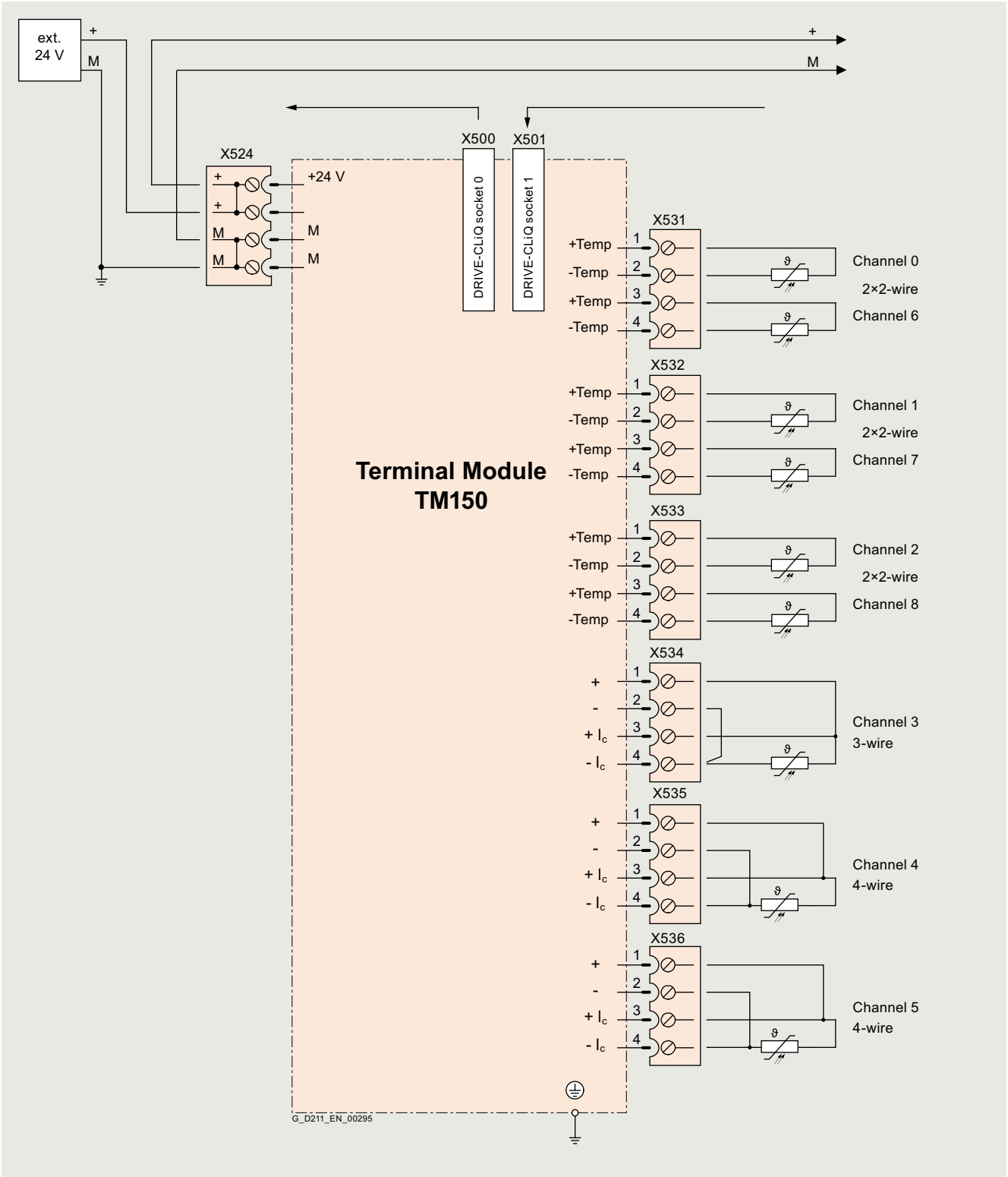

Connection example of a TM150 Terminal Module

© Siemens 2024

VSM10 Voltage Sensing Module

Overview



VSM10 Voltage Sensing Module

The VSM10 Voltage Sensing Module is capable of measuring the line or motor voltage waveform precisely and helps Line Modules to continue functioning properly under difficult supply conditions, for example, in the case of extreme voltage fluctuations or brief supply interruptions.

The phase differential voltage can be measured, either grounded (in the delivery state with jumper plugged in) or isolated.

The VSM10 Voltage Sensing Module is integrated in Active Interface Modules in chassis format and Smart Line Modules in chassis format. It can be optionally deployed for all Active Line Modules in booksize format and for 16 kW, 24 kW, 36 kW and 55 kW Smart Line Modules in booksize format.

In addition, the VSM10 Voltage Sensing Module is used to connect to rotating synchronous motors – or for a "quick flying restart" of rotating induction motors.

Design

The VSM10 Voltage Sensing Module has the following connections and interfaces:

- 1 connection for direct voltage sensing up to 690 V
- 1 connection for voltage sensing via voltage transformers; maximum voltage 100 V
- 2 analog inputs (reserved for monitoring of resonance in the Active Interface Module in chassis format)
- 1 temperature sensor input for KTY84-130, Pt1000 or PTC (Pt1000 can be used from firmware V4.7 HF17)
- 1 DRIVE-CLiQ socket
- 1 connection for the electronics power supply via the 24 V DC power supply connector
- 1 plug-in jumper for either grounded (delivery state) or isolated measurement
- 1 PE (protective earth) connection

The status of the VSM10 Voltage Sensing Modules is indicated via a multi-color LED.

The VSM10 Voltage Sensing Module can be snapped onto a TH 35 standard mounting rail in accordance with EN 60715 (IEC 60715).

Selection and ordering data

Description	Article No.
VSM10 Voltage Sensing Module Without DRIVE-CLiQ cable	**6SL3053-0AA00-3AA1**
Accessories for re-ordering	
Dust protection blanking plugs (50 units) For DRIVE-CLiQ port	**6SL3066-4CA00-0AA0**

For the SINAMICS G150, SINAMICS S150 and SINAMICS S120 Cabinet Modules, the VSM10 Voltage Sensing Module can be ordered as an option by specifying order code **K51** in order to implement the flying restart function.

Technical specifications

	VSM10 **Voltage Sensing Module** 6SL3053-0AA00-3AA1
Current requirement, max. at 24 V DC	0.2 A
• Conductor cross-section, max.	2.5 mm^2
Power loss, max.	10 W
Line voltage detection	
• Insulation resistance neutral point – ground when jumper is not inserted	>10 MΩ
• Input resistance	
- Terminal X521	>362 kΩ/phase
- Terminal X522	>2.5 MΩ/phase
Analog inputs (reserved for monitoring an Active Interface Module in chassis format)	
• Internal resistance, approx. (between differential inputs)	100 kΩ
• Resolution	12 bits + sign
PE connection	M4 screw
Dimensions	
• Width	50 mm (1.97 in)
• Height	151 mm (5.94 in)
• Depth	110 mm (4.33 in)
Weight, approx.	1 kg (2.21 lb)
Certificate of suitability	cULus

© Siemens 2024

Integration

The VSM10 Voltage Sensing Module can communicate with the following Control Units via DRIVE-CLiQ:

- CU310-2 Control Unit
- CU320-2 Control Unit
- SINUMERIK Control Unit
- SIMOTION D Control Unit or Controller Extension

On the SINAMICS S120 chassis format, the VSM10 Voltage Sensing Module is integrated in the Active Interface Modules and Smart Line Modules.

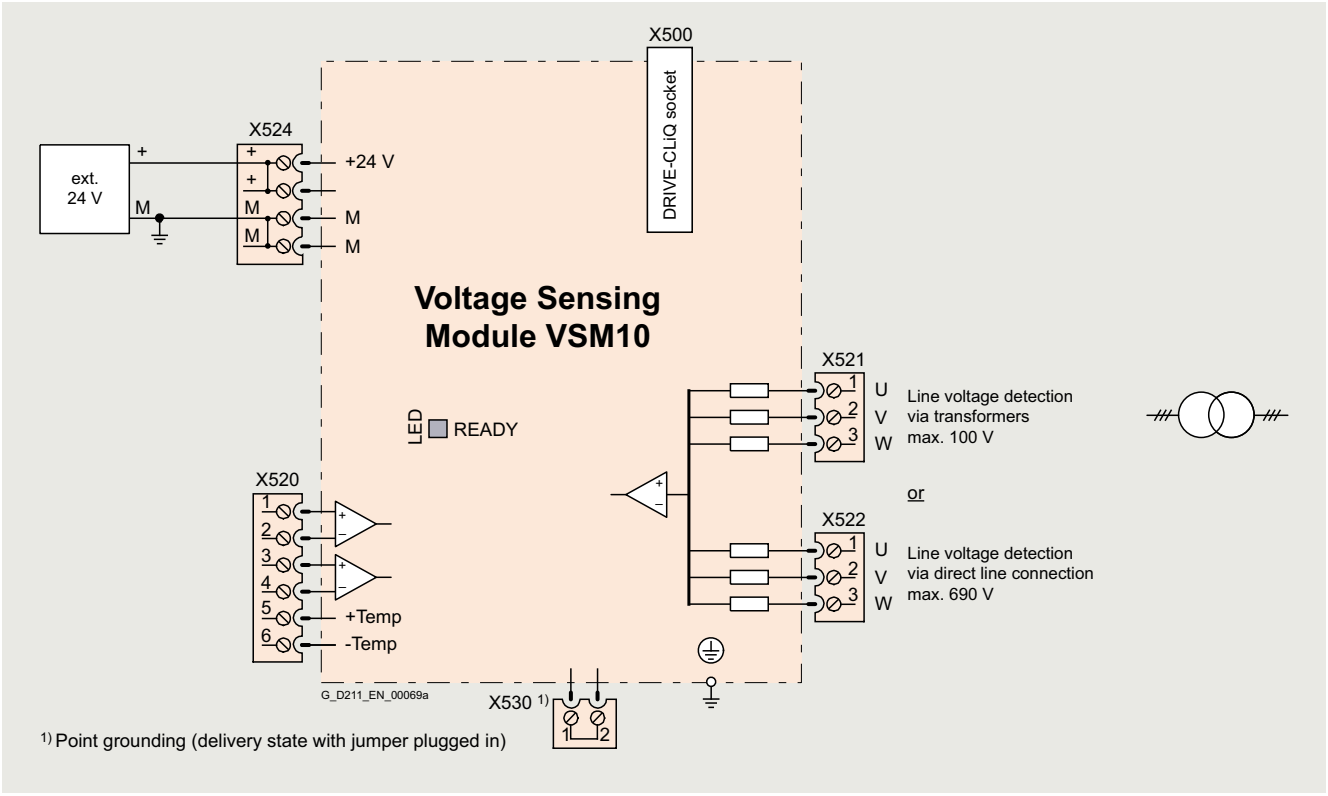

Connection example of VSM10 Voltage Sensing Module

© Siemens 2024

SBA Safe Brake Adapter

Overview



SBA Safe Brake Adapter

The SBA Safe Brake Adapter is needed for the implementation of a safe brake control (Safety Integrated function SBC) in accordance with IEC 61800-5-2.

The Safe Brake Adapter is available for a 230 V AC brake control voltage.

Note:
The SBA is approved for the IEC area. Safe Brake Adapter with UL approval are available on request. The UL approval is valid for a maximum permissible current consumption of 1.5 A (inductive).

Design

The Safe Brake Adapter SBA has the following connections and interfaces:

- 1 connection for the connecting cable to the Power Module/Motor Module
- 1 connection for the external 230 V AC supply
- 1 connection for motor holding brake
- 1 connection for fast de-excitation

The SBA Safe Brake Adapter is designed for attachment to a support rail in accordance with EN 60715.

Selection and ordering data

Description	Article No.
SBA Safe Brake Adapter 230 V AC/2 A	**6SL3355-2DX00-1AA0**
Accessories	
Connecting cable Pre-assembled interface cable to connect the SBA to the electronics module Control Interface Module in the Motor Module/Power Module (4 m)	**6SL3060-4DX04-0AA0**

Technical specifications

	SBA Safe Brake Adapter 6SL3355-2DX00-1AA0
Electronics power supply	
• Supply voltage (via the Control Interface Module)	24 V DC (20.4 … 28.8 V DC)
Supply voltage of the motor holding brake	230 V AC
Current consumption, max. permitted [1]	
• Motor holding brake	2 A
• Fast de-excitation	2 A
Cable length, max.	
• to the Control Interface Module	10 m (32.8 ft)
• to the brake	300 m (984 ft)
Conductor cross-section, max., respectively	2.5 mm^2
Dimensions	
• Width	75 mm (2.95 in)
• Height	111 mm (4.37 in)
• Depth	89 mm (3.50 in)
Weight, approx.	0.25 kg (0.55 lb)
Safety Integrated	According to IEC 61508 SIL2 and ISO 13849-1 PLd and Category 3

[1] The UL approval is valid for a maximum permissible current consumption of 1.5 A (inductive).

© Siemens 2024

Integration

The control and feedback signal regarding the switching state of the SBA relay is realized via terminals of the Control Interface Module (CIM) in the Motor Module/Power Module. The excitation coil of the holding brake is connected directly at the SBA.

The SBA can be ordered as an additional component for SINAMICS S120 built-in units in chassis format.

It is available as option (**K88**) for SINAMICS S150 and S120 Cabinet Modules.

For the SINAMICS S120 units, chassis format, the brake supply voltage must be connected externally at the SBA.

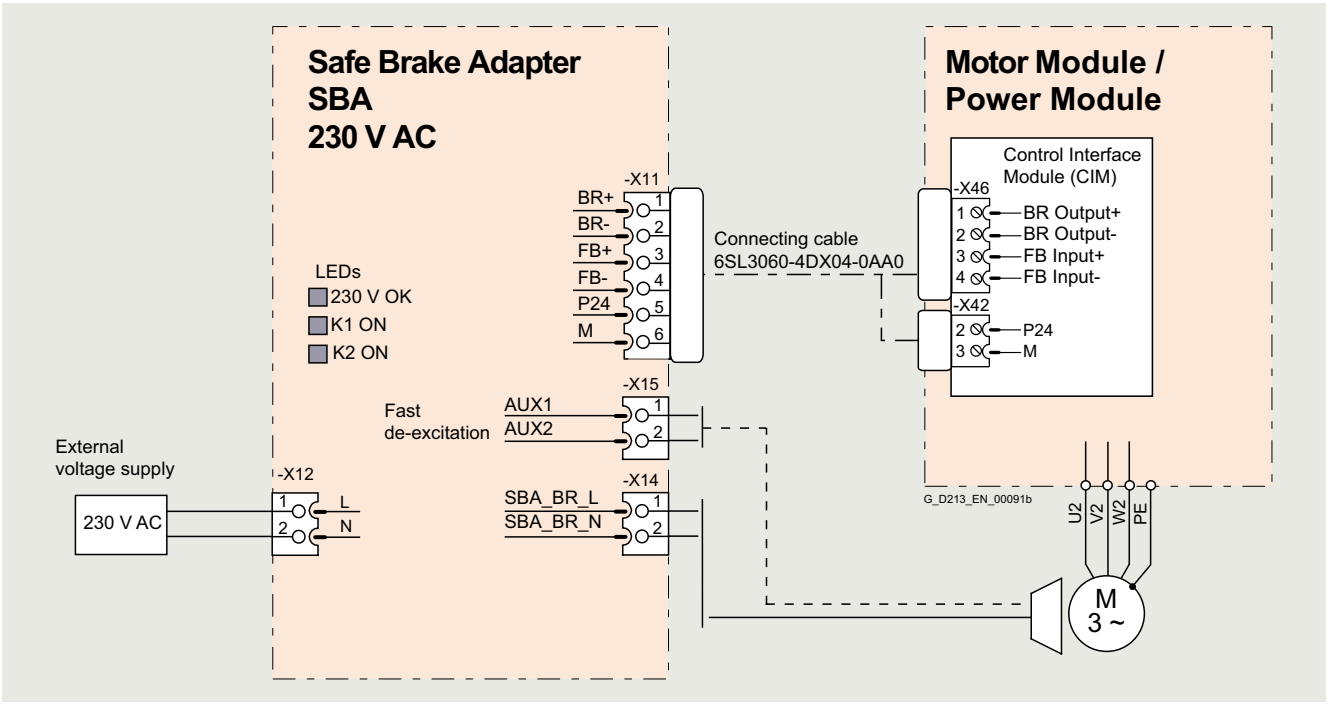

Connection example for the SBA Safe Brake Adapter

© Siemens 2024

Overview

Motors with DRIVE-CLiQ interface

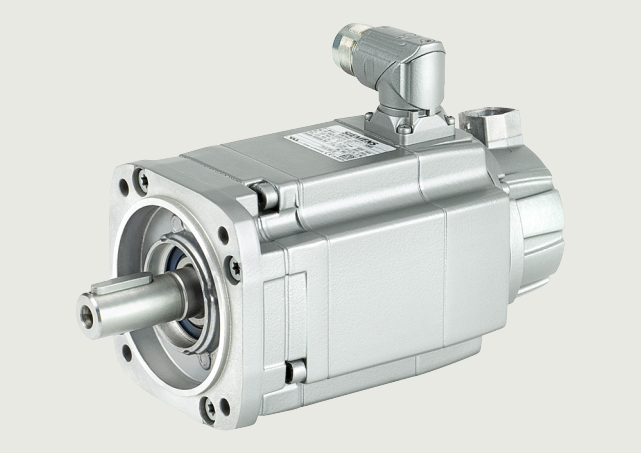

DRIVE-CLiQ is the preferred method for connecting the encoder systems to SINAMICS S110 or SINAMICS S120.

Motors with DRIVE-CLiQ interface are available for this purpose, e.g.

- SIMOTICS M-1PH8 and SIMOTICS S-1FT7/1FT2 synchronous motors
- SIMOTICS M-1PH8 asynchronous motors (induction motors)
- SIMOTICS T-1FW3 torque motors

Motors with a DRIVE-CLiQ interface can be directly connected to the SINAMICS S110 Control Unit CU305 or, in case of the SINAMICS S120 drive system, to the associated Motor Module using MOTION-CONNECT DRIVE-CLiQ cables. The MOTION-CONNECT DRIVE-CLiQ cable connection at the motor has degree of protection IP67.

The DRIVE-CLiQ interface supplies the motor encoder via the integrated 24 V DC supply and transfers the motor encoder and temperature signals and the electronic rating plate data, e.g. a unique identification number and rated data (voltage, current, torque) to the Control Unit. This means that for the various encoder types different encoder cables with varying permissible lengths are no longer required; just one cable type, MOTION-CONNECT DRIVE-CLiQ with varying permissible lengths, can be used for all encoders.

These motors simplify commissioning and diagnostics, as the motor and encoder type are identified automatically.

Motors without DRIVE-CLiQ interface

The encoder and temperature signals of motors without DRIVE-CLiQ interface, as well as those of external encoders, must be connected via Sensor Modules. Sensor Modules Cabinet-Mounted are available in degree of protection IP20 for control cabinet installation, as well as Sensor Modules External-Mounted in degree of protection IP67.

Only one encoder system can be connected to each Sensor Module.

More information

Motor encoder and temperature signals must be connected when possible to the corresponding Motor Module or Power Module and external encoders to the Control Unit. However, the DRIVE-CLiQ connections can also be bundled via DRIVE-CLiQ Hub Modules.

Safety Integrated

The Safety Integrated extended functions of the SINAMICS drive system require suitable encoders (see SIMOTICS servomotors section).

Motors driving a load via a belt

Unfavorable material combinations generate static electricity between the belt pulley and the belt. Electrostatic charging must be prevented, since this can discharge via the motor shaft and the encoder, thereby causing disturbances in the encoder signals. One countermeasure is to manufacture belts out of an antistatic material, for example.

© Siemens 2024

Overview



SMC10 Sensor Module Cabinet-Mounted

The SMC10 Sensor Module Cabinet-Mounted is required to evaluate the encoder signals of motors without a DRIVE-CLiQ interface. External encoders can also be connected via the SMC10.

The following encoder signals can be evaluated:

- 2-pole resolver
- Multi-pole resolver

Design

The SMC10 Sensor Module Cabinet-Mounted features the following connections and interfaces as standard:

- 1 encoder connection including motor temperature sensing (KTY84-130, Pt1000 [1] or PTC) via SUB-D connector
- 1 DRIVE-CLiQ interface
- 1 connection for the electronics power supply via the 24 V DC supply connector
- 1 PE/protective conductor connection

The status of the SMC10 Sensor Module Cabinet-Mounted is indicated via a multi-color LED.

The SMC10 Sensor Module Cabinet-Mounted can be snapped onto a TH 35 standard mounting rail according to EN 60715 (IEC 60715).

The signal cable shield is connected via the encoder system connector and can also be connected to the SMC10 Sensor Module Cabinet-Mounted via a shield connection terminal, e.g. Phoenix Contact type SK8 or Weidmüller type KLBÜ CO 1. The shield connection terminal must not be used as a strain relief mechanism.

Integration

SMC10 Sensor Modules Cabinet-Mounted communicate with a Control Unit via DRIVE-CLiQ.

Selection and ordering data

Description	Article No.
SMC10 Sensor Module Cabinet-Mounted Without DRIVE-CLiQ cable	**6SL3055-0AA00-5AA3**
Accessories for re-ordering	
Dust protection blanking plugs (50 units) For DRIVE-CLiQ port	**6SL3066-4CA00-0AA0**

For the SINAMICS S150 and SINAMICS S120 Cabinet Modules, the SMC10 Sensor Module Cabinet-Mounted can be ordered as an option by specifying order code **K46**.

Technical specifications

	SMC10 Sensor Module Cabinet-Mounted 6SL3055-0AA00-5AA3
Current requirement, max. at 24 V DC, without taking encoder into account	0.2 A
• Conductor cross-section, max.	2.5 mm^2
• Fuse protection, max.	20 A
Power loss, max.	10 W
Encoders which can be evaluated	• 2-pole resolver • Multi-pole resolver
• Excitation voltage, rms	4.1 V
• Excitation frequency	5 ... 16 kHz depending on the current controller clock cycle of the Motor Module or Power Module
• Transformation ratio	0.5
• Encoder frequency, max.	2 kHz (120000 r/min) depending on the number of resolver pole pairs and current controller clock cycle of the Motor Module or Power Module
• Signal subdivision (interpolation), max.	16384 times (14 bits)
• Cable length to encoder, max.	130 m (427 ft)
PE connection	M4 screw
Dimensions	
• Width	30 mm (1.18 in)
• Height	150 mm (5.91 in)
• Depth	111 mm (4.37 in)
Weight, approx.	0.45 kg (0.99 lb)
Certificate of suitability	cULus

[1] The Pt1000 sensor is not supported when combined with a Control Unit CU305.

© Siemens 2024

Overview



SMC20 Sensor Module Cabinet-Mounted

The SMC20 Sensor Module Cabinet-Mounted is required to evaluate the encoder signals of motors without a DRIVE-CLiQ interface. External encoders can also be connected via the SMC20.

The following encoder signals can be evaluated:

- Incremental encoder sin/cos 1 V_{pp}
- Absolute encoder EnDat 2.1
- SSI encoder with incremental signals sin/cos 1 V_{pp} (firmware version 2.4 and later)

The motor temperature can also be sensed using a PTC thermistor KTY84-130, Pt1000 [1] or PTC.

Design

The SMC20 Sensor Module Cabinet-Mounted features the following connections and interfaces as standard:

- 1 encoder connection including motor temperature sensing (KTY84-130, Pt1000 [1] or PTC) via SUB-D connector
- 1 DRIVE-CLiQ interface
- 1 connection for the electronics power supply via the 24 V DC supply connector
- 1 PE/protective conductor connection

The status of the SMC20 Sensor Module Cabinet-Mounted is indicated via a multi-color LED.

The SMC20 Sensor Module Cabinet-Mounted can be snapped onto a TH 35 standard mounting rail according to EN 60715 (IEC 60715).

The signal cable shield is connected via the encoder system connector and can also be connected to the SMC20 Sensor Module Cabinet-Mounted via a shield connection terminal, e.g. Phoenix Contact type SK8 or Weidmüller type KLBÜ CO 1. The shield connection terminal must not be used as a strain relief mechanism.

Integration

SMC20 Sensor Modules Cabinet-Mounted communicate with a Control Unit via DRIVE-CLiQ.

Selection and ordering data

Description	Article No.
SMC20 Sensor Module Cabinet-Mounted Without DRIVE-CLiQ cable	**6SL3055-0AA00-5BA3**
Accessories for re-ordering	
Dust protection blanking plugs (50 units) For DRIVE-CLiQ port	**6SL3066-4CA00-0AA0**

For the SINAMICS S150 and SINAMICS S120 Cabinet Modules, the SMC20 Sensor Module Cabinet-Mounted can be ordered as an option by specifying order code **K48**.

Technical specifications

	SMC20 Sensor Module Cabinet-Mounted 6SL3055-0AA00-5BA3
Power requirement, max. at 24 V DC, without taking encoder into account	0.2 A
• Conductor cross-section, max.	2.5 mm^2
• Fuse protection, max.	20 A
Power loss, max.	10 W
Encoders which can be evaluated	• Incremental encoder sin/cos 1 V_{pp} • Absolute encoder EnDat 2.1 • SSI encoder with incremental signals sin/cos 1 V_{pp} (firmware version 2.4 and ater)
• Encoder supply	5 V DC/0.35 A
• Encoder frequency incremental signals, max.	500 kHz
• Signal subdivision (interpolation), max.	16384 times (14 bits)
• SSI baud rate	100 ... 1000 kBaud
• Cable length to encoder, max.	100 m (328 ft)
PE connection	M4 screw
Dimensions	
• Width	30 mm (1.18 in)
• Height	150 mm (5.91 in)
• Depth	111 mm (4.37 in)
Weight, approx.	0.45 kg (0.99 lb)
Certificate of suitability	cULus

[1] The Pt1000 sensor is not supported when combined with a Control Unit CU305.

© Siemens 2024

Overview



SMC30 Sensor Module Cabinet-Mounted

The SMC30 Sensor Module Cabinet-Mounted is required to evaluate the encoder signals of motors without a DRIVE-CLiQ interface. External encoders can also be connected via the SMC30.

The following encoder signals can be evaluated:

- Incremental encoders TTL/HTL with/without open-circuit detection (open-circuit detection is only available with bipolar signals)
- SSI encoder with TTL/HTL incremental signals
- SSI encoder without incremental signals

The motor temperature can also be sensed using a PTC thermistor KTY84-130, Pt1000 [1] or PTC.

Design

The SMC30 Sensor Module Cabinet-Mounted features the following connections and interfaces as standard:

- 1 encoder connection including motor temperature sensing (KTY84-130, Pt1000 [1] or PTC) either via SUB-D connector or via terminals
- 1 DRIVE-CLiQ interface
- 1 connection for the electronics power supply via the 24 V DC supply connector
- 1 PE/protective conductor connection

The status of the SMC30 Sensor Module Cabinet-Mounted is indicated via a multi-color LED.

The SMC30 Sensor Module Cabinet-Mounted can be snapped onto a TH 35 standard mounting rail in according to EN 60715 (IEC 60715).

The maximum encoder cable length between SMC30 modules and encoders is 100 m. For HTL encoders, this length can be increased to 300 m if the A+/A- and B+/B- signals are evaluated and the power supply cable has a minimum cross-section of 0.5 mm^2.

The signal cable shield can be connected to the SMC30 Sensor Module Cabinet-Mounted via a shield connection terminal, e.g., Phoenix Contact type SK8 or Weidmüller type KLBÜ CO 1. The shield connection terminal must not be used as a strain relief mechanism.

Integration

SMC30 Sensor Modules Cabinet-Mounted communicate with a Control Unit via DRIVE-CLiQ.

Selection and ordering data

Description	Article No.
SMC30 Sensor Module Cabinet-Mounted Without DRIVE-CLiQ cable	**6SL3055-0AA00-5CA2**
Accessories for re-ordering	
Dust protection blanking plugs (50 units) For DRIVE-CLiQ port	**6SL3066-4CA00-0AA0**

For the SINAMICS S150 and SINAMICS S120 Cabinet Modules, the SMC30 Sensor Module Cabinet-Mounted can be ordered as an option by specifying order code **K50**.

A second SMC30 can be ordered as an option with the order code **K52** for reliable actual value acquisition when using the Safety Integrated Extended Functions.

Technical specifications

	SMC30 Sensor Module Cabinet-Mounted 6SL3055-0AA00-5CA2
Current requirement, max. at 24 V DC, without taking encoder into account	0.2 A
• Conductor cross-section, max.	2.5 mm^2
• Fuse protection, max.	20 A
Power loss, max.	10 W
Encoders which can be evaluated	• Incremental encoder TTL/HTL • SSI encoder with TTL/HTL incremental signals • SSI encoder without incremental signals
• Input current range TTL/HTL	4 ... 20 mA (typ. 10 mA)
• Encoder supply	24 V DC/0.35 A or 5 V DC/0.35 A
• Encoder frequency, max.	500 kHz
• SSI baud rate	100 ... 1000 kBaud
• Resolution absolute position SSI	30 bits
• Cable length, max.	
- TTL encoder	100 m (328 ft) (only bipolar signals permitted)[2]
- HTL encoder	100 m (328 ft) for unipolar signals 300 m (984 ft) for bipolar signals[2]
- SSI encoder	100 m (328 ft)
PE connection	M4 screw
Dimensions	
• Width	30 mm (1.18 in)
• Height	150 mm (5.91 in)
• Depth	111 mm (4.37 in)
Weight, approx.	0.45 kg (0.99 lb)
Certificate of suitability	cULus

[1] The Pt1000 sensor is not supported when combined with a Control Unit CU305.

[2] Signal cables twisted in pairs and shielded.

© Siemens 2024

Overview



SME20/SME25 Sensor Module External

SME20/SME25 Sensor Modules External are encoder evaluation units for machine encoders (direct measuring systems).
The devices are designed with IP67 degree of protection. This means that the units can be installed outside the control cabinet near the machine encoder.

The following encoder signals can be evaluated:

- Incremental encoder sin/cos 1 V_{pp} without rotor position track (C and D tracks)
- Absolute encoder EnDat 2.1
- SSI absolute encoder [1] with incremental signals sin/cos 1 V_{pp} (firmware V2.4 and later)

Using adapter cable 6FX8002-2CA88-..., it is possible to connect a motor with a 17-pole circular encoder connector to the 12-pole circular connector of the SME20.

- KTY/Pt1000/PTC temperature sensors can be used to evaluate the motor temperature (only possible with SME20).
- The Sensor Module is only suitable for motors without absolute track signals (C and D tracks), e.g.:
  - Synchronous motors with pole position identification (SIMOTICS L-1FN/T-1FW/M-1FE)
  - Asynchronous motors (induction motors) (SIMOTICS M-1PH)

SME20/SME25 Sensor Modules External evaluate the encoder signals and convert the information obtained to DRIVE-CLiQ. Neither motor nor encoder data are saved in the SME20/SME25.

Design

SME20/SME25 Sensor Modules External feature the following connections and interfaces as standard:

- 1 encoder connector via circular plug
- 1 DRIVE-CLiQ interface with integrated 24 V DC electronics power supply from the Control Unit or Motor Module
- 1 PE (protective earth) connection

Integration

SME20/SME25 Sensor Modules External communicate with a Control Unit via DRIVE-CLiQ.

Selection and ordering data

Description	Article No.
SME20 Sensor Module External For incremental measuring systems Without DRIVE-CLiQ cable	**6SL3055-0AA00-5EA3**
SME25 Sensor Module External For absolute measuring systems Without DRIVE-CLiQ cable	**6SL3055-0AA00-5HA3**
Accessories	
Adapter cable [2] For SME20, for connecting motors with 17-pole encoder connector, with encoders, without C and D tracks	**6FX8002-2CA88-....**

[1] For SME25, only encoders with 5 V supply voltage.

[2] For length code, see section MOTION-CONNECT connection systems.

© Siemens 2024

Technical specifications

		SME20 Sensor Module External 6SL3055-0AA00-5EA3	SME25 Sensor Module External 6SL3055-0AA00-5HA3
Encoder		• Incremental encoder sin/cos 1 V_{pp} with 5 V power supply 0.35 A	• Absolute encoder EnDat 2.1 with 5 V voltage supply 0.35 A • Absolute encoder SSI with incremental signals sin/cos 1 V_{pp} with 5 V voltage supply 0.35 A
Signal subdivision (interpolation)		≤16384 × (14 bits)	≤16384 × (14 bits)
Max. encoder frequency that can be evaluated	kHz	≤500	≤500
SSI/EnDat 2.1 baud rate	kHz	–	100
Measuring system interface		12-pin M23 circular connector	17-pin M23 circular connector
Outlet		IP67 DRIVE-CLiQ connector	IP67 DRIVE-CLiQ connector
Current requirement, max. At 24 V DC, not taking encoder into account • Conductor cross-section • Protection	A	0.11 Acc. to connector contacts Via DRIVE-CLiQ power supply source	0.11 Acc. to connector contacts Via DRIVE-CLiQ power supply source
Power loss, max.	W	4	4
PE connection		M4 screw/1.8 Nm	M4 screw/1.8 Nm
Cable length, max. • To measuring system [1)] • To automatic speed control	 m (ft) m (ft)	 3 (9.84) 100 (328)	 3 (9.84) 100 (328)
Degree of protection		IP67	IP67
Dimensions • Width • Height • Depth	 mm (in) mm (in) mm (in)	 58 (2.28) 44 (1.73) 112 (4.41)	 58 (2.28) 44 (1.73) 112 (4.41)
Weight, approx.	kg (lb)	0.31 (0.68)	0.31 (0.68)
Certificate of suitability		cULus	cULus

[1)] The maximum cable length at the encoder system interface depends on the current drawn by the encoder system and the cross-section of the supply conductors in the cable, however, a maximum of 30 m (98.4 ft) (for detailed information, see Manual SINAMICS S120 Control Units).

© Siemens 2024

Overview



SME120/SME125 Sensor Module External

The SME120/SME125 Sensor Modules External are encoder evaluation units with degree of protection IP67, especially suitable for use in linear and torque motor applications. They can be installed close to the motor systems and encoders in the machine.

Sensor Modules External evaluate the encoder signals and motor temperature sensors specifically and convert the information obtained for DRIVE-CLiQ. The motor temperature signals are safely electrically separated.

Neither motor nor encoder data are saved in the SME120/SME125.

The SME120 and SME125 can be operated on Control Units with firmware release V2.4 and later.

The following encoder signals can be evaluated depending on the type of Sensor Module:

- Incremental encoder sin/cos 1 V_{pp}
- Absolute encoder EnDat 2.1
- SSI absolute encoder [1] with sin/cos 1 V_{pp} incremental signals, but without reference signal

The motor temperature can also be sensed using a PTC thermistor KTY84-130, Pt1000 or PTC.

Design

SME120/SME125 Sensor Modules External feature the following connections and interfaces as standard:

- 1 encoder connection via circular connector
- 1 temperature sensor connection via circular connector
- 1 Hall-effect sensor connection via circular connector (SME120 only)
- 1 DRIVE-CLiQ interface with integrated 24 V DC electronics power supply from the Control Unit or Motor Module
- 1 PE (protective earth) connection

Selection and ordering data

Description	Article No.
SME120 Sensor Module External For incremental measuring systems Without DRIVE-CLiQ cable	**6SL3055-0AA00-5JA3**
SME125 Sensor Module External For absolute measuring systems Without DRIVE-CLiQ cable	**6SL3055-0AA00-5KA3**
Accessories	
Connector for temperature sensor input (connector kits, 6+1-pole)	**6FX2003-0SU07**
Connector for Hall sensor input (connector kits, 9-pole)	**6FX2003-0SU01**
Connector for SME120 encoder system interface (connector kits, 12-pole)	**6FX2003-0SA12**
Connector for SME125 encoder system interface (connector kits, 17-pole)	**6FX2003-0SA17**

[1] For SME125, only SSI encoders with 5 V supply voltage.

© Siemens 2024

Technical specifications

		SME120 Sensor Module External 6SL3055-0AA00-5JA3	SME125 Sensor Module External 6SL3055-0AA00-5KA3
Encoder		• Incremental encoder sin/cos 1 V_{pp} with 5 V power supply	• Absolute encoder EnDat 2.1 with 5 V voltage supply • Absolute encoder SSI with incremental signals sin/cos 1 V_{pp} with 5-V voltage supply
Signal subdivision (interpolation)		≤16384 × (14 bits)	≤16384 × (14 bits)
Max. encoder frequency that can be evaluated	kHz	≤500	≤500
SSI/EnDat 2.1 baud rate	kHz	–	100
Measuring system interface		12-pin M23 circular connector	17-pin M23 circular connector
Temperature sensor input		6-pin M17 circular connector	6-pin M17 circular connector
Hall-effect sensor input		9-pin M23 circular connector	–
Output		IP67 DRIVE-CLiQ connector	IP67 DRIVE-CLiQ connector
Current requirement, max. at 24 V DC, without taking encoder into account	A	0.16	0.16
• Current carrying capacity of the encoder supply, for measuring system (at 5 V DC)	A	0.35	0.35
• Conductor cross-section		Acc. to connector contacts	Acc. to connector contacts
• Protection		Via DRIVE-CLiQ power supply source	Via DRIVE-CLiQ power supply source
Power loss, max.	W	4.5	4.5
PE connection		M4 screw/1.8 Nm	M4 screw/1.8 Nm
Cable length, max.			
• To measuring system [1]/temperature sensor	m (ft)	3 (9.84)	3 (9.84)
• To automatic speed control	m (ft)	100 (328)	100 (328)
Degree of protection		IP67	IP67
Dimensions			
• Width	mm (in)	117.6 (4.63)	117.6 (4.63)
• Height	mm (in)	43.1 (1.70)	43.1 (1.70)
• Depth	mm (in)	127 (5.00)	127 (5.00)
Weight, approx.	kg (lb)	0.7 (1.54)	0.7 (1.54)
Certificate of suitability		cULus	cULus

[1] The maximum cable length at the encoder system interface depends on the current drawn by the encoder system and the cross-section of the supply conductors in the cable, however, a maximum of 30 m (98.4 ft) (for detailed information, see Manual SINAMICS S120 Control Units).

© Siemens 2024

Notes

© Siemens 2024

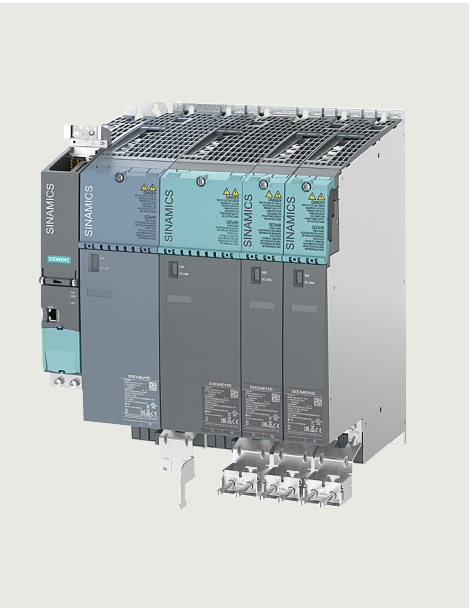

7.2/2 SINAMICS S220 built-in units
7.2/2 System overview

7.2/3 Booksize format
7.2/3 Smart Line Modules in booksize format
7.2/9 Line reactors for Smart Line Modules
7.2/10 Line filters for Smart Line Modules
7.2/11 Recommended line-side components for Smart Line Modules

© Siemens 2024

Overview

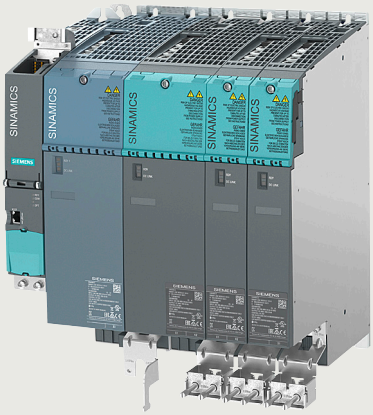

SINAMICS S220 Smart Line Module between Control Unit CU320-2 and SINAMICS S120 Motor Modules, in booksize format

With SINAMICS S120 in booksize format, Siemens is one of the world's leading suppliers of drive solutions for machine tools/production machines and General Motion Control applications. Used in a wide variety of areas, industries and applications, Siemens delivers outstanding customer benefits and industry know-how with SINAMICS S120.

The requirements that drive solutions need to meet are continually changing and increasing. Machine solutions need to be perfectly tailored to one another, offer the highest level of functionality and quality, while being economic and simple to implement across the board.

With SINAMICS S220 in booksize format, Siemens is innovating the proven SINAMICS S120 series with considerably more powerful functions and is providing answers to future requirements. SINAMICS S220 is the reliable, robust, and innovative high-performance solution that meets all the requirements for IoT and industrial security.

SINAMICS S220 Smart Line Modules are the first steps in innovating the proven SINAMICS S120 range. Smart Line Modules are an integral part of the SINAMICS S220 in booksize format series and are characterized by the highest level of performance, maximum flexibility, high degree of user-friendliness and being fit for digitalization. Available in two versions (C and D type), thanks to their higher power density, greater overload capability and precise dimensioning, economical machine solutions can be implemented while also requiring less space in the control cabinet. Thanks to their innovative mechanical design, Smart Line Modules are also simple and reliable to install and extremely robust.

Operation of SINAMICS S220 Smart Line Modules is possible with a CU320-2 Control Unit (SINAMICS firmware V5.2 SP3 HF10).

Smart Line Modules can supply energy and return regenerative energy to the supply system. A Braking Module and braking resistor are required only if the drives need to be decelerated in a controlled manner after a power failure (i.e. when energy cannot be recovered to the supply). When a Smart Line Module is used as the infeed, the matching line reactor must be installed. A line filter can be optionally installed in order to ensure compliance with the limits stipulated for Category C2 in EN 61800-3.

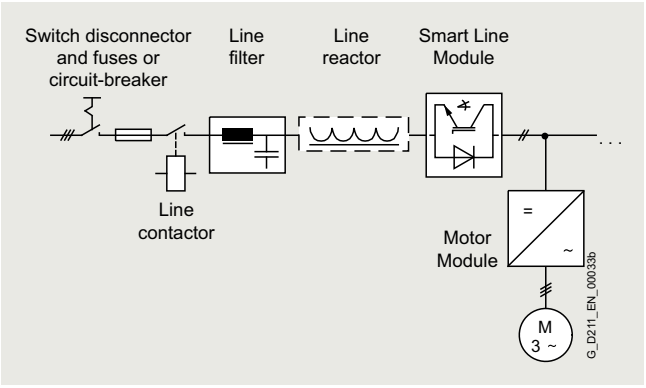

Drive dimensioning in the TIA Selection Tool

Application-specific requirements can be determined using drive technology dimensioning in the TIA Selection Tool. This can include motors, gearboxes and converters. The tool supports the configuration and dimensioning of control functions with an open and closed control loop. The technical documentation with features of the technical drive system, as well as a product list for ordering via SiePortal can also be compiled.

You can find more information about the TIA Selection Tool at www.siemens.com/tia-selection-tool

Virtualization

The DriveSim Designer virtualization solution makes it possible to simulate all SINAMICS S220 device types in a realistic manner, with minimum work for parameter setting and simple handling.

© Siemens 2024

Overview



SINAMICS S220 Smart Line Module, in booksize format

Smart Line Modules are stall-protected, line-commutated infeed/regenerative feedback units (diode bridge for incoming supply; stall-protected, line-commutated regenerative feedback via IGBTs) with 100 % continuous regenerative feedback power. The regenerative capability of the modules can be deactivated by means of parameterization. Smart Line Modules are designed for connection to grounded TN/TT and non-grounded IT supply systems.

- C type: Optimized for continuous load with up to 200 % overload (continuous motion)
- D type: Optimized for highly dynamic, intermittent duty cycles with up to 300 % overload (discontinuous motion)

The DC link is pre-charged via integrated precharging resistors.

The associated line reactor is required for operating a Smart Line Module.

Design

The Smart Line Modules in booksize format feature the following connections and interfaces as standard:

- 1 power connection via screw-type or push-in terminals (not included in the scope of supply)
- 1 connection for the 24 V DC electronics power supply via the 24 V terminal adapter included in the scope of supply
- 1 DC link connection via integrated DC link busbars
- 2 PE (protective earth) connections
- 3 DRIVE-CLiQ sockets
- 1 temperature sensor input for KTY84-130, Pt1000 or PTC (Pt1000 can be used from firmware V4.7 HF17)

The status of the Smart Line Modules is indicated via two multi-color LEDs.

The signal cable shield can be connected to the Line Module by means of a shield terminal, e.g. Weidmüller type KLBÜ 3-8 SC.

The scope of supply of the Smart Line Modules includes:

- DRIVE-CLiQ cable for connection to the adjacent Control Unit on the left for drive control, length 0.11 m
- 2 blanking plugs for sealing unused DRIVE-CLiQ sockets
- DRIVE-CLiQ cable (length depends on Smart Line Module width) for connection to the adjacent Motor Module, length = width of Smart Line Module + 0.11 m
- Jumper plug for connecting the 24 V DC busbar to the adjacent Motor Module
- 24 V terminal adapter (X24)
- Connector X21 for digital inputs and outputs
- 1 set of warning labels in 36 languages

© Siemens 2024

Integration

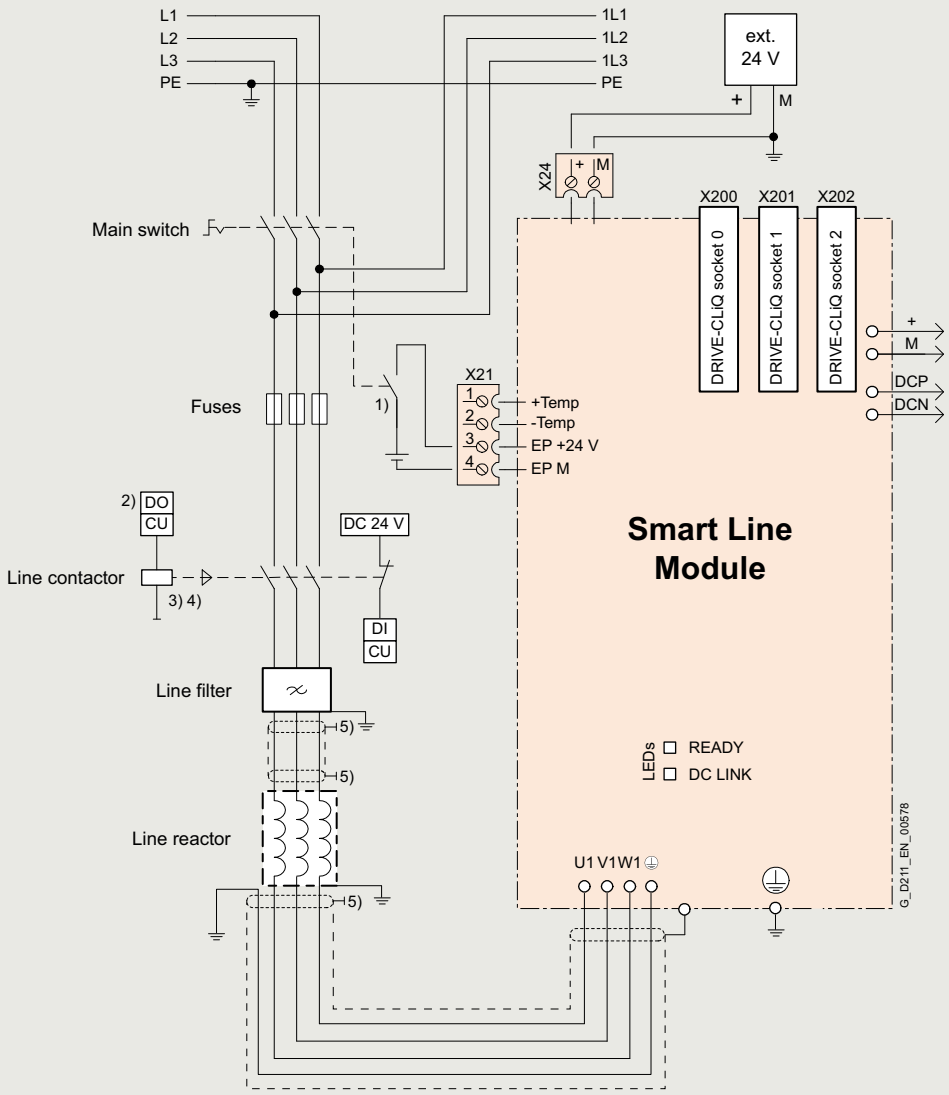

[1] Leading NC contact *t* >10 ms. When using a VSM10, the leading NC contact can be omitted.
[2] DI/DO, controlled by the Control Unit.
[3] No additional load permitted downstream of the line contactor.
[4] The current carrying capacity of the digital output must be taken into account. An output interface element may have to be used.
[5] Contacting via rear panel or shield panels according to EMC Installation Guidelines.

Connection example of 16 kW and 24 kW Smart Line Modules in booksize format

© Siemens 2024

Selection and ordering data

Rated power at 380 V kW	Maximum power at 380 V kW	C/D type	**Smart Line Module in booksize format** Article No.
Line voltage 380 ... 480 V 3 AC			
16	35	C type	**6SL5130-6UE21-6AC0**
	48	D type	**6SL5130-6UE21-6AD0**
24	48	C type	**6SL5130-6UE22-4AC0**
	72	D type	**6SL5130-6UE22-4AD0**

Description	Article No.
Accessories	
Shield connection plate For Smart Line Modules in booksize format with a width of 100 mm (3.94 in)	**6SL5166-1BD00-0AA0**
Shield terminal For shield connection on the shield connection plate	
• Diameter 3 ... 20 mm (0.12 ... 0.79 in)	**8WH9130-0NA00**
• Diameter 20 ... 35 mm (0.79 ... 1.38 in)	**8WH9130-0PA00**
DC link rectifier adapter For direct infeed of DC link voltage	
• Screw-type terminals 0.5 ... 10 mm^2 For Line Modules and Motor Modules in booksize format with a width of 50 mm, 75 mm and 100 mm (1.97 in, 2.95 in and 3.94 in)	**6SL3162-2BD00-0AA0**
• Screw-type terminals 10 ... 35 mm^2 For Line Modules and Motor Modules in booksize format with a width of 100 mm, 150 mm, 200 mm and 300 mm (3.94 in, 5.91 in, 7.87 in and 11.81 in)	**6SL3162-2BE00-0AA0**
DC link adapter (2 units) For multi-tier configuration Screw-type terminals 35 ... 95 mm^2 For all Line Modules and Motor Modules in booksize format	**6SL3162-2BM01-0AA0**
Connector with screw-type terminal For 16 kW and 24 kW Smart Line Modules in booksize format Screw-type terminals 6 ... 16 mm^2	**6SL5166-2NA00-0AA0**
Connector with push-in connection For 16 kW and 24 kW Smart Line Modules in booksize format Push-in type terminals 6 ... 16 mm^2	**6SL5166-2NB00-0AA0**

Description	Article No.
Accessories for re-ordering	
24 V terminal adapter For all Line Modules and Motor Modules in booksize format	**6SL3162-2AA00-0AA0**
24 V jumper plug For connection of the 24 V busbars (for booksize format)	**6SL3162-2AA01-0AA0**
Terminal Kit (Plug-in terminals, DRIVE-CLiQ jumper (length = module width + 110 mm (4.33 in)), dust protection blanking plugs) For DRIVE-CLiQ port For Smart Line Modules in booksize format with a width of 100 mm (3.94 in)	**6SL5166-8AD03-0AA0**
Warning labels in 36 languages This label set can be glued over the standard English or German labels to provide warnings in other languages. One set of labels is supplied with the devices. One sign in each of the following languages is provided in each set: BG, CZ, DE, DK, EE, ES, FI, FR, GB, GR, HU, IE, IS, IT, LT, LV, MT, NL, NO, PL, PT, RO, RU, SE, SI, SK, TR, CN, ID, IL, IR, JP, KR, SA, TH, TW	**6SL3166-3AB00-0AA0**
Dust protection blanking plugs (50 units) For DRIVE-CLiQ port	**6SL3066-4CA00-0AA0**

© Siemens 2024

Technical specifications

	Smart Line Module in booksize format 6SL5130-...
Line voltage (up to 4000 m (13124 ft) above sea level)	380 ... 480 V 3 AC ±10 % (in operation -15 % <1 min)
Line frequency	50/60 Hz (47 ... 63 Hz)
SCCR (short-circuit current rating)	100 kA in conjunction with the recommended Class J fuse, or circuit breaker according to UL489 / CSA 22.2 No. 5-02 see recommended line-side components
Line power factor at rated power • Fundamental (cos φ_1) • Total (λ)	 >0.98 0.65 ... 0.9
Overvoltage category according to EN 60664-1	Class III
DC link voltage, approx.	495 ... 720 V (typ. 1.35 × line voltage) [1]
Electronics power supply	24 V DC -15 %/+20 %
Radio interference suppression • Standard • With line filter	 No radio interference suppression Category C2 to EN 61800-3 Total cable length up to 750 m (2460 ft) (shielded)
Cooling method	Internal air cooling (power units with increased air cooling by built-in fan)
Permissible ambient and coolant temperature (air) during operation for line-side components, Line Modules and Motor Modules	-10 ... +40 °C (14 ... 104 °F) without derating, >40 ... 55 °C (104 ... 131 °F), see derating characteristics
Installation altitude	Up to 1000 m (3281 ft) above sea level without derating, > 1000 ... 4000 m (3281 ... 13124 ft) above sea level, see derating characteristics
Declarations of Conformity	CE (Low-Voltage and EMC Directives)
Certificate of suitability	cULus

[1] The DC link voltage is maintained at the mean value of the rectified line voltage. For further information, see section Configuration notes.

© Siemens 2024

Technical specifications

Line voltage 380 ... 480 V 3 AC		**Smart Line Module in booksize format**			
Internal air cooling		6SL5130-6UE21-6AC0	6SL5130-6UE21-6AD0	6SL5130-6UE22-4AC0	6SL5130-6UE22-4AD0
Power data		C type	D type	C type	D type
• Rated power P_N					
- At 380 V 3 AC	kW	**16.0**	**16.0**	**24**	**24**
- At 400 V 3 AC	kW	**16.8**	**16.8**	**25.3**	**25.3**
- At 480 V 3 AC	kW	**20.2**	**20.2**	**30**	**30**
• Maximum power P_{max}					
- At 380 V 3 AC	kW	35	48	48	72
- At 400 V 3 AC	kW	37	51	51	76
- At 480 V 3 AC	kW	51	61	61	91
Input data					
• Rated current	A	29	29	43	43
• Maximum current	A	62	86	86	129
Output data					
• Rated DC current	A	33	33	49	49
• Maximum DC current	A	71	97	97	146
Current demand 24 V DC electronics power supply, max.	A	0.7	0.7	0.7	0.7
Current carrying capacity					
• 24 V DC busbars	A	20	20	20	20
• DC link busbars	A	200	200	200	200
DC link capacitance					
• Smart Line Module	µF	820	820	940	940
• Drive line-up, max.	µF	20000	20000	20000	20000
Power loss [1]	kW	0.15	0.15	0.2	0.2
Cooling air requirement	m^3/h (ft^3/h)	77 (2719)	77 (2719)	77 (2719)	77 (2719)
Sound pressure level L_{pA} (1 m)	dB	<70	<70	<70	<70
Line connection U1, V1, W1		Screw-type terminals (X1)	Screw-type terminals (X1)	Screw-type terminals (X1)	Screw-type terminals (X1)
• Conductor cross-section	mm^2	6 ... 16	6 ... 16	6 ... 16	6 ... 16
Shield connection		6SL5166-1BD00-0AA0	6SL5166-1BD00-0AA0	6SL5166-1BD00-0AA0	6SL5166-1BD00-0AA0
PE connection		M5 screw	M5 screw	M5 screw	M5 screw
Cable length, max. (total of all motor power cables and DC link)					
• Shielded	m (ft)	1000 (3281)	1000 (3281)	1000 (3281)	1000 (3281)
• Unshielded	m (ft)	1200 (3937)	1200 (3937)	1200 (3937)	1200 (3937)
Degree of protection		IP20	IP20	IP20	IP20
Dimensions					
• Width	mm (in)	100 (3.94)	100 (3.94)	100 (3.94)	100 (3.94)
• Height	mm (in)	380 (14.96)	380 (14.96)	380 (14.96)	380 (14.96)
• Depth	mm (in)	270 (10.63)	270 (10.63)	270 (10.63)	270 (10.63)
Weight, approx.	kg (lb)	8.2 (18.1)	8.2 (18.1)	8.2 (18.1)	8.2 (18.1)

.

[1] Power loss of Smart Line Module at rated output including losses of 24 V DC electronics power supply.

© Siemens 2024

Characteristic curves

Derating characteristics

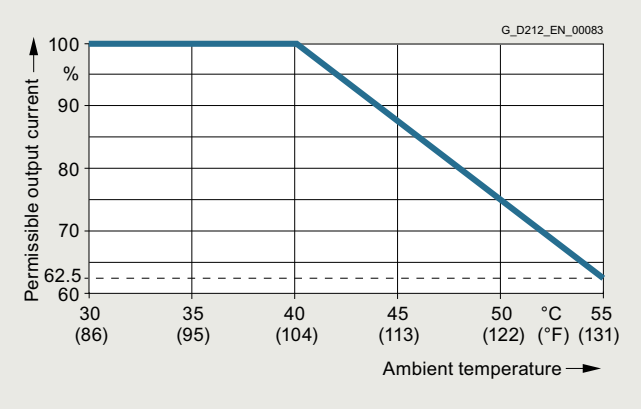

Output power as a function of ambient temperature

Installation altitude

- 0 ... 1000 m (0 ... 3281 ft) above sea level without derating
- > 1000 ... 2000 m (3281 ... 6562 ft)
  - Reduction of the output current by 10 % per 1000 meters (3281 feet), or
  - reduction in the ambient temperature by 5 °C (41 °F) per 1000 meters (3281 ft)
- > 2000 ... 4000 m (6562 ... 13124 ft)
  - Reduction of the output current by 10 % per 1000 meters (3281 feet), or
  - reduction in the ambient temperature by 5 °C (41 °F) per 1000 meters (3281 ft)
  - Operation on line supply systems with grounded neutral point, or
  - operation with an isolating transformer with secondary grounded neutral point

More information

Identification link according to IEC 61406 for SINAMICS S220

The ID link contains the article and serial number of the product. As a QR code, it replaces the previous data matrix code on the nameplate and takes you with the URL directly to a product information page on the internet with access to the technical documentation, data sheet, certificates, FAQs, product notifications, and catalogs. Paper package inserts become superfluous since the information is available electronically directly via the QR code, even years later. In this way, we are making a valuable contribution to the preservation of our environment. You don't need an additional app. Simply scan the QR code with your smartphone or tablet. According to IEC 61406, the QR code of an ID link is marked with a frame and a triangle at the bottom right.
With their globally unique identifiers, Siemens products are ready for Industry 4.0.
The ID serves as a connection to the administration shell with which modules of the digital twin can be provided.
The latest technical documentation as well as further technical specifications are available on the internet at:
www.siemens.com/sinamics-s220/documentation

and in the Siemens Product Configurator:
www.siemens.com/sinamics-s220/configuration

© Siemens 2024

Overview

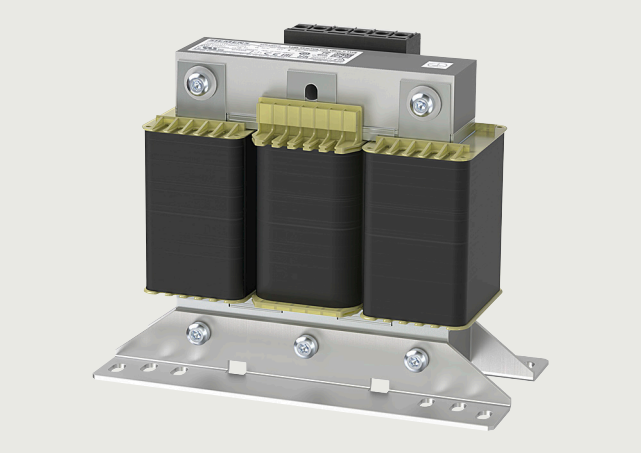

Line reactors are always to be provided for operation of Smart Line Modules, as line harmonics can occur on converters that damage/disturb other loads connected to the same line supply. Line reactors limit the line harmonics to permissible values. Line reactors that are not permissible can damage the Smart Line Modules.

Selection and ordering data

Rated power of the Smart Line Module kW	Suitable for Smart Line Module in booksize format	**Line reactor** Article No.
Line voltage 380 ... 480 V 3 AC		
16	6SL5130-6UE21-6AC0	**6SL3100-0EE21-6AA0**
	6SL5130-6UE21-6AD0	**6SL5100-0EE21-6AD0**
24	6SL5130-6UE22-4AC0	**6SL5100-0EE22-4AC0**
	6SL5130-6UE22-4AD0	**6SL5100-0EE22-4AD0**

Technical specifications

Line voltage 380 ... 480 V 3 AC		**Line reactor**			
		6SL3100-0EE21-6AA0	6SL5100-0EE21-6AD0	6SL5100-0EE22-4AC0	6SL5100-0EE22-4AD0
Rated current	A	29	29	43.5	43.5
Power loss	W	90	90	92	92
Line/load connection 1U1, 1V1, 1W1 / 1U2, 1V2, 1W2		Screw terminals	Screw terminals	Screw terminals	Screw terminals
• Conductor cross-section	mm^2	10	16	16	16
PE connection		M6 screw stud	M6 screw	M6 screw	M6 screw
Degree of protection		IPXXB	IPXXB	IPXXB	IPXXB
Dimensions					
• Width	mm (in)	219 (8.62)	219 (8.62)	219 (8.62)	219 (8.62)
• Height	mm (in)	176 (6.93)	176 (6.93)	195 (7.68)	195 (7.68)
• Depth	mm (in)	110.5 (4.35)	110.5 (4.35)	126 (4.96)	126 (4.96)
Weight, approx.	kg (lb)	9.0 (19.9)	9.0 (19.9)	15.5 (34.2)	15.5 (34.2)
Certificate of suitability		cURus	cURus	cURus	cURus
Suitable for Smart Line Module in booksize format	Type	6SL5130-6UE21-6AC0	6SL5130-6UE21-6AD0	6SL5130-6UE22-4AC0	6SL5130-6UE22-4AD0
• Rated power of the Smart Line Module	kW	16 C type	16 D type	24 C type	24 D type

© Siemens 2024

Line filters for Smart Line Modules

Overview



In conjunction with line reactors and a consistent EMC-compliant system design, line filters limit the conducted electromagnetic emissions generated by the Smart Line Modules to the limit values according to IEC 61800-3. Line filters are only suitable for direct connection to TN line systems.

Selection and ordering data

Rated power of the Smart Line Module kW	Suitable for Smart Line Module in booksize format	**Line filter** Article No.
Line voltage 380 ... 480 V 3 AC		
16	6SL5130-6UE21-6AC0 6SL5130-6UE21-6AD0	**6SL5100-0HE21-6DD0**
24	6SL5130-6UE22-4AC0 6SL5130-6UE22-4AD0	**6SL5100-0HE22-4DD0**

Technical specifications

Line voltage 380 ... 480 V 3 AC		**Line filter**	
		6SL5100-0HE21-6DD0	6SL5100-0HE22-4DD0
Rated current	A	30	44
Power loss	W	12.0	22.0
Line/load connection L1, L2, L3 / U, V, W		Screw terminals	Screw terminals
• Conductor cross-section	mm^2	10	35
PE connection		M8 screw studs	M8 screw studs
Degree of protection		IPXXB	IPXXB
Dimensions			
• Width	mm (in)	50 (1.97)	50 (1.97)
• Height	mm (in)	370 (14.57)	370 (14.57)
• Depth	mm (in)	205 (8.07)	205 (8.07)
Weight, approx.	kg (lb)	5 (11.0)	5 (11.0)
Certificate of suitability		cURus	cURus
Suitable for Smart Line Module in booksize format	Type	6SL5130-6UE21-6AC0 6SL5130-6UE21-6AD0	6SL5130-6UE22-4AC0 6SL5130-6UE22-4AD0
• Rated power of the Smart Line Module	kW	16	24

© Siemens 2024

Selection and ordering data

Suitable line-side power components are assigned depending on the power rating of the Smart Line Modules.

Additional information about the line-side power components can be found in Catalogs LV 10 and IC 10 as well as SiePortal.

The tables below list recommended components.

Assignment of line-side power components to Smart Line Modules in booksize format

Rated power	Suitable for Smart Line Module in booksize format	**Line contactor**	**LV HRC fuse (gL/gG)**			**UL/CSA fuse, Class J** Available from: Mersen www.ep.mersen.com		
			Rated current	Size		Rated current	Size	
kW	Type	Type	A		Article No.	A	mm	Reference No.
Line voltage 380 ... 480 V 3 AC								
16	6SL5130-6UE21-6AC0 6SL5130-6UE21-6AD0	**3RT2035**	40	000	**3NA3817**	40	27 × 60	AJT40
24	6SL5130-6UE22-4AC0 6SL5130-6UE22-4AD0	**3RT2037**	80	000	**3NA3824**	80	27 × 117	AJT80

Recommendations on further overcurrent protection devices are available at:
https://support.industry.siemens.com/cs/document/109804134

© Siemens 2024

Notes

© Siemens 2024

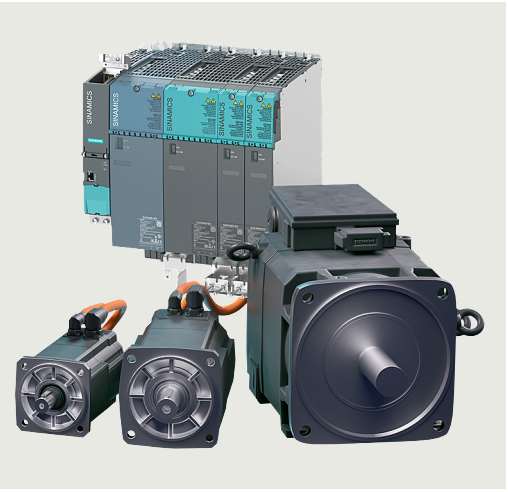

8/2 **Overview**
8/8 Technical information for main, linear and torque motors
8.1/1 SIMOTICS S servomotors
8.2/1 SIMOTICS M main motors
8.3/1 SIMOTICS L linear motors
8.4/1 SIMOTICS T torque motors

In addition, the Siemens Product Configurator can be used on the internet at the following address:
www.siemens.com/spc

© Siemens 2024

Motor type		Features	Degree of protection	Cooling method
SIMOTICS S servomotors				
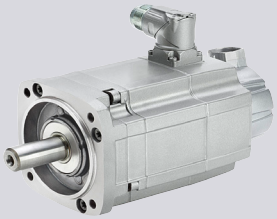	**SIMOTICS S-1FT7** Compact	Very high power density	IP64 [1] (optional IP65, IP67)	Natural cooling Forced ventilation Water cooling
	SIMOTICS S-1FT7 High Dynamic	Very low rotor moment of inertia	IP64 (optional IP65, IP67)	Forced ventilation Water cooling
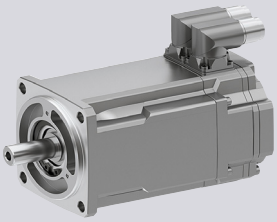	**SIMOTICS S-1FT2** Compact	High power density	IP64 (optional IP65, IP67)	Natural cooling Forced ventilation
	SIMOTICS S-1FT2 High Dynamic	Very low rotor moment of inertia	IP64 (optional IP65, IP67)	Natural cooling Forced ventilation

Servomotors

SIMOTICS S-1FT7/S-1FT2 motors can be used in a wide range of applications.

In machine tools, they are mainly referred to and used as feed motors.

On production machines, e.g. printing, packaging and textile machines, they are designated as synchronous servomotors.

In addition, servomotors are used in a wide variety of industrial applications where a high dynamic response and precise motion control are required, e.g. in printing, packaging, textile and handling machines.

The selection and ordering data for SINAMICS S120 Motor Modules are based on the booksize format by way of example. Other formats are also possible. The TIA Selection Tool is available for detailed configuration.

[1] Core type: IP65.

© Siemens 2024

Shaft height	Rated power P_N for S1 duty kW	Rated torque M_N	Selection and ordering data
	0.01 0.1 1 10 100 1000 10000		Page
SH 36/SH 48/SH 63/ SH 80/SH 100/SH 132	0.85 – 16.96	1.4 … 108 Nm	8.1/10 ... 8.1/17
SH 80/SH 100/SH 132	5 – 45.5	21 … 250 Nm	8.1/18 ... 8.1/19
SH 63/SH 80/SH 100	3.1 – 34.2	9.2 … 125 Nm	8.1/20 ... 8.1/23
SH 63/SH 80	3.8 – 10.8	11 … 33 Nm	8.1/24 ... 8.1/25
SH 63/SH 80	5.7 – 21.7	16.5 … 51 Nm	8.1/24 ... 8.1/25
SH 30/SH 40/ SH 48/SH 63/SH 80/ SH 100	0.26 – 7.1	0.41 … 39 Nm	8.1/57 ... 8.1/58
SH 80	3.1 – 7.1	17.6 … 32 Nm	8.1/59
SH 30/SH 40/SH 52/ SH 63/SH 80	0.28 – 5.5	0.59 … 30 Nm	8.1/56
SH 80	5.6 – 10.2	28.5 … 44 Nm	8.1/59

© Siemens 2024

Motor type		Features	Degree of protection	Cooling method
SIMOTICS M main motors				
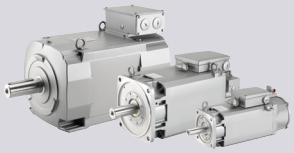	**SIMOTICS M-1PH8** Asynchronous motor	Three-phase squirrel-cage motor without housing High power density with low construction volume	IP55	Forced ventilation
			IP23	Forced ventilation
			IP65/IP55 [1]	Water cooling
	SIMOTICS M-1PH8 Synchronous reluctance motor	High power density High efficiency	IP55	Forced ventilation
			IP65	Water cooling
	SIMOTICS M-1PH8 Synchronous motor	Permanent-magnet excited Excellent performance properties Extremely high power density with low construction volume	IP55	Forced ventilation
			IP65/IP55 [1]	Water cooling
	**SIMOTICS M-1FE1** Synchronous built-in motor	Built-in spindle motor Permanent-magnet excited High Torque	IP00	Water cooling
		Built-in spindle motor Permanent-magnet excited High Speed	IP00	Water cooling
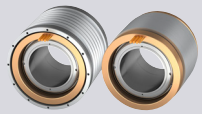	**SIMOTICS M-1FE2** Synchronous built-in motor	Built-in spindle motor Permanent-magnet excited High Torque	IP00	Water cooling
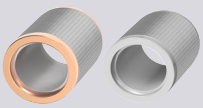	**SIMOTICS M-1FE2** Asynchronous built-in motor	Built-in spindle motor Permanent-magnet excited High Torque (AL rotor, CU rotor)	IP00	Water cooling

Main motors

SIMOTICS M-1PH8/M-1FE1/M-1FE2 motors can be used in a wide range of applications.

In machine tools, they are usually designated and used as main spindle motors.

In production machines, such as printing, packaging, and re-forming machines, they are used as high-output main motors.

The selection and ordering data for SINAMICS S120 Motor Modules are based on the booksize format by way of example. Blocksize and chassis formats are also possible. The TIA Selection Tool is used to carry out detailed configuration.

[1] From SH 180: IP55.

© Siemens 2024

Shaft height / diameter mm	Rated power P_N for S1 duty kW	Rated torque M_N	Selection and ordering data
	0.1 1 10 100 1000 10000		Page
SH 80/SH 100/ SH 132/SH 160/ SH 132/SH 180/ SH 225/SH 280	2.5 – 385	13 … 2481 Nm	8.2/6 ... 8.2/23
SH 180/ SH 225/SH 280	24.5 – 630	317 … 3711 Nm	8.2/24 ... 8.2/33
SH 80/ SH 100/SH 132/ SH 160/SH 180/ SH 225/SH 280	3.5 – 460	20 … 2610 Nm	8.2/34 ... 8.2/49
SH 132/SH 160	21 – 101	200 … 420 Nm	8.2/50 ... 8.2/55
SH 132/SH 160	32 – 121	200 … 500 Nm	8.2/56 ... 8.2/59
SH 132/SH 160/ SH 180/SH 225	15.7 – 196	95 … 1086 Nm	8.2/60 ... 8.2/65
SH 132/SH 160/ SH 180/SH 225	17.6 – 310	107 … 1651 Nm	8.2/66 ... 8.2/73
Overall outer diameter 95/115/130/190/ 205/250/310	4 – 104	4.5 … 820 Nm	8.2/100 ... 8.2/103
Overall outer diameter 120/155/180/205/ 230/270	6.5 – 94	5 … 300 Nm	8.2/104 ... 8.2/107
Overall outer diameter 400	34 – 159	640 … 1530 Nm	8.2/108 ... 8.2/109
Stator outer diameter 180/280	7.5 – 48	17 … 611 Nm	8.2/112 ... 8.2/113

© Siemens 2024

Motor type		Features	Degree of protection	Cooling method
SIMOTICS L linear motors				
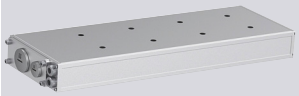	**SIMOTICS L-1FN3** Water cooling	Synchronous linear motor Permanent-magnet excited	IP65	Water cooling
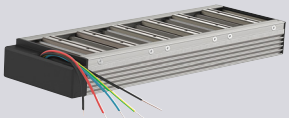	**SIMOTICS L-1FN3** Natural cooling	Synchronous linear motor Permanent-magnet excited	IP23 [1]	Natural cooling

Motor type		Features	Degree of protection	Cooling method
SIMOTICS T torque motors				
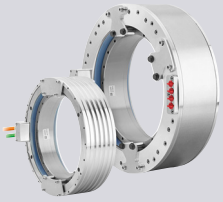	**SIMOTICS T-1FW6** Built-in torque motor Internal rotor - Standard	Synchronous torque motor Permanent-magnet excited Hollow shaft Individual components	IP23 [1]	Natural cooling Water cooling
	SIMOTICS T-1FW6 Built-in torque motor Internal rotor - High Speed	Synchronous torque motor Permanent-magnet excited Hollow shaft Individual components	IP23 [1]	Water cooling
	SIMOTICS T-1FW6 Built-in torque motor External rotor, Standard	Synchronous torque motor Permanent-magnet excited Hollow shaft Individual components	IP23 [1]	Water cooling
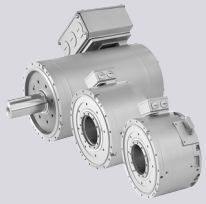	**SIMOTICS T-1FW3** Complete torque motor	Synchronous torque motor Permanent-magnet excited Hollow shaft Plug-on shaft (for 1FW328 IP54) Solid shaft (for 1FW328 IP54)	 IP54 IP55 IP55	Water cooling

Linear and torque motors

SIMOTICS L-1FN3/T-1FW6/T-1FW3 motors can be used in a wide range of applications.

On machine tools, they are designated and used as feed motors.

On production machines, e.g. printing, packaging and textile machines, they are designated as synchronous servomotors.

The selection and ordering data for SINAMICS S120 Motor Modules are based on the booksize format by way of example. Other formats are also possible. The TIA Selection Tool is available for detailed configuration.

[1] The final degree of protection (minimum degree of protection is IP54) for the installed motor is determined by the machine manufacturer.

© Siemens 2024

Primary section width mm	Feedrate force F_N N	Velocity v_{max} at F_N	Selection and ordering data
	0.1 1 10 100 1000 10000		Page
Precision cooling without with 67/96 76/105 126/141 135/150 188/248 197/257 342 351	Peak load: 200 … 8100 Continuous load: 151 … 10400	98.9 … 984m/min 59 … 715 m/min	8.3/4 ... 8.3/7 8.3/8 ... 8.3/11
58/86/115.5	133 … 994	377 … 477 m/min	8.3/12 ... 8.3/13

Shaft height / outer diameter mm	Rated torque M_N Nm	Rated speed n_N	Selection and ordering data
	0.1 1 10 100 1000 10000		Page
159/184	9.91 … 38.9	400 … 600 r/min	8.4/6 ... 8.4/7
159/184/230/310/385/440/502/576/730	23.2 … 5760	37.2 … 1040r/min	8.4/8 ... 8.4/19
230/310/385/502/576	150 … 4310	92 … 1060 r/min	8.4/20 ... 8.4/23
436	1150 … 2240	44 … 116 r/min	8.4/26 ... 8.4/27
SH 150/SH 200/SH 280	100 … 7000	150 … 1200 r/min	8.4/30 ... 8.4/39

More information:

When a plant or system is down, some motor types can be delivered as replacement motors through a quick delivery service, which has the advantage that replacement parts are supplied faster.

Siemens provides comprehensive support when selecting the optimum motor solution. If you have any questions relating to SIMOTICS linear and torque motors, contact us by email at the following address:

motor.support.motioncontrol@siemens.com

© Siemens 2024

Technical specifications

Regulations, standards, and specifications

SIMOTICS M-1PH8 motors (without brake), SIMOTICS M-1FE, SIMOTICS L-1FN3 and SIMOTICS T-1FW3 conform with the relevant standards and regulations.

For technical explanations of servomotors, see Section SIMOTICS S servomotors.

As a result of the fact that in many countries the national regulations have been completely harmonized with the international IEC 60034-1 recommendation, there are no longer any differences with respect to coolant temperatures, temperature classes and temperature rise limits.

General specifications for rotating electrical machines	IEC 60034-1
Terminal designations and direction of rotation for electrical machines	IEC 60034-8
Types of construction of rotating electrical machines	IEC 60034-7
Noise limit values for rotating electrical machines	IEC 60034-9
Cooling methods of rotating electrical machines	IEC 60034-6
Sound pressure level	EN ISO1680
Degrees of protection of rotating electrical machines	IEC 60034-5
Vibration severity of rotating electrical machines	IEC 60034-14
Thermal motor protection	DIN 44081/DIN 44082
Temperature monitoring or thermal motor protection	EN 60034-111 EN 60034-11 (IEC 60034-11)
Shaft and flange accuracy	DIN 42955 (IEC 60072-1)
Cylindrical shaft ends for electrical machines	DIN 748 Part 3/ DIN IEC 60072

The guidelines relevant for SIMOTICS motors can be found in the individual Configuration Manuals. Certificates for SIMOTICS motors are available in SiePortal Support under Certificates:
https://sieportal.siemens.com/en-ww/support
The marking is made on the nameplate or on a second nameplate.

Degrees of protection for three-phase motors

A suitable degree of protection must be selected depending on the operating and environmental conditions to protect the machine against:

- Ingress of water, dust, and solid foreign objects
- Contact with rotating parts inside a motor
- Contact with live parts

Degrees of protection of electric motors are specified by a code. This comprises two identification letters, two digits and, if required, an additional identification letter.

IP (International Protection)
Identification letter designating the degree of protection against contact and the ingress of foreign bodies and water

0 to **6**
1st digit designating the degree of touch protection and protection against ingress of solid foreign objects

0 to **8**
2nd digit designating the degree of protection against the ingress of water (no oil protection)

W, S and **M**
Additional identification letters for special degrees of protection

Most motors are supplied with the following degrees of protection:

Motor	Degree of protection	1st digit: touch protection	Protection against foreign objects	2nd digit: protection against water
Internally cooled	**IP23**	Protection against finger contact	Protection against medium-sized, solid foreign objects with diameter above 12 mm (0.47 in)	Protection against spray water up to 60° from the vertical
Surface-cooled	**IP54**	Complete protection against accidental contact	Protection against damaging dust deposits	Splash water from any direction
	IP55			Jet water from any direction
	IP64	Complete protection against accidental contact	Protection against dust ingress	Splash water from any direction
	IP65 [1]			Jet water from any direction
	IP67 [1]			Motor under specified pressure and time conditions under water

Recommended degrees of protection for three-phase motors

When cooling lubricants are used, protection against water alone is inadequate. The IP rating should only be considered as a guideline in this case. The motors may have to be protected by suitable covers. When selecting the motor degree of protection, the motor shaft must be equipped with a suitable seal.

The table can serve as a decision aid for selecting the required degree of protection for motors. It must be avoided that liquid accumulates on the flange when the motor is mounted with the shaft end facing upwards IM V3/IM V19/IM V6/IM V35.

Effect \ Liquids	General workshop environment	Water; gen. cooling lubricant (95 % water, 5 % oil)
Dry	IP64	–
Humid/moist environment	–	IP64
Mist	–	IP65
Spray	–	IP65
Jet	–	IP67
Splash/ brief immersion/ constant immersion	–	IP67

[1] DIN VDE 0530 Part 5 or EN 60034 Part 5 specifies that there are only 5 degrees of protection for the first digit code and 8 degrees of protection for the second digit code in relation to rotating electrical machinery. However, IP6 is included in DIN 40050, which generally applies to electrical equipment.

© Siemens 2024

Technical specifications

Types of construction/mounting positions	Types of construction/mounting positions
IM B3	**IM B6**
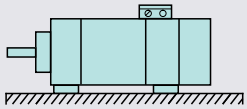	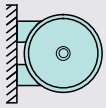
IM B7	**IM B8**
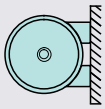	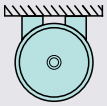
IM V6	**IM V5**
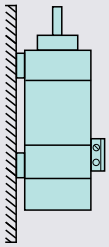	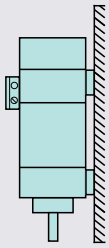
IM V35 [1]	**IM V15** [1]
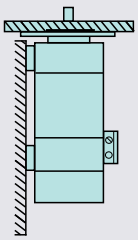	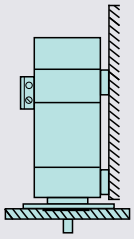
IM B35 [1]	**IM B5, IM B14**
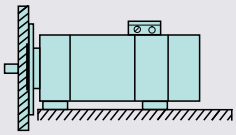	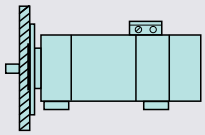
IM V3, IM V19	**IM V1, IM V18**
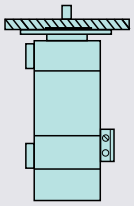	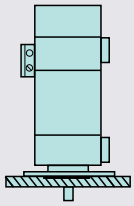

[1] Fixing on the flange and feet is necessary.

© Siemens 2024

Technical specifications

Radial eccentricity tolerance of the shaft to the housing axis for SIMOTICS M-1PH8 main motors
(referred to cylindrical shaft ends)

Shaft height	Tolerance N	Tolerance R	Tolerance SPECIAL
SH	mm (in)	mm (in)	mm (in)
80/100/132	0.05 (0.0020)	0.025 (0.0010)	0.01 (0.0004)
160/180/225	0.06 (0.0024)	0.03 (0.0012)	0.01/–/– (0.0004/–/–)
280	0.07 (0.0028)	0.035 (0.0014)	–

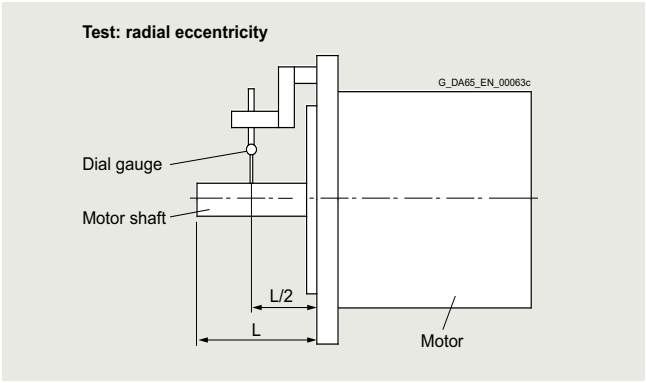

Concentricity and axial eccentricity tolerance of the flange surface with respect to the shaft axis of SIMOTICS M-1PH8 main motors
(based on the centering diameter of the mounting flange)

Shaft height	Tolerance N	Tolerance R	Tolerance SPECIAL
SH	mm (in)	mm (in)	mm (in)
80/100	0.1 (0.0039)	0.05 (0.0020)	0.03/0.04 (0.0012/0.0016)
132/160/180/225	0.125 (0.0049)	0.063 (0.0025)	0.04/0.04/–/– (0.0016/0.0016/–/–)
280	0.16 (0.0063)	0.08 (0.0031)	–

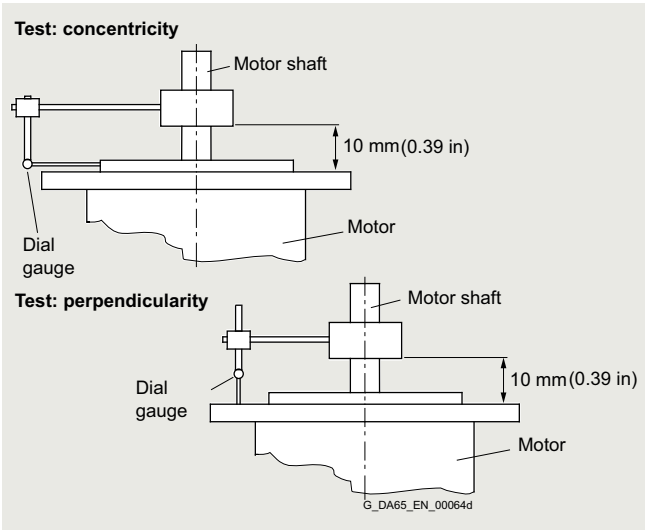

Vibration severity grades and vibration severity grade A according to IEC 60034-14 for SIMOTICS M-1PH8 main motors

SIMOTICS M-1PH8 motors comply with vibration severity grade A according to EN 60034-14 (IEC 600-34-14) as standard. The specified values refer only to the motor. The system vibration response depends on the conditions at the installation location and can result in higher vibration values at the motor.

As a general rule, high radial force load capacity is not compatible with high speed and high vibration quality. The reason for this is that the different applications require different bearings.

For SIMOTICS M-1PH8 motors, an acceptance test certificate with the actual measured vibration velocities can be ordered by specifying option B35.

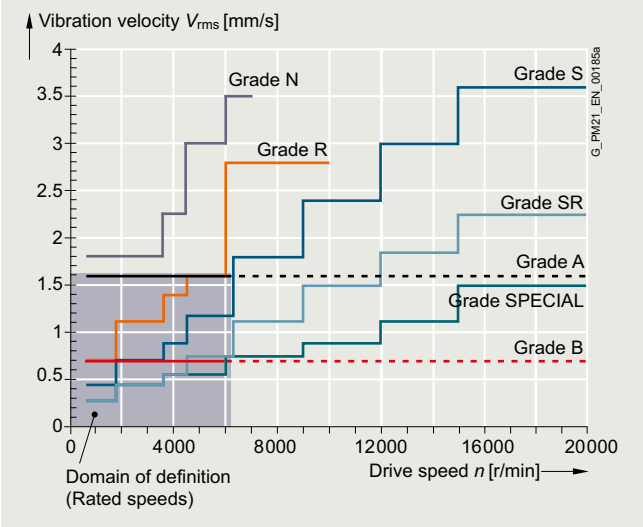

Vibration severity limit values for shaft heights 20 to 132

The motors maintain vibration severity grade A up to rated speed.

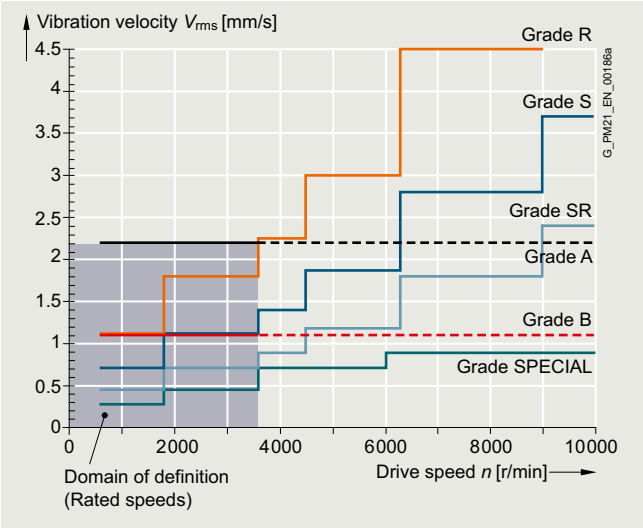

Vibration severity limit values for shaft heights 160 to 355

© Siemens 2024

Technical specifications

Balancing according to ISO 8821 for SIMOTICS M-1PH8 main motors

In addition to the balance quality of the motor, the vibration quality of motors with mounted belt pulleys and coupling is essentially determined by the balance quality of the mounted component.

If the motor and the mounted component are balanced separately before being assembled together, the balancing process of the belt pulley should be adapted to the balancing type of the motor. The following different balancing methods are used on motors of types SIMOTICS M-1PH8:

- Half-key balancing (an H is stamped on the shaft face)
- Full-key balancing (an F is stamped on the shaft face)
- Plain shaft end

In general, motors with a plain shaft are recommended for systems with the most stringent vibrational quality requirements. For full-key balanced motors, we recommend belt pulleys with two opposite keyways, but only one feather key in the shaft end.

Vibration stress, immitted vibration values for SIMOTICS M-1PH8 main motors and SIMOTICS T-1FW3 complete torque motors

The following maximum permissible limit value for vibration stress, but still retaining full functionality only applies to SIMOTICS T complete torque motors.

Vibration stress according to ISO 10816:

Vibration velocity V_{rms} in accordance with ISO 10816	max. 4.5 mm/s (0.18 in/s)
Vibration acceleration a_{peak} axial [1]	25 m/s² (82 ft/s²)
Vibration acceleration a_{peak} radial [1]	50 m/s² (164 ft/s²)

The following limits apply to all SIMOTICS M-1PH8 main motors for (immitted) vibration values introduced into the motor from outside:

Vibration frequency	Vibration values for shaft height 80 to shaft height 160	
< 6.3 Hz	Vibration displacement *s*	≤0.16 mm (0.006 in)
6.3 ... 250 Hz	Vibration velocity V_{rms}	≤4.5 mm/s (0.18 in/s)
> 250 Hz	Vibration acceleration *a*	≤10 m/s² (32.8 ft/s²)

Vibration frequency	Vibration values for shaft height 180 to shaft height 280	
< 6.3 Hz	Vibration displacement *s*	≤0.25 mm (0.099 in)
6.3 ... 63 Hz	Vibration velocity V_{rms}	≤7.1 mm/s (0.28 in/s)
> 63 Hz	Vibration acceleration *a*	≤4.0 m/s² (13.1 ft/s²)

The following maximum permissible radial vibration values apply to the SIMOTICS T-1FW3 torque motors in accordance with ISO 10816 [2]

Vibration frequency	Vibration values for 1FW3	
< 6.3 Hz	Vibration displacement *s*	≤0.16 mm (0.006 in)
6.3 ... 250 Hz	Vibration velocity V_{rms}	≤4.5 mm/s (0.18 in/s)
> 250 Hz	Vibration acceleration *a*	≤10 m/s² (32.8 ft/s²)

In addition, the following maximum permissible axial vibration values apply [2]

Vibration velocity	Vibration acceleration
V_{rms} = 4.5 mm/s (0.18 in/s)	a_{peak} = 2.25 m/s² (7.42 ft/s²)

Environmental conditions and installation height for naturally cooled and force-ventilated SIMOTICS M-1PH8 main motors

Operation without restriction: -15 °C to +40 °C (5 to 104 °F)

The rated power (rated torque) is applicable to continuous duty (S1) in accordance with EN 60034-1 at rated frequency, a coolant temperature of 40 °C (104 °F) and an installation altitude of up to 1000 m (3281 ft) above sea level.

SIMOTICS M-1FE./L-1FN3/T-1FW. motors have temperature class 155 (F) and are utilized to temperature class 155 (F).
SIMOTICS M-1PH8 motors are designed for temperature class 180 (H). [3]
For deviating conditions (ambient temperature > 40 °C (104 °F) or installation altitude > 1000 m (3281 ft) above sea level), you must define the permissible torque/power reduction from the following table.
Ambient temperature and installation altitude are rounded off to 5 °C and/or 500 m.

Coolant temperature for naturally cooled motors SIMOTICS T-1FW6 from -5 °C to +35 °C (23 °F to 95 °F).

Installation altitude above sea level	Coolant temperature (ambient temperature in °C)			
m (ft)	30 ... 40 °C (86 ... 104 °F)	45 °C (113 °F)	50 °C (122 °F)	55 °C [4] (131 °F)
1000 (3281)	1.00	0.96	0.92	0.87
1500 (4922)	0.97	0.93	0.89	0.84
2000 (6562)	0.94	0.90	0.86	0.82
2500 (8203)	0.90	0.86	0.83	0.78
3000 (9843)	0.86	0.82	0.79	0.75
3500 (11484)	0.82	0.79	0.75	0.71
4000 (13124)	0.77	0.74	0.71	0.67

[1] For motors with forced ventilation, the limit values for axial and radial acceleration are limited to 10 m/s² (32.8 ft/s²).

[2] Both values (vibration velocity and vibration acceleration) must be maintained at the same time.

[3] As a result of the design/version, the following motors have temperature class 155 (F):
1PH8107-1.F2/1PH8138-2/1PH8107-1.M2/1PH8164/1PH8166/1PH8168

[4] Only permissible when the flows from NDE → DE.

© Siemens 2024

Technical specifications

Duty types S1 and S6 in accordance with EN 60034-1

S1: Continuous duty

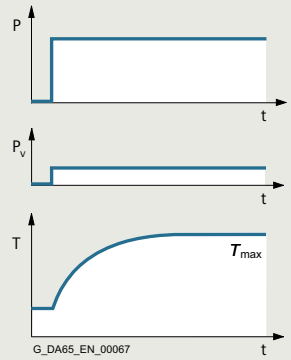

Duty cycle under constant load condition of sufficient duration to establish thermal equilibrium.

Designation: S1

Output specification (torque).

S6: Continuous duty with intermittent loading

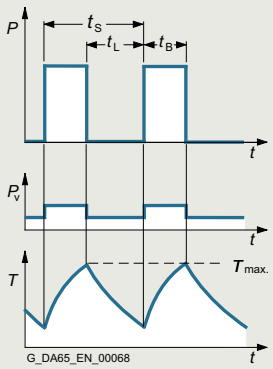

Duty cycle comprising a sequence of identical duty cycles, each of which consists of a period of constant load followed by an interval at no load. There are no de-energized intervals.

Designation:

e.g.: S6 - 40 %, 85 kW (114 HP)

$t_r = \frac{t_B}{t_B + t_L}$

t_s = 10 min

Rated torque

The torque supplied on the shaft is indicated in Nm (lb_f-ft) in the selection and ordering data.

$$M_N = 9.55 \times P_N \times \frac{1000}{n_N}$$

P_N Rated power in kW
n_N Rated speed in r/min
M_N Rated torque in Nm

$$M_N = P_N \times \frac{5250}{n_N}$$

P_N Rated power in hp
n_N Rated speed in r/min
M_N Rated torque in lb_f-ft

DURIGNIT IR 2000 insulation

The DURIGNIT IR 2000 insulation system consists of high-quality enamel wires and insulating materials in conjunction with solvent-free resin impregnation.

The insulating material system ensures that these motors will have a high mechanical and electrical stability, high service value, and a long service life.

The insulation system protects the winding to a large degree against aggressive gases, vapors, dust, oil, and increased air humidity. It can withstand the usual vibration stressing.

Characteristic curves

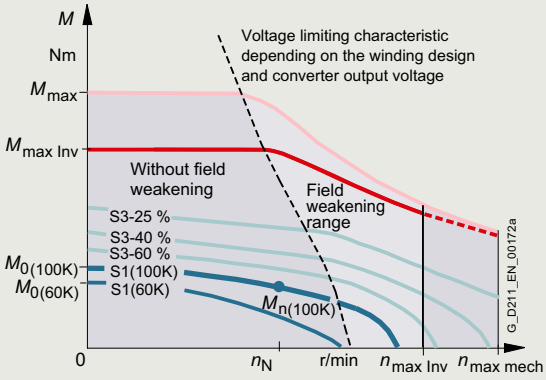

Torque characteristic of a synchronous motor operating on a converter with field weakening (example)

	Explanations
n_n	Rated speed
$n_{max\ Inv}$	Maximum permissible electric speed limit
$n_{max\ mech}$	Maximum permissible mechanical speed limit
M_0	Static torque
M_n	Rated torque at rated speed
$M_{max\ Inv}$	Achievable maximum torque with the recommended Motor Module
M_{max}	Maximum permissible torque

8

© Siemens 2024

Technical specifications

Motor protection

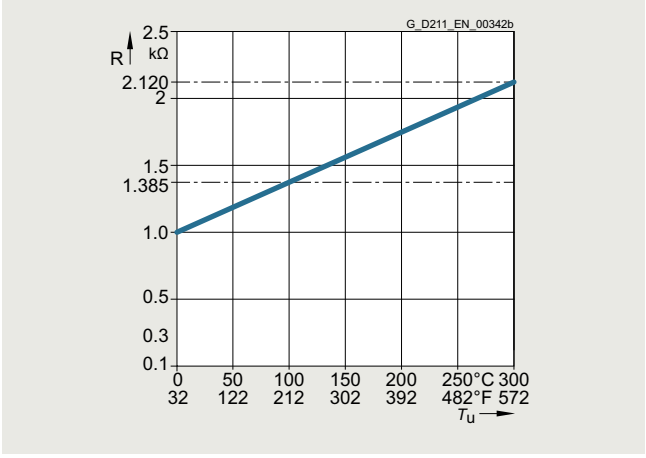

Motor protection for Pt1000 temperature sensor

The motor temperature is monitored using a Pt1000 temperature sensor integrated in the stator winding.

The Pt1000 has a linear thermal resistance characteristic. In addition, the Pt1000 has a low thermal capacity and good thermal contact with the motor winding (see characteristic).

Siemens converters calculate the motor temperature from the resistance of the temperature sensor.

The temperatures required for alarm and shutdown can be parameterized.

As standard, temperature sensors are evaluated in the SINAMICS S120 drive system.

Sensor Modules are used to evaluate the signals for SIMOTICS L-1FN3 and SIMOTICS T-1FW3:
SME120/SME125/TM120
(see SINAMICS S120 Equipment Manual).

If the motors are operated with converters that do not have a temperature sensor evaluation function, then the temperature can be evaluated using the external 3RS2600 temperature monitoring relay.

More information is provided in SiePortal:
www.siemens.com/sieportal

Paint finish for SIMOTICS M-1PH8 main motors

Motors without a paint finish have an impregnated resin coating. Motors with primer have corrosion protection.

All motors can be painted over with commercially available paints. Up to 2 additional paint coats are permissible.

SIMOTICS L-1FN3/T-1FW6 motors have no paint finish, no coating and should also not be painted over.

Version	Suitability of paint finish for climate group according to IEC 60721, Part2 – 1	
Paint finish	**Moderate** (expanded) for indoor and outdoor installation with roof protection	
	briefly	up to 150 °C (302 °F)
	continuously	up to 120 °C (248 °F)
Special paint finish	**Worldwide** (expanded) for outdoor installation	
	briefly	up to 150 °C (302 °F)
	continuously	up to 120 °C (248 °F)
	also	up to 1 % acid and alkali concentration in aggressive atmospheres or permanent wetness in protected rooms

Built-in encoder

The encoder system is not included in the scope of supply of the SIMOTICS motor series M-1FE, M-1PH2, L-1FN and T-1FW6.

SIMOTICS M-1PH8 main motors and T-1FW3 complete torque motors can be ordered without encoders or with built-in encoders. For integrated encoder systems, a distinction can be made between an encoder with and without a DRIVE-CLiQ interface.

Built-in encoder systems without DRIVE-CLiQ interface

For motors without an integrated DRIVE-CLiQ interface, the analog encoder signal in the drive system is converted into a digital signal. For these motors and external encoders, the encoder signals must be connected to SINAMICS S120 via Sensor Modules.

Built-in encoder systems with DRIVE-CLiQ interface

For motors with integrated DRIVE-CLiQ interface, the analog encoder signal is internally converted into a digital signal. No further conversion of the encoder signal in the drive system is required. The motor-internal encoders are the same encoders that are used for motors without a DRIVE-CLiQ interface. Motors with a DRIVE-CLiQ interface simplify commissioning and diagnostics, for example, as the encoder system is identified automatically.

The different encoder types, incremental, absolute or resolver, are uniformly connected with one type of MOTION-CONNECT DRIVE-CLiQ cable.

© Siemens 2024

Technical specifications

Short designations for the encoder systems

The first letters of the short designation define the encoder type. This is followed by the resolution in signals per revolution if S/R is specified (for encoders without DRIVE-CLiQ interface) or in bits if DQ or DQI is specified (for encoders with DRIVE-CLiQ interface).

Type	Resolution/interface	
AM AS IC IN HTL	xxxxS/R	Encoder without DRIVE-CLiQ interface Resolution = xxxx signals per revolution
AM AS IC IN R	xxDQ, xxDQI or xxDQC	Encoder with DRIVE-CLiQ interface Resolution = xx bits
AM	Multi-turn absolute encoder	
AS	Single-turn absolute encoder	
IC	Incremental encoder sin/cos with commutation position C and D tracks	
IN	Incremental encoder sin/cos without commutation position	
HTL	Incremental encoder with HTL signal	
R	Resolver	

Overview of motor encoder systems

Encoder without DRIVE-CLiQ interface			Encoder with DRIVE-CLiQ interface			Absolute position within one revolution (single-turn)	Absolute position over 4096 revolutions (multi-turn)	For use in safety applications
	Identification letter in the motor article number			Identification letter in the motor article number				
Encoder	1FW3	1PH8	Encoder	1FW3	1PH8			
AM2048S/R	E [1]	E	AM22DQ	F	F	Yes	Yes	Yes
AS2048S/R	N	–	AS22DQ	P	–	Yes	No	No
IC2048S/R	A	M	IC22DQ	D	D	No	No	Yes [1]
IN 512S/R	T	T	IN 20DQ	U	U	No	No	Yes
IN 256S/R	C	C	IN 19DQ	S	S	No	No	Yes
HTL1024S/R	–	H	–	–	–	No	No	No
HTL2048S/R	–	J	–	–	–	No	No	No
Resolver p=3	S	–	R15DQ	U	–	No	No	No
Resolver p=4	S	–	R15DQ	U	–	No	No	No

Not every encoder is available for every motor frame size.

– Not possible

[1] Not for 1FW3 motors

© Siemens 2024

Technical specifications

Multi-turn absolute encoder

This encoder outputs an absolute angular position between 0° and 360° in the specified resolution. An internal measuring gearbox enables it to differentiate 4096 revolutions.

For a ball screw, for example, the absolute position of the slide can be determined over a longer distance.

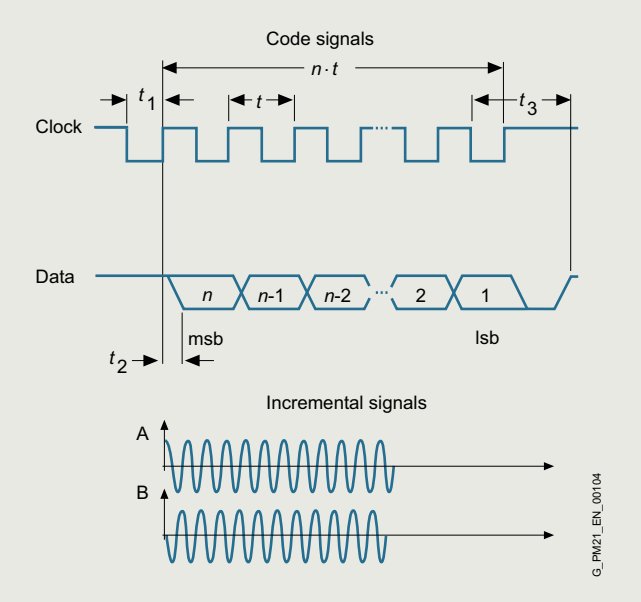

Multi-turn absolute encoder

Single-turn absolute encoder

This encoder outputs an absolute angular position between 0° and 360° in the specified resolution. In contrast to the multi-turn absolute encoder, it has no measuring gearbox and can therefore only supply the position value within one revolution. It does not have a traversing range.

Absolute encoders without DRIVE-CLiQ interface	
AM2048S/R encoder	Absolute encoder 2048 S/R, 4096 revolutions, multi-turn, with EnDat interface
AS2048S/R encoder	Absolute encoder 2048 S/R, single-turn
Absolute encoders with DRIVE-CLiQ interface	
AM22DQ encoder	Absolute encoder, 22-bit (resolution 4194304, encoder-internal 2048 S/R) + 12-bit multi-turn (traversing range 4096 revolutions)
AS22DQ encoder	Absolute encoder 22-bit single-turn (resolution 4194304)

Absolute encoders without DRIVE-CLiQ interface	
Supply voltage	5 V
Absolute position interface via EnDat 2.1	
• Traversing range (multi-turn) [1]	4096 revolutions
Incremental signals (sinusoidal, 1 V_{pp})	
• Signals per revolution	2048/512/32/16
Absolute encoders with DRIVE-CLiQ interface	
Supply voltage	24 V
Absolute position via DRIVE-CLiQ	
• Resolution within one revolution	$2^{24}/2^{22}/2^{20}/2^{16}/2^{15}$ bit
• Traversing range (multi-turn) [1]	4096 revolutions

[1] Not for absolute encoder, single-turn AS.

© Siemens 2024

Technical specifications

Incremental encoder

This encoder senses relative movements and does not supply absolute position information. In combination with evaluation logic, a zero point can be determined using the integrated reference mark, which can be used to calculate the absolute position.

IC/IN incremental encoder (sin/cos)

The encoder outputs sine and cosine signals. These can be interpolated using evaluation logic (usually 2048 points) and the direction of rotation can be determined.

In the version with DRIVE-CLiQ interface, this evaluation logic is already integrated in the encoder.

Commutation position

The position of the rotor is required for commutation of a synchronous motor. Encoders with commutation position (also called C and D tracks) detect the angular position of the rotor.

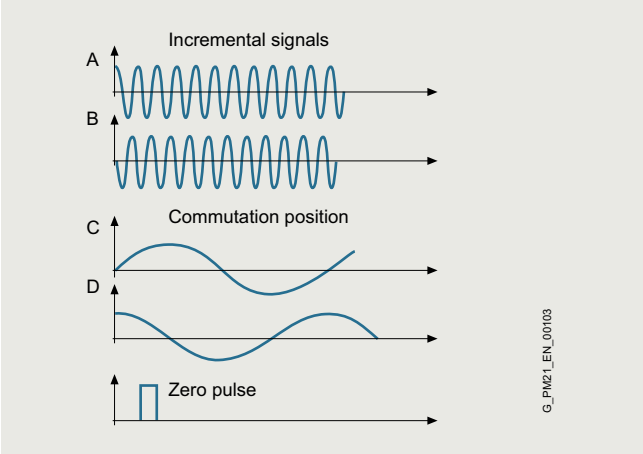

IC/IN incremental encoder (sin/cos), commutation position only for IC

HTL incremental encoder

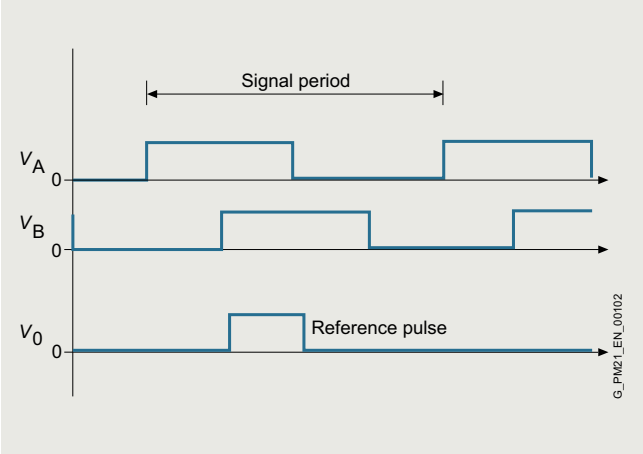

HTL incremental encoder

Incremental encoders without DRIVE-CLiQ interface	
IC2048S/R encoder	Incremental encoder sin/cos 1 V_{pp} 2048 S/R with C and D tracks
IN512S/R encoder	Incremental encoder sin/cos 1 V_{pp} 512 S/R without C and D tracks
IN256S/R encoder	Incremental encoder sin/cos 1 V_{pp} 256 S/R without C and D tracks
HTL IC2048S/R encoder	HTL 2048 S/R incremental encoder
HTL IN1024S/R encoder	HTL 1024 S/R incremental encoder
Incremental encoders with DRIVE-CLiQ interface [1]	
IC22DQ encoder	Incremental encoder 22-bit (resolution 4194304, encoder-internal 2048 S/R) + commutation position 11-bit

IC/IN incremental encoder (sin/cos) without DRIVE-CLiQ interface	
Supply voltage	5 V
Incremental signals per revolution	
• Resolution (sin/cos)	2048
• Commutation position (for IC only)	1 sin/cos
• Reference signal	1
IC/IN incremental encoder (sin/cos) with DRIVE-CLiQ interface	
Supply voltage	24 V
Incremental signals per revolution	
• Resolution	2^{22} bit
• Commutation position in bit (for IC only)	11
• Reference signal	1
HTL incremental encoder without DRIVE-CLiQ interface	
Supply voltage	10 ... 30 V
Incremental signals per revolution	
• Resolution (HTL)	2048/1024
• Reference signal	1

[1] Instead of the IC22DQ incremental encoder, the SIMOTICS S-1FT7 is equipped with the single-turn AS24DQI absolute encoder.

© Siemens 2024

Technical specifications

Resolver

The number of sine and cosine periods per revolution corresponds to the number of pole pairs of the resolver. In the case of a 2-pole resolver, the evaluation electronics may output an additional zero pulse per encoder revolution. This zero pulse ensures a unique assignment of the position information in relation to an encoder revolution. A 2-pole resolver can therefore be used as a single-turn encoder.

2-pole resolvers can be used for motors with any number of poles. For multi-pole resolvers, the number of motor pole pairs and the resolver are always identical. so that the resolution is correspondingly higher than with 2-pole resolvers.

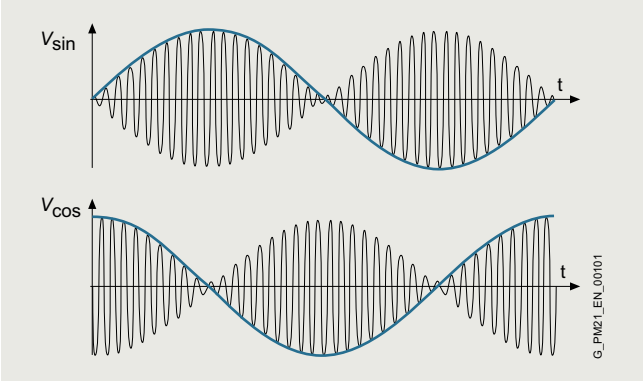

Resolvers without DRIVE-CLiQ interface [1]	
Resolver p = 1	2-pole resolver
Resolver p = 3	6-pole resolver
Resolver p = 4	8-pole resolver
Resolvers with DRIVE-CLiQ interface	
R15DQ	Resolver 15-bit (resolution 32768, internal, multi-pole)

Resolvers without DRIVE-CLiQ interface	
Excitation voltage, rms	2 ... 8 V
Excitation frequency	5 ... 10 kHz
Output signals	$U_{\text{sine track}} = r \times U_{\text{excitation}} \times \sin \alpha$ $U_{\text{cosine track}} = r \times U_{\text{excitation}} \times \cos \alpha$ $\alpha = \arctan (U_{\text{sine track}}/U_{\text{cosine track}})$
Transmission ratio	$r = 0.5 \pm 5\%$
Resolvers with DRIVE-CLiQ interface	
Supply voltage	24 V
• Resolution	$2^{15}/2^{14}$ bit

[1] Output signals:
2-pole resolver: 1 sin/cos signal per revolution
6-pole resolver: 3 sin/cos signals per revolution
8-pole resolver: 4 sin/cos signals per revolution

© Siemens 2024

Notes

© Siemens 2024

SIMOTICS S servomotors

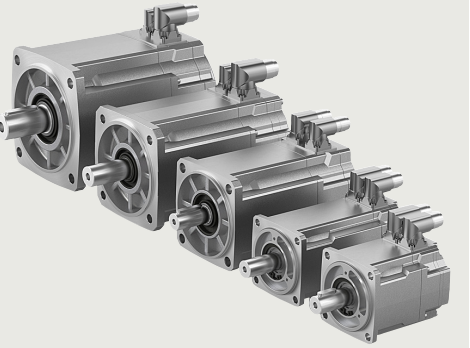

8.1/2 Technical information
8.1/6 SIMOTICS S-1FT7 synchronous motors
8.1/7 Technical specifications
8.1/10 Compact – natural cooling
8.1/18 Compact – forced ventilation
8.1/20 Compact – water cooling
8.1/24 High Dynamic – forced ventilation/ water cooling
8.1/26 Built-in holding brakes
8.1/27 Dimensional drawings

8.1/33 SIMOTICS S geared motors for SINAMICS S120
Planetary gearbox SP+ series
8.1/38 Dimensional drawings

8.1/40 SIMOTICS S-1FT2 servomotors
8.1/41 Technical specifications and dimensional drawings
8.1/56 Selection and ordering data

8.1/60 SIMOTICS S-1FT2 servo planetary geared motors
8.1/65 General technical specifications
8.1/66 Coaxial geared motors
8.1/66 Coaxial gearbox type NRB
8.1/72 Coaxial gearbox type NRK
8.1/76 Coaxial gearbox type NLC
8.1/80 Angular geared motors
8.1/80 Angular gearbox type NRBW
8.1/86 Angular gearbox type NRKW
8.1/90 Angular gearbox type NLCW

In addition, the Siemens Product Configurator can be used on the internet at the following address:
www.siemens.com/spc
See under:
Motors →
Motors for Motion Control →
SIMOTICS S servomotors

© Siemens 2024

Technical specifications

Regulations, standards, and specifications

The motors comply with the appropriate standards and regulations, see table below.

As a result of the fact that in many countries the national regulations have been completely harmonized with the international IEC 60034-1 recommendation, there are no longer any differences with respect to coolant temperatures, temperature classes and temperature rise limits.

General specifications for rotating electrical machines	IEC 60034-1
Terminal designations and direction of rotation for electrical machines	IEC 60034-8
Types of construction of rotating electrical machines	IEC 60034-7
Cooling methods of rotating electrical machines	IEC 60034-6
Degrees of protection of rotating electrical machines	IEC 60034-5
Vibration severity of rotating electrical machines	IEC 60034-14
Noise limit values for rotating electrical machines	IEC 60034-9
Cylindrical shaft ends for electrical machines	DIN 748-3/IEC 60072-1

SIMOTICS S motors are UL approved by Underwriters Laboratories Inc. and have the "UL Recognized Component" test mark. This is used for components that are part of a larger product or system. This confirms compliance with the corresponding American and Canadian regulations, and allows the North American market to be accessed.

SIMOTICS S motors are certified to comply with the relevant EC guidelines 2006/95/EC and 2014/35/EU as well as the relevant standards EN 60034-1:2010, EN 60204-1:2006. By applying the CE mark to the product, Siemens AG confirms this for the product, and secures the free movement of goods within the European Union.

The SIMOTICS S servomotors are usually identified using a second nameplate.

Degree of protection acc. to IEC 60034-5

A suitable degree of protection must be selected according to the operating and environmental conditions to protect the motor against damage caused by the ingress of liquids, as well as dust and foreign bodies.

The protection class designation according to IEC 60034-5 is derived from the abbreviation IP (for International Protection) and two code numbers:

First code number

6: Protection against dust ingress and complete protection against touching

Second code number

4: Protection against splashwater from any direction

5: Protection against jet water from any direction

7: Protection against short-term immersion in water

Recommended degrees of protection for three-phase motors

When cooling lubricants are used, protection against water alone is inadequate. The IP rating should only be considered as a guideline in this case. The motors may have to be protected by suitable covers. When selecting the motor degree of protection, the motor shaft must be equipped with a suitable seal. It must be avoided that liquid accumulates on the flange when the motor is mounted with the shaft end facing upwards (IM V3).

The following table provides support when selecting the appropriate degree of protection for motors.

Effect	General workshop environment	Water/ general cooling lubricant (95 % water, 5 % oil)
Dry	IP64	–
Humid/moist environment	–	IP64
Mist	–	IP65
Spray	–	IP65
Jet	–	IP67
Splash/ brief immersion/ constant immersion	–	IP67

© Siemens 2024

Technical specifications

Type of construction, installation position acc. to IEC 60034-7

The SIMOTICS S-1FT2 motors have an IM B5 type of construction. They may also be used in mounting positions IM V1 and IM V3.

Code 1	IM B5	IM V1	IM V3
Code 2	IM 3001	IM 3011	IM 3031
	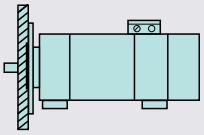	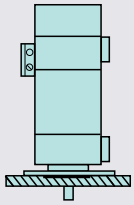	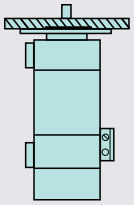
	Horizontal flange mounting	Flange mounting, output shaft pointing vertically downwards	Flange mounting, output shaft pointing vertically upwards

Shaft and flange accuracy acc. to IEC 60072-1 or DIN 429955

Radial eccentricity tolerance of shaft in relation to housing axis

(referred to cylindrical shaft ends)

Shaft end ØD x L mm (in)	acc. to IEC 60072-1 or Tolerance "N" acc. to DIN 429955 µm	Tolerance "R" acc. to DIN 429955 µm
8 × 25 (0.31 × 0.98)	30	15
11 × 23 (0.43 × 0.91)	35	18
14 × 30 (0.55 × 1.18)		
19 × 40 (0.75 × 1.57)	40	21
24 × 50 (0.94 × 1.97)		
32 × 58 (1.26 × 2.28)	50	25
38 × 80 (1.50 × 3.15)		
48 × 82 (1.89 × 3.23)		

Concentricity tolerance of the centering ring and axial eccentricity tolerance of the flange surface referred to the motor shaft

Centering diameter mm (in)	acc. to IEC 60072-1 or Tolerance "N" acc. to DIN 429955 µm	Tolerance "R" acc. to DIN 429955 µm
30 (1.18)	60	30
40 (1.57)	80	40
50 (1.97)		
60 (2.36)		
70 (2.76)		
80 (3.15)		
95 (3.74)		
110 (4.33)	100	50
130 (5.12)		
180 (7.09)		
250 (9.84)	125	63

Test: radial eccentricity

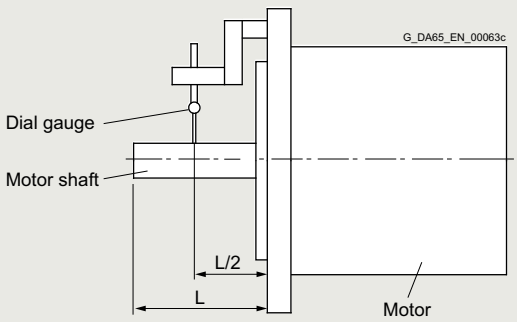

Test: concentricity

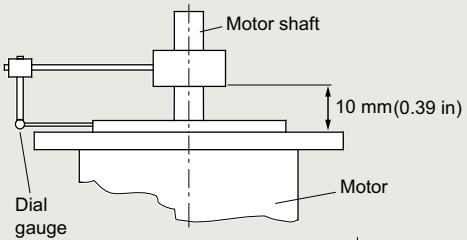

Test: perpendicularity

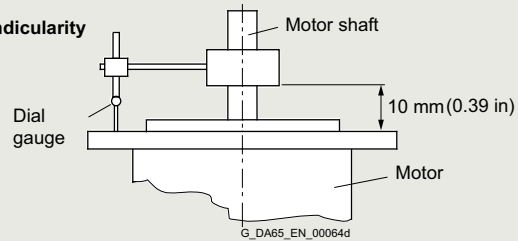

© Siemens 2024

Technical specifications

Vibration severity grades and vibration severity grades A and B according to EN 60034-14

The vibration severity is the root-mean square value (rms value) of the vibration velocity (frequency range from 10 Hz to 1000 Hz). The vibration severity is measured using electrical measuring devices according to DIN 45666.

The specified values refer only to the motor. The system vibration behavior as a result of the installation can increase these values.

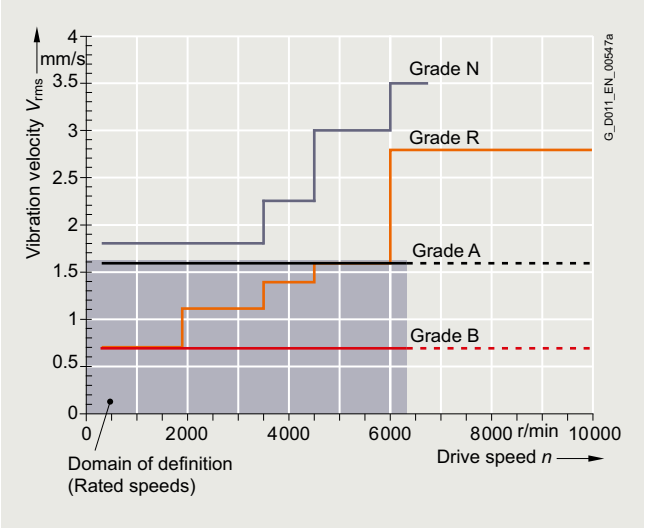

Vibration severity limit values

The speeds of 1800 r/min and 3600 r/min and the corresponding limits are specified in accordance with IEC 60034-14.
The speeds of 4500 r/min and 6000 r/min and the specified values have been determined by the motor manufacturer.

The motors maintain vibration severity grade A up to the rated speed.

Balancing in accordance with ISO 21940-32

Apart from the balance quality of the motor, the vibrational quality of motors with attached belt pulleys is mainly determined by the balance state of the mounted component. If the motor and the mounted component are balanced separately before being assembled together, the balancing process of the belt pulley should be adapted to the balancing type of the motor.

The motors with feather key are always half-key balanced. In general, motors with a plain shaft are recommended for systems with the most stringent vibrational quality requirements.

Vibration stress, immitted vibration values

To function correctly and to ensure the bearing lifetime, the requirements of environmental class 3M8 (according to EN 60721-3-3 Table 6) must be complied with. The following limits are valid for (immitted) vibration values introduced into the motor from outside:

- Vibration velocity V_{rms} in accordance with ISO 10816, max. 4.5 mm/s (0.18 in/s)
- Vibration acceleration a_{peak}:

Vibration acceleration a_{peak}:		
	1F□7	1F□2
Axial	25 m/s² (82 ft/s²)	50 m/s² (164 ft/s²)
Radial	50 m/s² (164 ft/s²)	50 m/s² (164 ft/s²)

During transport, the motors withstand single shocks (6 ms) of up to 250 m/s². Different values may apply to motors with mounted planetary gearboxes. More information is provided in the Configuration Manual of the particular product.

Ambient temperature and installation altitude

Operating range without restrictions:

Temperature range from -15 °C to +40 °C (5.0 °F to 104 °F), installation altitude up to 1000 m (3281 ft).

If deviating conditions are encountered, the S1 characteristic of the motor must be adapted with regard to speed and torque.

The reduced S1 characteristic should be calculated according to the following formula:
$S1_{red}(n) = x_D \bullet S1_{40°C;\ 1000m} \bullet (n / x_D)$

Factors x_D for derating depending on installation altitude and ambient temperature. (intermediate values should be interpolated)

Motor	Installation altitude above sea level	Ambient temperature in °C (°F)				
	m (ft)	30 (86)	40 (104)	45 (113)	50 (122)	55 (131)
1F□7	1000 (3281)	1.05	1	0.97	0.95	0.92
	2000 (6562)	1	0.95	0.92	0.89	0.87
	3000 (9843)	0.95	0.89	0.87	0.84	0.81
	4000 (13124)	0.89	0.84	0.81	0.77	0.74
1F□2	1000 (3281)	1.05	1	0.95	0.89	0.84
	2000 (6562)	1	0.95	0.86	0.8	0.73
	3000 (9843)	0.95	0.89	0.76	0.69	0.62
	4000 (13124)	0.89	0.84	0.65	0.57	0.47

Factors for derating depending on installation altitude and ambient temperature

Encoder systems

For motors with integrated DRIVE-CLiQ interface, the encoder signal is already digitally processed in the motor, and then transferred quickly and without loss to the drive system. Motors with DRIVE-CLiQ interface simplify commissioning and diagnostics by automatically identifying the motor parameters and the encoder system.
Motors without DRIVE-CLiQ interface are intended for converters with analog encoder evaluation (e.g. from third-party manufacturers).

Single-turn absolute encoder

This encoder outputs an absolute angular position between 0° and 360° in the specified resolution. In contrast to the multi-turn absolute encoder, it does not have a revolution counter, and can therefore only supply the position value within one revolution. It does not have a traversing range.

Multi-turn absolute encoder

This encoder outputs an absolute angular position between 0° and 360° in the specified resolution. It can also count 4096 revolutions. For a ball screw, for example, the absolute position of the slide can be determined over a longer distance.

Incremental encoder

This encoder senses relative movements and does not supply absolute position information. In combination with evaluation logic, a zero point can be determined using the integrated reference mark, which can be used to calculate the absolute position.

Resolver

A resolver provides sin/cos signal periods per motor revolution according to its number of pole pairs. 2-pole resolvers can be used for motors with any number of poles. For multi-pole resolvers, the number of motor pole pairs and the resolver are always identical.

© Siemens 2024

Technical specifications

Short designation of the encoder systems

The first letters of the short designation define the encoder type. This is followed by the encoder resolution.

In the case of DRIVE-CLiQ encoders, the information is given in bits with the trailing identifier "DQ", "DQI" or "DQC".

For encoders without a DRIVE-CLiQ interface, the analog resolution follows in signals per revolution with the identifier "S/R".

Encoder type	
AM	Multi-turn absolute encoder
AS	Single-turn absolute encoder
IC	Incremental encoder sin/cos with commutation position (C/D track)
R	Resolver
Encoder resolution	
□□DQ, □□DQI, □□DQC	For encoders with DRIVE-CLiQ interface Resolution = □□ bit $=2^{□□}$ signals per revolution
□□□□S/R	For encoders without DRIVE-CLiQ interface Resolution = □□□□ signals per revolution

Paint finish

All motors can be painted over with commercially available paints. Up to 2 additional paint coats are permissible.

Holding brake

Many drives require a holding brake with an EMERGENCY STOP function for safety-related reasons or to comply with process requirements.

The brakes that are used operate according to the closed-circuit principle. A spring or permanent magnet exerts a tensile force on the brake armature disk, i.e. in a zero current state, the brake is closed and the motor shaft is held.

An electric current that flows through a coil generates an opposing field that counteracts the force effect of the spring or permanent magnet and releases or holds open the brake.

Only a limited number of braking operations can be performed for an EMERGENCY STOP or voltage failure without causing excessive wear on the holding brake.

The holding brake is not an operational brake.

Regular dynamic braking leads to increased wear and premature brake failure. In order to ensure the functionality and specification of the brake, neither the total operating energy nor the maximum operating energy per braking operation may be exceeded.

The brake control is already fully integrated into the SINAMICS S120 converter system, so that an external circuit is not necessary.

© Siemens 2024

SIMOTICS S-1FT7

Overview

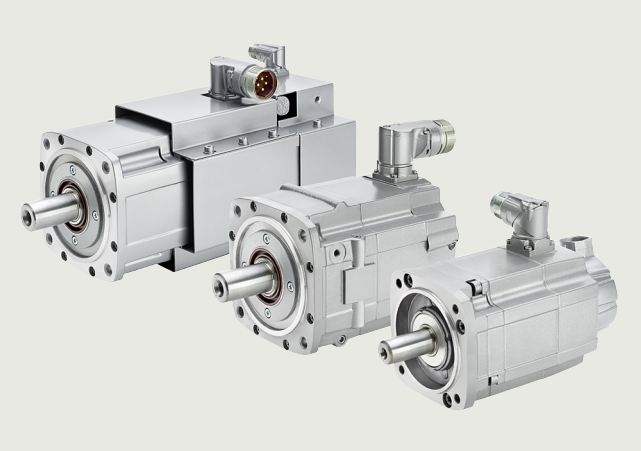

SIMOTICS S-1FT7 motors, forced ventilation, water cooling and natural cooling

SIMOTICS S-1FT7 servomotors are permanent-magnet synchronous motors with very compact dimensions and an optically attractive design.

S-1FT7 motors fulfill the highest standards in terms of dynamic response, speed control range, shaft and flange accuracy. They are equipped with state-of-the-art encoder technology and optimized for operation with our fully digital drive and control systems.

Natural cooling, forced ventilation or water cooling are available as cooling methods. For natural cooling, heat is dissipated through the surface of the motor, while for forced ventilation, heat is dissipated using mounted fans. Maximum cooling, and thus maximum power can be achieved using water cooling.

Configuration

You can find the Configuration Manual for SIMOTICS S-1FT7 for SINAMICS S120 at:

https://support.industry.siemens.com/cs/ww/en/view/109482538

Characteristic curves

Characteristics for the SIMOTICS motors are available via selectors through to the exact article number with the Siemens Product Configurator.

The Siemens Product Configurator can be accessed without having to register or log in:

www.siemens.com/spc

→ SIMOTICS S-1FT7 in the SPC

Dimensional drawings

Dimensional drawings for SIMOTICS motors are provided in the Siemens Product Configurator.

The Siemens Product Configurator can be accessed without having to register or log in:

www.siemens.com/spc

→ SIMOTICS S-1FT7 in the SPC

Benefits

- Excellent dynamic response over a wide speed range thanks to high overload capability ~ 4 × M_0 with natural cooling
- Wide speed control range
- High degree of ruggedness with respect to vibration and shock loads thanks to vibration-isolated encoder mounting
- High degree of protection – permits operation even under challenging ambient conditions
- Quick and easy mounting due to cross-profile (up to SH 100) and rotatable connectors with quick-release locks
- Zero-backlash holding brake
- Extremely high efficiency

SIMOTICS S-1FT7 Compact motors

S-1FT7 Compact motors have a low torque ripple so that they are ideal for use in machine tool applications that require extremely high surface quality and optimum machining results. Their compact dimensions permit mounting in areas where space is restricted.

SIMOTICS S-1FT7 High Dynamic motors

S-1FT7 High Dynamic motors have very low rotor moments of inertia to achieve extremely good dynamic response and very short cycle times. The motors are available with forced ventilation or water cooling as cooling methods and have high continuous output ratings as a result.

Application

- High performance machine tools
- Machines with high requirements regarding dynamic response and precision, e.g.:
  - Packaging machines
  - Foil drawing systems
  - Printing machines
  - Handling equipment

More information

Some SIMOTICS S-1FT7 Compact motors are available as core types. These core types can be express-delivered as replacement motors in the event of plant outages and offer the advantage of a quicker spare parts supply. This is the reason that core types should be used whenever possible when configuring.

The selection and ordering data for SINAMICS S120 Motor Modules are based on the booksize format by way of example. Other formats are also possible. The SIZER engineering tool is available in the TIA Selection Tool for detailed configuration.

More information and download:

www.siemens.com/tst

© Siemens 2024

Technical specifications

General technical specifications

SIMOTICS S-1FT7 Compact/S-1FT7 High Dynamic	
Motor type	Permanent-magnet synchronous motor
Cooling	Natural cooling, forced ventilation, water cooling
Temperature monitoring	Temperature sensor in the stator winding
Type of construction according to EN 60034-7 (IEC 60034-7)	IM B5 (IM V1, IM V3)
Degree of protection according to EN 60034-5 (IEC 60034-5)	IP64, optional IP65, optional IP67
Shaft end according to DIN 748-3 (IEC 60072-1)	Plain shaft, optional feather key and keyway (half-key balancing)
Shaft and flange accuracy according to DIN 42955 (IEC 60072-1)	Tolerance N optional tolerance R in each case for radial eccentricity of the shaft end, concentricity of the centering ring, and axial eccentricity of the mounting flange to the axis of the shaft end
Vibration severity grade according to EN 60034-14 (IEC 60034-14)	Grade A, optional, Grade R is maintained up to the rated speed
Sound pressure level L_{pA} (1 m), max. according to EN ISO 1680 tolerance + 3 dB(A)	
Natural cooling/water cooling	
1FT703 ... 1FT706	65 dB(A)
1FT708 ... 1FT713	70 dB(A)
Forced ventilation	
1FT708 ... 1FT713	73 dB(A)
Connection	Connectors for signals and power, rotatable
Color of the paint finish	Pearl dark grey, similar to RAL 9023
Holding brake	optional integrated holding brake
Certificate of suitability	cURus, CE, EAC, CEL
Encoder system with DRIVE-CLiQ	
AS24DQI	Absolute encoder single-turn, 24-bit
AM24DQI	Absolute encoder 24-bit + 12-bit multi-turn
Encoder system without DRIVE-CLiQ	
IC2048S/R	Incremental encoder sin/cos 1 V_{pp} 2048 S/R with C and D tracks
AM2048S/R	Absolute encoder 2048 S/R, 4096 revolutions multi-turn

S/R = signals/revolution

© Siemens 2024

Options

Order code	Description
J..	Mounting SP+ planetary gearbox (See SIMOTICS geared motors)
K20	Reinforced bearing (information about validity and specifications can be found in the latest Configuration Manual)
L03	Version for increased vibration stress (information about validity and specification can be found in the latest Configuration Manual)
N05	Alternative shaft geometry
N16	Version for increased chemical resistance
N40	Stainless steel shaft and coating for increased chemical resistance (information about validity and specification can be found in the latest Configuration Manual)
Q12	Sealing air connection (Only in conjunction with IP67 degree of protection. Not in conjunction with terminal box.)
Q13	Customer-specific additional seal, encoder flange, An encoder cannot be replaced in the field (information regarding the validity and specification in the current Configuration Manual)
Y84	Customer specifications on rating plate (max. 30 characters) [1]
	Paint finish
K23	Special paint finish for "Worldwide" climate group: Primer and paint finish in pearl dark grey, similar to RAL 9023
K23+X..	Special paint finish for "Worldwide" climate group: Primer and paint finish can be selected from X01 to X09
K24	Primer (unpainted)
X01	Paint finish jet black, matt RAL 9005
X02	Paint finish cream white RAL 9001
X03	Paint finish reseda green RAL 6011
X04	Paint finish pebble gray RAL 7032
X05	Paint finish sky blue RAL 5015
X06	Paint finish light ivory RAL 1015
X08	Paint finish white aluminum
X09	Paint finish anthracite, similar to RAL 7016

The paint finish in standard and special colors meets the requirements for environmental conditions of climate class 3K4 according to IEC 60721-3-3 with the exception of the influencing variables "low air temperature", "condensation" and "low air pressure".

-Z must be added to the article number to order a motor with options.

[1] Additional plain text required.

© Siemens 2024

Options

N05
Alternative shaft geometry

The following versions are delivered for shaft ends with smaller dimensions:

- 1FT7034-5A.71-.... /1FT7042-5A.71-....
- 1FT7062-5A.71-.... /1FT7064-5A.71-....
- 1FT7082-5A.71-.... /1FT7084-5A.71-.... /1FT7086-5A.71-....
- 1FT7102-5A.71-.... /1FT7105-5A.71-.... /1FT7108-5A.71-....

Shaft dimensions (diameter × length) according to shaft height (SH):

- SH 36: 11 × 23 mm (0.43 × 0.91 in)
- SH 48: 14 × 30 mm (0.55 × 1.18 in)
- SH 63: 19 × 40 mm (0.75 × 1.57 in)
- SH 80: 24 × 50 mm (0.94 × 1.97 in)
- SH 100: 32 × 58 mm (1.26 × 2.28 in)

N16
Version for increased chemical resistance

Additional information is provided in the current Configuration Manual.

Option N16 is available only for naturally cooled and water-cooled SIMOTICS S-1FT7 motors with the following encoders:

- Encoder AS24DQI (DRIVE-CLiQ absolute encoder 24 bit single-turn)
- Encoder AM24DQI (DRIVE-CLiQ absolute encoder 24 bit + 12 bit multi-turn)
- Encoder AM2048S/R (absolute encoder 2048 S/R, 4096 revolutions multi-turn, with EnDat interface)

Option N16 is only available for motors with rotatable connector (connector sizes 1 and 1.5).

Option N16 is not available for SIMOTICS S-1FT7 motors SH 132.

© Siemens 2024

Selection and ordering data

Rated speed	Shaft height	Rated power	Static torque	Rated torque	Rated current	**SIMOTICS S-1FT7 synchronous motors Compact**	Number of pole pairs	Moment of inertia Rotor (without brake)	Weight (without brake)
n_N	SH	P_N at ΔT=100 K	M_0 at ΔT=100 K	M_N at ΔT=100 K	I_N at ΔT=100 K	Core type	p	J	m
r/min		kW (hp)	Nm (lb_f-ft)	Nm (lb_f-ft)	A	Article No.		10^{-4} kgm^2 (10^{-3} lb_f-in-s^2)	kg (lb)
SIMOTICS S-1FT7 Compact for DC link voltages 510 ... 720 V DC – natural cooling									
2000	100	5.03 (6.75)	30 (22.1)	24 (17.7)	10	**1FT7102-1AC7■-1 ■ ■ 1**	5	91.4 (80.9)	26.1 (57.6)
		7.96 (10.67)	50 (36.9)	38 (28.0)	15	**1FT7105-1AC7■-1 ■ ■ 1**	5	178 (158)	44.2 (97.5)
3000	48	1.35 (1.81)	5 (3.69)	4.3 (3.2)	2.6	**1FT7044-1AF7■-1 ■ ■ 1**	3	5.43 (4.81)	7.2 (15.9)
	63	1.7 (2.3)	6 (4.43)	5.4 (4.0)	3.9	**1FT7062-1AF7■-1 ■ ■ 1**	5	7.36 (6.51)	7.1 (15.7)
		2.39 (3.20)	9 (6.64)	7.6 (5.6)	5.2	**1FT7064-1AF7■-1 ■ ■ 1**	5	11.9 (10.5)	9.7 (21.4)
	80	3.24 (4.34)	13 (9.59)	10.3 (7.6)	6.6	**1FT7082-1AF7■-1 ■ ■ 1**	5	26.5 (23.5)	14 (30.9)
		4.56 (6.11)	20 (14.8)	14.5 (10.7)	8.5	**1FT7084-1AF7■-1 ■ ■ 1**	5	45.1 (39.9)	20.8 (45.9)
		5.65 (7.58)	28 (20.7)	18 (13.3)	11	**1FT7086-1AF7■-1 ■ ■ 1**	5	63.6 (56.3)	27.5 (60.6)
4500	80	4.82 (3.56) [1]	20 (14.8)	11.5 (8.48) [1]	10.1 [1]	**1FT7084-1AH7■-1 ■ ■ 1**	5	45.1 (39.9)	20.8 (45.9)
		4.71 (6.32)	28 (20.7)	10 (7.38)	10	**1FT7086-1AH7■-1 ■ ■ 1**	5	63.6 (56.3)	27.5 (60.6)
6000	36	0.88 (1.18)	2 (1.48)	1.4 (1.0)	2.1	**1FT7034-1AK7■-1 ■ ■ 1**	3	0.85 (0.75)	3.8 (8.4)
	63	2.13 (1.57) [2]	6 (4.43)	3.7 (2.73) [2]	5.9 [2]	**1FT7062-1AK7■-1 ■ ■ 1**	5	7.36 (6.51)	7.1 (15.7)
		2.59 (1.91) [3]	9 (6.64)	5.5 (4.06) [3]	6.1 [3]	**1FT7064-1AK7■-1 ■ ■ 1**	5	11.9 (10.5)	9.7 (21.4)

With DRIVE-CLiQ interface:					
	Flange:	Classic (compatible with 1FT6/1FK7)		1	
		Recessed (more compact)		0	
	Encoder:	AS24DQI encoder	RJ45 signal port		B
			M17 signal port		K
		AM24DQI encoder	RJ45 signal port		C
			M17 signal port		L
Without DRIVE-CLiQ interface:					
	Flange:	Classic (compatible with 1FT6/1FK7)		4	
		Recessed (more compact)		5	
	Encoder:	IC2048S/R encoder	M23 signal port		N
		AM2048S/R encoder	M23 signal port		M
Shaft end:		**Shaft and flange accuracy:**	**Holding brake:**		
Plain shaft		Tolerance N	Without		G
Plain shaft		Tolerance N	With		H
Vibration severities:		**Degree of protection:**			
Grade A		IP65			1

For footnotes, see next page.

© Siemens 2024

Motor type (repeated)	Effi-ciency [4]	Stall current	Calculated power [8]	SINAMICS S120 Motor Module		Power cable with complete shield		
				Rated output current [5]	**Booksize format** Internal air cooling For further components, see SINAMICS S120 drive system	Motor connection (and brake connection) via power connector		
	η	I_0 at M_0 ΔT=100 K	P_{calc} at M_0 ΔT=100 K	I_N		Power connec-tors	Cable cross-section [6]	Pre-assembled cable
	%	A	kW (hp)	A	Article No.	Size	mm^2	Article No.
1FT7102-1AC7...	93	12.5	6.28 (8.42)	18	**6SL3120-■TE21-8AD0**	1.5	4 × 1.5	**6FX■002-5■N26-....**
1FT7105-1AC7...	93	18	10.47 (14.04)	18	**6SL3120-■TE21-8AD0**	1.5	4 × 2.5	**6FX■002-5■N36-....**
1FT7044-1AF7...	92	2.8	1.57 (2.11)	3	**6SL3120-■TE13-0AD0**	1	4 × 1.5	**6FX■002-5■N06-....**
1FT7062-1AF7...	91	3.9	1.88 (2.52)	5	**6SL3120-■TE15-0AD0**	1	4 × 1.5	**6FX■002-5■N06-....**
1FT7064-1AF7...	93	5.7	2.83 (3.80)	9	**6SL3120-■TE21-0AD0**	1	4 × 1.5	**6FX■002-5■N06-....**
1FT7082-1AF7...	93	7.6	4.08 (5.47)	9	**6SL3120-■TE21-0AD0**	1	4 × 1.5	**6FX■002-5■N06-....**
1FT7084-1AF7...	93	11	6.28 (8.42)	18	**6SL3120-■TE21-8AD0**	1	4 × 1.5	**6FX■002-5■N06-....**
1FT7086-1AF7...	93	15.5	8.8 (11.8)	18	**6SL3120-■TE21-8AD0**	1.5	4 × 2.5	**6FX■002-5■N36-....**
1FT7084-1AH7...	93	15.6	9.42 (12.63)	18	**6SL3120-■TE21-8AD0**	1.5	4 × 2.5	**6FX■002-5■N36-....**
1FT7086-1AH7...	91	24	13.19 (17.69)	24	**6SL3120-1 TE22-4AD0**	1.5	4 × 4	**6FX■002-5■N46-....**
1FT7034-1AK7...	90	2.7	1.26 (1.69)	3	**6SL3120-■TE13-0AD0**	1	4 × 1.5	**6FX■002-5■N06-....**
1FT7062-1AK7...	90	8.4	3.77 (5.06)	9	**6SL3120-■TE21-0AD0**	1	4 × 1.5	**6FX■002-5■N06-....**
1FT7064-1AK7...	91	9	5.65 (7.58)	9	**6SL3120-■TE21-0AD0**	1	4 × 1.5	**6FX■002-5■N06-....**

Motor Module:	
Single Motor Module	**1**
Double Motor Module	**2**

Power cable:	
MOTION-CONNECT 800PLUS	**8**
MOTION-CONNECT 500	**5**
Without brake cores	**C**
With brake cores [7]	**D**
Length code	**....**

For more information about cables, see MOTION-CONNECT connection systems

1) These values refer to n = 4000 r/min.
2) These values refer to n = 5500 r/min.
3) These values refer to n = 4500 r/min.
4) Optimum efficiency in continuous duty.
5) With default setting of the pulse frequency.
6) The current-carrying capacity of the power cables complies with EN 60204-1 for installation type C, under continuous operating conditions at an ambient air temperature of 40 °C (104 °F).
7) Cable cross-section for brake connection 2 × 1.5 mm^2.
8) $P_{calc}[kW] = \frac{M_0[Nm] \times n_N}{9550}$ $P_{calc}[hp] = \frac{M_0[lb_f\text{-}ft] \times n_N}{5250}$

© Siemens 2024

SIMOTICS S-1FT7 Compact – natural cooling

Selection and ordering data

Rated speed	Shaft height	Rated power	Static torque	Rated torque	Rated current	SIMOTICS S-1FT7 synchronous motors Compact	Number of pole pairs	Moment of inertia Rotor (without brake)	Weight (without brake)
n_N	SH	P_N at ΔT=100 K	M_0 at ΔT=100 K	M_N at ΔT=100 K	I_N at ΔT=100 K		p	J	m
r/min		kW (hp)	Nm (lb_f-ft)	Nm (lb_f-ft)	A	Article No.		10^{-4} kgm^2 (10^{-3} lb_f-in-s^2)	kg (lb)
SIMOTICS S-1FT7 Compact for DC link voltages 510 ... 720 V DC – natural cooling									
1500	100	4.08 (5.47)	30 (22.1)	26 (19.2)	8	**1FT7102-5AB7■-1 ■ ■ ■**	5	91.4 (80.9)	26.1 (57.6)
		6.6 (8.9)	50 (36.9)	42 (31.0)	13	**1FT7105-5AB7■-1 ■ ■ ■**	5	178 (158)	44.2 (97.5)
		9.58 (12.85)	70 (51.6)	61 (45.0)	16	**1FT7108-5AB7■-1 ■ ■ ■**	5	248 (220)	59 (130)
	132	10.52 (14.11)	90 (66.4)	67 (49.4)	17.4	**1FT7132-5AB7■-1 ■ ■ ■**	4	459 (406)	76 (168)
		12.88 (17.27)	118 (87.0)	82 (60.5)	22.0	**1FT7134-5AB7■-1 ■ ■ ■**	4	604 (535)	92 (203)
		14.45 (19.38)	140 (103)	92 (67.9)	25.0	**1FT7136-5AB7■-1 ■ ■ ■**	4	748 (662)	108 (238)
		16.96 (22.74)	170 (125)	108 (79.7)	28.5	**1FT7138-5AB7■-■ ■ ■ ■**	4	896 (793)	124 (273)
2000	80	2.39 (3.20)	13 (9.59)	11.4 (8.4)	4.9	**1FT7082-5AC7■-1 ■ ■ ■**	5	26.5 (23.5)	14 (30.9)
		3.54 (4.75)	20 (14.8)	16.9 (12.5)	8.4	**1FT7084-5AC7■-1 ■ ■ ■**	5	45.1 (39.9)	20.8 (45.9)
		4.71 (6.32)	28 (20.7)	22.5 (16.6)	9.2	**1FT7086-5AC7■-1 ■ ■ ■**	5	63.6 (56.3)	27.5 (60.6)
	100	5.03 (6.75)	30 (22.1)	24 (17.7)	10	**1FT7102-5AC7■-1 ■ ■ ■**	5	91.4 (80.9)	26.1 (57.6)
		7.96 (10.67)	50 (36.9)	38 (28.0)	15	**1FT7105-5AC7■-1 ■ ■ ■**	5	178 (158)	44.2 (97.5)
		10.5 (14.1)	70 (51.6)	50 (36.9)	18	**1FT7108-5AC7■-1 ■ ■ ■**	5	248 (220)	59 (130)
	132	11.52 (15.45)	90 (66.4)	55 (40.6)	18.7	**1FT7132-5AC7■-1 ■ ■ ■**	4	459 (406)	76 (168)
		13.82 (18.53) [5]	118 (87.0)	66 (48.7) [5]	21 [5]	**1FT7134-5AC7■-1 ■ ■ ■**	4	604 (535)	92 (203)
		14.87 (19.94) [5]	140 (103)	71 (52.4) [5]	23.0 [5]	**1FT7136-5AC7■-■ ■ ■ ■**	4	748 (662)	109 (240)

With DRIVE-CLiQ interface:

Flange:	Classic (compatible with 1FT6/1FK7)		1 0
	Recessed (more compact) [7]		
Encoder:	AS24DQI encoder	RJ45 signal port	B
		M17 signal port	K
	AM24DQI encoder	RJ45 signal port	C
		M17 signal port	L

Without DRIVE-CLiQ interface:

Flange:	Classic (compatible with 1FT6/1FK7)		4 5
	Recessed (more compact) [7]		
Encoder:	IC2048S/R encoder	M23 signal port	N
	AM2048S/R encoder	M23 signal port	M

Connector outlet direction:	Connector sizes 1 and 1.5	Rotatable connector	1
	Connector size 3 [1]	Transverse right	1
		Transverse left	2
		Axial NDE	3
		Axial DE	4

Terminal box/ cable entry: [1]	Top/transverse from right	5
	Top/transverse from left	6
	Top/axial from NDE	7
	Top/axial from DE	8

Shaft end:	**Shaft and flange accuracy:**	**Holding brake:**	
Feather key and keyway	Tolerance N	Without	A
Feather key and keyway	Tolerance N	With	B
Feather key and keyway	Tolerance R	Without	D
Feather key and keyway	Tolerance R	With	E
Plain shaft	Tolerance N	Without	G
Plain shaft	Tolerance N	With	H
Plain shaft	Tolerance R	Without	K
Plain shaft	Tolerance R	With	L

Vibration severity:	**Degree of protection:**	
Grade A	IP64	0
Grade A	IP65	1
Grade A	IP67	2
Grade R	IP64	3
Grade R	IP65	4
Grade R	IP67	5

For footnotes, see next page.

© Siemens 2024

Motor type (repeated)	Efficiency [2]	Stall current	Calculated power [8]	SINAMICS S120 Motor Module		Power cable with complete shield Motor connection (and brake connection) via power connector		
				Rated output current [3]	**Booksize format** Internal air cooling For further components, see SINAMICS S120 drive system	Power connectors	Cable cross-section [4]	Pre-assembled cable
	η	I_0 at M_0 ΔT=100 K	P_{calc} at M_0 ΔT=100 K	I_N				
	%	A	kW (hp)	A	Article No.	Size	mm^2	Article No.
1FT7102-5AB7...	93	9	4.71 (6.32)	9	**6SL3120-■TE21-0AD0**	1.5	4 × 1.5	**6FX■002-5■N26-....**
1FT7105-5AB7...	93	15	7.85 (10.53)	18	**6SL3120-■TE21-8AD0**	1.5	4 × 1.5	**6FX■002-5■N26-....**
1FT7108-5AB7...	93	18	10.99 (14.74)	18	**6SL3120-■TE21-8AD0**	1.5	4 × 2.5	**6FX■002-5■N36-....**
1FT7132-5AB7...	94	22.5	14.14 (18.96)	24	**6SL3120-1TE22-4AD0**	1.5	4 × 4	**6FX■002-5■N46-....**
1FT7134-5AB7...	95	30.0	18.53 (24.85)	30	**6SL3120-1TE23-0AD0**	1.5	4 × 6	**6FX■002-5■N54-....**
1FT7136-5AB7...	94	36.0	21.99 (29.49)	45	**6SL3120-1TE24-5AC0**	1.5	4 × 6	**6FX■002-5■N54-....**
1FT7138-5AB7...	94	43.0	26.7 (35.8)	45	**6SL3120-1TE24-5AC0**	3	4 × 10	**6FX■002-5■S14-....**
1FT7082-5AC7...	93	5	2.72 (3.65)	5	**6SL3120-■TE15-0AD0**	1	4 × 1.5	**6FX■002-5■N06-....**
1FT7084-5AC7...	93	9	4.19 (5.62)	9	**6SL3120-■TE21-0AD0**	1	4 × 1.5	**6FX■002-5■N06-....**
1FT7086-5AC7...	93	10.6	5.86 (7.86)	18	**6SL3120-■TE21-8AD0**	1	4 × 1.5	**6FX■002-5■N06-....**
1FT7102-5AC7...	93	12.5	6.28 (8.42)	18	**6SL3120-■TE21-8AD0**	1.5	4 × 1.5	**6FX■002-5■N26-....**
1FT7105-5AC7...	93	18	10.47 (14.04)	18	**6SL3120-■TE21-8AD0**	1.5	4 × 2.5	**6FX■002-5■N36-....**
1FT7108-5AC7...	93	25	14.66 (19.66)	30	**6SL3120-1TE23-0AD0**	1.5	4 × 4	**6FX■002-5■N46-....**
1FT7132-5AC7...	94	29.5	18.85 (25.28)	30	**6SL3120-1TE23-0AD0**	1.5	4 × 6	**6FX■002-5■N56-....**
1FT7134-5AC7...	95	36.0	24.71 (33.14)	45	**6SL3120-1TE24-5AC0**	1.5	4 × 6	**6FX■002-5■N54-....**
1FT7136-5AC7...	94	43.0	29.32 (39.32)	45	**6SL3120-1TE24-5AC0**	3	4 × 10	**6FX■002-5■S14-....**

Motor Module:	
Single Motor Module	**1**
Double Motor Module	**2**

Power cable:	
MOTION-CONNECT 800PLUS	**8**
MOTION-CONNECT 500	**5**
Without brake cores	**C**
With brake cores [6]	**D**
Length code	**....**

For more information about cables, see MOTION-CONNECT connection systems

8 1

1) Connector size 3 not rotatable. An alternative terminal box can be selected for connector size 3 only.

2) Optimum efficiency in continuous duty.

3) With default setting of the pulse frequency.

4) The current-carrying capacity of the power cables complies with EN 60204-1 for installation type C, under continuous operating conditions at an ambient air temperature of 40 °C (104 °F).

5) Rated data are applicable with a DC link voltage of 600 to 720 V DC.

6) Cable cross-section for brake connection 2 × 1.5 mm^2.

7) Only up to SH 100.

8) $$P_{calc}[kW] = \frac{M_0[Nm] \times n_N}{9550} \qquad P_{calc}[hp] = \frac{M_0[lb_f\text{-}ft] \times n_N}{5250}$$

© Siemens 2024

SIMOTICS S-1FT7 Compact – natural cooling

Selection and ordering data

Rated speed	Shaft height	Rated power	Static torque	Rated torque	Rated current	SIMOTICS S-1FT7 synchronous motors Compact	Number of pole pairs	Moment of inertia Rotor (without brake)	Weight (without brake)
n_N	SH	P_N at ΔT=100 K	M_0 at ΔT=100 K	M_N at ΔT=100 K	I_N at ΔT=100 K		p	J	m
r/min		kW (hp)	Nm (lb_f-ft)	Nm (lb_f-ft)	A	Article No.		10^{-4} kgm^2 (10^{-3} lb_f-in-s^2)	kg (lb)
SIMOTICS S-1FT7 Compact for DC link voltages 510 ... 720 V DC – natural cooling									
3000	48	0.85 (1.14)	3 (2.21)	2.7 (2.0)	2.1	**1FT7042-5AF7■-1 ■ ■ ■**	3	2.81 (2.49)	4.6 (10.1)
		1.35 (1.81)	5 (3.69)	4.3 (3.2)	2.6	**1FT7044-5AF7■-1 ■ ■ ■**	3	5.43 (4.81)	7.2 (15.9)
		1.76 (2.36)	7 (5.16)	5.6 (4.1)	3.5	**1FT7046-5AF7■-1 ■ ■ ■**	3	7.52 (6.66)	9.3 (20.5)
	63	1.7 (2.3)	6 (4.43)	5.4 (4.0)	3.9	**1FT7062-5AF7■-1 ■ ■ ■**	5	7.36 (6.51)	7.1 (15.7)
		2.39 (3.20)	9 (6.64)	7.6 (5.6)	5.2	**1FT7064-5AF7■-1 ■ ■ ■**	5	11.9 (10.5)	9.7 (21.4)
		2.92 (3.92)	12 (8.85)	9.3 (6.9)	7.2	**1FT7066-5AF7■-1 ■ ■ ■**	5	16.4 (14.5)	12.3 (27.1)
		3.42 (4.59)	15 (11.1)	10.9 (8.0)	6.7	**1FT7068-5AF7■-1 ■ ■ ■**	5	23.2 (20.5)	16.3 (35.9)
	80	3.24 (4.34)	13 (9.59)	10.3 (7.6)	6.6	**1FT7082-5AF7■-1 ■ ■ ■**	5	26.5 (23.5)	14 (30.9)
		4.55 (6.10)	20 (14.8)	14.5 (10.7)	8.5	**1FT7084-5AF7■-1 ■ ■ ■**	5	45.1 (39.9)	20.8 (45.9)
		5.65 (7.58)	28 (20.7)	18 (13.3)	11	**1FT7086-5AF7■-1 ■ ■ ■**	5	63.6 (56.3)	27.5 (60.6)
	100	6.28 (8.42)	30 (22.1)	20 (14.8)	12	**1FT7102-5AF7■-1 ■ ■ ■**	5	91.4 (80.9)	26.1 (57.6)
		8.8 (11.8)	50 (36.9)	28 (20.7)	15	**1FT7105-5AF7■-1 ■ ■ ■**	5	178 (158)	44.2 (97.5)
		6.28 (8.42)	70 (51.6)	20 (14.8)	12	**1FT7108-5AF7■-1 ■ ■ ■**	5	248 (220)	59 (130)
	132	8.48 (11.37)	90 (66.4)	27 (19.9)	14	**1FT7132-5AF7■-■ ■ ■ ■**	4	459 (406)	77 (170)

With DRIVE-CLiQ interface:

Flange:	Classic (compatible with 1FT6/1FK7) Recessed (more compact) [6]		1 0
Encoder:	AS24DQI encoder	RJ45 signal port M17 signal port	B K
	AM24DQI encoder	RJ45 signal port M17 signal port	C L

Without DRIVE-CLiQ interface:

Flange:	Classic (compatible with 1FT6/1FK7) Recessed (more compact) [6]		4 5
Encoder:	IC2048S/R encoder AM2048S/R encoder	M23 signal port M23 signal port	N M

Connector outlet direction:	Connector sizes 1 and 1.5	Rotatable connector	1
	Connector size 3 [1]	Transverse right	1
		Transverse left	2
		Axial NDE	3
		Axial DE	4
Terminal box/ cable entry: [1]	Top/transverse from right		5
	Top/transverse from left		6
	Top/axial from NDE		7
	Top/axial from DE		8

Shaft end:	Shaft and flange accuracy:	Holding brake:	
Feather key and keyway	Tolerance N	Without	A
Feather key and keyway	Tolerance N	With	B
Feather key and keyway	Tolerance R	Without	D
Feather key and keyway	Tolerance R	With	E
Plain shaft	Tolerance N	Without	G
Plain shaft	Tolerance N	With	H
Plain shaft	Tolerance R	Without	K
Plain shaft	Tolerance R	With	L

Vibration severity:	Degree of protection:	
Grade A	IP64	0
Grade A	IP65	1
Grade A	IP67	2
Grade R	IP64	3
Grade R	IP65	4
Grade R	IP67	5

For footnotes, see next page.

© Siemens 2024

Motor type (repeated)	Effi-ciency [2]	Stall current	Calculated power [7]	SINAMICS S120 Motor Module		Power cable with complete shield Motor connection (and brake connection) via power connector		
				Rated output current [3]	**Booksize format** Internal air cooling For further components, see SINAMICS S120 drive system			
	η	I_0 at M_0 ΔT=100 K	P_{calc} at M_0 ΔT=100 K	I_N		Power connec-tors	Cable cross-section [4]	Pre-assembled cable
	%	A	kW (hp)	A	Article No.	Size	mm²	Article No.
1FT7042-5AF7...	92	2.1	0.94 (1.26)	3	**6SL3120-■TE13-0AD0**	1	4 × 1.5	**6FX■002-5■N06-....**
1FT7044-5AF7...	92	2.8	1.57 (2.11)	3	**6SL3120-■TE13-0AD0**	1	4 × 1.5	**6FX■002-5■N06-....**
1FT7046-5AF7...	92	4	2.2 (3.0)	5	**6SL3120-■TE15-0AD0**	1	4 × 1.5	**6FX■002-5■N06-....**
1FT7062-5AF7...	91	3.9	1.88 (2.52)	5	**6SL3120-■TE15-0AD0**	1	4 × 1.5	**6FX■002-5■N06-....**
1FT7064-5AF7...	93	5.7	2.83 (3.80)	9	**6SL3120-■TE21-0AD0**	1	4 × 1.5	**6FX■002-5■N06-....**
1FT7066-5AF7...	92	8.4	3.77 (5.06)	9	**6SL3120-■TE21-0AD0**	1	4 × 1.5	**6FX■002-5■N06-....**
1FT7068-5AF7...	92	8.3	4.71 (6.32)	9	**6SL3120-■TE21-0AD0**	1	4 × 1.5	**6FX■002-5■N06-....**
1FT7082-5AF7...	93	7.6	4.08 (5.47)	9	**6SL3120-■TE21-0AD0**	1	4 × 1.5	**6FX■002-5■N06-....**
1FT7084-5AF7...	93	11	6.28 (8.42)	18	**6SL3120-■TE21-8AD0**	1	4 × 1.5	**6FX■002-5■N06-....**
1FT7086-5AF7...	93	15.5	8.8 (11.8)	18	**6SL3120-■TE21-8AD0**	1.5	4 × 2.5	**6FX■002-5■N36-....**
1FT7102-5AF7...	93	18	9.42 (12.63)	18	**6SL3120-■TE21-8AD0**	1.5	4 × 2.5	**6FX■002-5■N36-....**
1FT7105-5AF7...	94	26	15.71 (21.07)	30	**6SL3120-1 TE23-0AD0**	1.5	4 × 4	**6FX■002-5■N46-....**
1FT7108-5AF7...	93	36	21.99 (29.49)	45	**6SL3120-1 TE24-5AC0**	1.5	4 × 6	**6FX■002-5■N54-....**
1FT7132-5AF7...	94	43.5	28.27 (37.91)	45	**6SL3120-1 TE24-5AC0**	3	4 × 10	**6FX■002-5■S14-....**

Motor Module:
Single Motor Module **1**
Double Motor Module **2**

Power cable:
MOTION-CONNECT 800PLUS / MOTION-CONNECT 500 **8 5**

Without brake cores / With brake cores [5] **C D**

Length code **....**

For more information about cables, see MOTION-CONNECT connection systems

8 1

[1] Connector size 3 not rotatable. An alternative terminal box can be selected for connector size 3 only.

[2] Optimum efficiency in continuous duty.

[3] With default setting of the pulse frequency.

[4] The current-carrying capacity of the power cables complies with EN 60204-1 for installation type C, under continuous operating conditions at an ambient air temperature of 40 °C (104 °F).

[5] Cable cross-section for brake connection 2 × 1.5 mm².

[6] Only up to SH 100.

[7] $P_{calc}[kW] = \frac{M_0[Nm] \times n_N}{9550}$ $P_{calc}[hp] = \frac{M_0[lb_f\text{-}ft] \times n_N}{5250}$

© Siemens 2024

SIMOTICS S-1FT7 Compact – natural cooling

Selection and ordering data

Rated speed	Shaft height	Rated power	Static torque	Rated torque	Rated current	SIMOTICS S-1FT7 synchronous motors Compact	Number of pole pairs	Moment of inertia Rotor (without brake)	Weight (without brake)
n_N	SH	P_N at ΔT=100 K	M_0 at ΔT=100 K	M_N at ΔT=100 K	I_N at ΔT=100 K		p	J	m
r/min		kW (hp)	Nm (lb_f-ft)	Nm (lb_f-ft)	A	Article No.		10^{-4} kgm^2 (10^{-3} lb_f-in-s^2)	kg (lb)
SIMOTICS S-1FT7 Compact for DC link voltages 510 ... 720 V DC – natural cooling									
4500	48	1.32 (1.77) [1]	7 (5.16)	3.6 (2.66) [1]	4.7 [1]	**1FT7046-5AH7■-1 ■■■**	3	7.52 (6.66)	9.3 (20.5)
	63	2.55 (3.42) [2]	12 (8.85)	6.1 (4.50)[2]	7.5 [2]	**1FT7066-5AH7■-1 ■■■**	5	16.4 (14.5)	12.3 (27.1)
	80	3.77 (5.06)	13 (9.59)	8 (5.90)	7.8	**1FT7082-5AH7■-1 ■■■**	5	26.5 (23.5)	14 (30.9)
		4.82 (6.46) [2]	20 (14.8)	11.5 (8.48) [2]	10.1 [2]	**1FT7084-5AH7■-1 ■■■**	5	45.1 (39.9)	20.8 (45.9)
		4.71 (6.32)	28 (20.7)	10 (7.38)	10	**1FT7086-5AH7■-1 ■■■**	5	63.6 (56.3)	27.5 (60.6)
6000	36	0.88 (1.18)	2 (1.48)	1.4 (1.0)	2.1	**1FT7034-5AK7■-1 ■■■**	3	0.85 (0.75)	3.8 (8.4)
		1.07 (1.43)	3 (2.21)	1.7 (1.3)	2.4	**1FT7036-5AK7■-1 ■■■**	3	1.33 (1.18)	5.0 (11.0)
	48	1.26 (1.69)	3 (2.21)	2 (1.48)	3	**1FT7042-5AK7■-1 ■■■**	3	2.81 (2.49)	4.6 (10.1)
		1.41 (1.89) [3]	5 (3.69)	3 (2.21) [3]	3.6 [3]	**1FT7044-5AK7■-1 ■■■**	3	5.43 (4.81)	7.2 (15.9)
	63	2.13 (2.86) [4]	6 (4.43)	3.7 (2.73) [4]	5.9 [4]	**1FT7062-5AK7■-1 ■■■**	5	7.36 (6.51)	7.1 (15.7)
		2.59 (3.47)[3]	9 (6.64)	5.5 (4.06) [3]	6.1 [3]	**1FT7064-5AK7■-1 ■■■**	5	11.9 (10.5)	9.7 (21.4)

With DRIVE-CLiQ interface:

Flange:	Classic (compatible with 1FT6/1FK7)		1
	Recessed (more compact)		0
Encoder:	AS24DQI encoder	RJ45 signal port	B
		M17 signal port	K
	AM24DQI encoder	RJ45 signal port	C
		M17 signal port	L

Without DRIVE-CLiQ interface:

Flange:	Classic (compatible with 1FT6/1FK7)		4
	Recessed (more compact)		5
Encoder:	IC2048S/R encoder	M23 signal port	N
	AM2048S/R encoder	M23 signal port	M

Shaft end:	Shaft and flange accuracy:	Holding brake:	
Feather key and keyway	Tolerance N	Without	A
Feather key and keyway	Tolerance N	With	B
Feather key and keyway	Tolerance R	Without	D
Feather key and keyway	Tolerance R	With	E
Plain shaft	Tolerance N	Without	G
Plain shaft	Tolerance N	With	H
Plain shaft	Tolerance R	Without	K
Plain shaft	Tolerance R	With	L

Vibration severity:	Degree of protection:	
Grade A	IP64	0
Grade A	IP65	1
Grade A	IP67	2
Grade R	IP64	3
Grade R	IP65	4
Grade R	IP67	5

For footnotes, see next page.

© Siemens 2024

Motor type (repeated)	Effi-ciency [5]	Stall current	Calculated power [9]	**SINAMICS S120 Motor Module**		**Power cable with complete shield** Motor connection (and brake connection) via power connector		
				Rated output current [6]	**Booksize format** Internal air cooling For further components, see SINAMICS S120 drive system			
	η	I_0 at M_0 ΔT=100 K	P_{calc} at M_0 ΔT=100 K	I_N		Power connec-tors	Cable cross-section [7]	Pre-assembled cable
	%	A	kW (hp)	A	Article No.	Size	mm²	Article No.
1FT7046-5AH7...	90	8.1	3.3 (4.4)	9	**6SL3120-■TE21-0AD0**	1	4 × 1.5	**6FX■002-5■N06-....**
1FT7066-5AH7...	90	13.6	5.65 (7.58)	18	**6SL3120-■TE21-8AD0**	1	4 × 1.5	**6FX■002-5■N06-....**
1FT7082-5AH7...	93	12.3	6.13 (8.22)	18	**6SL3120-■TE21-8AD0**	1	4 × 1.5	**6FX■002-5■N06-....**
1FT7084-5AH7...	93	15.6	9.42 (12.63)	18	**6SL3120-■TE21-8AD0**	1.5	4 × 2.5	**6FX■002-5■N36-....**
1FT7086-5AH7...	91	22.4	13.19 (17.69)	24	**6SL3120-1TE22-4AD0**	1.5	4 × 4	**6FX■002-5■N46-....**
1FT7034-5AK7...	90	2.7	1.26 (1.69)	3	**6SL3120-■TE13-0AD0**	1	4 × 1.5	**6FX■002-5■N06-....**
1FT7036-5AK7...	90	4.0	1.88 (2.52)	5	**6SL3120-■TE15-0AD0**	1	4 × 1.5	**6FX■002-5■N06-....**
1FT7042-5AK7...	91	3.9	1.88 (2.52)	5	**6SL3120-■TE15-0AD0**	1	4 × 1.5	**6FX■002-5■N06-....**
1FT7044-5AK7...	91	5.7	3.14 (4.21)	9	**6SL3120-■TE21-0AD0**	1	4 × 1.5	**6FX■002-5■N06-....**
1FT7062-5AK7...	90	8.4	3.77 (5.06)	9	**6SL3120-■TE21-0AD0**	1	4 × 1.5	**6FX■002-5■N06-....**
1FT7064-5AK7...	91	9	5.65 (7.58)	9	**6SL3120-■TE21-0AD0**	1	4 × 1.5	**6FX■002-5■N06-....**

Motor Module:
Single Motor Module **1**
Double Motor Module **2**

Power cable:
MOTION-CONNECT 800PLUS **8**
MOTION-CONNECT 500 **5**

Without brake cores **C**
With brake cores [7] [8] **D**

Length code **....**

For more information about cables, see MOTION-CONNECT connection systems

8 1

1) These values refer to n = 3500 r/min.
2) These values refer to n = 4000 r/min.
3) These values refer to n = 4500 r/min.
4) These values refer to n = 5500 r/min.
5) Optimum efficiency in continuous duty.
6) With default setting of the pulse frequency.
7) The current-carrying capacity of the power cables complies with EN 60204-1 for installation type C, under continuous operating conditions at an ambient air temperature of 40 °C (104 °F).
8) Cable cross-section for brake connection 2 × 1.5 mm².
9) $P_{calc}\,[kW] = \frac{M_0\,[Nm] \times n_N}{9550}$ $\quad P_{calc}\,[hp] = \frac{M_0\,[lb_f\text{-}ft] \times n_N}{5250}$

© Siemens 2024

SIMOTICS S-1FT7 Compact – forced ventilation

Selection and ordering data

Rated speed	Shaft height	Rated power	Static torque	Rated torque	Rated current	**SIMOTICS S-1FT7 synchronous motors Compact**	Number of pole pairs	Moment of inertia Rotor (without brake)	Weight (without brake)
n_N	SH	P_N at ΔT=100 K	M_0 at ΔT=100 K	M_N at ΔT=100 K	I_N at ΔT=100 K		p	J	m
r/min		kW (hp)	Nm (lb_f-ft)	Nm (lb_f-ft)	A	Article No.		10^{-4} kgm^2 (10^{-3} lb_f-in-s^2)	kg (lb)
SIMOTICS S-1FT7 Compact for DC link voltage 510 ... 720 V DC – forced ventilation									
1500	132	20.5 (27.5)	140 (103)	132 (97.4)	45	**1FT7132-5SB7■-■■■■**	4	459 (406)	81 (179)
		31.4 (42.1)	235 (173)	200 (148)	60	**1FT7136-5SB7■-■■■■**	4	748 (662)	113 (249)
		39 (52.3)	280 (207)	250 (184)	79	**1FT7138-5SB7■-■■■■**	4	896 (793)	129 (284)
2000	80	5.0 (6.7)	27 (19.9)	24 (17.7)	13.5	**1FT7084-5SC7■-1■■■**	5	45 (39.8)	25 (55.1)
		6.7 (9.0)	36 (26.6)	32 (23.6)	17	**1FT7086-5SC7■-1■■■**	5	64 (56.6)	36 (79.4)
	100	11.7 (15.7)	65 (47.9)	56 (41.3)	29	**1FT7105-5SC7■-1■■■**	5	178 (158)	50 (110)
		15.3 (20.5)	91 (67.1)	73 (53.8)	33	**1FT7108-5SC7■-1■■■**	5	248 (220)	64 (141)
	132	26.5 (35.5)	140 (103)	126 (92.9)	55	**1FT7132-5SC7■-■■■■**	4	459 (406)	81 (179)
		33.5 (44.9)	190 (140)	160 (118)	73	**1FT7134-5SC7■-■■■■**	4	604 (535)	97 (214)
		39.8 (53.4)	235 (173)	190 (140)	81	**1FT7136-5SC7■-■■■■**	4	748 (662)	113 (249)
3000	80	7.2 (9.7)	27 (19.9)	23 (17.0)	18.5	**1FT7084-5SF7■-1■■■**	5	45 (39.8)	25 (55.1)
		9.1 (12.2)	36 (26.6)	29 (21.4)	24	**1FT7086-5SF7■-1■■■**	5	64 (56.6)	36 (79.4)
	100	15.1 (20.2)	65 (47.9)	48 (35.4)	35	**1FT7105-5SF7■-■■■■**	5	178 (158)	50 (110)
		18.8 (25.2)	91 (67.1)	60 (44.3)	38	**1FT7108-5SF7■-■■■■**	5	248 (220)	64 (141)
	132	35.5 (47.6)	140 (103)	113 (83.3)	69	**1FT7132-5SF7■-■■■■**	4	459 (406)	81 (179)
		45.5 (61.0)	190 (140)	145 (107)	91	**1FT7134-5SF7■-■■■■**	4	604 (535)	97 (214)
4500	80	9.9 (13.3)	27 (19.9)	21 (15.5)	24.5	**1FT7084-5SH7■-1■■■**	5	45 (39.8)	25 (55.1)
		11.8 (15.8)	36 (26.6)	25 (18.4)	25	**1FT7086-5SH7■-1■■■**	5	64 (56.6)	36 (79.4)

With DRIVE-CLiQ interface:

Flange:	Classic (compatible with 1FT6/1FK7)		1 0
	Recessed (more compact)		
Encoder:	AS24DQI encoder	RJ45 signal port	B
	AM24DQI encoder	RJ45 signal port	C

Without DRIVE-CLiQ interface:

Flange:	Classic (compatible with 1FT6/1FK7)		4 5
	Recessed (more compact)		
Encoder:	IC2048S/R encoder	M23 signal port	N
	AM2048S/R encoder	M23 signal port	M

Connector outlet direction:	Connector sizes 1 and 1.5	Rotatable connector 1
	Connector size 3 [1]	Transverse right 1
		Transverse left 2
		Axial NDE 3
		Axial DE 4
Terminal box/ cable entry: [1]	Top/transverse from right	5
	Top/transverse from left	6
	Top/axial from NDE	7
	Top/axial from DE	8

Shaft end:	**Shaft and flange accuracy:**	**Holding brake:** [8]	
Feather key	Tolerance N	Without	A
Feather key	Tolerance N	With	B
Feather key	Tolerance R	Without	D
Feather key	Tolerance R	With	E
Plain shaft	Tolerance N	Without	G
Plain shaft	Tolerance N	With	H
Plain shaft	Tolerance R	Without	K
Plain shaft	Tolerance R	With	L

Vibration severity:	**Degree of protection:** [2]	
Grade A	IP64	0
Grade A	IP65	1
Grade R	IP64	3
Grade R	IP65	4

For footnotes, see next page.

© Siemens 2024

Motor type (repeated)	Efficiency [3]	Stall current	Calculated power [9]	SINAMICS S120 Motor Module		Power cable with complete shield Motor connection (and brake connection) via power connector		
				Rated output current [4]	**Booksize format** Internal air cooling For further components, see SINAMICS S120 drive system	Power connectors	Cable cross-section [5]	Pre-assembled cable
	η	I_0 at M_0 ΔT=100 K	P_{calc} at M_0 ΔT=100 K	I_N				
	%	A	kW (hp)	A	Article No.	Size	mm^2	Article No.
1FT7132-5SB7...	94	48	22 (29.5)	45	**6SL3120-1TE24-5AC0**	3	4 × 10	**6FX■0■2-5DS17-....**
1FT7136-5SB7...	95	70	36.9 (49.5)	85	**6SL3120-1TE28-5AA3**	3	4 × 25	**6FX■002-5DG33-....**
1FT7138-5SB7...	95	85	44 (59.0)	85	**6SL3120-1TE28-5AA3**	3	4 × 35	**6FX■002-5DG53-....**
1FT7084-5SC7...	93	15	5.7 (7.6)	18	**6SL3120-■TE21-8AD0**	1.5	4 × 1.5	**6FX■002-5■N26-....**
1FT7086-5SC7...	93	19.5	7.5 (10.1)	24	**6SL3120-1TE22-4AD0**	1.5	4 × 2.5	**6FX■002-5■N36-....**
1FT7105-5SC7...	93	31	13.6 (18.2)	45	**6SL3120-1TE24-5AC0**	1.5	4 × 6	**6FX■002-5■N54-....**
1FT7108-5SC7...	93	39	19.1 (25.6)	45	**6SL3120-1TE24-5AC0**	1.5	4 × 10	**6FX■002-5■N64-....**
1FT7132-5SC7...	95	60	29.3 (39.3)	60	**6SL3120-1TE26-0AC0**	3	4 × 16	**6FX■002-5DS23-....**
1FT7134-5SC7...	95	85	39.8 (53.4)	85	**6SL3120-1TE28-5AA3**	3	4 × 35	**6FX■002-5DG53-....**
1FT7136-5SC7...	95	98	49.2 (66.0)	132	**6SL3120-1TE31-3AA3**	b. w. [7]	4 × 35	**6FX5002-5CR73-....**
1FT7084-5SF7...	94	21	8.5 (11.4)	24	**6SL3120-1TE22-4AD0**	1.5	4 × 2.5	**6FX■002-5■N36-....**
1FT7086-5SF7...	93	29	11.3 (15.2)	30	**6SL3120-1TE23-0AD0**	1.5	4 × 6	**6FX■002-5■N56-....**
1FT7105-5SF7...	94	45	20.4 (27.4)	45	**6SL3120-1TE24-5AC0**	3	4 × 10	**6FX■002-5■S14-....**
1FT7108-5SF7...	94	57	28.6 (38.4)	60	**6SL3120-1TE26-0AC0**	3	4 × 16	**6FX■002-5■S23-....**
1FT7132-5SF7...	95	85	44 (59.0)	85	**6SL3120-1TE28-5AA3**	3	4 × 35	**6FX■002-5DG53-....**
1FT7134-5SF7...	96	115	59.7 (80.1)	132	**6SL3120-1TE31-3AA3**	b. w. [7]	4 ×50	**6FX5002-5CR83-....**
1FT7084-5SH7...	94	30.5	12.7 (17.0)	30	**6SL3120-1TE23-0AD0**	1.5	4 × 6	**6FX■002-5■N56-....**
1FT7086-5SH7...	93	34	17.0 (22.8)	45	**6SL3120-1TE24-5AC0**	1.5	4 × 6	**6FX■002-5■N54-....**

Motor Module:
Single Motor Module **1**
Double Motor Module **2**

Power cable:
MOTION-CONNECT 800PLUS **8**
MOTION-CONNECT 500 **5**

Without brake cores **C**
With brake cores [6] [8] **D**

Length code **....**

For more information about cables, see MOTION-CONNECT connection systems

8 1

1) Connector size 3 not rotatable. An alternative terminal box can be selected for connector size 3 only.
1FT7136-5SC7.-.... and 1FT7134-5SF7.-.... only with terminal box.

2) The degree of protection refers to the motor. The built-in fan has degree of protection IP54/IP55 (shaft height 132).

3) Optimum efficiency in continuous duty.

4) With default setting of the pulse frequency.

5) The current-carrying capacity of the power cables complies with EN 60204-1 for installation type C, under continuous operating conditions at an ambient air temperature of 40 °C (104 °F).

6) Cable cross-section for brake connection 2 × 1.5 mm^2.

7) b. w. bare wire ends. Only in conjunction with terminal boxes.

8) Holding brake not for 1FT7138-5SB7.-....

9) $P_{calc}\,[kW] = \frac{M_0\,[Nm] \times n_N}{9550}$ $\quad P_{calc}\,[hp] = \frac{M_0\,[lb_f\text{-}ft] \times n_N}{5250}$

© Siemens 2024

SIMOTICS S-1FT7 Compact – water cooling

Selection and ordering data

Rated speed	Shaft height	Rated power	Static torque	Rated torque	Rated current	**SIMOTICS S-1FT7 synchronous motors Compact**	Number of pole pairs	Moment of inertia Rotor (without brake)	Weight (without brake)
n_N	SH	P_N at ΔT=100 K	M_0 at ΔT=100 K	M_N at ΔT=100 K	I_N at ΔT=100 K		p	J	m
r/min		kW (hp)	Nm (lb_f-ft)	Nm (lb_f-ft)	A	Article No.		10^{-4} kgm^2 (10^{-3} lb_f-in-s^2)	kg (lb)
SIMOTICS S-1FT7 Compact for DC link voltage 510 ... 720 V DC – water cooling									
1500	100	7.9 (10.6)	50 (36.9)	50 (36.9)	20.3	**1FT7102-5WB7■-1 ■ ■ ■**	5	98.9 (87.5)	36.6 (80.7)
		14.1 (18.9)	90 (66.4)	90 (66.4)	29.5	**1FT7105-5WB7■-1 ■ ■ ■**	5	191 (169)	54.8 (120.8)
		19.6 (26.3)	125 (92.2)	125 (92.2)	40.3	**1FT7108-5WB7■-1 ■ ■ ■**	5	265 (235)	68.6 (151.3)
2000	80	4.4 (5.9)	21 (15.5)	21 (15.5)	11	**1FT7082-5WC7■-1 ■ ■ ■**	5	28.9 (25.6)	20.7 (45.6)
		7.33 (9.83)	35 (25.8)	35 (25.8)	17	**1FT7084-5WC7■-1 ■ ■ ■**	5	48.3 (42.8)	27.5 (60.6)
		10.5 (14.1)	50 (36.9)	50 (36.9)	24	**1FT7086-5WC7■-1 ■ ■ ■**	5	67.8 (60.0)	34.1 (75.2)
	100	10.4 (13.9)	50 (36.9)	49.5 (36.5)	29.3	**1FT7102-5WC7■-1 ■ ■ ■**	5	98.9 (87.5)	36.6 (80.7)
		18.8 (25.2)	90 (66.4)	90 (66.4)	40.8	**1FT7105-5WC7■-1 ■ ■ ■**	5	191 (169)	54.8 (120.8)
		26.2 (35.1)	125 (92.2)	125 (92.2)	47.5	**1FT7108-5WC7■-■ ■ ■**	5	265 (235)	69.6 (153.5)

With DRIVE-CLiQ interface:				
	Flange:	Classic (compatible with 1FT6/1FK7)		1
		Recessed (more compact)		0
	Encoder:	AS24DQI encoder	RJ45 signal port	B
			M17 signal port	K
		AM24DQI encoder	RJ45 signal port	C
			M17 signal port	L
Without DRIVE-CLiQ interface:				
	Flange:	Classic (compatible with 1FT6/1FK7)		4
		Recessed (more compact)		5
	Encoder:	IC2048S/R encoder	M23 signal port	N
		AM2048S/R encoder	M23 signal port	M
Connector outlet direction:		Connector sizes 1 and 1.5	Rotatable connector	1
		Connector size 3 [1]	Transverse right	1
			Transverse left	2
			Axial NDE	3
			Axial DE	4
Terminal box/ cable entry: [1]		Top/transverse from right		5
		Top/transverse from left		6
		Top/axial from NDE		7
		Top/axial from DE		8

Shaft end:	**Shaft and flange accuracy:**	**Holding brake:**	
Feather key and keyway	Tolerance N	Without	A
Feather key and keyway	Tolerance N	With	B
Feather key and keyway	Tolerance R	Without	D
Feather key and keyway	Tolerance R	With	E
Plain shaft	Tolerance N	Without	G
Plain shaft	Tolerance N	With	H
Plain shaft	Tolerance R	Without	K
Plain shaft	Tolerance R	With	L

Vibration severity:	**Degree of protection:**	
Grade A	IP64	0
Grade A	IP65	1
Grade A	IP67	2
Grade R	IP64	3
Grade R	IP65	4
Grade R	IP67	5

For footnotes, see next page.

© Siemens 2024

Motor type (repeated)	Effi-ciency [2]	Stall current	Calculated power [6]	**SINAMICS S120 Motor Module** Rated output current [3]	**Booksize format** Internal air cooling For further components, see SINAMICS S120 drive system	**Power cable with complete shield** Motor connection (and brake connection) via power connector		
	η	I_0 at M_0 ΔT=100 K	P_{calc} at M_0 ΔT=100 K	I_N		Power connec-tors	Cable cross-section [4]	Pre-assembled cable
	%	A	kW (hp)	A	Article No.	Size	mm^2	Article No.
1FT7102-5WB7...	93	17.8	7.9 (10.6)	18	**6SL3120-■TE21-8AD0**	1.5	4 × 2.5	**6FX■002-5■N36-....**
1FT7105-5WB7...	94	28	14.1 (18.9)	30	**6SL3120-1TE23-0AD0**	1.5	4 × 4	**6FX■002-5■N46-....**
1FT7108-5WB7...	94	39	19.6 (26.3)	45	**6SL3120-1TE24-5AC0**	1.5	4 × 10	**6FX■002-5■N64-....**
1FT7082-5WC7...	93	10.7	4.4 (5.9)	18	**6SL3120-■TE21-8AD0**	1.5	4 × 1.5	**6FX■002-5■N26-....**
1FT7084-5WC7...	94	16.5	7.3 (9.8)	18	**6SL3120-■TE21-8AD0**	1.5	4 × 2.5	**6FX■002-5■N36-....**
1FT7086-5WC7...	94	23	10.5 (14.1)	24	**6SL3120-1TE22-4AD0**	1.5	4 × 4	**6FX■002-5■N46-....**
1FT7102-5WC7...	94	25.5	10.5 (14.1)	30	**6SL3120-1TE23-0AD0**	1.5	4 × 4	**6FX■002-5■N46-....**
1FT7105-5WC7...	94	39	18.8 (25.2)	45	**6SL3120-1TE24-5AC0**	1.5	4 × 10	**6FX■002-5■N64-....**
1FT7108-5WC7...	95	45.3	26.2 (35.1)	45	**6SL3120-1TE24-5AC0**	3	4 × 10	**6FX■002-5■S14-....**

Motor Module:	
Single Motor Module	**1**
Double Motor Module	**2**

Power cable:		
MOTION-CONNECT 800PLUS	**8**	
MOTION-CONNECT 500	**5**	
Without brake cores		**C**
With brake cores [5]		**D**
Length code		**....**

For more information about cables, see MOTION-CONNECT connection systems

8 1

[1] Connector size 3 not rotatable. An alternative terminal box can be selected for connector size 3 only.

[2] Optimum efficiency in continuous duty.

[3] With default setting of the pulse frequency.

[4] The current-carrying capacity of the power cables complies with EN 60204-1 for installation type C, under continuous operating conditions at an ambient air temperature of 40 °C (104 °F).

[5] Cable cross-section for brake connection 2 × 1.5 mm^2.

[6] $$P_{calc}[kW] = \frac{M_0[Nm] \times n_N}{9550} \qquad P_{calc}[hp] = \frac{M_0[lb_f\text{-}ft] \times n_N}{5250}$$

© Siemens 2024

SIMOTICS S-1FT7 Compact – water cooling

Selection and ordering data

Rated speed	Shaft height	Rated power	Static torque	Rated torque	Rated current	**SIMOTICS S-1FT7 synchronous motors Compact**	Number of pole pairs	Moment of inertia Rotor (without brake)	Weight (without brake)
n_N	SH	P_N at ΔT=100 K	M_0 at ΔT=100 K	M_N at ΔT=100 K	I_N at ΔT=100 K		p	J	m
r/min		kW (hp)	Nm (lb_f-ft)	Nm (lb_f-ft)	A	Article No.		10^{-4} kgm^2 (10^{-3} lb_f-in-s^2)	kg (lb)
SIMOTICS S-1FT7 Compact for DC link voltage 510 ... 720 V DC – water cooling									
3000	63	3.1 (4.2)	10 (7.38)	10 (7.38)	7.8	**1FT7062-5WF7■-1 ■ ■ ■**	5	8.1 (7.2)	11 (24.3)
		5 (6.71)	16 (11.8)	16 (11.8)	12.5	**1FT7064-5WF7■-1 ■ ■ ■**	5	12.9 (11.4)	13.7 (30.2)
		6.2 (8.3)	20 (14.8)	19.6 (14.5)	14.4	**1FT7066-5WF7■-1 ■ ■ ■**	5	17.7 (15.7)	16.3 (35.9)
		9.3 (12.5)	30 (22.1)	29.5 (21.8)	19.6	**1FT7068-5WF7■-1 ■ ■ ■**	5	24.8 (22.0)	20.1 (44.3)
	80	6.4 (8.6)	21 (15.5)	20.5 (15.1)	16	**1FT7082-5WF7■-1 ■ ■ ■**	5	28.9 (25.6)	20.7 (45.6)
		11 (14.8)	35 (25.8)	35 (25.8)	24.2	**1FT7084-5WF7■-1 ■ ■ ■**	5	48.3 (42.8)	27.5 (60.6)
		15.4 (20.7)	50 (36.9)	49 (36.1)	36	**1FT7086-5WF7■-1 ■ ■ ■**	5	67.8 (60.0)	34.1 (75.2)
	100	14.3 (19.2)	50 (36.9)	45.5 (33.6)	38.8	**1FT7102-5WF7■-1 ■ ■ ■**	5	98.9 (87.5)	36.6 (80.7)
		24.8 (33.3)	90 (66.4)	79 (58.3)	49.5	**1FT7105-5WF7■-■ ■ ■ ■**	5	164 (145)	55.9 (123.3)
		34.2 (45.9)	125 (92.2)	109 (80.4)	60	**1FT7108-5WF7■-■ ■ ■ ■**	5	265 (235)	69.6 (153.5)
4500	63	9.1 (12.2)	20 (14.8)	19.4 (14.3)	20.8	**1FT7066-5WH7■-1 ■ ■ ■**	5	17.7 (15.7)	16.3 (35.9)
	80	8.95 (12.00)	21 (15.5)	19 (14.0)	23.9	**1FT7082-5WH7■-1 ■ ■ ■**	5	28.9 (25.6)	20.7 (45.6)
		15.08 (20.22)	35 (25.8)	32 (23.6)	34.5	**1FT7084-5WH7■-1 ■ ■ ■**	5	48.3 (42.8)	27.5 (60.6)
		20.3 (27.2)	50 (36.9)	43 (31.7)	38	**1FT7086-5WH7■-1 ■ ■ ■**	5	67.8 (60.0)	34.1 (75.2)
6000	63	5.8 (7.8)	10 (7.38)	9.2 (6.8)	12.7	**1FT7062-5WK7■-1 ■ ■ ■**	5	8.1 (7.2)	11 (24.3)
		8.9 (11.9)	16 (11.8)	14.2 (10.5)	20	**1FT7064-5WK7■-1 ■ ■ ■**	5	12.9 (11.4)	13.7 (30.2)

With DRIVE-CLiQ interface:				1 0	
	Flange:	Classic (compatible with 1FT6/1FK7)			B
		Recessed (more compact)			K
	Encoder:	AS24DQI encoder	RJ45 signal port, M17 signal port		C
		AM24DQI encoder	RJ45 signal port, M17 signal port		L
Without DRIVE-CLiQ interface:				4 5	
	Flange:	Classic (compatible with 1FT6/1FK7)			N
		Recessed (more compact)			M
	Encoder:	IC2048S/R encoder	M23 signal port		
		AM2048S/R encoder	M23 signal port		
Connector outlet direction:		Connector sizes 1 and 1.5	Rotatable connector	1	
		Connector size 3 [1]	Transverse right	1	
			Transverse left	2	
			Axial NDE	3	
			Axial DE	4	
Terminal box/ cable entry: [1]		Top/transverse from right		5	
		Top/transverse from left		6	
		Top/axial from NDE		7	
		Top/axial from DE		8	

Shaft end:	**Shaft and flange accuracy:**	**Holding brake:**	
Feather key and keyway	Tolerance N	Without	A
Feather key and keyway	Tolerance N	With	B
Feather key and keyway	Tolerance R	Without	D
Feather key and keyway	Tolerance R	With	E
Plain shaft	Tolerance N	Without	G
Plain shaft	Tolerance N	With	H
Plain shaft	Tolerance R	Without	K
Plain shaft	Tolerance R	With	L

Vibration severity:	**Degree of protection:**	
Grade A	IP64	0
Grade A	IP65	1
Grade A	IP67	2
Grade R	IP64	3
Grade R	IP65	4
Grade R	IP67	5

For footnotes, see next page.

© Siemens 2024

Motor type (repeated)	Efficiency [2]	Stall current	Calculated power [7]	SINAMICS S120 Motor Module		Power cable with complete shield Motor connection (and brake connection) via power connector		
				Rated output current [3]	**Booksize format** Internal air cooling For further components, see SINAMICS S120 drive system			
	η	I_0 at M_0 ΔT=100 K	P_{calc} at M_0 ΔT=100 K	I_N		Power connectors	Cable cross-section [4]	Pre-assembled cable
	%	A	kW (hp)	A	Article No.	Size	mm²	Article No.
1FT7062-5WF7...	91	7.4	3.1 (4.2)	9	**6SL3120-■TE21-0AD0**	1	4 × 1.5	**6FX■002-5■N06-....**
1FT7064-5WF7...	91	11.9	5.0 (6.7)	18	**6SL3120-■TE21-8AD0**	1	4 × 1.5	**6FX■002-5■N06-....**
1FT7066-5WF7...	91	14	6.3 (8.4)	18	**6SL3120-■TE21-8AD0**	1	4 × 1.5	**6FX■002-5■N06-....**
1FT7068-5WF7...	93	19	9.4 (12.6)	18 [5]	**6SL3120-■TE21-8AD0**	1	4 × 2.5	**6FX■002-5■N16-....**
1FT7082-5WF7...	94	16	6.6 (8.9)	18	**6SL3120-■TE21-8AD0**	1.5	4 × 2.5	**6FX■002-5■N36-....**
1FT7084-5WF7...	94	24	11.0 (14.8)	24	**6SL3120-1TE22-4AD0**	1.5	4 × 4	**6FX■002-5■N46-....**
1FT7086-5WF7...	94	34	15.7 (21.1)	45	**6SL3120-1TE24-5AC0**	1.5	4 × 6	**6FX■002-5■N54-....**
1FT7102-5WF7...	95	40	15.7 (21.1)	45	**6SL3120-1TE24-5AC0**	1.5	4 × 10	**6FX■002-5■N64-....**
1FT7105-5WF7...	94	53.2	28.3 (38.0)	60	**6SL3120-1TE26-0AC0**	3	4 × 16	**6FX■002-5■S23-....**
1FT7108-5WF7...	95	65	39.3 (52.7)	85	**6SL3120-1TE28-5AA3**	3	4 × 16	**6FX■002-5■G23-....**
1FT7066-5WH7...	91	19.7	9.4 (12.6)	24	**6SL3120-1TE22-4AD0**	1	4 × 2.5	**6FX■002-5■N16-....**
1FT7082-5WH7...	94	24	9.9 (13.3)	24	**6SL3120-1TE22-4AD0**	1.5	4 × 4	**6FX■002-5■N46-....**
1FT7084-5WH7...	94	34.3	16.5 (22.1)	45	**6SL3120-1TE24-5AC0**	1.5	4 × 6	**6FX■002-5■N54-....**
1FT7086-5WH7...	94	40.5	23.6 (31.6)	45	**6SL3120-1TE24-5AC0**	1.5	4 × 10	**6FX■002-5■N64-....**
1FT7062-5WK7...	92	12.5	6.3 (8.4)	18	**6SL3120-■TE21-8AD0**	1	4 × 1.5	**6FX■002-5■N06-....**
1FT7064-5WK7...	92	20.2	10.1 (13.5)	24	**6SL3120-1TE22-4AD0**	1	4 × 2.5	**6FX■002-5■N16-....**

Motor Module:
Single Motor Module **1**
Double Motor Module **2**

Power cable:
MOTION-CONNECT 800PLUS **8**
MOTION-CONNECT 500 **5**

Without brake cores **C**
With brake cores [6] **D**

Length code **....**

For more information about cables, see MOTION-CONNECT connection systems

8 1

1) Connector size 3 is not rotatable. An alternative terminal box can be selected for connector size 3 only.

2) Optimum efficiency in continuous duty.

3) With default setting of the pulse frequency.

4) The current-carrying capacity of the power cables complies with EN 60204-1 for installation type C, under continuous operating conditions at an ambient air temperature of 40 °C (104 °F).

5) With the specified Motor Module, the motor cannot be fully utilized at M_0 with a winding temperature rise of ΔT = 100 K. If a Motor Module with a higher rating is used, you must carefully check whether the specified power cable can be connected to the larger Motor Module.

6) Cable cross-section for brake connection 2 × 1.5 mm².

7) $$P_{calc}\,[kW] = \frac{M_0\,[Nm] \times n_N}{9550} \qquad P_{calc}\,[hp] = \frac{M_0\,[lb_f\text{-}ft] \times n_N}{5250}$$

© Siemens 2024

SIMOTICS S-1FT7 High Dynamic – forced ventilation/water cooling

Selection and ordering data

Rated speed	Shaft height	Rated power	Static torque	Rated torque	Rated current	SIMOTICS S-1FT7 synchronous motors High Dynamic	Number of pole pairs	Moment of inertia Rotor (without brake)	Weight (without brake)
n_N	SH	P_N at ΔT=100 K	M_0 at ΔT=100 K	M_N at ΔT=100 K	I_N at ΔT=100 K		p	J	m
r/min		kW (hp)	Nm (lb_f-ft)	Nm (lb_f-ft)	A	Article No.		10^{-4} kgm^2 (10^{-3} lb_f-in-s^2)	kg (lb)
SIMOTICS S-1FT7 High Dynamic for DC link voltage 510 ... 720 V DC – forced ventilation									
3000	63	3.8 (5.1)	14 (10.3)	12 (8.85)	10.5	**1FT7065-7SF7■-1 ■ ■ ■**	5	6.4 (5.7)	19 (41.9)
		4.4 (5.9)	17 (12.5)	14 (10.3)	13	**1FT7067-7SF7■-1 ■ ■ ■**	5	8.3 (7.3)	23 (50.7)
	80	7.2 (9.7)	34 (25.1)	23 (17.0)	20	**1FT7085-7SF7■-1 ■ ■ ■**	5	20.7 (18.3)	34 (75.0)
		10.4 (13.9)	48 (35.4)	33 (24.3)	29	**1FT7087-7SF7■-1 ■ ■ ■**	5	27.4 (24.3)	42 (92.6)
4500	63	5.2 (7.0)	14 (10.3)	11 (8.11)	13.5	**1FT7065-7SH7■-1 ■ ■ ■**	5	6.4 (5.7)	19 (41.9)
		6.1 (8.2)	17 (12.5)	13 (9.59)	15	**1FT7067-7SH7■-1 ■ ■ ■**	5	8.3 (7.3)	23 (50.7)
	80	8.2 (11.0)	34 (25.1)	17.5 (12.9)	22.5	**1FT7085-7SH7■-1 ■ ■ ■**	5	20.7 (18.3)	34 (75.0)
		10.8 (14.5)	48 (35.4)	23 (17.0)	24	**1FT7087-7SH7■-■ ■ ■**	5	27.4 (24.3)	43 (94.8)
SIMOTICS S-1FT7 High Dynamic for DC link voltage 510 ... 720 V DC – water cooling									
3000	63	5.7 (7.6)	19 (14.0)	18 (13.3)	15	**1FT7065-7WF7■-1 ■ ■ ■**	5	6.4 (5.7)	16 (35.3)
		7.4 (9.9)	25 (18.4)	23.5 (17.3)	21	**1FT7067-7WF7■-1 ■ ■ ■**	5	8.3 (7.3)	22 (48.5)
	80	11.9 (16.0)	43 (31.7)	38 (28.0)	32	**1FT7085-7WF7■-1 ■ ■ ■**	5	20.7 (18.3)	32 (70.6)
		16.0 (21.5)	61 (45.0)	51 (37.6)	43	**1FT7087-7WF7■-■ ■ ■**	5	27.4 (24.3)	41 (90.4)
4500	63	7.8 (10.5)	19 (14.0)	16.5 (12.2)	20	**1FT7065-7WH7■-1 ■ ■ ■**	5	6.4 (5.7)	16 (35.3)
		10.4 (13.9)	25 (18.4)	22 (16.2)	25	**1FT7067-7WH7■-1 ■ ■ ■**	5	8.3 (7.3)	22 (48.5)
	80	15.6 (20.9)	43 (31.7)	33 (24.3)	48	**1FT7085-7WH7■-■ ■ ■**	5	20.7 (18.3)	32 (70.6)
		21.7 (29.1)	61 (45.0)	46 (33.9)	53	**1FT7087-7WH7■-■ ■ ■**	5	27.4 (24.3)	41 (90.4)

With DRIVE-CLiQ interface:

Flange:	Classic (compatible with 1FT6/1FK7) Recessed (more compact)		1 0
Encoder:	AS24DQI encoder	RJ45 signal port M17 signal port (only for water cooling)	B K
	AM24DQI encoder	RJ45 signal port M17 signal port (only for water cooling)	C L

Without DRIVE-CLiQ interface:

Flange:	Classic (compatible with 1FT6/1FK7) Recessed (more compact)		4 5
Encoder:	IC2048S/R encoder AM2048S/R encoder	M23 signal port M23 signal port	N M

Connector outlet direction:

Connector sizes 1 and 1.5	Rotatable connector	1
Connector size 3 [1]	Transverse right	1
	Transverse left	2
	Axial NDE	3
	Axial DE	4

Terminal box/ cable entry: [1]

Top/transverse from right	5
Top/transverse from left	6
Top/axial from NDE	7
Top/axial from DE	8

Shaft end:	Shaft and flange accuracy:	Holding brake:	
Feather key and keyway	Tolerance N	Without	A
Feather key and keyway	Tolerance N	With	B
Feather key and keyway	Tolerance R	Without	D
Feather key and keyway	Tolerance R	With	E
Plain shaft	Tolerance N	Without	G
Plain shaft	Tolerance N	With	H
Plain shaft	Tolerance R	Without	K
Plain shaft	Tolerance R	With	L

Vibration severity:	Degree of protection:	
Grade A	IP64	0
Grade A	IP65	1
Grade A	IP67 (only for water cooling)	2
Grade R	IP64	3
Grade R	IP65	4
Grade R	IP67 (only for water cooling)	5

For footnotes, see next page.

© Siemens 2024

Motor type (repeated)	Effi-ciency [2]	Stall current	Calculated power [6]	SINAMICS S120 Motor Module		Power cable with complete shield Motor connection (and brake connection) via power connector		
				Rated output current [3]	**Booksize format** Internal air cooling For further components, see SINAMICS S120 drive system	Power connec-tors	Cable cross-section [4]	Pre-assembled cable
	η	I_0 at M_0 ΔT=100 K	P_{calc} at M_0 ΔT=100 K	I_N				
	%	A	kW (hp)	A	Article No.	Size	mm^2	Article No.
1FT7065-7SF7...	92	12	4.4 (5.9)	18	**6SL3120-■TE21-8AD0**	1.5	4 × 1.5	**6FX■002-5■ N26-....**
1FT7067-7SF7...	94	15	5.3 (7.1)	18	**6SL3120-■TE21-8AD0**	1.5	4 × 1.5	**6FX■002-5■ N26-....**
1FT7085-7SF7...	92	28	10.7 (14.3)	30	**6SL3120-1 TE23-0AD0**	1.5	4 × 4	**6FX■002-5■ N46-....**
1FT7087-7SF7...	93	40	15.1 (20.2)	45	**6SL3120-1 TE24-5AC0**	1.5	4 × 10	**6FX■002-5■ N64-....**
1FT7065-7SH7...	92	16	6.6 (8.9)	18	**6SL3120-■TE21-8AD0**	1.5	4 × 2.5	**6FX■002-5■ N36-....**
1FT7067-7SH7...	94	19	8.0 (10.7)	24	**6SL3120-1 TE22-4AD0**	1.5	4 × 2.5	**6FX■002-5■ N36-....**
1FT7085-7SH7...	92	40	16.0 (21.5)	45	**6SL3120-1 TE24-5AC0**	1.5	4 × 10	**6FX■002-5■ N64-....**
1FT7087-7SH7...	93	45	22.6 (30.3)	45	**6SL3120-1 TE24-5AC0**	3	4 × 10	**6FX■002-5■ S14-....**
1FT7065-7WF7...	92	16	6.0 (8.0)	18	**6SL3120-■TE21-8AD0**	1.5	4 × 2.5	**6FX■002-5■ N36-....**
1FT7067-7WF7...	94	22	7.9 (10.6)	24	**6SL3120-1 TE22-4AD0**	1.5	4 × 4	**6FX■002-5■ N46-....**
1FT7085-7WF7...	93	36	13.5 (18.1)	45	**6SL3120-1 TE24-5AC0**	1.5	4 × 6	**6FX■002-5■ N54-....**
1FT7087-7WF7...	94	51	19.2 (25.7)	60	**6SL3120-1 TE26-0AC0**	3	4 × 16	**6FX■002-5■ S23-....**
1FT7065-7WH7...	92	22	9.0 (12.1)	24	**6SL3120-1 TE22-4AD0**	1.5	4 × 4	**6FX■002-5■ N46-....**
1FT7067-7WH7...	94	28	11.8 (15.8)	30	**6SL3120-1 TE23-0AD0**	1.5	4 × 4	**6FX■002-5■ N46-....**
1FT7085-7WH7...	94	58	20.3 (27.2)	60	**6SL3120-1 TE26-0AC0**	3	4 × 16	**6FX■002-5■ S23-....**
1FT7087-7WH7...	94	67	28.7 (38.5)	85	**6SL3120-1 TE28-5AA3**	3	4 × 25	**6FX■002-5DG33-....**

Motor Module:	
Single Motor Module	**1**
Double Motor Module	**2**

Power cable:	
MOTION-CONNECT 800PLUS	**8**
MOTION-CONNECT 500	**5**
Without brake cores	**C**
With brake cores [5]	**D**
Length code	**....**

For more information about cables, see MOTION-CONNECT connection systems

8 1

[1] Connector size 3 is not rotatable. An alternative terminal box can be selected for connector size 3 only.

[2] Optimum efficiency in continuous duty.

[3] With default setting of the pulse frequency.

[4] The current-carrying capacity of the power cables complies with EN 60204-1 for installation type C, under continuous operating conditions at an ambient air temperature of 40 °C (104 °F).

[5] Cable cross-section for brake connection 2 × 1.5 mm^2.

[6] $$P_{calc}\,[kW] = \frac{M_0\,[Nm] \times n_N}{9550} \qquad P_{calc}\,[hp] = \frac{M_0\,[lb_f\text{-}ft] \times n_N}{5250}$$

© Siemens 2024

Built-in holding brakes for SIMOTICS S-1FT7 motors

Overview

Many drives require a holding brake with an EMERGENCY STOP function for safety-related reasons or to comply with process requirements.

The permanent magnet brakes used for SIMOTICS S-1FT7 motors function according to the closed-circuit principle. The magnetic field of the permanent magnet pulls on the brake armature disk, i.e. in a condition of zero current, the brake is closed and the motor shaft is held. When the rated voltage of 24 V DC ± 10 % is applied to the brake, current flows through the coil and produces a counter-field that cancels the pull of the permanent magnet, causing the brake to release.

In the event of an emergency stop or voltage failure, approximately 2000 braking operations can be performed with the maximum operating energy without causing excessive wear on the holding brake (condition: maximum external moment of inertia = moment of inertia of motor and n_{max} type-specific).

The holding brake is not an operational or safety brake.

To avoid switching overvoltages and any related impact on the system environment, a varistor must be externally connected to brake connecting cables. The connection is established using a power connector or terminal box.

When connected to the SINAMICS S120 drive system, this overvoltage protection is already provided.

Technical specifications

Motor		Built-in holding brake					
Shaft height SH	Type	Holding torque [1]	DC current	Opening time with varistor	Closing time with varistor	Moment of inertia	Maximum operating energy per braking operation from n = 3000 r/min
		Nm (lb_f-ft)	A	ms	ms	10^{-4} kgm^2 (10^{-3} lb_f-in-s^2)	J
SIMOTICS S-1FT7 with permanent magnet brake, zero-backlash							
36	1FT703	3 (2.21)	0.3	60	25	0.12 (0.11)	30
48	1FT704	8 (5.90)	0.6	90	30	0.87 (0.77)	270
63	1FT706	18 (13.3)	0.8	150	50	2.84 (2.51)	880
80	1FT708	48 (35.4)	1.0	220	65	15.4 (13.6)	1900
100	1FT710	85 (62.7)	1.6	250	70	27.6 (24.4)	5300
132	1FT713	140 (103)	1.8	350	70	51.0 (45.1)	9800

[1] The holding torque is the highest permissible torque with which the closed brake can be loaded in steady-state operation without slip (holding function when the motor is stationary).

© Siemens 2024

Dimensional drawings

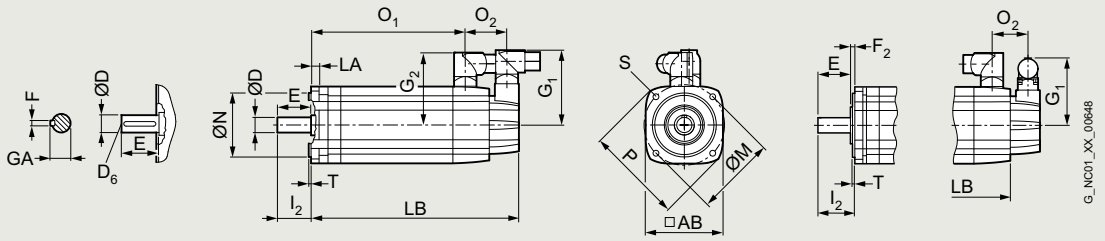

For motor		Dimensions in mm (inches)									Signal connector		Connector size		Shaft end DE				
											M17	M23	Size 1	Size 1.5					
Shaft height	Type	IEC	P	N	LA	M	AB	T	O_2	S	G_1	G_1	G_2	G_2	**D**	D_6	E	GA	F
SIMOTICS S-1FT7 natural cooling, with connector, without/with brake																			
36	1FT703.-5A		90 (3.54)	60 (2.36)	8 (0.31)	75 (2.95)	72 (2.83)	3 (0.12)	48 (1.89)	6.5 (0.26)	66 (2.60)	77 (3.03)	80 (3.15)	–	**14 (0.55)**	M5	30 (1.18)	16 (0.63)	5 (0.20)
48	1FT704.-5A		120 (4.72)	80 (3.15)	10 (0.39)	100 (3.94)	96 (3.78)	3 (0.12)	53 (2.09)	6.5 (0.26)	82 (3.23)	93 (3.66)	90 (3.54)	–	**19 (0.75)**	M6	40 (1.57)	21.5 (0.85)	6 (0.24)
63	1FT706.-5A		155 (6.10)	110 (4.33)	10 (0.39)	130 (5.12)	126 (4.96)	3.5 (0.14)	53 (2.09)	9 (0.35)	82 (3.23)	93 (3.66)	104 (4.09)	–	**24 (0.94)**	M8	50 (1.97)	27 (1.06)	8 (0.31)
80	1FT708.-5A		195 (7.68)	130 (5.12)	11.5 (0.45)	165 (6.50)	155 (6.10)	3.5 (0.14)	51 (2.01)	11 (0.43)	82 (3.23)	93 (3.66)	119 (4.69)	140 (5.51)	**32 (1.26)**	M12	58 (2.28)	35 (1.38)	10 (0.39)
100	1FT710.-5A		245 (9.65)	180 (7.09)	13 (0.51)	215 (8.46)	196 (7.72)	4 (0.16)	56 (2.20)	14 (0.55)	82 (3.23)	93 (3.66)	–	160 (6.30)	**38 (1.50)**	M12	80 (3.15)	41 (1.61)	10 (0.39)

			Recessed flange						Flange compatible with 1FT6/1FK7				
					without brake		with brake			without brake		with brake	
Shaft height	Type	IEC	F_2	I_2	LB	O_1	LB	O_1	I_2	LB	O_1	LB	O_1
36	1FT7034		5.5 (0.22)	36.5 (1.44)	189 (7.44)	127 (5.00)	216 (8.50)	154 (6.06)	30 (1.18)	195 (7.68)	133 (5.24)	222 (8.74)	160 (6.30)
	1FT7036				237 (9.33)	175 (6.89)	264 (10.39)	202 (7.95)		243 (9.57)	181 (7.13)	270 (10.63)	208 (8.19)
48	1FT7042		5.5 (0.22)	46 (1.81)	163 (6.42)	96 (3.78)	195 (7.68)	128 (5.04)	40 (1.57)	169 (6.65)	102 (4.02)	201 (7.91)	134 (5.28)
	1FT7044				213 (8.39)	146 (5.75)	245 (9.65)	178 (7.01)		219 (8.62)	152 (5.98)	251 (9.88)	184 (7.24)
	1FT7046				253 (9.96)	186 (7.32)	285 (11.22)	218 (8.58)		259 (10.20)	192 (7.56)	291 (11.46)	224 (8.82)
63	1FT7062		6 (0.24)	56.5 (2.22)	167 (6.57)	99 (3.90)	202 (7.95)	135 (5.31)	50 (1.97)	173 (6.81)	106 (4.17)	208 (8.19)	141 (5.55)
	1FT7064				198 (7.80)	131 (5.16)	233 (9.17)	166 (6.54)		205 (8.07)	137 (5.39)	240 (9.45)	173 (6.81)
	1FT7066				230 (9.06)	162 (6.38)	265 (10.43)	198 (7.80)		236 (9.29)	169 (6.65)	272 (10.71)	204 (8.03)
	1FT7068				277 (10.91)	210 (8.27)	312 (12.28)	245 (9.65)		284 (11.18)	216 (8.50)	319 (12.56)	252 (9.92)
80	1FT7082		6 (0.24)	64.5 (2.54)	184 (7.24)	124 (4.88)	241 (9.49)	176 (6.93)	58 (2.28)	196 (7.72)	130 (5.12)	248 (9.76)	183 (7.20)
	1FT7084				236 (9.29)	175 (6.89)	293 (11.54)	228 (8.98)		247 (9.72)	182 (7.17)	299 (11.77)	234 (9.21)
	1FT7086				287 (11.30)	227 (8.94)	345 (13.58)	279 (10.98)		299 (11.77)	234 (9.21)	351 (13.82)	286 (11.26)
100	1FT7102		6.5 (0.26)	87 (3.43)	209 (8.23)	144 (5.67)	266 (10.47)	196 (7.72)	80 (3.15)	221 (8.70)	151 (5.94)	273 (10.75)	203 (7.99)
	1FT7105				296 (11.65)	231 (9.09)	353 (13.90)	283 (11.14)		307 (12.09)	238 (9.37)	360 (14.17)	290 (11.42)
	1FT7108				365 (14.37)	300 (11.81)	422 (16.61)	352 (13.86)		377 (14.84)	307 (12.09)	429 (16.89)	359 (14.13)

© Siemens 2024

SIMOTICS S-1FT7 up to SH 100 with RJ45 signal connector (DRIVE-CLiQ) – natural cooling

Dimensional drawings

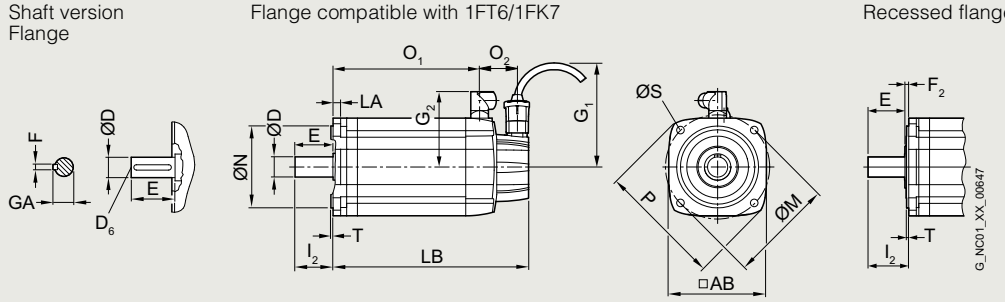

For motor			Dimensions in mm (inches)									Connector size		Shaft end DE				
												Size 1	Size 1.5					
Shaft height	Type	IEC	P	N	LA	M	AB	T	O_2	S	G_1	G_2	G_2	**D**	D_6	E	GA	F
SIMOTICS S-1FT7 natural cooling, with connector, without/with brake																		
36	1FT703.-5A		90 (3.54)	60 (2.36)	8 (0.31)	75 (2.95)	72 (2.83)	3 (0.12)	48 (1.89)	6.5 (0.26)	104.5 (4.11)	80 (3.15)	–	**14 (0.55)**	M5	30 (1.18)	16 (0.63)	5 (0.20)
48	1FT704.-5A		120 (4.72)	80 (3.15)	10 (0.39)	100 (3.94)	96 (3.78)	3 (0.12)	53 (2.09)	6.5 (0.26)	104.5 (4.11)	90 (3.54)	–	**19 (0.75)**	M6	40 (1.57)	21.5 (0.85)	6 (0.24)
63	1FT706.-5A		155 (6.10)	110 (4.33)	10 (0.39)	130 (5.12)	126 (4.96)	3.5 (0.14)	53 (2.09)	9 (0.35)	104.5 (4.11)	104 (4.09)	–	**24 (0.94)**	M8	50 (1.97)	27 (1.06)	8 (0.31)
80	1FT708.-5A		195 (7.68)	130 (5.12)	11.5 (0.45)	165 (6.50)	155 (6.10)	3.5 (0.14)	51 (2.01)	11 (0.43)	104.5 (4.11)	119 (4.69)	140 (5.51)	**32 (1.26)**	M12	58 (2.28)	35 (1.38)	10 (0.39)
100	1FT710.-5A		245 (9.65)	180 (7.09)	13 (0.51)	215 (8.46)	196 (7.72)	4 (0.16)	56 (2.20)	14 (0.55)	104.5 (4.11)	–	160 (6.30)	**38 (1.50)**	M12	80 (3.15)	41 (1.61)	10 (0.39)

			Recessed flange						Flange compatible with 1FT6/1FK7				
					without brake		with brake			without brake		with brake	
Shaft height	Type	IEC	F_2	I_2	LB	O_1	LB	O_1	I_2	LB	O_1	LB	O_1
36	1FT7034		5.5 (0.22)	36.5 (1.44)	189 (7.44)	127 (5.00)	216 (8.50)	154 (6.06)	30 (1.18)	196 (7.72)	133 (5.24)	223 (8.78)	160 (6.30)
	1FT7036				237 (9.33)	175 (6.89)	264 (10.39)	202 (7.95)		244 (9.61)	181 (7.13)	271 (10.67)	208 (8.19)
48	1FT7042		5.5 (0.22)	46 (1.81)	158 (6.22)	96 (3.78)	190 (7.48)	128 (5.04)	40 (1.57)	164 (6.46)	102 (4.02)	196 (7.72)	134 (5.28)
	1FT7044				208 (8.19)	146 (5.75)	240 (9.45)	178 (7.01)		214 (8.43)	152 (5.98)	246 (9.69)	184 (7.24)
	1FT7046				248 (9.76)	186 (7.32)	280 (11.02)	218 (8.58)		254 (10.00)	192 (7.56)	286 (11.26)	224 (8.82)
63	1FT7062		6 (0.24)	56.5 (2.22)	161 (6.34)	99 (3.90)	197 (7.76)	135 (5.31)	50 (1.97)	168 (6.61)	106 (4.17)	203 (7.99)	141 (5.55)
	1FT7064				193 (7.60)	131 (5.16)	228 (8.98)	166 (6.54)		200 (7.87)	137 (5.39)	235 (9.25)	173 (6.81)
	1FT7066				225 (8.86)	162 (6.38)	260 (10.24)	198 (7.80)		231 (9.09)	169 (6.65)	267 (10.51)	204 (8.03)
	1FT7068				272 (10.71)	210 (8.27)	307 (12.09)	245 (9.65)		279 (10.98)	216 (8.50)	314 (12.36)	252 (9.92)
80	1FT7082		6 (0.24)	64.5 (2.54)	189 (7.44)	124 (4.88)	236 (9.29)	176 (6.93)	58 (2.28)	191 (7.52)	130 (5.12)	243 (9.57)	183 (7.20)
	1FT7084				236 (9.29)	175 (6.89)	288 (11.34)	228 (8.98)		242 (9.53)	182 (7.17)	294 (11.57)	234 (9.21)
	1FT7086				287 (11.30)	227 (8.94)	340 (13.39)	279 (10.98)		294 (11.57)	234 (9.21)	346 (13.62)	286 (11.26)
100	1FT7102		6.5 (0.26)	87 (3.43)	209 (8.23)	144 (5.67)	261 (10.28)	196 (7.72)	80 (3.15)	216 (8.50)	151 (5.94)	268 (10.55)	203 (7.99)
	1FT7105				296 (11.65)	231 (9.09)	348 (13.70)	283 (11.14)		303 (11.93)	238 (9.37)	355 (13.98)	290 (11.42)
	1FT7108				365 (14.37)	300 (11.81)	417 (16.42)	352 (13.86)		372 (14.65)	307 (12.09)	424 (16.69)	359 (14.13)

© Siemens 2024

Dimensional drawings

Version with connector

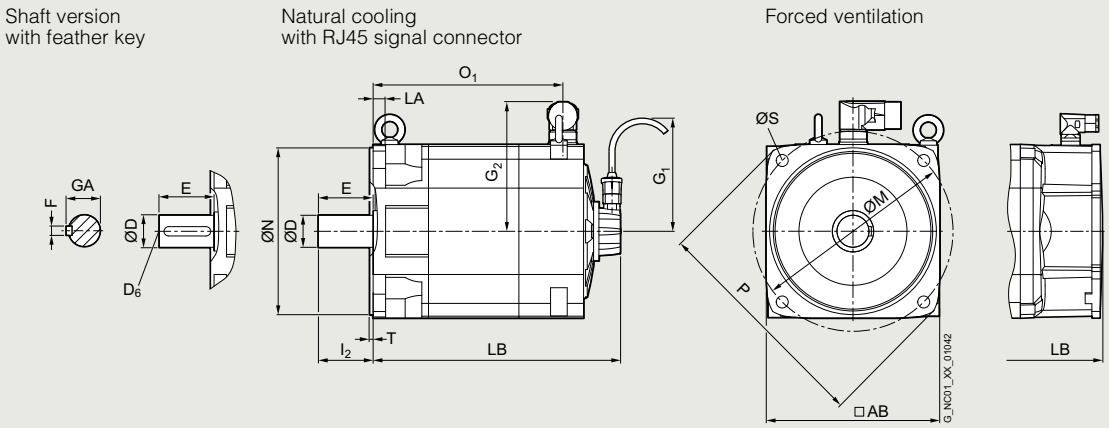

Version with terminal box

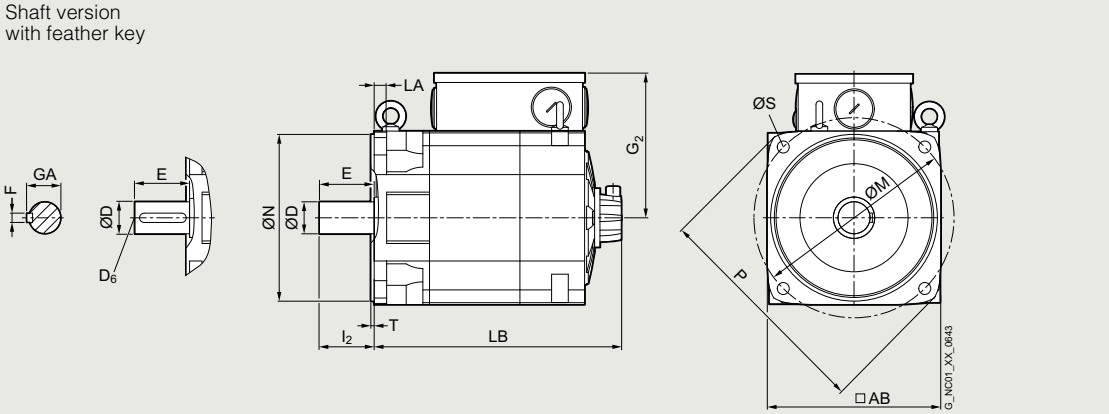

For motor		Dimensions in mm (inches)										Connector size		Terminal box	Shaft end DE				
												Size 1.5	Size 3						
Shaft height	Type	IEC	P	N	LA	M	AB	T	I_2	S		G_2	G_2	G_2	**D**	D_6	E	GA	F
SIMOTICS S-1FT7 natural cooling and forced ventilation, with connector/with terminal box, without/with brake																			
132	1FT713.-5(A/S)		340 (13.39)	250 (9.84)	18 (0.71)	300 (11.81)	260 (10.24)	5 (0.20)	82 (3.23)	18 (0.71)	193.5 (7.62)	203 (7.99)	215.5 (8.48)	**48 (1.89)**	M16	82 (3.23)	51.5 (2.03)	14 (0.55)

			Natural cooling							Forced ventilation		Natural cooling and forced ventilation			
			without brake		with brake					without brake	with brake	without brake		with brake	
			Signal connector									Connector size			
			RJ45	M17 M23	RJ45	M17 M23	RJ45	M17	M23			Size 1.5	Size 3	Size 1.5	Size 3
Shaft height	Type	IEC	LB	LB	LB	LB	G_1	G_1	G_1	LB	LB	O_1	O_1	O_1	O_1
132	1FT7132-5(A/S)		370.5 (14.59)	375.5 (14.78)	431 (16.97)	436 (17.97)	104.5 (4.11)	82 (3.23)	93 (3.65)	483.6 (19.04)	544.1 (21.42)	284.5 (11.20)	265.5 (10.45)	345 (13.58)	326 (12.83)
	1FT7134-5(A/S)		415.5 (16.36)	420.5 (16.56)	476 (18.74)	481 (18.94)				528.6 (20.81)	589.1 (23.19)	329.5 (12.97)	310.5 (12.22)	390 (15.35)	371 (14.61)
	1FT7136-5(A/S)		460.5 (18.13)	465.5 (18.53)	521 (20.51)	526 (20.71)				573.6 (22.58)	634.1 (24.96)	374.5 (14.74)	355.5 (14.00)	435 (17.13)	416 (16.38)
	1FT7138-5(A/S)		500.5 (19.70)	505.5 (19.90)	561 (22.09)	566 (22.28)				613.6 (24.16)	674.1 (26.54)	414.5 (16.32)	395.5 (15.57)	475 (18.70)	456 (17.95)

© Siemens 2024

SIMOTICS S-1FT7 with M17 / M23 signal connector – water cooling

Dimensional drawings

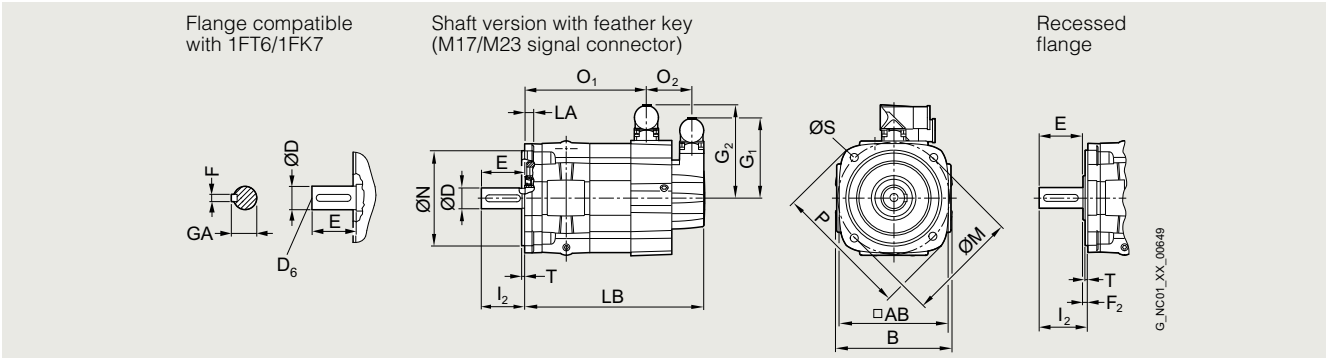

For motor		Dimensions in mm (inches)									Signal connector		Power connectors			Connector		
											M17	M23	Size 1	Size 1.5	Size 3	Size 1	Size 1.5	Size 3
Shaft height	Type	IEC	P	B	N	LA	M	AB	T	S			G_2	G_2	G_2	O_2	O_2	O_2
SIMOTICS S-1FT7 water cooling, with connector, without/with brake																		
63	1FT706.-.W		155 (6.10)	135 (5.31)	110 (4.33)	10 (0.39)	130 (5.12)	126 (4.96)	3.5 (0.14)	9 (0.35)	82 (3.23)	93 (3.66)	108 (4.25)	132.5 (5.22)	–	52 (2.05)	57 (2.24)	–
80	1FT708.-.W		194 (7.68)	165 (6.50)	130 (5.12)	11.5 (0.45)	165 (6.50)	155 (6.10)	3.5 (0.14)	11 (0.43)	82 (3.23)	93 (3.66)	–	140.5 (5.53)	168.5. (6.63)	–	50 (1.97)	67 (2.64)
100	1FT710.-5W		245 (9.65)	206 (8.11)	180 (7.09)	13 (0.51)	215 (8.46)	196 (7.72)	4 (0.16)	14 (0.55)	82 (3.23)	93 (3.66)	–	159.5 (6.28)	187.5 (7.38)	–	55 (2.17)	72 (2.83)

			Flange compatible with 1FT6/1FK7 without/with brake					Recessed flange without/with brake						Shaft end DE				
					Power connectors						Power connectors							
					Size 1	Size 1.5	Size 3				Size 1	Size 1.5	Size 3					
Shaft height	Type	IEC	l_2	LB	O_1	O_1	O_1	F_2	l_2	LB	O_1	O_1	O_1	D	D_6	E	GA	F
63	1FT7062		50 (1.97)	208 (8.19)	141 (5.55)	–	–	6 (0.24)	56.5 (2.22)	202 (7.95)	135 (5.31)	–	–	**24 (0.94)**	M8	50 (1.97)	27 (1.06)	8 (0.31)
	1FT7064			240 (9.45)	173 (6.81)	–	–			233 (9.17)	166 (6.54)	–	–					
	1FT7065			292 (11.50)	220 (8.66)	–	–			286 (11.26)	214 (8.43)	–	–					
	1FT7066			272 (10.71)	204 (8.03)	–	–			265 (10.43)	198 (7.80)	–	–					
	1FT7067			332 (13.07)	260 (10.24)	–	–			325 (12.80)	254 (10.00)	–	–					
	1FT7068			319 (12.56)	252 (9.92)	–	–			312 (12.28)	245 (9.65)	–	–					
80	1FT7082		58 (2.28)	248 (9.76)	–	183 (7.20)	–	6 (0.24)	64.5 (2.54)	241 (9.49)	–	176 (6.93)	–	**32 (1.26)**	M12	58 (2.28)	35 (1.38)	10 (0.39)
	1FT7084			299 (11.77)	–	234 (9.21)	–			293 (11.54)	–	228 (8.98)	–					
	1FT7085			319 (12.56)	–	254 (10.00)	237 (9.33)			312.5 (12.30)	–	247 (9.72)	231 (9.09)					
	1FT7086			351 (13.82)	–	286 (11.26)	–			345 (13.58)	–	279 (10.98)	–					
	1FT7087			379 (14.92)	–	314 (12.36)	297 (11.69)			372.5 (14.67)	–	307 (12.09)	291 (11.46)					
100	1FT7102		80 (3.15)	273 (10.75)	–	203 (7.99)	187 (7.36)	6.5 (0.26)	87 (3.43)	266 (10.47)	–	196 (7.72)	180 (7.09)	**38 (1.50)**	M12	80 (3.15)	41 (1.61)	10 (0.39)
	1FT7105			360 (14.17)	–	290 (11.42)	273 (10.75)			353 (13.90)	–	283 (11.14)	266 (10.47)					
	1FT7108			429 (16.89)	–	359 (14.13)	342 (13.46)			422 (16.61)	–	352 (13.86)	335 (13.19)					

© Siemens 2024

Dimensional drawings

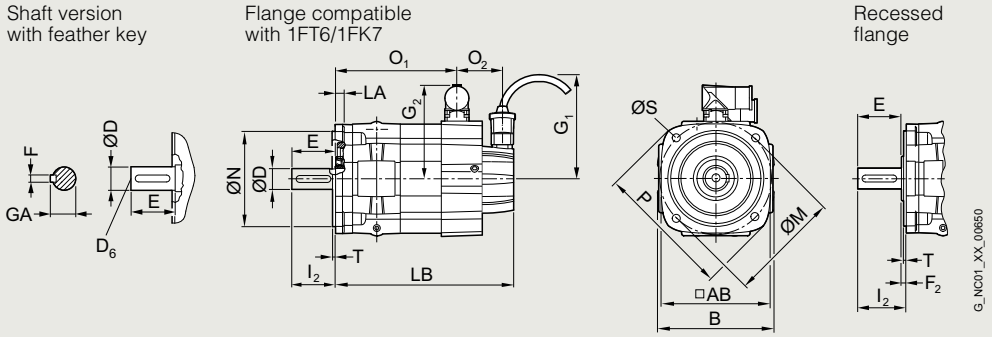

For motor			Dimensions in mm (inches)															
											Signal connector	Power connectors Size 1	Size 1.5	Size 3	Connector Size 1	Size 1.5	Size 3
Shaft height	Type	IEC	P	B	N	LA	M	AB	T	S	G_1	G_2	G_2	G_2	O_2	O_2	O_2
SIMOTICS S-1FT7 water cooling, with connector, without/with brake																	
63	1FT706.-.W		155 (6.10)	135 (5.31)	110 (4.33)	10 (0.39)	130 (5.12)	126 (4.96)	3.5 (0.14)	9 (0.35)	104.5 (4.11)	108 (4.25)	132.5 (5.22)	–	50 (1.97)	55 (2.17)	–
80	1FT708.-.W		194 (7.68)	165 (6.50)	130 (5.12)	11.5 (0.45)	165 (6.50)	155 (6.10)	3.5 (0.14)	11 (0.43)	104.5 (4.11)	–	140.5 (5.53)	168.5. (6.63)	–	48 (1.89)	63 (2.48)
100	1FT710.-5W		245 (9.65)	206 (8.11)	180 (7.09)	13 (0.51)	215 (8.46)	196 (7.72)	4 (0.16)	14 (0.55)	104.5 (4.11)	–	159.5 (6.28)	187.5 (7.38)	–	53 (2.09)	69 (2.72)

			Recessed flange without/with brake					Flange compatible with 1FT6/1FK7 without/with brake						Shaft end DE				
					Power connectors Size 1	Size 1.5	Size 3				Power connectors Size 1	Size 1.5	Size 3					
Shaft height	Type	IEC	I_2	LB	O_1	O_1	O_1	F_2	I_2	LB	O_1	O_1	O_1	D	D_6	E	GA	F
63	1FT7062		50 (1.97)	204 (8.03)	141 (5.55)	–	–	6 (0.24)	56.5 (2.22)	197 (7.76)	135 (5.31)	–	–	**24 (0.94)**	M8	50 (1.97)	27 (1.06)	8 (0.31)
	1FT7064			235 (9.25)	173 (6.81)	–	–			229 (9.02)	166 (6.54)	–	–					
	1FT7065			287 (11.30)	220 (8.66)	–	–			281 (11.06)	214 (8.43)	–	–					
	1FT7066			267 (10.51)	204 (8.03)	–	–			260 (10.24)	198 (7.80)	–	–					
	1FT7067			327 (12.87)	260 (10.24)	–	–			321 (12.64)	254 (10.00)	–	–					
	1FT7068			314 (12.36)	252 (9.92)	–	–			308 (12.13)	245 (9.65)	–	–					
80	1FT7082		58 (2.28)	243 (9.57)	–	183 (7.20)	–	6 (0.24)	64.5 (2.54)	237 (9.33)	–	176 (6.93)	–	**32 (1.26)**	M12	58 (2.28)	35 (1.38)	10 (0.39)
	1FT7084			295 (11.61)	–	234 (9.21)	–			288 (11.34)	–	228 (8.98)	–					
	1FT7085			314 (12.36)	–	254 (10.00)	237 (9.33)			308 (12.13)	–	247 (9.72)	231 (9.09)					
	1FT7086			346 (13.62)	–	286 (11.26)	–			340 (13.39)	–	279 (10.98)	–					
	1FT7087			374 (14.72)	–	314 (12.36)	297 (11.69)			368 (14.49)	–	307 (12.09)	291 (11.46)					
100	1FT7102		80 (3.15)	267 (10.51)	–	203 (7.99)	187 (7.36)	6.5 (0.26)	87 (3.43)	262 (10.31)	–	196 (7.72)	180 (7.09)	**38 (1.50)**	M12	80 (3.15)	41 (1.61)	10 (0.39)
	1FT7105			355 (13.98)	–	290 (11.42)	273 (10.75)			348 (13.70)	–	283 (11.14)	266 (10.47)					
	1FT7108			424 (16.69)	–	359 (14.13)	342 (13.46)			417 (16.42)	–	352 (13.86)	335 (13.19)					

© Siemens 2024

SIMOTICS S-1FT7 with RJ45 (DRIVE-CLiQ) and M23 signal connector – forced ventilation

Dimensional drawings

1FT706
1FT708
1FT710

Shaft version with feather key

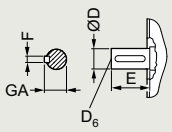

Flange compatible with 1FT6/1FK7

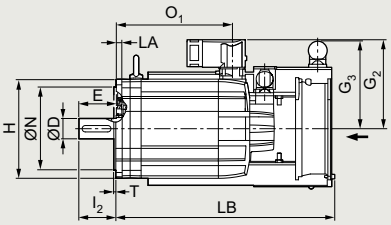

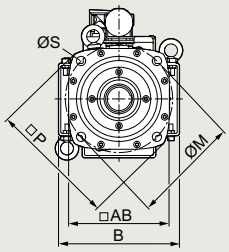

Recessed flange

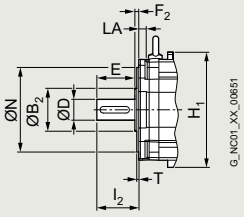

For motor			Dimensions in mm (inches)														
											Connector size					Fan	
											Size 1.5	Size 3					
Shaft height	Type	IEC	P	B	N	LA	M	AB	T	S	G_2	G_2	G_3	H	H_1	H_2	
SIMOTICS S-1FT7 forced ventilation, with connector, without/with brake																	
63	1FT706.-.S		155 (6.10)	158 (6.22)	110 (4.33)	10 (0.39)	130 (5.12)	126 (4.96)	3.5 (0.14)	11 (0.43)	125 (4.92)	–	102 (4.02)	26 (1.02)	143 (5.36)	135 (5.31)	
80	1FT708.-.S		194 (7.68)	186 (7.32)	130 (5.12)	11.5 (0.45)	165 (6.50)	155 (6.10)	3.5 (0.14)	11 (0.43)	139 (5.47)	167 (6.57)	137.5 (5.41)	27 (1.06)	177 (6.97)	186.5 (7.34)	
100	1FT710.-5S		245 (9.65)	224 (8.82)	180 (7.09)	13 (0.51)	215 (8.46)	196 (7.72)	4 (0.16)	14 (0.55)	159 (6.26)	187 (7.36)	151 (5.94)	27 (1.06)	220 (8.66)	222 (8.74)	

			Flange compatible with 1FT6/1FK7					Recessed flange						Shaft end DE				
				without brake		with brake				without brake		with brake						
Shaft height	Type	IEC	I_2	LB	O_1	LB	O_1	F_2	I_2	LB	O_1	LB	O_1	D	D_6	E	GA	F
63	1FT7065-7S		50 (1.97)	380 (14.96)	220 (8.66)	380 (14.96)	220 (8.66)	6 (0.24)	56.5 (2.22)	373.5 (14.70)	214 (8.43)	373.5 (14.70)	214 (8.43)	24 **(0.94)**	M8	50 (1.97)	27 (1.06)	8 (0.31)
	1FT7067-7S			420 (16.54)	260 (10.24)	420 (16.54)	260 (10.24)			413.5 (16.28)	254 (10.00)	413.5 (16.28)	254 (10.00)					
80	1FT7084-5S		58 (2.28)	342 (13.46)	182 (7.17)	394 (15.51)	234 (9.21)	6 (0.24)	64.5 (2.54)	336 (13.23)	175 (6.89)	387 (15.24)	228 (8.98)	**32 (1.26)**	M12	58 (2.28)	35 (1.38)	10 (0.39)
	1FT7085-7S			414 (16.30)	254 (10.00)	414 (16.30)	254 (10.00)			408 (16.06)	247 (9.72)	408 (16.06)	247 (9.72)					
	1FT7086-5S			394 (15.51)	234 (9.21)	446 (17.56)	286 (11.26)			387 (15.24)	227 (8.94)	440 (17.32)	379 (14.92)					
	1FT7087-7S			474 (18.66)	314 (12.36)	474 (18.66)	314 (12.36)			468 (18.43)	307 (12.09)	468 (18.43)	307 (12.09)					
100	1FT7105		80 (3.15)	404 (15.91)	238 (9.37)	456 (17.95)	290 (11.42)	6.5 (0.26)	87 (3.43)	397 (15.63)	231 (9.09)	449 (17.68)	283 (11.14)	**38 (1.50)**	M12	80 (3.15)	41 (1.61)	10 (0.39)
	1FT7108			473 (18.62)	307 (12.09)	525 (20.67)	359 (14.13)			466 (18.35)	300 (11.81)	518 (20.39)	352 (13.86)					

© Siemens 2024

Overview

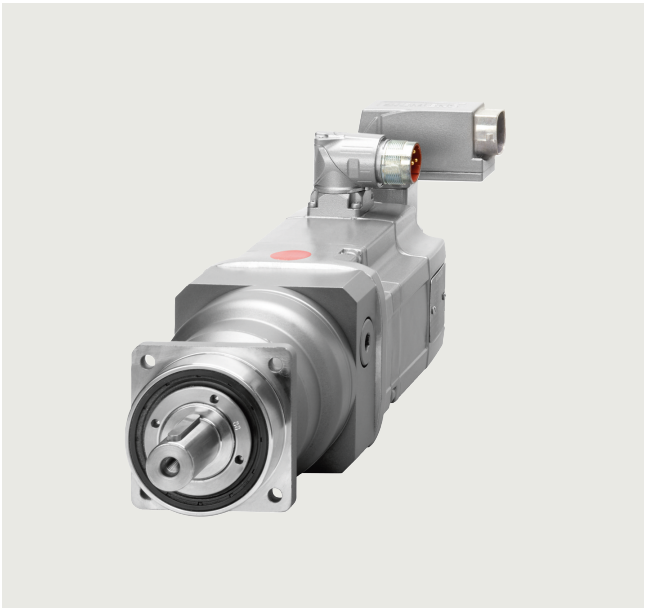

SIMOTICS S-1FT7 motor with mounted planetary gearbox SP+ series

SIMOTICS S-1FT7 motors can be combined with planetary gearboxes to create compact coaxial drive units. The gearboxes are flanged coaxially to the DE side of the motors.

Benefits

- High efficiency;
  1-stage: > 97 %
  2-stage: > 94 %
- Minimum torsional backlash
  1-stage: ≤ 4 arcmin
  2-stage: ≤ 6 arcmin
- Very low moment of inertia and thus short acceleration times of the motors
- Output shaft bearings dimensioned for high cantilever and axial loads with preloaded tapered roller bearings
- The gearboxes are enclosed (seal between gearbox and motor) and filled with oil at the factory. They are lubricated and sealed for their service life.
  The gearboxes are suitable for all mounting positions.
- Degree of protection of gearbox: IP65
- Small dimensions
- Low weight

Integration

SIMOTICS S-1FT7 motors can be supplied with a flanged planetary gearbox from the factory.

The gearboxes assigned to the individual motors and gearbox ratios *i* available for these motor/gearbox combinations are listed in the subsequent selection table. The maximum permissible input speed of the gearbox (this is the same as the maximum motor speed) must be taken into account when a gearbox is selected.

The motor/gearbox combinations listed in the selection tables are mainly intended for cyclic operation S3-60 % (switch-on duration ≤ 60 % and ≤ 20 min). Reduced maximum motor speeds and output torques apply for use in S1 continuous duty (switch-on duration > 60 % or > 20 min). The gearbox must not exceed a temperature of 90 °C.

© Siemens 2024

Planetary gearbox SP+ series for SIMOTICS S-1FT7

Selection and ordering data

Motor	Planetary gearbox 1-stage			Available gearbox ratio i =				Motor speed, max. S3-60 %	Output torque, max. S3-60 %	Radial output shaft load, max. [1]	Axial output shaft load, max. [1]
Type	Type	Torsional backlash	Gearbox weight, approx.	4	5	7	10	n_{G1} (n_1)	M_{G2} (T_{2B})	F_r (F_{2Rmax})	F_a (F_{2Amax})
		arcmin	kg (lb)					r/min	Nm (lb$_f$-ft)	N (lb$_f$)	N (lb$_f$)
1FT7034	SP 060S-MF1	≤ 4	1.9 (4.2)	✔	✔	✔	–	7500	50 (36.9)	2800 (629)	2400 (540)
1FT7034	SP 075S-MF1	≤ 4	3.9 (8.6)	–	–	–	✔	7500	132 (97.4) (114 (84.1) for i = 10)	4200 (944)	3350 (753)
1FT7036				✔	✔	✔	✔				
1FT7042				✔	✔	✔	✔				
1FT7044				✔	✔	✔	✔				
1FT7046				✔	✔	✔	–				
1FT7046	SP 100S-MF1	≤ 3	7.7 (17.0)	–	–	–	✔	5500	378 (279) (282 (208) for i = 10)	6600 (1484)	5650 (1270)
1FT7062				✔	✔	✔	✔				
1FT7064				✔	✔	✔	✔				
1FT7065				✔	✔	✔	–				
1FT7066				✔	✔	✔	✔				
1FT7067				✔	✔	✔	–				
1FT7068				✔	✔	✔	–				
1FT7065	SP 140S-MF1	≤ 3	17.2 (37.9)	–	–	–	✔	5000	792 (584) (636 (469) for i = 10)	9900 (2226)	9870 (2219)
1FT7067				–	–	–	✔				
1FT7068				–	–	–	✔				
1FT7082				✔	✔	✔	✔				
1FT7084				✔	✔	✔	✔				
1FT7085				✔	✔	✔	–				
1FT7086				✔	✔	✔	–				
1FT7087				✔	✔	–	–				
1FT7085	SP 180S-MF1	≤ 3	34 (75.0)	–	–	–	✔	4500	1452 (1071) (1164 (859) for i = 10)	15400 (3462)	15570 (3500)
1FT7086				–	–	–	✔				
1FT7087				–	–	✔	✔				
1FT7102				✔	✔	✔	✔				
1FT7105				✔	✔	✔	–				
1FT7108				✔	✔	✔	–				
1FT7105	SP 210S-MF1	≤ 3	56 (123)	–	–	–	✔	3000	3000 (2213) (2880 (2124) for i = 7 2280 (1682) for i = 10)	21000 (4721)	30000 (6744)
1FT7108				–	–	–	✔				
1FT7132				✔	✔	✔	–				
1FT7134				✔	✔	✔	–				
1FT7136				✔	✔	✔	–				
1FT7138				✔	✔	–	–				
1FT7132	SP 240S-MF1	≤ 3	83 (183)	–	–	–	✔	3000	5400 (3983) (5160 (3806) for i = 7 4000 (2950) for i = 10)	30000 (6744)	33000 (7419)
1FT7134				–	–	–	✔				
1FT7136				–	–	–	✔				
1FT7138				–	–	✔	–				
	Gear shaft			Order code							
	With feather key			**J02**	**J03**	**J05**	**J09**				
	Without feather key			**J22**	**J23**	**J25**	**J29**				

Preconditions:

SP+ planetary gearboxes can be mounted with the following motor versions:
- Flange compatible with 1FT6/1FK7
- Plain motor shaft end, shaft and flange accuracy tolerance N, without/with holding brake
- Vibration severity grade A/IP65 degree of protection

SP+ planetary gearboxes can therefore only be ordered with these motors:

- **1FT7...-....1-..G1**,
- **1FT7...-....1-..H1,**
- **1FT7...-....4-..G1,**
- **1FT7...-....4-..H1**

When ordering a motor with gearbox, a **-Z** must be added to the article number and the order code of the required gearbox specified.

Example:
- 1FT7042 motor without holding brake
- With single-stage SP+ planetary gearbox
- With i = 5 and gearbox shaft without feather key

1FT7042-5AF74-1NG1**-Z J23**

✔ Possible
– Not possible
[1] Referred to output shaft center.

© Siemens 2024

Technical specifications

SIMOTICS S-1FT7 motor with SP+ planetary gearbox

1-stage Type	Gearbox ratio	Motor speed	Output torque	Moments of inertia of gearboxes (referred to the drive)					
		Continuous duty S1 [1]		1FT703.	1FT704.	1FT706.	1FT708.	1FT710.	1FT713.
	i	n_{N1} r/min	M_{N2} (T_{2N}) Nm (lb_f-ft)	J_1 kgcm^2 (lb_f-in^2)	J_1 kgcm^2 (lb_f-in^2)	J_1 kgcm^2 (lb_f-in^2)	J_1 kgcm^2 (lb_f-in^2)	J_1 kgcm^2 (lb_f-in^2)	J_1 kgcm^2 (lb_f-in^2)
SP 060S-MF1	4	3300	27 (19.9)	0.22 (0.08)	–	–	–	–	–
	5	3300	27 (19.9)	0.20 (0.07)	–	–	–	–	–
	7	4000	26 (19.2)	0.18 (0.06)	–	–	–	–	–
SP 075S-MF1	4	2900	81 (59.7)	0.61 (0.21)	0.78 (0.27)	–	–	–	–
	5	2900	81 (59.7)	0.51 (0.17)	0.68 (0.23)	–	–	–	–
	7	3100	81 (59.7)	0.42 (0.14)	0.59 (0.20)	–	–	–	–
	10	3100	81 (59.7)	0.38 (0.13)	0.54 (0.18)	–	–	–	–
SP 100S-MF1	4	2500	171 (126)	–	–	3.04 (1.04)	–	–	–
	5	2500	169 (125)	–	–	2.61 (0.89)	–	–	–
	7	2800	166 (122)	–	–	2.29 (0.78)	–	–	–
	10	2800	174 (128)	–	1.38 (0.47)	2.07 (0.71)	–	–	–
SP 140S-MF1	4	2100	335 (247)	–	–	–	11.0 (3.8)	–	–
	5	2100	333 (246)	–	–	–	9.95 (3.40)	–	–
	7	2600	319 (235)	–	–	–	9.00 (3.08)	–	–
	10	2600	327 (241)	–	–	5.28 (1.80)	8.44 (2.88)	–	–
SP 180S-MF1	4	1500	927 (684)	–	–	–	–	33.9 (11.6)	–
	5	1500	919 (678)	–	–	–	–	27.9 (9.5)	–
	7	2300	825 (609)	–	–	–	–	22.2 (7.6)	–
	10	2300	864 (637)	–	–	–	19.2 (6.6)	19.2 (6.6)	–
SP 210S-MF1	4	1200	1895 (1398)	–	–	–	–	–	94.3 (32.2)
	5	1500	1767 (1303)	–	–	–	–	–	76.9 (26.3)
	7	1700	1731 (1277)	–	–	–	–	–	61.5 (21.0)
	10	2000	1708 (1260)	–	–	–	–	53.1 (18.1)	–
SP 240S-MF1	7	1500	2737 (2019)	–	–	–	–	–	138 (47.2)
	10	1700	2735 (2017)	–	–	–	–	–	125 (42.7)

[1] The limit values in the table apply for S1 continuous duty (switch-on duration > 60 % or > 20 min) for a maximum gearbox temperature of 90 °C (194 °F).

© Siemens 2024

Planetary gearbox SP+ series for SIMOTICS S-1FT7

Selection and ordering data

Motor	Planetary gearbox 2-stage			Available gearbox ratio i =					Motor speed, max. S3-60 %	Output torque, max. S3-60 %	Radial output shaft load, max. [1]	Axial output shaft load, max. [1]
Type	Type	Torsional backlash	Gearbox weight, approx.	16	20	28	40	50	n_{G1} (n_1)	M_{G2} (T_{2B})	F_r (F_{2Rmax})	F_a (F_{2Amax})
		arcmin	kg (lb)						r/min	Nm (lb$_f$-ft)	N (lb$_f$)	N (lb$_f$)
1FT7034	SP 075S-MF2	≤ 6	3.6 (7.9)	✔	✔	✔	–	–	8500	126 (92.9)	4200 (944)	3350 (753)
1FT7036				✔	–	–	–	–				
1FT7042				✔	–	–	–	–				
1FT7034	SP 100S-MF2	≤ 5	7.9 (17.4)	–	–	–	✔	✔	6500	347 (256)	6600 (1484)	5650 (1270)
1FT7036				–	✔	✔	✔	✔				
1FT7042				–	✔	✔	✔	✔				
1FT7044				✔	✔	✔	–	–				
1FT7046				✔	✔	–	–	–				
1FT7062				✔	✔	–	–	–				
1FT7064				✔	–	–	–	–				
1FT7044	SP 140S-MF2	≤ 5	17 (37.5)	–	–	–	✔	✔	6000	726 (535) (670 (494) for i = 50)	9900 (2226)	9870 (2219)
1FT7046				–	–	✔	✔	✔				
1FT7062				–	–	✔	✔	✔				
1FT7064				–	✔	✔	–	–				
1FT7065				✔	✔	–	–	–				
1FT7066				✔	✔	–	–	–				
1FT7067				✔	–	–	–	–				
1FT7068				✔	✔	–	–	–				
1FT7082				✔	✔	–	–	–				
1FT7084				✔	–	–	–	–				
1FT7064	SP 180S-MF2	≤ 5	36.4 (80.3)	–	–	–	✔	✔	5000	1452 (1071)	15400 (3462)	15570 (3500)
1FT7065				–	–	✔	✔	–				
1FT7066				–	–	✔	✔	✔				
1FT7067				–	✔	✔	–	–				
1FT7068				–	–	✔	✔	✔				
1FT7082				–	–	✔	✔	✔				
1FT7084				–	✔	✔	–	–				
1FT7085				✔	–	–	–	–				
1FT7086				✔	✔	–	–	–				
1FT7102				✔	✔	–	–	–				
1FT7084	SP 210S-MF2	≤ 5	55 (121)	–	–	–	✔	✔	4500	2880 (2124) (3000 (2213) for i = 20) (2840 (2095) for i = 40)	21000 (4721)	30000 (6744)
1FT7085				–	✔	✔	–	–				
1FT7086				–	–	✔	✔	–				
1FT7087				✔	✔	✔	–	–				
1FT7102				–	–	✔	–	–				
1FT7105				✔	✔	–	–	–				
1FT7108				✔	–	–	–	–				
1FT7085	SP 240S-MF2	≤ 5	80.6 (177.7)	–	–	–	✔	✔	4500	5400 (3983) (4400 (3245) for i = 40 5160 (3806) for i = 50)	30000 (6744)	33000 (7419)
1FT7086				–	–	–	–	✔				
1FT7102				–	–	–	✔	✔				
1FT7105				–	–	✔	✔	–				
1FT7108				–	✔	✔	–	–				
1FT7132				✔	✔	–	–	–				
1FT7134				✔	–	–	–	–				
	Gear shaft			**Order code**								
	With feather key			**J12**	**J13**	**J15**	**J16**	**J17**				
	Without feather key			**J32**	**J33**	**J35**	**J36**	**J37**				

Preconditions, see page 8.1/34.

✔ Possible
– Not possible

[1] Referred to output shaft center.

© Siemens 2024

Technical specifications

SIMOTICS S-1FT7 motor with SP+ planetary gearbox

2-stage Type	Gearbox ratio	Motor speed	Output torque	Moments of inertia of gearboxes (referred to the drive)					
		Continuous duty S1[1]		1FT703.	1FT704.	1FT706.	1FT708.	1FT710.	1FT713.
	i	n_{N1} r/min	M_{N2} (T_{2N}) Nm (lb_f-ft)	J_1 kgcm^2 (lb_f-in^2)	J_1 kgcm^2 (lb_f-in^2)	J_1 kgcm^2 (lb_f-in^2)	J_1 kgcm^2 (lb_f-in^2)	J_1 kgcm^2 (lb_f-in^2)	J_1 kgcm^2 (lb_f-in^2)
SP 075S-MF2	16	3500	101 (74.5)	0.23 (0.08)	0.55 (0.19)	–	–	–	–
	20	3500	101 (74.5)	0.20 (0.07)	–	–	–	–	–
	28	3500	101 (74.5)	0.18 (0.06)	–	–	–	–	–
SP 100S-MF2	16	3100	243 (179)	–	0.81 (0.28)	2.18 (0.74)	–	–	–
	20	3100	259 (191)	0.54 (0.18)	0.70 (0.24)	2.07 (0.71)	–	–	–
	28	3100	277 (204)	0.43 (0.15)	0.60 (0.21)	–	–	–	–
	40	3100	277 (204)	0.38 (0.13)	0.55 (0.19)	–	–	–	–
	50	3500	277 (204)	0.38 (0.13)	0.54 (0.18)	–	–	–	–
SP 140S-MF2	16	2900	461 (340)	–	–	3.19 (1.09)	10.3 (3.5)	–	–
	20	2900	493 (364)	–	–	2.71 (0.93)	9.77 (3.34)	–	–
	28	2900	545 (402)	–	1.65 (0.56)	2.34 (0.80)	–	–	–
	40	2900	581 (429)	–	1.40 (0.48)	2.10 (0.72)	–	–	–
	50	3200	536 (395)	–	1.39 (0.47)	2.08 (0.71)	–	–	–
SP 180S-MF2	16	2700	1162 (857)	–	–	–	12.4 (4.2)	13.5 (4.6)	–
	20	2700	1162 (857)	–	–	–	10.9 (3.7)	12.0 (4.1)	–
	28	2700	1162 (857)	–	–	6.32 (2.16)	9.48 (3.24)	–	–
	40	2700	1162 (857)	–	–	5.51 (1.88)	8.67 (2.96)	–	–
	50	2900	1162 (857)	–	–	5.45 (1.86)	8.61 (2.94)	–	–
SP 210S-MF2	16	2500	1274 (940)	–	–	–	–	34.5 (11.8)	–
	20	2500	1266 (934)	–	–	–	–	31.5 (10.8)	–
	28	2500	1294 (954)	–	–	–	30.0 (10.3)	30.0 (10.3)	–
	40	2500	1358 (1002)	–	–	–	28.5 (9.7)	–	–
	50	2500	1679 (1238)	–	–	–	28.3 (9.7)	–	–
SP 240S-MF2	16	2300	2658 (1961)	–	–	–	–	–	39.2 (13.4)
	20	2500	2596 (1915)	–	–	–	–	34.6 (11.8)	34.6 (11.8)
	28	2500	2667 (1967)	–	–	–	–	30.5 (10.4)	–
	40	2500	2803 (2067)	–	–	–	28.2 (9.6)	28.2 (9.6)	–
	50	2500	3457 (2550)	–	–	–	27.9 (9.5)	27.9 (9.5)	–

[1] The limit values in the table apply for S1 continuous duty (switch-on duration > 60 % or > 20 min) for a maximum gearbox temperature of 90 °C (194 °F).

© Siemens 2024

Dimensional drawings

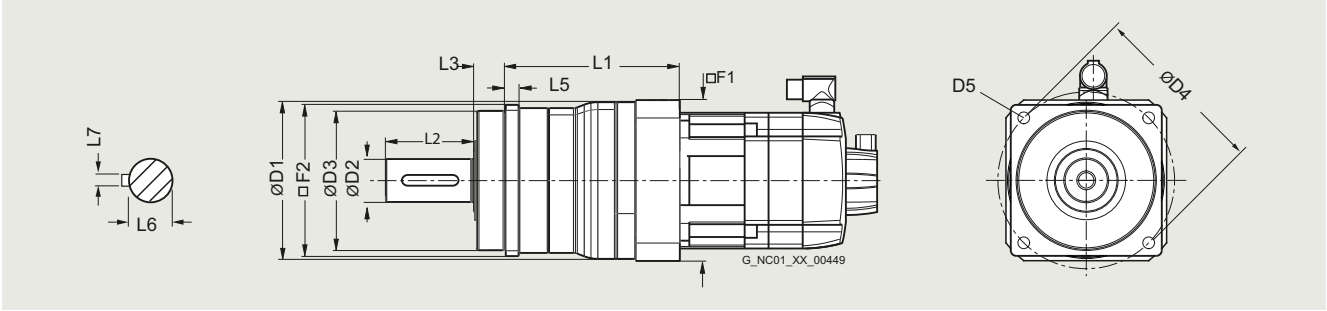

For planetary gearboxes SP+ series on SIMOTICS S-1FT7/S-1FK7 motors

Dimensions in mm (inches)

Planetary gearbox Type	D2	D3	D4	D5	F2	L2	L3	L5	L6	L7
SIMOTICS S-1FT7 with planetary gearbox SP+ series 1-stage/2-stage										
SP060S-MF1/-MF2	16 (0.63)	60 (2.36)	68 (2.68)	5.5 (0.22)	62 (2.48)	28 (1.10)	20 (0.79)	6 (0.24)	18 (0.71)	5 (0.20)
SP075S-MF1/-MF2	22 (0.87)	70 (2.76)	85 (3.35)	6.6 (0.26)	76 (2.99)	36 (1.42)	20 (0.79)	7 (0.28)	24.5 (0.96)	6 (0.24)
SP100S-MF1/-MF2	32 (1.26)	90 (3.54)	120 (4.72)	9 (0.35)	101 (3.98)	58 (2.28)	30 (1.18)	10 (0.39)	35 (1.38)	10 (0.39)
SP140S-MF1/-MF2	40 (1.57)	130 (5.12)	165 (6.50)	11 (0.43)	141 (5.55)	82 (3.23)	30 (1.18)	12 (0.47)	43 (1.69)	12 (0.47)
SP180S-MF1/-MF2	55 (2.17)	160 (6.30)	215 (8.46)	13.5 (0.53)	182 (7.17)	82 (3.23)	30 (1.18)	15 (0.59)	59 (2.32)	16 (0.63)
SP210S-MF1/-MF2	75 (2.95)	180 (7.09)	250 (9.84)	17 (0.67)	215 (8.46)	105 (4.13)	38 (1.50)	17 (0.67)	79.5 (3.13)	20 (0.79)
SP240S-MF1/-MF2	85 (3.35)	200 (7.87)	290 (11.42)	17 (0.67)	245 (9.65)	130 (5.12)	40 (1.57)	20 (0.79)	90 (3.54)	22 (0.87)

© Siemens 2024

Dimensional drawings

For planetary gearboxes SP+ series on SIMOTICS S-1FT7/S-1FK7 motors

Dimensions in mm (inches)

Planetary gearbox	Motor	Planetary gearbox SP+ series 1-stage **-MF1**			Planetary gearbox SP+ series 2-stage **-MF2**		
Type	Type	D1	F1	L1	D1	F1	L1
SIMOTICS S-1FT7 with planetary gearbox SP+ series 1-stage/2-stage							
SP060S-	1FT703/	68 (2.68)	70 (2.76)	94 (3.70)	68 (2.68)	70 (2.76)	116 (4.57)
	1FT704	91 (3.58)	90 (3.54)	106 (4.17)	–	–	–
SP075S-	1FT703	91 (3.58)	90 (3.54)	107.8 (4.24)	95 (3.74)	70 (2.76)	123.4 (4.86)
	1FT704/	91 (3.58)	90 (3.54)	111.5 (4.39)	91 (3.58)	90 (3.54)	135.6 (5.34)
SP100S-	1FT703/	–	–	–	118 (4.65)	90 (3.54)	142.3 (5.60)
	1FT704	115 (4.53)	120 (4.72)	122 (4.80)	118 (4.65)	90 (3.54)	146 (5.75)
	1FT704	115 (4.53)	120 (4.72)	129 (5.08)	115 (4.53)	120 (4.72)	164 (6.46)
SP140S-	1FT704	–	–	–	152 (5.98)	120 (4.72)	186.3 (7.33)
	1FT706	146 (5.75)	150 (5.91)	162.3 (6.39)	152 (5.98)	120 (4.72)	193.3 (7.61)
	1FT708	146 (5.75)	150 (5.91)	171.3 (6.74)	146 (5.75)	150 (5.91)	220 (8.66)
	1FT710	146 (5.75)	190 (7.48)	171.3 (6.74)	–	–	–
SP180S-	1FT706	–	–	–	212 (8.35)	150 (5.91)	234 (9.21)
	1FT708	207 (8.15)	210 (8.27)	198 (7.80)	212 (8.35)	150 (5.91)	242.9 (9.56)
	1FT710	207 (8.15)	210 (8.27)	203.5 (8.01)	212 (8.35)	190 (7.48)	242.9 (9.56)
SP210S-	1FT708	–	–	–	215 (8.46)	210 (8.27)	272 (10.71)
	1FT710	215 (8.46)	190 (7.48)	242 (9.53)	215 (8.46)	210 (8.27)	272 (10.71)
	1FT713	215 (8.46)	260 (7.48)	242 (9.53)	–	–	–
SP240S-	1FT708	–	–	–	245 (9.65)	210 (8.27)	297.5 (11.71)
	1FT710	245 (9.65)	240 (9.45)	273 (10.75)	245 (9.65)	210 (8.27)	297.5 (11.71)
	1FT713	245 (9.65)	260 (9.45)	273 (10.75)	245 (9.65)	260 (8.27)	297.5 (11.71)

© Siemens 2024

SIMOTICS S-1FT2

Overview

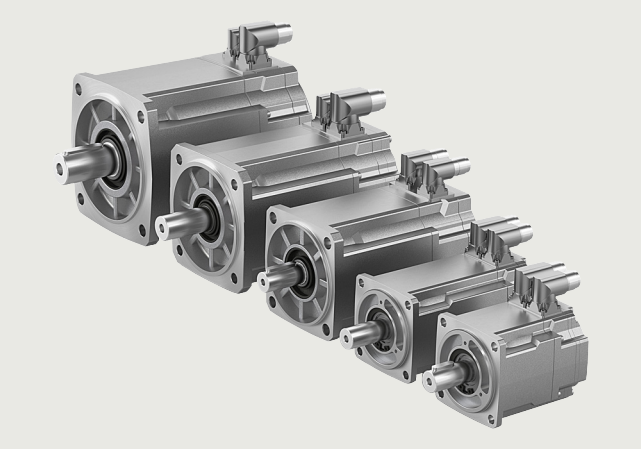

SIMOTICS S-1FT2 motors natural cooling

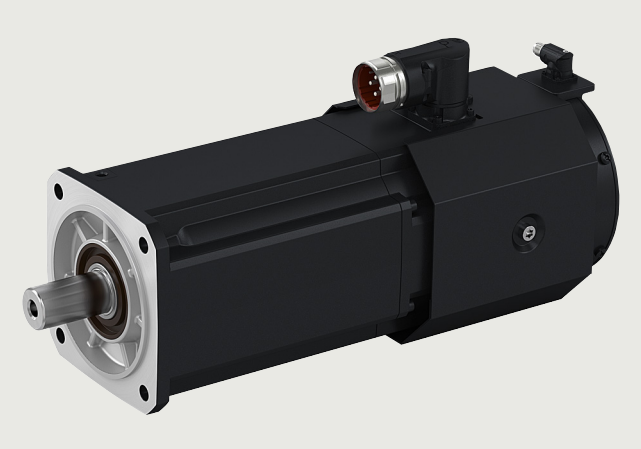

SIMOTICS S-1FT2 motors forced ventilation

SIMOTICS S-1FT2 servomotors are compact and highly dynamic synchronous motors to address a wide range of applications in an industrial environment. They are characterized by a high power density, degree of protection and overload capability. You can select between natural cooling or forced ventilation as cooling method. For natural cooling, the resulting heat loss is dissipated through the surface, while for forced ventilation, a mounted fan dissipates the heat loss and significantly increases the continuous power rating of the motor.

1FT2 servomotors are finely scaled in terms of torque and rated speed and have numerous variations and options. This makes it possible to create customized solutions to address the wide range of challenges in drive technology. Even more demanding tasks or applications in harsh environments can be mastered with 1FT2 servomotors.

SIMOTICS S-1FT2 High Dynamic motors

- Highest dynamic response through low inertia for highly dynamic applications with low moved masses.

SIMOTICS S-1FT2 Compact motors

- Precise, stable control with medium to high masses to be moved with medium moment of inertia.

Benefits

SIMOTICS S-1FT2 servomotors fully exploit their strengths in a system with converters from the SINAMICS S120 family:

- Short adjustment and positioning times
- Quick and precise compensation of disturbances
- Stable closed-loop control with high dynamic response
- Maximum flexibility in the selection
- Increased ruggedness
- Best accuracy

This is achieved by:

- Rapid control cycle
- High pulse frequency
- Complex rule algorithms
- Highest resolution optical encoder
- Low moment of inertia of the motors
- High overload capability

Application

- Feed axes and auxiliary axes in machine tools
- Robots and handling equipment
- Packaging machines
- Feed and withdrawal devices
- Automatic assembly machines
- Laboratory automation
- Woodworking, glass and ceramic industries
- Digital printing machines

More information

Detailed dimensional drawings, 3D models, data sheets and characteristic curves are available on the internet via the Siemens Product Configurator:

www.siemens.com/spc

→ SIMOTICS S-1FT2 in the SPC

© Siemens 2024

Technical specifications

General technical specifications

SIMOTICS S-1FT2	
Motor type	Permanent-magnet synchronous motor
Cooling	Natural cooling, forced ventilation
Type of construction according to EN 60034-7 (IEC 60034-7)	IM B5 (IM V1, IM V3)
Degree of protection according to EN 60034-5 (IEC 60034-5)	IP64, IP65 optional or retrofittable, IP67 optional
Shaft end according to DIN 748-3 (IEC 60072-1)	Plain shaft, optional shaft with keyway (half-key balancing)
Shaft and flange accuracy according to DIN 42955 (IEC 60072-1)	Tolerance N in each case for radial eccentricity of the shaft end, concentricity of the centering ring, and axial eccentricity of the mounting flange to the axis of the shaft end
Vibration severity grade according to EN 60034-14 (IEC 60034-14)	Grade A is maintained up to rated speed
Sound pressure level L_{pA} (1 m), max. according to EN ISO 1680, tolerance +3 dB(A) **Natural cooling** 1FT2.03 and 1FT2.04 1FT2.05 and 1FT2.06 1FT2.08 and 1FT2.10 **Forced ventilation** 1FT2.08	 55 dB(A) 65 dB(A) 70 dB(A) 73 dB(A)
Connection	Connectors for signals and power, rotatable
Color of the paint finish	Anthracite, RAL 7016
Holding brake	Optional integrated holding brake
Certificates of suitability	cURus, CE, EAC, CEL
Encoder system AS22DQC AM22DQC AS26DQC AM26DQC	 Absolute encoder single-turn 22-bit Absolute encoder 22-bit + 12-bit multi-turn Absolute encoder single-turn 26-bit Absolute encoder 26-bit + 12-bit multi-turn

© Siemens 2024

Technical specifications

SIMOTICS S-1FT2 shaft height 30

IP65, IP67

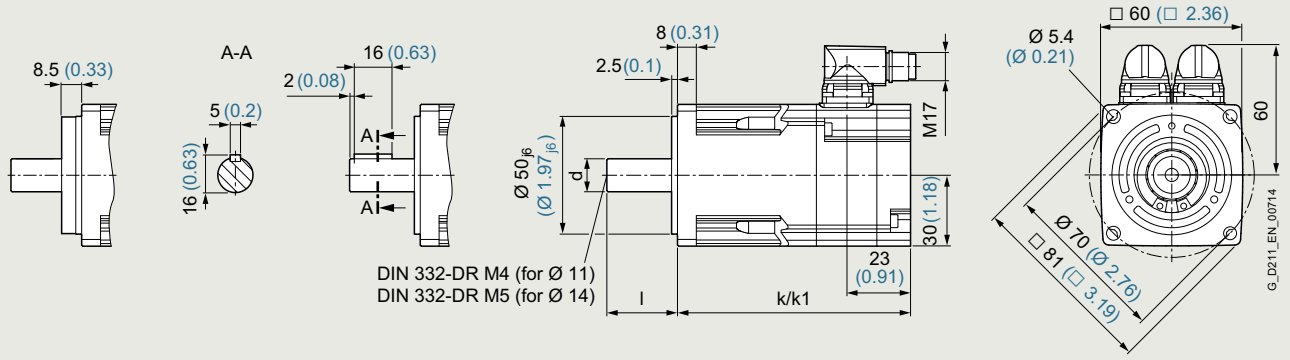

Dimensions in mm (inches)

SIMOTICS S-1FT2	without brake k	with brake k1
1FT2 . 03-2	99 (3.90)	131 (5.16)
1FT2 . 03-4	123 (4.84)	155 (6.10)

Shaft end	Ø d × l
Shaft end 0 / 1	$Ø11_{k6} \times 23$ ($Ø0.43_{k6} \times 0.91$)
Shaft end 2	$Ø14_{h6} \times 30$ ($Ø0.55_{h6} \times 1.18$)

SIMOTICS S-1FT2 servomotors		High Dynamic		Compact	
Shaft height 30		**1FT2103-2AH**	**1FT2103-4AH**	**1FT2203-2AK**	**1FT2203-4AK**
Static torque M_0	Nm (lb_f-ft)	0.64 (0.47)	1.27 (0.94)	0.64 (0.47)	1.27 (0.94)
Stall current I_0	A	1.06	1.87	1.05	2.05
Maximum torque M_{max}	Nm (lb_f-ft)	1.95 (1.44)	4.05 (2.99)	1.85 (1.36)	3.75 (2.77)
Maximum current I_{max}	A	3.95	7.1	3.4	6.7
Maximum speed n_{max}	r/min	8000	8000	8000	8000
Rotor moment of inertia J_{Mot}	kg cm² (lb_f-in²)	0.093 (0.032)	0.139 (0.047)	0.2 (0.068)	0.35 (0.120)
Moment of inertia (with brake) $J_{Mot\ Br}$	kg cm² (lb_f-in²)	0.112 (0.038)	0.158 (0.054)	0.22 (0.075)	0.37 (0.126)
Weight m_{Mot}	kg (lb)	1.18 (2.60)	1.65 (3.64)	1.16 (2.56)	1.49 (3.29)
Weight (with brake) $m_{Mot\ Br}$	kg (lb)	1.55 (3.42)	1.99 (4.39)	1.53 (3.37)	1.97 (4.34)
Rated data 380 ... 480 V 3 AC					
Rated speed n_N	r/min	4500	4500	6000	6000
Rated torque M_N	Nm (lb_f-ft)	0.59 (0.44)	1.01 (0.74)	0.405 (0.299)	0.68 (0.50)
Rated current I_N	A	1.05	1.56	0.75	1.24
Rated power P_N	kW	0.28	0.48	0.255	0.43
Connection system					
Connector size, power		M17	M17	M17	M17
Recommended cross-section	mm²	1.5	1.5	1.5	1.5
Connector, signal		M17 signal connector, DRIVE-CLiQ			

© Siemens 2024

Technical specifications

SIMOTICS S-1FT2 shaft height 40

IP65, IP67

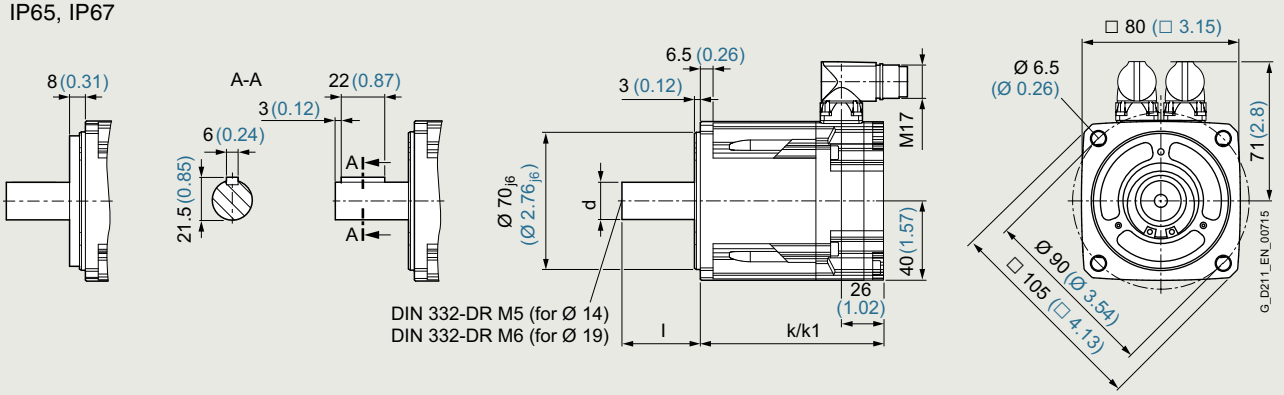

Dimensions in mm (inches)

SIMOTICS S-1FT2	without brake k	with brake k1
1FT2 . 04-4	98 (3.86)	142 (5.59)
1FT2 . 04-5	126 (4.96)	170 (6.69)
1FT2 . 04-6	144 (5.67)	188 (7.40)

Shaft end	Ø d × l
Shaft end 0 / 1	$Ø19_{k6} \times 40$ ($Ø0.75_{k6} \times 1.57$)
Shaft end 2	$Ø14_{k6} \times 30$ ($Ø0.55_{k6} \times 1.18$)

SIMOTICS S-1FT2 servomotors		High Dynamic					Compact		
Shaft height 40		**1FT2104-4AF**	**1FT2104-4AK**	**1FT2104-5AF**	**1FT2104-5AK**	**1FT2104-6AF**	**1FT2204-5AF**	**1FT2204-5AK**	**1FT2204-6AF**
Static torque M_0	Nm (lb_f-ft)	1.27 (0.94)	1.27 (0.94)	2.4 (1.77)	2.4 (1.77)	3.2 (2.36)	2.4 (1.77)	2.4 (1.77)	3.2 (2.36)
Stall current I_0	A	1.19	2.4	2.1	4.4	3	2.25	4.4	3
Maximum torque M_{max}	Nm (lb_f-ft)	3.75 (2.77)	3.85 (2.84)	7.5 (5.53)	7.6 (5.61)	10 (7.38)	7.1 (5.24)	7.1 (5.24)	9.5 (7.01)
Maximum current I_{max}	A	4.2	8.7	7.6	16	10.9	7.1	14.2	9.9
Maximum speed n_{max}	r/min	7200	8000	6700	8000	7200	7500	8000	7600
Rotor moment of inertia J_{Mot}	kg cm^2 (lb_f-in^2)	0.35 (0.120)	0.35 (0.120)	0.56 (0.191)	0.56 (0.191)	0.76 (0.260)	1.23 (0.420)	1.23 (0.420)	1.61 (0.550)
Moment of inertia (with brake) $J_{Mot\ Br}$	kg cm^2 (lb_f-in^2)	0.43 (0.147)	0.43 (0.147)	0.65 (0.222)	0.65 (0.222)	0.84 (0.287)	1.31 (0.448)	1.31 (0.448)	1.69 (0.577)
Weight m_{Mot}	kg (lb)	2.05 (4.52)	2.05 (4.52)	2.9 (6.39)	2.9 (6.39)	3.4 (7.50)	2.9 (6.39)	2.9 (6.39)	3.5 (7.72)
Weight (with brake) $m_{Mot\ Br}$	kg (lb)	2.9 (6.39)	2.9 (6.39)	3.7 (8.16)	3.7 (8.16)	4.3 (9.48)	3.75 (8.27)	3.75 (8.27)	4.25 (9.37)
Rated data 380 ... 480 V 3 AC									
Rated speed n_N	r/min	3000	6000	3000	6000	3000	3000	6000	3000
Rated torque M_N	Nm (lb_f-ft)	1.27 (0.94)	0.95 (0.70)	2.4 (1.77)	1.7 (1.25)	3.2 (2.36)	2.4 (1.77)	0.9 (0.66)	3.2 (2.36)
Rated current I_N	A	1.19	1.88	2.1	3.20	3	2.25	1.95	3
Rated power P_N	kW	0.4	0.6	0.75	1.07	1	0.75	0.57	1
Connection system									
Connector size, power		M17	M17	M17	M17	M17	M 17	M17	M17
Recommended cross-section	mm^2	1.5	1.5	1.5	1.5	1.5	1.5	1.5	1.5
Connector, signal		M17 signal connector, DRIVE-CLiQ							

© Siemens 2024

Technical specifications

SIMOTICS S-1FT2 shaft height 48, Compact

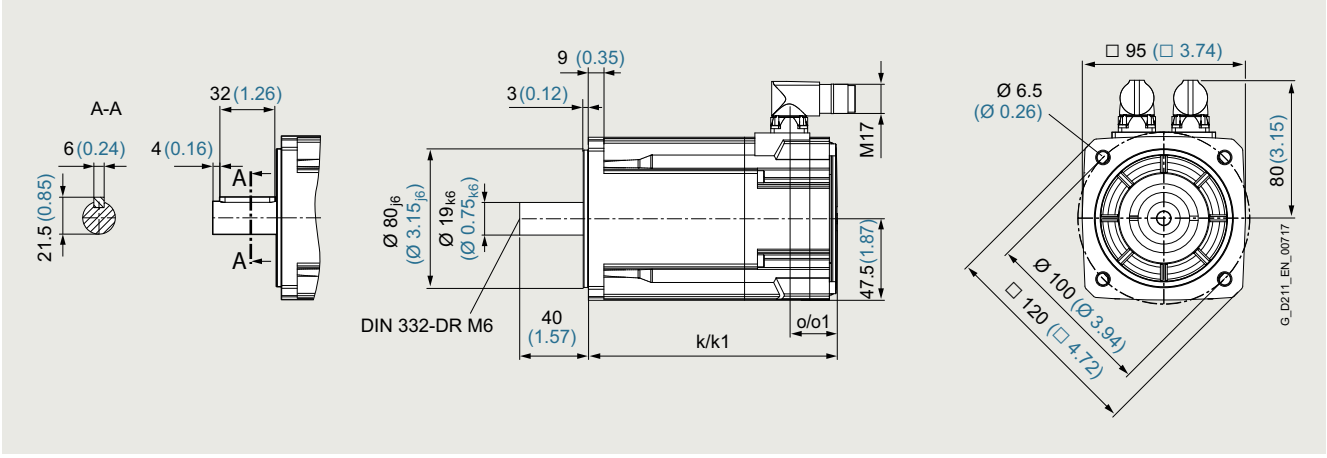

Dimensions in mm (inches)

SIMOTICS S-1FT2 Compact	without brake		with brake	
	k	o	k1	o1
1FT2205-2	145 (5.71)	28 (1.10)	188 (7.40)	34 (1.34)
1FT2205-4	177 (6.97)		220 (8.66)	

SIMOTICS S-1FT2 servomotors		Compact			
Shaft height 48		**1FT2205-2AC**	**1FT2205-2AF**	**1FT2205-2AH**	**1FT2205-4AF**
Static torque M_0	Nm (lb_f-ft)	3.6 (2.66)	3.6 (2.66)	3.6 (2.66)	6 (4.43)
Stall current I_0	A	1.84	2.9	3.8	4.7
Maximum torque M_{max}	Nm (lb_f-ft)	10.8 (7.97)	10.8 (7.97)	10.8 (7.97)	18 (13.28)
Maximum current I_{max}	A	6	9.5	12.1	15.1
Maximum speed n_{max}	r/min	4850	6500	8300	6200
Rotor moment of inertia J_{Mot}	kg cm^2 (lb_f-in^2)	3.15 (1.076)	3.15 (1.076)	3.15 (1.076)	5.1 (1.743)
Moment of inertia (with brake) $J_{Mot\ Br}$	kg cm^2 (lb_f-in^2)	4.05 (1.384)	4.05 (1.384)	4.05 (1.384)	6 (2.050)
Weight m_{Mot}	kg (lb)	3.75 (8.27)	3.75 (8.27)	3.75 (8.27)	5.2 (11.47)
Weight (with brake) $m_{Mot\ Br}$	kg (lb)	4.75 (10.47)	4.75 (10.47)	4.75 (10.47)	6.2 (13.67)
Rated data 380 ... 480 V 3 AC					
Rated speed n_N	r/min	2000	3000	4500	3000
Rated torque M_N	Nm (lb_f-ft)	3.3 (2.43)	3 (2.21)	2.25 (1.66)	4.6 (3.39)
Rated current I_N	A	1.74	2.5	2.55	3.75
Rated power P_N	kW	0.69	0.94	1.06	1.45
Connection system					
Connector size, power		M17	M17	M17	M17
Recommended cross-section	mm^2	1.5	1.5	1.5	1.5
Connector, signal		M17 signal connector, DRIVE-CLiQ			

© Siemens 2024

Technical specifications

SIMOTICS S-1FT2 shaft height 52, High Dynamic

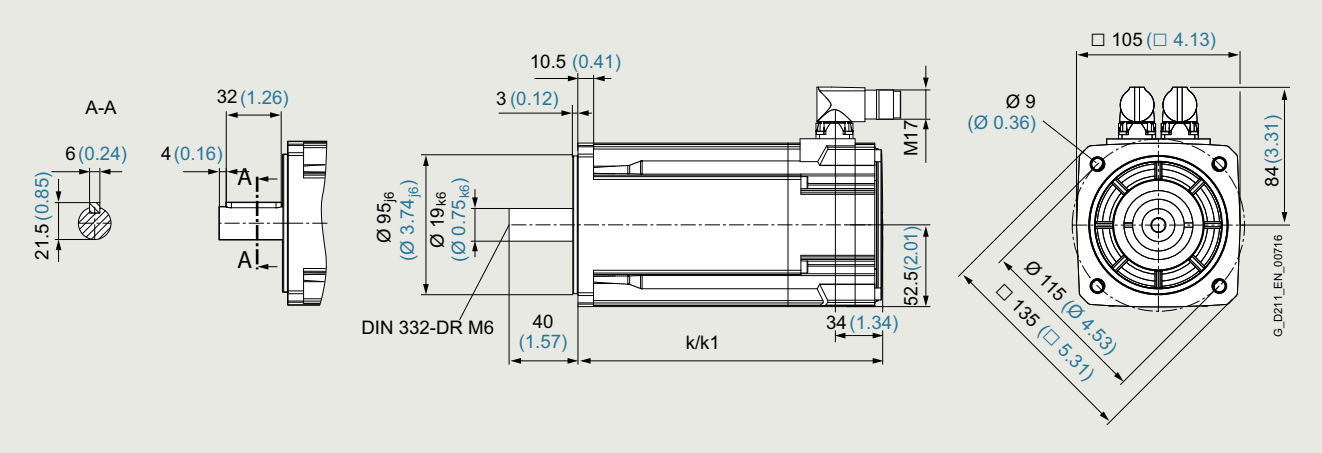

Dimensions in mm (inches)

SIMOTICS S-1FT2 High Dynamic	without brake k	with brake k1
1FT2105-4	173 (6.81)	200 (7.87)
1FT2105-6	215 (8.46)	242 (9.53)

SIMOTICS S-1FT2 servomotors		High Dynamic		
Shaft height 52		**1FT2105-4AF**	**1FT2105-4AH**	**1FT2105-6AF**
Static torque M_0	Nm (lb_f-ft)	5 (3.69)	5 (3.69)	8 (5.90)
Stall current I_0	A	4.65	6.9	6.7
Maximum torque M_{max}	Nm (lb_f-ft)	15 (11.06)	15 (11.06)	24 (17.70)
Maximum current I_{max}	A	18	27	24
Maximum speed n_{max}	r/min	7400	9000	6600
Rotor moment of inertia J_{Mot}	kg cm² (lb_f-in²)	1.71 (0.584)	1.71 (0.584)	2.65 (0.906)
Moment of inertia (with brake) $J_{Mot\ Br}$	kg cm² (lb_f-in²)	2.55 (0.871)	2.55 (0.871)	3.5 (1.196)
Weight m_{Mot}	kg (lb)	5.6 (12.35)	5.6 (12.35)	7.7 (16.98)
Weight (with brake) $m_{Mot\ Br}$	kg (lb)	6.6 (14.55)	6.6 (14.55)	8.7 (19.18)
Rated data 380 ... 480 V 3 AC				
Rated speed n_N	r/min	3000	4500	3000
Rated torque M_N	Nm (lb_f-ft)	4.6 (3.39)	3.7 (2.73)	6.6 (4.87)
Rated current I_N	A	4.35	5.4	5.6
Rated power P_N	kW	1.45	1.74	2.1
Connection system				
Connector size, power		M17	M17	M17
Recommended cross-section	mm²	1.5	1.5	1.5
Connector, signal			M17 signal connector, DRIVE-CLiQ	

© Siemens 2024

Technical specifications

SIMOTICS S-1FT2 shaft height 63

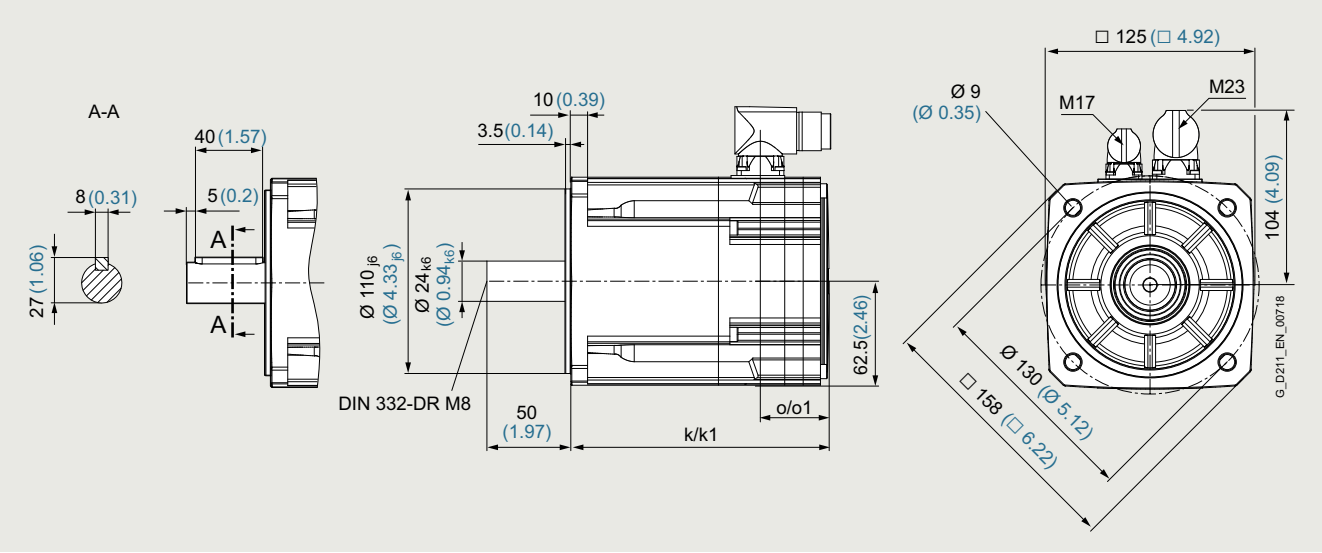

Dimensions in mm (inches)

SIMOTICS S-1FT2	without brake		with brake	
	k	o	k1	o
1FT2 . 06-2	154 (6.06)	41 (1.61)	205 (8.07)	53 (2.09)
1FT2 . 06-3	174 (6.85)		225 (8.86)	
1FT2 . 06-4	193 (7.60)		244 (9.61)	
1FT2 . 06-6	232 (9.13)		283 (11.14)	

SIMOTICS S-1FT2 servomotors Shaft height 63		High Dynamic			Compact							
		1FT21 06-3AF	1FT21 06-4AF	1FT21 06-6AF	1FT22 06-2AC	1FT22 06-2AF	1FT22 06-2AH	1FT22 06-3AB	1FT22 06-3AF	1FT22 06-4AC	1FT22 06-4AF	1FT22 06-4AH
Static torque M_0	Nm (lb$_f$-ft)	9 (6.64)	12 (8.85)	16 (11.80)	6 (4.43)	6.5 (4.79)	6.5 (4.79)	9 (6.64)	9 (6.64)	12 (8.85)	12 (8.85)	12 (8.85)
Stall current I_0	A	9.2	10.7	14.3	2.8	5	6.5	3.15	5.4	4.5	7.9	12
Maximum torque M_{max}	Nm (lb$_f$-ft)	26 (19.18)	33 (24.34)	45.5 (33.56)	18 (18.28)	18 (13.28)	18 (13.28)	27 (19.92)	27 (19.92)	38 (28.03)	36 (26.55)	36 (26.55)
Maximum current I_{max}	A	43	42	49	10.3	17.8	22.5	11.4	19.7	17	29.5	44
Maximum speed n_{max}	r/min	8000	7800	7600	4300	6800	8000	3300	5700	3300	5800	8000
Rotor moment of inertia J_{Mot}	kg cm^2 (lb$_f$-in^2)	4.6 (1.572)	6.0 (2.050)	8.7 (2.973)	7.8 (2.665)	7.8 (2.665)	7.8 (2.665)	11.5 (3.930)	11.5 (3.930)	15.1 (5.160)	15 (5.126)	15 (5.126)
Moment of inertia (with brake) $J_{Mot\ Br}$	kg cm^2 (lb$_f$-in^2)	6.3 (2.153)	7.6 (2.597)	10 (3.417)	9.4 (3.212)	9.4 (3.212)	9.4 (3.212)	13.1 (4.476)	13.1 (4.476)	16.8 (5.741)	16.8 (5.741)	16.8 (5.741)
Weight m_{Mot}	kg (lb)	7.4 (16.32)	9,0 (19.85)	11.8 (26.02)	6.3 (13.89)	6.3 (13.89)	6.3 (13.89)	7.4 (16.32)	7.4 (16.32)	8.9 (19.62)	8.9 (19.62)	8.9 (19.62)
Weight (with brake) $m_{Mot\ Br}$	kg (lb)	9,0 (19.85)	10.6 (23.37)	13.4 (29.55)	7.9 (17.42)	7.9 (17.42)	7.9 (17.42)	9 (19.85)	9 (19.85)	10.6 (23.37)	10.6 (23.37)	10.6 (23.37)
Rated data 380 ... 480 V 3 AC												
Rated speed n_N	r/min	3000	3000	3000	2000	3000	4500	1500	3000	2000	3000	4500
Rated torque M_N	Nm (lb$_f$-ft)	7.3 (5.38)	8.6 (6.34)	10.6 (7.82)	5.5 (4.06)	5.4 (3.98)	3.85 (2.84)	8.3 (6.12)	7.5 (5.53)	10.5 (7.74)	9.1 (6.71)	4.7 (3.47)
Rated current I_N	A	7.9	8.1	9.7	2.8	4.35	4.1	2.9	4.65	4.1	6.2	5.2
Rated power P_N	kW	2.3	2.7	3.3	1.15	1.71	1.8	1.3	2.35	2.2	2.85	2.2
Connection system												
Connector size, power		M23	M23	M23	M23	M23	M23	M23	M23	M23	M23	M23
Recommended cross-section	mm^2	1.5	1.5	1.5	1.5	1.5	1.5	1.5	1.5	1.5	1.5	1.5
Connector, signal		M17 signal connector, DRIVE-CLiQ										

© Siemens 2024

Technical specifications

SIMOTICS S-1FT2 shaft height 80, High Dynamic

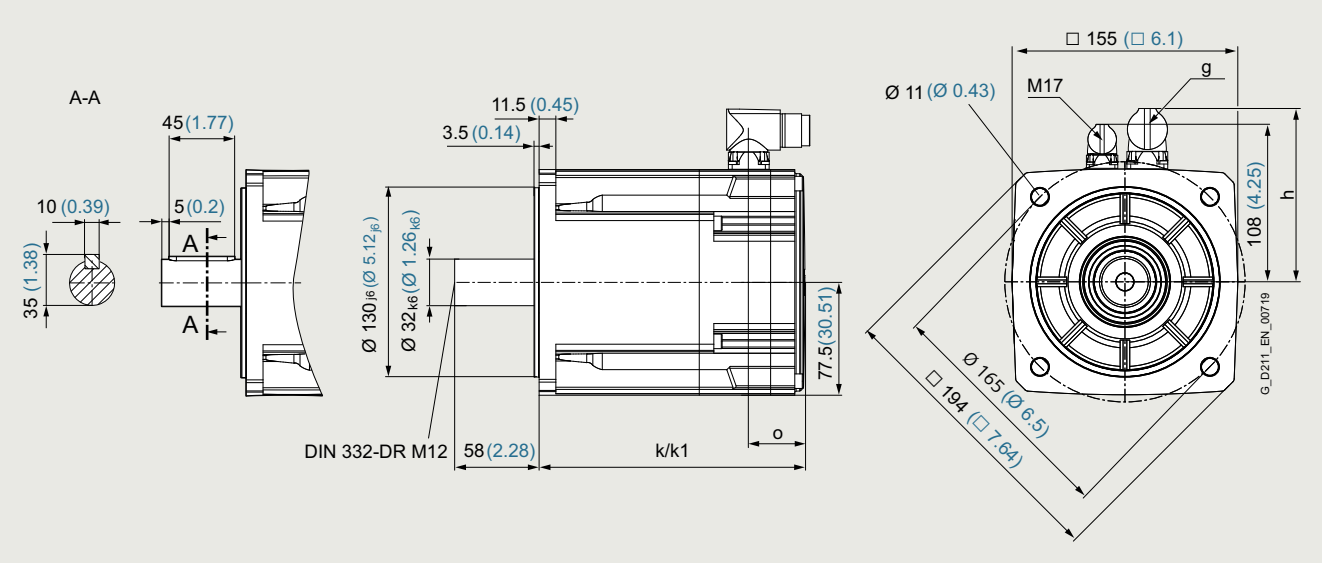

Dimensions in mm (inches)

SIMOTICS S-1FT2 High Dynamic	without brake k	with brake k1
1FT2108-4	227 (8.94)	280 (11.02)
1FT2108-5	247 (9.72)	300 (11.81)
1FT2108-7	287 (11.30)	340 (13.39)

g	h	o
M23	119 (4.69)	39 (1.54)
M40	139 (5.47)	45 (1.77)

SIMOTICS S-1FT2 servomotors Shaft height 80		High Dynamic 1FT21 08-4AC	1FT21 08-5AB	1FT21 08-5AC	1FT21 08-7AB	1FT21 08-7AC	1FT21 08-7AE
Static torque M_0	Nm (lb_f-ft)	25 (18.44)	30 (22.13)	30 (22.13)	37.5 (27.66)	37.5 (27.66)	37.5 (27.66)
Stall current I_0	A	14.8	11.8	18.4	14	22	28
Maximum torque M_{max}	Nm (lb_f-ft)	87 (64.17)	105 (77.45)	105 (77.45)	140 (103.26)	140 (103.26)	140 (103.26)
Maximum current I_{max}	A	77	61	96	78	123	155
Maximum speed n_{max}	r/min	5600	3750	5800	3550	5600	6500
Rotor moment of inertia J_{Mot}	kg cm² (lb_f-in²)	18.3 (6.253)	21.6 (7.381)	21.6 (7.381)	28.2 (9.636)	28.2 (9.636)	28.2 (9.636)
Rotor moment of inertia (with brake) $J_{Mot\ br}$	kg cm² (lb_f-in²)	22.3 (7.620)	25.6 (8.748)	25.6 (8.748)	32.2 (11.003)	32.2 (11.003)	32.2 (11.003)
Rotor moment of inertia (with reinforced brake) $J_{Mot\ br}$	kg cm² (lb_f-in²)	23.9 (8.167)	27.2 (9.294)	27.2 (9.294)	33.8 (11.549)	33.8 (11.549)	33.8 (11.549)
Weight m_{Mot}	kg (lb)	17 ((37.49))	19.7 (43.44)	20 (44.10)	24.5 (54.02)	25 (55.13)	25.2 (55.57)
Weight (with brake) $m_{Mot\ Br}$	kg (lb)	19.7 (43.44)	22.4 (49.39)	22.7 (50.05)	27.2 (59.98)	27.7 (61.08)	27.9 (61.52)
Weight (with reinforced brake) $m_{Mot\ Br}$	kg (lb)	19.9 (43.88)	22.5 (49.61)	22.9 (50.49)	27.4 (60.42)	27.9 (61.52)	28 (61.74)
Rated data 380 ... 480 V 3 AC							
Rated speed n_N	r/min	2000	1500	2000	1500	2000	2500
Rated torque M_N	Nm (lb_f-ft)	20.5 (15.12)	25.5 (18.81)	23.5 (17.33)	30 (22.13)	26 (19.18)	21 (15.49)
Rated current I_N	A	12.8	10.3	15.2	11.5	16	17
Rated power P_N	kW	4.3	4	4.9	4.7	5.4	5.5
Connection system							
Connector size, power		M23	M23	M40	M23	M40	M40
Recommended cross-section	mm²	1.5	1.5	2.5	1.5	4	4
Connector, signal		M17 signal connector, DRIVE-CLiQ					

© Siemens 2024

Technical specifications

SIMOTICS S-1FT2 shaft height 80, Compact

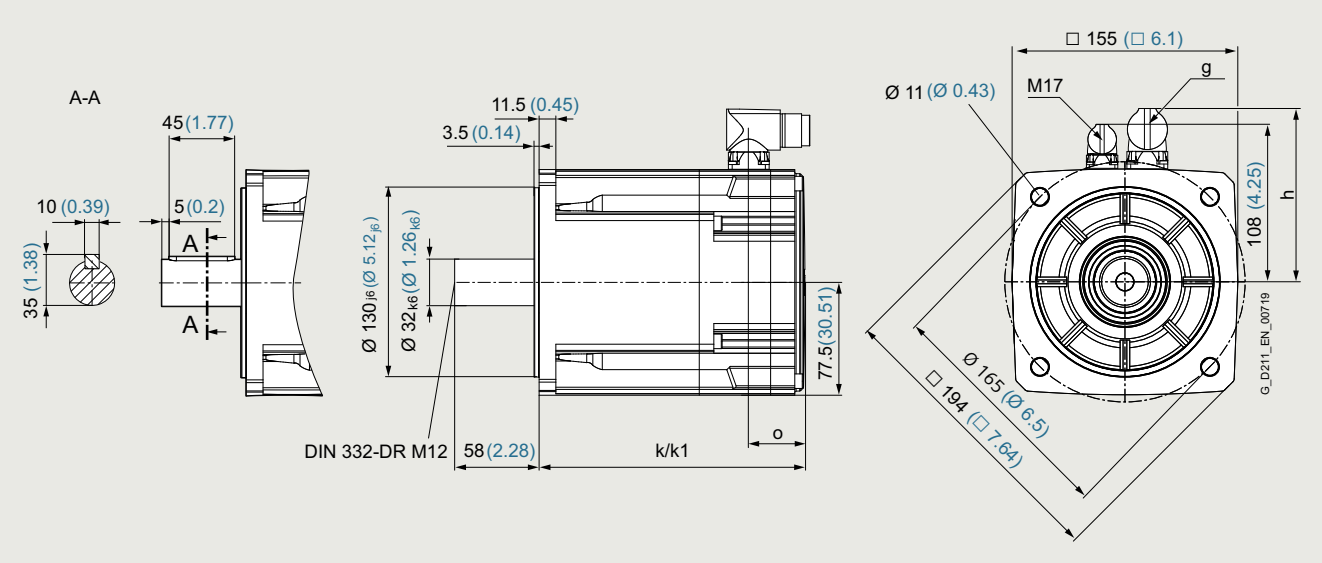

Dimensions in mm (inches)

SIMOTICS S-1FT2 Compact	without brake k	with brake k1
1FT2208-2	168 (6.61)	221 (8.70)
1FT2208-3	183 (7.20)	236 (9.29)
1FT2208-4	203 (7.99)	256 (10.08)
1FT2208-5	223 (8.78)	276 (10.87)

g	h	o
M23	119 (4.69)	39 (1.54)
M40	139 (5.47)	45 (1.77)

SIMOTICS S-1FT2 servomotors Shaft height 80		Compact 1FT2208-2AF	1FT2208-3AB	1FT2208-3AC	1FT2208-3AF	1FT2208-4AB	1FT2208-4AC	1FT2208-4AF	1FT2208-5AB	1FT2208-5AC
Static torque M_0	Nm (lb_f-ft)	12.5 (9.22)	18 (13.28)	18 (13.28)	18 (13.28)	22 (16.23)	22 (16.23)	22 (16.23)	27 (19.92)	27 (19.92)
Stall current I_0	A	8.3	6.2	8.4	11.9	7.1	11.7	15	8.6	14.6
Maximum torque M_{max}	Nm (lb_f-ft)	38 (28.03)	51 (37.62)	51 (37.62)	51 (37.62)	66 (48.68)	66 (48.68)	66 (48.68)	80 (59.01)	80 (59.01)
Maximum current I_{max}	A	31	20.5	29.5	40	25	43.5	55	29.5	51.5
Maximum speed n_{max}	r/min	6000	3000	4100	5600	3000	4600	5900	3000	4700
Rotor moment of inertia J_{Mot}	kg cm² (lb_f-in²)	22.5 (7.688)	29.6 (10.114)	29.6 (10.114)	29.6 (10.114)	38.8 (13.258)	38.8 (13.258)	38.8 (13.258)	48.1 (16.436)	48.1 (16.436)
Rotor moment of inertia (with brake) $J_{Mot\ br}$	kg cm² (lb_f-in²)	25.5 (8.713)	32.6 (11.139)	32.6 (11.139)	32.6 (11.139)	44.4 (15.171)	44.4 (15.171)	44.4 (15.171)	53.6 (18.315)	53.6 (18.315)
Rotor moment of inertia (with reinforced brake) $J_{Mot\ br}$	kg cm² (lb_f-in²)	28 (9.568)	35.1 (11.994)	35.1 (11.994)	35.1 (11.994)	-	-	-	-	-
Weight m_{Mot}	kg (lb)	10.4 (22.93)	12.6 (27.78)	12.6 (27.78)	12.6 (27.78)	14.6 (32.19)	14.6 (32.19)	14.6 (32.19)	16.6 (36.60)	16.6 (36.60)
Weight (with brake) $m_{Mot\ Br}$	kg (lb)	12.6 (27.78)	14.6 (32.19)	14.6 (32.19)	14.6 (32.19)	17.3 (38.15)	17.3 (38.15)	17.3 (38.15)	19.3 (42.56)	19.3 (42.56)
Weight (with reinforced brake) $m_{Mot\ Br}$	kg (lb)	13.2 (29.11)	15.2 (33.52)	15.2 (33.52)	15.2 (33.52)	-	-	-	-	-
Rated data 380 ... 480 V 3 AC										
Rated speed n_N	r/min	3000	1500	2000	3000	1500	2000	3000	1500	2000
Rated torque M_N	Nm (lb_f-ft)	9 (6.64)	16 (11.80)	14.5 (10.70)	11.1 (8.19)	18.6 (13.72)	17 (12.54)	11.8 (8.70)	22 (16.23)	19.1 (14.09)
Rated current I_N	A	6.5	5.7	7	7.7	6.4	9.3	8.5	7.2	10.8
Rated power P_N	kW	2.85	2.5	3.05	3.5	2.9	3.55	3.7	3.45	4
Connection system										
Connector size, power		M23	M23	M23	M23	M23	M23	M23	M23	M23
Recommended cross-section	mm²	1.5	1.5	1.5	1.5	1.5	1.5	1.5	1.5	1.5
Connector, signal		M17 signal connector, DRIVE-CLiQ								

© Siemens 2024

Technical specifications

SIMOTICS S-1FT2 shaft height 80, High Dynamic – forced ventilation

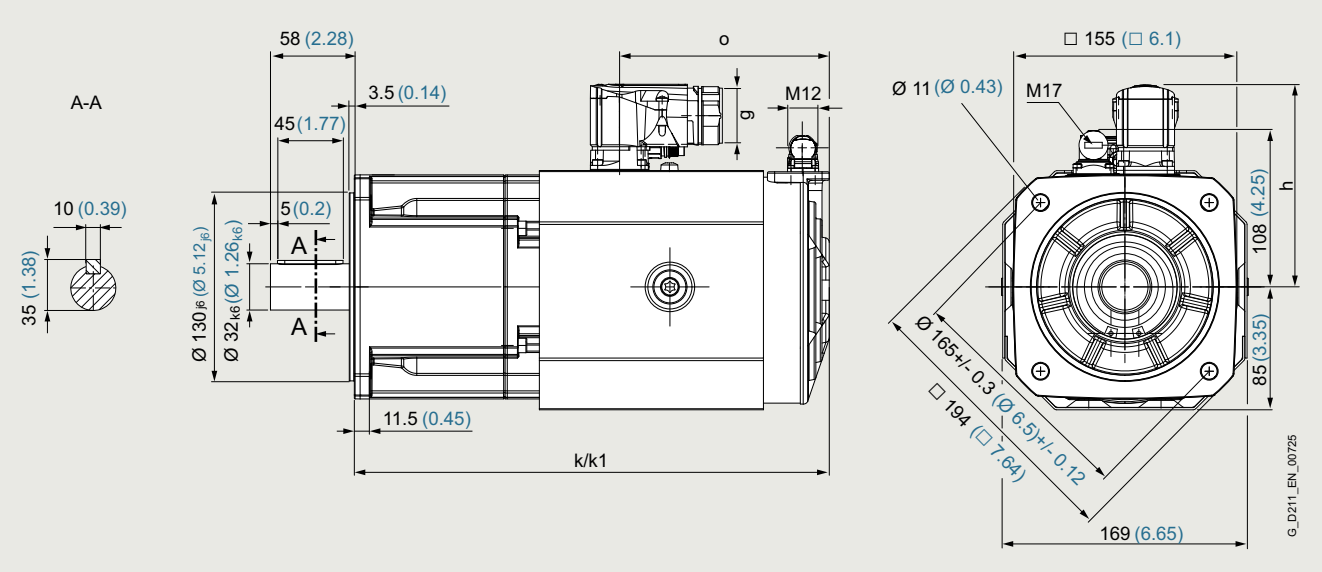

Dimensions in mm (inches)

SIMOTICS S-1FT2 High Dynamic	without brake k	with brake k1
1FT2108-4	327 (12.87)	380 (14.96)
1FT2108-5	347 (13.66)	400 (15.75)
1FT2108-7	387 (15.24)	440 (17.32)

g	h	o
M23	119 (4.69)	139 (5.47)
M40	139 (5.47)	145 (5.71)

SIMOTICS S-1FT2 servomotors Shaft height 80		High Dynamic 1FT21 08-4SC	1FT21 08-5SB	1FT21 08-5SC	1FT21 08-7SB	1FT21 08-7SC	1FT21 08-7SE
Static torque M_0	Nm (lb_f-ft)	33 (24.34)	40 (29.50)	40 (29.50)	50 (36.88)	50 (36.88)	49.5 (36.51)
Stall current I_0	A	19.2	15.5	24	18.2	29	36
Maximum torque M_{max}	Nm (lb_f-ft)	87 (64.17)	105 (77.45)	105 (77.45)	140 (103.26)	140 (103.26)	140 (103.26)
Maximum current I_{max}	A	77	61	96	78	123	155
Maximum speed n_{max}	r/min	5500	3700	5800	3450	5500	6500
Rotor moment of inertia J_{Mot}	kg cm² (lb_f-in²)	18.3 (6.253)	21.6 (7.381)	21.6 (7.381)	28.2 (9.636)	28.2 (9.636)	28.2 (9.636)
Rotor moment of inertia (with brake) $J_{Mot\ br}$	kg cm² (lb_f-in²)	22.3 (7.620)	25.6 (8.748)	25.6 (8.748)	32.2 (11.003)	32.2 (11.003)	32.2 (11.003)
Rotor moment of inertia (with reinforced brake) $J_{Mot\ br}$	kg cm² (lb_f-in²)	23.9 (8.167)	27.2 (9.294)	27.2 (9.294)	33.8 (11.549)	33.8 (11.549)	33.8 (11.549)
Weight m_{Mot}	kg (lb)	19.8 (43.66)	22.1 (48.73)	22.4 (49.39)	27.3 (60.20)	27.4 (60.42)	27.6 (60.86)
Weight (with brake) $m_{Mot\ Br}$	kg (lb)	22.5 (49.61)	24.8 (54.68)	25.1 (55.35)	30 (66.15)	30.1 (66.37)	30.3 (66.81)
Weight (with reinforced brake) $m_{Mot\ Br}$	kg (lb)	22.7 (50.05)	24.9 (54.90)	25.3 (55.79)	30.2 (66.59)	30.3 (66.81)	30.4 (67.03)
Rated data 380 ... 480 V 3 AC							
Rated speed n_N	r/min	2000	1500	2000	1500	2000	2500
Rated torque M_N	Nm (lb_f-ft)	28.5 (21.02)	35.5 (26.18)	34 (25.08)	44 (32.45)	42 (30.98)	39 (28.77)
Rated current I_N	A	17.4	14.9	21.5	16.8	26	31
Rated power P_N	kW	6	5.6	7.1	6.9	8.8	10.2
Connection system							
Connector size, power		M40	M23	M40	M40	M40	M40
Recommended cross-section	mm²	2.5	2.5	4	2.5	6	6
Connector, signal		M17 signal connector, DRIVE-CLiQ					

© Siemens 2024

Technical specifications

SIMOTICS S-1FT2 shaft height 80, Compact – forced ventilation

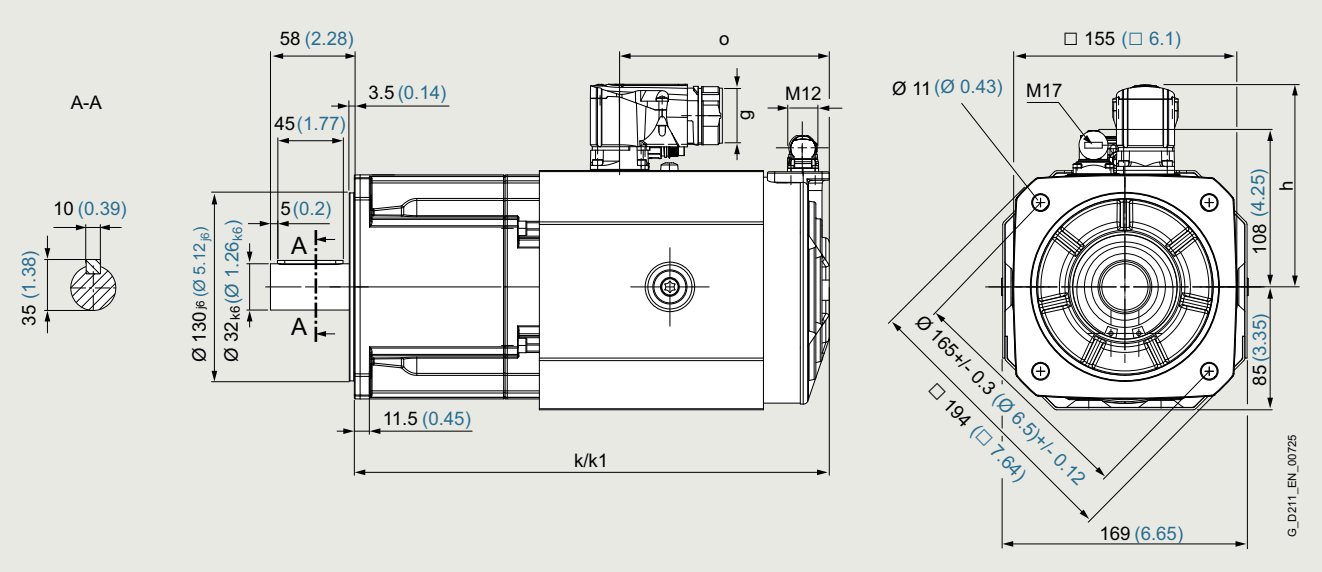

Dimensions in mm (inches)

SIMOTICS S-1FT2 Compact	without brake k	with brake k1
1FT2208-3	283 (11.14)	336 (13.23)
1FT2208-4	303 (11.93)	356 (14.02)
1FT2208-5	323 (12.72)	376 (14.80)

g	h	o
M23	119 (4.69)	139 (5.47)
M40	139 (5.47)	145 (5.71)

SIMOTICS S-1FT2 servomotors Shaft height 80		Compact 1FT22 08-3SB	1FT22 08-3SC	1FT22 08-3SF	1FT22 08-4SB	1FT22 08-4SC	1FT22 08-4SF	1FT22 08-5SB	1FT22 08-5SC
Static torque M_0	Nm (lb_f-ft)	22 (16.23)	22 (16.23)	22 (16.23)	28 (20.65)	28 (20.65)	28 (20.65)	35 (25.82)	35 (25.82)
Stall current I_0	A	7.8	10.4	14.1	9.3	14.6	18.7	10.7	18.8
Maximum torque M_{max}	Nm (lb_f-ft)	51 (37.62)	51 (37.62)	51 (37.62)	66 (48.68)	66 (48.68)	66 (48.68)	80 (59.01)	80 (59.01)
Maximum current I_{max}	A	20.5	29.5	40	25	43.5	55	29.5	51.5
Maximum speed n_{max}	r/min	3350	4500	6000	3150	4950	6000	2900	5100
Rotor moment of inertia J_{Mot}	kg cm² (lb_f-in²)	29.6 (10.114)	29.6 (10.114)	29.6 (10.114)	38.8 (13.258)	38.8 (13.258)	38.8 (13.258)	48.1 (16.436)	48.1 (16.436)
Rotor moment of inertia (with brake) $J_{Mot\ br}$	kg cm² (lb_f-in²)	32.6 (11.139)	32.6 (11.139)	32.6 (11.139)	44.4 (15.171)	44.4 (15.171)	44.4 (15.171)	53.6 (18.315)	53.6 (18.315)
Rotor moment of inertia (with reinforced brake) $J_{Mot\ br}$	kg cm² (lb_f-in²)	35.1 (11.994)	35.1 (11.994)	35.1 (11.994)	-	-	-	-	-
Weight m_{Mot}	kg (lb)	14.9 (32.85)	14.9 (32.85)	14.9 (32.85)	17.5 (38.59)	17.5 (38.59)	17.9 (39.47)	20 (44.10)	20.4 (44.98)
Weight (with brake) $m_{Mot\ Br}$	kg (lb)	17.1 (37.71)	17.1 (37.71)	17.1 (37.71)	20.3 (44.76)	20.3 (44.76)	20.7 (45.64)	22.8 (50.27)	23.2 (51.16)
Weight (with reinforced brake) $m_{Mot\ Br}$	kg (lb)	17.7 (39.03)	17.7 (39.03)	17.7 (39.03)	-	-	-	-	-
Rated data 380 ... 480 V 3 AC									
Rated speed n_N	r/min	1500	2000	3000	1500	2000	3000	1500	2000
Rated torque M_N	Nm (lb_f-ft)	19.9 (14.68)	19.1 (14.09)	17.6 (12.98)	25.5 (18.81)	24 (17.70)	22.5 (16.60)	32 (23.60)	30 (22.13)
Rated current I_N	A	7.3	9.5	12.2	8.8	13.3	16.3	10.2	17.1
Rated power P_N	kW	3.1	4	5.5	4	5.1	7.1	5	6.3
Connection system									
Connector size, power		M23	M23	M23	M23	M23	M40	M23	M40
Recommended cross-section	mm²	1.5	1.5	1.5	1.5	1.5	2.5	1.5	2.5
Connector, signal		M17 signal connector, DRIVE-CLiQ							

© Siemens 2024

Technical specifications

SIMOTICS S-1FT2 shaft height 100

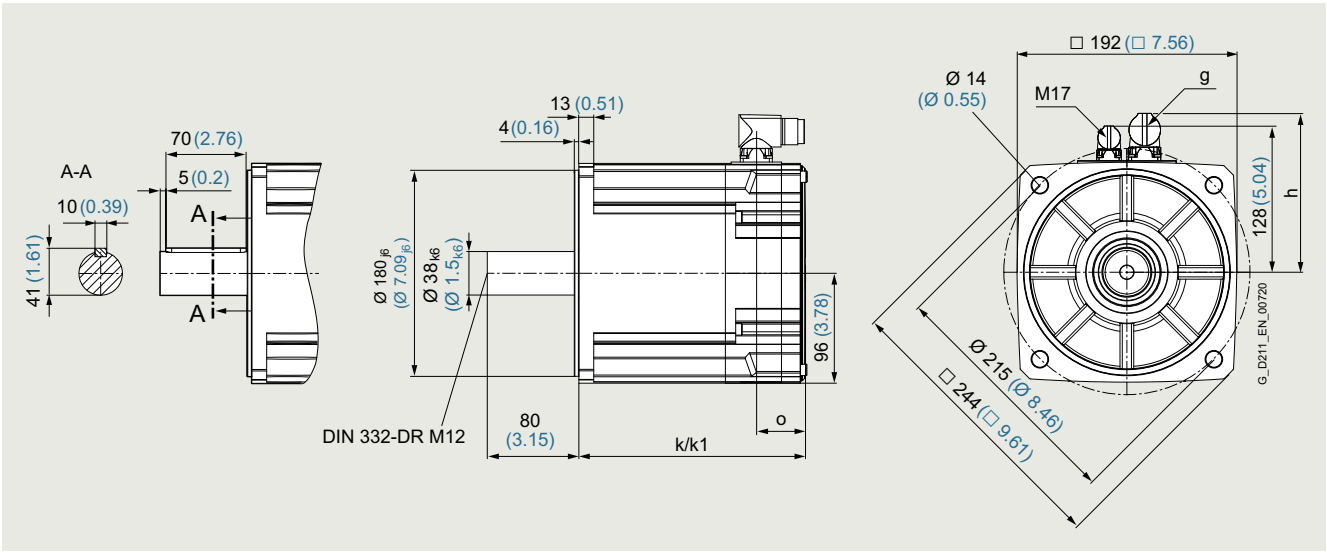

Dimensions in mm (inches)

SIMOTICS S-1FT2	without brake k	with brake k1
1FT2210-2	174 (6.85)	233 (9.17)
1FT2210-3	198 (7.80)	257 (10.12)
1FT2210-4	223 (8.78)	282 (11.10)
1FT2210-5	248 (9.76)	307 (12.09)

g	h	o
M23	139 (5.47)	37 (1.46)
M40	159 (6.26)	43 (1.69)

SIMOTICS S-1FT2 servomotors Shaft height 100		Compact									
		1FT22 10-2AC	1FT22 10-2AF	1FT22 10-3AB	1FT22 10-3AC	1FT22 10-3AF	1FT22 10-4AB	1FT22 10-4AC	1FT22 10-4AF	1FT22 10-5AB	1FT22 10-5AC
Static torque M_0	Nm (lb$_f$-ft)	22 (16.23)	22 (16.23)	30 (22.13)	30 (22.13)	30 (22.13)	40 (29.50)	40 (29.50)	40 (29.50)	50 (36.88)	50 (36.88)
Stall current I_0	A	9.3	12.9	8.5	15	19.8	11.8	15	22.5	15	22.5
Maximum torque M_{max}	Nm (lb$_f$-ft)	60 (44.26)	60 (44.26)	90 (66.38)	90 (66.38)	90 (66.38)	120 (88.51)	120 (88.51)	120 (88.51)	150 (110.64)	150 (110.64)
Maximum current I_{max}	A	32	44.5	31.5	55	74	43.5	55	84	55	83
Maximum speed n_{max}	r/min	4050	5000	2500	4400	5000	2500	3300	4950	2850	4000
Rotor moment of inertia J_{Mot}	kg cm^2 (lb$_f$-in^2)	61.7 (21.083)	61.7 (21.083)	88.8 (30.343)	88.8 (30.343)	88.8 (30.343)	117 (39.979)	117 (39.979)	117 (39.979)	145 (49.547)	145 (49.547)
Rotor moment of inertia (with brake) $J_{Mot\ br}$	kg cm^2 (lb$_f$-in^2)	67.7 (23.133)	67.7 (23.133)	94.8 (32.393)	94.8 (32.393)	94.8 (32.393)	133 (45.446)	133 (45.446)	133 (45.446)	161 (55.014)	161 (55.014)
Rotor moment of inertia (with reinforced brake) $J_{Mot\ br}$	kg cm^2 (lb$_f$-in^2)	77.3 (26.413)	77.3 (26.413)	104 (35.537)	104 (35.537)	104 (35.537)	-	-	-	-	-
Weight m_{Mot}	kg (lb)	16.7 (36.82)	16.7 (36.82)	22 (48.51)	22 (48.51)	22 (48.51)	27 (59.54)	27 (59.54)	27 (59.54)	32 (70.56)	32 (70.56)
Weight (with brake) $m_{Mot\ Br}$	kg (lb)	20.1 (44.32)	20.1 (44.32)	25 (55.13)	25 (55.13)	25 (55.13)	31 (68.36)	31 (68.36)	31 (68.36)	36 (79.38)	36 (79.38)
Weight (with reinforced brake) $m_{Mot\ Br}$	kg (lb)	21.4 (47.19)	21.4 (47.19)	26.3 (57.99)	26.3 (57.99)	26.3 (57.99)	-	-	-	-	-
Rated data 380 ... 480 V 3 AC											
Rated speed n_N	r/min	2000	3000	1500	2000	3000	1500	2000	3000	1500	2000
Rated torque M_N	Nm (lb$_f$-ft)	18.4 (13.57)	16.2 (11.95)	28.5 (21.02)	26 (19.18)	18.5 (13.65)	34.5 (25.45)	30.5 (22.50)	18 (13.28)	39 (28.77)	33.5 (24.71)
Rated current I_N	A	8.1	10.1	8.3	13.5	13.6	10.4	11.8	11.1	12.1	15.8
Rated power P_N	kW	3.85	5.1	4.5	5.5	5.8	5.4	6.4	5.7	6.1	7.1
Connection system											
Connector size, power		M23	M23	M23	M23	M40	M23	M23	M40	M23	M40
Recommended cross-section	mm^2	1.5	1.5	1.5	1.5	2.5	1.5	1.5	4	1.5	4
Connector, signal		M17 signal connector, DRIVE-CLiQ									

© Siemens 2024

Options

SIMOTICS S-1FT2 motors can be expanded with numerous options.

Holding brake

The holding brake is used to hold the motor shaft when the motor is stationary and is designed for at least 5 million switching cycles. The holding brake is not a working brake for braking a rotating motor. A limited number of Emergency Off operations is permitted: The specified maximum operating energy for each emergency braking operation as well as the total operating energy over the service life must not be exceeded. For the 1FT2108, 1FT2208-2, 1FT2208-3, 1FT2210-2 and 1FT2210-3 motors, a reinforced holding brake can also be selected.

The following table contains technical specifications of the holding brakes for operation with a SINAMICS S120:

Motor	Holding torque at 120 °C (248 °F)	Dynamic braking torque at 120 °C (248 °F)	Maximum permissible (single operating energy [1])	Total operating energy (lifetime)	Opening time	Closing time	Rated current
	Nm (lb_f-ft)	Nm (lb_f-ft)	J	kJ	ms	ms	A
Spring-loaded brake, maximum play 1°							
1FT2.03	1.3 (0.96)	1.3 (0.96)	62	5	90	30	0.4
1FT2.04	3.3 (2.43)	3.3 (2.43)	270	35	110	40	0.5
Permanent magnet brake, zero-backlash							
1FT2.05	8 (5.90)	5 (3.69)	570	284	90	25	0.6
1FT2106	16 (11.80)	9 (6.64)	1065	774	100	50	0.7
1FT2206	13 (9.59)	6.5 (4.79)	1550	774	100	50	0.7
1FT2208-2	19 (14.01)	12 (8.85)	2000	1800	100	40	0.8
1FT2208-3							
1FT2108	36 (26.55)	12 (8.85)	1300	2400	200	60	0.9
1FT2208-4							
1FT2208-5							
1FT2210-2	32 (23.60)	17 (12.54)	6600	2400	200	60	0.9
1FT2210-3							
1FT2210-4	55 (40.57)	26 (19.18)	8700	3800	220	80	1.0
1FT2210-5							
Reinforced permanent magnet brake, zero-backlash							
1FT2108	32 (23.60)	17 (12.54)	4800	2400	200	60	0.9
1FT2208-2							
1FT2208-3							
1FT2210-2	55 (40.57)	26 (19.18)	8700	3800	220	80	1.0
1FT2210-3							

Degree of protection

SIMOTICS S-1FT2 motors have degree of protection IP64 as standard. Optionally, the motor can be supplied with an IP65 or IP67 degree of protection.

Recommended degree of protection, see page 8.1/2

For 1FT2x03 and 1FT2x04 motors, the optional IP65 and IP67 shaft sealing ring shortens the shaft end that can be used. These motors can also be upgraded from IP64 to IP65 using the separately available degree of protection kit.

Shaft end

SIMOTICS S-1FT2 motors have a cylindrical shaft end. This can optionally be realized with keyway and feather key (half-key balancing).

For the 1FT2.03 and 1FT2.04 motors, an alternative shaft geometry (smaller diameter and shorter length of the shaft) is optionally available. The alternative shaft geometry is only available without feather key and for IP64 motors. It is suitable, for example, for mounting planetary gears with a small, low-inertia clamping system or for mounting small diameter pinions.

[1] Maximum three EMERGENCY STOP operations in sequence with a maximum of 25 % total operating energy

© Siemens 2024

Options

Encoder

SIMOTICS S-1FT2 motors are equipped with digital absolute encoders with DRIVE-CLiQ interface.

The following encoders are available for 1FT2:

- AS22DCQ: Absolute encoder single-turn 22-bit
- AM22DQC: Absolute encoder 22-bit + 12-bit multi-turn (with rotation counter for 4096 revolutions)
- AS26DQC: Absolute encoder single-turn 26-bit
- AM26DQC: Absolute encoder 26-bit + 12-bit multi-turn (with rotation counter for 4096 revolutions)

Planetary gearbox

SIMOTICS S-1FT2 motors can optionally be supplied as coaxial or angular planetary geared motors. The geared motors are specified as unit; interaction between the motor and gearbox thermal situation has been taken into account. More information about planetary geared motors: See page 8.1/60

Paint finish

If a special color and paint finish are not specified, then 1FT2 motors are painted in the standard anthracite color (RAL 7016). Optionally, various special colors are possible. Special colors are ordered by adding an order code to the article number.

Order code	Description
X00	unpainted
X01	Paint finish jet black RAL 9005
X02	Paint finish cream white RAL 9001
X03	Paint finish reseda green RAL 6011
X04	Paint finish pebble gray RAL 7032
X05	Paint finish sky blue RAL 5015
X06	Paint finish light ivory RAL 1015
X08	Paint finish white aluminum

The paint finish in standard and special colors meets the requirements for environmental conditions of climate class 3K4 according to IEC 60721-3-3 with the exception of the influencing variables "low air temperature", "condensation" and "low air pressure". It meets corrosivity category C1 according to EN ISO 12944-2.

Resistance

Options relating to resistance are ordered by adding an order code to the article number.

Order code	Description
K23	**Special paint finish with additional primer** Additional primer, paint finish in standard color RAL 7016, anthracite grey Properties same as standard paint finish, in addition, condensation is permitted on the external surfaces of the motor. Combination with special color X■■ according to color table is permissible. However, a combination with X00 is not permissible.
N16	**Motors with increased chemical resistance** (Includes the properties of the paint with additional primer K23) • 4-layer paint system (PS Premium paint system) • Nickel-plated plug connectors • Resistant to greases, mineral oils, aliphatic solvents (10 %), caustic soda (10 %) With this option, the motor meets the requirements of corrosivity category C4(M) according to EN ISO 12944-2. A certificate regarding resistance against common ECOLAB cleaning agents and disinfectants is available here: https://support.industry.siemens.com/cs/document/58657336
Q31	**Metal rating plate** The rating plate of the motor is designed as an adhesive label as standard. With this option, an aluminum rating plate can be ordered instead. The labeling is lasered on. This ensures legibility for a long time even under poor ambient conditions.
Q20	**Pressure equalization** If a motor with degree of protection IP67 cools down after operation, a vacuum may build up in the motor. This may result in moisture ingress. Moisture ingress of this kind can be prevented by using a defined air supply via a connected pressure equalization tube.

© Siemens 2024

Options

Low temperature -30 °C (-22 °F) – Q30

The permissible temperature range is defined as -15 °C to +40 °C (5 °F to 104 °F) (without power reduction).

Optionally, 1FT2 motors can be designed for an extended temperature range down to -30 °C (-22 °F) by adding order code **Q30** to the article number. Application e.g. in cold storage facilities.

The extended operating temperature range is not possible for the following variants:

- Degree of protection IP67
- Motors with gearbox
- Motors with forced ventilation

Suitability for dry room environments and certification for clean rooms – Q40

The permissible range for relative ambient air humidity is 5 % to 95 % as standard, suitability for use in clean rooms is not certified.

The 1FT2 motors can optionally be designed for use in extremely dry environments and with certification for use in clean rooms by adding order code **Q40** to the article number:

The following clean room classes are achieved according to ISO 156441-14, and have been certified accordingly by the TÜV (German Technical Inspectorate):

- Motors without gearbox, with degree of protection IP64: ISO Class 7 or better
- Motors without gearbox, with degree of protection IP65: ISO Class 6 or better
- Motors with gearbox NRB(W), NRK(W) or NLC(W): ISO Class 7 or better

Certificates are available here:
https://support.industry.siemens.com/cs/document/109815586

These motors feature extended specifications for use in relative air humidity: Operation from a relative humidity level of 0.3 % (dew point -50 °C at 20 °C (-58 F at 68 °F) ambient temperature) is permitted.

Customer-specific text on the rating plate – Y84

A text selected by the customer (maximum 20 characters) can be optionally printed on the rating plate of 1FT2 motors. For example, inscriptions for the name of the axis, the installation location or customer-specific spare part numbers can be provided. The order is entered using supplementary order code **Y84** and the plain text for the required inscription.

Ordering options using order codes

When ordering a motor with one or more order codes, the 16 position article number must be supplemented once with "-Z". Different order codes can be separated by spaces or "+".

Example for order codes X01 and N16:
1FT2■■■-■■■■-■■■■-Z X01 + N16

Accessories

Description	For motor	Article No.
Shaft sealing ring		
Degree of protection kit to achieve degree of protection IP65 for mounting on the motor. For retrofitting or as a spare part.	1FT2.03	**1FY2903-0GC00**
	1FT2.04	**1FY2904-0GC00**

© Siemens 2024

Selection and ordering data

Structure of the article number of SIMOTICS S-1FT2 servomotors

Data position of the Article No.		1	2	3	4	5	6	7		8	9	10	11	12		13	14	15	16
		1	**F**	**T**	**2**	■	■	■	**-**	■	■	■	■	■	**-**	■	■	**A**	**0**
1st to 4th position: Digit, letter, letter, digit	**Motor**	1	F	T	2														
5th position: Digit	**Moment of inertia**																		
	High Dynamic					1													
	Compact					2													
6th and 7th position: Digit, digit	**Shaft height**																		
	20						0	2											
	30						0	3											
	40						0	4											
	52					1	0	5											
	48					2	0	5											
	63						0	6											
	80						0	8											
	100						1	0											
8th position: Digit	**Overall length**																		
	See specific technical specifications									0 ... 8									
9th position: Letter	Natural cooling										A								
	Forced ventilation										S								
10th position: Letter	**Winding/rated speed**																		
	1500 r/min											B							
	2000 r/min											C							
	2500 r/min											E							
	3000 r/min											F							
	4500 r/min											H							
	6000 r/min											K							
11th position: Digit	**Brake**																		
	Without												0						
	Holding brake												1						
	Reinforced holding brake												2						
12th position: Digit	**Degree of protection**																		
	IP64 (without shaft sealing ring)													0					
	IP65 (with shaft sealing ring)													1					
	IP67 (with shaft sealing ring and spring lock washer)													2					
13th position: Digit	**Shaft end, feather key**																		
	Plain shaft															0			
	Shaft with feather key															1			
	Plain shaft, reduced shaft diameter • Ø11 × 23 mm (0.43 × 0.91 in) (for 1FT2.03 and IP64), • Ø14 × 30 mm (0.55 × 1.18 in) (for 1FT2.04 and IP64)													0		2			
14th position: Letter	**Encoder**																		
	Absolute encoder single-turn 22-bit (AS22DQC)																S		
	Absolute encoder 22-bit + 12-bit multi-turn (AM22DQC)																M		
	Absolute encoder single-turn 26-bit (AS26DQC)																B		
	Absolute encoder 26-bit + 12-bit multi-turn (AM26DQC[)]																C		
15th position: Letter	**2 CC (dual cable technology) for SINAMICS S120**																	B	
16th position: Digit	Reserved																		0

© Siemens 2024

SIMOTICS S-1FT2 High Dynamic

Selection and ordering data

SIMOTICS S-1FT2 servomotors for SINAMICS S120 with line connection 380 ... 480 V 3 AC

SIMOTICS S-1FT2 servomotor											SINAMICS S120
Shaft height	Static torque	Stall current	Maximum torque	Rated speed	Rated power	Rated torque	Rotor moment of inertia	Article No.	Cable connector	Recommended cross-section [1] of the power cable	SINAMICS S120 rated output current
	M_0 Nm (lb_f-ft)	I_0 A	M_{max} Nm (lb_f-ft)	n_N r/min	P_N kW	M_N Nm (lb_f-ft)	J_{Mot} kg cm^2 (lb_f-in^2)		Size	4 × mm^2	Booksize I_N A
High Dynamic for highly dynamic applications											
30	0.64 (0.47)	1.06	1.95 (1.44)	4500	0.28	0.59 (0.44)	0.093 (0.008)	**1FT2103-2AH■■-■■B0**	M17	4 × 1.5	3
30	1.27 (0.94)	1.87	4.05 (2.99)	4500	0.48	1.01 (0.74)	0.139 (0.012)	**1FT2103-4AH■■-■■B0**	M17	4 × 1.5	3
40	1.27 (0.94)	1.19	3.75 (2.77)	3000	0.4	1.27 (0.94)	0.35 (0.03)	**1FT2104-4AF■■-■■B0**	M17	4 × 1.5	3
40	1.27 (0.94)	2.4	3.85 (2.84)	6000	0.6	0.95 (0.70)	0.35 (0.03)	**1FT2104-4AK■■-■■B0**	M17	4 × 1.5	3
40	2.4 (1.8)	2.1	7.5 (5.5)	3000	0.75	2.4 (1.8)	0.56 (0.05)	**1FT2104-5AF■■-■■B0**	M17	4 × 1.5	3
40	2.4 (1.8)	4.4	7.6 (5.6)	6000	1.07	1.7 (1.3)	0.56 (0.05)	**1FT2104-5AK■■-■■B0**	M17	4 × 1.5	5
40	3.2 (2.4)	3	10 (7.38)	3000	1	3.2 (2.4)	0.76 (0.07)	**1FT2104-6AF■■-■■B0**	M17	4 × 1.5	3
52	5 (3.69)	4.65	15 (11.1)	3000	1.45	4.6 (3.4)	1.71 (0.15)	**1FT2105-4AF■■-■■B0**	M17	4 × 1.5	5
52	5 (3.69)	6.9	15 (11.1)	4500	1.74	3.7 (2.7)	1.71 (0.15)	**1FT2105-4AH■■-■■B0**	M17	4 × 1.5	9
52	8 (5.90)	6.7	24 (17.7)	3000	2.1	6.6 (4.9)	2.65 (0.23)	**1FT2105-6AF■■-■■B0**	M17	4 × 1.5	9
63	9 (6.64)	9.2	26 (19.2)	3000	2.3	7.3 (5.4)	4.6 (0.4)	**1FT2106-3AF■■-■■B0**	M23	4 × 1.5	9
63	12 (8.85)	10.7	33 (24.3)	3000	2.7	8.6 (6.3)	6 (0.53)	**1FT2106-4AF■■-■■B0**	M23	4 × 1.5	18
63	16 (11.8)	14.3	45.5 (33.6)	3000	3.3	10.6 (7.8)	8.7 (0.8)	**1FT2106-6AF■■-■■B0**	M23	4 × 1.5	18
80	25 (18.4)	14.8	87 (64.2)	2000	4.3	20.5 (15.1)	18.3 (1.6)	**1FT2108-4AC■■-■■B0**	M23	4 × 1.5	18
80	30 (22.1)	11.8	105 (77.4)	1500	4	25.5 (18.8)	21.6 (1.9)	**1FT2108-5AB■■-■■B0**	M23	4 × 1.5	18
80	30 (22.1)	18.4	105 (77.4)	2000	4.9	23.5 (17.3)	21.6 (1.9)	**1FT2108-5AC■■-■■B0**	M40	4 × 2.5	18
80	37.5 (27.7)	14	140 (103)	1500	4.7	30 (22.1)	28.2 (2.5)	**1FT2108-7AB■■-■■B0**	M23	4 × 1.5	18
80	37.5 (27.7)	22	140 (103)	2000	5.4	26 (19.2)	28.2 (2.5)	**1FT2108-7AC■■-■■B0**	M40	4 × 4	24
80	37.5 (27.7)	28	140 (103)	2500	5.5	21 (15.5)	28.2 (2.5)	**1FT2108-7AE■■-■■B0**	M40	4 × 4	30

Article No. supplements

Holding brake										
Without brake	**0**									
With brake	**1**									
With reinforced holding brake (1FT2108 only)	**2**									
Degree of protection										
IP64 (without shaft sealing ring)		**0**								
IP65 (with shaft sealing ring)		**1**								
IP67 (with shaft sealing ring with annular spring)		**2**								
Shaft end / feather key										
Plain shaft			**0**							
Shaft with feather key			**1**							
Plain shaft, reduced shaft diameter		**0**	**2**							
• Ø11 × 23 mm (0.43 × 0.91 in) (only for 1FT2.03 and IP64)										
• Ø14 × 30 mm (0.55 × 1.18 in) (only for 1FT2.04 and IP64)										
Encoder										
AS22DQC (absolute encoder 22-bit single-turn)				**S**						
AM22DQC (absolute encoder 22-bit + 12-bit multi-turn)				**M**						
AS26DQC (absolute encoder 26-bit single-turn)				**B**						
AM26DQC (absolute encoder 22-bit + 12-bit multi-turn)				**C**						

Power cable		
	Article No.	**for I_0 motor**
M17	**6FX ■ 002-5 ■ N27-...**	4 × 1.5 for max. 15.2 A
M23	**6FX ■ 002-5 ■ N06-...**	4 × 1.5 for max. 15.2 A
M23	**6FX ■ 002-5 ■ N16-...**	4 × 2.5 for max. 21 A
M40	**6FX ■ 002-5 ■ N36-...**	4 × 2.5 for max. 21 A
M40	**6FX ■ 002-5 ■ N46-...**	4 ×4 for max. 28 A
M40	**6FX ■ 002-5 ■ N56-...**	4 × 6 for max. 36 A

... Length code

C Without brake cores
D With brake cores [2]

8 MOTION-CONNECT 800PLUS
5 MOTION-CONNECT 500

For more information about cables, see MOTION-CONNECT connection systems

[1] For installation type "C" and 40 °C (104 °F).

[2] Cable cross-section for brake connection 2 × 1.5 mm^2.

© Siemens 2024

Selection and ordering data

SIMOTICS S-1FT2 servomotors for SINAMICS S120 with line connection 380 ... 480 V 3 AC

SIMOTICS S-1FT2 servomotor											SINAMICS S120
Shaft height	Static torque	Stall current	Maximum torque	Rated speed	Rated power	Rated torque	Rotor moment of inertia		Cable connector	Recommended cross-section [1] of the power cable	SINAMICS S120 rated output current Booksize
	M_0	I_0	M_{max}	n_N	P_N	M_N	J_{Mot}		Size		I_N
	Nm (lb$_f$-ft)	A	Nm (lb$_f$-ft)	r/min	kW	Nm (lb$_f$-ft)	kg cm^2 (lb$_f$-in^2)	Article No.		4 × mm^2	A
Compact for high precision applications											
30	0.64 (0.47)	1.05	1.85 (1.36)	6000	0.255	0.405 (0.299)	0.2 (0.1)	**1FT2203-2AK■■-■■B0**	M17	4 × 1.5	3
30	1.27 (0.94)	2.05	3.75 (2.77)	6000	0.43	0.68 (0.50)	0.35 (0.12)	**1FT2203-4AK■■-■■B0**	M17	4 × 1.5	3
40	2.4 (1.8)	2.25	7.1 (5.2)	3000	0.75	2.4 (1.8)	1.23 (0.42)	**1FT2204-5AF■■-■■B0**	M17	4 × 1.5	3
40	2.4 (1.8)	4.4	7.1 (5.2)	6000	0.57	0.9 (0.7)	1.23 (0.42)	**1FT2204-5AK■■-■■B0**	M17	4 × 1.5	5
40	3.2 (2.4)	3	9.5 (7.0)	3000	1	3.2 (2.4)	1.61 (0.55)	**1FT2204-6AF■■-■■B0**	M17	4 × 1.5	3
48	3.6 (2.7)	1.84	10.8 (8.0)	2000	0.69	3.3 (2.4)	3.15 (1.08)	**1FT2205-2AC■■-■■B0**	M17	4 × 1.5	5
48	3.6 (2.7)	2.9	10.8 (8.0)	3000	0.94	3 (2.21)	3.15 (1.08)	**1FT2205-2AF■■-■■B0**	M17	4 × 1.5	3
48	3.6 (2.7)	3.8	10.8 (8.0)	4500	1.06	2.25 (1.66)	3.15 (1.08)	**1FT2205-2AH■■-■■B0**	M17	4 × 1.5	5
48	6 (4.43)	4.7	18 (13.3)	3000	1.45	4.6 (3.4)	5.1 (1.7)	**1FT2205-4AF■■-■■B0**	M17	4 × 1.5	5
63	6 (4.43)	2.8	18 (13.3)	2000	1.15	5.5 (4.1)	7.8 (2.7)	**1FT2206-2AC■■-■■B0**	M23	4 × 1.5	3
63	6.5 (4.8)	5	18 (13.3)	3000	1.71	5.4 (4.0)	7.8 (2.7)	**1FT2206-2AF■■-■■B0**	M23	4 × 1.5	5
63	6.5 (4.8)	6.5	18 (13.3)	4500	1.8	3.85 (2.84)	7.8 (2.7)	**1FT2206-2AH■■-■■B0**	M23	4 × 1.5	9
63	9 (6.64)	3.15	27 (19.9)	1500	1.3	8.3 (6.1)	11.5 (3.9)	**1FT2206-3AB■■-■■B0**	M23	4 × 1.5	5
63	9 (6.64)	5.4	27 (19.9)	3000	2.35	7.5 (5.5)	11.5 (3.9)	**1FT2206-3AF■■-■■B0**	M23	4 × 1.5	9
63	12 (8.85)	4.5	38 (28.0)	2000	2.2	10.5 (7.7)	15.1 (5.2)	**1FT2206-4AC■■-■■B0**	M23	4 × 1.5	5
63	12 (8.85)	7.9	36 (26.6)	3000	2.85	9.1 (6.7)	15.1 (5.2)	**1FT2206-4AF■■-■■B0**	M23	4 × 1.5	9
63	12 (8.85)	12	36 (26.6)	4500	2.2	4.7 (3.5)	15.1 (5.2)	**1FT2206-4AH■■-■■B0**	M23	4 × 1.5	18

Article No. supplements

Holding brake					
Without brake	**0**				
With brake	**1**				
Degree of protection					
IP64 (without shaft sealing ring)		**0**			
IP65 (with shaft sealing ring)		**1**			
IP67 (with shaft sealing ring with annular spring)		**2**			
Shaft end / feather key					
Plain shaft			**0**		
Shaft with feather key			**1**		
Plain shaft, reduced shaft diameter		**0**	**2**		
•Ø11 × 23 mm (0.43 × 0.91 in) (only for 1FT2.03 and IP64)					
•Ø14 × 30 mm (0.55 × 1.18 in) (only for 1FT2.04 and IP64)					
Encoder					
AS22DQC (absolute encoder 22-bit single-turn)				**S**	
AM22DQC (absolute encoder 22-bit + 12-bit multi-turn)				**M**	
AS26DQC (absolute encoder 26-bit single-turn)				**B**	
AM26DQC (absolute encoder 22-bit + 12-bit multi-turn)				**C**	

Power cable

	Article No.	for I_0 motor
M17	**6FX ■ 002-5 ■ N27-...**	4 × 1.5 for max. 15.2 A
M23	**6FX ■ 002-5 ■ N06-...**	4 × 1.5 for max. 15.2 A
M23	**6FX ■ 002-5 ■ N16-...**	4 × 2.5 for max. 21 A
M40	**6FX ■ 002-5 ■ N36-...**	4 × 2.5 for max. 21 A
M40	**6FX ■ 002-5 ■ N46-...**	4 × 4 for max. 28 A
M40	**6FX ■ 002-5 ■ N56-...**	4 × 6 for max. 36 A

... Length code

C Without brake cores
D With brake cores [2]

8 MOTION-CONNECT 800PLUS
5 MOTION-CONNECT 500

For more information about cables, see MOTION-CONNECT connection systems

[1] For installation type "C" and 40 °C (104 °F).

[2] Cable cross-section for brake connection 2 × 1.5 mm^2.

© Siemens 2024

SIMOTICS S-1FT2 Compact

Selection and ordering data

SIMOTICS S-1FT2 servomotors for SINAMICS S120 with line connection 380 ... 480 V 3 AC

SIMOTICS S-1FT2 servomotor											SINAMICS S120
Shaft height	Static torque	Stall current	Maximum torque	Rated speed	Rated power	Rated torque	Rotor moment of inertia		Cable connector	Recommended cross-section [1] of the power cable	SINAMICS S120 rated output current Booksize
	M_0	I_0	M_{max}	n_N	P_N	M_N	J_{Mot}		Size		I_N
	Nm (lb$_f$-ft)	A	Nm (lb$_f$-ft)	r/min	kW	Nm (lb$_f$-ft)	kg cm^2 (lb$_f$-in^2)	Article No.		4 × mm^2	A
Compact for high precision applications											
80	12.5 (9.2)	8.3	38 (28.0)	3000	2.85	9 (6.64)	22.5 (7.7)	**1FT2208-2AF■■-■■B0**	M23	4 × 1.5	9
80	18 (13.3)	6.2	51 (37.6)	1500	2.5	16 (11.8)	29.6 (10.1)	**1FT2208-3AB■■-■■B0**	M23	4 × 1.5	9
80	18 (13.3)	8.4	51 (37.6)	2000	3.05	14.5 (10.7)	29.6 (10.1)	**1FT2208-3AC■■-■■B0**	M23	4 × 1.5	9
80	18 (13.3)	11.9	51 (37.6)	3000	3.5	11.1 (8.2)	29.5 (10.1)	**1FT2208-3AF■■-■■B0**	M23	4 × 1.5	18
80	22 (16.2)	7.1	66 (48.7)	1500	2.9	18.6 (13.7)	38.8 (13.3)	**1FT2208-4AB■■-■■B0**	M23	4 × 1.5	9
80	22 (16.2)	11.7	66 (48.7)	2000	3.55	17 (12.5)	38.8 (13.3)	**1FT2208-4AC■■-■■B0**	M23	4 × 1.5	18
80	22 (16.2)	15	66 (48.7)	3000	3.7	11.8 (8.7)	38.8 (13.3)	**1FT2208-4AF■■-■■B0**	M23	4 × 1.5	18
80	27 (19.9)	8.6	80 (59.0)	1500	3.45	22 (16.2)	48.1 (16.4)	**1FT2208-5AB■■-■■B0**	M23	4 × 1.5	9
80	27 (19.9)	14.6	80 (59.0)	2000	4	19.1 (14.1)	48.1 (16.4)	**1FT2208-5AC■■-■■B0**	M23	4 × 1.5	18
100	22 (16.2)	9.3	60 (44.3)	2000	3.85	18.4 (13.6)	61.7 (21.1)	**1FT2210-2AC■■-■■B0**	M23	4 × 1.5	9
100	22 (16.2)	12.9	60 (44.3)	3000	5.1	16.2 (11.9)	61.7 (21.1)	**1FT2210-2AF■■-■■B0**	M23	4 × 1.5	18
100	30 (22.1)	8.5	90 (66.4)	1500	4.5	28.5 (21.0)	88.8 (30.3)	**1FT2210-3AB■■-■■B0**	M23	4 × 1.5	9
100	30 (22.1)	15	90 (66.4)	2000	5.5	26 (19.2)	88.8 (30.3)	**1FT2210-3AC■■-■■B0**	M23	4 × 1.5	18
100	30 (22.1)	19.8	90 (66.4)	3000	5.8	18.5 (13.6)	88.8 (30.3)	**1FT2210-3AF■■-■■B0**	M23	4 × 2.5	24
100	40 (29.5)	11.8	120 (88.5)	1500	5.4	34.5 (25.4)	117 (40.0)	**1FT2210-4AB■■-■■B0**	M23	4 × 1.5	18
100	40 (29.5)	15	120 (88.5)	2000	6.4	30.5 (22.5)	117 (40.0)	**1FT2210-4Ac■■-■■B0**	M23	4 × 1.5	18
100	40 (29.5)	22.5	120 (88.5)	3000	5.7	18 (13.3)	117 (40.0)	**1FT2210-4AF■■-■■B0**	M40	4 × 4	24
100	50 (36.9)	15	150 (111)	1500	6.1	39 (28.8)	145 (49.5)	**1FT2210-5AB■■-■■B0**	M23	4 × 1.5	18
100	50 (36.9)	22.5	150 (111)	2000	7.1	33.5 (24.7)	145 (49.5)	**1FT2210-5AC■■-■■B0**	M40	4 × 4	24

Article No. supplements

Holding brake											
Without brake								**0**			
With brake								**1**			
With reinforced holding brake (1FT2208-2, 1FT2208-3, 1FT2210-2, 1FT2210-3 only)								**2**			
Degree of protection											
IP64 (without shaft sealing ring)									**0**		
IP65 (with shaft sealing ring)									**1**		
IP67 (with shaft sealing ring with annular spring)									**2**		
Shaft end / feather key											
Plain shaft										**0**	
Shaft with feather key										**1**	
Encoder											
AS22DQC (absolute encoder 22-bit single-turn)											**S**
AM22DQC (absolute encoder 22-bit + 12-bit multi-turn)											**M**
AS26DQC (absolute encoder 26-bit single-turn)											**B**
AM26DQC (absolute encoder 22-bit + 12-bit multi-turn)											**C**

Power cable		
	Article No.	**for I_0 motor**
M17	**6FX ■ 002-5 ■ N27-...**	4 × 1.5 for max. 15.2 A
M23	**6FX ■ 002-5 ■ N06-...**	4 × 1.5 for max. 15.2 A
M23	**6FX ■ 002-5 ■ N16-...**	4 × 2.5 for max. 21 A
M40	**6FX ■ 002-5 ■ N36-...**	4 × 2.5 for max. 21 A
M40	**6FX ■ 002-5 ■ N46-...**	4 × 4 for max. 28 A
M40	**6FX ■ 002-5 ■ N56-...**	4 × 6 for max. 36 A

... Length code

C Without brake cores
D With brake cores [2]

8 MOTION-CONNECT 800PLUS
5 MOTION-CONNECT 500

For more information about cables, see MOTION-CONNECT connection systems

[1] For installation type "C" and 40 °C (104 °F).

[2] Cable cross-section for brake connection 2 × 1.5 mm^2.

© Siemens 2024

Selection and ordering data

SIMOTICS S-1FT2 servomotors for SINAMICS S120 with line connection 380 ... 480 V 3 AC

SIMOTICS S-1FT2 servomotor											SINAMICS S120
Shaft height	Static torque	Stall current	Maximum torque	Rated speed	Rated power	Rated torque	Rotor moment of inertia		Cable connector	Recommended cross-section [1] of the power cable	SINAMICS S120 rated output current Booksize
	M_0	I_0	M_{max}	n_N	P_N	M_N	J_{Mot}		Size		I_N
	Nm (lb_f-ft)	A	Nm (lb_f-ft)	r/min	kW	Nm (lb_f-ft)	kg cm² (lb_f-in²)	Article No.		4 × mm²	A
Forced ventilation: High Dynamic for highly dynamic applications											
80	33 (24.3)	19.2	87 (64.2)	2000	6	28.5 (21.0)	18.3 (6.3)	**1FT2108-4SC■■-■■B0**	M40	4 × 2.5	24
80	40 (29.5)	15.5	105 (77.4)	1500	5.6	35.5 (26.2)	21.6 (7.4)	**1FT2108-5SB■■-■■B0**	M23	4 × 2.5	18
80	40 (29.5)	24	105 (77.4)	2000	7.1	34 (25.1)	21.6 (7.4)	**1FT2108-5SC■■-■■B0**	M40	4 × 4	24
80	50 (36.9)	18.2	140 (103)	1500	6.9	44 (32.5)	28.2 (9.6)	**1FT2108-7SB■■-■■B0**	M40	4 × 2.5	18
80	50 (36.9)	29	140 (103)	2000	8.8	42 (31.0)	28.2 (9.6)	**1FT2108-7SC■■-■■B0**	M40	4 × 6	30
80	49.5 (36.5)	36	140 (103)	2500	10.2	39 (28.8)	28.2 (9.6)	**1FT2108-7SE■■-■■B0**	M40	4 × 6	45
Forced ventilation: Compact for high precision applications											
80	22 (16.2)	7.8	51 (37.6)	1500	3.1	19.9 (14.7)	29.6 (10.1)	**1FT2208-3SB■■-■■B0**	M23	4 × 1.5	9
80	22 (16.2)	10.4	51 (37.6)	2000	4	19.1 (14.1)	29.6 (10.1)	**1FT2208-3SC■■-■■B0**	M23	4 × 1.5	18
80	22 (16.2)	14.1	51 (37.6)	3000	5.5	17.6 (13.0)	29.6 (10.1)	**1FT2208-3SF■■-■■B0**	M23	4 × 1.5	18
80	28 (20.7)	9.3	66 (48.7)	1500	4	25.5 (18.8)	38.8 (13.3)	**1FT2208-4SB■■-■■B0**	M23	4 × 1.5	9
80	28 (20.7)	14.6	66 (48.7)	2000	5.1	24 (17.7)	38.8 (13.3)	**1FT2208-4SC■■-■■B0**	M23	4 × 1.5	18
80	28 (20.7)	18.7	66 (48.7)	3000	7.1	22.5 (16.6)	38.8 (13.3)	**1FT2208-4SF■■-■■B0**	M40	4 × 2.5	18
80	35 (25.8)	10.7	80 (59.0)	1500	5	32 (23.6)	48.1 (16.4)	**1FT2208-5SB■■-■■B0**	M23	4 × 1.5	18
80	35 (25.8)	18.8	80 (59.0)	2000	6.3	30 (22.1)	48.1 (16.4)	**1FT2208-5SC■■-■■B0**	M40	4 × 2.5	18

Article No. supplements

Holding brake											
Without brake	0										
With brake	1										
With reinforced holding brake (only for 1FT2108, 1FT2208-2, 1FT2208-3)	2										
Degree of protection											
IP64 (without shaft sealing ring)		0									
IP65 (with shaft sealing ring)		1									
IP67 (with shaft sealing ring with annular spring)		2									
Shaft end / feather key											
Plain shaft			0								
Shaft with feather key			1								
Encoder											
AS22DQC (absolute encoder 22-bit single-turn)				S							
AM22DQC (absolute encoder 22-bit + 12-bit multi-turn)				M							
AS26DQC (absolute encoder 26-bit single-turn)				B							
AM26DQC (absolute encoder 26-bit + 12-bit multi-turn)				C							

Cable connector Size	Power cable Article No.	for I_0 motor
M17	6FX ■ 002-5 ■ N27-...	4 × 1.5 for max. 15.2 A
M23	6FX ■ 002-5 ■ N06-...	4 × 1.5 for max. 15.2 A
M23	6FX ■ 002-5 ■ N16-...	4 × 2.5 for max. 21 A
M40	6FX ■ 002-5 ■ N36-...	4 × 2.5 for max. 21 A
M40	6FX ■ 002-5 ■ N46-...	4 × 4 for max. 28 A
M40	6FX ■ 002-5 ■ N56-...	4 × 6 for max. 36 A

... Length code

C Without brake cores
D With brake cores [2]

8 MOTION-CONNECT 800PLUS
5 MOTION-CONNECT 500

For more information about cables, see MOTION-CONNECT connection systems

[1] For installation type "C" and 40 °C (104 °F).
[2] Cable cross-section for brake connection 2 × 1.5 mm².

© Siemens 2024

Overview

SIMOTICS S-1FT2 servo planetary geared motors
– with coaxial gearbox



• Gearbox type NRB

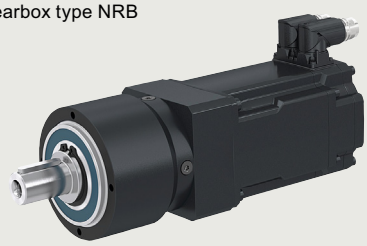

• Gearbox type NRK

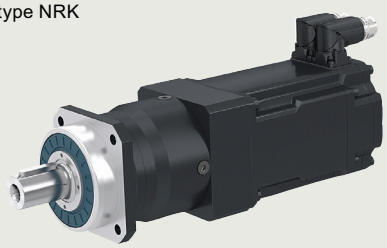

• Gearbox type NLC

– with angular gearbox

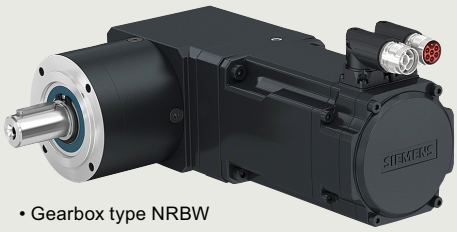

• Gearbox type NRBW



• Gearbox type NRKW



• Gearbox type NLCW

G_D211_EN_00726

SIMOTICS S-1FT2 servo planetary geared motors with coaxial gearboxes NRB, NRK, NLC and angular gearboxes NRBW, NRKW, NLCW are compact and efficient drive units that have a high dynamic performance. The combinations, each comprising a servomotor with a high-performance planetary gearbox, are suitable for a wide range of applications in industrial environments.
These planetary geared motors are specified and delivered as complete unit. All outstanding performance data are matched to the motor-gearbox combination.

Motors

High Dynamic

Where small masses have to be moved with maximum dynamic response and precision, the S-1FT2 High Dynamic servomotors with low inertia show their strengths to the full.
The lightweight and low-friction gearboxes in conjunction with inertia-optimized clamping systems allow the highest cycle rates to be achieved in the application.

Compact

If larger loads need to be moved with precision but also with a high dynamic response, a motor version with higher inertia is unavoidable so that the closed-loop control can be adequately handled. 1FT2 Compact servomotors with medium inertia and planetary gearboxes with higher transmission ratios enable even difficult inertia conditions to be mastered from a control perspective.

© Siemens 2024

Overview

Planetary gearboxes

Planetary gearboxes NRB(W), NRK(W), and NLC(W) can be mounted in all spatial positions without restriction and are maintenance-free thanks to their life-long lubrication.

Coaxial gearboxes

NRB

NRB is the lightest gearbox with the highest power density. Thanks to its low friction bearing design it is suitable for high speeds and only generates a slight amount of heat.

Application areas:
- Packaging
- Food industry
- Pharmaceutical and medical systems
- Auxiliary axes in machine tools

NRK

The NRK series gearbox is suitable for higher radial and axial forces due to the large output bearing. This gearbox is also suitable for higher speeds thanks to low internal friction.

Application areas:
- Automation and mounting technology
- Packaging
- Auxiliary axes in machine tools

NLC

Thanks to the preloaded tapered roller bearing, the NLC gearbox has a high degree of rigidity and is perfectly suited for high radial and axial loads. The IP65 cover provides protection against dust and water.

Application areas:
- Automation and mounting technology
- Packaging
- Food industry
- Printing industry
- Auxiliary axes in machine tools

Angular gearboxes

Thanks to a first bevel gear stage, the NRB, NRK and NLC planetary gearboxes are also available as NRBW, NRKW or NLCW angular gearboxes.
The angled versions are ideal for confined spaces.

Due to the additional angle stage, the losses in the angular gearbox are slightly higher and the rated data is reduced compared to the corresponding coaxial version.

		Coaxial gearbox type		
		NRB	**NRK**	**NLC**
SIMOTICS S-1FT2 servo planetary geared motors		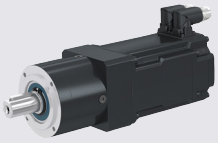		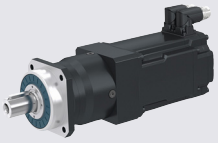
Transmission ratio *i*		3 ... 512	3 ... 100	3 ... 100
Gearbox stages *z*		1, 2 and 3-stage	1 and 2-stage	1 and 2-stage
Torsional backlash φ_2	'	6 ... 22	6 ... 19	7 ... 12
Gearbox type • Eco planetary gearbox • Straight gearing • Life-long grease lubrication • Average torsional backlash		IM B14 / IM V18 / IM V19 IP64 High input speeds thanks to low-friction bearing design 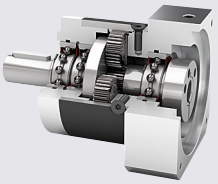	IM B14 / IM V18 / IM V19 IP64 Large ball bearing, optimized for high radial and axial forces 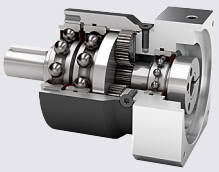	IM B5 / IM V1 / IM V3 IP65 Preloaded tapered roller bearing for best rigidity at highest loads 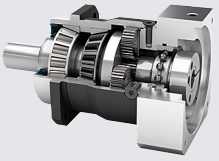
Geared motor data for 380 ... 480 V 3 AC				
Maximum torque M_{2max}	Nm (lb_f-ft)	4.9 ... 1280 (3.61 ... 944)	4.7 ... 736 (3.47 ... 376)	4.7 ... 416 (3.47 ... 307)
Rated torque M_{2N}	Nm (lb_f-ft)	0.8 ... 650 (0.59 ... 479)	0.54 ... 460 (0.40 ... 339)	0.36 ... 260 (0,27 ... 192)
Rated speed n_{2N}	r/min	3 ... 1000	20 ... 750	25 ... 500
Suitability				
Power density		+++	++	++
Bearing loading capacity		+	++	+++
Suitable for high speeds		++	++	+
Degree of protection		+	+	++
Options				
Plain shaft / solid shaft with feather key		✓ / ✓	✓ / ✓	✓ / ✓
Standard lubrication / food-safe lubricant		✓ / ✓	✓ / ✓	✓ / ✓

© Siemens 2024

SIMOTICS S-1FT2

Overview

		Angular gearbox type **NRBW**	**NRKW**	**NLCW**
SIMOTICS S-1FT2 servo planetary geared motors				
Transmission ratio *i*		3 ... 512	3 ... 100	3 ... 100
Gearbox stages *z*		1, 2 and 3-stage	1 and 2-stage	1 and 2-stage
Torsional backlash φ_2	'	11 ... 28	11 ... 25	11 ... 18
Gearbox type • Eco planetary gearbox • Straight gearing • Life-long grease lubrication • Average torsional backlash		IM B14 / IM V18 / IM V19 IP64 High input speeds thanks to low-friction bearing design 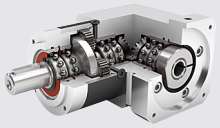	IM B14 / IM V18 / IM V19 IP64 Large ball bearing, optimized for high radial and axial forces 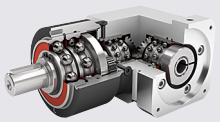	IM B5 / IM V1 / IM V3 IP65 Preloaded tapered roller bearing for best rigidity at highest loads 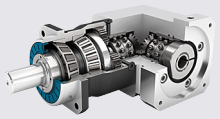
Geared motor data for 380 ... 480 V 3 AC				
Maximum torque M_{2max}	Nm (lb_f-ft)	4.6 ... 416 (3.39 ... 307)	4.35 ... 312 (3.21 ... 230)	4.6 ... 416 (3.39 ... 307)
Rated torque M_{2N}	Nm (lb_f-ft)	0.52 ... 260 (0.38 ... 192)	0.34 ... 195 (0.25 ... 144)	0.26 ... 230 (0.19 ... 170)
Rated speed n_{2N}	r/min	6 ... 1000	15 ... 750	15 ... 375
Suitability				
Power density		++	+	+
Bearing loading capacity		+	++	+++
Suitable for high speeds		+	+	+
Degree of protection		+	+	++
Options				
Plain shaft / solid shaft with feather key		✓ / ✓	✓ / ✓	✓ / ✓
Standard lubrication / food-safe lubricant		✓ / ✓	✓ / ✓	✓ / ✓

© Siemens 2024

Overview

Possible motor-gearbox combinations

Coaxial gearbox type	Gearbox size	Motor 1FT2 . 03	1FT2 . 04	1FT2 . 05	1FT2 . 06	1FT2208	1FT2210	Order code Number of gearbox stages 1-stage	2-stage	3-stage
NRB 	040	✓	–	–	–	–	–	**A11**	**A12**	**A13**
	060	✓	✓	✓	–	–	–	**A21**	**A22**	**A23**
	080	✓	✓	✓	✓	–	–	**A31**	**A32**	**A33**
	120	✓	✓	✓	✓	✓	–	**A41**	**A42**	**A43**
	160	–	–	✓	✓	✓	–	**A51**	**A52**	**A53**
NRK 	050	✓	–	–	–	–	–	**B11**	**B12**	–
	070	✓	✓	✓	–	–	–	**B21**	**B22**	–
	090	✓	✓	✓	✓	–	–	**B31**	**B32**	–
	120	✓	✓	✓	✓	✓	–	**B41**	**B42**	–
	155	–	–	✓	✓	✓	✓	**B51**	**B52**	–
NLC 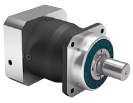	060	✓	✓	✓	–	–	–	**C21**	**C22**	–
	080	✓	✓	✓	✓	–	–	**C31**	**C32**	–
	120	✓	✓	✓	✓	✓	–	**C41**	**C42**	–

Angular gearbox type	Gearbox size	Motor 1FT2 . 03	1FT2 . 04	1FT2 . 05	1FT2 . 06	1FT2208	1FT2210	Order code Number of gearbox stages 1-stage	2-stage	3-stage
NRBW 	060	✓	✓	–	–	–	–	**A26**	**A27**	**A28**
	080	✓	✓	✓	–	–	–	**A36**	**A37**	**A38**
	120	✓	✓	✓	✓	–	–	**A46**	**A47**	**A48**
NRKW 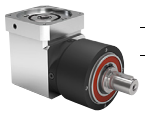	070	✓	✓	–	–	–	–	**B26**	**B27**	–
	090	✓	✓	✓	–	–	–	**B36**	**B37**	–
	120	✓	✓	✓	✓	–	–	**B46**	**B47**	–
NLCW 	060	✓	✓	–	–	–	–	**C26**	**C27**	–
	080	✓	✓	✓	–	–	–	**C36**	**C37**	–
	120	✓	✓	✓	✓	–	–	**C46**	**C47**	–

© Siemens 2024

Overview

Gearbox ratio

Number of gearbox stages	Transmission ratio *i*	Order code
1-stage	3	**R03**
	4	**R04**
	5	**R05**
	7	**R07**
	8	**R08**
	10	**R10**
2-stage	9	**R09**
	12	**R12**
	15	**R15**
	16	**R16**
	20	**R20**
	25	**R25**
	32	**R32**
	40	**R40**
	50	**R50**
	64	**R64**
	100	**R00**
3-stage	60	**R60**
	80	**R80**
	100	**R01**
	120	**R21**
	160	**R61**
	200	**R02**
	256	**R52**
	320	**R23**
	512	**R51**

Option for shaft

The output shaft of planetary gearboxes can be ordered as a plain shaft for a friction-locked connection or optionally with a feather key for a positive locking connection.
A friction-locked connection free of backlash (plain shaft) is recommended for dynamic loads, particularly in the case of reversals during operation.
For pulsating loads without reversals a positive locking connection with feather key is also suitable as an alternative.

Limitation of output torques for gearbox shaft with feather key

It must be ensured that the following torques are not exceeded at the output shaft for gearboxes with feather key and changing application loads. Independent of this, other limitations are kept, for example the maximum torque $M_{2max,G}$ or the rated torque $M_{2N,G}$ of the gearbox component.

Gearbox	**Max. application torque M_2 for the feather key version in Nm**	
	up to 10 million load changes	up to 100 million load changes
NRB040	9	7
NRB060, NRBW060	31	25
NRB080, NRBW080	68	54
NRB120, NRBW120	132	105
NRB160	401	319
NRK050	12	9
NRK070, NRKW070	No restriction	29
NRK090, NRKW090	84	67
NRK120, NRKW120	No restriction	190
NRK155	389	309
NLC060, NLCW060	37	29
NLC080, NLCW080	76	60
NLC120, NLCW120	239	190

Option for lubrication

Planetary gearboxes can be optionally ordered with a food-safe lubricant.
This lubricant was developed for the food and pharmaceutical industries for unpredictable contact with products and packaging in the food, cosmetics, pharmaceutical and animal feed industries. NSF H1 registration ensures that the lubricant is compliant with FDA 21 CFR §178.3570.

Lubrication	Gearbox shaft end	Order code
Standard lubrication	Plain solid shaft	**M00**
	Solid shaft with feather key	**M01**
Food-safe lubricant [1]	Plain solid shaft	**M10**
	Solid shaft with feather key	**M11**

Option for orientation of the output for angular gearboxes

For angular geared motors, the motor connector is oriented to the gearbox output as standard at the top (when viewing the gearbox output and motor orientation to the right).
Optionally, a different assembly can be carried out according to the following table.

Note: Independent of this, the geared motor can be mounted in any spatial position.

Gearbox orientation		Order code
	Standard orientation	–
	Connector on the output side	**Q91**
	Connector offset through 180° with respect to the standard	**Q92**
	Connector opposite the output	**Q93**

[1] In angular planetary gearboxes NRBW, NRKW, NLCW, the selection of the food-safe lubricant reduces the rated data from the following data tables. In this case, you can find the precise power and rated data in the data sheet from the online configurator:
www.siemens.com/spc

© Siemens 2024

Technical specifications

General technical specifications for NRB, NRK, NLC coaxial gearboxes and NRBW, NRKW, NLCW angular gearboxes

Highest average input speed $n_{1av,G}$ and maximum input speed $n_{1max,G}$

$n_{1av,G}$ – highest average input speed:
In each time window of 15 minutes, the average input speed must be below $n_{1av,G}$

$n_{1max,G}$ – maximum input speed
The maximum input speed $n_{1max,G}$ must never be exceeded.

The maximum speeds of the mounted motor can be found in the data sheet resulting from the configuration on the Siemens Product Configurator.

Coaxial gearbox type	Motor	Highest average input speed $n_{1av,G}$ in r/min	Maximum input speed $n_{1max,G}$ in r/min
NRB040, NRK050	1FT2102	5000	18000
	1FT2.03	4500	
NRB060, NRK070, NLC060	1FT2102 1FT2.03 1FT2.04	4500	13000
	1FT2.05	4000	
NRB080, NRK090, NLC080	1FT2.03 1FT2.04 1FT2.05	4000	7000
	1FT2.06	3500	
NRB120, NRK120, NLC120	1FT2.03 1FT2.04 1FT2.05 1FT2.06	3500	6500
	1FT2208 1FT2210	3000	
NRB160, NRK155	1FT2.05 1FT2.06 1FT2208 1FT2210	3000	5500

Angular gearbox type	Motor	Highest average input speed $n_{1av,G}$ in r/min	Maximum input speed $n_{1max,G}$ in r/min
NRBW060, NRKW070, NLCW060	1FT2102 1FT2.03 1FT2.04	4500	13000
	1FT2.05	4000	
NRBW080, NRKW090, NLCW080	1FT2.03 1FT2.04 1FT2.05	4000	7000
	1FT2.06	3500	
NRBW120, NRKW120, NLCW120	1FT2.03 1FT2.04 1FT2.05 1FT2.06	3500	6500
	1FT2208 1FT2210	3000	

© Siemens 2024

Coaxial gearbox type NRB

Technical specifications

Technical specifications for NRB coaxial gearboxes

$M_{2N,G}$ – Rated torque of the gearbox component

A fatigue strength calculation becomes necessary if this torque is exceeded (see Configuration Manual).
For the feather key version, the rated gearbox torque is only permissible as a pulsating load or it must be reduced depending on the number of load changes (see Components and Options).

Transmission ratio *i*	$M_{2N,G}$ – Rated torque of the gearbox component in Nm				
	Gearbox				
	NRB040	NRB060	NRB080	NRB120	NRB160
1-stage					
3	11	28	85	115	400
4	15	38	115	155	450
5	14	40	110	195	450
7	8.5	25	65	135	–
8	6	18	50	120	450
10	5	15	38	95	–
2-stage					
9	16.5	44	130	210	–
12	20	44	120	260	800
15	18	44	110	230	700
16	20	44	120	260	800
20	20	44	120	260	800
25	18	40	110	230	700
32	20	44	120	260	800
40	18	40	110	230	700
64	7.5	18	50	120	450
3-stage					
60	20	44	110	260	–
80	20	44	120	260	–
100	20	44	120	260	–
120	18	44	110	230	–
160	20	44	120	260	–
200	18	40	110	230	–
256	20	44	120	260	–
320	18	40	110	230	–
512	7.5	18	50	120	–

© Siemens 2024

Technical specifications

$M_{2max,G}$ – Maximum output torque of the gearbox component

This torque must not be exceeded during operation. It is permissible for a maximum of 30000 revolutions of the output shaft. When output torques up to $M_{2max,G}$ are used, then the gearbox must be designed with the appropriate fatigue strength (see Configuration Manual).

Transmission ratio *i*	$M_{2max,G}$ – Maximum output torque of the gearbox component in Nm				
	Gearbox				
	NRB040	NRB060	NRB080	NRB120	NRB160
1-stage					
3	17.5	45	136	184	640
4	24	61	184	248	720
5	22	64	176	312	720
7	13.5	40	104	216	–
8	10	29	80	192	720
10	8	24	61	152	–
2-stage					
9	26	70	208	336	–
12	32	70	192	416	1280
15	29	70	176	368	1120
16	32	70	192	416	1280
20	32	70	192	416	1280
25	29	64	176	368	1120
32	32	70	192	416	1280
40	29	64	176	368	1120
64	12	29	80	192	720
3-stage					
60	32	70	176	416	–
80	32	70	192	416	–
100	32	70	192	416	–
120	29	70	176	368	–
160	32	70	192	416	–
200	29	64	176	368	–
256	32	70	192	416	–
320	29	64	176	368	–
512	12	29	80	192	–

© Siemens 2024

Technical specifications

$M_{2Em.Off}$ – Emergency Off output torque of the gearbox component

The Emergency Off torque can be tolerated a maximum of 1000 times within the gearbox service life without causing unacceptable damage to the gearbox. This code can be used to check whether the torques, caused by very rare operating faults, can damage the gearbox.

Transmission ratio *i*	$M_{2Em.Off}$ – Emergency Off output torque of the gearbox component in Nm Gearbox				
	NRB040	NRB060	NRB080	NRB120	NRB160
1-stage					
3	22.5	66	180	390	800
4	30	88	240	520	900
5	36	80	220	500	900
7	26	80	178	340	–
8	27	80	190	380	900
10	27	80	200	480	–
2-stage					
9	33	88	260	500	–
12	40	88	240	520	1600
15	36	88	220	500	1400
16	40	88	240	520	1600
20	40	88	240	520	1600
25	36	80	220	500	1400
32	40	88	240	520	1600
40	36	80	220	500	1400
64	27	80	190	380	900
3-stage					
60	40	88	220	520	–
80	40	88	240	520	–
100	40	88	240	520	–
120	36	88	220	500	–
160	40	88	240	520	–
200	36	80	220	500	–
256	40	88	240	520	–
320	36	80	220	500	–
512	27	80	190	380	–

© Siemens 2024

Technical specifications

η_G – Efficiency of the gearbox component under full load

The exact values for the efficiency are, to some extent, dependent on the frame size of the mounted motor and can be found in the data sheet resulting from the configuration in the Siemens Product Configurator. In the partial load range, especially when the gearbox is cold, the efficiency of the gearbox is always lower than at operating speed.
The gearbox losses are already taken into account in the characteristic curves and in the following characteristic data of the geared motor or its components: $M_{2,0}$, $M_{2,max}$, $M_{0,M}$, $M_{max,M}$.
These characteristic curves and characteristic data do not have to be reduced based on the efficiency.

Transmission ratio *i*	η_G – Efficiency of the gearbox component under full load in %				
	Gearbox				
	NRB040	NRB060	NRB080	NRB120	NRB160
1-stage					
3	98	98	98	98	98
4	98	98	98	98	98
5	97 ... 98	98	98	98	98
7	96 ... 97	96 ... 97	97	97	–
8	94 ... 96	95 ... 97	96 ... 97	97	97
10	92 ... 95	94 ... 96	94 ... 96	97	–
2-stage					
9	96 ... 97	96 ... 97	96 ... 97	97	–
12	95 ... 96	95 ... 96	96 ... 97	96	96
15	95 ... 96	95 ... 96	95 ... 96	96	96
16	95 ... 96	95 ... 96	95 ... 96	96	96
20	94 ... 96	94 ... 96	95 ... 96	96	96
25	93 ... 95	93 ... 95	94 ... 95	95	95
32	92 ... 95	92 ... 95	93 ... 95	95	95
40	91 ... 94	91 ... 94	92 ... 94	94	94
64	76 ... 86	78 ... 87	81 ... 89	89	90
3-stage					
60	88 ... 92	88 ... 92	88 ... 92	92	–
80	85 ... 90	86 ... 91	87 ... 91	91	–
100	83 ... 89	83 ... 89	85 ... 90	90	–
120	79 ... 87	81 ... 88	82 ... 89	88	–
160	77 ... 86	77 ... 86	80 ... 88	87	–
200	71 ... 82	72 ... 83	75 ... 85	84	–
256	69 ... 81	69 ... 81	73 ... 84	83	–
320	62 ... 76	63 ... 77	67 ... 80	79	–
512	31 ... 48	34 ... 51	38 ... 57	58	–

© Siemens 2024

Coaxial gearbox type NRB

Technical specifications

C_{T2} – Torsional rigidity of the gearbox (referred to the output)

The exact values for the torsional rigidity are dependent on the motor-gearbox combination and can be found in the data sheet resulting from the configuration in the Siemens Product Configurator.

Transmission ratio *i*	C_{T2} – Torsional rigidity of the gearbox in Nm/ ' Gearbox				
	NRB040	NRB060	NRB080	NRB120	NRB160
1-stage					
3	0.65 ... 0.75	2.2 ... 2.6	7.2 ... 7.9	17.5 ... 18.5	57.5 ... 59.5
4	0.85 ... 0.95	2.4 ... 2.8	9.2 ... 10.1	19 ... 20.5	65 ... 68
5	0.9 ... 0.95	2.5 ... 2.8	9.4 ... 10.2	19.5 ... 21	66 ... 69
7	0.8 ... 0.85	2.3 ... 2.5	8.1 ... 8.7	17.5 ... 18.5	–
8	0.8 ... 0.85	2.2 ... 2.5	8 ... 8.4	17 ... 18	60 ... 62
10	0.75	2 ... 2.2	7.5 ... 7.9	15.5 ... 16.4	–
2-stage					
9	0.75 ... 0.8	2.4 ... 2.7	7.9 ... 8.4	19 ... 20	–
12	0.9 ... 1	2.5 ... 2.8	9.6 ... 10.3	20.5 ... 22	70 ... 73
15	0.9 ... 1	2.4 ... 2.7	9.5 ... 10.2	20 ... 21.5	69 ... 73
16	0.95 ... 1	2.5 ... 2.8	9.8 ... 10.5	20.5 ... 22	72 ... 75
20	0.95 ... 1	2.5 ... 2.8	9.8 ... 10.4	20.5 ... 22	72 ... 75
25	0.95 ... 1	2.5 ... 2.8	9.7 ... 10.3	20 ... 21.5	70 ... 74
32	0.95 ... 1	2.5 ... 2.8	9.7 ... 10.3	20.5 ... 22	71 ... 75
40	0.95 ... 1	2.5 ... 2.8	9.6 ... 10.2	20 ... 21.5	70 ... 73
64	0.8 ... 0.85	2.3 ... 2.5	7.9 ... 8.3	17.5 ... 18.5	61 ... 63
3-stage					
60	0.95 ... 1	2.5 ... 2.8	9.7 ... 10.3	20.5 ... 22	–
80	0.95 ... 1	2.5 ... 2.8	9.8 ... 10.5	20.5 ... 22	–
100	0.95 ... 1	2.5 ... 2.8	9.8 ... 10.4	20.5 ... 22	–
120	0.95 ... 1	2.4 ... 2.7	9.6 ... 10.2	20 ... 21.5	–
160	0.95 ... 1	2.5 ... 2.8	9.8 ... 10.4	20.5 ... 22	–
200	0.95 ... 1	2.5 ... 2.8	9.7 ... 10.3	20 ... 21.5	–
256	0.95 ... 1	2.5 ... 2.8	9.7 ... 10.3	20.5 ... 22	–
320	0.95 ... 1	2.5 ... 2.8	9.6 ... 10.2	20 ... 21.5	–
512	0.8 ... 0.85	2.3 ... 2.5	7.9 ... 8.3	17.5 ... 18.5	–

φ_2 – Torsional backlash of the gearbox at the gearbox output

Gearbox stages *z*	φ_2 – Torsional backlash of the gearbox at the gearbox output in ' Gearbox				
	NRB040	NRB060	NRB080	NRB120	NRB160
1-stage	15	10	7	7	6
2-stage	19	12	9	9	10
3-stage	22	15	11	11	–

Permissible shaft loading capacity

The limit values shown for the bearing load refer to equivalent forces to be determined mathematically, whose effect is equivalent to the forces occurring in the load profile.
They only apply to radial and axial loads. Axial forces up to maximum $F_A = 0.24 \times F_R$ are permissible in case of superimposition. They apply to the output speed of 100 r/min and in case of radial force for a force application point in the center of the shaft or for centrally applied axial force. For other speeds or force application points, the permissible radial forces must be obtained from the radial force diagrams of the Configuration Manual.

	Permissible shaft loading capacity, radial and axial forces in Nm Gearbox				
	NRB040	NRB060	NRB080	NRB120	NRB160
Average radial force $F_{R\,eq}$					
• for L_{10h} = 20000 h	200	400	750	1750	5000
• for L_{10h} = 30000 h	160	340	650	1500	4200
Maximum radial force $F_{R\,max}$	200	700	1250	2000	5000
Average axial force $F_{A\,eq}$					
• for L_{10h} = 20000 h	200	500	1000	2500	7000
• for L_{10h} = 30000 h	160	450	900	2100	6000
Maximum axial force $F_{A\,max}$	240	800	1600	3800	11000

© Siemens 2024

Technical specifications

m_G – Weight of the gearbox component

The weight of the assigned motors and the total weight of the geared motors are in the data sheet resulting from the configuration of the motor or the geared motor in the Siemens Product Configurator.

Transmission ratio *i*	m_G - Weight of the gearbox component in kg							
	Gearbox NRB040	NRB060		NRB080		NRB120		NRB160
	Motor 1FT2 . 03	1FT2102 1FT2 . 03	1FT2 . 04 1FT2 . 05	1FT2 . 03 1FT2 . 04 1FT2 . 05	1FT2 . 06	1FT2 . 03 1FT2 . 04 1FT2 . 05 1FT2 . 06	1FT2208	1FT2 . 05 1FT2 . 06 1FT2208
1-stage								
3	0.60	0.87	1.7	2.1	3.2	5.7	7.4	17
4	0.60	0.88	1.4	2.1	3.2	5.7	7.8	17
5	0.60	0.89	1.4	2.2	3.2	5.8	7.8	17
7	0.60	0.88	1.4	2.1	3.2	5.7	7.8	–
8	0.68	0.88	1.4	2.1	3.2	5.7	7.0	17
10	0.61	0.89	1.4	2.2	3.2	5.7	7.8	–
2-stage								
9	0.69	1.1	1.9	2.6	3.7	7.4	9.2	–
12	0.69	1.1	1.9	2.6	3.7	7.4	9.2	23
15	0.69	1.1	1.6	2.6	3.7	7.5	9.3	23
16	0.69	1.1	1.6	2.6	3.7	7.5	9.5	23
20	0.69	1.1	1.6	2.6	3.7	7.5	9.6	23
25	0.69	1.1	1.6	2.7	3.7	7.5	9.6	23
32	0.77	1.1	1.6	2.7	3.7	7.5	8.9	23
40	0.77	1.1	1.6	2.7	3.7	7.6	8.9	23
64	0.78	1.1	1.6	2.7	3.7	7.6	8.9	23
3-stage								
60	0.78	1.3	1.8	3.1	4.2	9.2	11	–
80	0.78	1.3	1.8	3.1	4.2	9.2	11	–
100	0.78	1.3	1.8	3.1	4.2	9.3	11	–
120	0.78	1.3	1.8	3.2	4.2	9.3	11	–
160	0.86	1.3	1.8	3.1	4.2	9.3	11	–
200	0.86	1.3	1.8	3.2	4.2	9.4	11	–
256	0.87	1.3	1.8	3.2	4.2	9.4	11	–
320	0.87	1.3	1.8	3.2	4.3	9.4	11	–
512	0.87	1.3	1.8	3.2	4.3	9.4	11	–

© Siemens 2024

Coaxial gearbox type NRK

Technical specifications

Technical specifications for NRK coaxial gearboxes

$M_{2N,G}$ – Rated torque of the gearbox component

A fatigue strength calculation becomes necessary if this torque is exceeded (see Configuration Manual).
For the feather key version, the rated gearbox torque is only permissible as a pulsating load or it must be reduced depending on the number of load changes (see Components and Options).

Transmission ratio *i*	$M_{2N,G}$ – Rated torque of the gearbox component in Nm Gearbox				
	NRK050	NRK070	NRK090	NRK120	NRK155
1-stage					
3	11	28	85	115	–
4	15	33	90	155	460
5	13	30	82	172	445
7	8.5	25	65	135	–
8	6	18	50	120	–
10	5	15	38	95	210
2-stage					
9	12	33	97	157	–
12	15	33	90	195	–
15	13	33	82	172	–
16	15	33	90	195	460
20	15	33	90	195	460
25	13	30	82	172	445
32	15	33	90	195	–
40	13	30	82	172	460
50	–	–	–	–	445
64	7.5	18	50	120	–
100	5	15	38	95	210

$M_{2max,G}$ – Maximum output torque of the gearbox component

This torque must not be exceeded during operation. It is permissible for a maximum of 30000 revolutions of the output shaft. When output torques up to $M_{2max,G}$ are used, then the gearbox must be designed with the appropriate fatigue strength (see Configuration Manual).

Transmission ratio *i*	$M_{2max,G}$ – Maximum output torque of the gearbox component in Nm Gearbox				
	NRK050	NRK070	NRK090	NRK120	NRK155
1-stage					
3	17.5	45	136	184	–
4	24	53	144	248	736
5	21	48	131	275	712
7	13.5	40	104	216	–
8	9.5	29	80	192	–
10	8	24	61	152	336
2-stage					
9	19	53	155	251	–
12	24	53	144	312	–
15	21	53	131	275	–
16	24	53	144	312	736
20	24	53	144	312	736
25	21	48	131	275	712
32	24	53	144	312	–
40	21	48	131	275	736
50	–	–	–	–	712
64	12	29	80	192	–
100	8	24	61	152	336

© Siemens 2024

Technical specifications

$M_{2Em.Off}$ – Emergency Off output torque of the gearbox component

The Emergency Off torque can be tolerated a maximum of 1000 times within the gearbox service life without causing unacceptable damage to the gearbox. This code can be used to check whether the torques, caused by very rare operating faults, can damage the gearbox.

Transmission ratio *i*	$M_{2Em.Off}$ – Emergency Off output torque of the gearbox component in Nm Gearbox				
	NRK050	NRK070	NRK090	NRK120	NRK155
1-stage					
3	22.5	66	180	390	–
4	30	88	240	520	920
5	36	80	220	500	890
7	26	80	178	340	–
8	27	80	190	380	–
10	27	80	200	480	420
2-stage					
9	33	88	260	500	–
12	40	88	240	520	–
15	36	88	220	500	–
16	40	88	240	520	920
20	40	88	240	520	920
25	36	80	220	500	890
32	40	88	240	520	–
40	36	80	220	500	920
50	–	–	–	–	890
64	27	80	190	380	–
100	27	80	200	480	420

η_G – Efficiency of the gearbox component under full load

The exact values for the efficiency are, to some extent, dependent on the frame size of the mounted motor and can be found in the data sheet resulting from the configuration in the Siemens Product Configurator. In the partial load range, especially when the gearbox is cold, the efficiency of the gearbox is always lower than at operating speed.
The gearbox losses are already taken into account in the characteristic curves and in the following characteristic data of the geared motor or its components: $M_{2,0}$, $M_{2,max}$, $M_{0,M}$, $M_{max,M}$.
These characteristic curves and characteristic data do not have to be reduced based on the efficiency.

Transmission ratio *i*	η_G – Efficiency of the gearbox component under full load in % Gearbox				
	NRK050	NRK070	NRK090	NRK120	NRK155
1-stage					
3	97 ... 98	97 ... 98	98	98	–
4	97 ... 98	97 ... 98	98	98	98
5	97 ... 98	97	97 ... 98	98	98
7	95 ... 97	96 ... 97	96 ... 97	97	–
8	94 ... 96	95 ... 96	96 ... 97	97	–
10	92 ... 95	93 ... 95	94 ... 96	96	97
2-stage					
9	95 ... 96	95 ... 96	96 ... 97	96	–
12	95 ... 96	95 ... 96	95 ... 96	96	–
15	94 ... 95	94 ... 95	94 ... 96	96	–
16	94 ... 95	94 ... 95	94 ... 96	96	96
20	93 ... 95	93 ... 95	94 ... 95	95	96
25	91 ... 94	92 ... 94	92 ... 95	95	95 ... 96
32	91 ... 94	91 ... 94	92 ... 94	94	–
40	88 ... 92	89 ... 93	90 ... 94	93	94 ... 95
50	–	–	–	–	94 ... 95
64	76 ... 86	78 ... 86	81 ... 89	89	–
100	60 ... 75	67 ... 80	69 ... 82	83	84 ... 88

© Siemens 2024

Coaxial gearbox type NRK

Technical specifications

C_{T2} – Torsional rigidity of the gearbox (referred to the output)

The exact values for the torsional rigidity are dependent on the motor-gearbox combination and can be found in the data sheet resulting from the configuration in the Siemens Product Configurator.

Transmission ratio *i*	C_{T2} – Torsional rigidity of the gearbox in Nm/ ' Gearbox				
	NRK050	NRK070	NRK090	NRK120	NRK155
1-stage					
3	0.7 ... 0.75	4 ... 5.1	9.7 ... 10.8	29.5 ... 31.5	–
4	0.9 ... 1	4.7 ... 5.7	13.6 ... 15.3	35.5 ... 38.5	65 ... 70
5	0.95 ... 1	5 ... 5.9	14 ... 15.5	36.5 ... 39.5	68 ... 72
7	0.85	4.2 ... 4.6	11.4 ... 12.2	29.5 ... 31	–
8	0.85	4.1 ... 4.5	11.1 ... 11.8	28.5 ... 30.5	–
10	0.75 ... 0.8	3.5 ... 3.8	10.1 ... 10.6	24.5 ... 25.5	54.5 ... 56.5
2-stage					
9	0.8 ... 0.85	4.7 ... 5.2	11 ... 11.7	34 ... 36.5	–
12	1 ... 1.05	5.1 ... 5.7	14.6 ... 15.7	39.5 ... 43	–
15	1 ... 1.05	4.8 ... 5.3	14.4 ... 15.5	37.5 ... 40.5	–
16	1 ... 1.05	5.2 ... 5.8	15 ... 16.1	40 ... 43.5	69 ... 73
20	1 ... 1.05	5.2 ... 5.7	15 ... 16.1	40 ... 43.5	70 ... 73
25	1 ... 1.05	5.3 ... 5.8	14.7 ... 15.8	37.5 ... 41	70 ... 73
32	1 ... 1.05	5.1 ... 5.6	14.8 ... 15.8	39.5 ... 43	–
40	1 ... 1.05	5.2 ... 5.8	14.6 ... 15.6	37.5 ... 40.5	69 ... 72
50	–	–	–	–	69 ... 73
64	0.85 ... 0.9	4.2 ... 4.6	11 ... 11.5	30 ... 31.5	–
100	0.7	3.3 ... 3.6	9.7 ... 10.1	21 ... 22	55 ... 57

φ_2 – Torsional backlash of the gearbox at the gearbox output

Gearbox stages *z*	φ_2 – Torsional backlash of the gearbox at the gearbox output in ' Gearbox				
	NRK050	NRK070	NRK090	NRK120	NRK155
1-stage	15	10	7	7	6
2-stage	19	12	9	9	9

Permissible shaft loading capacity

The limit values shown for the bearing load refer to equivalent forces to be determined mathematically, whose effect is equivalent to the forces occurring in the load profile.
They only apply to radial and axial loads. Axial forces up to maximum $F_A = 0.24 \times F_R$ are permissible in case of superimposition. They apply to the output speed of 100 r/min and in case of radial force for a force application point in the center of the shaft or for centrally applied axial force. For other speeds or force application points, the permissible radial forces must be obtained from the radial force diagrams of the Configuration Manual.

	Permissible shaft loading capacity, radial and axial forces in Nm Gearbox				
	NRK050	NRK070	NRK090	NRK120	NRK155
Average radial force $F_{R\,eq}$					
• for L_{10h} = 20000 h	800	1050	1900	2500	5200
• for L_{10h} = 30000 h	700	900	1700	2150	4600
Maximum radial force $F_{R\,max}$	1300	1650	3100	4000	8400
Average axial force $F_{A\,eq}$					
• for L_{10h} = 20000 h	1000	1350	2000	4000	7000
• for L_{10h} = 30000 h	800	1000	1500	3000	6000
Maximum axial force $F_{A\,max}$	1000	2100	3800	5900	11000

© Siemens 2024

Technical specifications

m_G – Weight of the gearbox component

The weight of the assigned motors and the total weight of the geared motors are in the data sheet resulting from the configuration of the motor or the geared motor in the Siemens Product Configurator.

Transmission ratio *i*	m_G - Weight of the gearbox component in kg								
	Gearbox								
	NRK050	NRK070		NRK090		NRK120		NRK155	
	Motor								
	1FT2 . 03	1FT2102 1FT2 . 03 1FT2 . 04	1FT2 . 05	1FT2 . 03 1FT2 . 04 1FT2 . 05	1FT2 . 06	1FT2 . 03 1FT2 . 04 1FT2 . 05 1FT2 . 06	1FT2208	1FT2 . 05 1FT2 . 06 1FT2208	1FT2210
1-stage									
3	0.86	1.4	2.2	3.3	4.3	7.5	9.2	–	–
4	0.87	1.4	1.9	3.3	4.3	7.5	9.6	17	22
5	0.87	1.4	2	3.3	4.3	7.5	9.6	17	22
7	0.87	1.4	2	3.3	4.3	7.5	9.6	–	–
8	0.95	1.4	2	3.3	4.4	7.5	8.9	–	–
10	0.88	1.4	2	3.3	4.4	7.6	9.7	17	22
2-stage									
9	1.0	1.7	2.5	3.9	5.0	9.4	11	–	–
12	1.0	1.7	2.5	3.9	5.0	9.4	11	–	–
15	1.0	1.7	2.2	3.9	5.0	9.4	11	–	–
16	1.0	1.7	2.2	3.9	5.0	9.4	11	22	28
20	1.0	1.7	2.2	3.9	5.0	9.4	12	22	28
25	1.0	1.7	2.3	4.0	5.0	9.5	12	22	28
32	1.1	1.7	2.3	4.0	5.0	9.5	11	–	–
40	1.1	1.7	2.3	4.0	5.0	9.5	11	22	28
50	–	–	–	–	–	–	–	22	28
64	1.1	1.7	2.3	4.0	5.1	9.6	11	–	–
100	1.1	1.9	2.4	4.1	5.1	9.7	12	22	28

© Siemens 2024

Coaxial gearbox type NLC

Technical specifications

Technical specifications for NLC coaxial gearboxes

$M_{2N,G}$ – Rated torque of the gearbox component

A fatigue strength calculation becomes necessary if this torque is exceeded (see Configuration Manual).
For the feather key version, the rated gearbox torque is only permissible as a pulsating load or it must be reduced depending on the number of load changes (see Components and Options).

Transmission ratio *i*	$M_{2N,G}$ – Rated torque of the gearbox component in Nm Gearbox		
	NLC060	NLC080	NLC120
1-stage			
3	28	85	115
4	38	115	155
5	40	110	195
7	25	65	135
8	18	50	120
10	15	38	95
2-stage			
9	44	130	210
12	44	120	260
15	44	110	230
16	44	120	260
20	44	120	260
25	40	110	230
32	44	120	260
40	40	110	230
64	18	50	120
100	15	38	95

$M_{2max,G}$ – Maximum output torque of the gearbox component

This torque must not be exceeded during operation. It is permissible for a maximum of 30000 revolutions of the output shaft. When output torques up to $M_{2max,G}$ are used, then the gearbox must be designed with the appropriate fatigue strength (see Configuration Manual).

Transmission ratio *i*	$M_{2max,G}$ – Maximum output torque of the gearbox component in Nm Gearbox		
	NLC060	NLC080	NLC120
1-stage			
3	45	136	184
4	61	148	248
5	64	176	312
7	40	104	216
8	29	80	192
10	24	61	152
2-stage			
9	70	208	336
12	70	192	416
15	70	176	368
16	70	192	416
20	70	192	416
25	64	176	368
32	70	192	416
40	64	176	368
64	29	80	192
100	24	61	152

© Siemens 2024

Technical specifications

$M_{2Em.Off}$ – Emergency Off output torque of the gearbox component

The Emergency Off torque can be tolerated a maximum of 1000 times within the gearbox service life without causing unacceptable damage to the gearbox. This code can be used to check whether the torques, caused by very rare operating faults, can damage the gearbox.

Transmission ratio *i*	$M_{2Em.Off}$ – Emergency Off output torque of the gearbox component in Nm Gearbox		
	NLC060	NLC080	NLC120
1-stage			
3	66	180	390
4	88	240	520
5	80	220	500
7	80	178	340
8	80	190	380
10	80	200	480
2-stage			
9	88	260	500
12	88	240	520
15	88	220	500
16	88	240	520
20	88	240	520
25	80	220	500
32	88	240	520
40	80	220	500
64	80	190	380
100	80	200	480

η_G – Efficiency of the gearbox component under full load

The exact values for the efficiency are, to some extent, dependent on the frame size of the mounted motor and can be found in the data sheet resulting from the configuration in the Siemens Product Configurator. In the partial load range, especially when the gearbox is cold, the efficiency of the gearbox is always lower than at operating speed. The gearbox losses are already taken into account in the characteristic curves and in the following characteristic data of the geared motor or its components:
$M_{2,0}$, $M_{2,max}$, $M_{0,M}$, $M_{max,M}$.
These characteristic curves and characteristic data do not have to be reduced based on the efficiency.

Transmission ratio *i*	η_G – Efficiency of the gearbox component under full load in % Gearbox		
	NLC060	NLC080	NLC120
1-stage			
3	96	97	97
4	96 ... 97	97	97
5	96 ... 97	97	97
7	94 ... 95	95 ... 96	96
8	93 ... 94	94 ... 96	96
10	91 ... 93	92 ... 94	96
2-stage			
9	95 ... 96	96	96
12	94 ... 95	95 ... 96	96
15	94 ... 95	94 ... 95	96
16	94 ... 95	94 ... 96	96
20	93 ... 95	94 ... 95	95
25	92 ... 94	93 ... 95	95
32	91 ... 94	93 ... 95	95
40	90 ... 93	91 ... 94	94
64	77 ... 85	80 ... 88	89
100	66 ... 78	68 ... 81	83

© Siemens 2024

Coaxial gearbox type NLC

Technical specifications

C_{T2} – Torsional rigidity of the gearbox (referred to the output)

The exact values for the torsional rigidity are dependent on the motor-gearbox combination and can be found in the data sheet resulting from the configuration in the Siemens Product Configurator.

Transmission ratio *i*	C_{T2} – Torsional rigidity of the gearbox in Nm/ ' Gearbox		
	NLC060	NLC080	NLC120
1-stage			
3	3.4 ... 4.1	8.2 ... 8.9	21.5 ... 22
4	3.9 ... 4.5	10.9 ... 11.8	24.5 ... 25.5
5	4 ... 4.6	11.2 ... 11.9	25 ... 26
7	3.5 ... 3.8	9.4 ... 9.9	21.5 ... 22
8	3.4 ... 3.7	9.2 ... 9.6	21 ... 22
10	3 ... 3.2	8.5 ... 8.9	18.5 ... 19.5
2-stage			
9	3.8 ... 4.2	9.2 ... 9.6	23.5 ... 24.5
12	4.1 ... 4.5	11.5 ... 12.1	26 ... 27.5
15	3.9 ... 4.2	11.4 ... 12	25.5 ... 26.5
16	4.2 ... 4.6	11.8 ... 12.3	26.5 ... 27.5
20	4.1 ... 4.5	11.8 ... 12.3	26.5 ... 27.5
25	4.2 ... 4.6	11.6 ... 12.1	25.5 ... 26.5
32	4.1 ... 4.5	11.5 ... 12.2	26 ... 27.5
40	4.2 ... 4.5	11.5 ... 12	25.5 ... 26.5
64	3.5 ... 3.8	9.2 ... 9.5	21.5 ... 22.5
100	2.9 ... 3.1	8.2 ... 8.5	16.7 ... 17

φ_2 – Torsional backlash of the gearbox at the gearbox output

Gearbox stages *z*	φ_2 – Torsional backlash of the gearbox at the gearbox output in ' Gearbox		
	NLC060	NLC080	NLC120
1-stage	10	7	7
2-stage	12	9	9

Permissible shaft loading capacity

The limit values shown for the bearing load refer to equivalent forces to be determined mathematically, whose effect is equivalent to the forces occurring in the load profile.
They only apply to radial and axial loads. Axial forces up to maximum $F_A = 0.24 \times F_R$ are permissible in case of superimposition. They apply to the output speed of 100 r/min and in case of radial force for a force application point in the center of the shaft or for centrally applied axial force. For other speeds or force application points, the permissible radial forces must be obtained from the radial force diagrams of the Configuration Manual.

	Permissible shaft loading capacity, radial and axial forces in Nm Gearbox		
	NLC060	NLC080	NLC120
Average radial force $F_{R\,eq}$			
• for L_{10h} = 20000 h	3200	5500	6000
• for L_{10h} = 30000 h	3200	4800	5400
Maximum radial force $F_{R\,max}$	3200	5500	6000
Average axial force $F_{A\,eq}$			
• for L_{10h} = 20000 h	4400	6400	8000
• for L_{10h} = 30000 h	3900	5700	7000
Maximum axial force $F_{A\,max}$	4400	6400	8000

© Siemens 2024

Technical specifications

m_G – Weight of the gearbox component

The weight of the assigned motors and the total weight of the geared motors are in the data sheet resulting from the configuration of the motor or the geared motor in the Siemens Product Configurator.

Transmission ratio *i*	m_G - Weight of the gearbox component in kg					
	Gearbox					
	NLC060		NLC080		NLC120	
	Motor					
	1FT2102 1FT2 . 03 1FT2 . 04	1FT2 . 05	1FT2 . 03 1FT2 . 04 1FT2 . 05	1FT2 . 06	1FT2 . 03 1FT2 . 04 1FT2 . 05 1FT2 . 06	1FT2208
1-stage						
3	1.6	2.4	3.0	4.1	6.9	8.7
4	1.6	2.1	3.0	4.1	6.9	9.0
5	1.6	2.1	3.1	4.1	7.0	9.1
7	1.6	2.1	3.0	4.1	7.0	9.1
8	1.6	2.1	3.0	4.1	6.9	8.2
10	1.6	2.1	3.1	4.1	7.0	9.1
2-stage						
9	1.7	2.6	3.6	4.6	8.6	10
12	1.8	2.6	3.5	4.6	8.6	10
15	1.7	2.3	3.5	4.6	8.7	10
16	1.8	2.3	3.5	4.6	8.6	11
20	1.8	2.3	3.5	4.6	8.7	11
25	1.8	2.3	3.6	4.6	8.7	11
32	1.8	2.3	3.6	4.6	8.7	10
40	1.8	2.3	3.6	4.6	8.8	10
64	1.8	2.3	3.6	4.6	8.7	10
100	1.8	2.3	3.6	4.7	8.9	11

© Siemens 2024

Angular gearbox type NRBW

Technical specifications

Technical specifications for NRBW angular gearboxes

$M_{2N,\,G}$ – Rated torque of the gearbox component

A fatigue strength calculation becomes necessary if this torque is exceeded (see Configuration Manual).
For the feather key version, the rated gearbox torque is only permissible as a pulsating load or it must be reduced depending on the number of load changes (see Components and Options).

Transmission ratio *i*	$M_{2N,\,G}$ – Rated torque of the gearbox component in Nm Gearbox		
	NRBW060	NRBW080	NRBW120
1-stage			
3	14	40	80
4	19	53	105
5	24	67	130
7	25	65	135
8	18	50	120
10	15	38	95
2-stage			
9	44	130	210
12	44	120	260
15	44	110	230
16	44	120	260
20	44	120	260
25	40	110	230
32	44	120	260
40	40	110	230
64	18	50	120
3-stage			
60	44	110	260
80	44	120	260
100	44	120	260
120	44	110	230
160	44	120	260
200	40	110	230
256	44	120	260
320	40	110	230
512	18	50	120

© Siemens 2024

Technical specifications

$M_{2max, G}$ – Maximum output torque of the gearbox component

This torque must not be exceeded during operation. It is permissible for a maximum of 30000 revolutions of the output shaft. When output torques up to $M_{2max, G}$ are used, then the gearbox must be designed with the appropriate fatigue strength (see Configuration Manual).

Transmission ratio *i*	$M_{2max, G}$ – Maximum output torque of the gearbox component in Nm Gearbox		
	NRBW060	NRBW080	NRBW120
1-stage			
3	22	64	128
4	30	85	168
5	38	107	208
7	40	104	216
8	29	80	192
10	24	61	152
2-stage			
9	70	208	336
12	70	192	416
15	70	176	368
16	70	192	416
20	70	192	416
25	64	176	368
32	70	192	416
40	64	176	368
64	29	80	192
3-stage			
60	70	176	416
80	70	192	416
100	70	192	416
120	70	176	368
160	70	192	416
200	64	176	368
256	70	192	416
320	64	176	368
512	29	80	192

© Siemens 2024

Angular gearbox type NRBW

Technical specifications

$M_{2Em.Off}$ – Emergency Off output torque of the gearbox component

The Emergency Off torque can be tolerated a maximum of 1000 times within the gearbox service life without causing unacceptable damage to the gearbox. This code can be used to check whether the torques, caused by very rare operating faults, can damage the gearbox.

Transmission ratio *i*	$M_{2Em.Off}$ – Emergency Off output torque of the gearbox component in Nm Gearbox		
	NRBW060	NRBW080	NRBW120
1-stage			
3	66	180	360
4	86	240	474
5	80	220	500
7	80	178	340
8	80	190	380
10	70	170	430
2-stage			
9	88	260	500
12	88	240	520
15	88	220	500
16	88	240	520
20	88	240	520
25	80	220	500
32	88	240	520
40	80	220	500
64	80	190	380
3-stage			
60	88	220	520
80	88	240	520
100	88	240	520
120	88	220	500
160	88	240	520
200	80	220	500
256	88	240	520
320	80	220	500
512	80	190	380

© Siemens 2024

Technical specifications

η_G – Efficiency of the gearbox component under full load

The exact values for the efficiency are, to some extent, dependent on the frame size of the mounted motor and can be found in the data sheet resulting from the configuration in the Siemens Product Configurator. In the partial load range, especially when the gearbox is cold, the efficiency of the gearbox is always lower than at operating speed.
The gearbox losses are already taken into account in the characteristic curves and in the following characteristic data of the geared motor or its components: $M_{2,0}$, $M_{2,max}$, $M_{0,M}$, $M_{max,M}$
It is not necessary to reduce these characteristic curves and characteristic data based on the efficiency.

Transmission ratio *i*	η_G – Efficiency of the gearbox component under full load in % Gearbox		
	NRBW060	NRBW080	NRBW120
1-stage			
3	95	95	95
4	95	95	95
5	95	95	95
7	94	95	95
8	93	94	95
10	92	93	94
2-stage			
9	94	94	94
12	94	94	94
15	93	93	94
16	93	93	94
20	92	93	93
25	91	92	92
32	91	92	92
40	89	90	91
64	77	80	84
3-stage			
60	86	87	88
80	84	86	87
100	82	84	85
120	80	81	82
160	76	79	81
200	71	74	77
256	68	72	75
320	62	66	70
512	33	38	46

© Siemens 2024

Angular gearbox type NRBW

Technical specifications

C_{T2} – Torsional rigidity of the gearbox (referred to the output)

The exact values for the torsional rigidity are dependent on the motor-gearbox combination and can be found in the data sheet resulting from the configuration in the Siemens Product Configurator.

Transmission ratio *i*	C_{T2} – Torsional rigidity of the gearbox in Nm/ ' Gearbox		
	NRBW060	NRBW080	NRBW120
1-stage			
3	1.6	4.1	10
4	2.0	6.0	14
5	2.2	7.0	15
7	2.2	7.5	17
8	2.2	7.5	17
10	2.2	7.8	16
2-stage			
9	2.4	7.4	18
12	2.6	9.3	20
15	2.5	9.5	20
16	2.6	9.7	21
20	2.6	9.9	21
25	2.7	9.8	20
32	2.7	10	21
40	2.7	9.9	21
64	2.4	8.1	18
3-stage			
60	2.7	10	21
80	2.7	10	21
100	2.7	10	21
120	2.6	9.9	21
160	2.7	10	21
200	2.7	10	21
256	2.7	10	21
320	2.7	9.9	21
512	2.4	8.1	18

φ_2 – Torsional backlash of the gearbox at the gearbox output

Gearbox stages *z*	φ_2 – Torsional backlash of the gearbox at the gearbox output in ' Gearbox		
	NRBW060	NRBW080	NRBW120
1-stage	16	13	11
2-stage	18	15	13
3-stage	21	17	15

Permissible shaft loading capacity

The limit values shown for the bearing load refer to equivalent forces to be determined mathematically, whose effect is equivalent to the forces occurring in the load profile.
They only apply to radial and axial loads. Axial forces up to maximum $F_A = 0.24 \times F_R$ are permissible in case of superimposition. They apply to the output speed of 100 r/min and in case of radial force for a force application point in the center of the shaft or for centrally applied axial force. For other speeds or force application points, the permissible radial forces must be obtained from the radial force diagrams of the Configuration Manual.

	Permissible shaft loading capacity, radial and axial forces in Nm Gearbox		
	NRBW060	NRBW080	NRBW120
Average radial force $F_{R\,eq}$			
• for L_{10h} = 20000 h	400	750	1750
• for L_{10h} = 30000 h	340	650	1500
Maximum radial force $F_{R\,max}$	700	1250	2000
Average axial force $F_{A\,eq}$			
• for L_{10h} = 20000 h	500	1000	2500
• for L_{10h} = 30000 h	450	900	2100
Maximum axial force $F_{A\,max}$	800	1600	3800

© Siemens 2024

Technical specifications

m_G – Weight of the gearbox component

The weight of the assigned motors and the total weight of the geared motors are in the data sheet resulting from the configuration of the motor or the geared motor in the Siemens Product Configurator.

Transmission ratio *i*	m_G - Weight of the gearbox component in kg						
	Gearbox						
	NRBW060		NRBW080			NRBW120	
	Motor						
	1FT2 . 03	1FT2 . 04	1FT2 . 03 1FT2 . 04	1FT2105	1FT2205	1FT2 . 03 1FT2 . 04 1FT2 . 05	1FT2 . 06
1-stage							
3	1.6	1.8	3.6	4.0	3.8	9.6	10
4	1.6	1.8	3.6	4.0	3.8	9.7	10
5	1.6	1.8	3.6	4.0	3.8	9.7	10
7	1.6	1.8	3.6	4.0	3.8	9.7	10
8	1.6	1.8	3.6	4.0	3.8	9.7	10
10	1.6	1.8	3.6	4.0	3.8	9.7	10
2-stage							
9	1.8	2.0	4.1	4.5	4.3	11	12
12	1.8	2.0	4.1	4.5	4.3	11	12
15	1.8	2.0	4.1	4.5	4.3	11	12
16	1.8	2.0	4.0	4.5	4.2	11	12
20	1.8	2.0	4.1	4.5	4.3	11	12
25	1.8	2.0	4.1	4.5	4.3	12	12
32	1.8	2.0	4.1	4.5	4.3	12	12
40	1.8	2.0	4.1	4.5	4.3	12	12
64	1.8	2.0	4.1	4.5	4.3	12	12
3-stage							
60	2.0	2.2	4.5	5.0	4.7	13	14
80	2.0	2.2	4.5	5.0	4.7	13	14
100	2.0	2.2	4.6	5.0	4.8	13	14
120	2.0	2.2	4.6	5.0	4.8	13	14
160	2.0	2.2	4.6	5.0	4.8	13	14
200	2.0	2.2	4.6	5.0	4.8	13	14
256	2.0	2.2	4.6	5.0	4.8	13	14
320	2.0	2.2	4.6	5.1	4.8	13	14
512	2.0	2.2	4.6	5.1	4.8	13	14

© Siemens 2024

Angular gearbox type NRKW

Technical specifications

Technical specifications for NRKW angular gearboxes

$M_{2N,\,G}$ – Rated torque of the gearbox component

A fatigue strength calculation becomes necessary if this torque is exceeded (see Configuration Manual).
For the feather key version, the rated gearbox torque is only permissible as a pulsating load or it must be reduced depending on the number of load changes (see Components and Options).

Transmission ratio *i*	$M_{2N,\,G}$ – Rated torque of the gearbox component in Nm Gearbox		
	NRKW070	NRKW090	NRKW120
1-stage			
3	14	40	80
4	19	53	105
5	24	67	130
7	25	65	135
8	18	50	120
10	15	38	95
2-stage			
9	33	97	157
12	33	90	195
15	33	82	172
16	33	90	195
20	33	90	195
25	30	82	172
32	33	90	195
40	30	82	172
64	18	50	120
100	15	38	95

$M_{2max,\,G}$ – Maximum output torque of the gearbox component

This torque must not be exceeded during operation. It is permissible for a maximum of 30000 revolutions of the output shaft. When output torques up to $M_{2max,\,G}$ are used, then the gearbox must be designed with the appropriate fatigue strength (see Configuration Manual).

Transmission ratio *i*	$M_{2max,\,G}$ – Maximum output torque of the gearbox component in Nm Gearbox		
	NRKW070	NRKW090	NRKW120
1-stage			
3	22	64	128
4	30	85	168
5	38	107	208
7	40	104	216
8	29	80	192
10	24	61	152
2-stage			
9	53	155	251
12	53	144	312
15	53	131	275
16	53	144	312
20	53	144	312
25	48	131	275
32	53	144	312
40	48	131	275
64	29	80	192
100	24	61	152

© Siemens 2024

Technical specifications

$M_{2Em.Off}$ – Emergency Off output torque of the gearbox component

The Emergency Off torque can be tolerated a maximum of 1000 times within the gearbox service life without causing unacceptable damage to the gearbox. This code can be used to check whether the torques, caused by very rare operating faults, can damage the gearbox.

Transmission ratio *i*	$M_{2Em.Off}$ – Emergency Off output torque of the gearbox component in Nm Gearbox		
	NRKW070	NRKW090	NRKW120
1-stage			
3	66	180	360
4	86	240	474
5	80	220	500
7	80	178	340
8	80	190	380
10	70	170	430
2-stage			
9	88	260	500
12	88	240	520
15	88	220	500
16	88	240	520
20	88	240	520
25	80	220	500
32	88	240	520
40	80	220	500
64	80	190	380
100	80	170	430

η_G – Efficiency of the gearbox component under full load

The exact values for the efficiency are, to some extent, dependent on the frame size of the mounted motor and can be found in the data sheet resulting from the configuration in the Siemens Product Configurator. In the partial load range, especially when the gearbox is cold, the efficiency of the gearbox is always lower than at operating speed.
The gearbox losses are already taken into account in the characteristic curves and in the following characteristic data of the geared motor or its components: $M_{2,0}$, $M_{2,max}$, $M_{0,M}$, $M_{max,M}$
It is not necessary to reduce these characteristic curves and characteristic data based on the efficiency.

Transmission ratio *i*	η_G – Efficiency of the gearbox component under full load in % Gearbox		
	NRKW070	NRKW090	NRKW120
1-stage			
3	94	95	95
4	94	95	95
5	95	95	95
7	94	95	95
8	93	94	94
10	91	92	94
2-stage			
9	93	94	94
12	93	93	94
15	92	93	93
16	92	93	93
20	91	92	93
25	90	91	91
32	89	90	91
40	87	89	90
64	76	80	84
100	65	69	75

© Siemens 2024

Angular gearbox type NRKW

Technical specifications

C_{T2} – Torsional rigidity of the gearbox (referred to the output)

The exact values for the torsional rigidity are dependent on the motor-gearbox combination and can be found in the data sheet resulting from the configuration in the Siemens Product Configurator.

Transmission ratio *i*	C_{T2} – Torsional rigidity of the gearbox in Nm/ ' Gearbox		
	NRKW070	NRKW090	NRKW120
1-stage			
3	2.3	4.8	13
4	3.2	7.5	20
5	3.8	9.2	24
7	4.0	10	27
8	4.0	10	27
10	3.7	11	25
2-stage			
9	4.4	10	31
12	5.0	14	37
15	4.8	14	37
16	5.3	15	39
20	5.3	15	40
25	5.5	15	39
32	5.4	15	41
40	5.5	15	39
64	4.4	11	31
100	3.5	9.9	22

φ_2 – Torsional backlash of the gearbox at the gearbox output

Gearbox stages *z*	φ_2 – Torsional backlash of the gearbox at the gearbox output in ' Gearbox		
	NRKW070	NRKW090	NRKW120
1-stage	16	13	11
2-stage	18	15	13

Permissible shaft loading capacity

The limit values shown for the bearing load refer to equivalent forces to be determined mathematically, whose effect is equivalent to the forces occurring in the load profile.
They only apply to radial and axial loads. Axial forces up to maximum $F_A = 0.24 \times F_R$ are permissible in case of superimposition. They apply to the output speed of 100 r/min and in case of radial force for a force application point in the center of the shaft or for centrally applied axial force. For other speeds or force application points, the permissible radial forces must be obtained from the radial force diagrams of the Configuration Manual.

	Permissible shaft loading capacity, radial and axial forces in Nm Gearbox		
	NRKW070	NRKW090	NRKW120
Average radial force $F_{R\,eq}$			
• for L_{10h} = 20000 h	1050	1900	2500
• for L_{10h} = 30000 h	900	1700	2150
Maximum radial force $F_{R\,max}$	1650	3100	4000
Average axial force $F_{A\,eq}$			
• for L_{10h} = 20000 h	1350	2000	4000
• for L_{10h} = 30000 h	1000	1500	3000
Maximum axial force $F_{A\,max}$	2100	3800	5900

© Siemens 2024

Technical specifications

m_G – Weight of the gearbox component

The weight of the assigned motors and the total weight of the geared motors are in the data sheet resulting from the configuration of the motor or the geared motor in the Siemens Product Configurator.

Transmission ratio *i*	m_G - Weight of the gearbox component in kg						
	Gearbox						
	NRKW070		NRKW090			NRKW120	
	Motor						
	1FT2 . 03	1FT2 . 04	1FT2 . 03 1FT2 . 04	1FT2105	1FT2205	1FT2 . 03 1FT2 . 04 1FT2 . 05	1FT2 . 06
1-stage							
3	2.1	2.3	4.7	5.1	4.9	11	12
4	2.1	2.3	4.7	5.1	4.9	11	12
5	2.1	2.3	4.7	5.2	4.9	11	12
7	2.1	2.3	4.7	5.1	4.9	12	12
8	2.1	2.3	4.7	5.2	4.9	12	12
10	2.1	2.3	4.8	5.2	5.0	12	12
2-stage							
9	2.4	2.6	5.4	5.8	5.6	13	14
12	2.4	2.6	5.4	5.8	5.6	13	14
15	2.4	2.6	5.4	5.8	5.6	13	14
16	2.4	2.6	5.4	5.8	5.6	13	14
20	2.4	2.6	5.4	5.8	5.6	13	14
25	2.4	2.6	5.4	5.8	5.6	13	14
32	2.4	2.6	5.4	5.8	5.6	13	14
40	2.4	2.6	5.4	5.8	5.6	13	14
64	2.4	2.6	5.4	5.9	5.6	14	14
100	2.6	2.8	5.5	5.9	5.7	14	14

© Siemens 2024

Angular gearbox type NLCW

Technical specifications

Technical specifications for NLCW angular gearboxes

$M_{2N,\,G}$ – Rated torque of the gearbox component

A fatigue strength calculation becomes necessary if this torque is exceeded (see Configuration Manual).
For the feather key version, the rated gearbox torque is only permissible as a pulsating load or it must be reduced depending on the number of load changes (see Components and Options).

Transmission ratio *i*	$M_{2N,\,G}$ – Rated torque of the gearbox component in Nm Gearbox		
	NLCW060	NLCW080	NLCW120
1-stage			
3	14	40	80
4	19	53	105
5	24	67	130
7	25	65	135
8	18	50	120
10	15	38	95
2-stage			
9	44	130	210
12	44	120	260
15	44	110	230
16	44	120	260
20	44	120	260
25	40	110	230
32	44	120	260
40	40	110	230
64	18	50	120
100	15	38	95

$M_{2max,\,G}$ – Maximum output torque of the gearbox component

This torque must not be exceeded during operation. It is permissible for a maximum of 30000 revolutions of the output shaft. When output torques up to $M_{2max,\,G}$ are used, then the gearbox must be designed with the appropriate fatigue strength (see Configuration Manual).

Transmission ratio *i*	$M_{2max,\,G}$ – Maximum output torque of the gearbox component in Nm Gearbox		
	NLCW060	NLCW080	NLCW120
1-stage			
3	22	64	128
4	30	85	168
5	38	107	208
7	40	104	216
8	29	80	192
10	24	61	152
2-stage			
9	70	208	336
12	70	192	416
15	70	176	368
16	70	192	416
20	70	192	416
25	64	176	368
32	70	192	416
40	64	176	368
64	29	80	192
100	24	61	152

© Siemens 2024

Technical specifications

$M_{2Em.Off}$ – Emergency Off output torque of the gearbox component

The Emergency Off torque can be tolerated a maximum of 1000 times within the gearbox service life without causing unacceptable damage to the gearbox. This code can be used to check whether the torques, caused by very rare operating faults, can damage the gearbox.

Transmission ratio *i*	$M_{2Em.Off}$ – Emergency Off output torque of the gearbox component in Nm Gearbox		
	NLCW060	NLCW080	NLCW120
1-stage			
3	66	180	360
4	86	240	474
5	80	220	500
7	80	178	340
8	80	190	380
10	70	170	430
2-stage			
9	88	260	500
12	88	240	520
15	88	220	500
16	88	240	520
20	88	240	520
25	80	220	500
32	88	240	520
40	80	220	500
64	80	190	380
100	80	200	430

η_G – Efficiency of the gearbox component under full load

The exact values for the efficiency are, to some extent, dependent on the frame size of the mounted motor and can be found in the data sheet resulting from the configuration in the Siemens Product Configurator. In the partial load range, especially when the gearbox is cold, the efficiency of the gearbox is always lower than at operating speed.
The gearbox losses are already taken into account in the characteristic curves and in the following characteristic data of the geared motor or its components: $M_{2,0}$, $M_{2,max}$, $M_{0,M}$, $M_{max,M}$
It is not necessary to reduce these characteristic curves and characteristic data based on the efficiency.

Transmission ratio *i*	η_G – Efficiency of the gearbox component under full load in % Gearbox		
	NLCW060	NLCW080	NLCW120
1-stage			
3	91	93	94
4	92	93	94
5	92	94	94
7	92	93	94
8	90	92	93
10	88	90	92
2-stage			
9	93	94	94
12	93	94	94
15	93	93	94
16	92	93	94
20	92	93	93
25	91	92	92
32	90	91	92
40	88	90	91
64	75	78	83
100	64	67	74

© Siemens 2024

Angular gearbox type NLCW

Technical specifications

C_{T2} – Torsional rigidity of the gearbox (referred to the output)

The exact values for the torsional rigidity are dependent on the motor-gearbox combination and can be found in the data sheet resulting from the configuration in the Siemens Product Configurator.

Transmission ratio *i*	C_{T2} – Torsional rigidity of the gearbox in Nm/ ' Gearbox		
	NLCW060	NLCW080	NLCW120
1-stage			
3	2.1	4.4	11
4	2.8	6.6	16
5	3.2	7.9	18
7	3.3	8.5	20
8	3.3	8.6	20
10	3.1	8.9	19
2-stage			
9	3.7	8.4	22
12	4.1	11	25
15	4.0	11	25
16	4.2	11	26
20	4.3	12	26
25	4.4	12	26
32	4.3	12	27
40	4.4	12	26
64	3.7	9.3	22
100	3.0	8.4	17

φ_2 – Torsional backlash of the gearbox at the gearbox output

Gearbox stages *z*	φ_2 – Torsional backlash of the gearbox at the gearbox output in ' Gearbox		
	NLCW060	NLCW080	NLCW120
1-stage	16	13	11
2-stage	18	15	13

Permissible shaft loading capacity

The limit values shown for the bearing load refer to equivalent forces to be determined mathematically, whose effect is equivalent to the forces occurring in the load profile.
They only apply to radial and axial loads. Axial forces up to maximum $F_A = 0.24 \times F_R$ are permissible in case of superimposition. They apply to the output speed of 100 r/min and in case of radial force for a force application point in the center of the shaft or for centrally applied axial force. For other speeds or force application points, the permissible radial forces must be obtained from the radial force diagrams of the Configuration Manual.

	Permissible shaft loading capacity, radial and axial forces in Nm Gearbox		
	NLCW060	NLCW080	NLCW120
Average radial force $F_{R\,eq}$			
• for L_{10h} = 20000 h	3200	5500	6000
• for L_{10h} = 30000 h	3200	4800	5400
Maximum radial force $F_{R\,max}$	3200	5500	6000
Average axial force $F_{A\,eq}$			
• for L_{10h} = 20000 h	4400	6400	8000
• for L_{10h} = 30000 h	3900	5700	7000
Maximum axial force $F_{A\,max}$	4400	6400	8000

© Siemens 2024

Technical specifications

m_G – Weight of the gearbox component

The weight of the assigned motors and the total weight of the geared motors are in the data sheet resulting from the configuration of the motor or the geared motor in the Siemens Product Configurator.

Transmission ratio *i*	m_G - Weight of the gearbox component in kg						
	Gearbox						
	NLCW060		NLCW080			NLCW120	
	Motor						
	1FT2 . 03	1FT2 . 04	1FT2 . 03 1FT2 . 04	1FT2105	1FT2205	1FT2 . 03 1FT2 . 04 1FT2 . 05	1FT2206
1-stage							
3	2.3	2.5	4.5	4.9	4.7	11	11
4	2.3	2.5	4.5	4.9	4.7	11	11
5	2.3	2.5	4.5	4.9	4.7	11	11
7	2.3	2.5	4.5	4.9	4.7	11	11
8	2.3	2.5	4.5	4.9	4.7	11	11
10	2.3	2.5	4.5	4.9	4.7	11	11
2-stage							
9	2.4	2.6	5.0	5.4	5.2	12	13
12	2.5	2.7	5.0	5.4	5.2	13	13
15	2.4	2.6	5.0	5.4	5.2	13	13
16	2.5	2.7	5.0	5.4	5.2	13	13
20	2.5	2.7	5.0	5.4	5.2	13	13
25	2.5	2.7	5.0	5.4	5.2	13	13
32	2.5	2.7	5.0	5.4	5.2	13	13
40	2.5	2.7	5.0	5.4	5.2	13	13
64	2.5	2.7	5.0	5.4	5.2	13	13
100	2.5	2.7	5.0	5.5	5.2	13	13

© Siemens 2024

Notes on selection

Selection and ordering data

Selection of holding brake, degree of protection motor, encoder, connection technology, gearbox lubrication and shaft design

Configuration in the Siemens Product Configurator
www.siemens.com/simotics-1ft2-servogearedmotors/configuration

SIMOTICS S-1FT2 servo planetary geared motors
Basic motor — Planetary gearbox
Article No. — Order codes

1F T2 . 0 . - . A . ■ ■ - ■ ■ ■ **0 -Z** ■ ■ ■ + ■ ■ ■ + ■ ■ ■ + ■ ■ ■

Holding brake	Without brake	**0**
	With brake	**1**
	Reinforced holding brake (only for 1FT2208-2, 1FT2208-3, 1FT2210-2 and 1FT2210-3)	**2**
Motor degree of protection	IP64	**0**
	IP65	**1**
Motor shaft – Assignment depends on the gearbox size, see selection and ordering data tables		
Encoder	Absolute encoder single-turn 22-bit (AS22DQC)	**S**
	Absolute encoder 22-bit + 12-bit multi-turn (AM22DQC)	**M**
	Absolute encoder single-turn 26-bit (AS26DQC)	**B**
	Absolute encoder 26-bit + 12-bit multi-turn (AM26DQC)	**C**
Connection technology	Two-cable technology	**B**

Gearbox type, gearbox size, number of gearbox stages, gearbox ratio, lubrication and gearbox shaft

1st order code – gearbox type, gearbox size and number of gearbox stages

• Gearbox type Order codes see selection and ordering data tables	NRB or NRBW planetary gearbox	**A**
	NRK or NRKW planetary gearbox	**B**
	NLC or NLCW planetary gearbox	**C**
• Gearbox size Order codes see selection and ordering data tables	040/050	**1**
	060/070	**2**
	080/090	**3**
	120	**4**
	155/160	**5**

• Number of gearbox stages and gearbox type
For order codes, see selection and ordering data tables

Coaxial gearboxes		Angular gearboxes	
	1-stage **1**		1-stage **6**
	2-stage **2**		2-stage **7**
	3-stage **3**		3-stage **8**

2nd order code – transmission ratio *i* – order code, see selection and ordering data tables

1-stage		2-stage		3-stage	
3	**R 0 3**	9	**R 0 9**	60	**R 6 0**
4	**R 0 4**	12	**R 1 2**	80	**R 8 0**
5	**R 0 5**	15	**R 1 5**	100	**R 0 1**
7	**R 0 7**	16	**R 1 6**	120	**R 2 1**
8	**R 0 8**	20	**R 2 0**	160	**R 6 1**
10	**R 1 0**	25	**R 2 5**	200	**R 0 2**
		32	**R 3 2**	256	**R 5 2**
		40	**R 4 0**	320	**R 2 3**
		50	**R 5 0**	512	**R 5 1**
		64	**R 6 4**		
		100	**R 0 0**		

3rd order code – gearbox lubrication and shaft version

Standard lubrication	+	Plain solid shaft	**M 0 0**
Standard lubrication	+	Solid shaft with feather key	**M 0 1**
Food-safe lubricant	+	Plain solid shaft	**M 1 0**
Food-safe lubricant	+	Solid shaft with feather key	**M 1 1**

4th order code (optional) – different orientation of the output for angular gearboxes

 Standard orientation	**–**	 Connector on the output side	**Q 9 1**	 Connector offset through 180° with respect to the standard	**Q 9 2**	 Connector opposite the output	**Q 9 3**

Note:
- The geared motor can only be delivered as a unit – motor plus gearbox – (no individual gearboxes).
- Not all combinations are possible – see selection and ordering data tables.

© Siemens 2024

Selection and ordering data

Characteristic curves of the geared motor (available via the Siemens Product Configurator)

1. $M_{S1,M}$ – Characteristic of the highest thermally permissible effective torque of the motor component minus the gearbox friction and with consideration of the thermal interactions of the gearbox attachment.
   The effective operating point must be below this line to avoid thermal overload of the geared motor.
2. $M_{max,M}$ – Characteristic of the highest torque that can be generated by the motor component for a short time minus the gearbox friction.

$M_{S1,M}$ and $M_{max,M}$ may exceed the mechanically permissible limits of the gearbox, depending on the selection of the motor-gearbox combination [1].

Important gearbox component data in this catalog:

3. $M_{2N,G}$ – The rated torque of the gearbox component at the output. This represents the fatigue strength limit of the gear teeth (independent of the motor).
   If exceeded, the gearbox will be partially damaged and a service life calculation is required.
4. $M_{2max,G}$ – Maximum torque of the gearbox component. This is the limit of the fatigue strength range (can be tolerated for 30000 revolutions of the output shaft). There is a risk of fracture if this limit is exceeded.
5. $n_{1av,G}$ – Highest average input speed. In each time window of 15 minutes, the average input speed must be below $n_{1av,G}$.

Important motor component data in this catalog:

6. $M_{0,M}$ – The motor component can deliver this torque thermally on a sustained basis at standstill and near standstill. It may exceed the mechanical limits of the gearbox component if necessary [1].
7. $M_{max,M}$ – The motor component can deliver this torque for a short time. It may exceed the mechanical limits of the gearbox component if necessary [1].

Important geared motor system data in this catalog:

8. Rated operating point:
   M_{2N} – Rated torque and
   n_{2N} – Rated speed.
   This rated operating point can be permanently driven thermally and mechanically. If the S1 characteristic $M_{S1,M}$ at n_{2N} is greater than $M_{2N,G}$, then M_{2N} is reduced accordingly.
   At the rated operating point, the geared motor has approximately its maximum power.
9. $M_{2,0}$ – The geared motor can deliver this torque thermally on a sustained basis at standstill and near standstill.
   It is reduced to $M_{2N,G}$ if necessary.
10. M_{2max} – The geared motor can deliver this torque for a short time. It can be within the fatigue strength range of the gearbox.

Servomotor 1FT2104-5AF… with gearbox NRK 090, i = 25

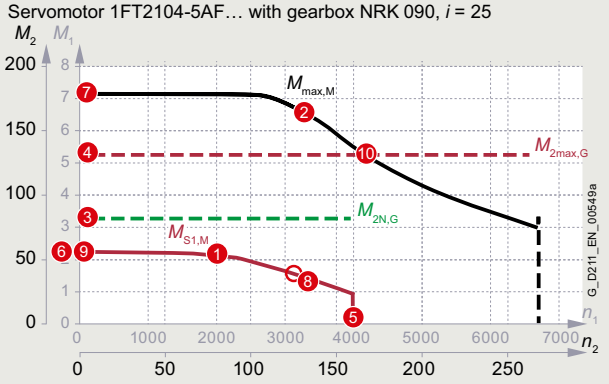

Servomotor 1FT2104-5AF… with gearbox NRK 070, i = 40

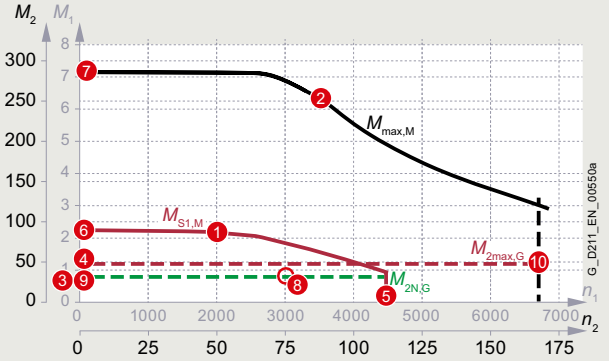

[1] In this case, it must be ensured that the torque effective at the gearbox output does not exceed the permissible limits (taking into consideration the load-to-motor inertia ratio and the motor moment of inertia when accelerating).
More information is provided in the Configuration Manual.

© Siemens 2024

Selection and ordering data

Glossary

Formula symbols	Unit	Designation	Explanation
i		Gearbox ratio	Ratio between the input and output speed of the gearbox
C_{T2}	Nm/ ‘	Torsional rigidity of the gearbox	Torsional rigidity of the gearbox referred to the output
J_1	kg cm^2	Mass moment of inertia of the geared motor	Total mass moment of inertia of the geared motor referred to the input or the motor shaft
$J_{1,G}$	kg cm^2	Mass moment of inertia of the gearbox component	Mass moment of inertia of the gearbox component of a geared motor related to the input of the gearbox
J_M	kg cm^2	Mass moment of inertia of the motor component without brake	Mass moment of inertia of the motor component of a geared motor
$J_{M,Br}$	kg cm^2	Mass moment of inertia of the motor component with brake	Mass moment of inertia of the motor component of a geared motor including motor holding brake
m	kg	Mass of the geared motor	Total mass of the geared motor
m_G	kg	Mass of the gearbox component	Mass of the gearbox component of a geared motor
m_M	kg	Mass of the motor component	Mass of the motor component of a geared motor
$m_{M,Br}$	kg	Mass of the motor component with brake	Mass of the motor component with motor holding brake
$M_{0,M}$	Nm	Static torque of the motor component on the geared motor	Torque of the motor component at standstill and near standstill that can be generated permanently electrically or on average. If this is above $M_{2max,G}$, it must be ensured that a maximum of $M_{2max,G}/ i$ is applied to the gearbox input (observe the gearbox inertia to load inertia ratio). If necessary, limit the acceleration, torque or current accordingly on the application side.
$M_{2,0}$	Nm	Static torque of the geared motor	The geared motor can deliver this torque thermally on a sustained basis at standstill and near standstill. It is within the fatigue strength range of the gearbox.
M_{2N}	Nm	Rated torque of the geared motor	The geared motor can deliver this torque thermally on a sustained basis at its rated speed. It is within the fatigue strength range of the gearbox.
$M_{2N,G}$	Nm	Rated torque of the gearbox component	Rated torque of the gearbox component at the output. This represents the fatigue strength limit of the gear teeth (independently of the motor). If exceeded, the gearbox will be partially damaged and a service life calculation is required.
M_{max}	Nm	Maximum torque of the motor	Maximum torque of the motor that can be generated for a short time.
M_{2max}	Nm	Maximum torque of the geared motor	Maximum possible short-term and permissible torque at the output of the geared motor.
$M_{max,M}$	Nm	Maximum torque of the motor component	Maximum torque of the motor component that can be electrically generated. If this is above $M_{2max,G}$, it must be ensured that a maximum of $M_{2max,G}/ i$ is applied to the gearbox input (observe the gearbox inertia to load inertia ratio). If necessary, limit the acceleration, torque or current accordingly on the application side.
$M_{2max,G}$	Nm	Maximum torque of the gearbox component	Maximum (very rare) permissible torque at the output of the gearbox. This is the limit of the fatigue strength range. There is a risk of fracture if this limit is exceeded.
$M_{2Em.Off}$	Nm	Emergency Off torque	$M_{2Em.Off}$ can be tolerated a maximum of 1000 times during the gearbox service life without causing unacceptable damage to the gearbox. This code can be used to check whether high torques, caused by very rare operating faults, can damage the gearbox.
$n_{1av,G}$	r/min	Highest average input speed of the gearbox component	In each time window of 15 minutes, the average input speed must be below $n_{1av,G}$.
$n_{1max,G}$	r/min	Maximum input speed of the gearbox component	Maximum permissible short-term input speed of the gearbox component on a geared motor
$n_{max,M}$	r/min	Maximum speed of the motor component	Maximum achievable and maximum permissible speed of the motor component on a geared motor
$n_{2B,G}$	r/min	Reference speed of the gearbox	Reference speed relative to the rated torque $M_{2N,G}$ of the gearbox component. This is required to perform a service life calculation of the gearbox output bearings.
n_{2max}	r/min	Maximum speed of the geared motor	Maximum achievable and maximum permissible speed at the gearbox output of a geared motor
n_{2N}	r/min	Rated speed of the geared motor	The rated torque of the geared motor is specified at this speed
F_R	N	Radial force	Radial force perpendicular to the shaft axis
$F_{R\,eq}$	N	Average radial force	Radial force averaged over the cycle, perpendicular to the shaft axis. For ball bearings, use the cubic mean value. For roller bearings, use the exponent 3.33 instead of the exponent 3.
$F_{R\,max}$	N	Maximum radial force	Maximum permissible static radial force
F_A	N	Axial force	Axial force
$F_{A\,eq}$	N	Average axial force	Axial force averaged over the cycle. For ball bearings, use the cubic mean. For roller bearings, use the exponent 3.33 instead of the exponent 3.
$F_{A\,max}$	N	Maximum axial force	Maximum permissible static axial force
M_b	Nm	Maximum permissible bending moment	Maximum permissible bending moment at the motor flange to gearbox adapter interface
φ_2	’	Torsional backlash of the gearbox	Torsional backlash of the gearbox with respect to the output

© Siemens 2024

Selection and ordering data

Selection of servomotors with planetary gearbox

- Select gearbox type and gearbox size, e.g. on the basis of the required torque or the required shaft loads – Table *Permissible output shaft loads*.
- Select a suitable servomotor-gearbox combination from the *Selection data servomotors with planetary gearbox*, the *servomotor data* and the *planetary gearbox data* e.g. on the basis of the rated speed of the servomotor with planetary gearbox, the associated gearbox ratio and the rated torque.
  The fatigue strength of the motor and gearbox combination must be taken into account - see color background of the *Selection data servomotors with planetary gearbox* with associated color legend.

Structure of the tables for selection and ordering data

In the selection tables of the SIMOTICS S-1FT2 servo planetary geared motors you will find all combinations of servomotors with planetary gearboxes with the respective transmission ratios available.

The selection tables are sorted according to the following criteria:

- Line supply voltage of the converter
- Gearbox type and gearbox size

The following views contain legends with explanations of the formula symbols and units specified in the selection and order tables.

Legend for "Servomotor data":

Servomotor data			Selection data servomotors with planetary gearbox	Servomotors with planetary gearbox
$M_{0,M}$	$M_{max,M}$	J_M ($J_{M,Br}$)		
Nm	Nm	kg cm²		
				1F.2102-0AG..-0.A0-Z
			Rotor moment of inertia of the motor component (with holding brake) [1]	■■■ + ■■■ + . . .
			Maximum possible short-term torque of the motor component [2]	
			Maximum thermally permissible effective torque of the motor component at standstill or near standstill [2]	

Legend for "Selection data servomotors with planetary gearbox":

Servomotor data			**Selection data servomotors with planetary gearbox**			Servomotors with planetary gearbox
$M_{0,M}$	$M_{max,M}$	J_M ($J_{M,Br}$)				
Nm	Nm	kg cm²				
...	...	...	n_{2N}	r/min	Rated speed of the servo planetary geared motor	1F.2102-0AG..-0.A0-Z
			M_{2N}	Nm	Rated torque of the servo planetary geared motor	■■■ + ■■■ + . . .
			$M_{2,0}$	Nm	Static torque of the servo planetary geared motor	
			M_{2max}	Nm	Max. permissible short-term output torque of the servo planetary geared motor	

Legend for "Planetary gearbox data":

Servomotor data			Selection data servomotors with planetary gearbox			Servomotors with planetary gearbox
$M_{0,M}$	$M_{max,M}$	J_M ($J_{M,Br}$)				
Nm	Nm	kg cm²				
Planetary gearbox data						1F.2102-0AG..-0.A0-Z
Gearbox type, gearbox stages:					Gearbox type and number of gearbox stages	■■■ + ■■■ + . . .
1st order code					1. Order code for gearbox type, gearbox size and number of gearbox stages	
	i				Gearbox ratio	
2nd order code					2nd order code for gearbox ratio	
	$M_{2N,G}$	Nm			Rated torque of the gearbox component (fatigue strength)	
	$M_{2max,G}$	Nm			Maximum permissible short-term output torque of the gearbox (fatigue strength, max. 30000 revolutions of the output shaft)	
	$M_{2Em.Off}$	Nm			Emergency Off output torque of the gearbox (max. 1000 times)	
	$J_{1,G}$	kg cm²			Moment of inertia of the gearbox referred to the input [1]	
	$\varphi_{2,G}$	'			Torsional backlash of the gearbox with respect to the output	

Color legend for the fatigue strength of the motor and gearbox combination:

Color legend:		
	$M_{max,M} \times i < M_{2N,G}$	**The motor and gearbox combination is fatigue-proof**
	$M_{2N,G} < M_{max,M} \times i < M_{2max,G}$	**Check acceleration and inertias, perform service life calculation if necessary**
	$M_{max,M} \times i > M_{2max,G}$	**The motor can destroy the gearbox, check acceleration and inertias, perform service life calculation if necessary**

[1] The total mass inertia is the sum of the motor and gearbox mass inertias. For some motors, the inertia of the gearbox clamping system is added to that of the motor.

[2] Exact values can be found in the data sheet for the motor-gearbox combination, available via the Siemens Product Configurator.

© Siemens 2024

Selection and ordering data

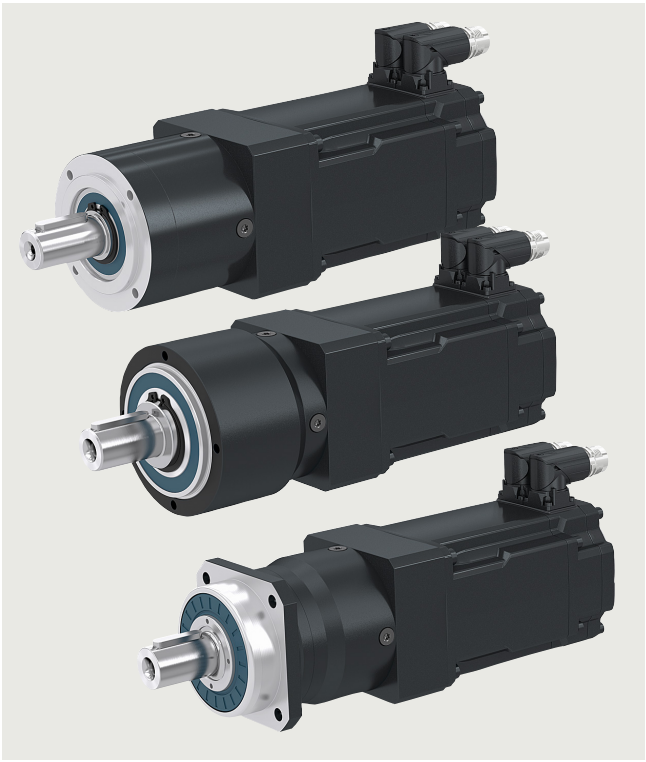

SIMOTICS S-1FT2 servo planetary geared motors with coaxial gearbox

The following servo planetary geared motors with coaxial gearbox are suitable for servo converters with 380 V to 480 V 3 AC line supply, especially for SINAMICS S120 servo converters.

The rated operating points of the geared motors are adapted to this voltage.

© Siemens 2024

Selection and ordering data

NRB040

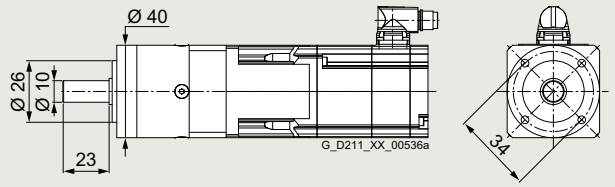

Permissible output shaft loads		
Average radial force for 20000 h	$F_{R,eq}$	200 N
Average axial force for 20000 h	$F_{A,eq}$	200 N
Average radial force for 30000 h	$F_{R,eq}$	160 N
Average axial force for 30000 h	$F_{A,eq}$	160 N
Maximum radial force	$F_{R,max}$	200 N
Maximum axial force	$F_{A,max}$	240 N

Servomotor data			Selection data servomotors with planetary gearbox																Servomotors with planetary gearbox
$M_{0,M}$	$M_{max,M}$	J_M ($J_{M,Br}$)																	
Nm	Nm	kg cm²																	
SIMOTICS S-1FT2 High Dynamic servomotors with 1 and 2-stage NRB040 planetary gearboxes																			
0.452	1.83	0.1396	n_{2N}	r/min	1000	750	600	375	375	300	375	300	200	200	150	125	100	75	60	1FT2103-2AH..-2.B0-Z
...	...	(0.1586)	M_{2N}	Nm	0.86	1.21	1.59	2.45	2.65	3.35	2.65	3.2	4.8	4.9	6.4	7.9	10	13	7.5	■■■ + ■■■ + . . .
0.482	1.89		$M_{2.0}$	Nm	1.43	1.91	2.35	3.35	3.8	4.8	4.2	5.6	7	7.4	9.3	11.6	14.9	18	7.5	
			M_{2max}	Nm	5.6	7.5	9.4	13.2	10	8	16.8	22	28	29.5	32	29	32	29	12	
0.881	3.85	0.1856	n_{2N}	r/min	750	600	600	375	375	375	300	250	200	200	150	125	100	100	–	1FT2103-4AH..-2.B0-Z
...	...	(0.2046)	M_{2N}	Nm	2.05	2.65	2.75	4.55	4.6	4	5.9	7	8.8	8.6	11.9	14.2	17.9	14.6	–	■■■ + ■■■ + . . .
0.933	3.96		$M_{2.0}$	Nm	2.75	3.7	4.65	6.5	6	5	8.1	10.8	13.6	14.5	18.1	18	20	18	–	
			M_{2max}	Nm	11.8	15.8	19.7	13.5	10	8	26	32	29	32	32	29	32	29	–	
SIMOTICS S-1FT2 Compact servomotors with 1 and 2-stage NRB040 planetary gearboxes																			
0.493	1.74	0.2466	n_{2N}	r/min	750	600	500	375	300	250	300	200	150	150	125	100	75	60	50	1FT2203-2AK..-2.B0-Z
...	...	(0.2666)	M_{2N}	Nm	0.93	1.2	1.47	2	2.5	3.05	2.35	3.55	4.7	4.75	5.7	7.2	9.6	12.1	7.5	■■■ + ■■■ + . . .
0.527	1.79		$M_{2.0}$	Nm	1.56	2.05	2.6	3.65	4.2	5	4.6	6.1	7.6	8.1	10.2	12.7	16.3	18	7.5	
			M_{2max}	Nm	5.3	7.1	8.9	12.5	10	8	15.9	21	26.5	28	32	29	32	29	12	
1	3.56	0.3966	n_{2N}	r/min	750	500	500	300	300	300	300	200	150	150	125	100	75	75	–	1FT2203-4AK..-2.B0-Z
...	...	(0.4166)	M_{2N}	Nm	2.05	3.15	3.15	5.4	5.5	4.75	5.5	8.4	11	11.2	13.7	17.1	20	18	–	■■■ + ■■■ + . . .
1.06	3.67		$M_{2.0}$	Nm	3.15	4.2	5.3	7.4	6	5	9.3	12.4	15.5	16.5	20	18	20	18	–	
			M_{2max}	Nm	10.9	14.6	18.3	13.5	10	8	26	32	29	32	32	29	32	29	–	

Planetary gearbox data																
Gearbox type:			NRB040, 1-stage						NRB040, 2-stage							
1st order code			A11						A12							
	i		3	4	5	7	8	10	9	12	15	16	20	25	32	40	64
2nd order code			R03	R04	R05	R07	R08	R10	R09	R12	R15	R16	R20	R25	R32	R40	R64
	$M_{2N,G}$	Nm	11	15	14	8.5	6	5	16.5	20	18	20	20	18	20	18	7.5
	$M_{2max,G}$	Nm	17.5	24	22	13.5	10	8	26	32	29	32	32	29	32	29	12
	$M_{2Em.Off}$	Nm	22.5	30	36	26	27	27	33	40	36	40	40	36	40	36	27
	$J_{1,G}$	kg cm²	0.027	0.021	0.019	0.015	0.015	0.014	0.026	0.025	0.025	0.02	0.018	0.018	0.015	0.015	0.015
	$\varphi_{2,G}$	'	15						19								

Color legend:		
	$M_{max,M} \times i < M_{2N,G}$	**The motor and gearbox combination is fatigue-proof**
	$M_{2N,G} < M_{max,M} \times i < M_{2max,G}$	**Check acceleration and inertias, perform service life calculation if necessary**
	$M_{max,M} \times i > M_{2max,G}$	**The motor can destroy the gearbox, check acceleration and inertias, perform service life calculation if necessary**

© Siemens 2024

Coaxial geared motors for servo converters with 400 V 3 AC line connection

Selection and ordering data

Servomotor data $M_{0,M}$ Nm	$M_{max,M}$ Nm	J_M ($J_{M,Br}$) kg cm²	Selection data servomotors with planetary gearbox									Servomotors with planetary gearbox
SIMOTICS S-1FT2 High Dynamic servomotors with 3-stage NRB040 planetary gearboxes												
0.452 ... 0.482	1.83 ... 1.89	0.1396 (0.1586)	n_{2N}	r/min	60	50	37.5	37.5	25	20	15	1FT2103-2AH..-2.B0-Z
			M_{2N}	Nm	16.4	19.3	20	17.2	20	18	20	■■■ + ■■■ + . . .
			$M_{2.0}$	Nm	20	20	20	18	20	18	20	
			M_{2max}	Nm	32	32	32	29	32	29	32	
0.881 ... 0.933	3.85 ... 3.96	0.1856 (0.2046)	n_{2N}	r/min	60	50	37.5	–	–	–	–	1FT2103-4AH..-2.B0-Z
			M_{2N}	Nm	20	20	20	–	–	–	–	■■■ + ■■■ + . . .
			$M_{2.0}$	Nm	20	20	20	–	–	–	–	
			M_{2max}	Nm	32	32	32	–	–	–	–	
SIMOTICS S-1FT2 Compact servomotors with 3-stage NRB040 planetary gearboxes												
0.493 ... 0.527	1.74 ... 1.79	0.2466 (0.2666)	n_{2N}	r/min	37.5	37.5	30	25	20	15	12.5	1FT2203-2AK..-2.B0-Z
			M_{2N}	Nm	18	17.1	20	18	20	18	20	■■■ + ■■■ + . . .
			$M_{2.0}$	Nm	20	20	20	18	20	18	20	
			M_{2max}	Nm	32	32	32	29	32	29	32	
1 ... 1.06	3.56 ... 3.67	0.3966 (0.4166)	n_{2N}	r/min	60	37.5	37.5	–	–	–	–	1FT2203-4AK..-2.B0-Z
			M_{2N}	Nm	18.2	20	20	–	–	–	–	■■■ + ■■■ + . . .
			$M_{2.0}$	Nm	20	20	20	–	–	–	–	
			M_{2max}	Nm	32	32	32	–	–	–	–	

Planetary gearbox data								
Gearbox type:			**NRB040, 3-stage**					
1st order code			**A13**					
	i		**60**	**80**	**100**	**120**	**160**	**200**	**256**
2nd order code			**R60**	**R80**	**R01**	**R21**	**R61**	**R02**	**R52**
	$M_{2N,G}$	Nm	20	20	20	18	20	18	20
	$M_{2max,G}$	Nm	32	32	32	29	32	29	32
	$M_{2Em.Off}$	Nm	40	40	40	36	40	36	40
	$J_{1,G}$	kg cm²	0.025	0.018	0.018	0.025	0.015	0.015	0.015
	$\varphi_{2,G}$	'	22						

Color legend:		
	$M_{max,M} \times i < M_{2N,G}$	The motor and gearbox combination is fatigue-proof
	$M_{2N,G} < M_{max,M} \times i < M_{2max,G}$	Check acceleration and inertias, perform service life calculation if necessary
	$M_{max,M} \times i > M_{2max,G}$	The motor can destroy the gearbox, check acceleration and inertias, perform service life calculation if necessary

8
1

© Siemens 2024

Selection and ordering data

NRB060

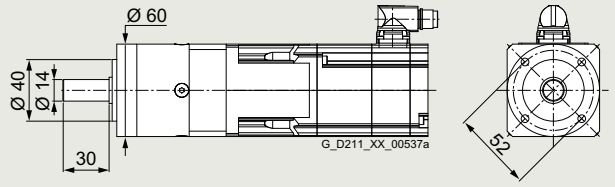

Permissible output shaft loads		
Average radial force for 20000 h	$F_{R,eq}$	400 N
Average axial force for 20000 h	$F_{A,eq}$	500 N
Average radial force for 30000 h	$F_{R,eq}$	340 N
Average axial force for 30000 h	$F_{A,eq}$	450 N
Maximum radial force	$F_{R,max}$	700 N
Maximum axial force	$F_{A,max}$	800 N

Servomotor data			Selection data servomotors with planetary gearbox																Servomotors with planetary gearbox
$M_{0,M}$	$M_{max,M}$	J_M ($J_{M,Br}$)																	
Nm	Nm	kg cm²																	
SIMOTICS S-1FT2 High Dynamic servomotors with 1 and 2-stage NRB060 planetary gearboxes																			
0.51	1.83	0.093	n_{2N}	r/min	1000	750	750	500	500	375	375	300	300	250	200	150	125	100	60	1FT2103-2AH..-2.B0-Z
...	...	(0.112)	M_{2N}	Nm	1.06	1.53	1.68	2.65	2.75	3.7	3.15	4.1	4.6	5.3	6.8	8.9	11.2	14	18	■■■ + ■■■ + . . .
0.539	1.88		$M_{2,0}$	Nm	1.58	2.1	2.65	3.75	4.3	5.3	4.7	6.2	7.8	8.4	10.5	13.1	16.8	21	18	
			M_{2max}	Nm	5.6	7.5	9.4	13.1	15	18.8	16.8	22	27.5	29.5	37	46.5	59	64	29	
0.972	3.84	0.139	n_{2N}	r/min	1000	750	600	500	500	375	375	250	250	200	200	150	125	100	60	1FT2103-4AH..-2.B0-Z
...	...	(0.158)	M_{2N}	Nm	1.91	2.8	3.65	4.7	4.65	6.5	5.9	8.9	9.8	11.8	12.1	16.4	20	25	18	■■■ + ■■■ + . . .
1.03	3.95		$M_{2,0}$	Nm	3.05	4.05	5.1	7.1	8.2	10.2	9	12	15	16	20	25	32	40	18	
			M_{2max}	Nm	11.8	15.8	19.7	27.5	29	24	35	46.5	58	62	70	64	70	64	29	
1.17	3.56	0.371	n_{2N}	r/min	1000	750	600	500	375	300	375	250	200	200	150	125	100	75	50	1FT2104-4AF..-2.B0-Z
...	...	(0.451)	M_{2N}	Nm	2.85	3.95	5	6.7	8.1	10.2	8.3	11.6	14.8	15.4	19.7	24	31	39.5	18	■■■ + ■■■ + . . .
1.2	3.66		$M_{2,0}$	Nm	3.55	4.75	5.9	8.3	9.5	11.9	10.6	14.2	17.8	19	23.5	29.5	37.5	40	18	
			M_{2max}	Nm	10.9	14.6	18.2	25.5	29	24	32.5	43	54	57	70	64	70	64	29	
1.16	3.65	0.371	n_{2N}	r/min	1000	1000	750	600	500	375	375	300	250	250	200	150	125	100	60	1FT2104-4AK..-2.B0-Z
...	...	(0.451)	M_{2N}	Nm	3.1	3.3	4.8	6.2	7.7	10.2	8.9	11.6	14.7	14.6	18.9	24.5	30.5	38.5	18	■■■ + ■■■ + . . .
1.19	3.75		$M_{2,0}$	Nm	3.55	4.7	5.9	8.3	9.5	11.9	10.6	14.1	17.7	18.8	23.5	29.5	37.5	40	18	
			M_{2max}	Nm	11.2	15	18.7	26	29	24	33	44.5	55	59	70	64	70	64	29	
2.25	7.16	0.581	n_{2N}	r/min	1000	750	600	500	375	300	300	250	200	200	150	125	100	75	–	1FT2104-5AF..-2.B0-Z
...	...	(0.671)	M_{2N}	Nm	4.6	6.6	8.5	10.6	14	15	16	19.5	25.5	25	33.5	40	44	40	–	■■■ + ■■■ + . . .
2.3	7.36		$M_{2,0}$	Nm	6.8	9.1	11.4	16	18	15	20.5	27	34	36	44	40	44	40	–	
			M_{2max}	Nm	22	29	36.5	40	29	24	65	70	70	70	70	64	70	64	–	
2.23	7.25	0.581	n_{2N}	r/min	1000	750	600	500	375	375	300	250	200	200	150	125	125	100	–	1FT2104-5AK..-2.B0-Z
...	...	(0.671)	M_{2N}	Nm	4.55	6.5	8.4	10.4	13.8	14	15.8	19.3	25	24.5	33.5	40	38.5	40	–	■■■ + ■■■ + . . .
2.28	7.46		$M_{2,0}$	Nm	6.8	9.1	11.4	15.9	18	15	20	27	33.5	36	44	40	44	40	–	
			M_{2max}	Nm	22	29.5	37	40	29	24	66	70	70	70	70	64	70	64	–	
2.98	9.56	0.781	n_{2N}	r/min	1000	750	600	500	375	300	300	250	200	200	150	125	100	75	–	1FT2104-6AF..-2.B0-Z
...	...	(0.861)	M_{2N}	Nm	5.5	7.8	10.1	12.3	16.5	15	18.8	22.5	29.5	28.5	39	40	44	40	–	■■■ + ■■■ + . . .
3.05	9.83		$M_{2,0}$	Nm	9.1	12.1	15.2	21	18	15	27	36	44	44	44	40	44	40	–	
			M_{2max}	Nm	29	39	49	40	29	24	70	70	70	70	70	64	70	64	–	

➥ Continued on the following page

Planetary gearbox data																	
Gearbox type:		NRB060, 1-stage						NRB060, 2-stage									
1st order code		A21						A22									
	i	3	4	5	7	8	10	9	12	15	16	20	25	32	40	64	
2nd order code		R03	R04	R05	R07	R08	R10	R09	R12	R15	R16	R20	R25	R32	R40	R64	
	$M_{2N,G}$	Nm	28	38	40	25	18	15	44	44	44	44	44	40	44	40	18
	$M_{2max,G}$	Nm	45	61	64	40	29	24	70	70	70	70	70	64	70	64	29
	$M_{2Em.Off}$	Nm	66	88	80	80	80	80	88	88	88	88	88	80	88	80	80
	$J_{1,G}$	kg cm²	0.128	0.092	0.08	0.069	0.067	0.065	0.121	0.118	0.076	0.085	0.075	0.075	0.066	0.066	0.066
	$\varphi_{2,G}$	'	10						12								

Color legend:		
	$M_{max,M} \times i < M_{2N,G}$	The motor and gearbox combination is fatigue-proof
	$M_{2N,G} < M_{max,M} \times i < M_{2max,G}$	Check acceleration and inertias, perform service life calculation if necessary
	$M_{max,M} \times i > M_{2max,G}$	The motor can destroy the gearbox, check acceleration and inertias, perform service life calculation if necessary

© Siemens 2024

Coaxial geared motors for servo converters with 400 V 3 AC line connection

Servomotor data $M_{0,M}$ Nm	$M_{max,M}$ Nm	J_M ($J_{M,Br}$) kg cm²	Selection data servomotors with planetary gearbox																	Servomotors with planetary gearbox
SIMOTICS S-1FT2 High Dynamic servomotors with 1 and 2-stage NRB060 planetary gearboxes (continued)																				
4.59 ... 4.75	14.3 ... 14.7	1.98 (2.82)	n_{2N}	r/min	600	500	375	300	300	300	200	150	150	150	125	125	100	75	–	1FT2105-4AF..-0.B0-Z
			M_{2N}	Nm	11.3	14	18.6	23.5	18	15	32.5	43	43	41	44	33	39.5	40	–	■■■ + ■■■ + . . .
			$M_{2,0}$	Nm	14.2	18.9	23.5	25	18	15	42	44	44	44	44	40	44	40	–	
			M_{2max}	Nm	44	58	64	40	29	24	70	70	70	70	70	64	70	64	–	
4.57 ... 4.75	14.3 ... 14.7	1.98 (2.82)	n_{2N}	r/min	600	500	375	250	300	250	200	150	150	125	125	100	75	75	–	1FT2105-4AH..-0.B0-Z
			M_{2N}	Nm	10	12.1	16.5	24.5	17.9	15	29	38.5	36.5	44	38.5	40	44	40	–	■■■ + ■■■ + . . .
			$M_{2,0}$	Nm	14.2	19	23.5	25	18	15	42	44	44	44	44	40	44	40	–	
			M_{2max}	Nm	44	58	64	40	29	24	70	70	70	70	70	64	70	64	–	
7.1 ... 7.25	23.2 ... 23.6	2.92 (3.77)	n_{2N}	r/min	600	500	375	300	300	300	–	150	150	150	125	100	75	–	–	1FT2105-6AF..-0.B0-Z
			M_{2N}	Nm	14.1	16.8	23	25	18	13	–	44	44	42	44	40	44	–	–	■■■ + ■■■ + . . .
			$M_{2,0}$	Nm	21.5	28.5	36	25	18	15	–	44	44	44	44	40	44	–	–	
			M_{2max}	Nm	45	61	64	40	29	24	–	70	70	70	70	64	70	–	–	
SIMOTICS S-1FT2 Compact servomotors with 1 and 2-stage NRB060 planetary gearboxes																				
0.527 ... 0.538	1.74 ... 1.79	0.2 (0.22)	n_{2N}	r/min	1000	750	600	375	375	300	300	250	200	200	150	125	100	75	60	1FT2203-2AK..-2.B0-Z
			M_{2N}	Nm	0.85	1.26	1.66	2.7	2.8	3.55	3.1	3.75	5	4.9	6.7	8.1	10.3	13.9	15.5	■■■ + ■■■ + . . .
			$M_{2,0}$	Nm	1.57	2.1	2.65	3.7	4.25	5.3	4.75	6.3	8	8.5	10.6	13.3	17.1	21	18	
			M_{2max}	Nm	5.3	7.1	8.9	12.4	14.2	17.8	15.9	21	26.5	28	35	44	56	64	29	
1.11 ... 1.15	3.56 ... 3.66	0.35 (0.37)	n_{2N}	r/min	750	600	500	375	375	300	300	250	200	200	150	125	100	75	60	1FT2203-4AK..-2.B0-Z
			M_{2N}	Nm	2.55	3.4	4.25	5.9	5.9	7.6	7	8.6	11.1	11	14.8	17.9	22.5	29.5	18	■■■ + ■■■ + . . .
			$M_{2,0}$	Nm	3.4	4.55	5.7	8	9.2	11.5	10.2	13.7	17.1	18.2	22.5	28.5	36.5	40	18	
			M_{2max}	Nm	10.9	14.6	18.2	25.5	29	24	32.5	43	54	57	70	64	70	64	29	
2.21 ... 2.26	6.78 ... 6.96	1.251 (1.331)	n_{2N}	r/min	750	600	600	375	375	300	300	200	200	150	150	125	100	75	–	1FT2204-5AF..-2.B0-Z
			M_{2N}	Nm	5.4	7.1	7.4	12.2	12.3	15	14.6	21.5	22.5	29	30	35.5	44	40	–	■■■ + ■■■ + . . .
			$M_{2,0}$	Nm	6.7	9	11.2	15.7	18	15	20	26.5	33.5	35.5	44	40	44	40	–	
			M_{2max}	Nm	20.5	27.5	34.5	40	29	24	61	70	70	70	70	64	70	64	–	
2.22 ... 2.27	6.78 ... 6.96	1.251 (1.331)	n_{2N}	r/min	750	600	600	375	375	300	300	200	200	150	150	125	100	100	–	1FT2204-5AK..-2.B0-Z
			M_{2N}	Nm	5.5	7.3	7.5	12.4	12.6	15	14.8	22	23	29.5	30.5	36.5	44	36.5	–	■■■ + ■■■ + . . .
			$M_{2,0}$	Nm	6.8	9	11.3	15.8	18	15	20	27	33.5	35.5	44	40	44	40	–	
			M_{2max}	Nm	20.5	27.5	34.5	40	29	24	61	70	70	70	70	64	70	64	–	
2.96 ... 3.03	9.08 ... 9.33	1.631 (1.711)	n_{2N}	r/min	750	600	500	375	375	300	300	200	200	150	150	125	100	75	–	1FT2204-6AF..-2.B0-Z
			M_{2N}	Nm	7.1	9.4	11.6	15.8	15.8	15	18.3	27	28	37	37	40	44	40	–	■■■ + ■■■ + . . .
			$M_{2,0}$	Nm	9	12.1	15.1	21	18	15	27	36	44	44	44	40	44	40	–	
			M_{2max}	Nm	27.5	37	46.5	40	29	24	70	70	70	70	70	64	70	64	–	
2.73 ... 2.84	10.3 ... 10.6	3.42 (4.32)	n_{2N}	r/min	600	500	375	250	250	200	200	150	125	100	100	100	75	50	–	1FT2205-2AC..-0.B0-Z
			M_{2N}	Nm	5.9	7.1	9.9	15.1	15	15	18.9	25	30.5	36	37.5	31.5	43.5	40	–	■■■ + ■■■ + . . .
			$M_{2,0}$	Nm	8.5	11.3	14.2	19.8	18	15	25	33	41.5	44	44	40	44	40	–	
			M_{2max}	Nm	31.5	42	52	40	29	24	70	70	70	70	70	64	70	64	–	
2.79 ... 2.9	10.3 ... 10.6	3.42 (4.32)	n_{2N}	r/min	600	500	375	300	300	250	250	200	150	125	100	100	75	75	–	1FT2205-2AF..-0.B0-Z
			M_{2N}	Nm	7.4	9.3	12.4	16	15.8	15	18.2	22	31	37	44	40	44	40	–	■■■ + ■■■ + . . .
			$M_{2,0}$	Nm	8.7	11.6	14.5	20	18	15	25.5	34	42.5	44	44	40	44	40	–	
			M_{2max}	Nm	31.5	42	52	40	29	24	70	70	70	70	70	64	70	64	–	

➥ Continued on the following page

Planetary gearbox data																
Gearbox type:		NRB060, 1-stage						NRB060, 2-stage								
1st order code		A21						A22								
i		3	4	5	7	8	10	9	12	15	16	20	25	32	40	64
2nd order code		R03	R04	R05	R07	R08	R10	R09	R12	R15	R16	R20	R25	R32	R40	R64
$M_{2N,G}$	Nm	28	38	40	25	18	15	44	44	44	44	44	40	44	40	18
$M_{2max,G}$	Nm	45	61	64	40	29	24	70	70	70	70	70	64	70	64	29
$M_{2Em.Off}$	Nm	66	88	80	80	80	80	88	88	88	88	88	80	88	80	80
$J_{1,G}$	kg cm²	0.128	0.092	0.08	0.069	0.067	0.065	0.121	0.118	0.076	0.085	0.075	0.075	0.066	0.066	0.066
$\varphi_{2,G}$	'	10						12								

Color legend:		
	$M_{max,M} \times i < M_{2N,G}$	The motor and gearbox combination is fatigue-proof
	$M_{2N,G} < M_{max,M} \times i < M_{2max,G}$	Check acceleration and inertias, perform service life calculation if necessary
	$M_{max,M} \times i > M_{2max,G}$	The motor can destroy the gearbox, check acceleration and inertias, perform service life calculation if necessary

© Siemens 2024

Coaxial geared motors for servo converters with 400 V 3 AC line connection

Servomotor data			Selection data servomotors with planetary gearbox																Servomotors with planetary gearbox
$M_{0,M}$	$M_{max,M}$	J_M ($J_{M,Br}$)																	
Nm	Nm	kg cm²																	
SIMOTICS S-1FT2 Compact servomotors with 1 and 2-stage NRB060 planetary gearboxes (continued)																			
2.77	10.3	3.42	n_{2N}	r/min	600	500	375	300	250	250	200	150	125	125	100	100	75	75	–	**1FT2205-2AH..-0.B0-Z**
...	...	(4.32)	M_{2N}	Nm	6.5	8	10.9	13.6	16.6	14.6	20	27	33	32.5	41	36	44	32	–	■■■ + ■■■ + . . .
2.88	10.6		$M_{2,0}$	Nm	8.6	11.5	14.4	20	18	15	25	33.5	42.5	44	44	40	44	40	–	
			M_{2max}	Nm	31.5	42	52	40	29	24	70	70	70	70	70	64	70	64	–	
4.85	17.4	5.37	n_{2N}	r/min	600	500	375	250	300	250	200	150	125	125	125	100	75	75	–	**1FT2205-4AF..-0.B0-Z**
...	...	(6.27)	M_{2N}	Nm	9.6	11.5	15.8	23.5	17	15	28	37.5	44	43	35.5	40	44	32.5	–	■■■ + ■■■ + . . .
4.95	17.7		$M_{2,0}$	Nm	14.8	19.8	24.5	25	18	15	43.5	44	44	44	44	40	44	40	–	
			M_{2max}	Nm	45	61	64	40	29	24	70	70	70	70	70	64	70	64	–	

Planetary gearbox data																	
Gearbox type:			**NRB060, 1-stage**						**NRB060, 2-stage**								
1st order code			**A21**						**A22**								
	i		**3**	**4**	**5**	**7**	**8**	**10**	**9**	**12**	**15**	**16**	**20**	**25**	**32**	**40**	**64**
2nd order code			**R03**	**R04**	**R05**	**R07**	**R08**	**R10**	**R09**	**R12**	**R15**	**R16**	**R20**	**R25**	**R32**	**R40**	**R64**
	$M_{2N,G}$	Nm	28	38	40	25	18	15	44	44	44	44	44	40	44	40	18
	$M_{2max,G}$	Nm	45	61	64	40	29	24	70	70	70	70	70	64	70	64	29
	$M_{2Em.Off}$	Nm	66	88	80	80	80	80	88	88	88	88	88	80	88	80	80
	$J_{1,G}$	kg cm²	0.128	0.092	0.08	0.069	0.067	0.065	0.121	0.118	0.076	0.085	0.075	0.075	0.066	0.066	0.066
	$\varphi_{2,G}$	'	10						12								

Color legend:		
	$M_{max,M} \times i < M_{2N,G}$	**The motor and gearbox combination is fatigue-proof**
	$M_{2N,G} < M_{max,M} \times i < M_{2max,G}$	**Check acceleration and inertias, perform service life calculation if necessary**
	$M_{max,M} \times i > M_{2max,G}$	**The motor can destroy the gearbox, check acceleration and inertias, perform service life calculation if necessary**

© Siemens 2024

Coaxial geared motors for servo converters with 400 V 3 AC line connection

Selection and ordering data

Servomotor data $M_{0,M}$ Nm	$M_{max,M}$ Nm	J_M ($J_{M,Br}$) kg cm²	Selection data servomotors with planetary gearbox									Servomotors with planetary gearbox
SIMOTICS S-1FT2 High Dynamic servomotors with 3-stage NRB060 planetary gearboxes												
0.51 ... 0.539	1.83 ... 1.88	0.093 (0.112)	n_{2N}	r/min	75	50	37.5	37.5	25	20	15	12.5	**1FT2103-2AH..-2.B0-Z**
			M_{2N}	Nm	18.1	26.5	34.5	37	44	40	44	40	■■■ + ■■■ + . . .
			$M_{2,0}$	Nm	30.5	40.5	44	44	44	40	44	40	
			M_{2max}	Nm	70	70	70	70	70	64	70	64	
0.972 ... 1.03	3.84 ... 3.95	0.139 (0.158)	n_{2N}	r/min	60	50	37.5	37.5	25	20	15	–	**1FT2103-4AH..-2.B0-Z**
			M_{2N}	Nm	40.5	44	44	44	44	40	44	–	■■■ + ■■■ + . . .
			$M_{2,0}$	Nm	44	44	44	44	44	40	44	–	
			M_{2max}	Nm	70	70	70	70	70	64	70	–	
1.17 ... 1.2	3.56 ... 3.66	0.371 (0.451)	n_{2N}	r/min	50	37.5	30	25	20	15	12.5	–	**1FT2104-4AF..-2.B0-Z**
			M_{2N}	Nm	44	44	44	44	44	40	44	–	■■■ + ■■■ + . . .
			$M_{2,0}$	Nm	44	44	44	44	44	40	44	–	
			M_{2max}	Nm	70	70	70	70	70	64	70	–	
1.16 ... 1.19	3.65 ... 3.75	0.371 (0.451)	n_{2N}	r/min	75	50	37.5	37.5	25	20	15	–	**1FT2104-4AK..-2.B0-Z**
			M_{2N}	Nm	44	44	44	44	44	40	44	–	■■■ + ■■■ + . . .
			$M_{2,0}$	Nm	44	44	44	44	44	40	44	–	
			M_{2max}	Nm	70	70	70	70	70	64	70	–	
2.25 ... 2.3	7.16 ... 7.36	0.581 (0.671)	n_{2N}	r/min	50	37.5	30	25	–	–	–	–	**1FT2104-5AF..-2.B0-Z**
			M_{2N}	Nm	44	44	44	44	–	–	–	–	■■■ + ■■■ + . . .
			$M_{2,0}$	Nm	44	44	44	44	–	–	–	–	
			M_{2max}	Nm	70	70	70	70	–	–	–	–	
2.23 ... 2.28	7.25 ... 7.46	0.581 (0.671)	n_{2N}	r/min	75	50	37.5	37.5	–	–	–	–	**1FT2104-5AK..-2.B0-Z**
			M_{2N}	Nm	44	44	44	44	–	–	–	–	■■■ + ■■■ + . . .
			$M_{2,0}$	Nm	44	44	44	44	–	–	–	–	
			M_{2max}	Nm	70	70	70	70	–	–	–	–	
2.98 ... 3.05	9.56 ... 9.83	0.781 (0.861)	n_{2N}	r/min	50	37.5	–	–	–	–	–	–	**1FT2104-6AF..-2.B0-Z**
			M_{2N}	Nm	44	44	–	–	–	–	–	–	■■■ + ■■■ + . . .
			$M_{2,0}$	Nm	44	44	–	–	–	–	–	–	
			M_{2max}	Nm	70	70	–	–	–	–	–	–	
4.59 ... 4.75	14.3 ... 14.7	1.98 (2.82)	n_{2N}	r/min	50	–	–	–	–	–	–	–	**1FT2105-4AF..-0.B0-Z**
			M_{2N}	Nm	44	–	–	–	–	–	–	–	■■■ + ■■■ + . . .
			$M_{2,0}$	Nm	44	–	–	–	–	–	–	–	
			M_{2max}	Nm	70	–	–	–	–	–	–	–	
4.57 ... 4.75	14.3 ... 14.7	1.98 (2.82)	n_{2N}	r/min	50	–	–	–	–	–	–	–	**1FT2105-4AH..-0.B0-Z**
			M_{2N}	Nm	44	–	–	–	–	–	–	–	■■■ + ■■■ + . . .
			$M_{2,0}$	Nm	44	–	–	–	–	–	–	–	
			M_{2max}	Nm	70	–	–	–	–	–	–	–	
SIMOTICS S-1FT2 Compact servomotors with 3-stage NRB060 planetary gearboxes												
0.527 ... 0.538	1.74 ... 1.79	0.2 (0.22)	n_{2N}	r/min	50	37.5	30	25	20	20	15	12.5	**1FT2203-2AK..-2.B0-Z**
			M_{2N}	Nm	19.4	25.5	32	39.5	44	39.5	44	40	■■■ + ■■■ + . . .
			$M_{2,0}$	Nm	31.5	42	44	44	44	40	44	40	
			M_{2max}	Nm	70	70	70	70	70	64	70	64	

➥ Continued on the following page

Planetary gearbox data									
Gearbox type:			**NRB060, 3-stage**						
1st order code			**A23**						
	i		**60**	**80**	**100**	**120**	**160**	**200**	**256**	**320**
2nd order code			**R60**	**R80**	**R01**	**R21**	**R61**	**R02**	**R52**	**R23**
	$M_{2N,G}$	Nm	44	44	44	44	44	40	44	40
	$M_{2max,G}$	Nm	70	70	70	70	70	64	70	64
	$M_{2Em.Off}$	Nm	88	88	88	88	88	80	88	80
	$J_{1,G}$	kg cm²	0.076	0.075	0.074	0.066	0.066	0.066	0.066	0.066
	$\varphi_{2,G}$	'	15							

Color legend:		
	$M_{max,M} \times i < M_{2N,G}$	The motor and gearbox combination is fatigue-proof
	$M_{2N,G} < M_{max,M} \times i < M_{2max,G}$	Check acceleration and inertias, perform service life calculation if necessary
	$M_{max,M} \times i > M_{2max,G}$	The motor can destroy the gearbox, check acceleration and inertias, perform service life calculation if necessary

© Siemens 2024

Servomotor data			Selection data servomotors with planetary gearbox									Servomotors with planetary gearbox
$M_{0,M}$ Nm	$M_{max,M}$ Nm	J_M ($J_{M,Br}$) kg cm²										
SIMOTICS S-1FT2 Compact servomotors with 3-stage NRB060 planetary gearboxes (continued)												
1.11 ... 1.15	3.56 ... 3.66	0.35 (0.37)	n_{2N}	r/min	50	50	37.5	37.5	25	20	15	–	**1FT2203-4AK..-2.B0-Z**
			M_{2N}	Nm	42.5	38	44	40.5	44	40	44	–	■■■ + ■■■ + . . .
			$M_{2,0}$	Nm	44	44	44	44	44	40	44	–	
			M_{2max}	Nm	70	70	70	70	70	64	70	–	
2.21 ... 2.26	6.78 ... 6.96	1.251 (1.331)	n_{2N}	r/min	50	37.5	30	25	–	–	–	–	**1FT2204-5AF..-2.B0-Z**
			M_{2N}	Nm	44	44	44	44	–	–	–	–	■■■ + ■■■ + . . .
			$M_{2,0}$	Nm	44	44	44	44	–	–	–	–	
			M_{2max}	Nm	70	70	70	70	–	–	–	–	
2.22 ... 2.27	6.78 ... 6.96	1.251 (1.331)	n_{2N}	r/min	60	50	37.5	37.5	–	–	–	–	**1FT2204-5AK..-2.B0-Z**
			M_{2N}	Nm	44	44	44	44	–	–	–	–	■■■ + ■■■ + . . .
			$M_{2,0}$	Nm	44	44	44	44	–	–	–	–	
			M_{2max}	Nm	70	70	70	70	–	–	–	–	
2.96 ... 3.03	9.08 ... 9.33	1.631 (1.711)	n_{2N}	r/min	50	37.5	–	–	–	–	–	–	**1FT2204-6AF..-2.B0-Z**
			M_{2N}	Nm	44	44	–	–	–	–	–	–	■■■ + ■■■ + . . .
			$M_{2,0}$	Nm	44	44	–	–	–	–	–	–	
			M_{2max}	Nm	70	70	–	–	–	–	–	–	
2.73 ... 2.84	10.3 ... 10.6	3.42 (4.32)	n_{2N}	r/min	37.5	25	–	–	–	–	–	–	**1FT2205-2AC..-0.B0-Z**
			M_{2N}	Nm	44	44	–	–	–	–	–	–	■■■ + ■■■ + . . .
			$M_{2,0}$	Nm	44	44	–	–	–	–	–	–	
			M_{2max}	Nm	70	70	–	–	–	–	–	–	
2.79 ... 2.9	10.3 ... 10.6	3.42 (4.32)	n_{2N}	r/min	50	37.5	–	–	–	–	–	–	**1FT2205-2AF..-0.B0-Z**
			M_{2N}	Nm	44	44	–	–	–	–	–	–	■■■ + ■■■ + . . .
			$M_{2,0}$	Nm	44	44	–	–	–	–	–	–	
			M_{2max}	Nm	70	70	–	–	–	–	–	–	
2.77 ... 2.88	10.3 ... 10.6	3.42 (4.32)	n_{2N}	r/min	50	37.5	–	–	–	–	–	–	**1FT2205-2AH..-0.B0-Z**
			M_{2N}	Nm	44	44	–	–	–	–	–	–	■■■ + ■■■ + . . .
			$M_{2,0}$	Nm	44	43.5	–	–	–	–	–	–	
			M_{2max}	Nm	70	70	–	–	–	–	–	–	

Planetary gearbox data									
Gearbox type:			**NRB060, 3-stage**						
1st order code			**A23**						
	i		**60**	**80**	**100**	**120**	**160**	**200**	**256**	**320**
2nd order code			**R60**	**R80**	**R01**	**R21**	**R61**	**R02**	**R52**	**R23**
	$M_{2N,G}$	Nm	44	44	44	44	44	40	44	40
	$M_{2max,G}$	Nm	70	70	70	70	70	64	70	64
	$M_{2Em.Off}$	Nm	88	88	88	88	88	80	88	80
	$J_{1,G}$	kg cm²	0.076	0.075	0.074	0.066	0.066	0.066	0.066	0.066
	$\varphi_{2,G}$	'	15							

Color legend:		
	$M_{max,M} \times i < M_{2N,G}$	**The motor and gearbox combination is fatigue-proof**
	$M_{2N,G} < M_{max,M} \times i < M_{2max,G}$	**Check acceleration and inertias, perform service life calculation if necessary**
	$M_{max,M} \times i > M_{2max,G}$	**The motor can destroy the gearbox, check acceleration and inertias, perform service life calculation if necessary**

© Siemens 2024

Coaxial geared motors for servo converters with 400 V 3 AC line connection

Selection and ordering data

NRB080

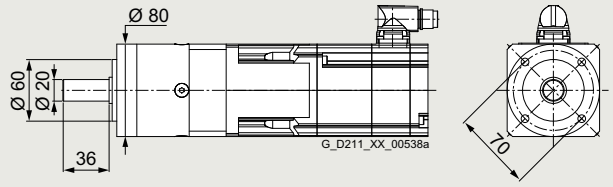

Permissible output shaft loads		
Average radial force for 20000 h	$F_{R,eq}$	750 N
Average axial force for 20000 h	$F_{A,eq}$	1000 N
Average radial force for 30000 h	$F_{R,eq}$	650 N
Average axial force for 30000 h	$F_{A,eq}$	900 N
Maximum radial force	$F_{R,max}$	1250 N
Maximum axial force	$F_{A,max}$	1600 N

Servomotor data			Selection data servomotors with planetary gearbox																Servomotors with planetary gearbox
$M_{0,M}$	$M_{max,M}$	J_M ($J_{M,Br}$)																	
Nm	Nm	kg cm²																	
SIMOTICS S-1FT2 High Dynamic servomotors with 1 and 2-stage NRB080 planetary gearboxes																			
0.49	1.8	0.093	n_{2N}	r/min	750	750	600	500	375	375	375	300	250	200	200	150	125	100	60	**1FT2103-2AH..-0.B0-Z**
...	...	(0.112)	M_{2N}	Nm	1.04	1.19	1.68	2.3	2.95	3.3	2.7	3.4	4.2	5.2	5.7	7.7	10.1	12.7	21	■■■ + ■■■ + . . .
0.516	1.85		$M_{2.0}$	Nm	1.46	1.99	2.5	3.55	4.05	5.1	4.55	6.1	7.6	8.2	10.2	12.8	16.4	20.5	33	
			M_{2max}	Nm	5.4	7.3	9.1	12.9	14.7	18.4	16.4	21.5	27	29	36.5	45.5	58	73	80	
0.994	3.81	0.139	n_{2N}	r/min	750	600	600	500	375	300	375	250	200	200	150	125	125	100	60	**1FT2103-4AH..-0.B0-Z**
...	...	(0.158)	M_{2N}	Nm	2.3	3.1	3.35	4.35	6.1	7.8	5.4	8.6	10.8	11.1	14.8	18.2	19.9	24.5	42.5	■■■ + ■■■ + . . .
1.06	3.91		$M_{2.0}$	Nm	3.05	4.15	5.2	7.3	8.4	10.5	9.2	12.3	15.3	16.4	20.5	25.5	32.5	41	50	
			M_{2max}	Nm	11.7	15.6	19.5	27	31	39	34.5	46.5	58	61	77	96	123	154	80	
1.14	3.52	0.35	n_{2N}	r/min	1000	750	600	500	375	300	375	250	200	200	150	125	100	75	50	**1FT2104-4AF..-2.B0-Z**
...	...	(0.43)	M_{2N}	Nm	2.55	3.6	4.7	6.4	7.9	10	7.8	11.2	14	14.5	19.1	23.5	30.5	39	50	■■■ + ■■■ + . . .
1.16	3.62		$M_{2.0}$	Nm	3.4	4.55	5.7	8.1	9.2	11.6	10.3	13.8	17.3	18.4	23	28.5	36.5	46	50	
			M_{2max}	Nm	10.8	14.4	18	25	28.5	36	32	42.5	53	57	71	89	114	142	80	
1.13	3.62	0.35	n_{2N}	r/min	1000	750	600	500	500	375	375	300	250	200	200	150	125	100	60	**1FT2104-4AK..-2.B0-Z**
...	...	(0.43)	M_{2N}	Nm	2.65	3.9	5.1	7	6.8	9.9	8.6	10.7	12.6	15.8	16.8	23.5	30	37.5	50	■■■ + ■■■ + . . .
1.16	3.72		$M_{2.0}$	Nm	3.4	4.55	5.7	8	9.2	11.5	10.3	13.7	17.2	18.3	22.5	28.5	36.5	45.5	50	
			M_{2max}	Nm	11.1	14.8	18.5	25.5	29.5	37	33	44	55	58	73	91	117	146	80	
2.21	7.1	0.56	n_{2N}	r/min	750	600	500	375	375	300	300	250	200	200	150	125	100	75	50	**1FT2104-5AF..-2.B0-Z**
...	...	(0.65)	M_{2N}	Nm	5.9	7.7	9.8	14	14.6	18.6	17	20	25.5	24.5	35.5	42	56	74	50	■■■ + ■■■ + . . .
2.26	7.31		$M_{2.0}$	Nm	6.7	9	11.2	15.8	18	22.5	20	26.5	33.5	35.5	44.5	55	71	89	50	
			M_{2max}	Nm	21.5	29	36.5	51	58	61	65	86	108	115	144	176	192	176	80	
2.19	7.19	0.56	n_{2N}	r/min	750	600	600	375	375	300	300	250	200	150	150	125	100	75	60	**1FT2104-5AK..-2.B0-Z**
...	...	(0.65)	M_{2N}	Nm	5.8	7.6	8	13.8	14.3	18.3	16.8	20	25	32.5	35	41.5	55	73	50	■■■ + ■■■ + . . .
2.25	7.41		$M_{2.0}$	Nm	6.6	8.9	11.1	15.7	17.9	22	20	26.5	33	35.5	44	55	71	88	50	
			M_{2max}	Nm	22	29.5	37	51	59	61	66	87	109	117	146	176	192	176	80	
2.93	9.49	0.76	n_{2N}	r/min	750	600	500	375	375	300	300	200	200	150	150	125	100	75	50	**1FT2104-6AF..-2.B0-Z**
...	...	(0.84)	M_{2N}	Nm	7.1	9.3	11.8	16.8	17.3	22	20	29.5	29.5	39.5	41	48.5	64	86	50	■■■ + ■■■ + . . .
3.01	9.78		$M_{2.0}$	Nm	8.9	12	15	21	24	30	26.5	35.5	44.5	47.5	59	74	95	110	50	
			M_{2max}	Nm	29	39	48.5	68	78	61	87	116	144	154	192	176	192	176	80	

➥ Continued on the following page

Planetary gearbox data																
Gearbox type:			NRB080, 1-stage						NRB080, 2-stage							
1st order code			A31						A32							
	i		3	4	5	7	8	10	9	12	15	16	20	25	32	40	64
2nd order code			R03	R04	R05	R07	R08	R10	R09	R12	R15	R16	R20	R25	R32	R40	R64
	$M_{2N,G}$	Nm	85	115	110	65	50	38	130	120	110	120	120	110	120	110	50
	$M_{2max,G}$	Nm	136	184	176	104	80	61	208	192	176	192	192	176	192	176	80
	$M_{2Em.Off}$	Nm	180	240	220	178	190	200	260	240	220	240	240	220	240	220	190
	$J_{1,G}$	kg cm²	0.654	0.455	0.423	0.379	0.37	0.359	0.613	0.589	0.586	0.446	0.406	0.404	0.366	0.365	0.366
	$\varphi_{2,G}$	'	7						9								

Color legend:		
	$M_{max,M} \times i < M_{2N,G}$	The motor and gearbox combination is fatigue-proof
	$M_{2N,G} < M_{max,M} \times i < M_{2max,G}$	Check acceleration and inertias, perform service life calculation if necessary
	$M_{max,M} \times i > M_{2max,G}$	The motor can destroy the gearbox, check acceleration and inertias, perform service life calculation if necessary

© Siemens 2024

Coaxial geared motors for servo converters with 400 V 3 AC line connection

Servomotor data $M_{0,M}$ Nm	$M_{max,M}$ Nm	J_M ($J_{M,Br}$) kg cm²	Selection data servomotors with planetary gearbox																Servomotors with planetary gearbox
SIMOTICS S-1FT2 High Dynamic servomotors with 1 and 2-stage NRB080 planetary gearboxes (continued)																			
4.62 ... 4.74	14.3 ... 14.7	1.71 (2.55)	n_{2N}	r/min	750	600	500	375	300	250	250	200	150	150	125	100	75	75	50	**1FT2105-4AF..-0.B0-Z**
			M_{2N}	Nm	11	14	17.4	24	30.5	37	33.5	42.5	56	56	68	85	117	108	50	■■■ + ■■■ + . . .
			$M_{2,0}$	Nm	14.1	18.9	23.5	33	37.5	38	42	56	70	74	93	110	120	110	50	
			M_{2max}	Nm	44	58	73	102	80	61	131	174	176	192	192	176	192	176	80	
4.65 ... 4.77	14.3 ... 14.7	1.71 (2.55)	n_{2N}	r/min	750	500	500	300	300	250	250	200	150	150	100	100	75	75	60	**1FT2105-4AH..-0.B0-Z**
			M_{2N}	Nm	9.6	15	14.9	26	27	33	31	38	51	50	73	75	106	92	50	■■■ + ■■■ + . . .
			$M_{2,0}$	Nm	14.2	19	23.5	33	38	38	42.5	56	70	75	94	110	120	110	50	
			M_{2max}	Nm	44	58	73	102	80	61	131	174	176	192	192	176	192	176	80	
7.15 ... 7.5	22.9 ... 23.6	2.65 (3.5)	n_{2N}	r/min	600	500	375	300	250	250	200	150	125	125	100	100	75	75	–	**1FT2105-6AF..-0.B0-Z**
			M_{2N}	Nm	17.3	21	28	37	44	38	51	67	81	80	101	94	120	107	–	■■■ + ■■■ + . . .
			$M_{2,0}$	Nm	22.5	29.5	37	52	50	38	66	88	110	117	120	110	120	110	–	
			M_{2max}	Nm	70	94	117	104	80	61	208	192	176	192	192	176	192	176	–	
7.25 ... 7.57	24.8 ... 25.5	5.476 (7.176)	n_{2N}	r/min	500	375	300	250	200	200	150	125	100	100	75	75	60	60	–	**1FT2106-3AF..-0.B0-Z**
			M_{2N}	Nm	17.2	23	29	35.5	45	38	56	68	84	83	111	104	120	93	–	■■■ + ■■■ + . . .
			$M_{2,0}$	Nm	22.5	30	37.5	52	50	38	66	89	110	119	120	110	120	110	–	
			M_{2max}	Nm	76	101	127	104	80	61	208	192	176	192	192	175	192	176	–	
9.39 ... 9.81	31.5 ... 32.4	6.876 (8.476)	n_{2N}	r/min	500	375	300	200	200	200	150	125	100	100	75	75	60	50	–	**1FT2106-4AF..-0.B0-Z**
			M_{2N}	Nm	20.5	27	34.5	52	50	38	66	78	96	93	120	108	120	110	–	■■■ + ■■■ + . . .
			$M_{2,0}$	Nm	29	39	49	65	50	38	86	115	110	120	120	110	120	110	–	
			M_{2max}	Nm	97	129	161	104	80	61	208	192	176	192	192	176	192	176	–	
SIMOTICS S-1FT2 Compact servomotors with 1 and 2-stage NRB080 planetary gearboxes																			
0.476 ... 0.503	1.71 ... 1.75	0.2 (0.22)	n_{2N}	r/min	750	600	500	375	375	300	300	200	150	150	150	100	100	75	50	**1FT2203-2AK..-0.B0-Z**
			M_{2N}	Nm	0.93	1.26	1.66	2.45	2.5	3.25	2.7	4.15	5.5	5.6	5.9	9	9.5	13	19.4	■■■ + ■■■ + . . .
			$M_{2,0}$	Nm	1.42	1.93	2.45	3.45	3.95	5	4.45	5.9	7.4	7.9	10	12.5	16	20	32	
			M_{2max}	Nm	5.1	6.9	8.6	12.2	13.9	17.4	15.5	20.5	26	27.5	34.5	43	55	69	80	
1.09 ... 1.12	3.52 ... 3.62	0.35 (0.37)	n_{2N}	r/min	750	600	500	375	375	300	300	250	200	200	150	125	100	75	50	**1FT2203-4AK..-0.B0-Z**
			M_{2N}	Nm	2.5	3.25	4.15	5.9	6.1	7.8	6.9	8.4	10.6	10.5	14.6	17.7	22.5	30	46	■■■ + ■■■ + . . .
			$M_{2,0}$	Nm	3.25	4.4	5.5	7.7	8.9	11.1	9.9	13.2	16.6	17.7	22	27.5	35.5	44	50	
			M_{2max}	Nm	10.8	14.4	18	25	28.5	36	32	42.5	53	57	71	89	114	142	80	
2.17 ... 2.22	6.72 ... 6.91	1.23 (1.31)	n_{2N}	r/min	750	600	500	375	375	300	300	250	200	150	150	100	100	75	50	**1FT2204-5AF..-2.B0-Z**
			M_{2N}	Nm	5.5	7.1	9.1	12.9	12.9	16.6	15.7	18	22.5	29.5	32	46	50	67	50	■■■ + ■■■ + . . .
			$M_{2,0}$	Nm	6.6	8.8	11	15.5	17.7	22	19.8	26	33	35	43.5	54	70	87	50	
			M_{2max}	Nm	20.5	27.5	34.5	48	55	61	61	82	102	109	136	170	192	176	80	
2.18 ... 2.23	6.72 ... 6.91	1.23 (1.31)	n_{2N}	r/min	750	600	500	375	375	300	300	200	200	150	150	100	100	75	60	**1FT2204-5AK..-2.B0-Z**
			M_{2N}	Nm	5.6	7.3	9.3	13.2	13.2	16.9	15.9	23	23	30.5	32.5	47.5	50	68	50	■■■ + ■■■ + . . .
			$M_{2,0}$	Nm	6.6	8.8	11.1	15.6	17.8	22	19.9	26.5	33	35	44	55	70	88	50	
			M_{2max}	Nm	20.5	27.5	34.5	48	55	61	61	82	102	109	136	170	192	176	80	
2.92 ... 3	9.01 ... 9.28	1.61 (1.69)	n_{2N}	r/min	750	600	500	375	300	250	250	200	150	150	125	100	75	75	50	**1FT2204-6AF..-2.B0-Z**
			M_{2N}	Nm	7.3	9.5	12	17	21	25.5	24	30	40	40	49.5	61	84	84	50	■■■ + ■■■ + . . .
			$M_{2,0}$	Nm	8.9	11.9	14.9	20.5	23.5	29.5	26.5	35.5	44.5	47	59	74	94	110	50	
			M_{2max}	Nm	27.5	37	46	64	74	61	82	110	137	146	183	176	192	176	80	

➥ Continued on the following page

Planetary gearbox data																
Gearbox type:			NRB080, 1-stage						NRB080, 2-stage							
1st order code			A31						A32							
	i		3	4	5	7	8	10	9	12	15	16	20	25	32	40	64
2nd order code			R03	R04	R05	R07	R08	R10	R09	R12	R15	R16	R20	R25	R32	R40	R64
	$M_{2N,G}$	Nm	85	115	110	65	50	38	130	120	110	120	120	110	120	110	50
	$M_{2max,G}$	Nm	136	184	176	104	80	61	208	192	176	192	192	176	192	176	80
	$M_{2Em.Off}$	Nm	180	240	220	178	190	200	260	240	220	240	240	220	240	220	190
	$J_{1,G}$	kg cm²	0.654	0.455	0.423	0.379	0.37	0.359	0.613	0.589	0.586	0.446	0.406	0.404	0.366	0.365	0.366
	$\varphi_{2,G}$	'	7						9								

Color legend:		
	$M_{max,M} \times i < M_{2N,G}$	**The motor and gearbox combination is fatigue-proof**
	$M_{2N,G} < M_{max,M} \times i < M_{2max,G}$	**Check acceleration and inertias, perform service life calculation if necessary**
	$M_{max,M} \times i > M_{2max,G}$	**The motor can destroy the gearbox, check acceleration and inertias, perform service life calculation if necessary**

© Siemens 2024

Coaxial geared motors for servo converters with 400 V 3 AC line connection

Servomotor data $M_{0,M}$ Nm	$M_{max,M}$ Nm	J_M ($J_{M,Br}$) kg cm²	Selection data servomotors with planetary gearbox																	Servomotors with planetary gearbox
SIMOTICS S-1FT2 Compact servomotors with 1 and 2-stage NRB080 planetary gearboxes (continued)																				
2.83 ... 2.98	10.3 ... 10.6	3.15 (4.05)	n_{2N}	r/min	600	500	500	300	250	200	250	200	150	125	100	100	75	50	37.5	**1FT2205-2AC..-0.B0-Z**
			M_{2N}	Nm	7.1	9.1	9	16.2	19	23.5	19.2	24.5	32	36	45.5	50	66	91	50	■■■ + ■■■ + . . .
			$M_{2,0}$	Nm	8.8	11.8	14.8	20.5	23.5	29.5	26	34.5	43.5	46.5	58	72	92	110	50	
			M_{2max}	Nm	31.5	42	52	73	80	61	94	125	156	166	192	176	192	176	80	
2.87 ... 3.02	10.3 ... 10.6	3.15 (4.05)	n_{2N}	r/min	750	600	500	375	375	250	300	200	200	150	125	100	100	75	50	**1FT2205-2AF..-0.B0-Z**
			M_{2N}	Nm	7.2	9.3	11.7	16.6	15.9	24.5	19.7	28.5	27	38	47	59	59	81	50	■■■ + ■■■ + . . .
			$M_{2,0}$	Nm	9	12	15	21	24	30	26.5	35	44	47	59	73	94	110	50	
			M_{2max}	Nm	31.5	42	52	73	80	61	94	125	156	166	192	176	192	176	80	
2.85 ... 2.99	10.3 ... 10.6	3.15 (4.05)	n_{2N}	r/min	750	500	500	375	300	250	250	200	150	150	125	100	75	60	60	**1FT2205-2AH..-0.B0-Z**
			M_{2N}	Nm	6.2	9.6	9.9	14	18.2	22	20.5	26.5	34	35	43.5	54	72	90	45.5	■■■ + ■■■ + . . .
			$M_{2,0}$	Nm	8.9	11.9	14.8	20.5	23.5	29.5	26	35	43.5	46.5	58	72	93	110	50	
			M_{2max}	Nm	31.5	42	52	73	80	61	94	125	156	166	192	176	192	176	80	
4.89 ... 5.12	17.2 ... 17.7	5.1 (6)	n_{2N}	r/min	600	500	375	300	250	250	250	150	125	125	100	75	75	60	–	**1FT2205-4AF..-0.B0-Z**
			M_{2N}	Nm	11.7	14.4	19.7	25.5	31	30.5	29.5	49	59	59	75	98	100	110	–	■■■ + ■■■ + . . .
			$M_{2,0}$	Nm	15.3	20	25.5	35.5	40.5	38	45	60	75	80	100	110	120	110	–	
			M_{2max}	Nm	53	70	88	104	80	61	157	192	176	192	192	176	192	176	–	
5.11 ... 5.35	17.1 ... 17.6	8.676 (10.276)	n_{2N}	r/min	375	300	250	200	150	150	150	125	100	75	75	50	50	37.5	30	**1FT2206-2AC..-0.B0-Z**
			M_{2N}	Nm	13	16.6	20	26	34	35	36	42.5	53	69	70	105	104	110	50	■■■ + ■■■ + . . .
			$M_{2,0}$	Nm	16	21	26.5	37	42.5	38	47	62	78	83	104	110	120	110	50	
			M_{2max}	Nm	52	70	87	104	80	61	156	192	176	192	192	176	192	176	80	
5.04 ... 5.26	17.1 ... 17.6	8.676 (10.276)	n_{2N}	r/min	500	375	300	250	200	200	200	150	100	100	75	75	60	50	–	**1FT2206-2AF..-0.B0-Z**
			M_{2N}	Nm	12.9	17.3	21.5	27.5	34	33	33.5	44	63	66	84	86	109	110	–	■■■ + ■■■ + . . .
			$M_{2,0}$	Nm	15.7	21	26	36.5	42	38	46.5	61	77	82	103	110	120	110	–	
			M_{2max}	Nm	52	70	87	104	80	61	156	192	176	192	192	176	192	176	–	
4.9 ... 5.11	17.1 ... 17.6	8.676 (10.276)	n_{2N}	r/min	500	375	300	200	200	150	150	125	100	100	75	60	50	50	–	**1FT2206-2AH..-0.B0-Z**
			M_{2N}	Nm	10.9	14.8	18.8	28.5	29	38	37.5	46.5	58	57	77	96	117	100	–	■■■ + ■■■ + . . .
			$M_{2,0}$	Nm	15.3	20	25.5	35.5	40.5	38	45	60	75	80	100	110	120	110	–	
			M_{2max}	Nm	52	70	87	104	80	61	156	192	176	192	192	176	192	176	–	
7.3 ... 7.64	25.7 ... 26.5	12.38 (13.976)	n_{2N}	r/min	500	375	300	200	200	150	150	125	100	100	75	60	50	37.5	–	**1FT2206-3AB..-0.B0-Z**
			M_{2N}	Nm	15.3	20.5	26	39.5	40	38	51	61	76	75	101	110	120	110	–	■■■ + ■■■ + . . .
			$M_{2,0}$	Nm	22.5	30.5	38	53	50	38	67	89	110	119	120	110	120	110	–	
			M_{2max}	Nm	79	105	132	104	80	61	208	192	176	192	192	176	192	176	–	
7.17 ... 7.5	25.7 ... 26.5	12.38 (13.976)	n_{2N}	r/min	500	375	300	200	200	200	150	125	100	75	75	60	60	50	–	**1FT2206-3AF..-0.B0-Z**
			M_{2N}	Nm	14.2	19.1	24	37.5	37	29.5	49.5	58	72	94	95	110	102	110	–	■■■ + ■■■ + . . .
			$M_{2,0}$	Nm	22	29.5	37	52	50	38	66	88	110	117	120	110	120	110	–	
			M_{2max}	Nm	79	105	132	104	80	61	208	192	176	192	192	176	192	176	–	
9.95 ... 10.4	36.3 ... 37.4	15.98 (17.676)	n_{2N}	r/min	300	250	200	150	150	150	125	75	75	60	60	50	50	37.5	–	**1FT2206-4AC..-0.B0-Z**
			M_{2N}	Nm	22	27	33.5	45.5	44.5	34	56	91	91	113	110	110	94	110	–	■■■ + ■■■ + . . .
			$M_{2,0}$	Nm	31	41.5	52	65	50	38	91	120	110	120	120	110	120	110	–	
			M_{2max}	Nm	112	149	176	104	80	61	208	192	176	192	192	176	192	176	–	

➥ Continued on the following page

Planetary gearbox data																
Gearbox type:			**NRB080, 1-stage**						**NRB080, 2-stage**							
1st order code			**A31**						**A32**							
	i		**3**	**4**	**5**	**7**	**8**	**10**	**9**	**12**	**15**	**16**	**20**	**25**	**32**	**40**	**64**
2nd order code			**R03**	**R04**	**R05**	**R07**	**R08**	**R10**	**R09**	**R12**	**R15**	**R16**	**R20**	**R25**	**R32**	**R40**	**R64**
	$M_{2N,G}$	Nm	85	115	110	65	50	38	130	120	110	120	120	110	120	110	50
	$M_{2max,G}$	Nm	136	184	176	104	80	61	208	192	176	192	192	176	192	176	80
	$M_{2Em.Off}$	Nm	180	240	220	178	190	200	260	240	220	240	240	220	240	220	190
	$J_{1,G}$	kg cm²	0.654	0.455	0.423	0.379	0.37	0.359	0.613	0.589	0.586	0.446	0.406	0.404	0.366	0.365	0.366
	$\varphi_{2,G}$	'	7						9								

Color legend:

	$M_{max,M} \times i < M_{2N,G}$	**The motor and gearbox combination is fatigue-proof**
	$M_{2N,G} < M_{max,M} \times i < M_{2max,G}$	**Check acceleration and inertias, perform service life calculation if necessary**
	$M_{max,M} \times i > M_{2max,G}$	**The motor can destroy the gearbox, check acceleration and inertias, perform service life calculation if necessary**

© Siemens 2024

Servomotor data			Selection data servomotors with planetary gearbox																Servomotors with planetary gearbox
$M_{0,M}$	$M_{max,M}$	J_M ($J_{M,Br}$)																	
Nm	Nm	kg cm²																	
SIMOTICS S-1FT2 Compact servomotors with 1 and 2-stage NRB080 planetary gearboxes (continued)																			
9.84	34.4	15.976	n_{2N}	r/min	500	375	300	200	200	200	150	125	100	100	75	75	60	50	–	**1FT2206-4AF..-0.B0-Z**
...	...	(17.676)	M_{2N}	Nm	21	28	35.5	53	50	38	67	79	98	95	120	109	120	110	–	■■■ + ■■■ + . . .
10.3	35.4		$M_{2,0}$	Nm	30.5	41	51	65	50	38	90	120	110	120	120	110	120	110	–	
			M_{2max}	Nm	106	141	176	104	79	61	208	192	176	192	191	176	192	176	–	
9.45	34.4	15.976	n_{2N}	r/min	375	300	250	200	200	150	150	100	75	75	75	60	50	50	–	**1FT2206-4AH..-0.B0-Z**
...	...	(17.676)	M_{2N}	Nm	21.5	27	33	41.5	39	38	54	81	106	106	102	110	120	102	–	■■■ + ■■■ + . . .
9.85	35.4		$M_{2,0}$	Nm	29.5	39	49	65	50	38	86	115	110	120	120	110	120	110	–	
			M_{2max}	Nm	106	141	176	104	79	61	208	192	176	192	191	176	192	176	–	

Planetary gearbox data																
Gearbox type:			**NRB080, 1-stage**						**NRB080, 2-stage**							
1st order code			**A31**						**A32**							
i			**3**	**4**	**5**	**7**	**8**	**10**	**9**	**12**	**15**	**16**	**20**	**25**	**32**	**40**	**64**
2nd order code			**R03**	**R04**	**R05**	**R07**	**R08**	**R10**	**R09**	**R12**	**R15**	**R16**	**R20**	**R25**	**R32**	**R40**	**R64**
$M_{2N,G}$		Nm	85	115	110	65	50	38	130	120	110	120	120	110	120	110	50
$M_{2max,G}$		Nm	136	184	176	104	80	61	208	192	176	192	192	176	192	176	80
$M_{2Em.Off}$		Nm	180	240	220	178	190	200	260	240	220	240	240	220	240	220	190
$J_{1,G}$		kg cm²	0.654	0.455	0.423	0.379	0.37	0.359	0.613	0.589	0.586	0.446	0.406	0.404	0.366	0.365	0.366
$\varphi_{2,G}$		'	7						9								

Color legend:		
	$M_{max,M} \times i < M_{2N,G}$	**The motor and gearbox combination is fatigue-proof**
	$M_{2N,G} < M_{max,M} \times i < M_{2max,G}$	**Check acceleration and inertias, perform service life calculation if necessary**
	$M_{max,M} \times i > M_{2max,G}$	**The motor can destroy the gearbox, check acceleration and inertias, perform service life calculation if necessary**

© Siemens 2024

Coaxial geared motors for servo converters with 400 V 3 AC line connection

Selection and ordering data

Servomotor data $M_{0,M}$ Nm	$M_{max,M}$ Nm	J_M ($J_{M,Br}$) kg cm²	Selection data servomotors with planetary gearbox										Servomotors with planetary gearbox
SIMOTICS S-1FT2 High Dynamic servomotors with 3-stage NRB080 planetary gearboxes													
0.49 ... 0.516	1.8 ... 1.85	0.093 (0.112)	n_{2N}	r/min	60	50	37.5	30	25	20	15	12.5	7.5	**1FT2103-2AH..-0.B0-Z**
			M_{2N}	Nm	17.5	22.5	30	35.5	49	61	81	98	50	■■■ + ■■■ + . . .
			$M_{2.0}$	Nm	30.5	40.5	51	61	81	102	120	110	49.5	
			M_{2max}	Nm	108	144	180	176	192	176	192	176	80	
0.994 ... 1.06	3.81 ... 3.91	0.139 (0.158)	n_{2N}	r/min	60	50	37.5	30	25	20	15	12.5	–	**1FT2103-4AH..-0.B0-Z**
			M_{2N}	Nm	37	45	63	75	101	110	120	110	–	■■■ + ■■■ + . . .
			$M_{2.0}$	Nm	59	79	99	110	120	110	120	110	–	
			M_{2max}	Nm	176	192	192	176	192	176	192	176	–	
1.14 ... 1.16	3.52 ... 3.62	0.35 (0.43)	n_{2N}	r/min	50	37.5	30	25	20	15	12.5	10	–	**1FT2104-4AF..-2.B0-Z**
			M_{2N}	Nm	55	74	93	110	120	110	120	110	–	■■■ + ■■■ + . . .
			$M_{2.0}$	Nm	68	91	114	110	120	110	120	110	–	
			M_{2max}	Nm	176	192	192	176	192	176	192	176	–	
1.13 ... 1.16	3.62 ... 3.72	0.35 (0.43)	n_{2N}	r/min	60	50	37.5	30	25	20	15	12.5	–	**1FT2104-4AK..-2.B0-Z**
			M_{2N}	Nm	54	69	91	109	120	110	120	110	–	■■■ + ■■■ + . . .
			$M_{2.0}$	Nm	68	90	113	110	120	110	120	110	–	
			M_{2max}	Nm	176	192	192	176	192	176	192	176	–	
2.21 ... 2.26	7.1 ... 7.31	0.56 (0.65)	n_{2N}	r/min	50	37.5	30	25	20	15	12.5	10	–	**1FT2104-5AF..-2.B0-Z**
			M_{2N}	Nm	101	120	120	110	120	110	120	110	–	■■■ + ■■■ + . . .
			$M_{2.0}$	Nm	110	120	120	110	120	110	120	110	–	
			M_{2max}	Nm	176	192	192	176	192	176	192	176	–	
2.19 ... 2.25	7.19 ... 7.41	0.56 (0.65)	n_{2N}	r/min	50	37.5	37.5	30	25	20	15	12.5	–	**1FT2104-5AK..-2.B0-Z**
			M_{2N}	Nm	99	120	120	110	120	110	120	110	–	■■■ + ■■■ + . . .
			$M_{2.0}$	Nm	110	120	120	110	120	110	120	110	–	
			M_{2max}	Nm	176	192	192	176	192	176	192	176	–	
2.93 ... 3.01	9.49 ... 9.78	0.76 (0.84)	n_{2N}	r/min	50	37.5	30	25	20	15	12.5	–	–	**1FT2104-6AF..-2.B0-Z**
			M_{2N}	Nm	110	120	120	110	120	110	120	–	–	■■■ + ■■■ + . . .
			$M_{2.0}$	Nm	110	120	120	110	120	110	120	–	–	
			M_{2max}	Nm	176	192	192	176	192	176	192	–	–	
4.62 ... 4.74	14.3 ... 14.7	1.71 (2.55)	n_{2N}	r/min	50	37.5	30	25	20	–	–	–	–	**1FT2105-4AF..-0.B0-Z**
			M_{2N}	Nm	110	120	120	110	120	–	–	–	–	■■■ + ■■■ + . . .
			$M_{2.0}$	Nm	110	120	120	110	120	–	–	–	–	
			M_{2max}	Nm	176	192	192	176	192	–	–	–	–	
4.65 ... 4.77	14.3 ... 14.7	1.71 (2.55)	n_{2N}	r/min	50	37.5	30	30	25	–	–	–	–	**1FT2105-4AH..-0.B0-Z**
			M_{2N}	Nm	110	120	120	109	120	–	–	–	–	■■■ + ■■■ + . . .
			$M_{2.0}$	Nm	110	120	120	110	120	–	–	–	–	
			M_{2max}	Nm	176	192	192	176	192	–	–	–	–	
7.15 ... 7.5	22.9 ... 23.6	2.65 (3.5)	n_{2N}	r/min	50	37.5	30	–	–	–	–	–	–	**1FT2105-6AF..-0.B0-Z**
			M_{2N}	Nm	110	120	120	–	–	–	–	–	–	■■■ + ■■■ + . . .
			$M_{2.0}$	Nm	110	120	120	–	–	–	–	–	–	
			M_{2max}	Nm	176	192	192	–	–	–	–	–	–	

➥ Continued on the following page

Planetary gearbox data										
Gearbox type:			**NRB080, 3-stage**							
1st order code			**A33**							
	i		**60**	**80**	**100**	**120**	**160**	**200**	**256**	**320**	**512**
2nd order code			**R60**	**R80**	**R01**	**R21**	**R61**	**R02**	**R52**	**R23**	**R51**
	$M_{2N,G}$	Nm	110	120	120	110	120	110	120	110	50
	$M_{2max,G}$	Nm	176	192	192	176	192	176	192	176	80
	$M_{2Em.Off}$	Nm	220	240	240	220	240	220	240	220	190
	$J_{1,G}$	kg cm²	0.584	0.405	0.404	0.59	0.365	0.365	0.366	0.366	0.366
	$\varphi_{2,G}$	'	11								

Color legend:		
	$M_{max,M} \times i < M_{2N,G}$	**The motor and gearbox combination is fatigue-proof**
	$M_{2N,G} < M_{max,M} \times i < M_{2max,G}$	**Check acceleration and inertias, perform service life calculation if necessary**
	$M_{max,M} \times i > M_{2max,G}$	**The motor can destroy the gearbox, check acceleration and inertias, perform service life calculation if necessary**

© Siemens 2024

Servomotor data			Selection data servomotors with planetary gearbox										Servomotors with planetary gearbox
$M_{0,M}$	$M_{max,M}$	J_M ($J_{M,Br}$)											
Nm	Nm	kg cm²											
SIMOTICS S-1FT2 High Dynamic servomotors with 3-stage NRB080 planetary gearboxes (continued)													
7.25 ... 7.57	24.8 ... 25.5	5.476 (7.176)	n_{2N}	r/min	37.5	30	25	–	–	–	–	–	–	**1FT2106-3AF..-0.B0-Z** ■■■ + ■■■ + . . .
			M_{2N}	Nm	110	120	120	–	–	–	–	–	–	
			$M_{2,0}$	Nm	110	120	120	–	–	–	–	–	–	
			M_{2max}	Nm	176	192	192	–	–	–	–	–	–	
9.39 ... 9.81	31.5 ... 32.4	6.876 (8.476)	n_{2N}	r/min	37.5	–	–	–	–	–	–	–	–	**1FT2106-4AF..-0.B0-Z** ■■■ + ■■■ + . . .
			M_{2N}	Nm	110	–	–	–	–	–	–	–	–	
			$M_{2,0}$	Nm	110	–	–	–	–	–	–	–	–	
			M_{2max}	Nm	176	–	–	–	–	–	–	–	–	
SIMOTICS S-1FT2 Compact servomotors with 3-stage NRB080 planetary gearboxes													
0.476 ... 0.503	1.71 ... 1.75	0.2 (0.22)	n_{2N}	r/min	50	37.5	30	20	20	15	12.5	10	7.5	**1FT2203-2AK..-0.B0-Z** ■■■ + ■■■ + . . .
			M_{2N}	Nm	16.4	23	29	41.5	46	62	73	92	50	
			$M_{2,0}$	Nm	29.5	39.5	49.5	59	79	99	120	110	50	
			M_{2max}	Nm	102	137	171	176	192	176	192	176	80	
1.09 ... 1.12	3.52 ... 3.62	0.35 (0.37)	n_{2N}	r/min	50	37.5	30	25	20	20	15	12.5	–	**1FT2203-4AK..-0.B0-Z** ■■■ + ■■■ + . . .
			M_{2N}	Nm	41	56	70	82	109	98	120	110	–	
			$M_{2,0}$	Nm	65	87	109	110	120	110	120	110	–	
			M_{2max}	Nm	176	192	192	176	192	176	192	176	–	
2.17 ... 2.22	6.72 ... 6.91	1.23 (1.31)	n_{2N}	r/min	50	37.5	30	25	20	15	12.5	10	–	**1FT2204-5AF..-2.B0-Z** ■■■ + ■■■ + . . .
			M_{2N}	Nm	91	120	120	110	120	110	120	110	–	
			$M_{2,0}$	Nm	110	120	120	110	120	110	120	110	–	
			M_{2max}	Nm	176	192	192	176	192	176	192	176	–	
2.18 ... 2.23	6.72 ... 6.91	1.23 (1.31)	n_{2N}	r/min	50	37.5	37.5	30	25	20	15	12.5	–	**1FT2204-5AK..-2.B0-Z** ■■■ + ■■■ + . . .
			M_{2N}	Nm	93	120	100	110	120	110	120	110	–	
			$M_{2,0}$	Nm	110	120	120	110	120	110	120	110	–	
			M_{2max}	Nm	176	192	192	176	192	176	192	176	–	
2.92 ... 3	9.01 ... 9.28	1.61 (1.69)	n_{2N}	r/min	50	37.5	30	25	20	15	12.5	–	–	**1FT2204-6AF..-2.B0-Z** ■■■ + ■■■ + . . .
			M_{2N}	Nm	109	120	120	110	120	110	120	–	–	
			$M_{2,0}$	Nm	110	120	120	110	120	110	120	–	–	
			M_{2max}	Nm	176	192	192	176	192	176	192	–	–	
2.83 ... 2.98	10.3 ... 10.6	3.15 (4.05)	n_{2N}	r/min	37.5	25	20	20	12.5	10	–	–	–	**1FT2205-2AC..-0.B0-Z** ■■■ + ■■■ + . . .
			M_{2N}	Nm	110	120	120	110	120	110	–	–	–	
			$M_{2,0}$	Nm	110	120	120	110	120	109	–	–	–	
			M_{2max}	Nm	176	192	192	176	192	176	–	–	–	
2.87 ... 3.02	10.3 ... 10.6	3.15 (4.05)	n_{2N}	r/min	50	37.5	30	25	20	15	–	–	–	**1FT2205-2AF..-0.B0-Z** ■■■ + ■■■ + . . .
			M_{2N}	Nm	107	120	120	110	120	110	–	–	–	
			$M_{2,0}$	Nm	110	120	120	110	120	110	–	–	–	
			M_{2max}	Nm	176	192	192	176	192	176	–	–	–	
2.85 ... 2.99	10.3 ... 10.6	3.15 (4.05)	n_{2N}	r/min	50	37.5	30	25	25	20	–	–	–	**1FT2205-2AH..-0.B0-Z** ■■■ + ■■■ + . . .
			M_{2N}	Nm	91	120	120	110	104	110	–	–	–	
			$M_{2,0}$	Nm	110	120	120	110	120	109	–	–	–	
			M_{2max}	Nm	176	192	192	176	192	176	–	–	–	

➥ Continued on the following page

Planetary gearbox data										
Gearbox type:			**NRB080, 3-stage**							
1st order code			**A33**							
i			**60**	**80**	**100**	**120**	**160**	**200**	**256**	**320**	**512**
2nd order code			**R60**	**R80**	**R01**	**R21**	**R61**	**R02**	**R52**	**R23**	**R51**
$M_{2N,G}$		Nm	110	120	120	110	120	110	120	110	50
$M_{2max,G}$		Nm	176	192	192	176	192	176	192	176	80
$M_{2Em.Off}$		Nm	220	240	240	220	240	220	240	220	190
$J_{1,G}$		kg cm²	0.584	0.405	0.404	0.59	0.365	0.365	0.366	0.366	0.366
$\varphi_{2,G}$		'	11							

Color legend:		
	$M_{max,M} \times i < M_{2N,G}$	The motor and gearbox combination is fatigue-proof
	$M_{2N,G} < M_{max,M} \times i < M_{2max,G}$	Check acceleration and inertias, perform service life calculation if necessary
	$M_{max,M} \times i > M_{2max,G}$	The motor can destroy the gearbox, check acceleration and inertias, perform service life calculation if necessary

© Siemens 2024

Coaxial geared motors for servo converters with 400 V 3 AC line connection

Servomotor data			Selection data servomotors with planetary gearbox										Servomotors with planetary gearbox
$M_{0,M}$	$M_{max,M}$	J_M ($J_{M,Br}$)											
Nm	Nm	kg cm²											
SIMOTICS S-1FT2 Compact servomotors with 3-stage NRB080 planetary gearboxes (continued)													
4.89 ... 5.12	17.2 ... 17.7	5.1 (6)	n_{2N}	r/min	50	37.5	30	25	–	–	–	–	–	**1FT2205-4AF..-0.B0-Z**
			M_{2N}	Nm	103	120	120	110	–	–	–	–	–	■■■ + ■■■ + . . .
			$M_{2,0}$	Nm	110	120	120	110	–	–	–	–	–	
			M_{2max}	Nm	176	192	192	176	–	–	–	–	–	
5.11 ... 5.35	17.1 ... 17.6	8.676 (10.276)	n_{2N}	r/min	30	25	20	15	12.5	–	–	–	–	**1FT2206-2AC..-0.B0-Z**
			M_{2N}	Nm	110	120	120	110	120	–	–	–	–	■■■ + ■■■ + . . .
			$M_{2,0}$	Nm	110	120	120	110	120	–	–	–	–	
			M_{2max}	Nm	176	192	192	176	192	–	–	–	–	
5.04 ... 5.26	17.1 ... 17.6	8.676 (10.276)	n_{2N}	r/min	37.5	30	25	20	–	–	–	–	–	**1FT2206-2AF..-0.B0-Z**
			M_{2N}	Nm	110	120	120	110	–	–	–	–	–	■■■ + ■■■ + . . .
			$M_{2,0}$	Nm	110	120	120	110	–	–	–	–	–	
			M_{2max}	Nm	176	192	192	176	–	–	–	–	–	
4.9 ... 5.11	17.1 ... 17.6	8.676 (10.276)	n_{2N}	r/min	37.5	25	20	20	–	–	–	–	–	**1FT2206-2AH..-0.B0-Z**
			M_{2N}	Nm	95	119	120	109	–	–	–	–	–	■■■ + ■■■ + . . .
			$M_{2,0}$	Nm	110	119	119	109	–	–	–	–	–	
			M_{2max}	Nm	176	192	192	176	–	–	–	–	–	
7.3 ... 7.64	25.7 ... 26.5	12.38 (13.976)	n_{2N}	r/min	25	20	15	–	–	–	–	–	–	**1FT2206-3AB..-0.B0-Z**
			M_{2N}	Nm	110	120	120	–	–	–	–	–	–	■■■ + ■■■ + . . .
			$M_{2,0}$	Nm	110	120	120	–	–	–	–	–	–	
			M_{2max}	Nm	176	192	192	–	–	–	–	–	–	
7.17 ... 7.5	25.7 ... 26.5	12.38 (13.976)	n_{2N}	r/min	37.5	25	20	–	–	–	–	–	–	**1FT2206-3AF..-0.B0-Z**
			M_{2N}	Nm	99	120	120	–	–	–	–	–	–	■■■ + ■■■ + . . .
			$M_{2,0}$	Nm	110	120	120	–	–	–	–	–	–	
			M_{2max}	Nm	176	192	192	–	–	–	–	–	–	
9.95 ... 10.4	36.3 ... 37.4	15.98 (17.676)	n_{2N}	r/min	30	–	–	–	–	–	–	–	–	**1FT2206-4AC..-0.B0-Z**
			M_{2N}	Nm	105	–	–	–	–	–	–	–	–	■■■ + ■■■ + . . .
			$M_{2,0}$	Nm	110	–	–	–	–	–	–	–	–	
			M_{2max}	Nm	176	–	–	–	–	–	–	–	–	
9.84 ... 10.3	34.4 ... 35.4	15.976 (17.676)	n_{2N}	r/min	37.5	–	–	–	–	–	–	–	–	**1FT2206-4AF..-0.B0-Z**
			M_{2N}	Nm	110	–	–	–	–	–	–	–	–	■■■ + ■■■ + . . .
			$M_{2,0}$	Nm	110	–	–	–	–	–	–	–	–	
			M_{2max}	Nm	176	–	–	–	–	–	–	–	–	
9.45 ... 9.85	34.4 ... 35.4	15.976 (17.676)	n_{2N}	r/min	30	–	–	–	–	–	–	–	–	**1FT2206-4AH..-0.B0-Z**
			M_{2N}	Nm	110	–	–	–	–	–	–	–	–	■■■ + ■■■ + . . .
			$M_{2,0}$	Nm	110	–	–	–	–	–	–	–	–	
			M_{2max}	Nm	176	–	–	–	–	–	–	–	–	

Planetary gearbox data										
Gearbox type:			**NRB080, 3-stage**							
1st order code			**A33**							
	i		**60**	**80**	**100**	**120**	**160**	**200**	**256**	**320**	**512**
2nd order code			**R60**	**R80**	**R01**	**R21**	**R61**	**R02**	**R52**	**R23**	**R51**
	$M_{2N,G}$	Nm	110	120	120	110	120	110	120	110	50
	$M_{2max,G}$	Nm	176	192	192	176	192	176	192	176	80
	$M_{2Em.Off}$	Nm	220	240	240	220	240	220	240	220	190
	$J_{1,G}$	kg cm²	0.584	0.405	0.404	0.59	0.365	0.365	0.366	0.366	0.366
	$\varphi_{2,G}$	'	11								

Color legend:		
	$M_{max,M} \times i < M_{2N,G}$	**The motor and gearbox combination is fatigue-proof**
	$M_{2N,G} < M_{max,M} \times i < M_{2max,G}$	**Check acceleration and inertias, perform service life calculation if necessary**
	$M_{max,M} \times i > M_{2max,G}$	**The motor can destroy the gearbox, check acceleration and inertias, perform service life calculation if necessary**

© Siemens 2024

Selection and ordering data

NRB120

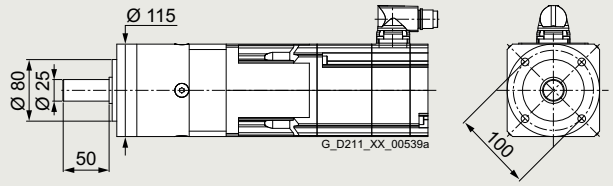

Permissible output shaft loads		
Average radial force for 20000 h	$F_{R,eq}$	1750 N
Average axial force for 20000 h	$F_{A,eq}$	2500 N
Average radial force for 30000 h	$F_{R,eq}$	1500 N
Average axial force for 30000 h	$F_{A,eq}$	2100 N
Maximum radial force	$F_{R,max}$	2000 N
Maximum axial force	$F_{A,max}$	3800 N

Servomotor data			Selection data servomotors with planetary gearbox																	Servomotors with planetary gearbox
$M_{0,M}$	$M_{max,M}$	J_M ($J_{M,Br}$)																		
Nm	Nm	kg cm²																		
SIMOTICS S-1FT2 High Dynamic servomotors with 1 and 2-stage NRB120 planetary gearboxes																				
0.379	1.72	0.093	n_{2N}	r/min	500	500	500	375	300	300	250	150	150	150	125	100	100	75	50	**1FT2103-2AH..-0.B0-Z**
...	...	(0.112)	M_{2N}	Nm	0.81	0.98	1.19	2.05	2.6	2.9	2.3	3.95	4.2	4.4	6.1	7.8	9.4	12.7	19.4	■■■ + ■■■ + . . .
0.45	1.77		M_{2_0}	Nm	1.13	1.59	2.05	2.95	3.4	4.35	3.85	5.2	6.5	7	8.8	11.1	14.2	17.9	28.5	
			M_{2max}	Nm	5.1	6.9	8.7	12.3	14.1	17.6	15.7	21	26	28	35	43.5	56	70	112	
1	3.74	0.139	n_{2N}	r/min	600	500	375	375	300	250	250	200	150	150	125	100	100	75	50	**1FT2103-4AH..-0.B0-Z**
...	...	(0.158)	M_{2N}	Nm	2.05	2.75	4	4.85	6.3	8	6.4	8	11	11.6	15.1	19.1	21	29.5	43.5	■■■ + ■■■ + . . .
1.06	3.83		M_{2_0}	Nm	3	4.05	5.1	7.3	8.4	10.5	9.3	12.5	15.7	16.8	21	26	33.5	42	67	
			M_{2max}	Nm	11.3	15.2	19	26.5	30.5	38	34	45.5	56	60	75	94	121	151	192	
1.03	3.45	0.35	n_{2N}	r/min	750	600	500	375	375	300	300	200	150	150	150	125	100	75	50	**1FT2104-4AF..-0.B0-Z**
...	...	(0.43)	M_{2N}	Nm	2.2	3.2	4.35	6.5	7.1	9.2	7	10.6	13.9	14.7	17.1	21	28.5	37.5	58	■■■ + ■■■ + . . .
1.09	3.54		M_{2_0}	Nm	3.05	4.15	5.3	7.5	8.6	10.8	9.6	12.9	16.2	17.2	21.5	27	34.5	43	69	
			M_{2max}	Nm	10.4	14	17.5	24.5	28	35	31.5	42	52	56	70	87	112	140	192	
1.02	3.55	0.35	n_{2N}	r/min	750	600	500	375	375	300	300	200	150	150	150	125	100	75	50	**1FT2104-4AK..-0.B0-Z**
...	...	(0.43)	M_{2N}	Nm	2.35	3.45	4.7	6.8	7.8	9.9	7.5	11.2	14.2	15.2	18.9	22.5	31.5	40	63	■■■ + ■■■ + . . .
1.08	3.64		M_{2_0}	Nm	3.05	4.15	5.2	7.4	8.5	10.7	9.5	12.8	16	17.1	21.5	26.5	34.5	43	69	
			M_{2max}	Nm	10.7	14.4	18	25	29	36	32	43	54	57	72	90	115	144	192	
2.13	7.03	0.56	n_{2N}	r/min	600	500	500	375	300	250	250	200	150	150	125	100	75	75	50	**1FT2104-5AF..-0.B0-Z**
...	...	(0.65)	M_{2N}	Nm	5.9	7.7	8.2	12.6	16.4	20.5	17.1	21	29.5	30	38.5	49	67	69	101	■■■ + ■■■ + . . .
2.18	7.23		M_{2_0}	Nm	6.4	8.6	10.8	15.2	17.4	21.5	19.4	25.5	32.5	34.5	43	54	69	86	120	
			M_{2max}	Nm	21.5	28.5	36	50	57	72	64	85	107	114	142	178	225	285	192	
2.12	7.12	0.56	n_{2N}	r/min	600	500	500	375	300	250	250	200	150	150	125	100	75	75	50	**1FT2104-5AK..-0.B0-Z**
...	...	(0.65)	M_{2N}	Nm	5.8	7.6	8	12.4	16.1	20	16.8	20.5	28.5	29	38	48	66	68	100	■■■ + ■■■ + . . .
2.17	7.33		M_{2_0}	Nm	6.3	8.5	10.7	15.1	17.3	21.5	19.3	25.5	32	34	43	53	68	86	120	
			M_{2max}	Nm	21.5	29	36.5	51	58	73	65	87	108	115	144	180	230	285	192	
2.87	9.42	0.76	n_{2N}	r/min	600	500	375	375	300	250	250	200	150	150	125	100	75	60	50	**1FT2104-6AF..-0.B0-Z**
...	...	(0.84)	M_{2N}	Nm	7.3	9.5	13.6	15.3	19.8	24.5	20.5	25.5	35	35.5	46	58	83	104	117	■■■ + ■■■ + . . .
2.93	9.69		M_{2_0}	Nm	8.6	11.6	14.5	20	23	29	26	34.5	43.5	46.5	58	72	93	116	120	
			M_{2max}	Nm	28.5	38.5	48	67	77	96	86	115	143	153	191	235	305	368	192	

➥ Continued on the following page

Planetary gearbox data																
Gearbox type:			NRB120, 1-stage						NRB120, 2-stage							
1st order code			A41						A42							
	i		3	4	5	7	8	10	9	12	15	16	20	25	32	40	64
2nd order code			R03	R04	R05	R07	R08	R10	R09	R12	R15	R16	R20	R25	R32	R40	R64
	$M_{2N,G}$	Nm	115	155	195	135	120	95	210	260	230	260	260	230	260	230	120
	$M_{2max,G}$	Nm	184	248	312	216	192	152	336	416	368	416	416	368	416	368	192
	$M_{2Em.Off}$	Nm	390	520	500	340	380	480	500	520	500	520	520	500	520	500	380
	$J_{1,G}$	kg cm²	2.361	1.835	1.633	1.463	1.431	1.378	2.288	2.224	2.203	1.747	1.573	1.566	1.42	1.417	1.414
	$\varphi_{2,G}$	'	7						9								

Color legend:		
	$M_{max,M} \times i < M_{2N,G}$	**The motor and gearbox combination is fatigue-proof**
	$M_{2N,G} < M_{max,M} \times i < M_{2max,G}$	**Check acceleration and inertias, perform service life calculation if necessary**
	$M_{max,M} \times i > M_{2max,G}$	**The motor can destroy the gearbox, check acceleration and inertias, perform service life calculation if necessary**

© Siemens 2024

Coaxial geared motors for servo converters with 400 V 3 AC line connection

Servomotor data $M_{0,M}$ Nm	$M_{max,M}$ Nm	J_M ($J_{M,Br}$) kg cm²	Selection data servomotors with planetary gearbox																Servomotors with planetary gearbox
SIMOTICS S-1FT2 High Dynamic servomotors with 1 and 2-stage NRB120 planetary gearboxes (continued)																			
4.55 ... 4.66	14.2 ... 14.6	1.71 (2.55)	n_{2N} r/min	600	500	375	300	300	250	250	150	150	125	100	100	75	60	50	1FT2105-4AF..-0.B0-Z
			M_{2N} Nm	11.9	15	21	29	29.5	36.5	30.5	50	52	64	82	82	120	150	120	■■■ + ■■■ + . . .
			$M_{2,0}$ Nm	13.8	18.5	23	32.5	37	46.5	41.5	55	69	73	92	115	147	184	120	
			M_{2max} Nm	43.5	58	72	102	116	146	130	173	215	230	285	360	416	368	192	
4.58 ... 4.69	14.2 ... 14.6	1.71 (2.55)	n_{2N} r/min	600	500	375	300	250	200	200	150	125	125	100	75	75	60	50	1FT2105-4AH..-0.B0-Z
			M_{2N} Nm	10.7	13.3	19.7	26.5	32	40.5	35.5	47.5	58	60	78	99	108	134	105	■■■ + ■■■ + . . .
			$M_{2,0}$ Nm	13.9	18.6	23	32.5	37	46.5	41.5	55	69	74	92	116	148	185	120	
			M_{2max} Nm	43.5	58	72	102	116	146	130	173	215	230	285	360	416	368	192	
7.42 ... 7.62	22.8 ... 23.5	2.65 (3.5)	n_{2N} r/min	500	375	375	300	250	200	200	150	125	125	100	75	60	50	50	1FT2105-6AF..-0.B0-Z
			M_{2N} Nm	18.8	25.5	27.5	37	45	57	51	68	81	81	106	141	184	220	119	■■■ + ■■■ + . . .
			$M_{2,0}$ Nm	22.5	30	38	53	60	76	68	90	113	120	150	188	240	230	120	
			M_{2max} Nm	70	93	117	164	187	152	205	275	345	370	416	368	416	368	192	
7.8 ... 8.1	24.7 ... 25.5	4.6 (6.3)	n_{2N} r/min	500	375	375	300	250	200	200	150	125	100	100	75	60	50	50	1FT2106-3AF..-0.B0-Z
			M_{2N} Nm	19.4	26.5	28.5	38	46.5	59	52	70	84	103	109	145	189	225	120	■■■ + ■■■ + . . .
			$M_{2,0}$ Nm	24	32	40	56	64	81	71	95	119	127	159	198	255	230	120	
			M_{2max} Nm	76	101	127	177	192	152	225	300	368	400	416	368	416	368	192	
10.1 ... 10.5	31.5 ... 32.4	6 (7.6)	n_{2N} r/min	500	375	375	250	250	200	200	125	100	100	75	75	60	50	37.5	1FT2106-4AF..-0.B0-Z
			M_{2N} Nm	23.5	32.5	33.5	53	53	68	60	97	121	123	163	165	210	230	120	■■■ + ■■■ + . . .
			$M_{2,0}$ Nm	31.5	42	52	73	84	95	93	124	155	165	205	230	260	230	120	
			M_{2max} Nm	97	129	161	216	192	152	285	380	368	416	416	368	416	368	192	
14.3 ... 14.9	43.4 ... 44.7	8.7 (10.4)	n_{2N} r/min	500	375	300	250	200	200	150	125	100	100	75	75	60	60	–	1FT2106-6AF..-0.B0-Z
			M_{2N} Nm	31	42	54	69	85	87	101	122	151	152	200	199	255	215	–	■■■ + ■■■ + . . .
			$M_{2,0}$ Nm	44.5	59	74	104	119	95	131	175	215	230	260	230	260	230	–	
			M_{2max} Nm	134	178	220	216	192	152	336	416	368	416	416	365	416	368	–	
SIMOTICS S-1FT2 Compact servomotors with 1 and 2-stage NRB120 planetary gearboxes																			
0.366 ... 0.437	1.62 ... 1.67	0.2 (0.22)	n_{2N} r/min	500	375	375	300	250	250	200	150	125	125	100	100	75	60	37.5	1FT2203-2AK..-0.B0-Z
			M_{2N} Nm	0.79	1.19	1.5	2.25	2.85	3	2.75	3.85	4.75	4.95	7	6.9	10.9	13.8	22	■■■ + ■■■ + . . .
			$M_{2,0}$ Nm	1.09	1.54	1.99	2.85	3.3	4.2	3.7	5	6.3	6.8	8.5	10.7	13.8	17.3	27.5	
			M_{2max} Nm	4.85	6.5	8.2	11.6	13.3	16.7	14.8	19.8	24.5	26.5	33	41.5	53	66	106	
0.985 ... 1.04	3.45 ... 3.54	0.35 (0.37)	n_{2N} r/min	600	500	375	300	300	250	250	200	150	150	125	100	75	75	37.5	1FT2203-4AK..-0.B0-Z
			M_{2N} Nm	2.4	3.15	4.55	6.5	7	8.8	7.1	8.8	12.3	12.8	16.5	20.5	29	30.5	58	■■■ + ■■■ + . . .
			$M_{2,0}$ Nm	2.95	4	5	7.2	8.2	10.3	9.2	12.3	15.5	16.5	20.5	25.5	33	41.5	66	
			M_{2max} Nm	10.4	14	17.5	24.5	28	35	31.5	42	52	56	70	87	112	140	192	
2.09 ... 2.14	6.64 ... 6.83	1.23 (1.31)	n_{2N} r/min	600	500	375	375	300	250	250	200	150	150	125	100	75	60	37.5	1FT2204-5AF..-0.B0-Z
			M_{2N} Nm	5.6	7.3	10	11.4	15.2	18.9	15.9	19.5	27.5	27.5	36	45	63	79	120	■■■ + ■■■ + . . .
			$M_{2,0}$ Nm	6.2	8.4	10.6	14.9	17	21	19	25	31.5	34	42.5	53	68	85	120	
			M_{2max} Nm	20	27	34	47.5	54	68	60	81	101	108	135	168	215	265	192	
2.11 ... 2.16	6.64 ... 6.83	1.23 (1.31)	n_{2N} r/min	600	500	375	375	300	250	250	200	150	150	125	100	75	60	37.5	1FT2204-5AK..-0.B0-Z
			M_{2N} Nm	5.7	7.4	10.1	11.7	15.6	19.4	16.3	20	28	28	36.5	46	65	82	120	■■■ + ■■■ + . . .
			$M_{2,0}$ Nm	6.3	8.4	10.6	15	17.2	21.5	19.2	25.5	32	34	42.5	53	68	85	120	
			M_{2max} Nm	20	27	34	47.5	54	68	60	81	101	108	135	168	215	265	192	

➥ Continued on the following page

Planetary gearbox data																
Gearbox type:		NRB120, 1-stage						NRB120, 2-stage								
1st order code		A41						A42								
i		3	4	5	7	8	10	9	12	15	16	20	25	32	40	64
2nd order code		R03	R04	R05	R07	R08	R10	R09	R12	R15	R16	R20	R25	R32	R40	R64
$M_{2N,G}$	Nm	115	155	195	135	120	95	210	260	230	260	260	230	260	230	120
$M_{2max,G}$	Nm	184	248	312	216	192	152	336	416	368	416	416	368	416	368	192
$M_{2Em.Off}$	Nm	390	520	500	340	380	480	500	520	500	520	520	500	520	500	380
$J_{1,G}$	kg cm²	2.361	1.835	1.633	1.463	1.431	1.378	2.288	2.224	2.203	1.747	1.573	1.566	1.42	1.417	1.414
$\varphi_{2,G}$	'	7						9								

Color legend:		
	$M_{max,M} \times i < M_{2N,G}$	The motor and gearbox combination is fatigue-proof
	$M_{2N,G} < M_{max,M} \times i < M_{2max,G}$	Check acceleration and inertias, perform service life calculation if necessary
	$M_{max,M} \times i > M_{2max,G}$	The motor can destroy the gearbox, check acceleration and inertias, perform service life calculation if necessary

© Siemens 2024

Coaxial geared motors for servo converters with 400 V 3 AC line connection

Servomotor data $M_{0,M}$ Nm	$M_{max,M}$ Nm	J_M ($J_{M,Br}$) kg cm²	Selection data servomotors with planetary gearbox																Servomotors with planetary gearbox
SIMOTICS S-1FT2 Compact servomotors with 1 and 2-stage NRB120 planetary gearboxes (continued)																			
2.85 ... 2.92	8.94 ... 9.19	1.61 (1.69)	n_{2N} r/min	600	500	375	300	300	250	250	200	150	125	100	100	75	60	50	**1FT2204-6AF..-0.B0-Z**
			M_{2N} Nm	7.8	10	13.9	19.7	20.5	25	21	25.5	36.5	44	55	59	86	108	111	■■■ + ■■■ + . . .
			$M_{2,0}$ Nm	8.6	11.5	14.4	20	23	29	26	34.5	43	46	57	72	92	115	120	
			M_{2max} Nm	27.5	36.5	45.5	64	73	91	82	109	136	145	181	225	290	360	192	
3.08 ... 3.2	10.2 ... 10.5	3.15 (4.05)	n_{2N} r/min	500	500	375	300	250	200	200	150	125	125	100	75	75	50	37.5	**1FT2205-2AC..-0.B0-Z**
			M_{2N} Nm	7.4	7.6	11.8	16.1	19.8	25	21.5	29	36	37.5	48.5	62	70	99	120	■■■ + ■■■ + . . .
			$M_{2,0}$ Nm	9.4	12.6	15.8	22	25.5	31.5	28	37.5	47	50	62	78	100	125	120	
			M_{2max} Nm	31	41.5	52	73	83	104	93	124	155	165	205	255	330	368	192	
3.11 ... 3.23	10.2 ... 10.5	3.15 (4.05)	n_{2N} r/min	600	500	375	300	300	250	250	200	150	150	125	100	75	60	50	**1FT2205-2AF..-0.B0-Z**
			M_{2N} Nm	7.4	9.7	13.1	18.3	19.6	24	20.5	24.5	35.5	35	45	57	80	101	100	■■■ + ■■■ + . . .
			$M_{2,0}$ Nm	9.5	12.7	16	22.5	25.5	32	28.5	38	47.5	50	63	79	101	127	120	
			M_{2max} Nm	31	41.5	52	73	83	104	93	124	155	165	205	255	330	368	192	
3.05 ... 3.16	10.2 ... 10.5	3.15 (4.05)	n_{2N} r/min	600	500	375	300	250	250	200	150	150	125	100	100	75	60	37.5	**1FT2205-2AH..-0.B0-Z**
			M_{2N} Nm	6.6	8.4	12.4	17	20	20.5	22	29.5	30.5	38.5	49	49	73	92	120	■■■ + ■■■ + . . .
			$M_{2,0}$ Nm	9.3	12.5	15.6	22	25	31.5	27.5	37	46.5	49.5	62	77	99	124	120	
			M_{2max} Nm	31	41.5	52	73	83	104	93	124	155	165	205	255	330	368	192	
5.25 ... 5.46	17.1 ... 17.6	5.1 (6)	n_{2N} r/min	500	375	375	300	250	200	200	150	125	125	100	75	60	50	37.5	**1FT2205-4AF..-0.B0-Z**
			M_{2N} Nm	12.6	17.5	19.1	25.5	31	40	35.5	48	57	58	76	101	132	159	120	■■■ + ■■■ + . . .
			$M_{2,0}$ Nm	16.2	21.5	27	38	43.5	54	48	64	80	85	107	134	171	210	120	
			M_{2max} Nm	52	70	87	122	140	152	156	205	260	275	345	368	416	368	192	
5.31 ... 5.45	17.1 ... 17.6	7.8 (9.4)	n_{2N} r/min	500	375	300	250	200	150	150	125	100	100	75	60	50	37.5	37.5	**1FT2206-2AC..-0.B0-Z**
			M_{2N} Nm	11	15.5	20	25.5	32.5	43.5	41	50	63	64	87	109	136	178	120	■■■ + ■■■ + . . .
			$M_{2,0}$ Nm	16.2	21.5	27	38	43.5	54	48.5	64	80	86	107	134	172	215	120	
			M_{2max} Nm	52	70	87	122	140	152	156	205	260	275	345	368	416	368	192	
5.41 ... 5.62	17.1 ... 17.6	7.8 (9.4)	n_{2N} r/min	600	500	375	300	250	200	200	150	125	125	100	75	75	60	37.5	**1FT2206-2AF..-0.B0-Z**
			M_{2N} Nm	12.2	15	21.5	29	35	44	39	52	64	66	84	108	115	143	120	■■■ + ■■■ + . . .
			$M_{2,0}$ Nm	16.7	22	27.5	39	44.5	56	49.5	66	82	88	110	138	176	220	119	
			M_{2max} Nm	52	70	87	122	140	152	156	205	260	275	345	368	416	368	192	
5.25 ... 5.45	17.1 ... 17.6	7.8 (9.4)	n_{2N} r/min	500	375	300	250	250	200	200	150	125	100	100	75	60	50	37.5	**1FT2206-2AH..-0.B0-Z**
			M_{2N} Nm	12.4	17.3	22	29	29	37.5	34.5	46	55	70	72	97	127	152	120	■■■ + ■■■ + . . .
			$M_{2,0}$ Nm	16.2	21.5	27	38	43.5	54	48	64	80	85	107	133	171	210	120	
			M_{2max} Nm	52	70	87	122	140	152	156	205	260	275	345	368	416	368	192	
7.94 ... 8.26	25.7 ... 26.4	11.5 (13.1)	n_{2N} r/min	500	375	300	250	200	150	200	125	100	100	75	60	50	37.5	25	**1FT2206-3AB..-0.B0-Z**
			M_{2N} Nm	17.5	24	31	40.5	50	66	47	74	93	95	127	158	199	230	120	■■■ + ■■■ + . . .
			$M_{2,0}$ Nm	24.5	32.5	41	57	66	82	73	97	121	129	162	200	255	230	120	
			M_{2max} Nm	79	105	132	184	192	152	235	310	368	416	416	368	416	368	192	
7.81 ... 8.12	25.7 ... 26.4	11.5 (13.1)	n_{2N} r/min	500	375	300	250	200	200	200	125	100	100	75	75	60	50	37.5	**1FT2206-3AF..-0.B0-Z**
			M_{2N} Nm	16.4	22.5	29.5	38	47.5	48	43.5	71	89	90	121	122	159	188	120	■■■ + ■■■ + . . .
			$M_{2,0}$ Nm	24	32	40.5	56	64	81	71	95	119	127	159	199	255	230	120	
			M_{2max} Nm	79	105	132	184	192	152	235	310	368	416	416	368	416	368	192	

➥ Continued on the following page

Planetary gearbox data																
Gearbox type:			NRB120, 1-stage						NRB120, 2-stage							
1st order code			A41						A42							
	i		3	4	5	7	8	10	9	12	15	16	20	25	32	40	64
2nd order code			R03	R04	R05	R07	R08	R10	R09	R12	R15	R16	R20	R25	R32	R40	R64
	$M_{2N,G}$	Nm	115	155	195	135	120	95	210	260	230	260	260	230	260	230	120
	$M_{2max,G}$	Nm	184	248	312	216	192	152	336	416	368	416	416	368	416	368	192
	$M_{2Em.Off}$	Nm	390	520	500	340	380	480	500	520	500	520	520	500	520	500	380
	$J_{1,G}$	kg cm²	2.361	1.835	1.633	1.463	1.431	1.378	2.288	2.224	2.203	1.747	1.573	1.566	1.42	1.417	1.414
	$\varphi_{2,G}$	'	7						9								

Color legend:		
	$M_{max,M} \times i < M_{2N,G}$	The motor and gearbox combination is fatigue-proof
	$M_{2N,G} < M_{max,M} \times i < M_{2max,G}$	Check acceleration and inertias, perform service life calculation if necessary
	$M_{max,M} \times i > M_{2max,G}$	The motor can destroy the gearbox, check acceleration and inertias, perform service life calculation if necessary

© Siemens 2024

Coaxial geared motors for servo converters with 400 V 3 AC line connection

Servomotor data $M_{0,M}$ Nm	$M_{max,M}$ Nm	J_M ($J_{M,Br}$) kg cm²	Selection data servomotors with planetary gearbox																Servomotors with planetary gearbox
SIMOTICS S-1FT2 Compact servomotors with 1 and 2-stage NRB120 planetary gearboxes (continued)																			
10.8 ... 11.1	36.2 ... 37.3	15.1 (16.8)	n_{2N}	r/min	375	300	250	150	150	125	125	100	75	75	60	50	37.5	37.5	30	1FT2206-4AC..-0.B0-Z
			M_{2N}	Nm	20	25.5	31.5	54	55	67	66	82	109	109	138	165	225	210	120	■■■ + ■■■ + . . .
			$M_{2,0}$	Nm	33	44	55	77	88	95	99	131	164	175	215	230	260	230	120	
			M_{2max}	Nm	111	149	186	216	192	152	330	416	368	416	416	368	416	368	192	
10.6 ... 11	34.3 ... 35.3	15.1 (16.8)	n_{2N}	r/min	500	375	375	250	250	200	200	125	100	100	75	75	60	50	37.5	1FT2206-4AF..-0.B0-Z
			M_{2N}	Nm	24	33	34	54	54	70	62	99	123	125	167	168	215	230	120	■■■ + ■■■ + . . .
			$M_{2,0}$	Nm	32.5	43.5	54	76	87	95	97	129	162	172	215	230	260	230	120	
			M_{2max}	Nm	106	141	176	216	192	152	310	416	368	416	416	368	416	368	192	
10.1 ... 10.5	34.3 ... 35.3	15.1 (16.8)	n_{2N}	r/min	500	375	300	200	200	150	150	125	100	100	75	60	50	50	37.5	1FT2206-4AH..-0.B0-Z
			M_{2N}	Nm	18.5	25.5	33.5	51	53	71	66	80	100	99	136	169	205	190	120	■■■ + ■■■ + . . .
			$M_{2,0}$	Nm	31	41.5	52	73	83	95	93	123	154	165	205	230	260	230	120	
			M_{2max}	Nm	106	141	176	216	192	152	310	416	368	416	416	368	416	368	192	
10.3 ... 10.6	36.2 ... 37.3	24.86 (28.16)	n_{2N}	r/min	375	300	250	200	150	125	150	100	100	75	60	50	50	37.5	30	1FT2208-2AF..-0.B0-Z
			M_{2N}	Nm	25.5	32.5	40.5	52	68	84	67	99	96	132	167	200	199	225	119	■■■ + ■■■ + . . .
			$M_{2,0}$	Nm	31.5	42.5	53	74	85	95	94	125	157	167	205	230	260	225	120	
			M_{2max}	Nm	111	148	185	216	192	152	330	416	368	416	416	368	416	368	192	
16.2 ... 16.6	48.6 ... 50.1	31.96 (34.96)	n_{2N}	r/min	375	250	200	150	150	125	125	100	75	60	50	50	37.5	37.5	–	1FT2208-3AB..-0.B0-Z
			M_{2N}	Nm	27.5	42.5	54	74	74	89	87	106	143	176	210	205	260	230	–	■■■ + ■■■ + . . .
			$M_{2,0}$	Nm	49.5	66	82	116	120	95	148	197	230	260	260	230	260	230	–	
			M_{2max}	Nm	150	200	245	216	192	152	336	416	368	416	416	368	416	368	–	
15.2 ... 15.8	48.6 ... 50.1	31.96 (35.36)	n_{2N}	r/min	375	300	250	200	150	150	150	100	75	75	60	60	50	50	–	1FT2208-3AC..-0.B0-Z
			M_{2N}	Nm	34.5	44	54	70	92	93	87	130	170	172	215	205	245	177	–	■■■ + ■■■ + . . .
			$M_{2,0}$	Nm	47	63	79	110	120	95	140	186	230	245	260	230	260	230	–	
			M_{2max}	Nm	150	200	245	216	192	152	336	416	368	416	416	368	416	368	–	
15.1 ... 15.7	48.6 ... 50.1	31.96 (35.36)	n_{2N}	r/min	375	300	250	200	150	150	125	100	75	75	60	50	50	37.5	–	1FT2208-3AF..-0.B0-Z
			M_{2N}	Nm	32	41	50	64	86	84	98	123	162	162	205	230	225	230	–	■■■ + ■■■ + . . .
			$M_{2,0}$	Nm	47	62	78	109	120	95	139	185	230	245	260	230	260	230	–	
			M_{2max}	Nm	150	200	245	216	192	152	336	416	368	416	416	368	416	368	–	
19.7 ... 20.2	63.1 ... 64.9	41.16 (46.76)	n_{2N}	r/min	250	200	150	125	100	100	100	75	60	50	50	37.5	37.5	30	–	1FT2208-4AB..-0.B0-Z
			M_{2N}	Nm	38	48.5	64	80	99	94	100	133	165	197	194	230	230	230	–	■■■ + ■■■ + . . .
			$M_{2,0}$	Nm	60	80	100	135	120	95	179	235	230	260	260	230	260	230	–	
			M_{2max}	Nm	184	248	312	216	192	152	336	416	368	416	416	368	416	368	–	
18.9 ... 19.7	63.1 ... 64.9	41.16 (46.76)	n_{2N}	r/min	375	300	250	150	150	150	125	100	75	75	60	60	50	37.5	–	1FT2208-4AC..-0.B0-Z
			M_{2N}	Nm	39.5	49.5	60	101	104	94	116	142	190	189	235	210	245	230	–	■■■ + ■■■ + . . .
			$M_{2,0}$	Nm	58	78	98	135	120	95	174	230	230	260	260	230	260	230	–	
			M_{2max}	Nm	184	248	312	216	192	152	336	416	368	416	416	368	416	368	–	
18.2 ... 18.8	63.1 ... 64.9	41.16 (46.76)	n_{2N}	r/min	375	300	250	150	150	150	125	100	75	75	60	60	50	37.5	–	1FT2208-4AF..-0.B0-Z
			M_{2N}	Nm	39.5	49.5	60	101	103	94	117	143	190	189	235	210	245	230	–	■■■ + ■■■ + . . .
			$M_{2,0}$	Nm	56	75	93	131	120	95	166	220	230	260	260	230	260	230	–	
			M_{2max}	Nm	184	248	312	216	192	152	336	416	368	416	415	368	416	368	–	

➥ Continued on the following page

Planetary gearbox data																
Gearbox type:			NRB120, 1-stage						NRB120, 2-stage							
1st order code			A41						A42							
	i		3	4	5	7	8	10	9	12	15	16	20	25	32	40	64
2nd order code			R03	R04	R05	R07	R08	R10	R09	R12	R15	R16	R20	R25	R32	R40	R64
	$M_{2N,G}$	Nm	115	155	195	135	120	95	210	260	230	260	260	230	260	230	120
	$M_{2max,G}$	Nm	184	248	312	216	192	152	336	416	368	416	416	368	416	368	192
	$M_{2Em.Off}$	Nm	390	520	500	340	380	480	500	520	500	520	520	500	520	500	380
	$J_{1,G}$	kg cm²	2.361	1.835	1.633	1.463	1.431	1.378	2.288	2.224	2.203	1.747	1.573	1.566	1.42	1.417	1.414
	$\varphi_{2,G}$	'	7						9								

Color legend:		
	$M_{max,M} \times i < M_{2N,G}$	The motor and gearbox combination is fatigue-proof
	$M_{2N,G} < M_{max,M} \times i < M_{2max,G}$	Check acceleration and inertias, perform service life calculation if necessary
	$M_{max,M} \times i > M_{2max,G}$	The motor can destroy the gearbox, check acceleration and inertias, perform service life calculation if necessary

© Siemens 2024

Servomotor data			Selection data servomotors with planetary gearbox																Servomotors with planetary gearbox
$M_{0,M}$	$M_{max,M}$	J_M ($J_{M,Br}$)																	
Nm	Nm	kg cm²																	
SIMOTICS S-1FT2 Compact servomotors with 1 and 2-stage NRB120 planetary gearboxes (continued)																			
22.9	76.6	50.46	n_{2N}	r/min	375	250	250	150	150	150	125	100	75	60	60	60	50	37.5	–	**1FT2208-5AB..-0.B0-Z**
...	...	(55.96)	M_{2N}	Nm	43	64	65	111	112	95	126	152	205	250	250	215	250	230	–	■■■ + ■■■ + . . .
23.7	78.7		$M_{2,0}$	Nm	71	94	118	135	120	95	210	260	230	260	260	230	260	230	–	
			M_{2max}	Nm	184	248	312	216	192	152	336	416	368	416	416	368	416	368	–	
22.7	76.6	50.46	n_{2N}	r/min	375	250	200	150	150	150	125	75	75	60	60	60	50	37.5	–	**1FT2208-5AC..-0.B0-Z**
...	...	(55.96)	M_{2N}	Nm	42.5	64	81	110	111	92	124	200	200	250	245	200	230	230	–	■■■ + ■■■ + . . .
23.5	78.7		$M_{2,0}$	Nm	70	94	117	135	120	95	205	260	230	260	260	230	260	230	–	
			M_{2max}	Nm	184	248	312	216	192	152	336	416	368	415	416	368	416	368	–	

Planetary gearbox data																
Gearbox type:			**NRB120, 1-stage**						**NRB120, 2-stage**							
1st order code			**A41**						**A42**							
	i		**3**	**4**	**5**	**7**	**8**	**10**	**9**	**12**	**15**	**16**	**20**	**25**	**32**	**40**	**64**
2nd order code			**R03**	**R04**	**R05**	**R07**	**R08**	**R10**	**R09**	**R12**	**R15**	**R16**	**R20**	**R25**	**R32**	**R40**	**R64**
	$M_{2N,G}$	Nm	115	155	195	135	120	95	210	260	230	260	260	230	260	230	120
	$M_{2max,G}$	Nm	184	248	312	216	192	152	336	416	368	416	416	368	416	368	192
	$M_{2Em.Off}$	Nm	390	520	500	340	380	480	500	520	500	520	520	500	520	500	380
	$J_{1,G}$	kg cm²	2.361	1.835	1.633	1.463	1.431	1.378	2.288	2.224	2.203	1.747	1.573	1.566	1.42	1.417	1.414
	$\varphi_{2,G}$	'	7						9								

Color legend:		
	$M_{max,M} \times i < M_{2N,G}$	**The motor and gearbox combination is fatigue-proof**
	$M_{2N,G} < M_{max,M} \times i < M_{2max,G}$	**Check acceleration and inertias, perform service life calculation if necessary**
	$M_{max,M} \times i > M_{2max,G}$	**The motor can destroy the gearbox, check acceleration and inertias, perform service life calculation if necessary**

© Siemens 2024

Coaxial geared motors for servo converters with 400 V 3 AC line connection

Selection and ordering data

Servomotor data $M_{0,M}$ Nm	$M_{max,M}$ Nm	J_M ($J_{M,Br}$) kg cm²	Selection data servomotors with planetary gearbox										Servomotors with planetary gearbox
SIMOTICS S-1FT2 High Dynamic servomotors with 3-stage NRB120 planetary gearboxes													
0.379 ... 0.45	1.72 ... 1.77	0.093 (0.112)	n_{2N}	r/min	37.5	37.5	30	20	20	15	12.5	10	6	**1FT2103-2AH..-0.B0-Z**
			M_{2N}	Nm	17.6	21	26.5	33.5	48	63	77	97	120	■■■ + ■■■ + . . .
			$M_{2,0}$	Nm	26.5	35.5	44.5	53	71	89	114	142	119	
			M_{2max}	Nm	104	139	174	205	275	345	416	368	191	
1 ... 1.06	3.74 ... 3.83	0.139 (0.158)	n_{2N}	r/min	37.5	37.5	30	20	20	15	12.5	10	6	**1FT2103-4AH..-0.B0-Z**
			M_{2N}	Nm	44.5	52	66	86	113	147	181	225	119	■■■ + ■■■ + . . .
			$M_{2,0}$	Nm	62	83	104	125	167	205	260	230	119	
			M_{2max}	Nm	225	300	375	368	416	368	416	368	192	
1.03 ... 1.09	3.45 ... 3.54	0.35 (0.43)	n_{2N}	r/min	50	37.5	30	25	20	15	12.5	10	6	**1FT2104-4AF..-0.B0-Z**
			M_{2N}	Nm	45	69	86	93	143	185	225	225	120	■■■ + ■■■ + . . .
			$M_{2,0}$	Nm	64	86	107	129	172	215	260	230	119	
			M_{2max}	Nm	205	275	345	368	416	368	416	368	192	
1.02 ... 1.08	3.55 ... 3.64	0.35 (0.43)	n_{2N}	r/min	50	37.5	30	25	20	15	12.5	10	6	**1FT2104-4AK..-0.B0-Z**
			M_{2N}	Nm	47.5	76	95	98	157	198	250	230	120	■■■ + ■■■ + . . .
			$M_{2,0}$	Nm	64	85	107	128	171	210	260	230	119	
			M_{2max}	Nm	210	285	355	368	416	368	416	368	192	
2.13 ... 2.18	7.03 ... 7.23	0.56 (0.65)	n_{2N}	r/min	37.5	30	25	20	20	15	12.5	10	6	**1FT2104-5AF..-0.B0-Z**
			M_{2N}	Nm	120	162	197	225	250	230	260	230	120	■■■ + ■■■ + . . .
			$M_{2,0}$	Nm	129	171	210	230	260	230	260	230	120	
			M_{2max}	Nm	416	416	416	368	416	368	416	368	192	
2.12 ... 2.17	7.12 ... 7.33	0.56 (0.65)	n_{2N}	r/min	37.5	30	25	20	20	15	12.5	10	6	**1FT2104-5AK..-0.B0-Z**
			M_{2N}	Nm	118	161	194	220	245	230	260	230	120	■■■ + ■■■ + . . .
			$M_{2,0}$	Nm	128	170	210	230	260	230	260	230	120	
			M_{2max}	Nm	416	416	416	368	416	368	416	368	192	
2.87 ... 2.93	9.42 ... 9.69	0.76 (0.84)	n_{2N}	r/min	37.5	30	25	20	20	15	12.5	10	–	**1FT2104-6AF..-0.B0-Z**
			M_{2N}	Nm	143	194	230	230	260	230	260	230	–	■■■ + ■■■ + . . .
			$M_{2,0}$	Nm	172	230	260	230	260	230	260	230	–	
			M_{2max}	Nm	416	416	416	368	416	368	416	368	–	
4.55 ... 4.66	14.2 ... 14.6	1.71 (2.55)	n_{2N}	r/min	37.5	30	25	25	20	15	12.5	10	–	**1FT2105-4AF..-0.B0-Z**
			M_{2N}	Nm	205	260	260	185	260	230	260	230	–	■■■ + ■■■ + . . .
			$M_{2,0}$	Nm	260	260	260	230	260	230	260	230	–	
			M_{2max}	Nm	416	416	415	368	416	368	416	368	–	
4.58 ... 4.69	14.2 ... 14.6	1.71 (2.55)	n_{2N}	r/min	30	30	25	20	20	15	12.5	10	–	**1FT2105-4AH..-0.B0-Z**
			M_{2N}	Nm	230	240	260	230	255	230	260	230	–	■■■ + ■■■ + . . .
			$M_{2,0}$	Nm	260	260	260	230	260	230	260	230	–	
			M_{2max}	Nm	416	416	416	368	416	368	416	368	–	
7.42 ... 7.62	22.8 ... 23.5	2.65 (3.5)	n_{2N}	r/min	37.5	30	25	20	20	15	–	–	–	**1FT2105-6AF..-0.B0-Z**
			M_{2N}	Nm	235	260	260	230	260	230	–	–	–	■■■ + ■■■ + . . .
			$M_{2,0}$	Nm	260	260	260	230	260	230	–	–	–	
			M_{2max}	Nm	416	416	416	368	416	368	–	–	–	

➥ Continued on the following page

Planetary gearbox data										
Gearbox type:			**NRB120, 3-stage**							
1st order code			**A43**							
i			**60**	**80**	**100**	**120**	**160**	**200**	**256**	**320**	**512**
2nd order code			**R60**	**R80**	**R01**	**R21**	**R61**	**R02**	**R52**	**R23**	**R51**
$M_{2N,G}$	Nm		260	260	260	230	260	230	260	230	120
$M_{2max,G}$	Nm		416	416	416	368	416	368	416	368	192
$M_{2Em.Off}$	Nm		520	520	520	500	520	500	520	500	380
$J_{1,G}$	kg cm²		2.196	1.57	1.563	2.179	1.416	1.416	1.413	1.413	1.413
$\varphi_{2,G}$	'		11								

Color legend:		
	$M_{max,M} \times i < M_{2N,G}$	The motor and gearbox combination is fatigue-proof
	$M_{2N,G} < M_{max,M} \times i < M_{2max,G}$	Check acceleration and inertias, perform service life calculation if necessary
	$M_{max,M} \times i > M_{2max,G}$	The motor can destroy the gearbox, check acceleration and inertias, perform service life calculation if necessary

© Siemens 2024

Coaxial geared motors for servo converters with 400 V 3 AC line connection

Servomotor data			Selection data servomotors with planetary gearbox										Servomotors with planetary gearbox
$M_{0,M}$	$M_{max,M}$	J_M ($J_{M,Br}$)											
Nm	Nm	kg cm²											
SIMOTICS S-1FT2 High Dynamic servomotors with 3-stage NRB120 planetary gearboxes (continued)													
7.8	24.7	4.6	n_{2N}	r/min	37.5	30	25	20	20	–	–	–	–	**1FT2106-3AF..-0.B0-Z**
...	...	(6.3)	M_{2N}	Nm	240	260	260	230	260	–	–	–	–	■■■ + ■■■ + . . .
8.1	25.5		$M_{2,0}$	Nm	260	260	260	230	260	–	–	–	–	
			M_{2max}	Nm	410	415	416	368	416	–	–	–	–	
10.1	31.5	6	n_{2N}	r/min	37.5	30	25	20	–	–	–	–	–	**1FT2106-4AF..-0.B0-Z**
...	...	(7.6)	M_{2N}	Nm	245	260	260	230	–	–	–	–	–	■■■ + ■■■ + . . .
10.5	32.4		$M_{2,0}$	Nm	260	260	260	230	–	–	–	–	–	
			M_{2max}	Nm	416	416	416	368	–	–	–	–	–	
14.3	43.4	8.7	n_{2N}	r/min	37.5	30	25	–	–	–	–	–	–	**1FT2106-6AF..-0.B0-Z**
...	...	(10.4)	M_{2N}	Nm	260	260	260	–	–	–	–	–	–	■■■ + ■■■ + . . .
14.9	44.7		$M_{2,0}$	Nm	260	260	260	–	–	–	–	–	–	
			M_{2max}	Nm	416	416	416	–	–	–	–	–	–	
SIMOTICS S-1FT2 Compact servomotors with 3-stage NRB120 planetary gearboxes													
0.366	1.62	0.2	n_{2N}	r/min	30	30	20	15	15	12.5	10	7.5	6	**1FT2203-2AK..-0.B0-Z**
...	...	(0.22)	M_{2N}	Nm	20	24	36	41	55	66	83	111	120	■■■ + ■■■ + . . .
0.437	1.67		$M_{2,0}$	Nm	25.5	34.5	43	52	69	86	111	138	120	
			M_{2max}	Nm	98	131	164	197	260	325	416	368	192	
0.985	3.45	0.35	n_{2N}	r/min	37.5	30	25	20	20	15	12.5	10	6	**1FT2203-4AK..-0.B0-Z**
...	...	(0.37)	M_{2N}	Nm	49	67	82	94	114	152	183	225	120	■■■ + ■■■ + . . .
1.04	3.54		$M_{2,0}$	Nm	62	82	103	124	165	205	260	230	120	
			M_{2max}	Nm	205	275	345	368	416	368	416	368	192	
2.09	6.64	1.23	n_{2N}	r/min	37.5	30	25	20	20	15	12.5	10	6	**1FT2204-5AF..-0.B0-Z**
...	...	(1.31)	M_{2N}	Nm	112	151	184	210	220	230	260	230	119	■■■ + ■■■ + . . .
2.14	6.83		$M_{2,0}$	Nm	126	168	210	230	260	230	260	230	120	
			M_{2max}	Nm	400	416	416	368	416	368	416	368	192	
2.11	6.64	1.23	n_{2N}	r/min	37.5	30	25	20	20	15	12.5	10	6	**1FT2204-5AK..-0.B0-Z**
...	...	(1.31)	M_{2N}	Nm	116	157	188	215	225	230	260	230	120	■■■ + ■■■ + . . .
2.16	6.83		$M_{2,0}$	Nm	127	169	210	230	260	230	260	230	120	
			M_{2max}	Nm	400	416	416	368	416	368	416	368	192	
2.85	8.94	1.61	n_{2N}	r/min	37.5	30	25	20	20	15	12.5	10	–	**1FT2204-6AF..-0.B0-Z**
...	...	(1.69)	M_{2N}	Nm	148	200	235	230	260	230	260	230	–	■■■ + ■■■ + . . .
2.92	9.19		$M_{2,0}$	Nm	172	225	260	230	260	230	260	230	–	
			M_{2max}	Nm	416	416	416	368	416	368	416	368	–	
3.08	10.2	3.15	n_{2N}	r/min	37.5	25	20	20	12.5	10	10	7.5	–	**1FT2205-2AC..-0.B0-Z**
...	...	(4.05)	M_{2N}	Nm	121	190	235	210	260	230	255	230	–	■■■ + ■■■ + . . .
3.2	10.5		$M_{2,0}$	Nm	185	245	260	230	260	230	260	230	–	
			M_{2max}	Nm	416	416	416	368	416	368	416	368	–	
3.11	10.2	3.15	n_{2N}	r/min	37.5	30	25	20	20	15	12.5	10	–	**1FT2205-2AF..-0.B0-Z**
...	...	(4.05)	M_{2N}	Nm	143	192	230	230	250	230	260	230	–	■■■ + ■■■ + . . .
3.23	10.5		$M_{2,0}$	Nm	187	245	260	230	260	230	260	225	–	
			M_{2max}	Nm	416	416	416	368	416	368	416	368	–	

➥ Continued on the following page

Planetary gearbox data										
Gearbox type:			NRB120, 3-stage								
1st order code			A43								
	i		60	80	100	120	160	200	256	320	512
2nd order code			R60	R80	R01	R21	R61	R02	R52	R23	R51
	$M_{2N,G}$	Nm	260	260	260	230	260	230	260	230	120
	$M_{2max,G}$	Nm	416	416	416	368	416	368	416	368	192
	$M_{2Em.Off}$	Nm	520	520	520	500	520	500	520	500	380
	$J_{1,G}$	kg cm²	2.196	1.57	1.563	2.179	1.416	1.416	1.413	1.413	1.413
	$\varphi_{2,G}$	'	11								

Color legend:		
	$M_{max,M} \times i < M_{2N,G}$	The motor and gearbox combination is fatigue-proof
	$M_{2N,G} < M_{max,M} \times i < M_{2max,G}$	Check acceleration and inertias, perform service life calculation if necessary
	$M_{max,M} \times i > M_{2max,G}$	The motor can destroy the gearbox, check acceleration and inertias, perform service life calculation if necessary

© Siemens 2024

Coaxial geared motors for servo converters with 400 V 3 AC line connection

Servomotor data			Selection data servomotors with planetary gearbox										Servomotors with planetary gearbox
$M_{0,M}$	$M_{max,M}$	J_M ($J_{M,Br}$)											
Nm	Nm	kg cm²											
SIMOTICS S-1FT2 Compact servomotors with 3-stage NRB120 planetary gearboxes (continued)													
3.05 ... 3.16	10.2 ... 10.5	3.15 (4.05)	n_{2N}	r/min	37.5	30	25	20	20	15	12.5	10	–	**1FT2205-2AH..-0.B0-Z**
			M_{2N}	Nm	128	172	200	225	199	225	255	225	–	■■■ + ■■■ + . . .
			$M_{2,0}$	Nm	183	240	260	225	260	230	255	225	–	
			M_{2max}	Nm	416	416	416	368	416	368	416	368	–	
5.25 ... 5.46	17.1 ... 17.6	5.1 (6)	n_{2N}	r/min	30	30	25	20	20	15	12.5	–	–	**1FT2205-4AF..-0.B0-Z**
			M_{2N}	Nm	240	230	260	230	220	230	260	–	–	■■■ + ■■■ + . . .
			$M_{2,0}$	Nm	260	260	260	230	260	230	260	–	–	
			M_{2max}	Nm	416	416	416	368	416	368	416	–	–	
5.31 ... 5.45	17.1 ... 17.6	7.8 (9.4)	n_{2N}	r/min	25	25	20	20	12.5	10	10	–	–	**1FT2206-2AC..-0.B0-Z**
			M_{2N}	Nm	255	250	260	187	260	230	260	–	–	■■■ + ■■■ + . . .
			$M_{2,0}$	Nm	260	260	260	230	260	230	260	–	–	
			M_{2max}	Nm	416	416	416	368	416	368	416	–	–	
5.41 ... 5.62	17.1 ... 17.6	7.8 (9.4)	n_{2N}	r/min	30	30	25	20	20	15	12.5	–	–	**1FT2206-2AF..-0.B0-Z**
			M_{2N}	Nm	250	250	260	230	220	230	260	–	–	■■■ + ■■■ + . . .
			$M_{2,0}$	Nm	260	260	260	230	255	225	255	–	–	
			M_{2max}	Nm	416	416	416	368	416	368	416	–	–	
5.25 ... 5.45	17.1 ... 17.6	7.8 (9.4)	n_{2N}	r/min	30	25	25	20	15	15	12.5	–	–	**1FT2206-2AH..-0.B0-Z**
			M_{2N}	Nm	230	255	230	225	255	225	215	–	–	■■■ + ■■■ + . . .
			$M_{2,0}$	Nm	260	260	260	225	255	225	255	–	–	
			M_{2max}	Nm	416	416	416	368	416	368	416	–	–	
7.94 ... 8.26	25.7 ... 26.4	11.5 (13.1)	n_{2N}	r/min	25	20	15	12.5	10	–	–	–	–	**1FT2206-3AB..-0.B0-Z**
			M_{2N}	Nm	260	260	260	230	260	–	–	–	–	■■■ + ■■■ + . . .
			$M_{2,0}$	Nm	260	260	260	230	260	–	–	–	–	
			M_{2max}	Nm	416	416	416	368	416	–	–	–	–	
7.81 ... 8.12	25.7 ... 26.4	11.5 (13.1)	n_{2N}	r/min	30	30	25	20	15	–	–	–	–	**1FT2206-3AF..-0.B0-Z**
			M_{2N}	Nm	260	235	255	230	260	–	–	–	–	■■■ + ■■■ + . . .
			$M_{2,0}$	Nm	260	260	260	230	260	–	–	–	–	
			M_{2max}	Nm	416	416	416	368	416	–	–	–	–	
10.8 ... 11.1	36.2 ... 37.3	15.1 (16.8)	n_{2N}	r/min	25	20	20	15	–	–	–	–	–	**1FT2206-4AC..-0.B0-Z**
			M_{2N}	Nm	260	260	220	230	–	–	–	–	–	■■■ + ■■■ + . . .
			$M_{2,0}$	Nm	260	260	260	230	–	–	–	–	–	
			M_{2max}	Nm	416	416	416	368	–	–	–	–	–	
10.6 ... 11	34.3 ... 35.3	15.1 (16.8)	n_{2N}	r/min	37.5	30	25	20	–	–	–	–	–	**1FT2206-4AF..-0.B0-Z**
			M_{2N}	Nm	250	260	260	230	–	–	–	–	–	■■■ + ■■■ + . . .
			$M_{2,0}$	Nm	260	260	260	230	–	–	–	–	–	
			M_{2max}	Nm	416	416	416	368	–	–	–	–	–	
10.1 ... 10.5	34.3 ... 35.3	15.1 (16.8)	n_{2N}	r/min	30	25	25	20	–	–	–	–	–	**1FT2206-4AH..-0.B0-Z**
			M_{2N}	Nm	260	260	210	225	–	–	–	–	–	■■■ + ■■■ + . . .
			$M_{2,0}$	Nm	260	260	260	230	–	–	–	–	–	
			M_{2max}	Nm	416	416	416	368	–	–	–	–	–	

➥ Continued on the following page

Planetary gearbox data										
Gearbox type:			**NRB120, 3-stage**							
1st order code			**A43**							
	i		**60**	**80**	**100**	**120**	**160**	**200**	**256**	**320**	**512**
2nd order code			**R60**	**R80**	**R01**	**R21**	**R61**	**R02**	**R52**	**R23**	**R51**
	$M_{2N,G}$	Nm	260	260	260	230	260	230	260	230	120
	$M_{2max,G}$	Nm	416	416	416	368	416	368	416	368	192
	$M_{2Em.Off}$	Nm	520	520	520	500	520	500	520	500	380
	$J_{1,G}$	kg cm²	2.196	1.57	1.563	2.179	1.416	1.416	1.413	1.413	1.413
	$\varphi_{2,G}$	'	11								

Color legend:		
	$M_{max,M} \times i < M_{2N,G}$	The motor and gearbox combination is fatigue-proof
	$M_{2N,G} < M_{max,M} \times i < M_{2max,G}$	Check acceleration and inertias, perform service life calculation if necessary
	$M_{max,M} \times i > M_{2max,G}$	The motor can destroy the gearbox, check acceleration and inertias, perform service life calculation if necessary

© Siemens 2024

Servomotor data			Selection data servomotors with planetary gearbox									Servomotors with planetary gearbox
$M_{0,M}$	$M_{max,M}$	J_M ($J_{M,Br}$)										
Nm	Nm	kg cm²										
SIMOTICS S-1FT2 Compact servomotors with 3-stage NRB120 planetary gearboxes (continued)												
10.3 ... 10.6	36.2 ... 37.3	24.86 (28.16)	n_{2N} r/min	30	25	20	15	–	–	–	–	–	1FT2208-2AF..-0.B0-Z
			M_{2N} Nm	250	250	260	230	–	–	–	–	–	■■■ + ■■■ + . . .
			$M_{2,0}$ Nm	255	260	255	225	–	–	–	–	–	
			M_{2max} Nm	416	416	416	368	–	–	–	–	–	
16.2 ... 16.6	48.6 ... 50.1	31.96 (34.96)	n_{2N} r/min	25	20	15	–	–	–	–	–	–	1FT2208-3AB..-0.B0-Z
			M_{2N} Nm	260	260	260	–	–	–	–	–	–	■■■ + ■■■ + . . .
			$M_{2,0}$ Nm	260	260	260	–	–	–	–	–	–	
			M_{2max} Nm	416	416	416	–	–	–	–	–	–	
15.2 ... 15.8	48.6 ... 50.1	31.96 (35.36)	n_{2N} r/min	30	25	20	–	–	–	–	–	–	1FT2208-3AC..-0.B0-Z
			M_{2N} Nm	260	260	260	–	–	–	–	–	–	■■■ + ■■■ + . . .
			$M_{2,0}$ Nm	260	260	260	–	–	–	–	–	–	
			M_{2max} Nm	416	416	416	–	–	–	–	–	–	
15.1 ... 15.7	48.6 ... 50.1	31.96 (35.36)	n_{2N} r/min	30	25	20	–	–	–	–	–	–	1FT2208-3AF..-0.B0-Z
			M_{2N} Nm	255	250	260	–	–	–	–	–	–	■■■ + ■■■ + . . .
			$M_{2,0}$ Nm	260	260	260	–	–	–	–	–	–	
			M_{2max} Nm	416	416	416	–	–	–	–	–	–	
19.7 ... 20.2	63.1 ... 64.9	41.16 (46.76)	n_{2N} r/min	25	20	–	–	–	–	–	–	–	1FT2208-4AB..-0.B0-Z
			M_{2N} Nm	210	235	–	–	–	–	–	–	–	■■■ + ■■■ + . . .
			$M_{2,0}$ Nm	260	260	–	–	–	–	–	–	–	
			M_{2max} Nm	416	416	–	–	–	–	–	–	–	
18.9 ... 19.7	63.1 ... 64.9	41.16 (46.76)	n_{2N} r/min	30	25	–	–	–	–	–	–	–	1FT2208-4AC..-0.B0-Z
			M_{2N} Nm	250	230	–	–	–	–	–	–	–	■■■ + ■■■ + . . .
			$M_{2,0}$ Nm	260	260	–	–	–	–	–	–	–	
			M_{2max} Nm	416	416	–	–	–	–	–	–	–	
18.2 ... 18.8	63.1 ... 64.9	41.16 (46.76)	n_{2N} r/min	30	25	–	–	–	–	–	–	–	1FT2208-4AF..-0.B0-Z
			M_{2N} Nm	255	245	–	–	–	–	–	–	–	■■■ + ■■■ + . . .
			$M_{2,0}$ Nm	260	255	–	–	–	–	–	–	–	
			M_{2max} Nm	416	416	–	–	–	–	–	–	–	
22.9 ... 23.7	76.6 ... 78.7	50.46 (55.96)	n_{2N} r/min	25	–	–	–	–	–	–	–	–	1FT2208-5AB..-0.B0-Z
			M_{2N} Nm	260	–	–	–	–	–	–	–	–	■■■ + ■■■ + . . .
			$M_{2,0}$ Nm	260	–	–	–	–	–	–	–	–	
			M_{2max} Nm	416	–	–	–	–	–	–	–	–	
22.7 ... 23.5	76.6 ... 78.7	50.46 (55.96)	n_{2N} r/min	25	–	–	–	–	–	–	–	–	1FT2208-5AC..-0.B0-Z
			M_{2N} Nm	260	–	–	–	–	–	–	–	–	■■■ + ■■■ + . . .
			$M_{2,0}$ Nm	260	–	–	–	–	–	–	–	–	
			M_{2max} Nm	416	–	–	–	–	–	–	–	–	

Planetary gearbox data										
Gearbox type:		NRB120, 3-stage								
1st order code		A43								
i		60	80	100	120	160	200	256	320	512
2nd order code		R60	R80	R01	R21	R61	R02	R52	R23	R51
$M_{2N,G}$	Nm	260	260	260	230	260	230	260	230	120
$M_{2max,G}$	Nm	416	416	416	368	416	368	416	368	192
$M_{2Em.Off}$	Nm	520	520	520	500	520	500	520	500	380
$J_{1,G}$	kg cm²	2.196	1.57	1.563	2.179	1.416	1.416	1.413	1.413	1.413
$\varphi_{2,G}$	'	11								

Color legend:		
	$M_{max,M} \times i < M_{2N,G}$	The motor and gearbox combination is fatigue-proof
	$M_{2N,G} < M_{max,M} \times i < M_{2max,G}$	Check acceleration and inertias, perform service life calculation if necessary
	$M_{max,M} \times i > M_{2max,G}$	The motor can destroy the gearbox, check acceleration and inertias, perform service life calculation if necessary

© Siemens 2024

Coaxial geared motors for servo converters with 400 V 3 AC line connection

Selection and ordering data

NRB160

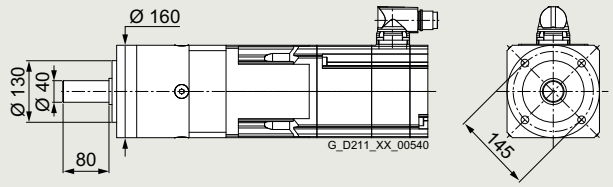

Permissible output shaft loads		
Average radial force for 20000 h	$F_{R,eq}$	5000 N
Average axial force for 20000 h	$F_{A,eq}$	7000 N
Average radial force for 30000 h	$F_{R,eq}$	4200 N
Average axial force for 30000 h	$F_{A,eq}$	6000 N
Maximum radial force	$F_{R,max}$	5000 N
Maximum axial force	$F_{A,max}$	11000 N

Servomotor data			Selection data servomotors with planetary gearbox														Servomotors with planetary gearbox
$M_{0,M}$	$M_{max,M}$	J_M ($J_{M,Br}$)															
Nm	Nm	kg cm²															
SIMOTICS S-1FT2 High Dynamic servomotors with 1 and 2-stage NRB160 planetary gearboxes																	
4.16 ... 4.28	14.1 ... 14.2	1.71 (2.55)	n_{2N}	r/min	300	250	200	150	100	75	75	60	50	50	37.5	20	1FT2105-4AF..-0.B0-Z
			M_{2N}	Nm	11.2	14.8	19.5	31	44	57	60	76	95	96	136	245	■■■ + ■■■ + . . .
			$M_{2.0}$	Nm	12.4	16.8	21	34	51	63	68	85	106	136	170	270	
			M_{2max}	Nm	42	56	70	113	169	210	225	280	350	450	560	720	
4.19 ... 4.31	14.1 ... 14.2	1.71 (2.55)	n_{2N}	r/min	300	250	200	150	100	75	75	60	50	37.5	37.5	20	1FT2105-4AH..-0.B0-Z
			M_{2N}	Nm	10.6	13.8	18.8	28.5	41	55	56	73	90	120	122	235	■■■ + ■■■ + . . .
			$M_{2.0}$	Nm	12.5	16.9	21	34	51	64	68	85	107	137	172	275	
			M_{2max}	Nm	42	56	70	113	169	210	225	280	350	450	560	720	
7.13 ... 7.24	22.8 ... 23.1	2.65 (3.5)	n_{2N}	r/min	300	250	200	150	100	75	75	60	50	37.5	30	20	1FT2105-6AF..-0.B0-Z
			M_{2N}	Nm	16.5	21	29	43	60	83	82	110	132	187	230	350	■■■ + ■■■ + . . .
			$M_{2.0}$	Nm	21	28.5	36	57	86	107	114	143	179	230	285	450	
			M_{2max}	Nm	69	92	115	184	270	340	365	455	570	720	910	720	
7.5 ... 7.65	24.7 ... 25	4.6 (6.3)	n_{2N}	r/min	300	250	200	150	100	75	75	60	50	37.5	30	20	1FT2106-3AF..-0.B0-Z
			M_{2N}	Nm	17.5	22.5	30.5	45.5	63	88	86	115	139	195	240	365	■■■ + ■■■ + . . .
			$M_{2.0}$	Nm	22.5	30	38	61	90	112	120	150	187	240	300	450	
			M_{2max}	Nm	75	100	125	200	295	370	395	495	610	790	980	720	
9.84 ... 10	31.5 ... 31.9	6 (7.6)	n_{2N}	r/min	300	250	200	150	100	75	75	60	50	37.5	30	20	1FT2106-4AF..-0.B0-Z
			M_{2N}	Nm	22.5	28.5	39	56	76	108	104	140	167	235	295	435	■■■ + ■■■ + . . .
			$M_{2.0}$	Nm	29.5	39.5	50	80	118	147	157	196	245	310	390	450	
			M_{2max}	Nm	95	127	159	255	375	470	500	630	780	1000	1120	720	
14.1 ... 14.4	43.6 ... 44.3	8.7 (10.4)	n_{2N}	r/min	300	200	200	125	75	60	60	50	37.5	37.5	25	20	1FT2106-6AF..-0.B0-Z
			M_{2N}	Nm	30	47	51	88	137	172	173	215	285	290	440	450	■■■ + ■■■ + . . .
			$M_{2.0}$	Nm	42.5	57	71	114	168	210	225	280	350	450	560	450	
			M_{2max}	Nm	132	176	220	350	520	650	690	870	1090	1280	1120	720	
SIMOTICS S-1FT2 Compact servomotors with 1 and 2-stage NRB160 planetary gearboxes																	
2.65 ... 2.78	9.99 ... 10.1	3.15 (4.05)	n_{2N}	r/min	300	250	200	150	100	75	75	60	50	37.5	37.5	20	1FT2205-2AC..-0.B0-Z
			M_{2N}	Nm	5.4	7.1	10.2	15.8	22.5	30.5	31	41	51	68	70	135	■■■ + ■■■ + . . .
			$M_{2.0}$	Nm	7.9	10.8	13.6	22	32.5	40.5	43.5	54	68	87	110	176	
			M_{2max}	Nm	29.5	40	50	80	120	150	160	200	250	320	400	630	

➥ Continued on the following page

Planetary gearbox data														
Gearbox type:			NRB160, 1-stage				NRB160, 2-stage							
1st order code			A51				A52							
	i		3	4	5	8	12	15	16	20	25	32	40	64
2nd order code			R03	R04	R05	R08	R12	R15	R16	R20	R25	R32	R40	R64
	$M_{2N,G}$	Nm	400	450	450	450	800	700	800	800	700	800	700	450
	$M_{2max,G}$	Nm	640	720	720	720	1280	1120	1280	1280	1120	1280	1120	720
	$M_{2Em.Off}$	Nm	800	900	900	900	1600	1400	1600	1600	1400	1600	1400	900
	$J_{1.G}$	kg cm²	11.999	6.912	5.188	3.726	10.087	9.913	6.059	4.695	4.632	3.549	3.524	3.502
	$\varphi_{2,G}$	'	6				9							

Color legend:		
	$M_{max,M} \times i < M_{2N,G}$	The motor and gearbox combination is fatigue-proof
	$M_{2N,G} < M_{max,M} \times i < M_{2max,G}$	Check acceleration and inertias, perform service life calculation if necessary
	$M_{max,M} \times i > M_{2max,G}$	The motor can destroy the gearbox, check acceleration and inertias, perform service life calculation if necessary

© Siemens 2024

Coaxial geared motors for servo converters with 400 V 3 AC line connection

Servomotor data

$M_{0,M}$	$M_{max,M}$	J_M ($J_{M,Br}$)
Nm	Nm	kg cm²

Selection data servomotors with planetary gearbox

Servomotors with planetary gearbox

SIMOTICS S-1FT2 Compact servomotors with 1 and 2-stage NRB160 planetary gearboxes (continued)

$M_{0,M}$	$M_{max,M}$	J_M ($J_{M,Br}$)															Servomotors with planetary gearbox
2.68 ... 2.81	9.99 ... 10.1	3.15 (4.05)	n_{2N}	r/min	300	250	250	150	100	75	75	75	60	50	37.5	25	1FT2205-2AF..-0.B0-Z
			M_{2N}	Nm	5.9	8.1	8.9	17.6	25	32	33.5	36.5	47	61	85	127	■■■ + ■■■ + ...
			$M_{2,0}$	Nm	8	10.9	13.8	22	33	41	44	55	69	88	111	178	
			M_{2max}	Nm	29.5	40	50	80	120	150	160	200	250	320	400	630	
2.62 ... 2.74	9.99 ... 10.1	3.15 (4.05)	n_{2N}	r/min	300	250	200	150	100	75	75	60	50	37.5	37.5	20	1FT2205-2AH..-0.B0-Z
			M_{2N}	Nm	5.8	7.7	10.5	16.9	24	31	32.5	42.5	53	70	77	139	■■■ + ■■■ + ...
			$M_{2,0}$	Nm	7.8	10.6	13.4	21.5	32	40.5	43	54	67	87	108	174	
			M_{2max}	Nm	29.5	40	50	80	120	150	160	200	250	320	400	630	
4.91 ... 5.02	17 ... 17.2	5.1 (6)	n_{2N}	r/min	300	250	200	150	100	75	75	60	50	37.5	30	20	1FT2205-4AF..-0.B0-Z
			M_{2N}	Nm	10.4	13.4	18.8	28	40	56	55	74	89	127	160	240	■■■ + ■■■ + ...
			$M_{2,0}$	Nm	14.7	19.8	24.5	40	59	74	78	98	123	158	197	315	
			M_{2max}	Nm	51	68	85	137	200	255	270	335	420	540	670	720	
4.94 ... 5.06	17 ... 17.2	7.8 (9.4)	n_{2N}	r/min	250	200	200	125	75	60	60	50	37.5	37.5	30	20	1FT2206-2AC..-0.B0-Z
			M_{2N}	Nm	12.2	16.5	17.5	31.5	52	65	67	85	110	119	150	220	■■■ + ■■■ + ...
			$M_{2,0}$	Nm	14.8	19.9	25	40	60	75	80	100	126	161	200	320	
			M_{2max}	Nm	51	68	85	137	200	255	270	335	420	540	670	720	
5.07 ... 5.18	17 ... 17.2	7.8 (9.4)	n_{2N}	r/min	300	250	200	150	100	75	75	60	50	37.5	37.5	20	1FT2206-2AF..-0.B0-Z
			M_{2N}	Nm	12.1	16.1	21	33	47.5	61	64	82	102	134	143	260	■■■ + ■■■ + ...
			$M_{2,0}$	Nm	15.2	20	25.5	41	61	76	81	102	127	163	200	325	
			M_{2max}	Nm	51	68	85	137	200	255	270	335	420	540	670	720	
4.9 ... 5.02	17 ... 17.2	7.8 (9.4)	n_{2N}	r/min	300	250	200	150	100	75	75	60	50	37.5	30	20	1FT2206-2AH..-0.B0-Z
			M_{2N}	Nm	10.8	13.8	19.4	28	40.5	57	56	76	91	129	161	240	■■■ + ■■■ + ...
			$M_{2,0}$	Nm	14.7	19.7	24.5	40	59	74	79	98	123	158	197	315	
			M_{2max}	Nm	51	68	85	137	200	255	270	335	420	540	670	720	
7.64 ... 7.79	25.7 ... 26	11.5 (13.1)	n_{2N}	r/min	300	200	200	125	75	75	60	50	50	37.5	30	20	1FT2206-3AB..-0.B0-Z
			M_{2N}	Nm	15.7	25	27.5	48.5	76	79	99	125	124	177	220	330	■■■ + ■■■ + ...
			$M_{2,0}$	Nm	23	30.5	38.5	62	91	114	122	152	191	240	305	450	
			M_{2max}	Nm	77	103	130	205	305	385	410	510	640	820	1020	720	
7.51 ... 7.66	25.7 ... 26	11.5 (13.1)	n_{2N}	r/min	250	200	200	125	75	75	60	50	37.5	37.5	30	20	1FT2206-3AF..-0.B0-Z
			M_{2N}	Nm	18.2	24	26	46.5	75	76	96	121	157	170	210	310	■■■ + ■■■ + ...
			$M_{2,0}$	Nm	22.5	30	38	61	90	112	120	150	187	240	300	450	
			M_{2max}	Nm	77	103	130	205	305	385	410	510	640	820	1020	720	
10.6 ... 10.7	36.3 ... 36.9	15.1 (16.8)	n_{2N}	r/min	250	200	150	100	75	60	50	37.5	37.5	30	25	15	1FT2206-4AC..-0.B0-Z
			M_{2N}	Nm	19.7	26	37	59	80	101	122	164	168	215	255	430	■■■ + ■■■ + ...
			$M_{2,0}$	Nm	31.5	42.5	53	85	127	159	169	210	265	340	420	450	
			M_{2max}	Nm	110	147	184	290	435	540	580	720	910	1160	1120	720	
10.3 ... 10.5	34.4 ... 34.9	15.1 (16.8)	n_{2N}	r/min	300	250	200	150	75	75	60	60	50	37.5	30	20	1FT2206-4AF..-0.B0-Z
			M_{2N}	Nm	23	29	39.5	57	106	110	137	143	170	240	300	445	■■■ + ■■■ + ...
			$M_{2,0}$	Nm	31	41.5	52	84	123	154	164	205	255	325	410	450	
			M_{2max}	Nm	104	139	174	275	410	510	550	680	860	1100	1120	720	

➥ Continued on the following page

Planetary gearbox data

Gearbox type:		NRB160, 1-stage				NRB160, 2-stage							
1st order code		A51				A52							
i		3	4	5	8	12	15	16	20	25	32	40	64
2nd order code		R03	R04	R05	R08	R12	R15	R16	R20	R25	R32	R40	R64
$M_{2N,G}$	Nm	400	450	450	450	800	700	800	800	700	800	700	450
$M_{2max,G}$	Nm	640	720	720	720	1280	1120	1280	1280	1120	1280	1120	720
$M_{2Em.Off}$	Nm	800	900	900	900	1600	1400	1600	1600	1400	1600	1400	900
$J_{1,G}$	kg cm²	11.999	6.912	5.188	3.726	10.087	9.913	6.059	4.695	4.632	3.549	3.524	3.502
$\varphi_{2,G}$	'	6				9							

Color legend:		
	$M_{max,M} \times i < M_{2N,G}$	The motor and gearbox combination is fatigue-proof
	$M_{2N,G} < M_{max,M} \times i < M_{2max,G}$	Check acceleration and inertias, perform service life calculation if necessary
	$M_{max,M} \times i > M_{2max,G}$	The motor can destroy the gearbox, check acceleration and inertias, perform service life calculation if necessary

© Siemens 2024

Coaxial geared motors for servo converters with 400 V 3 AC line connection

Servomotor data $M_{0,M}$ Nm	$M_{max,M}$ Nm	J_M ($J_{M,Br}$) kg cm²	Selection data servomotors with planetary gearbox														Servomotors with planetary gearbox
SIMOTICS S-1FT2 Compact servomotors with 1 and 2-stage NRB160 planetary gearboxes (continued)																	
9.83	34.4	15.1 (16.8)	n_{2N}	r/min	250	200	200	125	75	60	60	50	37.5	30	25	20	**1FT2206-4AH..-0.B0-Z**
... 10	... 34.9		M_{2N}	Nm	22.5	29.5	31.5	56	91	115	115	143	191	245	295	350	■■■ + ■■■ + . . .
			$M_{2,0}$	Nm	29.5	39.5	49.5	80	117	147	157	196	245	310	390	450	
			M_{2max}	Nm	104	139	174	275	410	510	550	680	860	1100	1120	720	
10.1	36.3	22.5 (25.8)	n_{2N}	r/min	250	200	200	125	75	60	60	50	37.5	30	25	20	**1FT2208-2AF..-0.B0-Z**
... 10.3	... 36.9		M_{2N}	Nm	25	33.5	35	62	98	123	126	158	205	260	320	370	■■■ + ■■■ + . . .
			$M_{2,0}$	Nm	30.5	40.5	51	82	121	151	161	200	250	320	400	450	
			M_{2max}	Nm	110	147	184	290	435	540	580	720	910	1160	1120	720	
16.1	48.9	29.6 (32.6)	n_{2N}	r/min	250	200	150	100	60	50	50	37.5	30	25	20	15	**1FT2208-3AB..-0.B0-Z**
... 16.3	... 49.7		M_{2N}	Nm	29.5	38.5	54	87	143	174	174	235	290	360	450	450	■■■ + ■■■ + . . .
			$M_{2,0}$	Nm	48.5	64	81	130	193	240	255	320	400	510	640	450	
			M_{2max}	Nm	149	198	245	395	580	730	780	980	1120	1280	1120	720	
15	48.9	29.6 (33)	n_{2N}	r/min	250	200	200	125	75	60	60	50	37.5	30	25	20	**1FT2208-3AC..-0.B0-Z**
... 15.3	... 49.7		M_{2N}	Nm	35	46	48.5	85	134	169	167	205	275	355	425	450	■■■ + ■■■ + . . .
			$M_{2,0}$	Nm	45.5	61	76	122	180	225	240	300	375	480	590	450	
			M_{2max}	Nm	149	198	245	395	580	730	780	980	1120	1280	1120	720	
14.9	48.9	29.6 (33)	n_{2N}	r/min	250	200	150	125	75	60	60	50	37.5	30	25	20	**1FT2208-3AF..-0.B0-Z**
... 15.2	... 49.7		M_{2N}	Nm	34	44.5	61	80	129	163	161	198	265	340	410	440	■■■ + ■■■ + . . .
			$M_{2,0}$	Nm	45	60	76	121	179	220	235	295	370	475	590	450	
			M_{2max}	Nm	149	198	245	395	580	730	780	980	1120	1280	1120	720	
19.4	63.5	38.8 (44.4)	n_{2N}	r/min	200	150	125	75	60	50	37.5	37.5	30	25	20	15	**1FT2208-4AB..-0.B0-Z**
... 19.8	... 64.5		M_{2N}	Nm	37	51	64	111	143	171	225	230	290	350	440	450	■■■ + ■■■ + . . .
			$M_{2,0}$	Nm	59	79	99	158	230	290	310	385	480	620	700	450	
			M_{2max}	Nm	193	255	320	510	760	950	1010	1270	1120	1280	1120	720	
18.7	63.5	38.8 (44.4)	n_{2N}	r/min	250	200	150	125	75	60	50	50	37.5	30	25	20	**1FT2208-4AC..-0.B0-Z**
... 19.1	... 64.5		M_{2N}	Nm	42	54	75	97	154	194	230	230	315	400	480	450	■■■ + ■■■ + . . .
			$M_{2,0}$	Nm	57	76	95	153	220	280	295	370	465	590	700	450	
			M_{2max}	Nm	193	255	320	510	760	950	1010	1270	1120	1280	1120	720	
18	63.5	38.8 (44.4)	n_{2N}	r/min	250	200	150	125	75	60	50	50	37.5	30	25	20	**1FT2208-4AF..-0.B0-Z**
... 18.3	... 64.5		M_{2N}	Nm	42.5	55	74	97	155	195	230	230	315	405	480	450	■■■ + ■■■ + . . .
			$M_{2,0}$	Nm	54	73	91	146	215	270	285	355	445	570	700	450	
			M_{2max}	Nm	193	255	320	510	760	950	1010	1270	1120	1280	1120	720	
22.7	77	48.1 (53.6)	n_{2N}	r/min	250	200	150	100	60	50	50	37.5	30	25	20	20	**1FT2208-5AB..-0.B0-Z**
... 23.3	... 78.3		M_{2N}	Nm	47	61	84	134	205	250	250	340	420	520	650	450	■■■ + ■■■ + . . .
			$M_{2,0}$	Nm	69	92	116	186	270	340	360	455	560	720	700	450	
			M_{2max}	Nm	230	310	390	620	920	1120	1230	1280	1120	1280	1120	720	
22.4	77	48.1 (53.6)	n_{2N}	r/min	250	200	150	100	60	50	50	37.5	30	25	20	20	**1FT2208-5AC..-0.B0-Z**
... 23	... 78.3		M_{2N}	Nm	47.5	61	85	135	210	255	250	340	425	520	650	450	■■■ + ■■■ + . . .
			$M_{2,0}$	Nm	68	91	114	183	270	335	355	445	560	710	700	450	
			M_{2max}	Nm	230	310	390	620	920	1120	1230	1280	1120	1280	1120	720	

Planetary gearbox data													
Gearbox type:			**NRB160, 1-stage**				**NRB160, 2-stage**						
1st order code			**A51**				**A52**						
	i		**3**	**4**	**5**	**8**	**12**	**15**	**16**	**20**	**25**	**32**	**40**	**64**
2nd order code			**R03**	**R04**	**R05**	**R08**	**R12**	**R15**	**R16**	**R20**	**R25**	**R32**	**R40**	**R64**
	$M_{2N,G}$	Nm	400	450	450	450	800	700	800	800	700	800	700	450
	$M_{2max,G}$	Nm	640	720	720	720	1280	1120	1280	1280	1120	1280	1120	720
	$M_{2Em.Off}$	Nm	800	900	900	900	1600	1400	1600	1600	1400	1600	1400	900
	$J_{1,G}$	kg cm²	11.999	6.912	5.188	3.726	10.087	9.913	6.059	4.695	4.632	3.549	3.524	3.502
	$\varphi_{2,G}$	'	6				9							

Color legend:		
	$M_{max,M} \times i < M_{2N,G}$	**The motor and gearbox combination is fatigue-proof**
	$M_{2N,G} < M_{max,M} \times i < M_{2max,G}$	**Check acceleration and inertias, perform service life calculation if necessary**
	$M_{max,M} \times i > M_{2max,G}$	**The motor can destroy the gearbox, check acceleration and inertias, perform service life calculation if necessary**

© Siemens 2024

Selection and ordering data

NRK050

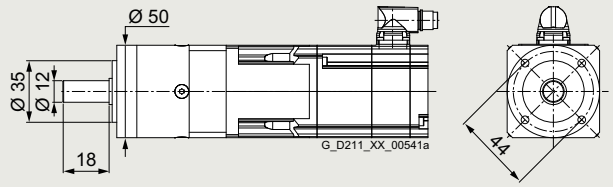

Permissible output shaft loads		
Average radial force for 20000 h	$F_{R,eq}$	800 N
Average axial force for 20000 h	$F_{A,eq}$	1000 N
Average radial force for 30000 h	$F_{R,eq}$	700 N
Average axial force for 30000 h	$F_{A,eq}$	800 N
Maximum radial force	$F_{R,max}$	1300 N
Maximum axial force	$F_{A,max}$	1000 N

Servomotor data			Selection data servomotors with planetary gearbox																Servomotors with planetary gearbox
$M_{0,M}$	$M_{max,M}$	J_M ($J_{M,Br}$)																	
Nm	Nm	kg cm²																	
SIMOTICS S-1FT2 High Dynamic servomotors with 1 and 2-stage NRK050 planetary gearboxes																			
0.5	1.86	0.1396	n_{2N}	r/min	750	600	600	375	375	300	300	250	200	200	150	125	100	100	60	1FT2103-2AH..-2.B0-Z
...	...	(0.1586)	M_{2N}	Nm	1.11	1.47	1.55	2.55	2.65	3.35	3.3	4.15	5.2	5.2	7.1	8.6	10.9	9.8	7.5	■■■ + ■■■ + . . .
0.509	1.89		$M_{2.0}$	Nm	1.5	2	2.5	3.5	4.05	5	4.5	6	7.5	8	10	12.5	15	13	7.5	
			M_{2max}	Nm	5.6	7.5	9.4	13.1	9.5	8	16.8	22	21	24	24	21	24	21	12	
0.964	3.9	0.1856	n_{2N}	r/min	750	600	600	375	375	375	300	250	200	200	150	150	125	100	–	1FT2103-4AH..-2.B0-Z
...	...	(0.2046)	M_{2N}	Nm	1.99	2.6	2.7	4.5	4.55	4.15	5.7	6.9	8.8	8.7	11.9	10.8	12.4	13	–	■■■ + ■■■ + . . .
0.978	3.96		$M_{2.0}$	Nm	2.9	3.85	4.85	6.8	6	5	8.6	11.5	13	15	15	13	15	13	–	
			M_{2max}	Nm	11.8	15.8	19.7	13.5	9.5	8	19	24	21	24	24	21	24	21	–	
SIMOTICS S-1FT2 Compact servomotors with 1 and 2-stage NRK050 planetary gearboxes																			
0.531	1.76	0.2466	n_{2N}	r/min	750	600	500	375	375	300	300	250	200	150	150	100	75	75	60	1FT2203-2AK..-2.B0-Z
...	...	(0.2666)	M_{2N}	Nm	1	1.32	1.63	2.25	2.2	2.85	2.75	3.3	4.15	5.5	5.6	8.5	11.2	11.5	7.5	■■■ + ■■■ + . . .
0.539	1.79		$M_{2.0}$	Nm	1.59	2.1	2.65	3.75	4.3	5	4.8	6.4	8	8.5	10.6	13	15	13	7.5	
			M_{2max}	Nm	5.3	7.1	8.9	12.4	9.5	8	15.9	21	21	24	24	21	24	21	12	
1.1	3.61	0.3966	n_{2N}	r/min	750	500	500	300	300	300	250	200	150	150	125	125	100	75	–	1FT2203-4AK..-2.B0-Z
...	...	(0.4166)	M_{2N}	Nm	1.96	3	3.05	5.3	5.3	4.7	6.6	8.3	11.1	11.1	13.4	11.4	14.2	13	–	■■■ + ■■■ + . . .
1.12	3.66		$M_{2.0}$	Nm	3.3	4.4	5.5	7.7	6	5	9.9	13.2	13	15	15	13	15	13	–	
			M_{2max}	Nm	10.9	14.6	18.2	13.5	9.5	8	19	24	21	24	24	21	24	21	–	

Planetary gearbox data																	
Gearbox type:			NRK050, 1-stage						NRK050, 2-stage								
1st order code			B11						B12								
	i		3	4	5	7	8	10	9	12	15	16	20	25	32	40	64
2nd order code			R03	R04	R05	R07	R08	R10	R09	R12	R15	R16	R20	R25	R32	R40	R64
	$M_{2N,G}$	Nm	11	15	13	8.5	6	5	12	15	13	15	15	13	15	13	7.5
	$M_{2max,G}$	Nm	17.5	24	21	13.5	9.5	8	19	24	21	24	24	21	24	21	12
	$M_{2Em.Off}$	Nm	22.5	30	36	26	27	27	33	40	36	40	40	36	40	36	27
	$J_{1,G}$	kg cm²	0.03	0.022	0.02	0.016	0.015	0.015	0.026	0.026	0.025	0.02	0.018	0.018	0.015	0.015	0.015
	$\varphi_{2,G}$	'	15						19								

Color legend:		
	$M_{max,M} \times i < M_{2N,G}$	The motor and gearbox combination is fatigue-proof
	$M_{2N,G} < M_{max,M} \times i < M_{2max,G}$	Check acceleration and inertias, perform service life calculation if necessary
	$M_{max,M} \times i > M_{2max,G}$	The motor can destroy the gearbox, check acceleration and inertias, perform service life calculation if necessary

© Siemens 2024

Coaxial geared motors for servo converters with 400 V 3 AC line connection

Selection and ordering data

NRK070

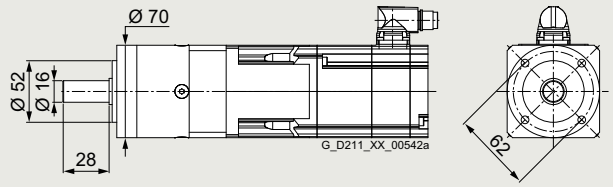

Permissible output shaft loads		
Average radial force for 20000 h	$F_{R,eq}$	1050 N
Average axial force for 20000 h	$F_{A,eq}$	1350 N
Average radial force for 30000 h	$F_{R,eq}$	900 N
Average axial force for 30000 h	$F_{A,eq}$	1000 N
Maximum radial force	$F_{R,max}$	1650 N
Maximum axial force	$F_{A,max}$	2100 N

Servomotor data			Selection data servomotors with planetary gearbox																	Servomotors with planetary gearbox
$M_{0,M}$ Nm	$M_{max,M}$ Nm	J_M ($J_{M,Br}$) kg cm²																			
SIMOTICS S-1FT2 High Dynamic servomotors with 1 and 2-stage NRK070 planetary gearboxes																					
0.5	1.84	0.093 (0.112)	n_{2N}	r/min	600	600	500	375	375	300	375	250	250	200	200	150	125	100	60	37.5	**1FT2103-2AH..-2.B0-Z**
...	...		M_{2N}	Nm	1.09	1.36	1.84	2.75	2.95	3.9	2.85	4.55	5.2	6.1	6.6	9.2	11.5	14.5	18	15	■■■ + ■■■ + . . .
0.543	1.87		$M_{2,0}$	Nm	1.5	2.05	2.6	3.7	4.25	5.3	4.75	6.4	8	8.5	10.7	13.5	17.3	21.5	18	15	
			M_{2max}	Nm	5.5	7.4	9.2	13	14.9	18.7	16.6	22	27.5	29.5	37	46	53	48	29	24	
0.997	3.89	0.139 (0.158)	n_{2N}	r/min	600	600	500	375	375	300	300	250	200	200	150	150	100	100	60	–	**1FT2103-4AH..-2.B0-Z**
...	...		M_{2N}	Nm	2.1	2.5	3.3	4.95	5.2	6.8	6.4	8.1	10.8	10.8	14.7	15.1	23	23	18	–	■■■ + ■■■ + . . .
1.03	3.94		$M_{2,0}$	Nm	2.95	4	5	7.1	8.2	10.3	9.1	12.2	15.3	16.4	20.5	25.5	32.5	30	18	–	
			M_{2max}	Nm	11.7	15.6	19.6	27.5	29	24	35	46.5	53	53	53	48	53	48	29	–	
1.15	3.6	0.371 (0.451)	n_{2N}	r/min	750	600	600	500	375	300	375	250	200	200	150	125	100	75	50	–	**1FT2104-4AF..-2.B0-Z**
...	...		M_{2N}	Nm	2.7	3.9	4.4	5.8	7.8	10	7.8	11.6	14.9	15.5	19.9	24.5	31.5	30	18	–	■■■ + ■■■ + . . .
1.19	3.64		$M_{2,0}$	Nm	3.45	4.65	5.8	8.2	9.4	11.8	10.5	14.1	17.7	18.9	23.5	29.5	33	30	18	–	
			M_{2max}	Nm	10.8	14.5	18.1	25	29	24	32	43	53	53	53	48	53	48	29	–	
1.15	3.7	0.371 (0.451)	n_{2N}	r/min	750	600	600	500	375	375	375	300	250	200	200	150	125	100	60	–	**1FT2104-4AK..-2.B0-Z**
...	...		M_{2N}	Nm	2.85	4.1	4.6	6.1	8.3	8.9	8.1	10.5	13.7	16.7	17.4	23.5	29	30	18	–	■■■ + ■■■ + . . .
1.18	3.74		$M_{2,0}$	Nm	3.4	4.6	5.8	8.2	9.4	11.8	10.5	14	17.6	18.7	23.5	29	33	30	18	–	
			M_{2max}	Nm	11.1	14.9	18.6	26	29	24	33	44	53	53	53	48	53	48	29	–	
2.26	7.24	0.581 (0.671)	n_{2N}	r/min	750	600	500	375	375	300	300	250	200	200	150	125	100	75	–	–	**1FT2104-5AF..-2.B0-Z**
...	...		M_{2N}	Nm	4.5	6.4	8.2	11.8	12.2	15	14.6	17.9	23.5	23	31.5	30	33	30	–	–	■■■ + ■■■ + . . .
2.29	7.33		$M_{2,0}$	Nm	6.7	9	11.3	15.9	18	15	20	27	33	33	33	30	33	30	–	–	
			M_{2max}	Nm	21.5	29	36.5	40	29	24	53	53	53	53	53	48	53	48	–	–	
2.24	7.34	0.581 (0.671)	n_{2N}	r/min	750	600	500	375	375	300	300	250	200	200	150	150	125	100	–	–	**1FT2104-5AK..-2.B0-Z**
...	...		M_{2N}	Nm	4.45	6.3	8.1	11.6	12	15	14.4	17.7	23	23	31	30	33	30	–	–	■■■ + ■■■ + . . .
2.27	7.43		$M_{2,0}$	Nm	6.7	9	11.3	15.8	18	15	20	27	33	33	33	30	33	30	–	–	
			M_{2max}	Nm	22	29.5	37	40	29	24	53	53	53	53	53	48	53	48	–	–	
3.01	9.66	0.781 (0.861)	n_{2N}	r/min	750	600	500	375	375	300	300	250	200	–	–	125	100	75	–	–	**1FT2104-6AF..-2.B0-Z**
...	...		M_{2N}	Nm	5.4	7.7	9.8	14.1	14.5	15	17	20.5	27	–	–	30	33	30	–	–	■■■ + ■■■ + . . .
3.04	9.79		$M_{2,0}$	Nm	9	12	15.1	21	18	15	27	33	33	–	–	30	33	30	–	–	
			M_{2max}	Nm	29	39	48	40	29	24	53	53	53	–	–	48	53	48	–	–	

➥ Continued on the following page

Planetary gearbox data																	
Gearbox type:		NRK070, 1-stage						NRK070, 2-stage									
1st order code		B21						B22									
	i	3	4	5	7	8	10	9	12	15	16	20	25	32	40	64	100
2nd order code		R03	R04	R05	R07	R08	R10	R09	R12	R15	R16	R20	R25	R32	R40	R64	R00
	$M_{2N,G}$ Nm	28	33	30	25	18	15	33	33	33	33	33	30	33	30	18	15
	$M_{2max,G}$ Nm	45	53	48	40	29	24	53	53	53	53	53	48	53	48	29	24
	$M_{2Em.Off}$ Nm	66	88	80	80	80	80	88	88	88	88	88	80	88	80	80	80
	$J_{1,G}$ kg cm²	0.174	0.117	0.095	0.078	0.074	0.069	0.126	0.121	0.078	0.087	0.076	0.075	0.067	0.066	0.066	0.064
	$\varphi_{2,G}$ '	10						12									

Color legend:		
	$M_{max,M} \times i < M_{2N,G}$	**The motor and gearbox combination is fatigue-proof**
	$M_{2N,G} < M_{max,M} \times i < M_{2max,G}$	**Check acceleration and inertias, perform service life calculation if necessary**
	$M_{max,M} \times i > M_{2max,G}$	**The motor can destroy the gearbox, check acceleration and inertias, perform service life calculation if necessary**

© Siemens 2024

Coaxial geared motors for servo converters with 400 V 3 AC line connection

Servomotor data			Selection data servomotors with planetary gearbox																		Servomotors with planetary gearbox
$M_{0,M}$	$M_{max,M}$	J_M ($J_{M,Br}$)																			
Nm	Nm	kg cm²																			
SIMOTICS S-1FT2 High Dynamic servomotors with 1 and 2-stage NRK070 planetary gearboxes (continued)																					
4.68 ... 4.73	14.5 ... 14.7	1.98 (2.82)	n_{2N}	r/min	600	500	375	300	300	300	–	–	150	150	150	125	100	75	–	–	1FT2105-4AF..-0.B0-Z
			M_{2N}	Nm	9.1	11.4	16.3	21	18	13.4	–	–	33	33	28	29	32.5	30	–	–	■■■ + ■■■ + ...
			$M_{2,0}$	Nm	14.1	18.8	23.5	25	18	15	–	–	33	33	33	30	33	30	–	–	
			M_{2max}	Nm	44	53	48	40	29	24	–	–	53	53	53	48	53	48	–	–	
4.71 ... 4.77	14.5 ... 14.7	1.98 (2.82)	n_{2N}	r/min	500	375	300	250	250	250	200	150	150	150	125	100	75	75	–	–	1FT2105-4AH..-0.B0-Z
			M_{2N}	Nm	9.6	13.5	17.4	21.5	18	15	26	33	32	30	33	30	33	30	–	–	■■■ + ■■■ + ...
			$M_{2,0}$	Nm	14.2	19	23.5	25	18	15	33	33	33	33	33	30	33	30	–	–	
			M_{2max}	Nm	44	53	48	40	29	24	53	53	53	53	53	48	53	48	–	–	
7.21 ... 7.3	23.2 ... 23.6	2.92 (3.77)	n_{2N}	r/min	500	375	–	300	300	250	200	200	150	150	125	100	–	–	–	–	1FT2105-6AF..-0.B0-Z
			M_{2N}	Nm	14	19.5	–	24	18	15	33	28	33	33	33	30	–	–	–	–	■■■ + ■■■ + ...
			$M_{2,0}$	Nm	21.5	29	–	25	18	15	33	33	33	33	33	30	–	–	–	–	
			M_{2max}	Nm	45	53	–	40	29	24	53	53	53	53	53	48	–	–	–	–	
SIMOTICS S-1FT2 Compact servomotors with 1 and 2-stage NRK070 planetary gearboxes																					
0.489 ... 0.533	1.74 ... 1.77	0.2 (0.22)	n_{2N}	r/min	600	600	500	375	375	300	300	250	200	200	150	125	100	75	60	37.5	1FT2203-2AK..-2.B0-Z
			M_{2N}	Nm	1.01	1.21	1.62	2.4	2.5	3.3	3	3.8	5.1	5	6.9	8.5	10.8	14.5	17	15	■■■ + ■■■ + ...
			$M_{2,0}$	Nm	1.46	2	2.55	3.6	4.15	5.2	4.65	6.2	7.8	8.4	10.5	13.2	16.9	21	18	15	
			M_{2max}	Nm	5.2	7	8.8	12.3	14.1	17.7	15.8	21	26	28	35	44	53	48	29	24	
1.11 ... 1.14	3.6 ... 3.64	0.35 (0.37)	n_{2N}	r/min	600	500	375	375	300	250	250	200	200	150	150	100	100	75	60	–	1FT2203-4AK..-2.B0-Z
			M_{2N}	Nm	2.25	3.1	4.35	4.85	6.3	7.9	7.6	9.9	10.3	13.8	14.2	21.5	21.5	29.5	18	–	■■■ + ■■■ + ...
			$M_{2,0}$	Nm	3.3	4.45	5.6	7.9	9.1	11.4	10.1	13.6	17	18.1	22.5	28	33	30	18	–	
			M_{2max}	Nm	10.8	14.5	18.1	25	29	24	32	43	53	53	53	48	53	48	29	–	
2.22 ... 2.25	6.85 ... 6.94	1.251 (1.331)	n_{2N}	r/min	600	600	500	375	300	300	300	200	200	150	150	125	100	75	–	–	1FT2204-5AF..-2.B0-Z
			M_{2N}	Nm	5.1	5.7	7.3	10.5	13.4	13.5	12.9	20	20.5	27	27.5	30	33	30	–	–	■■■ + ■■■ + ...
			$M_{2,0}$	Nm	6.6	8.9	11.1	15.6	17.9	15	20	26.5	33	33	33	30	33	30	–	–	
			M_{2max}	Nm	20.5	27.5	34.5	40	29	24	53	53	53	53	53	48	53	48	–	–	
2.23 ... 2.26	6.85 ... 6.94	1.251 (1.331)	n_{2N}	r/min	600	600	500	375	300	300	300	200	200	150	150	125	100	100	–	–	1FT2204-5AK..-2.B0-Z
			M_{2N}	Nm	5.2	5.8	7.5	10.7	13.6	13.8	13.2	20	21	27.5	28	30	33	30	–	–	■■■ + ■■■ + ...
			$M_{2,0}$	Nm	6.6	8.9	11.2	15.7	18	15	20	26.5	33	33	33	30	33	30	–	–	
			M_{2max}	Nm	20.5	27.5	34.5	40	29	24	53	53	53	53	53	48	53	48	–	–	
2.99 ... 3.02	9.18 ... 9.3	1.631 (1.711)	n_{2N}	r/min	600	500	500	375	300	300	250	200	200	–	150	125	100	75	–	–	1FT2204-6AF..-2.B0-Z
			M_{2N}	Nm	6.8	9	9.6	13.6	17.4	15	19.9	25.5	25.5	–	33	30	33	30	–	–	■■■ + ■■■ + ...
			$M_{2,0}$	Nm	8.9	12	15	21	18	15	26.5	33	33	–	33	30	33	30	–	–	
			M_{2max}	Nm	27.5	37	46	40	29	24	53	53	53	–	53	48	53	48	–	–	
2.84 ... 2.87	10.4 ... 10.5	3.42 (4.32)	n_{2N}	r/min	500	375	300	250	200	200	200	150	125	100	100	100	75	50	–	–	1FT2205-2AC..-0.B0-Z
			M_{2N}	Nm	5.4	7.9	10.3	12.9	16.4	15	16.4	22	27	33	32.5	26.5	33	30	–	–	■■■ + ■■■ + ...
			$M_{2,0}$	Nm	8.5	11.4	14.2	20	18	15	25.5	33	33	33	33	30	33	30	–	–	
			M_{2max}	Nm	31.5	42	48	40	29	24	53	53	53	53	53	48	53	48	–	–	
2.89 ... 2.93	10.4 ... 10.5	3.42 (4.32)	n_{2N}	r/min	500	500	375	300	250	250	200	150	150	125	125	100	75	75	–	–	1FT2205-2AF..-0.B0-Z
			M_{2N}	Nm	7	7.5	10.8	14	17.1	15	20.5	28	28.5	33	32	30	33	30	–	–	■■■ + ■■■ + ...
			$M_{2,0}$	Nm	8.6	11.6	14.5	20	18	15	26	33	33	33	33	30	33	30	–	–	
			M_{2max}	Nm	31.5	42	48	40	29	24	53	53	53	53	53	48	53	48	–	–	

➥ Continued on the following page

Planetary gearbox data																	
Gearbox type:		NRK070, 1-stage						NRK070, 2-stage									
1st order code		B21						B22									
	i	3	4	5	7	8	10	9	12	15	16	20	25	32	40	64	100
2nd order code		R03	R04	R05	R07	R08	R10	R09	R12	R15	R16	R20	R25	R32	R40	R64	R00
$M_{2N,G}$	Nm	28	33	30	25	18	15	33	33	33	33	33	30	33	30	18	15
$M_{2max,G}$	Nm	45	53	48	40	29	24	53	53	53	53	53	48	53	48	29	24
$M_{2Em.Off}$	Nm	66	88	80	80	80	80	88	88	88	88	88	80	88	80	80	80
$J_{1,G}$	kg cm²	0.174	0.117	0.095	0.078	0.074	0.069	0.126	0.121	0.078	0.087	0.076	0.075	0.067	0.066	0.066	0.064
$\varphi_{2,G}$	'	10						12									

Color legend:		
	$M_{max,M} \times i < M_{2N,G}$	The motor and gearbox combination is fatigue-proof
	$M_{2N,G} < M_{max,M} \times i < M_{2max,G}$	Check acceleration and inertias, perform service life calculation if necessary
	$M_{max,M} \times i > M_{2max,G}$	The motor can destroy the gearbox, check acceleration and inertias, perform service life calculation if necessary

© Siemens 2024

Coaxial geared motors for servo converters with 400 V 3 AC line connection

Servomotor data			Selection data servomotors with planetary gearbox																Servomotors with planetary gearbox
$M_{0,M}$	$M_{max,M}$	J_M ($J_{M,Br}$)																	
Nm	Nm	kg cm²																	
SIMOTICS S-1FT2 Compact servomotors with 1 and 2-stage NRK070 planetary gearboxes (continued)																			
2.87 ... 2.9	10.4 ... 10.5	3.42 (4.32)	n_{2N}	r/min	500	375	375	250	250	200	200	150	125	125	100	100	75	75	–	–	**1FT2205-2AH..-0.B0-Z**
			M_{2N}	Nm	6.1	8.7	9	14.4	14.4	15	18.2	24.5	30	29.5	33	30	33	24.5	–	–	■■■ + ■■■ + . . .
			$M_{2,0}$	Nm	8.6	11.5	14.4	20	18	15	25.5	33	33	33	33	30	33	30	–	–	
			M_{2max}	Nm	31.5	42	48	40	29	24	53	53	53	53	53	48	53	48	–	–	
4.93 ... 4.99	17.4 ... 17.7	5.37 (6.27)	n_{2N}	r/min	500	375	300	250	250	250	200	150	150	125	125	100	75	–	–	–	**1FT2205-4AF..-0.B0-Z**
			M_{2N}	Nm	9.3	13.1	16.9	21	18	14.2	25.5	33	30.5	33	31	30	33	–	–	–	■■■ + ■■■ + . . .
			$M_{2,0}$	Nm	14.9	19.9	24.5	25	18	15	33	33	33	33	33	30	33	–	–	–	
			M_{2max}	Nm	45	53	48	40	29	24	53	53	53	53	53	48	53	–	–	–	

Planetary gearbox data																		
Gearbox type:			**NRK070, 1-stage**						**NRK070, 2-stage**									
1st order code			**B21**						**B22**									
	i		**3**	**4**	**5**	**7**	**8**	**10**	**9**	**12**	**15**	**16**	**20**	**25**	**32**	**40**	**64**	**100**
2nd order code			**R03**	**R04**	**R05**	**R07**	**R08**	**R10**	**R09**	**R12**	**R15**	**R16**	**R20**	**R25**	**R32**	**R40**	**R64**	**R00**
	$M_{2N,G}$	Nm	28	33	30	25	18	15	33	33	33	33	33	30	33	30	18	15
	$M_{2max,G}$	Nm	45	53	48	40	29	24	53	53	53	53	53	48	53	48	29	24
	$M_{2Em.Off}$	Nm	66	88	80	80	80	80	88	88	88	88	88	80	88	80	80	80
	$J_{1,G}$	kg cm²	0.174	0.117	0.095	0.078	0.074	0.069	0.126	0.121	0.078	0.087	0.076	0.075	0.067	0.066	0.066	0.064
	$\varphi_{2,G}$	'	10						12									

Color legend:		
	$M_{max,M} \times i < M_{2N,G}$	**The motor and gearbox combination is fatigue-proof**
	$M_{2N,G} < M_{max,M} \times i < M_{2max,G}$	**Check acceleration and inertias, perform service life calculation if necessary**
	$M_{max,M} \times i > M_{2max,G}$	**The motor can destroy the gearbox, check acceleration and inertias, perform service life calculation if necessary**

© Siemens 2024

Selection and ordering data

NRK090

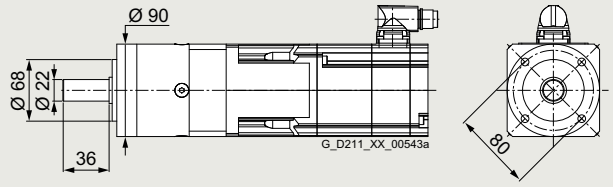

Permissible output shaft loads		
Average radial force for 20000 h	$F_{R,eq}$	1900 N
Average axial force for 20000 h	$F_{A,eq}$	2000 N
Average radial force for 30000 h	$F_{R,eq}$	1700 N
Average axial force for 30000 h	$F_{A,eq}$	1500 N
Maximum radial force	$F_{R,max}$	3100 N
Maximum axial force	$F_{A,max}$	3800 N

Servomotor data			Selection data servomotors with planetary gearbox																		Servomotors with planetary gearbox
$M_{0,M}$ Nm	$M_{max,M}$ Nm	J_M ($J_{M,Br}$) kg cm²																			
SIMOTICS S-1FT2 High Dynamic servomotors with 1 and 2-stage NRK090 planetary gearboxes																					
0.445 ... 0.515	1.78 ... 1.83	0.093 (0.112)	n_{2N}	r/min	600	500	500	375	375	300	300	250	200	200	150	150	125	100	60	37.5	**1FT2103-2AH..-0.B0-Z**
			M_{2N}	Nm	0.86	1.28	1.54	2.4	2.6	3.5	2.95	3.85	4.95	5.2	7.2	7.7	10	12.8	21.5	34.5	■■■ + ■■■ + . . .
			$M_{2.0}$	Nm	1.33	1.86	2.35	3.4	3.95	5	4.45	6	7.5	8	10.1	12.7	16.3	20.5	32.5	38	
			M_{2max}	Nm	5.3	7.2	9	12.7	14.6	18.3	16.3	21.5	27	29	36	45.5	58	73	80	61	
0.998 ... 1.05	3.86 ... 3.9	0.139 (0.158)	n_{2N}	r/min	600	500	500	375	300	300	300	200	200	200	150	125	100	75	50	37.5	**1FT2103-4AH..-0.B0-Z**
			M_{2N}	Nm	1.96	2.75	3.05	4.85	6.2	6.7	6.1	9.4	9.8	10	14.7	17.9	23.5	31	48.5	38	■■■ + ■■■ + . . .
			$M_{2.0}$	Nm	2.95	4.05	5.1	7.2	8.3	10.5	9.3	12.4	15.6	16.6	20.5	26	33.5	41.5	50	38	
			M_{2max}	Nm	11.5	15.4	19.3	27	31	38.5	34.5	46	57	61	77	96	123	131	80	61	
1.1 ... 1.15	3.56 ... 3.6	0.35 (0.43)	n_{2N}	r/min	750	600	500	375	375	300	300	250	200	200	150	125	100	75	50	30	**1FT2104-4AF..-2.B0-Z**
			M_{2N}	Nm	2.3	3.5	4.65	6.8	7.5	9.6	8.4	10.9	13.8	14.5	19.2	23.5	30.5	39.5	50	38	■■■ + ■■■ + . . .
			$M_{2.0}$	Nm	3.25	4.45	5.6	7.9	9.1	11.4	10.2	13.7	17.1	18.3	22.5	28.5	36.5	46	50	38	
			M_{2max}	Nm	10.6	14.3	17.9	25	28.5	36	32	42.5	53	57	71	89	114	131	80	61	
1.09 ... 1.15	3.66 ... 3.7	0.35 (0.43)	n_{2N}	r/min	600	600	500	375	375	300	300	250	200	200	150	150	125	100	60	37.5	**1FT2104-4AK..-2.B0-Z**
			M_{2N}	Nm	3.05	3.7	5	7.4	8.1	10.4	9.2	11.9	15.1	15.8	20.5	21.5	27.5	35	50	38	■■■ + ■■■ + . . .
			$M_{2.0}$	Nm	3.25	4.4	5.6	7.9	9.1	11.4	10.1	13.6	17	18.2	22.5	28.5	36.5	45.5	50	38	
			M_{2max}	Nm	10.9	14.6	18.4	25.5	29.5	37	33	44	55	58	73	91	117	131	80	61	
2.2 ... 2.25	7.19 ... 7.29	0.56 (0.65)	n_{2N}	r/min	600	500	500	375	300	300	300	200	150	150	150	125	100	75	50	30	**1FT2104-5AF..-2.B0-Z**
			M_{2N}	Nm	5.4	7.3	8	12	15.3	16.1	14.7	22.5	30	31	32.5	39	51	69	50	38	■■■ + ■■■ + . . .
			$M_{2.0}$	Nm	6.6	8.8	11.1	15.6	17.9	22	20	26.5	33	35.5	44.5	55	71	82	50	38	
			M_{2max}	Nm	21.5	29	36	50	58	61	65	86	108	115	144	131	144	131	80	61	
2.19 ... 2.23	7.29 ... 7.39	0.56 (0.65)	n_{2N}	r/min	600	500	500	375	300	300	300	200	150	150	150	125	100	75	60	37.5	**1FT2104-5AK..-2.B0-Z**
			M_{2N}	Nm	5.3	7.2	7.8	11.8	15	15.8	14.4	22	29.5	30.5	32	38.5	50	68	50	38	■■■ + ■■■ + . . .
			$M_{2.0}$	Nm	6.5	8.8	11	15.5	17.8	22	19.9	26.5	33	35	44	55	71	82	50	38	
			M_{2max}	Nm	22	29	36.5	51	59	61	65	87	109	117	144	131	144	131	80	61	
2.95 ... 3	9.62 ... 9.75	0.76 (0.84)	n_{2N}	r/min	600	500	500	375	300	250	250	200	150	150	125	100	100	75	50	–	**1FT2104-6AF..-2.B0-Z**
			M_{2N}	Nm	6.6	8.9	9.6	14.3	18.3	22.5	20.5	27	35.5	36.5	45.5	57	59	80	50	–	■■■ + ■■■ + . . .
			$M_{2.0}$	Nm	8.8	11.8	14.8	20.5	23.5	29.5	26.5	35.5	44.5	47.5	59	74	90	82	50	–	
			M_{2max}	Nm	29	38.5	48.5	68	77	61	86	115	131	144	144	131	144	131	80	–	

➥ Continued on the following page

Planetary gearbox data																	
Gearbox type:			NRK090, 1-stage						NRK090, 2-stage								
1st order code			B31						B32								
	i		3	4	5	7	8	10	9	12	15	16	20	25	32	40	64	100
2nd order code			R03	R04	R05	R07	R08	R10	R09	R12	R15	R16	R20	R25	R32	R40	R64	R00
	$M_{2N,G}$	Nm	85	90	82	65	50	38	97	90	82	90	90	82	90	82	50	38
	$M_{2max,G}$	Nm	136	144	131	104	80	61	155	144	131	144	144	131	144	131	80	61
	$M_{2Em.Off}$	Nm	180	240	220	178	190	200	260	240	220	240	240	220	240	220	190	200
	$J_{1.G}$	kg cm²	0.789	0.557	0.476	0.409	0.394	0.374	0.625	0.601	0.592	0.453	0.41	0.406	0.368	0.366	0.367	0.356
	$\varphi_{2,G}$	'	7						9									

Color legend:		
	$M_{max,M} \times i < M_{2N,G}$	The motor and gearbox combination is fatigue-proof
	$M_{2N,G} < M_{max,M} \times i < M_{2max,G}$	Check acceleration and inertias, perform service life calculation if necessary
	$M_{max,M} \times i > M_{2max,G}$	The motor can destroy the gearbox, check acceleration and inertias, perform service life calculation if necessary

8 1

© Siemens 2024

Coaxial geared motors for servo converters with 400 V 3 AC line connection

Servomotor data			Selection data servomotors with planetary gearbox																	Servomotors with planetary gearbox
$M_{0,M}$	$M_{max,M}$	J_M ($J_{M,Br}$)																		
Nm	Nm	kg cm²																		
SIMOTICS S-1FT2 High Dynamic servomotors with 1 and 2-stage NRK090 planetary gearboxes (continued)																				
4.67 ... 4.72	14.5 ... 14.7	1.71 (2.55)	n_{2N}	r/min	600	500	375	300	300	250	250	200	150	125	125	100	100	75	50	–	1FT2105-4AF..-0.B0-Z
			M_{2N}	Nm	10.7	13.9	19.6	26.5	27	33	30.5	38	51	62	63	78	69	82	50	–	■■■ + ■■■ + . . .
			$M_{2,0}$	Nm	14	18.7	23.5	33	37.5	38	42	56	70	74	90	82	90	82	50	–	
			M_{2max}	Nm	44	58	73	102	80	61	130	144	131	144	144	131	144	131	80	–	
4.7 ... 4.76	14.5 ... 14.7	1.71 (2.55)	n_{2N}	r/min	500	500	375	300	250	200	200	150	125	125	100	100	75	75	60	–	1FT2105-4AH..-0.B0-Z
			M_{2N}	Nm	11.4	11.9	17.5	23	28.5	36.5	34	45.5	55	56	71	68	90	79	41.5	–	■■■ + ■■■ + . . .
			$M_{2,0}$	Nm	14.1	18.9	23.5	33	38	38	42	56	70	75	90	82	90	82	50	–	
			M_{2max}	Nm	44	58	73	102	80	61	130	144	131	144	144	131	144	131	80	–	
7.4 ... 7.52	23.2 ... 23.6	2.65 (3.5)	n_{2N}	r/min	500	375	375	300	250	250	200	150	125	125	100	100	75	75	–	–	1FT2105-6AF..-0.B0-Z
			M_{2N}	Nm	16.5	23	24.5	32.5	39.5	37	46	62	74	74	90	82	90	82	–	–	■■■ + ■■■ + . . .
			$M_{2,0}$	Nm	22	29.5	37.5	52	50	38	66	89	82	90	90	82	90	82	–	–	
			M_{2max}	Nm	70	94	117	104	80	61	155	144	131	144	144	131	144	131	–	–	
7.47 ... 7.58	25.1 ... 25.5	5.476 (7.176)	n_{2N}	r/min	375	375	300	200	200	200	150	125	100	100	100	75	60	60	–	–	1FT2106-3AF..-0.B0-Z
			M_{2N}	Nm	18.6	19.9	25.5	40	40.5	36.5	51	62	78	77	68	82	90	80	–	–	■■■ + ■■■ + . . .
			$M_{2,0}$	Nm	22.5	30	37.5	53	50	38	67	90	82	90	90	82	90	82	–	–	
			M_{2max}	Nm	76	101	127	104	80	61	155	144	131	144	143	131	144	131	–	–	
9.67 ... 9.82	31.8 ... 32.4	6.876 (8.476)	n_{2N}	r/min	375	300	250	200	200	200	–	125	100	100	100	75	60	50	–	–	1FT2106-4AF..-0.B0-Z
			M_{2N}	Nm	23	30	36.5	48	47	37	–	71	82	86	67	82	90	82	–	–	■■■ + ■■■ + . . .
			$M_{2,0}$	Nm	29	39	49	65	50	38	–	90	82	90	90	82	90	82	–	–	
			M_{2max}	Nm	97	129	131	104	80	61	–	144	131	144	144	131	144	131	–	–	
SIMOTICS S-1FT2 Compact servomotors with 1 and 2-stage NRK090 planetary gearboxes																				
0.432 ... 0.502	1.68 ... 1.74	0.2 (0.22)	n_{2N}	r/min	500	500	375	375	300	250	250	200	150	150	150	100	100	75	50	30	1FT2203-2AK..-0.B0-Z
			M_{2N}	Nm	0.92	1.14	1.73	2	2.7	3.45	3	3.95	5.4	5.6	6	9.1	9.6	13.2	19.8	34	■■■ + ■■■ + . . .
			$M_{2,0}$	Nm	1.29	1.8	2.3	3.3	3.85	4.85	4.3	5.8	7.3	7.8	9.8	12.4	15.9	19.9	32	38	
			M_{2max}	Nm	5	6.8	8.5	12	13.8	17.3	15.4	20.5	25.5	27.5	34.5	43	55	69	80	61	
1.05 ... 1.11	3.56 ... 3.6	0.35 (0.37)	n_{2N}	r/min	500	500	375	300	300	250	250	200	150	150	150	125	100	75	50	37.5	1FT2203-4AK..-0.B0-Z
			M_{2N}	Nm	2.55	3	4.4	6.2	6.6	8.4	7.6	10	13.1	13.6	14.5	17.3	23	31	47	38	■■■ + ■■■ + . . .
			$M_{2,0}$	Nm	3.15	4.25	5.4	7.6	8.7	11	9.8	13.1	16.5	17.6	22	27.5	35	44	50	38	
			M_{2max}	Nm	10.6	14.3	17.9	25	28.5	36	32	42.5	53	57	71	89	114	131	80	61	
2.16 ... 2.21	6.8 ... 6.9	1.23 (1.31)	n_{2N}	r/min	600	500	375	375	300	250	250	200	150	150	125	100	75	75	50	30	1FT2204-5AF..-2.B0-Z
			M_{2N}	Nm	5.1	6.8	9.7	10.7	14.1	17.6	16.4	21	28	29	36	45	61	61	50	38	■■■ + ■■■ + . . .
			$M_{2,0}$	Nm	6.4	8.7	10.9	15.4	17.6	22	19.6	26	32.5	35	43.5	54	70	82	50	38	
			M_{2max}	Nm	20.5	27.5	34	48	55	61	61	82	102	109	136	131	144	131	80	61	
2.17 ... 2.22	6.8 ... 6.9	1.23 (1.31)	n_{2N}	r/min	600	500	375	300	300	250	250	200	150	150	125	100	75	75	60	37.5	1FT2204-5AK..-2.B0-Z
			M_{2N}	Nm	5.2	7	9.9	13.7	14.4	18	16.8	21.5	28.5	29.5	36.5	46	62	62	50	38	■■■ + ■■■ + . . .
			$M_{2,0}$	Nm	6.5	8.7	10.9	15.4	17.7	22	19.7	26	33	35	44	55	70	82	50	38	
			M_{2max}	Nm	20.5	27.5	34	48	55	61	61	82	102	109	136	131	144	131	80	61	
2.94 ... 2.98	9.13 ... 9.26	1.61 (1.69)	n_{2N}	r/min	600	500	375	300	300	250	250	200	150	150	125	100	75	75	50	–	1FT2204-6AF..-2.B0-Z
			M_{2N}	Nm	6.9	9.2	13	17.9	18.6	23	21	27	36.5	37	46	57	78	76	50	–	■■■ + ■■■ + . . .
			$M_{2,0}$	Nm	8.8	11.8	14.8	20.5	23.5	29.5	26.5	35	44	47	59	73	90	82	50	–	
			M_{2max}	Nm	27.5	36.5	46	64	74	61	82	110	131	144	144	131	144	131	80	–	

➥ Continued on the following page

Planetary gearbox data																	
Gearbox type:		NRK090, 1-stage						NRK090, 2-stage									
1st order code		B31						B32									
	i	3	4	5	7	8	10	9	12	15	16	20	25	32	40	64	100
2nd order code		R03	R04	R05	R07	R08	R10	R09	R12	R15	R16	R20	R25	R32	R40	R64	R00
	$M_{2N,G}$ Nm	85	90	82	65	50	38	97	90	82	90	90	82	90	82	50	38
	$M_{2max,G}$ Nm	136	144	131	104	80	61	155	144	131	144	144	131	144	131	80	61
	$M_{2Em.Off}$ Nm	180	240	220	178	190	200	260	240	220	240	240	220	240	220	190	200
	$J_{1,G}$ kg cm²	0.789	0.557	0.476	0.409	0.394	0.374	0.625	0.601	0.592	0.453	0.41	0.406	0.368	0.366	0.367	0.356
	$\varphi_{2,G}$ '	7						9									

Color legend:

	$M_{max,M} \times i < M_{2N,G}$	The motor and gearbox combination is fatigue-proof
	$M_{2N,G} < M_{max,M} \times i < M_{2max,G}$	Check acceleration and inertias, perform service life calculation if necessary
	$M_{max,M} \times i > M_{2max,G}$	The motor can destroy the gearbox, check acceleration and inertias, perform service life calculation if necessary

© Siemens 2024

Coaxial geared motors for servo converters with 400 V 3 AC line connection

Servomotor data			Selection data servomotors with planetary gearbox																	Servomotors with planetary gearbox
$M_{0,M}$	$M_{max,M}$	J_M ($J_{M,Br}$)																		
Nm	Nm	kg cm²																		
SIMOTICS S-1FT2 Compact servomotors with 1 and 2-stage NRK090 planetary gearboxes (continued)																				
2.94	10.4	3.15	n_{2N}	r/min	500	375	375	300	250	200	200	150	150	125	100	100	75	50	37.5	–	1FT2205-2AC..-0.B0-Z
...	...	(4.05)	M_{2N}	Nm	6.7	9.6	10.5	14.1	17.5	22.5	21	28	29	36	46	45	63	82	50	–	■■■ + ■■■ + ...
2.98	10.5		$M_{2,0}$	Nm	8.8	11.8	14.8	20.5	23.5	29.5	26	35	44	47	58	73	90	82	49.5	–	
			M_{2max}	Nm	31.5	42	52	73	80	61	94	125	131	144	144	131	144	131	80	–	
2.98	10.4	3.15	n_{2N}	r/min	600	500	375	300	300	250	250	200	150	150	125	100	75	75	50	–	1FT2205-2AF..-0.B0-Z
...	...	(4.05)	M_{2N}	Nm	6.9	9.1	12.6	17.5	18.2	22.5	21	26.5	36	36.5	45	56	77	73	50	–	■■■ + ■■■ + ...
3.02	10.5		$M_{2,0}$	Nm	8.9	11.9	15	21	24	30	26.5	35.5	44.5	47.5	59	74	90	82	50	–	
			M_{2max}	Nm	31.5	42	52	73	80	61	94	125	131	144	144	131	144	131	80	–	
2.94	10.4	3.15	n_{2N}	r/min	500	500	375	300	250	200	250	200	150	125	100	100	75	60	50	–	1FT2205-2AH..-0.B0-Z
...	...	(4.05)	M_{2N}	Nm	7.2	7.7	11.4	15.4	18.9	24	18.4	22.5	31.5	38	48	48.5	68	82	50	–	■■■ + ■■■ + ...
2.99	10.5		$M_{2,0}$	Nm	8.8	11.8	14.8	20.5	23.5	29.5	26.5	35	44	47	59	73	90	82	50	–	
			M_{2max}	Nm	31.5	42	52	73	80	61	94	125	131	144	144	131	144	131	80	–	
5.06	17.4	5.1	n_{2N}	r/min	500	375	375	300	250	200	200	150	125	125	100	100	75	75	–	–	1FT2205-4AF..-0.B0-Z
...	...	(6)	M_{2N}	Nm	11.1	15.7	16.9	22	27.5	35	33	44.5	54	54	68	63	89	69	–	–	■■■ + ■■■ + ...
5.13	17.6		$M_{2,0}$	Nm	15.2	20	25.5	35.5	41	38	45.5	60	76	81	90	82	90	82	–	–	
			M_{2max}	Nm	52	70	88	104	80	61	155	144	131	144	144	131	144	131	–	–	
5.27	17.3	8.676	n_{2N}	r/min	375	300	250	200	150	125	150	100	75	75	60	60	50	50	30	–	1FT2206-2AC..-0.B0-Z
...	...	(10.276)	M_{2N}	Nm	10.8	14.3	17.7	22.5	31	37	31.5	47	62	63	79	78	89	61	50	–	■■■ + ■■■ + ...
5.3	17.6		$M_{2,0}$	Nm	15.8	21	26	37	42	38	47.5	63	79	84	90	82	90	82	50	–	
			M_{2max}	Nm	52	70	87	104	80	61	155	144	131	144	144	131	144	131	80	–	
5.19	17.3	8.676	n_{2N}	r/min	500	375	300	200	200	200	200	125	100	100	75	75	60	50	–	–	1FT2206-2AF..-0.B0-Z
...	...	(10.276)	M_{2N}	Nm	10.6	15.3	20	30.5	31.5	28.5	29	49.5	62	62	84	79	90	82	–	–	■■■ + ■■■ + ...
5.27	17.6		$M_{2,0}$	Nm	15.6	20.5	26	36.5	42	38	46.5	62	78	83	90	82	90	82	–	–	
			M_{2max}	Nm	52	70	87	104	80	61	155	144	131	144	144	131	144	131	–	–	
5.05	17.3	8.676	n_{2N}	r/min	375	300	250	200	200	150	150	125	100	100	75	60	60	50	–	–	1FT2206-2AH..-0.B0-Z
...	...	(10.276)	M_{2N}	Nm	12	15.8	19.7	25.5	25	35	34.5	41.5	52	51	71	82	77	81	–	–	■■■ + ■■■ + ...
5.12	17.6		$M_{2,0}$	Nm	15.2	20	25	35.5	40.5	38	45.5	60	75	80	90	82	90	82	–	–	
			M_{2max}	Nm	52	70	87	104	80	61	155	144	131	144	144	131	144	131	–	–	
7.54	26	12.38	n_{2N}	r/min	375	300	250	200	200	150	150	125	100	100	75	60	50	37.5	–	–	1FT2206-3AB..-0.B0-Z
...	...	(13.976)	M_{2N}	Nm	16.7	22	27	35.5	35	38	46.5	55	69	68	89	82	90	82	–	–	■■■ + ■■■ + ...
7.66	26.5		$M_{2,0}$	Nm	22.5	30.5	38	53	50	38	68	90	82	90	90	82	90	82	–	–	
			M_{2max}	Nm	79	105	131	104	80	61	155	144	131	144	144	131	144	131	–	–	
7.41	26	12.38	n_{2N}	r/min	375	300	250	200	150	150	150	100	100	75	75	75	60	50	–	–	1FT2206-3AF..-0.B0-Z
...	...	(13.976)	M_{2N}	Nm	15.9	20.5	25.5	33	44	38	44	65	64	87	87	70	87	82	–	–	■■■ + ■■■ + ...
7.52	26.5		$M_{2,0}$	Nm	22	30	37.5	52	50	38	66	89	82	90	90	82	90	82	–	–	
			M_{2max}	Nm	79	105	131	104	80	61	155	144	131	144	144	131	144	131	–	–	
10.3	36.7	15.98	n_{2N}	r/min	300	250	200	150	125	125	100	75	75	75	60	50	37.5	37.5	–	–	1FT2206-4AC..-0.B0-Z
...	...	(17.676)	M_{2N}	Nm	18.9	23	29	40	48.5	38	61	81	79	76	90	82	90	82	–	–	■■■ + ■■■ + ...
10.5	37.3		$M_{2,0}$	Nm	31	41.5	52	65	50	38	94	90	82	90	90	82	90	82	–	–	
			M_{2max}	Nm	111	144	131	104	80	61	155	144	131	144	144	131	144	131	–	–	

➥ Continued on the following page

Planetary gearbox data																	
Gearbox type:			NRK090, 1-stage						NRK090, 2-stage								
1st order code			B31						B32								
	i		3	4	5	7	8	10	9	12	15	16	20	25	32	40	64	100
2nd order code			R03	R04	R05	R07	R08	R10	R09	R12	R15	R16	R20	R25	R32	R40	R64	R00
	$M_{2N,G}$	Nm	85	90	82	65	50	38	97	90	82	90	90	82	90	82	50	38
	$M_{2max,G}$	Nm	136	144	131	104	80	61	155	144	131	144	144	131	144	131	80	61
	$M_{2Em.Off}$	Nm	180	240	220	178	190	200	260	240	220	240	240	220	240	220	190	200
	$J_{1,G}$	kg cm²	0.789	0.557	0.476	0.409	0.394	0.374	0.625	0.601	0.592	0.453	0.41	0.406	0.368	0.366	0.367	0.356
	$\varphi_{2,G}$	'	7						9									

Color legend:		
	$M_{max,M} \times i < M_{2N,G}$	The motor and gearbox combination is fatigue-proof
	$M_{2N,G} < M_{max,M} \times i < M_{2max,G}$	Check acceleration and inertias, perform service life calculation if necessary
	$M_{max,M} \times i > M_{2max,G}$	The motor can destroy the gearbox, check acceleration and inertias, perform service life calculation if necessary

© Siemens 2024

Coaxial geared motors for servo converters with 400 V 3 AC line connection

Servomotor data			Selection data servomotors with planetary gearbox																Servomotors with planetary gearbox
$M_{0,M}$	$M_{max,M}$	J_M ($J_{M,Br}$)																	
Nm	Nm	kg cm²																	
SIMOTICS S-1FT2 Compact servomotors with 1 and 2-stage NRK090 planetary gearboxes (continued)																			
10.1	34.7	15.976	n_{2N}	r/min	375	300	250	200	200	200	–	125	100	100	100	75	60	50	–	–	**1FT2206-4AF..-0.B0-Z**
...	...	(17.676)	M_{2N}	Nm	23.5	30.5	37.5	49	48.5	38	–	73	82	88	70	82	90	82	–	–	■■■ + ■■■ + . . .
10.3	35.3		$M_{2,0}$	Nm	30.5	41	51	65	50	38	–	90	82	90	90	82	90	82	–	–	
			M_{2max}	Nm	106	141	131	104	79	61	–	144	131	144	144	131	144	131	–	–	
9.7	34.7	15.976	n_{2N}	r/min	375	300	250	150	150	150	125	100	100	75	75	60	60	50	–	–	**1FT2206-4AH..-0.B0-Z**
...	...	(17.676)	M_{2N}	Nm	18.3	23.5	28.5	49	49.5	38	59	73	68	90	90	82	77	80	–	–	■■■ + ■■■ + . . .
9.86	35.3		$M_{2,0}$	Nm	29.5	39	49	65	50	38	87	90	82	90	90	82	90	82	–	–	
			M_{2max}	Nm	106	141	131	104	79	61	155	144	131	144	144	131	144	131	–	–	

Planetary gearbox data																	
Gearbox type:			**NRK090, 1-stage**						**NRK090, 2-stage**								
1st order code			**B31**						**B32**								
	i		**3**	**4**	**5**	**7**	**8**	**10**	**9**	**12**	**15**	**16**	**20**	**25**	**32**	**40**	**64**	**100**
2nd order code			**R03**	**R04**	**R05**	**R07**	**R08**	**R10**	**R09**	**R12**	**R15**	**R16**	**R20**	**R25**	**R32**	**R40**	**R64**	**R00**
	$M_{2N,G}$	Nm	85	90	82	65	50	38	97	90	82	90	90	82	90	82	50	38
	$M_{2max,G}$	Nm	136	144	131	104	80	61	155	144	131	144	144	131	144	131	80	61
	$M_{2Em.Off}$	Nm	180	240	220	178	190	200	260	240	220	240	240	220	240	220	190	200
	$J_{1,G}$	kg cm²	0.789	0.557	0.476	0.409	0.394	0.374	0.625	0.601	0.592	0.453	0.41	0.406	0.368	0.366	0.367	0.356
	$\varphi_{2,G}$	'	7						9									

Color legend:		
	$M_{max,M} \times i < M_{2N,G}$	**The motor and gearbox combination is fatigue-proof**
	$M_{2N,G} < M_{max,M} \times i < M_{2max,G}$	**Check acceleration and inertias, perform service life calculation if necessary**
	$M_{max,M} \times i > M_{2max,G}$	**The motor can destroy the gearbox, check acceleration and inertias, perform service life calculation if necessary**

© Siemens 2024

Selection and ordering data

NRK120

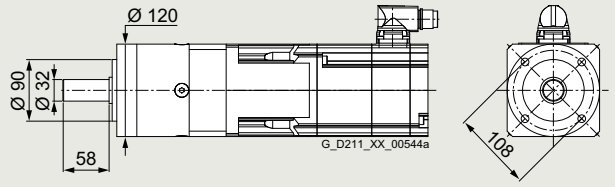

Permissible output shaft loads		
Average radial force for 20000 h	$F_{R,eq}$	2500 N
Average axial force for 20000 h	$F_{A,eq}$	4000 N
Average radial force for 30000 h	$F_{R,eq}$	2150 N
Average axial force for 30000 h	$F_{A,eq}$	3000 N
Maximum radial force	$F_{R,max}$	4000 N
Maximum axial force	$F_{A,max}$	5900 N

Servomotor data			Selection data servomotors with planetary gearbox																	Servomotors with planetary gearbox
$M_{0,M}$ Nm	$M_{max,M}$ Nm	J_M ($J_{M,Br}$) kg cm²																		
SIMOTICS S-1FT2 High Dynamic servomotors with 1 and 2-stage NRK120 planetary gearboxes																				
0.318	1.66	0.093 (0.112)	n_{2N}	r/min	375	300	300	300	250	250	200	150	125	125	125	100	75	75	37.5	30	1FT2103-2AH..-0.B0-Z
...	...		M_{2N}	Nm	0.55	0.98	1.29	1.73	2.2	2.45	2.35	3.4	4.35	4.55	5.3	6.8	10.1	10.6	21	28.5	■■■ + ■■■ + . . .
0.449	1.76		$M_{2.0}$	Nm	0.95	1.41	1.87	2.75	3.25	4.15	3.65	5	6.4	6.8	8.6	10.9	14.1	17.7	28.5	44.5	
			M_{2max}	Nm	4.95	6.7	8.5	12.1	13.9	17.5	15.5	20.5	26	27.5	34.5	43.5	56	70	112	152	
0.941	3.73	0.139 (0.158)	n_{2N}	r/min	375	375	300	250	250	200	200	150	125	125	125	100	75	60	37.5	25	1FT2103-4AH..-0.B0-Z
...	...		M_{2N}	Nm	2	2.55	3.7	5.3	5.7	7.7	6.5	8.9	11.2	11.8	12.7	16.5	24	30	49	76	■■■ + ■■■ + . . .
1.06	3.82		$M_{2.0}$	Nm	2.8	3.9	4.95	7.1	8.2	10.3	9.2	12.4	15.5	16.6	20.5	26	33.5	42	67	95	
			M_{2max}	Nm	11.1	15	18.8	26.5	30	38	33.5	45	56	60	75	94	121	151	192	152	
0.969	3.43	0.35 (0.43)	n_{2N}	r/min	500	375	375	300	300	250	250	200	150	150	125	100	100	75	50	30	1FT2104-4AF..-0.B0-Z
...	...		M_{2N}	Nm	2.25	3.45	4.25	6.2	6.8	8.8	7.3	9.7	13	13.6	17.6	22	24	34	51	88	■■■ + ■■■ + . . .
1.09	3.52		$M_{2.0}$	Nm	2.9	4	5.1	7.3	8.4	10.6	9.4	12.7	16	17.1	21	26.5	34.5	43	69	95	
			M_{2max}	Nm	10.2	13.8	17.4	24.5	28	35	31	41.5	52	55	69	87	112	139	192	152	
0.963	3.53	0.35 (0.43)	n_{2N}	r/min	500	500	375	300	300	250	250	200	150	150	125	100	100	75	50	30	1FT2104-4AK..-0.B0-Z
...	...		M_{2N}	Nm	2.45	2.65	4.55	6.7	7.4	9.7	8.1	10.5	14.2	15	19.4	24.5	25	37	53	95	■■■ + ■■■ + . . .
1.08	3.62		$M_{2.0}$	Nm	2.85	3.95	5	7.2	8.3	10.6	9.4	12.6	15.9	17	21	26.5	34	43	69	95	
			M_{2max}	Nm	10.5	14.2	17.8	25	28.5	36	32	43	53	57	71	89	115	143	192	152	
2.07	7.13	0.56 (0.65)	n_{2N}	r/min	500	375	375	300	250	200	200	150	125	125	100	100	75	60	37.5	30	1FT2104-5AF..-0.B0-Z
...	...		M_{2N}	Nm	4.9	7.6	8.5	12.2	15.3	20	18.1	24.5	30.5	31.5	41	41	60	75	120	95	■■■ + ■■■ + . . .
2.17	7.21		$M_{2.0}$	Nm	6.2	8.4	10.6	15	17.2	21.5	19.2	25.5	32	34.5	43	54	69	86	120	95	
			M_{2max}	Nm	21	28.5	35.5	50	57	72	64	85	107	114	142	178	225	275	192	152	
2.06	7.23	0.56 (0.65)	n_{2N}	r/min	500	375	375	300	250	200	200	150	125	125	100	100	75	60	37.5	30	1FT2104-5AK..-0.B0-Z
...	...		M_{2N}	Nm	4.8	7.5	8.3	12	15.1	19.8	17.7	24	30	30.5	40.5	40.5	59	74	119	95	■■■ + ■■■ + . . .
2.15	7.31		$M_{2.0}$	Nm	6.1	8.3	10.5	14.9	17.1	21	19.1	25.5	32	34	42.5	53	68	85	120	95	
			M_{2max}	Nm	21.5	29	36	51	58	73	65	86	108	115	144	180	230	275	192	152	
2.82	9.55	0.76 (0.84)	n_{2N}	r/min	500	375	375	300	250	200	200	150	125	125	100	75	75	60	37.5	30	1FT2104-6AF..-0.B0-Z
...	...		M_{2N}	Nm	6.2	9.5	10.5	14.9	18.7	24.5	22	30	37	37.5	49.5	65	71	89	120	95	■■■ + ■■■ + . . .
2.92	9.67		$M_{2.0}$	Nm	8.4	11.4	14.3	20	23	29	25.5	34.5	43	46	57	72	92	116	120	95	
			M_{2max}	Nm	28.5	38	48	67	77	96	86	114	143	153	191	235	305	275	192	152	

➥ Continued on the following page

Planetary gearbox data																	
Gearbox type:			NRK120, 1-stage						NRK120, 2-stage								
1st order code			B41						B42								
	i		3	4	5	7	8	10	9	12	15	16	20	25	32	40	64	100
2nd order code			R03	R04	R05	R07	R08	R10	R09	R12	R15	R16	R20	R25	R32	R40	R64	R00
	$M_{2N,G}$	Nm	115	155	172	135	120	95	157	195	172	195	195	172	195	172	120	95
	$M_{2max,G}$	Nm	184	248	275	216	192	152	251	312	275	312	312	275	312	275	192	152
	$M_{2Em.Off}$	Nm	390	520	500	340	380	480	500	520	500	520	520	500	520	500	380	480
	$J_{1,G}$	kg cm²	2.764	2.051	1.768	1.546	1.495	1.419	2.334	2.248	2.218	1.76	1.582	1.571	1.423	1.419	1.415	1.376
	$\varphi_{2,G}$	'	7						9									

Color legend:		
	$M_{max,M} \times i < M_{2N,G}$	The motor and gearbox combination is fatigue-proof
	$M_{2N,G} < M_{max,M} \times i < M_{2max,G}$	Check acceleration and inertias, perform service life calculation if necessary
	$M_{max,M} \times i > M_{2max,G}$	The motor can destroy the gearbox, check acceleration and inertias, perform service life calculation if necessary

© Siemens 2024

Coaxial geared motors for servo converters with 400 V 3 AC line connection

Servomotor data			Selection data servomotors with planetary gearbox																	Servomotors with planetary gearbox
$M_{0,M}$	$M_{max,M}$	J_M ($J_{M,Br}$)																		
Nm	Nm	kg cm²																		
SIMOTICS S-1FT2 High Dynamic servomotors with 1 and 2-stage NRK120 planetary gearboxes (continued)																				
4.56 ... 4.64	14.4 ... 14.6	1.71 (2.55)	n_{2N}	r/min	500	375	375	250	250	200	200	150	125	125	100	75	60	50	50	30	1FT2105-4AF..-0.B0-Z
			M_{2N}	Nm	10.5	15.8	16.8	28	29	38	34.5	47	57	57	75	100	128	157	92	95	■■■ + ■■■ + ...
			$M_{2,0}$	Nm	13.6	18.3	23	32	37	46	41	55	69	73	92	115	147	172	120	95	
			M_{2max}	Nm	43.5	58	72	102	116	145	130	173	215	230	285	275	312	275	192	152	
4.59 ... 4.67	14.4 ... 14.6	1.71 (2.55)	n_{2N}	r/min	500	375	300	250	200	200	200	150	125	100	100	75	60	50	37.5	30	1FT2105-4AH..-0.B0-Z
			M_{2N}	Nm	9.3	14.4	19.6	25.5	32	34	31	42.5	51	63	67	91	119	143	120	95	■■■ + ■■■ + ...
			$M_{2,0}$	Nm	13.7	18.4	23	32.5	37	46.5	41.5	55	69	74	92	115	148	172	120	95	
			M_{2max}	Nm	43.5	58	72	102	116	145	130	173	215	230	285	275	312	275	192	152	
7.52 ... 7.6	23.1 ... 23.4	2.65 (3.5)	n_{2N}	r/min	375	375	300	250	200	200	200	125	100	100	75	75	60	50	37.5	–	1FT2105-6AF..-0.B0-Z
			M_{2N}	Nm	18.8	21	28	36.5	46.5	47.5	43	71	89	90	121	124	161	172	120	–	■■■ + ■■■ + ...
			$M_{2,0}$	Nm	22.5	30	37.5	53	60	76	67	90	112	120	150	172	195	172	120	–	
			M_{2max}	Nm	70	93	117	163	187	152	205	275	275	312	312	275	312	275	192	–	
7.76 ... 7.88	25 ... 25.4	4.6 (6.3)	n_{2N}	r/min	500	375	300	250	200	200	200	125	100	100	75	75	60	60	37.5	–	1FT2106-3AF..-0.B0-Z
			M_{2N}	Nm	14.8	22	29.5	38	48.5	50	45	73	93	94	126	128	166	146	120	–	■■■ + ■■■ + ...
			$M_{2,0}$	Nm	23	31	39	55	62	78	70	93	116	124	155	172	195	172	120	–	
			M_{2max}	Nm	76	101	126	177	192	152	225	300	275	312	312	275	312	270	192	–	
10.1 ... 10.2	31.8 ... 32.3	6 (7.6)	n_{2N}	r/min	375	375	300	200	200	150	150	125	100	100	75	75	60	50	37.5	–	1FT2106-4AF..-0.B0-Z
			M_{2N}	Nm	24.5	26	35.5	56	58	79	71	87	109	109	148	142	184	172	120	–	■■■ + ■■■ + ...
			$M_{2,0}$	Nm	30.5	40.5	50	71	81	95	90	121	151	161	195	172	195	172	120	–	
			M_{2max}	Nm	96	129	161	216	192	152	251	312	275	312	312	275	312	275	192	–	
14.3 ... 14.5	43.9 ... 44.7	8.7 (10.4)	n_{2N}	r/min	375	300	300	200	200	150	150	125	100	100	75	75	60	60	–	–	1FT2106-6AF..-0.B0-Z
			M_{2N}	Nm	32	43	45	72	73	95	89	106	134	132	181	168	195	165	–	–	■■■ + ■■■ + ...
			$M_{2,0}$	Nm	43	57	72	101	116	95	128	171	172	195	195	172	195	172	–	–	
			M_{2max}	Nm	133	178	220	216	192	152	251	312	275	312	312	275	312	275	–	–	
SIMOTICS S-1FT2 Compact servomotors with 1 and 2-stage NRK120 planetary gearboxes																				
0.304 ... 0.436	1.56 ... 1.66	0.2 (0.22)	n_{2N}	r/min	375	300	300	250	200	200	150	125	100	100	100	75	75	50	37.5	25	1FT2203-2AK..-0.B0-Z
			M_{2N}	Nm	0.54	0.98	1.22	1.89	2.5	2.8	2.9	3.85	5	5.2	5.9	8.1	8.9	13.7	18.8	29	■■■ + ■■■ + ...
			$M_{2,0}$	Nm	0.91	1.36	1.8	2.7	3.1	4	3.55	4.85	6.2	6.6	8.4	10.6	13.6	17.2	27.5	43.5	
			M_{2max}	Nm	4.65	6.3	8	11.4	13.1	16.5	14.6	19.7	24.5	26	33	41	53	66	106	152	
0.924 ... 1.04	3.43 ... 3.52	0.35 (0.37)	n_{2N}	r/min	375	375	300	250	250	200	200	150	125	125	100	100	75	60	37.5	25	1FT2203-4AK..-0.B0-Z
			M_{2N}	Nm	2.35	3	4.2	6	6.4	8.5	7.3	10	12.5	13.1	17.2	17.3	26	33	53	82	■■■ + ■■■ + ...
			$M_{2,0}$	Nm	2.75	3.8	4.85	7	8	10.2	9	12.2	15.3	16.3	20.5	25.5	33	41.5	66	95	
			M_{2max}	Nm	10.2	13.8	17.4	24.5	28	35	31	41.5	52	55	69	87	112	139	192	152	
2.03 ... 2.13	6.74 ... 6.82	1.23 (1.31)	n_{2N}	r/min	500	375	375	250	250	200	200	150	125	125	100	100	75	60	37.5	30	1FT2204-5AF..-0.B0-Z
			M_{2N}	Nm	4.65	7.3	7.9	13.7	14.4	19	17.1	23	28.5	29.5	38.5	37.5	55	70	113	95	■■■ + ■■■ + ...
			$M_{2,0}$	Nm	6	8.2	10.4	14.7	16.9	21	18.9	25	31.5	33.5	42	53	67	84	120	95	
			M_{2max}	Nm	20	27	33.5	47.5	54	68	60	81	101	107	134	168	215	265	192	152	
2.05 ... 2.14	6.74 ... 6.82	1.23 (1.31)	n_{2N}	r/min	500	375	375	250	250	200	200	150	125	125	100	100	75	60	37.5	30	1FT2204-5AK..-0.B0-Z
			M_{2N}	Nm	4.8	7.5	8.1	14	14.8	19.4	17.6	24	29.5	30	40	38	57	71	116	95	■■■ + ■■■ + ...
			$M_{2,0}$	Nm	6.1	8.3	10.4	14.8	17	21	19	25	31.5	34	42.5	53	68	85	120	95	
			M_{2max}	Nm	20	27	33.5	47.5	54	68	60	81	101	107	134	168	215	265	192	152	

➥ Continued on the following page

Planetary gearbox data																	
Gearbox type:		NRK120, 1-stage						NRK120, 2-stage									
1st order code		B41						B42									
i		3	4	5	7	8	10	9	12	15	16	20	25	32	40	64	100
2nd order code		R03	R04	R05	R07	R08	R10	R09	R12	R15	R16	R20	R25	R32	R40	R64	R00
$M_{2N,G}$	Nm	115	155	172	135	120	95	157	195	172	195	195	172	195	172	120	95
$M_{2max,G}$	Nm	184	248	275	216	192	152	251	312	275	312	312	275	312	275	192	152
$M_{2Em.Off}$	Nm	390	520	500	340	380	480	500	520	500	520	520	500	520	500	380	480
$J_{1,G}$	kg cm²	2.764	2.051	1.768	1.546	1.495	1.419	2.334	2.248	2.218	1.76	1.582	1.571	1.423	1.419	1.415	1.376
$\varphi_{2,G}$	'	7						9									

Color legend:		
	$M_{max,M} \times i < M_{2N,G}$	The motor and gearbox combination is fatigue-proof
	$M_{2N,G} < M_{max,M} \times i < M_{2max,G}$	Check acceleration and inertias, perform service life calculation if necessary
	$M_{max,M} \times i > M_{2max,G}$	The motor can destroy the gearbox, check acceleration and inertias, perform service life calculation if necessary

© Siemens 2024

Coaxial geared motors for servo converters with 400 V 3 AC line connection

Servomotor data			Selection data servomotors with planetary gearbox																		Servomotors with planetary gearbox
$M_{0,M}$	$M_{max,M}$	J_M ($J_{M,Br}$)																			
Nm	Nm	kg cm²																			
SIMOTICS S-1FT2 Compact servomotors with 1 and 2-stage NRK120 planetary gearboxes (continued)																					
2.81	9.06	1.61	n_{2N}	r/min	500	375	300	250	250	200	200	150	125	125	100	75	75	50	37.5	30	1FT2204-6AF..-0.B0-Z
...	...	(1.69)	M_{2N}	Nm	6.5	10.1	13.7	18.8	19.5	25.5	23	31.5	39	39.5	52	69	72	110	120	95	■■■ + ■■■ + . . .
2.9	9.18		$M_{2,0}$	Nm	8.4	11.3	14.3	20	23	29	25.5	34.5	43	46	57	72	92	115	120	95	
			M_{2max}	Nm	27	36.5	45.5	64	73	91	81	109	136	145	181	225	290	275	192	152	
2.98	10.3	3.15	n_{2N}	r/min	375	375	300	250	200	200	200	150	125	100	100	75	60	50	37.5	20	1FT2205-2AC..-0.B0-Z
...	...	(4.05)	M_{2N}	Nm	7.1	8.2	11.5	15.3	19.5	20	19	26	32	38.5	42.5	58	75	91	113	94	■■■ + ■■■ + . . .
3.07	10.5		$M_{2,0}$	Nm	8.9	12	15.1	21	24.5	30.5	27	36	45.5	48.5	60	76	97	121	120	95	
			M_{2max}	Nm	31	41.5	52	73	83	104	93	124	155	165	205	255	312	275	192	152	
3.02	10.3	3.15	n_{2N}	r/min	500	375	375	300	250	200	200	150	125	125	100	75	75	60	37.5	30	1FT2205-2AF..-0.B0-Z
...	...	(4.05)	M_{2N}	Nm	6.5	9.8	10.7	14.9	19.1	25	22	29.5	36.5	38.5	49	63	70	89	120	94	■■■ + ■■■ + . . .
3.11	10.5		$M_{2,0}$	Nm	9	12.1	15.3	21.5	24.5	31	27.5	36.5	46	49	61	76	98	123	120	95	
			M_{2max}	Nm	31	41.5	52	73	83	104	93	124	155	165	205	255	312	275	192	152	
2.96	10.3	3.15	n_{2N}	r/min	500	375	300	250	250	200	200	150	125	125	100	75	60	50	37.5	30	1FT2205-2AH..-0.B0-Z
...	...	(4.05)	M_{2N}	Nm	5.6	8.9	12.2	16.4	16.5	22	20	28	34	34	45.5	60	77	95	120	95	■■■ + ■■■ + . . .
3.05	10.5		$M_{2,0}$	Nm	8.8	11.9	15	21	24	30.5	27	36	45	48	60	75	96	120	120	95	
			M_{2max}	Nm	31	41.5	52	73	83	104	93	124	155	165	205	255	312	275	192	152	
5.21	17.3	5.1	n_{2N}	r/min	375	375	300	250	200	200	200	125	100	100	100	75	60	50	37.5	30	1FT2205-4AF..-0.B0-Z
...	...	(6)	M_{2N}	Nm	12.5	14	19.1	25	31.5	32.5	30	49.5	62	64	65	89	116	138	120	95	■■■ + ■■■ + . . .
5.29	17.5		$M_{2,0}$	Nm	15.6	20.5	26	36.5	42	52	46.5	62	78	83	104	130	167	172	120	95	
			M_{2max}	Nm	52	70	87	122	140	152	156	205	260	275	312	275	312	275	192	152	
5.34	17.3	7.8	n_{2N}	r/min	375	300	250	200	200	150	150	125	100	100	75	60	50	37.5	30	20	1FT2206-2AC..-0.B0-Z
...	...	(9.4)	M_{2N}	Nm	11.6	15.7	20	27	27	38	36.5	44.5	56	56	78	98	121	161	120	95	■■■ + ■■■ + . . .
5.42	17.5		$M_{2,0}$	Nm	16	21	26.5	37.5	43	54	48	64	80	86	107	134	172	172	120	95	
			M_{2max}	Nm	52	70	87	122	140	152	156	205	260	275	312	275	312	275	192	152	
5.38	17.3	7.8	n_{2N}	r/min	500	375	300	250	250	200	200	150	125	100	100	75	60	50	37.5	30	1FT2206-2AF..-0.B0-Z
...	...	(9.4)	M_{2N}	Nm	11.2	16.8	22	29.5	29	38.5	35.5	48	58	69	75	102	133	158	120	95	■■■ + ■■■ + . . .
5.46	17.5		$M_{2,0}$	Nm	16.1	21.5	27	38	43.5	54	48.5	64	80	86	107	134	172	172	120	95	
			M_{2max}	Nm	52	70	87	122	140	152	156	205	260	275	312	275	312	275	192	152	
5.22	17.3	7.8	n_{2N}	r/min	375	300	300	200	200	150	150	125	100	100	75	60	50	50	37.5	25	1FT2206-2AH..-0.B0-Z
...	...	(9.4)	M_{2N}	Nm	12.7	17.3	18.7	30	31	42.5	39	49.5	62	63	86	107	134	130	120	95	■■■ + ■■■ + . . .
5.3	17.5		$M_{2,0}$	Nm	15.6	20.5	26	36.5	42	53	47	62	78	83	104	130	167	172	120	94	
			M_{2max}	Nm	52	70	87	122	140	152	156	205	260	275	312	275	312	275	192	152	
7.89	26	11.5	n_{2N}	r/min	375	300	300	250	200	150	150	125	100	100	75	60	50	37.5	25	–	1FT2206-3AB..-0.B0-Z
...	...	(13.1)	M_{2N}	Nm	17.8	24	26	33.5	43	59	54	66	84	84	115	143	179	172	120	–	■■■ + ■■■ + . . .
8.01	26.4		$M_{2,0}$	Nm	23.5	31.5	39.5	55	64	80	71	94	118	126	157	172	195	172	120	–	
			M_{2max}	Nm	79	105	131	184	192	152	235	312	275	312	312	275	312	275	192	–	
7.76	26	11.5	n_{2N}	r/min	375	300	250	200	200	150	150	125	100	100	75	60	50	50	37.5	–	1FT2206-3AF..-0.B0-Z
...	...	(13.1)	M_{2N}	Nm	17.1	23	29	39.5	40	55	51	63	79	79	109	136	169	156	120	–	■■■ + ■■■ + . . .
7.88	26.4		$M_{2,0}$	Nm	23	31	39	55	62	78	69	93	116	124	155	172	195	172	120	–	
			M_{2max}	Nm	79	105	131	184	192	152	235	312	275	312	312	275	312	275	192	–	

➥ Continued on the following page

Planetary gearbox data																	
Gearbox type:			NRK120, 1-stage						NRK120, 2-stage								
1st order code			B41						B42								
	i		3	4	5	7	8	10	9	12	15	16	20	25	32	40	64	100
2nd order code			R03	R04	R05	R07	R08	R10	R09	R12	R15	R16	R20	R25	R32	R40	R64	R00
	$M_{2N,G}$	Nm	115	155	172	135	120	95	157	195	172	195	195	172	195	172	120	95
	$M_{2max,G}$	Nm	184	248	275	216	192	152	251	312	275	312	312	275	312	275	192	152
	$M_{2Em.Off}$	Nm	390	520	500	340	380	480	500	520	500	520	520	500	520	500	380	480
	$J_{1,G}$	kg cm²	2.764	2.051	1.768	1.546	1.495	1.419	2.334	2.248	2.218	1.76	1.582	1.571	1.423	1.419	1.415	1.376
	$\varphi_{2,G}$	'	7						9									

Color legend:		
	$M_{max,M} \times i < M_{2N,G}$	The motor and gearbox combination is fatigue-proof
	$M_{2N,G} < M_{max,M} \times i < M_{2max,G}$	Check acceleration and inertias, perform service life calculation if necessary
	$M_{max,M} \times i > M_{2max,G}$	The motor can destroy the gearbox, check acceleration and inertias, perform service life calculation if necessary

© Siemens 2024

Coaxial geared motors for servo converters with 400 V 3 AC line connection

Servomotor data			Selection data servomotors with planetary gearbox																		Servomotors with planetary gearbox
$M_{0,M}$	$M_{max,M}$	J_M ($J_{M,Br}$)																			
Nm	Nm	kg cm²																			
SIMOTICS S-1FT2 Compact servomotors with 1 and 2-stage NRK120 planetary gearboxes (continued)																					
11	36.6	15.1	n_{2N}	r/min	300	250	200	150	125	100	125	100	75	75	60	50	37.5	37.5	30	–	**1FT2206-4AC..-0.B0-Z**
...	...	(16.8)	M_{2N}	Nm	20.5	26	34	47.5	57	73	58	72	98	97	123	146	195	172	108	–	■■■ + ■■■ + ...
11.1	37.2		$M_{2,0}$	Nm	33	44	55	77	88	95	98	131	164	175	195	172	195	172	120	–	
			M_{2max}	Nm	111	148	186	216	192	152	251	312	275	312	312	275	312	275	192	–	
10.5	34.7	15.1	n_{2N}	r/min	375	375	300	200	200	150	150	125	100	100	75	75	60	60	37.5	–	**1FT2206-4AF..-0.B0-Z**
...	...	(16.8)	M_{2N}	Nm	25	27	36	57	59	80	73	88	111	111	151	145	186	144	120	–	■■■ + ■■■ + ...
10.7	35.3		$M_{2,0}$	Nm	31.5	42.5	53	74	85	95	95	126	158	168	195	172	195	172	120	–	
			M_{2max}	Nm	105	141	176	216	192	152	251	312	275	312	312	275	310	275	192	–	
10.1	34.7	15.1	n_{2N}	r/min	375	300	250	200	150	150	150	100	100	75	75	60	50	50	37.5	–	**1FT2206-4AH..-0.B0-Z**
...	...	(16.8)	M_{2N}	Nm	20	26.5	33.5	44.5	59	62	58	87	87	117	120	150	183	152	117	–	■■■ + ■■■ + ...
10.2	35.3		$M_{2,0}$	Nm	30	40.5	50	71	81	95	90	121	151	161	195	172	195	172	120	–	
			M_{2max}	Nm	105	141	176	216	192	152	251	312	275	312	312	275	310	275	192	–	
10.3	36.6	24.86	n_{2N}	r/min	300	250	200	150	150	125	125	100	75	75	60	50	50	37.5	30	–	**1FT2208-2AF..-0.B0-Z**
...	...	(28.16)	M_{2N}	Nm	25.5	33	42.5	59	61	75	71	89	119	120	152	172	164	172	120	–	■■■ + ■■■ + ...
10.4	37.2		$M_{2,0}$	Nm	31	41.5	51	72	83	95	92	123	154	164	195	171	195	172	120	–	
			M_{2max}	Nm	111	148	185	216	192	152	251	312	275	312	312	275	312	275	192	–	
16.3	49.2	31.96	n_{2N}	r/min	300	200	200	150	125	100	100	75	60	60	50	50	37.5	37.5	–	–	**1FT2208-3AB..-0.B0-Z**
...	...	(34.96)	M_{2N}	Nm	28.5	44.5	46	64	78	95	95	127	158	159	190	170	195	172	–	–	■■■ + ■■■ + ...
16.6	50		$M_{2,0}$	Nm	49.5	66	82	115	120	95	146	195	172	195	195	172	195	172	–	–	
			M_{2max}	Nm	150	199	245	216	192	152	251	312	275	312	312	275	312	275	–	–	
15.1	49.2	31.96	n_{2N}	r/min	375	250	250	150	150	125	125	100	75	75	60	60	50	37.5	–	–	**1FT2208-3AC..-0.B0-Z**
...	...	(35.36)	M_{2N}	Nm	28	44	45.5	79	81	95	92	115	154	153	192	171	194	172	–	–	■■■ + ■■■ + ...
15.4	50		$M_{2,0}$	Nm	45.5	61	76	107	120	95	136	181	172	195	195	172	195	172	–	–	
			M_{2max}	Nm	150	199	245	216	192	152	251	312	275	312	312	275	312	275	–	–	
15.1	49.2	31.96	n_{2N}	r/min	300	250	200	150	150	125	125	100	75	75	60	60	50	37.5	–	–	**1FT2208-3AF..-0.B0-Z**
...	...	(35.36)	M_{2N}	Nm	33	42	54	75	76	92	87	108	146	144	183	159	185	172	–	–	■■■ + ■■■ + ...
15.3	50		$M_{2,0}$	Nm	45.5	61	76	107	120	95	136	181	172	195	195	172	195	172	–	–	
			M_{2max}	Nm	150	199	245	216	192	152	251	312	275	312	312	275	312	275	–	–	
19.3	63.8	41.16	n_{2N}	r/min	250	200	150	100	100	100	75	60	60	50	50	37.5	37.5	30	–	–	**1FT2208-4AB..-0.B0-Z**
...	...	(46.76)	M_{2N}	Nm	32.5	41.5	57	87	89	84	117	148	145	177	166	172	184	172	–	–	■■■ + ■■■ + ...
19.7	64.9		$M_{2,0}$	Nm	59	78	98	135	120	95	157	195	172	195	195	172	195	172	–	–	
			M_{2max}	Nm	184	248	275	216	192	152	251	312	275	312	312	275	312	275	–	–	
18.8	63.8	41.16	n_{2N}	r/min	300	250	200	150	125	125	125	75	75	75	60	60	50	37.5	–	–	**1FT2208-4AC..-0.B0-Z**
...	...	(46.76)	M_{2N}	Nm	40.5	51	65	90	108	95	102	167	168	165	195	168	192	172	–	–	■■■ + ■■■ + ...
19.1	64.9		$M_{2,0}$	Nm	57	76	95	134	120	95	157	195	172	195	195	172	195	172	–	–	
			M_{2max}	Nm	184	248	275	216	192	152	251	312	270	310	312	275	312	275	–	–	
18.1	63.8	41.16	n_{2N}	r/min	300	250	200	150	125	125	125	75	75	75	60	60	50	37.5	–	–	**1FT2208-4AF..-0.B0-Z**
...	...	(46.76)	M_{2N}	Nm	41	51	65	90	108	95	102	169	168	166	195	168	192	172	–	–	■■■ + ■■■ + ...
18.4	64.9		$M_{2,0}$	Nm	55	73	92	128	120	95	157	195	172	195	195	172	195	172	–	–	
			M_{2max}	Nm	184	248	275	216	192	152	251	312	270	312	312	275	312	275	–	–	

➥ Continued on the following page

Planetary gearbox data																	
Gearbox type:			NRK120, 1-stage						NRK120, 2-stage								
1st order code			B41						B42								
	i		3	4	5	7	8	10	9	12	15	16	20	25	32	40	64	100
2nd order code			R03	R04	R05	R07	R08	R10	R09	R12	R15	R16	R20	R25	R32	R40	R64	R00
	$M_{2N,G}$	Nm	115	155	172	135	120	95	157	195	172	195	195	172	195	172	120	95
	$M_{2max,G}$	Nm	184	248	275	216	192	152	251	312	275	312	312	275	312	275	192	152
	$M_{2Em.Off}$	Nm	390	520	500	340	380	480	500	520	500	520	520	500	520	500	380	480
	$J_{1,G}$	kg cm²	2.764	2.051	1.768	1.546	1.495	1.419	2.334	2.248	2.218	1.76	1.582	1.571	1.423	1.419	1.415	1.376
	$\varphi_{2,G}$	'	7						9									

Color legend:		
	$M_{max,M} \times i < M_{2N,G}$	The motor and gearbox combination is fatigue-proof
	$M_{2N,G} < M_{max,M} \times i < M_{2max,G}$	Check acceleration and inertias, perform service life calculation if necessary
	$M_{max,M} \times i > M_{2max,G}$	The motor can destroy the gearbox, check acceleration and inertias, perform service life calculation if necessary

© Siemens 2024

Coaxial geared motors for servo converters with 400 V 3 AC line connection

Servomotor data			Selection data servomotors with planetary gearbox																Servomotors with planetary gearbox
$M_{0,M}$	$M_{max,M}$	J_M ($J_{M,Br}$)																	
Nm	Nm	kg cm²																	
SIMOTICS S-1FT2 Compact servomotors with 1 and 2-stage NRK120 planetary gearboxes (continued)																			
22.8 ... 23.2	77.3 ... 78.7	50.46 (55.96)	n_{2N}	r/min	300	250	200	150	125	150	100	75	75	75	60	60	50	37.5	–	–	1FT2208-5AB..-0.B0-Z
			M_{2N}	Nm	45	55	71	98	118	79	139	182	171	173	195	168	191	172	–	–	■■■ + ■■■ + . . .
			$M_{2,0}$	Nm	69	92	115	135	120	95	157	195	172	195	195	172	195	172	–	–	
			M_{2max}	Nm	184	248	275	216	192	152	251	312	275	312	312	275	312	275	–	–	
22.5 ... 22.9	77.3 ... 78.7	50.46 (55.96)	n_{2N}	r/min	300	250	200	150	125	125	100	75	75	75	60	60	50	37.5	–	–	1FT2208-5AC..-0.B0-Z
			M_{2N}	Nm	45	55	71	98	118	95	138	183	170	170	195	159	173	172	–	–	■■■ + ■■■ + . . .
			$M_{2,0}$	Nm	68	91	114	135	120	95	157	195	172	195	195	172	195	172	–	–	
			M_{2max}	Nm	184	248	275	216	192	152	251	310	275	312	312	275	312	275	–	–	

Planetary gearbox data																	
Gearbox type:			NRK120, 1-stage						NRK120, 2-stage								
1st order code			B41						B42								
	i		3	4	5	7	8	10	9	12	15	16	20	25	32	40	64	100
2nd order code			R03	R04	R05	R07	R08	R10	R09	R12	R15	R16	R20	R25	R32	R40	R64	R00
	$M_{2N,G}$	Nm	115	155	172	135	120	95	157	195	172	195	195	172	195	172	120	95
	$M_{2max,G}$	Nm	184	248	275	216	192	152	251	312	275	312	312	275	312	275	192	152
	$M_{2Em.Off}$	Nm	390	520	500	340	380	480	500	520	500	520	520	500	520	500	380	480
	$J_{1,G}$	kg cm²	2.764	2.051	1.768	1.546	1.495	1.419	2.334	2.248	2.218	1.76	1.582	1.571	1.423	1.419	1.415	1.376
	$\varphi_{2,G}$	'	7						9									

Color legend:		
	$M_{max,M} \times i < M_{2N,G}$	The motor and gearbox combination is fatigue-proof
	$M_{2N,G} < M_{max,M} \times i < M_{2max,G}$	Check acceleration and inertias, perform service life calculation if necessary
	$M_{max,M} \times i > M_{2max,G}$	The motor can destroy the gearbox, check acceleration and inertias, perform service life calculation if necessary

© Siemens 2024

Coaxial geared motors for servo converters with 400 V 3 AC line connection

Selection and ordering data

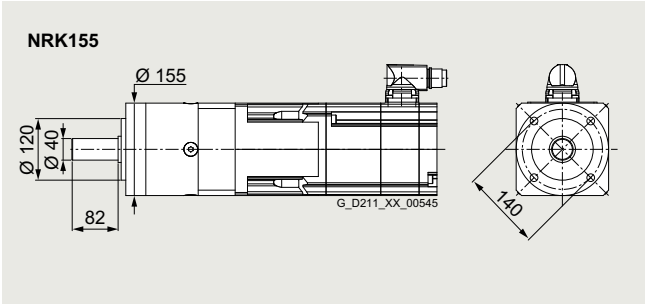

Permissible output shaft loads		
Average radial force for 20000 h	$F_{R,eq}$	5200 N
Average axial force for 20000 h	$F_{A,eq}$	7000 N
Average radial force for 30000 h	$F_{R,eq}$	4600 N
Average axial force for 30000 h	$F_{A,eq}$	6000 N
Maximum radial force	$F_{R,max}$	8400 N
Maximum axial force	$F_{A,max}$	11000 N

Servomotor data $M_{0,M}$ Nm	$M_{max,M}$ Nm	J_M ($J_{M,Br}$) kg cm²	Selection data servomotors with planetary gearbox										Servomotors with planetary gearbox
SIMOTICS S-1FT2 High Dynamic servomotors with 1 and 2-stage NRK155 planetary gearboxes													
4.5 ... 4.58	14.3 ... 14.5	1.71 (2.55)	n_{2N}	r/min	375	300	200	100	100	75	50	37.5	30	**1FT2105-4AF..-0.B0-Z**
			M_{2N}	Nm	15.1	20.5	39.5	65	71	98	161	205	186	■■■ + ■■■ + . . .
			$M_{2.0}$	Nm	18	22.5	45.5	72	91	113	182	225	210	
			M_{2max}	Nm	57	72	145	225	285	355	570	712	336	
4.53 ... 4.62	14.3 ... 14.5	1.71 (2.55)	n_{2N}	r/min	375	300	200	100	100	75	50	37.5	25	**1FT2105-4AH..-0.B0-Z**
			M_{2N}	Nm	13.6	19.6	35	61	63	90	150	195	210	■■■ + ■■■ + . . .
			$M_{2.0}$	Nm	18.1	22.5	46	73	91	114	183	225	210	
			M_{2max}	Nm	57	72	145	225	285	355	570	712	336	
7.47 ... 7.54	23 ... 23.4	2.65 (3.5)	n_{2N}	r/min	300	300	200	100	75	60	50	37.5	25	**1FT2105-6AF..-0.B0-Z**
			M_{2N}	Nm	25.5	28.5	50	87	124	156	200	270	210	■■■ + ■■■ + . . .
			$M_{2.0}$	Nm	29.5	37	75	119	149	187	295	370	210	
			M_{2max}	Nm	93	116	230	365	460	570	736	712	336	
7.89 ... 8.04	25 ... 25.3	4.6 (6.3)	n_{2N}	r/min	375	300	200	100	75	60	50	37.5	25	**1FT2106-3AF..-0.B0-Z**
			M_{2N}	Nm	21	29.5	52	91	128	161	205	280	210	■■■ + ■■■ + . . .
			$M_{2.0}$	Nm	31.5	39.5	80	126	158	197	315	395	210	
			M_{2max}	Nm	101	126	250	400	500	620	736	712	336	
10.3 ... 10.5	31.7 ... 32.2	6 (7.6)	n_{2N}	r/min	300	300	150	100	75	60	37.5	30	25	**1FT2106-4AF..-0.B0-Z**
			M_{2N}	Nm	33	36	82	106	153	192	320	400	210	■■■ + ■■■ + . . .
			$M_{2.0}$	Nm	41.5	52	104	164	205	255	410	445	210	
			M_{2max}	Nm	128	161	320	500	630	712	736	712	336	
14.5 ... 14.8	43.9 ... 44.5	8.7 (10.4)	n_{2N}	r/min	300	250	150	75	75	60	37.5	37.5	–	**1FT2106-6AF..-0.B0-Z**
			M_{2N}	Nm	43.5	56	107	179	189	235	400	380	–	■■■ + ■■■ + . . .
			$M_{2.0}$	Nm	59	73	148	230	290	360	460	445	–	
			M_{2max}	Nm	178	220	336	700	736	712	736	712	–	
SIMOTICS S-1FT2 Compact servomotors with 1 and 2-stage NRK155 planetary gearboxes													
3.04 ... 3.12	10.3 ... 10.4	3.15 (4.05)	n_{2N}	r/min	300	300	200	100	100	75	50	37.5	20	**1FT2205-2AC..-0.B0-Z**
			M_{2N}	Nm	9.4	11.4	21	37	39	55	94	121	210	■■■ + ■■■ + . . .
			$M_{2.0}$	Nm	12.1	15.3	31	49	61	77	123	154	210	
			M_{2max}	Nm	41	51	103	164	205	255	410	510	336	

➥ Continued on the following page

Planetary gearbox data										
Gearbox type:		**NRK155, 1-stage**			**NRK155, 2-stage**					
1st order code		**B51**			**B52**					
i		**4**	**5**	**10**	**16**	**20**	**25**	**40**	**50**	**100**
2nd order code		**R04**	**R05**	**R10**	**R16**	**R20**	**R25**	**R40**	**R50**	**R00**
$M_{2N,G}$	Nm	460	445	210	460	460	445	460	445	210
$M_{2max,G}$	Nm	736	712	336	736	736	712	736	712	336
$M_{2Em.Off}$	Nm	920	890	420	920	920	890	920	890	420
$J_{1.G}$	kg cm²	7.611	6.482	4.932	7.108	6.172	6.117	5.107	4.774	4.759
$\varphi_{2,G}$	'	6			9					

Color legend:		
	$M_{max,M} \times i < M_{2N,G}$	**The motor and gearbox combination is fatigue-proof**
	$M_{2N,G} < M_{max,M} \times i < M_{2max,G}$	**Check acceleration and inertias, perform service life calculation if necessary**
	$M_{max,M} \times i > M_{2max,G}$	**The motor can destroy the gearbox, check acceleration and inertias, perform service life calculation if necessary**

© Siemens 2024

Servomotor data			Selection data servomotors with planetary gearbox										Servomotors with planetary gearbox
$M_{0,M}$	$M_{max,M}$	J_M ($J_{M,Br}$)											
Nm	Nm	kg cm²											
SIMOTICS S-1FT2 Compact servomotors with 1 and 2-stage NRK155 planetary gearboxes (continued)													
3.07 ... 3.15	10.3 ... 10.4	3.15 (4.05)	n_{2N}	r/min	375	375	200	125	100	75	60	50	25	**1FT2205-2AF..-0.B0-Z**
			M_{2N}	Nm	9.2	9.8	24.5	32.5	47.5	61	90	106	210	■■■ + ■■■ + . . .
			$M_{2,0}$	Nm	12.2	15.4	31.5	49.5	62	77	124	156	210	
			M_{2max}	Nm	41	51	103	164	205	255	410	510	336	
3 ... 3.08	10.3 ... 10.4	3.15 (4.05)	n_{2N}	r/min	375	300	200	100	100	75	50	37.5	25	**1FT2205-2AH..-0.B0-Z**
			M_{2N}	Nm	8.2	11.8	22.5	37.5	42	58	96	122	183	■■■ + ■■■ + . . .
			$M_{2,0}$	Nm	11.9	15.1	30.5	48.5	60	76	122	152	205	
			M_{2max}	Nm	41	51	103	164	205	255	410	510	336	
5.3 ... 5.39	17.2 ... 17.5	5.1 (6)	n_{2N}	r/min	300	300	200	100	75	60	50	37.5	25	**1FT2205-4AF..-0.B0-Z**
			M_{2N}	Nm	17.1	19.2	34	61	87	109	146	196	210	■■■ + ■■■ + . . .
			$M_{2,0}$	Nm	21	26.5	53	84	106	132	210	265	210	
			M_{2max}	Nm	69	87	174	275	345	430	690	712	336	
5.29 ... 5.37	17.2 ... 17.5	7.8 (9.4)	n_{2N}	r/min	300	250	150	75	75	60	37.5	30	20	**1FT2206-2AC..-0.B0-Z**
			M_{2N}	Nm	15.8	20.5	40.5	73	79	100	171	215	205	■■■ + ■■■ + . . .
			$M_{2,0}$	Nm	21	26.5	53	85	106	133	210	265	210	
			M_{2max}	Nm	69	87	174	275	345	430	690	712	336	
5.46 ... 5.54	17.2 ... 17.5	7.8 (9.4)	n_{2N}	r/min	375	300	200	100	100	75	50	37.5	25	**1FT2206-2AF..-0.B0-Z**
			M_{2N}	Nm	16	21.5	39.5	68	71	100	165	210	210	■■■ + ■■■ + . . .
			$M_{2,0}$	Nm	21.5	27	55	87	109	136	215	270	205	
			M_{2max}	Nm	69	87	174	275	345	430	690	712	336	
5.29 ... 5.37	17.2 ... 17.5	7.8 (9.4)	n_{2N}	r/min	300	300	150	100	75	60	50	37.5	25	**1FT2206-2AH..-0.B0-Z**
			M_{2N}	Nm	17.2	18.8	44.5	60	86	108	138	189	200	■■■ + ■■■ + . . .
			$M_{2,0}$	Nm	21	26.5	53	84	105	132	210	265	210	
			M_{2max}	Nm	69	87	174	275	345	430	690	712	336	
8.04 ... 8.19	25.9 ... 26.3	11.5 (13.1)	n_{2N}	r/min	300	300	150	100	75	60	37.5	30	15	**1FT2206-3AB..-0.B0-Z**
			M_{2N}	Nm	24	26.5	62	81	117	148	250	310	210	■■■ + ■■■ + . . .
			$M_{2,0}$	Nm	32	40.5	81	128	161	200	320	400	210	
			M_{2max}	Nm	105	131	260	415	520	650	736	712	336	
7.91 ... 8.06	25.9 ... 26.3	11.5 (13.1)	n_{2N}	r/min	300	250	150	75	75	60	37.5	30	25	**1FT2206-3AF..-0.B0-Z**
			M_{2N}	Nm	23	30	59	103	111	140	235	295	210	■■■ + ■■■ + . . .
			$M_{2,0}$	Nm	31.5	40	80	126	158	198	315	395	210	
			M_{2max}	Nm	105	131	260	415	520	650	736	712	336	
10.9 ... 11	36.6 ... 37.1	15.1 (16.8)	n_{2N}	r/min	250	200	125	60	60	50	30	25	20	**1FT2206-4AC..-0.B0-Z**
			M_{2N}	Nm	27.5	36.5	64	125	131	156	275	330	162	■■■ + ■■■ + . . .
			$M_{2,0}$	Nm	43.5	54	110	174	215	270	435	445	210	
			M_{2max}	Nm	148	185	336	580	730	712	736	712	336	
10.7 ... 10.9	34.6 ... 35.2	15.1 (16.8)	n_{2N}	r/min	300	300	150	100	75	60	37.5	30	25	**1FT2206-4AF..-0.B0-Z**
			M_{2N}	Nm	34	37	84	108	155	195	325	405	210	■■■ + ■■■ + . . .
			$M_{2,0}$	Nm	43	54	109	171	210	265	425	445	210	
			M_{2max}	Nm	140	175	336	550	690	712	736	712	336	

➥ Continued on the following page

Planetary gearbox data										
Gearbox type:			NRK155, 1-stage			NRK155, 2-stage				
1st order code			B51			B52				
	i		4	5	10	16	20	25	40	50	100
2nd order code			R04	R05	R10	R16	R20	R25	R40	R50	R00
	$M_{2N,G}$	Nm	460	445	210	460	460	445	460	445	210
	$M_{2max,G}$	Nm	736	712	336	736	736	712	736	712	336
	$M_{2Em.Off}$	Nm	920	890	420	920	920	890	920	890	420
	$J_{1,G}$	kg cm²	7.611	6.482	4.932	7.108	6.172	6.117	5.107	4.774	4.759
	$\varphi_{2,G}$	'	6			9					

Color legend:		
	$M_{max,M} \times i < M_{2N,G}$	**The motor and gearbox combination is fatigue-proof**
	$M_{2N,G} < M_{max,M} \times i < M_{2max,G}$	**Check acceleration and inertias, perform service life calculation if necessary**
	$M_{max,M} \times i > M_{2max,G}$	**The motor can destroy the gearbox, check acceleration and inertias, perform service life calculation if necessary**

© Siemens 2024

Coaxial geared motors for servo converters with 400 V 3 AC line connection

Servomotor data			Selection data servomotors with planetary gearbox										Servomotors with planetary gearbox
$M_{0,M}$	$M_{max,M}$	J_M ($J_{M,Br}$)											
Nm	Nm	kg cm²											
SIMOTICS S-1FT2 Compact servomotors with 1 and 2-stage NRK155 planetary gearboxes (continued)													
10.2 ... 10.4	34.6 ... 35.2	15.1 (16.8)	n_{2N} r/min	300	250	150	75	75	50	37.5	30	20	**1FT2206-4AH..-0.B0-Z**
			M_{2N} Nm	27	35	67	119	124	188	265	330	210	■■■ + ■■■ + . . .
			$M_{2,0}$ Nm	41	51	104	164	205	255	410	445	210	
			M_{2max} Nm	140	175	336	550	690	712	736	712	336	
10.5 ... 10.7	36.6 ... 37.1	22.5 (25.8)	n_{2N} r/min	300	250	125	75	60	50	37.5	30	20	**1FT2208-2AF..-0.B0-Z**
			M_{2N} Nm	29.5	38	85	129	166	200	280	350	210	■■■ + ■■■ + . . .
			$M_{2,0}$ Nm	42	53	106	167	205	260	415	445	210	
			M_{2max} Nm	148	185	336	580	730	712	736	712	336	
16.4 ... 16.6	49.2 ... 49.9	29.6 (32.6)	n_{2N} r/min	250	200	100	60	50	37.5	30	25	–	**1FT2208-3AB..-0.B0-Z**
			M_{2N} Nm	39.5	52	113	174	215	280	370	435	–	■■■ + ■■■ + . . .
			$M_{2,0}$ Nm	66	82	165	260	325	405	460	445	–	
			M_{2max} Nm	199	245	336	736	736	712	736	712	–	
15.5 ... 15.8	49.2 ... 49.9	29.6 (33)	n_{2N} r/min	300	250	125	75	60	50	30	30	–	**1FT2208-3AC..-0.B0-Z**
			M_{2N} Nm	40.5	52	115	169	215	260	450	440	–	■■■ + ■■■ + . . .
			$M_{2,0}$ Nm	63	78	158	245	310	385	460	445	–	
			M_{2max} Nm	199	245	336	736	736	712	736	712	–	
15.4 ... 15.7	49.2 ... 49.9	29.6 (33)	n_{2N} r/min	250	250	125	75	60	50	30	30	–	**1FT2208-3AF..-0.B0-Z**
			M_{2N} Nm	45.5	48	108	160	205	245	425	410	–	■■■ + ■■■ + . . .
			$M_{2,0}$ Nm	62	78	156	245	305	385	460	445	–	
			M_{2max} Nm	199	245	336	736	736	712	736	712	–	
19.9 ... 20.1	63.8 ... 64.7	38.8 (44.4)	n_{2N} r/min	200	150	100	50	37.5	37.5	25	20	–	**1FT2208-4AB..-0.B0-Z**
			M_{2N} Nm	46.5	64	102	197	260	265	405	445	–	■■■ + ■■■ + . . .
			$M_{2,0}$ Nm	80	100	200	315	395	445	460	445	–	
			M_{2max} Nm	255	320	336	736	736	712	736	712	–	
19.2 ... 19.6	63.8 ... 64.7	38.8 (44.4)	n_{2N} r/min	250	200	125	75	60	50	37.5	30	–	**1FT2208-4AC..-0.B0-Z**
			M_{2N} Nm	56	73	129	186	240	285	365	440	–	■■■ + ■■■ + . . .
			$M_{2,0}$ Nm	78	98	196	305	385	445	460	445	–	
			M_{2max} Nm	255	320	336	736	736	712	730	712	–	
18.4 ... 18.8	63.8 ... 64.7	38.8 (44.4)	n_{2N} r/min	250	200	125	75	60	50	37.5	30	–	**1FT2208-4AF..-0.B0-Z**
			M_{2N} Nm	56	73	128	186	240	285	370	445	–	■■■ + ■■■ + . . .
			$M_{2,0}$ Nm	74	93	187	295	365	445	460	445	–	
			M_{2max} Nm	255	320	336	736	736	712	730	712	–	
23.3 ... 23.8	77.3 ... 78.5	48.1 (53.6)	n_{2N} r/min	250	200	125	60	50	37.5	37.5	30	–	**1FT2208-5AB..-0.B0-Z**
			M_{2N} Nm	61	80	138	250	305	405	375	445	–	■■■ + ■■■ + . . .
			$M_{2,0}$ Nm	95	118	210	370	460	445	460	445	–	
			M_{2max} Nm	310	390	336	736	736	712	736	712	–	
23.1 ... 23.5	77.3 ... 78.5	48.1 (53.6)	n_{2N} r/min	250	200	125	60	50	37.5	30	30	–	**1FT2208-5AC..-0.B0-Z**
			M_{2N} Nm	61	80	137	250	310	405	460	435	–	■■■ + ■■■ + . . .
			$M_{2,0}$ Nm	94	117	210	365	455	445	460	445	–	
			M_{2max} Nm	310	390	336	736	736	712	736	712	–	

➥ Continued on the following page

Planetary gearbox data										
Gearbox type:			NRK155, 1-stage			NRK155, 2-stage					
1st order code			B51			B52					
	i		4	5	10	16	20	25	40	50	100
2nd order code			R04	R05	R10	R16	R20	R25	R40	R50	R00
	$M_{2N,G}$	Nm	460	445	210	460	460	445	460	445	210
	$M_{2max,G}$	Nm	736	712	336	736	736	712	736	712	336
	$M_{2Em.Off}$	Nm	920	890	420	920	920	890	920	890	420
	$J_{1,G}$	kg cm²	7.611	6.482	4.932	7.108	6.172	6.117	5.107	4.774	4.759
	$\varphi_{2,G}$	'	6			9					

Color legend:		
	$M_{max,M} \times i < M_{2N,G}$	The motor and gearbox combination is fatigue-proof
	$M_{2N,G} < M_{max,M} \times i < M_{2max,G}$	Check acceleration and inertias, perform service life calculation if necessary
	$M_{max,M} \times i > M_{2max,G}$	The motor can destroy the gearbox, check acceleration and inertias, perform service life calculation if necessary

© Siemens 2024

Servomotor data			Selection data servomotors with planetary gearbox										Servomotors with planetary gearbox
$M_{0,M}$	$M_{max,M}$	J_M ($J_{M,Br}$)											
Nm	Nm	kg cm²											
SIMOTICS S-1FT2 Compact servomotors with 1 and 2-stage NRK155 planetary gearboxes (continued)													
18.2 ... 18.6	57.9 ... 58.7	66.7 (72.7)	n_{2N} r/min	250	200	100	60	50	37.5	30	30	–	**1FT2210-2AC..-0.B0-Z**
			M_{2N} Nm	57	74	153	235	290	370	460	400	–	■■■ + ■■■ + . . .
			$M_{2,0}$ Nm	74	92	185	290	365	445	460	445	–	
			M_{2max} Nm	230	290	336	736	736	712	736	712	–	
18 ... 18.3	57.9 ... 58.7	66.7 (72.7)	n_{2N} r/min	250	200	100	60	50	37.5	30	25	–	**1FT2210-2AF..-0.B0-Z**
			M_{2N} Nm	53	69	148	220	270	360	440	445	–	■■■ + ■■■ + . . .
			$M_{2,0}$ Nm	73	91	183	285	360	445	460	445	–	
			M_{2max} Nm	230	290	336	736	736	712	736	712	–	
28.3 ... 28.7	86.9 ... 88.3	93,8. (99.8)	n_{2N} r/min	250	200	100	60	50	37.5	30	30	–	**1FT2210-3AB..-0.B0-Z**
			M_{2N} Nm	73	96	200	290	355	445	460	435	–	■■■ + ■■■ + . . .
			$M_{2,0}$ Nm	114	143	210	450	460	445	460	445	–	
			M_{2max} Nm	350	440	336	736	736	712	736	712	–	
28.3 ... 28.7	86.9 ... 88.3	93,8. (99.8)	n_{2N} r/min	250	200	100	60	50	37.5	30	30	–	**1FT2210-3AC..-0.B0-Z**
			M_{2N} Nm	73	95	200	285	350	445	460	435	–	■■■ + ■■■ + . . .
			$M_{2,0}$ Nm	114	143	210	450	460	445	460	445	–	
			M_{2max} Nm	350	440	336	736	736	710	736	712	–	
27.8 ... 28.2	86.9 ... 88.3	93,8. (99.8)	n_{2N} r/min	200	200	100	50	37.5	37.5	30	25	–	**1FT2210-3AF..-0.B0-Z**
			M_{2N} Nm	85	86	184	325	435	435	455	445	–	■■■ + ■■■ + . . .
			$M_{2,0}$ Nm	112	140	210	445	460	445	455	440	–	
			M_{2max} Nm	350	440	336	736	736	712	736	712	–	
37.6 ... 38.5	116 ... 118	122 (138)	n_{2N} r/min	200	200	100	50	50	37.5	30	30	–	**1FT2210-4AB..-0.B0-Z**
			M_{2N} Nm	105	107	210	385	380	445	460	395	–	■■■ + ■■■ + . . .
			$M_{2,0}$ Nm	153	192	210	460	460	445	460	445	–	
			M_{2max} Nm	470	580	335	736	736	712	736	712	–	
37 ... 37.8	116 ... 118	122 (138)	n_{2N} r/min	200	200	100	50	50	37.5	30	30	–	**1FT2210-4AC..-0.B0-Z**
			M_{2N} Nm	104	106	210	380	375	445	460	390	–	■■■ + ■■■ + . . .
			$M_{2,0}$ Nm	151	188	210	460	460	445	460	445	–	
			M_{2max} Nm	470	580	335	736	736	712	736	712	–	
35.5 ... 36.2	116 ... 118	122 (138)	n_{2N} r/min	200	150	100	50	50	37.5	30	25	–	**1FT2210-4AF..-0.B0-Z**
			M_{2N} Nm	102	138	205	375	360	445	460	445	–	■■■ + ■■■ + . . .
			$M_{2,0}$ Nm	144	180	210	460	460	445	460	440	–	
			M_{2max} Nm	470	580	335	736	736	712	736	712	–	
42.9 ... 43.7	145 ... 147	19.5 (21.1)	n_{2N} r/min	200	200	125	50	50	50	30	30	–	**1FT2210-5AB..-0.B0-Z**
			M_{2N} Nm	125	126	187	440	430	350	460	435	–	■■■ + ■■■ + . . .
			$M_{2,0}$ Nm	174	215	210	460	460	445	460	445	–	
			M_{2max} Nm	580	712	336	736	736	712	736	712	–	
43.9 ... 44.9	145 ... 147	150 (166)	n_{2N} r/min	200	150	100	50	50	37.5	30	25	–	**1FT2210-5AC..-0.B0-Z**
			M_{2N} Nm	114	154	210	410	390	445	460	445	–	■■■ + ■■■ + . . .
			$M_{2,0}$ Nm	179	220	210	460	460	445	460	445	–	
			M_{2max} Nm	580	712	336	736	736	712	736	712	–	

Planetary gearbox data										
Gearbox type:			**NRK155, 1-stage**			**NRK155, 2-stage**				
1st order code			**B51**			**B52**				
	i		**4**	**5**	**10**	**16**	**20**	**25**	**40**	**50**	**100**
2nd order code			**R04**	**R05**	**R10**	**R16**	**R20**	**R25**	**R40**	**R50**	**R00**
	$M_{2N,G}$	Nm	460	445	210	460	460	445	460	445	210
	$M_{2max,G}$	Nm	736	712	336	736	736	712	736	712	336
	$M_{2Em.Off}$	Nm	920	890	420	920	920	890	920	890	420
	$J_{1,G}$	kg cm²	7.611	6.482	4.932	7.108	6.172	6.117	5.107	4.774	4.759
	$\varphi_{2,G}$	'	6			9					

Color legend:		
	$M_{max,M} \times i < M_{2N,G}$	**The motor and gearbox combination is fatigue-proof**
	$M_{2N,G} < M_{max,M} \times i < M_{2max,G}$	**Check acceleration and inertias, perform service life calculation if necessary**
	$M_{max,M} \times i > M_{2max,G}$	**The motor can destroy the gearbox, check acceleration and inertias, perform service life calculation if necessary**

© Siemens 2024

Coaxial geared motors for servo converters with 400 V 3 AC line connection

Selection and ordering data

NLC060

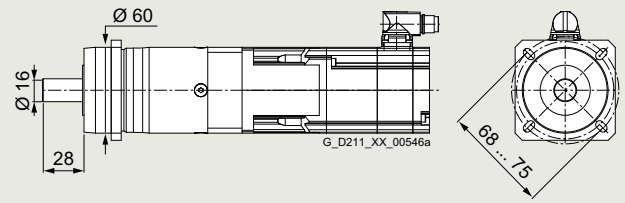

Permissible output shaft loads		
Average radial force for 20000 h	$F_{R,eq}$	3200 N
Average axial force for 20000 h	$F_{A,eq}$	4400 N
Average radial force for 30000 h	$F_{R,eq}$	3200 N
Average axial force for 30000 h	$F_{A,eq}$	3900 N
Maximum radial force	$F_{R,max}$	3200 N
Maximum axial force	$F_{A,max}$	4400 N

Servomotor data			Selection data servomotors with planetary gearbox																		Servomotors with planetary gearbox
$M_{0,M}$	$M_{max,M}$	J_M ($J_{M,Br}$)																			
Nm	Nm	kg cm²																			
SIMOTICS S-1FT2 High Dynamic servomotors with 1 and 2-stage NLC060 planetary gearboxes																					
0.326	1.7	0.093	n_{2N}	r/min	375	375	375	300	300	300	300	250	250	200	200	150	150	125	100	60	37.5	**1FT2103-2AH..-2..0-Z**
...	...	(0.112)	M_{2N}	Nm	0.6	0.96	1.28	2.1	2.35	2.8	2.4	3.35	3.95	4.8	5.3	7.4	9.6	12.3	18	15	■■■ + ■■■ + . . .
0.5	1.85		$M_{2,0}$	Nm	0.97	1.49	2	3.05	3.55	4.6	4	5.5	7	7.5	9.5	12.1	15.6	19.6	18	15	
			M_{2max}	Nm	5	6.9	8.8	12.6	14.5	18.3	16.2	21.5	27	29	36.5	46	59	64	28.5	24	
0.801	3.77	0.139	n_{2N}	r/min	375	375	375	300	300	250	250	250	200	200	150	150	125	100	60	–	**1FT2103-4AH..-2..0-Z**
...	...	(0.158)	M_{2N}	Nm	1.79	2.35	2.8	4.65	5	6.8	6.1	6.8	9.9	10.1	13.7	15.2	19.4	24.5	18	–	■■■ + ■■■ + . . .
0.958	3.9		$M_{2,0}$	Nm	2.4	3.35	4.35	6.3	7.3	9.3	8.1	11	13.9	14.9	18.8	23.5	30	38	18	–	
			M_{2max}	Nm	11.3	15.2	19.2	27	29	24	34.5	46	58	61	70	64	70	64	29	–	
1.01	3.48	0.371	n_{2N}	r/min	500	375	375	375	300	300	300	250	200	200	150	125	100	75	50	–	**1FT2104-4AF..-2..0-Z**
...	...	(0.451)	M_{2N}	Nm	2	3.45	4.35	5.5	7.2	8.6	7.6	10.2	13.3	13.8	18.2	22.5	29	37.5	18	–	■■■ + ■■■ + . . .
1.18	3.6		$M_{2,0}$	Nm	3	4.2	5.4	7.8	9	11.4	10.1	13.7	17.3	18.4	23	29	37	40	18	–	
			M_{2max}	Nm	10.4	14	17.7	25	28.5	24	32	42.5	53	57	70	64	70	64	29	–	
1.01	3.58	0.371	n_{2N}	r/min	500	375	375	375	300	300	300	250	250	200	200	150	125	100	60	–	**1FT2104-4AK..-2..0-Z**
...	...	(0.451)	M_{2N}	Nm	2.15	3.75	4.75	5.8	7.8	9.1	8.2	11	11.7	15	15.9	22.5	28.5	36.5	18	–	■■■ + ■■■ + . . .
1.17	3.7		$M_{2,0}$	Nm	3	4.2	5.4	7.8	9	11.3	10.1	13.6	17.1	18.3	23	28.5	37	40	18	–	
			M_{2max}	Nm	10.7	14.4	18.2	25.5	29	24	32.5	44	55	58	70	64	70	64	29	–	
2.12	7.18	0.581	n_{2N}	r/min	375	375	375	300	300	300	250	200	200	150	150	125	100	75	–	–	**1FT2104-5AF..-2..0-Z**
...	...	(0.671)	M_{2N}	Nm	5.4	6.8	7.9	12	12.7	13.1	15.5	21	22.5	29.5	32	40	44	40	–	–	■■■ + ■■■ + . . .
2.26	7.29		$M_{2,0}$	Nm	6.3	8.6	10.9	15.5	17.8	15	19.9	26.5	33.5	35.5	44	40	44	40	–	–	
			M_{2max}	Nm	21.5	28.5	36	40	29	24	64	70	70	70	70	64	70	64	–	–	
2.1	7.28	0.581	n_{2N}	r/min	375	375	375	300	300	300	250	200	200	150	150	125	125	100	–	–	**1FT2104-5AK..-2..0-Z**
...	...	(0.671)	M_{2N}	Nm	5.3	6.7	7.8	11.8	12.6	12.9	15.2	20.5	22.5	30	32	39.5	37.5	40	–	–	■■■ + ■■■ + . . .
2.24	7.39		$M_{2,0}$	Nm	6.3	8.5	10.8	15.4	17.7	15	19.8	26.5	33	35.5	44	40	44	40	–	–	
			M_{2max}	Nm	21.5	29	36.5	40	29	24	65	70	70	70	70	64	70	64	–	–	
2.87	9.65	0.781	n_{2N}	r/min	375	375	375	300	300	300	250	200	150	150	150	125	100	75	–	–	**1FT2104-6AF..-2..0-Z**
...	...	(0.861)	M_{2N}	Nm	6.7	8.4	9.6	14.5	15.2	15	18.2	24.5	35	35.5	37	40	44	40	–	–	■■■ + ■■■ + . . .
3	9.75		$M_{2,0}$	Nm	8.6	11.6	14.7	20.5	18	15	26.5	35.5	44	44	44	40	44	40	–	–	
			M_{2max}	Nm	28.5	38.5	48.5	40	29	24	70	70	70	70	70	64	70	64	–	–	

➥ Continued on the following page

Planetary gearbox data																		
Gearbox type:		NLC060, 1-stage						NLC060, 2-stage										
1st order code		C21						C22										
	i	3	4	5	7	8	10	9	12	15	16	20	25	32	40	64	100	
2nd order code		R03	R04	R05	R07	R08	R10	R09	R12	R15	R16	R20	R25	R32	R40	R64	R00	
	$M_{2N,G}$	Nm	28	38	40	25	18	15	44	44	44	44	44	40	44	40	18	15
	$M_{2max,G}$	Nm	45	61	64	40	29	24	70	70	70	70	70	64	70	64	29	24
	$M_{2Em.Off}$	Nm	66	88	80	80	80	80	88	88	88	88	88	80	88	80	80	80
	$J_{1,G}$	kg cm²	0.178	0.12	0.097	0.078	0.074	0.069	0.135	0.129	0.081	0.091	0.079	0.078	0.068	0.067	0.067	0.064
	$\varphi_{2,G}$	'	10						12									

Color legend:		
	$M_{max,M} \times i < M_{2N,G}$	The motor and gearbox combination is fatigue-proof
	$M_{2N,G} < M_{max,M} \times i < M_{2max,G}$	Check acceleration and inertias, perform service life calculation if necessary
	$M_{max,M} \times i > M_{2max,G}$	The motor can destroy the gearbox, check acceleration and inertias, perform service life calculation if necessary

© Siemens 2024

Coaxial geared motors for servo converters with 400 V 3 AC line connection

Servomotor data			Selection data servomotors with planetary gearbox																		Servomotors with planetary gearbox
$M_{0,M}$	$M_{max,M}$	J_M ($J_{M,Br}$)																			
Nm	Nm	kg cm²																			
SIMOTICS S-1FT2 High Dynamic servomotors with 1 and 2-stage NLC060 planetary gearboxes (continued)																					
4.51 ... 4.63	14.5 ... 14.6	1.98 (2.82)	n_{2N}	r/min	375	300	300	250	250	250	200	150	150	125	125	100	100	75	–	–	1FT2105-4AF..-0..0-Z
			M_{2N}	Nm	10.6	15.4	17.1	22.5	18	15	28.5	40.5	39	44	43.5	40	38	40	–	–	■■■ + ■■■ + . . .
			$M_{2,0}$	Nm	13.5	18.2	22.5	25	18	15	41	44	44	44	44	40	44	40	–	–	
			M_{2max}	Nm	43.5	58	64	40	29	24	70	70	70	70	70	64	70	64	–	–	
4.49 ... 4.61	14.5 ... 14.6	1.98 (2.82)	n_{2N}	r/min	375	300	250	200	250	200	200	150	125	125	125	100	75	75	–	–	1FT2105-4AH..-0..0-Z
			M_{2N}	Nm	9.6	14.3	18.7	25	17.7	15	25	36.5	44	43.5	36.5	40	44	40	–	–	■■■ + ■■■ + . . .
			$M_{2,0}$	Nm	13.4	18.1	22.5	25	18	15	40.5	44	44	44	44	40	44	40	–	–	
			M_{2max}	Nm	43.5	58	64	40	29	24	70	70	70	70	70	64	70	64	–	–	
SIMOTICS S-1FT2 Compact servomotors with 1 and 2-stage NLC060 planetary gearboxes																					
0.348 ... 0.529	1.6 ... 1.76	0.2 (0.22)	n_{2N}	r/min	375	375	300	300	250	250	250	200	150	150	125	100	100	75	50	37.5	1FT2203-2AK..-2..0-Z
			M_{2N}	Nm	0.55	0.83	1.32	1.74	2.25	2.55	2.25	3.2	4.75	4.8	6.2	8	8.3	11.7	17.9	15	■■■ + ■■■ + . . .
			$M_{2,0}$	Nm	1.04	1.58	2.1	3.2	3.75	4.8	4.25	5.8	7.4	8	10.1	12.8	16.5	20.5	18	15	
			M_{2max}	Nm	4.8	6.5	8.3	11.9	13.7	17.3	15.3	20.5	25.5	27.5	34.5	43.5	55	64	29	24	
0.942 ... 1.09	3.48 ... 3.6	0.35 (0.37)	n_{2N}	r/min	375	375	300	300	250	250	250	200	200	200	150	125	100	75	60	–	1FT2203-4AK..-2..0-Z
			M_{2N}	Nm	2.05	2.6	3.8	4.85	6.1	6.9	6.3	8.5	9.2	9	12.7	15.6	20	27	18	–	■■■ + ■■■ + . . .
			$M_{2,0}$	Nm	2.8	3.95	5	7.3	8.4	10.7	9.4	12.7	16	17.1	21.5	27	34.5	40	18	–	
			M_{2max}	Nm	10.4	14	17.7	25	28.5	24	32	42.5	53	57	70	64	70	64	29	–	
2.08 ... 2.22	6.78 ... 6.89	1.251 (1.331)	n_{2N}	r/min	375	375	375	300	250	250	250	200	200	150	150	125	100	75	–	–	1FT2204-5AF..-2..0-Z
			M_{2N}	Nm	5.2	6.5	7.3	11.2	14.2	14.9	14.3	19.5	19.9	27.5	28.5	35.5	44	40	–	–	■■■ + ■■■ + . . .
			$M_{2,0}$	Nm	6.2	8.4	10.7	15.2	17.5	15	19.6	26	33	35	44	40	44	40	–	–	
			M_{2max}	Nm	20	27	34	40	29	24	61	70	70	70	70	64	70	64	–	–	
2.09 ... 2.23	6.78 ... 6.89	1.251 (1.331)	n_{2N}	r/min	375	375	300	300	250	250	250	200	150	150	125	125	100	100	–	–	1FT2204-5AK..-2..0-Z
			M_{2N}	Nm	5.3	6.6	9.4	11.4	14.5	15	14.6	19.9	27.5	28.5	35.5	36	44	38.5	–	–	■■■ + ■■■ + . . .
			$M_{2,0}$	Nm	6.2	8.5	10.8	15.3	17.6	15	19.7	26	33	35	44	40	44	40	–	–	
			M_{2max}	Nm	20	27	34	40	29	24	61	70	70	70	70	64	70	64	–	–	
2.85 ... 2.98	9.15 ... 9.26	1.631 (1.711)	n_{2N}	r/min	375	375	300	250	250	300	200	200	150	150	125	125	100	75	–	–	1FT2204-6AF..-2..0-Z
			M_{2N}	Nm	7.1	8.7	12.4	17.5	18	13.3	22.5	24	35.5	35.5	43.5	40	44	40	–	–	■■■ + ■■■ + . . .
			$M_{2,0}$	Nm	8.5	11.5	14.6	20.5	18	15	26.5	35.5	44	44	44	40	44	40	–	–	
			M_{2max}	Nm	27	36.5	46	40	29	24	70	70	70	70	70	64	70	64	–	–	
2.6 ... 2.73	10.4 ... 10.5	3.42 (4.32)	n_{2N}	r/min	375	300	250	200	200	200	200	150	125	125	100	100	75	50	–	–	1FT2205-2AC..-0..0-Z
			M_{2N}	Nm	5.4	8.3	10.9	15.3	16.7	15	16.5	24	30.5	30	39.5	33.5	44	40	–	–	■■■ + ■■■ + . . .
			$M_{2,0}$	Nm	7.7	10.5	13.3	18.9	18	15	24	32	40	43	44	40	44	40	–	–	
			M_{2max}	Nm	31	41.5	52	40	29	24	70	70	70	70	70	64	70	64	–	–	
2.66 ... 2.79	10.4 ... 10.5	3.42 (4.32)	n_{2N}	r/min	375	375	300	250	250	250	200	150	150	125	100	100	75	75	–	–	1FT2205-2AF..-0..0-Z
			M_{2N}	Nm	6.7	7.6	11.3	15.5	15.4	12.4	20.5	27.5	29	36	44	40	44	40	–	–	■■■ + ■■■ + . . .
			$M_{2,0}$	Nm	7.9	10.8	13.6	19.3	18	15	24.5	33	41.5	43.5	44	40	44	40	–	–	
			M_{2max}	Nm	31	41.5	52	40	29	24	70	70	70	70	70	64	70	64	–	–	
2.65 ... 2.77	10.4 ... 10.5	3.42 (4.32)	n_{2N}	r/min	375	300	300	250	200	200	200	150	125	125	100	100	75	75	–	–	1FT2205-2AH..-0..0-Z
			M_{2N}	Nm	6	9	9.9	13.4	17.9	15	18.2	26	33	32.5	42.5	37.5	44	38	–	–	■■■ + ■■■ + . . .
			$M_{2,0}$	Nm	7.9	10.7	13.6	19.2	18	15	24.5	32.5	41	43.5	44	40	44	40	–	–	
			M_{2max}	Nm	31	41.5	52	40	29	24	70	70	70	70	70	64	70	64	–	–	

➥ Continued on the following page

Planetary gearbox data																	
Gearbox type:		NLC060, 1-stage						NLC060, 2-stage									
1st order code		C21						C22									
	i	3	4	5	7	8	10	9	12	15	16	20	25	32	40	64	100
2nd order code		R03	R04	R05	R07	R08	R10	R09	R12	R15	R16	R20	R25	R32	R40	R64	R00
	$M_{2N,G}$ Nm	28	38	40	25	18	15	44	44	44	44	44	40	44	40	18	15
	$M_{2max,G}$ Nm	45	61	64	40	29	24	70	70	70	70	70	64	70	64	29	24
	$M_{2Em.Off}$ Nm	66	88	80	80	80	80	88	88	88	88	88	80	88	80	80	80
	$J_{1,G}$ kg cm²	0.178	0.12	0.097	0.078	0.074	0.069	0.135	0.129	0.081	0.091	0.079	0.078	0.068	0.067	0.067	0.064
	$\varphi_{2,G}$ '	10						12									

Color legend:		
	$M_{max,M} \times i < M_{2N,G}$	The motor and gearbox combination is fatigue-proof
	$M_{2N,G} < M_{max,M} \times i < M_{2max,G}$	Check acceleration and inertias, perform service life calculation if necessary
	$M_{max,M} \times i > M_{2max,G}$	The motor can destroy the gearbox, check acceleration and inertias, perform service life calculation if necessary

© Siemens 2024

Coaxial geared motors for servo converters with 400 V 3 AC line connection

Servomotor data

$M_{0,M}$	$M_{max,M}$	J_M ($J_{M,Br}$)
Nm	Nm	kg cm²
4.69 ... 4.81	17.4 ... 17.6	5.37 (6.27)

Selection data servomotors with planetary gearbox

Servomotors with planetary gearbox

SIMOTICS S-1FT2 Compact servomotors with 1 and 2-stage NLC060 planetary gearboxes (continued)

n_{2N}	r/min	300	300	250	200	250	200	150	125	125	125	100	100	75	75	–	–	**1FT2205-4AF..-0..0-Z**
M_{2N}	Nm	11.9	13.9	18.4	24.5	17.2	15	35	43.5	44	42.5	44	40	44	39	–	–	■■■ + ■■■ + . . .
$M_{2,0}$	Nm	14	18.9	23.5	25	18	15	42.5	44	44	44	44	40	44	40	–	–	
M_{2max}	Nm	45	61	64	40	29	24	70	70	70	70	70	64	70	64	–	–	

Planetary gearbox data

Gearbox type:		**NLC060, 1-stage**						**NLC060, 2-stage**									
1st order code		**C21**						**C22**									
i		**3**	**4**	**5**	**7**	**8**	**10**	**9**	**12**	**15**	**16**	**20**	**25**	**32**	**40**	**64**	**100**
2nd order code		**R03**	**R04**	**R05**	**R07**	**R08**	**R10**	**R09**	**R12**	**R15**	**R16**	**R20**	**R25**	**R32**	**R40**	**R64**	**R00**
$M_{2N,G}$	Nm	28	38	40	25	18	15	44	44	44	44	44	40	44	40	18	15
$M_{2max,G}$	Nm	45	61	64	40	29	24	70	70	70	70	70	64	70	64	29	24
$M_{2Em.Off}$	Nm	66	88	80	80	80	80	88	88	88	88	88	80	88	80	80	80
$J_{1,G}$	kg cm²	0.178	0.12	0.097	0.078	0.074	0.069	0.135	0.129	0.081	0.091	0.079	0.078	0.068	0.067	0.067	0.064
$\varphi_{2,G}$	'	10						12									

Color legend:

$M_{max,M} \times i < M_{2N,G}$	**The motor and gearbox combination is fatigue-proof**
$M_{2N,G} < M_{max,M} \times i < M_{2max,G}$	**Check acceleration and inertias, perform service life calculation if necessary**
$M_{max,M} \times i > M_{2max,G}$	**The motor can destroy the gearbox, check acceleration and inertias, perform service life calculation if necessary**

© Siemens 2024

Selection and ordering data

NLC080

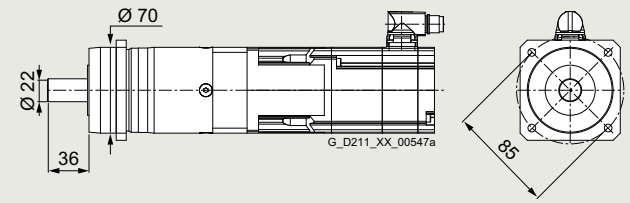

Permissible output shaft loads		
Average radial force for 20000 h	$F_{R,eq}$	5500 N
Average axial force for 20000 h	$F_{A,eq}$	6400 N
Average radial force for 30000 h	$F_{R,eq}$	4800 N
Average axial force for 30000 h	$F_{A,eq}$	5700 N
Maximum radial force	$F_{R,max}$	5500 N
Maximum axial force	$F_{A,max}$	6400 N

Servomotor data			Selection data servomotors with planetary gearbox																	Servomotors with planetary gearbox
$M_{0,M}$	$M_{max,M}$	J_M ($J_{M,Br}$)																		
Nm	Nm	kg cm²																		
SIMOTICS S-1FT2 High Dynamic servomotors with 1 and 2-stage NLC080 planetary gearboxes																				
0.224	1.56	0.093	n_{2N}	r/min	250	300	300	300	300	250	250	250	200	200	150	150	125	100	60	37.5	1FT2103-2AH..-0..0-Z
...	...	(0.112)	M_{2N}	Nm	0.35	0.63	0.98	1.59	1.83	2.6	2.1	2.5	3.6	3.65	5.6	6	8.3	10.8	19	31.5	■■■ + ■■■ + . . .
0.501	1.82		$M_{2,0}$	Nm	0.67	1.19	1.72	2.75	3.3	4.35	3.7	5.2	6.7	7.3	9.3	11.8	15.4	19.5	31.5	38	
			M_{2max}	Nm	4.65	6.5	8.3	12.1	13.9	17.6	15.6	21	26.5	28	35.5	44.5	57	72	80	61	
0.727	3.64	0.139	n_{2N}	r/min	375	375	300	300	300	250	250	200	200	200	150	125	125	100	60	37.5	1FT2103-4AH..-0..0-Z
...	...	(0.158)	M_{2N}	Nm	1.5	2	3.1	4.35	4.65	6.6	5.7	7.8	8.9	8.5	12.9	16.2	18.6	23.5	40	38	■■■ + ■■■ + . . .
0.984	3.85		$M_{2,0}$	Nm	2.15	3.2	4.2	6.2	7.3	9.3	8.1	11	14	15	19	23.5	30.5	38.5	50	38	
			M_{2max}	Nm	10.9	14.8	18.7	26.5	30	38	34	45.5	57	61	76	95	122	153	80	61	
0.875	3.34	0.35	n_{2N}	r/min	375	375	375	300	300	300	300	250	200	200	150	125	100	75	50	30	1FT2104-4AF..-2..0-Z
...	...	(0.43)	M_{2N}	Nm	2.1	3	3.85	5.9	6.7	7.8	7	9.4	12.2	12.7	17.3	21.5	28.5	37	50	38	■■■ + ■■■ + . . .
1.15	3.56		$M_{2,0}$	Nm	2.6	3.75	4.95	7.3	8.4	10.8	9.5	13	16.5	17.6	22	28	36	45	50	38	
			M_{2max}	Nm	10	13.6	17.2	24.5	28	35	31	42	52	56	70	88	113	142	80	61	
0.869	3.44	0.35	n_{2N}	r/min	375	375	375	300	300	300	300	250	200	200	150	150	125	100	60	37.5	1FT2104-4AK..-2..0-Z
...	...	(0.43)	M_{2N}	Nm	2.35	3.3	4.25	6.5	7.3	8.2	7.6	10.1	13.4	13.9	18.9	21	28	35.5	50	38	■■■ + ■■■ + . . .
1.14	3.66		$M_{2,0}$	Nm	2.6	3.75	4.9	7.2	8.4	10.7	9.5	12.9	16.4	17.5	22	27.5	35.5	45	50	38	
			M_{2max}	Nm	10.3	14	17.7	25	28.5	36	32	43	54	58	72	91	116	145	80	61	
1.98	7.04	0.56	n_{2N}	r/min	375	375	375	300	300	250	250	200	200	150	150	125	100	75	50	30	1FT2104-5AF..-2..0-Z
...	...	(0.65)	M_{2N}	Nm	5.3	6.6	7.5	12.2	12.7	17.4	16.1	21.5	21	29.5	33.5	41	56	73	50	38	■■■ + ■■■ + . . .
2.23	7.22		$M_{2,0}$	Nm	5.9	8.2	10.4	15	17.2	21.5	19.3	26	32.5	35	44	55	70	88	50	38	
			M_{2max}	Nm	21	28	35.5	50	57	61	64	86	107	114	143	176	192	176	80	61	
1.96	7.14	0.56	n_{2N}	r/min	375	375	300	300	250	250	250	200	150	150	150	100	100	75	60	37.5	1FT2104-5AK..-2..0-Z
...	...	(0.65)	M_{2N}	Nm	5.3	6.5	9.7	12	15.5	17.1	16	22	29.5	31	33	49.5	56	77	50	38	■■■ + ■■■ + . . .
2.21	7.32		$M_{2,0}$	Nm	5.8	8.1	10.4	14.9	17.1	21.5	19.2	25.5	32.5	34.5	43.5	54	70	88	50	38	
			M_{2max}	Nm	21	28.5	36	51	58	61	65	87	109	116	145	176	192	176	80	61	
2.73	9.51	0.76	n_{2N}	r/min	375	375	300	300	250	250	250	200	150	150	125	100	100	75	50	–	1FT2104-6AF..-2..0-Z
...	...	(0.84)	M_{2N}	Nm	6.8	8.3	12.2	14.9	19.3	20.5	19.4	26.5	37.5	37.5	48.5	62	66	91	50	–	■■■ + ■■■ + . . .
2.96	9.68		$M_{2,0}$	Nm	8.1	11.2	14.2	20	23	29	26	35	43.5	46.5	58	73	94	110	50	–	
			M_{2max}	Nm	28.5	38	48	67	77	61	86	115	144	153	192	176	192	176	80	–	

➥ Continued on the following page

Planetary gearbox data																	
Gearbox type:		NLC080, 1-stage						NLC080, 2-stage									
1st order code		C31						C32									
	i	3	4	5	7	8	10	9	12	15	16	20	25	32	40	64	100
2nd order code		R03	R04	R05	R07	R08	R10	R09	R12	R15	R16	R20	R25	R32	R40	R64	R00
	$M_{2N,G}$ Nm	85	115	110	65	50	38	130	120	110	120	120	110	120	110	50	38
	$M_{2max,G}$ Nm	136	184	176	104	80	61	208	192	176	192	192	176	192	176	80	61
	$M_{2Em.Off}$ Nm	180	240	220	178	190	200	260	240	220	240	240	220	240	220	190	200
	$J_{1,G}$ kg cm²	0.775	0.54	0.466	0.401	0.387	0.37	0.641	0.615	0.607	0.46	0.415	0.412	0.37	0.368	0.369	0.357
	$\varphi_{2,G}$ '	7						9									

Color legend:		
	$M_{max,M} \times i < M_{2N,G}$	The motor and gearbox combination is fatigue-proof
	$M_{2N,G} < M_{max,M} \times i < M_{2max,G}$	Check acceleration and inertias, perform service life calculation if necessary
	$M_{max,M} \times i > M_{2max,G}$	The motor can destroy the gearbox, check acceleration and inertias, perform service life calculation if necessary

© Siemens 2024

Coaxial geared motors for servo converters with 400 V 3 AC line connection

Servomotor data $M_{0,M}$ Nm	$M_{max,M}$ Nm	J_M ($J_{M,Br}$) kg cm²	Selection data servomotors with planetary gearbox																		Servomotors with planetary gearbox
SIMOTICS S-1FT2 High Dynamic servomotors with 1 and 2-stage NLC080 planetary gearboxes (continued)																					
4.47 ... 4.66	14.4 ... 14.6	1.71 (2.55)	n_{2N}	r/min	375	375	300	300	250	250	250	200	150	150	125	100	75	75	50	–	1FT2105-4AF..-0..0-Z
			M_{2N}	Nm	11.5	14	19.3	23	29.5	30	28	37	53	53	68	87	115	110	50	–	■■■ + ■■■ + . . .
			$M_{2,0}$	Nm	13.4	18.1	22.5	32	37	38	41	55	69	74	92	110	120	110	50	–	
			M_{2max}	Nm	43	57	72	101	80	61	130	173	176	192	192	176	192	176	80	–	
4.5 ... 4.69	14.4 ... 14.6	1.71 (2.55)	n_{2N}	r/min	375	375	300	250	250	200	200	200	150	150	125	100	75	75	60	–	1FT2105-4AH..-0..0-Z
			M_{2N}	Nm	11	12.5	18.3	25	27	35.5	32	32.5	49.5	48	61	79	107	104	50	–	■■■ + ■■■ + . . .
			$M_{2,0}$	Nm	13.4	18.2	23	32.5	37	38	41.5	55	70	74	93	110	120	110	50	–	
			M_{2max}	Nm	43	57	72	101	80	61	130	173	176	192	192	176	192	176	80	–	
7.08 ... 7.26	23.2 ... 23.4	2.65 (3.5)	n_{2N}	r/min	375	300	300	250	200	250	200	150	125	100	100	100	75	75	–	–	1FT2105-6AF..-0..0-Z
			M_{2N}	Nm	16.7	24	26.5	37	48	33	47	65	81	95	104	96	120	110	–	–	■■■ + ■■■ + . . .
			$M_{2,0}$	Nm	21	28.5	35.5	50	50	38	64	85	107	114	120	110	120	110	–	–	
			M_{2max}	Nm	70	93	116	104	80	61	208	192	176	192	192	176	192	176	–	–	
7.18 ... 7.36	25 ... 25.3	5.476 (7.176)	n_{2N}	r/min	300	300	250	200	200	200	150	125	100	100	75	75	60	60	–	–	1FT2106-3AF..-0..0-Z
			M_{2N}	Nm	18.7	21	28.5	39.5	39.5	32.5	54	67	86	85	118	108	120	104	–	–	■■■ + ■■■ + . . .
			$M_{2,0}$	Nm	21.5	28.5	36	51	50	38	65	87	109	116	120	110	120	110	–	–	
			M_{2max}	Nm	75	101	126	104	80	61	208	192	176	192	192	175	192	176	–	–	
9.37 ... 9.55	31.8 ... 32.2	6.876 (8.476)	n_{2N}	r/min	300	250	250	200	200	200	150	125	100	100	75	75	60	60	–	–	1FT2106-4AF..-0..0-Z
			M_{2N}	Nm	23.5	31.5	34	47	45	32	64	76	98	94	120	109	120	95	–	–	■■■ + ■■■ + . . .
			$M_{2,0}$	Nm	28	37.5	47	65	50	38	84	112	110	120	120	110	120	110	–	–	
			M_{2max}	Nm	96	128	160	104	80	61	208	192	176	192	192	176	192	176	–	–	
SIMOTICS S-1FT2 Compact servomotors with 1 and 2-stage NLC080 planetary gearboxes																					
0.286 ... 0.496	1.54 ... 1.72	0.2 (0.22)	n_{2N}	r/min	–	250	250	250	200	200	200	150	150	125	125	100	75	75	37.5	30	1FT2203-2AK..-0..0-Z
			M_{2N}	Nm	–	0.73	1.07	1.61	2.2	2.65	2.25	3.5	3.9	4.75	5.3	7.1	10.4	10.8	22	30	■■■ + ■■■ + . . .
			$M_{2,0}$	Nm	–	1.14	1.65	2.65	3.15	4.2	3.65	5.1	6.7	7.2	9.2	11.7	15.3	19.3	31	38	
			M_{2max}	Nm	–	6.1	7.9	11.4	13.1	16.6	14.8	20	25	26.5	33.5	42.5	54	68	80	61	
0.83 ... 1.1	3.34 ... 3.56	0.35 (0.37)	n_{2N}	r/min	375	375	300	300	250	250	250	200	200	150	150	125	100	75	50	37.5	1FT2203-4AK..-0..0-Z
			M_{2N}	Nm	1.74	2.3	3.45	4.7	5.8	6.7	5.9	8.1	8.4	11.4	12.3	15.1	20	27.5	42	38	■■■ + ■■■ + . . .
			$M_{2,0}$	Nm	2.45	3.6	4.7	7	8.1	10.3	9.1	12.5	15.8	16.9	21	26.5	34.5	43.5	50	38	
			M_{2max}	Nm	10	13.6	17.2	24.5	28	35	31	42	52	56	70	88	113	142	80	61	
1.94 ... 2.19	6.65 ... 6.83	1.23 (1.31)	n_{2N}	r/min	375	375	300	300	250	250	250	200	150	150	150	125	100	75	50	30	1FT2204-5AF..-2..0-Z
			M_{2N}	Nm	5	6.3	8.9	11.3	14.3	15.9	15	20	26	27.5	30	37	50	66	50	38	■■■ + ■■■ + . . .
			$M_{2,0}$	Nm	5.8	8	10.2	14.7	16.9	21	19	25.5	32	34	43	54	69	87	50	38	
			M_{2max}	Nm	19.9	26.5	33.5	47.5	54	61	60	81	101	108	135	169	192	176	80	61	
1.95 ... 2.2	6.65 ... 6.83	1.23 (1.31)	n_{2N}	r/min	375	375	300	300	250	250	250	200	150	150	150	125	100	75	60	37.5	1FT2204-5AK..-2..0-Z
			M_{2N}	Nm	5.2	6.4	9.2	11.6	14.8	16.2	15.4	20.5	27	28.5	30.5	37.5	52	68	50	38	■■■ + ■■■ + . . .
			$M_{2,0}$	Nm	5.8	8	10.3	14.8	17	21.5	19.1	25.5	32	34.5	43	54	70	87	50	38	
			M_{2max}	Nm	19.9	26.5	33.5	47.5	54	61	60	81	101	108	135	169	192	176	80	61	
2.72 ... 2.95	9.02 ... 9.19	1.61 (1.69)	n_{2N}	r/min	375	375	300	250	250	200	250	200	150	150	125	100	100	75	50	–	1FT2204-6AF..-2..0-Z
			M_{2N}	Nm	7.3	8.7	12.9	18.6	20	26.5	19.6	26.5	38	38.5	49	63	63	89	50	–	■■■ + ■■■ + . . .
			$M_{2,0}$	Nm	8.1	11.1	14.1	20	23	29	25.5	34.5	43.5	46.5	58	73	94	110	50	–	
			M_{2max}	Nm	27	36	45.5	64	73	61	81	109	136	145	182	176	192	176	80	–	

➥ Continued on the following page

Planetary gearbox data																	
Gearbox type:		NLC080, 1-stage						NLC080, 2-stage									
1st order code		C31						C32									
	i	3	4	5	7	8	10	9	12	15	16	20	25	32	40	64	100
2nd order code		R03	R04	R05	R07	R08	R10	R09	R12	R15	R16	R20	R25	R32	R40	R64	R00
$M_{2N,G}$	Nm	85	115	110	65	50	38	130	120	110	120	120	110	120	110	50	38
$M_{2max,G}$	Nm	136	184	176	104	80	61	208	192	176	192	192	176	192	176	80	61
$M_{2Em.Off}$	Nm	180	240	220	178	190	200	260	240	220	240	240	220	240	220	190	200
$J_{1,G}$	kg cm²	0.775	0.54	0.466	0.401	0.387	0.37	0.641	0.615	0.607	0.46	0.415	0.412	0.37	0.368	0.369	0.357
$\varphi_{2,G}$	'	7						9									

Color legend:

	$M_{max,M} \times i < M_{2N,G}$	The motor and gearbox combination is fatigue-proof
	$M_{2N,G} < M_{max,M} \times i < M_{2max,G}$	Check acceleration and inertias, perform service life calculation if necessary
	$M_{max,M} \times i > M_{2max,G}$	The motor can destroy the gearbox, check acceleration and inertias, perform service life calculation if necessary

© Siemens 2024

Coaxial geared motors for servo converters with 400 V 3 AC line connection

Servomotor data			Selection data servomotors with planetary gearbox																		Servomotors with planetary gearbox
$M_{0,M}$	$M_{max,M}$	J_M ($J_{M,Br}$)																			
Nm	Nm	kg cm²																			
SIMOTICS S-1FT2 Compact servomotors with 1 and 2-stage NLC080 planetary gearboxes (continued)																					
2.62	10.3	3.15	n_{2N}	r/min	375	375	300	250	250	200	250	200	150	125	100	100	75	50	37.5	–	1FT2205-2AC..-0..0-Z
...	...	(4.05)	M_{2N}	Nm	6.2	6.9	10.6	15	16.4	21	15.8	21.5	29.5	34	43	46.5	63	88	50	–	■■■ + ■■■ + ...
2.82	10.5		$M_{2,0}$	Nm	7.8	10.7	13.6	19.5	22	28	24.5	33	41.5	44.5	56	70	90	110	50	–	
			M_{2max}	Nm	30.5	41	51	73	80	61	93	124	155	166	192	176	192	176	80	–	
2.67	10.3	3.15	n_{2N}	r/min	375	375	375	300	250	250	250	200	150	150	125	100	100	75	50	–	1FT2205-2AF..-0..0-Z
...	...	(4.05)	M_{2N}	Nm	6.7	8.8	9.6	15.3	18.6	20.5	19.7	26	34	35.5	45	56	62	86	50	–	■■■ + ■■■ + ...
2.87	10.5		$M_{2,0}$	Nm	8	10.9	13.9	19.8	22.5	28.5	25	33.5	42.5	45	57	71	91	110	50	–	
			M_{2max}	Nm	30.5	41	51	73	80	61	93	124	155	166	192	176	192	176	80	–	
2.64	10.3	3.15	n_{2N}	r/min	375	375	300	250	250	200	250	200	150	150	125	100	100	75	60	–	1FT2205-2AH..-0..0-Z
...	...	(4.05)	M_{2N}	Nm	6.5	7.8	11.2	15.8	17.6	22.5	17.4	23.5	32	33.5	41.5	52	53	78	49.5	–	■■■ + ■■■ + ...
2.85	10.5		$M_{2,0}$	Nm	7.9	10.8	13.7	19.6	22.5	28	25	33.5	42	45	56	70	90	110	50	–	
			M_{2max}	Nm	30.5	41	51	73	80	61	93	124	155	166	192	176	192	176	80	–	
4.75	17.4	5.1	n_{2N}	r/min	375	300	300	250	200	200	200	150	125	125	100	100	75	75	–	–	1FT2205-4AF..-0..0-Z
...	...	(6)	M_{2N}	Nm	11	16.2	18.3	25.5	32.5	36	34	47	58	60	77	75	110	95	–	–	■■■ + ■■■ + ...
4.94	17.5		$M_{2,0}$	Nm	14.2	19.2	24	34	39	38	43.5	58	73	77	97	110	120	110	–	–	
			M_{2max}	Nm	52	69	87	104	80	61	156	192	176	192	192	176	192	176	–	–	
4.98	17.3	8.676	n_{2N}	r/min	300	250	200	200	150	150	150	125	100	100	75	60	50	50	37.5	–	1FT2206-2AC..-0..0-Z
...	...	(10.276)	M_{2N}	Nm	11.7	16.2	21	23	33.5	34.5	35.5	43.5	56	54	78	99	119	101	49.5	–	■■■ + ■■■ + ...
5.17	17.5		$M_{2,0}$	Nm	14.9	20	25	35.5	41	38	45.5	61	76	81	102	110	120	110	50	–	
			M_{2max}	Nm	52	69	87	104	80	61	155	192	176	192	192	176	192	176	80	–	
4.9	17.3	8.676	n_{2N}	r/min	375	300	250	200	200	150	150	150	125	100	100	75	60	50	–	–	1FT2206-2AF..-0..0-Z
...	...	(10.276)	M_{2N}	Nm	10.9	16.2	20.5	29	31	38	37.5	41	50	64	62	91	119	110	–	–	■■■ + ■■■ + ...
5.09	17.5		$M_{2,0}$	Nm	14.7	19.8	25	35	40.5	38	45	60	75	80	100	110	120	110	–	–	
			M_{2max}	Nm	52	69	87	104	80	61	155	192	176	192	192	176	192	176	–	–	
4.76	17.3	8.676	n_{2N}	r/min	300	250	250	200	200	150	150	125	100	100	75	60	60	50	–	–	1FT2206-2AH..-0..0-Z
...	...	(10.276)	M_{2N}	Nm	12.2	16.5	18.6	26	25	38	36	47.5	59	60	80	100	101	110	–	–	■■■ + ■■■ + ...
4.95	17.5		$M_{2,0}$	Nm	14.2	19.2	24	34	39	38	43.5	58	73	78	97	110	120	110	–	–	
			M_{2max}	Nm	52	69	87	104	80	61	155	192	176	192	192	176	192	176	–	–	
7.23	26	12.38	n_{2N}	r/min	300	250	250	200	150	150	150	100	100	100	75	60	50	37.5	–	–	1FT2206-3AB..-0..0-Z
...	...	(13.976)	M_{2N}	Nm	17.7	24	25.5	35.5	49	38	50	73	79	77	109	110	120	110	–	–	■■■ + ■■■ + ...
7.41	26.3		$M_{2,0}$	Nm	21.5	29	36.5	51	50	38	65	87	109	117	120	110	120	110	–	–	
			M_{2max}	Nm	78	105	131	104	80	61	208	192	176	192	192	176	192	176	–	–	
7.09	26	12.38	n_{2N}	r/min	300	250	200	200	150	150	150	125	100	100	75	75	60	50	–	–	1FT2206-3AF..-0..0-Z
...	...	(13.976)	M_{2N}	Nm	17	23	30	33.5	47.5	38	48	58	75	72	104	89	117	110	–	–	■■■ + ■■■ + ...
7.28	26.3		$M_{2,0}$	Nm	21	28.5	35.5	50	50	38	64	85	107	114	120	110	120	110	–	–	
			M_{2max}	Nm	78	105	131	104	80	61	208	192	176	192	192	176	192	176	–	–	
9.93	36.7	15.98	n_{2N}	r/min	250	200	200	125	150	150	100	100	75	75	60	60	50	37.5	–	–	1FT2206-4AC..-0..0-Z
...	...	(17.676)	M_{2N}	Nm	22	30.5	31.5	56	45.5	34.5	73	74	103	101	120	110	119	110	–	–	■■■ + ■■■ + ...
10.1	37.1		$M_{2,0}$	Nm	29.5	39.5	50	65	50	38	89	119	110	120	120	110	120	110	–	–	
			M_{2max}	Nm	111	148	176	104	80	61	208	192	176	192	192	176	192	176	–	–	

➥ Continued on the following page

Planetary gearbox data																	
Gearbox type:			NLC080, 1-stage						NLC080, 2-stage								
1st order code			C31						C32								
	i		3	4	5	7	8	10	9	12	15	16	20	25	32	40	64	100
2nd order code			R03	R04	R05	R07	R08	R10	R09	R12	R15	R16	R20	R25	R32	R40	R64	R00
	$M_{2N,G}$	Nm	85	115	110	65	50	38	130	120	110	120	120	110	120	110	50	38
	$M_{2max,G}$	Nm	136	184	176	104	80	61	208	192	176	192	192	176	192	176	80	61
	$M_{2Em.Off}$	Nm	180	240	220	178	190	200	260	240	220	240	240	220	240	220	190	200
	$J_{1,G}$	kg cm²	0.775	0.54	0.466	0.401	0.387	0.37	0.641	0.615	0.607	0.46	0.415	0.412	0.37	0.368	0.369	0.357
	$\varphi_{2,G}$	'	7						9									

Color legend:

	$M_{max,M} \times i < M_{2N,G}$	The motor and gearbox combination is fatigue-proof
	$M_{2N,G} < M_{max,M} \times i < M_{2max,G}$	Check acceleration and inertias, perform service life calculation if necessary
	$M_{max,M} \times i > M_{2max,G}$	The motor can destroy the gearbox, check acceleration and inertias, perform service life calculation if necessary

© Siemens 2024

Coaxial geared motors for servo converters with 400 V 3 AC line connection

Servomotor data			Selection data servomotors with planetary gearbox																Servomotors with planetary gearbox
$M_{0,M}$	$M_{max,M}$	J_M ($J_{M,Br}$)																	
Nm	Nm	kg cm²																	
SIMOTICS S-1FT2 Compact servomotors with 1 and 2-stage NLC080 planetary gearboxes (continued)																			
9.84	34.7	15.976	n_{2N}	r/min	300	250	250	200	200	200	150	100	100	100	75	75	60	60	–	–	**1FT2206-4AF..-0..0-Z**
...	...	(17.676)	M_{2N}	Nm	24.5	33	35	48	46	34	65	100	100	96	120	110	120	97	–	–	■■■ + ■■■ + . . .
10	35.2		$M_{2,0}$	Nm	29.5	39.5	49.5	65	50	38	88	118	110	120	120	110	120	110	–	–	
			M_{2max}	Nm	105	140	175	104	79	61	208	192	176	192	191	176	192	176	–	–	
9.42	34.7	15.976	n_{2N}	r/min	300	250	200	150	150	150	125	100	75	75	75	60	60	50	–	–	**1FT2206-4AH..-0..0-Z**
...	...	(17.676)	M_{2N}	Nm	20	27	37	54	50	38	67	86	110	116	112	110	115	110	–	–	■■■ + ■■■ + . . .
9.6	35.2		$M_{2,0}$	Nm	28	37.5	47.5	65	50	38	84	113	110	120	120	110	120	110	–	–	
			M_{2max}	Nm	105	140	175	104	79	61	208	192	176	192	191	176	192	176	–	–	

Planetary gearbox data																	
Gearbox type:			**NLC080, 1-stage**						**NLC080, 2-stage**								
1st order code			**C31**						**C32**								
	i		**3**	**4**	**5**	**7**	**8**	**10**	**9**	**12**	**15**	**16**	**20**	**25**	**32**	**40**	**64**	**100**
2nd order code			**R03**	**R04**	**R05**	**R07**	**R08**	**R10**	**R09**	**R12**	**R15**	**R16**	**R20**	**R25**	**R32**	**R40**	**R64**	**R00**
	$M_{2N,G}$	Nm	85	115	110	65	50	38	130	120	110	120	120	110	120	110	50	38
	$M_{2max,G}$	Nm	136	184	176	104	80	61	208	192	176	192	192	176	192	176	80	61
	$M_{2Em.Off}$	Nm	180	240	220	178	190	200	260	240	220	240	240	220	240	220	190	200
	$J_{1,G}$	kg cm²	0.775	0.54	0.466	0.401	0.387	0.37	0.641	0.615	0.607	0.46	0.415	0.412	0.37	0.368	0.369	0.357
	$\varphi_{2,G}$	'	7						9									

Color legend:		
	$M_{max,M} \times i < M_{2N,G}$	**The motor and gearbox combination is fatigue-proof**
	$M_{2N,G} < M_{max,M} \times i < M_{2max,G}$	**Check acceleration and inertias, perform service life calculation if necessary**
	$M_{max,M} \times i > M_{2max,G}$	**The motor can destroy the gearbox, check acceleration and inertias, perform service life calculation if necessary**

© Siemens 2024

Selection and ordering data

NLC120

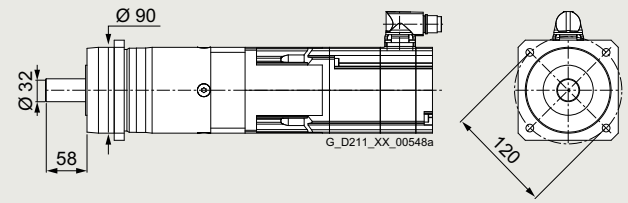

Permissible output shaft loads		
Average radial force for 20000 h	$F_{R,eq}$	6000 N
Average axial force for 20000 h	$F_{A,eq}$	8000 N
Average radial force for 30000 h	$F_{R,eq}$	5400 N
Average axial force for 30000 h	$F_{A,eq}$	7000 N
Maximum radial force	$F_{R,max}$	6000 N
Maximum axial force	$F_{A,max}$	8000 N

Servomotor data			Selection data servomotors with planetary gearbox																		Servomotors with planetary gearbox
$M_{0,M}$	$M_{max,M}$	J_M ($J_{M,Br}$)																			
Nm	Nm	kg cm²																			
SIMOTICS S-1FT2 High Dynamic servomotors with 1 and 2-stage NLC120 planetary gearboxes																					
0.211	1.55	0.093	n_{2N}	r/min	–	–	200	200	200	200	150	125	100	100	100	100	75	75	50	30	1FT2103-2AH..-0..0-Z
...	...	(0.112)	M_{2N}	Nm	–	–	0.7	1.38	1.65	2.1	1.92	2.85	4.05	4.3	5.4	5.8	9.6	10.2	16.5	29.5	■■■ + ■■■ + . . .
0.441	1.75		$M_{2.0}$	Nm	–	–	1.05	1.97	2.4	3.35	2.85	4.2	5.5	6	7.8	10.1	13.3	16.9	27.5	44	
			M_{2max}	Nm	–	–	7.7	11.3	13	16.6	14.7	20	25	27	34	42.5	55	69	111	152	
0.666	3.45	0.139	n_{2N}	r/min	300	250	250	200	200	200	200	150	125	125	100	100	75	60	37.5	30	1FT2103-4AH..-0..0-Z
...	...	(0.158)	M_{2N}	Nm	1.18	2.15	2.85	4.8	5.4	6	4.9	7.8	10.1	10.6	14.6	15	23.5	30	49.5	67	■■■ + ■■■ + . . .
1.05	3.78		$M_{2.0}$	Nm	1.99	3.05	4.15	6.3	7.3	9.5	8.3	11.5	14.7	15.8	20	25	32.5	41	66	95	
			M_{2max}	Nm	10.3	14.2	18	25.5	29.5	37	33	44.5	55	59	74	93	120	150	192	152	
0.695	3.16	0.35	n_{2N}	r/min	375	300	300	250	250	200	200	150	150	150	125	100	100	75	50	30	1FT2104-4AF..-0..0-Z
...	...	(0.43)	M_{2N}	Nm	1.51	2.6	3.5	5.5	6.3	8.6	7	10.1	11.6	11.9	16.4	21	23.5	34	54	90	■■■ + ■■■ + . . .
1.08	3.49		$M_{2.0}$	Nm	2.05	3.15	4.3	6.5	7.6	9.8	8.6	11.9	15.2	16.3	20.5	26	33.5	42	68	95	
			M_{2max}	Nm	9.4	13	16.5	23.5	27	34	30.5	41	51	55	69	86	111	139	192	152	
0.688	3.26	0.35	n_{2N}	r/min	375	300	300	250	250	200	200	150	150	150	125	100	100	75	50	30	1FT2104-4AK..-0..0-Z
...	...	(0.43)	M_{2N}	Nm	1.69	2.75	3.8	5.9	7	9.1	7.5	10.5	12.7	12.7	18.2	23.5	24.5	37.5	57	95	■■■ + ■■■ + . . .
1.07	3.59		$M_{2.0}$	Nm	2.05	3.15	4.25	6.4	7.5	9.7	8.5	11.8	15.1	16.1	20.5	25.5	33.5	42	68	95	
			M_{2max}	Nm	9.7	13.4	17	24	28	35	31	42	53	56	71	89	114	143	192	152	
1.8	6.86	0.56	n_{2N}	r/min	300	300	250	250	200	200	200	150	125	125	100	100	75	60	37.5	30	1FT2104-5AF..-0..0-Z
...	...	(0.65)	M_{2N}	Nm	5.1	6.6	9.3	11.8	15.7	17.6	15.2	22	28	29	40	39	61	77	120	95	■■■ + ■■■ + . . .
2.16	7.13		$M_{2.0}$	Nm	5.3	7.6	9.8	14.2	16.4	20.5	18.4	25	31.5	33.5	42	53	68	85	120	95	
			M_{2max}	Nm	20.5	27.5	35	49.5	56	71	63	84	106	113	141	177	225	280	192	152	
1.78	6.96	0.56	n_{2N}	r/min	300	300	250	250	200	200	200	150	125	125	100	100	75	60	37.5	30	1FT2104-5AK..-0..0-Z
...	...	(0.65)	M_{2N}	Nm	5	6.5	9.2	11.5	15.5	17.2	14.9	21.5	27.5	28	39	38.5	60	76	120	95	■■■ + ■■■ + . . .
2.15	7.23		$M_{2.0}$	Nm	5.3	7.5	9.7	14.1	16.3	20.5	18.3	24.5	31	33	42	52	68	85	120	95	
			M_{2max}	Nm	20.5	28	35.5	50	57	72	64	86	107	114	143	179	230	285	192	152	
2.55	9.33	0.76	n_{2N}	r/min	300	300	250	250	200	200	200	150	125	125	100	75	75	60	50	30	1FT2104-6AF..-0..0-Z
...	...	(0.84)	M_{2N}	Nm	6.8	8.4	11.8	14.6	19.5	21.5	18.6	27	34.5	35	48	65	72	92	97	95	■■■ + ■■■ + . . .
2.9	9.59		$M_{2.0}$	Nm	7.6	10.6	13.5	19.4	22	28	25	33.5	42.5	45.5	57	71	92	115	120	95	
			M_{2max}	Nm	27.5	37.5	47	66	76	95	85	114	142	152	190	235	305	368	192	152	

➥ Continued on the following page

Planetary gearbox data																	
Gearbox type:		NLC120, 1-stage						NLC120, 2-stage									
1st order code		C41						C42									
	i	3	4	5	7	8	10	9	12	15	16	20	25	32	40	64	100
2nd order code		R03	R04	R05	R07	R08	R10	R09	R12	R15	R16	R20	R25	R32	R40	R64	R00
	$M_{2N,G}$	Nm	115	155	195	135	120	95	210	260	230	260	260	230	260	230	120	95
	$M_{2max,G}$	Nm	184	248	312	216	192	152	336	416	368	416	416	368	416	368	192	152
	$M_{2Em.Off}$	Nm	390	520	500	340	380	480	500	520	500	520	520	500	520	500	380	480
	$J_{1.G}$	kg cm²	2.486	1.905	1.677	1.486	1.434	1.39	2.326	2.256	2.233	1.765	1.585	1.577	1.424	1.421	1.417	1.378
	$\varphi_{2,G}$	'	7						9									

Color legend:		
	$M_{max,M} \times i < M_{2N,G}$	The motor and gearbox combination is fatigue-proof
	$M_{2N,G} < M_{max,M} \times i < M_{2max,G}$	Check acceleration and inertias, perform service life calculation if necessary
	$M_{max,M} \times i > M_{2max,G}$	The motor can destroy the gearbox, check acceleration and inertias, perform service life calculation if necessary

© Siemens 2024

Coaxial geared motors for servo converters with 400 V 3 AC line connection

Servomotor data			Selection data servomotors with planetary gearbox																	Servomotors with planetary gearbox
$M_{0,M}$	$M_{max,M}$	J_M ($J_{M,Br}$)																		
Nm	Nm	kg cm²																		
SIMOTICS S-1FT2 High Dynamic servomotors with 1 and 2-stage NLC120 planetary gearboxes (continued)																				
4.29 ... 4.6	14.3 ... 14.5	1.71 (2.55)	n_{2N}	r/min	375	300	250	250	200	200	200	150	125	100	100	75	75	50	50	30	1FT2105-4AF..-0..0-Z
			M_{2N}	Nm	9.8	15	20	23.5	32	33.5	29.5	42.5	53	65	73	99	104	160	106	95	■■■ + ■■■ + . . .
			$M_{2,0}$	Nm	12.8	17.5	22	31.5	36	45.5	40.5	54	68	72	91	114	146	183	120	95	
			M_{2max}	Nm	42.5	57	71	101	115	145	129	172	215	230	285	355	416	368	192	152	
4.32 ... 4.63	14.3 ... 14.5	1.71 (2.55)	n_{2N}	r/min	300	300	250	200	200	150	150	125	100	100	100	75	60	50	37.5	30	1FT2105-4AH..-0..0-Z
			M_{2N}	Nm	11.5	13.7	18.9	27.5	29	40.5	35.5	47	59	62	65	91	123	149	120	95	■■■ + ■■■ + . . .
			$M_{2,0}$	Nm	12.9	17.6	22	31.5	36.5	45.5	40.5	54	68	73	91	115	147	184	120	95	
			M_{2max}	Nm	42.5	57	71	101	115	145	129	172	215	230	285	355	416	368	192	152	
7.26 ... 7.52	23.1 ... 23.4	2.65 (3.5)	n_{2N}	r/min	300	300	250	200	200	150	150	125	100	100	75	75	60	50	37.5	–	1FT2105-6AF..-0..0-Z
			M_{2N}	Nm	17.6	20.5	27.5	40	42	59	53	67	87	88	122	124	165	199	120	–	■■■ + ■■■ + . . .
			$M_{2,0}$	Nm	21.5	29	37	52	59	75	66	89	112	119	149	187	240	230	120	–	
			M_{2max}	Nm	69	92	116	163	186	152	205	275	345	365	416	368	416	368	192	–	
7.64 ... 7.9	25 ... 25.3	4.6 (6.3)	n_{2N}	r/min	300	300	250	200	200	150	150	125	100	100	75	75	60	50	37.5	–	1FT2106-3AF..-0..0-Z
			M_{2N}	Nm	18.6	21.5	29	42	43.5	62	56	70	90	91	126	129	171	205	120	–	■■■ + ■■■ + . . .
			$M_{2,0}$	Nm	22.5	30.5	38.5	54	62	78	70	93	117	125	156	195	250	230	120	–	
			M_{2max}	Nm	75	100	126	176	192	152	225	300	368	400	416	368	416	368	192	–	
10 ... 10.3	31.8 ... 32.2	6 (7.6)	n_{2N}	r/min	300	250	250	200	200	150	150	125	100	100	75	60	50	50	37.5	–	1FT2106-4AF..-0..0-Z
			M_{2N}	Nm	23.5	32.5	36	51	52	75	67	83	107	106	149	189	235	225	120	–	■■■ + ■■■ + . . .
			$M_{2,0}$	Nm	30	40	50	71	81	95	91	121	152	162	200	230	260	230	120	–	
			M_{2max}	Nm	96	128	160	216	192	152	285	380	368	416	416	368	416	368	192	–	
14.3 ... 14.6	43.9 ... 44.5	8.7 (10.4)	n_{2N}	r/min	300	250	250	200	150	150	150	100	100	75	75	60	60	50	–	–	1FT2106-6AF..-0..0-Z
			M_{2N}	Nm	31.5	42.5	46.5	65	88	95	84	128	131	174	183	230	225	230	–	–	■■■ + ■■■ + . . .
			$M_{2,0}$	Nm	43	57	72	101	116	95	129	172	215	230	260	230	260	230	–	–	
			M_{2max}	Nm	133	177	220	216	192	152	336	416	368	416	416	365	416	368	–	–	
SIMOTICS S-1FT2 Compact servomotors with 1 and 2-stage NLC120 planetary gearboxes																				
0.198 ... 0.428	1.45 ... 1.66	0.2 (0.22)	n_{2N}	r/min	–	–	200	200	200	150	150	125	100	100	100	75	60	50	37.5	25	1FT2203-2AK..-0..0-Z
			M_{2N}	Nm	–	–	0.68	1.29	1.48	2.6	1.88	2.75	3.95	4.15	4.85	7.2	10.6	13.4	19.2	30.5	■■■ + ■■■ + . . .
			$M_{2,0}$	Nm	–	–	0.98	1.88	2.3	3.2	2.7	4.05	5.3	5.8	7.5	9.7	12.8	16.3	26.5	42.5	
			M_{2max}	Nm	–	–	7.2	10.6	12.3	15.7	13.8	18.8	23.5	25.5	32	40.5	52	65	105	152	
0.649 ... 1.03	3.16 ... 3.49	0.35 (0.37)	n_{2N}	r/min	300	250	250	200	200	200	200	150	125	125	100	75	75	60	37.5	25	1FT2203-4AK..-0..0-Z
			M_{2N}	Nm	1.58	2.6	3.45	5.5	6.2	6.7	5.7	8.8	11.4	12	16.3	21.5	26	33	54	84	■■■ + ■■■ + . . .
			$M_{2,0}$	Nm	1.94	3	4.05	6.1	7.2	9.3	8.2	11.3	14.5	15.5	19.7	24.5	32	40.5	65	95	
			M_{2max}	Nm	9.4	13	16.5	23.5	27	34	30.5	41	51	55	69	86	111	139	192	152	
1.76 ... 2.12	6.47 ... 6.74	1.23 (1.31)	n_{2N}	r/min	300	300	250	250	200	200	200	150	125	125	100	75	75	60	37.5	30	1FT2204-5AF..-0..0-Z
			M_{2N}	Nm	4.95	6.3	9	11	15.1	16.3	14.3	21	26.5	27	37.5	49	56	72	119	95	■■■ + ■■■ + . . .
			$M_{2,0}$	Nm	5.2	7.4	9.5	13.9	16	20	18	24.5	30.5	33	41.5	52	67	84	120	95	
			M_{2max}	Nm	19.3	26	33	46.5	53	67	59	80	100	107	134	167	215	265	192	152	
1.77 ... 2.14	6.47 ... 6.74	1.23 (1.31)	n_{2N}	r/min	300	300	250	250	200	200	200	150	125	125	100	75	75	60	37.5	30	1FT2204-5AK..-0..0-Z
			M_{2N}	Nm	5	6.5	9.1	11.3	15.4	16.7	14.6	21.5	27.5	27.5	38.5	50	58	74	120	95	■■■ + ■■■ + . . .
			$M_{2,0}$	Nm	5.3	7.4	9.6	14	16.2	20.5	18.2	24.5	31	33	41.5	52	67	84	120	95	
			M_{2max}	Nm	19.3	26	33	46.5	53	67	59	80	100	107	134	167	215	265	192	152	

➥ Continued on the following page

Planetary gearbox data																	
Gearbox type:		NLC120, 1-stage						NLC120, 2-stage									
1st order code		C41						C42									
	i	3	4	5	7	8	10	9	12	15	16	20	25	32	40	64	100
2nd order code		R03	R04	R05	R07	R08	R10	R09	R12	R15	R16	R20	R25	R32	R40	R64	R00
$M_{2N,G}$	Nm	115	155	195	135	120	95	210	260	230	260	260	230	260	230	120	95
$M_{2max,G}$	Nm	184	248	312	216	192	152	336	416	368	416	416	368	416	368	192	152
$M_{2Em.Off}$	Nm	390	520	500	340	380	480	500	520	500	520	520	500	520	500	380	480
$J_{1,G}$	kg cm²	2.486	1.905	1.677	1.486	1.434	1.39	2.326	2.256	2.233	1.765	1.585	1.577	1.424	1.421	1.417	1.378
$\varphi_{2,G}$	'	7						9									

Color legend:

	$M_{max,M} \times i < M_{2N,G}$	The motor and gearbox combination is fatigue-proof
	$M_{2N,G} < M_{max,M} \times i < M_{2max,G}$	Check acceleration and inertias, perform service life calculation if necessary
	$M_{max,M} \times i > M_{2max,G}$	The motor can destroy the gearbox, check acceleration and inertias, perform service life calculation if necessary

© Siemens 2024

Coaxial geared motors for servo converters with 400 V 3 AC line connection

Servomotor data			Selection data servomotors with planetary gearbox																		Servomotors with planetary gearbox
$M_{0,M}$	$M_{max,M}$	J_M ($J_{M,Br}$)																			
Nm	Nm	kg cm²																			
SIMOTICS S-1FT2 Compact servomotors with 1 and 2-stage NLC120 planetary gearboxes (continued)																					
2.54	8.84	1.61	n_{2N}	r/min	300	300	250	250	200	200	200	150	125	100	100	100	75	75	60	37.5	30	1FT2204-6AF..-0..0-Z
...	...	(1.69)	M_{2N}	Nm	7.2	9.1	12.8	15.3	20.5	22	19.4	28.5	36	43.5	50	68	74	95	120	95	■■■ + ■■■ + . . .
2.88	9.09		$M_{2,0}$	Nm	7.6	10.5	13.4	19.3	22	28	25	33.5	42	45	56	71	91	114	120	95	
			M_{2max}	Nm	26.5	35.5	44.5	63	72	90	81	108	135	144	180	225	285	360	192	152	
2.76	10.1	3.15	n_{2N}	r/min	300	250	250	200	200	150	150	125	100	100	100	75	60	50	37.5	20	1FT2205-2AC..-0..0-Z
...	...	(4.05)	M_{2N}	Nm	6.3	9	10.7	16.2	16.9	24	21	28	35.5	37.5	40.5	57	76	94	120	94	■■■ + ■■■ + . . .
3.09	10.4		$M_{2,0}$	Nm	8.2	11.4	14.6	20.5	24	30	26.5	36	45	48.5	60	76	98	122	120	95	
			M_{2max}	Nm	30	40.5	51	72	82	103	92	123	154	164	205	255	325	368	192	152	
2.79	10.1	3.15	n_{2N}	r/min	375	300	300	250	200	200	200	150	125	125	100	75	75	60	37.5	30	1FT2205-2AF..-0..0-Z
...	...	(4.05)	M_{2N}	Nm	5.7	9	10.3	15.1	19.7	21.5	19.3	28	35	35.5	48.5	62	72	92	120	94	■■■ + ■■■ + . . .
3.12	10.4		$M_{2,0}$	Nm	8.3	11.5	14.7	21	24	30.5	27	36.5	45.5	49	61	77	99	124	120	94	
			M_{2max}	Nm	30	40.5	51	72	82	103	92	123	154	164	205	255	325	368	192	152	
2.73	10.1	3.15	n_{2N}	r/min	300	300	250	200	200	150	200	150	125	100	100	75	60	50	37.5	30	1FT2205-2AH..-0..0-Z
...	...	(4.05)	M_{2N}	Nm	6.5	8.1	11.4	16.8	18.2	24.5	16.6	25	31	38.5	43.5	59	77	96	120	95	■■■ + ■■■ + . . .
3.06	10.4		$M_{2,0}$	Nm	8.1	11.3	14.4	20.5	23.5	30	26.5	35.5	45	48	60	75	97	121	119	95	
			M_{2max}	Nm	30	40.5	51	72	82	103	92	123	154	164	205	255	325	368	192	152	
5.01	17.2	5.1	n_{2N}	r/min	300	250	250	200	200	150	150	125	100	100	75	75	60	50	37.5	30	1FT2205-4AF..-0..0-Z
...	...	(6)	M_{2N}	Nm	11.4	16	18.4	27	28	40.5	37	47	61	62	86	89	119	144	120	95	■■■ + ■■■ + . . .
5.28	17.5		$M_{2,0}$	Nm	15	20	25.5	36.5	42	52	46.5	62	78	83	104	131	168	210	120	95	
			M_{2max}	Nm	51	69	86	121	139	152	155	205	255	275	345	368	416	368	192	152	
5.07	17.2	7.8	n_{2N}	r/min	300	250	200	200	150	125	150	100	100	75	75	60	50	37.5	37.5	20	1FT2206-2AC..-0..0-Z
...	...	(9.4)	M_{2N}	Nm	10.7	15	20.5	23.5	33	42	33.5	52	54	72	77	99	125	167	110	95	■■■ + ■■■ + . . .
5.37	17.5		$M_{2,0}$	Nm	15.2	20.5	26	37	42	53	47.5	63	79	85	106	133	171	210	120	95	
			M_{2max}	Nm	51	69	86	121	139	152	155	205	255	275	345	368	416	368	192	152	
5.18	17.2	7.8	n_{2N}	r/min	375	300	250	200	200	150	200	150	125	100	100	75	60	50	37.5	30	1FT2206-2AF..-0..0-Z
...	...	(9.4)	M_{2N}	Nm	10.9	16.3	21.5	30.5	33.5	44.5	30	43.5	54	68	73	102	134	164	120	95	■■■ + ■■■ + . . .
5.45	17.5		$M_{2,0}$	Nm	15.5	21	26.5	37.5	43	54	48	64	81	86	108	135	173	215	120	95	
			M_{2max}	Nm	51	69	86	121	139	152	155	205	255	275	345	368	416	368	192	152	
5.01	17.2	7.8	n_{2N}	r/min	300	250	250	200	200	150	150	125	100	100	75	60	50	50	37.5	30	1FT2206-2AH..-0..0-Z
...	...	(9.4)	M_{2N}	Nm	11.8	16.4	18.4	26.5	27	39.5	37	46.5	60	61	85	108	137	136	119	85	■■■ + ■■■ + . . .
5.28	17.5		$M_{2,0}$	Nm	15	20	25.5	36.5	42	52	46.5	62	78	83	105	131	168	210	119	95	
			M_{2max}	Nm	51	69	86	121	139	152	155	205	255	275	345	368	416	368	192	152	
7.78	26	11.5	n_{2N}	r/min	300	250	250	200	200	150	150	125	100	100	75	60	50	37.5	25	–	1FT2206-3AB..-0..0-Z
...	...	(13.1)	M_{2N}	Nm	16.8	23	26	37.5	38.5	55	50	63	81	82	115	145	184	230	120	–	■■■ + ■■■ + . . .
8.04	26.3		$M_{2,0}$	Nm	23	31	39.5	55	64	80	71	95	119	127	159	198	255	230	120	–	
			M_{2max}	Nm	78	104	131	183	192	152	230	310	368	416	416	368	416	368	192	–	
7.64	26	11.5	n_{2N}	r/min	300	250	250	200	150	150	150	125	100	100	75	60	50	37.5	37.5	–	1FT2206-3AF..-0..0-Z
...	...	(13.1)	M_{2N}	Nm	16.1	22	24	35	48	52	48	59	77	76	109	138	174	230	120	–	■■■ + ■■■ + . . .
7.91	26.3		$M_{2,0}$	Nm	22.5	30.5	38.5	54	63	79	70	93	117	125	156	195	250	230	120	–	
			M_{2max}	Nm	78	104	131	183	192	152	230	310	368	416	416	368	416	368	192	–	

➥ Continued on the following page

Planetary gearbox data																	
Gearbox type:			NLC120, 1-stage						NLC120, 2-stage								
1st order code			C41						C42								
	i		3	4	5	7	8	10	9	12	15	16	20	25	32	40	64	100
2nd order code			R03	R04	R05	R07	R08	R10	R09	R12	R15	R16	R20	R25	R32	R40	R64	R00
	$M_{2N,G}$	Nm	115	155	195	135	120	95	210	260	230	260	260	230	260	230	120	95
	$M_{2max,G}$	Nm	184	248	312	216	192	152	336	416	368	416	416	368	416	368	192	152
	$M_{2Em.Off}$	Nm	390	520	500	340	380	480	500	520	500	520	520	500	520	500	380	480
	$J_{1,G}$	kg cm²	2.486	1.905	1.677	1.486	1.434	1.39	2.326	2.256	2.233	1.765	1.585	1.577	1.424	1.421	1.417	1.378
	$\varphi_{2,G}$	'	7						9									

Color legend:

	$M_{max,M} \times i < M_{2N,G}$	The motor and gearbox combination is fatigue-proof
	$M_{2N,G} < M_{max,M} \times i < M_{2max,G}$	Check acceleration and inertias, perform service life calculation if necessary
	$M_{max,M} \times i > M_{2max,G}$	The motor can destroy the gearbox, check acceleration and inertias, perform service life calculation if necessary

© Siemens 2024

Coaxial geared motors for servo converters with 400 V 3 AC line connection

Servomotor data			Selection data servomotors with planetary gearbox																		Servomotors with planetary gearbox
$M_{0,M}$	$M_{max,M}$	J_M ($J_{M,Br}$)																			
Nm	Nm	kg cm²																			
SIMOTICS S-1FT2 Compact servomotors with 1 and 2-stage NLC120 planetary gearboxes (continued)																					
10.8	36.6	15.1	n_{2N}	r/min	250	200	200	150	125	100	100	75	75	60	60	50	37.5	37.5	30	–	**1FT2206-4AC..-0..0-Z**
...	...	(16.8)	M_{2N}	Nm	19.9	27.5	29.5	44	55	71	68	93	97	121	125	151	210	193	120	–	■■■ + ■■■ + . . .
11	37.1		$M_{2,0}$	Nm	32	43	54	76	87	95	98	130	163	174	215	230	260	230	120	–	
			M_{2max}	Nm	110	148	185	216	192	152	330	416	368	416	416	368	416	368	192	–	
10.5	34.7	15.1	n_{2N}	r/min	300	300	250	200	200	150	150	125	100	100	75	60	50	50	37.5	–	**1FT2206-4AF..-0..0-Z**
...	...	(16.8)	M_{2N}	Nm	24	27.5	36.5	52	53	76	68	84	109	108	152	191	240	230	120	–	■■■ + ■■■ + . . .
10.7	35.2		$M_{2,0}$	Nm	31	42	53	74	85	95	95	127	159	169	210	230	260	230	120	–	
			M_{2max}	Nm	104	140	175	216	192	152	310	416	368	416	416	368	416	368	192	–	
10	34.7	15.1	n_{2N}	r/min	300	250	200	150	150	125	125	100	75	75	75	60	50	37.5	37.5	–	**1FT2206-4AH..-0..0-Z**
...	...	(16.8)	M_{2N}	Nm	19.4	26.5	36	52	56	70	66	85	114	117	121	153	191	230	120	–	■■■ + ■■■ + . . .
10.3	35.2		$M_{2,0}$	Nm	30	40	50	71	81	95	90	121	152	162	200	230	260	230	120	–	
			M_{2max}	Nm	104	140	175	216	192	152	310	416	368	416	416	368	416	368	192	–	
10.2	36.6	24.86	n_{2N}	r/min	250	250	200	150	150	125	125	100	75	75	60	50	37.5	37.5	30	–	**1FT2208-2AF..-0..0-Z**
...	...	(28.16)	M_{2N}	Nm	25	27.5	38	56	57	72	68	87	119	120	154	186	255	225	119	–	■■■ + ■■■ + . . .
10.4	37.1		$M_{2,0}$	Nm	30.5	41	51	72	83	95	92	123	154	165	205	230	255	225	119	–	
			M_{2max}	Nm	110	147	184	216	192	152	330	416	368	416	416	368	416	368	192	–	
16.3	49.2	31.96	n_{2N}	r/min	250	200	150	125	125	100	100	75	60	60	50	50	37.5	37.5	–	–	**1FT2208-3AB..-0..0-Z**
...	...	(34.96)	M_{2N}	Nm	28.5	39.5	55	73	74	94	93	127	160	161	197	185	255	215	–	–	■■■ + ■■■ + . . .
16.5	49.9		$M_{2,0}$	Nm	48.5	65	81	115	120	95	147	196	230	260	260	230	260	230	–	–	
			M_{2max}	Nm	149	199	245	216	192	152	336	416	368	416	416	368	416	368	–	–	
15.3	49.2	31.96	n_{2N}	r/min	300	250	200	150	150	125	125	100	75	75	60	50	50	37.5	–	–	**1FT2208-3AC..-0..0-Z**
...	...	(35.36)	M_{2N}	Nm	28.5	38	51	75	77	94	89	113	154	154	198	230	220	230	–	–	■■■ + ■■■ + . . .
15.5	49.9		$M_{2,0}$	Nm	45.5	61	76	108	120	95	137	183	225	240	260	230	260	230	–	–	
			M_{2max}	Nm	149	199	245	216	192	152	336	416	368	416	416	368	416	368	–	–	
15.2	49.2	31.96	n_{2N}	r/min	250	200	200	150	125	125	125	100	75	75	60	50	50	37.5	–	–	**1FT2208-3AF..-0..0-Z**
...	...	(35.36)	M_{2N}	Nm	33	45	48.5	70	86	89	84	106	146	145	186	220	197	230	–	–	■■■ + ■■■ + . . .
15.4	49.9		$M_{2,0}$	Nm	45.5	61	76	107	120	95	136	182	225	240	260	230	260	230	–	–	
			M_{2max}	Nm	149	199	245	216	192	152	336	416	368	416	416	368	416	368	–	–	
19.6	63.7	41.16	n_{2N}	r/min	200	150	125	100	100	100	75	60	50	50	37.5	37.5	30	30	–	–	**1FT2208-4AB..-0..0-Z**
...	...	(46.76)	M_{2N}	Nm	35	50	63	85	86	80	117	149	181	181	240	225	260	230	–	–	■■■ + ■■■ + . . .
20.1	64.6		$M_{2,0}$	Nm	59	79	99	135	120	95	176	235	230	260	260	230	260	230	–	–	
			M_{2max}	Nm	184	248	312	216	192	152	336	416	368	416	416	368	416	368	–	–	
19	63.7	41.16	n_{2N}	r/min	250	200	200	150	125	125	100	75	75	60	60	50	50	37.5	–	–	**1FT2208-4AC..-0..0-Z**
...	...	(46.76)	M_{2N}	Nm	40.5	55	59	85	105	95	124	168	170	210	210	230	205	230	–	–	■■■ + ■■■ + . . .
19.3	64.6		$M_{2,0}$	Nm	57	76	95	134	120	95	170	225	230	260	260	230	260	230	–	–	
			M_{2max}	Nm	184	248	312	216	192	152	336	416	368	416	416	368	416	368	–	–	
18.3	63.7	41.16	n_{2N}	r/min	250	200	200	150	125	125	100	75	75	60	50	50	50	37.5	–	–	**1FT2208-4AF..-0..0-Z**
...	...	(46.76)	M_{2N}	Nm	41	55	59	85	105	95	125	169	170	215	255	230	205	230	–	–	■■■ + ■■■ + . . .
18.5	64.6		$M_{2,0}$	Nm	54	73	92	129	120	95	164	215	230	260	260	230	260	230	–	–	
			M_{2max}	Nm	184	248	312	216	192	152	336	416	368	416	415	368	416	368	–	–	

➥ Continued on the following page

Planetary gearbox data																	
Gearbox type:			NLC120, 1-stage						NLC120, 2-stage								
1st order code			C41						C42								
	i		3	4	5	7	8	10	9	12	15	16	20	25	32	40	64	100
2nd order code			R03	R04	R05	R07	R08	R10	R09	R12	R15	R16	R20	R25	R32	R40	R64	R00
	$M_{2N,G}$	Nm	115	155	195	135	120	95	210	260	230	260	260	230	260	230	120	95
	$M_{2max,G}$	Nm	184	248	312	216	192	152	336	416	368	416	416	368	416	368	192	152
	$M_{2Em.Off}$	Nm	390	520	500	340	380	480	500	520	500	520	520	500	520	500	380	480
	$J_{1,G}$	kg cm²	2.486	1.905	1.677	1.486	1.434	1.39	2.326	2.256	2.233	1.765	1.585	1.577	1.424	1.421	1.417	1.378
	$\varphi_{2,G}$	'	7						9									

Color legend:

	$M_{max,M} \times i < M_{2N,G}$	The motor and gearbox combination is fatigue-proof
	$M_{2N,G} < M_{max,M} \times i < M_{2max,G}$	Check acceleration and inertias, perform service life calculation if necessary
	$M_{max,M} \times i > M_{2max,G}$	The motor can destroy the gearbox, check acceleration and inertias, perform service life calculation if necessary

© Siemens 2024

Coaxial geared motors for servo converters with 400 V 3 AC line connection

Servomotor data			Selection data servomotors with planetary gearbox																Servomotors with planetary gearbox
$M_{0,M}$	$M_{max,M}$	J_M ($J_{M,Br}$)																	
Nm	Nm	kg cm²																	
SIMOTICS S-1FT2 Compact servomotors with 1 and 2-stage NLC120 planetary gearboxes (continued)																			
23	77.3	50.46 (55.96)	n_{2N}	r/min	250	200	200	125	125	125	100	75	60	60	60	50	50	37.5	–	–	**1FT2208-5AB..-0..0-Z**
...	...		M_{2N}	Nm	45.5	61	63	111	114	95	137	184	225	230	220	230	210	230	–	–	■■■ + ■■■ + . . .
23.3	78.4		$M_{2,0}$	Nm	69	92	116	135	120	95	205	260	230	260	260	230	260	230	–	–	
			M_{2max}	Nm	184	248	312	216	192	152	336	416	368	416	416	368	416	368	–	–	
22.7	77.3	50.46 (55.96)	n_{2N}	r/min	250	200	200	125	125	125	100	75	60	60	60	50	37.5	37.5	–	–	**1FT2208-5AC..-0..0-Z**
...	...		M_{2N}	Nm	46	62	63	111	114	95	136	183	225	230	220	230	260	230	–	–	■■■ + ■■■ + . . .
23.1	78.4		$M_{2,0}$	Nm	68	91	115	135	120	95	205	260	230	260	260	230	260	230	–	–	
			M_{2max}	Nm	184	248	312	216	192	152	336	416	368	415	416	368	416	368	–	–	

Planetary gearbox data																		
Gearbox type:			**NLC120, 1-stage**						**NLC120, 2-stage**									
1st order code			**C41**						**C42**									
	i		**3**	**4**	**5**	**7**	**8**	**10**	**9**	**12**	**15**	**16**	**20**	**25**	**32**	**40**	**64**	**100**
2nd order code			**R03**	**R04**	**R05**	**R07**	**R08**	**R10**	**R09**	**R12**	**R15**	**R16**	**R20**	**R25**	**R32**	**R40**	**R64**	**R00**
	$M_{2N,G}$	Nm	115	155	195	135	120	95	210	260	230	260	260	230	260	230	120	95
	$M_{2max,G}$	Nm	184	248	312	216	192	152	336	416	368	416	416	368	416	368	192	152
	$M_{2Em.Off}$	Nm	390	520	500	340	380	480	500	520	500	520	520	500	520	500	380	480
	$J_{1,G}$	kg cm²	2.486	1.905	1.677	1.486	1.434	1.39	2.326	2.256	2.233	1.765	1.585	1.577	1.424	1.421	1.417	1.378
	$\varphi_{2,G}$	'	7						9									

Color legend:		
	$M_{max,M} \times i < M_{2N,G}$	**The motor and gearbox combination is fatigue-proof**
	$M_{2N,G} < M_{max,M} \times i < M_{2max,G}$	**Check acceleration and inertias, perform service life calculation if necessary**
	$M_{max,M} \times i > M_{2max,G}$	**The motor can destroy the gearbox, check acceleration and inertias, perform service life calculation if necessary**

© Siemens 2024

Angular geared motors for servo converters with 400 V 3 AC line connection

Selection and ordering data

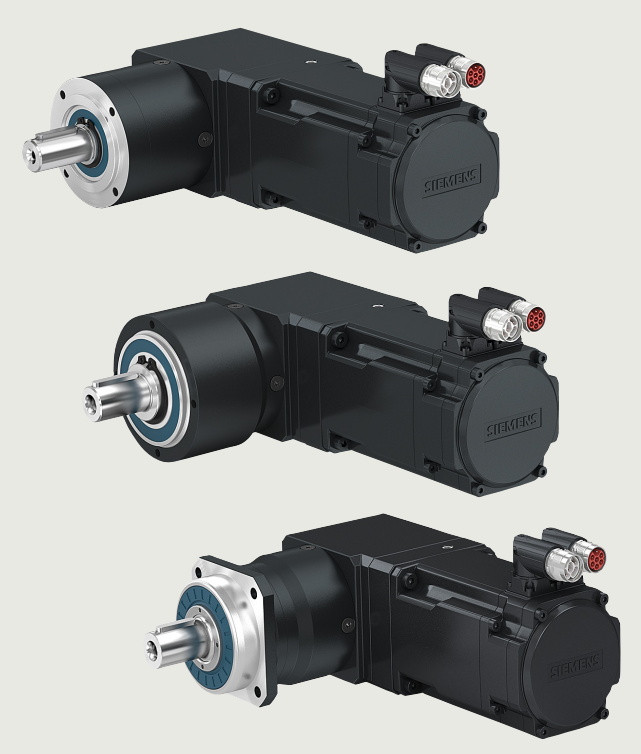

SIMOTICS S-1FT2 servo planetary geared motors with angular gearbox

The following servo planetary geared motors with angular gearbox are suitable for servo converters with 380 V to 480 V 3 AC line connection, especially for SINAMICS S120 servo converters. They are particularly suitable for where space is restricted.

The rated operating points of the geared motors are adapted to this voltage.

© Siemens 2024

Selection and ordering data

NRBW060

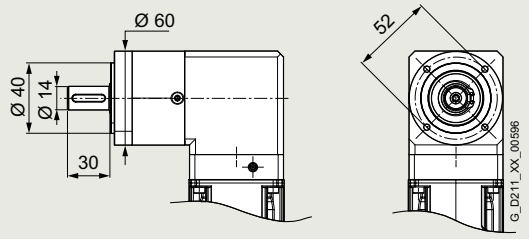

Permissible output shaft loads		
Average radial force for 20000 h	$F_{R,eq}$	400 N
Average axial force for 20000 h	$F_{A,eq}$	500 N
Average radial force for 30000 h	$F_{R,eq}$	340 N
Average axial force for 30000 h	$F_{A,eq}$	450 N
Maximum radial force	$F_{R,max}$	700 N
Maximum axial force	$F_{A,max}$	800 N

Servomotor data			Selection data servomotors with planetary gearbox																	Servomotors with planetary gearbox
$M_{0,M}$	$M_{max,M}$	J_M ($J_{M,Br}$)																		
Nm	Nm	kg cm²																		
SIMOTICS S-1FT2 High Dynamic servomotors with 1 and 2-stage NRBW060 planetary gearboxes																				
0.498	1.77	0.093	n_{2N}	r/min	750	600	600	375	375	300	300	250	200	200	150	125	100	75	50	1FT2103-2AH..-2..0-Z
...	...	(0.112)	M_{2N}	Nm	1.02	1.38	1.48	2.4	2.55	3.25	3	3.75	4.95	4.95	6.6	8.1	10.3	13.5	18	■■■ + ■■■ + . . .
0.51	1.82		$M_{2,0}$	Nm	1.49	2	2.5	3.5	4.05	5	4.55	6	7.6	8.1	10.1	12.7	16.3	20	18	
			M_{2max}	Nm	5.4	7.2	9	12.7	14.5	18.1	16.2	21.5	27	28.5	36	45	57	64	29	
0.983	3.74	0.139	n_{2N}	r/min	750	600	500	375	300	250	300	200	200	150	125	100	75	75	60	1FT2103-4AH..-2..0-Z
...	...	(0.158)	M_{2N}	Nm	2.05	2.7	3.35	4.65	5.8	7.1	5.7	8.6	8.9	11.8	14.5	18.1	24	24.5	18	■■■ + ■■■ + . . .
0.993	3.85		$M_{2,0}$	Nm	2.95	3.9	4.9	6.9	7.9	9.9	8.9	11.9	14.8	15.8	19.8	24.5	31.5	39.5	18	
			M_{2max}	Nm	11.5	15.3	19.2	26.5	29	24	34	45.5	57	60	70	64	70	64	29	
1.12	3.46	0.368	n_{2N}	r/min	1000	750	600	375	375	300	300	250	200	200	150	125	100	75	50	1FT2104-4AF..-2..0-Z
...	...	(0.448)	M_{2N}	Nm	2.1	3.15	4.1	6.5	6.9	8.8	8.1	10	13.2	12.7	17.6	21	26.5	35.5	18	■■■ + ■■■ + . . .
1.15	3.56		$M_{2,0}$	Nm	3.4	4.55	5.7	8	9.1	11.4	10.2	13.6	17	18.2	22.5	28	36	40	18	
			M_{2max}	Nm	10.6	14.2	17.7	24.5	28	24	31.5	42	52	56	70	64	70	64	29	
1.11	3.55	0.368	n_{2N}	r/min	750	750	600	375	375	300	300	250	200	200	150	125	100	75	60	1FT2104-4AK..-2..0-Z
...	...	(0.448)	M_{2N}	Nm	3.05	3.3	4.3	7	7.2	9.1	8.7	10.3	13.7	13.2	18.3	21.5	27.5	37	18	■■■ + ■■■ + . . .
1.14	3.65		$M_{2,0}$	Nm	3.35	4.5	5.6	7.9	9.1	11.4	10.1	13.5	16.9	18	22.5	28	36	40	18	
			M_{2max}	Nm	10.9	14.6	18.2	25.5	29	24	32.5	43	54	57	70	64	70	64	29	
2.18	7	0.578	n_{2N}	r/min	750	600	500	375	300	250	250	200	150	150	125	100	100	75	–	1FT2104-5AF..-2..0-Z
...	...	(0.668)	M_{2N}	Nm	4.8	6.2	7.6	10.3	13	15	15	18.8	25.5	25.5	30.5	38.5	35	40	–	■■■ + ■■■ + . . .
2.23	7.18		$M_{2,0}$	Nm	6.6	8.8	11.1	15.5	17.8	15	19.8	26	33	35	44	40	44	40	–	
			M_{2max}	Nm	21.5	28.5	35.5	40	29	24	63	70	70	70	70	64	70	64	–	
2.16	7.09	0.578	n_{2N}	r/min	750	600	500	375	300	250	250	200	150	150	125	100	100	75	–	1FT2104-5AK..-2..0-Z
...	...	(0.668)	M_{2N}	Nm	4.75	6.1	7.5	10.2	12.9	15	14.8	18.6	25	25	30	38	35	40	–	■■■ + ■■■ + . . .
2.21	7.28		$M_{2,0}$	Nm	6.6	8.8	11	15.4	17.6	15	19.7	26	32.5	35	43.5	40	44	40	–	
			M_{2max}	Nm	21.5	29	36	40	29	24	64	70	70	70	70	64	70	64	–	
2.89	9.35	0.778	n_{2N}	r/min	750	600	500	375	300	300	250	200	150	150	125	100	100	75	–	1FT2104-6AF..-2..0-Z
...	...	(0.858)	M_{2N}	Nm	5.6	7.3	8.9	12	15.2	14.2	17.4	21.5	29.5	29	35	40	39	40	–	■■■ + ■■■ + . . .
2.96	9.6		$M_{2,0}$	Nm	8.8	11.8	14.7	20.5	18	15	26	35	43.5	44	44	40	44	40	–	
			M_{2max}	Nm	22	30	38	40	29	24	70	70	70	70	70	64	70	64	–	

Planetary gearbox data																	
Gearbox type:			NRBW060, 1-stage						NRBW060, 2-stage								
1st order code			A26						A27								
	i		3	4	5	7	8	10	9	12	15	16	20	25	32	40	64
2nd order code			R03	R04	R05	R07	R08	R10	R09	R12	R15	R16	R20	R25	R32	R40	R64
	$M_{2N,G}$	Nm	14	19	24	25	18	15	44	44	44	44	44	40	44	40	18
	$M_{2max,G}$	Nm	22	30	38	40	29	24	70	70	70	70	70	64	70	64	29
	$M_{2Em.Off}$	Nm	66	86	80	80	80	70	88	88	88	88	88	80	88	80	80
	$J_{1,G}$	kg cm²	0.357	0.248	0.236	0.225	0.223	0.221	0.35	0.346	0.232	0.241	0.231	0.231	0.222	0.222	0.222
	$\varphi_{2,G}$	'	16						18								

Color legend:		
	$M_{max,M} \times i < M_{2N,G}$	The motor and gearbox combination is fatigue-proof
	$M_{2N,G} < M_{max,M} \times i < M_{2max,G}$	Check acceleration and inertias, perform service life calculation if necessary
	$M_{max,M} \times i > M_{2max,G}$	The motor can destroy the gearbox, check acceleration and inertias, perform service life calculation if necessary

© Siemens 2024

Angular geared motors for servo converters with 400 V 3 AC line connection

Servomotor data $M_{0,M}$ Nm	$M_{max,M}$ Nm	J_M ($J_{M,Br}$) kg cm²	Selection data servomotors with planetary gearbox																Servomotors with planetary gearbox
SIMOTICS S-1FT2 Compact servomotors with 1 and 2-stage NRBW060 planetary gearboxes																			
0.489 ... 0.5	1.68 ... 1.72	0.2 (0.22)	n_{2N}	r/min	750	600	500	375	300	250	250	200	150	150	125	100	75	60	50	1FT2203-2AK..-2..0-Z
			M_{2N}	Nm	0.89	1.19	1.47	2	2.55	3.1	2.95	3.8	5.2	5.2	6.4	8	10.7	13.5	15.1	■■■ + ■■■ + . . .
			$M_{2,0}$	Nm	1.46	1.97	2.45	3.45	3.95	4.95	4.45	5.9	7.4	7.9	9.9	12.4	15.9	19.8	18	
			M_{2max}	Nm	5.1	6.8	8.6	12	13.7	17.2	15.3	20	25.5	27	34	42.5	54	64	29	
1.08 ... 1.1	3.46 ... 3.56	0.35 (0.37)	n_{2N}	r/min	750	500	500	300	300	250	250	200	150	150	125	100	75	60	50	1FT2203-4AK..-2..0-Z
			M_{2N}	Nm	2.1	3.35	3.35	5.8	6	7.2	7.1	8.9	12.2	12.3	14.9	18.6	25	31.5	18	■■■ + ■■■ + . . .
			$M_{2,0}$	Nm	3.25	4.35	5.5	7.7	8.8	11	9.8	13.1	16.4	17.5	21.5	27	34.5	40	18	
			M_{2max}	Nm	10.6	14.2	17.7	24.5	28	24	31.5	42	52	56	70	64	70	64	29	
2.14 ... 2.19	6.62 ... 6.8	1.248 (1.328)	n_{2N}	r/min	750	500	500	300	300	250	250	200	150	150	125	100	75	75	–	1FT2204-5AF..-2..0-Z
			M_{2N}	Nm	4.4	6.9	6.9	11.9	12	14.4	14	17.3	23.5	23.5	28	35	44	40	–	■■■ + ■■■ + . . .
			$M_{2,0}$	Nm	6.5	8.7	10.9	15.3	17.4	15	19.5	25.5	32	34.5	43	40	44	40	–	
			M_{2max}	Nm	20	27	33.5	40	29	24	60	70	70	70	70	64	70	64	–	
2.15 ... 2.2	6.62 ... 6.8	1.248 (1.328)	n_{2N}	r/min	750	500	500	300	300	250	250	200	150	150	125	100	75	75	–	1FT2204-5AK..-2..0-Z
			M_{2N}	Nm	4.5	7	7	12.1	12.2	14.6	14.2	17.6	24	24	28.5	35.5	44	40	–	■■■ + ■■■ + . . .
			$M_{2,0}$	Nm	6.5	8.7	10.9	15.3	17.5	15	19.6	26	32.5	34.5	43.5	40	44	40	–	
			M_{2max}	Nm	20	27	33.5	40	29	24	60	70	70	70	70	64	70	64	–	
2.88 ... 2.95	8.88 ... 9.12	1.628 (1.708)	n_{2N}	r/min	600	500	375	300	250	250	250	150	150	125	100	100	100	75	–	1FT2204-6AF..-2..0-Z
			M_{2N}	Nm	7	8.8	11.7	15	17.8	15	17.2	28	29	34.5	43.5	40	33	40	–	■■■ + ■■■ + . . .
			$M_{2,0}$	Nm	8.8	11.7	14.7	20.5	18	15	26	35	43.5	44	44	40	44	40	–	
			M_{2max}	Nm	22	30	38	40	29	24	70	70	70	70	70	64	70	64	–	

Planetary gearbox data																	
Gearbox type:			NRBW060, 1-stage						NRBW060, 2-stage								
1st order code			A26						A27								
	i		3	4	5	7	8	10	9	12	15	16	20	25	32	40	64
2nd order code			R03	R04	R05	R07	R08	R10	R09	R12	R15	R16	R20	R25	R32	R40	R64
	$M_{2N,G}$	Nm	14	19	24	25	18	15	44	44	44	44	44	40	44	40	18
	$M_{2max,G}$	Nm	22	30	38	40	29	24	70	70	70	70	70	64	70	64	29
	$M_{2Em.Off}$	Nm	66	86	80	80	80	70	88	88	88	88	88	80	88	80	80
	$J_{1,G}$	kg cm²	0.357	0.248	0.236	0.225	0.223	0.221	0.35	0.346	0.232	0.241	0.231	0.231	0.222	0.222	0.222
	$\varphi_{2,G}$	'	16						18								

Color legend:		
	$M_{max,M} \times i < M_{2N,G}$	The motor and gearbox combination is fatigue-proof
	$M_{2N,G} < M_{max,M} \times i < M_{2max,G}$	Check acceleration and inertias, perform service life calculation if necessary
	$M_{max,M} \times i > M_{2max,G}$	The motor can destroy the gearbox, check acceleration and inertias, perform service life calculation if necessary

© Siemens 2024

Selection and ordering data

Servomotor data $M_{0,M}$ Nm	$M_{max,M}$ Nm	J_M ($J_{M,Br}$) kg cm²	Selection data servomotors with planetary gearbox									Servomotors with planetary gearbox
SIMOTICS S-1FT2 High Dynamic servomotors with 3-stage NRBW060 planetary gearboxes												
0.498 ... 0.51	1.77 ... 1.82	0.093 (0.112)	n_{2N}	r/min	50	37.5	30	30	20	20	15	12.5	**1FT2103-2AH..-2..0-Z**
			M_{2N}	Nm	20	26.5	33	34	44	40	44	39.5	■■■ + ■■■ + . . .
			$M_{2,0}$	Nm	30	40	44	44	44	40	44	40	
			M_{2max}	Nm	70	70	70	70	70	64	70	64	
0.983 ... 0.993	3.74 ... 3.85	0.139 (0.158)	n_{2N}	r/min	50	37.5	37.5	30	25	20	15	12.5	**1FT2103-4AH..-2..0-Z**
			M_{2N}	Nm	36	44	39	44	44	40	44	40	■■■ + ■■■ + . . .
			$M_{2,0}$	Nm	44	44	44	44	44	40	44	40	
			M_{2max}	Nm	70	70	70	70	70	64	70	64	
1.12 ... 1.15	3.46 ... 3.56	0.368 (0.448)	n_{2N}	r/min	50	37.5	30	25	20	15	12.5	10	**1FT2104-4AF..-2..0-Z**
			M_{2N}	Nm	44	44	44	44	44	40	44	40	■■■ + ■■■ + . . .
			$M_{2,0}$	Nm	44	44	44	44	44	40	44	40	
			M_{2max}	Nm	70	70	70	70	70	64	70	64	
1.11 ... 1.14	3.55 ... 3.65	0.368 (0.448)	n_{2N}	r/min	60	50	37.5	37.5	25	20	15	12.5	**1FT2104-4AK..-2..0-Z**
			M_{2N}	Nm	41	42	44	43	44	40	44	40	■■■ + ■■■ + . . .
			$M_{2,0}$	Nm	44	44	44	44	44	40	44	40	
			M_{2max}	Nm	70	70	70	70	70	64	70	64	
2.18 ... 2.23	7 ... 7.18	0.578 (0.668)	n_{2N}	r/min	50	37.5	30	25	–	–	–	–	**1FT2104-5AF..-2..0-Z**
			M_{2N}	Nm	44	44	44	44	–	–	–	–	■■■ + ■■■ + . . .
			$M_{2,0}$	Nm	44	44	44	44	–	–	–	–	
			M_{2max}	Nm	70	70	70	70	–	–	–	–	
2.16 ... 2.21	7.09 ... 7.28	0.578 (0.668)	n_{2N}	r/min	60	50	37.5	30	–	–	–	–	**1FT2104-5AK..-2..0-Z**
			M_{2N}	Nm	44	42	44	44	–	–	–	–	■■■ + ■■■ + . . .
			$M_{2,0}$	Nm	44	44	44	44	–	–	–	–	
			M_{2max}	Nm	70	70	70	70	–	–	–	–	
2.89 ... 2.96	9.35 ... 9.6	0.778 (0.858)	n_{2N}	r/min	50	37.5	30	–	–	–	–	–	**1FT2104-6AF..-2..0-Z**
			M_{2N}	Nm	44	44	44	–	–	–	–	–	■■■ + ■■■ + . . .
			$M_{2,0}$	Nm	44	44	44	–	–	–	–	–	
			M_{2max}	Nm	70	70	70	–	–	–	–	–	
SIMOTICS S-1FT2 Compact servomotors with 3-stage NRBW060 planetary gearboxes												
0.489 ... 0.5	1.68 ... 1.72	0.2 (0.22)	n_{2N}	r/min	50	30	25	20	20	15	12.5	12.5	**1FT2203-2AK..-2..0-Z**
			M_{2N}	Nm	15.8	26.5	32	40.5	38.5	40	44	33	■■■ + ■■■ + . . .
			$M_{2,0}$	Nm	29.5	39	44	44	44	40	44	40	
			M_{2max}	Nm	70	70	70	70	70	64	70	64	
1.08 ... 1.1	3.46 ... 3.56	0.35 (0.37)	n_{2N}	r/min	50	37.5	30	30	20	15	15	12.5	**1FT2203-4AK..-2..0-Z**
			M_{2N}	Nm	33.5	43.5	44	39	44	40	44	38	■■■ + ■■■ + . . .
			$M_{2,0}$	Nm	44	44	44	44	44	40	44	40	
			M_{2max}	Nm	70	70	70	70	70	64	70	64	
2.14 ... 2.19	6.62 ... 6.8	1.248 (1.328)	n_{2N}	r/min	50	37.5	30	25	–	–	–	–	**1FT2204-5AF..-2..0-Z**
			M_{2N}	Nm	44	44	44	44	–	–	–	–	■■■ + ■■■ + . . .
			$M_{2,0}$	Nm	44	44	44	44	–	–	–	–	
			M_{2max}	Nm	70	70	70	70	–	–	–	–	

➥ Continued on the following page

Planetary gearbox data									
Gearbox type:			**NRBW060, 3-stage**						
1st order code			**A28**						
	i		**60**	**80**	**100**	**120**	**160**	**200**	**256**	**320**
2nd order code			**R60**	**R80**	**R01**	**R21**	**R61**	**R02**	**R52**	**R23**
	$M_{2N,G}$	Nm	44	44	44	44	44	40	44	40
	$M_{2max,G}$	Nm	70	70	70	70	70	64	70	64
	$M_{2Em.Off}$	Nm	88	88	88	88	88	80	88	80
	$J_{1,G}$	kg cm²	0.232	0.231	0.231	0.222	0.222	0.222	0.222	0.222
	$\varphi_{2,G}$	'	21							

Color legend:		
	$M_{max,M} \times i < M_{2N,G}$	The motor and gearbox combination is fatigue-proof
	$M_{2N,G} < M_{max,M} \times i < M_{2max,G}$	Check acceleration and inertias, perform service life calculation if necessary
	$M_{max,M} \times i > M_{2max,G}$	The motor can destroy the gearbox, check acceleration and inertias, perform service life calculation if necessary

© Siemens 2024

Angular geared motors for servo converters with 400 V 3 AC line connection

Servomotor data			Selection data servomotors with planetary gearbox									Servomotors with planetary gearbox
$M_{0,M}$	$M_{max,M}$	J_M ($J_{M,Br}$)										
Nm	Nm	kg cm²										
SIMOTICS S-1FT2 Compact servomotors with 3-stage NRBW060 planetary gearboxes (continued)												
2.15 ... 2.2	6.62 ... 6.8	1.248 (1.328)	n_{2N}	r/min	50	37.5	37.5	30	–	–	–	–	**1FT2204-5AK..-2..0-Z**
			M_{2N}	Nm	44	44	43.5	44	–	–	–	–	■■■ + ■■■ + . . .
			$M_{2,0}$	Nm	44	44	44	44	–	–	–	–	
			M_{2max}	Nm	70	70	70	70	–	–	–	–	
2.88 ... 2.95	8.88 ... 9.12	1.628 (1.708)	n_{2N}	r/min	50	37.5	30	–	–	–	–	–	**1FT2204-6AF..-2..0-Z**
			M_{2N}	Nm	44	44	44	–	–	–	–	–	■■■ + ■■■ + . . .
			$M_{2,0}$	Nm	44	44	44	–	–	–	–	–	
			M_{2max}	Nm	70	70	70	–	–	–	–	–	
Planetary gearbox data												
Gearbox type:			**NRBW060, 3-stage**									
1st order code			**A28**									
i			**60**		**80**		**100**	**120**	**160**	**200**	**256**	**320**
2nd order code			**R60**		**R80**		**R01**	**R21**	**R61**	**R02**	**R52**	**R23**
$M_{2N,G}$		Nm	44		44		44	44	44	40	44	40
$M_{2max,G}$		Nm	70		70		70	70	70	64	70	64
$M_{2Em.Off}$		Nm	88		88		88	88	88	80	88	80
$J_{1,G}$		kg cm²	0.232		0.231		0.231	0.222	0.222	0.222	0.222	0.222
$\varphi_{2,G}$		'	21									

Color legend:		
	$M_{max,M} \times i < M_{2N,G}$	**The motor and gearbox combination is fatigue-proof**
	$M_{2N,G} < M_{max,M} \times i < M_{2max,G}$	**Check acceleration and inertias, perform service life calculation if necessary**
	$M_{max,M} \times i > M_{2max,G}$	**The motor can destroy the gearbox, check acceleration and inertias, perform service life calculation if necessary**

8.1

© Siemens 2024

Selection and ordering data

NRBW080

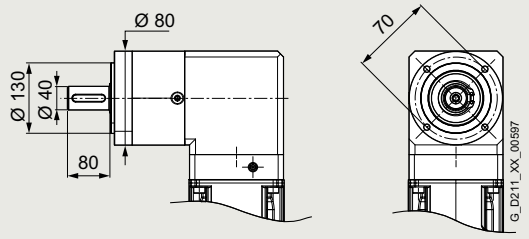

Permissible output shaft loads		
Average radial force for 20000 h	$F_{R,eq}$	750 N
Average axial force for 20000 h	$F_{A,eq}$	1000 N
Average radial force for 30000 h	$F_{R,eq}$	650 N
Average axial force for 30000 h	$F_{A,eq}$	900 N
Maximum radial force	$F_{R,max}$	1250 N
Maximum axial force	$F_{A,max}$	1600 N

Servomotor data			Selection data servomotors with planetary gearbox																	Servomotors with planetary gearbox
$M_{0,M}$	$M_{max,M}$	J_M ($J_{M,Br}$)																		
Nm	Nm	kg cm²																		
SIMOTICS S-1FT2 High Dynamic servomotors with 1 and 2-stage NRBW080 planetary gearboxes																				
0.422	1.71	0.093	n_{2N}	r/min	750	500	500	375	300	250	250	200	150	150	125	100	75	60	37.5	**1FT2103-2AH..-0..0-Z**
...	...	(0.112)	M_{2N}	Nm	0.66	1.07	1.15	1.7	2.15	2.7	2.45	3.15	4.25	4.25	5.4	6.8	9.4	11.8	19.1	■■■ + ■■■ + . . .
0.45	1.75		M_{2_0}	Nm	1.26	1.72	2.15	3.05	3.55	4.45	3.95	5.3	6.6	7.1	8.9	11.2	14.3	17.9	28.5	
			M_{2max}	Nm	5.2	6.9	8.7	12.2	14	17.5	15.6	20.5	26	27.5	34.5	43	55	69	80	
0.983	3.68	0.139	n_{2N}	r/min	600	500	375	300	300	250	250	200	150	150	125	100	75	60	37.5	**1FT2103-4AH..-0..0-Z**
...	...	(0.158)	M_{2N}	Nm	2.1	2.7	3.65	5	5	6	6.1	7.5	10.4	10.1	12.5	15.7	22	27.5	44.5	■■■ + ■■■ + . . .
1.01	3.78		M_{2_0}	Nm	2.9	3.95	4.95	7	8	10	9	12	15	16	20	25	32	40	50	
			M_{2max}	Nm	11.3	15	18.8	26	30	37.5	33.5	44.5	56	59	74	93	119	149	80	
1.06	3.4	0.35	n_{2N}	r/min	750	600	500	375	300	250	300	200	150	150	125	100	75	75	50	**1FT2104-4AF..-2..0-Z**
...	...	(0.43)	M_{2N}	Nm	2.45	3.2	4.05	5.7	7	8.6	6.9	10.3	13.3	13.7	17.1	21.5	28.5	29	39.5	■■■ + ■■■ + . . .
1.08	3.49		M_{2_0}	Nm	3.15	4.25	5.3	7.5	8.6	10.8	9.6	12.8	16.1	17.2	21.5	26.5	34	43	50	
			M_{2max}	Nm	10.4	13.9	17.4	24	27.5	34.5	31	41	51	55	69	86	110	137	80	
1.05	3.49	0.35	n_{2N}	r/min	750	600	500	375	300	250	300	200	150	150	125	100	75	60	50	**1FT2104-4AK..-2..0-Z**
...	...	(0.43)	M_{2N}	Nm	2.65	3.4	4.3	6.1	7.6	9.5	7.2	11.2	14.5	15	18.8	23.5	31	39	41.5	■■■ + ■■■ + . . .
1.08	3.59		M_{2_0}	Nm	3.15	4.2	5.3	7.5	8.5	10.7	9.5	12.8	16	17	21	26.5	34	42.5	50	
			M_{2max}	Nm	10.7	14.3	17.8	25	28.5	35.5	31.5	42.5	53	56	70	88	113	141	80	
2.11	6.91	0.56	n_{2N}	r/min	600	500	375	300	250	200	250	200	150	125	100	75	75	50	50	**1FT2104-5AF..-2..0-Z**
...	...	(0.65)	M_{2N}	Nm	5.7	7	9.6	12.6	15.2	19.2	14.7	17.9	24.5	29.5	37.5	49.5	51	77	49.5	■■■ + ■■■ + . . .
2.16	7.11		M_{2_0}	Nm	6.4	8.5	10.7	15.1	17.2	21.5	19.2	25.5	32	34	42.5	53	68	85	50	
			M_{2max}	Nm	21	28	35.5	49.5	56	61	63	84	105	112	140	175	192	176	80	
2.09	7	0.56	n_{2N}	r/min	600	500	375	300	250	200	250	150	150	125	100	75	75	50	50	**1FT2104-5AK..-2..0-Z**
...	...	(0.65)	M_{2N}	Nm	5.6	6.8	9.5	12.4	14.9	18.9	14.5	24	24	29	37	49	50	75	49.5	■■■ + ■■■ + . . .
2.15	7.2		M_{2_0}	Nm	6.3	8.5	10.6	14.9	17.1	21	19.1	25.5	31.5	34	42.5	53	68	84	50	
			M_{2max}	Nm	21.5	28.5	35.5	50	57	61	64	85	106	113	142	176	192	176	80	
2.82	9.25	0.76	n_{2N}	r/min	600	500	375	300	250	200	200	150	125	125	100	75	60	50	50	**1FT2104-6AF..-2..0-Z**
...	...	(0.84)	M_{2N}	Nm	6.8	8.3	11.5	15	18.1	22.5	21.5	29	35	35	44.5	58	75	90	50	■■■ + ■■■ + . . .
2.89	9.53		M_{2_0}	Nm	8.6	11.5	14.4	20	23	28.5	25.5	34	43	45.5	57	71	91	110	50	
			M_{2max}	Nm	28.5	38	47.5	66	76	61	84	113	141	150	188	176	192	176	80	

➥ Continued on the following page

Planetary gearbox data																	
Gearbox type:			NRBW080, 1-stage						NRBW080, 2-stage								
1st order code			A36						A37								
	i		3	4	5	7	8	10	9	12	15	16	20	25	32	40	64
2nd order code			R03	R04	R05	R07	R08	R10	R09	R12	R15	R16	R20	R25	R32	R40	R64
	$M_{2N,G}$	Nm	40	53	67	65	50	38	130	120	110	120	120	110	120	110	50
	$M_{2max,G}$	Nm	64	85	107	104	80	61	208	192	176	192	192	176	192	176	80
	$M_{2Em.Off}$	Nm	180	240	220	178	190	170	260	240	220	240	240	220	240	220	190
	$J_{1,G}$	kg cm²	1.273	1.004	0.973	0.929	0.92	0.91	1.232	1.209	1.205	0.996	0.955	0.954	0.917	0.916	0.917
	$\varphi_{2,G}$	'	13						15								

Color legend:		
	$M_{max,M} \times i < M_{2N,G}$	The motor and gearbox combination is fatigue-proof
	$M_{2N,G} < M_{max,M} \times i < M_{2max,G}$	Check acceleration and inertias, perform service life calculation if necessary
	$M_{max,M} \times i > M_{2max,G}$	The motor can destroy the gearbox, check acceleration and inertias, perform service life calculation if necessary

© Siemens 2024

Angular geared motors for servo converters with 400 V 3 AC line connection

Servomotor data $M_{0,M}$ Nm	$M_{max,M}$ Nm	J_M ($J_{M,Br}$) kg cm²	Selection data servomotors with planetary gearbox																Servomotors with planetary gearbox
SIMOTICS S-1FT2 High Dynamic servomotors with 1 and 2-stage NRBW080 planetary gearboxes (continued)																			
4.47 ... 4.59	14 ... 14.4	1.71 (2.55)	n_{2N}	r/min	600	500	375	250	250	200	200	150	125	100	100	75	60	60	50	**1FT2105-4AF..-0..0-Z**
			M_{2N}	Nm	10.4	12.1	17.2	26.5	26	33	32	42.5	51	62	63	84	107	94	48.5	■■■ + ■■■ + . . .
			$M_{2,0}$	Nm	13.7	18.3	22.5	32	36.5	38	40.5	54	68	72	90	110	120	110	50	
			M_{2max}	Nm	43	57	71	100	80	61	127	170	176	192	192	176	192	176	80	
4.5 ... 4.62	14 ... 14.4	1.71 (2.55)	n_{2N}	r/min	500	375	375	250	200	200	200	150	100	100	75	75	50	50	37.5	**1FT2105-4AH..-0..0-Z**
			M_{2N}	Nm	11.3	15.2	15.4	24	30	29.5	29	38.5	57	58	76	76	117	110	50	■■■ + ■■■ + . . .
			$M_{2,0}$	Nm	13.8	18.4	23	32	36.5	38	41	54	68	73	91	110	120	110	50	
			M_{2max}	Nm	43	57	71	100	80	61	127	170	176	192	192	176	192	176	80	
7.27 ... 7.4	22.4 ... 23.1	2.65 (3.5)	n_{2N}	r/min	500	375	300	250	200	200	150	125	100	100	75	75	60	60	–	**1FT2105-6AF..-0..0-Z**
			M_{2N}	Nm	15.6	20.5	26.5	32	40.5	37.5	51	61	76	76	101	97	119	96	–	■■■ + ■■■ + . . .
			$M_{2,0}$	Nm	22	29.5	36.5	51	50	38	66	88	110	117	120	110	120	110	–	
			M_{2max}	Nm	64	85	107	104	80	61	205	192	176	192	192	176	192	176	–	
SIMOTICS S-1FT2 Compact servomotors with 1 and 2-stage NRBW080 planetary gearboxes																			
0.409 ... 0.437	1.62 ... 1.66	0.2 (0.22)	n_{2N}	r/min	500	375	375	250	250	200	200	150	125	125	100	75	60	50	30	**1FT2203-2AK..-0..0-Z**
			M_{2N}	Nm	0.9	1.26	1.37	2.2	2.25	2.9	2.75	3.7	4.5	4.5	5.8	7.8	10.2	12.3	20.5	■■■ + ■■■ + . . .
			$M_{2,0}$	Nm	1.22	1.67	2.1	3	3.45	4.3	3.85	5.1	6.4	6.9	8.6	10.8	13.9	17.4	27.5	
			M_{2max}	Nm	4.9	6.5	8.2	11.5	13.2	16.5	14.7	19.7	24.5	26	32.5	41	52	65	80	
1.02 ... 1.04	3.4 ... 3.49	0.35 (0.37)	n_{2N}	r/min	600	500	375	300	250	200	250	200	150	125	100	100	75	60	37.5	**1FT2203-4AK..-0..0-Z**
			M_{2N}	Nm	2.35	2.95	4	5.4	6.4	8.1	6.5	7.8	11.1	12.8	16.2	16.2	23.5	29.5	47.5	■■■ + ■■■ + . . .
			$M_{2,0}$	Nm	3	4.05	5.1	7.2	8.2	10.3	9.2	12.3	15.4	16.4	20.5	25.5	33	41	50	
			M_{2max}	Nm	10.4	13.9	17.4	24	27.5	34.5	31	41	51	55	69	86	110	137	80	
2.07 ... 2.12	6.53 ... 6.72	1.23 (1.31)	n_{2N}	r/min	600	500	375	300	250	200	250	150	125	125	100	75	60	50	50	**1FT2204-5AF..-2..0-Z**
			M_{2N}	Nm	5.4	6.5	9.1	11.8	14.4	18.2	13.7	22.5	27.5	28	36	46.5	59	73	39	■■■ + ■■■ + . . .
			$M_{2,0}$	Nm	6.3	8.4	10.5	14.8	16.9	21	18.9	25	31.5	33.5	42	52	67	83	50	
			M_{2max}	Nm	20	26.5	33.5	47	53	61	59	79	99	106	132	165	192	176	80	
2.08 ... 2.13	6.53 ... 6.72	1.23 (1.31)	n_{2N}	r/min	600	500	375	300	250	200	200	150	125	125	100	75	60	50	50	**1FT2204-5AK..-2..0-Z**
			M_{2N}	Nm	5.5	6.7	9.3	12.1	14.7	18.5	17.6	23	28.5	28.5	36.5	48	61	74	39.5	■■■ + ■■■ + . . .
			$M_{2,0}$	Nm	6.3	8.4	10.6	14.9	17	21	19	25	31.5	33.5	42	52	67	84	50	
			M_{2max}	Nm	20	26.5	33.5	47	53	61	59	79	99	106	132	165	192	176	80	
2.81 ... 2.88	8.78 ... 9.04	1.61 (1.69)	n_{2N}	r/min	600	500	375	250	250	200	200	150	125	125	100	75	60	50	50	**1FT2204-6AF..-2..0-Z**
			M_{2N}	Nm	7.1	8.5	11.9	18.4	18.7	23.5	22.5	30	36.5	36	45.5	61	77	93	44.5	■■■ + ■■■ + . . .
			$M_{2,0}$	Nm	8.5	11.4	14.3	20	23	28.5	25.5	34	42.5	45.5	57	71	91	110	50	
			M_{2max}	Nm	27	36	45	63	72	61	80	107	134	142	178	176	192	176	80	
2.87 ... 2.92	10 ... 10.3	3.15 (4.05)	n_{2N}	r/min	600	375	375	250	250	200	200	150	125	100	100	75	60	50	37.5	**1FT2205-2AC..-0..0-Z**
			M_{2N}	Nm	5.8	9.2	9.8	15.5	15.1	19.2	19.3	25.5	30.5	36.5	37.5	51	65	77	50	■■■ + ■■■ + . . .
			$M_{2,0}$	Nm	8.7	11.6	14.5	20	23	29	26	34.5	43.5	46	58	72	92	110	49.5	
			M_{2max}	Nm	30.5	41	51	72	80	61	91	122	152	162	192	176	192	176	80	
2.91 ... 2.96	10 ... 10.3	3.15 (4.05)	n_{2N}	r/min	600	500	375	300	250	200	200	150	125	125	100	75	60	50	37.5	**1FT2205-2AF..-0..0-Z**
			M_{2N}	Nm	7	8.5	11.8	15.2	18.6	23	21.5	28.5	35.5	36	45.5	59	76	92	50	■■■ + ■■■ + . . .
			$M_{2,0}$	Nm	8.8	11.7	14.7	20.5	23.5	29.5	26.5	35	44	47	58	73	94	110	50	
			M_{2max}	Nm	30.5	41	51	72	80	61	91	122	152	162	192	176	192	176	80	

➥ Continued on the following page

Planetary gearbox data																
Gearbox type:		NRBW080, 1-stage						NRBW080, 2-stage								
1st order code		A36						A37								
i		3	4	5	7	8	10	9	12	15	16	20	25	32	40	64
2nd order code		R03	R04	R05	R07	R08	R10	R09	R12	R15	R16	R20	R25	R32	R40	R64
$M_{2N,G}$	Nm	40	53	67	65	50	38	130	120	110	120	120	110	120	110	50
$M_{2max,G}$	Nm	64	85	107	104	80	61	208	192	176	192	192	176	192	176	80
$M_{2Em.Off}$	Nm	180	240	220	178	190	170	260	240	220	240	240	220	240	220	190
$J_{1,G}$	kg cm²	1.273	1.004	0.973	0.929	0.92	0.91	1.232	1.209	1.205	0.996	0.955	0.954	0.917	0.916	0.917
$\varphi_{2,G}$	'	13						15								

Color legend:		
	$M_{max,M} \times i < M_{2N,G}$	The motor and gearbox combination is fatigue-proof
	$M_{2N,G} < M_{max,M} \times i < M_{2max,G}$	Check acceleration and inertias, perform service life calculation if necessary
	$M_{max,M} \times i > M_{2max,G}$	The motor can destroy the gearbox, check acceleration and inertias, perform service life calculation if necessary

© Siemens 2024

Servomotor data			Selection data servomotors with planetary gearbox															Servomotors with planetary gearbox
$M_{0,M}$	$M_{max,M}$	J_M ($J_{M,Br}$)																
Nm	Nm	kg cm²																
SIMOTICS S-1FT2 Compact servomotors with 1 and 2-stage NRBW080 planetary gearboxes (continued)																		
2.87	10	3.15	n_{2N}	r/min	600	500	375	250	250	200	200	150	125	100	100	75	60	50	37.5	**1FT2205-2AH..-0..0-Z**
...	...	(4.05)	M_{2N}	Nm	6.3	7.4	10.6	16.3	16.4	20.5	20.5	27	32.5	37.5	40.5	55	70	83	50	■■■ + ■■■ + . . .
2.92	10.3		$M_{2,0}$	Nm	8.7	11.6	14.5	20	23	29	26	34.5	43.5	46	57	72	92	110	49.5	
			M_{2max}	Nm	30.5	41	51	72	80	61	91	122	152	162	192	176	192	176	80	
4.95	16.8	5.1	n_{2N}	r/min	500	375	300	250	200	200	200	125	100	100	75	60	50	50	37.5	**1FT2205-4AF..-0..0-Z**
...	...	(6)	M_{2N}	Nm	11.2	15.1	19.2	23.5	29.5	28.5	28.5	45.5	57	57	76	94	116	108	50	■■■ + ■■■ + . . .
5.04	17.3		$M_{2,0}$	Nm	15.1	20	25	35	40	38	45	60	75	80	100	110	120	110	50	
			M_{2max}	Nm	51	69	86	104	80	61	153	192	176	192	192	176	192	176	80	

Planetary gearbox data																
Gearbox type:			**NRBW080, 1-stage**						**NRBW080, 2-stage**							
1st order code			**A36**						**A37**							
i			**3**	**4**	**5**	**7**	**8**	**10**	**9**	**12**	**15**	**16**	**20**	**25**	**32**	**40**	**64**
2nd order code			**R03**	**R04**	**R05**	**R07**	**R08**	**R10**	**R09**	**R12**	**R15**	**R16**	**R20**	**R25**	**R32**	**R40**	**R64**
$M_{2N,G}$		Nm	40	53	67	65	50	38	130	120	110	120	120	110	120	110	50
$M_{2max,G}$		Nm	64	85	107	104	80	61	208	192	176	192	192	176	192	176	80
$M_{2Em.Off}$		Nm	180	240	220	178	190	170	260	240	220	240	240	220	240	220	190
$J_{1,G}$		kg cm²	1.273	1.004	0.973	0.929	0.92	0.91	1.232	1.209	1.205	0.996	0.955	0.954	0.917	0.916	0.917
$\varphi_{2,G}$		'	13						15								

Color legend:		
	$M_{max,M} \times i < M_{2N,G}$	**The motor and gearbox combination is fatigue-proof**
	$M_{2N,G} < M_{max,M} \times i < M_{2max,G}$	**Check acceleration and inertias, perform service life calculation if necessary**
	$M_{max,M} \times i > M_{2max,G}$	**The motor can destroy the gearbox, check acceleration and inertias, perform service life calculation if necessary**

© Siemens 2024

Angular geared motors for servo converters with 400 V 3 AC line connection

Selection and ordering data

Servomotor data $M_{0,M}$ Nm	$M_{max,M}$ Nm	J_M ($J_{M,Br}$) kg cm²	Selection data servomotors with planetary gearbox										Servomotors with planetary gearbox
SIMOTICS S-1FT2 High Dynamic servomotors with 3-stage NRBW080 planetary gearboxes													
0.422 ... 0.45	1.71 ... 1.75	0.093 (0.112)	n_{2N}	r/min	37.5	30	25	20	15	15	10	7.5	6	1FT2103-2AH..-0..0-Z
			M_{2N}	Nm	17.7	23	28	33.5	48	49.5	73	96	49.5	■■■ + ■■■ + . . .
			$M_{2,0}$	Nm	26.5	35.5	44.5	53	71	89	114	110	49.5	
			M_{2max}	Nm	103	137	171	176	192	176	192	176	80	
0.983 ... 1.01	3.68 ... 3.78	0.139 (0.158)	n_{2N}	r/min	37.5	30	25	20	15	15	12.5	10	6	1FT2103-4AH..-0..0-Z
			M_{2N}	Nm	42	55	65	80	112	98	104	110	50	■■■ + ■■■ + . . .
			$M_{2,0}$	Nm	60	80	100	110	120	110	120	110	50	
			M_{2max}	Nm	176	192	192	176	192	176	192	176	80	
1.06 ... 1.08	3.4 ... 3.49	0.35 (0.43)	n_{2N}	r/min	37.5	37.5	25	20	20	15	12.5	10	6	1FT2104-4AF..-2..0-Z
			M_{2N}	Nm	53	56	85	103	103	110	120	110	49.5	■■■ + ■■■ + . . .
			$M_{2,0}$	Nm	64	85	106	110	120	110	120	110	49.5	
			M_{2max}	Nm	176	192	192	176	192	176	192	176	80	
1.05 ... 1.08	3.49 ... 3.59	0.35 (0.43)	n_{2N}	r/min	37.5	30	25	20	20	15	12.5	10	7.5	1FT2104-4AK..-2..0-Z
			M_{2N}	Nm	58	76	93	110	108	110	120	110	50	■■■ + ■■■ + . . .
			$M_{2,0}$	Nm	63	84	105	110	120	110	120	110	49.5	
			M_{2max}	Nm	176	192	192	176	192	176	192	176	80	
2.11 ... 2.16	6.91 ... 7.11	0.56 (0.65)	n_{2N}	r/min	37.5	30	25	25	20	15	12.5	10	–	1FT2104-5AF..-2..0-Z
			M_{2N}	Nm	98	119	120	107	120	110	120	110	–	■■■ + ■■■ + . . .
			$M_{2,0}$	Nm	110	120	120	110	120	110	120	110	–	
			M_{2max}	Nm	176	192	192	176	192	176	192	176	–	
2.09 ... 2.15	7 ... 7.2	0.56 (0.65)	n_{2N}	r/min	37.5	30	25	25	20	15	12.5	10	–	1FT2104-5AK..-2..0-Z
			M_{2N}	Nm	97	119	120	107	120	110	120	110	–	■■■ + ■■■ + . . .
			$M_{2,0}$	Nm	110	120	120	110	120	110	120	110	–	
			M_{2max}	Nm	176	192	192	176	192	176	192	176	–	
2.82 ... 2.89	9.25 ... 9.53	0.76 (0.84)	n_{2N}	r/min	37.5	30	30	25	20	15	12.5	10	–	1FT2104-6AF..-2..0-Z
			M_{2N}	Nm	110	120	108	110	120	110	120	110	–	■■■ + ■■■ + . . .
			$M_{2,0}$	Nm	110	120	120	110	120	110	120	110	–	
			M_{2max}	Nm	176	192	192	176	192	176	192	176	–	
4.47 ... 4.59	14 ... 14.4	1.71 (2.55)	n_{2N}	r/min	37.5	30	30	25	20	–	–	–	–	1FT2105-4AF..-0..0-Z
			M_{2N}	Nm	110	120	106	110	119	–	–	–	–	■■■ + ■■■ + . . .
			$M_{2,0}$	Nm	110	120	120	110	120	–	–	–	–	
			M_{2max}	Nm	176	192	192	176	192	–	–	–	–	
4.5 ... 4.62	14 ... 14.4	1.71 (2.55)	n_{2N}	r/min	37.5	30	25	20	15	–	–	–	–	1FT2105-4AH..-0..0-Z
			M_{2N}	Nm	110	120	120	110	120	–	–	–	–	■■■ + ■■■ + . . .
			$M_{2,0}$	Nm	110	120	120	110	120	–	–	–	–	
			M_{2max}	Nm	176	192	192	176	192	–	–	–	–	
7.27 ... 7.4	22.4 ... 23.1	2.65 (3.5)	n_{2N}	r/min	37.5	30	25	–	–	–	–	–	–	1FT2105-6AF..-0..0-Z
			M_{2N}	Nm	110	120	120	–	–	–	–	–	–	■■■ + ■■■ + . . .
			$M_{2,0}$	Nm	110	120	120	–	–	–	–	–	–	
			M_{2max}	Nm	176	192	192	–	–	–	–	–	–	

Planetary gearbox data										
Gearbox type:			NRBW080, 3-stage							
1st order code			A38							
i			60	80	100	120	160	200	256	320	512
2nd order code			R60	R80	R01	R21	R61	R02	R52	R23	R51
$M_{2N,G}$	Nm		110	120	120	110	120	110	120	110	50
$M_{2max,G}$	Nm		176	192	192	176	192	176	192	176	80
$M_{2Em.Off}$	Nm		220	240	240	220	240	220	240	220	190
$J_{1,G}$	kg cm²		1.203	0.955	0.954	1.209	0.916	0.916	0.917	0.917	0.917
$\varphi_{2,G}$	'		17								

Color legend:		
	$M_{max,M} \times i < M_{2N,G}$	The motor and gearbox combination is fatigue-proof
	$M_{2N,G} < M_{max,M} \times i < M_{2max,G}$	Check acceleration and inertias, perform service life calculation if necessary
	$M_{max,M} \times i > M_{2max,G}$	The motor can destroy the gearbox, check acceleration and inertias, perform service life calculation if necessary

© Siemens 2024

Angular geared motors for servo converters with 400 V 3 AC line connection

Servomotor data			Selection data servomotors with planetary gearbox										Servomotors with planetary gearbox
$M_{0,M}$	$M_{max,M}$	J_M ($J_{M,Br}$)											
Nm	Nm	kg cm²											
SIMOTICS S-1FT2 Compact servomotors with 3-stage NRBW080 planetary gearboxes													
0.409 ... 0.437	1.62 ... 1.66	0.2 (0.22)	n_{2N}	r/min	30	25	20	15	12.5	10	7.5	7.5	6	**1FT2203-2AK..-0..0-Z**
			M_{2N}	Nm	19.5	24	30.5	39	50	63	83	83	50	■■■ + ■■■ + . . .
			$M_{2,0}$	Nm	25.5	34.5	43	51	69	86	110	110	49.5	
			M_{2max}	Nm	97	130	162	176	192	176	192	176	80	
1.02 ... 1.04	3.4 ... 3.49	0.35 (0.37)	n_{2N}	r/min	37.5	30	25	20	15	12.5	10	10	6	**1FT2203-4AK..-0..0-Z**
			M_{2N}	Nm	45	58	68	85	119	110	120	100	50	■■■ + ■■■ + . . .
			$M_{2,0}$	Nm	61	81	102	110	120	110	120	110	50	
			M_{2max}	Nm	176	192	192	176	192	176	192	176	80	
2.07 ... 2.12	6.53 ... 6.72	1.23 (1.31)	n_{2N}	r/min	37.5	30	25	20	20	15	12.5	10	–	**1FT2204-5AF..-2..0-Z**
			M_{2N}	Nm	92	114	120	110	106	110	120	110	–	■■■ + ■■■ + . . .
			$M_{2,0}$	Nm	110	120	120	110	120	110	120	110	–	
			M_{2max}	Nm	176	192	192	176	192	176	192	176	–	
2.08 ... 2.13	6.53 ... 6.72	1.23 (1.31)	n_{2N}	r/min	37.5	30	25	25	20	15	12.5	10	–	**1FT2204-5AK..-2..0-Z**
			M_{2N}	Nm	94	116	120	88	107	110	120	110	–	■■■ + ■■■ + . . .
			$M_{2,0}$	Nm	110	120	120	110	120	110	120	110	–	
			M_{2max}	Nm	176	192	192	176	192	176	192	176	–	
2.81 ... 2.88	8.78 ... 9.04	1.61 (1.69)	n_{2N}	r/min	37.5	30	25	25	20	15	12.5	10	–	**1FT2204-6AF..-2..0-Z**
			M_{2N}	Nm	110	120	120	100	117	110	120	110	–	■■■ + ■■■ + . . .
			$M_{2,0}$	Nm	110	120	120	110	120	110	120	110	–	
			M_{2max}	Nm	176	192	192	176	192	176	192	176	–	
2.87 ... 2.92	10 ... 10.3	3.15 (4.05)	n_{2N}	r/min	37.5	25	20	20	12.5	10	10	–	–	**1FT2205-2AC..-0..0-Z**
			M_{2N}	Nm	89	120	120	110	120	110	120	–	–	■■■ + ■■■ + . . .
			$M_{2,0}$	Nm	110	120	120	110	120	110	120	–	–	
			M_{2max}	Nm	176	192	192	176	192	176	192	–	–	
2.91 ... 2.96	10 ... 10.3	3.15 (4.05)	n_{2N}	r/min	37.5	30	25	25	20	15	12.5	–	–	**1FT2205-2AF..-0..0-Z**
			M_{2N}	Nm	109	120	120	89	100	110	120	–	–	■■■ + ■■■ + . . .
			$M_{2,0}$	Nm	110	120	120	110	120	110	119	–	–	
			M_{2max}	Nm	176	192	192	176	192	176	192	–	–	
2.87 ... 2.92	10 ... 10.3	3.15 (4.05)	n_{2N}	r/min	37.5	30	25	20	15	15	10	–	–	**1FT2205-2AH..-0..0-Z**
			M_{2N}	Nm	98	116	120	110	120	109	120	–	–	■■■ + ■■■ + . . .
			$M_{2,0}$	Nm	110	120	119	110	120	109	119	–	–	
			M_{2max}	Nm	176	192	192	176	192	176	192	–	–	
4.95 ... 5.04	16.8 ... 17.3	5.1 (6)	n_{2N}	r/min	37.5	30	25	20	15	–	–	–	–	**1FT2205-4AF..-0..0-Z**
			M_{2N}	Nm	110	120	120	110	120	–	–	–	–	■■■ + ■■■ + . . .
			$M_{2,0}$	Nm	110	120	120	110	120	–	–	–	–	
			M_{2max}	Nm	176	192	192	176	192	–	–	–	–	

Planetary gearbox data										
Gearbox type:			**NRBW080, 3-stage**							
1st order code			**A38**							
	i		**60**	**80**	**100**	**120**	**160**	**200**	**256**	**320**	**512**
2nd order code			**R60**	**R80**	**R01**	**R21**	**R61**	**R02**	**R52**	**R23**	**R51**
	$M_{2N,G}$	Nm	110	120	120	110	120	110	120	110	50
	$M_{2max,G}$	Nm	176	192	192	176	192	176	192	176	80
	$M_{2Em.Off}$	Nm	220	240	240	220	240	220	240	220	190
	$J_{1,G}$	kg cm²	1.203	0.955	0.954	1.209	0.916	0.916	0.917	0.917	0.917
	$\varphi_{2,G}$	'	17								

Color legend:		
	$M_{max,M} \times i < M_{2N,G}$	The motor and gearbox combination is fatigue-proof
	$M_{2N,G} < M_{max,M} \times i < M_{2max,G}$	Check acceleration and inertias, perform service life calculation if necessary
	$M_{max,M} \times i > M_{2max,G}$	The motor can destroy the gearbox, check acceleration and inertias, perform service life calculation if necessary

© Siemens 2024

Angular geared motors for servo converters with 400 V 3 AC line connection

Selection and ordering data

NRBW120

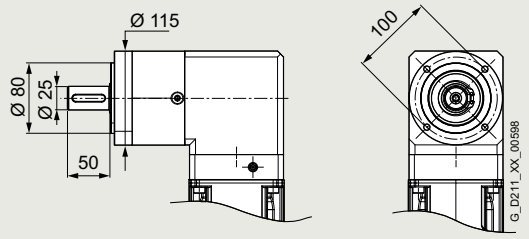

Permissible output shaft loads		
Average radial force for 20000 h	$F_{R,eq}$	1750 N
Average axial force for 20000 h	$F_{A,eq}$	2500 N
Average radial force for 30000 h	$F_{R,eq}$	1500 N
Average axial force for 30000 h	$F_{A,eq}$	2100 N
Maximum radial force	$F_{R,max}$	2000 N
Maximum axial force	$F_{A,max}$	3800 N

Servomotor data $M_{0,M}$ Nm	$M_{max,M}$ Nm	J_M ($J_{M,Br}$) kg cm²	Selection data servomotors with planetary gearbox																Servomotors with planetary gearbox
SIMOTICS S-1FT2 High Dynamic servomotors with 1 and 2-stage NRBW120 planetary gearboxes																				
0.31 ... 0.379	1.62 ... 1.67	0.093 (0.112)	n_{2N}	r/min	375	375	300	250	200	200	150	125	100	100	100	75	60	50	30	**1FT2103-2AH..-0..0-Z**
			M_{2N}	Nm	0.56	0.69	1.07	1.55	2	2.1	2.1	2.75	3.55	3.7	4.1	5.7	8	9.7	16.4	■■■ + ■■■ + . . .
			$M_{2,0}$	Nm	0.92	1.31	1.7	2.45	2.85	3.65	3.2	4.35	5.5	5.9	7.4	9.3	12	15.1	24	
			M_{2max}	Nm	4.85	6.5	8.2	11.6	13.3	16.7	14.8	19.9	24.5	26.5	33	41.5	53	66	106	
0.92 ... 0.978	3.61 ... 3.7	0.139 (0.158)	n_{2N}	r/min	600	500	375	300	300	200	250	150	150	125	125	100	75	60	37.5	**1FT2103-4AH..-0..0-Z**
			M_{2N}	Nm	1.61	2.1	3.1	4.4	4.4	6.7	4.65	7.8	8.3	10	10.8	13.8	20	25	40.5	■■■ + ■■■ + . . .
			$M_{2,0}$	Nm	2.75	3.75	4.75	6.7	7.7	9.7	8.6	11.6	14.5	15.5	19.4	24	31	39	62	
			M_{2max}	Nm	10.9	14.6	18.3	25.5	29.5	36.5	32.5	43.5	54	58	73	91	117	146	192	
0.948 ... 1.01	3.33 ... 3.41	0.35 (0.43)	n_{2N}	r/min	600	500	375	375	300	250	250	200	150	150	125	100	75	60	37.5	**1FT2104-4AF..-0..0-Z**
			M_{2N}	Nm	2.1	2.85	4	4.7	6	7.5	6.3	8.1	10.9	11.3	14.7	18.5	25.5	32.5	52	■■■ + ■■■ + . . .
			$M_{2,0}$	Nm	2.8	3.85	4.85	6.9	7.9	10	8.9	11.9	14.9	15.9	20	25	32	40	64	
			M_{2max}	Nm	10	13.5	16.9	23.5	27	34	30	40.5	50	54	67	84	108	135	192	
0.941 ... 0.999	3.42 ... 3.5	0.35 (0.43)	n_{2N}	r/min	600	500	500	375	300	250	250	200	150	150	125	100	75	60	37.5	**1FT2104-4AK..-0..0-Z**
			M_{2N}	Nm	2.25	3.1	3.1	5	6.7	8.4	7.1	9.2	12	12.7	16.5	20.5	27.5	34.5	55	■■■ + ■■■ + . . .
			$M_{2,0}$	Nm	2.8	3.8	4.85	6.8	7.9	9.9	8.8	11.8	14.8	15.8	19.8	24.5	31.5	39.5	63	
			M_{2max}	Nm	10.3	13.9	17.4	24	27.5	35	31	41.5	52	55	69	86	111	138	192	
2.03 ... 2.08	6.84 ... 7.02	0.56 (0.65)	n_{2N}	r/min	600	500	375	300	250	200	200	150	125	125	100	100	75	60	37.5	**1FT2104-5AF..-0..0-Z**
			M_{2N}	Nm	5.2	6.5	9.5	13.1	15.5	19.5	17	22.5	28	30	38	36.5	56	70	112	■■■ + ■■■ + . . .
			$M_{2,0}$	Nm	6	8.1	10.2	14.4	16.5	20.5	18.5	24.5	30.5	33	41	51	66	82	120	
			M_{2max}	Nm	20.5	28	35	49	56	70	62	83	104	111	138	173	220	275	192	
2.02 ... 2.07	6.93 ... 7.12	0.56 (0.65)	n_{2N}	r/min	600	500	375	300	250	200	200	150	125	125	100	100	75	60	37.5	**1FT2104-5AK..-0..0-Z**
			M_{2N}	Nm	5.1	6.4	9.4	12.9	15.4	19.4	16.8	22.5	28	30	38	36	55	68	110	■■■ + ■■■ + . . .
			$M_{2,0}$	Nm	6	8.1	10.2	14.3	16.4	20.5	18.3	24.5	30.5	32.5	41	51	65	82	120	
			M_{2max}	Nm	21	28	35.5	49.5	56	71	63	84	105	112	140	175	225	280	192	
2.75 ... 2.81	9.18 ... 9.44	0.76 (0.84)	n_{2N}	r/min	500	500	375	300	250	200	200	150	125	125	100	75	60	50	37.5	**1FT2104-6AF..-0..0-Z**
			M_{2N}	Nm	7.8	7.9	12	15.9	19.6	25	23	30.5	37	37.5	49	65	85	103	120	■■■ + ■■■ + . . .
			$M_{2,0}$	Nm	8.3	11.1	13.9	19.6	22	28	25	33	41.5	44.5	55	69	89	111	120	
			M_{2max}	Nm	28	37.5	47	65	75	94	84	112	140	149	186	230	295	368	192	

➥ Continued on the following page

Planetary gearbox data																
Gearbox type:		NRBW120, 1-stage						NRBW120, 2-stage								
1st order code		A46						A47								
i		3	4	5	7	8	10	9	12	15	16	20	25	32	40	64
2nd order code		R03	R04	R05	R07	R08	R10	R09	R12	R15	R16	R20	R25	R32	R40	R64
$M_{2N,G}$	Nm	80	105	130	135	120	95	210	260	230	260	260	230	260	230	120
$M_{2max,G}$	Nm	128	168	208	216	192	152	336	416	368	416	416	368	416	368	192
$M_{2Em.Off}$	Nm	360	474	500	340	380	430	500	520	500	520	520	500	520	500	380
$J_{1,G}$	kg cm²	2.846	2.276	2.074	1.905	1.873	1.82	2.773	2.708	2.687	2.188	2.015	2.007	1.861	1.858	1.855
$\varphi_{2,G}$	'	11						13								

Color legend:		
	$M_{max,M} \times i < M_{2N,G}$	**The motor and gearbox combination is fatigue-proof**
	$M_{2N,G} < M_{max,M} \times i < M_{2max,G}$	**Check acceleration and inertias, perform service life calculation if necessary**
	$M_{max,M} \times i > M_{2max,G}$	**The motor can destroy the gearbox, check acceleration and inertias, perform service life calculation if necessary**

© Siemens 2024

Angular geared motors for servo converters with 400 V 3 AC line connection

Servomotor data			Selection data servomotors with planetary gearbox																	Servomotors with planetary gearbox
$M_{0,M}$	$M_{max,M}$	J_M ($J_{M,Br}$)																		
Nm	Nm	kg cm²																		
SIMOTICS S-1FT2 High Dynamic servomotors with 1 and 2-stage NRBW120 planetary gearboxes (continued)																				
4.4 ... 4.51	13.9 ... 14.3	1.71 (2.55)	n_{2N}	r/min	600	500	375	300	250	200	200	150	125	125	100	75	60	50	37.5	1FT2105-4AF..-0..0-Z
			M_{2N}	Nm	10.2	12.1	18.5	23.5	29.5	38	34	45.5	56	55	72	95	123	151	120	■■■ + ■■■ + . . .
			$M_{2,0}$	Nm	13.4	17.9	22	31.5	36	45	40	53	67	71	89	111	142	178	120	
			M_{2max}	Nm	42.5	57	71	99	114	142	127	169	210	225	280	350	416	368	192	
4.43 ... 4.54	13.9 ... 14.3	1.71 (2.55)	n_{2N}	r/min	500	375	375	250	250	200	200	150	125	125	100	75	60	50	37.5	1FT2105-4AH..-0..0-Z
			M_{2N}	Nm	11.3	15.4	16.8	26	26.5	34.5	32	43	51	50	66	90	117	139	120	■■■ + ■■■ + . . .
			$M_{2,0}$	Nm	13.5	18	22.5	31.5	36	45	40	53	67	71	89	112	143	179	120	
			M_{2max}	Nm	42.5	57	71	99	114	142	127	169	210	225	280	350	416	368	192	
7.22 ... 7.41	22.3 ... 23	2.65 (3.5)	n_{2N}	r/min	500	375	300	250	200	150	200	125	100	100	75	60	50	50	37.5	1FT2105-6AF..-0..0-Z
			M_{2N}	Nm	17	23	30	37.5	48	63	43	72	90	90	122	152	188	179	120	■■■ + ■■■ + . . .
			$M_{2,0}$	Nm	22	29.5	36.5	51	59	74	66	88	110	117	146	183	230	230	120	
			M_{2max}	Nm	68	91	114	160	183	152	200	270	340	360	416	368	416	368	192	
7.66 ... 7.8	24.2 ... 24.9	4.6 (6.3)	n_{2N}	r/min	500	375	300	250	200	150	200	125	100	100	75	60	50	50	37.5	1FT2106-3AF..-0..0-Z
			M_{2N}	Nm	17.6	24	31	39	49.5	63	44.5	74	93	93	125	156	194	184	120	■■■ + ■■■ + . . .
			$M_{2,0}$	Nm	23	31	38.5	54	62	78	69	93	116	124	154	193	245	230	120	
			M_{2max}	Nm	74	99	124	174	192	152	220	295	368	390	416	368	416	368	192	
9.97 ... 10.1	30.8 ... 31.7	6 (7.6)	n_{2N}	r/min	500	375	300	200	200	150	150	125	100	100	75	60	50	50	37.5	1FT2106-4AF..-0..0-Z
			M_{2N}	Nm	20.5	28.5	37	55	57	78	70	86	107	106	146	182	220	196	120	■■■ + ■■■ + . . .
			$M_{2,0}$	Nm	30	40.5	50	70	81	95	90	121	151	161	200	230	260	230	120	
			M_{2max}	Nm	95	126	158	216	192	152	280	375	368	416	416	368	416	368	192	
14.1 ... 14.4	42.5 ... 43.8	8.7 (10.4)	n_{2N}	r/min	375	300	250	200	200	150	150	100	75	75	60	60	50	50	–	1FT2106-6AF..-0..0-Z
			M_{2N}	Nm	34.5	44	54	70	69	94	87	129	170	171	215	210	255	220	–	■■■ + ■■■ + . . .
			$M_{2,0}$	Nm	43	57	71	100	115	95	128	171	210	225	260	230	260	230	–	
			M_{2max}	Nm	128	168	208	216	192	152	336	416	368	416	416	368	416	368	–	
SIMOTICS S-1FT2 Compact servomotors with 1 and 2-stage NRBW120 planetary gearboxes																				
0.297 ... 0.367	1.52 ... 1.58	0.2 (0.22)	n_{2N}	r/min	375	375	300	250	200	150	150	125	100	100	75	75	60	50	30	1FT2203-2AK..-0..0-Z
			M_{2N}	Nm	0.52	0.66	1.06	1.45	1.95	2.6	2	2.6	3.35	3.55	5	5.2	7.5	9	15.5	■■■ + ■■■ + . . .
			$M_{2,0}$	Nm	0.88	1.26	1.64	2.35	2.75	3.5	3.1	4.2	5.3	5.7	7.1	9	11.6	14.5	23	
			M_{2max}	Nm	4.55	6.1	7.7	10.9	12.5	15.7	14	18.7	23	25	31	39	50	62	100	
0.903 ... 0.961	3.33 ... 3.41	0.35 (0.37)	n_{2N}	r/min	600	500	375	300	250	200	200	150	150	125	100	100	75	60	37.5	1FT2203-4AK..-0..0-Z
			M_{2N}	Nm	1.85	2.4	3.5	4.95	5.9	7.6	6.6	8.9	9.3	11.4	15	14.9	22	27.5	44.5	■■■ + ■■■ + . . .
			$M_{2,0}$	Nm	2.7	3.65	4.65	6.6	7.6	9.5	8.5	11.4	14.3	15.2	19.1	23.5	30.5	38	61	
			M_{2max}	Nm	10	13.5	16.9	23.5	27	34	30	40.5	50	54	67	84	108	135	192	
1.99 ... 2.04	6.47 ... 6.64	1.23 (1.31)	n_{2N}	r/min	600	500	375	300	250	200	200	150	125	125	100	75	75	60	37.5	1FT2204-5AF..-0..0-Z
			M_{2N}	Nm	5	6.1	9	12.3	14.6	18.5	16.4	22	27	28	36	46.5	52	65	105	■■■ + ■■■ + . . .
			$M_{2,0}$	Nm	5.9	8	10	14.2	16.2	20	18.1	24	30	32	40	50	64	81	120	
			M_{2max}	Nm	19.8	26	33	46	53	66	59	78	98	105	131	164	210	260	192	
2 ... 2.05	6.47 ... 6.64	1.23 (1.31)	n_{2N}	r/min	600	500	375	300	250	200	200	150	125	125	100	75	75	60	37.5	1FT2204-5AK..-0..0-Z
			M_{2N}	Nm	5.1	6.2	9.3	12.6	15.2	19.1	16.6	22	27.5	29.5	37.5	47	53	66	107	■■■ + ■■■ + . . .
			$M_{2,0}$	Nm	6	8	10.1	14.3	16.3	20.5	18.2	24	30.5	32.5	40.5	50	65	81	120	
			M_{2max}	Nm	19.8	26	33	46	53	66	59	78	98	105	131	164	210	260	192	

➥ Continued on the following page

Planetary gearbox data																
Gearbox type:			NRBW120, 1-stage						NRBW120, 2-stage							
1st order code			A46						A47							
	i		3	4	5	7	8	10	9	12	15	16	20	25	32	40	64
2nd order code			R03	R04	R05	R07	R08	R10	R09	R12	R15	R16	R20	R25	R32	R40	R64
	$M_{2N,G}$	Nm	80	105	130	135	120	95	210	260	230	260	260	230	260	230	120
	$M_{2max,G}$	Nm	128	168	208	216	192	152	336	416	368	416	416	368	416	368	192
	$M_{2Em.Off}$	Nm	360	474	500	340	380	430	500	520	500	520	520	500	520	500	380
	$J_{1,G}$	kg cm²	2.846	2.276	2.074	1.905	1.873	1.82	2.773	2.708	2.687	2.188	2.015	2.007	1.861	1.858	1.855
	$\varphi_{2,G}$	'	11						13								

Color legend:		
	$M_{max,M} \times i < M_{2N,G}$	The motor and gearbox combination is fatigue-proof
	$M_{2N,G} < M_{max,M} \times i < M_{2max,G}$	Check acceleration and inertias, perform service life calculation if necessary
	$M_{max,M} \times i > M_{2max,G}$	The motor can destroy the gearbox, check acceleration and inertias, perform service life calculation if necessary

© Siemens 2024

Angular geared motors for servo converters with 400 V 3 AC line connection

Servomotor data $M_{0,M}$ Nm	$M_{max,M}$ Nm	J_M ($J_{M,Br}$) kg cm²	Selection data servomotors with planetary gearbox																	Servomotors with planetary gearbox
SIMOTICS S-1FT2 Compact servomotors with 1 and 2-stage NRBW120 planetary gearboxes (continued)																				
2.74 ... 2.8	8.71 ... 8.95	1.61 (1.69)	n_{2N}	r/min	600	500	375	300	250	200	200	150	125	125	100	75	60	50	37.5	**1FT2204-6AF..-0..0-Z**
			M_{2N}	Nm	6.8	8.2	12.6	16.5	20.5	26	23	31	38.5	39	51	65	84	105	120	■■■ + ■■■ + . . .
			$M_{2,0}$	Nm	8.2	11	13.8	19.5	22	27.5	24.5	33	41.5	44	55	69	88	111	120	
			M_{2max}	Nm	26.5	35.5	44.5	62	71	89	79	106	132	141	177	220	280	350	192	
2.99 ... 3.03	9.93 ... 10.2	3.15 (4.05)	n_{2N}	r/min	500	375	375	250	250	200	200	150	125	125	100	75	60	50	37.5	**1FT2205-2AC..-0..0-Z**
			M_{2N}	Nm	6.7	9.1	10.5	15.9	17.1	22	19.7	26	32.5	32.5	43	55	72	88	105	■■■ + ■■■ + . . .
			$M_{2,0}$	Nm	8.9	12	15	21	24	30	27	36	45	48	60	75	96	120	120	
			M_{2max}	Nm	30.5	40.5	50	71	81	102	91	121	151	161	200	250	320	368	192	
3.02 ... 3.06	9.93 ... 10.2	3.15 (4.05)	n_{2N}	r/min	600	500	375	300	250	200	200	150	125	125	100	75	75	60	37.5	**1FT2205-2AF..-0..0-Z**
			M_{2N}	Nm	6.6	8.1	11.6	15.9	18.8	23.5	21	28	34.5	36.5	46.5	59	65	81	120	■■■ + ■■■ + . . .
			$M_{2,0}$	Nm	9	12.1	15.2	21	24	30.5	27	36.5	45.5	48.5	61	76	97	122	120	
			M_{2max}	Nm	30.5	40.5	50	71	81	102	91	121	151	161	200	250	320	368	192	
2.96 ... 3	9.93 ... 10.2	3.15 (4.05)	n_{2N}	r/min	600	375	375	300	250	200	200	150	125	125	100	75	60	50	37.5	**1FT2205-2AH..-0..0-Z**
			M_{2N}	Nm	5.9	9.3	11	14.2	17.9	22.5	20	26.5	33	34.5	44	56	73	90	114	■■■ + ■■■ + . . .
			$M_{2,0}$	Nm	8.8	11.8	14.9	20.5	23.5	30	26.5	35.5	44.5	47.5	59	74	95	119	120	
			M_{2max}	Nm	30.5	40.5	50	71	81	102	91	121	151	161	200	250	320	368	192	
5.14 ... 5.23	16.7 ... 17.2	5.1 (6)	n_{2N}	r/min	500	375	300	250	200	200	200	150	100	100	100	75	60	50	37.5	**1FT2205-4AF..-0..0-Z**
			M_{2N}	Nm	11.9	16.5	21	27	33.5	33.5	31.5	42.5	63	65	64	88	115	135	120	■■■ + ■■■ + . . .
			$M_{2,0}$	Nm	15.5	20.5	26	36.5	41.5	52	46.5	62	78	83	103	129	166	205	120	
			M_{2max}	Nm	51	68	85	120	137	152	153	200	250	270	335	368	416	368	192	
5.15 ... 5.27	16.7 ... 17.2	7.8 (9.4)	n_{2N}	r/min	500	375	300	200	200	150	150	125	100	100	75	60	50	37.5	30	**1FT2206-2AC..-0..0-Z**
			M_{2N}	Nm	10.7	15	19.8	30.5	31	42.5	39.5	48	60	60	83	104	127	170	120	■■■ + ■■■ + . . .
			$M_{2,0}$	Nm	15.7	20.5	26	36.5	42	52	47	62	78	83	104	130	167	205	119	
			M_{2max}	Nm	51	68	85	120	137	152	153	200	250	270	335	368	416	368	192	
5.29 ... 5.39	16.7 ... 17.2	7.8 (9.4)	n_{2N}	r/min	600	375	375	250	250	200	200	150	125	125	100	75	60	50	37.5	**1FT2206-2AF..-0..0-Z**
			M_{2N}	Nm	10.4	16.9	18.9	29	30	38.5	35.5	47.5	57	55	72	99	128	152	120	■■■ + ■■■ + . . .
			$M_{2,0}$	Nm	16	21	26.5	37.5	43	53	48	64	80	85	107	133	171	210	120	
			M_{2max}	Nm	51	68	85	120	137	152	153	200	250	270	335	368	416	368	192	
5.13 ... 5.23	16.7 ... 17.2	7.8 (9.4)	n_{2N}	r/min	500	375	300	250	200	150	200	125	100	100	75	75	50	50	37.5	**1FT2206-2AH..-0..0-Z**
			M_{2N}	Nm	11.8	16.5	20.5	26.5	33.5	42.5	30.5	50	62	65	84	85	133	129	120	■■■ + ■■■ + . . .
			$M_{2,0}$	Nm	15.5	20.5	26	36.5	41.5	52	46.5	62	77	83	103	129	166	205	120	
			M_{2max}	Nm	51	68	85	120	137	152	153	200	250	270	335	368	416	368	192	
7.8 ... 7.95	25.1 ... 25.9	11.5 (13.1)	n_{2N}	r/min	500	375	300	200	200	150	150	125	100	100	75	60	50	37.5	25	**1FT2206-3AB..-0..0-Z**
			M_{2N}	Nm	16	22	28.5	44	45	61	56	68	85	85	117	145	179	230	120	■■■ + ■■■ + . . .
			$M_{2,0}$	Nm	23.5	31.5	39.5	55	63	79	71	94	118	126	157	197	250	230	120	
			M_{2max}	Nm	77	103	129	180	192	152	230	305	368	405	416	368	416	368	192	
7.68 ... 7.82	25.1 ... 25.9	11.5 (13.1)	n_{2N}	r/min	500	375	300	200	200	150	150	125	100	100	75	60	50	37.5	37.5	**1FT2206-3AF..-0..0-Z**
			M_{2N}	Nm	15.1	21	27.5	42.5	43	58	54	65	82	81	112	140	171	225	120	■■■ + ■■■ + . . .
			$M_{2,0}$	Nm	23	31	38.5	54	62	78	70	93	116	124	155	193	245	230	120	
			M_{2max}	Nm	77	103	129	180	192	152	230	305	368	405	416	368	416	368	192	

➥ Continued on the following page

Planetary gearbox data																
Gearbox type:			**NRBW120, 1-stage**						**NRBW120, 2-stage**							
1st order code			**A46**						**A47**							
	i		**3**	**4**	**5**	**7**	**8**	**10**	**9**	**12**	**15**	**16**	**20**	**25**	**32**	**40**	**64**
2nd order code			**R03**	**R04**	**R05**	**R07**	**R08**	**R10**	**R09**	**R12**	**R15**	**R16**	**R20**	**R25**	**R32**	**R40**	**R64**
	$M_{2N,G}$	Nm	80	105	130	135	120	95	210	260	230	260	260	230	260	230	120
	$M_{2max,G}$	Nm	128	168	208	216	192	152	336	416	368	416	416	368	416	368	192
	$M_{2Em.Off}$	Nm	360	474	500	340	380	430	500	520	500	520	520	500	520	500	380
	$J_{1,G}$	kg cm²	2.846	2.276	2.074	1.905	1.873	1.82	2.773	2.708	2.687	2.188	2.015	2.007	1.861	1.858	1.855
	$\varphi_{2,G}$	'	11						13								

Color legend:		
	$M_{max,M} \times i < M_{2N,G}$	The motor and gearbox combination is fatigue-proof
	$M_{2N,G} < M_{max,M} \times i < M_{2max,G}$	Check acceleration and inertias, perform service life calculation if necessary
	$M_{max,M} \times i > M_{2max,G}$	The motor can destroy the gearbox, check acceleration and inertias, perform service life calculation if necessary

© Siemens 2024

Servomotor data			Selection data servomotors with planetary gearbox																Servomotors with planetary gearbox
$M_{0,M}$	$M_{max,M}$	J_M ($J_{M,Br}$)																	
Nm	Nm	kg cm²																	
SIMOTICS S-1FT2 Compact servomotors with 1 and 2-stage NRBW120 planetary gearboxes (continued)																			
10.6 ... 10.8	35.5 ... 36.5	15.1 (16.8)	n_{2N}	r/min	375	250	200	150	150	125	125	100	75	75	60	50	37.5	37.5	30	**1FT2206-4AC..-0..0-Z**
			M_{2N}	Nm	20.5	31.5	40	54	55	67	64	80	107	107	135	160	215	199	120	■■■ + ■■■ + . . .
			$M_{2,0}$	Nm	32	43	54	75	86	95	96	128	160	171	210	230	260	230	120	
			M_{2max}	Nm	109	145	182	216	192	152	325	416	368	416	416	368	416	368	192	
10.4 ... 10.6	33.6 ... 34.6	15.1 (16.8)	n_{2N}	r/min	500	375	300	200	200	150	150	125	100	100	75	60	50	50	37.5	**1FT2206-4AF..-0..0-Z**
			M_{2N}	Nm	21	29	37.5	58	58	79	73	87	109	107	148	184	225	199	120	■■■ + ■■■ + . . .
			$M_{2,0}$	Nm	31.5	42	52	74	84	95	94	126	158	168	210	230	260	230	120	
			M_{2max}	Nm	103	138	172	216	192	152	305	405	368	416	416	368	416	368	192	
9.93 ... 10.1	33.6 ... 34.6	15.1 (16.8)	n_{2N}	r/min	375	300	250	200	150	150	150	100	75	75	60	50	37.5	37.5	37.5	**1FT2206-4AH..-0..0-Z**
			M_{2N}	Nm	23.5	30	37.5	48	63	65	61	92	120	122	154	185	245	230	113	■■■ + ■■■ + . . .
			$M_{2,0}$	Nm	30	40	50	70	80	95	90	120	150	160	200	230	260	230	119	
			M_{2max}	Nm	103	138	172	216	192	152	305	405	368	416	416	368	416	368	192	

Planetary gearbox data																
Gearbox type:			**NRBW120, 1-stage**						**NRBW120, 2-stage**							
1st order code			**A46**						**A47**							
	i		**3**	**4**	**5**	**7**	**8**	**10**	**9**	**12**	**15**	**16**	**20**	**25**	**32**	**40**	**64**
2nd order code			**R03**	**R04**	**R05**	**R07**	**R08**	**R10**	**R09**	**R12**	**R15**	**R16**	**R20**	**R25**	**R32**	**R40**	**R64**
	$M_{2N,G}$	Nm	80	105	130	135	120	95	210	260	230	260	260	230	260	230	120
	$M_{2max,G}$	Nm	128	168	208	216	192	152	336	416	368	416	416	368	416	368	192
	$M_{2Em.Off}$	Nm	360	474	500	340	380	430	500	520	500	520	520	500	520	500	380
	$J_{1,G}$	kg cm²	2.846	2.276	2.074	1.905	1.873	1.82	2.773	2.708	2.687	2.188	2.015	2.007	1.861	1.858	1.855
	$\varphi_{2,G}$	'	11						13								

Color legend:		
	$M_{max,M} \times i < M_{2N,G}$	**The motor and gearbox combination is fatigue-proof**
	$M_{2N,G} < M_{max,M} \times i < M_{2max,G}$	**Check acceleration and inertias, perform service life calculation if necessary**
	$M_{max,M} \times i > M_{2max,G}$	**The motor can destroy the gearbox, check acceleration and inertias, perform service life calculation if necessary**

© Siemens 2024

Angular geared motors for servo converters with 400 V 3 AC line connection

Selection and ordering data

Servomotor data $M_{0,M}$ Nm	$M_{max,M}$ Nm	J_M ($J_{M,Br}$) kg cm²	Selection data servomotors with planetary gearbox									Servomotors with planetary gearbox
SIMOTICS S-1FT2 High Dynamic servomotors with 3-stage NRBW120 planetary gearboxes												
0.31 ... 0.379	1.62 ... 1.67	0.093 (0.112)	n_{2N}	r/min	30	25	20	15	12.5	10	7.5	6	**1FT2103-2AH..-0..0-Z**
			M_{2N}	Nm	12.9	17.9	22.5	26.5	40.5	50	67	84	■■■ + ■■■ + . . .
			$M_{2.0}$	Nm	22.5	30	37.5	45	60	75	96	120	
			M_{2max}	Nm	99	131	164	197	260	325	416	368	
0.92 ... 0.978	3.61 ... 3.7	0.139 (0.158)	n_{2N}	r/min	37.5	30	25	20	15	12.5	10	7.5	**1FT2103-4AH..-0..0-Z**
			M_{2N}	Nm	34.5	48	58	66	102	124	157	205	■■■ + ■■■ + . . .
			$M_{2.0}$	Nm	58	77	96	116	155	193	245	230	
			M_{2max}	Nm	215	285	360	368	416	368	416	368	
0.948 ... 1.01	3.33 ... 3.41	0.35 (0.43)	n_{2N}	r/min	37.5	30	25	20	15	15	10	10	**1FT2104-4AF..-0..0-Z**
			M_{2N}	Nm	45	62	75	86	131	139	200	178	■■■ + ■■■ + . . .
			$M_{2.0}$	Nm	59	79	99	119	159	198	250	230	
			M_{2max}	Nm	200	265	330	368	416	368	416	368	
0.941 ... 0.999	3.42 ... 3.5	0.35 (0.43)	n_{2N}	r/min	37.5	30	25	20	15	15	10	10	**1FT2104-4AK..-0..0-Z**
			M_{2N}	Nm	48	66	82	96	137	149	215	188	■■■ + ■■■ + . . .
			$M_{2.0}$	Nm	59	79	98	118	158	197	250	230	
			M_{2max}	Nm	205	270	340	368	416	368	416	368	
2.03 ... 2.08	6.84 ... 7.02	0.56 (0.65)	n_{2N}	r/min	37.5	30	25	20	15	15	10	10	**1FT2104-5AF..-0..0-Z**
			M_{2N}	Nm	100	131	152	176	260	210	260	230	■■■ + ■■■ + . . .
			$M_{2.0}$	Nm	122	163	200	230	260	230	260	230	
			M_{2max}	Nm	410	416	416	368	416	368	416	368	
2.02 ... 2.07	6.93 ... 7.12	0.56 (0.65)	n_{2N}	r/min	37.5	30	20	20	15	15	10	10	**1FT2104-5AK..-0..0-Z**
			M_{2N}	Nm	98	129	188	174	260	210	260	230	■■■ + ■■■ + . . .
			$M_{2.0}$	Nm	122	162	200	230	260	230	260	230	
			M_{2max}	Nm	416	416	416	368	416	368	416	368	
2.75 ... 2.81	9.18 ... 9.44	0.76 (0.84)	n_{2N}	r/min	30	25	20	20	15	15	12.5	10	**1FT2104-6AF..-0..0-Z**
			M_{2N}	Nm	155	198	245	205	260	230	230	230	■■■ + ■■■ + . . .
			$M_{2.0}$	Nm	165	220	260	230	260	230	260	230	
			M_{2max}	Nm	416	416	416	368	416	368	416	368	
4.4 ... 4.51	13.9 ... 14.3	1.71 (2.55)	n_{2N}	r/min	30	25	25	20	15	15	12.5	10	**1FT2105-4AF..-0..0-Z**
			M_{2N}	Nm	225	260	225	230	260	230	210	230	■■■ + ■■■ + . . .
			$M_{2.0}$	Nm	260	260	260	230	260	230	260	230	
			M_{2max}	Nm	416	416	416	368	416	368	416	368	
4.43 ... 4.54	13.9 ... 14.3	1.71 (2.55)	n_{2N}	r/min	30	25	20	20	15	12.5	10	7.5	**1FT2105-4AH..-0..0-Z**
			M_{2N}	Nm	215	255	260	220	260	230	260	230	■■■ + ■■■ + . . .
			$M_{2.0}$	Nm	260	260	260	230	260	230	260	225	
			M_{2max}	Nm	416	416	416	368	416	368	416	368	
7.22 ... 7.41	22.3 ... 23	2.65 (3.5)	n_{2N}	r/min	30	25	25	20	15	15	10	–	**1FT2105-6AF..-0..0-Z**
			M_{2N}	Nm	260	260	230	230	260	210	260	–	■■■ + ■■■ + . . .
			$M_{2.0}$	Nm	260	260	260	230	260	230	260	–	
			M_{2max}	Nm	416	416	416	368	416	368	416	–	

➥ Continued on the following page

Planetary gearbox data									
Gearbox type:			NRBW120, 3-stage						
1st order code			A48						
	i		60	80	100	120	160	200	256	320
2nd order code			R60	R80	R01	R21	R61	R02	R52	R23
	$M_{2N,G}$	Nm	260	260	260	230	260	230	260	230
	$M_{2max,G}$	Nm	416	416	416	368	416	368	416	368
	$M_{2Em.Off}$	Nm	520	520	520	500	520	500	520	500
	$J_{1,G}$	kg cm²	2.681	2.011	2.005	2.663	1.857	1.857	1.855	1.855
	$\varphi_{2,G}$	'	15							

Color legend:		
	$M_{max,M} \times i < M_{2N,G}$	The motor and gearbox combination is fatigue-proof
	$M_{2N,G} < M_{max,M} \times i < M_{2max,G}$	Check acceleration and inertias, perform service life calculation if necessary
	$M_{max,M} \times i > M_{2max,G}$	The motor can destroy the gearbox, check acceleration and inertias, perform service life calculation if necessary

© Siemens 2024

Angular geared motors for servo converters with 400 V 3 AC line connection

Servomotor data $M_{0,M}$ Nm	$M_{max,M}$ Nm	J_M ($J_{M,Br}$) kg cm²	Selection data servomotors with planetary gearbox									Servomotors with planetary gearbox
SIMOTICS S-1FT2 High Dynamic servomotors with 3-stage NRBW120 planetary gearboxes (continued)												
7.66 ... 7.8	24.2 ... 24.9	4.6 (6.3)	n_{2N} r/min	30	30	25	20	15	15	–	–	1FT2106-3AF..-0..0-Z
			M_{2N} Nm	260	215	235	230	260	215	–	–	■■■ + ■■■ + . . .
			$M_{2,0}$ Nm	260	260	260	230	260	230	–	–	
			M_{2max} Nm	416	416	416	368	416	368	–	–	
9.97 ... 10.1	30.8 ... 31.7	6 (7.6)	n_{2N} r/min	30	25	25	20	15	–	–	–	1FT2106-4AF..-0..0-Z
			M_{2N} Nm	260	260	210	230	260	–	–	–	■■■ + ■■■ + . . .
			$M_{2,0}$ Nm	260	260	260	230	260	–	–	–	
			M_{2max} Nm	416	416	416	368	416	–	–	–	
14.1 ... 14.4	42.5 ... 43.8	8.7 (10.4)	n_{2N} r/min	30	30	20	–	–	–	–	–	1FT2106-6AF..-0..0-Z
			M_{2N} Nm	260	225	260	–	–	–	–	–	■■■ + ■■■ + . . .
			$M_{2,0}$ Nm	260	260	260	–	–	–	–	–	
			M_{2max} Nm	416	416	416	–	–	–	–	–	
SIMOTICS S-1FT2 Compact servomotors with 3-stage NRBW120 planetary gearboxes												
0.297 ... 0.367	1.52 ... 1.58	0.2 (0.22)	n_{2N} r/min	30	25	20	15	12.5	10	7.5	6	1FT2203-2AK..-0..0-Z
			M_{2N} Nm	12.1	16.3	20.5	25	38	47.5	64	80	■■■ + ■■■ + . . .
			$M_{2,0}$ Nm	21.5	29	36	43.5	58	72	93	116	
			M_{2max} Nm	93	124	155	186	245	310	395	368	
0.903 ... 0.961	3.33 ... 3.41	0.35 (0.37)	n_{2N} r/min	37.5	30	25	20	15	12.5	10	7.5	1FT2203-4AK..-0..0-Z
			M_{2N} Nm	39	53	63	73	113	136	170	225	■■■ + ■■■ + . . .
			$M_{2,0}$ Nm	57	76	95	114	152	190	240	230	
			M_{2max} Nm	200	265	330	368	416	368	416	368	
1.99 ... 2.04	6.47 ... 6.64	1.23 (1.31)	n_{2N} r/min	37.5	30	20	15	15	12.5	10	10	1FT2204-5AF..-0..0-Z
			M_{2N} Nm	93	122	181	220	260	230	260	194	■■■ + ■■■ + . . .
			$M_{2,0}$ Nm	120	160	200	230	260	230	260	230	
			M_{2max} Nm	385	416	416	368	416	368	416	368	
2 ... 2.05	6.47 ... 6.64	1.23 (1.31)	n_{2N} r/min	37.5	30	20	15	15	12.5	10	10	1FT2204-5AK..-0..0-Z
			M_{2N} Nm	95	125	186	220	260	230	260	197	■■■ + ■■■ + . . .
			$M_{2,0}$ Nm	121	161	200	230	260	230	260	230	
			M_{2max} Nm	385	416	416	368	416	368	416	368	
2.74 ... 2.8	8.71 ... 8.95	1.61 (1.69)	n_{2N} r/min	30	25	20	20	15	15	10	10	1FT2204-6AF..-0..0-Z
			M_{2N} Nm	154	205	255	205	260	215	260	220	■■■ + ■■■ + . . .
			$M_{2,0}$ Nm	165	215	260	230	260	230	260	230	
			M_{2max} Nm	416	416	416	368	416	368	416	368	
2.99 ... 3.03	9.93 ... 10.2	3.15 (4.05)	n_{2N} r/min	30	25	20	15	12.5	10	10	7.5	1FT2205-2AC..-0..0-Z
			M_{2N} Nm	132	173	215	230	260	230	260	230	■■■ + ■■■ + . . .
			$M_{2,0}$ Nm	180	240	260	230	260	230	260	230	
			M_{2max} Nm	416	416	416	368	416	368	416	368	
3.02 ... 3.06	9.93 ... 10.2	3.15 (4.05)	n_{2N} r/min	37.5	25	20	20	15	15	10	10	1FT2205-2AF..-0..0-Z
			M_{2N} Nm	117	185	230	200	255	197	260	190	■■■ + ■■■ + . . .
			$M_{2,0}$ Nm	182	240	260	230	255	230	255	230	
			M_{2max} Nm	416	416	416	368	416	368	416	368	

➥ Continued on the following page

Planetary gearbox data									
Gearbox type:			**NRBW120, 3-stage**						
1st order code			**A48**						
	i		**60**	**80**	**100**	**120**	**160**	**200**	**256**	**320**
2nd order code			**R60**	**R80**	**R01**	**R21**	**R61**	**R02**	**R52**	**R23**
	$M_{2N,G}$	Nm	260	260	260	230	260	230	260	230
	$M_{2max,G}$	Nm	416	416	416	368	416	368	416	368
	$M_{2Em.Off}$	Nm	520	520	520	500	520	500	520	500
	$J_{1,G}$	kg cm²	2.681	2.011	2.005	2.663	1.857	1.857	1.855	1.855
	$\varphi_{2,G}$	'	15							

Color legend:		
	$M_{max,M} \times i < M_{2N,G}$	**The motor and gearbox combination is fatigue-proof**
	$M_{2N,G} < M_{max,M} \times i < M_{2max,G}$	**Check acceleration and inertias, perform service life calculation if necessary**
	$M_{max,M} \times i > M_{2max,G}$	**The motor can destroy the gearbox, check acceleration and inertias, perform service life calculation if necessary**

© Siemens 2024

Angular geared motors for servo converters with 400 V 3 AC line connection

Servomotor data			Selection data servomotors with planetary gearbox									Servomotors with planetary gearbox
$M_{0,M}$	$M_{max,M}$	J_M ($J_{M,Br}$)										
Nm	Nm	kg cm²										
SIMOTICS S-1FT2 Compact servomotors with 3-stage NRBW120 gearboxes (continued)												
2.96	9.93	3.15	n_{2N}	r/min	30	25	20	15	15	12.5	10	7.5	**1FT2205-2AH..-0..0-Z**
...	...	(4.05)	M_{2N}	Nm	135	176	220	230	260	225	260	230	■■■ + ■■■ + . . .
3	10.2		$M_{2,0}$	Nm	178	235	260	230	260	225	260	225	
			M_{2max}	Nm	416	416	416	368	416	368	416	368	
5.14	16.7	5.1	n_{2N}	r/min	30	25	20	20	15	12.5	10	7.5	**1FT2205-4AF..-0..0-Z**
...	...	(6)	M_{2N}	Nm	210	250	260	210	260	230	260	230	■■■ + ■■■ + . . .
5.23	17.2		$M_{2,0}$	Nm	260	260	260	230	260	230	260	230	
			M_{2max}	Nm	416	416	416	368	416	368	416	368	
5.15	16.7	7.8	n_{2N}	r/min	25	25	20	15	12.5	10	10	7.5	**1FT2206-2AC..-0..0-Z**
...	...	(9.4)	M_{2N}	Nm	240	205	255	230	260	230	250	225	■■■ + ■■■ + . . .
5.27	17.2		$M_{2,0}$	Nm	260	260	260	230	260	225	255	230	
			M_{2max}	Nm	416	416	416	368	416	368	416	368	
5.29	16.7	7.8	n_{2N}	r/min	30	25	20	20	15	12.5	10	7.5	**1FT2206-2AF..-0..0-Z**
...	...	(9.4)	M_{2N}	Nm	235	260	260	225	260	230	260	230	■■■ + ■■■ + . . .
5.39	17.2		$M_{2,0}$	Nm	260	260	255	230	255	225	260	230	
			M_{2max}	Nm	416	416	416	368	416	368	416	368	
5.13	16.7	7.8	n_{2N}	r/min	30	25	20	20	15	12.5	10	7.5	**1FT2206-2AH..-0..0-Z**
...	...	(9.4)	M_{2N}	Nm	205	240	255	175	260	230	255	225	■■■ + ■■■ + . . .
5.23	17.2		$M_{2,0}$	Nm	260	255	255	230	260	230	260	225	
			M_{2max}	Nm	416	416	416	368	416	368	416	368	
7.8	25.1	11.5	n_{2N}	r/min	25	20	15	12.5	10	7.5	–	–	**1FT2206-3AB..-0..0-Z**
...	...	(13.1)	M_{2N}	Nm	260	260	260	230	260	230	–	–	■■■ + ■■■ + . . .
7.95	25.9		$M_{2,0}$	Nm	260	260	260	230	255	230	–	–	
			M_{2max}	Nm	416	416	416	368	416	368	–	–	
7.68	25.1	11.5	n_{2N}	r/min	30	25	20	20	15	12.5	–	–	**1FT2206-3AF..-0..0-Z**
...	...	(13.1)	M_{2N}	Nm	245	260	260	187	260	230	–	–	■■■ + ■■■ + . . .
7.82	25.9		$M_{2,0}$	Nm	260	260	260	230	260	230	–	–	
			M_{2max}	Nm	416	416	416	368	416	368	–	–	
10.6	35.5	15.1	n_{2N}	r/min	25	20	15	15	12.5	–	–	–	**1FT2206-4AC..-0..0-Z**
...	...	(16.8)	M_{2N}	Nm	260	260	260	230	260	–	–	–	■■■ + ■■■ + . . .
10.8	36.5		$M_{2,0}$	Nm	260	260	260	230	260	–	–	–	
			M_{2max}	Nm	416	416	416	368	416	–	–	–	
10.4	33.6	15.1	n_{2N}	r/min	30	25	25	20	15	–	–	–	**1FT2206-4AF..-0..0-Z**
...	...	(16.8)	M_{2N}	Nm	260	260	215	230	260	–	–	–	■■■ + ■■■ + . . .
10.6	34.6		$M_{2,0}$	Nm	260	260	260	230	260	–	–	–	
			M_{2max}	Nm	416	416	416	368	416	–	–	–	
9.93	33.6	15.1	n_{2N}	r/min	30	25	20	15	15	–	–	–	**1FT2206-4AH..-0..0-Z**
...	...	(16.8)	M_{2N}	Nm	250	260	260	230	260	–	–	–	■■■ + ■■■ + . . .
10.1	34.6		$M_{2,0}$	Nm	260	260	260	230	255	–	–	–	
			M_{2max}	Nm	416	416	416	368	416	–	–	–	

Planetary gearbox data									
Gearbox type:			**NRBW120, 3-stage**						
1st order code			**A48**						
	i		**60**	**80**	**100**	**120**	**160**	**200**	**256**	**320**
2nd order code			**R60**	**R80**	**R01**	**R21**	**R61**	**R02**	**R52**	**R23**
	$M_{2N,G}$	Nm	260	260	260	230	260	230	260	230
	$M_{2max,G}$	Nm	416	416	416	368	416	368	416	368
	$M_{2Em.Off}$	Nm	520	520	520	500	520	500	520	500
	$J_{1,G}$	kg cm²	2.681	2.011	2.005	2.663	1.857	1.857	1.855	1.855
	$\varphi_{2,G}$	'	15							

Color legend:		
	$M_{max,M} \times i < M_{2N,G}$	The motor and gearbox combination is fatigue-proof
	$M_{2N,G} < M_{max,M} \times i < M_{2max,G}$	Check acceleration and inertias, perform service life calculation if necessary
	$M_{max,M} \times i > M_{2max,G}$	The motor can destroy the gearbox, check acceleration and inertias, perform service life calculation if necessary

© Siemens 2024

Selection and ordering data

NRKW070

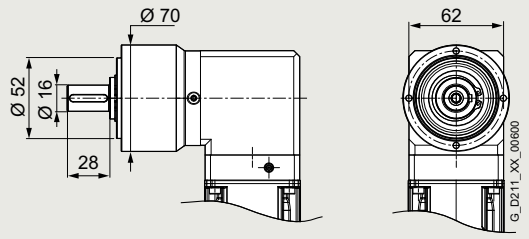

Permissible output shaft loads		
Average radial force for 20000 h	$F_{R,eq}$	1050 N
Average axial force for 20000 h	$F_{A,eq}$	1350 N
Average radial force for 30000 h	$F_{R,eq}$	900 N
Average axial force for 30000 h	$F_{A,eq}$	1000 N
Maximum radial force	$F_{R,max}$	1650 N
Maximum axial force	$F_{A,max}$	2100 N

Servomotor data			Selection data servomotors with planetary gearbox																		Servomotors with planetary gearbox
$M_{0,M}$ Nm	$M_{max,M}$ Nm	J_M ($J_{M,Br}$) kg cm²																			
SIMOTICS S-1FT2 High Dynamic servomotors with 1 and 2-stage NRKW070 planetary gearboxes																					
0.461	1.78	0.093	n_{2N}	r/min	600	500	500	375	300	250	300	250	200	200	150	125	100	75	50	37.5	**1FT2103-2AH..-2..0-Z**
...	...	(0.112)	M_{2N}	Nm	0.91	1.28	1.43	2.15	2.7	3.4	2.8	3.35	4.65	4.35	6.4	7.8	9.9	13.2	18	15	■■■ + ■■■ + . . .
0.508	1.81		$M_{2,0}$	Nm	1.38	1.89	2.4	3.4	3.95	4.95	4.45	5.9	7.5	8	10	12.6	16.1	20	18	15	
			M_{2max}	Nm	5.3	7.1	8.9	12.6	14.4	18	16.1	21.5	26.5	28.5	35.5	44.5	53	48	29	24	
0.948	3.79	0.139	n_{2N}	r/min	600	500	375	300	300	250	250	200	150	150	125	100	75	60	60	37.5	**1FT2103-4AH..-2..0-Z**
...	...	(0.158)	M_{2N}	Nm	1.92	2.6	3.65	5	5.2	6.4	6.2	8.1	11.1	11.2	13.8	17.4	23	29	18	15	■■■ + ■■■ + . . .
0.989	3.83		$M_{2,0}$	Nm	2.8	3.8	4.8	6.8	7.8	9.8	8.8	11.7	14.7	15.7	19.7	24.5	31.5	30	18	15	
			M_{2max}	Nm	11.4	15.2	19.1	26.5	29	24	34	45.5	53	53	53	48	53	48	29	24	
1.1	3.5	0.368	n_{2N}	r/min	750	600	500	375	375	300	300	250	200	200	150	125	100	75	50	30	**1FT2104-4AF..-2..0-Z**
...	...	(0.448)	M_{2N}	Nm	2.25	3.25	4.2	6.1	5.9	7.8	7.6	9.1	12.2	11.7	16.6	19.9	25	30	18	15	■■■ + ■■■ + . . .
1.14	3.54		$M_{2,0}$	Nm	3.3	4.45	5.6	7.9	9	11.3	10.1	13.5	16.9	18	22.5	28	33	30	18	15	
			M_{2max}	Nm	10.5	14.1	17.6	24.5	28	24	31.5	42	52	53	53	48	53	48	29	24	
1.1	3.6	0.368	n_{2N}	r/min	600	600	500	375	300	250	300	200	200	150	150	100	100	75	60	37.5	**1FT2104-4AK..-2..0-Z**
...	...	(0.448)	M_{2N}	Nm	2.95	3.4	4.4	6.3	8	10	7.9	12	12.7	16.2	17.3	25	26	30	18	15	■■■ + ■■■ + . . .
1.13	3.64		$M_{2,0}$	Nm	3.25	4.4	5.5	7.8	9	11.3	10	13.4	16.8	17.9	22.5	28	33	30	18	15	
			M_{2max}	Nm	10.8	14.4	18.1	25	29	24	32	43	53	53	53	48	53	48	29	24	
2.19	7.07	0.578	n_{2N}	r/min	600	500	375	300	300	250	250	200	150	150	125	125	100	75	50	–	**1FT2104-5AF..-2..0-Z**
...	...	(0.668)	M_{2N}	Nm	4.85	6.3	8.8	11.7	12	14.7	14	17.7	24.5	24	29.5	26.5	32.5	30	18	–	■■■ + ■■■ + . . .
2.22	7.16		$M_{2,0}$	Nm	6.5	8.7	11	15.4	17.6	15	19.7	26	32.5	33	33	30	33	30	18	–	
			M_{2max}	Nm	21	28.5	35.5	40	29	24	53	53	53	53	53	48	53	48	29	–	
2.17	7.16	0.578	n_{2N}	r/min	600	500	375	300	300	250	250	200	150	150	125	125	100	75	60	–	**1FT2104-5AK..-2..0-Z**
...	...	(0.668)	M_{2N}	Nm	4.75	6.2	8.6	11.5	11.7	14.5	13.8	17.5	24	24	29	26.5	32.5	30	18	–	■■■ + ■■■ + . . .
2.2	7.26		$M_{2,0}$	Nm	6.5	8.7	10.9	15.3	17.5	15	19.6	26	32.5	33	33	30	33	30	18	–	
			M_{2max}	Nm	21.5	28.5	36	40	29	24	53	53	53	53	53	48	53	48	29	–	
2.92	9.45	0.778	n_{2N}	r/min	600	500	375	300	300	300	250	200	150	150	125	125	100	75	–	–	**1FT2104-6AF..-2..0-Z**
...	...	(0.858)	M_{2N}	Nm	5.8	7.5	10.4	13.8	13.9	12.5	16.2	20.5	28	28	32.5	29.5	33	30	–	–	■■■ + ■■■ + . . .
2.95	9.57		$M_{2,0}$	Nm	8.7	11.7	14.6	20.5	18	15	26	33	33	33	33	30	33	30	–	–	
			M_{2max}	Nm	22	30	38	40	29	24	53	53	53	53	53	48	53	48	–	–	

Planetary gearbox data																		
Gearbox type:			**NRKW070, 1-stage**						**NRKW070, 2-stage**									
1st order code			**B26**						**B27**									
	i		**3**	**4**	**5**	**7**	**8**	**10**	**9**	**12**	**15**	**16**	**20**	**25**	**32**	**40**	**64**	**100**
2nd order code			**R03**	**R04**	**R05**	**R07**	**R08**	**R10**	**R09**	**R12**	**R15**	**R16**	**R20**	**R25**	**R32**	**R40**	**R64**	**R00**
	$M_{2N,G}$	Nm	14	19	24	25	18	15	33	33	33	33	33	30	33	30	18	15
	$M_{2max,G}$	Nm	22	30	38	40	29	24	53	53	53	53	53	48	53	48	29	24
	$M_{2Em.Off}$	Nm	66	86	80	80	80	70	88	88	88	88	88	80	88	80	80	80
	$J_{1,G}$	kg cm²	0.329	0.23	0.224	0.22	0.219	0.218	0.326	0.326	0.224	0.228	0.223	0.223	0.219	0.219	0.219	0.218
	$\varphi_{2,G}$	'	16						18									

Color legend:		
	$M_{max,M} \times i < M_{2N,G}$	**The motor and gearbox combination is fatigue-proof**
	$M_{2N,G} < M_{max,M} \times i < M_{2max,G}$	**Check acceleration and inertias, perform service life calculation if necessary**
	$M_{max,M} \times i > M_{2max,G}$	**The motor can destroy the gearbox, check acceleration and inertias, perform service life calculation if necessary**

© Siemens 2024

Angular geared motors for servo converters with 400 V 3 AC line connection

Servomotor data			Selection data servomotors with planetary gearbox																	Servomotors with planetary gearbox
$M_{0,M}$	$M_{max,M}$	J_M ($J_{M,Br}$)																		
Nm	Nm	kg cm²																		
SIMOTICS S-1FT2 Compact servomotors with 1 and 2-stage NRKW070 planetary gearboxes																				
0.452	1.68	0.2 (0.22)	n_{2N}	r/min	600	500	375	300	300	250	250	200	150	150	125	100	75	60	50	37.5	**1FT2203-2AK..-2..0-Z**
...	...		M_{2N}	Nm	0.8	1.12	1.6	2.2	2.25	2.8	2.7	3.55	4.95	4.95	6.1	7.7	10.4	13.1	14.6	13.7	■■■ + ■■■ + . . .
0.495	1.71		$M_{2,0}$	Nm	1.35	1.85	2.35	3.35	3.85	4.85	4.3	5.8	7.3	7.8	9.8	12.3	15.7	19.7	18	15	
			M_{2max}	Nm	5	6.7	8.4	11.9	13.6	17.1	15.2	20	25	27	33.5	42.5	53	48	29	24	
1.06	3.5	0.35 (0.37)	n_{2N}	r/min	600	500	375	300	250	200	250	200	150	150	125	100	75	60	50	37.5	**1FT2203-4AK..-2..0-Z**
...	...		M_{2N}	Nm	2.05	2.75	3.95	5.3	6.5	8.3	6.5	8.2	11.7	11.5	13.9	17.7	24	29.5	18	15	■■■ + ■■■ + . . .
1.09	3.54		$M_{2,0}$	Nm	3.15	4.25	5.3	7.6	8.7	10.9	9.7	13	16.3	17.3	21.5	27	33	30	18	15	
			M_{2max}	Nm	10.5	14.1	17.6	24.5	28	24	31.5	42	52	53	53	48	53	48	29	24	
2.15	6.69	1.248 (1.328)	n_{2N}	r/min	600	500	375	300	250	250	250	200	150	125	100	100	100	75	50	–	**1FT2204-5AF..-2..0-Z**
...	...		M_{2N}	Nm	4.55	5.9	8.3	10.9	13.3	13.2	12.9	16.2	22.5	27	33	30	26.5	30	18	–	■■■ + ■■■ + . . .
2.18	6.77		$M_{2,0}$	Nm	6.4	8.6	10.8	15.1	17.3	15	19.3	25.5	32	33	33	30	33	30	18	–	
			M_{2max}	Nm	20	27	33.5	40	29	24	53	53	53	53	53	48	53	48	29	–	
2.16	6.69	1.248 (1.328)	n_{2N}	r/min	600	500	375	300	250	250	250	150	150	125	100	100	100	75	60	–	**1FT2204-5AK..-2..0-Z**
...	...		M_{2N}	Nm	4.65	6	8.4	11.1	13.5	13.4	13.1	21.5	23	27	33	30	26.5	30	18	–	■■■ + ■■■ + . . .
2.19	6.77		$M_{2,0}$	Nm	6.4	8.6	10.8	15.2	17.4	15	19.5	26	32.5	33	33	30	33	30	18	–	
			M_{2max}	Nm	20	27	33.5	40	29	24	53	53	53	53	53	48	53	48	29	–	
2.91	8.98	1.628 (1.708)	n_{2N}	r/min	600	500	375	300	250	250	200	150	150	125	125	125	100	75	–	–	**1FT2204-6AF..-2..0-Z**
...	...		M_{2N}	Nm	5.8	7.4	10.6	13.8	16.8	15	20	27	27.5	33	32	24.5	30	30	–	–	■■■ + ■■■ + . . .
2.93	9.09		$M_{2,0}$	Nm	8.7	11.6	14.6	20.5	18	15	26	33	33	33	33	30	33	30	–	–	
			M_{2max}	Nm	22	30	38	40	29	24	53	53	53	53	53	48	53	48	–	–	

Planetary gearbox data																		
Gearbox type:			**NRKW070, 1-stage**						**NRKW070, 2-stage**									
1st order code			**B26**						**B27**									
	i		**3**	**4**	**5**	**7**	**8**	**10**	**9**	**12**	**15**	**16**	**20**	**25**	**32**	**40**	**64**	**100**
2nd order code			**R03**	**R04**	**R05**	**R07**	**R08**	**R10**	**R09**	**R12**	**R15**	**R16**	**R20**	**R25**	**R32**	**R40**	**R64**	**R00**
	$M_{2N,G}$	Nm	14	19	24	25	18	15	33	33	33	33	33	30	33	30	18	15
	$M_{2max,G}$	Nm	22	30	38	40	29	24	53	53	53	53	53	48	53	48	29	24
	$M_{2Em.Off}$	Nm	66	86	80	80	80	70	88	88	88	88	88	80	88	80	80	80
	$J_{1,G}$	kg cm²	0.329	0.23	0.224	0.22	0.219	0.218	0.326	0.326	0.224	0.228	0.223	0.223	0.219	0.219	0.219	0.218
	$\varphi_{2,G}$	'	16						18									

Color legend:		
	$M_{max,M} \times i < M_{2N,G}$	The motor and gearbox combination is fatigue-proof
	$M_{2N,G} < M_{max,M} \times i < M_{2max,G}$	Check acceleration and inertias, perform service life calculation if necessary
	$M_{max,M} \times i > M_{2max,G}$	The motor can destroy the gearbox, check acceleration and inertias, perform service life calculation if necessary

© Siemens 2024

Selection and ordering data

NRKW090

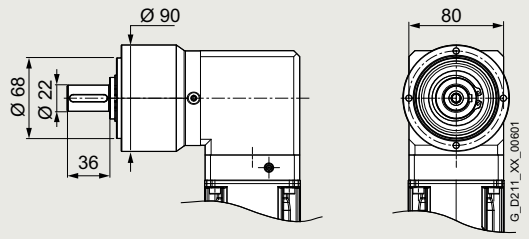

Permissible output shaft loads		
Average radial force for 20000 h	$F_{R,eq}$	1900 N
Average axial force for 20000 h	$F_{A,eq}$	2000 N
Average radial force for 30000 h	$F_{R,eq}$	1700 N
Average axial force for 30000 h	$F_{A,eq}$	1500 N
Maximum radial force	$F_{R,max}$	3100 N
Maximum axial force	$F_{A,max}$	3800 N

Servomotor data			Selection data servomotors with planetary gearbox																		Servomotors with planetary gearbox
$M_{0,M}$ Nm	$M_{max,M}$ Nm	J_M ($J_{M,Br}$) kg cm²																			
SIMOTICS S-1FT2 High Dynamic servomotors with 1 and 2-stage NRKW090 planetary gearboxes																					
0.379 ... 0.449	1.69 ... 1.74	0.093 (0.112)	n_{2N}	r/min	500	500	375	300	300	250	250	200	150	150	125	100	75	60	37.5	25	1FT2103-2AH..-0..0-Z
			M_{2N}	Nm	0.66	0.79	1.24	1.8	1.85	2.3	2.15	2.85	3.95	4.05	5.1	6.5	9	11.4	18.5	28	■■■ + ■■■ + . . .
			$M_{2.0}$	Nm	1.13	1.59	2.05	2.95	3.4	4.3	3.85	5.2	6.5	7	8.8	11	14.2	17.8	28.5	38	
			M_{2max}	Nm	5	6.8	8.5	12.1	13.8	17.4	15.5	20.5	25.5	27.5	34.5	43	55	69	80	61	
0.938 ... 1	3.72 ... 3.77	0.139 (0.158)	n_{2N}	r/min	500	375	375	300	250	200	200	150	150	125	100	100	75	60	37.5	30	1FT2103-4AH..-0..0-Z
			M_{2N}	Nm	1.97	2.8	3.2	4.35	5.5	7.1	6.5	8.8	9.4	11.4	14.6	14.5	20.5	26	42	38	■■■ + ■■■ + . . .
			$M_{2.0}$	Nm	2.8	3.8	4.8	6.8	7.8	9.9	8.8	11.8	14.9	15.9	19.9	24.5	31.5	39.5	50	38	
			M_{2max}	Nm	11.1	14.9	18.7	26	30	37.5	33.5	44.5	55	59	74	93	119	131	80	61	
1.02 ... 1.07	3.43 ... 3.48	0.35 (0.43)	n_{2N}	r/min	600	500	375	300	300	250	250	200	150	150	125	100	75	60	37.5	30	1FT2104-4AF..-2..0-Z
			M_{2N}	Nm	2.35	3.2	4.3	6	6.5	8.1	7.5	9.8	12.9	13.4	16.8	21	28	35	50	37.5	■■■ + ■■■ + . . .
			$M_{2.0}$	Nm	3.05	4.1	5.2	7.4	8.5	10.7	9.5	12.7	16	17	21	26.5	34	42.5	50	38	
			M_{2max}	Nm	10.3	13.7	17.2	24	27.5	34.5	31	41	51	55	68	86	110	131	80	61	
1.01 ... 1.07	3.53 ... 3.57	0.35 (0.43)	n_{2N}	r/min	600	500	375	300	300	250	250	200	150	150	125	100	75	60	37.5	30	1FT2104-4AK..-2..0-Z
			M_{2N}	Nm	2.6	3.45	4.75	6.6	6.9	8.5	8.2	10.6	14.1	14.7	18.2	23	30.5	38	50	38	■■■ + ■■■ + . . .
			$M_{2.0}$	Nm	3	4.1	5.2	7.3	8.4	10.6	9.4	12.6	15.8	16.9	21	26.5	34	42.5	50	38	
			M_{2max}	Nm	10.5	14.1	17.7	24.5	28.5	35.5	31.5	42.5	53	56	70	88	113	131	80	61	
2.1 ... 2.15	7 ... 7.09	0.56 (0.65)	n_{2N}	r/min	500	375	375	250	250	200	200	150	125	125	100	75	60	50	50	30	1FT2104-5AF..-2..0-Z
			M_{2N}	Nm	5.5	7.8	8.4	13.4	13.8	17.8	17	23	28	28	36	47.5	61	73	46	38	■■■ + ■■■ + . . .
			$M_{2.0}$	Nm	6.3	8.4	10.6	14.9	17.1	21	19.1	25.5	32	34	42.5	53	68	82	50	38	
			M_{2max}	Nm	21	28	35	49.5	56	61	63	84	105	112	140	131	144	131	80	61	
2.08 ... 2.13	7.09 ... 7.19	0.56 (0.65)	n_{2N}	r/min	500	375	375	250	250	200	200	150	125	125	100	75	60	50	50	30	1FT2104-5AK..-2..0-Z
			M_{2N}	Nm	5.4	7.7	8.3	13.2	13.6	17.5	16.7	22.5	27.5	27.5	35.5	47	60	72	46	38	■■■ + ■■■ + . . .
			$M_{2.0}$	Nm	6.2	8.4	10.5	14.8	17	21	19	25	31.5	33.5	42	52	67	82	50	38	
			M_{2max}	Nm	21	28.5	35.5	50	57	61	64	85	106	113	142	131	144	131	80	61	
2.84 ... 2.88	9.37 ... 9.5	0.76 (0.84)	n_{2N}	r/min	500	375	375	250	250	200	200	150	125	125	100	75	60	60	50	30	1FT2104-6AF..-2..0-Z
			M_{2N}	Nm	6.7	9.5	10.1	16.1	16.5	21	20	27	33	33	42.5	56	72	69	49	38	■■■ + ■■■ + . . .
			$M_{2.0}$	Nm	8.5	11.4	14.3	20	23	28.5	25.5	34	42.5	45.5	57	71	90	82	50	38	
			M_{2max}	Nm	28	37.5	47	66	76	61	84	112	131	144	144	131	144	131	80	61	

➥ Continued on the following page

Planetary gearbox data																	
Gearbox type:			NRKW090, 1-stage						NRKW090, 2-stage								
1st order code			B36						B37								
	i		3	4	5	7	8	10	9	12	15	16	20	25	32	40	64	100
2nd order code			R03	R04	R05	R07	R08	R10	R09	R12	R15	R16	R20	R25	R32	R40	R64	R00
	$M_{2N,G}$	Nm	40	53	67	65	50	38	97	90	82	90	90	82	90	82	50	38
	$M_{2max,G}$	Nm	64	85	107	104	80	61	155	144	131	144	144	131	144	131	80	61
	$M_{2Em.Off}$	Nm	180	240	220	178	190	170	260	240	220	240	240	220	240	220	190	170
	$J_{1.G}$	kg cm²	1.408	1.107	1.026	0.96	0.944	0.925	1.245	1.22	1.211	1.002	0.96	0.956	0.918	0.917	0.917	0.907
	$\varphi_{2,G}$	'	13						15									

Color legend:		
	$M_{max,M} \times i < M_{2N,G}$	**The motor and gearbox combination is fatigue-proof**
	$M_{2N,G} < M_{max,M} \times i < M_{2max,G}$	**Check acceleration and inertias, perform service life calculation if necessary**
	$M_{max,M} \times i > M_{2max,G}$	**The motor can destroy the gearbox, check acceleration and inertias, perform service life calculation if necessary**

© Siemens 2024

Angular geared motors for servo converters with 400 V 3 AC line connection

Servomotor data			Selection data servomotors with planetary gearbox																	Servomotors with planetary gearbox
$M_{0,M}$	$M_{max,M}$	J_M ($J_{M,Br}$)																		
Nm	Nm	kg cm²																		
SIMOTICS S-1FT2 High Dynamic servomotors with 1 and 2-stage NRKW090 planetary gearboxes (continued)																				
4.52 ... 4.57	14.1 ... 14.3	1.71 (2.55)	n_{2N}	r/min	500	375	300	250	200	200	200	150	125	100	100	75	60	60	50	–	1FT2105-4AF..-0..0-Z
			M_{2N}	Nm	10.6	15	19.4	24	30.5	30.5	29.5	39.5	47.5	60	59	80	90	82	40	–	■■■ + ■■■ + . . .
			$M_{2,0}$	Nm	13.6	18.1	22.5	31.5	36.5	38	40.5	54	67	72	90	82	90	82	50	–	
			M_{2max}	Nm	42.5	57	71	100	80	61	127	144	131	144	144	131	144	131	80	–	
4.56 ... 4.61	14.1 ... 14.3	1.71 (2.55)	n_{2N}	r/min	500	375	300	250	200	150	200	125	100	100	75	75	60	60	37.5	–	1FT2105-4AH..-0..0-Z
			M_{2N}	Nm	9.6	13.7	17.9	22	28	37.5	26.5	44	55	55	74	72	89	72	50	–	■■■ + ■■■ + . . .
			$M_{2,0}$	Nm	13.7	18.3	22.5	32	36.5	38	41	54	68	73	90	82	90	82	50	–	
			M_{2max}	Nm	42.5	57	71	100	80	61	127	144	131	144	144	131	144	131	80	–	
7.31 ... 7.38	22.7 ... 23	2.65 (3.5)	n_{2N}	r/min	375	375	300	200	200	200	150	125	100	100	75	75	60	60	–	–	1FT2105-6AF..-0..0-Z
			M_{2N}	Nm	17.7	18.7	24	37.5	37.5	34.5	48	58	72	72	90	82	90	82	–	–	■■■ + ■■■ + . . .
			$M_{2,0}$	Nm	22	29	36.5	51	50	38	66	87	82	90	90	82	90	82	–	–	
			M_{2max}	Nm	64	85	107	104	80	61	155	144	131	144	144	131	144	131	–	–	
SIMOTICS S-1FT2 Compact servomotors with 1 and 2-stage NRKW090 gearboxes																				
0.366 ... 0.436	1.59 ... 1.64	0.2 (0.22)	n_{2N}	r/min	375	375	300	250	200	200	200	150	125	125	100	75	60	50	30	20	1FT2203-2AK..-0..0-Z
			M_{2N}	Nm	0.82	0.99	1.39	1.9	2.4	2.55	2.4	3.35	4.15	4.2	5.5	7.5	9.7	11.8	19.9	30	■■■ + ■■■ + . . .
			$M_{2,0}$	Nm	1.09	1.54	1.98	2.85	3.3	4.2	3.7	5	6.3	6.8	8.5	10.7	13.8	17.3	27.5	38	
			M_{2max}	Nm	4.75	6.4	8.1	11.4	13.1	16.4	14.6	19.5	24.5	26	32.5	40.5	52	65	80	61	
0.974 ... 1.03	3.43 ... 3.48	0.35 (0.37)	n_{2N}	r/min	500	375	375	250	250	200	200	150	125	125	100	75	75	60	37.5	30	1FT2203-4AK..-0..0-Z
			M_{2N}	Nm	2.2	3.15	3.55	5.6	6	7.7	7.1	9.7	12	12.5	15.9	20.5	21.5	27	44.5	33.5	■■■ + ■■■ + . . .
			$M_{2,0}$	Nm	2.9	3.95	5	7.1	8.1	10.2	9.1	12.2	15.3	16.3	20	25.5	32.5	41	50	38	
			M_{2max}	Nm	10.3	13.7	17.2	24	27.5	34.5	31	41	51	55	68	86	110	131	80	61	
2.06 ... 2.11	6.62 ... 6.71	1.23 (1.31)	n_{2N}	r/min	500	375	375	250	250	200	200	150	125	125	100	75	60	50	37.5	30	1FT2204-5AF..-2..0-Z
			M_{2N}	Nm	5.2	7.4	7.9	12.8	13	16.7	16.2	22	26.5	26.5	34	45.5	58	70	50	38	■■■ + ■■■ + . . .
			$M_{2,0}$	Nm	6.1	8.3	10.4	14.6	16.8	21	18.7	25	31	33	41.5	52	67	82	50	38	
			M_{2max}	Nm	20	26.5	33	46.5	53	61	59	79	99	106	132	131	144	131	80	61	
2.07 ... 2.12	6.62 ... 6.71	1.23 (1.31)	n_{2N}	r/min	500	375	375	250	250	200	200	150	125	125	100	75	60	50	37.5	30	1FT2204-5AK..-2..0-Z
			M_{2N}	Nm	5.4	7.7	8.1	13.1	13.2	17.1	16.5	22	27	27	34.5	46.5	59	71	50	38	■■■ + ■■■ + . . .
			$M_{2,0}$	Nm	6.2	8.3	10.4	14.7	16.9	21	18.9	25	31.5	33.5	42	52	67	82	50	38	
			M_{2max}	Nm	20	26.5	33	46.5	53	61	59	79	99	106	132	131	144	131	80	61	
2.82 ... 2.87	8.9 ... 9.02	1.61 (1.69)	n_{2N}	r/min	500	375	300	250	200	200	200	150	125	100	100	75	60	50	37.5	30	1FT2204-6AF..-2..0-Z
			M_{2N}	Nm	7	10	13	16.8	21	21.5	21	28	34	42	43.5	58	74	82	50	38	■■■ + ■■■ + . . .
			$M_{2,0}$	Nm	8.4	11.3	14.2	20	22.5	28.5	25.5	34	42.5	45	56	71	90	82	50	38	
			M_{2max}	Nm	27	36	45	63	72	61	80	107	131	142	144	131	144	131	80	61	

➥ Continued on the following page

Planetary gearbox data																	
Gearbox type:		NRKW090, 1-stage						NRKW090, 2-stage									
1st order code		B36						B37									
i		3	4	5	7	8	10	9	12	15	16	20	25	32	40	64	100
2nd order code		R03	R04	R05	R07	R08	R10	R09	R12	R15	R16	R20	R25	R32	R40	R64	R00
$M_{2N,G}$	Nm	40	53	67	65	50	38	97	90	82	90	90	82	90	82	50	38
$M_{2max,G}$	Nm	64	85	107	104	80	61	155	144	131	144	144	131	144	131	80	61
$M_{2Em.Off}$	Nm	180	240	220	178	190	170	260	240	220	240	240	220	240	220	190	170
$J_{1,G}$	kg cm²	1.408	1.107	1.026	0.96	0.944	0.925	1.245	1.22	1.211	1.002	0.96	0.956	0.918	0.917	0.917	0.907
$\varphi_{2,G}$	'	13						15									

Color legend:		
	$M_{max,M} \times i < M_{2N,G}$	The motor and gearbox combination is fatigue-proof
	$M_{2N,G} < M_{max,M} \times i < M_{2max,G}$	Check acceleration and inertias, perform service life calculation if necessary
	$M_{max,M} \times i > M_{2max,G}$	The motor can destroy the gearbox, check acceleration and inertias, perform service life calculation if necessary

© Siemens 2024

Servomotor data			Selection data servomotors with planetary gearbox																	Servomotors with planetary gearbox
$M_{0,M}$	$M_{max,M}$	J_M ($J_{M,Br}$)																		
Nm	Nm	kg cm²																		
SIMOTICS S-1FT2 Compact servomotors with 1 and 2-stage NRKW090 planetary gearboxes (continued)																				
2.85 ... 2.9	10.1 ... 10.3	3.15 (4.05)	n_{2N}	r/min	500	375	300	250	200	150	200	150	100	100	100	75	60	50	37.5	–	**1FT2205-2AC..-0..0-Z**
			M_{2N}	Nm	5.8	8.5	11.1	13.9	17.9	23	17.4	23.5	34.5	36	35	48.5	61	72	50	–	■■■ + ■■■ + . . .
			$M_{2,0}$	Nm	8.5	11.4	14.3	20	23	28.5	25.5	34.5	43	46	57	72	90	82	49.5	–	
			M_{2max}	Nm	30.5	41	51	71	80	61	91	122	131	144	144	131	144	131	80	–	
2.89 ... 2.94	10.1 ... 10.3	3.15 (4.05)	n_{2N}	r/min	500	375	375	250	250	200	200	150	125	125	100	75	60	50	37.5	–	**1FT2205-2AF..-0..0-Z**
			M_{2N}	Nm	7	9.6	10.4	16.6	16.8	21.5	21	28	34	34	43	58	74	82	50	–	■■■ + ■■■ + . . .
			$M_{2,0}$	Nm	8.6	11.6	14.5	20.5	23	29	26	35	43.5	46.5	58	73	90	82	50	–	
			M_{2max}	Nm	30.5	41	51	71	80	61	91	122	131	144	144	131	144	131	80	–	
2.85 ... 2.9	10.1 ... 10.3	3.15 (4.05)	n_{2N}	r/min	500	375	300	250	200	200	200	150	125	100	100	75	60	50	37.5	–	**1FT2205-2AH..-0..0-Z**
			M_{2N}	Nm	6.4	9.1	11.7	15.1	18.8	18.8	18.8	25.5	30.5	37.5	38	52	66	78	49.5	–	■■■ + ■■■ + . . .
			$M_{2,0}$	Nm	8.5	11.4	14.3	20	23	28.5	25.5	34.5	43	46	57	72	90	82	49.5	–	
			M_{2max}	Nm	30.5	41	51	71	80	61	91	122	131	144	144	131	144	131	80	–	
4.98 ... 5.02	17 ... 17.2	5.1 (6)	n_{2N}	r/min	500	375	300	200	200	150	150	125	100	100	75	75	60	50	37.5	–	**1FT2205-4AF..-0..0-Z**
			M_{2N}	Nm	9.3	13.4	17.4	27	27.5	37	35	43	54	54	72	70	88	82	50	–	■■■ + ■■■ + . . .
			$M_{2,0}$	Nm	14.9	19.9	25	35	40	38	44.5	59	74	79	90	82	90	82	50	–	
			M_{2max}	Nm	51	68	86	104	80	61	153	144	131	144	144	131	144	131	80	–	

Planetary gearbox data																	
Gearbox type:			**NRKW090, 1-stage**						**NRKW090, 2-stage**								
1st order code			**B36**						**B37**								
	i		**3**	**4**	**5**	**7**	**8**	**10**	**9**	**12**	**15**	**16**	**20**	**25**	**32**	**40**	**64**	**100**
2nd order code			**R03**	**R04**	**R05**	**R07**	**R08**	**R10**	**R09**	**R12**	**R15**	**R16**	**R20**	**R25**	**R32**	**R40**	**R64**	**R00**
	$M_{2N,G}$	Nm	40	53	67	65	50	38	97	90	82	90	90	82	90	82	50	38
	$M_{2max,G}$	Nm	64	85	107	104	80	61	155	144	131	144	144	131	144	131	80	61
	$M_{2Em.Off}$	Nm	180	240	220	178	190	170	260	240	220	240	240	220	240	220	190	170
	$J_{1,G}$	kg cm²	1.408	1.107	1.026	0.96	0.944	0.925	1.245	1.22	1.211	1.002	0.96	0.956	0.918	0.917	0.917	0.907
	$\varphi_{2,G}$	'	13						15									

Color legend:

	$M_{max,M} \times i < M_{2N,G}$	**The motor and gearbox combination is fatigue-proof**
	$M_{2N,G} < M_{max,M} \times i < M_{2max,G}$	**Check acceleration and inertias, perform service life calculation if necessary**
	$M_{max,M} \times i > M_{2max,G}$	**The motor can destroy the gearbox, check acceleration and inertias, perform service life calculation if necessary**

© Siemens 2024

Angular geared motors for servo converters with 400 V 3 AC line connection

Selection and ordering data

NRKW120

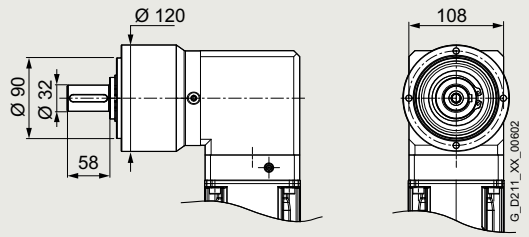

Permissible output shaft loads		
Average radial force for 20000 h	$F_{R,eq}$	2500 N
Average axial force for 20000 h	$F_{A,eq}$	4000 N
Average radial force for 30000 h	$F_{R,eq}$	2150 N
Average axial force for 30000 h	$F_{A,eq}$	3000 N
Maximum radial force	$F_{R,max}$	4000 N
Maximum axial force	$F_{A,max}$	5900 N

Servomotor data			Selection data servomotors with planetary gearbox																	Servomotors with planetary gearbox
$M_{0,M}$ Nm	$M_{max,M}$ Nm	J_M ($J_{M,Br}$) kg cm²																		
SIMOTICS S-1FT2 High Dynamic servomotors with 1 and 2-stage NRKW120 planetary gearboxes																				
0.249	1.56	0.093	n_{2N}	r/min	300	250	250	200	200	150	150	125	100	100	75	60	60	50	30	20	**1FT2103-2AH..-0..0-Z**
...	...	(0.112)	M_{2N}	Nm	0.38	0.68	0.88	1.44	1.54	2.25	1.88	2.4	3.2	3.3	4.9	6.3	7	8.5	14.7	22.5	■■■ + ■■■ + . . .
0.379	1.67		$M_{2.0}$	Nm	0.74	1.13	1.52	2.3	2.65	3.45	3.05	4.2	5.3	5.7	7.2	9.1	11.8	14.9	24	37.5	
			M_{2max}	Nm	4.65	6.3	8	11.4	13.1	16.5	14.7	19.7	24.5	26	33	41	53	66	106	152	
0.86	3.59	0.139	n_{2N}	r/min	375	375	300	250	250	200	200	150	125	125	100	75	60	50	30	20	**1FT2103-4AH..-0..0-Z**
...	...	(0.158)	M_{2N}	Nm	1.7	2.15	3	4.25	4.25	5.9	5.2	7.3	9.1	9.4	12.4	16.3	21.5	26	43.5	67	■■■ + ■■■ + . . .
0.978	3.68		$M_{2.0}$	Nm	2.55	3.55	4.55	6.5	7.5	9.5	8.4	11.4	14.3	15.3	19.2	24	31	38.5	62	95	
			M_{2max}	Nm	10.7	14.4	18.2	25.5	29	36.5	32.5	43.5	54	58	73	91	117	146	192	152	
0.888	3.3	0.35	n_{2N}	r/min	500	375	375	300	250	200	200	150	150	125	100	100	75	60	37.5	25	**1FT2104-4AF..-0..0-Z**
...	...	(0.43)	M_{2N}	Nm	1.89	2.85	3.4	4.95	6	7.8	6.8	9.4	10.1	12.2	16	16.2	24	30	48.5	75	■■■ + ■■■ + . . .
1.01	3.39		$M_{2.0}$	Nm	2.65	3.65	4.7	6.7	7.7	9.8	8.7	11.7	14.7	15.7	19.8	24.5	31.5	39.5	64	95	
			M_{2max}	Nm	9.9	13.3	16.7	23.5	27	33.5	30	40	50	53	67	84	107	134	192	152	
0.881	3.4	0.35	n_{2N}	r/min	500	375	375	300	250	200	200	150	150	125	100	100	75	60	37.5	25	**1FT2104-4AK..-0..0-Z**
...	...	(0.43)	M_{2N}	Nm	2.05	3	3.85	5.4	6.6	8.5	7.2	9.8	11	13.2	17	17.1	26.5	33.5	54	84	■■■ + ■■■ + . . .
0.998	3.49		$M_{2.0}$	Nm	2.6	3.65	4.65	6.7	7.7	9.7	8.6	11.6	14.6	15.6	19.6	24.5	31.5	39.5	63	95	
			M_{2max}	Nm	10.2	13.7	17.2	24	27.5	34.5	31	41	51	55	69	86	110	138	192	152	
1.97	6.93	0.56	n_{2N}	r/min	500	375	300	250	250	200	200	150	125	100	100	75	60	50	30	25	**1FT2104-5AF..-0..0-Z**
...	...	(0.65)	M_{2N}	Nm	4.6	7.1	9.4	12.8	12.6	16.7	15.7	21.5	26	30.5	34.5	47	61	74	120	95	■■■ + ■■■ + . . .
2.07	7.01		$M_{2.0}$	Nm	5.9	8	10.1	14.3	16.4	20.5	18.3	24.5	30.5	32.5	41	51	65	82	120	95	
			M_{2max}	Nm	20.5	27.5	34.5	48.5	55	70	62	83	104	111	138	173	220	275	192	152	
1.96	7.03	0.56	n_{2N}	r/min	500	375	300	250	250	200	200	150	125	100	100	75	60	50	30	25	**1FT2104-5AK..-0..0-Z**
...	...	(0.65)	M_{2N}	Nm	4.5	7	9.3	12.6	12.4	16.4	15.4	21	25.5	30	34	46.5	60	72	120	95	■■■ + ■■■ + . . .
2.05	7.1		$M_{2.0}$	Nm	5.8	7.9	10	14.2	16.2	20	18.2	24	30.5	32.5	40.5	51	65	81	120	95	
			M_{2max}	Nm	21	28	35	49.5	56	71	63	84	105	112	140	175	225	275	192	152	
2.71	9.3	0.76	n_{2N}	r/min	500	375	300	250	200	200	200	125	100	100	100	75	60	50	37.5	25	**1FT2104-6AF..-0..0-Z**
...	...	(0.84)	M_{2N}	Nm	5.7	8.8	12	15.6	20	20	19	31.5	39.5	40.5	41	56	73	88	105	95	■■■ + ■■■ + . . .
2.8	9.42		$M_{2.0}$	Nm	8.1	10.9	13.7	19.4	22	27.5	24.5	33	41.5	44	55	69	89	111	120	95	
			M_{2max}	Nm	28	37	46.5	65	75	94	83	111	139	149	186	230	295	275	192	152	

➥ Continued on the following page

Planetary gearbox data																	
Gearbox type:		NRKW120, 1-stage						NRKW120, 2-stage									
1st order code		B46						B47									
	i	3	4	5	7	8	10	9	12	15	16	20	25	32	40	64	100
2nd order code		R03	R04	R05	R07	R08	R10	R09	R12	R15	R16	R20	R25	R32	R40	R64	R00
	$M_{2N,G}$ Nm	80	105	130	135	120	95	157	195	172	195	195	172	195	172	120	95
	$M_{2max,G}$ Nm	128	168	208	216	192	152	251	312	275	312	312	275	312	275	192	152
	$M_{2Em.Off}$ Nm	360	474	500	340	380	430	500	520	500	520	520	500	520	500	380	430
	$J_{1.G}$ kg cm²	3.248	2.492	2.209	1.989	1.936	1.861	2.818	2.733	2.702	2.201	2.023	2.012	1.864	1.86	1.856	1.818
	$\varphi_{2,G}$ '	11						13									

Color legend:		
	$M_{max,M} \times i < M_{2N,G}$	The motor and gearbox combination is fatigue-proof
	$M_{2N,G} < M_{max,M} \times i < M_{2max,G}$	Check acceleration and inertias, perform service life calculation if necessary
	$M_{max,M} \times i > M_{2max,G}$	The motor can destroy the gearbox, check acceleration and inertias, perform service life calculation if necessary

© Siemens 2024

Angular geared motors for servo converters with 400 V 3 AC line connection

Servomotor data $M_{0,M}$ Nm	$M_{max,M}$ Nm	J_M ($J_{M,Br}$) kg cm²	Selection data servomotors with planetary gearbox																		Servomotors with planetary gearbox
SIMOTICS S-1FT2 High Dynamic servomotors with 1 and 2-stage NRKW120 planetary gearboxes (continued)																					
4.41 ... 4.49	14.1 ... 14.2	1.71 (2.55)	n_{2N}	r/min	500	375	300	250	200	150	200	150	100	100	75	75	60	50	37.5	25	1FT2105-4AF..-0..0-Z
			M_{2N}	Nm	9.5	14.4	19.4	24	31	40	28.5	39	59	61	79	83	107	126	120	95	■■■ + ■■■ + . . .
			$M_{2,0}$	Nm	13.2	17.7	22	31	35.5	44.5	40	53	66	71	89	111	142	172	120	95	
			M_{2max}	Nm	42.5	56	71	99	113	142	127	169	210	225	280	275	312	275	192	152	
4.44 ... 4.52	14.1 ... 14.2	1.71 (2.55)	n_{2N}	r/min	375	375	300	250	200	150	150	125	100	100	75	60	50	37.5	37.5	25	1FT2105-4AH..-0..0-Z
			M_{2N}	Nm	11.6	13.1	17.9	21.5	29	38.5	34.5	45	56	58	76	95	120	154	110	95	■■■ + ■■■ + . . .
			$M_{2,0}$	Nm	13.3	17.8	22	31.5	36	45	40	53	67	71	89	112	143	172	120	95	
			M_{2max}	Nm	42.5	56	71	99	113	142	127	169	210	225	280	275	312	275	192	152	
7.32 ... 7.39	22.6 ... 22.9	2.65 (3.5)	n_{2N}	r/min	375	300	250	200	200	150	150	125	100	100	75	60	50	50	37.5	25	1FT2105-6AF..-0..0-Z
			M_{2N}	Nm	18	24	30	40	40	55	51	62	78	77	107	133	163	144	120	95	■■■ + ■■■ + . . .
			$M_{2,0}$	Nm	21.5	29	36.5	51	59	73	65	87	109	117	146	172	195	172	120	95	
			M_{2max}	Nm	68	91	114	160	183	152	200	270	275	312	312	275	312	275	192	152	
7.64 ... 7.72	24.5 ... 24.8	4.6 (6.3)	n_{2N}	r/min	375	300	250	200	200	150	150	125	100	100	75	60	50	50	37.5	–	1FT2106-3AF..-0..0-Z
			M_{2N}	Nm	18.7	24.5	31	41.5	41.5	57	53	64	81	80	111	139	169	149	120	–	■■■ + ■■■ + . . .
			$M_{2,0}$	Nm	22.5	30.5	38	53	61	77	69	92	115	122	153	172	195	172	120	–	
			M_{2max}	Nm	74	99	124	173	192	152	220	295	275	312	312	275	312	275	192	–	
9.94 ... 10	31.1 ... 31.6	6 (7.6)	n_{2N}	r/min	375	300	250	200	150	150	150	100	100	75	60	60	50	50	37.5	–	1FT2106-4AF..-0..0-Z
			M_{2N}	Nm	23	30	37.5	49	64	67	62	94	92	125	158	157	189	152	116	–	■■■ + ■■■ + . . .
			$M_{2,0}$	Nm	29.5	39.5	50	70	80	95	89	119	149	159	195	172	195	172	120	–	
			M_{2max}	Nm	94	126	157	216	192	152	251	312	275	312	312	275	312	275	192	–	
14.1 ... 14.2	43 ... 43.7	8.7 (10.4)	n_{2N}	r/min	375	300	250	200	150	150	125	100	75	75	60	60	50	50	–	–	1FT2106-6AF..-0..0-Z
			M_{2N}	Nm	28.5	37	46	58	80	80	90	114	151	152	190	172	195	171	–	–	■■■ + ■■■ + . . .
			$M_{2,0}$	Nm	42.5	56	71	99	113	95	127	169	172	195	195	172	195	172	–	–	
			M_{2max}	Nm	128	168	208	216	192	152	251	312	275	312	312	275	312	275	–	–	
SIMOTICS S-1FT2 Compact servomotors with 1 and 2-stage NRKW120 planetary gearboxes																					
0.236 ... 0.366	1.46 ... 1.57	0.2 (0.22)	n_{2N}	r/min	300	250	250	200	150	150	150	125	100	100	75	60	50	37.5	25	15	1FT2203-2AK..-0..0-Z
			M_{2N}	Nm	0.34	0.63	0.87	1.39	1.89	2.15	1.87	2.3	3.1	3.1	4.8	6.2	8	10.8	16.8	27.5	■■■ + ■■■ + . . .
			$M_{2,0}$	Nm	0.7	1.08	1.46	2.2	2.55	3.3	2.9	4.05	5.1	5.5	7	8.8	11.4	14.4	23	36.5	
			M_{2max}	Nm	4.35	5.9	7.5	10.7	12.3	15.5	13.8	18.5	23	24.5	31	39	50	62	100	152	
0.843 ... 0.961	3.3 ... 3.39	0.35 (0.37)	n_{2N}	r/min	375	375	300	250	200	200	200	150	125	125	100	75	60	50	30	20	1FT2203-4AK..-0..0-Z
			M_{2N}	Nm	2	2.5	3.5	4.85	6	6.7	6	8.3	10.3	10.6	13.9	18.4	24	29.5	49	75	■■■ + ■■■ + . . .
			$M_{2,0}$	Nm	2.5	3.5	4.45	6.4	7.4	9.3	8.3	11.2	14.1	15	18.9	23.5	30.5	38	61	95	
			M_{2max}	Nm	9.9	13.3	16.7	23.5	27	33.5	30	40	50	53	67	84	107	134	192	152	
1.93 ... 2.03	6.55 ... 6.62	1.23 (1.31)	n_{2N}	r/min	500	375	300	250	200	200	200	150	125	100	100	75	60	50	30	25	1FT2204-5AF..-0..0-Z
			M_{2N}	Nm	4.35	6.8	9	12.2	14.9	15.6	14.9	20.5	24.5	29.5	32.5	44.5	58	69	116	95	■■■ + ■■■ + . . .
			$M_{2,0}$	Nm	5.7	7.8	9.9	14	16	20	17.9	24	30	32	40	50	64	80	120	95	
			M_{2max}	Nm	19.6	26	32.5	46	52	66	59	78	98	104	131	163	205	260	192	152	
1.94 ... 2.04	6.55 ... 6.62	1.23 (1.31)	n_{2N}	r/min	500	375	300	250	200	200	200	150	125	100	100	75	60	50	30	25	1FT2204-5AK..-0..0-Z
			M_{2N}	Nm	4.5	7	9.2	12.5	15.1	16	15.3	21	25.5	30	33	46	59	71	119	95	■■■ + ■■■ + . . .
			$M_{2,0}$	Nm	5.8	7.9	9.9	14.1	16.1	20	18.1	24	30	32	40.5	50	65	81	120	95	
			M_{2max}	Nm	19.6	26	32.5	46	52	66	59	78	98	104	131	163	205	260	192	152	

➥ Continued on the following page

Planetary gearbox data																	
Gearbox type:		NRKW120, 1-stage						NRKW120, 2-stage									
1st order code		B46						B47									
	i	3	4	5	7	8	10	9	12	15	16	20	25	32	40	64	100
2nd order code		R03	R04	R05	R07	R08	R10	R09	R12	R15	R16	R20	R25	R32	R40	R64	R00
	$M_{2N,G}$ Nm	80	105	130	135	120	95	157	195	172	195	195	172	195	172	120	95
	$M_{2max,G}$ Nm	128	168	208	216	192	152	251	312	275	312	312	275	312	275	192	152
	$M_{2Em.Off}$ Nm	360	474	500	340	380	430	500	520	500	520	520	500	520	500	380	430
	$J_{1,G}$ kg cm²	3.248	2.492	2.209	1.989	1.936	1.861	2.818	2.733	2.702	2.201	2.023	2.012	1.864	1.86	1.856	1.818
	$\varphi_{2,G}$ '	11						13									

Color legend:		
	$M_{max,M} \times i < M_{2N,G}$	The motor and gearbox combination is fatigue-proof
	$M_{2N,G} < M_{max,M} \times i < M_{2max,G}$	Check acceleration and inertias, perform service life calculation if necessary
	$M_{max,M} \times i > M_{2max,G}$	The motor can destroy the gearbox, check acceleration and inertias, perform service life calculation if necessary

© Siemens 2024

Angular geared motors for servo converters with 400 V 3 AC line connection

Servomotor data			Selection data servomotors with planetary gearbox																		Servomotors with planetary gearbox
$M_{0,M}$	$M_{max,M}$	J_M ($J_{M,Br}$)																			
Nm	Nm	kg cm²																			
SIMOTICS S-1FT2 Compact servomotors with 1 and 2-stage NRKW120 planetary gearboxes (continued)																					
2.69 ... 2.78	8.83 ... 8.94	1.61 (1.69)	n_{2N}	r/min	500	375	300	250	200	200	200	150	100	100	100	75	60	50	37.5	25	1FT2204-6AF..-0..0-Z
			M_{2N}	Nm	6.1	9.4	12.9	16.5	21	20.5	19.9	27	39	41.5	42.5	59	76	91	102	95	■■■ + ■■■ + . . .
			$M_{2,0}$	Nm	8	10.8	13.7	19.3	22	27.5	24.5	33	41	44	55	69	88	110	120	95	
			M_{2max}	Nm	26.5	35.5	44.5	62	71	89	79	106	132	141	176	220	280	275	192	152	
2.89 ... 2.98	10.1 ... 10.2	3.15 (4.05)	n_{2N}	r/min	375	375	300	250	200	150	200	125	100	100	75	75	60	50	30	20	1FT2205-2AC..-0..0-Z
			M_{2N}	Nm	6.7	7.8	10.9	13.3	17.8	23	16	27	34	35.5	46	48.5	63	74	119	94	■■■ + ■■■ + . . .
			$M_{2,0}$	Nm	8.6	11.6	14.6	20.5	23.5	29.5	26.5	35.5	44.5	47.5	59	74	95	119	120	95	
			M_{2max}	Nm	30	40.5	50	71	81	101	90	121	151	161	200	250	312	275	192	152	
2.92 ... 3.01	10.1 ... 10.2	3.15 (4.05)	n_{2N}	r/min	500	375	300	250	250	200	200	150	125	125	100	75	60	50	37.5	25	1FT2205-2AF..-0..0-Z
			M_{2N}	Nm	6.1	9	11.6	16	15.4	20.5	19.8	27	32.5	31.5	42	57	74	90	99	95	■■■ + ■■■ + . . .
			$M_{2,0}$	Nm	8.7	11.8	14.8	20.5	23.5	30	26.5	35.5	45	48	60	75	96	120	120	95	
			M_{2max}	Nm	30	40.5	50	71	81	101	90	121	151	161	200	250	312	275	192	152	
2.86 ... 2.95	10.1 ... 10.2	3.15 (4.05)	n_{2N}	r/min	500	375	300	250	200	150	200	150	125	100	100	75	60	50	30	25	1FT2205-2AH..-0..0-Z
			M_{2N}	Nm	5.3	8.4	11.2	14.5	18.3	23.5	17.5	24	28.5	36.5	36.5	52	67	79	119	95	■■■ + ■■■ + . . .
			$M_{2,0}$	Nm	8.5	11.5	14.5	20.5	23.5	29.5	26	35	44	47	58	73	94	117	119	94	
			M_{2max}	Nm	30	40.5	50	71	81	101	90	121	151	161	200	250	312	275	192	152	
5.08 ... 5.16	16.9 ... 17.1	5.1 (6)	n_{2N}	r/min	375	300	250	200	200	150	150	125	100	100	75	60	50	37.5	37.5	25	1FT2205-4AF..-0..0-Z
			M_{2N}	Nm	12.3	16.6	21	28	28.5	39.5	37	45	57	56	78	98	120	160	102	95	■■■ + ■■■ + . . .
			$M_{2,0}$	Nm	15.2	20	25.5	36	41	51	46	61	77	82	102	128	164	172	120	95	
			M_{2max}	Nm	51	68	85	119	136	152	152	200	250	270	312	275	312	275	192	152	
5.18 ... 5.26	16.9 ... 17.1	7.8 (9.4)	n_{2N}	r/min	375	300	250	200	150	125	150	100	100	75	75	50	37.5	37.5	30	20	1FT2206-2AC..-0..0-Z
			M_{2N}	Nm	11.7	15.6	19.7	25.5	35	43	34	52	51	69	70	107	143	146	120	95	■■■ + ■■■ + . . .
			$M_{2,0}$	Nm	15.5	20.5	26	36.5	41.5	52	46.5	62	78	83	104	130	166	172	120	95	
			M_{2max}	Nm	51	68	85	119	136	152	152	200	250	270	312	275	312	275	192	152	
5.25 ... 5.33	16.9 ... 17.1	7.8 (9.4)	n_{2N}	r/min	500	375	300	250	200	150	200	125	100	100	75	75	50	37.5	37.5	25	1FT2206-2AF..-0..0-Z
			M_{2N}	Nm	10	15.2	20.5	24.5	32.5	42.5	29	49.5	62	64	84	84	132	170	114	94	■■■ + ■■■ + . . .
			$M_{2,0}$	Nm	15.7	21	26	37	42.5	53	47.5	63	79	84	105	132	169	172	120	95	
			M_{2max}	Nm	51	68	85	119	136	152	152	200	250	270	312	275	312	275	192	152	
5.09 ... 5.17	16.9 ... 17.1	7.8 (9.4)	n_{2N}	r/min	375	300	250	200	200	150	150	125	100	100	75	60	50	37.5	30	25	1FT2206-2AH..-0..0-Z
			M_{2N}	Nm	12.5	16.7	21	28	28	39	37	44.5	56	55	78	97	119	159	119	91	■■■ + ■■■ + . . .
			$M_{2,0}$	Nm	15.2	20	25.5	36	41	51	46	61	77	82	102	128	164	172	119	95	
			M_{2max}	Nm	51	68	85	119	136	152	152	200	250	270	312	275	312	275	192	152	
7.78 ... 7.85	25.4 ... 25.8	11.5 (13.1)	n_{2N}	r/min	375	300	250	200	150	150	150	100	100	75	75	60	50	37.5	25	–	1FT2206-3AB..-0..0-Z
			M_{2N}	Nm	17.2	22.5	28.5	37.5	50	52	49	73	73	98	101	126	153	172	120	–	■■■ + ■■■ + . . .
			$M_{2,0}$	Nm	23	31	39	54	62	78	70	93	117	124	155	172	195	172	120	–	
			M_{2max}	Nm	77	103	128	180	192	152	230	305	275	312	312	275	312	275	192	–	
7.65 ... 7.72	25.4 ... 25.8	11.5 (13.1)	n_{2N}	r/min	375	300	250	200	150	125	150	100	75	75	60	50	37.5	37.5	30	–	1FT2206-3AF..-0..0-Z
			M_{2N}	Nm	16.5	21.5	27.5	35.5	48.5	59	47	71	93	95	120	145	193	172	120	–	■■■ + ■■■ + . . .
			$M_{2,0}$	Nm	22.5	30.5	38	53	61	77	69	92	115	122	153	172	195	172	120	–	
			M_{2max}	Nm	77	103	128	180	192	152	230	305	275	312	312	275	312	275	192	–	

➥ Continued on the following page

Planetary gearbox data																	
Gearbox type:			NRKW120, 1-stage						NRKW120, 2-stage								
1st order code			B46						B47								
	i		3	4	5	7	8	10	9	12	15	16	20	25	32	40	64	100
2nd order code			R03	R04	R05	R07	R08	R10	R09	R12	R15	R16	R20	R25	R32	R40	R64	R00
	$M_{2N,G}$	Nm	80	105	130	135	120	95	157	195	172	195	195	172	195	172	120	95
	$M_{2max,G}$	Nm	128	168	208	216	192	152	251	312	275	312	312	275	312	275	192	152
	$M_{2Em.Off}$	Nm	360	474	500	340	380	430	500	520	500	520	520	500	520	500	380	430
	$J_{1,G}$	kg cm²	3.248	2.492	2.209	1.989	1.936	1.861	2.818	2.733	2.702	2.201	2.023	2.012	1.864	1.86	1.856	1.818
	$\varphi_{2,G}$	'	11						13									

Color legend:		
	$M_{max,M} \times i < M_{2N,G}$	The motor and gearbox combination is fatigue-proof
	$M_{2N,G} < M_{max,M} \times i < M_{2max,G}$	Check acceleration and inertias, perform service life calculation if necessary
	$M_{max,M} \times i > M_{2max,G}$	The motor can destroy the gearbox, check acceleration and inertias, perform service life calculation if necessary

© Siemens 2024

Servomotor data			Selection data servomotors with planetary gearbox																	Servomotors with planetary gearbox
$M_{0,M}$	$M_{max,M}$	J_M ($J_{M,Br}$)																		
Nm	Nm	kg cm²																		
SIMOTICS S-1FT2 Compact servomotors with 1 and 2-stage NRKW120 planetary gearboxes (continued)																				
10.7 ... 10.8	35.9 ... 36.5	15.1 (16.8)	n_{2N}	r/min	300	250	200	150	125	100	100	75	75	60	50	50	37.5	37.5	25	–	**1FT2206-4AC..-0..0-Z**
			M_{2N}	Nm	21	26	34	46.5	56	72	68	91	92	115	141	134	185	153	120	–	■■■ + ■■■ + . . .
			$M_{2,0}$	Nm	32	43	53	75	86	95	96	128	160	171	195	172	195	172	120	–	
			M_{2max}	Nm	109	145	182	216	192	152	251	312	275	312	312	275	312	275	192	–	
10.4 ... 10.5	34 ... 34.5	15.1 (16.8)	n_{2N}	r/min	375	300	250	200	150	150	150	100	75	75	60	60	50	50	37.5	–	**1FT2206-4AF..-0..0-Z**
			M_{2N}	Nm	23	30.5	38	49.5	66	68	63	95	126	127	161	160	191	158	118	–	■■■ + ■■■ + . . .
			$M_{2,0}$	Nm	31	41.5	52	73	83	95	93	125	156	166	195	172	195	172	120	–	
			M_{2max}	Nm	103	138	172	216	192	152	251	312	275	312	312	275	312	275	192	–	
9.93 ... 10	34 ... 34.5	15.1 (16.8)	n_{2N}	r/min	375	250	250	150	150	125	125	100	75	75	60	50	50	37.5	30	–	**1FT2206-4AH..-0..0-Z**
			M_{2N}	Nm	19.1	30	31	53	55	67	64	80	107	107	136	163	152	172	120	–	■■■ + ■■■ + . . .
			$M_{2,0}$	Nm	29.5	39.5	49.5	70	80	95	89	119	149	159	195	172	195	172	120	–	
			M_{2max}	Nm	103	138	172	216	192	152	251	312	275	312	312	275	312	275	192	–	

Planetary gearbox data																	
Gearbox type:			**NRKW120, 1-stage**						**NRKW120, 2-stage**								
1st order code			**B46**						**B47**								
	i		**3**	**4**	**5**	**7**	**8**	**10**	**9**	**12**	**15**	**16**	**20**	**25**	**32**	**40**	**64**	**100**
2nd order code			**R03**	**R04**	**R05**	**R07**	**R08**	**R10**	**R09**	**R12**	**R15**	**R16**	**R20**	**R25**	**R32**	**R40**	**R64**	**R00**
	$M_{2N,G}$	Nm	80	105	130	135	120	95	157	195	172	195	195	172	195	172	120	95
	$M_{2max,G}$	Nm	128	168	208	216	192	152	251	312	275	312	312	275	312	275	192	152
	$M_{2Em.Off}$	Nm	360	474	500	340	380	430	500	520	500	520	520	500	520	500	380	430
	$J_{1,G}$	kg cm²	3.248	2.492	2.209	1.989	1.936	1.861	2.818	2.733	2.702	2.201	2.023	2.012	1.864	1.86	1.856	1.818
	$\varphi_{2,G}$	'	11						13									

Color legend:		
	$M_{max,M} \times i < M_{2N,G}$	**The motor and gearbox combination is fatigue-proof**
	$M_{2N,G} < M_{max,M} \times i < M_{2max,G}$	**Check acceleration and inertias, perform service life calculation if necessary**
	$M_{max,M} \times i > M_{2max,G}$	**The motor can destroy the gearbox, check acceleration and inertias, perform service life calculation if necessary**

© Siemens 2024

Angular geared motors for servo converters with 400 V 3 AC line connection

Selection and ordering data

NLCW060

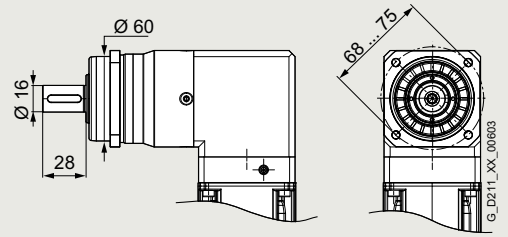

Permissible output shaft loads		
Average radial force for 20000 h	$F_{R,eq}$	3200 N
Average axial force for 20000 h	$F_{A,eq}$	4400 N
Average radial force for 30000 h	$F_{R,eq}$	3200 N
Average axial force for 30000 h	$F_{A,eq}$	3900 N
Maximum radial force	$F_{R,max}$	3200 N
Maximum axial force	$F_{A,max}$	4400 N

Servomotor data			Selection data servomotors with planetary gearbox																	Servomotors with planetary gearbox
$M_{0,M}$ Nm	$M_{max,M}$ Nm	J_M ($J_{M,Br}$) kg cm²																		
SIMOTICS S-1FT2 High Dynamic servomotors with 1 and 2-stage NLCW060 planetary gearboxes																				
0.309 ... 0.489	1.63 ... 1.81	0.093 (0.112)	n_{2N}	r/min	375	300	300	250	250	200	150	150	125	125	100	75	75	60	37.5	30	**1FT2103-2AH..-2..0-Z**
			M_{2N}	Nm	0.455	0.91	1.2	1.94	2.05	3	2.75	3.25	4.5	4.45	6.1	8.5	8.9	11.7	18	14.9	■■■ + ■■■ + . . .
			$M_{2,0}$	Nm	0.92	1.43	1.95	2.95	3.45	4.5	3.85	5.3	6.8	7.3	9.3	11.7	15.2	19.2	18	15	
			M_{2max}	Nm	4.85	6.6	8.5	12.1	13.9	17.6	15.8	21	26.5	28.5	35.5	44.5	57	64	29	24	
0.795 ... 0.962	3.66 ... 3.83	0.139 (0.158)	n_{2N}	r/min	300	300	250	250	200	200	150	125	125	100	100	75	60	50	50	30	**1FT2103-4AH..-2..0-Z**
			M_{2N}	Nm	1.77	2.3	3.25	4.05	5.4	5.9	5.7	7.7	8.5	10.6	11.4	15.9	20.5	25.5	17.3	15	■■■ + ■■■ + . . .
			$M_{2,0}$	Nm	2.35	3.35	4.35	6.3	7.3	9.3	8.1	11	13.9	14.9	18.7	23.5	30	38	18	15	
			M_{2max}	Nm	10.9	14.8	18.6	26	29	24	34	45.5	57	60	70	64	70	64	29	24	
0.952 ... 1.14	3.37 ... 3.54	0.368 (0.448)	n_{2N}	r/min	375	375	300	250	250	200	200	150	125	125	100	100	75	60	50	30	**1FT2104-4AF..-2..0-Z**
			M_{2N}	Nm	2.3	2.95	4.25	6.1	6.7	8.9	6.8	10.1	13.3	13.4	17.7	17.8	25.5	33	18	15	■■■ + ■■■ + . . .
			$M_{2,0}$	Nm	2.85	4	5.1	7.4	8.6	10.9	9.7	13.2	16.7	17.8	22	28	36	40	18	15	
			M_{2max}	Nm	10.1	13.6	17.2	24	27.5	24	31	42	52	56	70	64	70	64	29	24	
0.945 ... 1.14	3.46 ... 3.64	0.368 (0.448)	n_{2N}	r/min	375	375	300	250	250	200	200	150	125	125	100	75	75	60	50	37.5	**1FT2104-4AK..-2..0-Z**
			M_{2N}	Nm	2.5	3.1	4.6	6.6	7	9.6	7.1	10.6	13.9	14	18.5	25	26.5	34.5	18	15	■■■ + ■■■ + . . .
			$M_{2,0}$	Nm	2.8	3.95	5.1	7.4	8.5	10.8	9.7	13.1	16.6	17.7	22	28	36	40	18	15	
			M_{2max}	Nm	10.3	14	17.6	24.5	28.5	24	32	43	54	57	70	64	70	64	29	24	
2.03 ... 2.22	7 ... 7.15	0.578 (0.668)	n_{2N}	r/min	375	300	300	250	200	200	150	150	125	125	100	75	75	60	50	–	**1FT2104-5AF..-2..0-Z**
			M_{2N}	Nm	4.45	6.6	7.5	10.5	13.6	14.6	14.9	16.3	21	20.5	27.5	38	38	40	18	–	■■■ + ■■■ + . . .
			$M_{2,0}$	Nm	6.1	8.3	10.5	15	17.2	15	19.4	26	32.5	35	43.5	40	44	40	18	–	
			M_{2max}	Nm	20.5	28	35	40	29	24	63	70	70	70	70	64	70	64	29	–	
2.02 ... 2.2	7.09 ... 7.24	0.578 (0.668)	n_{2N}	r/min	375	300	300	250	200	200	150	150	125	125	100	75	75	60	50	–	**1FT2104-5AK..-2..0-Z**
			M_{2N}	Nm	4.35	6.5	7.4	10.3	13.4	14.5	14.6	16.1	21	20.5	27	37.5	37.5	40	18	–	■■■ + ■■■ + . . .
			$M_{2,0}$	Nm	6	8.2	10.4	14.9	17.1	15	19.3	25.5	32.5	34.5	43.5	40	44	40	18	–	
			M_{2max}	Nm	21	28.5	35.5	40	29	24	64	70	70	70	70	64	70	64	29	–	
2.77 ... 2.94	9.42 ... 9.55	0.778 (0.858)	n_{2N}	r/min	375	300	300	250	200	200	150	150	125	100	100	75	75	75	–	–	**1FT2104-6AF..-2..0-Z**
			M_{2N}	Nm	5.5	8.1	9.1	12.5	16.3	15	17.9	19.4	25	31	32.5	40	43.5	33.5	–	–	■■■ + ■■■ + . . .
			$M_{2,0}$	Nm	8.3	11.2	14.2	20	18	15	26	34.5	43.5	44	44	40	44	40	–	–	
			M_{2max}	Nm	22	30	38	40	29	24	70	70	70	70	70	64	70	64	–	–	

Planetary gearbox data																	
Gearbox type:			NLCW060, 1-stage						NLCW060, 2-stage								
1st order code			C26						C27								
	i		3	4	5	7	8	10	9	12	15	16	20	25	32	40	64	100
2nd order code			R03	R04	R05	R07	R08	R10	R09	R12	R15	R16	R20	R25	R32	R40	R64	R00
	$M_{2N,G}$	Nm	14	19	24	25	18	15	44	44	44	44	44	40	44	40	18	15
	$M_{2max,G}$	Nm	22	30	38	40	29	24	70	70	70	70	70	64	70	64	29	24
	$M_{2Em.Off}$	Nm	66	86	80	80	80	70	88	88	88	88	88	80	88	80	80	80
	$J_{1,G}$	kg cm²	0.406	0.275	0.253	0.234	0.23	0.225	0.355	0.35	0.234	0.242	0.233	0.231	0.223	0.222	0.222	0.22
	$\varphi_{2,G}$	'	16						18									

Color legend:

	$M_{max,M} \times i < M_{2N,G}$	The motor and gearbox combination is fatigue-proof
	$M_{2N,G} < M_{max,M} \times i < M_{2max,G}$	Check acceleration and inertias, perform service life calculation if necessary
	$M_{max,M} \times i > M_{2max,G}$	The motor can destroy the gearbox, check acceleration and inertias, perform service life calculation if necessary

© Siemens 2024

Angular geared motors for servo converters with 400 V 3 AC line connection

Servomotor data			Selection data servomotors with planetary gearbox																	Servomotors with planetary gearbox
$M_{0,M}$	$M_{max,M}$	J_M ($J_{M,Br}$)																		
Nm	Nm	kg cm²																		
SIMOTICS S-1FT2 Compact servomotors with 1 and 2-stage NLCW060 planetary gearboxes																				
0.301	1.53	0.2	n_{2N}	r/min	300	300	250	250	200	200	150	150	125	125	100	75	60	50	37.5	30	1FT2203-2AK..-2..0-Z
...	...	(0.22)	M_{2N}	Nm	0.55	0.83	1.27	1.67	2.25	2.55	2.6	3	4.05	4.05	5.4	7.6	10	12.3	17.1	15	■■■ + ■■■ + . . .
0.497	1.72		$M_{2,0}$	Nm	0.9	1.4	1.91	2.9	3.4	4.4	3.9	5.4	6.9	7.4	9.4	11.9	15.5	19.5	18	15	
			M_{2max}	Nm	4.55	6.3	8	11.4	13.2	16.6	14.9	20	25	27	33.5	42.5	54	64	29	24	
0.907	3.37	0.35	n_{2N}	r/min	300	300	250	200	200	150	150	125	100	100	75	75	60	50	37.5	30	1FT2203-4AK..-2..0-Z
...	...	(0.37)	M_{2N}	Nm	2.1	2.65	3.75	5.5	5.9	8.3	6.4	8.4	11.4	11.5	15.9	16.6	21.5	26.5	18	15	■■■ + ■■■ + . . .
1.1	3.54		$M_{2,0}$	Nm	2.7	3.8	4.9	7.1	8.2	10.4	9.3	12.6	16	17.1	21.5	27	34.5	40	18	15	
			M_{2max}	Nm	10.1	13.6	17.2	24	27.5	24	31	42	52	56	70	64	70	64	29	24	
1.99	6.61	1.248	n_{2N}	r/min	375	300	300	250	200	200	150	125	100	100	100	75	60	60	50	–	1FT2204-5AF..-2..0-Z
...	...	(1.328)	M_{2N}	Nm	4.25	6.4	7.1	9.8	12.9	13.6	14.3	18.5	24	24.5	25	35.5	44	40	18	–	■■■ + ■■■ + . . .
2.18	6.76		$M_{2,0}$	Nm	5.9	8.1	10.3	14.7	16.9	15	19.1	25.5	32	34	43	40	44	40	18	–	
			M_{2max}	Nm	19.8	26.5	33	40	29	24	60	70	70	70	70	64	70	64	29	–	
2.01	6.61	1.248	n_{2N}	r/min	375	300	300	250	200	200	150	125	125	100	100	75	60	60	50	–	1FT2204-5AK..-2..0-Z
...	...	(1.328)	M_{2N}	Nm	4.35	6.5	7.3	10	13.2	13.9	14.5	18.8	20	25	25.5	36	44	40	18	–	■■■ + ■■■ + . . .
2.19	6.76		$M_{2,0}$	Nm	6	8.2	10.4	14.8	17	15	19.2	25.5	32	34.5	43	40	44	40	18	–	
			M_{2max}	Nm	19.8	26.5	33	40	29	24	60	70	70	70	70	64	70	64	29	–	
2.76	8.93	1.628	n_{2N}	r/min	375	300	250	200	200	200	150	125	100	100	75	75	75	60	–	–	1FT2204-6AF..-2..0-Z
...	...	(1.708)	M_{2N}	Nm	5.7	8.5	11.2	15.8	16.7	15	18.5	23.5	31.5	31.5	43	40	40	40	–	–	■■■ + ■■■ + . . .
2.93	9.07		$M_{2,0}$	Nm	8.2	11.2	14.1	20	18	15	25.5	34.5	43.5	44	44	40	44	40	–	–	
			M_{2max}	Nm	22	30	38	40	29	24	70	70	70	70	70	64	70	64	–	–	

Planetary gearbox data																		
Gearbox type:			NLCW060, 1-stage						NLCW060, 2-stage									
1st order code			C26						C27									
	i		3	4	5	7	8	10	9	12	15	16	20	25	32	40	64	100
2nd order code			R03	R04	R05	R07	R08	R10	R09	R12	R15	R16	R20	R25	R32	R40	R64	R00
	$M_{2N,G}$	Nm	14	19	24	25	18	15	44	44	44	44	44	40	44	40	18	15
	$M_{2max,G}$	Nm	22	30	38	40	29	24	70	70	70	70	70	64	70	64	29	24
	$M_{2Em.Off}$	Nm	66	86	80	80	80	70	88	88	88	88	88	80	88	80	80	80
	$J_{1,G}$	kg cm²	0.406	0.275	0.253	0.234	0.23	0.225	0.355	0.35	0.234	0.242	0.233	0.231	0.223	0.222	0.222	0.22
	$\varphi_{2,G}$	'	16						18									

Color legend:		
	$M_{max,M} \times i < M_{2N,G}$	The motor and gearbox combination is fatigue-proof
	$M_{2N,G} < M_{max,M} \times i < M_{2max,G}$	Check acceleration and inertias, perform service life calculation if necessary
	$M_{max,M} \times i > M_{2max,G}$	The motor can destroy the gearbox, check acceleration and inertias, perform service life calculation if necessary

© Siemens 2024

Angular geared motors for servo converters with 400 V 3 AC line connection

Selection and ordering data

NLCW080

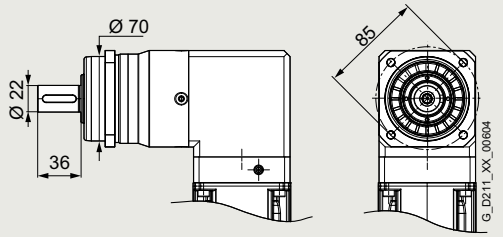

Permissible output shaft loads		
Average radial force for 20000 h	$F_{R,eq}$	5500 N
Average axial force for 20000 h	$F_{A,eq}$	6400 N
Average radial force for 30000 h	$F_{R,eq}$	4800 N
Average axial force for 30000 h	$F_{A,eq}$	5700 N
Maximum radial force	$F_{R,max}$	5500 N
Maximum axial force	$F_{A,max}$	6400 N

Servomotor data			Selection data servomotors with planetary gearbox																		Servomotors with planetary gearbox
$M_{0,M}$	$M_{max,M}$	J_M ($J_{M,Br}$)																			
Nm	Nm	kg cm²																			
SIMOTICS S-1FT2 High Dynamic servomotors with 1 and 2-stage NLCW080 planetary gearboxes																					
0.223	1.53	0.093	n_{2N}	r/min	–	200	200	200	200	150	150	125	100	100	75	75	60	50	30	20	1FT2103-2AH..-0..0-Z
...	...	(0.112)	M_{2N}	Nm	–	0.495	0.8	1.3	1.49	2.35	1.83	2.65	3.65	3.8	5.4	6.1	8.4	10.5	18.2	28.5	■■■ + ■■■ + . . .
0.447	1.75		$M_{2.0}$	Nm	–	0.89	1.35	2.25	2.7	3.6	3.15	4.55	5.9	6.3	8.2	10.4	13.7	17.3	28	38	
			M_{2max}	Nm	–	6.1	7.8	11.4	13.1	16.7	14.9	20	25	27	34	43	55	69	80	61	
0.695	3.49	0.139	n_{2N}	r/min	300	250	250	200	200	150	150	100	100	100	75	60	50	37.5	30	25	1FT2103-4AH..-0..0-Z
...	...	(0.158)	M_{2N}	Nm	1.27	2.1	2.55	4.15	4.3	6.6	5.1	8.4	9.2	9.2	13.5	17.6	22.5	30	40	37	■■■ + ■■■ + . . .
0.975	3.76		$M_{2.0}$	Nm	2.05	3.05	4.05	6.1	7.1	9.1	7.9	10.9	13.8	14.8	18.7	23.5	30.5	38	50	38	
			M_{2max}	Nm	10.4	14.2	18	25.5	29	36.5	33	44.5	55	59	74	93	120	150	80	61	
0.782	3.2	0.35	n_{2N}	r/min	375	300	300	250	200	200	150	150	125	100	100	75	60	50	37.5	25	1FT2104-4AF..-2..0-Z
...	...	(0.43)	M_{2N}	Nm	1.62	2.7	3.25	4.9	6.4	7.1	7.4	8.4	10.8	13.6	14.8	21	27.5	34.5	44.5	37.5	■■■ + ■■■ + . . .
1.08	3.48		$M_{2.0}$	Nm	2.3	3.4	4.5	6.7	7.8	9.9	8.9	12.1	15.4	16.5	20.5	26	34	42.5	50	38	
			M_{2max}	Nm	9.5	13	16.5	23.5	27	34	30.5	41	51	54	68	86	110	138	80	61	
0.776	3.3	0.35	n_{2N}	r/min	375	300	250	250	200	200	150	125	100	100	100	75	60	50	37.5	30	1FT2104-4AK..-2..0-Z
...	...	(0.43)	M_{2N}	Nm	1.77	3.05	4.15	5.1	7.1	7.5	8.2	11	14.2	14.9	15.6	22.5	30	37	46.5	32.5	■■■ + ■■■ + . . .
1.07	3.57		$M_{2.0}$	Nm	2.3	3.4	4.45	6.6	7.7	9.9	8.8	12	15.3	16.4	20.5	26	33.5	42	50	38	
			M_{2max}	Nm	9.8	13.4	17	24	27.5	35	31	42	52	56	70	88	113	142	80	61	
1.87	6.83	0.56	n_{2N}	r/min	300	250	250	200	200	150	150	125	100	100	75	60	50	50	37.5	30	1FT2104-5AF..-2..0-Z
...	...	(0.65)	M_{2N}	Nm	4.9	7	8.1	12	12.5	18	14.8	19.1	25	25	35	45	57	57	50	35.5	■■■ + ■■■ + . . .
2.16	7.08		$M_{2.0}$	Nm	5.5	7.7	9.9	14.2	16.4	20.5	18.6	25	31.5	33.5	42	53	68	85	50	38	
			M_{2max}	Nm	20	27.5	34.5	48.5	56	61	63	84	105	112	141	176	192	176	80	61	
1.85	6.93	0.56	n_{2N}	r/min	300	250	250	200	200	150	150	125	100	100	75	60	60	50	37.5	30	1FT2104-5AK..-2..0-Z
...	...	(0.65)	M_{2N}	Nm	4.8	6.9	7.9	11.7	12.3	17.7	14.5	18.7	24.5	24.5	34.5	44.5	47	56	50	35.5	■■■ + ■■■ + . . .
2.14	7.17		$M_{2.0}$	Nm	5.5	7.7	9.8	14.1	16.3	20.5	18.4	24.5	31	33.5	42	52	67	85	50	38	
			M_{2max}	Nm	20.5	27.5	35	49.5	56	61	64	85	107	114	143	176	192	176	80	61	
2.6	9.25	0.76	n_{2N}	r/min	300	250	250	200	200	150	150	125	100	100	75	60	50	37.5	37.5	30	1FT2104-6AF..-2..0-Z
...	...	(0.84)	M_{2N}	Nm	6.2	8.8	10	14.6	15.2	21.5	18	23	30	30.5	42.5	54	68	91	50	37.5	■■■ + ■■■ + . . .
2.88	9.48		$M_{2.0}$	Nm	7.8	10.7	13.6	19.4	22	28	25	33.5	42.5	45	57	71	91	110	50	38	
			M_{2max}	Nm	27.5	37	46.5	65	75	61	84	113	141	151	189	176	192	176	80	61	

➥ Continued on the following page

Planetary gearbox data																	
Gearbox type:		NLCW080, 1-stage						NLCW080, 2-stage									
1st order code		C36						C37									
	i	3	4	5	7	8	10	9	12	15	16	20	25	32	40	64	100
2nd order code		R03	R04	R05	R07	R08	R10	R09	R12	R15	R16	R20	R25	R32	R40	R64	R00
	$M_{2N,G}$	Nm	40	53	67	65	50	38	130	120	110	120	120	110	120	110	50	38
	$M_{2max,G}$	Nm	64	85	107	104	80	61	208	192	176	192	192	176	192	176	80	61
	$M_{2Em.Off}$	Nm	180	240	220	178	190	170	260	240	220	240	240	220	240	220	190	200
	$J_{1,G}$	kg cm²	1.394	1.089	1.016	0.951	0.937	0.921	1.246	1.218	1.21	1.001	0.959	0.956	0.918	0.917	0.917	0.906
	$\varphi_{2,G}$	'	13						15									

Color legend:		
	$M_{max,M} \times i < M_{2N,G}$	The motor and gearbox combination is fatigue-proof
	$M_{2N,G} < M_{max,M} \times i < M_{2max,G}$	Check acceleration and inertias, perform service life calculation if necessary
	$M_{max,M} \times i > M_{2max,G}$	The motor can destroy the gearbox, check acceleration and inertias, perform service life calculation if necessary

© Siemens 2024

Angular geared motors for servo converters with 400 V 3 AC line connection

Servomotor data			Selection data servomotors with planetary gearbox																	Servomotors with planetary gearbox
$M_{0,M}$	$M_{max,M}$	J_M ($J_{M,Br}$)																		
Nm	Nm	kg cm²																		
SIMOTICS S-1FT2 High Dynamic servomotors with 1 and 2-stage NLCW080 planetary gearboxes (continued)																				
4.3	14.1	1.71 (2.55)	n_{2N}	r/min	300	250	250	200	150	150	150	100	100	75	75	60	50	50	37.5	–	1FT2105-4AF..-0..0-Z
...	...		M_{2N}	Nm	10.9	15	16.4	23	31.5	34	28.5	44.5	46	61	65	83	104	94	50	–	■■■ + ■■■ + . . .
4.57	14.3		$M_{2,0}$	Nm	12.9	17.5	22	31	35.5	38	40	54	67	72	90	110	120	110	50	–	
			M_{2max}	Nm	42	56	70	99	80	61	128	171	176	192	192	176	192	176	80	–	
4.33	14.1	1.71 (2.55)	n_{2N}	r/min	300	250	200	200	150	125	125	100	75	75	60	50	50	37.5	37.5	–	1FT2105-4AH..-0..0-Z
...	...		M_{2N}	Nm	10.2	14	18.9	20.5	29.5	37	31.5	41.5	56	57	73	90	92	110	50	–	■■■ + ■■■ + . . .
4.6	14.3		$M_{2,0}$	Nm	12.9	17.6	22	31	36	38	40.5	54	68	73	91	110	120	110	50	–	
			M_{2max}	Nm	42	56	70	99	80	61	128	171	176	192	192	176	192	176	80	–	
7.09	22.8	2.65 (3.5)	n_{2N}	r/min	300	250	200	150	150	150	125	100	75	75	60	60	50	50	–	–	1FT2105-6AF..-0..0-Z
...	...		M_{2N}	Nm	14.7	19.9	26.5	39	41	38	44	57	77	78	101	100	120	101	–	–	■■■ + ■■■ + . . .
7.28	23		$M_{2,0}$	Nm	21	28.5	35.5	50	50	38	64	86	108	115	120	110	120	110	–	–	
			M_{2max}	Nm	64	85	107	104	80	61	205	192	176	192	192	176	192	176	–	–	
SIMOTICS S-1FT2 Compact servomotors with 1 and 2-stage NLCW080 planetary gearboxes																				
0.209	1.44	0.2 (0.22)	n_{2N}	r/min	–	200	150	150	150	125	125	100	100	75	75	60	50	37.5	25	20	1FT2203-2AK..-0..0-Z
...	...		M_{2N}	Nm	–	0.52	1.04	1.61	1.83	2.55	2	3	3.25	4.45	5	6.7	8.7	12	19.1	24	■■■ + ■■■ + . . .
0.434	1.65		$M_{2,0}$	Nm	–	0.83	1.28	2.15	2.6	3.5	3.05	4.35	5.7	6.1	7.9	10.1	13.2	16.8	27	38	
			M_{2max}	Nm	–	5.7	7.4	10.7	12.4	15.7	14	19	24	25.5	32	40.5	52	65	80	61	
0.738	3.2	0.35 (0.37)	n_{2N}	r/min	300	250	250	200	200	150	150	100	100	100	75	60	50	37.5	30	25	1FT2203-4AK..-0..0-Z
...	...		M_{2N}	Nm	1.65	2.55	3.05	4.8	4.85	7.5	5.9	9.5	10.5	10.3	15.4	19.8	25	33	43	30.5	■■■ + ■■■ + . . .
1.04	3.48		$M_{2,0}$	Nm	2.2	3.25	4.3	6.4	7.4	9.5	8.5	11.6	14.7	15.8	20	25	32.5	40.5	50	38	
			M_{2max}	Nm	9.5	13	16.5	23.5	27	34	30.5	41	51	54	68	86	110	138	80	61	
1.83	6.44	1.23 (1.31)	n_{2N}	r/min	300	250	250	200	200	150	150	125	100	100	75	60	50	37.5	37.5	25	1FT2204-5AF..-2..0-Z
...	...		M_{2N}	Nm	4.75	6.8	7.8	11.4	11.8	17.3	14.1	18.1	23.5	23.5	33.5	43	54	73	50	38	■■■ + ■■■ + . . .
2.11	6.69		$M_{2,0}$	Nm	5.4	7.6	9.7	14	16.1	20	18.2	24.5	30.5	33	41.5	52	67	84	50	38	
			M_{2max}	Nm	19.3	26	32.5	46	52	61	59	79	99	106	133	166	192	176	80	61	
1.84	6.44	1.23 (1.31)	n_{2N}	r/min	300	250	250	200	200	150	150	125	100	100	75	60	50	37.5	37.5	25	1FT2204-5AK..-2..0-Z
...	...		M_{2N}	Nm	4.9	7	8	11.7	12.1	17.6	14.5	18.5	24	24	34.5	44	55	74	50	38	■■■ + ■■■ + . . .
2.13	6.69		$M_{2,0}$	Nm	5.5	7.6	9.7	14	16.2	20	18.3	24.5	31	33	41.5	52	67	84	50	38	
			M_{2max}	Nm	19.3	26	32.5	46	52	61	59	79	99	106	133	166	192	176	80	61	
2.59	8.77	1.61 (1.69)	n_{2N}	r/min	300	250	250	200	150	150	150	125	100	100	75	60	50	37.5	37.5	25	1FT2204-6AF..-2..0-Z
...	...		M_{2N}	Nm	6.7	9.4	10.6	15.3	20.5	22.5	18.9	23.5	31	31	44.5	56	71	95	50	38	■■■ + ■■■ + . . .
2.87	9		$M_{2,0}$	Nm	7.7	10.6	13.5	19.3	22	27.5	25	33.5	42	45	56	71	91	110	50	38	
			M_{2max}	Nm	26	35	44	62	71	61	80	107	134	143	179	176	192	176	80	61	
2.6	10	3.15 (4.05)	n_{2N}	r/min	300	250	200	150	150	150	125	100	75	75	60	50	50	37.5	30	20	1FT2205-2AC..-0..0-Z
...	...		M_{2N}	Nm	5.8	8.2	11	16	18	19	19.2	25.5	34.5	35.5	45.5	56	58	80	50	38	■■■ + ■■■ + . . .
2.85	10.3		$M_{2,0}$	Nm	7.8	10.7	13.6	19.4	22	28	24.5	33	42	44.5	56	70	90	110	50	38	
			M_{2max}	Nm	30	40	50	71	80	61	91	122	153	163	192	176	192	176	80	61	
2.64	10	3.15 (4.05)	n_{2N}	r/min	300	300	250	200	200	150	150	125	100	100	75	60	50	37.5	37.5	25	1FT2205-2AF..-0..0-Z
...	...		M_{2N}	Nm	6.5	7.9	10.9	15.6	15.9	23	19.3	24	31.5	31.5	45	57	72	95	50	37.5	■■■ + ■■■ + . . .
2.89	10.3		$M_{2,0}$	Nm	7.9	10.8	13.8	19.7	22.5	28.5	25	33.5	42.5	45.5	57	71	92	110	50	38	
			M_{2max}	Nm	30	40	50	71	80	61	91	122	153	163	192	176	192	176	80	61	

➥ Continued on the following page

Planetary gearbox data																	
Gearbox type:			NLCW080, 1-stage						NLCW080, 2-stage								
1st order code			C36						C37								
	i		3	4	5	7	8	10	9	12	15	16	20	25	32	40	64	100
2nd order code			R03	R04	R05	R07	R08	R10	R09	R12	R15	R16	R20	R25	R32	R40	R64	R00
	$M_{2N,G}$	Nm	40	53	67	65	50	38	130	120	110	120	120	110	120	110	50	38
	$M_{2max,G}$	Nm	64	85	107	104	80	61	208	192	176	192	192	176	192	176	80	61
	$M_{2Em.Off}$	Nm	180	240	220	178	190	170	260	240	220	240	240	220	240	220	190	200
	$J_{1,G}$	kg cm²	1.394	1.089	1.016	0.951	0.937	0.921	1.246	1.218	1.21	1.001	0.959	0.956	0.918	0.917	0.917	0.906
	$\varphi_{2,G}$	'	13						15									

Color legend:		
	$M_{max,M} \times i < M_{2N,G}$	The motor and gearbox combination is fatigue-proof
	$M_{2N,G} < M_{max,M} \times i < M_{2max,G}$	Check acceleration and inertias, perform service life calculation if necessary
	$M_{max,M} \times i > M_{2max,G}$	The motor can destroy the gearbox, check acceleration and inertias, perform service life calculation if necessary

© Siemens 2024

Angular geared motors for servo converters with 400 V 3 AC line connection

Servomotor data

$M_{0,M}$ Nm	$M_{max,M}$ Nm	J_M ($J_{M,Br}$) kg cm²
2.61 ... 2.86	10 ... 10.3	3.15 (4.05)
4.73 ... 4.94	17 ... 17.2	5.1 (6)

Selection data servomotors with planetary gearbox

Servomotors with planetary gearbox

SIMOTICS S-1FT2 Compact servomotors with 1 and 2-stage NLCW080 planetary gearboxes (continued)

n_{2N}	r/min	300	250	250	200	150	150	125	100	100	75	75	60	50	37.5	37.5	25	**1FT2205-2AH..-0..0-Z**		
M_{2N}	Nm	6.2	8.7	9.6	13.9	18.6	20.5	20.5	27	28	37.5	40	51	64	87	44	37.5	■■■ + ■■■ + . . .		
$M_{2,0}$	Nm	7.8	10.7	13.6	19.4	22	28	24.5	33.5	42	45	56	70	90	110	50	37.5			
M_{2max}	Nm	30	40	50	71	80	61	91	122	153	163	192	176	192	176	80	61			
n_{2N}	r/min	300	250	200	150	150	125	125	100	75	75	60	50	50	37.5	37.5	–	**1FT2205-4AF..-0..0-Z**		
M_{2N}	Nm	9.9	13.6	18.5	27	29	36.5	30.5	40.5	55	56	72	88	90	110	47	–	■■■ + ■■■ + . . .		
$M_{2,0}$	Nm	14.1	19.2	24	34	39	38	43.5	58	73	78	98	110	120	110	50	–			
M_{2max}	Nm	50	68	85	104	80	61	154	192	176	192	192	176	192	176	80	–			

Planetary gearbox data

Gearbox type:		**NLCW080, 1-stage**						**NLCW080, 2-stage**									
1st order code		**C36**						**C37**									
i		**3**	**4**	**5**	**7**	**8**	**10**	**9**	**12**	**15**	**16**	**20**	**25**	**32**	**40**	**64**	**100**
2nd order code		**R03**	**R04**	**R05**	**R07**	**R08**	**R10**	**R09**	**R12**	**R15**	**R16**	**R20**	**R25**	**R32**	**R40**	**R64**	**R00**
$M_{2N,G}$	Nm	40	53	67	65	50	38	130	120	110	120	120	110	120	110	50	38
$M_{2max,G}$	Nm	64	85	107	104	80	61	208	192	176	192	192	176	192	176	80	61
$M_{2Em.Off}$	Nm	180	240	220	178	190	170	260	240	220	240	240	220	240	220	190	200
$J_{1,G}$	kg cm²	1.394	1.089	1.016	0.951	0.937	0.921	1.246	1.218	1.21	1.001	0.959	0.956	0.918	0.917	0.917	0.906
$\varphi_{2,G}$	'	13						15									

Color legend:

	$M_{max,M} \times i < M_{2N,G}$	**The motor and gearbox combination is fatigue-proof**
	$M_{2N,G} < M_{max,M} \times i < M_{2max,G}$	**Check acceleration and inertias, perform service life calculation if necessary**
	$M_{max,M} \times i > M_{2max,G}$	**The motor can destroy the gearbox, check acceleration and inertias, perform service life calculation if necessary**

© Siemens 2024

Selection and ordering data

NLCW120

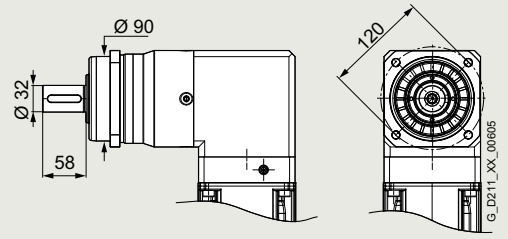

Permissible output shaft loads		
Average radial force for 20000 h	$F_{R,eq}$	6000 N
Average axial force for 20000 h	$F_{A,eq}$	8000 N
Average radial force for 30000 h	$F_{R,eq}$	5400 N
Average axial force for 30000 h	$F_{A,eq}$	7000 N
Maximum radial force	$F_{R,max}$	6000 N
Maximum axial force	$F_{A,max}$	8000 N

Servomotor data			Selection data servomotors with planetary gearbox																		Servomotors with planetary gearbox
$M_{0,M}$	$M_{max,M}$	J_M ($J_{M,Br}$)																			
Nm	Nm	kg cm²																			
SIMOTICS S-1FT2 High Dynamic servomotors with 1 and 2-stage NLCW120 planetary gearboxes																					
0.132	1.44	0.093	n_{2N}	r/min	–	–	150	150	150	150	100	100	75	75	75	60	50	37.5	30	20	1FT2103-2AH..-0..0-Z
...	...	(0.112)	M_{2N}	Nm	–	–	0.255	0.85	1.12	1.54	1.35	1.77	2.85	3	3.6	4.95	7	9.8	13.2	21	■■■ + ■■■ + . . .
0.375	1.68		$M_{2,0}$	Nm	–	–	0.65	1.43	1.82	2.6	2.2	3.35	4.5	4.9	6.4	8.4	11.1	14.2	23.5	37	
			M_{2max}	Nm	–	–	7.1	10.5	12.2	15.6	13.9	19	24	25.5	32.5	40.5	52	66	106	152	
0.569	3.3	0.139	n_{2N}	r/min	300	300	300	250	250	200	150	125	100	100	75	75	60	50	30	20	1FT2103-4AH..-0..0-Z
...	...	(0.158)	M_{2N}	Nm	0.98	1.56	2.1	3.45	3.75	5.4	4.9	6.6	8.8	9.3	13	14.6	20	25	42	66	■■■ + ■■■ + . . .
0.981	3.69		$M_{2,0}$	Nm	1.7	2.7	3.7	5.6	6.6	8.6	7.6	10.6	13.6	14.6	18.6	23.5	30.5	38.5	62	95	
			M_{2max}	Nm	9.9	13.6	17.3	24.5	28	35.5	32	43	54	58	73	91	117	147	192	152	
0.597	3.01	0.35	n_{2N}	r/min	375	375	300	300	250	200	150	150	125	125	100	75	75	60	37.5	25	1FT2104-4AF..-0..0-Z
...	...	(0.43)	M_{2N}	Nm	1.27	1.87	2.95	4.05	5.2	7.1	6.5	7.7	9.9	10.1	14.2	19.2	21	27.5	47	73	■■■ + ■■■ + . . .
1.01	3.41		$M_{2,0}$	Nm	1.79	2.8	3.8	5.8	6.9	8.9	7.9	11	14	15	19.1	24	31	39.5	64	95	
			M_{2max}	Nm	9	12.4	15.8	22.5	26	33	29.5	39.5	50	53	67	84	108	135	192	152	
0.59	3.11	0.35	n_{2N}	r/min	375	375	375	300	250	200	200	150	125	125	100	75	75	60	37.5	25	1FT2104-4AK..-0..0-Z
...	...	(0.43)	M_{2N}	Nm	1.31	2.1	2.5	4.6	5.8	7.6	5.2	8.7	11.1	10.9	16	20.5	22	29.5	51	77	■■■ + ■■■ + . . .
1	3.5		$M_{2,0}$	Nm	1.77	2.75	3.8	5.8	6.8	8.8	7.8	10.9	13.9	14.9	19	24	31	39	63	95	
			M_{2max}	Nm	9.3	12.8	16.3	23	26.5	33.5	30	41	51	55	69	86	111	139	192	152	
1.68	6.64	0.56	n_{2N}	r/min	375	375	300	250	250	200	150	125	100	100	100	75	60	50	30	25	1FT2104-5AF..-0..0-Z
...	...	(0.65)	M_{2N}	Nm	4.55	5.6	8.5	12.4	12.5	17.7	16.4	21.5	28	29	28.5	42	57	69	120	95	■■■ + ■■■ + . . .
2.08	7.01		$M_{2,0}$	Nm	5	7.1	9.2	13.4	15.5	19.7	17.6	23.5	30	32	40.5	51	65	82	120	95	
			M_{2max}	Nm	19.9	26.5	33.5	48	55	69	62	83	104	111	139	174	220	275	192	152	
1.67	6.74	0.56	n_{2N}	r/min	375	375	300	250	250	200	150	125	100	100	75	75	60	50	30	25	1FT2104-5AK..-0..0-Z
...	...	(0.65)	M_{2N}	Nm	4.5	5.4	8.4	12.2	12.3	17.3	16.2	21	27.5	28.5	37.5	41	56	68	118	95	■■■ + ■■■ + . . .
2.07	7.1		$M_{2,0}$	Nm	4.95	7	9.1	13.3	15.4	19.6	17.5	23.5	29.5	32	40	50	65	82	120	95	
			M_{2max}	Nm	20	27	34	48.5	55	70	63	84	105	112	141	176	225	280	192	152	
2.42	9.06	0.76	n_{2N}	r/min	375	300	300	250	200	200	150	125	100	100	75	60	60	50	37.5	25	1FT2104-6AF..-0..0-Z
...	...	(0.84)	M_{2N}	Nm	6.5	9.5	11	15.5	20	21.5	21	26.5	35	35.5	51	64	69	83	98	95	■■■ + ■■■ + . . .
2.81	9.41		$M_{2,0}$	Nm	7.2	10	12.9	18.5	21	27	24	32.5	41	44	55	69	89	111	120	95	
			M_{2max}	Nm	27	36.5	46	64	74	93	83	112	140	149	187	230	300	368	192	152	

➥ Continued on the following page

Planetary gearbox data																	
Gearbox type:		NLCW120, 1-stage						NLCW120, 2-stage									
1st order code		C46						C47									
	i	3	4	5	7	8	10	9	12	15	16	20	25	32	40	64	100
2nd order code		R03	R04	R05	R07	R08	R10	R09	R12	R15	R16	R20	R25	R32	R40	R64	R00
	$M_{2N,G}$	Nm	80	105	130	135	120	95	210	260	230	260	260	230	260	230	120	95
	$M_{2max,G}$	Nm	128	168	208	216	192	152	336	416	368	416	416	368	416	368	192	152
	$M_{2Em.Off}$	Nm	360	474	500	340	380	430	500	520	500	520	520	500	520	500	380	430
	$J_{1,G}$	kg cm²	2.97	2.346	2.118	1.928	1.876	1.832	2.787	2.716	2.692	2.192	2.017	2.009	1.862	1.859	1.855	1.818
	$\varphi_{2,G}$	'	11						13									

Color legend:		
	$M_{max,M} \times i < M_{2N,G}$	The motor and gearbox combination is fatigue-proof
	$M_{2N,G} < M_{max,M} \times i < M_{2max,G}$	Check acceleration and inertias, perform service life calculation if necessary
	$M_{max,M} \times i > M_{2max,G}$	The motor can destroy the gearbox, check acceleration and inertias, perform service life calculation if necessary

© Siemens 2024

Angular geared motors for servo converters with 400 V 3 AC line connection

Servomotor data			Selection data servomotors with planetary gearbox																		Servomotors with planetary gearbox
$M_{0,M}$	$M_{max,M}$	J_M ($J_{M,Br}$)																			
Nm	Nm	kg cm²																			
SIMOTICS S-1FT2 High Dynamic servomotors with 1 and 2-stage NLCW120 planetary gearboxes (continued)																					
4.11 ... 4.5	13.9 ... 14.2	1.71 (2.55)	n_{2N}	r/min	375	300	300	250	200	200	150	125	100	100	75	60	50	50	37.5	25	1FT2105-4AF..-0..0-Z
			M_{2N}	Nm	11	15.2	18.4	24.5	31	32.5	34.5	43	56	56	78	99	126	123	120	95	■■■ + ■■■ + . . .
			$M_{2,0}$	Nm	12.3	16.8	21	30	34.5	44	39.5	53	66	71	89	111	143	179	120	95	
			M_{2max}	Nm	41.5	55	70	98	112	141	127	169	210	225	280	350	416	368	192	152	
4.15 ... 4.53	13.9 ... 14.2	1.71 (2.55)	n_{2N}	r/min	375	300	300	250	200	200	150	125	100	100	75	60	50	37.5	37.5	25	1FT2105-4AH..-0..0-Z
			M_{2N}	Nm	10.5	14.6	16.9	22	29.5	29	32	39.5	51	51	75	94	120	154	97	95	■■■ + ■■■ + . . .
			$M_{2,0}$	Nm	12.4	17	21.5	30.5	35	44	39.5	53	67	71	89	112	144	180	120	95	
			M_{2max}	Nm	41.5	55	70	98	112	141	127	169	210	225	280	350	416	368	192	152	
7.03 ... 7.39	22.6 ... 22.9	2.65 (3.5)	n_{2N}	r/min	375	300	250	200	200	150	125	100	100	75	75	60	50	37.5	37.5	25	1FT2105-6AF..-0..0-Z
			M_{2N}	Nm	16	22.5	30	42	42.5	61	54	71	71	98	103	131	164	220	119	95	■■■ + ■■■ + . . .
			$M_{2,0}$	Nm	21	28.5	35.5	50	58	73	65	87	110	117	147	184	235	230	120	95	
			M_{2max}	Nm	67	90	113	159	182	152	205	270	340	365	416	368	416	368	192	152	
7.48 ... 7.75	24.6 ... 24.8	4.6 (6.3)	n_{2N}	r/min	375	300	250	200	200	150	150	100	100	75	75	60	50	37.5	37.5	–	1FT2106-3AF..-0..0-Z
			M_{2N}	Nm	16.8	23.5	30.5	43	44	62	47	74	74	101	107	136	171	230	120	–	■■■ + ■■■ + . . .
			$M_{2,0}$	Nm	22	30	38	53	61	77	68	91	114	122	153	192	245	230	120	–	
			M_{2max}	Nm	73	98	123	172	192	152	220	295	368	395	416	368	416	368	192	–	
9.85 ... 10.1	31.3 ... 31.5	6 (7.6)	n_{2N}	r/min	375	300	250	200	200	150	125	100	75	75	60	50	50	37.5	37.5	–	1FT2106-4AF..-0..0-Z
			M_{2N}	Nm	20.5	29	37.5	52	51	74	69	89	120	123	158	193	194	230	105	–	■■■ + ■■■ + . . .
			$M_{2,0}$	Nm	29.5	39.5	49.5	70	80	95	89	119	149	159	199	230	260	230	120	–	
			M_{2max}	Nm	93	125	157	216	192	152	280	375	368	416	416	368	416	368	192	–	
14.1 ... 14.4	43.4 ... 43.6	8.7 (10.4)	n_{2N}	r/min	300	250	250	200	150	150	125	100	75	75	60	50	50	50	–	–	1FT2106-6AF..-0..0-Z
			M_{2N}	Nm	33.5	44.5	46.5	63	88	90	85	109	148	151	195	225	225	177	–	–	■■■ + ■■■ + . . .
			$M_{2,0}$	Nm	42	56	71	100	114	95	127	169	210	225	260	230	260	230	–	–	
			M_{2max}	Nm	128	168	208	216	192	152	336	416	368	416	416	368	416	368	–	–	
SIMOTICS S-1FT2 Compact servomotors with 1 and 2-stage NLCW120 planetary gearboxes																					
0.192 ... 0.362	1.42 ... 1.58	0.2 (0.22)	n_{2N}	r/min	–	–	–	150	150	150	125	100	75	75	60	50	50	37.5	25	15	1FT2203-2AK..-0..0-Z
			M_{2N}	Nm	–	–	–	0.76	1.02	1.47	1.01	1.73	2.7	2.95	4.3	5.6	6.6	9.5	15.2	27	■■■ + ■■■ + . . .
			$M_{2,0}$	Nm	–	–	–	1.34	1.72	2.45	2.05	3.2	4.3	4.7	6.2	8	10.7	13.7	22.5	36	
			M_{2max}	Nm	–	–	–	9.9	11.5	14.7	13.1	17.8	22.5	24	30.5	38.5	49.5	62	100	152	
0.552 ... 0.964	3.01 ... 3.41	0.35 (0.37)	n_{2N}	r/min	375	300	300	250	250	200	150	125	100	100	75	75	60	50	30	20	1FT2203-4AK..-0..0-Z
			M_{2N}	Nm	1.07	1.99	2.55	4.1	4.45	6.2	5.7	7.7	10.2	10.7	15	16.5	22.5	28	47.5	74	■■■ + ■■■ + . . .
			$M_{2,0}$	Nm	1.65	2.6	3.6	5.5	6.5	8.5	7.5	10.4	13.3	14.3	18.2	23	30	37.5	61	95	
			M_{2max}	Nm	9	12.4	15.8	22.5L	26	33	29.5	39.5	50	53	67	84	108	135	192	152	
1.64 ... 2.04	6.26 ... 6.62	1.23 (1.31)	n_{2N}	r/min	375	375	300	250	250	200	150	125	100	100	75	75	60	50	30	25	1FT2204-5AF..-0..0-Z
			M_{2N}	Nm	4.4	5.2	8.1	11.7	11.6	16.6	15.7	20.5	26.5	27.5	37	39.5	54	65	114	95	■■■ + ■■■ + . . .
			$M_{2,0}$	Nm	4.9	6.9	L9	13.1	15.2	19.3	17.2	23	29.5	31.5	39.5	50	64	80	120	95	
			M_{2max}	Nm	18.7	25	32	45	52	65	58	78	98	105	131	164	210	260	192	152	
1.65 ... 2.06	6.26 ... 6.62	1.23 (1.31)	n_{2N}	r/min	375	375	300	250	250	200	150	125	100	100	75	75	60	50	30	25	1FT2204-5AK..-0..0-Z
			M_{2N}	Nm	4.45	5.4	8.3	12.1	12	17	16	21	27.5	28.5	37.5	40.5	55	66	116	94	■■■ + ■■■ + . . .
			$M_{2,0}$	Nm	4.95	7	9.1	13.2	15.3	19.4	17.4	23.5	29.5	31.5	40	50	65	81	120	95	
			M_{2max}	Nm	18.7	25	32	45	52	65	58	78	98	105	131	164	210	260	192	152	

➥ Continued on the following page

Planetary gearbox data																	
Gearbox type:		NLCW120, 1-stage						NLCW120, 2-stage									
1st order code		C46						C47									
	i	3	4	5	7	8	10	9	12	15	16	20	25	32	40	64	100
2nd order code		R03	R04	R05	R07	R08	R10	R09	R12	R15	R16	R20	R25	R32	R40	R64	R00
$M_{2N,G}$	Nm	80	105	130	135	120	95	210	260	230	260	260	230	260	230	120	95
$M_{2max,G}$	Nm	128	168	208	216	192	152	336	416	368	416	416	368	416	368	192	152
$M_{2Em.Off}$	Nm	360	474	500	340	380	430	500	520	500	520	520	500	520	500	380	430
$J_{1,G}$	kg cm²	2.97	2.346	2.118	1.928	1.876	1.832	2.787	2.716	2.692	2.192	2.017	2.009	1.862	1.859	1.855	1.818
$\varphi_{2,G}$	'	11						13									

Color legend:

$M_{max,M} \times i < M_{2N,G}$	The motor and gearbox combination is fatigue-proof
$M_{2N,G} < M_{max,M} \times i < M_{2max,G}$	Check acceleration and inertias, perform service life calculation if necessary
$M_{max,M} \times i > M_{2max,G}$	The motor can destroy the gearbox, check acceleration and inertias, perform service life calculation if necessary

© Siemens 2024

Angular geared motors for servo converters with 400 V 3 AC line connection

Servomotor data			Selection data servomotors with planetary gearbox																		Servomotors with planetary gearbox
$M_{0,M}$	$M_{max,M}$	J_M ($J_{M,Br}$)																			
Nm	Nm	kg cm²																			
SIMOTICS S-1FT2 Compact servomotors with 1 and 2-stage NLCW120 planetary gearboxes (continued)																					
2.4	8.58	1.61	n_{2N}	r/min	375	375	300	250	200	200	150	125	100	100	75	75	60	50	30	25	1FT2204-6AF..-0..0-Z
...	...	(1.69)	M_{2N}	Nm	6.7	7.6	11.9	16.4	20	22.5	22.5	28.5	37.5	37.5	52	52	72	86	120	95	■■■ + ■■■ + . . .
2.8	8.93		$M_{2,0}$	Nm	7.2	10	12.8	18.4	21	26.5	24	32.5	40.5	43.5	55	69	88	111	120	95	
			M_{2max}	Nm	25.5	34.5	43.5	61	70	88	79	106	133	142	177	220	285	355	192	152	
2.66	9.84	3.15	n_{2N}	r/min	375	300	300	250	200	200	150	125	100	100	75	60	50	37.5	30	20	1FT2205-2AC..-0..0-Z
...	...	(4.05)	M_{2N}	Nm	5.6	8.1	9.9	13.4	17.3	17.9	19.2	23.5	31.5	31	44.5	56	72	93	120	95	■■■ + ■■■ + . . .
2.99	10.2		$M_{2,0}$	Nm	7.9	11	14.1	20	23	29.5	25.5	34.5	43.5	46.5	58	73	95	119	120	95	
			M_{2max}	Nm	29.5	39.5	49.5	70	80	101	90	121	151	162	200	250	325	368	192	152	
2.69	9.84	3.15	n_{2N}	r/min	375	375	300	250	250	200	150	125	100	100	75	75	60	50	30	25	1FT2205-2AF..-0..0-Z
...	...	(4.05)	M_{2N}	Nm	6	7.6	10.7	15.3	15.7	22	20	27	34.5	36	47.5	52	71	85	119	94	■■■ + ■■■ + . . .
3.03	10.2		$M_{2,0}$	Nm	8	11.1	14.2	20.5	23.5	29.5	26	35	44	47	59	74	96	120	120	95	
			M_{2max}	Nm	29.5	39.5	49.5	70	80	101	90	121	151	162	200	250	325	368	192	152	
2.63	9.84	3.15	n_{2N}	r/min	375	300	300	250	200	200	150	125	100	100	75	60	60	50	30	25	1FT2205-2AH..-0..0-Z
...	...	(4.05)	M_{2N}	Nm	5.8	8.3	10.3	14.3	17.7	19.4	19.8	25.5	33	33.5	45.5	57	62	74	120	94	■■■ + ■■■ + . . .
2.97	10.2		$M_{2,0}$	Nm	7.8	10.9	13.9	20	23	29	25.5	34.5	43.5	46.5	58	73	94	118	120	94	
			M_{2max}	Nm	29.5	39.5	49.5	70	80	101	90	121	151	162	200	250	325	368	192	152	
4.88	16.8	5.1	n_{2N}	r/min	375	300	250	200	200	150	150	100	100	75	75	60	50	37.5	30	25	1FT2205-4AF..-0..0-Z
...	...	(6)	M_{2N}	Nm	10.7	15.6	20	29	30	41.5	31.5	49.5	50	68	73	93	118	159	120	95	■■■ + ■■■ + . . .
5.17	17.1		$M_{2,0}$	Nm	14.6	19.9	25	35.5	41	51	45.5	61	76	81	102	128	164	205	120	95	
			M_{2max}	Nm	50	67	84	118	136	152	153	200	255	270	340	368	416	368	192	152	
4.89	16.8	7.8	n_{2N}	r/min	300	300	250	200	150	150	125	100	75	75	60	50	37.5	37.5	30	20	1FT2206-2AC..-0..0-Z
...	...	(9.4)	M_{2N}	Nm	12.7	14.5	19.5	27	35.5	39.5	36	46.5	64	65	85	103	142	143	119	95	■■■ + ■■■ + . . .
5.27	17.1		$M_{2,0}$	Nm	14.6	19.9	25	35.5	41	51	46	62	78	83	104	130	168	210	120	95	
			M_{2max}	Nm	50	67	84	118	136	152	153	200	255	270	340	368	416	368	192	152	
5.04	16.8	7.8	n_{2N}	r/min	375	300	300	250	200	200	150	125	100	100	75	60	50	37.5	37.5	25	1FT2206-2AF..-0..0-Z
...	...	(9.4)	M_{2N}	Nm	11.8	16.3	19.5	25	32.5	32.5	37	45.5	59	59	83	104	133	170	105	94	■■■ + ■■■ + . . .
5.33	17.1		$M_{2,0}$	Nm	15.1	20.5	25.5	36.5	42	53	47	63	79	84	105	132	170	210	120	95	
			M_{2max}	Nm	50	67	84	118	136	152	153	200	255	270	340	368	416	368	192	152	
4.87	16.8	7.8	n_{2N}	r/min	375	300	250	200	200	150	150	100	100	75	75	60	50	37.5	30	20	1FT2206-2AH..-0..0-Z
...	...	(9.4)	M_{2N}	Nm	10.9	15.7	20	28.5	29.5	41	31.5	50	49.5	67	72	93	116	158	119	94	■■■ + ■■■ + . . .
5.17	17.1		$M_{2,0}$	Nm	14.6	19.8	25	35.5	40.5	51	45.5	61	76	81	102	128	165	205	119	95	
			M_{2max}	Nm	50	67	84	118	136	152	153	200	255	270	340	368	416	368	192	152	
7.62	25.5	11.5	n_{2N}	r/min	375	300	250	200	200	150	125	100	75	75	60	50	50	37.5	25	–	1FT2206-3AB..-0..0-Z
...	...	(13.1)	M_{2N}	Nm	15.2	21.5	28.5	40	40	57	52	68	92	94	122	148	154	205	120	–	■■■ + ■■■ + . . .
7.89	25.8		$M_{2,0}$	Nm	22.5	30.5	38.5	54	62	78	69	93	116	124	156	195	250	230	120	–	
			M_{2max}	Nm	76	102	128	179	192	152	230	305	368	410	416	368	416	368	192	–	
7.49	25.5	11.5	n_{2N}	r/min	300	300	250	200	150	150	125	100	75	75	60	50	37.5	37.5	30	–	1FT2206-3AF..-0..0-Z
...	...	(13.1)	M_{2N}	Nm	18.4	20.5	27.5	38	50	55	50	65	88	90	117	143	196	198	120	–	■■■ + ■■■ + . . .
7.76	25.8		$M_{2,0}$	Nm	22	30	38	53	61	77	68	91	114	122	153	192	245	230	120	–	
			M_{2max}	Nm	76	102	128	179	192	152	230	305	368	410	416	368	416	368	192	–	

➥ Continued on the following page

Planetary gearbox data																	
Gearbox type:			NLCW120, 1-stage						NLCW120, 2-stage								
1st order code			C46						C47								
	i		3	4	5	7	8	10	9	12	15	16	20	25	32	40	64	100
2nd order code			R03	R04	R05	R07	R08	R10	R09	R12	R15	R16	R20	R25	R32	R40	R64	R00
	$M_{2N,G}$	Nm	80	105	130	135	120	95	210	260	230	260	260	230	260	230	120	95
	$M_{2max,G}$	Nm	128	168	208	216	192	152	336	416	368	416	416	368	416	368	192	152
	$M_{2Em.Off}$	Nm	360	474	500	340	380	430	500	520	500	520	520	500	520	500	380	430
	$J_{1,G}$	kg cm²	2.97	2.346	2.118	1.928	1.876	1.832	2.787	2.716	2.692	2.192	2.017	2.009	1.862	1.859	1.855	1.818
	$\varphi_{2,G}$	'	11						13									

Color legend:		
	$M_{max,M} \times i < M_{2N,G}$	The motor and gearbox combination is fatigue-proof
	$M_{2N,G} < M_{max,M} \times i < M_{2max,G}$	Check acceleration and inertias, perform service life calculation if necessary
	$M_{max,M} \times i > M_{2max,G}$	The motor can destroy the gearbox, check acceleration and inertias, perform service life calculation if necessary

© Siemens 2024

Angular geared motors for servo converters with 400 V 3 AC line connection

Servomotor data			Selection data servomotors with planetary gearbox																		Servomotors with planetary gearbox
$M_{0,M}$	$M_{max,M}$	J_M ($J_{M,Br}$)																			
Nm	Nm	kg cm²																			
SIMOTICS S-1FT2 Compact servomotors with 1 and 2-stage NLCW120 planetary gearboxes (continued)																					
10.5	36.2	15.1 (16.8)	n_{2N}	r/min	250	200	200	150	125	100	100	75	60	60	50	37.5	30	30	25	–	**1FT2206-4AC..-0..0-Z**
...	...		M_{2N}	Nm	24	33	35.5	51	63	81	63	86	110	111	138	185	235	225	120	–	■■■ + ■■■ + . . .
10.8	36.3		$M_{2,0}$	Nm	31	42	53	74	85	95	96	128	161	172	215	230	260	230	120	–	
			M_{2max}	Nm	108	144	181	216	192	152	325	416	368	416	416	368	416	368	192	–	
10.3	34.2	15.1 (16.8)	n_{2N}	r/min	375	300	250	200	150	150	125	100	75	75	60	50	50	37.5	37.5	–	**1FT2206-4AF..-0..0-Z**
...	...		M_{2N}	Nm	21	29.5	38.5	52	70	75	70	91	122	125	161	196	199	230	109	–	■■■ + ■■■ + . . .
10.6	34.4		$M_{2,0}$	Nm	30.5	41.5	52	73	84	95	93	124	156	166	205	230	260	230	120	–	
			M_{2max}	Nm	102	137	171	216	192	152	305	410	368	416	416	368	416	368	192	–	
9.81	34.2	15.1 (16.8)	n_{2N}	r/min	300	250	200	150	150	125	125	100	75	75	60	50	37.5	37.5	30	–	**1FT2206-4AH..-0..0-Z**
...	...		M_{2N}	Nm	22.5	30	40	57	60	75	58	74	102	103	134	161	220	215	120	–	■■■ + ■■■ + . . .
10.1	34.4		$M_{2,0}$	Nm	29	39.5	49.5	70	80	95	89	119	149	159	199	230	260	230	120	–	
			M_{2max}	Nm	102	137	171	216	192	152	305	410	368	416	416	368	416	368	192	–	

Planetary gearbox data																		
Gearbox type:			**NLCW120, 1-stage**						**NLCW120, 2-stage**									
1st order code			**C46**						**C47**									
	i		**3**	**4**	**5**	**7**	**8**	**10**	**9**	**12**	**15**	**16**	**20**	**25**	**32**	**40**	**64**	**100**
2nd order code			**R03**	**R04**	**R05**	**R07**	**R08**	**R10**	**R09**	**R12**	**R15**	**R16**	**R20**	**R25**	**R32**	**R40**	**R64**	**R00**
	$M_{2N,G}$	Nm	80	105	130	135	120	95	210	260	230	260	260	230	260	230	120	95
	$M_{2max,G}$	Nm	128	168	208	216	192	152	336	416	368	416	416	368	416	368	192	152
	$M_{2Em.Off}$	Nm	360	474	500	340	380	430	500	520	500	520	520	500	520	500	380	430
	$J_{1,G}$	kg cm²	2.97	2.346	2.118	1.928	1.876	1.832	2.787	2.716	2.692	2.192	2.017	2.009	1.862	1.859	1.855	1.818
	$\varphi_{2,G}$	'	11						13									

Color legend:

	$M_{max,M} \times i < M_{2N,G}$	The motor and gearbox combination is fatigue-proof
	$M_{2N,G} < M_{max,M} \times i < M_{2max,G}$	Check acceleration and inertias, perform service life calculation if necessary
	$M_{max,M} \times i > M_{2max,G}$	The motor can destroy the gearbox, check acceleration and inertias, perform service life calculation if necessary

© Siemens 2024



8.2/2	**SIMOTICS M-1PH8 asynchronous, synchronous reluctance and synchronous motors for SINAMICS S120**
8.2/6	SIMOTICS M-1PH8 asynchronous motors
8.2/6	Forced ventilation, IP55 degree of protection
8.2/24	Forced ventilation, IP23 degree of protection
8.2/34	Water cooling, IP65 degree of protection
8.2/42	Water cooling, IP55 degree of protection
8.2/50	SIMOTICS M-1PH8 synchronous reluctance motors
8.2/50	Forced ventilation, IP55 degree of protection
8.2/56	Water cooling, IP65 degree of protection
8.2/60	SIMOTICS M-1PH8 synchronous motors
8.2/60	Forced ventilation, IP55 degree of protection
8.2/66	Water cooling, IP65 degree of protection
8.2/70	Water cooling, IP55 degree of protection
8.2/74	Article No. supplements
8.2/85	Options
8.2/89	Selection guides
8.2/89	Terminal box assignment/ Cable cross-sections
8.2/90	Ventilation data/Sound pressure level
8.2/91	Cooling data/Sound pressure level/ Water specification
8.2/92	Radial force diagrams
8.2/96	Mounted holding brakes
8.2/97	**SIMOTICS M-1FE built-in motors for SINAMICS S120**
8.2/97	SIMOTICS M-1FE synchronous built-in motors
8.2/100	SIMOTICS M-1FE1 synchronous built-in motors
8.2/108	SIMOTICS M-1FE2 synchronous built-in motors
8.2/110	SIMOTICS M-1FE2 asynchronous built-in motors
8.2/114	Components for SIMOTICS M-1FE built-in motors
8.2/114	VPM Voltage Protection Module
8.2/115	**Dimensional drawings**
8.2/115	SIMOTICS M-1PH8 asynchronous and synchronous motors
8.2/159	SIMOTICS M-1FE1 synchronous built-in motors
8.2/160	SIMOTICS M-1FE2 synchronous built-in motors
8.2/161	SIMOTICS M-1FE2 asynchronous built-in motors

In addition, the Siemens Product Configurator can be used on the internet at the following address:
www.siemens.com/spc
See under:
Motors →
Motors for Motion Control →
SIMOTICS M main motors

© Siemens 2024

Overview



SIMOTICS M-1PH8 motors, forced ventilation, shaft heights 80 to 160

The SIMOTICS M-1PH8 motor series is a generation of motors designed for universal use in plants and machines involving motion control applications. The motors are based on a flexible, modular principle and are available as asynchronous, synchronous-reluctance and compact synchronous variants, with either forced ventilation or water cooling.

In comparison to the freely selectable performance of vector and servo control with the SINAMICS S120 drive system, it is possible to select between asynchronous, synchronous-reluctance or synchronous versions in the case of the new SIMOTICS M-1PH8 motor series.

Thanks to this flexible interplay between converter and motor, it is now even easier to implement applications which involve

- extreme duty cycles
- short rise times
- high accuracy

regarding speed, torque and positioning.

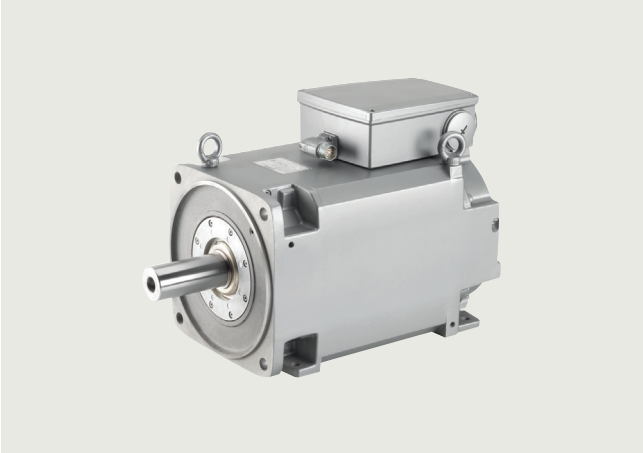

SIMOTICS M-1PH8 motors, water cooling, shaft heights 80 to 160

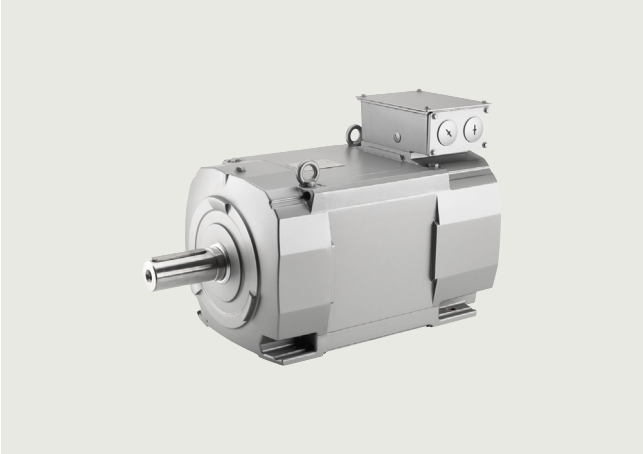

SIMOTICS M-1PH8 motors, water cooling, shaft heights 180 to 280

SIMOTICS M-1PH8 motors have been designed specifically for use in conjunction with the SINAMICS S120 drive system. Depending on the closed-loop control requirements, suitable encoder systems are available for the SIMOTICS M-1PH8 motors to acquire motor speed and the indirect position.

Encoder systems for C-axis operation are also available for machine tools.

SIMOTICS M-1PH8 motors are available with two different cooling methods:

- Forced ventilation
- Water cooling

© Siemens 2024

Benefits

- Wide power range with low construction volume
- Wide speed control ranges
- High degree of flexibility due to the choice of
  - Asynchronous, synchronous-reluctance or synchronous version
  - Forced ventilation or water cooling
  - Solid shaft or hollow shaft
  - Wide range of bearing concepts
  - Different encoder types for speed control and high-precision positioning
- Outstanding performance properties
  - Maximum speeds up to 24000 r/min
  - Excellent radial eccentricity down to 10 µm
  - Excellent vibration severity grade
  - High dynamic response (short acceleration times)
- Low noise emission
- Simple and flexible connection system
- Commissioning with electronic rating plate and DRIVE-CLiQ interface

Application

The range of applications extends across all industries and includes, for example:

- Main drives in presses and extruders
- Converting applications
- Main spindle drives in machine tools
- Rotary axes in the paper and printing industry
- Use in crane systems

The SIMOTICS M-1PH8 motors are suitable for installation in dry indoor areas without aggressive atmospheres.

Configuration

You can find the Configuration Manual for SIMOTICS M-1PH8 for SINAMICS S120 at:

https://support.industry.siemens.com/cs/ww/en/view/109744012

Dimensional drawings

Dimensional drawings for the SIMOTICS motors are available via selectors through to the exact article number with the Siemens Product Configurator.

www.siemens.com/spc

Characteristic curves

SIMOTICS M-1PH8 asynchronous motor

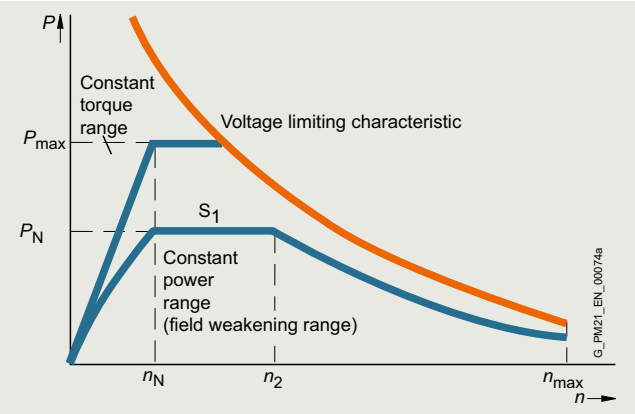

Typical speed-power characteristic for SIMOTICS M-1PH8 asynchronous motors

SIMOTICS M-1PH8 synchronous reluctance motor

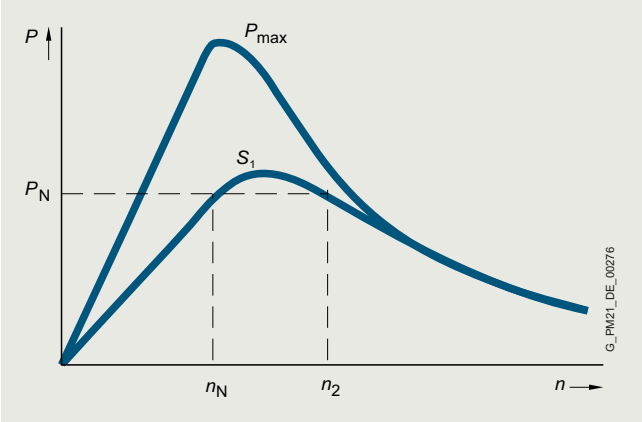

Typical speed-power characteristic for SIMOTICS M-1PH8 synchronous reluctance motors

SIMOTICS M-1PH8 synchronous motor

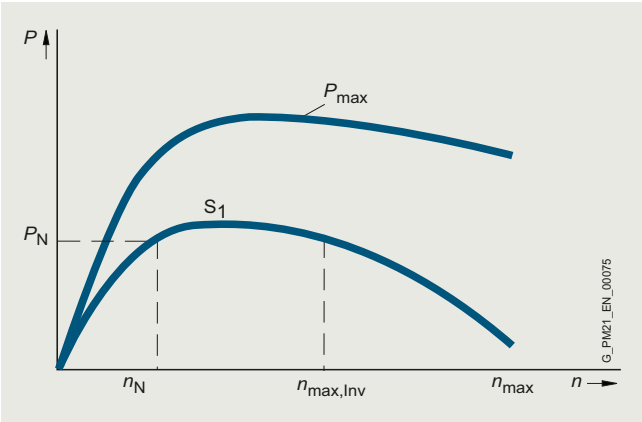

Typical speed-power characteristic for SIMOTICS M-1PH8 synchronous motors

The characteristic curves show the typical relationship between motor speed and drive power for SIMOTICS M-1PH8 motors for duty type S1 (continuous duty) in accordance with IEC 60034-1.

The detailed characteristic curves for the voltage and winding version are provided in the SIMOTICS M-1PH8 Configuration Manual.

Characteristics for the SIMOTICS motors are available via selectors through to the exact article number with the Siemens Product Configurator.

Access to the Siemens Product Configurator

The Siemens Product Configurator can be accessed without having to register or log in:

www.siemens.com/spc

→ SIMOTICS M-1PH8 in the SPC

© Siemens 2024

SIMOTICS M-1PH8 asynchronous and synchronous motors, forced ventilation

Technical specifications

SIMOTICS M-1PH8 motor, forced ventilation	
Stator winding insulation according to EN 60034-1 (IEC 60034-1)	For an ambient temperature of up to 40 °C (104 °F) Temperature class 180 (H)
Cooling according to EN 60034-6 (IEC 60034-6)	Forced ventilation
• 1PH808 ... 1PH822	Fan mounted axially at NDE
• 1PH828	Fan mounted radially at NDE
Temperature monitoring	Pt1000 temperature sensor in the stator winding
• 1PH818 ... 1PH828	1 additional Pt1000 temperature sensor as reserve
Fan supply voltage	
• 1PH808	230 V 1 AC 50/60 Hz, 265 V 1 AC/60 Hz 400 V 2 AC 50/60 Hz (option L77)
• 1PH810 ... 1PH816	400 V 3 AC 50/60 Hz, 480 V 3 AC 60 Hz
• 1PH818 ... 1PH822	200 ... 277 V 1 AC, 50/60 Hz (EC fan) 380 V ... 480 V 3 AC 50/60 Hz (EC fan) (option L76)
• 1PH828	380 V ... 480 V 3 AC 50/60 Hz (EC fan)
Type of construction according to EN 60034-7 (IEC 60034-7)	
• 1PH808	IM B3, IM B5
• 1PH810 ... 1PH828	IM B3, IM B5, IM B35
Degree of protection according to EN 60034-5 (IEC 60034-5)	
• 1PH808 ... 1PH828	IP55 (forced ventilation)
• 1PH818 ... 1PH828	IP23 (open-circuit cooling)
Shaft end at the DE according to DIN 748-3 (IEC 60034-5)	Plain shaft or feather key full-key or half-key balancing for feather key
Shaft and flange accuracy according to DIN 42955 (IEC 60072-1) [1]	Without holding brake: Tolerance R (reduced) With holding brake: Tolerance N (normal)
Vibration severity	In accordance with Siemens/EN 60034-14 (IEC 60034-14) [1]
Sound pressure level L_{pA} (1 m) according to EN ISO 1680, max. Tolerance +3 dB	
Forced ventilation (IP55)	
• 1PH808 ... 1PH813	70 dB at a rated pulse frequency of 4 kHz and a speed range up to 5000 r/min
• 1PH816	73 dB at a rated pulse frequency of 4 kHz and a speed range up to 5000 r/min
• 1PH818	73 dB at a rated pulse frequency of 2 kHz and a speed range up to 5000 r/min
• 1PH822	73 dB at a rated pulse frequency of 2 kHz and a speed range up to 3500 r/min
• 1PH828	74 dB at a rated pulse frequency of 2 kHz and a speed range up to 3300 r/min
Forced ventilation (IP23)	
• 1PH818	73 dB at a rated pulse frequency of 2 kHz and a speed range up to 3000 r/min
• 1PH822	73 dB at a rated pulse frequency of 2 kHz and a speed range up to 2000 r/min
• 1PH828	74 dB at a rated pulse frequency of 2 kHz and a speed range up to 2800 r/min
Built-in encoder systems	Absolute and incremental encoder with or without DRIVE-CLiQ interface
Connection	Connector for signals or DRIVE-CLiQ interface (mating connector not included in the scope of supply)
Power	
• 1PH808 ... 1PH813	Power connector or terminal box
• 1PH816 ... 1PH828	Terminal box
Fan	
• 1PH808	Power connector
• 1PH810 ... 1PH813	Power connector or terminal box
• 1PH816 ... 1PH828	Terminal box
Encoder system	Connector for signals or DRIVE-CLiQ interface (mating connector not included in the scope of supply)
Rating plate	1 attached to motor 1 supplied separately with terminal box
Paint finish	Standard paint finish in anthracite RAL 7016
Certificate of suitability	cURus, CE, EAC, UKCA

[1] Radial eccentricity of the shaft end, concentricity of the centering ring, and axial eccentricity of the mounting flange to the axis of the shaft end.

© Siemens 2024

Technical specifications

SIMOTICS M-1PH8 motor, water cooling	
Stator winding insulation according to EN 60034-1 (IEC 60034-1)	For a coolant inlet temperature of up to 30 °C (86 °F) Temperature class 180 (H) [1]
Cooling according to EN 60034-6 (IEC 60034-6)	Water cooling max. cooling water pressure at inlet: 6 bar Connection thread at NDE
Temperature monitoring	Pt1000 temperature sensor in the stator winding
• 1PH808 ... 1PH816	1 additional Pt1000 temperature sensor as option (option 25)
• 1PH818 ... 1PH828	1 additional Pt1000 temperature sensor as reserve
Type of construction according to EN 60034-7 (IEC 60034-7)	
• 1PH808	IM B3, IM B5
• 1PH818 ... 1PH828	IM B3, IM B5, IM B35
Degree of protection according to EN 60034-5 (IEC 60034-5)	
• 1PH808 ... 1PH816	IP65
• 1PH818 ... 1PH828	IP55
Shaft end at the DE according to DIN 748-3 (IEC 60072-1)	Plain shaft or feather key full-key or half-key balancing for feather key
Shaft and flange accuracy according to DIN 42955 (IEC 60072-1) [2]	Without holding brake: Tolerance R (reduced) With holding brake: Tolerance N (normal)
Vibration severity	In accordance with Siemens/EN 60034-14 (IEC 60034-14) [2]
Sound pressure level L_{pA} (1 m) according to EN ISO 1680, max. tolerance +3 dB	
• 1PH808 ... 1PH813	68 dB at a rated pulse frequency of 4 kHz and speed range up to 5000 r/min
• 1PH816	69 dB at a rated pulse frequency of 4 kHz and speed range up to 5000 r/min
• 1PH818	70 dB at a rated pulse frequency of 2 or 4 kHz and a speed range up to 5000 r/min
• 1PH822	70 dB at a rated pulse frequency of 2 or 4 kHz and speed range up to 4500 r/min
• 1PH828	72 dB for a rated pulse frequency of 2 kHz and speed range up to 3300 r/min
Integrated encoder systems	Absolute and incremental encoder with or without DRIVE-CLiQ interface
Connection	Connector for signals or DRIVE-CLiQ interface (mating connector is not included in the scope of supply)
Power	
• 1PH808 ... 1PH813	Power connector or terminal box
• 1PH816 ... 1PH828	Terminal box
Encoder system	Connector for signals or DRIVE-CLiQ interface (mating connector is not included in the scope of supply)
Rating plate	1 unit attached to motor 1 supplied loose in terminal box
Paint finish	Standard paint finish in anthracite RAL 7016
Certificate of suitability	cURus, CE, EAC, UKCA

[1] The following motors are designed to conform to temperature class 155 (F): 1PH8107-1.F2/1PH8107-1.M2 1PH8138-2/1PH8164/1PH8166/1PH8168

[2] Radial eccentricity of the shaft end, concentricity of the centering ring, and axial eccentricity of the mounting flange to the axis of the shaft end.

© Siemens 2024

Selection and ordering data

Rated speed	Shaft height	Rated power	Rated torque	Rated current	Rated voltage	Rated frequency	Operating speed for field weakening, max. [1]	Speed, max. [2]	**SIMOTICS M-1PH8 asynchronous motors Forced ventilation**
n_N	SH	P_N	M_N	I_N	U_N	f_N	n_2	n_{max}	
r/min		kW (hp)	Nm (lb_f-ft)	A	V	Hz	r/min	r/min	Article No.
Line voltage 400 V 3 AC, Smart/Basic Line Module									
400	100	2.5 (3.4)	60 (44.3)	8.8	290	15.5	1500	7000	**1PH8107- ■■B■■-....**
	132	2.9 (3.9)	69 (50.9)	9	272	14.7	1500	6000	**1PH8131- ■■B■■-....**
		5.2 (7.0)	124 (91.5)	15.5	309	15.0	1000	6000	**1PH8133- ■■B■■-....**
		6.4 (8.6)	153 (113)	18	320	15.2	1000	6000	**1PH8135- ■■B■■-....**
		6.9 (9.3)	165 (122)	18	323	14.7	1300	6000	**1PH8137- ■■B■■-....**
	160	9.5 (12.7)	227 (167)	30	260	14.3	2150	6500	**1PH8163- ■■B■■-....**
		13 (17.4)	310 (229)	36	300	14.1	1750	6500	**1PH8165- ■■B■■-....**
	180	16.3 (21.9)	389 (287)	49	271	14.1	2800	5000	**1PH8184- ■■B■■-....**
		21.2 (28.4)	506 (373)	65	268	13.9	3000	5000	**1PH8186- ■■B■■-....**
	225	30.4 (40.8)	726 (535)	86	268	13.9	2400	4500	**1PH8224- ■■B■■-....**
		39.2 (52.6)	936 (690)	112	264	13.9	2500	4500	**1PH8226- ■■B■■-....**
		48 (64.4)	1146 (845)	132	272	13.8	2600	4500	**1PH8228- ■■B■■-....**
	280	63 (84.5)	1504 (1109)	154	325	13.6	1100	3300	**1PH8284- 1■B1■-....**
		80 (107)	1910 (1409)	186	325	13.6	1200	3300	**1PH8286- 1■B1■-....**
		103 (138)	2459 (1814)	245	325	13.6	1300	3300	**1PH8288- 1■B1■-....**
700	180	27 (36.2)	368 (271)	65	320	24.0	3300	5000	**1PH8184- ■■C■■-....**
		35 (46.9)	478 (353)	83	330	23.9	3700	5000	**1PH8186- ■■C■■-....**
	225	55 (73.8)	750 (553)	136	310	23.8	2900	4500	**1PH8224- ■■C■■-....**
		68 (91.2)	928 (684)	162	310	23.8	3100	4500	**1PH8226- ■■C■■-....**
		82 (110)	1119 (825)	188	315	23.8	3300	4500	**1PH8228- ■■C■■-....**
	280	110 (148)	1501 (1107)	240	330	23.7	2100	3300	**1PH8284- 1■C1■-....**
		138 (185)	1883 (1389)	295	325	23.7	2100	3300	**1PH8286- 1■C1■-....**
		166 (223)	2265 (1671)	365	325	23.6	2100	3300	**1PH8288- 1■C1■-....**
1000	100	3.7 (5.0)	35 (25.8)	10	333	35.8	2550	9000	**1PH8103- ■■D■■-....**
		6.3 (8.4)	60 (44.3)	17.5	307	35.5	4300	9000	**1PH8107- ■■D■■-....**
	132	7.9 (10.6)	75 (55.3)	20	316	34.8	3000	8000	**1PH8131- ■■D■■-....**
		12 (16.1)	115 (84.8)	30	319	35.0	3000	8000	**1PH8133- ■■D■■-....**
		17 (22.8)	162 (119)	43	307	34.8	4300	8000	**1PH8137- ■■D■■-....**
	160	22 (29.5)	210 (155)	55	300	34.2	2800	6500	**1PH8163- ■■D■■-....**
		28 (37.5)	267 (197)	71	292	34.2	4600	6500	**1PH8165- ■■D■■-....**
	180	39 (52.3)	372 (274)	87	340	34.0	4200	5000	**1PH8184- ■■D■■-....**
		51 (68.4)	487 (359)	112	340	34.0	4400	5000	**1PH8186- ■■D■■-....**
	225	71 (95.2)	678 (500)	158	335	33.8	3300	4500	**1PH8224- ■■D■■-....**
		92 (123)	879 (648)	194	340	33.8	3300	4500	**1PH8226- ■■D■■-....**
		113 (152)	1079 (796)	235	340	33.9	3300	4500	**1PH8228- ■■D■■-....**
	280	150 (201)	1433 (1057)	315	335	33.7	2100	3300	**1PH8284- 1■D1■-....**
		182 (244)	1738 (1282)	410	330	33.6	2100	3300	**1PH8286- 1■D1■-....**
		226 (303)	2158 (1592)	495	335	33.6	2100	3300	**1PH8288- 1■D1■-....**

For versions, see Article No. supplements and options.

For footnotes, see next page.

© Siemens 2024

Motor type (repeated)	Power factor	Magnetizing current	Efficiency	Moment of inertia without holding brake	Weight without holding brake, approx.	Terminal box	SINAMICS S120 Motor Module	
							Rated output current [3]	Internal air cooling For further components, see SINAMICS S120 drive system
	$\cos \varphi$	I_μ	η	J			I_N	
		A	%	kgm^2 (lb$_f$-in-s^2)	kg (lb)	Type	A	Article No.
1PH8107-. . B . . .	0.85	4.1	69	0.0289 (0.2558)	73 (161)	gk813	9	6SL3120-■TE21-0AD 0
1PH8131-. . B . . .	0.88	3.5	77	0.0590 (0.5222)	89 (196)	gk833	9	6SL3120-■TE21-0AD 0
1PH8133-. . B . . .	0.88	6.2	75	0.0760 (0.6727)	106 (234)	gk833	18	6SL3120-■TE21-8A■ 0
1PH8135-. . B . . .	0.90	5.2	74	0.0940 (0.8320)	125 (276)	gk833	18	6SL3120-■TE21-8A■ 0
1PH8137-. . B . . .	0.88	6.7	79	0.1090 (0.9648)	141 (311)	gk833	18	6SL3120-■TE21-8A■ 0
1PH8163-. . B . . .	0.91	8.1	82.3	0.2160 (1.9118)	196 (432)	gk863	30	6SL3120-1TE23-0A■ 0
1PH8165-. . B . . .	0.86	14.9	82.6	0.2320 (2.0534)	230 (507)	gk863	45	6SL3120-1TE24-5AC 0
1PH8184-. . B . . .	0.85	23	83.4	0.489 (4.328)	350 (772)	1XB7322-P05	60	6SL3120-1TE26-0AC 0
1PH8186-. . B . . .	0.83	34	85	0.652 (5.771)	422 (931)	1XB7322-P05	85	6SL3120-1TE28-5AA 3
1PH8224-. . B . . .	0.87	34	87.2	1.48 (13.10)	610 (1345)	1XB7322-P05	85 [4]	6SL3120-1TE28-5AA 3
1PH8226-. . B . . .	0.87	46	88.7	1.93 (17.08)	740 (1632)	1XB7322-P05	132	6SL3120-1TE31-3AA 3
1PH8228-. . B . . .	0.86	58	89.6	2.33 (20.62)	870 (1918)	1XB7322-P05	132	6SL3120-1TE31-3AA 3
1PH8284-1. B . . .	0.79	86	92.4	4.20 (37.17)	1200 (2646)	1XB7700-P02	200	6SL3120-1TE32-0AA 4
1PH8286-1. B . . .	0.82	98	92.8	5.20 (46.03)	1400 (3087)	1XB7700-P02	200	6SL3120-1TE32-0AA 4
1PH8288-1. B . . .	0.80	136	93.1	6.30 (55.76)	1650 (3638)	1XB7700-P02	260	6SL3320-1TE32-6AA 3
1PH8184-. . C . . .	0.84	30	88.9	0.49 (4.34)	350 (772)	1XB7322-P05	85	6SL3120-1TE28-5AA 3
1PH8186-. . C . . .	0.81	44	90.9	0.652 (5.771)	422 (931)	1XB7322-P05	85	6SL3120-1TE28-5AA 3
1PH8224-. . C . . .	0.82	67	92.5	1.48 (13.10)	610 (1345)	1XB7322-P05	132 [4]	6SL3120-1TE31-3AA 3
1PH8226-. . C . . .	0.84	76	93.2	1.93 (17.08)	740 (1632)	1XB7322-P05	200	6SL3120-1TE32-0AA 4
1PH8228-. . C . . .	0.86	80	93.3	2.33 (20.62)	870 (1918)	1XB7322-P05	200	6SL3120-1TE32-0AA 4
1PH8284-1. C . . .	0.85	106	94.7	4.20 (37.17)	1200 (2646)	1XB7700-P02	260	6SL3320-1TE32-6AA 3
1PH8286-1. C . . .	0.87	121	94.9	5.20 (46.03)	1400 (3087)	1XB7700-P02	310	6SL3320-1TE33-1AA 3
1PH8288-1. C . . .	0.85	171	95.3	6.30 (55.76)	1650 (3638)	1XB7700-P02	380	6SL3320-1TE33-8AA 3
1PH8103-. . D . . .	0.82	4.6	81.4	0.0172 (0.1522)	51 (112)	gk813	18	6SL3120-■TE21-8A■ 0
1PH8107-. . D . . .	0.82	8.2	83.4	0.0289 (0.2558)	73 (161)	gk813	18	6SL3120-■TE21-8A■ 0
1PH8131-. . D . . .	0.86	8.0	87	0.0590 (0.5222)	89 (196)	gk833	30	6SL3120-1TE23-0A■ 0
1PH8133-. . D . . .	0.88	10.1	87.1	0.0760 (0.6727)	106 (234)	gk833	30	6SL3120-1TE23-0A■ 0
1PH8137-. . D . . .	0.88	15.1	88.1	0.1090 (0.9648)	141 (311)	gk833	45	6SL3120-1TE24-5AC 0
1PH8163-. . D . . .	0.89	17.3	90.9	0.2160 (1.9118)	196 (432)	gk863	60	6SL3120-1TE26-0AC 0
1PH8165-. . D . . .	0.89	22.2	91.4	0.2320 (2.0534)	230 (507)	gk863	85	6SL3120-1TE28-5AA 3
1PH8184-. . D . . .	0.83	42	92	0.489 (4.328)	350 (772)	1XB7322-P05	85 [4]	6SL3120-1TE28-5AA 3
1PH8186-. . D . . .	0.83	56	92.6	0.652 (5.771)	422 (931)	1XB7322-P05	132	6SL3120-1TE31-3AA 3
1PH8224-. . D . . .	0.82	77	94.2	1.48 (13.10)	610 (1345)	1XB7322-P05	200	6SL3120-1TE32-0AA 4
1PH8226-. . D . . .	0.85	86	94.4	1.93 (17.08)	740 (1632)	1XB7322-P05	200	6SL3120-1TE32-0AA 4
1PH8228-. . D . . .	0.87	97	94.8	2.33 (20.62)	870 (1918)	1XB7422-P06	260	6SL3320-1TE32-6AA 3
1PH8284-1. D . . .	0.85	143	95.8	4.20 (37.17)	1200 (2646)	1XB7700-P02	310 [4]	6SL3320-1TE33-1AA 3
1PH8286-1. D . . .	0.81	215	96	5.20 (46.03)	1400 (3087)	1XB7700-P02	490	6SL3320-1TE35-0AA 3
1PH8288-1. D . . .	0.82	252	96.2	6.30 (55.76)	1650 (3638)	1XB7700-P02	490 [4]	6SL3320-1TE35-0AA 3

Single Motor Module	1
Double Motor Module	2
Motor Module	
For continuous load with 200 % overload (C type)	C
For highly dynamic, intermittent load cycles with 300 % overload (D type)	D

1) n_2: Maximum permissible thermal speed at constant power.
2) n_{max}: Maximum speed that must not be exceeded (applicable for standard: 14th position of the Article No. A to H); for performance bearings (14th position = "L"), increased maximum speeds apply; limitations must be taken into consideration where necessary (e.g. with holding brake), see Article No. supplements.
3) I_N: Output current of the Motor Module at rated pulse frequency (see SINAMICS S120 drive system). The rated motor data are valid for 4 kHz (SH 80 to 160) or 2 kHz (SH 180 to 280).
4) The output current of the Motor Module is lower than the rated motor current for the pulse frequency on which it is based.

© Siemens 2024

Selection and ordering data

Rated speed	Shaft height	Rated power	Rated torque	Rated current	Rated voltage	Rated frequency	Operating speed for field weakening, max. [1]	Speed, max. [2]	**SIMOTICS M-1PH8 asynchronous motors Forced ventilation**
n_N	SH	P_N	M_N	I_N	U_N	f_N	n_2	n_{max}	
r/min		kW (hp)	Nm (lb_f-ft)	A	V	Hz	r/min	r/min	Article No.
Line voltage 400 V 3 AC, Smart/Basic Line Module									
1500	80	2.8 (3.8)	18 (13.3)	7.5	346	53.3	4700	10000	**1PH8083-■■F■■-....**
		3.7 (5.0)	24 (17.7)	10	336	53.2	5200	10000	**1PH8087-■■F■■-....**
	100	3.7 (5.0)	24 (17.7)	12.5	265	52.4	5000	9000	**1PH8101-■■F■■-....**
		5.5 (7.4)	35 (25.8)	13.5	368	52.4	4200	9000	**1PH8103-■■F■■-....**
		7 (9.39)	45 (33.2)	17.5	348	51.9	5250	9000	**1PH8105-■■F■■-....**
		9 (12.1)	57 (42.0)	23.5	330	52.2	4500	9000	**1PH8107-■■F■■-....**
	132	11 (14.8)	70 (51.6)	24	360	51.4	4800	8000	**1PH8131-■■F■■-....**
		15 (20.1)	96 (70.8)	34	342	51.3	5500	8000	**1PH8133-■■F■■-....**
		18.5 (24.8)	118 (87.0)	43	330	51.3	6150	8000	**1PH8135-■■F■■-....**
		22 (29.5)	140 (103)	56	308	51.3	4300	8000	**1PH8137-■■F■■-....**
	160	30 (40.2)	191 (141)	71	319	50.8	3500	6500	**1PH8163-■■F■■-....**
		37 (49.6)	236 (174)	78	350	50.8	2800	6500	**1PH8165-■■F■■-....**
	180	51 (68.4)	325 (240)	116	335	50.6	5000	5000	**1PH8184-■■F■■-....**
		74 (99.2)	471 (347)	166	330	50.6	5000	5000	**1PH8186-■■F■■-....**
	225	95 (127)	605 (446)	200	340	50.5	3300	4500	**1PH8224-■■F■■-....**
		130 (174)	828 (611)	270	340	50.5	3300	4500	**1PH8226-■■F■■-....**
		160 (215)	1019 (752)	340	340	50.4	3300	4500	**1PH8228-■■F■■-....**
	280	196 (263)	1248 (921)	390	345	50.4	1900	3300	**1PH8284-1■F1■-....**
		250 (335)	1592 (1174)	490	345	50.4	2000	3300	**1PH8286-1■F1■-....**
		320 (429)	2037 (1502)	620	345	50.4	2100	3300	**1PH8288-1■F1■-....**
2000	80	3.7 (5.0)	18 (13.3)	11.6	293	70.2	9200	10000	**1PH8083-■■G■■-....**
		4.9 (6.6)	23 (17.0)	14.1	320	69.8	8400	10000	**1PH8087-■■G■■-....**
	100	7 (9.39)	33 (24.3)	17.5	345	69.0	6000	9000	**1PH8103-■■G■■-....**
		10.5 (14.1)	50 (36.9)	26	355	68.6	4000	9000	**1PH8107-■■G■■-....**
	132	20 (26.8)	96 (70.8)	45	350	68.1	4000	8000	**1PH8133-■■G■■-....**
		21.5 (28.8)	103 (76.0)	51	323	68.0	4000	8000	**1PH8135-■■G■■-....**
		28 (37.5)	134 (98.8)	60	350	68.1	4000	8000	**1PH8137-■■G■■-....**
	160	36 (48.3)	172 (127)	83	324	67.5	3000	6500	**1PH8163-■■G■■-....**
		41 (55.0)	196 (145)	88	350	67.4	2750	6500	**1PH8165-■■G■■-....**
2500	180	78 (105)	298 (220)	166	340	84.0	5000	5000	**1PH8184-■■L■■-....**
		106 (142)	405 (299)	230	335	83.9	5000	5000	**1PH8186-■■L■■-....**
	225	142 (190)	542 (400)	295	340	83.9	3200	4500	**1PH8224-■■L■■-....**
		168 (225)	642 (474)	350	335	83.8	3200	4500	**1PH8226-■■L■■-....**
		205 (275)	783 (578)	420	340	83.8	3200	4500	**1PH8228-■■L■■-....**
3000	80	4.1 (5.5)	13 (9.59)	13.6	298	102.6	10000	10000	**1PH8083-■■M■■-....**
		4.8 (6.4)	15 (11.1)	17.3	284	102.2	10000	10000	**1PH8087-■■M■■-....**
	100	8.4 (11.3)	27 (19.9)	25.7	297	102.1	14250	9000	**1PH8103-■■M■■-....**
		12 (16.1)	38 (28.0)	38	294	101.6	16500	9000	**1PH8107-■■M■■-....**

For versions, see Article No. supplements and options.

For footnotes, see next page.

© Siemens 2024

Motor type (repeated)	Power factor	Magnetizing current	Efficiency	Moment of inertia without holding brake	Weight without holding brake, approx.	Terminal box	SINAMICS S120 Motor Module	
							Rated output current [3]	Internal air cooling For further components, see SINAMICS S120 drive system
	cos φ	I_μ	η	J			I_N	
		A	%	kgm² (lb_f-in-s²)	kg (lb)	Type	A	Article No.
1PH8083-..F...	0.80	3.8	80.9	0.0064 (0.0566)	32 (70.6)	gk803	9	6SL3120-■TE21-0AD 0
1PH8087-..F...	0.81	4.9	81.7	0.0089 (0.0788)	39 (86.0)	gk803	18	6SL3120-■TE21-8A■ 0
1PH8101-..F...	0.80	6.0	83.5	0.0138 (0.1221)	42 (92.6)	gk813	18	6SL3120-■TE21-8A■ 0
1PH8103-..F...	0.80	6.5	85.2	0.0172 (0.1522)	51 (112)	gk813	18	6SL3120-■TE21-8A■ 0
1PH8105-..F...	0.79	8.8	86.7	0.0252 (0.2230)	65 (143)	gk813	18	6SL3120-■TE21-8A■ 0
1PH8107-..F...	0.81	10.8	86.9	0.0289 (0.2558)	73 (161)	gk813	30	6SL3120-1TE23-0A■ 0
1PH8131-..F...	0.84	10.4	89.9	0.0590 (0.5222)	89 (196)	gk833	30	6SL3120-1TE23-0A■ 0
1PH8133-..F...	0.85	14.2	89.9	0.0760 (0.6727)	106 (234)	gk833	45	6SL3120-1TE24-5AC 0
1PH8135-..F...	0.85	18.1	89.8	0.0940 (0.8320)	125 (276)	gk833	45	6SL3120-1TE24-5AC 0
1PH8137-..F...	0.84	24.2	90.4	0.1090 (0.9648)	141 (311)	gk833	60	6SL3120-1TE26-0AC 0
1PH8163-..F...	0.87	25.6	92.3	0.2160 (1.9118)	196 (432)	gk863	85	6SL3120-1TE28-5AA 3
1PH8165-..F...	0.88	27.0	92.6	0.2320 (2.0534)	230 (507)	gk863	85	6SL3120-1TE28-5AA 3
1PH8184-..F...	0.80	63	94	0.489 (4.328)	350 (772)	1XB7322-P05	132	6SL3120-1TE31-3AA 3
1PH8186-..F...	0.83	82	94.5	0.652 (5.771)	422 (931)	1XB7322-P05	200	6SL3120-1TE32-0AA 4
1PH8224-..F...	0.85	87	95.3	1.48 (13.10)	610 (1345)	1XB7322-P05	200	6SL3120-1TE32-0AA 4
1PH8226-..F...	0.85	119	95.7	1.93 (17.08)	740 (1632)	1XB7422-P06	310	6SL3320-1TE33-1AA 3
1PH8228-..F...	0.83	170	95.9	2.33 (20.62)	870 (1918)	1XB7700-P02	380	6SL3320-1TE33-8AA 3
1PH8284-1.F...	0.87	162	96.3	4.20 (37.17)	1200 (2646)	1XB7700-P02	490	6SL3320-1TE35-0AA 3
1PH8286-1.F...	0.89	182	96.5	5.20 (46.03)	1400 (3087)	1XB7700-P02	490	6SL3320-1TE35-0AA 0
1PH8288-1.F...	0.89	233	96.6	6.30 (55.76)	1650 (3638)	1XB7712-P03	745	6SL3320-1TE37-5AA 3
1PH8083-..G...	0.79	5.7	83.2	0.0064 (0.0566)	32 (70.6)	gk803	18	6SL3120-■TE21-8A■ 0
1PH8087-..G...	0.78	7.3	85.3	0.0089 (0.0788)	39 (86.0)	gk803	18	6SL3120-■TE21-8A■ 0
1PH8103-..G...	0.79	8.7	87.7	0.0172 (0.1522)	51 (112)	gk813	18	6SL3120-■TE21-8A■ 0
1PH8107-..G...	0.78	12.9	89.7	0.0289 (0.2558)	73 (161)	gk813	30	6SL3120-1TE23-0A■ 0
1PH8133-..G...	0.85	18.1	91.8	0.0760 (0.6727)	106 (234)	gk833	45	6SL3120-1TE24-5AC 0
1PH8135-G	0.85	20.9	91.2	0.0940 (0.8320)	125 (276)	gk833	60	6SL3120-1TE26-0AC 0
1PH8137-..G...	0.87	21.5	92.4	0.1090 (0.9648)	141 (311)	gk833	60	6SL3120-1TE26-0AC 0
1PH8163-..G...	0.88	28.1	92.9	0.2160 (1.9118)	196 (432)	gk863	85	6SL3120-1TE28-5AA 3
1PH8165-..G...	0.87	32.4	92.7	0.2320 (2.0534)	230 (507)	gk863	85 [4]	6SL3120-1TE28-5AA 3
1PH8184-..L...	0.84	75	95.2	0.489 (4.328)	350 (772)	1XB7322-P05	200	6SL3120-1TE32-0AA 3
1PH8186-..L...	0.84	107	95.5	0.652 (5.771)	422 (931)	1XB7422-P06	260	6SL3320-1TE32-6AA 3
1PH8224-..L...	0.86	113	95.8	1.48 (13.10)	610 (1345)	1XB7700-P02	310	6SL3320-1TE33-1AA 3
1PH8226-..L...	0.86	151	96.1	1.93 (17.08)	740 (1632)	1XB7700-P02	380	6SL3320-1TE33-8AA 3
1PH8228-..L...	0.86	181	96.3	2.33 (20.62)	870 (1918)	1XB7700-P02	490	6SL3320-1TE35-0AA 3
1PH8083-..M...	0.74	7.3	86.9	0.0064 (0.0566)	32 (70.6)	gk803	18	6SL3120-■TE21-8A■ 0
1PH8087-..M...	0.72	9.6	87.1	0.0089 (0.0788)	39 (86.0)	gk803	18	6SL3120-■TE21-8A■ 0
1PH8103-..M...	0.78	12.2	90	0.0172 (0.1522)	51 (112)	gk813	30	6SL3120-1TE23-0A■ 0
1PH8107-..M...	0.76	19.2	90	0.0289 (0.2558)	73 (161)	gk813	45	6SL3120-1TE24-5AC 0

Single Motor Module	1
Double Motor Module	2
Motor Module	
For continuous load with 200 % overload (C type)	C
For highly dynamic, intermittent load cycles with 300 % overload (D type)	D

1) n_2: Maximum permissible thermal speed at constant power.
2) n_{max}: Maximum speed that must not be exceeded (applicable for standard: 14th position of the Article No. A to H); for performance bearings (14th position = "L"), increased maximum speeds apply; limitations must be taken into consideration where necessary (e.g. with holding brake), see Article No. supplements.
3) I_N: Output current of the Motor Module at rated pulse frequency (see SINAMICS S120 drive system). The rated motor data are valid for 4 kHz (SH 80 to 160) or 2 kHz (SH 180 to 280).
4) The output current of the Motor Module is lower than the rated motor current for the pulse frequency on which it is based.

© Siemens 2024

Selection and ordering data

Rated speed	Shaft height	Rated power	Rated torque	Rated current	Rated voltage	Rated frequency	Operating speed for field weakening, max. [1]	Speed, max. [2]	**SIMOTICS M-1PH8 asynchronous motors Forced ventilation**
n_N	SH	P_N	M_N	I_N	U_N	f_N	n_2	n_{max}	
r/min		kW (hp)	Nm (lb_f-ft)	A	V	Hz	r/min	r/min	Article No.
Line voltage 400 V 3 AC, Active Line Module									
500	100	3.2 (4.3)	61 (45.0)	8.8	345	18.8	1500	7000	**1PH8107-■■B■■-....**
	132	3.6 (4.8)	69 (50.9)	9	328	18.0	1500	6000	**1PH8131-■■B■■-....**
		6.5 (8.7)	124 (91.5)	15.5	363	18.5	1200	6000	**1PH8133-■■B■■-....**
		8 (10.7)	153 (113)	18	380	18.5	1000	6000	**1PH8135-■■B■■-....**
		8.6 (11.5)	165 (122)	18	391	17.8	1400	6000	**1PH8137-■■B■■-....**
	160	12 (16.1)	229 (169)	30	325	17.6	2200	6500	**1PH8163-■■B■■-....**
		16 (21.5)	306 (226)	36	365	17.5	1850	6500	**1PH8165-■■B■■-....**
	180	20.5 (27.5)	392 (289)	49	335	17.4	2900	5000	**1PH8184-■■B■■-....**
		26.5 (35.5)	506 (373)	65	335	17.2	3100	5000	**1PH8186-■■B■■-....**
	225	38 (51.0)	726 (535)	85	335	17.2	2500	4500	**1PH8224-■■B■■-....**
		49 (65.7)	936 (690)	110	330	17.2	2600	4500	**1PH8226-■■B■■-....**
		60 (80.5)	1146 (845)	132	340	17.2	2700	4500	**1PH8228-■■B■■-....**
	280	80 (107)	1529 (1128)	154	395	17.0	1600	3300	**1PH8284-1■B1■-....**
		100 (134)	1909 (1408)	188	400	17.0	1600	3300	**1PH8286-1■B1■-....**
		130 (174)	2481 (1830)	245	395	17.0	1600	3300	**1PH8288-1■B1■-....**
800	180	31 (41.6)	370 (273)	65	365	27.4	3800	5000	**1PH8184-■■C■■-....**
		40 (53.6)	478 (353)	83	360	27.3	4100	5000	**1PH8186-■■C■■-....**
	225	57 (76.4)	681 (502)	126	350	27.1	3400	4500	**1PH8224-■■C■■-....**
		73 (97.9)	872 (643)	154	350	27.1	3600	4500	**1PH8226-■■C■■-....**
		92 (123)	1098 (810)	182	360	27.2	3800	4500	**1PH8228-■■C■■-....**
	280	125 (168)	1492 (1100)	235	400	27.0	2300	3300	**1PH8284-1■C1■-....**
		155 (208)	1850 (1365)	285	385	27.0	2300	3300	**1PH8286-1■C1■-....**
		190 (255)	2268 (1673)	365	370	27.0	2300	3300	**1PH8288-1■C1■-....**
1150	100	4.3 (5.8)	36 (26.6)	10	380	40.7	2450	9000	**1PH8103-■■D■■-....**
		7.2 (9.7)	60 (44.3)	17.5	348	40.6	4750	9000	**1PH8107-■■D■■-....**
	132	9 (12.1)	75 (55.3)	20	360	39.8	3000	8000	**1PH8131-■■D■■-....**
		13.5 (18.1)	112 (82.6)	29	361	40.0	3000	8000	**1PH8133-■■D■■-....**
		19.5 (26.1)	162 (119)	43	350	39.8	4000	8000	**1PH8137-■■D■■-....**
	160	25 (33.5)	208 (153)	55	343	39.2	3550	6500	**1PH8163-■■D■■-....**
		31 (41.6)	257 (190)	69	333	39.2	4850	6500	**1PH8165-■■D■■-....**
	180	44 (59.0)	365 (269)	86	390	39.0	4800	5000	**1PH8184-■■D■■-....**
		58 (77.8)	482 (356)	112	390	38.9	5000	5000	**1PH8186-■■D■■-....**
	225	81 (109)	673 (496)	156	385	38.8	3400	4500	**1PH8224-■■D■■-....**
		105 (141)	872 (643)	192	390	38.8	3400	4500	**1PH8226-■■D■■-....**
		129 (173)	1071 (790)	235	390	38.8	3400	4500	**1PH8228-■■D■■-....**
	280	170 (228)	1414 (1043)	310	400	38.6	2200	3300	**1PH8284-1■D1■-....**
		210 (282)	1745 (1287)	410	380	38.6	2200	3300	**1PH8286-1■D1■-....**
		260 (349)	2160 (1593)	495	385	38.6	2200	3300	**1PH8288-1■D1■-....**

For versions, see Article No. supplements and options.

For footnotes, see next page.

© Siemens 2024

Motor type (repeated)	Power factor	Magnetizing current	Efficiency	Moment of inertia without holding brake	Weight without holding brake, approx.	Terminal box	SINAMICS S120 Motor Module	
							Rated output current [3]	Internal air cooling For further components, see SINAMICS S120 drive system
	cos φ	I_μ	η	J			I_N	
		A	%	kgm² (lb_f-in-s²)	kg (lb)	Type	A	Article No.
1PH8107-..B...	0.83	4.3	73	0.0289 (0.2558)	73 (161)	gk813	9	6SL3120-■TE21-0AD0
1PH8131-..B...	0.88	3.5	81	0.0590 (0.5222)	89 (196)	gk833	9	6SL3120-■TE21-0AD0
1PH8133-..B...	0.89	5.4	78	0.0760 (0.6727)	106 (234)	gk833	18	6SL3120-■TE21-8A■0
1PH8135-..B...	0.90	5.6	78	0.0940 (0.8320)	125 (276)	gk833	18	6SL3120-■TE21-8A■0
1PH8137-..B...	0.88	6.7	82	0.1090 (0.9648)	141 (311)	gk833	18	6SL3120-■TE21-8A■0
1PH8163-..B...	0.90	8.9	81.9	0.2160 (1.9118)	196 (432)	gk863	30	6SL3120-1TE23-0A■0
1PH8165-..B...	0.85	14.8	83	0.2320 (2.0534)	230 (507)	gk863	45	6SL3120-1TE24-5AC0
1PH8184-..B...	0.84	23	86.1	0.489 (4.328)	350 (772)	1XB7322-P05	60	6SL3120-1TE26-0AC0
1PH8186-..B...	0.80	36	87.5	0.652 (5.771)	422 (931)	1XB7322-P05	85	6SL3120-1TE28-5AA3
1PH8224-..B...	0.86	36	89.6	1.48 (13.10)	610 (1345)	1XB7322-P05	85	6SL3120-1TE28-5AA3
1PH8226-..B...	0.86	48	90.8	1.93 (17.08)	740 (1632)	1XB7322-P05	132	6SL3120-1TE31-3AA3
1PH8228-..B...	0.85	59	91.4	2.33 (20.62)	870 (1918)	1XB7322-P05	132	6SL3120-1TE31-3AA3
1PH8284-1.B...	0.81	81	93.5	4.20 (37.17)	1200 (2646)	1XB7700-P02	200	6SL3120-1TE32-0AA4
1PH8286-1.B...	0.82	96	93.9	5.20 (46.03)	1400 (3087)	1XB7700-P02	200	6SL3120-1TE32-0AA4
1PH8288-1.B...	0.82	127	94.1	6.30 (55.76)	1650 (3638)	1XB7700-P02	260	6SL3320-1TE32-6AA3
1PH8184-..C...	0.84	30	90.1	0.489 (4.328)	350 (772)	1XB7322-P05	85	6SL3120-1TE28-5AA3
1PH8186-..C...	0.84	41	91.6	0.652 (5.771)	422 (931)	1XB7322-P05	85	6SL3120-1TE28-5AA3
1PH8224-..C...	0.80	67	93.4	1.48 (13.10)	610 (1345)	1XB7322-P05	132	6SL3120-1TE31-3AA3
1PH8226-..C...	0.83	75	94	1.93 (17.08)	740 (1632)	1XB7322-P05	200	6SL3120-1TE32-0AA4
1PH8228-..C...	0.86	80	94.1	2.33 (20.62)	870 (1918)	1XB7322-P05	200	6SL3120-1TE32-0AA4
1PH8284-1.C...	0.81	124	95.2	4.20 (37.17)	1200 (2646)	1XB7700-P02	260	6SL3320-1TE32-6AA3
1PH8286-1.C...	0.85	133	95.5	5.20 (46.03)	1400 (3087)	1XB7700-P02	310	6SL3320-1TE33-1AA3
1PH8288-1.C...	0.85	171	95.7	6.30 (55.76)	1650 (3638)	1XB7700-P02	380	6SL3320-1TE33-8AA3
1PH8103-..D...	0.81	4.8	82.4	0.0172 (0.1522)	51 (112)	gk813	18	6SL3120-■TE21-8A■0
1PH8107-..D...	0.82	8.2	85.2	0.0289 (0.2558)	73 (161)	gk813	18	6SL3120-■TE21-8A■0
1PH8131-..D...	0.85	8.0	88	0.0590 (0.5222)	89 (196)	gk833	30	6SL3120-1TE23-0A■0
1PH8133-..D...	0.87	10.7	88.4	0.0760 (0.6727)	106 (234)	gk833	30	6SL3120-1TE23-0A■0
1PH8137-..D...	0.87	16.1	89.1	0.1090 (0.9648)	141 (311)	gk833	45	6SL3120-1TE24-5AC0
1PH8163-..D...	0.88	17.5	91.5	0.2160 (1.9118)	196 (432)	gk863	60	6SL3120-1TE26-0AC0
1PH8165-..D...	0.89	20.9	92.1	0.2320 (2.0534)	230 (507)	gk863	85	6SL3120-1TE28-5AA3
1PH8184-..D...	0.82	42	92.8	0.489 (4.328)	350 (772)	1XB7322-P05	85 [4]	6SL3120-1TE28-5AA3
1PH8186-..D...	0.82	57	93.3	0.652 (5.771)	422 (931)	1XB7322-P05	132	6SL3120-1TE31-3AA3
1PH8224-..D...	0.82	78	94.6	1.48 (13.10)	610 (1345)	1XB7322-P05	200	6SL3120-1TE32-0AA4
1PH8226-..D...	0.85	86	94.9	1.93 (17.08)	740 (1632)	1XB7322-P05	200	6SL3120-1TE32-0AA4
1PH8228-..D...	0.86	97	95.3	2.33 (20.62)	870 (1918)	1XB7422-P06	260	6SL3320-1TE32-6AA3
1PH8284-1.D...	0.82	157	96	4.20 (37.17)	1200 (2646)	1XB7700-P02	310	6SL3320-1TE33-1AA3
1PH8286-1.D...	0.81	217	96.2	5.20 (46.03)	1400 (3087)	1XB7700-P02	490	6SL3320-1TE35-0AA3
1PH8288-1.D...	0.82	253	96.4	6.30 (55.76)	1650 (3638)	1XB7700-P02	490 [4]	6SL3320-1TE35-0AA3

Single Motor Module	1
Double Motor Module	2

Motor Module	
For continuous load with 200 % overload (C type)	C
For highly dynamic, intermittent load cycles with 300 % overload (D type)	D

1) n_2: Maximum permissible thermal speed at constant power.
2) n_{max}: Maximum speed that must not be exceeded (applicable for standard: 14th position of the Article No. A to H); for performance bearings (14th position = "L"), increased maximum speeds apply; limitations must be taken into consideration where necessary (e.g. with holding brake), see Article No. supplements.
3) I_N: Output current of the Motor Module at rated pulse frequency (see SINAMICS S120 drive system). The rated motor data are valid for 4 kHz (SH 80 to 160) or 2 kHz (SH 180 to 280).
4) The output current of the Motor Module is lower than the rated motor current for the pulse frequency on which it is based.

© Siemens 2024

Selection and ordering data

Rated speed	Shaft height	Rated power	Rated torque	Rated current	Rated voltage	Rated frequency	Operating speed for field weakening, max. [1]	Speed, max. [2]	**SIMOTICS M-1PH8 asynchronous motors Forced ventilation**
n_N r/min	SH	P_N kW (hp)	M_N Nm (lb_f-ft)	I_N A	U_N V	f_N Hz	n_2 r/min	n_{max} r/min	Article No.
Line voltage 400 V 3 AC, Active Line Module									
1750	80	3.3 (4.4)	18 (13.3)	7.5	398	61.7	5200	10000	**1PH8083-■■F■■-....**
		4.3 (5.8)	23 (17.0)	10	396	61.3	5850	10000	**1PH8087-■■F■■-....**
	100	4.3 (5.8)	23 (17.0)	12.5	304	60.8	5000	9000	**1PH8101-■■F■■-....**
		6.3 (8.4)	34 (25.1)	13.1	412	60.8	4000	9000	**1PH8103-■■F■■-....**
		8 (10.7)	44 (32.5)	17.5	400	60.2	5900	9000	**1PH8105-■■F■■-....**
		10 (13.4)	55 (40.6)	22	380	60.4	5000	9000	**1PH8107-■■F■■-....**
	132	13 (17.4)	71 (52.4)	24	416	59.8	5150	8000	**1PH8131-■■F■■-....**
		17.5 (23.5)	96 (70.8)	34	392	59.7	5000	8000	**1PH8133-■■F■■-....**
		21.5 (28.8)	117 (86.3)	43	383	59.6	5500	8000	**1PH8135-■■F■■-....**
		25 (33.5)	136 (100)	56	353	59.6	5000	8000	**1PH8137-■■F■■-....**
	160	34 (45.6)	186 (137)	70	366	59.2	3050	6500	**1PH8163-■■F■■-....**
		41 (55.0)	224 (165)	76	400	59.1	2650	6500	**1PH8165-■■F■■-....**
	180	60 (80.5)	327 (241)	120	390	58.9	5000	5000	**1PH8184-■■F■■-....**
		85 (114)	464 (342)	164	385	58.9	5000	5000	**1PH8186-■■F■■-....**
	225	110 (148)	600 (443)	198	395	58.9	3200	4500	**1PH8224-■■F■■-....**
		135 (181)	737 (544)	250	395	58.8	3300	4500	**1PH8226-■■F■■-....**
		179 (240)	977 (721)	330	395	58.7	3400	4500	**1PH8228-■■F■■-....**
	280	225 (302)	1228 (906)	390	400	58.7	2200	3300	**1PH8284-1■F1■-....**
		270 (362)	1474 (1087)	460	400	58.7	2200	3300	**1PH8286-1■F1■-....**
		340 (456)	1856 (1369)	580	400	58.7	2200	3300	**1PH8288-1■F1■-....**
2300	80	4.1 (5.5)	17 (12.5)	11.3	332	80.0	10000	10000	**1PH8083-■■G■■-....**
		5.4 (7.2)	22 (16.2)	13.7	353	79.8	9650	10000	**1PH8087-■■G■■-....**
	100	7.5 (10.1)	31 (22.9)	17	382	78.9	6000	9000	**1PH8103-■■G■■-....**
		12.0 (16.1)	50 (36.9)	26	406	78.6	4600	9000	**1PH8107-■■G■■-....**
	132	22.5 (30.2)	93 (68.6)	44	400	78.1	5000	8000	**1PH8133-■■G■■-....**
		24 (32.2)	100 (73.8)	50	370	77.9	5000	8000	**1PH8135-■■G■■-....**
		29 (38.9)	120 (88.5)	56	400	77.9	5000	8000	**1PH8137-■■G■■-....**
	160	38 (51.0)	158 (117)	78	370	77.4	3200	6500	**1PH8163-■■G■■-....**
		44 (59.0)	183 (135)	85	394	77.4	3000	6500	**1PH8165-■■G■■-....**
2900	180	81 (109)	267 (197)	152	395	97.3	5000	5000	**1PH8184-■■L■■-....**
		101 (135)	333 (246)	198	385	97.2	5000	5000	**1PH8186-■■L■■-....**
	225	149 (200)	491 (362)	270	395	97.2	3300	4500	**1PH8224-■■L■■-....**
		185 (248)	609 (449)	335	390	97.1	3300	4500	**1PH8226-■■L■■-....**
		215 (288)	708 (522)	390	395	97.1	3300	4500	**1PH8228-■■L■■-....**
3300	80	4.5 (6.0)	13 (9.59)	13.5	327	112.6	10000	10000	**1PH8083-■■M■■-....**
		5.2 (7.0)	15 (11.1)	17.1	303	112.3	10000	10000	**1PH8087-■■M■■-....**
	100	9.3 (12.5)	27 (19.9)	25.7	326	112.1	16000	9000	**1PH8103-■■M■■-....**
		13 (17.4)	38 (28.0)	38	314	111.7	18000	9000	**1PH8107-■■M■■-....**

For versions, see Article No. supplements and options.

For footnotes, see next page.

© Siemens 2024

Motor type (repeated)	Power factor	Magnetizing current	Efficiency	Moment of inertia without holding brake	Weight without holding brake, approx.	Terminal box	SINAMICS S120 Motor Module	
							Rated output current [3]	Internal air cooling For further components, see SINAMICS S120 drive system
	cos φ	I_μ	η	J			I_N	
		A	%	kgm² (lb$_f$-in-s²)	kg (lb)	Type	A	Article No.
1PH8083-. . F . . .	0.80	3.8	83.1	0.0064 (0.0566)	32 (70.6)	gk803	9	6SL3120-■TE21-0AD 0
1PH8087-. . F . . .	0.78	5.3	83.8	0.0089 (0.0788)	39 (86.0)	gk803	18	6SL3120-■TE21-8A■ 0
1PH8101-. . F . . .	0.80	6.0	85.2	0.0138 (0.1221)	42 (92.6)	gk813	18	6SL3120-■TE21-8A■ 0
1PH8103-. . F . . .	0.81	6.0	85.9	0.0172 (0.1522)	51 (112)	gk813	18	6SL3120-■TE21-8A■ 0
1PH8105-. . F . . .	0.78	8.8	87.8	0.0252 (0.2230)	65 (143)	gk813	18	6SL3120-■TE21-8A■ 0
1PH8107-. . F . . .	0.80	10.9	87.8	0.0289 (0.2558)	73 (161)	gk813	30	6SL3120-1TE23-0A■ 0
1PH8131-. . F . . .	0.84	10.3	91.4	0.0590 (0.5222)	89 (196)	gk833	30	6SL3120-1TE23-0A■ 0
1PH8133-. . F . . .	0.85	13.6	91.3	0.0760 (0.6727)	106 (234)	gk833	45	6SL3120-1TE24-5AC 0
1PH8135-. . F . . .	0.84	18.3	90.9	0.0940 (0.8320)	125 (276)	gk833	45	6SL3120-1TE24-5AC 0
1PH8137-. . F . . .	0.86	23.1	90.7	0.1090 (0.9648)	141 (311)	gk833	60	6SL3120-1TE26-0AC 0
1PH8163-. . F . . .	0.87	24.6	92.6	0.2160 (1.9118)	196 (432)	gk863	85	6SL3120-1TE28-5AA 3
1PH8165-. . F . . .	0.88	25.8	93.4	0.2320 (2.0534)	230 (507)	gk863	85	6SL3120-1TE28-5AA 3
1PH8184-. . F . . .	0.79	64	94.4	0.489 (4.328)	350 (772)	1XB7322-P05	132	6SL3120-1TE31-3AA 3
1PH8186-. . F . . .	0.82	83	94.9	0.652 (5.771)	422 (931)	1XB7322-P05	200	6SL3120-1TE32-0AA 4
1PH8224-. . F . . .	0.85	87	95.6	1.48 (13.10)	610 (1345)	1XB7322-P05	200	6SL3120-1TE32-0AA 4
1PH8226-. . F . . .	0.83	119	96	1.93 (17.08)	740 (1632)	1XB7422-P06	310	6SL3320-1TE33-1AA 3
1PH8228-. . F . . .	0.82	170	96.1	2.33 (20.62)	870 (1918)	1XB7700-P02	380	6SL3320-1TE33-8AA 3
1PH8284-1. F . . .	0.86	162	96.4	4.20 (37.17)	1200 (2646)	1XB7700-P02	490	6SL3320-1TE35-0AA 3
1PH8286-1. F . . .	0.88	183	96.6	5.20 (46.03)	1400 (3087)	1XB7700-P02	490	6SL3320-1TE35-0AA 3
1PH8288-1. F . . .	0.88	233	96.7	6.30 (55.76)	1650 (3638)	1XB7712-P03	745	6SL3320-1TE37-5AA 3
1PH8083-. . G . . .	0.78	5.7	85.2	0.0064 (0.0566)	32 (70.6)	gk803	18	6SL3120-■TE21-8A■ 0
1PH8087-. . G . . .	0.79	6.8	85.9	0.0089 (0.0788)	39 (86.0)	gk803	18	6SL3120-■TE21-8A■ 0
1PH8103-. . G . . .	0.79	8.1	89.1	0.0172 (0.1522)	51 (112)	gk813	18	6SL3120-■TE21-8A■ 0
1PH8107-. . G . . .	0.78	13.0	90.9	0.0289 (0.2558)	73 (161)	gk813	30	6SL3120-1TE23-0A■ 0
1PH8133-. . G . . .	0.84	18.1	93.3	0.0760 (0.6727)	106 (234)	gk833	45	6SL3120-1TE24-5AC 0
1PH8135-. . G . . .	0.85	20.6	91.9	0.0940 (0.8320)	125 (276)	gk833	60	6SL3120-1TE26-0AC 0
1PH8137-. . G . . .	0.86	21.9	92.9	0.1090 (0.9648)	141 (311)	gk833	60	6SL3120-1TE26-0AC 0
1PH8163-. . G . . .	0.87	28.2	93.5	0.2160 (1.9118)	196 (432)	gk863	85	6SL3120-1TE28-5AA 3
1PH8165-. . G . . .	0.86	31.0	93.2	0.2320 (2.0534)	230 (507)	gk863	85	6SL3120-1TE28-5AA 3
1PH8184-. . L . . .	0.82	76	95.2	0.489 (4.328)	350 (772)	1XB7322-P05	200	6SL3120-1TE32-0AA 4
1PH8186-. . L . . .	0.80	106	95.4	0.652 (5.771)	422 (931)	1XB7422-P06	260	6SL3320-1TE32-6AA 3
1PH8224-. . L . . .	0.85	115	95.7	1.48 (13.10)	610 (1345)	1XB7700-P02	310	6SL3320-1TE33-1AA 3
1PH8226-. . L . . .	0.85	152	96	1.93 (17.08)	740 (1632)	1XB7700-P02	380	6SL3320-1TE33-8AA 3
1PH8228-. . L . . .	0.84	183	96.1	2.33 (20.62)	870 (1918)	1XB7700-P02	490	6SL3320-1TE35-0AA 3
1PH8083-. . M . . .	0.74	7.3	87.5	0.0064 (0.0566)	32 (70.6)	gk803	18	6SL3120-■TE21-8A■ 0
1PH8087-. . M . . .	0.73	9.2	87.8	0.0089 (0.0788)	39 (86.0)	gk803	18	6SL3120-■TE21-8A■ 0
1PH8103-. . M . . .	0.78	12.2	90	0.0172 (0.1522)	51 (112)	gk813	30	6SL3120-1TE23-0A■ 0
1PH8107-. . M . . .	0.78	12.2	90	0.0289 (0.2558)	73 (161)	gk813	45	6SL3120-1TE24-5AC 0

Single Motor Module	1
Double Motor Module	2
Motor Module	
For continuous load with 200 % overload (C type)	C
For highly dynamic, intermittent load cycles with 300 % overload (D type)	D

1) n_2: Maximum permissible thermal speed at constant power.
2) n_{max}: Maximum speed that must not be exceeded (applicable for standard: 14th position of the Article No. A to H); for performance bearings (14th position = "L"), increased maximum speeds apply; limitations must be taken into consideration where necessary (e.g. with holding brake), see Article No. supplements.
3) I_N: Output current of the Motor Module at rated pulse frequency (see SINAMICS S120 drive system).
The rated motor data are valid for 4 kHz (SH 80 to 160) or 2 kHz (SH 180 to 280).

© Siemens 2024

Selection and ordering data

Rated speed	Shaft height	Rated power	Rated torque	Rated current	Rated voltage	Rated frequency	Operating speed for field weakening, max. [1]	Speed, max. [2]	**SIMOTICS M-1PH8 asynchronous motors Forced ventilation**
n_N	SH	P_N	M_N	I_N	U_N	f_N	n_2	n_{max}	
r/min		kW (hp)	Nm (lb_f-ft)	A	V	Hz	r/min	r/min	Article No.
Line voltage 480 V 3 AC, Smart/Basic Line Module									
600	100	3.8 (5.1)	60 (44.3)	8.8	406	22.0	1500	7000	**1PH8107-■■B■■-....**
	132	4.3 (5.8)	68 (50.2)	9	384	21.3	1500	6000	**1PH8131-■■B■■-....**
		7.8 (10.5)	124 (91.5)	15.5	421	21.8	1200	6000	**1PH8133-■■B■■-....**
		9.6 (12.9)	153 (113)	18	443	21.9	1000	6000	**1PH8135-■■B■■-....**
		10.3 (13.8)	165 (122)	18	458	21.4	1300	6000	**1PH8137-■■B■■-....**
	160	14.5 (19.4)	231 (170)	30	370	21.0	2150	6500	**1PH8163-■■B■■-....**
		19 (25.5)	302 (223)	35	420	20.8	1800	6500	**1PH8165-■■B■■-....**
	180	25 (33.5)	398 (294)	49	410	20.7	3000	5000	**1PH8184-■■B■■-....**
		32 (42.9)	509 (375)	66	400	20.6	3200	5000	**1PH8186-■■B■■-....**
	225	45 (60.3)	716 (528)	83	405	20.5	2600	4500	**1PH8224-■■B■■-....**
		59 (79.1)	939 (693)	110	395	20.5	2700	4500	**1PH8226-■■B■■-....**
		72 (96.6)	1146 (845)	130	410	20.5	2800	4500	**1PH8228-■■B■■-....**
	280	95 (127)	1519 (1120)	154	460	20.3	1800	3300	**1PH8284-1■B1■-....**
		120 (161)	1916 (1413)	188	460	20.3	1800	3300	**1PH8286-1■B1■-....**
		155 (208)	2474 (1825)	245	460	20.3	1800	3300	**1PH8288-1■B1■-....**
1000	180	39 (52.3)	372 (274)	65	460	34.0	3700	5000	**1PH8184-■■C■■-....**
		50 (67.0)	478 (353)	83	450	33.9	4000	5000	**1PH8186-■■C■■-....**
	225	71 (95.2)	678 (500)	126	425	33.8	3700	4500	**1PH8224-■■C■■-....**
		92 (123)	879 (648)	156	440	33.8	3900	4500	**1PH8226-■■C■■-....**
		115 (154)	1098 (810)	182	450	33.8	4000	4500	**1PH8228-■■C■■-....**
	280	150 (201)	1433 (1057)	230	455	33.7	2300	3300	**1PH8284-1■C1■-....**
		185 (248)	1767 (1303)	280	460	33.7	2300	3300	**1PH8286-1■C1■-....**
		230 (308)	2197 (1621)	355	460	33.6	2300	3300	**1PH8288-1■C1■-....**
1350	100	4.7 (6.3)	33 (24.3)	9.7	423	47.3	3500	9000	**1PH8103-■■D■■-....**
		8.0 (10.7)	57 (42.0)	17	400	47.1	5045	9000	**1PH8107-■■D■■-....**
	132	10.6 (14.2)	75 (55.3)	20	416	46.5	3000	8000	**1PH8131-■■D■■-....**
		15 (20.1)	106 (78.2)	28	417	46.5	3500	8000	**1PH8133-■■D■■-....**
		22 (29.5)	156 (115)	42	404	46.4	4000	8000	**1PH8137-■■D■■-....**
	160	28 (37.5)	198 (146)	52	400	45.8	4000	6500	**1PH8163-■■D■■-....**
		34 (45.6)	241 (178)	66	387	45.8	5600	6500	**1PH8165-■■D■■-....**
	180	50 (67.0)	354 (261)	84	450	45.7	5000	5000	**1PH8184-■■D■■-....**
		67 (89.8)	474 (350)	112	450	45.6	5000	5000	**1PH8186-■■D■■-....**
	225	92 (123)	651 (480)	154	450	45.5	3400	4500	**1PH8224-■■D■■-....**
		120 (161)	849 (626)	188	460	45.5	3400	4500	**1PH8226-■■D■■-....**
		147 (197)	1040 (767)	225	460	45.5	3400	4500	**1PH8228-■■D■■-....**
	280	200 (268)	1416 (1044)	315	460	45.3	2200	3300	**1PH8284-1■D1■-....**
		245 (329)	1733 (1278)	410	445	45.3	2200	3300	**1PH8286-1■D1■-....**
		305 (409)	2158 (1592)	495	450	45.3	2200	3300	**1PH8288-1■D1■-....**

For versions, see Article No. supplements and options.

For footnotes, see next page.

© Siemens 2024

Motor type (repeated)	Power factor	Magnetizing current	Efficiency	Moment of inertia without holding brake	Weight without holding brake, approx.	Terminal box	SINAMICS S120 Motor Module	
							Rated output current [3]	Internal air cooling For further components, see SINAMICS S120 drive system
	cos φ	I_μ	η	J			I_N	
		A	%	kgm² (lb_f-in-s²)	kg (lb)	Type	A	Article No.
1PH8107-. . B . . .	0.82	4.4	76	0.0289 (0.2558)	73 (161)	gk813	9	6SL3120-■TE21-0AD 0
1PH8131-. . B . . .	0.88	3.5	83	0.0590 (0.5222)	89 (196)	gk833	9	6SL3120-■TE21-0AD 0
1PH8133-. . B . . .	0.89	5.3	81	0.0760 (0.6727)	106 (234)	gk833	18	6SL3120-■TE21-8A■ 0
1PH8135-. . B . . .	0.90	5.6	81	0.0940 (0.8320)	125 (276)	gk833	18	6SL3120-■TE21-8A■ 0
1PH8137-. . B . . .	0.88	6.8	85	0.1090 (0.9648)	141 (311)	gk833	18	6SL3120-■TE21-8A■ 0
1PH8163-. . B . . .	0.90	8.1	85.1	0.2160 (1.9118)	196 (432)	gk863	30	6SL3120-1TE23-0A■ 0
1PH8165-. . B . . .	0.88	12.0	85	0.2320 (2.0534)	230 (507)	gk863	45	6SL3120-1TE24-5AC 0
1PH8184-. . B . . .	0.81	26	88.2	0.489 (4.328)	350 (772)	1XB7322-P05	60	6SL3120-1TE26-0AC 0
1PH8186-. . B . . .	0.79	37	89.2	0.652 (5.771)	422 (931)	1XB7322-P05	85	6SL3120-1TE28-5AA 3
1PH8224-. . B . . .	0.85	37	91.2	1.48 (13.10)	610 (1345)	1XB7322-P05	85	6SL3120-1TE28-5AA 3
1PH8226-. . B . . .	0.85	49	92.1	1.93 (17.08)	740 (1632)	1XB7322-P05	132	6SL3120-1TE31-3AA 3
1PH8228-. . B . . .	0.84	62	92.7	2.33 (20.62)	870 (1918)	1XB7322-P05	132	6SL3120-1TE31-3AA 3
1PH8284-1. B . . .	0.82	77	94.3	4.20 (37.17)	1200 (2646)	1XB7700-P02	200	6SL3120-1TE32-0AA 4
1PH8286-1. B . . .	0.85	88	94.5	5.20 (46.03)	1400 (3087)	1XB7700-P02	200	6SL3120-1TE32-0AA 4
1PH8288-1. B . . .	0.84	121	94.8	6.30 (55.76)	1650 (3638)	1XB7700-P02	260	6SL3320-1TE32-6AA 3
1PH8184-. . C . . .	0.82	32	91.7	0.489 (4.328)	350 (772)	1XB7322-P05	85	6SL3120-1TE28-5AA 0
1PH8186-. . C . . .	0.83	42	92.9	0.652 (5.771)	422 (931)	1XB7322-P05	85	6SL3120-1TE28-5AA 3
1PH8224-. . C . . .	0.81	64	94.3	1.48 (13.10)	610 (1345)	1XB7322-P05	132	6SL3120-1TE31-3AA 3
1PH8226-. . C . . .	0.82	77	94.8	1.93 (17.08)	740 (1632)	1XB7322-P05	200	6SL3120-1TE32-0AA 4
1PH8228-. . C . . .	0.85	82	94.9	2.33 (20.62)	870 (1918)	1XB7322-P05	200	6SL3120-1TE32-0AA 4
1PH8284-1. C . . .	0.86	101	95.7	4.20 (37.17)	1200 (2646)	1XB7700-P02	260	6SL3320-1TE32-6AA 3
1PH8286-1. C . . .	0.86	122	96	5.20 (46.03)	1400 (3087)	1XB7700-P02	310	6SL3320-1TE33-1AA 3
1PH8288-1. C . . .	0.84	172	96.2	6.30 (55.76)	1650 (3638)	1XB7700-P02	380	6SL3320-1TE33-8AA 3
1PH8103-. . D . . .	0.82	4.4	84.8	0.0172 (0.1522)	51 (112)	gk813	18	6SL3120-■TE21-8A■ 0
1PH8107-. . D . . .	0.80	8.2	86.7	0.0289 (0.2558)	73 (161)	gk813	18	6SL3120-■TE21-8A■ 0
1PH8131-. . D . . .	0.86	7.9	90	0.0590 (0.5222)	89 (196)	gk833	30	6SL3120-1TE23-0A■ 0
1PH8133-. . D . . .	0.86	10.7	90.4	0.0760 (0.6727)	106 (234)	gk833	30	6SL3120-1TE23-0A■ 0
1PH8137-. . D . . .	0.86	15.9	90.2	0.1090 (0.9648)	141 (311)	gk833	45	6SL3120-1TE24-5AC 0
1PH8163-. . D . . .	0.88	17.7	92.4	0.2160 (1.9118)	196 (432)	gk863	60	6SL3120-1TE26-0AC 0
1PH8165-. . D . . .	0.86	22.5	92.8	0.2320 (2.0534)	230 (507)	gk863	85	6SL3120-1TE28-5AA 3
1PH8184-. . D . . .	0.82	41	93.6	0.489 (4.328)	350 (772)	1XB7322-P05	85	6SL3120-1TE28-5AA 3
1PH8186-. . D . . .	0.82	55	93.9	0.652 (5.771)	422 (931)	1XB7322-P05	132	6SL3120-1TE31-3AA 3
1PH8224-. . D . . .	0.81	78	95.1	1.48 (13.10)	610 (1345)	1XB7322-P05	200	6SL3120-1TE32-0AA 4
1PH8226-. . D . . .	0.84	88	95.4	1.93 (17.08)	740 (1632)	1XB7322-P05	200	6SL3120-1TE32-0AA 4
1PH8228-. . D . . .	0.86	99	95.7	2.33 (20.62)	870 (1918)	1XB7422-P06	260	6SL3320-1TE32-6AA 3
1PH8284-1. D . . .	0.83	151	96.2	4.20 (37.17)	1200 (2646)	1XB7700-P02	310 [4]	6SL3320-1TE33-1AA 3
1PH8286-1. D . . .	0.81	217	96.3	5.20 (46.03)	1400 (3087)	1XB7700-P02	490	6SL3320-1TE35-0AA 3
1PH8288-1. D . . .	0.82	251	96.5	6.30 (55.76)	1650 (3638)	1XB7700-P02	490 [4]	6SL3320-1TE35-0AA 3

Single Motor Module	1
Double Motor Module	2

Motor Module	
For continuous load with 200 % overload (C type)	C
For highly dynamic, intermittent load cycles with 300 % overload (D type)	D

1) n_2: Maximum permissible thermal speed at constant power.
2) n_{max}: Maximum speed that must not be exceeded (applicable for standard: 14th position of the Article No. A to H); for performance bearings (14th position = "L"), increased maximum speeds apply; limitations must be taken into consideration where necessary (e.g. with holding brake), see Article No. supplements.
3) I_N: Output current of the Motor Module at rated pulse frequency (see SINAMICS S120 drive system). The rated motor data are valid for 4 kHz (SH 80 to 160) or 2 kHz (SH 180 to 280).
4) The output current of the Motor Module is lower than the rated motor current for the pulse frequency on which it is based.

© Siemens 2024

Selection and ordering data

Rated speed	Shaft height	Rated power	Rated torque	Rated current	Rated voltage	Rated frequency	Operating speed for field weakening, max. [1]	Speed, max. [2]	SIMOTICS M-1PH8 asynchronous motors Forced ventilation
n_N r/min	SH	P_N kW (hp)	M_N Nm (lb_f-ft)	I_N A	U_N V	f_N Hz	n_2 r/min	n_{max} r/min	Article No.
Line voltage 480 V 3 AC, Smart/Basic Line Module									
2000	80	3.7 (5.0)	18 (13.3)	7.6	447	70.0	5550	10000	**1PH8083-■■F■■-....**
		4.9 (6.6)	23 (17.0)	10	435	69.9	6100	10000	**1PH8087-■■F■■-....**
	100	4.7 (6.3)	22 (16.2)	12.5	343	69.0	7500	9000	**1PH8101-■■F■■-....**
		7 (9.39)	33 (24.3)	12.7	460	69.1	4100	9000	**1PH8103-■■F■■-....**
		9 (12.1)	43 (31.7)	17	453	68.5	6180	9000	**1PH8105-■■F■■-....**
		11 (14.8)	53 (39.1)	21.5	428	68.6	5500	9000	**1PH8107-■■F■■-....**
	132	15 (20.1)	72 (53.1)	24	460	68.2	5300	8000	**1PH8131-■■F■■-....**
		20 (26.8)	96 (70.8)	34	445	68.0	6200	8000	**1PH8133-■■F■■-....**
		24 (32.2)	115 (84.8)	43	434	67.9	7100	8000	**1PH8135-■■F■■-....**
		28 (37.5)	134 (98.8)	55	401	67.9	4000	8000	**1PH8137-■■F■■-....**
	160	37 (49.6)	177 (131)	68	416	67.4	3550	6500	**1PH8163-■■F■■-....**
		45 (60.3)	215 (159)	75	440	67.5	3300	6500	**1PH8165-■■F■■-....**
	180	68 (91.2)	325 (240)	118	450	67.2	5000	5000	**1PH8184-■■F■■-....**
		94 (126)	449 (331)	160	445	67.2	5000	5000	**1PH8186-■■F■■-....**
	225	124 (166)	592 (437)	196	460	67.2	2900	4500	**1PH8224-■■F■■-....**
		153 (205)	731 (539)	245	450	67.1	3100	4500	**1PH8226-■■F■■-....**
		196 (263)	936 (690)	325	450	67.1	3200	4500	**1PH8228-■■F■■-....**
	280	255 (342)	1218 (898)	390	455	67.0	2200	3300	**1PH8284-1■F1■-....**
		310 (416)	1481 (1092)	460	455	67.0	2200	3300	**1PH8286-1■F1■-....**
		385 (516)	1838 (1356)	570	455	67.0	2200	3300	**1PH8288-1■F1■-....**
2650	80	4.6 (6.2)	17 (12.5)	11.2	376	91.6	10000	10000	**1PH8083-■■G■■-....**
		6 (8.05)	22 (16.2)	13.6	390	91.6	10000	10000	**1PH8087-■■G■■-....**
	100	8 (10.7)	29 (21.4)	16	434	90.4	7500	9000	**1PH8103-■■G■■-....**
		13.0 (17.4)	47 (34.7)	24	460	90.0	7000	9000	**1PH8107-■■G■■-....**
	132	24 (32.2)	86 (63.4)	41	456	89.6	7000	8000	**1PH8133-■■G■■-....**
		26 (34.9)	94 (69.3)	48	424	89.6	6000	8000	**1PH8135-■■G■■-....**
		30 (40.2)	108 (79.7)	52	460	89.4	4250	8000	**1PH8137-■■G■■-....**
	160	40 (53.6)	144 (106)	76	390	89.2	3500	6500	**1PH8163-■■G■■-....**
		50 (67.0)	180 (133)	85	440	89.0	3250	6500	**1PH8165-■■G■■-....**
3400	180	65 (87.2)	183 (135)	120	460	113.7	5000	5000	**1PH8184-■■L■■-....**
		81 (109)	228 (168)	158	455	113.7	5000	5000	**1PH8186-■■L■■-....**
	225	85 (114)	239 (176)	168	460	113.6	3600	4500	**1PH8224-■■L■■-....**
		90 (121)	253 (187)	205	460	113.5	3600	4500	**1PH8226-■■L■■-....**
		95 (127)	267 (197)	225	460	113.5	3600	4500	**1PH8228-■■L■■-....**
3600	80	4.9 (6.6)	13 (9.59)	14	355	122.6	10000	10000	**1PH8083-■■M■■-....**
		5.7 (7.6)	15 (11.1)	17.1	329	122.4	10000	10000	**1PH8087-■■M■■-....**
	100	10 (13.4)	27 (19.9)	25.4	355	122.1	17650	9000	**1PH8103-■■M■■-....**
		14 (18.8)	37 (27.3)	37.5	350	121.6	18000	9000	**1PH8107-■■M■■-....**

For versions, see Article No. supplements and options.

For footnotes, see next page.

© Siemens 2024

Motor type (repeated)	Power factor	Magnetizing current	Efficiency	Moment of inertia without holding brake	Weight without holding brake, approx.	Terminal box	SINAMICS S120 Motor Module	
							Rated output current [3]	Internal air cooling For further components, see SINAMICS S120 drive system
	cos φ	I_μ	η	J			I_N	
		A	%	kgm² (lb$_f$-in-s²)	kg (lb)	Type	A	Article No.
1PH8083-. . F . . .	0.79	3.7	85	0.0064 (0.0566)	32 (70.6)	gk803	9	6SL3120-■TE21-0AD 0
1PH8087-. . F . . .	0.80	4.9	86.4	0.0089 (0.0788)	39 (86.0)	gk803	18	6SL3120-■TE21-8A■ 0
1PH8101-. . F . . .	0.79	6.0	87.1	0.0138 (0.1221)	42 (92.6)	gk813	18	6SL3120-■TE21-8A■ 0
1PH8103-. . F . . .	0.81	5.8	89.4	0.0172 (0.1522)	51 (112)	gk813	18	6SL3120-■TE21-8A■ 0
1PH8105-. . F . . .	0.78	8.7	91.1	0.0252 (0.2230)	65 (143)	gk813	18	6SL3120-■TE21-8A■ 0
1PH8107-. . F . . .	0.79	10.8	90.1	0.0289 (0.2558)	73 (161)	gk813	30	6SL3120-1TE23-0A■ 0
1PH8131-. . F . . .	0.86	9.2	93.1	0.0590 (0.5222)	89 (196)	gk833	30	6SL3120-1TE23-0A■ 0
1PH8133-. . F . . .	0.85	13.5	93.3	0.0760 (0.6727)	106 (234)	gk833	45	6SL3120-1TE24-5AC 0
1PH8135-. . F . . .	0.84	18.1	92.9	0.0940 (0.8320)	125 (276)	gk833	45	6SL3120-1TE24-5AC 0
1PH8137-. . F . . .	0.84	23.1	93.1	0.1090 (0.9648)	141 (311)	gk833	60	6SL3120-1TE26-0AC 0
1PH8163-. . F . . .	0.86	24.6	93.2	0.2160 (1.9118)	196 (432)	gk863	85	6SL3120-1TE28-5AA 3
1PH8165-. . F . . .	0.89	23.6	93.6	0.2320 (2.0534)	230 (507)	gk863	85	6SL3120-1TE28-5AA 3
1PH8184-. . F . . .	0.78	65	94.7	0.489 (4.328)	350 (772)	1XB7322-P05	132	6SL3120-1TE31-3AA 3
1PH8186-. . F . . .	0.80	86	95.2	0.652 (5.771)	422 (931)	1XB7322-P05	200	6SL3120-1TE32-0AA 4
1PH8224-. . F . . .	0.83	90	95.7	1.48 (13.10)	610 (1345)	1XB7322-P05	200	6SL3120-1TE32-0AA 4
1PH8226-. . F . . .	0.83	119	96.1	1.93 (17.08)	740 (1632)	1XB7422-P06	310	6SL3320-1TE33-1AA 3
1PH8228-. . F . . .	0.81	169	96.2	2.33 (20.62)	870 (1918)	1XB7700-P02	380	6SL3320-1TE33-8AA 3
1PH8284-1. F . . .	0.86	162	96.5	4.20 (37.17)	1200 (2646)	1XB7700-P02	490	6SL3320-1TE35-0AA 3
1PH8286-1. F . . .	0.88	182	96.7	5.20 (46.03)	1400 (3087)	1XB7700-P02	490	6SL3320-1TE35-0AA 3
1PH8288-1. F . . .	0.88	232	96.7	6.30 (55.76)	1650 (3638)	1XB7712-P03	745	6SL3320-1TE37-5AA 3
1PH8083-. . G . . .	0.78	5.7	86.2	0.0064 (0.0566)	32 (70.6)	gk803	18	6SL3120-■TE21-8A■ 0
1PH8087-. . G . . .	0.79	6.5	88.4	0.0089 (0.0788)	39 (86.0)	gk803	18	6SL3120-■TE21-8A■ 0
1PH8103-. . G . . .	0.78	8.1	91.3	0.0172 (0.1522)	51 (112)	gk813	18	6SL3120-■TE21-8A■ 0
1PH8107-. . G . . .	0.77	12.8	93.2	0.0289 (0.2558)	73 (161)	gk813	30	6SL3120-1TE23-0A■ 0
1PH8133-. . G . . .	0.83	18.1	94.9	0.0760 (0.6727)	106 (234)	gk833	45	6SL3120-1TE24-5AC 0
1PH8135-. . G . . .	0.84	20.6	92.3	0.0940 (0.8320)	125 (276)	gk833	60	6SL3120-1TE26-0AC 0
1PH8137-. . G . . .	0.83	22.4	94.1	0.1090 (0.9648)	141 (311)	gk833	60	6SL3120-1TE26-0AC 0
1PH8163-. . G . . .	0.89	23.1	93.6	0.2160 (1.9118)	196 (432)	gk863	85	6SL3120-1TE28-5AA 3
1PH8165-. . G . . .	0.87	28.9	93.2	0.2320 (2.0534)	230 (507)	gk863	85	6SL3120-1TE28-5AA 3
1PH8184-. . L . . .	0.72	77	94.4	0.489 (4.328)	350 (772)	1XB7322-P05	200	6SL3120-1TE32-0AA 4
1PH8186-. . L . . .	0.69	109	94.3	0.652 (5.771)	422 (931)	1XB7422-P06	260	6SL3320-1TE32-6AA 3
1PH8224-. . L . . .	0.68	115	93.4	1.48 (13.10)	610 (1345)	1XB7700-P02	310	6SL3320-1TE33-1AA 3
1PH8226-. . L . . .	0.60	156	92.6	1.93 (17.08)	740 (1632)	1XB7700-P02	380	6SL3320-1TE33-8AA 3
1PH8228-. . L . . .	0.57	183	92.2	2.33 (20.62)	870 (1918)	1XB7700-P02	490	6SL3320-1TE35-0AA 3
1PH8083-. . M . . .	0.74	7.3	88.1	0.0064 (0.0566)	32 (70.6)	gk803	18	6SL3120-■TE21-8A■ 0
1PH8087-. . M . . .	0.73	9.2	87.8	0.0089 (0.0788)	39 (86.0)	gk803	18	6SL3120-■TE21-8A■ 0
1PH8103-. . M . . .	0.77	12.3	91	0.0172 (0.1522)	51 (112)	gk813	30	6SL3120-1TE23-0A■ 0
1PH8107-. . M . . .	0.77	12.3	91	0.0289 (0.2558)	73 (161)	gk813	45	6SL3120-1TE24-5AC 0

Single Motor Module	1
Double Motor Module	2
Motor Module	
For continuous load with 200 % overload (C type)	C
For highly dynamic, intermittent load cycles with 300 % overload (D type)	D

1) n_2: Maximum permissible thermal speed at constant power.
2) n_{max}: Maximum speed that must not be exceeded (applicable for standard: 14th position of the Article No. A to H); for performance bearings (14th position = "L"), increased maximum speeds apply; limitations must be taken into consideration where necessary (e.g. with holding brake), see Article No. supplements.
3) I_N: Output current of the Motor Module at rated pulse frequency (see SINAMICS S120 drive system).
The rated motor data are valid for 4 kHz (SH 80 to 160) or 2 kHz (SH 180 to 280).

© Siemens 2024

Selection and ordering data

Rated speed	Shaft height	Rated power	Rated torque	Rated current	Rated voltage	Rated frequency	Operating speed for field weakening, max. [1]	Speed, max. [2]	**SIMOTICS M-1PH8 asynchronous motors Forced ventilation**
n_N	SH	P_N	M_N	I_N	U_N	f_N	n_2	n_{max}	
r/min		kW (hp)	Nm (lb_f-ft)	A	V	Hz	r/min	r/min	Article No.
Line voltage 480 V 3 AC, Active Line Module									
700	100	4.4 (5.9)	60 (44.3)	8.7	452	25.5	1500	7000	**1PH8107-■■B■■-....**
	132	4.9 (6.6)	67 (49.4)	9	450	24.6	1500	6000	**1PH8131-■■B■■-....**
		9.1 (12.2)	124 (91.5)	15.5	480	25.2	1200	6000	**1PH8133-■■B■■-....**
		11.2 (15.0)	153 (113)	18	500	25.3	1000	6000	**1PH8135-■■B■■-....**
		11.5 (15.4)	157 (116)	17.5	500	24.9	1300	6000	**1PH8137-■■B■■-....**
	160	16.9 (22.7)	231 (170)	30	427	24.4	2250	6500	**1PH8163-■■B■■-....**
		22 (29.5)	300 (221)	35	475	24.3	1900	6500	**1PH8165-■■B■■-....**
	180	29 (38.9)	396 (292)	49	475	24.0	3100	5000	**1PH8184-■■B■■-....**
		37 (49.6)	505 (372)	65	470	23.9	3400	5000	**1PH8186-■■B■■-....**
	225	52 (69.7)	709 (523)	82	470	23.9	2700	4500	**1PH8224-■■B■■-....**
		68 (91.2)	928 (684)	108	465	23.8	2800	4500	**1PH8226-■■B■■-....**
		84 (113)	1146 (845)	130	480	23.8	2900	4500	**1PH8228-■■B■■-....**
	280	105 (141)	1433 (1057)	150	500	23.7	1400	3300	**1PH8284-1■B1■-....**
		132 (177)	1801 (1328)	184	500	23.7	1500	3300	**1PH8286-1■B1■-....**
		165 (221)	2251 (1660)	230	500	23.7	1600	3300	**1PH8288-1■B1■-....**
1100	180	42 (56.3)	365 (269)	64	500	37.3	3800	5000	**1PH8184-■■C■■-....**
		55 (73.8)	478 (353)	83	500	37.3	4100	5000	**1PH8186-■■C■■-....**
	225	78 (105)	677 (499)	126	470	37.1	3700	4500	**1PH8224-■■C■■-....**
		101 (135)	877 (647)	154	500	37.1	3900	4500	**1PH8226-■■C■■-....**
		126 (169)	1094 (807)	182	500	37.1	4000	4500	**1PH8228-■■C■■-....**
	280	155 (208)	1346 (993)	220	500	37.0	2400	3300	**1PH8284-1■C1■-....**
		191 (256)	1658 (1223)	270	500	37.0	2400	3300	**1PH8286-1■C1■-....**
		238 (319)	2066 (1524)	345	500	37.0	2400	3300	**1PH8288-1■C1■-....**
1500	100	5.2 (7.0)	33 (24.3)	9.7	470	52.2	3500	9000	**1PH8103-■■D■■-....**
		8.8 (11.8)	56 (41.3)	17.0	440	52.0	5750	9000	**1PH8107-■■D■■-....**
	132	11.7 (15.7)	74 (54.6)	20	460	51.5	3000	8000	**1PH8131-■■D■■-....**
		16.6 (22.3)	106 (78.2)	28	459	51.5	3500	8000	**1PH8133-■■D■■-....**
		24 (32.2)	153 (113)	41	447	51.5	4500	8000	**1PH8137-■■D■■-....**
	160	31 (41.6)	197 (145)	52	442	50.9	4000	6500	**1PH8163-■■D■■-....**
		37.7 (50.6)	240 (177)	65	430	50.8	5000	6500	**1PH8165-■■D■■-....**
	180	53 (71.1)	337 (249)	80	500	50.6	5000	5000	**1PH8184-■■D■■-....**
		73 (97.9)	465 (343)	110	500	50.6	5000	5000	**1PH8186-■■D■■-....**
	225	92 (123)	586 (432)	142	500	50.4	3600	4500	**1PH8224-■■D■■-....**
		120 (161)	764 (564)	174	500	50.4	3600	4500	**1PH8226-■■D■■-....**
		147 (197)	936 (690)	210	500	50.5	3600	4500	**1PH8228-■■D■■-....**
	280	200 (268)	1273 (939)	290	500	50.3	2200	3300	**1PH8284-1■D1■-....**
		245 (329)	1560 (1151)	380	495	50.3	2200	3300	**1PH8286-1■D1■-....**
		305 (409)	1942 (1432)	455	500	50.3	2200	3300	**1PH8288-1■D1■-....**

For versions, see Article No. supplements and options.

For footnotes, see next page.

© Siemens 2024

Motor type (repeated)	Power factor	Magnetizing current	Efficiency	Moment of inertia without holding brake	Weight without holding brake, approx.	Terminal box	SINAMICS S120 Motor Module	
							Rated output current [3]	Internal air cooling For further components, see SINAMICS S120 drive system
	$\cos \varphi$	I_μ	η	J			I_N	
		A	%	kgm^2 (lb$_f$-in-s^2)	kg (lb)	Type	A	Article No.
1PH8107-..B...	0.83	4.0	79	0.0289 (0.2558)	73 (161)	gk813	9	6SL3120-■TE21-0AD0
1PH8131-..B...	0.85	3.5	83.4	0.0590 (0.5222)	89 (196)	gk833	9	6SL3120-■TE21-0AD0
1PH8133-..B...	0.89	5.0	83	0.0760 (0.6727)	106 (234)	gk833	18	6SL3120-■TE21-8A■0
1PH8135-..B...	0.9	5.3	83	0.0940 (0.8320)	125 (276)	gk833	18	6SL3120-■TE21-8A■0
1PH8137-..B...	0.89	5.5	86	0.1090 (0.9648)	141 (311)	gk833	18	6SL3120-■TE21-8A■0
1PH8163-..B...	0.9	8.1	88	0.2160 (1.9118)	196 (432)	gk863	30	6SL3120-1TE23-0A■0
1PH8165-..B...	0.88	14.5	90	0.2320 (2.0534)	230 (507)	gk863	45	6SL3120-1TE24-5AC0
1PH8184-..B...	0.81	26	89.5	0.489 (4.328)	350 (772)	1XB7322-P05	60	6SL3120-1TE26-0AC0
1PH8186-..B...	0.77	39	90.4	0.652 (5.771)	422 (931)	1XB7322-P05	85	6SL3120-1TE28-5AA3
1PH8224-..B...	0.84	37	92.3	1.48 (13.10)	610 (1345)	1XB7322-P05	85	6SL3120-1TE28-5AA3
1PH8226-..B...	0.84	51	93.1	1.93 (17.08)	740 (1632)	1XB7322-P05	132	6SL3120-1TE31-3AA3
1PH8228-..B...	0.83	63	93.5	2.33 (20.62)	870 (1918)	1XB7322-P05	132	6SL3120-1TE31-3AA3
1PH8284-1.B...	0.85	66	94.8	4.20 (37.17)	1200 (2646)	1XB7700-P02	200	6SL3120-1TE32-0AA4
1PH8286-1.B...	0.87	76	950	5.20 (46.03)	1400 (3087)	1XB7700-P02	200	6SL3120-1TE32-0AA4
1PH8288-1.B...	0.86	104	95.3	6.30 (55.76)	1650 (3638)	1XB7700-P02	260	6SL3320-1TE32-6AA3
1PH8184-..C...	0.82	32	92.3	0.489 (4.328)	350 (772)	1XB7322-P05	85	6SL3120-1TE28-5AA3
1PH8186-..C...	0.82	43	93.4	0.652 (5.771)	422 (931)	1XB7322-P05	85	6SL3120-1TE28-5AA3
1PH8224-..C...	0.8	65	94.6	1.48 (13.10)	610 (1345)	1XB7322-P05	132	6SL3120-1TE31-3AA3
1PH8226-..C...	0.8	83	95.1	1.93 (17.08)	740 (1632)	1XB7322-P05	200	6SL3120-1TE32-0AA4
1PH8228-..C...	0.84	84	95.2	2.33 (20.62)	870 (1918)	1XB7322-P05	200	6SL3120-1TE32-0AA4
1PH8284-1.C...	0.84	102	95.9	4.20 (37.17)	1200 (2646)	1XB7700-P02	260	6SL3320-1TE32-6AA3
1PH8286-1.C...	0.85	120	96.2	5.20 (46.03)	1400 (3087)	1XB7700-P02	310	6SL3320-1TE33-1AA3
1PH8288-1.C...	0.83	168	96.3	6.30 (55.76)	1650 (3638)	1XB7700-P02	380	6SL3320-1TE33-8AA3
1PH8103-..D...	0.81	4.6	85	0.0172 (0.1522)	51 (112)	gk813	18	6SL3120-■TE21-8A■0
1PH8107-..D...	0.80	8.2	86	0.0289 (0.2558)	73 (161)	gk813	18	6SL3120-■TE21-8A■0
1PH8131-..D...	0.85	8.0	91	0.0590 (0.5222)	89 (196)	gk833	30	6SL3120-1TE23-0A■0
1PH8133-..D...	0.86	10.6	90	0.0760 (0.6727)	106 (234)	gk833	30	6SL3120-1TE23-0A■0
1PH8137-..D...	0.86	15.9	89	0.1090 (0.9648)	141 (311)	gk833	45	6SL3120-1TE24-5AC0
1PH8163-..D...	0.88	17.5	93	0.2160 (1.9118)	196 (432)	gk863	60	6SL3120-1TE26-0AC0
1PH8165-..D...	0.88	22.5	93	0.2320 (2.0534)	230 (507)	gk863	85	6SL3120-1TE28-5AA3
1PH8184-..D...	0.81	42	94	0.489 (4.328)	350 (772)	1XB7322-P05	85	6SL3120-1TE28-5AA3
1PH8186-..D...	0.82	56	94.3	0.652 (5.771)	422 (931)	1XB7322-P05	132	6SL3120-1TE31-3AA3
1PH8224-..D...	0.78	79	95.3	1.48 (13.10)	610 (1345)	1XB7322-P05	200	6SL3120-1TE32-0AA4
1PH8226-..D...	0.83	85	95.7	1.93 (17.08)	740 (1632)	1XB7322-P05	200	6SL3120-1TE32-0AA4
1PH8228-..D...	0.85	96	96	2.33 (20.62)	870 (1918)	1XB7422-P06	260	6SL3320-1TE32-6AA3
1PH8284-1.D...	0.82	145	96.3	4.20 (37.17)	1200 (2646)	1XB7700-P02	310 [4]	6SL3320-1TE33-1AA3
1PH8286-1.D...	0.78	219	96.3	5.20 (46.03)	1400 (3087)	1XB7700-P02	490	6SL3320-1TE35-0AA3
1PH8288-1.D...	0.8	253	96.5	6.30 (55.76)	1650 (3638)	1XB7700-P02	490 [4]	6SL3320-1TE35-0AA3

Single Motor Module	1
Double Motor Module	2

Motor Module	
For continuous load with 200 % overload (C type)	C
For highly dynamic, intermittent load cycles with 300 % overload (D type)	D

[1] n_2: Maximum permissible thermal speed at constant power.
[2] n_{max}: Maximum speed that must not be exceeded (applicable for standard: 14th position of the Article No. A to H); for performance bearings (14th position = "L"), increased maximum speeds apply; limitations must be taken into consideration where necessary (e.g. with holding brake), see Article No. supplements.
[3] I_N: Output current of the Motor Module at rated pulse frequency (see SINAMICS S120 drive system).
The rated motor data are valid for 4 kHz (SH 80 to 160) or 2 kHz (SH 180 to 280).
[4] The output current of the Motor Module is lower than the rated motor current for the pulse frequency on which it is based.

© Siemens 2024

Selection and ordering data

Rated speed	Shaft height	Rated power	Rated torque	Rated current	Rated voltage	Rated frequency	Operating speed for field weakening, max. [1]	Speed, max. [2]	**SIMOTICS M-1PH8 asynchronous motors Forced ventilation**
n_N	SH	P_N	M_N	I_N	U_N	f_N	n_2	n_{max}	
r/min		kW (hp)	Nm (lb_f-ft)	A	V	Hz	r/min	r/min	Article No.
Line voltage 480 V 3 AC, Active Line Module									
2200	80	4.1 (5.5)	18 (13.3)	7.6	480	76.2	6300	10000	**1PH8083-■■F■■-....**
		5.3 (7.1)	23 (17.0)	10	480	76.3	7100	10000	**1PH8087-■■F■■-....**
	100	5.1 (6.8)	22 (16.2)	12.5	363	76.0	7500	9000	**1PH8101-■■F■■-....**
		7.7 (10.3)	33 (24.3)	12.7	480	76.1	4100	9000	**1PH8103-■■F■■-....**
		9.9 (13.3)	43 (31.7)	17	485	75.3	7000	9000	**1PH8105-■■F■■-....**
		12.1 (16.2)	53 (39.1)	21.5	470	75.2	5500	9000	**1PH8107-■■F■■-....**
	132	16.5 (22.1)	72 (53.1)	24	500	75.0	4500	8000	**1PH8131-■■F■■-....**
		22 (29.5)	96 (70.8)	34	480	74.8	6200	8000	**1PH8133-■■F■■-....**
		26.4 (35.4)	115 (84.8)	43	468	74.7	6000	8000	**1PH8135-■■F■■-....**
		30 (40.2)	130 (95.9)	53	440	74.6	4500	8000	**1PH8137-■■F■■-....**
	160	40.7 (54.6)	177 (131)	68	456	74.2	3500	6500	**1PH8163-■■F■■-....**
		49.5 (66.4)	215 (159)	75	493	74.2	3500	6500	**1PH8165-■■F■■-....**
	180	68 (91.2)	295 (218)	110	500	73.8	5000	5000	**1PH8184-■■F■■-....**
		94 (126)	408 (301)	140	490	74.1	5000	5000	**1PH8186-■■F■■-....**
	225	110 (148)	478 (353)	168	500	73.7	2900	4500	**1PH8224-■■F■■-....**
		130 (174)	564 (416)	205	500	73.7	3100	4500	**1PH8226-■■F■■-....**
		170 (228)	738 (544)	275	500	73.6	3200	4500	**1PH8228-■■F■■-....**
	280	230 (308)	998 (736)	330	500	73.6	2400	3300	**1PH8284-1■F1■-....**
		279 (374)	1211 (893)	395	500	73.6	2400	3300	**1PH8286-1■F1■-....**
		347 (465)	1506 (1111)	495	500	73.6	2400	3300	**1PH8288-1■F1■-....**
2800	80	4.8 (6.4)	16 (11.8)	11.3	400	96.4	10000	10000	**1PH8083-■■G■■-....**
		6.3 (8.4)	21 (15.5)	13.5	425	96.5	10000	10000	**1PH8087-■■G■■-....**
	100	8.5 (11.4)	29 (21.4)	16	455	95.3	7000	9000	**1PH8103-■■G■■-....**
		13.7 (18.4)	47 (34.7)	24	480	95.1	7000	9000	**1PH8107-■■G■■-....**
	132	25 (33.5)	85 (62.7)	41	480	94.7	7000	8000	**1PH8133-■■G■■-....**
		26 (34.9)	89 (65.6)	47	440	94.6	6000	8000	**1PH8135-■■G■■-....**
		31 (41.6)	106 (78.2)	52	494	94.4	4000	8000	**1PH8137-■■G■■-....**
	160	42 (56.3)	143 (105)	75	447	94.1	3500	6500	**1PH8163-■■G■■-....**
		50 (67.0)	171 (126)	81	483	94.1	3500	6500	**1PH8165-■■G■■-....**
3900	80	5.3 (7.1)	13 (9.59)	14	372	132.8	10000	10000	**1PH8083-■■M■■-....**
		6.0 (8.0)	15 (11.1)	17.1	357	132.4	10000	10000	**1PH8087-■■M■■-....**
	100	10.8 (14.5)	26 (19.2)	25	383	132.1	9000	9000	**1PH8103-■■M■■-....**
		14.0 (18.8)	34 (25.1)	35	380	131.5	9000	9000	**1PH8107-■■M■■-....**

For versions, see Article No. supplements and options.

For footnotes, see next page.

© Siemens 2024

Motor type (repeated)	Power factor	Magnetizing current	Efficiency	Moment of inertia without holding brake	Weight without holding brake, approx.	Terminal box	SINAMICS S120 Motor Module	
							Rated output current [3]	Internal air cooling For further components, see SINAMICS S120 drive system
	cos φ	I_μ	η	J			I_N	
		A	%	kgm² (lb_f-in-s²)	kg (lb)	Type	A	Article No.
1PH8083-..F...	0.82	3.6	85	0.0064 (0.0566)	32 (70.6)	gk803	9	6SL3120-■TE21-0AD 0
1PH8087-..F...	0.78	5.1	87	0.0089 (0.0788)	39 (86.0)	gk803	18	6SL3120-■TE21-8A■ 0
1PH8101-..F...	0.82	6.0	87	0.0138 (0.1221)	42 (92.6)	gk813	18	6SL3120-■TE21-8A■ 0
1PH8103-..F...	0.83	5.8	88	0.0172 (0.1522)	51 (112)	gk813	18	6SL3120-■TE21-8A■ 0
1PH8105-..F...	0.79	8.7	90	0.0252 (0.2230)	65 (143)	gk813	18	6SL3120-■TE21-8A■ 0
1PH8107-..F...	0.78	10.9	90	0.0289 (0.2558)	73 (161)	gk813	30	6SL3120-1TE23-0A■ 0
1PH8131-..F...	0.87	10.0	92	0.0590 (0.5222)	89 (196)	gk833	30	6SL3120-1TE23-0A■ 0
1PH8133-..F...	0.89	5.0	83	0.0760 (0.6727)	106 (234)	gk833	45	6SL3120-1TE24-5AC 0
1PH8135-..F...	0.84	18.3	92	0.0940 (0.8320)	125 (276)	gk833	45	6SL3120-1TE24-5AC 0
1PH8137-..F...	0.83	23.2	92	0.1090 (0.9648)	141 (311)	gk833	60	6SL3120-1TE26-0AC 0
1PH8163-..F...	0.88	24.5	94	0.2160 (1.9118)	196 (432)	gk863	85	6SL3120-1TE28-5AA 3
1PH8165-..F...	0.88	25.1	95	0.2320 (2.0534)	230 (507)	gk863	85	6SL3120-1TE28-5AA 3
1PH8184-..F...	0.75	68	94.8	0.489 (4.328)	350 (772)	1XB7322-P05	132	6SL3120-1TE31-3AA 3
1PH8186-..F...	0.84	63	94.8	0.652 (5.771)	422 (931)	1XB7322-P05	200	6SL3120-1TE32-0AA 4
1PH8224-..F...	0.79	90	95.7	1.48 (13.10)	610 (1345)	1XB7322-P05	200	6SL3120-1TE32-0AA 4
1PH8226-..F...	0.76	123	95.8	1.93 (17.08)	740 (1632)	1XB7422-P06	310	6SL3320-1TE33-1AA 3
1PH8228-..F...	0.74	174	95.9	2.33 (20.62)	870 (1918)	1XB7700-P02	380	6SL3320-1TE33-8AA 3
1PH8284-1.F...	0.83	163	96.3	4.20 (37.17)	1200 (2646)	1XB7700-P02	490	6SL3320-1TE35-0AA 3
1PH8286-1.F...	0.85	183	96.5	5.20 (46.03)	1400 (3087)	1XB7700-P02	490	6SL3320-1TE35-0AA 3
1PH8288-1.F...	0.84	233	96.6	6.30 (55.76)	1650 (3638)	1XB7712-P03	745	6SL3320-1TE37-5AA 3
1PH8083-..G...	0.76	5.8	86.8	0.0064 (0.0566)	32 (70.6)	gk803	18	6SL3120-■TE21-8A■ 0
1PH8087-..G...	0.77	6.8	87	0.0089 (0.0788)	39 (86.0)	gk803	18	6SL3120-■TE21-8A■ 0
1PH8103-..G...	0.78	8.1	90	0.0172 (0.1522)	51 (112)	gk813	18	6SL3120-■TE21-8A■ 0
1PH8107-..G...	0.77	12.8	92	0.0289 (0.2558)	73 (161)	gk813	30	6SL3120-1TE23-0A■ 0
1PH8133-..G...	0.83	18.1	92	0.0760 (0.6727)	106 (234)	gk833	45	6SL3120-1TE24-5AC 0
1PH8135-..G...	0.84	20.0	92.4	0.0940 (0.8320)	125 (276)	gk833	60	6SL3120-1TE26-0AC 0
1PH8137-..G...	0.82	22.0	92	0.1090 (0.9648)	141 (311)	gk833	60	6SL3120-1TE26-0AC 0
1PH8163-..G...	0.85	28.1	93	0.2160 (1.9118)	196 (432)	gk863	85	6SL3120-1TE28-5AA 3
1PH8165-..G...	0.87	31.9	94	0.2320 (2.0534)	230 (507)	gk863	85	6SL3120-1TE28-5AA 3
1PH8083-..M...	0.76	7.2	87	0.0064 (0.0566)	32 (70.6)	gk803	18	6SL3120-■TE21-8A■ 0
1PH8087-..M...	0.73	9.2	89	0.0089 (0.0788)	39 (86.0)	gk803	18	6SL3120-■TE21-8A■ 0
1PH8103-..M...	0.77	12.2	90	0.0172 (0.1522)	51 (112)	gk813	30	6SL3120-1TE23-0A■ 0
1PH8107-..M...	0.73	19.4	90	0.0289 (0.2558)	73 (161)	gk813	45	6SL3120-1TE24-5AC 0

Single Motor Module	1
Double Motor Module	2
Motor Module	
For continuous load with 200 % overload (C type)	C
For highly dynamic, intermittent load cycles with 300 % overload (D type)	D

[1] n_2: Maximum permissible thermal speed at constant power.

[2] n_{max}: Maximum speed that must not be exceeded (applicable for standard: 14th position of the Article No. A to H); for performance bearings (14th position = "L"), increased maximum speeds apply; limitations must be taken into consideration where necessary (e.g. with holding brake), see Article No. supplements.

[3] I_N: Output current of the Motor Module at rated pulse frequency (see SINAMICS S120 drive system).
The rated motor data are valid for 4 kHz (SH 80 to 160) or 2 kHz (SH 180 to 280).

© Siemens 2024

Selection and ordering data

Rated speed	Shaft height	Rated power	Rated torque	Rated current	Rated voltage	Rated frequency	Operating speed for field weakening, max. [1]	Speed, max. [2]	**SIMOTICS M-1PH8 asynchronous motors Forced ventilation**
n_N	SH	P_N	M_N	I_N	U_N	f_N	n_2	n_{max}	
r/min		kW (hp)	Nm (lb_f-ft)	A	V	Hz	r/min	r/min	Article No.
Line voltage 690 V 3 AC, Basic Line Module									
400	280	61 (81.8)	1456 (1074)	82	555	13.7	1100	3300	**1PH8284-1■H1■-....**
		77 (103)	1838 (1356)	100	555	13.7	1200	3300	**1PH8286-1■H1■-....**
		100 (134)	2388 (1761)	130	555	13.7	1300	3300	**1PH8288-1■H1■-....**
700	280	100 (134)	1364 (1006)	118	605	23.7	2100	3300	**1PH8284-1■K1■-....**
		127 (170)	1733 (1278)	158	605	23.6	2100	3300	**1PH8286-1■K1■-....**
		162 (217)	2210 (1630)	186	605	23.7	2100	3300	**1PH8288-1■K1■-....**
1000	280	143 (192)	1366 (1008)	176	600	33.6	2100	3300	**1PH8284-1■U1■-....**
		176 (236)	1681 (1240)	230	570	33.6	2100	3300	**1PH8286-1■U1■-....**
		218 (292)	2082 (1536)	275	580	33.6	2100	3300	**1PH8288-1■U1■-....**
1500	280	186 (249)	1184 (873)	220	590	50.3	1900	3300	**1PH8284-1■W1■-....**
		224 (300)	1426 (1052)	260	590	50.3	2000	3300	**1PH8286-1■W1■-....**
		282 (378)	1795 (1324)	325	590	50.3	2100	3300	**1PH8288-1■W1■-....**
Line voltage 690 V 3 AC, Active Line Module									
500	280	77 (103)	1471 (1085)	82	690	17.0	1600	3300	**1PH8284-1■H1■-....**
		96 (129)	1834 (1353)	100	690	17.0	1600	3300	**1PH8286-1■H1■-....**
		125 (168)	2388 (1761)	128	690	17.0	1600	3300	**1PH8288-1■H1■-....**
800	280	115 (154)	1373 (1013)	120	690	27.0	2300	3300	**1PH8284-1■K1■-....**
		145 (194)	1731 (1277)	158	690	26.9	2300	3300	**1PH8286-1■K1■-....**
		185 (248)	2208 (1629)	184	690	27.0	2300	3300	**1PH8288-1■K1■-....**
1150	280	164 (220)	1362 (1005)	174	690	38.6	2200	3300	**1PH8284-1■U1■-....**
		203 (272)	1686 (1244)	230	655	38.6	2200	3300	**1PH8286-1■U1■-....**
		251 (337)	2084 (1537)	275	665	38.6	2200	3300	**1PH8288-1■U1■-....**
1750	280	217 (291)	1184 (873)	220	690	58.7	2200	3300	**1PH8284-1■W1■-....**
		261 (350)	1424 (1050)	260	690	58.7	2200	3300	**1PH8286-1■W1■-....**
		329 (441)	1795 (1324)	325	690	58.7	2200	3300	**1PH8288-1■W1■-....**

For versions, see Article No. supplements and options.

For footnotes, see next page.

© Siemens 2024

Motor type (repeated)	Power factor	Magnetizing current	Efficiency	Moment of inertia	Weight, approx.	Terminal box	SINAMICS S120 Motor Module	
							Rated output current [3]	Internal air cooling For further components, see SINAMICS S120 drive system
	cos φ	I_μ	η	J			I_N	
		A	%	kgm² (lb$_f$-in-s²)	kg (lb)	Type	A	Article No.
1PH8284-1.H...	0.84	39	92	4.20 (37.17)	1200 (2646)	1XB7700-P02	100	**6SL3320-1TG31-0AA3**
1PH8286-1.H...	0.87	43	92.1	5.20 (46.03)	1400 (3087)	1XB7700-P02	120	**6SL3320-1TG31-2AA3**
1PH8288-1.H...	0.87	55	92.4	6.30 (55.76)	1650 (3638)	1XB7700-P02	150	**6SL3320-1TG31-5AA3**
1PH8284-1.K...	0.85	53	94.5	4.20 (37.17)	1200 (2646)	1XB7700-P02	150	**6SL3320-1TG31-5AA3**
1PH8286-1.K...	0.81	83	95.1	5.20 (46.03)	1400 (3087)	1XB7700-P02	175	**6SL3320-1TG31-8AA3**
1PH8288-1.K...	0.88	75	94.9	6.30 (55.76)	1650 (3638)	1XB7700-P02	215	**6SL3320-1TG32-2AA3**
1PH8284-1.U...	0.82	89	95.6	4.20 (37.17)	1200 (2646)	1XB7700-P02	215	**6SL3320-1TG32-2AA3**
1PH8286-1.U...	0.81	124	95.9	5.20 (46.03)	1400 (3087)	1XB7700-P02	260	**6SL3320-1TG32-6AA3**
1PH8288-1.U...	0.82	145	96.1	6.30 (55.76)	1650 (3638)	1XB7700-P02	330	**6SL3320-1TG33-3AA3**
1PH8284-1.W...	0.86	92	96.2	4.20 (37.17)	1200 (2646)	1XB7700-P02	260	**6SL3320-1TG32-6AA3**
1PH8286-1.W...	0.88	104	96.5	5.20 (46.03)	1400 (3087)	1XB7700-P02	330	**6SL3320-1TG33-3AA3**
1PH8288-1.W...	0.88	133	96.6	6.30 (55.76)	1650 (3638)	1XB7700-P02	410	**6SL3320-1TG34-1AA3**
1PH8284-1.H...	0.84	39	93.2	4.20 (37.17)	1200 (2646)	1XB7700-P02	100	**6SL3320-1TG31-0AA3**
1PH8286-1.H...	0.86	43	93.4	5.20 (46.03)	1400 (3087)	1XB7700-P02	120	**6SL3320-1TG31-2AA3**
1PH8288-1.H...	0.87	56	93.7	6.30 (55.76)	1650 (3638)	1XB7700-P02	150	**6SL3320-1TG31-5AA3**
1PH8284-1.K...	0.85	53	95	4.20 (37.17)	1200 (2646)	1XB7700-P02	150	**6SL3320-1TG31-5AA3**
1PH8286-1.K...	0.81	83	95.4	5.20 (46.03)	1400 (3087)	1XB7700-P02	175	**6SL3320-1TG31-8AA3**
1PH8288-1.K...	0.88	76	95.3	6.30 (55.76)	1650 (3638)	1XB7700-P02	215	**6SL3320-1TG32-2AA3**
1PH8284-1.U...	0.82	90	95.9	4.20 (37.17)	1200 (2646)	1XB7700-P02	215	**6SL3320-1TG32-2AA3**
1PH8286-1.U...	0.81	124	96.1	5.20 (46.03)	1400 (3087)	1XB7700-P02	260	**6SL3320-1TG32-6AA3**
1PH8288-1.U...	0.82	145	96.3	6.30 (55.76)	1650 (3638)	1XB7700-P02	330	**6SL3320-1TG33-3AA3**
1PH8284-1.W...	0.86	93	96.3	4.20 (37.17)	1200 (2646)	1XB7700-P02	260	**6SL3320-1TG32-6AA3**
1PH8286-1.W...	0.87	105	96.6	5.20 (46.03)	1400 (3087)	1XB7700-P02	330	**6SL3320-1TG33-3AA3**
1PH8288-1.W...	0.87	134	96.7	6.30 (55.76)	1650 (3638)	1XB7700-P02	410	**6SL3320-1TG34-1AA3**

[1] n_2: Maximum permissible thermal speed at constant power.
[2] n_{max}: Maximum speed that must not be exceeded.
[3] I_N: Output current of the Motor Module at rated pulse frequency (see SINAMICS S120 drive system).
The rated motor data are valid for 2 kHz (SH 180 to 280).

© Siemens 2024

Selection and ordering data

Rated speed	Shaft height	Rated power	Rated torque	Rated current	Rated voltage	Rated frequency	Operating speed for field weakening, max. [1]	Speed, max. [2]	**SIMOTICS M-1PH8 asynchronous motors Forced ventilation**
n_N	SH	P_N	M_N	I_N	U_N	f_N	n_2	n_{max}	
r/min		kW (hp)	Nm (lb_f-ft)	A	V	Hz	r/min	r/min	Article No.
Line voltage 400 V 3 AC, Smart/Basic Line Module									
400	180	24.5 (32.9)	585 (431)	67	300	14.3	1900	5000	**1PH8184-■■B■■-....**
		31.5 (42.2)	752 (555)	88	290	14.2	2100	5000	**1PH8186-■■B■■-....**
	225	45 (60.3)	1074 (792)	114	300	14.1	1800	4500	**1PH8224-■■B■■-....**
		57 (76.4)	1361 (1004)	144	305	13.9	2100	4500	**1PH8226-■■B■■-....**
		72 (96.6)	1719 (1268)	176	305	14.0	2200	4500	**1PH8228-■■B■■-....**
700	180	40 (53.6)	546 (403)	94	320	24.5	2200	5000	**1PH8184-■■C■■-....**
		52 (69.7)	709 (523)	116	330	24.3	2400	5000	**1PH8186-■■C■■-....**
	225	80 (107)	1091 (805)	188	310	24.1	2200	4500	**1PH8224-■■C■■-....**
		106 (142)	1446 (1067)	240	310	24.2	2200	4500	**1PH8226-■■C■■-....**
		120 (161)	1637 (1207)	265	315	24.1	2300	4500	**1PH8228-■■C■■-....**
	280	171 (229)	2333 (1721)	355	330	23.9	1200	3300	**1PH8284-1■C4■-....**
		219 (294)	2988 (2204)	455	325	23.9	1300	3300	**1PH8286-1■C4■-....**
		272 (365)	3711 (2737)	570	325	23.9	1400	3300	**1PH8288-1■C4■-....**
1000	180	57 (76.4)	544 (401)	120	340	34.4	2800	5000	**1PH8184-■■D■■-....**
		74 (99.2)	707 (521)	156	340	34.3	3000	5000	**1PH8186-■■D■■-....**
	225	105 (141)	1003 (740)	220	335	34.1	2700	4500	**1PH8224-■■D■■-....**
		135 (181)	1289 (951)	275	340	34.1	2700	4500	**1PH8226-■■D■■-....**
		165 (221)	1576 (1162)	330	340	34.1	2700	4500	**1PH8228-■■D■■-....**
	280	243 (326)	2321 (1712)	490	335	33.9	1900	3300	**1PH8284-1■D4■-....**
		309 (414)	2951 (2177)	630	330	33.8	2000	3300	**1PH8286-1■D4■-....**
		379 (508)	3619 (2669)	760	335	33.8	2100	3300	**1PH8288-1■D4■-....**
1500	180	76 (102)	484 (357)	162	335	50.9	4300	5000	**1PH8184-■■F■■-....**
		108 (145)	688 (507)	225	330	50.9	4300	5000	**1PH8186-■■F■■-....**
	225	142 (190)	904 (667)	290	340	50.8	3000	4500	**1PH8224-■■F■■-....**
		175 (235)	1114 (822)	350	340	50.7	3000	4500	**1PH8226-■■F■■-....**
		230 (308)	1464 (1080)	465	340	50.6	3000	4500	**1PH8228-■■F■■-....**
	280	319 (428)	2031 (1498)	620	345	50.6	1900	3300	**1PH8284-1■F4■-....**
		382 (512)	2432 (1794)	730	345	50.6	2000	3300	**1PH8286-1■F4■-....**
		480 (644)	3056 (2254)	910	345	50.6	2100	3300	**1PH8288-1■F4■-....**
2500	180	100 (134)	382 (282)	205	340	84.2	5000	5000	**1PH8184-■■L■■-....**
		130 (174)	497 (367)	270	335	84.1	5000	5000	**1PH8186-■■L■■-....**
	225	178 (239)	680 (502)	355	340	84.1	3500	4500	**1PH8224-■■L■■-....**
		235 (315)	898 (662)	475	335	84.0	3500	4500	**1PH8226-■■L■■-....**
		265 (355)	1012 (746)	530	340	83.9	3500	4500	**1PH8228-■■L■■-....**

For versions, see Article No. supplements and options.

For footnotes, see next page.

© Siemens 2024

Motor type (repeated)	Power factor	Magnetizing current	Efficiency	Moment of inertia	Weight without holding brake, approx.	Terminal box	SINAMICS S120 Motor Module	
							Rated output current [3]	Internal air cooling For further components, see SINAMICS S120 drive system
	cos φ	I_μ	η	J			I_N	
		A	%	kgm² (lb$_f$-in-s²)	kg (lb)	Type	A	Article No.
1PH8184- . . B . . .	0.88	25	80.1	0.489 (4.328)	350 (772)	1XB7322-P05	85	**6SL3120-1TE28-5AA3**
1PH8186- . . B . . .	0.87	37	82.2	0.652 (5.771)	422 (931)	1XB7322-P05	85 [4]	**6SL3120-1TE28-5AA3**
1PH8224- . . B . . .	0.89	39	84.9	1.48 (13.10)	610 (1345)	1XB7322-P05	132	**6SL3120-1TE31-3AA3**
1PH8226- . . B . . .	0.86	61	87.5	1.93 (17.08)	740 (1632)	1XB7322-P05	200	**6SL3120-1TE32-0AA4**
1PH8228- . . B . . .	0.88	69	87.8	2.33 (20.62)	870 (1918)	1XB7322-P05	200	**6SL3120-1TE32-0AA4**
1PH8184- . . C . . .	0.90	27	85.2	0.489 (4.328)	350 (772)	1XB7322-P05	132	**6SL3120-1TE31-3AA3**
1PH8186- . . C . . .	0.89	41	88.5	0.652 (5.771)	422 (931)	1XB7322-P05	132	**6SL3120-1TE31-3AA3**
1PH8224- . . C . . .	0.88	63	90.4	1.48 (13.10)	610 (1345)	1XB7322-P05	200	**6SL3120-1TE32-0AA4**
1PH8226- . . C . . .	0.90	71	90.7	1.93 (17.08)	740 (1632)	1XB7422-P06	260	**6SL3320-1TE32-6AA3**
1PH8228- . . C . . .	0.91	75	91.1	2.33 (20.62)	870 (1918)	1XB7422-P06	260 [4]	**6SL3320-1TE32-6AA3**
1PH8284-1. C . . .	0.91	101	93	4.20 (37.17)	1200 (2646)	1XB7700-P02	380	**6SL3320-1TE33-8AA3**
1PH8286-1. C . . .	0.92	115	93.1	5.20 (46.03)	1400 (3087)	1XB7700-P02	490	**6SL3320-1TE35-0AA3**
1PH8288-1. C . . .	0.91	161	93.9	6.30 (55.76)	1650 (3638)	1XB7700-P02	745	**6SL3320-1TE37-5AA3**
1PH8184- . . D . . .	0.89	39	89.9	0.489 (4.328)	350 (772)	1XB7322-P05	132	**6SL3120-1TE31-3AA3**
1PH8186- . . D . . .	0.89	53	90.8	0.652 (5.771)	422 (931)	1XB7322-P05	200	**6SL3120-1TE32-0AA4**
1PH8224- . . D . . .	0.88	73	92.6	1.48 (13.10)	610 (1345)	1XB7422-P06	260	**6SL3320-1TE32-6AA3**
1PH8226- . . D . . .	0.90	82	92.9	1.93 (17.08)	740 (1632)	1XB7700-P02	310	**6SL3320-1TE33-1AA3**
1PH8228- . . D . . .	0.91	93	93.3	2.33 (20.62)	870 (1918)	1XB7700-P02	380	**6SL3320-1TE33-8AA3**
1PH8284-1. D . . .	0.90	137	94.7	4.20 (37.17)	1200 (2646)	1XB7700-P02	490	**6SL3320-1TE35-0AA3**
1PH8286-1. D . . .	0.90	207	95.2	5.20 (46.03)	1400 (3087)	1XB7700-P02	840	**6SL3320-1TE38-4AA3**
1PH8288-1. D . . .	0.90	242	95.5	6.30 (55.76)	1650 (3638)	1XB7712-P03	985	**6SL3320-1TE41-0AA3**
1PH8184- . . F . . .	0.87	61	93.1	0.489 (4.328)	350 (772)	1XB7322-P05	200	**6SL3120-1TE32-0AA4**
1PH8186- . . F . . .	0.89	79	93.6	0.652 (5.771)	422 (931)	1XB7422-P06	260	**6SL3320-1TE32-6AA3**
1PH8224- . . F . . .	0.89	84	94.2	1.48 (13.10)	610 (1345)	1XB7700-P02	310	**6SL3320-1TE33-1AA3**
1PH8226- . . F . . .	0.89	117	95	1.93 (17.08)	740 (1632)	1XB7700-P02	380	**6SL3320-1TE33-8AA3**
1PH8228- . . F . . .	0.88	166	95.3	2.33 (20.62)	870 (1918)	1XB7700-P02	490	**6SL3320-1TE35-0AA3**
1PH8284-1. F . . .	0.91	157	95.7	4.20 (37.17)	1200 (2646)	1XB7700-P02	745 [4]	**6SL3320-1TE37-5AA3**
1PH8286-1. F . . .	0.92	177	95.9	5.20 (46.03)	1400 (3087)	1XB7712-P03	840	**6SL3320-1TE38-4AA3**
1PH8288-1. F . . .	0.92	229	96.1	6.30 (55.76)	1650 (3638)	1XB7712-P03	985 [4]	**6SL3320-1TE41-0AA3**
1PH8184- . . L . . .	0.87	74	94.9	0.489 (4.328)	350 (772)	1XB7322-P05	210	**6SL3320-1TE32-1AA3**
1PH8186- . . L . . .	0.87	105	95.4	0.652 (5.771)	422 (931)	1XB7422-P06	310	**6SL3320-1TE33-1AA3**
1PH8224- . . L . . .	0.89	112	95.4	1.48 (13.10)	610 (1345)	1XB7700-P02	380	**6SL3320-1TE33-8AA3**
1PH8226- . . L . . .	0.89	149	95.7	1.93 (17.08)	740 (1632)	1XB7700-P02	490	**6SL3320-1TE35-0AA3**
1PH8228- . . L . . .	0.89	180	96	2.33 (20.62)	870 (1918)	1XB7700-P02	745	**6SL3320-1TE37-5AA3**

[1] n_2: Maximum permissible thermal speed at constant power.
[2] n_{max}: Maximum speed that must not be exceeded (applicable for standard: 14th position of the Article No. A to F); limitations must be taken into consideration where necessary (e.g. with holding brake), see Article No. supplements.
[3] I_N: Output current of the Motor Module at rated pulse frequency (see SINAMICS S120 drive system).
The rated motor data are valid for 2 kHz (SH 180 to 280).
[4] The output current of the Motor Module is lower than the rated motor current for the pulse frequency on which it is based.

© Siemens 2024

Selection and ordering data

Rated speed	Shaft height	Rated power	Rated torque	Rated current	Rated voltage	Rated frequency	Operating speed for field weakening, max. [1]	Speed, max. [2]	**SIMOTICS M-1PH8 asynchronous motors Forced ventilation**
n_N	SH	P_N	M_N	I_N	U_N	f_N	n_2	n_{max}	
r/min		kW (hp)	Nm (lb_f-ft)	A	V	Hz	r/min	r/min	Article No.
Line voltage 400 V 3 AC, Active Line Module									
500	180	30 (40.2)	573 (423)	65	370	17.6	2000	5000	**1PH8184-■■ B ■■-....**
		40 (53.6)	764 (564)	88	355	17.5	2200	5000	**1PH8186-■■ B ■■-....**
	225	55 (73.8)	1051 (775)	112	370	17.4	1800	4500	**1PH8224-■■ B ■■-....**
		72 (96.6)	1375 (1014)	144	375	17.3	2200	4500	**1PH8226-■■ B ■■-....**
		90 (121)	1719 (1268)	174	380	17.3	2200	4500	**1PH8228-■■ B ■■-....**
800	180	45 (60.3)	537 (396)	91	365	27.8	2300	5000	**1PH8184-■■ C ■■-....**
		60 (80.5)	716 (528)	120	360	27.7	2500	5000	**1PH8186-■■ C ■■-....**
	225	90 (121)	1074 (792)	184	350	27.4	2300	4500	**1PH8224-■■ C ■■-....**
		118 (158)	1409 (1039)	235	350	27.5	2300	4500	**1PH8226-■■ C ■■-....**
		135 (181)	1612 (1189)	260	360	27.4	2400	4500	**1PH8228-■■ C ■■-....**
	280	195 (261)	2328 (1717)	335	400	27.2	1350	3300	**1PH8284-1■ C 4■-....**
		250 (335)	2984 (2201)	435	385	27.2	1500	3300	**1PH8286-1■ C 4■-....**
		310 (416)	3701 (2730)	560	370	27.2	1550	3300	**1PH8288-1■ C 4■-....**
1150	180	65 (87.2)	540 (398)	120	390	39.4	3000	5000	**1PH8184-■■ D ■■-....**
		85 (114)	706 (521)	154	390	39.3	3200	5000	**1PH8186-■■ D ■■-....**
	225	120 (161)	997 (735)	220	385	39.1	2900	4500	**1PH8224-■■ D ■■-....**
		155 (208)	1287 (949)	270	390	39.1	2800	4500	**1PH8226-■■ D ■■-....**
		190 (255)	1578 (1164)	330	390	39.1	2800	4500	**1PH8228-■■ D ■■-....**
	280	280 (375)	2325 (1715)	475	400	38.9	2200	3300	**1PH8284-1■ D 4■-....**
		355 (476)	2944 (2171)	630	380	38.8	2200	3300	**1PH8286-1■ D 4■-....**
		435 (583)	3607 (2661)	760	385	38.8	2200	3300	**1PH8288-1■ D 4■-....**
1750	180	89 (119)	486 (358)	162	390	59.3	4300	5000	**1PH8184-■■ F ■■-....**
		125 (168)	682 (503)	225	385	59.2	4300	5000	**1PH8186-■■ F ■■-....**
	225	165 (221)	900 (664)	285	395	59.2	2900	4500	**1PH8224-■■ F ■■-....**
		200 (268)	1091 (805)	350	390	59.0	2900	4500	**1PH8226-■■ F ■■-....**
		265 (355)	1446 (1067)	460	390	59.0	2900	4500	**1PH8228-■■ F ■■-....**
	280	370 (496)	2019 (1489)	610	400	58.9	2200	3300	**1PH8284-1■ F 4■-....**
		445 (597)	2429 (1792)	730	400	58.9	2200	3300	**1PH8286-1■ F 4■-....**
		560 (751)	3055 (2253)	910	400	58.9	2200	3300	**1PH8288-1■ F 4■-....**
2900	180	113 (152)	372 (274)	200	395	97.5	5000	5000	**1PH8184-■■ L ■■-....**
		150 (201)	494 (364)	270	385	97.4	5000	5000	**1PH8186-■■ L ■■-....**
	225	205 (275)	675 (498)	355	395	97.4	3500	4500	**1PH8224-■■ L ■■-....**
		270 (362)	889 (656)	470	390	97.3	3500	4500	**1PH8226-■■ L ■■-....**
		300 (402)	988 (729)	510	395	97.3	3500	4500	**1PH8228-■■ L ■■-....**

For versions, see Article No. supplements and options.

For footnotes, see next page.

© Siemens 2024

Motor type (repeated)	Power factor	Magnetizing current	Efficiency	Moment of inertia	Weight without holding brake, approx.	Terminal box	SINAMICS S120 Motor Module	
							Rated output current [3]	Internal air cooling For further components, see SINAMICS S120 drive system
	cos φ	I_μ	η	J			I_N	
		A	%	kgm² (lb$_f$-in-s²)	kg (lb)	Type	A	Article No.
1PH8184- . . B . . .	0.86	27	84	0.489 (4.328)	350 (772)	1XB7322-P05	85	**6SL3120-1TE28-5AA3**
1PH8186- . . B . . .	0.87	38	85	0.652 (5.771)	422 (931)	1XB7322-P05	85 [4]	**6SL3120-1TE28-5AA3**
1PH8224- . . B . . .	0.88	41	87.8	1.48 (13.10)	610 (1345)	1XB7322-P05	132	**6SL3120-1TE31-3AA3**
1PH8226- . . B . . .	0.86	60	89.5	1.93 (17.08)	740 (1632)	1XB7322-P05	200	**6SL3120-1TE32-0AA4**
1PH8228- . . B . . .	0.87	73	89.9	2.33 (20.62)	870 (1918)	1XB7322-P05	200	**6SL3120-1TE32-0AA4**
1PH8184- . . C . . .	0.90	28	87.2	0.489 (4.328)	350 (772)	1XB7322-P05	132	**6SL3120-1TE31-3AA3**
1PH8186- . . C . . .	0.90	38	89.1	0.652 (5.771)	422 (931)	1XB7322-P05	132	**6SL3120-1TE31-3AA3**
1PH8224- . . C . . .	0.88	63	91.4	1.48 (13.10)	610 (1345)	1XB7322-P05	200	**6SL3120-1TE32-0AA4**
1PH8226- . . C . . .	0.90	71	91.8	1.93 (17.08)	740 (1632)	1XB7422-P06	260	**6SL3320-1TE32-6AA3**
1PH8228- . . C . . .	0.91	77	92.2	2.33 (20.62)	870 (1918)	1XB7422-P06	260	**6SL3320-1TE32-6AA3**
1PH8284-1. C . . .	0.89	117	94.2	4.20 (37.17)	1200 (2646)	1XB7700-P02	380	**6SL3320-1TE33-8AA3**
1PH8286-1. C . . .	0.91	126	94.2	5.20 (46.03)	1400 (3087)	1XB7700-P02	490	**6SL3320-1TE35-0AA3**
1PH8288-1. C . . .	0.91	164	94.5	6.30 (55.76)	1650 (3638)	1XB7700-P02	745	**6SL3320-1TE37-5AA3**
1PH8184- . . D . . .	0.88	39	91.1	0.489 (4.328)	350 (772)	1XB7322-P05	132	**6SL3120-1TE31-3AA3**
1PH8186- . . D . . .	0.89	54	91.8	0.652 (5.771)	422 (931)	1XB7322-P05	200	**6SL3120-1TE32-0AA4**
1PH8224- . . D . . .	0.88	74	93.4	1.48 (13.10)	610 (1345)	1XB7422-P06	260	**6SL3320-1TE32-6AA3**
1PH8226- . . D . . .	0.90	83	93.6	1.93 (17.08)	740 (1632)	1XB7700-P02	310	**6SL3320-1TE33-1AA3**
1PH8228- . . D . . .	0.91	94	94	2.33 (20.62)	870 (1918)	1XB7700-P02	380	**6SL3320-1TE33-8AA3**
1PH8284-1. D . . .	0.89	150	95.3	4.20 (37.17)	1200 (2646)	1XB7700-P02	490	**6SL3320-1TE35-0AA3**
1PH8286-1. D . . .	0.89	209	95.6	5.20 (46.03)	1400 (3087)	1XB7700-P02	840	**6SL3320-1TE38-4AA3**
1PH8288-1. D . . .	0.90	244	95.8	6.30 (55.76)	1650 (3638)	1XB7712-P03	985	**6SL3320-1TE41-0AA3**
1PH8184- . . F . . .	0.87	61	93.7	0.489 (4.328)	350 (772)	1XB7322-P05	200	**6SL3120-1TE32-0AA4**
1PH8186- . . F . . .	0.88	80	94.2	0.652 (5.771)	422 (931)	1XB7422-P06	260	**6SL3320-1TE32-6AA3**
1PH8224- . . F . . .	0.89	84	94.6	1.48 (13.10)	610 (1345)	1XB7700-P02	310	**6SL3320-1TE33-1AA3**
1PH8226- . . F . . .	0.89	114	95.4	1.93 (17.08)	740 (1632)	1XB7700-P02	380	**6SL3320-1TE33-8AA3**
1PH8228- . . F . . .	0.89	162	95.6	2.33 (20.62)	870 (1918)	1XB7700-P02	490	**6SL3320-1TE35-0AA3**
1PH8284-1. F . . .	0.91	158	960	4.20 (37.17)	1200 (2646)	1XB7700-P02	745	**6SL3320-1TE37-5AA3**
1PH8286-1. F . . .	0.92	178	96.2	5.20 (46.03)	1400 (3087)	1XB7712-P03	840	**6SL3320-1TE38-4AA3**
1PH8288-1. F . . .	0.92	228	96.3	6.30 (55.76)	1650 (3638)	1XB7712-P03	985 [4]	**6SL3320-1TE41-0AA3**
1PH8184- . . L . . .	0.87	75	95.2	0.489 (4.328)	350 (772)	1XB7322-P05	210	**6SL3320-1TE32-1AA3**
1PH8186- . . L . . .	0.87	105	95.5	0.652 (5.771)	422 (931)	1XB7422-P06	310	**6SL3320-1TE33-1AA3**
1PH8224- . . L . . .	0.89	113	95.5	1.48 (13.10)	610 (1345)	1XB7700-P02	380	**6SL3320-1TE33-8AA3**
1PH8226- . . L . . .	0.89	150	95.8	1.93 (17.08)	740 (1632)	1XB7700-P02	490	**6SL3320-1TE35-0AA3**
1PH8228- . . L . . .	0.89	182	96	2.33 (20.62)	870 (1918)	1XB7700-P02	745	**6SL3320-1TE37-5AA3**

[1] n_2: Maximum permissible thermal speed at constant power.
[2] n_{max}: Maximum speed that must not be exceeded (applicable for standard: 14th position of the Article No. A to F); limitations must be taken into consideration where necessary (e.g. with holding brake), see Article No. supplements.
[3] I_N: Output current of the Motor Module at rated pulse frequency (see SINAMICS S120 drive system).
The rated motor data are valid for 2 kHz (SH 180 to 280).
[4] The output current of the Motor Module is lower than the rated motor current for the pulse frequency on which it is based.

© Siemens 2024

Selection and ordering data

Rated speed	Shaft height	Rated power	Rated torque	Rated current	Rated voltage	Rated frequency	Operating speed for field weakening, max. [1]	Speed, max. [2]	**SIMOTICS M-1PH8 asynchronous motors Forced ventilation**
n_N	SH	P_N	M_N	I_N	U_N	f_N	n_2	n_{max}	
r/min		kW (hp)	Nm (lb_f-ft)	A	V	Hz	r/min	r/min	Article No.
Line voltage 480 V 3 AC, Smart/Basic Line Module									
600	180	36 (48.3)	573 (423)	64	440	20.9	2100	5000	**1PH8184-■■B■■-....**
		48 (64.4)	764 (564)	88	430	20.8	2300	5000	**1PH8186-■■B■■-....**
	225	67 (89.8)	1066 (786)	118	410	20.9	1800	4500	**1PH8224-■■B■■-....**
		87 (117)	1385 (1022)	152	410	20.8	2300	4500	**1PH8226-■■B■■-....**
		108 (145)	1719 (1268)	188	410	20.8	2200	4500	**1PH8228-■■B■■-....**
1000	180	57 (76.4)	544 (401)	90	460	34.4	2400	5000	**1PH8184-■■C■■-....**
		74 (99.2)	707 (521)	116	450	34.3	2600	5000	**1PH8186-■■C■■-....**
	225	105 (141)	1003 (740)	174	425	34.1	2300	4500	**1PH8224-■■C■■-....**
		146 (196)	1394 (1028)	230	440	34.1	2300	4500	**1PH8226-■■C■■-....**
		165 (221)	1576 (1162)	250	450	34.1	2400	4500	**1PH8228-■■C■■-....**
	280	235 (315)	2244 (1655)	345	455	33.9	1700	3300	**1PH8284-1■C4■-....**
		310 (416)	2961 (2184)	450	460	33.9	2000	3300	**1PH8286-1■C4■-....**
		385 (516)	3677 (2712)	560	460	33.9	2050	3300	**1PH8288-1■C4■-....**
1350	180	74 (99.2)	523 (386)	118	450	46.0	3100	5000	**1PH8184-■■D■■-....**
		98 (131)	693 (511)	152	450	45.9	3300	5000	**1PH8186-■■D■■-....**
	225	137 (184)	969 (715)	215	450	45.7	3000	4500	**1PH8224-■■D■■-....**
		172 (231)	1217 (898)	255	460	45.7	2900	4500	**1PH8226-■■D■■-....**
		218 (292)	1542 (1137)	320	460	45.7	2800	4500	**1PH8228-■■D■■-....**
	280	325 (436)	2299 (1696)	475	460	45.5	2200	3300	**1PH8284-1■D4■-....**
		410 (550)	2901 (2140)	620	445	45.5	2200	3300	**1PH8286-1■D4■-....**
		505 (677)	3573 (2635)	750	450	45.5	2200	3300	**1PH8288-1■D4■-....**
2000	180	98 (131)	468 (345)	156	450	67.5	4300	5000	**1PH8184-■■F■■-....**
		135 (181)	645 (476)	210	445	67.5	4300	5000	**1PH8186-■■F■■-....**
	225	178 (239)	850 (627)	265	460	67.4	2900	4500	**1PH8224-■■F■■-....**
		220 (295)	1051 (775)	335	450	67.3	2900	4500	**1PH8226-■■F■■-....**
		288 (386)	1375 (1014)	440	450	67.3	2900	4500	**1PH8228-■■F■■-....**
	280	415 (557)	1981 (1461)	600	455	67.3	2200	3300	**1PH8284-1■F4■-....**
		500 (671)	2387 (1761)	720	455	67.2	2200	3300	**1PH8286-1■F4■-....**
		630 (845)	3009 (2219)	900	455	67.2	2200	3300	**1PH8288-1■F4■-....**
3400	180	113 (152)	317 (234)	176	460	114.1	4500	5000	**1PH8184-■■L■■-....**
		130 (174)	365 (269)	210	455	113.9	4500	5000	**1PH8186-■■L■■-....**
	225	205 (275)	576 (425)	310	460	114.0	3500	4500	**1PH8224-■■L■■-....**
		270 (362)	758 (559)	405	460	113.9	3500	4500	**1PH8226-■■L■■-....**
		300 (402)	843 (622)	450	460	113.8	3500	4500	**1PH8228-■■L■■-....**

For versions, see Article No. supplements and options.

For footnotes, see next page.

© Siemens 2024

Motor type (repeated)	Power factor	Magnetizing current	Efficiency	Moment of inertia	Weight without holding brake, approx.	Terminal box	SINAMICS S120 Motor Module	
							Rated output current [3]	Internal air cooling For further components, see SINAMICS S120 drive system
	cos φ	I_μ	η	J			I_N	
		A	%	kgm² (lb$_f$-in-s²)	kg (lb)	Type	A	Article No.
1PH8184- . . B . . .	0.85	28	86.3	0.489 (4.328)	350 (772)	1XB7322-P05	85	**6SL3120-1TE28-5AA3**
1PH8186- . . B . . .	0.84	41	87.4	0.652 (5.771)	422 (931)	1XB7322-P05	85 [4]	**6SL3120-1TE28-5AA3**
1PH8224- . . B . . .	0.90	35	88.3	1.48 (13.10)	610 (1345)	1XB7322-P05	132	**6SL3120-1TE31-3AA3**
1PH8226- . . B . . .	0.90	49	89.9	1.93 (17.08)	740 (1632)	1XB7322-P05	200	**6SL3120-1TE32-0AA4**
1PH8228- . . B . . .	0.90	57	90.2	2.33 (20.62)	870 (1918)	1XB7322-P05	200	**6SL3120-1TE32-0AA4**
1PH8184- . . C . . .	0.89	30	89.6	0.489 (4.328)	350 (772)	1XB7322-P05	132	**6SL3120-1TE31-3AA3**
1PH8186- . . C . . .	0.89	39	91.2	0.652 (5.771)	422 (931)	1XB7322-P05	132	**6SL3120-1TE31-3AA3**
1PH8224- . . C . . .	0.88	61	92.9	1.48 (13.10)	610 (1345)	1XB7322-P05	200	**6SL3120-1TE32-0AA4**
1PH8226- . . C . . .	0.89	74	93.2	1.93 (17.08)	740 (1632)	1XB7422-P06	260	**6SL3320-1TE32-6AA3**
1PH8228- . . C . . .	0.90	79	93.6	2.33 (20.62)	870 (1918)	1XB7422-P06	260	**6SL3320-1TE32-6AA3**
1PH8284-1. C . . .	0.91	97	94.6	4.20 (37.17)	1200 (2646)	1XB7700-P02	380	**6SL3320-1TE33-8AA3**
1PH8286-1. C . . .	0.91	117	94.8	5.20 (46.03)	1400 (3087)	1XB7700-P02	490	**6SL3320-1TE35-0AA3**
1PH8288-1. C . . .	0.91	164	95.3	6.30 (55.76)	1650 (3638)	1XB7700-P02	745	**6SL3320-1TE37-5AA3**
1PH8184- . . D . . .	0.88	39	92.2	0.489 (4.328)	350 (772)	1XB7322-P05	132	**6SL3120-1TE31-3AA3**
1PH8186- . . D . . .	0.89	53	92.8	0.652 (5.771)	422 (931)	1XB7322-P05	200	**6SL3120-1TE32-0AA4**
1PH8224- . . D . . .	0.87	75	94.1	1.48 (13.10)	610 (1345)	1XB7422-P06	260	**6SL3320-1TE32-6AA3**
1PH8226- . . D . . .	0.89	85	94.5	1.93 (17.08)	740 (1632)	1XB7700-P02	310	**6SL3320-1TE33-1AA3**
1PH8228- . . D . . .	0.90	96	94.7	2.33 (20.62)	870 (1918)	1XB7700-P02	380	**6SL3320-1TE33-8AA3**
1PH8284-1. D . . .	0.90	146	95.7	4.20 (37.17)	1200 (2646)	1XB7700-P02	490	**6SL3320-1TE35-0AA3**
1PH8286-1. D . . .	0.89	210	96	5.20 (46.03)	1400 (3087)	1XB7700-P02	840	**6SL3320-1TE38-4AA3**
1PH8288-1. D . . .	0.90	243	96.2	6.30 (55.76)	1650 (3638)	1XB7712-P03	985	**6SL3320-1TE41-0AA3**
1PH8184- . . F . . .	0.85	63	94.3	0.489 (4.328)	350 (772)	1XB7322-P05	200	**6SL3120-1TE32-0AA4**
1PH8186- . . F . . .	0.87	83	94.8	0.652 (5.771)	422 (931)	1XB7422-P06	260	**6SL3320-1TE32-6AA3**
1PH8224- . . F . . .	0.88	88	95.2	1.48 (13.10)	610 (1345)	1XB7700-P02	310	**6SL3320-1TE33-1AA3**
1PH8226- . . F . . .	0.88	117	95.7	1.93 (17.08)	740 (1632)	1XB7700-P02	380	**6SL3320-1TE33-8AA3**
1PH8228- . . F . . .	0.88	166	95.9	2.33 (20.62)	870 (1918)	1XB7700-P02	490	**6SL3320-1TE35-0AA3**
1PH8284-1. F . . .	0.91	157	96.2	4.20 (37.17)	1200 (2646)	1XB7700-P02	745	**6SL3320-1TE37-5AA3**
1PH8286-1. F . . .	0.92	178	96.3	5.20 (46.03)	1400 (3087)	1XB7712-P03	840	**6SL3320-1TE38-4AA3**
1PH8288-1. F . . .	0.92	227	96.5	6.30 (55.76)	1650 (3638)	1XB7712-P03	985	**6SL3320-1TE41-0AA3**
1PH8184- . . L . . .	0.85	75	95.3	0.489 (4.328)	350 (772)	1XB7322-P05	210	**6SL3320-1TE32-1AA3**
1PH8186- . . L . . .	0.82	108	95.4	0.652 (5.771)	422 (931)	1XB7422-P06	310	**6SL3320-1TE33-1AA3**
1PH8224- . . L . . .	0.87	113	95.4	1.48 (13.10)	610 (1345)	1XB7700-P02	380	**6SL3320-1TE33-8AA3**
1PH8226- . . L . . .	0.87	153	95.7	1.93 (17.08)	740 (1632)	1XB7700-P02	490	**6SL3320-1TE35-0AA3**
1PH8228- . . L . . .	0.87	181	95.8	2.33 (20.62)	870 (1918)	1XB7700-P02	745	**6SL3320-1TE37-5AA3**

[1] n_2: Maximum permissible thermal speed at constant power.
[2] n_{max}: Maximum speed that must not be exceeded (applicable for standard: 14th position of the Article No. A to F); limitations must be taken into consideration where necessary (e.g. with holding brake), see Article No. supplements.
[3] I_N: Output current of the Motor Module at rated pulse frequency (see SINAMICS S120 drive system).
The rated motor data are valid for 2 kHz (SH 180 to 280).
[4] The output current of the Motor Module is lower than the rated motor current for the pulse frequency on which it is based.

© Siemens 2024

Selection and ordering data

Rated speed	Shaft height	Rated power	Rated torque	Rated current	Rated voltage	Rated frequency	Operating speed for field weakening, max. [1]	Speed, max. [2]	**SIMOTICS M-1PH8 asynchronous motors Forced ventilation**
n_N	SH	P_N	M_N	I_N	U_N	f_N	n_2	n_{max}	
r/min		kW (hp)	Nm (lb_f-ft)	A	V	Hz	r/min	r/min	Article No.
Line voltage 480 V 3 AC, Active Line Module									
700	180	42 (56.3)	573 (423)	65	500	24.2	2200	5000	**1PH8184-■■B■■-....**
		56 (75.1)	764 (564)	88	500	24.1	2400	5000	**1PH8186-■■B■■-....**
	225	67 (89.8)	914 (674)	98	500	24.0	2300	4500	**1PH8224-■■B■■-....**
		87 (117)	1187 (876)	128	500	23.9	2400	4500	**1PH8226-■■B■■-....**
		108 (145)	1473 (1086)	156	500	23.9	2500	4500	**1PH8228-■■B■■-....**
1100	180	62 (83.1)	538 (397)	89	500	37.7	2500	5000	**1PH8184-■■C■■-....**
		80 (107)	695 (513)	114	500	37.6	2800	5000	**1PH8186-■■C■■-....**
	225	105 (141)	912 (673)	160	470	37.3	2500	4500	**1PH8224-■■C■■-....**
		146 (196)	1268 (935)	205	500	37.3	2500	4500	**1PH8226-■■C■■-....**
		165 (221)	1433 (1057)	225	500	37.3	2700	4500	**1PH8228-■■C■■-....**
	280	250 (335)	2170 (1601)	335	500	37.2	1700	3300	**1PH8284-1■C4■-....**
		330 (443)	2865 (2113)	440	500	37.2	2000	3300	**1PH8286-1■C4■-....**
		405 (543)	3516 (2593)	540	500	37.2	2050	3300	**1PH8288-1■C4■-....**
1500	180	76 (102)	484 (357)	108	500	50.9	3600	5000	**1PH8184-■■D■■-....**
		105 (141)	669 (493)	148	500	50.9	3800	5000	**1PH8186-■■D■■-....**
	225	137 (184)	872 (643)	194	500	50.6	3400	4500	**1PH8224-■■D■■-....**
		172 (231)	1095 (808)	240	500	50.7	3100	4500	**1PH8226-■■D■■-....**
		218 (292)	1388 (1024)	295	500	50.7	3000	4500	**1PH8228-■■D■■-....**
	280	325 (436)	2069 (1526)	440	500	50.5	2200	3300	**1PH8284-1■D4■-....**
		410 (550)	2610 (1925)	560	495	50.4	2200	3300	**1PH8286-1■D4■-....**
		505 (677)	3215 (2371)	680	500	50.4	2200	3300	**1PH8288-1■D4■-....**
2200	180	98 (131)	425 (313)	144	500	74.1	4300	5000	**1PH8184-■■F■■-....**
		135 (181)	586 (432)	196	490	74.1	4300	5000	**1PH8186-■■F■■-....**
	225	178 (239)	773 (570)	250	500	74.0	2900	4500	**1PH8224-■■F■■-....**
		220 (295)	955 (704)	305	500	73.9	2900	4500	**1PH8226-■■F■■-....**
		288 (386)	1250 (922)	405	500	73.9	2900	4500	**1PH8228-■■F■■-....**
	280	394 (528)	1710 (1261)	520	500	73.8	2400	3300	**1PH8284-1■F4■-....**
		475 (637)	2062 (1521)	620	500	73.8	2400	3300	**1PH8286-1■F4■-....**
		599 (803)	2600 (1918)	790	500	73.8	2400	3300	**1PH8288-1■F4■-....**

For versions, see Article No. supplements and options.

For footnotes, see next page.

© Siemens 2024

Motor type (repeated)	Power factor	Magnetizing current	Efficiency	Moment of inertia	Weight without holding brake, approx.	Terminal box	SINAMICS S120 Motor Module	
							Rated output current [3]	Internal air cooling For further components, see SINAMICS S120 drive system
	cos φ	I_μ	η	J			I_N	
		A	%	kgm² (lb$_f$-in-s²)	kg (lb)	Type	A	Article No.
1PH8184- . . B . . .	0.85	27	87.7	0.489 (4.328)	350 (772)	1XB7322-P05	85	**6SL3120-1TE28-5AA3**
1PH8186- . . B . . .	0.83	43	88.9	0.652 (5.771)	422 (931)	1XB7322-P05	85 [4]	**6SL3120-1TE28-5AA3**
1PH8224- . . B . . .	0.86	41	91.4	1.48 (13.10)	610 (1345)	1XB7322-P05	132	**6SL3120-1TE31-3AA3**
1PH8226- . . B . . .	0.85	58	92.4	1.93 (17.08)	740 (1632)	1XB7322-P05	200	**6SL3120-1TE32-0AA4**
1PH8228- . . B . . .	0.86	67	92.6	2.33 (20.62)	870 (1918)	1XB7322-P05	200	**6SL3120-1TE32-0AA4**
1PH8184- . . C . . .	0.88	30	92.1	0.489 (4.328)	350 (772)	1XB7322-P05	132	**6SL3120-1TE31-3AA3**
1PH8186- . . C . . .	0.88	41	92.1	0.652 (5.771)	422 (931)	1XB7322-P05	132	**6SL3120-1TE31-3AA3**
1PH8224- . . C . . .	0.86	63	93.8	1.48 (13.10)	610 (1345)	1XB7322-P05	200	**6SL3120-1TE32-0AA3**
1PH8226- . . C . . .	0.87	81	94.2	1.93 (17.08)	740 (1632)	1XB7422-P06	260	**6SL3320-1TE32-6AA3**
1PH8228- . . C . . .	0.89	82	94.4	2.33 (20.62)	870 (1918)	1XB7422-P06	260	**6SL3320-1TE32-6AA3**
1PH8284-1. C . . .	0.9	98	95.1	4.20 (37.17)	1200 (2646)	1XB7700-P02	380	**6SL3320-1TE33-8AA3**
1PH8286-1. C . . .	0.91	115	95.2	5.20 (46.03)	1400 (3087)	1XB7700-P02	490	**6SL3320-1TE35-0AA3**
1PH8288-1. C . . .	0.91	162	95.6	6.30 (55.76)	1650 (3638)	1XB7700-P02	745	**6SL3320-1TE37-5AA3**
1PH8184- . . D . . .	0.87	40	93.1	0.489 (4.328)	350 (772)	1XB7322-P05	132	**6SL3120-1TE31-3AA3**
1PH8186- . . D . . .	0.88	54	93.5	0.652 (5.771)	422 (931)	1XB7322-P05	200	**6SL3120-1TE32-0AA4**
1PH8224- . . D . . .	0.86	77	94.7	1.48 (13.10)	610 (1345)	1XB7422-P06	260	**6SL3320-1TE32-6AA3**
1PH8226- . . D . . .	0.88	83	95	1.93 (17.08)	740 (1632)	1XB7700-P02	310	**6SL3320-1TE33-1AA3**
1PH8228- . . D . . .	0.9	94	95.2	2.33 (20.62)	870 (1918)	1XB7700-P02	380	**6SL3320-1TE33-8AA3**
1PH8284-1. D . . .	0.89	140	96	4.20 (37.17)	1200 (2646)	1XB7700-P02	490	**6SL3320-1TE35-0AA3**
1PH8286-1. D . . .	0.88	214	96.3	5.20 (46.03)	1400 (3087)	1XB7700-P02	840	**6SL3320-1TE38-4AA3**
1PH8288-1. D . . .	0.89	247	96.5	6.30 (55.76)	1650 (3638)	1XB7712-P03	985	**6SL3320-1TE41-0AA3**
1PH8184- . . F . . .	0.83	66	94.7	0.489 (4.328)	350 (772)	1XB7322-P05	200	**6SL3120-1TE32-0AA4**
1PH8186- . . F . . .	0.85	85	95.2	0.652 (5.771)	422 (931)	1XB7422-P06	260	**6SL3320-1TE32-6AA3**
1PH8224- . . F . . .	0.87	88	95.4	1.48 (13.10)	610 (1345)	1XB7700-P02	310	**6SL3320-1TE33-1AA3**
1PH8226- . . F . . .	0.87	120	95.9	1.93 (17.08)	740 (1632)	1XB7700-P02	380	**6SL3320-1TE33-8AA3**
1PH8228- . . F . . .	0.86	171	96	2.33 (20.62)	870 (1918)	1XB7700-P02	490	**6SL3320-1TE35-0AA3**
1PH8284-1. F . . .	0.9	159	96.4	4.20 (37.17)	1200 (2646)	1XB7700-P02	745	**6SL3320-1TE37-5AA3**
1PH8286-1. F . . .	0.91	180	96.6	5.20 (46.03)	1400 (3087)	1XB7712-P03	840	**6SL3320-1TE38-4AA3**
1PH8288-1. F . . .	0.91	230	96.7	6.30 (55.76)	1650 (3638)	1XB7712-P03	985	**6SL3320-1TE41-0AA3**

[1] n_2: Maximum permissible thermal speed at constant power.
[2] n_{max}: Maximum speed that must not be exceeded (applicable for standard: 14th position of the Article No. A to F); limitations must be taken into consideration where necessary (e.g. with holding brake), see Article No. supplements.
[3] I_N: Output current of the Motor Module at rated pulse frequency (see SINAMICS S120 drive system).
The rated motor data are valid for 2 kHz (SH 180 to 280).
[4] The output current of the Motor Module is lower than the rated motor current for the pulse frequency on which it is based.

© Siemens 2024

Selection and ordering data

Rated speed	Shaft height	Rated power	Rated torque	Rated current	Rated voltage	Rated frequency	Operating speed for field weakening, max. [1]	Speed, max. [2]	**SIMOTICS M-1PH8 asynchronous motors Forced ventilation**
n_N	SH	P_N	M_N	I_N	U_N	f_N	n_2	n_{max}	
r/min		kW (hp)	Nm (lb_f-ft)	A	V	Hz	r/min	r/min	Article No.
Line voltage 690 V 3 AC, Basic Line Module									
700	280	162 (217)	2210 (1630)	184	605	23.9	1200	3300	**1PH8284- 1■K 4■-....**
		210 (282)	2865 (2113)	235	605	23.8	1300	3300	**1PH8286- 1■K 4■-....**
		263 (353)	3588 (2647)	295	605	23.9	1400	3300	**1PH8288- 1■K 4■-....**
1000	280	236 (316)	2254 (1663)	265	600	33.9	1900	3300	**1PH8284- 1■U 4■-....**
		299 (401)	2855 (2106)	355	570	33.8	2000	3300	**1PH8286- 1■U 4■-....**
		367 (492)	3505 (2585)	425	580	33.8	2100	3300	**1PH8288- 1■U 4■-....**
1500	280	307 (412)	1955 (1442)	345	590	50.6	1900	3300	**1PH8284- 1■W 4■-....**
		370 (496)	2356 (1738)	410	590	50.6	2000	3300	**1PH8286- 1■W 4■-....**
		465 (624)	2961 (2184)	520	590	50.5	2100	3300	**1PH8288- 1■W 4■-....**
Line voltage 690 V 3 AC, Active Line Module									
800	280	185 (248)	2208 (1629)	182	690	27.2	1500	3300	**1PH8284- 1■K 4■-....**
		240 (322)	2865 (2113)	235	690	27.2	1600	3300	**1PH8286- 1■K 4■-....**
		300 (402)	3581 (2641)	290	690	27.3	1600	3300	**1PH8288- 1■K 4■-....**
1150	280	272 (365)	2255 (1663)	270	690	38.9	2200	3300	**1PH8284- 1■U 4■-....**
		344 (461)	2860 (2110)	355	655	38.8	2200	3300	**1PH8286- 1■U 4■-....**
		422 (566)	3504 (2585)	425	665	38.8	2200	3300	**1PH8288- 1■U 4■-....**
1750	280	359 (481)	1959 (1445)	345	690	58.9	2200	3300	**1PH8284- 1■W 4■-....**
		432 (579)	2356 (1738)	410	690	58.9	2200	3300	**1PH8286- 1■W 4■-....**
		543 (728)	2964 (2186)	510	690	58.9	2200	3300	**1PH8288- 1■W 4■-....**

For versions, see Article No. supplements and options.

For footnotes, see next page.

© Siemens 2024

Motor type (repeated)	Power factor	Magne-tizing current	Efficiency	Moment of inertia	Weight without holding brake, approx.	Terminal box	SINAMICS S120 Motor Module	
							Rated output current [3]	Internal air cooling For further components, see SINAMICS S120 drive system
	cos φ	I_μ	η	J			I_N	
		A	%	kgm² (lb_f-in-s²)	kg (lb)	Type	A	Article No.
1PH8284-1.K...	0.91	50	92.7	4.20 (37.17)	1200 (2646)	1XB7700-P02	215	**6SL3320-1TG32-2AA3**
1PH8286-1.K...	0.90	79	93.8	5.20 (46.03)	1400 (3087)	1XB7700-P02	260	**6SL3320-1TG32-6AA3**
1PH8288-1.K...	0.92	71	92.9	6.30 (55.76)	1650 (3638)	1XB7700-P02	330 [4]	**6SL3320-1TG33-3AA3**
1PH8284-1.U...	0.90	85	94.7	4.20 (37.17)	1200 (2646)	1XB7700-P02	330	**6SL3320-1TG33-3AA3**
1PH8286-1.U...	0.89	119	95.2	5.20 (46.03)	1400 (3087)	1XB7700-P02	410	**6SL3320-1TG34-1AA3**
1PH8288-1.U...	0.90	140	95.4	6.30 (55.76)	1650 (3638)	1XB7700-P02	465	**6SL3320-1TG34-7AA3**
1PH8284-1.W...	0.91	89	95.6	4.20 (37.17)	1200 (2646)	1XB7700-P02	410	**6SL3320-1TG34-1AA3**
1PH8286-1.W...	0.92	101	95.8	5.20 (46.03)	1400 (3087)	1XB7700-P02	465	**6SL3320-1TG34-7AA3**
1PH8288-1.W...	0.92	130	960	6.30 (55.76)	1650 (3638)	1XB7700-P02	575	**6SL3320-1TG35-8AA3**
1PH8284-1.K...	0.91	51	93.4	4.20 (37.17)	1200 (2646)	1XB7700-P02	215	**6SL3320-1TG32-2AA3**
1PH8286-1.K...	0.90	79	94.4	5.20 (46.03)	1400 (3087)	1XB7700-P02	260	**6SL3320-1TG32-6AA3**
1PH8288-1.K...	0.92	72	93.6	6.30 (55.76)	1650 (3638)	1XB7700-P02	330	**6SL3320-1TG33-3AA3**
1PH8284-1.U...	0.89	86	95.1	4.20 (37.17)	1200 (2646)	1XB7700-P02	330	**6SL3320-1TG33-3AA3**
1PH8286-1.U...	0.89	119	95.6	5.20 (46.03)	1400 (3087)	1XB7700-P02	410	**6SL3320-1TG34-1AA3**
1PH8288-1.U...	0.90	140	95.8	6.30 (55.76)	1650 (3638)	1XB7700-P02	465	**6SL3320-1TG34-7AA3**
1PH8284-1.W...	0.91	91	95.9	4.20 (37.17)	1200 (2646)	1XB7700-P02	410	**6SL3320-1TG34-1AA3**
1PH8286-1.W...	0.92	102	96.1	5.20 (46.03)	1400 (3087)	1XB7700-P02	465	**6SL3320-1TG34-7AA3**
1PH8288-1.W...	0.92	131	96.3	6.30 (55.76)	1650 (3638)	1XB7700-P02	575	**6SL3320-1TG35-8AA3**

[1] n_2: Maximum permissible thermal speed at constant power.
[2] n_{max}: Maximum speed that must not be exceeded (applicable for standard; 14. position of the Article No.: A to F).
[3] I_N: Output current of the Motor Module at rated pulse frequency (see SINAMICS S120 drive system).
The rated motor data are valid for 2 kHz (SH 180 to 280).
[4] The output current of the Motor Module is lower than the rated motor current for the pulse frequency on which it is based.

© Siemens 2024

Selection and ordering data

Rated speed	Shaft height	Rated power	Rated torque	Rated current	Rated voltage	Rated frequency	Operating speed for field weakening, max. [1]	Speed, max. [2]	**SIMOTICS M-1PH8 asynchronous motors Water cooling**
n_N	SH	P_N	M_N	I_N	U_N	f_N	n_2	n_{max}	
r/min		kW (hp)	Nm (lb_f-ft)	A	V	Hz	r/min	r/min	Article No.
Line voltage 400 V 3 AC, Smart/Basic Line Module									
1500	80	3.5 (4.7)	22 (16.2)	8.9	357	54.5	3550	10000	**1PH8083-■■F 2■-....**
		4.6 (6.2)	29 (21.4)	13.7	316	53.3	6000	10000	**1PH8087-■■F 2■-....**
	100	5 (6.71)	32 (23.6)	12.8	357	53.1	2500	9000	**1PH8101-■■F 2■-....**
		7.1 (9.5)	45 (33.2)	19.7	317	53.0	4000	9000	**1PH8103-■■F 2■-....**
		11 (14.8)	70 (51.6)	28.5	340	52.8	3500	9000	**1PH8105-■■F 2■-....**
		14 (18.8)	89 (65.6)	43.7	277	53.3	5600	9000	**1PH8107-■■F 2■-....**
	132	15 (20.1)	96 (70.8)	30	380	52.3	2500	8000	**1PH8131-■■F 2■-....**
		17 (22.8)	108 (79.7)	38	345	51.5	3500	8000	**1PH8133-■■F 2■-....**
		22 (29.5)	140 (103)	51	342	51.5	4000	8000	**1PH8135-■■F 2■-....**
		27 (36.2)	172 (127)	67	315	51.6	4000	8000	**1PH8137-■■F 2■-....**
		30 (40.2)	191 (141)	80	289	51.9	5000	8000	**1PH8138-■■F 2■-....**
	160	37 (49.6)	236 (174)	84	328	51.1	3000	6500	**1PH8163-■■F 2■-....**
		46 (61.7)	293 (216)	104	330	50.9	3050	6500	**1PH8165-■■F 2■-....**
		52 (69.7)	331 (244)	116	332	51.2	3050	6500	**1PH8166-■■F 2■-....**
2000	80	4.3 (5.8)	21 (15.5)	12	322	70.4	7200	10000	**1PH8083-■■G 2■-....**
		6.1 (8.2)	29 (21.4)	17.5	312	70.3	7950	10000	**1PH8087-■■G 2■-....**
	100	6.4 (8.6)	31 (22.9)	16.8	335	69.8	4000	9000	**1PH8101-■■G 2■-....**
		9.5 (12.7)	45 (33.2)	23.8	343	69.8	3000	9000	**1PH8103-■■G 2■-....**
		13.0 (17.4)	62 (45.7)	34.5	326	69.3	4000	9000	**1PH8105-■■G 2■-....**
	132	18 (24.1)	86 (63.4)	40	352	69.1	4000	8000	**1PH8131-■■G 2■-....**
		22 (29.5)	105 (77.4)	52	336	68.2	5000	8000	**1PH8133-■■G 2■-....**
		29 (38.9)	138 (102)	64	348	68.3	4500	8000	**1PH8135-■■G 2■-....**
	160	42 (56.3)	201 (148)	93	335	67.6	5000	6500	**1PH8163-■■G 2■-....**
		53 (71.1)	253 (187)	110	352	67.6	3500	6500	**1PH8165-■■G 2■-....**
		64 (85.8)	306 (226)	125	376	67.8	3000	6500	**1PH8166-■■G 2■-....**
3000	100	10.6 (14.2)	34 (25.1)	30	309	102.4	11900	9000	**1PH8103-■■M 2■-....**
		16.8 (22.5)	53 (39.1)	45	324	102.3	8050	9000	**1PH8105-■■M 2■-....**
		18 (24.1)	57 (42.0)	60	264	102.2	17000	9000	**1PH8107-■■M 2■-....**

For versions, see Article No. supplements and options.

For footnotes, see next page.

© Siemens 2024

Motor type (repeated)	Power factor	Magnetizing current	Efficiency	Moment of inertia without holding brake	Weight without holding brake, approx.	Terminal box	SINAMICS S120 Motor Module	
							Rated output current [3]	Internal air cooling For further components, see SINAMICS S120 drive system
	$\cos \varphi$	I_μ	η	J			I_N	
		A	%	kgm^2 (lb$_f$-in-s^2)	kg (lb)	Type	A	Article No.
1PH8083-..F...	0.84	3.6	78.4	0.0064 (0.0566)	36 (79.4)	gk803	9	**6SL3120-■TE21-0AD0**
1PH8087-..F...	0.78	7.2	81.4	0.0089 (0.0788)	44 (97.0)	gk803	18	**6SL3120-■TE21-8A■0**
1PH8101-..F...	0.81	6.0	81.3	0.0138 (0.1221)	51 (112)	gk823	18	**6SL3120-■TE21-8A■0**
1PH8103-..F...	0.82	8.6	82.7	0.0172 (0.1522)	60 (132)	gk823	30	**6SL3120-1TE23-0A■0**
1PH8105-..F...	0.81	13.3	84.3	0.0252 (0.2230)	74 (163)	gk823	30	**6SL3120-1TE23-0A■0**
1PH8107-..F...	0.83	17.8	82.9	0.0289 (0.2558)	83 (183)	gk823	45	**6SL3120-1TE24-5AC0**
1PH8131-..F...	0.89	9.2	88.3	0.0590 (0.5222)	105 (232)	gk843	30	**6SL3120-1TE23-0A■0**
1PH8133-..F...	0.86	14.2	89.7	0.0760 (0.6727)	123 (271)	gk843	45	**6SL3120-1TE24-5AC0**
1PH8135-..F...	0.85	20.3	90.1	0.0940 (0.8320)	141 (311)	gk843	60	**6SL3120-1TE26-0AC0**
1PH8137-..F...	0.86	25.3	90	0.1090 (0.9648)	157 (346)	gk843	85	**6SL3120-1TE28-5AA3**
1PH8138-..F...	0.88	27.1	88.2	0.1090 (0.9648)	157 (346)	gk843	85	**6SL3120-1TE28-5AA3**
1PH8163-..F...	0.88	27.4	91.6	0.2160 (1.9118)	229 (505)	gk873	85	**6SL3120-1TE28-5AA3**
1PH8165-..F...	0.87	37.2	93	0.2320 (2.0534)	264 (582)	gk873	132	**6SL3120-1TE31-3AA3**
1PH8166-..F...	0.88	36.7	93.6	0.2320 (2.0534)	269 (593)	gk873	132	**6SL3120-1TE31-3AA3**
1PH8083-..G...	0.80	5.9	83.3	0.0064 (0.0566)	36 (79.4)	gk803	18	**6SL3120-■TE21-8A■0**
1PH8087-..G...	0.80	8.4	84.3	0.0089 (0.0788)	44 (97.0)	gk803	18	**6SL3120-■TE21-8A■0**
1PH8101-..G...	0.81	7.6	85.7	0.0138 (0.1221)	51 (112)	gk823	18	**6SL3120-■TE21-8A■0**
1PH8103-..G...	0.82	10.3	85.7	0.0172 (0.1522)	60 (132)	gk823	30	**6SL3120-1TE23-0A■0**
1PH8105-..G...	0.81	15.6	87.9	0.0252 (0.2230)	74 (163)	gk823	45	**6SL3120-1TE24-5AC0**
1PH8131-..G...	0.85	15.5	90.8	0.0590 (0.5222)	105 (232)	gk843	45	**6SL3120-1TE24-5AC0**
1PH8133-..G...	0.84	22.2	90.9	0.0760 (0.6727)	123 (271)	gk843	60	**6SL3120-1TE26-0AC0**
1PH8135-..G...	0.86	23.9	92.4	0.0940 (0.8320)	141 (311)	gk843	85	**6SL3120-1TE28-5AA3**
1PH8163-..G...	0.88	30.8	93.7	0.2160 (1.9118)	229 (505)	gk873	132	**6SL3120-1TE31-3AA3**
1PH8165-..G...	0.89	32.1	93.8	0.2320 (2.0534)	264 (582)	gk873	132	**6SL3120-1TE31-3AA3**
1PH8166-..G...	0.88	39.3	93.7	0.2320 (2.0534)	269 (593)	gk873	132	**6SL3120-1TE31-3AA3**
1PH8103-..M...	0.80	13.0	90	0.0172 (0.1522)	60 (132)	gk823	30	**6SL3120-1TE23-0A■0**
1PH8105-..M...	0.80	20.3	90	0.0252 (0.2230)	74 (163)	gk823	45	**6SL3120-1TE24-5AC0**
1PH8107-..M...	0.80	26.0	90	0.0289 (0.2558)	83 (183)	gk823	60	**6SL3120-1TE26-0AC0**

Single Motor Module	**1**
Double Motor Module	**2**
Motor Module	
For continuous load with 200 % overload (C type)	**C**
For highly dynamic, intermittent load cycles with 300 % overload (D type)	**D**

[1] n_2: Maximum permissible thermal speed at constant power.
[2] n_{max}: Maximum speed that must not be exceeded (applicable for standard: 14th position of the Article No. B to H); for performance bearings (14th position = "L"), increased maximum speeds apply; limitations must be taken into consideration where necessary (e.g. with holding brake), see Article No. supplements.
[3] I_N: Output current of the Motor Module at rated pulse frequency (see SINAMICS S120 drive system).
The rated motor data are valid for 4 kHz (SH 80 to 160).

© Siemens 2024

Selection and ordering data

Rated speed	Shaft height	Rated power	Rated torque	Rated current	Rated voltage	Rated frequency	Operating speed for field weakening, max. [1]	Speed, max. [2]	**SIMOTICS M-1PH8 asynchronous motors Water cooling**
n_N	SH	P_N	M_N	I_N	U_N	f_N	n_2	n_{max}	
r/min		kW (hp)	Nm (lb_f-ft)	A	V	Hz	r/min	r/min	Article No.
Line voltage 400 V 3 AC, Active Line Module									
1750	80	4 (5.36)	22 (16.2)	8.7	416	62.4	4100	10000	**1PH8083-■■F 2■-....**
		5.4 (7.2)	29 (21.4)	13.7	358	61.8	6600	10000	**1PH8087-■■F 2■-....**
	100	5.8 (7.8)	32 (23.6)	12.8	400	61.7	2500	9000	**1PH8101-■■F 2■-....**
		8.2 (11.0)	45 (33.2)	19.7	364	61.4	5000	9000	**1PH8103-■■F 2■-....**
		12.5 (16.8)	68 (50.2)	28.5	380	61.2	3400	9000	**1PH8105-■■F 2■-....**
		15.5 (20.8)	85 (62.7)	42	314	61.4	4500	9000	**1PH8107-■■F 2■-....**
	132	17 (22.8)	93 (68.6)	30	425	60.7	2500	8000	**1PH8131-■■F 2■-....**
		19.5 (26.1)	106 (78.2)	38	403	59.8	3500	8000	**1PH8133-■■F 2■-....**
		25.5 (34.2)	139 (103)	51	395	59.8	4000	8000	**1PH8135-■■F 2■-....**
		31.5 (42.2)	172 (127)	67	365	59.9	4500	8000	**1PH8137-■■F 2■-....**
		33 (44.3)	180 (133)	77	332	60.0	5000	8000	**1PH8138-■■F 2■-....**
	160	43 (57.7)	235 (173)	84	380	59.4	3500	6500	**1PH8163-■■F 2■-....**
		53 (71.1)	289 (213)	104	374	59.3	3050	6500	**1PH8165-■■F 2■-....**
		61 (81.8)	333 (246)	116	381	59.5	3000	6500	**1PH8166-■■F 2■-....**
2300	80	4.9 (6.6)	20 (14.8)	12	362	80.5	8150	10000	**1PH8083-■■G 2■-....**
		7 (9.39)	29 (21.4)	17.7	355	80.3	8850	10000	**1PH8087-■■G 2■-....**
	100	7.3 (9.8)	30 (22.1)	16.8	382	79.7	5000	9000	**1PH8101-■■G 2■-....**
		10.9 (14.6)	45 (33.2)	23.8	390	79.8	3000	9000	**1PH8103-■■G 2■-....**
		15.0 (20.1)	62 (45.7)	34	370	79.3	3500	9000	**1PH8105-■■G 2■-....**
	132	20 (26.8)	83 (61.2)	39	400	78.5	4000	8000	**1PH8131-■■G 2■-....**
		25 (33.5)	104 (76.7)	52	373	78.3	6000	8000	**1PH8133-■■G 2■-....**
		31 (41.6)	129 (95.2)	61	397	78.1	4500	8000	**1PH8135-■■G 2■-....**
	160	48 (64.4)	199 (147)	93	382	77.6	4000	6500	**1PH8163-■■G 2■-....**
		60 (80.5)	249 (184)	107	410	77.6	3000	6500	**1PH8165-■■G 2■-....**
		72 (96.6)	299 (221)	124	420	77.8	3000	6500	**1PH8166-■■G 2■-....**
3300	100	11.7 (15.7)	34 (25.1)	30	340	112.4	13550	9000	**1PH8103-■■M 2■-....**
		18.5 (24.8)	54 (39.8)	45	355	112.4	9050	9000	**1PH8105-■■M 2■-....**
		20 (26.8)	58 (42.8)	60	290	112.6	18050	9000	**1PH8107-■■M 2■-....**

For versions, see Article No. supplements and options.

For footnotes, see next page.

© Siemens 2024

Motor type (repeated)	Power factor	Magnetizing current	Efficiency	Moment of inertia without holding brake	Weight without holding brake, approx.	Terminal box	SINAMICS S120 Motor Module	
							Rated output current [3]	Internal air cooling For further components, see SINAMICS S120 drive system
	$\cos \varphi$	I_μ	η	J			I_N	
		A	%	kgm^2 (lb$_f$-in-s^2)	kg (lb)	Type	A	Article No.
1PH8083-..F...	0.82	4.0	80.8	0.0064 (0.0566)	36 (79.4)	gk803	9	**6SL3120-■TE21-0AD0**
1PH8087-..F...	0.80	6.8	83.1	0.0089 (0.0788)	44 (97.0)	gk803	18	**6SL3120-■TE21-8A■0**
1PH8101-..F...	0.83	5.4	83.4	0.0138 (0.1221)	51 (112)	gk823	18	**6SL3120-■TE21-8A■0**
1PH8103-..F...	0.82	8.6	85.1	0.0172 (0.1522)	60 (132)	gk823	30	**6SL3120-1TE23-0A■0**
1PH8105-..F...	0.81	12.1	86.2	0.0252 (0.2230)	74 (163)	gk823	30	**6SL3120-1TE23-0A■0**
1PH8107-..F...	0.83	17.5	84.7	0.0289 (0.2558)	83 (183)	gk823	45	**6SL3120-1TE24-5AC0**
1PH8131-..F...	0.89	8.2	89.7	0.0590 (0.5222)	105 (232)	gk843	30	**6SL3120-1TE23-0A■0**
1PH8133-..F...	0.85	14.9	91.3	0.0760 (0.6727)	123 (271)	gk843	45	**6SL3120-1TE24-5AC0**
1PH8135-..F...	0.85	20.1	91.4	0.0940 (0.8320)	141 (311)	gk843	60	**6SL3120-1TE26-0AC0**
1PH8137-..F...	0.86	24.8	91.1	0.1090 (0.9648)	157 (346)	gk843	85	**6SL3120-1TE28-5AA3**
1PH8138-..F...	0.87	27.1	89.8	0.1090 (0.9648)	157 (346)	gk843	85	**6SL3120-1TE28-5AA3**
1PH8163-..F...	0.88	27.3	92.4	0.2160 (1.9118)	229 (505)	gk873	85	**6SL3120-1TE28-5AA3**
1PH8165-..F...	0.88	33.8	93.5	0.2320 (2.0534)	264 (582)	gk873	132	**6SL3120-1TE31-3AA3**
1PH8166-..F...	0.89	35.2	94	0.2320 (2.0534)	269 (593)	gk873	132	**6SL3120-1TE31-3AA3**
1PH8083-..G...	0.80	5.8	84.6	0.0064 (0.0566)	36 (79.4)	gk803	18	**6SL3120-■TE21-8A■0**
1PH8087-..G...	0.79	8.6	86	0.0089 (0.0788)	44 (97.0)	gk803	18	**6SL3120-■TE21-8A■0**
1PH8101-..G...	0.80	7.8	87.4	0.0138 (0.1221)	51 (112)	gk823	18	**6SL3120-■TE21-8A■0**
1PH8103-..G...	0.82	10.3	88.3	0.0172 (0.1522)	60 (132)	gk823	30	**6SL3120-1TE23-0A■0**
1PH8105-..G...	0.81	15.1	89.1	0.0252 (0.2230)	74 (163)	gk823	45	**6SL3120-1TE24-5AC0**
1PH8131-..G...	0.85	15.4	92	0.0590 (0.5222)	105 (232)	gk843	45	**6SL3120-1TE24-5AC0**
1PH8133-..G...	0.86	19.4	92.3	0.0760 (0.6727)	123 (271)	gk843	60	**6SL3120-1TE26-0AC0**
1PH8135-..G...	0.85	24.1	93.3	0.0940 (0.8320)	141 (311)	gk843	85	**6SL3120-1TE28-5AA3**
1PH8163-..G...	0.88	30.2	93.9	0.2160 (1.9118)	229 (505)	gk873	132	**6SL3120-1TE31-3AA3**
1PH8165-..G...	0.88	33.7	94.6	0.2320 (2.0534)	264 (582)	gk873	132	**6SL3120-1TE31-3AA3**
1PH8166-..G...	0.89	35.5	94.6	0.2320 (2.0534)	269 (593)	gk873	132	**6SL3120-1TE31-3AA3**
1PH8103-..M...	0.80	13.2	90	0.0172 (0.1522)	60 (132)	gk823	30	**6SL3120-1TE23-0A■0**
1PH8105-..M...	0.80	20.2	91	0.0252 (0.2230)	74 (163)	gk823	45	**6SL3120-1TE24-5AC0**
1PH8107-..M...	0.80	26.1	90	0.0289 (0.2558)	83 (183)	gk823	60	**6SL3120-1TE26-0AC0**

Single Motor Module	**1**
Double Motor Module	**2**
Motor Module	
For continuous load with 200 % overload (C type)	**C**
For highly dynamic, intermittent load cycles with 300 % overload (D type)	**D**

[1] n_2: Maximum permissible thermal speed at constant power.

[2] n_{max}: Maximum speed that must not be exceeded (applicable for standard: 14th position of the Article No. B to H); for performance bearings (14th position = "L"), increased maximum speeds apply; limitations must be taken into consideration where necessary (e.g. with holding brake), see Article No. supplements.

[3] I_N: Output current of the Motor Module at rated pulse frequency (see SINAMICS S120 drive system).
The rated motor data are valid for 4 kHz (SH 80 to 160).

© Siemens 2024

Selection and ordering data

Rated speed	Shaft height	Rated power	Rated torque	Rated current	Rated voltage	Rated frequency	Operating speed for field weakening, max. [1]	Speed, max. [2]	**SIMOTICS M-1PH8 asynchronous motors Water cooling**
n_N	SH	P_N	M_N	I_N	U_N	f_N	n_2	n_{max}	
r/min		kW (hp)	Nm (lb_f-ft)	A	V	Hz	r/min	r/min	Article No.
Line voltage 480 V 3 AC, Smart/Basic Line Module									
2000	80	4.6 (6.2)	22 (16.2)	8.7	457	71.0	4250	10000	**1PH8083-■■F 2■-....**
		6.1 (8.2)	29 (21.4)	13.7	402	70.0	6950	10000	**1PH8087-■■F 2■-....**
	100	6.6 (8.9)	32 (23.6)	12.5	450	69.9	2500	9000	**1PH8101-■■F 2■-....**
		9.4 (12.6)	45 (33.2)	19.7	411	69.7	5000	9000	**1PH8103-■■F 2■-....**
		14 (18.8)	67 (49.4)	27.5	426	69.5	3000	9000	**1PH8105-■■F 2■-....**
		18 (24.1)	86 (63.4)	42.6	363	69.7	3000	9000	**1PH8107-■■F 2■-....**
	132	18.5 (24.8)	88 (64.9)	30	460	68.7	2500	8000	**1PH8131-■■F 2■-....**
		22.5 (30.2)	107 (78.9)	38	452	68.2	4000	8000	**1PH8133-■■F 2■-....**
		29 (38.9)	138 (102)	52	448	68.2	4500	8000	**1PH8135-■■F 2■-....**
		36 (48.3)	172 (127)	67	415	68.3	4000	8000	**1PH8137-■■F 2■-....**
		37 (49.6)	177 (131)	76	380	68.4	4000	8000	**1PH8138-■■F 2■-....**
	160	49 (65.7)	234 (173)	84	430	67.7	3500	6500	**1PH8163-■■F 2■-....**
		60 (80.5)	287 (212)	103	426	67.6	3050	6500	**1PH8165-■■F 2■-....**
		68 (91.2)	325 (240)	116	426	67.9	3000	6500	**1PH8166-■■F 2■-....**
2650	80	5.6 (7.5)	20 (14.8)	12	425	91.8	8500	10000	**1PH8083-■■G 2■-....**
		8.1 (10.9)	29 (21.4)	17.8	415	91.8	9150	10000	**1PH8087-■■G 2■-....**
	100	8.4 (11.3)	30 (22.1)	16.8	435	91.4	4000	9000	**1PH8101-■■G 2■-....**
		12.5 (16.8)	45 (33.2)	23.5	454	91.2	4000	9000	**1PH8103-■■G 2■-....**
		17.0 (22.8)	61 (45.0)	33.5	424	90.9	4500	9000	**1PH8105-■■G 2■-....**
	132	23 (30.8)	83 (61.2)	39	458	90.1	4500	8000	**1PH8131-■■G 2■-....**
		28 (37.5)	101 (74.5)	50	427	89.9	6000	8000	**1PH8133-■■G 2■-....**
		32 (42.9)	115 (84.8)	58	448	89.6	5500	8000	**1PH8135-■■G 2■-....**
	160	55 (73.8)	198 (146)	90	450	89.2	5000	6500	**1PH8163-■■G 2■-....**
		65 (87.2)	234 (173)	100	460	89.2	3000	6500	**1PH8165-■■G 2■-....**
		83 (111)	299 (221)	125	460	89.6	3000	6500	**1PH8166-■■G 2■-....**
3600	100	12.7 (17.0)	34 (25.1)	29.7	368	122.5	14650	9000	**1PH8103-■■M 2■-....**
		20 (26.8)	53 (39.1)	45	375	122.5	10000	9000	**1PH8105-■■M 2■-....**
		21 (28.2)	56 (41.3)	59	315	122.1	17650	9000	**1PH8107-■■M 2■-....**

For versions, see Article No. supplements and options.

For footnotes, see next page.

© Siemens 2024

Motor type (repeated)	Power factor	Magnetizing current	Efficiency	Moment of inertia without holding brake	Weight without holding brake, approx.	Terminal box	SINAMICS S120 Motor Module	
							Rated output current [3]	Internal air cooling For further components, see SINAMICS S120 drive system
	cos φ	I_μ	η	J			I_N	
		A	%	kgm² (lb_f-in-s²)	kg (lb)	Type	A	Article No.
1PH8083-..F...	0.83	3.8	83.9	0.0064 (0.0566)	36 (79.4)	gk803	9	6SL3120-■TE21-0AD0
1PH8087-..F...	0.79	6.8	86.8	0.0089 (0.0788)	44 (97.0)	gk803	18	6SL3120-■TE21-8A■0
1PH8101-..F...	0.82	4.4	85.8	0.0138 (0.1221)	51 (112)	gk823	18	6SL3120-■TE21-8A■0
1PH8103-..F...	0.82	8.5	86.9	0.0172 (0.1522)	60 (132)	gk823	30	6SL3120-1TE23-0A■0
1PH8105-..F...	0.82	11.7	89.4	0.0252 (0.2230)	74 (163)	gk823	30	6SL3120-1TE23-0A■0
1PH8107-..F...	0.81	19.1	87.3	0.0289 (0.2558)	83 (183)	gk823	45	6SL3120-1TE24-5AC0
1PH8131-..F...	0.90	7.2	91.2	0.0590 (0.5222)	105 (232)	gk843	30	6SL3120-1TE23-0A■0
1PH8133-..F...	0.86	14.4	93.8	0.0760 (0.6727)	123 (271)	gk843	45	6SL3120-1TE24-5AC0
1PH8135-..F...	0.85	19.9	93.1	0.0940 (0.8320)	141 (311)	gk843	60	6SL3120-1TE26-0AC0
1PH8137-..F...	0.86	25.4	92.8	0.1090 (0.9648)	157 (346)	gk843	85	6SL3120-1TE28-5AA3
1PH8138-..F...	0.86	28.4	92	0.1090 (0.9648)	157 (346)	gk843	85	6SL3120-1TE28-5AA3
1PH8163-..F...	0.88	26.9	92.5	0.2160 (1.9118)	229 (505)	gk873	85	6SL3120-1TE28-5AA3
1PH8165-..F...	0.88	34.0	94	0.2320 (2.0534)	264 (582)	gk873	132	6SL3120-1TE31-3AA3
1PH8166-..F...	0.89	32.8	94.1	0.2320 (2.0534)	269 (593)	gk873	132	6SL3120-1TE31-3AA3
1PH8083-..G...	0.76	6.5	86.2	0.0064 (0.0566)	36 (79.4)	gk803	18	6SL3120-■TE21-8A■0
1PH8087-..G...	0.77	9.3	87.1	0.0089 (0.0788)	44 (97.0)	gk803	18	6SL3120-■TE21-8A■0
1PH8101-..G...	0.80	7.7	88.8	0.0138 (0.1221)	51 (112)	gk823	18	6SL3120-■TE21-8A■0
1PH8103-..G...	0.79	11.3	90.4	0.0172 (0.1522)	60 (132)	gk823	30	6SL3120-1TE23-0A■0
1PH8105-..G...	0.81	15.3	91.1	0.0252 (0.2230)	74 (163)	gk823	45	6SL3120-1TE24-5AC0
1PH8131-..G...	0.85	15.4	93.8	0.0590 (0.5222)	105 (232)	gk843	45	6SL3120-1TE24-5AC0
1PH8133-..G...	0.85	19.5	93.3	0.0760 (0.6727)	123 (271)	gk843	60	6SL3120-1TE26-0AC0
1PH8135-..G...	0.84	23.0	94.2	0.0940 (0.8320)	141 (311)	gk843	85	6SL3120-1TE28-5AA3
1PH8163-..G...	0.86	33.6	94	0.2160 (1.9118)	229 (505)	gk873	132	6SL3120-1TE31-3AA3
1PH8165-..G...	0.89	31.9	94.8	0.2320 (2.0534)	264 (582)	gk873	132	6SL3120-1TE31-3AA3
1PH8166-..G...	0.90	35.7	94.8	0.2320 (2.0534)	269 (593)	gk873	132	6SL3120-1TE31-3AA3
1PH8103-..M...	0.80	13.0	91	0.0172 (0.1522)	60 (132)	gk823	30	6SL3120-1TE23-0A■0
1PH8105-..M...	0.81	18.6	92	0.0252 (0.2230)	74 (163)	gk823	45	6SL3120-1TE24-5AC0
1PH8107-..M...	0.79	26.1	91	0.0289 (0.2558)	83 (183)	gk823	60	6SL3120-1TE26-0AC0

Single Motor Module	1
Double Motor Module	2

Motor Module	
For continuous load with 200 % overload (C type)	C
For highly dynamic, intermittent load cycles with 300 % overload (D type)	D

1) n_2: Maximum permissible thermal speed at constant power.
2) n_{max}: Maximum speed that must not be exceeded (applicable for standard: 14th position of the Article No. B to H); for performance bearings (14th position = "L"), increased maximum speeds apply; limitations must be taken into consideration where necessary (e.g. with holding brake), see Article No. supplements.
3) I_N: Output current of the Motor Module at rated pulse frequency (see SINAMICS S120 drive system).
The rated motor data are valid for 4 kHz (SH 80 to 160).

© Siemens 2024

Selection and ordering data

Rated speed	Shaft height	Rated power	Rated torque	Rated current	Rated voltage	Rated frequency	Operating speed for field weakening, max. [1]	Speed, max. [2]	**SIMOTICS M-1PH8 asynchronous motors Water cooling**
n_N	SH	P_N	M_N	I_N	U_N	f_N	n_2	n_{max}	
r/min		kW (hp)	Nm (lb_f-ft)	A	V	Hz	r/min	r/min	Article No.
Line voltage 480 V 3 AC, Active Line Module									
2200	80	5 (6.71)	22 (16.2)	8.7	500	77.4	5050	10000	**1PH8083-■■F 2■-....**
		6.7 (9.0)	29 (21.4)	13.7	435	76.4	7100	10000	**1PH8087-■■F 2■-....**
	100	7.2 (9.7)	31 (22.9)	12.5	480	76.6	3000	9000	**1PH8101-■■F 2■-....**
		10.3 (13.8)	45 (33.2)	19.7	430	76.8	5000	9000	**1PH8103-■■F 2■-....**
		15.4 (20.7)	67 (49.4)	27.5	458	76.3	3500	9000	**1PH8105-■■F 2■-....**
		19.8 (26.6)	86 (63.4)	42.6	381	76.3	3500	9000	**1PH8107-■■F 2■-....**
	132	20.0 (26.8)	87 (64.2)	29	500	75.9	3000	8000	**1PH8131-■■F 2■-....**
		24.0 (32.2)	104 (76.7)	37	495	74.8	4500	8000	**1PH8133-■■F 2■-....**
		31 (41.6)	135 (99.6)	50	480	74.9	4500	8000	**1PH8135-■■F 2■-....**
		39 (52.3)	169 (125)	66	456	74.9	4500	8000	**1PH8137-■■F 2■-....**
		39 (52.3)	169 (125)	72	410	75.0	5000	8000	**1PH8138-■■F 2■-....**
	160	53 (71.1)	230 (170)	83	460	74.4	4500	6500	**1PH8163-■■F 2■-....**
		66 (88.5)	287 (212)	103	457	74.4	3500	6500	**1PH8165-■■F 2■-....**
		75 (101)	326 (240)	116	470	74.5	3500	6500	**1PH8166-■■F 2■-....**
2800	80	6 (8.05)	20 (14.8)	12	450	96.4	8900	10000	**1PH8083-■■G 2■-....**
		8.5 (11.4)	29 (21.4)	17.8	420	97	9700	10000	**1PH8087-■■G 2■-....**
	100	8.3 (11.1)	28 (20.7)	16.5	448	96.1	5000	9000	**1PH8101-■■G 2■-....**
		12.8 (17.2)	44 (32.5)	22.5	470	96.2	4500	9000	**1PH8103-■■G 2■-....**
		18 (24.1)	61 (45.0)	33.5	450	96	4500	9000	**1PH8105-■■G 2■-....**
	132	24.0 (32.2)	82 (60.5)	39	472	95.2	6000	8000	**1PH8131-■■G 2■-....**
		29.0 (38.9)	99 (73.0)	50	450	94.9	6000	8000	**1PH8133-■■G 2■-....**
		33 (44.3)	113 (83.3)	57	462	94.7	6000	8000	**1PH8135-■■G 2■-....**
	160	56 (75.1)	191 (141)	89	462	94.3	5500	6500	**1PH8163-■■G 2■-....**
		68 (91.2)	232 (171)	100	494	94.2	3500	6500	**1PH8165-■■G 2■-....**
		87 (117)	297 (219)	124	500	94.5	3500	6500	**1PH8166-■■G 2■-....**
3900	100	13 (17.4)	32 (23.6)	29	397	132.4	13000	9000	**1PH8103-■■M 2■-....**
		21 (28.2)	51 (37.6)	43.5	405	132.5	10000	9000	**1PH8105-■■M 2■-....**
		21.6 (29.0)	53 (39.1)	58	329	131.9	18000	9000	**1PH8107-■■M 2■-....**

For versions, see Article No. supplements and options.

For footnotes, see next page.

© Siemens 2024

Motor type (repeated)	Power factor	Magnetizing current	Efficiency	Moment of inertia without holding brake	Weight without holding brake, approx.	Terminal box	SINAMICS S120 Motor Module	
							Rated output current [3]	Internal air cooling For further components, see SINAMICS S120 drive system
	$\cos \varphi$	I_μ	η	J			I_N	
		A	%	kgm^2 (lb$_f$-in-s^2)	kg (lb)	Type	A	Article No.
1PH8083-..F...	0.82	3.8	85	0.0064 (0.0566)	36 (79.4)	gk803	9	6SL3120-■TE21-0AD0
1PH8087-..F...	0.78	6.7	86	0.0089 (0.0788)	44 (97.0)	gk803	18	6SL3120-■TE21-8A■0
1PH8101-..F...	0.80	6.0	86	0.0138 (0.1221)	51 (112)	gk823	18	6SL3120-■TE21-8A■0
1PH8103-..F...	0.84	8.6	86	0.0172 (0.1522)	60 (132)	gk823	30	6SL3120-1TE23-0A■0
1PH8105-..F...	0.83	12.0	88	0.0252 (0.2230)	74 (163)	gk823	30	6SL3120-1TE23-0A■0
1PH8107-..F...	0.84	17.0	88	0.0289 (0.2558)	83 (183)	gk823	45	6SL3120-1TE24-5AC0
1PH8131-..F...	0.90	7.2	91	0.0590 (0.5222)	105 (232)	gk843	30	6SL3120-1TE23-0A■0
1PH8133-..F...	0.86	14.1	93	0.0760 (0.6727)	123 (271)	gk843	45	6SL3120-1TE24-5AC0
1PH8135-..F...	0.85	20.0	92	0.0940 (0.8320)	141 (311)	gk843	60	6SL3120-1TE26-0AC0
1PH8137-..F...	0.85	25.5	92	0.1090 (0.9648)	157 (346)	gk843	85	6SL3120-1TE28-5AA3
1PH8138-..F...	0.86	27.0	91	0.1090 (0.9648)	157 (346)	gk843	85	6SL3120-1TE28-5AA3
1PH8163-..F...	0.88	26.5	92	0.2160 (1.9118)	229 (505)	gk873	85	6SL3120-1TE28-5AA3
1PH8165-..F...	0.89	33.0	94	0.2320 (2.0534)	264 (582)	gk873	132	6SL3120-1TE31-3AA3
1PH8166-..F...	0.89	34.4	94	0.2320 (2.0534)	269 (593)	gk873	132	6SL3120-1TE31-3AA3
1PH8083-..G...	0.75	6.6	87	0.0064 (0.0566)	36 (79.4)	gk803	18	6SL3120-■TE21-8A■0
1PH8087-..G...	0.80	8.5	87	0.0089 (0.0788)	44 (97.0)	gk803	18	6SL3120-■TE21-8A■0
1PH8101-..G...	0.76	7.8	89	0.0138 (0.1221)	51 (112)	gk823	18	6SL3120-■TE21-8A■0
1PH8103-..G...	0.80	10.7	89	0.0172 (0.1522)	60 (132)	gk823	30	6SL3120-1TE23-0A■0
1PH8105-..G...	0.80	15.6	89	0.0252 (0.2230)	74 (163)	gk823	45	6SL3120-1TE24-5AC0
1PH8131-..G...	0.86	15.0	92	0.0590 (0.5222)	105 (232)	gk843	45	6SL3120-1TE24-5AC0
1PH8133-..G...	0.85	19.5	92	0.0760 (0.6727)	123 (271)	gk843	60	6SL3120-1TE26-0AC0
1PH8135-..G...	0.84	23.1	92	0.0940 (0.8320)	141 (311)	gk843	85	6SL3120-1TE28-5AA3
1PH8163-..G...	0.88	30.2	94	0.2160 (1.9118)	229 (505)	gk873	132	6SL3120-1TE31-3AA3
1PH8165-..G...	0.88	33.5	94	0.2320 (2.0534)	264 (582)	gk873	132	6SL3120-1TE31-3AA3
1PH8166-..G...	0.9	35.5	95	0.2320 (2.0534)	269 (593)	gk873	132	6SL3120-1TE31-3AA3
1PH8103-..M...	0.79	13.0	90	0.0172 (0.1522)	60 (132)	gk823	30	6SL3120-1TE23-0A■0
1PH8105-..M...	0.81	18.6	91	0.0252 (0.2230)	74 (163)	gk823	45	6SL3120-1TE24-5AC0
1PH8107-..M...	0.80	24.5	90	0.0289 (0.2558)	83 (183)	gk823	60	6SL3120-1TE26-0AC0

Single Motor Module	1
Double Motor Module	2
Motor Module	
For continuous load with 200 % overload (C type)	C
For highly dynamic, intermittent load cycles with 300 % overload (D type)	D

[1] n_2: Maximum permissible thermal speed at constant power.
[2] n_{max}: Maximum speed that must not be exceeded (applicable for standard: 14th position of the Article No. B to H); for performance bearings (14th position = "L"), increased maximum speeds apply; limitations must be taken into consideration where necessary (e.g. with holding brake), see Article No. supplements.
[3] I_N: Output current of the Motor Module at rated pulse frequency (see SINAMICS S120 drive system).
The rated motor data are valid for 4 kHz (SH 80 to 160).

© Siemens 2024

Selection and ordering data

Rated speed	Shaft height	Rated power	Rated torque	Rated current	Rated voltage	Rated frequency	Operating speed for field weakening, max. [1]	Speed, max. [2]	**SIMOTICS M-1PH8 asynchronous motors Water cooling**
n_N	SH	P_N	M_N	I_N	U_N	f_N	n_2	n_{max}	
r/min		kW (hp)	Nm (lb_f-ft)	A	V	Hz	r/min	r/min	Article No.
Line voltage 400 V 3 AC, Smart/Basic Line Module									
400	180	17 (22.8)	406 (299)	50	271	14.0	1500	5000	**1PH8184-■■B 2■-....**
		23 (30.8)	549 (405)	68	268	13.9	1800	5000	**1PH8186-■■B 2■-....**
	225	36 (48.3)	859 (634)	100	268	14.0	1400	4500	**1PH8224-■■B 2■-....**
		47 (63.0)	1122 (828)	130	264	14.0	1600	4500	**1PH8226-■■B 2■-....**
		58 (77.8)	1385 (1022)	154	272	13.9	1700	4500	**1PH8228-■■B 2■-....**
	280	71 (95.2)	1695 (1250)	170	295	13.8	2200	3300	**1PH8284-1■B 2■-....**
		89 (119)	2125 (1567)	210	300	13.7	2200	3300	**1PH8286-1■B 2■-....**
		109 (146)	2602 (1919)	260	295	13.7	2200	3300	**1PH8288-1■B 2■-....**
700	180	33 (44.3)	450 (332)	77	320	24.2	2500	5000	**1PH8184-■■C 2■-....**
		43 (57.7)	587 (433)	97	330	23.9	3000	5000	**1PH8186-■■C 2■-....**
	225	61 (81.8)	832 (614)	128	340	24.0	2100	4500	**1PH8224-■■C 2■-....**
		81 (109)	1105 (815)	184	310	23.9	2300	4500	**1PH8226-■■C 2■-....**
		96 (129)	1310 (966)	210	315	23.9	2500	4500	**1PH8228-■■C 2■-....**
	280	123 (165)	1678 (1238)	260	330	23.7	2200	3300	**1PH8284-1■C 2■-....**
		153 (205)	2087 (1539)	320	325	23.7	2200	3300	**1PH8286-1■C 2■-....**
		188 (252)	2565 (1892)	400	324	23.6	2200	3300	**1PH8288-1■C 2■-....**
1000	180	47 (63.0)	449 (331)	114	300	34.2	5000	5000	**1PH8184-■■D 2■-....**
		64 (85.8)	611 (451)	148	320	34.0	5000	5000	**1PH8186-■■D 2■-....**
	225	89 (119)	850 (627)	188	335	33.9	2800	4500	**1PH8224-■■D 2■-....**
		115 (154)	1098 (810)	235	340	33.9	2400	4500	**1PH8226-■■D 2■-....**
		141 (189)	1346 (993)	280	340	33.9	2300	4500	**1PH8228-■■D 2■-....**
	280	172 (231)	1643 (1212)	350	335	33.7	2200	3300	**1PH8284-1■D 2■-....**
		214 (287)	2044 (1508)	460	330	33.6	2200	3300	**1PH8286-1■D 2■-....**
		264 (354)	2521 (1859)	550	335	33.6	2200	3300	**1PH8288-1■D 2■-....**
1500	180	70 (93.9)	446 (329)	150	335	51.0	5000	5000	**1PH8184-■■F 2■-....**
		93 (125)	592 (437)	198	330	51.0	5000	5000	**1PH8186-■■F 2■-....**
	225	119 (160)	758 (559)	240	340	50.6	3500	4500	**1PH8224-■■F 2■-....**
		145 (194)	923 (681)	295	340	50.5	3700	4500	**1PH8226-■■F 2■-....**
		192 (257)	1222 (901)	390	340	50.5	3700	4500	**1PH8228-■■F 2■-....**
	280	227 (304)	1445 (1066)	445	343	50.4	2200	3300	**1PH8284-1■F 2■-....**
		281 (377)	1789 (1320)	540	343	50.4	2200	3300	**1PH8286-1■F 2■-....**
		345 (463)	2197 (1621)	660	345	50.3	2200	3300	**1PH8288-1■F 2■-....**
2500	180	95 (127)	363 (268)	196	340	85.2	5000	5000	**1PH8184-■■L 2■-....**
		120 (161)	458 (338)	250	335	83.9	5000	5000	**1PH8186-■■L 2■-....**
	225	153 (205)	584 (431)	310	340	83.8	3200	4500	**1PH8224-■■L 2■-....**
		185 (248)	707 (521)	380	335	83.8	3200	4500	**1PH8226-■■L 2■-....**
		226 (303)	863 (637)	455	340	83.7	3200	4500	**1PH8228-■■L 2■-....**

For versions, see Article No. supplements and options.

For footnotes, see next page.

© Siemens 2024

Motor type (repeated)	Power factor	Magnetizing current	Efficiency	Moment of inertia without holding brake	Weight without holding brake, approx.	Terminal box	SINAMICS S120 Motor Module	
							Rated output current [3]	Internal air cooling For further components, see SINAMICS S120 drive system
	cos φ	I_μ	η	J			I_N	
		A	%	kgm² (lb$_f$-in-s²)	kg (lb)	Type	A	Article No.
1PH8184-..B...	0.87	28	83.1	0.489 (4.328)	340 (750)	1XB7322-P05	60	**6SL3120-1TE26-0AC0**
1PH8186-..B...	0.86	42	84.5	0.652 (5.771)	410 (904)	1XB7322-P05	85	**6SL3120-1TE28-5AA3**
1PH8224-..B...	0.91	37	85.8	1.452 (12.852)	610 (1345)	1XB7322-P05	132	**6SL3120-1TE31-3AA3**
1PH8226-..B...	0.90	49	87.5	1.895 (16.773)	740 (1632)	1XB7322-P05	132	**6SL3120-1TE31-3AA3**
1PH8228-..B...	0.90	62	88.6	2.354 (20.835)	870 (1918)	1XB7322-P05	200	**6SL3120-1TE32-0AA4**
1PH8284-1.B...	0.89	70	91.4	4.21 (37.26)	1280 (2822)	1XB7322-P05	200	**6SL3120-1TE32-0AA4**
1PH8286-1.B...	0.89	83	91.6	5.16 (45.67)	1490 (3285)	1XB7322-P05	210	**6SL3320-1TE32-1AA3**
1PH8288-1.B...	0.89	110	92.5	6.29 (55.67)	1750 (3859)	1XB7422-P06	260	**6SL3320-1TE32-6AA3**
1PH8184-..C...	0.89	33	87.2	0.489 (4.328)	340 (750)	1XB7322-P05	85	**6SL3120-1TE28-5AA3**
1PH8186-..C...	0.86	49	89.8	0.652 (5.771)	410 (904)	1XB7322-P05	132	**6SL3120-1TE31-3AA3**
1PH8224-..C...	0.89	48	91.4	1.452 (12.852)	610 (1345)	1XB7322-P05	132	**6SL3120-1TE31-3AA3**
1PH8226-..C...	0.88	79	92.8	1.895 (16.773)	740 (1632)	1XB7322-P05	200	**6SL3120-1TE32-0AA4**
1PH8228-..C...	0.90	82	93	2.354 (20.835)	870 (1918)	1XB7322-P05	210	**6SL3320-1TE32-1AA3**
1PH8284-1.C...	0.87	108	94.5	4.21 (37.26)	1280 (2822)	1XB7422-P06	260	**6SL3320-1TE32-6AA3**
1PH8286-1.C...	0.89	123	94.8	5.16 (45.67)	1490 (3285)	1XB7700-P02	380	**6SL3320-1TE33-8AA3**
1PH8288-1.C...	0.88	172	95.2	6.29 (55.67)	1750 (3859)	1XB7700-P02	490	**6SL3320-1TE35-0AA3**
1PH8184-..D...	0.88	45	90.4	0.489 (4.328)	340 (750)	1XB7322-P05	132	**6SL3120-1TE31-3AA3**
1PH8186-..D...	0.85	78	92	0.652 (5.771)	410 (904)	1XB7322-P05	200	**6SL3120-1TE32-0AA4**
1PH8224-..D...	0.87	79	93.7	1.452 (12.852)	610 (1345)	1XB7322-P05	200	**6SL3120-1TE32-0AA4**
1PH8226-..D...	0.89	87	93.8	1.895 (16.773)	745 (1643)	1XB7422-P06	260	**6SL3320-1TE32-6AA3**
1PH8228-..D...	0.91	98	94.3	2.354 (20.835)	875 (1929)	1XB7700-P02	310	**6SL3320-1TE33-1AA3**
1PH8284-1.D...	0.88	144	95.7	4.21 (37.26)	1280 (2822)	1XB7700-P02	380	**6SL3320-1TE33-8AA3**
1PH8286-1.D...	0.85	215	96	5.16 (45.67)	1490 (3285)	1XB7700-P02	490	**6SL3320-1TE35-0AA3**
1PH8288-1.D...	0.86	251	96.2	6.29 (55.67)	1750 (3859)	1XB7700-P02	745	**6SL3320-1TE37-5AA3**
1PH8184-..F...	0.87	66	92.8	0.489 (4.328)	340 (750)	1XB7322-P05	200	**6SL3120-1TE32-0AA4**
1PH8186-..F...	0.87	85	93.5	0.652 (5.771)	410 (904)	1XB7322-P05	200	**6SL3120-1TE32-0AA4**
1PH8224-..F...	0.89	87	95.1	1.452 (12.852)	615 (1356)	1XB7422-P06	260	**6SL3320-1TE32-6AA3**
1PH8226-..F...	0.87	119	95.7	1.895 (16.773)	745 (1643)	1XB7700-P02	310	**6SL3320-1TE33-1AA3**
1PH8228-..F...	0.87	169	95.9	2.354 (20.835)	875 (1929)	1XB7700-P02	490	**6SL3320-1TE35-0AA3**
1PH8284-1.F...	0.89	161	96.4	4.21 (37.26)	1280 (2822)	1XB7700-P02	490	**6SL3320-1TE35-0AA3**
1PH8286-1.F...	0.90	181	96.6	5.16 (45.67)	1490 (3285)	1XB7712-P03	745	**6SL3320-1TE37-5AA3**
1PH8288-1.F...	0.90	234	96.7	6.29 (55.67)	1750 (3859)	1XB7712-P03	840	**6SL3320-1TE38-4AA3**
1PH8184-..L...	0.87	75	94.5	0.489 (4.328)	340 (750)	1XB7322-P05	200	**6SL3120-1TE32-0AA4**
1PH8186-..L...	0.88	109	94.8	0.652 (5.771)	415 (915)	1XB7422-P06	260	**6SL3320-1TE32-6AA3**
1PH8224-..L...	0.87	113	96.1	1.452 (12.852)	615 (1356)	1XB7700-P02	310	**6SL3320-1TE33-1AA3**
1PH8226-..L...	0.87	151	96.3	1.895 (16.773)	745 (1643)	1XB7700-P02	380	**6SL3320-1TE33-8AA3**
1PH8228-..L...	0.87	181	96.4	2.354 (20.835)	875 (1929)	1XB7700-P02	490	**6SL3320-1TE35-0AA3**

Single Motor Module	**1**
Motor Module	
For continuous load with 200 % overload (C type)	**C**
For highly dynamic, intermittent load cycles with 300 % overload (D type)	**D**

1) n_2: Maximum permissible thermal speed at constant power.
2) n_{max}: Maximum speed that must not be exceeded (applicable for standard: 14th position of the Article A to F); for performance bearings (14th position = "L"), increased maximum speeds apply; limitations must be taken into consideration where necessary (e.g. with holding brake), see Article No. supplements.
3) I_N: Output current of the Motor Module at rated pulse frequency (see SINAMICS S120 drive system). The rated motor data are valid for 2 kHz (SH 180 to 280).

© Siemens 2024

Selection and ordering data

Rated speed	Shaft height	Rated power	Rated torque	Rated current	Rated voltage	Rated frequency	Operating speed for field weakening, max. [1]	Speed, max. [2]	**SIMOTICS M-1PH8 asynchronous motors Water cooling**
n_N	SH	P_N	M_N	I_N	U_N	f_N	n_2	n_{max}	
r/min		kW (hp)	Nm (lb_f-ft)	A	V	Hz	r/min	r/min	Article No.
Line voltage 400 V 3 AC, Active Line Module									
500	180	23 (30.8)	439 (324)	54	335	17.4	1800	5000	**1PH8184-■■B 2■-....**
		30 (40.2)	573 (423)	70	335	17.3	2200	5000	**1PH8186-■■B 2■-....**
	225	46 (61.7)	879 (648)	100	335	17.3	1500	4500	**1PH8224-■■B 2■-....**
		59 (79.1)	1127 (831)	128	330	17.3	1700	4500	**1PH8226-■■B 2■-....**
		72 (96.6)	1375 (1014)	150	340	17.2	1800	4500	**1PH8228-■■B 2■-....**
	280	89 (119)	1700 (1254)	172	365	17.1	2200	3300	**1PH8284-1■B 2■-....**
		111 (149)	2120 (1564)	205	375	17.0	2200	3300	**1PH8286-1■B 2■-....**
		136 (182)	2598 (1916)	260	365	17.0	2200	3300	**1PH8288-1■B 2■-....**
800	180	38 (51.0)	454 (335)	77	365	27.5	2900	5000	**1PH8184-■■C 2■-....**
		49 (65.7)	585 (431)	99	360	27.4	3500	5000	**1PH8186-■■C 2■-....**
	225	70 (93.9)	836 (617)	130	380	27.3	2300	4500	**1PH8224-■■C 2■-....**
		93 (125)	1110 (819)	186	350	27.2	2500	4500	**1PH8226-■■C 2■-....**
		110 (148)	1313 (968)	210	360	27.2	2700	4500	**1PH8228-■■C 2■-....**
	280	141 (189)	1683 (1241)	260	375	27.0	2200	3300	**1PH8284-1■C 2■-....**
		175 (235)	2089 (1541)	320	375	27.0	2200	3300	**1PH8286-1■C 2■-....**
		215 (288)	2567 (1893)	405	370	27.0	2200	3300	**1PH8288-1■C 2■-....**
1150	180	54 (72.4)	448 (330)	112	350	39.2	5000	5000	**1PH8184-■■D 2■-....**
		74 (99.2)	615 (454)	148	370	38.9	5000	5000	**1PH8186-■■D 2■-....**
	225	101 (135)	839 (619)	186	385	38.9	3000	4500	**1PH8224-■■D 2■-....**
		131 (176)	1088 (803)	230	390	38.9	2700	4500	**1PH8226-■■D 2■-....**
		161 (216)	1337 (986)	280	390	38.9	2500	4500	**1PH8228-■■D 2■-....**
	280	198 (266)	1644 (1213)	355	385	38.7	2200	3300	**1PH8284-1■D 2■-....**
		246 (330)	2043 (1507)	455	380	38.6	2200	3300	**1PH8286-1■D 2■-....**
		304 (408)	2525 (1862)	550	385	38.6	2300	3300	**1PH8288-1■D 2■-....**
1750	180	82 (110)	447 (330)	150	390	59.3	5000	5000	**1PH8184-■■F 2■-....**
		111 (149)	606 (447)	200	385	59.3	5000	5000	**1PH8186-■■F 2■-....**
	225	138 (185)	753 (555)	240	395	58.9	3800	4500	**1PH8224-■■F 2■-....**
		169 (227)	922 (680)	295	390	58.8	3900	4500	**1PH8226-■■F 2■-....**
		221 (296)	1206 (890)	390	390	58.8	3900	4500	**1PH8228-■■F 2■-....**
	280	265 (355)	1446 (1067)	445	400	58.7	2200	3300	**1PH8284-1■F 2■-....**
		328 (440)	1790 (1320)	540	400	58.7	2300	3300	**1PH8286-1■F 2■-....**
		403 (540)	2199 (1622)	670	400	58.7	2400	3300	**1PH8288-1■F 2■-....**
2900	180	102 (137)	336 (248)	182	395	97.5	5000	5000	**1PH8184-■■L 2■-....**
		135 (181)	445 (328)	245	385	97.3	5000	5000	**1PH8186-■■L 2■-....**
	225	164 (220)	540 (398)	285	395	97.1	3600	4500	**1PH8224-■■L 2■-....**
		204 (274)	672 (496)	360	390	97.1	3600	4500	**1PH8226-■■L 2■-....**
		237 (318)	780 (575)	415	395	97.0	3600	4500	**1PH8228-■■L 2■-....**

For versions, see Article No. supplements and options.

For footnotes, see next page.

© Siemens 2024

Motor type (repeated)	Power factor	Magnetizing current	Efficiency	Moment of inertia without holding brake	Weight without holding brake, approx.	Terminal box	SINAMICS S120 Motor Module	
							Rated output current [3]	Internal air cooling For further components, see SINAMICS S120 drive system
	$\cos \varphi$	I_μ	η	J			I_N	
		A	%	kgm^2 (lb$_f$-in-s^2)	kg (lb)	Type	A	Article No.
1PH8184-. .B...	0.86	27	85	0.489 (4.328)	340 (750)	1XB7322-P05	60	**6SL3120-1TE26-0AC0**
1PH8186-. .B...	0.85	43	86.8	0.652 (5.771)	410 (904)	1XB7322-P05	85	**6SL3120-1TE28-5AA3**
1PH8224-. .B...	0.90	38	88.3	1.452 (12.852)	610 (1345)	1XB7322-P05	132	**6SL3120-1TE31-3AA3**
1PH8226-. .B...	0.90	50	89.9	1.895 (16.773)	740 (1632)	1XB7322-P05	132	**6SL3120-1TE31-3AA3**
1PH8228-. .B...	0.90	63	90.8	2.354 (20.835)	870 (1918)	1XB7322-P05	200	**6SL3120-1TE32-0AA4**
1PH8284-1.B...	0.88	69	92.9	4.21 (37.26)	1280 (2822)	1XB7322-P05	200	**6SL3120-1TE32-0AA4**
1PH8286-1.B...	0.89	84	93.1	5.16 (45.67)	1490 (3285)	1XB7322-P05	210	**6SL3320-1TE32-1AA3**
1PH8288-1.B...	0.88	109	93.8	6.29 (55.67)	1750 (3859)	1XB7422-P06	260	**6SL3320-1TE32-6AA3**
1PH8184-. .C...	0.88	33	88.5	0.489 (4.328)	340 (750)	1XB7322-P05	85	**6SL3120-1TE28-5AA3**
1PH8186-. .C...	0.88	44	90.4	0.652 (5.771)	410 (904)	1XB7322-P05	132	**6SL3120-1TE31-3AA3**
1PH8224-. .C...	0.89	46	92	1.452 (12.852)	610 (1345)	1XB7322-P05	132	**6SL3120-1TE31-3AA3**
1PH8226-. .C...	0.88	77	93.4	1.895 (16.773)	740 (1632)	1XB7322-P05	200	**6SL3120-1TE32-0AA4**
1PH8228-. .C...	0.90	82	93.7	2.354 (20.835)	870 (1918)	1XB7322-P05	210	**6SL3320-1TE32-1AA3**
1PH8284-1.C...	0.88	108	95	4.21 (37.26)	1280 (2822)	1XB7422-P06	260	**6SL3320-1TE32-6AA3**
1PH8286-1.C...	0.88	126	95.3	5.16 (45.67)	1490 (3285)	1XB7700-P02	380	**6SL3320-1TE33-8AA3**
1PH8288-1.C...	0.87	172	95.6	6.29 (55.67)	1750 (3859)	1XB7700-P02	490	**6SL3320-1TE35-0AA3**
1PH8184-. .D...	0.87	46	91.5	0.489 (4.328)	340 (750)	1XB7322-P05	132	**6SL3120-1TE31-3AA3**
1PH8186-. .D...	0.84	80	92.7	0.652 (5.771)	410 (904)	1XB7322-P05	200	**6SL3120-1TE32-0AA4**
1PH8224-. .D...	0.86	79	94.4	1.452 (12.852)	610 (1345)	1XB7322-P05	200	**6SL3120-1TE32-0AA4**
1PH8226-. .D...	0.89	87	94.5	1.895 (16.773)	745 (1643)	1XB7422-P06	260	**6SL3320-1TE32-6AA3**
1PH8228-. .D...	0.90	98	94.8	2.354 (20.835)	875 (1929)	1XB7700-P02	310	**6SL3320-1TE33-1AA3**
1PH8284-1.D...	0.87	144	96	4.21 (37.26)	1280 (2822)	1XB7700-P02	380	**6SL3320-1TE33-8AA3**
1PH8286-1.D...	0.85	216	96.2	5.16 (45.67)	1490 (3285)	1XB7700-P02	490	**6SL3320-1TE35-0AA3**
1PH8288-1.D...	0.86	251	96.4	6.29 (55.67)	1750 (3859)	1XB7700-P02	745	**6SL3320-1TE37-5AA3**
1PH8184-. .F...	0.87	65	93.3	0.489 (4.328)	340 (750)	1XB7322-P05	200	**6SL3120-1TE32-0AA4**
1PH8186-. .F...	0.89	85	93.9	0.652 (5.771)	410 (904)	1XB7322-P05	200	**6SL3120-1TE32-0AA4**
1PH8224-. .F...	0.88	87	95.4	1.452 (12.852)	615 (1356)	1XB7422-P06	260	**6SL3320-1TE32-6AA3**
1PH8226-. .F...	0.88	116	95.9	1.895 (16.773)	745 (1643)	1XB7700-P02	310	**6SL3320-1TE33-1AA3**
1PH8228-. .F...	0.87	165	96.1	2.354 (20.835)	875 (1929)	1XB7700-P02	490	**6SL3320-1TE35-0AA3**
1PH8284-1.F...	0.89	161	96.6	4.21 (37.26)	1280 (2822)	1XB7700-P02	490	**6SL3320-1TE35-0AA3**
1PH8286-1.F...	0.90	182	96.7	5.16 (45.67)	1490 (3285)	1XB7700-P02	745	**6SL3320-1TE37-5AA3**
1PH8288-1.F...	0.90	232	96.8	6.29 (55.67)	1750 (3859)	1XB7700-P02	840	**6SL3320-1TE38-4AA3**
1PH8184-. .L...	0.87	77	94.5	0.489 (4.328)	340 (750)	1XB7322-P05	200	**6SL3120-1TE32-0AA4**
1PH8186-. .L...	0.87	108	94.8	0.652 (5.771)	415 (915)	1XB7422-P06	260	**6SL3320-1TE32-6AA3**
1PH8224-. .L...	0.88	114	96.1	1.452 (12.852)	615 (1356)	1XB7700-P02	310	**6SL3320-1TE33-1AA3**
1PH8226-. .L...	0.87	152	96.2	1.895 (16.773)	745 (1643)	1XB7700-P02	380	**6SL3320-1TE33-8AA3**
1PH8228-. .L...	0.87	182	96.3	2.354 (20.835)	875 (1929)	1XB7700-P02	490	**6SL3320-1TE35-0AA3**

Single Motor Module	**1**	
Motor Module For continuous load with 200 % overload (C type)		**C**
For highly dynamic, intermittent load cycles with 300 % overload (D type)		**D**

1) n_2: Maximum permissible thermal speed at constant power.
2) n_{max}: Maximum speed that must not be exceeded (applicable for standard: 14th position of the Article A to F); for performance bearings (14th position = "L"), increased maximum speeds apply; limitations must be taken into consideration where necessary (e.g. with holding brake), see Article No. supplements.
3) I_N: Output current of the Motor Module at rated pulse frequency (see SINAMICS S120 drive system). The rated motor data are valid for 2 kHz (SH 180 to 280).

© Siemens 2024

Selection and ordering data

Rated speed	Shaft height	Rated power	Rated torque	Rated current	Rated voltage	Rated frequency	Operating speed for field weakening, max. [1]	Speed, max. [2]	**SIMOTICS M-1PH8 asynchronous motors Water cooling**
n_N	SH	P_N	M_N	I_N	U_N	f_N	n_2	n_{max}	
r/min		kW (hp)	Nm (lb_f-ft)	A	V	Hz	r/min	r/min	Article No.
Line voltage 480 V 3 AC, Smart/Basic/Active Line Module									
600	180	29 (38.9)	462 (341)	55	405	20.8	1800	5000	**1PH8184-■■B 2■-....**
		38 (51.0)	605 (446)	73	405	20.6	2500	5000	**1PH8186-■■B 2■-....**
	225	53 (71.1)	844 (623)	94	410	20.6	1900	4500	**1PH8224-■■B 2■-....**
		70 (93.9)	1114 (822)	122	410	20.5	2000	4500	**1PH8226-■■B 2■-....**
		85 (114)	1353 (998)	148	410	20.5	2100	4500	**1PH8228-■■B 2■-....**
	280	107 (143)	1703 (1256)	170	440	20.4	2200	3300	**1PH8284-1■B 2■-....**
		133 (178)	2117 (1561)	205	445	20.4	2200	3300	**1PH8286-1■B 2■-....**
		164 (220)	2610 (1925)	260	440	20.3	2200	3300	**1PH8288-1■B 2■-....**
1000	180	48 (64.4)	458 (338)	77	460	34.1	3100	5000	**1PH8184-■■C 2■-....**
		61 (81.8)	583 (430)	98	450	34.0	3700	5000	**1PH8186-■■C 2■-....**
	225	87 (117)	831 (613)	132	460	34.0	2500	4500	**1PH8224-■■C 2■-....**
		116 (156)	1108 (817)	184	440	33.9	2700	4500	**1PH8226-■■C 2■-....**
		138 (185)	1318 (972)	210	450	33.9	2900	4500	**1PH8228-■■C 2■-....**
	280	176 (236)	1681 (1240)	265	455	33.7	2200	3300	**1PH8284-1■C 2■-....**
		219 (294)	2091 (1542)	325	455	33.7	2200	3300	**1PH8286-1■C 2■-....**
		269 (361)	2569 (1895)	405	460	33.6	2200	3300	**1PH8288-1■C 2■-....**
1350	180	64 (85.8)	453 (334)	112	410	45.8	5000	5000	**1PH8184-■■D 2■-....**
		86 (115)	608 (448)	148	420	45.7	5000	5000	**1PH8186-■■D 2■-....**
	225	115 (154)	813 (600)	180	450	45.5	3400	4500	**1PH8224-■■D 2■-....**
		150 (201)	1061 (783)	225	460	45.5	3200	4500	**1PH8226-■■D 2■-....**
		184 (247)	1302 (960)	270	460	45.5	3000	4500	**1PH8228-■■D 2■-....**
	280	232 (311)	1641 (1210)	355	450	45.4	2200	3300	**1PH8284-1■D 2■-....**
		289 (388)	2044 (1508)	460	445	45.3	2300	3300	**1PH8286-1■D 2■-....**
		357 (479)	2525 (1862)	550	450	45.3	2400	3300	**1PH8288-1■D 2■-....**
2000	180	95 (127)	454 (335)	152	450	67.3	5000	5000	**1PH8184-■■F 2■-....**
		126 (169)	602 (444)	200	445	67.3	5000	5000	**1PH8186-■■F 2■-....**
	225	155 (208)	740 (546)	235	460	67.2	4200	4500	**1PH8224-■■F 2■-....**
		191 (256)	912 (673)	290	450	67.1	4100	4500	**1PH8226-■■F 2■-....**
		245 (329)	1170 (863)	380	450	67.1	4100	4500	**1PH8228-■■F 2■-....**
	280	303 (406)	1447 (1067)	445	455	67.0	2300	3300	**1PH8284-1■F 2■-....**
		375 (503)	1791 (1321)	550	455	67.0	2400	3300	**1PH8286-1■F 2■-....**
		460 (617)	2197 (1621)	670	455	67.0	2500	3300	**1PH8288-1■F 2■-....**
3400	180	100 (134)	281 (207)	158	460	114.0	5000	5000	**1PH8184-■■L 2■-....**
		121 (162)	340 (251)	200	455	114.0	5000	5000	**1PH8186-■■L 2■-....**
	225	164 (220)	461 (340)	255	460	114.0	4100	4500	**1PH8224-■■L 2■-....**
		199 (267)	559 (412)	310	460	114.0	4100	4500	**1PH8226-■■L 2■-....**
		237 (318)	666 (491)	370	460	114.0	4100	4500	**1PH8228-■■L 2■-....**

For versions, see Article No. supplements and options.

For footnotes, see next page.

© Siemens 2024

Motor type (repeated)	Power factor	Magnetizing current	Efficiency	Moment of inertia without holding brake	Weight without holding brake, approx.	Terminal box	SINAMICS S120 Motor Module	
							Rated output current [3]	Internal air cooling For further components, see SINAMICS S120 drive system
	cos φ	I_μ	η	J			I_N	
		A	%	kgm² (lb$_f$-in-s²)	kg (lb)	Type	A	Article No.
1PH8184-..B...	0.86	28	86.9	0.489 (4.328)	340 (750)	1XB7322-P05	60	**6SL3120-1TE26-0AC0**
1PH8186-..B...	0.84	44	88.3	0.652 (5.771)	410 (904)	1XB7322-P05	85	**6SL3120-1TE28-5AA3**
1PH8224-..B...	0.87	40	90.8	1.452 (12.852)	610 (1345)	1XB7322-P05	132	**6SL3120-1TE31-3AA3**
1PH8226-..B...	0.88	55	91.9	1.895 (16.773)	740 (1632)	1XB7322-P05	132	**6SL3120-1TE31-3AA3**
1PH8228-..B...	0.88	64	92.3	2.354 (20.835)	870 (1918)	1XB7322-P05	200	**6SL3120-1TE32-0AA4**
1PH8284-1.B...	0.88	71	93.9	4.21 (37.26)	1280 (2822)	1XB7322-P05	200	**6SL3120-1TE32-0AA4**
1PH8286-1.B...	0.89	83	94	5.16 (45.67)	1490 (3285)	1XB7322-P05	210	**6SL3320-1TE32-1AA3**
1PH8288-1.B...	0.88	111	94.6	6.29 (55.67)	1750 (3859)	1XB7422-P06	260	**6SL3320-1TE32-6AA3**
1PH8184-..C...	0.86	34	90.5	0.489 (4.328)	340 (750)	1XB7322-P05	85	**6SL3120-1TE28-5AA3**
1PH8186-..C...	0.87	44	92	0.652 (5.771)	410 (904)	1XB7322-P05	132	**6SL3120-1TE31-3AA3**
1PH8224-..C...	0.89	44	93.1	1.452 (12.852)	610 (1345)	1XB7322-P05	132	**6SL3120-1TE31-3AA3**
1PH8226-..C...	0.88	79	94.4	1.895 (16.773)	740 (1632)	1XB7322-P05	200	**6SL3120-1TE32-0AA4**
1PH8228-..C...	0.89	83	94.6	2.354 (20.835)	870 (1918)	1XB7322-P05	210	**6SL3320-1TE32-1AA3**
1PH8284-1.C...	0.88	102	95.6	4.21 (37.26)	1280 (2822)	1XB7422-P06	260	**6SL3320-1TE32-6AA3**
1PH8286-1.C...	0.89	120	95.8	5.16 (45.67)	1490 (3285)	1XB7700-P02	380	**6SL3320-1TE33-8AA3**
1PH8288-1.C...	0.87	171	96.1	6.29 (55.67)	1750 (3859)	1XB7700-P02	490	**6SL3320-1TE35-0AA3**
1PH8184-..D...	0.87	46	92.4	0.489 (4.328)	340 (750)	1XB7322-P05	132	**6SL3120-1TE31-3AA3**
1PH8186-..D...	0.86	73	93.3	0.652 (5.771)	410 (904)	1XB7322-P05	200	**6SL3120-1TE32-0AA4**
1PH8224-..D...	0.86	79	950	1.452 (12.852)	610 (1345)	1XB7322-P05	200	**6SL3120-1TE32-0AA4**
1PH8226-..D...	0.88	88	95.1	1.895 (16.773)	745 (1643)	1XB7422-P06	260	**6SL3320-1TE32-6AA3**
1PH8228-..D...	0.90	99	95.4	2.354 (20.835)	875 (1929)	1XB7700-P02	310	**6SL3320-1TE33-1AA3**
1PH8284-1.D...	0.87	143	96.3	4.21 (37.26)	1280 (2822)	1XB7700-P02	380	**6SL3320-1TE33-8AA3**
1PH8286-1.D...	0.85	216	96.4	5.16 (45.67)	1490 (3285)	1XB7700-P02	490	**6SL3320-1TE35-0AA3**
1PH8288-1.D...	0.86	249	96.6	6.29 (55.67)	1750 (3859)	1XB7700-P02	745	**6SL3320-1TE37-5AA3**
1PH8184-..F...	0.85	68	93.8	0.489 (4.328)	340 (750)	1XB7322-P05	200	**6SL3120-1TE32-0AA4**
1PH8186-..F...	0.87	89	93.8	0.652 (5.771)	410 (904)	1XB7322-P05	200	**6SL3120-1TE32-0AA4**
1PH8224-..F...	0.86	90	95.8	1.452 (12.852)	615 (1356)	1XB7422-P06	260	**6SL3320-1TE32-6AA3**
1PH8226-..F...	0.88	118	96.1	1.895 (16.773)	745 (1643)	1XB7700-P02	310	**6SL3320-1TE33-1AA3**
1PH8228-..F...	0.86	169	96.3	2.354 (20.835)	875 (1929)	1XB7700-P02	490	**6SL3320-1TE35-0AA3**
1PH8284-1.F...	0.89	160	96.7	4.21 (37.26)	1280 (2822)	1XB7700-P02	490	**6SL3320-1TE35-0AA3**
1PH8286-1.F...	0.90	180	96.8	5.16 (45.67)	1490 (3285)	1XB7700-P02	745	**6SL3320-1TE37-5AA3**
1PH8288-1.F...	0.90	230	96.9	6.29 (55.67)	1750 (3859)	1XB7700-P02	840	**6SL3320-1TE38-4AA3**
1PH8184-..L...	0.84	76	94.4	0.489 (4.328)	340 (750)	1XB7322-P05	200	**6SL3120-1TE32-0AA4**
1PH8186-..L...	0.81	110	94.2	0.652 (5.771)	415 (915)	1XB7422-P06	260	**6SL3320-1TE32-6AA3**
1PH8224-..L...	0.84	113	95.9	1.452 (12.852)	615 (1356)	1XB7700-P02	310	**6SL3320-1TE33-1AA3**
1PH8226-..L...	0.84	153	95.8	1.895 (16.773)	745 (1643)	1XB7700-P02	380	**6SL3320-1TE33-8AA3**
1PH8228-..L...	0.84	180	95.9	2.354 (20.835)	875 (1929)	1XB7700-P02	490	**6SL3320-1TE35-0AA3**

Single Motor Module	**1**
Motor Module For continuous load with 200 % overload (C type) For highly dynamic, intermittent load cycles with 300 % overload (D type)	**C** **D**

1) n_2: Maximum permissible thermal speed at constant power.
2) n_{max}: Maximum speed that must not be exceeded (applicable for standard: 14th position of the Article A to F); for performance bearings (14th position = "L"), increased maximum speeds apply; limitations must be taken into consideration where necessary (e.g. with holding brake), see Article No. supplements.
3) I_N: Output current of the Motor Module at rated pulse frequency (see SINAMICS S120 drive system).
The rated motor data are valid for 2 kHz (SH 180 to 280).

© Siemens 2024

Selection and ordering data

Rated speed	Shaft height	Rated power	Rated torque	Rated current	Rated voltage	Rated frequency	Operating speed for field weakening, max. [1]	Speed, max. [2]	**SIMOTICS M-1PH8 asynchronous motors Water cooling**
n_N	SH	P_N	M_N	I_N	U_N	f_N	n_2	n_{max}	
r/min		kW (hp)	Nm (lb_f-ft)	A	V	Hz	r/min	r/min	Article No.
Line voltage 690 V 3 AC, Basic Line Module									
400	280	68 (91.2)	1624 (1198)	89	555	13.7	2000	3300	**1PH8284-1■H2■-....**
		85 (114)	2029 (1497)	108	555	13.7	2000	3300	**1PH8286-1■H2■-....**
		105 (141)	2507 (1849)	134	555	13.7	2000	3300	**1PH8288-1■H2■-....**
700	280	119 (160)	1624 (1198)	136	605	23.7	2200	3300	**1PH8284-1■K2■-....**
		148 (198)	2019 (1489)	174	605	23.6	2200	3300	**1PH8286-1■K2■-....**
		182 (244)	2483 (1831)	205	605	23.7	2200	3300	**1PH8288-1■K2■-....**
1000	280	167 (224)	1595 (1176)	196	600	33.6	2200	3300	**1PH8284-1■U2■-....**
		208 (279)	1986 (1465)	260	570	33.6	2200	3300	**1PH8286-1■U2■-....**
		256 (343)	2445 (1803)	310	580	33.6	2200	3300	**1PH8288-1■U2■-....**
1500	280	220 (295)	1401 (1033)	250	590	50.4	2200	3300	**1PH8284-1■W2■-....**
		273 (366)	1738 (1282)	310	590	50.4	2200	3300	**1PH8286-1■W2■-....**
		335 (449)	2133 (1573)	375	590	50.3	2200	3300	**1PH8288-1■W2■-....**
Line voltage 690 V 3 AC, Active Line Module									
500	280	85 (114)	1624 (1198)	89	690	17.0	2000	3300	**1PH8284-1■H2■-....**
		106 (142)	2025 (1494)	108	690	17.0	2000	3300	**1PH8286-1■H2■-....**
		131 (176)	2502 (1845)	134	690	17.0	2000	3300	**1PH8288-1■H2■-....**
800	280	137 (184)	1635 (1206)	138	690	27.0	2200	3300	**1PH8284-1■K2■-....**
		170 (228)	2029 (1497)	176	690	27.0	2200	3300	**1PH8286-1■K2■-....**
		209 (280)	2495 (1840)	205	690	27.0	2200	3300	**1PH8288-1■K2■-....**
1150	280	192 (257)	1594 (1176)	198	690	38.6	2200	3300	**1PH8284-1■U2■-....**
		239 (320)	1985 (1464)	260	655	38.6	2200	3300	**1PH8286-1■U2■-....**
		295 (396)	2450 (1807)	310	665	38.6	2300	3300	**1PH8288-1■U2■-....**
1750	280	257 (345)	1401 (1033)	250	690	58.7	2200	3300	**1PH8284-1■W2■-....**
		318 (426)	1735 (1280)	305	690	58.7	2300	3300	**1PH8286-1■W2■-....**
		391 (524)	2134 (1574)	375	690	58.7	2400	3300	**1PH8288-1■W2■-....**

For versions, see Article No. supplements and options.

For footnotes, see next page.

© Siemens 2024

Motor type (repeated)	Power factor	Magnetizing current	Efficiency	Moment of inertia	Weight, approx.	Terminal box	SINAMICS S120 Motor Module	
							Rated output current [3]	Internal air cooling For further components, see SINAMICS S120 drive system
	cos φ	I_μ	η	J			I_N	
		A	%	kgm^2 (lb$_f$-in-s^2)	kg (lb)	Type	A	Article No.
1PH8284-1.H...	0.87	41	91.7	4.21 (37.26)	1280 (2822)	1XB7322-P05	100	**6SL3320-1TG31-0AA3**
1PH8286-1.H...	0.89	45	91.7	5.16 (45.67)	1490 (3285)	1XB7322-P05	120	**6SL3320-1TG31-2AA3**
1PH8288-1.H...	0.88	58	92.3	6.29 (55.67)	1750 (3859)	1XB7322-P05	150	**6SL3320-1TG31-5AA3**
1PH8284-1.K...	0.88	54	94.2	4.21 (37.26)	1280 (2822)	1XB7322-P05	150	**6SL3320-1TG31-5AA3**
1PH8286-1.K...	0.85	84	0.95	5.16 (45.67)	1490 (3285)	1XB7322-P05	215	**6SL3320-1TG32-2AA3**
1PH8288-1.K...	0.90	77	94.6	6.29 (55.67)	1750 (3859)	1XB7322-P05	260	**6SL3320-1TG32-6AA3**
1PH8284-1.U...	0.86	89	95.6	4.21 (37.26)	1280 (2822)	1XB7322-P05	215	**6SL3320-1TG32-2AA3**
1PH8286-1.U...	0.85	123	95.9	5.16 (45.67)	1490 (3285)	1XB7422-P06	330	**6SL3320-1TG33-3AA3**
1PH8288-1.U...	0.86	145	96.1	6.29 (55.67)	1750 (3859)	1XB7700-P02	410	**6SL3320-1TG34-1AA3**
1PH8284-1.W...	0.89	92	96.3	4.21 (37.26)	1280 (2822)	1XB7422-P06	330	**6SL3320-1TG33-3AA3**
1PH8286-1.W...	0.90	104	96.5	5.16 (45.67)	1490 (3285)	1XB7700-P02	410	**6SL3320-1TG34-1AA3**
1PH8288-1.W...	0.90	132	96.6	6.29 (55.67)	1750 (3859)	1XB7700-P02	465	**6SL3320-1TG34-7AA3**
1PH8284-1.H...	0.86	41	93.1	4.21 (37.26)	1280 (2822)	1XB7322-P05	100	**6SL3320-1TG31-0AA3**
1PH8286-1.H...	0.88	45	93.1	5.16 (45.67)	1490 (3285)	1XB7322-P05	120	**6SL3320-1TG31-2AA3**
1PH8288-1.H...	0.88	58	93.6	6.29 (55.67)	1750 (3859)	1XB7322-P05	150	**6SL3320-1TG31-5AA3**
1PH8284-1.K...	0.88	54	94.7	4.21 (37.26)	1280 (2822)	1XB7322-P05	150	**6SL3320-1TG31-5AA3**
1PH8286-1.K...	0.85	84	95.4	5.16 (45.67)	1490 (3285)	1XB7322-P05	215	**6SL3320-1TG32-2AA3**
1PH8288-1.K...	0.90	77	95.1	5.29 (46.82)	1750 (3859)	1XB7322-P05	260	**6SL3320-1TG32-6AA3**
1PH8284-1.U...	0.85	90	95.9	4.21 (37.26)	1280 (2822)	1XB7322-P05	215	**6SL3320-1TG32-2AA3**
1PH8286-1.U...	0.85	123	96.2	5.16 (45.67)	1490 (3285)	1XB7422-P06	330	**6SL3320-1TG33-3AA3**
1PH8288-1.U...	0.86	144	96.3	6.29 (55.67)	1750 (3859)	1XB7700-P02	410	**6SL3320-1TG34-1AA3**
1PH8284-1.W...	0.89	92	96.5	4.21 (37.26)	1280 (2822)	1XB7422-P06	330	**6SL3320-1TG33-3AA3**
1PH8286-1.W...	0.90	104	96.7	5.16 (45.67)	1490 (3285)	1XB7700-P02	410	**6SL3320-1TG34-1AA3**
1PH8288-1.W...	0.90	133	96.8	6.29 (55.67)	1750 (3859)	1XB7700-P02	465	**6SL3320-1TG34-7AA3**

[1] n_2: Maximum permissible thermal speed at constant power.
[2] n_{max}: Maximum speed that must not be exceeded (applicable for standard: 14th position of the Article No. A to D, E and F).
[3] I_N: Output current of the Motor Module at rated pulse frequency (see SINAMICS S120 drive system).
The rated motor data are valid for 2 kHz (SH 180 to 280).

© Siemens 2024

Selection and ordering data

Rated speed	Shaft height	Rated power	Rated torque	Rated current	Rated voltage	Rated frequency	Operating speed, max. [1]	Speed, max. [2]	**SIMOTICS M-1PH8 reluctance motors Forced ventilation**
n_N	SH	P_N	M_N	I_N	U_N	f_N	n_2	n_{max}	
r/min		kW (hp)	Nm (lb_f-ft)	A	V	Hz	r/min	r/min	Article No.
Line voltage 400 V 3 AC, Smart/Basic Line Module									
1000	132	21 (28.2)	200 (148)	62	283	33.3	3000	6500	**1PH8138-5■D■■-....**
		25 (33.5)	240 (177)	72	292	33.3	2600	6500	**1PH8138-7■D■■-....**
	160	35 (46.9)	335 (247)	97	298	33.3	2650	5000	**1PH8165-5■D■■-....**
		39 (52.3)	370 (273)	106	304	33.3	2350	5000	**1PH8165-7■D■■-....**
		39 (52.3)	370 (273)	96	335	33.3	2100	5000	**1PH8167-5■D■■-....**
		44 (59.0)	420 (310)	106	342	33.3	1800	5000	**1PH8167-7■D■■-....**
1500	132	32 (42.9)	205 (151)	75	350	50.0	2800	6500	**1PH8138-5■F■■-....**
		38 (51.0)	240 (177)	87	361	50.0	2250	6500	**1PH8138-7■F■■-....**
	160	45 (60.3)	285 (210)	107	344	50.0	3100	5000	**1PH8165-5■F■■-....**
		56 (75.1)	355 (262)	128	359	50.0	2300	5000	**1PH8165-7■F■■-....**
		56 (75.1)	355 (262)	132	345	50.0	2950	5000	**1PH8167-5■F■■-....**
		63 (84.5)	400 (295)	146	352	50.0	2400	5000	**1PH8167-7■F■■-....**
2000	132	43 (57.7)	205 (151)	95	370	66.7	3150	6500	**1PH8138-5■G■■-....**
		48 (64.4)	230 (170)	104	370	66.7	2500	6500	**1PH8138-7■G■■-....**
	160	51 (68.4)	245 (181)	110	370	66.7	3050	5000	**1PH8165-5■G■■-....**
		68 (91.2)	325 (240)	143	370	66.7	2100	5000	**1PH8165-7■G■■-....**
		68 (91.2)	325 (240)	145	370	66.7	2850	5000	**1PH8167-5■G■■-....**
		81 (109)	390 (288)	170	370	66.7	2200	5000	**1PH8167-7■G■■-....**
Line voltage 400 V 3 AC, Active Line Module									
1150	132	24 (32.2)	200 (148)	62	324	38.3	3300	6500	**1PH8138-5■D■■-....**
		28.5 (38.2)	240 (177)	71	334	38.3	2850	6500	**1PH8138-7■D■■-....**
	160	40 (53.6)	335 (247)	97	342	38.3	2850	5000	**1PH8165-5■D■■-....**
		43.5 (58.3)	365 (269)	104	347	38.3	2550	5000	**1PH8165-7■D■■-....**
		45 (60.3)	370 (273)	96	383	38.3	2300	5000	**1PH8167-5■D■■-....**
		49 (65.7)	410 (302)	104	390	38.3	1950	5000	**1PH8167-7■D■■-....**
1750	132	37 (49.6)	205 (151)	75	406	58.3	3000	6500	**1PH8138-5■F■■-....**
		43.5 (58.3)	235 (173)	85	415	58.3	2300	6500	**1PH8138-7■F■■-....**
	160	52 (69.7)	285 (210)	107	401	58.3	3150	5000	**1PH8165-5■F■■-....**
		63 (84.5)	345 (254)	124	415	58.3	2400	5000	**1PH8165-7■F■■-....**
		65 (87.2)	355 (262)	132	402	58.3	2950	5000	**1PH8167-5■F■■-....**
		71 (95.2)	385 (284)	141	408	58.3	2500	5000	**1PH8167-7■F■■-....**
2300	132	49.5 (66.4)	205 (151)	95	415	76.7	3250	6500	**1PH8138-5■G■■-....**
		54 (72.4)	220 (162)	102	415	76.7	2600	6500	**1PH8138-7■G■■-....**
	160	58 (77.8)	245 (181)	110	415	76.7	3250	5000	**1PH8165-5■G■■-....**
		74 (99.2)	310 (229)	138	415	76.7	2350	5000	**1PH8165-7■G■■-....**
		78 (105)	320 (236)	145	415	76.7	3050	5000	**1PH8167-5■G■■-....**
		89 (119)	370 (273)	165	415	76.7	2400	5000	**1PH8167-7■G■■-....**

Reluctance version Efficiency: without holding brake **5** / with holding brake **6**
Reluctance version Performance: without holding brake **7** / with holding brake **8**

5
7

For versions, see Article No. supplements and options.

For footnotes, see next page.

© Siemens 2024

Motor type (repeated)	Static torque	Stall current	Efficiency (acc. to IEC 60034-30-2)	IE efficiency class	Moment of inertia	Weight, approx.	Terminal box	SINAMICS S120 Motor Module	
								Rated output current [3]	**Booksize format** Internal air cooling For further components, see SINAMICS S120 drive system
	M_0	I_0	η		J			I_N	
	Nm (lb_f-ft)	A	%		kgm^2 (lb_f-in-s^2)	kg (lb)	Type	A	Article No.
Line voltage 400 V 3 AC, Smart/Basic Line Module									
1PH8138-5.D...	200 (148)	62	91	IE 3	0.0930 (0.8231)	145 (320)	gk843	60 [4]	**6SL3120-1TE26-0AC0**
1PH8138-7.D...	260 (192)	77	90.1	IE 2	0.0930 (0.8231)	145 (320)	gk843	85	**6SL3120-1TE28-5AA3**
1PH8165-5.D...	335 (247)	97	92.3	IE 3	0.1830 (1.6197)	221 (487)	gk874	132	**6SL3120-1TE31-3AA3**
1PH8165-7.D...	400 (295)	115	91.4	IE 2	0.1830 (1.6197)	221 (487)	gk874	132	**6SL3120-1TE31-3AA3**
1PH8167-5.D...	375 (277)	96	92.5	IE 3	0.2140 (1.8941)	244 (538)	gk874	132	**6SL3120-1TE31-3AA3**
1PH8167-7.D...	450 (332)	115	91.7	IE 2	0.2140 (1.8941)	244 (538)	gk874	132	**6SL3120-1TE31-3AA3**
1PH8138-5.F...	205 (151)	75	92.8	IE 3	0.0930 (0.8231)	145 (320)	gk843	85	**6SL3120-1TE28-5AA3**
1PH8138-7.F...	260 (192)	92	91.8	IE 2	0.0930 (0.8231)	145 (320)	gk843	132	**6SL3120-1TE31-3AA3**
1PH8165-5.F...	290 (214)	107	94.8	IE 4	0.1830 (1.6197)	221 (487)	gk874	132	**6SL3120-1TE31-3AA3**
1PH8165-7.F...	400 (295)	144	93.8	IE 3	0.1830 (1.6197)	221 (487)	gk874	132	**6SL3120-1TE31-3AA3**
1PH8167-5.F...	360 (266)	132	95.1	IE 4	0.2140 (1.8941)	244 (538)	gk874	132	**6SL3120-1TE31-3AA3**
1PH8167-7.F...	450 (332)	163	94	IE 3	0.2140 (1.8941)	244 (538)	gk874	200	**6SL3120-1TE32-0AA4**
1PH8138-5.G...	210 (155)	95	94.3	IE 4	0.0930 (0.8231)	145 (320)	gk843	132	**6SL3120-1TE31-3AA3**
1PH8138-7.G...	260 (192)	115	93.3	IE 3	0.0930 (0.8231)	145 (320)	gk843	132	**6SL3120-1TE31-3AA3**
1PH8165-5.G...	255 (188)	110	95.6	IE 5	0.1830 (1.6197)	221 (487)	gk874	132	**6SL3120-1TE31-3AA3**
1PH8165-7.G...	400 (295)	165	94.9	IE 4	0.1830 (1.6197)	221 (487)	gk874	200	**6SL3120-1TE32-0AA4**
1PH8167-5.G...	335 (247)	145	95.9	IE 5	0.2140 (1.8941)	244 (538)	gk874	200	**6SL3120-1TE32-0AA4**
1PH8167-7.G...	450 (332)	191	95.1	IE 4	0.2140 (1.8941)	244 (538)	gk874	200	**6SL3120-1TE32-0AA4**
Line voltage 400 V 3 AC, Active Line Module									
1PH8138-5.D...	200 (148)	62	91.3	IE 3	0.0930 (0.8231)	145 (320)	gk843	60 [4]	**6SL3120-1TE26-0AC0**
1PH8138-7.D...	260 (192)	77	90.5	IE 2	0.0930 (0.8231)	145 (320)	gk843	85	**6SL3120-1TE28-5AA3**
1PH8165-5.D...	335 (247)	97	92.6	IE 3	0.1830 (1.6197)	221 (487)	gk874	132	**6SL3120-1TE31-3AA3**
1PH8165-7.D...	400 (295)	115	91.7	IE 2	0.1830 (1.6197)	221 (487)	gk874	132	**6SL3120-1TE31-3AA3**
1PH8167-5.D...	375 (277)	96	92.9	IE 3	0.2140 (1.8941)	244 (538)	gk874	132	**6SL3120-1TE31-3AA3**
1PH8167-7.D...	450 (332)	115	92	IE 2	0.2140 (1.8941)	244 (538)	gk874	132	**6SL3120-1TE31-3AA3**
1PH8138-5.F...	205 (151)	75	93.1	IE 3	0.0930 (0.8231)	145 (320)	gk843	85	**6SL3120-1TE28-5AA3**
1PH8138-7.F...	260 (192)	92	92.1	IE 2	0.0930 (0.8231)	145 (320)	gk843	132	**6SL3120-1TE31-3AA3**
1PH8165-5.F...	290 (214)	107	95	IE 4	0.1830 (1.6197)	221 (487)	gk874	132	**6SL3120-1TE31-3AA3**
1PH8165-7.F...	400 (295)	144	94	IE 3	0.1830 (1.6197)	221 (487)	gk874	132	**6SL3120-1TE31-3AA3**
1PH8167-5.F...	360 (266)	132	95.2	IE 4	0.2140 (1.8941)	244 (538)	gk874	132	**6SL3120-1TE31-3AA3**
1PH8167-7.F...	450 (332)	163	94.2	IE 3	0.2140 (1.8941)	244 (538)	gk874	200	**6SL3120-1TE32-0AA4**
1PH8138-5.G...	210 (155)	95	94.5	IE 4	0.0930 (0.8231)	145 (320)	gk843	132	**6SL3120-1TE31-3AA3**
1PH8138-7.G...	260 (192)	115	93.5	IE 3	0.0930 (0.8231)	145 (320)	gk843	132	**6SL3120-1TE31-3AA3**
1PH8165-5.G...	255 (188)	110	95.7	IE 5	0.1830 (1.6197)	221 (487)	gk874	132	**6SL3120-1TE31-3AA3**
1PH8165-7.G...	400 (295)	165	95	IE 4	0.1830 (1.6197)	221 (487)	gk874	200	**6SL3120-1TE32-0AA4**
1PH8167-5.G...	335 (247)	145	96	IE 5	0.2140 (1.8941)	244 (538)	gk874	200	**6SL3120-1TE32-0AA4**
1PH8167-7.G...	450 (332)	191	95.2	IE 4	0.2140 (1.8941)	244 (538)	gk874	200	**6SL3120-1TE32-0AA4**

Motor Module: Single Motor Module	**1**
Motor Module For continuous load with 200 % overload (C type)	**C**

1) n_2: Maximum permissible thermal speed at constant power.
2) n_{max}: Maximum speed that must not be exceeded. Limitations must be taken into consideration where necessary (e.g. with holding brake).
3) I_N: Output current of the Motor Module at rated pulse frequency (see SINAMICS S120 drive system).
4) The output current of the Motor Module is lower than the rated motor current for the pulse frequency on which it is based.

© Siemens 2024

Selection and ordering data

Rated speed	Shaft height	Rated power	Rated torque	Rated current	Rated voltage	Rated frequency	Operating speed, max. [1]	Speed, max. [2]	**SIMOTICS M-1PH8 reluctance motors Forced ventilation**
n_N	SH	P_N	M_N	I_N	U_N	f_N	n_2	n_{max}	
r/min		kW (hp)	Nm (lb_f-ft)	A	V	Hz	r/min	r/min	Article No.
Line voltage 480 V 3 AC, Smart/Basic Line Module									
1350	132	28.5 (38.2)	200 (148)	62	378	45.0	3300	6500	**1PH8138-5■D■■-....**
		33 (44.3)	235 (173)	70	389	45.0	2750	6500	**1PH8138-7■D■■-....**
	160	47 (63.0)	335 (247)	97	400	45.0	2700	5000	**1PH8165-5■D■■-....**
		49.5 (66.4)	350 (258)	101	404	45.0	2500	5000	**1PH8165-7■D■■-....**
		52 (69.7)	370 (273)	96	448	45.0	2100	5000	**1PH8167-5■D■■-....**
		56 (75.1)	395 (291)	101	448	45.0	1800	5000	**1PH8167-7■D■■-....**
2000	132	42 (56.3)	200 (148)	75	448	66.7	2800	6500	**1PH8138-5■F■■-....**
		47 (63.0)	225 (166)	83	448	66.7	2200	6500	**1PH8138-7■F■■-....**
	160	60 (80.5)	285 (210)	107	448	66.7	2950	5000	**1PH8165-5■F■■-....**
		68 (91.2)	325 (240)	120	448	66.7	2250	5000	**1PH8165-7■F■■-....**
		74 (99.2)	355 (262)	132	448	66.7	2750	5000	**1PH8167-5■F■■-....**
		78 (105)	370 (273)	137	448	66.7	2400	5000	**1PH8167-7■F■■-....**
2650	132	55 (73.8)	198 (146)	95	448	88.3	3100	6500	**1PH8138-5■G■■-....**
		57 (76.4)	205 (151)	99	448	88.3	2700	6500	**1PH8138-7■G■■-....**
	160	64 (85.8)	230 (170)	110	448	88.3	3100	5000	**1PH8165-5■G■■-....**
		77 (103)	275 (203)	132	448	88.3	2650	5000	**1PH8165-7■G■■-....**
		85 (114)	305 (225)	145	448	88.3	3000	5000	**1PH8167-5■G■■-....**
		94 (126)	335 (247)	159	448	88.3	2650	5000	**1PH8167-7■G■■-....**

Reluctance version Efficiency: without holding brake **5** / with holding brake **6**
Reluctance version Performance: without holding brake **7** / with holding brake **8**

5
7

For versions, see Article No. supplements and options.

For footnotes, see next page.

© Siemens 2024

Motor type (repeated)	Static torque	Stall current	Efficiency (acc. to IEC 60034-30-2)	IE efficiency class	Moment of inertia	Weight, approx.	Terminal box	SINAMICS S120 Motor Module	
								Rated output current [3]	**Booksize format** Internal air cooling For further components, see SINAMICS S120 drive system
	M_0	I_0	η		J			I_N	
	Nm (lb_f-ft)	A	%		kgm^2 (lb_f-in-s^2)	kg (lb)	Type	A	Article No.
Line voltage 480 V 3 AC, Smart/Basic Line Module									
1PH8138-5.D...	200 (148)	62	92.6	IE 3	0.0930 (0.8231)	145 (320)	gk843	60 [4]	**6SL3120-1TE26-0AC0**
1PH8138-7.D...	260 (192)	77	91.5	IE 2	0.0930 (0.8231)	145 (320)	gk843	85	**6SL3120-1TE28-5AA3**
1PH8165-5.D...	335 (247)	97	93.5	IE 3	0.1830 (1.6197)	221 (487)	gk874	132	**6SL3120-1TE31-3AA3**
1PH8165-7.D...	400 (295)	115	92.3	IE 2	0.1830 (1.6197)	221 (487)	gk874	132	**6SL3120-1TE31-3AA3**
1PH8167-5.D...	375 (277)	96	93.7	IE 3	0.2140 (1.8941)	244 (538)	gk874	132	**6SL3120-1TE31-3AA3**
1PH8167-7.D...	450 (332)	115	92.6	IE 2	0.2140 (1.8941)	244 (538)	gk874	132	**6SL3120-1TE31-3AA3**
1PH8138-5.F...	205 (151)	75	93.1	IE 3	0.0930 (0.8231)	145 (320)	gk843	85	**6SL3120-1TE28-5AA3**
1PH8138-7.F...	260 (192)	92	92	IE 2	0.0930 (0.8231)	145 (320)	gk843	132	**6SL3120-1TE31-3AA3**
1PH8165-5.F...	290 (214)	111	94.7	IE 4	0.1830 (1.6197)	221 (487)	gk874	132	**6SL3120-1TE31-3AA3**
1PH8165-7.F...	400 (295)	144	93.9	IE 3	0.1830 (1.6197)	221 (487)	gk874	132	**6SL3120-1TE31-3AA3**
1PH8167-5.F...	360 (266)	132	95	IE 4	0.2140 (1.8941)	244 (538)	gk874	132	**6SL3120-1TE31-3AA3**
1PH8167-7.F...	450 (332)	163	94.1	IE 3	0.2140 (1.8941)	244 (538)	gk874	200	**6SL3120-1TE32-0AA4**
1PH8138-5.G...	210 (155)	95	94.6	IE 4	0.0930 (0.8231)	145 (320)	gk843	132	**6SL3120-1TE31-3AA3**
1PH8138-7.G...	260 (192)	115	93.6	IE 3	0.0930 (0.8231)	145 (320)	gk843	132	**6SL3120-1TE31-3AA3**
1PH8165-5.G...	255 (188)	110	95.8	IE 5	0.1830 (1.6197)	221 (487)	gk874	132	**6SL3120-1TE31-3AA3**
1PH8165-7.G...	400 (295)	165	95.1	IE 4	0.1830 (1.6197)	221 (487)	gk874	200	**6SL3120-1TE32-0AA4**
1PH8167-5.G...	335 (247)	145	96.1	IE 5	0.2140 (1.8941)	244 (538)	gk874	200	**6SL3120-1TE32-0AA4**
1PH8167-7.G...	450 (332)	191	94.9	IE 4	0.2140 (1.8941)	244 (538)	gk874	200	**6SL3120-1TE32-0AA4**

Motor Module: Single Motor Module	**1**
Motor Module For continuous load with 200 % overload (C type)	**C**

[1] n_2: Maximum permissible thermal speed at constant power.
[2] n_{max}: Maximum speed that must not be exceeded. Limitations must be taken into consideration where necessary (e.g. with holding brake).
[3] I_N: Output current of the Motor Module at rated pulse frequency (see SINAMICS S120 drive system).
[4] The output current of the Motor Module is lower than the rated motor current for the pulse frequency on which it is based.

© Siemens 2024

Selection and ordering data

Rated speed	Shaft height	Rated power	Rated torque	Rated current	Rated voltage	Rated frequency	Operating speed, max. [1]	Speed, max. [2]	**SIMOTICS M-1PH8 reluctance motors Forced ventilation**
n_N	SH	P_N	M_N	I_N	U_N	f_N	n_2	n_{max}	
r/min		kW (hp)	Nm (lb_f-ft)	A	V	Hz	r/min	r/min	Article No.
Line voltage 480 V 3 AC, Active Line Module									
1500	132	31.5 (42.2)	200 (148)	62	419	50.0	3600	6500	**1PH8138-5■D■■-....**
		36 (48.3)	230 (170)	70	429	50.0	3000	6500	**1PH8138-7■D■■-....**
	160	52 (69.7)	335 (247)	97	443	50.0	2850	5000	**1PH8165-5■D■■-....**
		53.5 (71.7)	340 (251)	99	445	50.0	2700	5000	**1PH8165-7■D■■-....**
		58 (77.8)	370 (273)	96	498	50.0	2200	5000	**1PH8167-5■D■■-....**
		60 (80.5)	385 (284)	99	498	50.0	2000	5000	**1PH8167-7■D■■-....**
2200	132	46.5 (62.4)	200 (148)	75	498	73.3	3200	6500	**1PH8138-5■F■■-....**
		51 (68.4)	220 (162)	81	498	73.3	2450	6500	**1PH8138-7■F■■-....**
	160	66 (88.5)	285 (210)	107	498	73.3	3000	5000	**1PH8165-5■F■■-....**
		73 (97.9)	315 (232)	117	498	73.3	2550	5000	**1PH8165-7■F■■-....**
		82 (110)	355 (262)	132	498	73.3	2750	5000	**1PH8167-5■F■■-....**
		82 (110)	355 (262)	132	498	73.3	2700	5000	**1PH8167-7■F■■-....**
2800	132	60 (80.5)	205 (151)	95	498	93.3	3250	6500	**1PH8138-5■G■■-....**
		61 (81.8)	210 (155)	97	498	93.3	3000	6500	**1PH8138-7■G■■-....**
	160	70 (93.9)	240 (177)	110	498	93.3	3700	5000	**1PH8165-5■G■■-....**
		82 (110)	280 (207)	128	498	93.3	2900	5000	**1PH8165-7■G■■-....**
		94 (126)	320 (236)	145	498	93.3	3100	5000	**1PH8167-5■G■■-....**
		101 (135)	345 (254)	155	498	93.3	2800	5000	**1PH8167-7■G■■-....**

Reluctance version Efficiency: without holding brake **5** / with holding brake **6** — **5**
Reluctance version Performance: without holding brake **7** / with holding brake **8** — **7**

For versions, see Article No. supplements and options.

For footnotes, see next page.

© Siemens 2024

Motor type (repeated)	Static torque	Stall current	Efficiency (acc. to IEC 60034-30-2)	IE efficiency class	Moment of inertia	Weight, approx.	Terminal box	SINAMICS S120 Motor Module	
								Rated output current [3]	**Booksize format** Internal air cooling For further components, see SINAMICS S120 drive system
	M_0	I_0	η		J			I_N	
	Nm (lb_f-ft)	A	%		kgm^2 (lb_f-in-s^2)	kg (lb)	Type	A	Article No.
Line voltage 480 V 3 AC, Active Line Module									
1PH8138-5.D...	200 (148)	62	92.8	IE 3	0.0930 (0.8231)	145 (320)	gk843	60[4]	**6SL3120-1TE26-0AC0**
1PH8138-7.D...	260 (192)	77	91.7	IE 2	0.0930 (0.8231)	145 (320)	gk843	85	**6SL3120-1TE28-5AA3**
1PH8165-5.D...	335 (247)	97	93.7	IE 3	0.1830 (1.6197)	221 (487)	gk874	132	**6SL3120-1TE31-3AA3**
1PH8165-7.D...	400 (295)	115	92.5	IE 2	0.1830 (1.6197)	221 (487)	gk874	132	**6SL3120-1TE31-3AA3**
1PH8167-5.D...	375 (277)	96	93.9	IE 3	0.2140 (1.8941)	244 (538)	gk874	132	**6SL3120-1TE31-3AA3**
1PH8167-7.D...	450 (332)	115	92.7	IE 2	0.2140 (1.8941)	244 (538)	gk874	132	**6SL3120-1TE31-3AA3**
1PH8138-5.F...	205 (151)	75	93.2	IE 3	0.0930 (0.8231)	145 (320)	gk843	85	**6SL3120-1TE28-5AA3**
1PH8138-7.F...	260 (192)	92	92.2	IE 2	0.0930 (0.8231)	145 (320)	gk843	132	**6SL3120-1TE31-3AA3**
1PH8165-5.F...	290 (214)	107	94.9	IE 4	0.1830 (1.6197)	221 (487)	gk874	132	**6SL3120-1TE31-3AA3**
1PH8165-7.F...	400 (295)	144	94	IE 3	0.1830 (1.6197)	221 (487)	gk874	132	**6SL3120-1TE31-3AA3**
1PH8167-5.F...	360 (266)	132	95.1	IE 4	0.2140 (1.8941)	244 (538)	gk874	132	**6SL3120-1TE31-3AA3**
1PH8167-7.F...	450 (332)	163	94.1	IE 3	0.2140 (1.8941)	244 (538)	gk874	200	**6SL3120-1TE32-0AA4**
1PH8138-5.G...	210 (155)	95	94.7	IE 4	0.0930 (0.8231)	145 (320)	gk843	132	**6SL3120-1TE31-3AA3**
1PH8138-7.G...	260 (192)	115	93.7	IE 3	0.0930 (0.8231)	145 (320)	gk843	132	**6SL3120-1TE31-3AA3**
1PH8165-5.G...	255 (188)	110	95.9	IE 5	0.1830 (1.6197)	221 (487)	gk874	132	**6SL3120-1TE31-3AA3**
1PH8165-7.G...	400 (295)	165	95.1	IE 4	0.1830 (1.6197)	221 (487)	gk874	200	**6SL3120-1TE32-0AA4**
1PH8167-5.G...	335 (247)	145	95.9	IE 5	0.2140 (1.8941)	244 (538)	gk874	200	**6SL3120-1TE32-0AA4**
1PH8167-7.G...	450 (332)	191	95	IE 4	0.2140 (1.8941)	244 (538)	gk874	200	**6SL3120-1TE32-0AA4**

Motor Module: Single Motor Module	**1**
Motor Module For continuous load with 200 % overload (C type)	**C**

[1] n_2: Maximum permissible thermal speed at constant power.
[2] n_{max}: Maximum speed that must not be exceeded. Limitations must be taken into consideration where necessary (e.g. with holding brake).
[3] I_N: Output current of the Motor Module at rated pulse frequency (see SINAMICS S120 drive system).
[4] The output current of the Motor Module is lower than the rated motor current for the pulse frequency on which it is based.

© Siemens 2024

Selection and ordering data

Rated speed	Shaft height	Rated power	Rated torque	Rated current	Rated voltage	Rated frequency	Operating speed, max. [1]	Speed, max. [2]	SIMOTICS M-1PH8 reluctance motors Water cooling
n_N	SH	P_N	M_N	I_N	U_N	f_N	n_2	n_{max}	
r/min		kW (hp)	Nm (lb_f-ft)	A	V	Hz	r/min	r/min	Article No.
Line voltage 400 V 3 AC, Smart/Basic Line Module									
1500	132	32 (42.9)	205 (151)	84	315	50.0	3600	6500	**1PH8138-5■F2■-....**
		40 (53.6)	255 (188)	102	330	50.0	2850	6500	**1PH8138-7■F2■-....**
	160	55 (73.8)	350 (258)	146	310	50.0	3600	5000	**1PH8165-5■F2■-....**
		70 (93.9)	445 (328)	179	325	50.0	2800	5000	**1PH8165-7■F2■-....**
		62 (83.1)	395 (291)	145	348	50.0	2800	5000	**1PH8167-5■F2■-....**
		78 (105)	500 (369)	178	365	50.0	2150	5000	**1PH8167-7■F2■-....**
2000	132	50 (67.0)	240 (177)	125	333	66.7	4000	6500	**1PH8138-5■G2■-....**
		63 (84.5)	300 (221)	153	350	66.7	3100	6500	**1PH8138-7■G2■-....**
	160	77 (103)	370 (273)	178	357	66.7	3400	5000	**1PH8165-5■G2■-....**
		91 (122)	435 (321)	205	369	66.7	2700	5000	**1PH8165-7■G2■-....**
		84 (113)	400 (295)	177	370	66.7	2450	5000	**1PH8167-5■G2■-....**
		96 (129)	460 (339)	202	370	66.7	2100	5000	**1PH8167-7■G2■-....**
Line voltage 400 V 3 AC, Active Line Module									
1750	132	37 (49.6)	205 (151)	84	366	58.3	3750	6500	**1PH8138-5■F2■-....**
		43.5 (58.3)	250 (184)	100	381	58.3	2950	6500	**1PH8138-7■F2■-....**
	160	64 (85.8)	350 (258)	146	361	58.3	3900	5000	**1PH8165-5■F2■-....**
		80 (107)	435 (321)	176	377	58.3	3000	5000	**1PH8165-7■F2■-....**
		72 (96.6)	395 (291)	145	405	58.3	2950	5000	**1PH8167-5■F2■-....**
		89 (119)	490 (361)	176	415	58.3	2200	5000	**1PH8167-7■F2■-....**
2300	132	57 (76.4)	240 (177)	125	382	76.7	4400	6500	**1PH8138-5■G2■-....**
		71 (95.2)	295 (218)	151	399	76.7	3350	6500	**1PH8138-7■G2■-....**
	160	89 (119)	370 (273)	178	410	76.7	3650	5000	**1PH8165-5■G2■-....**
		102 (137)	425 (313)	200	415	76.7	2850	5000	**1PH8165-7■G2■-....**
		95 (127)	395 (291)	177	415	76.7	2600	5000	**1PH8167-5■G2■-....**
		106 (142)	440 (325)	197	415	76.7	2300	5000	**1PH8167-7■G2■-....**

Reluctance version Efficiency: without holding brake **5** / with holding brake **6**
Reluctance version Performance: without holding brake **7** / with holding brake **8**

5
7

For versions, see Article No. supplements and options.

For footnotes, see next page.

© Siemens 2024

Motor type (repeated)	Static torque	Stall current	Efficiency (acc. to IEC 60034-30-2)	IE efficiency class	Moment of inertia	Weight, approx.	Terminal box	SINAMICS S120 Motor Module	
								Rated output current [3]	**Booksize format** Internal air cooling For further components, see SINAMICS S120 drive system
	M_0	I_0	η		J			I_N	
	Nm (lb_f-ft)	A	%		kgm^2 (lb_f-in-s^2)	kg (lb)	Type	A	Article No.
Line voltage 400 V 3 AC, Smart/Basic Line Module									
1PH8138-5. F2...	205 (151)	85	92.8	IE 3	0.0930 (0.8231)	163 (359)	gk843	85	**6SL3120-1TE28-5AA3**
1PH8138-7. F2...	285 (210)	111	91.9	IE 2	0.0930 (0.8231)	163 (359)	gk843	132	**6SL3120-1TE31-3AA3**
1PH8165-5. F2...	355 (262)	146	93.8	IE 3	0.1830 (1.6197)	260 (573)	gk874	200	**6SL3120-1TE32-0AA4**
1PH8165-7. F2...	500 (369)	191	93	IE 2	0.1830 (1.6197)	260 (573)	gk874	200	**6SL3120-1TE32-0AA4**
1PH8167-5. F2...	400 (295)	146	0.94	IE 3	0.2140 (1.8941)	283 (624)	gk874	200	**6SL3120-1TE32-0AA4**
1PH8167-7. F2...	550 (406)	192	93.2	IE 2	0.2140 (1.8941)	283 (624)	gk874	200	**6SL3120-1TE32-0AA4**
1PH8138-5. G2...	245 (181)	125	93.4	IE 3	0.0930 (0.8231)	163 (359)	gk874	132	**6SL3120-1TE31-3AA3**
1PH8138-7. G2...	330 (243)	164	92.6	IE 2	0.0930 (0.8231)	163 (359)	gk874	200	**6SL3120-1TE32-0AA4**
1PH8165-5. G2...	375 (277)	178	95.1	IE 4	0.1830 (1.6197)	260 (573)	gk874	200	**6SL3120-1TE32-0AA4**
1PH8165-7. G2...	500 (369)	225	93.8	IE 3	0.1830 (1.6197)	260 (573)	gk874	200 [4]	**6SL3120-1TE32-0AA4**
1PH8167-5. G2...	415 (306)	177	95.2	IE 4	0.2140 (1.8941)	283 (624)	gk874	200	**6SL3120-1TE32-0AA4**
1PH8167-7. G2...	550 (406)	225	93.9	IE 3	0.2140 (1.8941)	283 (624)	gk874	200 [4]	**6SL3120-1TE32-0AA4**
Line voltage 400 V 3 AC, Active Line Module									
1PH8138-5. F2...	205 (151)	85	93.1	IE 3	0.0930 (0.8231)	163 (359)	gk843	85	**6SL3120-1TE28-5AA3**
1PH8138-7. F2...	285 (210)	111	92.2	IE 2	0.0930 (0.8231)	163 (359)	gk843	132	**6SL3120-1TE31-3AA3**
1PH8165-5. F2...	355 (262)	146	94	IE 3	0.1830 (1.6197)	260 (573)	gk874	200	**6SL3120-1TE32-0AA4**
1PH8165-7. F2...	500 (369)	191	93.2	IE 2	0.1830 (1.6197)	260 (573)	gk874	200	**6SL3120-1TE32-0AA4**
1PH8167-5. F2...	400 (295)	146	94.2	IE 3	0.2140 (1.8941)	283 (624)	gk874	200	**6SL3120-1TE32-0AA4**
1PH8167-7. F2...	550 (406)	192	93.4	IE 2	0.2140 (1.8941)	283 (624)	gk874	200	**6SL3120-1TE32-0AA4**
1PH8138-5. G2...	245 (181)	125	93.6	IE 3	0.0930 (0.8231)	163 (359)	gk874	132	**6SL3120-1TE31-3AA3**
1PH8138-7. G2...	330 (243)	164	92.8	IE 2	0.0930 (0.8231)	163 (359)	gk874	200	**6SL3120-1TE32-0AA4**
1PH8165-5. G2...	375 (277)	178	95.2	IE 4	0.1830 (1.6197)	260 (573)	gk874	200	**6SL3120-1TE32-0AA4**
1PH8165-7. G2...	500 (369)	225	94	IE 3	0.1830 (1.6197)	260 (573)	gk874	200	**6SL3120-1TE32-0AA4**
1PH8167-5. G2...	415 (306)	177	94.9	IE 4	0.2140 (1.8941)	283 (624)	gk874	200	**6SL3120-1TE32-0AA4**
1PH8167-7. G2...	550 (406)	225	94	IE 3	0.2140 (1.8941)	283 (624)	gk874	200	**6SL3120-1TE32-0AA4**

Motor Module: Single Motor Module	**1**
Motor Module For continuous load with 200 % overload (C type)	**C**

[1] n_2: Maximum permissible thermal speed at constant power.
[2] n_{max}: Maximum speed that must not be exceeded. Limitations must be taken into consideration where necessary (e.g. with holding brake).
[3] I_N: Output current of the Motor Module at rated pulse frequency (see SINAMICS S120 drive system).
[4] The output current of the Motor Module is lower than the rated motor current for the pulse frequency on which it is based.

© Siemens 2024

Selection and ordering data

Rated speed	Shaft height	Rated power	Rated torque	Rated current	Rated voltage	Rated frequency	Operating speed, max. [1]	Speed, max. [2]	**SIMOTICS M-1PH8 reluctance motors Water cooling**
n_N	SH	P_N	M_N	I_N	U_N	f_N	n_2	n_{max}	
r/min		kW (hp)	Nm (lb_f-ft)	A	V	Hz	r/min	r/min	Article No.
Line voltage 480 V 3 AC, Smart/Basic Line Module									
2000	132	42.5 (57.0)	205 (151)	84	417	66.7	3600	6500	**1PH8138- 5■F 2■-....**
		51 (68.4)	240 (177)	98	432	66.7	2900	6500	**1PH8138- 7■F 2■-....**
	160	73 (97.9)	350 (258)	146	412	66.7	3900	5000	**1PH8165- 5■F 2■-....**
		89 (119)	425 (313)	174	428	66.7	3000	5000	**1PH8165- 7■F 2■-....**
		82 (110)	390 (288)	145	448	66.7	2750	5000	**1PH8167- 5■F 2■-....**
		98 (131)	470 (347)	173	448	66.7	2150	5000	**1PH8167- 7■F 2■-....**
2650	132	66 (88.5)	240 (177)	125	439	88.3	4300	6500	**1PH8138- 5■G 2■-....**
		80 (107)	290 (214)	148	448	88.3	3200	6500	**1PH8138- 7■G 2■-....**
	160	101 (135)	365 (269)	178	448	88.3	3350	5000	**1PH8165- 5■G 2■-....**
		112 (150)	405 (299)	196	448	88.3	2750	5000	**1PH8165- 7■G 2■-....**
		103 (138)	370 (273)	177	448	88.3	2750	5000	**1PH8167- 5■G 2■-....**
		110 (148)	400 (295)	191	448	88.3	2650	5000	**1PH8167- 7■G 2■-....**
Line voltage 480 V 3 AC, Active Line Module									
2200	132	46.5 (62.4)	200 (148)	84	458	73.3	3750	6500	**1PH8138- 5■F 2■-....**
		54 (72.4)	235 (173)	96	472	73.3	3150	6500	**1PH8138- 7■F 2■-....**
	160	81 (109)	350 (258)	145	452	73.3	4300	5000	**1PH8165- 5■F 2■-....**
		96 (129)	415 (306)	171	468	73.3	3300	5000	**1PH8165- 7■F 2■-....**
		91 (122)	395 (291)	145	498	73.3	3150	5000	**1PH8167- 5■F 2■-....**
		106 (142)	460 (339)	170	498	73.3	2450	5000	**1PH8167- 7■F 2■-....**
2800	132	70 (93.9)	240 (177)	125	463	93.3	5000	6500	**1PH8138- 5■G 2■-....**
		83 (111)	285 (210)	146	481	93.3	3850	6500	**1PH8138- 7■G 2■-....**
	160	108 (145)	370 (273)	178	498	93.3	3950	5000	**1PH8165- 5■G 2■-....**
		118 (158)	405 (299)	193	498	93.3	3300	5000	**1PH8165- 7■G 2■-....**
		114 (153)	390 (288)	177	498	93.3	3050	5000	**1PH8167- 5■G 2■-....**
		121 (162)	415 (306)	188	498	93.3	2800	5000	**1PH8167- 7■G 2■-....**

Reluctance version Efficiency: without holding brake **5** / with holding brake **6**
Reluctance version Performance: without holding brake **7** / with holding brake **8**

5
7

For versions, see Article No. supplements and options.

For footnotes, see next page.

© Siemens 2024

Motor type (repeated)	Static torque	Stall current	Efficiency (acc. to IEC 60034-30-2)	IE efficiency class	Moment of inertia	Weight, approx.	Terminal box	SINAMICS S120 Motor Module	
								Rated output current [3]	**Booksize format** Internal air cooling For further components, see SINAMICS S120 drive system
	M_0	I_0	η		J			I_N	
	Nm (lb_f-ft)	A	%		kgm^2 (lb_f-in-s^2)	kg (lb)	Type	A	Article No.
Line voltage 480 V 3 AC, Smart/Basic Line Module									
1PH8138-5. F2…	205 (151)	85	93.1	IE 3	0.0930 (0.8231)	163 (359)	gk843	85	**6SL3120-1TE28-5AA3**
1PH8138-7. F2…	285 (210)	111	92.2	IE 2	0.0930 (0.8231)	163 (359)	gk843	132	**6SL3120-1TE31-3AA3**
1PH8165-5. F2…	355 (262)	146	94	IE 3	0.1830 (1.6197)	260 (573)	gk874	200	**6SL3120-1TE32-0AA4**
1PH8165-7. F2…	500 (369)	191	93.2	IE 2	0.1830 (1.6197)	260 (573)	gk874	200	**6SL3120-1TE32-0AA4**
1PH8167-5. F2…	400 (295)	146	94.1	IE 3	0.2140 (1.8941)	283 (624)	gk874	200	**6SL3120-1TE32-0AA4**
1PH8167-7. F2…	550 (406)	192	92.8	IE 2	0.2140 (1.8941)	283 (624)	gk874	200	**6SL3120-1TE32-0AA4**
1PH8138-5. G2…	245 (181)	125	93.8	IE 3	0.0930 (0.8231)	163 (359)	gk874	132	**6SL3120-1TE31-3AA3**
1PH8138-7. G2…	330 (243)	164	93	IE 2	0.0930 (0.8231)	163 (359)	gk874	200	**6SL3120-1TE32-0AA4**
1PH8165-5. G2…	375 (277)	178	95	IE 4	0.1830 (1.6197)	260 (573)	gk874	200	**6SL3120-1TE32-0AA4**
1PH8165-7. G2…	500 (369)	225	94.1	IE 3	0.1830 (1.6197)	260 (573)	gk874	200	**6SL3120-1TE32-0AA4**
1PH8167-5. G2…	415 (306)	177	95	IE 4	0.2140 (1.8941)	283 (624)	gk874	200	**6SL3120-1TE32-0AA4**
1PH8167-7. G2…	550 (406)	225	94.1	IE 3	0.2140 (1.8941)	283 (624)	gk874	200	**6SL3120-1TE32-0AA4**
Line voltage 480 V 3 AC, Active Line Module									
1PH8138-5. F2…	205 (151)	85	93.2	IE 3	0.0930 (0.8231)	163 (359)	gk843	85	**6SL3120-1TE28-5AA3**
1PH8138-7. F2…	285 (210)	111	92.3	IE 2	0.0930 (0.8231)	163 (359)	gk843	132	**6SL3120-1TE31-3AA3**
1PH8165-5. F2…	355 (262)	146	94.1	IE 3	0.1830 (1.6197)	260 (573)	gk874	200	**6SL3120-1TE32-0AA4**
1PH8165-7. F2…	500 (369)	191	92.8	IE 2	0.1830 (1.6197)	260 (573)	gk874	200	**6SL3120-1TE32-0AA4**
1PH8167-5. F2…	400 (295)	146	93.8	IE 3	0.2140 (1.8941)	283 (624)	gk874	200	**6SL3120-1TE32-0AA4**
1PH8167-7. F2…	550 (406)	192	93	IE 2	0.2140 (1.8941)	283 (624)	gk874	200	**6SL3120-1TE32-0AA4**
1PH8138-5. G2…	245 (181)	125	93.9	IE 3	0.0930 (0.8231)	163 (359)	gk874	132	**6SL3120-1TE31-3AA3**
1PH8138-7. G2…	330 (243)	164	93.1	IE 2	0.0930 (0.8231)	163 (359)	gk874	200	**6SL3120-1TE32-0AA4**
1PH8165-5. G2…	375 (277)	178	95.1	IE 4	0.1830 (1.6197)	260 (573)	gk874	200	**6SL3120-1TE32-0AA4**
1PH8165-7. G2…	500 (369)	225	94.2	IE 3	0.1830 (1.6197)	260 (573)	gk874	200	**6SL3120-1TE32-0AA4**
1PH8167-5. G2…	415 (306)	177	95.1	IE 4	0.2140 (1.8941)	283 (624)	gk874	200	**6SL3120-1TE32-0AA4**
1PH8167-7. G2…	550 (406)	225	94.2	IE 3	0.2140 (1.8941)	283 (624)	gk874	200	**6SL3120-1TE32-0AA4**

Motor Module:
Single Motor Module **1**

Motor Module
For continuous load with 200 % overload (C type) **C**

1) n_2: Maximum permissible thermal speed at constant power.
2) n_{max}: Maximum speed that must not be exceeded. Limitations must be taken into consideration where necessary (e.g. with holding brake).
3) I_N: Output current of the Motor Module at rated pulse frequency (see SINAMICS S120 drive system).
4) The output current of the Motor Module is lower than the rated motor current for the pulse frequency on which it is based.

© Siemens 2024

Selection and ordering data

Rated speed	Shaft height	Rated power	Rated torque	Rated current	Rated voltage	Rated frequency	Operating speed, max. [1]	Speed, max. [2]	**SIMOTICS M-1PH8 synchronous motors Forced ventilation**
n_N	SH	P_N	M_N	I_N	U_N	f_N	$n_{max, Inv}$	n_{max}	
r/min		kW (hp)	Nm (lb_f-ft)	A	V	Hz	r/min	r/min	Article No.
Line voltage 400 V 3 AC, Smart/Basic Line Module									
700	180	33 (44.3)	450 (332)	80	278	47.0	1450	3800	**1PH8184-■■C■■-....**
		44 (59.0)	600 (443)	108	269	47.0	1450	3800	**1PH8186-■■C■■-....**
	225	48 (64.4)	655 (483)	120	256	47.0	1450	3500	**1PH8224-■■C■■-....**
		64 (85.8)	873 (644)	170	238	47.0	1550	3500	**1PH8226-■■C■■-....**
		80 (107)	1091 (805)	200	254	47.0	1450	3500	**1PH8228-■■C■■-....**
1000	180	46 (61.7)	439 (324)	106	285	67.0	1950	3800	**1PH8184-■■D■■-....**
		62 (83.1)	592 (437)	148	275	67.0	2050	3800	**1PH8186-■■D■■-....**
	225	68 (91.2)	649 (479)	170	254	67.0	2050	3500	**1PH8224-■■D■■-....**
		91 (122)	869 (641)	215	265	67.0	1950	3500	**1PH8226-■■D■■-....**
		113 (152)	1079 (796)	265	271	67.0	1950	3500	**1PH8228-■■D■■-....**
1500	132	15.7 (21.1)	100 (73.8)	29	388	50.0	2550	4500	**1PH8131-■■F■■-....**
		19.9 (26.7)	127 (93.7)	44	316	50.0	3050	4500	**1PH8133-■■F■■-....**
		23.7 (31.8)	151 (111)	43	383	50.0	2450	4500	**1PH8135-■■F■■-....**
		30.6 (41.0)	195 (144)	60	356	50.0	2700	4500	**1PH8137-■■F■■-....**
	160	61 (81.8)	390 (288)	119	340	100	2600	4000	**1PH8165-■■F■■-....**
		69 (92.5)	435 (321)	133	345	100	2600	4000	**1PH8167-■■F■■-....**
	180	70 (93.9)	446 (329)	148	308	100	2700	3800	**1PH8184-■■F■■-....**
		93 (125)	592 (437)	215	282	100	2950	3800	**1PH8186-■■F■■-....**
	225	101 (135)	643 (474)	235	271	100	2900	3500	**1PH8224-■■F■■-....**
		134 (180)	853 (629)	295	288	100	2700	3500	**1PH8226-■■F■■-....**
		168 (225)	1070 (789)	395	270	100	2900	3500	**1PH8228-■■F■■-....**
2000	132	31.4 (42.1)	150 (111)	59	356	66.7	3500	4500	**1PH8135-■■G■■-....**
2500	132	25 (33.5)	96 (70.8)	44	371	83.3	4050	4500	**1PH8131-■■L■■-....**
		31.7 (42.5)	121 (89.2)	55	371	83.3	3950	4500	**1PH8133-■■L■■-....**
		48.4 (64.9)	185 (136)	83	371	83.3	3900	4500	**1PH8137-■■L■■-....**
	160	84 (113)	320 (236)	148	370	167	3900	4000	**1PH8165-■■L■■-....**
		95 (127)	360 (266)	177	350	167	4000	4000	**1PH8167-■■L■■-....**
3000	132	57.5 (77.1)	183 (135)	104	370	100	4500	4500	**1PH8137-■■M■■-....**

For versions, see Article No. supplements and options.

For footnotes, see next page.

© Siemens 2024

Motor type (repeated)	Static torque	Stall current	Efficiency	Moment of inertia without holding brake	Weight, approx. without holding brake	Terminal box	SINAMICS S120 Motor Module	
							Rated output current [3]	Internal air cooling For further components, see SINAMICS S120 drive system
	M_0	I_0	η	J			I_N	
	Nm (lb_f-ft)	A	%	kgm^2 (lb_f-in-s^2)	kg (lb)	Type	A	Article No.
1PH8184-..C...	480 (354)	84	93.2	0.46 (4.07)	330 (728)	1XB7322-P05	85	**6SL3120-1TE28-5A A 3**
1PH8186-..C...	640 (472)	115	92.4	0.60 (5.31)	400 (882)	1XB7322-P05	132	**6SL3120-1TE31-3A A 3**
1PH8224-..C...	708 (522)	128	96.1	1.28 (11.33)	580 (1279)	1XB7322-P05	132	**6SL3120-1TE31-3A A 3**
1PH8226-..C...	944 (696)	183	96.3	1.66 (14.69)	700 (1544)	1XB7322-P05	200	**6SL3120-1TE32-0A A 4**
1PH8228-..C...	1180 (870)	213	96.5	2.02 (17.88)	810 (1786)	1XB7322-P05	200 [4]	**6SL3120-1TE32-0A A 4**
1PH8184-..D...	480 (354)	115	93.7	0.46 (4.07)	330 (728)	1XB7322-P05	132	**6SL3120-1TE31-3A A 3**
1PH8186-..D...	640 (472)	157	94.3	0.60 (5.31)	400 (882)	1XB7322-P05	200	**6SL3120-1TE32-0A A 4**
1PH8224-..D...	708 (522)	183	96.4	1.28 (11.33)	580 (1279)	1XB7322-P05	200	**6SL3120-1TE32-0A A 4**
1PH8226-..D...	944 (696)	233	96.7	1.66 (14.69)	700 (1544)	1XB7422-P06	260	**6SL3320-1TE32-6A A 3**
1PH8228-..D...	1180 (870)	284	96.8	2.02 (17.88)	810 (1786)	1XB7422-P06	310	**6SL3320-1TE33-1A A 3**
1PH8131-..F...	105 (77.4)	30	94.4	0.0446 (0.3948)	85 (187)	gk833	30	**6SL3120-1TE23-0A ■ 0**
1PH8133-..F...	131 (96.6)	45	94.8	0.0600 (0.5311)	103 (227)	gk833	45	**6SL3120-1TE24-5A C 0**
1PH8135-..F...	158 (117)	44	95.2	0.0750 (0.6638)	120 (265)	gk833	45	**6SL3120-1TE24-5A C 0**
1PH8137-..F...	203 (150)	62	95.2	0.0885 (0.7833)	136 (300)	gk833	60	**6SL3120-1TE26-0A C 0**
1PH8165-..F...	440 (325)	126	94	0.2160 (1.9118)	218 (481)	gk874	132	**6SL3120-1TE31-3A A 3**
1PH8167-..F...	500 (369)	143	94	0.2440 (2.1596)	240 (529)	gk874	132 [4]	**6SL3120-1TE31-3A A 3**
1PH8184-..F...	480 (354)	157	95.1	0.46 (4.07)	330 (728)	1XB7322-P05	200	**6SL3120-1TE32-0A A 4**
1PH8186-..F...	640 (472)	229	95.2	0.60 (5.31)	405 (893)	1XB7422-P06	260	**6SL3320-1TE32-6A A 3**
1PH8224-..F...	708 (522)	256	96.5	1.28 (11.33)	580 (1279)	1XB7422-P06	260	**6SL3320-1TE32-6A A 3**
1PH8226-..F...	944 (696)	320	96.7	1.66 (14.69)	700 (1544)	1XB7700-P02	310 [4]	**6SL3320-1TE33-1A A 3**
1PH8228-..F...	1180 (870)	427	96.7	2.02 (17.88)	810 (1786)	1XB7700-P02	490	**6SL3320-1TE35-0A A 3**
1PH8135-..G...	158 (117)	63	95.3	0.0750 (0.6638)	120 (265)	gk833	60	**6SL3120-1TE26-0A C 0**
1PH8131-..L...	105 (77.4)	48	94.8	0.0446 (0.3948)	85 (187)	gk833	45	**6SL3120-1TE24-5A C 0**
1PH8133-..L...	131 (96.6)	59	95.1	0.0600 (0.5311)	103 (227)	gk833	60	**6SL3120-1TE26-0A C 0**
1PH8137-..L...	203 (150)	89 [5]	95.4	0.0885 (0.7833)	136 (300)	gk833	85	**6SL3120-1TE28-5A A 3**
1PH8165-..L...	440 (325)	188	95.5	0.2160 (1.9118)	218 (481)	gk874	200	**6SL3120-1TE32-0A A 4**
1PH8167-..L...	500 (369)	230	95.5	0.2440 (2.1596)	240 (529)	gk874	200	**6SL3120-1TE32-0A A 4**
1PH8137-..M...	203 (150)	115 [5]	95.3	0.0885 (0.7833)	136 (300)	gk833	132	**6SL3120-1TE31-3A A 3**

Single Motor Module	**1**
Motor Module	
For continuous load with 200 % overload (C type)	**C**
For highly dynamic, intermittent load cycles with 300 % overload (D type)	**D**

[1] $n_{max, Inv}$: Maximum permissible operating speed based on the voltage induced in the motor and the voltage strength of the Motor Module (without protective circuit).
[2] n_{max}: Maximum speed that must not be exceeded.
[3] I_N: Output current of the Motor Module at rated pulse frequency (see SINAMICS S120 drive system).
The rated motor data are valid for 4 kHz (SH 80 to 160) or 2 kHz (SH 180 to 280).
[4] The output current of the Motor Module is lower than the rated motor current for the pulse frequency on which it is based.
[5] From approximately 85 A, the top power connector connection type is not possible (15th data position E to H).

© Siemens 2024

Selection and ordering data

Rated speed	Shaft height	Rated power	Rated torque	Rated current	Rated voltage	Rated frequency	Operating speed, max.[1]	Speed, max.[2]	**SIMOTICS M-1PH8 synchronous motors Forced ventilation**
n_N	SH	P_N	M_N	I_N	U_N	f_N	$n_{max, Inv}$	n_{max}	
r/min		kW (hp)	Nm (lb_f-ft)	A	V	Hz	r/min	r/min	Article No.
Line voltage 400 V 3 AC, Active Line Module									
800	180	38 (51.0)	454 (335)	80	316	53.0	1450	3800	**1PH8184-■■C■■-....**
		50 (67.0)	597 (440)	108	306	53.0	1450	3800	**1PH8186-■■C■■-....**
	225	55 (73.8)	657 (485)	120	292	53.0	1450	3500	**1PH8224-■■C■■-....**
		73 (97.9)	871 (642)	170	271	53.0	1550	3500	**1PH8226-■■C■■-....**
		91 (122)	1086 (801)	198	290	53.0	1450	3500	**1PH8228-■■C■■-....**
1150	180	53 (71.1)	440 (325)	106	327	77.0	1950	3800	**1PH8184-■■D■■-....**
		71 (95.2)	590 (435)	148	315	77.0	2050	3800	**1PH8186-■■D■■-....**
	225	78 (105)	648 (478)	170	292	77.0	2050	3500	**1PH8224-■■D■■-....**
		104 (139)	864 (637)	215	304	77.0	1950	3500	**1PH8226-■■D■■-....**
		129 (173)	1071 (790)	260	311	77.0	1950	3500	**1PH8228-■■D■■-....**
1750	132	18 (24.1)	98 (72.3)	29	415	58.3	2550	4500	**1PH8131-■■F■■-....**
		23.1 (31.0)	126 (92.9)	43	366	58.3	3050	4500	**1PH8133-■■F■■-....**
		27.2 (36.5)	149 (110)	42	415	58.3	2450	4500	**1PH8135-■■F■■-....**
		35.6 (47.7)	194 (143)	59	412	58.3	2700	4500	**1PH8137-■■F■■-....**
	160	69 (92.5)	375 (277)	115	395	117	2600	4000	**1PH8165-■■F■■-....**
		77 (103)	420 (310)	128	400	117	2600	4000	**1PH8167-■■F■■-....**
	180	82 (110)	447 (330)	150	359	117	2700	3800	**1PH8184-■■F■■-....**
		109 (146)	595 (439)	215	328	117	2950	3800	**1PH8186-■■F■■-....**
	225	117 (157)	638 (471)	235	315	117	2900	3500	**1PH8224-■■F■■-....**
		156 (209)	851 (628)	295	335	117	2700	3500	**1PH8226-■■F■■-....**
		195 (261)	1064 (785)	390	314	117	2900	3500	**1PH8228-■■F■■-....**
2300	132	35.6 (47.7)	148 (109)	59	407	76.7	3500	4500	**1PH8135-■■G■■-....**
2800	132	27.7 (37.1)	95 (70.1)	44	415	93.3	4050	4500	**1PH8131-■■L■■-....**
		35.2 (47.2)	120 (88.5)	54	415	93.3	3950	4500	**1PH8133-■■L■■-....**
		53.4 (71.6)	182 (134)	82	415	93.3	3900	4500	**1PH8137-■■L■■-....**
	160	87 (117)	300 (221)	138	410	187	3900	4000	**1PH8165-■■L■■-....**
		98 (131)	335 (247)	164	385	187	4000	4000	**1PH8167-■■L■■-....**
3300	132	62.2 (83.4)	180 (133)	102	405	110	4500	4500	**1PH8137-■■M■■-....**

For versions, see Article No. supplements and options.

For footnotes, see next page.

© Siemens 2024

Motor type (repeated)	Static torque	Stall current	Efficiency	Moment of inertia without holding brake	Weight, approx. without holding brake	Terminal box	SINAMICS S120 Motor Module	
							Rated output current [3]	Internal air cooling For further components, see SINAMICS S120 drive system
	M_0	I_0	η	J			I_N	
	Nm (lb_f-ft)	A	%	kgm^2 (lb_f-in-s^2)	kg (lb)	Type	A	Article No.
1PH8184-..C...	480 (354)	84	92.6	0.46 (4.07)	330 (728)	1XB7322-P05	85	**6SL3120-1TE28-5A A 3**
1PH8186-..C...	640 (472)	115	93.1	0.60 (5.31)	400 (882)	1XB7322-P05	132	**6SL3120-1TE31-3A A 3**
1PH8224-..C...	708 (522)	128	96.2	1.28 (11.33)	580 (1279)	1XB7322-P05	132	**6SL3120-1TE31-3A A 3**
1PH8226-..C...	944 (696)	183	96.5	1.66 (14.69)	700 (1544)	1XB7322-P05	200	**6SL3120-1TE32-0A A 4**
1PH8228-..C...	1180 (870)	213	96.7	2.02 (17.88)	810 (1786)	1XB7322-P05	200 [4]	**6SL3120-1TE32-0A A 4**
1PH8184-..D...	480 (354)	115	94.2	0.46 (4.07)	330 (728)	1XB7322-P05	132	**6SL3120-1TE31-3A A 3**
1PH8186-..D...	640 (472)	157	94.8	0.60 (5.31)	400 (882)	1XB7322-P05	200	**6SL3120-1TE32-0A A 4**
1PH8224-..D...	708 (522)	183	96.5	1.28 (11.33)	580 (1279)	1XB7322-P05	200	**6SL3120-1TE32-0A A 4**
1PH8226-..D...	944 (696)	233	96.7	1.66 (14.69)	700 (1544)	1XB7422-P06	260	**6SL3320-1TE32-6A A 3**
1PH8228-..D...	1180 (870)	284	96.9	2.02 (17.88)	810 (1786)	1XB7422-P06	310	**6SL3320-1TE33-1A A 3**
1PH8131-..F...	105 (77.4)	30	94.7	0.0446 (0.3948)	85 (187)	gk833	30	**6SL3120-1TE23-0A ■ 0**
1PH8133-..F...	131 (96.6)	45	95	0.0600 (0.5311)	103 (227)	gk833	45	**6SL3120-1TE24-5A C 0**
1PH8135-..F...	158 (117)	44	95.2	0.0750 (0.6638)	120 (265)	gk833	45	**6SL3120-1TE24-5A C 0**
1PH8137-..F...	203 (150)	62	95.3	0.0885 (0.7833)	136 (300)	gk833	60	**6SL3120-1TE26-0A C 0**
1PH8165-..F...	440 (325)	126	94.3	0.2160 (1.9118)	218 (481)	gk874	132	**6SL3120-1TE31-3A A 3**
1PH8167-..F...	500 (369)	143	94.3	0.2440 (2.1596)	240 (529)	gk874	132	**6SL3120-1TE31-3A A 3**
1PH8184-..F...	480 (354)	157	95.4	0.46 (4.07)	330 (728)	1XB7322-P05	200	**6SL3120-1TE32-0A A 4**
1PH8186-..F...	640 (472)	229	95.5	0.60 (5.31)	405 (893)	1XB7422-P06	260	**6SL3320-1TE32-6A A 3**
1PH8224-..F...	708 (522)	256	96.5	1.28 (11.33)	580 (1279)	1XB7422-P06	260	**6SL3320-1TE32-6A A 3**
1PH8226-..F...	944 (696)	320	96.6	1.66 (14.69)	700 (1544)	1XB7700-P02	310 [4]	**6SL3320-1TE33-1A A 3**
1PH8228-..F...	1180 (870)	427	96.6	2.02 (17.88)	810 (1786)	1XB7700-P02	490	**6SL3320-1TE35-0A A 3**
1PH8135-..G...	158 (117)	63	95.3	0.0750 (0.6638)	120 (265)	gk833	60	**6SL3120-1TE26-0A C 0**
1PH8131-..L...	105 (77.4)	48	94.9	0.0446 (0.3948)	85 (187)	gk833	45	**6SL3120-1TE24-5A C 0**
1PH8133-..L...	131 (96.6)	59	95.2	0.0600 (0.5311)	103 (227)	gk833	60	**6SL3120-1TE26-0A C 0**
1PH8137-..L...	203 (150)	89 [5]	95.3	0.0885 (0.7833)	136 (300)	gk833	85	**6SL3120-1TE28-5A A 3**
1PH8165-..L...	440 (325)	188	95.9	0.2160 (1.9118)	218 (481)	gk874	200	**6SL3120-1TE32-0A A 4**
1PH8167-..L...	500 (369)	230	95.9	0.2440 (2.1596)	240 (529)	gk874	200	**6SL3120-1TE32-0A A 4**
1PH8137-..M...	203 (150)	115 [5]	95.2	0.0885 (0.7833)	136 (300)	gk833	132	**6SL3120-1TE31-3A A 3**

Single Motor Module	**1**
Motor Module For continuous load with 200 % overload (C type) For highly dynamic, intermittent load cycles with 300 % overload (D type)	**C** **D**

1) $n_{max,\ Inv}$: Maximum permissible operating speed based on the voltage induced in the motor and the voltage strength of the Motor Module (without protective circuit).
2) n_{max}: Maximum speed that must not be exceeded.
3) I_N: Output current of the Motor Module at rated pulse frequency (see SINAMICS S120 drive system).
The rated motor data are valid for 4 kHz (SH 80 to 160) or 2 kHz (SH 180 to 280).
4) The output current of the Motor Module is lower than the rated motor current for the pulse frequency on which it is based.
5) From approximately 85 A, the top power connector connection type is not possible (15th data position E to H).

© Siemens 2024

Selection and ordering data

Rated speed	Shaft height	Rated power	Rated torque	Rated current	Rated voltage	Rated frequency	Operating speed, max.[1]	Speed, max.[2]	**SIMOTICS M-1PH8 synchronous motors Forced ventilation**
n_N	SH	P_N	M_N	I_N	U_N	f_N	$n_{max, Inv}$	n_{max}	
r/min		kW (hp)	Nm (lb_f-ft)	A	V	Hz	r/min	r/min	Article No.
Line voltage 480 V 3 AC, Smart/Basic/Active Line Module									
1000	180	46 (61.7)	439 (324)	78	390	67.0	1450	3800	**1PH8184-■■C■■-....**
		62 (83.1)	592 (437)	108	379	67.0	1450	3800	**1PH8186-■■C■■-....**
	225	68 (91.2)	649 (479)	118	363	67.0	1450	3500	**1PH8224-■■C■■-....**
		91 (122)	869 (641)	170	338	67.0	1550	3500	**1PH8226-■■C■■-....**
		113 (152)	1079 (796)	198	361	67.0	1450	3500	**1PH8228-■■C■■-....**
1350	180	62 (83.1)	439 (324)	106	382	90.0	1950	3800	**1PH8184-■■D■■-....**
		83 (111)	587 (433)	146	368	90.0	2050	3800	**1PH8186-■■D■■-....**
	225	91 (122)	644 (475)	168	342	90.0	2050	3500	**1PH8224-■■D■■-....**
		121 (162)	856 (631)	215	356	90.0	1950	3500	**1PH8226-■■D■■-....**
		151 (202)	1068 (788)	260	364	90.0	1950	3500	**1PH8228-■■D■■-....**
2000	132	19.9 (26.7)	95 (70.1)	29	449	66.7	2550	4500	**1PH8131-■■F■■-....**
		26.2 (35.1)	125 (92.2)	43	415	66.7	3050	4500	**1PH8133-■■F■■-....**
		30.2 (40.5)	144 (106)	42	449	66.7	2450	4500	**1PH8135-■■F■■-....**
		40 (53.6)	191 (141)	59	449	66.7	2700	4500	**1PH8137-■■F■■-....**
	160	74 (99.2)	355 (262)	110	445	133	2600	4000	**1PH8165-■■F■■-....**
		82 (110)	395 (291)	123	450	133	2600	4000	**1PH8167-■■F■■-....**
	180	86 (115)	411 (303)	138	404	133	2700	3800	**1PH8184-■■F■■-....**
		115 (154)	549 (405)	200	370	133	2950	3800	**1PH8186-■■F■■-....**
	225	118 (158)	563 (415)	210	355	133	2900	3500	**1PH8224-■■F■■-....**
		157 (211)	750 (553)	260	378	133	2700	3500	**1PH8226-■■F■■-....**
		196 (263)	936 (690)	345	355	133	2900	3500	**1PH8228-■■F■■-....**
2650	132	40.2 (53.9)	145 (107)	58	449	88.3	3500	4500	**1PH8135-■■G■■-....**
3000	132	29.5 (39.6)	94 (69.3)	43	449	100	4050	4500	**1PH8131-■■L■■-....**
		37.4 (50.2)	119 (87.8)	54	449	100	3950	4500	**1PH8133-■■L■■-....**
		56.9 (76.3)	181 (134)	81	449	100	3900	4500	**1PH8137-■■L■■-....**
	160	89 (119)	285 (210)	131	440	200	3900	4000	**1PH8165-■■L■■-....**
		99 (133)	315 (232)	155	410	200	4000	4000	**1PH8167-■■L■■-....**
3600	132	66.7 (89.4)	177 (131)	100	440	120	4500	4500	**1PH8137-■■M■■-....**

For versions, see Article No. supplements and options.

For footnotes, see next page.

© Siemens 2024

Motor type (repeated)	Static torque	Stall current	Efficiency	Moment of inertia without holding brake	Weight, approx. without holding brake	Terminal box	SINAMICS S120 Motor Module	
							Rated output current [3]	Internal air cooling For further components, see SINAMICS S120 drive system
	M_0	I_0	η	J			I_N	
	Nm (lb_f-ft)	A	%	kgm^2 (lb_f-in-s^2)	kg (lb)	Type	A	Article No.
1PH8184-..C...	480 (354)	84	93.7	0.46 (4.07)	330 (728)	1XB7322-P05	85	**6SL3120-1TE28-5A A 3**
1PH8186-..C...	640 (472)	115	94.1	0.60 (5.31)	400 (882)	1XB7322-P05	132	**6SL3120-1TE31-3A A 3**
1PH8224-..C...	708 (522)	128	96.5	1.28 (11.33)	580 (1279)	1XB7322-P05	132	**6SL3120-1TE31-3A A 3**
1PH8226-..C...	944 (696)	183	96.7	1.66 (14.69)	700 (1544)	1XB7322-P05	200	**6SL3120-1TE32-0A A 4**
1PH8228-..C...	1180 (870)	213	96.8	2.02 (17.88)	810 (1786)	1XB7322-P05	200 [4]	**6SL3120-1TE32-0A A 4**
1PH8184-..D...	480 (354)	115	94.6	0.46 (4.07)	330 (728)	1XB7322-P05	132	**6SL3120-1TE31-3A A 3**
1PH8186-..D...	640 (472)	157	95.2	0.60 (5.31)	400 (882)	1XB7322-P05	200	**6SL3120-1TE32-0A A 4**
1PH8224-..D...	708 (522)	183	96.5	1.28 (11.33)	580 (1279)	1XB7322-P05	200	**6SL3120-1TE32-0A A 4**
1PH8226-..D...	944 (696)	233	96.8	1.66 (14.69)	700 (1544)	1XB7422-P06	260	**6SL3320-1TE32-6A A 3**
1PH8228-..D...	1180 (870)	284	96.8	2.02 (17.88)	810 (1786)	1XB7422-P06	310	**6SL3320-1TE33-1A A 3**
1PH8131-..F...	105 (77.4)	30	94.8	0.0446 (0.3948)	85 (187)	gk833	30	**6SL3120-1TE23-0A ■ 3**
1PH8133-..F...	131 (96.6)	45	95.1	0.0600 (0.5311)	103 (227)	gk833	45	**6SL3120-1TE24-5A C 0**
1PH8135-..F...	158 (117)	44	95.3	0.0750 (0.6638)	120 (265)	gk833	45	**6SL3120-1TE24-5A C 0**
1PH8137-..F...	203 (150)	62	95.4	0.0885 (0.7833)	136 (300)	gk833	60	**6SL3120-1TE26-0A C 0**
1PH8165-..F...	440 (325)	126	94.6	0.2160 (1.9118)	218 (481)	gk874	132	**6SL3120-1TE31-3A A 3**
1PH8167-..F...	500 (369)	143	94.6	0.2440 (2.1596)	240 (529)	gk874	132	**6SL3120-1TE31-3A A 3**
1PH8184-..F...	480 (354)	157	95.7	0.46 (4.07)	330 (728)	1XB7322-P05	200	**6SL3120-1TE32-0A A 4**
1PH8186-..F...	640 (472)	229	95.6	0.60 (5.31)	405 (893)	1XB7422-P06	260	**6SL3320-1TE32-6A A 3**
1PH8224-..F...	708 (522)	256	96.3	1.28 (11.33)	580 (1279)	1XB7422-P06	260	**6SL3320-1TE32-6A A 3**
1PH8226-..F...	944 (696)	320	96.4	1.66 (14.69)	700 (1544)	1XB7700-P02	310 [4]	**6SL3320-1TE33-1A A 3**
1PH8228-..F...	1180 (870)	427	96.4	2.02 (17.88)	810 (1786)	1XB7700-P02	490	**6SL3320-1TE35-0A A 3**
1PH8135-..G...	158 (117)	63	95.2	0.0750 (0.6638)	120 (265)	gk833	60	**6SL3120-1TE26-0A C 0**
1PH8131-..L...	105 (77.4)	48	95.1	0.0446 (0.3948)	85 (187)	gk833	45	**6SL3120-1TE24-5A C 0**
1PH8133-..L...	131 (96.6)	59	95.2	0.0600 (0.5311)	103 (227)	gk833	60	**6SL3120-1TE26-0A C 0**
1PH8137-..L...	203 (150)	89 [5]	95.3	0.0885 (0.7833)	136 (300)	gk833	85	**6SL3120-1TE28-5A A 3**
1PH8165-..L...	440 (325)	188	96	0.2160 (1.9118)	218 (481)	gk874	200	**6SL3120-1TE32-0A A 4**
1PH8167-..L...	500 (369)	230	96	0.2440 (2.1596)	240 (529)	gk874	200	**6SL3120-1TE32-0A A 4**
1PH8137-..M...	203 (150)	115 [5]	95	0.0885 (0.7833)	136 (300)	gk833	132	**6SL3120-1TE31-3A A 3**

Single Motor Module	**1**
Motor Module For continuous load with 200 % overload (C type) For highly dynamic, intermittent load cycles with 300 % overload (D type)	**C** **D**

[1] $n_{max, Inv}$: Maximum permissible operating speed based on the voltage induced in the motor and the voltage strength of the Motor Module (without protective circuit).
[2] n_{max}: Maximum speed that must not be exceeded.
[3] I_N: Output current of the Motor Module at rated pulse frequency (see SINAMICS S120 drive system).
The rated motor data are valid for 4 kHz (SH 80 to 160) or 2 kHz (SH 180 to 280).
[4] The output current of the Motor Module is lower than the rated motor current for the pulse frequency on which it is based.
[5] From approximately 85 A, the top power connector connection type is not possible (15th data position E to H).

© Siemens 2024

Selection and ordering data

Rated speed	Shaft height	Rated power	Rated torque	Rated current	Rated voltage	Rated frequency	Operating speed, max. [1]	Speed, max. [2]	**SIMOTICS M-1PH8 synchronous motors Water cooling**
n_N	SH	P_N	M_N	I_N	U_N	f_N	$n_{max, Inv}$	n_{max}	
r/min		kW (hp)	Nm (lb_f-ft)	A	V	Hz	r/min	r/min	Article No.
Line voltage 400 V 3 AC, Smart/Basic Line Module									
1500	132	17.6 (23.6)	112 (82.6)	40	326	50.0	3150	4500	**1PH8131-■■F2■-....**
		23.1 (31.0)	147 (108)	42	371	50.0	2450	4500	**1PH8133-■■F2■-....**
		29.7 (39.8)	189 (139)	57	384	50.0	2650	4500	**1PH8135-■■F2■-....**
		32.7 (43.9)	208 (153)	58	371	50.0	2350	4500	**1PH8137-■■F2■-....**
		44.9 (60.2)	286 (211)	118	316	50.0	3500	4500	**1PH8138-■■F2■-....**
	160	59 (79.1)	375 (277)	111	380	100	2400	4000	**1PH8164-■■F2■-....**
		74 (99.2)	475 (350)	148	355	100	2600	4000	**1PH8166-■■F2■-....**
		84 (113)	530 (391)	169	355	100	2600	4000	**1PH8168-■■F2■-....**
2000	132	30.6 (41.0)	146 (108)	57	383	66.7	3450	4500	**1PH8133-■■G2■-....**
		39 (52.3)	186 (137)	81	346	66.7	3800	4500	**1PH8135-■■G2■-....**
		44.4 (59.5)	212 (156)	85	371	66.7	3500	4500	**1PH8137-■■G2■-....**
		59.3 (79.5)	283 (209)	131	374	66.7	3900	4500	**1PH8138-■■G2■-....**
2500	132	28.5 (38.2)	109 (80.4)	57	359	83.3	4500	4500	**1PH8131-■■L2■-....**
	160	88 (118)	335 (247)	165	355	167	4000	4000	**1PH8164-■■L2■-....**
		102 (137)	390 (288)	188	380	167	3900	4000	**1PH8166-■■L2■-....**
		119 (160)	455 (336)	225	355	167	4000	4000	**1PH8168-■■L2■-....**
Line voltage 400 V 3 AC, Active Line Module									
1750	132	20.4 (27.4)	112 (82.6)	40	377	58.3	3150	4500	**1PH8131-■■F2■-....**
		26.4 (35.4)	144 (106)	42	415	58.3	2450	4500	**1PH8133-■■F2■-....**
		34.1 (45.7)	186 (137)	56	395	58.3	2650	4500	**1PH8135-■■F2■-....**
		37 (49.6)	202 (149)	57	415	58.3	2350	4500	**1PH8137-■■F2■-....**
		52.4 (70.3)	286 (211)	118	366	58.3	3500	4500	**1PH8138-■■F2■-....**
	160	67 (89.8)	365 (269)	108	440	117	2400	4000	**1PH8164-■■F2■-....**
		85 (114)	460 (339)	143	410	117	2600	4000	**1PH8166-■■F2■-....**
		94 (126)	510 (376)	164	410	117	2600	4000	**1PH8168-■■F2■-....**
2300	132	34.9 (46.8)	145 (107)	57	415	76.7	3450	4500	**1PH8133-■■G2■-....**
		44.3 (59.4)	184 (136)	80	395	76.7	3800	4500	**1PH8135-■■G2■-....**
		50.5 (67.7)	210 (155)	84	424	76.7	3500	4500	**1PH8137-■■G2■-....**
		67.7 (90.8)	281 (207)	130	415	76.7	3900	4500	**1PH8138-■■G2■-....**
2800	132	31.7 (42.5)	108 (79.7)	56	400	93.3	4500	4500	**1PH8131-■■L2■-....**
	160	93 (125)	315 (232)	156	395	187	4000	4000	**1PH8164-■■L2■-....**
		109 (146)	375 (277)	177	420	187	3900	4000	**1PH8166-■■L2■-....**
		123 (165)	420 (310)	210	395	187	4000	4000	**1PH8168-■■L2■-....**

For versions, see Article No. supplements and options.

For footnotes, see next page.

© Siemens 2024

Motor type (repeated)	Static torque	Stall current	Efficiency	Moment of inertia without holding brake	Weight, approx. without holding brake	Terminal box	SINAMICS S120 Motor Module	
							Rated output current [3]	Internal air cooling For further components, see SINAMICS S120 drive system
	M_0	I_0	η	J			I_N	
	Nm (lb_f-ft)	A	%	kgm^2 (lb_f-in-s^2)	kg (lb)	Type	A	Article No.
1PH8131-..F...	115 (84.8)	41	94.6	0.0446 (0.3948)	102 (225)	gk843	45	**6SL3120-1TE24-5AC0**
1PH8133-..F...	155 (114)	43	94.7	0.0600 (0.5311)	120 (265)	gk843	45	**6SL3120-1TE24-5AC0**
1PH8135-..F...	196 (145)	59	95	0.0750 (0.6638)	138 (304)	gk843	60	**6SL3120-1TE26-0AC0**
1PH8137-..F...	226 (167)	60	95.1	0.0885 (0.7833)	153 (337)	gk843	60	**6SL3120-1TE26-0AC0**
1PH8138-..F...	290 (214)	120 [4]	95.8	0.0885 (0.7833)	156 (344)	gk843	132	**6SL3120-1TE31-3AA3**
1PH8164-..F...	440 (325)	118	94	0.1750 (1.5489)	224 (494)	gk874	132	**6SL3120-1TE31-3AA3**
1PH8166-..F...	550 (406)	159	94	0.2160 (1.9118)	257 (567)	gk874	200	**6SL3120-1TE32-0AA4**
1PH8168-..F...	620 (457)	179	94	0.2440 (2.1596)	279 (615)	gk874	200	**6SL3120-1TE32-0AA4**
1PH8133-..G...	155 (114)	61	95	0.0600 (0.5311)	120 (265)	gk843	60	**6SL3120-1TE26-0AC0**
1PH8135-..G...	196 (145)	85 [4]	95.2	0.0750 (0.6638)	138 (304)	gk843	85	**6SL3120-1TE28-5AA3**
1PH8137-..G...	226 (167)	90 [4]	95.4	0.0885 (0.7833)	153 (337)	gk843	85	**6SL3120-1TE28-5AA3**
1PH8138-..G...	290 (214)	133 [4]	96	0.0885 (0.7833)	156 (344)	gk843	132	**6SL3120-1TE31-3AA3**
1PH8131-..L...	115 (84.8)	60	94.8	0.0446 (0.3948)	102 (225)	gk843	60	**6SL3120-1TE26-0AC0**
1PH8164-..L...	440 (325)	205	95.5	0.1750 (1.5489)	224 (494)	gk874	200	**6SL3120-1TE32-0AA4**
1PH8166-..L...	550 (406)	240	95.5	0.2160 (1.9118)	257 (567)	gk874	200	**6SL3120-1TE32-0AA4**
1PH8168-..L...	520 (384)	240	95.5	0.2440 (2.1596)	279 (615)	gk874	260	**6SL3320-1TE32-6AA3**
1PH8131-..F...	115 (84.8)	41	94.7	0.0446 (0.3948)	102 (225)	gk843	45	**6SL3120-1TE24-5AC0**
1PH8133-..F...	155 (114)	43	94.8	0.0600 (0.5311)	120 (265)	gk843	45	**6SL3120-1TE24-5AC0**
1PH8135-..F...	196 (145)	59	95.1	0.0750 (0.6638)	138 (304)	gk843	60	**6SL3120-1TE26-0AC0**
1PH8137-..F...	226 (167)	60	95.2	0.0885 (0.7833)	153 (337)	gk843	60	**6SL3120-1TE26-0AC0**
1PH8138-..F...	290 (214)	120 [4]	95.9	0.0885 (0.7833)	156 (344)	gk843	132	**6SL3120-1TE31-3AA3**
1PH8164-..F...	440 (325)	118	94.3	0.1750 (1.5489)	224 (494)	gk874	132	**6SL3120-1TE31-3AA3**
1PH8166-..F...	550 (406)	159	94.3	0.2160 (1.9118)	257 (567)	gk874	200	**6SL3120-1TE32-0AA4**
1PH8168-..F...	620 (457)	179	94.3	0.2440 (2.1596)	279 (615)	gk874	200	**6SL3120-1TE32-0AA4**
1PH8133-..G...	155 (114)	61	95.1	0.0600 (0.5311)	120 (265)	gk843	60	**6SL3120-1TE26-0AC0**
1PH8135-..G...	196 (145)	85 [4]	95.3	0.0750 (0.6638)	138 (304)	gk843	85	**6SL3120-1TE28-5AA3**
1PH8137-..G...	226 (167)	90 [4]	95.6	0.0885 (0.7833)	153 (337)	gk843	85	**6SL3120-1TE28-5AA3**
1PH8138-..G...	290 (214)	133 [4]	96.1	0.0885 (0.7833)	156 (344)	gk843	132	**6SL3120-1TE31-3AA3**
1PH8131-..L...	115 (84.8)	60	94.9	0.0446 (0.3948)	102 (225)	gk843	60	**6SL3120-1TE26-0AC0**
1PH8164-..L...	440 (325)	205	95.9	0.1750 (1.5489)	224 (494)	gk874	200	**6SL3120-1TE32-0AA4**
1PH8166-..L...	550 (406)	240	95.9	0.2160 (1.9118)	257 (567)	gk874	200	**6SL3120-1TE32-0AA4**
1PH8168-..L...	520 (384)	240	95.9	0.2440 (2.1596)	279 (615)	gk874	260	**6SL3320-1TE32-6AA3**

[1] $n_{max, Inv}$: Maximum permissible operating speed based on the voltage induced in the motor and the voltage strength of the Motor Module (without protective circuit).
[2] n_{max}: Maximum speed that must not be exceeded.
[3] I_N: Output current of the Motor Module at rated pulse frequency (see SINAMICS S120 drive system).
The rated motor data are valid for 4 kHz (SH 80 to 160).
[4] From approximately 85 A, the top power connector connection type is not possible (15th data position E to H).

© Siemens 2024

Selection and ordering data

Rated speed	Shaft height	Rated power	Rated torque	Rated current	Rated voltage	Rated frequency	Operating speed, max. [1]	Speed, max. [2]	**SIMOTICS M-1PH8 synchronous motors Water cooling**
n_N	SH	P_N	M_N	I_N	U_N	f_N	$n_{max, Inv}$	n_{max}	
r/min		kW (hp)	Nm (lb_f-ft)	A	V	Hz	r/min	r/min	Article No.
Line voltage 480 V 3 AC, Smart/Basic Line Module									
2000	132	23.2 (31.1)	111 (81.9)	39	427	66.7	3150	4500	**1PH8131-■■F2■-....**
		29 (38.9)	139 (103)	41	449	66.7	2450	4500	**1PH8133-■■F2■-....**
		37.9 (50.8)	181 (134)	56	449	66.7	2650	4500	**1PH8135-■■F2■-....**
		40.6 (54.4)	194 (143)	57	449	66.7	2350	4500	**1PH8137-■■F2■-....**
		59.7 (80.1)	285 (210)	118	416	66.7	3500	4500	**1PH8138-■■F2■-....**
	160	70 (93.9)	330 (243)	105	500	133	2400	4000	**1PH8164-■■F2■-....**
		89 (119)	425 (313)	138	465	133	2600	4000	**1PH8166-■■F2■-....**
		100 (134)	480 (354)	157	465	133	2600	4000	**1PH8168-■■F2■-....**
2650	132	39.1 (52.4)	141 (104)	57	449	88.3	3450	4500	**1PH8133-■■G2■-....**
		50.5 (67.7)	182 (134)	79	452	88.3	3800	4500	**1PH8135-■■G2■-....**
		56.8 (76.2)	205 (151)	83	449	88.3	3500	4500	**1PH8137-■■G2■-....**
		76.3(102.3)	275 (203)	130	449	88.3	3900	4500	**1PH8138-■■G2■-....**
3000	132	33.6 (45.1)	107 (78.9)	56	427	100.0	4500	4500	**1PH8131-■■L2■-....**
	160	96 (129)	305 (225)	150	420	200	4000	4000	**1PH8164-■■L2■-....**
		110 (148)	350 (258)	169	450	200	3900	4000	**1PH8166-■■L2■-....**
		125 (168)	395 (291)	197	420	200	4000	4000	**1PH8168-■■L2■-....**

For versions, see Article No. supplements and options.

For footnotes, see next page.

© Siemens 2024

Motor type (repeated)	Static torque	Stall current	Efficiency	Moment of inertia without holding brake	Weight, approx. without holding brake	Terminal box	SINAMICS S120 Motor Module	
							Rated output current [3]	Internal air cooling For further components, see SINAMICS S120 drive system
	M_0	I_0	η	J			I_N	
	Nm (lb_f-ft)	A	%	kgm^2 (lb_f-in-s^2)	kg (lb)	Type	A	Article No.
1PH8131-..F...	115 (84.8)	41	94.8	0.0446 (0.3948)	102 (225)	gk843	45	**6SL3120-1TE24-5AC0**
1PH8133-..F...	155 (114)	43	94.9	0.0600 (0.5311)	120 (265)	gk843	45	**6SL3120-1TE24-5AC0**
1PH8135-..F...	196 (145)	59	95.2	0.0750 (0.6638)	138 (304)	gk843	60	**6SL3120-1TE26-0AC0**
1PH8137-..F...	226 (167)	60	95.3	0.0885 (0.7833)	153 (337)	gk843	60	**6SL3120-1TE26-0AC0**
1PH8138-..F...	290 (214)	120 [4]	96	0.0885 (0.7833)	156 (344)	gk843	132	**6SL3120-1TE31-3AA3**
1PH8164-..F...	440 (325)	118	94.6	0.1750 (1.5489)	224 (494)	gk874	132	**6SL3120-1TE31-3AA3**
1PH8166-..F...	550 (406)	159	94.6	0.2160 (1.9118)	257 (567)	gk874	200	**6SL3120-1TE32-0AA4**
1PH8168-..F...	620 (457)	179	94.6	0.2440 (2.1596)	279 (615)	gk874	200	**6SL3120-1TE32-0AA4**
1PH8133-..G...	155 (114)	61	95.2	0.0600 (0.5311)	120 (265)	gk843	60	**6SL3120-1TE26-0AC0**
1PH8135-..G...	196 (145)	85 [4]	95.4	0.0750 (0.6638)	138 (304)	gk843	85	**6SL3120-1TE28-5AA3**
1PH8137-..G...	226 (167)	90 [4]	95.8	0.0885 (0.7833)	153 (337)	gk843	85	**6SL3120-1TE28-5AA3**
1PH8138-..G...	290 (214)	133 [4]	96.2	0.0885 (0.7833)	156 (344)	gk843	132	**6SL3120-1TE31-3AA3**
1PH8131-..L...	115 (84.8)	60	95	0.0446 (0.3948)	102 (225)	gk843	60	**6SL3120-1TE26-0AC0**
1PH8164-..L...	440 (325)	205	96	0.1750 (1.5489)	224 (494)	gk874	200	**6SL3120-1TE32-0AA4**
1PH8166-..L...	550 (406)	240	96	0.2160 (1.9118)	257 (567)	gk874	200	**6SL3120-1TE32-0AA4**
1PH8168-..L...	520 (384)	240	96	0.2440 (2.1596)	279 (615)	gk874	260	**6SL3320-1TE32-6AA3**

[1] $n_{max, Inv}$: Maximum permissible operating speed based on the voltage induced in the motor and the voltage strength of the Motor Module (without protective circuit).
[2] n_{max}: Maximum speed that must not be exceeded.
[3] I_N: Output current of the Motor Module at rated pulse frequency (see SINAMICS S120 drive system).
The rated motor data are valid for 4 kHz (SH 80 to 160).
[4] From approximately 85 A, the top power connector connection type is not possible (15th data position E to H).

© Siemens 2024

Selection and ordering data

Rated speed	Shaft height	Rated power	Rated torque	Rated current	Rated voltage	Rated frequency	Operating speed, max. [1]	Speed, max. [2]	**SIMOTICS M-1PH8 synchronous motors Water cooling**
n_N r/min	SH	P_N kW (hp)	M_N Nm (lb_f-ft)	I_N A	U_N V	f_N Hz	$n_{max, Inv}$ r/min	n_{max} r/min	Article No.
Line voltage 400 V 3 AC, Smart/Basic Line Module									
700	180	42 (56.3)	573 (423)	100	303	47	1450	3800	**1PH8184-■■C2■-....**
		58 (77.8)	791 (583)	142	295	47	1450	3800	**1PH8186-■■C2■-....**
	225	72 (96.6)	982 (724)	180	275	47	1450	3500	**1PH8224-■■C2■-....**
		95 (127)	1296 (956)	255	255	47	1550	3500	**1PH8226-■■C2■-....**
		121 (162)	1651 (1218)	305	270	47	1450	3500	**1PH8228-■■C2■-....**
1000	180	61 (81.8)	583 (430)	140	313	67	1950	3800	**1PH8184-■■D2■-....**
		80 (107)	764 (564)	190	300	67	2050	3800	**1PH8186-■■D2■-....**
	225	101 (135)	964 (711)	255	275	67	2050	3500	**1PH8224-■■D2■-....**
		135 (181)	1289 (951)	325	285	67	1950	3500	**1PH8226-■■D2■-....**
		169 (227)	1614 (1190)	395	290	67	1950	3500	**1PH8228-■■D2■-....**
1500	180	90 (121)	573 (423)	190	334	100	2700	3800	**1PH8184-■■F2■-....**
		119 (160)	758 (559)	275	305	100	2950	3800	**1PH8186-■■F2■-....**
	225	151 (202)	961 (709)	355	290	100	2900	3500	**1PH8224-■■F2■-....**
		201 (270)	1280 (944)	445	305	100	2700	3500	**1PH8226-■■F2■-....**
		251 (337)	1598 (1179)	590	285	100	2900	3500	**1PH8228-■■F2■-....**
2500	180	127 (170)	485 (358)	260	328	167	3800	3800	**1PH8184-■■L2■-....**
		168 (225)	642 (474)	370	305	167	3800	3800	**1PH8186-■■L2■-....**
	225	182 (244)	695 (513)	365	320	167	3500	3500	**1PH8224-■■L2■-....**
		228 (306)	871 (642)	400	360	167	3500	3500	**1PH8226-■■L2■-....**
		270 (362)	1031 (760)	570	300	167	3500	3500	**1PH8228-■■L2■-....**
Line voltage 400 V 3 AC, Active Line Module									
800	180	48 (64.4)	573 (423)	102	342	53	1450	3800	**1PH8184-■■C2■-....**
		66 (88.5)	788 (581)	142	335	53	1450	3800	**1PH8186-■■C2■-....**
	225	81 (109)	967 (713)	178	310	53	1450	3500	**1PH8224-■■C2■-....**
		108 (145)	1289 (951)	255	287	53	1550	3500	**1PH8226-■■C2■-....**
		138 (185)	1647 (1215)	305	315	53	1450	3500	**1PH8228-■■C2■-....**
1150	180	70 (93.9)	581 (429)	140	386	77	1950	3800	**1PH8184-■■D2■-....**
		92 (123)	764 (564)	190	345	77	2050	3800	**1PH8186-■■D2■-....**
	225	115 (154)	955 (704)	250	310	77	2050	3500	**1PH8224-■■D2■-....**
		155 (208)	1287 (949)	325	325	77	1950	3500	**1PH8226-■■D2■-....**
		194 (260)	1611 (1188)	395	330	77	1950	3500	**1PH8228-■■D2■-....**
1750	180	103 (138)	562 (415)	186	386	117	2700	3800	**1PH8184-■■F2■-....**
		138 (185)	753 (555)	275	355	117	2950	3800	**1PH8186-■■F2■-....**
	225	175 (235)	955 (704)	355	335	117	2900	3500	**1PH8224-■■F2■-....**
		233 (312)	1271 (937)	440	355	117	2700	3500	**1PH8226-■■F2■-....**
		289 (388)	1577 (1163)	580	335	117	2900	3500	**1PH8228-■■F2■-....**
2900	180	140 (188)	461 (340)	250	375	193	3800	3800	**1PH8184-■■L2■-....**
		178 (239)	586 (432)	340	345	193	3800	3800	**1PH8186-■■L2■-....**
	225	191 (256)	629 (464)	335	370	193	3500	3500	**1PH8224-■■L2■-....**
		238 (319)	784 (578)	365	413	193	3500	3500	**1PH8226-■■L2■-....**
		283 (380)	932 (687)	520	345	193	3500	3500	**1PH8228-■■L2■-....**

For versions, see Article No. supplements and options.

For footnotes, see next page.

© Siemens 2024

Motor type (repeated)	Static torque	Stall current	Efficiency	Moment of inertia without holding brake	Weight, approx. without holding brake	Terminal box	SINAMICS S120 Motor Module	
							Rated output current [3]	Internal air cooling For further components, see SINAMICS S120 drive system
	M_0	I_0	η	J			I_N	
	Nm (lb_f-ft)	A	%	kgm^2 (lb_f-in-s^2)	kg (lb)	Type	A	Article No.
1PH8184-..C...	590 (435)	103	91.9	0.457 (4.045)	330 (728)	1XB7322-P05	132	**6SL3120-1TE31-3AA3**
1PH8186-..C...	800 (590)	143	92.4	0.599 (5.302)	400 (882)	1XB7322-P05	200	**6SL3120-1TE32-0AA4**
1PH8224-..C...	1007 (743)	183	94.7	1.28 (11.33)	580 (1279)	1XB7322-P05	200	**6SL3120-1TE32-0AA4**
1PH8226-..C...	1330 (981)	260	95.2	1.66 (14.69)	700 (1544)	1XB7422-P06	260	**6SL3320-1TE32-6AA3**
1PH8228-..C...	1680 (1239)	306	95.5	2.02 (17.88)	810 (1786)	1XB7700-P02	310	**6SL3320-1TE33-1AA3**
1PH8184-..D...	600 (443)	143	93.7	0.457 (4.045)	330 (728)	1XB7322-P05	200	**6SL3120-1TE32-0AA4**
1PH8186-..D...	800 (590)	196	94.3	0.599 (5.302)	400 (882)	1XB7322-P05	200	**6SL3120-1TE32-0AA4**
1PH8224-..D...	1007 (743)	262	95.6	1.28 (11.33)	580 (1279)	1XB7422-P06	260	**6SL3320-1TE32-6AA3**
1PH8226-..D...	1330 (981)	330	96	1.66 (14.69)	700 (1544)	1XB7700-P02	380	**6SL3320-1TE33-8AA3**
1PH8228-..D...	1680 (1239)	408	96.2	2.02 (17.88)	810 (1786)	1XB7700-P02	490	**6SL3320-1TE35-0AA3**
1PH8184-..F...	600 (443)	196	95.1	0.457 (4.045)	330 (728)	1XB7322-P05	200	**6SL3120-1TE32-0AA4**
1PH8186-..F...	800 (590)	285	95.2	0.599 (5.302)	405 (893)	1XB7700-P02	310	**6SL3320-1TE33-1AA3**
1PH8224-..F...	1007 (743)	367	96.2	1.28 (11.33)	580 (1279)	1XB7700-P02	380	**6SL3320-1TE33-8AA3**
1PH8226-..F...	1330 (981)	454	96.5	1.66 (14.69)	700 (1544)	1XB7700-P02	490	**6SL3320-1TE35-0AA3**
1PH8228-..F...	1680 (1239)	612	96.4	2.02 (17.88)	810 (1786)	1XB7700-P02	745	**6SL3320-1TE37-5AA3**
1PH8184-..L...	530 (391)	278	95.7	0.457 (4.045)	332 (732)	1XB7422-P06	260	**6SL3320-1TE32-6AA3**
1PH8186-..L...	720 (531)	405	95.7	0.599 (5.302)	405 (893)	1XB7700-P02	380	**6SL3320-1TE33-8AA3**
1PH8224-..L...	885 (653)	460	96.1	1.28 (11.33)	580 (1279)	1XB7700-P02	380	**6SL3320-1TE33-8AA3**
1PH8226-..L...	1170 (863)	532	96.2	1.66 (14.69)	700 (1544)	1XB7700-P02	380 [4]	**6SL3320-1TE33-8AA3**
1PH8228-..L...	1400 (1033)	762	96.3	2.02 (17.88)	810 (1786)	1XB7700-P02	745	**6SL3320-1TE37-5AA3**
1PH8184-..C...	590 (435)	103	92.6	0.457 (4.045)	330 (728)	1XB7322-P05	132	**6SL3120-1TE31-3AA3**
1PH8186-..C...	800 (590)	143	93.1	0.599 (5.302)	400 (882)	1XB7322-P05	200	**6SL3120-1TE32-0AA4**
1PH8224-..C...	1007 (743)	183	95.2	1.28 (11.33)	580 (1279)	1XB7322-P05	200	**6SL3120-1TE32-0AA4**
1PH8226-..C...	1330 (981)	260	95.6	1.66 (14.69)	700 (1544)	1XB7422-P06	260	**6SL3320-1TE32-6AA3**
1PH8228-..C...	1680 (1239)	306	95.8	2.02 (17.88)	810 (1786)	1XB7700-P02	310	**6SL3320-1TE33-1AA3**
1PH8184-..D...	600 (443)	143	94.2	0.457 (4.045)	330 (728)	1XB7322-P05	200	**6SL3120-1TE32-0AA4**
1PH8186-..D...	800 (590)	196	94.8	0.599 (5.302)	400 (882)	1XB7322-P05	200	**6SL3120-1TE32-0AA4**
1PH8224-..D...	1007 (743)	262	95.9	1.28 (11.33)	580 (1279)	1XB7422-P06	260	**6SL3320-1TE32-6AA3**
1PH8226-..D...	1330 (981)	330	96.2	1.66 (14.69)	700 (1544)	1XB7700-P02	380	**6SL3320-1TE33-8AA3**
1PH8228-..D...	1680 (1239)	408	96.4	2.02 (17.88)	810 (1786)	1XB7700-P02	490	**6SL3320-1TE35-0AA3**
1PH8184-..F...	600 (443)	196	95.4	0.457 (4.045)	330 (728)	1XB7322-P05	200	**6SL3120-1TE32-0AA4**
1PH8186-..F...	800 (590)	285	95.5	0.599 (5.302)	405 (893)	1XB7700-P02	310	**6SL3320-1TE33-1AA3**
1PH8224-..F...	1007 (743)	367	96.3	1.28 (11.33)	580 (1279)	1XB7700-P02	380	**6SL3320-1TE33-8AA3**
1PH8226-..F...	1330 (981)	454	96.5	1.66 (14.69)	700 (1544)	1XB7700-P02	490	**6SL3320-1TE35-0AA3**
1PH8228-..F...	1680 (1239)	612	96.5	2.02 (17.88)	810 (1786)	1XB7700-P02	745	**6SL3320-1TE37-5AA3**
1PH8184-..L...	530 (391)	278	95.6	0.457 (4.045)	332 (732)	1XB7422-P06	260	**6SL3320-1TE32-6AA3**
1PH8186-..L...	720 (531)	405	95.5	0.599 (5.302)	405 (893)	1XB7700-P02	380	**6SL3320-1TE33-8AA3**
1PH8224-..L...	885 (653)	460	95.8	1.28 (11.33)	580 (1279)	1XB7700-P02	380	**6SL3320-1TE33-8AA3**
1PH8226-..L...	1170 (863)	532	95.8	1.66 (14.69)	700 (1544)	1XB7700-P02	380	**6SL3320-1TE33-8AA3**
1PH8228-..L...	1400 (1033)	762	95.8	2.02 (17.88)	810 (1786)	1XB7700-P02	745	**6SL3320-1TE37-5AA3**

[1] $n_{max,\ Inv}$: Maximum permissible operating speed based on the voltage induced in the motor and the voltage strength of the Motor Module (without protective circuit).
[2] n_{max}: Maximum speed that must not be exceeded.
[3] I_N: Output current of the Motor Module at rated pulse frequency (see SINAMICS S120 drive system).
The rated motor data are valid for 2 kHz (SH 180 to 280).
[4] The output current of the Motor Module is lower than the rated motor current for the pulse frequency on which it is based.

© Siemens 2024

Selection and ordering data

Rated speed	Shaft height	Rated power	Rated torque	Rated current	Rated voltage	Rated frequency	Operating speed, max. [1]	Speed, max. [2]	**SIMOTICS M-1PH8 synchronous motors Water cooling**
n_N r/min	SH	P_N kW (hp)	M_N Nm (lb_f-ft)	I_N A	U_N V	f_N Hz	$n_{max, Inv}$ r/min	n_{max} r/min	Article No.
Line voltage 480 V 3 AC, Smart/Basic/Active Line Module									
1000	180	60 (80.5)	573 (423)	102	423	67	1450	3800	**1PH8184-■■C2■-....**
		82 (110)	783 (578)	140	415	67	1450	3800	**1PH8186-■■C2■-....**
	225	101 (135)	964 (711)	178	385	67	1450	3500	**1PH8224-■■C2■-....**
		134 (180)	1280 (944)	255	357	67	1550	3500	**1PH8226-■■C2■-....**
		172 (231)	1642 (1211)	300	390	67	1450	3500	**1PH8228-■■C2■-....**
1350	180	82 (110)	580 (428)	140	417	90	1950	3800	**1PH8184-■■D2■-....**
		107 (143)	757 (558)	190	400	90	2050	3800	**1PH8186-■■D2■-....**
	225	135 (181)	955 (704)	250	365	90	2050	3500	**1PH8224-■■D2■-....**
		180 (241)	1273 (939)	320	380	90	1950	3500	**1PH8226-■■D2■-....**
		226 (303)	1599 (1179)	395	395	90	1950	3500	**1PH8228-■■D2■-....**
2000	180	110 (148)	525 (387)	176	434	133	2700	3800	**1PH8184-■■F2■-....**
		154 (207)	735 (542)	265	400	133	2950	3800	**1PH8186-■■F2■-....**
	225	186 (249)	888 (655)	330	380	133	2900	3500	**1PH8224-■■F2■-....**
		248 (333)	1184 (873)	410	390	133	2700	3500	**1PH8226-■■F2■-....**
		310 (416)	1480 (1092)	550	380	133	2900	3500	**1PH8228-■■F2■-....**
3200	180	142 (190)	424 (313)	230	405	213	3800	3800	**1PH8184-■■L2■-....**
		183 (245)	546 (403)	315	375	213	3800	3800	**1PH8186-■■L2■-....**
	225	196 (263)	585 (431)	310	400	213	3500	3500	**1PH8224-■■L2■-....**
		245 (329)	731 (539)	340	460	213	3500	3500	**1PH8226-■■L2■-....**
		291 (390)	868 (640)	485	380	213	3500	3500	**1PH8228-■■L2■-....**

For versions, see Article No. supplements and options.

For footnotes, see next page.

© Siemens 2024

Motor type (repeated)	Static torque	Stall current	Efficiency	Moment of inertia without holding brake	Weight, approx. without holding brake	Terminal box	SINAMICS S120 Motor Module	
							Rated output current [3]	Internal air cooling For further components, see SINAMICS S120 drive system
	M_0	I_0	η	J			I_N	
	Nm (lb_f-ft)	A	%	kgm^2 (lb_f-in-s^2)	kg (lb)	Type	A	Article No.
1PH8184-..C...	590 (435)	103	93.7	0.457 (4.045)	330 (728)	1XB7322-P05	132	**6SL3120-1TE31-3AA3**
1PH8186-..C...	800 (590)	143	94.1	0.599 (5.302)	400 (882)	1XB7322-P05	200	**6SL3120-1TE32-0AA4**
1PH8224-..C...	1007 (743)	183	95.7	1.28 (11.33)	580 (1279)	1XB7322-P05	200	**6SL3120-1TE32-0AA4**
1PH8226-..C...	1330 (981)	260	96	1.66 (14.69)	700 (1544)	1XB7422-P06	260	**6SL3320-1TE32-6AA3**
1PH8228-..C...	1680 (1239)	306	96.1	2.02 (17.88)	810 (1786)	1XB7700-P02	310	**6SL3320-1TE33-1AA3**
1PH8184-..D...	600 (443)	143	94.6	0.457 (4.045)	330 (728)	1XB7322-P05	200	**6SL3120-1TE32-0AA4**
1PH8186-..D...	800 (590)	196	95.2	0.599 (5.302)	400 (882)	1XB7322-P05	200	**6SL3120-1TE32-0AA4**
1PH8224-..D...	1007 (743)	262	96.1	1.28 (11.33)	580 (1279)	1XB7422-P06	260	**6SL3320-1TE32-6AA3**
1PH8226-..D...	1330 (981)	330	96.4	1.66 (14.69)	700 (1544)	1XB7700-P02	380	**6SL3320-1TE33-8AA3**
1PH8228-..D...	1680 (1239)	408	96.5	2.02 (17.88)	810 (1786)	1XB7700-P02	490	**6SL3320-1TE35-0AA3**
1PH8184-..F...	600 (443)	196	95.7	0.457 (4.045)	330 (728)	1XB7322-P05	200	**6SL3120-1TE32-0AA4**
1PH8186-..F...	800 (590)	285	95.6	0.599 (5.302)	405 (893)	1XB7700-P02	310	**6SL3320-1TE33-1AA3**
1PH8224-..F...	1007 (743)	367	96.4	1.28 (11.33)	580 (1279)	1XB7700-P02	380	**6SL3320-1TE33-8AA3**
1PH8226-..F...	1330 (981)	454	96.5	1.66 (14.69)	700 (1544)	1XB7700-P02	490	**6SL3320-1TE35-0AA3**
1PH8228-..F...	1680 (1239)	612	96.4	2.02 (17.88)	810 (1786)	1XB7700-P02	745	**6SL3320-1TE37-5AA3**
1PH8184-..L...	530 (391)	278	95.4	0.457 (4.045)	332 (732)	1XB7422-P06	260	**6SL3320-1TE32-6AA3**
1PH8186-..L...	720 (531)	405	95.3	0.599 (5.302)	405 (893)	1XB7700-P02	380	**6SL3320-1TE33-8AA3**
1PH8224-..L...	885 (653)	460	95.4	1.28 (11.33)	580 (1279)	1XB7700-P02	380	**6SL3320-1TE33-8AA3**
1PH8226-..L...	1170 (863)	532	95.4	1.66 (14.69)	700 (1544)	1XB7700-P02	380	**6SL3320-1TE33-8AA3**
1PH8228-..L...	1400 (1033)	762	95.4	2.02 (17.88)	810 (1786)	1XB7700-P02	745	**6SL3320-1TE37-5AA3**

[1] $n_{max, Inv}$: Maximum permissible operating speed based on the voltage induced in the motor and the voltage strength of the Motor Module (without protective circuit).
[2] n_{max}: Maximum speed that must not be exceeded.
[3] I_N: Output current of the Motor Module at rated pulse frequency (see SINAMICS S120 drive system).
The rated motor data are valid for 2 kHz (SH 180 to 280).

© Siemens 2024

Article No. supplements for SIMOTICS M-1PH8 without holding brake > SH 80 to SH 160

Selection and ordering data

Data position of the Article No.	1	2	3	4	5	6	7		8	9	10	11	12		13	14	15	16		
Shaft height 80	**1**	**P**	**H**	**8**	**0**	**8**	**.**	**–**	■	■	■	■	■	**–**	■	■	■	**.**	**–**	**Z**
Shaft height 100	**1**	**P**	**H**	**8**	**1**	**0**	**.**	**–**	■	■	■	■	■	**–**	■	■	■	**.**	**–**	**Z**
Shaft height 132	**1**	**P**	**H**	**8**	**1**	**3**	**.**	**–**	■	■	■	■	■	**–**	■	■	■	**.**	**–**	**Z**
Shaft height 160	**1**	**P**	**H**	**8**	**1**	**6**	**.**	**–**	■	■	■	■	■	**–**	■	■	■	**.**	**–**	**Z**
Overall length (cannot be selected, determined by the choice of rated power)							**.**													
Asynchronous version									**1**											
Synchronous version (only shaft height 132 and 160)									**2**											
Encoder systems for motors without DRIVE-CLiQ interface																				
Without encoder [1]										**A**								**2**		
Absolute encoder EnDat 2048 S/R (encoder AM2048S/R) [2]										**E**								**2**		
Incremental encoder HTL 1024 S/R (encoder HTL1024S/R) [1] [3]										**H**								**2**		
Incremental encoder HTL 2048 S/R (encoder HTL2048S/R) [1] [4]										**J**								**2**		
Incremental encoder sin/cos 1 V_{pp} 2048 S/R with C and D tracks (encoder IC2048S/R) [2]										**M**								**2**		
Incremental encoder sin/cos 1 V_{pp} 512 S/R without C and D tracks (encoder IN512S/R) [1] [5]										**T**								**2**		
Encoder systems for motors with DRIVE-CLiQ interface																				
Absolute encoder 22-bit single-turn + 12-bit multi-turn (encoder AM22DQ) [2]										**F**								**1**		
Incremental encoder 22-bit with commutation position (encoder IC22DQ) [2]										**D**								**1**		
Incremental encoder 20-bit without commutation position (encoder IN20DQ) [1] [5]										**U**								**1**		
Rated speeds (380 V to 480 V 3 AC) (winding design)																				
400 r/min, 500 r/min, 600 r/min, 700 r/min											**B**									
1000 r/min, 1150 r/min, 1350 r/min, 1500 r/min											**D**									
1500 r/min, 1750 r/min, 2000 r/min, 2200 r/min											**F**									
2000 r/min, 2300 r/min, 2650 r/min, 2800 r/min											**G**									
2500 r/min, 2800 r/min, 3000 r/min											**L**									
3000 r/min, 3300 r/min, 3600 r/min, 3900 r/min											**M**									
Cooling / **Degree of protection**																				
Forced ventilation DE → NDE / IP55												**0**								
Forced ventilation NDE → DE / IP55												**1**								
Water cooling / IP65												**2**								
Type of construction																				
IM B3 (IM V5, IM V6, IM B6, IM B7, IM B8)													**0**							
IM B5 (IM V1, IM V3) [12]													**2**							
IM B35 (IM V15, IM V35) [6]													**3**							
Version status [11]																				
Special version (order codes required for options)																				**Z**

13th to 16th position of the Article No. see next page

For footnotes, see next page.

© Siemens 2024

Article No. supplements for SIMOTICS M-1PH8 without holding brake > SH 80 to SH 160

Selection and ordering data

Data position of the Article No.			1	2	3	4	5	6	7		8	9	10	11	12		13	14	15	16		
			1	P	H	8	.	.	.	–	■	■	■	■	■	–	■	■	■	.	–	Z
Shaft end (DE)	**Balancing**																					
Plain shaft	–																**0**					
Feather key	Full-key																**1**					
Feather key	Half-key																**2**					
Bearing	**Vibration severity acc. to Siemens/EN 60034-14**	**Shaft and flange accuracy**																				
Standard with location bearing [13]	R/A	R																**B**				
Standard with location bearing [13]	S/A	R																**C**				
Standard with location bearing [1] [13]	SR/A	R																**D**				
Standard [13]	R/A	R																**G**				
Standard [13]	S/A	R																**H**				
Increased radial forces [13] [15]	R/A	R																**F**				
Performance [7]	SPECIAL/B	SPECIAL																**L**				
Advanced Lifetime [8] [13]	S/A	R																**Q**				
Power connection (when viewing DE)																						
Terminal box	Cable entry	Signal port																				
Top	Right	DE																	**A**			
Top	Left	DE																	**B**			
Top	NDE	Left																	**C**			
Top [14]	DE	Left																	**D**			
Power connector																						
Top [9]	Right	DE																	**E**			
Top [9]	Left	DE																	**F**			
Top [9]	NDE	Left																	**G**			
Top [9]	DE	Left																	**H**			
Version status [11]																						
Special version (order codes required for options)																						**Z**

1) Only possible when 8th data position is "1" (asynchronous version).
2) Limited to n_{max} = 12000 r/min.
3) Limited to n_{max} = 9000 r/min.
4) Limited to n_{max} = 4600 r/min.
5) Limited to n_{max} = 15000 r/min.
6) Only possible for shaft height 100, 132, and 160.
7) Only possible when 8th data position is "1" (asynchronous version).
Shaft height 80: limited to n_{max} = 15000 r/min
shaft height 100: limited to n_{max} = 12000 r/min
shaft height 132: limited to n_{max} = 10000 r/min
shaft height 160: limited to n_{max} = 9000 r/min, not possible if 12th data position is "2" (IM B5).
8) Limited to n_{max} = 5000 r/min, shaft height 132: n_{max} = 4500 r/min, shaft height 160: n_{max} = 4000 r/min .
9) Power connector for shaft height 100 only possible up to a maximum stall current of I_0 = 36 A,
Power connector for shaft height 132 only possible up to a maximum stall current of I_0 = 85 A.
Power connector not possible for shaft height 160.
10) Only possible when 14th data position is: B, C, D, G, H, Q, F; and 15th data position is: A and B.
11) Directly coupled to the 9th data position.
12) Not possible with shaft height 160 and 14th data position: L.
13) Not possible when 9th data position is: T, U.
14) Not possible with shaft height 160 and when 8th data position is "2" or "4" (synchronous version).
15) Limited to shaft height 100: n_{max} = 7000 r/min, shaft height 132: n_{max} = 6500 r/min, shaft height 160: n_{max} = 5300 r/min .

© Siemens 2024

Article No. supplements for SIMOTICS M-1PH8 without holding brake > SH 180 to SH 280

Selection and ordering data

Data position of the Article No.	1	2	3	4	5	6	7		8	9	10	11	12		13	14	15	16		
Shaft height 180	**1**	**P**	**H**	**8**	**1**	**8**	**.**	**–**	■	■	■	■	■	**–**	■	■	■	**.**	**–**	**Z**
Shaft height 225	**1**	**P**	**H**	**8**	**2**	**2**	**.**	**–**	■	■	■	■	■	**–**	■	■	■	**.**	**–**	**Z**
Shaft height 280 (only asynchronous version with water cooling)	**1**	**P**	**H**	**8**	**2**	**8**	**.**	**–**	■	■	■	■	■	**–**	■	■	■	**.**	**–**	**Z**
Overall length (cannot be selected, determined by the choice of rated power)							**.**													
Asynchronous version									**1**											
Synchronous version									**2**											
Encoder systems for motors without DRIVE-CLiQ interface																				
Without encoder [1]										**A**								**2**		
Absolute encoder EnDat 2048 S/R (encoder AM2048S/R)										**E**								**2**		
Incremental encoder HTL 1024 S/R (encoder HTL1024S/R) [1]										**H**								**2**		
Incremental encoder HTL 2048 S/R (encoder HTL2048S/R) [1] [2]										**J**								**2**		
Incremental encoder sin/cos 1 V_{pp} 2048 S/R with C and D track (encoder IC2048S/R)										**M**								**2**		
Encoder systems for motors with DRIVE-CLiQ interface																				
Absolute encoder 22-bit single-turn + 12-bit multi-turn (encoder AM22DQ)										**F**								**1**		
Incremental encoder 22-bit with commutation position (encoder IC22DQ)										**D**								**1**		
Rated speeds (380 V to 480 V 3 AC) (winding design)																				
400 r/min, 500 r/min, 600 r/min, 700 r/min											**B**									
700 r/min, 800 r/min, 1000 r/min, 1100 r/min											**C**									
1000 r/min, 1150 r/min, 1350 r/min, 1500 r/min											**D**									
1500 r/min, 1750 r/min, 2000 r/min, 2200 r/min											**F**									
2500 r/min, 2900 r/min, 3400 r/min											**L**									
Rated speeds (690 V 3 AC) only with shaft height 280 (winding design)																				
400 r/min, 500 r/min											**H**									
700 r/min, 800 r/min											**K**									
1000 r/min, 1150 r/min											**U**									
1500 r/min, 1750 r/min											**W**									

Cooling	Degree of protection		
Forced ventilation, DE → NDE	IP55	**0**	
Forced ventilation, NDE → DE	IP55	**1**	
Water cooling	IP55	**2**	
Forced ventilation, DE → NDE (only asynchronous version)	IP23	**3**	
Forced ventilation, NDE → DE (only asynchronous version)	IP23	**4**	

Type of construction

Shaft height 180	Shaft height 225	Shaft height 280	
IM B3 (IM B6, IM B7, IM B8, IM V6)	IM B3 (IM B6, IM B7, IM B8, IM V6)	IM B3 (IM V6)	**0**
IM V5	IM V5	IM V5 [7]	**1**
IM B5 with A450 flange (IM V3) [3]	IM B5 with A550 flange (IM V3) [3]	IM B5 with A660 flange (IM V3) [5] [7]	**2**
IM B35 with A450 flange (IM V35)	IM B35 with A550 flange (IM V35)	IM B35 with A660 flange (IM V35)	**3**
IM V15 with A450 flange	IM V15 with A550 flange	IM V15 with A660 flange	**5**

Version status [8]

Special version (order codes required for options) **Z**

13th to 16th position of the Article No. see next page

For footnotes, see next page.

© Siemens 2024

Article No. supplements for SIMOTICS M-1PH8 without holding brake > SH 180 to SH 280

Selection and ordering data

Data position of the Article No.			1	2	3	4	5	6	7		8	9	10	11	12		13	14	15	16		
			1	P	H	8	.	.	.	–	■	■	■	■	■	–	■	■	■	.	–	Z
Shaft end (DE)	**Balancing**																					
Plain shaft	–																**0**					
Feather key	Full-key																**1**					
Feather key	Half-key																**2**					
Bearing	**Vibration severity acc. to Siemens/EN 60034-14**	**Shaft and flange accuracy**																				
Standard	A	N																**A**				
Standard	R/A	R																**B**				
Increased radial forces	A	N																**E**				
Increased radial forces	R/A	R																**F**				
Also possible with shaft heights 180 and 225:																						
Standard	S/A	R																**C**				
Standard [1]	SR/A	R																**D**				
Performance [6]	SR/A	R																**L**				
Power connection (when viewing DE)																						
Terminal box	Cable entry	Signal port																				
Top	Right	DE																	**A**			
Top	Left	DE																	**B**			
Top	NDE	Right																	**C**			
Top	DE	Right																	**D**			
Version status [8]																						
Special version (order codes required for options)																						**Z**

[1] Only possible when 8th data position is "1" (asynchronous version).
[2] Limited to n_{max} = 4600 r/min.
[3] Limited to n_{max} = 3000 r/min, not possible if 14th data position is "L" (Performance).
[4] Limited to n_{max} = 2500 r/min, not possible if 14th data position is "L" (Performance).
[5] Limited to n_{max} = 2000 r/min.
[6] Only possible when 8th data position is "1" (asynchronous version); not possible when 12th data position is "2" (IM B5) and 11th data position is "3" and "4" (forced ventilation, IP23).
Shaft height 180: limited to n_{max} = 7500 r/min;
shaft height 225: limited to n_{max} = 6000 r/min.
[7] Only possible when 14th data position is "A" or "B" (standard bearing).
[8] Directly coupled to the 9th data position.

© Siemens 2024

Article No. supplements for SIMOTICS M-1PH8 without holding brake > SH 280

Selection and ordering data

Data position of the Article No.	1	2	3	4	5	6	7		8	9	10	11	12		13	14	15	16		
Shaft height 280 (forced ventilation)	**1**	**P**	**H**	**8**	**2**	**8**	**.**	**–**	**1**	■	■	■	■	**–**	■	■	■	**.**	**–**	**Z**
Overall length (cannot be selected, determined by the choice of rated power)							**.**													
Asynchronous version									**1**											
Encoder systems for motors without DRIVE-CLiQ interface																				
Without encoder										**A**								**2**		
Absolute encoder EnDat 2048 S/R (encoder AM2048S/R)										**E**								**2**		
Incremental encoder HTL 1024 S/R (encoder HTL1024S/R)										**H**								**2**		
Incremental encoder HTL 2048 S/R (encoder HTL2048S/R)										**J**								**2**		
Incremental encoder sin/cos 1 V_{pp} 2048 S/R with C and D track (encoder IC2048S/R)										**M**								**2**		
Encoder systems for motors with DRIVE-CLiQ interface																				
Absolute encoder 22-bit single-turn + 12-bit multi-turn (encoder AM22DQ)										**F**								**1**		
Incremental encoder 22-bit with commutation position (encoder IC22DQ)										**D**								**1**		
External encoder systems																				
Incremental encoder HTL 1024 S/R WITH HOLLOW SHAFT HOG 22 (Baumer-Hübner), prepared for mounting [1]										**G**								**2**		
Incremental encoder HTL 1024 S/R POG 10 (Baumer-Hübner), prepared for mounting [2]										**K**								**2**		
Rated speeds (380 V to 480 V 3 AC) (winding design)																				
400 r/min, 500 r/min, 600 r/min, 700 r/min											**B**									
700 r/min, 800 r/min, 1000 r/min, 1100 r/min											**C**									
1000 r/min, 1150 r/min, 1350 r/min, 1500 r/min											**D**									
1500 r/min, 1750 r/min, 2000 r/min, 2200 r/min											**F**									
Rated speeds (690 V 3 AC) (winding design)																				
400 r/min, 500 r/min											**H**									
700 r/min, 800 r/min											**K**									
1000 r/min, 1150 r/min											**U**									
1500 r/min, 1750 r/min											**W**									
Cooling **Degree of protection**																				
Forced ventilation IP55												**1**								
Forced ventilation IP23												**4**								
Type of construction																				
IM B3 (IM V6)													**0**							
IM V5 [3] [6]													**1**							
IM B5 with A660 flange (IM V3) [3] [6]													**2**							
IM B35 with A660 flange (IM V35)													**3**							
IM V15 with A660 flange (IM V35) [3]													**5**							
Version status [8]																				
Special version (order codes required for options)																				**Z**

13th to 16th position of the Article No. see next page

For footnotes, see next page.

© Siemens 2024

Selection and ordering data

Data position of the Article No.				1	2	3	4	5	6	7		8	9	10	11	12		13	14	15	16		
				1	P	H	8	.	.	.	–	1	■	■	■	■	–	■	■	■	.	–	Z
Shaft end (DE)	**Balancing**																						
Plain shaft	–																	**0**					
Feather key	Full-key																	**1**					
Feather key	Half-key																	**2**					
Bearing	**Vibration severity acc. to Siemens/EN 60034-1**	**Shaft and flange accuracy**																					
Standard	A	N																	**A**				
Standard	R/A	R																	**B**				
Increased radial forces	A	N																	**E**				
Increased radial forces	R/A	R																	**F**				
Power connection (when viewing DE)																							
Terminal box	Cable entry	Signal port	Separately driven fan																				
NDE right	Bottom	DE																		**U**			
			NDE top, air inlet from NDE, air-flow direction NDE → DE																			**–**	
			NDE left, air inlet from NDE, air-flow direction NDE → DE																			**G00**	
NDE left	Bottom	DE																		**V**			
			NDE top, air inlet from NDE, air-flow direction NDE → DE																			**–**	
			NDE right, air inlet from NDE, air-flow direction NDE → DE																			**G02**	
NDE top	Right	DE																		**W**			
			NDE left, air inlet from NDE, air-flow direction NDE → DE																			**G00**	
			NDE right, air inlet from NDE, air-flow direction NDE → DE																			**G02**	
DE top [4]	Right	NDE																		**X**			
			NDE top, air inlet from NDE, air-flow direction NDE → DE [4] [5]																			**–**	
			NDE left, air inlet from NDE, air-flow direction NDE → DE [4]																			**G00**	
			NDE right, air inlet from NDE, air-flow direction NDE → DE [4]																			**G02**	
Version status [8]																							
Special version (order codes required for options)																						**Z**	

1) When ordering, also select option H75 (= encoder provided).
2) When ordering, also select options H56 (= procured by factory) or G80 (provided).
3) n_{max}. Limited to 2000 r/min.
4) Only possible when 12th data position is "0" (IM B3) and "1" (IM V5).
5) Only possible for assignments with terminal box 1XB7712-P..
6) Only possible when 14th data position is "A" and "B" (standard bearing).
7) Possible for the following combinations:
12th data position is "0" or "1" with 16th data position "W" or "X"
12th data position is "2", "3", or "5" with 16th data position "W".
8) Directly coupled to the 9th data position.

© Siemens 2024

Article No. supplements for SIMOTICS M-1PH8 with holding brake > SH 80 to SH 160

Selection and ordering data

Data position of the Article No.	1	2	3	4	5	6	7		8	9	10	11	12		13	14	15	16		
Shaft height 80	**1**	**P**	**H**	**8**	**0**	**8**	**.**	**–**	■	■	■	■	■	**–**	■	■	■	**.**	**–**	**Z**
Shaft height 100	**1**	**P**	**H**	**8**	**1**	**0**	**.**	**–**	■	■	■	■	■	**–**	■	■	■	**.**	**–**	**Z**
Shaft height 132	**1**	**P**	**H**	**8**	**1**	**3**	**.**	**–**	■	■	■	■	■	**–**	■	■	■	**.**	**–**	**Z**
Shaft height 160	**1**	**P**	**H**	**8**	**1**	**6**	**.**	**–**	■	■	■	■	■	**–**	■	■	■	**.**	**–**	**Z**
Overall length (cannot be selected, determined by the choice of rated power)							**.**													
Asynchronous version with holding brake [1]									**3**											
Synchronous version with holding brake (only shaft heights 132 and 160) [1]									**4**											
Encoder systems for motors without DRIVE-CLiQ interface																				
Without encoder [2]										**A**								**2**		
Absolute encoder EnDat 2048 S/R (encoder AM2048S/R)										**E**								**2**		
Incremental encoder HTL 1024 S/R (encoder HTL1024S/R) [2]										**H**								**2**		
Incremental encoder HTL 2048 S/R (encoder HTL2048S/R) [2]										**J**								**2**		
Incremental encoder sin/cos 1 V_{pp} 2048 S/R with C and D track (encoder IC2048S/R)										**M**								**2**		
Encoder systems for motors with DRIVE-CLiQ interface																				
Absolute encoder 22-bit single-turn + 12-bit multi-turn (encoder AM22DQ)										**F**								**1**		
Incremental encoder 22-bit with commutation position (encoder IC22DQ)										**D**								**1**		
Rated speeds (380 V to 480 V 3 AC) (winding design)																				
400 r/min, 500 r/min, 600 r/min, 700 r/min											**B**									
1000 r/min, 1150 r/min, 1350 r/min, 1500 r/min											**D**									
1500 r/min, 1750 r/min, 2000 r/min, 2200 r/min											**F**									
2000 r/min, 2300 r/min, 2650 r/min, 2800 r/min											**G**									
2500 r/min, 2800 r/min, 3000 r/min											**L**									
3000 r/min, 3300 r/min, 3600 r/min, 3900 r/min											**M**									
Cooling / **Degree of protection**																				
Forced ventilation, DE → NDE / IP55												**0**								
Forced ventilation, NDE → DE / IP55												**1**								
Water cooling / IP55 [3]												**2**								
Type of construction																				
IM B5 (IM V1, IM V3) [4]													**2**							
IM B35 (IM V15, IM V35) [7]													**3**							
Version status [10]																				
Special version (order codes required for options)																				**Z**

13th to 16th position of the Article No. see next page

For footnotes, see next page.

© Siemens 2024

Article No. supplements for SIMOTICS M-1PH8 with holding brake > SH 80 to SH 160

Selection and ordering data

Data position of the Article No.			1	2	3	4	5	6	7		8	9	10	11	12		13	14	15	16		
			1	**P**	**H**	**8**	**.**	**.**	**.**	**–**	■	■	■	■	■	**–**	■	■	■	**.**	**–**	**Z**
Shaft end (DE)	**Balancing**																					
Plain shaft	–																**0**					
Feather key	Half-key																**2**					
Bearing	**Vibration severity acc. to Siemens/EN 60034-14**	**Shaft and flange accuracy**																				
Standard	A	N																**A**				
Advanced Lifetime	A	N																**P**				
Power connection [5] (when viewing DE)																						
Terminal box	Cable entry	Signal port																				
Top	Right	DE																	**A**			
Top	Left	DE																	**B**			
Top	NDE	Left																	**C**			
Top [9]	DE	Left																	**D**			
Top [6]	Right	DE																	**E**			
Top [6]	Left	DE																	**F**			
Top [6]	NDE	Left																	**G**			
Top [6]	DE	Left																	**H**			
Version status [10]																						
Brake versions:																						
Brake supply voltage 230 V 1 AC, 50/60 Hz																						
Holding brake DE																						**U60**
Holding brake DE with microswitch																						**U61**
Holding brake DE with manual brake release lever																						**U62**
Holding brake DE with microswitch and manual brake release lever																						**U63**
Brake supply voltage 24 V DC																						
Holding brake DE																						**U65**
Holding brake DE with microswitch																						**U66**
Holding brake DE with manual brake release lever																						**U67**
Holding brake DE with microswitch and manual brake release lever																						**U68**
Z options that cannot be combined with DE holding brake DE: K18, V91, M03, M39																						

[1] A U option must also be stated in the order to specify the holding brake version.
Shaft height 80: limited to n_{max} = 5000 r/min
shaft height 100: limited to n_{max} = 5000 r/min
shaft height 132: limited to n_{max} = 4500 r/min
shaft height 160: limited to n_{max} = 4000 r/min

[2] Only possible when 8th data position is "3" (asynchronous version).

[3] With holding brake, degree of protection is limited to IP55.

[4] Not possible with shaft height 160.

[5] Connection for holding brake is only possible via terminal box (top).

[6] Power connector for motor only (not with holding brake):
Power connector for shaft height 100 only possible up to a maximum stall current of I_0 = 36 A.
Power connector for shaft height 132 only possible up to a maximum stall current of I_0 = 85 A.
Power connector not possible for shaft height 160.

[7] Not possible for shaft height 80.

[8] Only possible when 15th data position is: A and B.

[9] Not possible with shaft height 160 and when 8th data position is "2" or "4" (synchronous version).

[10] Directly coupled to the 9th data position.

© Siemens 2024

Article No. supplements for SIMOTICS M-1PH8 with holding brake > SH 180 and SH 225

Selection and ordering data

Data position of the Article No.	1	2	3	4	5	6	7		8	9	10	11	12		13	14	15	16		
Shaft height 180	**1**	**P**	**H**	**8**	**1**	**8**	**.**	**–**	■	■	■	■	■	**–**	■	■	■	**.**	**–**	**Z**
Shaft height 225	**1**	**P**	**H**	**8**	**2**	**2**	**.**	**–**	■	■	■	■	■	**–**	■	■	■	**.**	**–**	**Z**
Overall length							**.**													
Asynchronous version with holding brake [1]									**3**											
Synchronous version with holding brake [1]									**4**											
Encoder systems for motors without DRIVE-CLiQ interface																				
Without encoder [2]										**A**								**2**		
Absolute encoder EnDat 2048 S/R (encoder AM2048S/R)										**E**								**2**		
Incremental encoder HTL 1024 S/R (encoder HTL1024S/R) [2]										**H**								**2**		
Incremental encoder HTL 2048 S/R (encoder HTL2048S/R) [2]										**J**								**2**		
Incremental encoder sin/cos 1 V_{pp} 2048 S/R with C and D track (encoder IC2048S/R)										**M**								**2**		
Encoder systems for motors with DRIVE-CLiQ interface																				
Absolute encoder 22-bit single-turn + 12-bit multi-turn (encoder AM22DQ)										**F**								**1**		
Incremental encoder 22-bit with commutation position (encoder IC22DQ)										**D**								**1**		
Rated speeds (380 V to 480 V 3 AC) (winding design)																				
400 r/min, 500 r/min, 600 r/min, 700 r/min											**B**									
700 r/min, 800 r/min, 1000 r/min, 1100 r/min											**C**									
1000 r/min, 1150 r/min, 1350 r/min, 1500 r/min											**D**									
1500 r/min, 1750 r/min, 2000 r/min, 2200 r/min											**F**									
2500 r/min, 2900 r/min, 3400 r/min											**L**									
Cooling												**Degree of protection**								
Forced ventilation, DE → NDE												IP55								
Forced ventilation, NDE → DE												IP55								
Water cooling												IP55								
Forced ventilation, NDE → DE (only asynchronous)												IP23								
Type of construction																				
IM B3 (IM B6, IM B7, IM B8)													**0**							
Shaft end (DE)														**Balancing**						
Feather key														Half-key						
Bearing														**Vibration severity acc. to Siemens/EN 60034-14**				**Shaft and flange accuracy**		
Standard														A				N		
Power connection [3] (when viewing DE)																				
Terminal box														Cable entry				Signal port		
Top														Right				DE		
Top														Left				DE		
Top														NDE				Right		
Top														DE				Right		
Version status [4]																				
With DRIVE-CLiQ interface																		**1**		
Without DRIVE-CLiQ interface, Pt1000 temperature sensor in the stator winding																		**2**		
Brake versions:																				
Brake supply voltage 230 V 1 AC, 50/60 Hz																				
Holding brake DE with microswitch and manual brake release lever																				**U63**
Z options that cannot be combined with DE holding brake DE: K18, K90, L03, V92, M39																				

[1] A U option must also be stated in the order to specify the holding brake version.
Shaft height 180: limited to n_{max} = 3500 r/min
shaft height 225: limited to n_{max} = 3100 r/min.
[2] Only possible when 8th data position is "3" (asynchronous version).
[3] Connection for holding brake is only possible via brake terminal box (top).
[4] Directly coupled to the 9th data position.

© Siemens 2024

Article No. supplements for SIMOTICS M-1PH8 without holding brake > SH 132 and 160

Selection and ordering data

Data position of the Article No.	1	2	3	4	5	6	7		8	9	10	11	12		13	14	15	16		
Shaft height 132	**1**	**P**	**H**	**8**	**1**	**3**	**.**	**–**	■	■	■	■	■	**–**	■	■	■	**.**	**–**	**Z**
Shaft height 160	**1**	**P**	**H**	**8**	**1**	**6**	**.**	**–**	■	■	■	■	■	**–**	■	■	■	**.**	**–**	**Z**
Overall length (cannot be selected, determined by the choice of rated power)							**.**													
Reluctance version Efficiency									**5**											
Reluctance version Performance									**7**											
Encoder systems for motors without DRIVE-CLiQ interface																				
Without encoder										**A**								**2**		
Absolute encoder EnDat 2048 S/R (encoder AM2048S/R)										**E**								**2**		
Incremental encoder HTL 1024 S/R (encoder HTL1024S/R)										**H**								**2**		
Incremental encoder HTL 2048 S/R (encoder HTL2048S/R)										**J**								**2**		
Incremental encoder sin/cos 1 V_{pp} 2048 S/R with C and D track (encoder IC2048S/R)										**M**								**2**		
Encoder systems for motors with DRIVE-CLiQ interface																				
Absolute encoder 22-bit single-turn + 12-bit multi-turn (encoder AM22DQ)										**F**								**1**		
Incremental encoder 22-bit with commutation position (encoder IC22DQ)										**D**								**1**		
Rated speeds (380 V to 480 V 3 AC) (winding design)																				
1000 r/min, 1150 r/min, 1350 r/min, 1500 r/min (only for forced ventilation)											**D**									
1500 r/min, 1750 r/min, 2000 r/min, 2200 r/min											**F**									
2000 r/min, 2300 r/min, 2650 r/min, 2800 r/min											**G**									

Cooling	**Degree of protection**	
Forced ventilation DE → NDE	IP55	**0**
Forced ventilation NDE → DE	IP55	**1**
Water cooling	IP65	**2**

Type of construction	
IM B3 (IM V5, IM V6, IM B6, IM B7, IM B8)	**0**
IM B5 (IM V1, IM V3)	**2**
IM B35 (IM V15, IM V35)	**3**

Shaft end (DE)	**Balancing**	
Plain shaft	–	**0**
Feather key	Full-key	**1**
Feather key	Half-key	**2**

Bearing	**Vibration severity acc. to Siemens/EN 60034-14**	**Shaft and flange accuracy**	
Standard with fixed bearing	R/A	R	**B**
Standard with fixed bearing	S/A	R	**C**
Standard with fixed bearing	SR/A	R	**D**
Increased radial forces	R/A	R	**F**

Power connection (when viewing DE)

Terminal box	Cable entry	Signal port	
Top	Right	DE	**A**
Top	Left	DE	**B**
Top	NDE	Left	**C**
Top [1]	DE	Left	**D**

Version status [2]	
With DRIVE-CLiQ interface	**1**
Without DRIVE-CLiQ interface, Pt1000 temperature sensor in the stator winding	**2**

Special version (order codes required for options)	**Z**

[1] Not possible with shaft height 160 and when 8th data position is "2" or "4" (synchronous version).
[2] Directly coupled to the 9th data position.

© Siemens 2024

Article No. supplements for SIMOTICS M-1PH8 with holding brake > SH 132 and SH 160

Selection and ordering data

Data position of the Article No.	1	2	3	4	5	6	7		8	9	10	11	12		13	14	15	16		
Shaft height 132	**1**	**P**	**H**	**8**	**1**	**3**	**.**	**–**	■	■	■	■	■	**–**	■	■	■	**.**	**–**	**Z**
Shaft height 160	**1**	**P**	**H**	**8**	**1**	**6**	**.**	**–**	■	■	■	■	■	**–**	■	■	■	**.**	**–**	**Z**
Overall length (cannot be selected, determined by the choice of rated power)							**.**													
Reluctance version Efficiency with holding brake [1]									**6**											
Reluctance version Performance with holding brake [1]									**8**											
Encoder systems for motors without DRIVE-CLiQ interface																				
Without encoder										**A**								**2**		
Absolute encoder EnDat 2048 S/R (encoder AM2048S/R)										**E**								**2**		
Incremental encoder HTL 1024 S/R (encoder HTL1024S/R)										**H**								**2**		
Incremental encoder HTL 2048 S/R (encoder HTL2048S/R)										**J**								**2**		
Incremental encoder sin/cos 1 V_{pp} 2048 S/R with C and D track (encoder IC2048S/R)										**M**								**2**		
Encoder systems for motors with DRIVE-CLiQ interface																				
Absolute encoder 22-bit single-turn + 12-bit multi-turn (encoder AM22DQ)										**F**								**1**		
Incremental encoder 22-bit with commutation position (encoder IC22DQ) [2]										**D**								**1**		
Rated speeds (380 V to 480 V 3 AC) (winding design)																				
1000 r/min, 1150 r/min, 1350 r/min, 1500 r/min (only for forced ventilation)											**D**									
1500 r/min, 1750 r/min, 2000 r/min, 2200 r/min											**F**									
2000 r/min, 2300 r/min, 2650 r/min, 2800 r/min											**G**									
Cooling / **Degree of protection**																				
Forced ventilation DE → NDE / IP55												**0**								
Forced ventilation NDE → DE / IP55												**1**								
Water cooling / IP55												**2**								
Type of construction																				
IM B5 (IM V1, IM V3) [2]													**2**							
IM B35 (IM V15, IM V35)													**3**							
Shaft end (DE) / **Balancing**																				
Plain shaft / –															**0**					
Feather key / Half-key															**2**					
Bearing / **Vibration severity acc. to Siemens/EN 60034-14** / **Shaft and flange accuracy**																				
Standard / A / N																**A**				
Power connection (when viewing DE)																				
Terminal box / Cable entry / Signal port																				
Top / Right / DE																	**A**			
Top / Left / DE																	**B**			
Top / NDE / Left																	**C**			
Top [3] / DE / Left																	**D**			
Version status [4]																				
With DRIVE-CLiQ interface																		**1**		
Without DRIVE-CLiQ interface, Pt1000 temperature sensor in the stator winding																		**2**		
Special version (order codes required for options)																				**Z**

[1] A U option must also be provided in the order to specify the holding brake version.

Shaft height 132: limited to n_{max} = 4500 r/min
shaft height 160: limited to n_{max} = 4000 r/min

[2] Not possible for shaft height 160; the vibration load must be taken into consideration for shaft height 132, see Configuration Manual.

[3] Not possible for terminal box gk874 (1PH816 and 1PH8138-xxG2x).

[4] Directly coupled to the 9th data position.

© Siemens 2024

Options

Order code	Option description **-Z** must be attached to the Article No. to order a motor with options. The order code must also be specified for each additional required option (Order codes must not be repeated in plain text in the order)	For use with motors Shaft height 80 to 160	Shaft height 180 to 280	Shaft height 280 only for forced ventilation (11th data position "1" or "4")
A12	Additional PTC thermistor chain for alarm and tripping (Only possible for version with terminal box)	✔	✔	✔
A25	Additional temperature sensor as reserve connected to signal terminal strip (Only possible for version with terminal box)	✔	Standard	Standard
A72	2 Pt1000 temperature sensors for roller bearing temperature monitoring (DE and NDE)	–	✔	✔
B02	Factory test certificate in accordance with EN 10204 2.3 (for motor ordered)	✔	Standard	Standard
B35	Factory test certificate for vibration report	✔	✔ 1)	✔ 1)
B36	Factory test certificate for run-out log	✔	Only for SH 180 and SH 225	–
G00	Separately driven fan NDE left, air inlet at NDE (possible if 15th data position is U, W or X)	–	–	✔
G02	Separately driven fan NDE right, air inlet at NDE (possible if 15th data position is V, W or X)	–	–	✔
G06	Separately driven fan DE left, air inlet NDE (possible at 11th position = 1 and 15th position = U, V or W; possible if 11th position = 4 and 15th position = W)	–	–	✔
G07	Separately driven fan DE left, air inlet DE (possible if 11th position = 1 and 15th position = U, V or W; possible if 11th position = 4 and 15th position = W)	–	–	✔
G08	Separately driven fan DE right, air inlet NDE (possible if 11th position = 1 and 15th position = U, V or W; possible if 11th position = 4 and 15th position = W)	–	–	✔
G09	Separately driven fan DE right, air inlet DE (possible if 11th position = 1 and 15th position = U, V or W; possible if 11th position = 4 and 15th position = W)	–	–	✔
G11	Separately driven fan DE top, air inlet DE (possible if 11th position = 1 and 15th position = U, V or W; possible if 11th position = 4 and 15th position = W)	–	–	✔
G14	With air filter (only possible when 11th data position "1" or "4")	Only for SH 132 and SH 160	✔	✔
G50	Nipple for SPM, with M8 adapter	–	✔	✔
G80	Mounting a POG 10 incremental encoder supplied by the customer (Possible if 9th data position is "K")	–	–	✔
H56	Mounting a POG 10 D 1024 incremental encoder (encoder HTL1024 S/R) (Possible if 9th data position is "K")	–	–	✔
H75	Mounting a HOG 22 hollow shaft encoder supplied by the customer (Possible if 9th data position is "G")	–	–	✔
K08	Encoder connector or DRIVE-CLiQ mounted opposite (Not possible if 15th data position is "X")	–	✔	✔
K09	Terminal box or power connector NDE right	Only for SH 100 2) up to SH 160	–	–
	Terminal box NDE right, cable entry DE, signal port top (Possible if 15th data position is "A")	–	✔	–
K10	Terminal box or power connector NDE left	Only for SH 100 2) up to SH 160	–	–
	Terminal box NDE left, cable entry DE, signal port top (Possible if 15th data position is "A")	–	✔	–
K16	Second shaft end (d × l: 95 mm × 170 mm) (Possible if 9th data position is "A" or "G" and 12th data position is "0" or "3")	–	–	✔
K17	Labyrinth seal DE for Performance version (possible if 12th data position is "5" and 14th data position is "L")	–	Only for SH 180	–
K18	Radial shaft sealing ring DE 3)	✔	✔	–
K40	Regreasing system, DE and NDE	–	Only for SH 180 and SH 225	Standard

–	Not possible
✔	Option available

1) Not possible with shaft height 280 and when 14th data position is "E" or "F" (increased radial forces).
2) Not possible when 12th data position is "2" (type of construction IM B5).
3) Only appropriate if oil spray or oil vapor is occasionally deposited on the sealing ring.
Radial shaft sealing ring not possible when: 14th data position is "E", "F" or "L".

© Siemens 2024

Options for SIMOTICS M-1PH8 asynchronous and synchronous motors

Options

Order code	Option description **-Z** must be attached to the Article No. to order a motor with options. The order code must also be specified for each additional required option (Order codes must not be repeated in plain text in the order)	For use with motors Shaft height 80 to 160	Shaft height 180 to 280	Shaft height 280 only for forced ventilation (11th data position "1" or "4")
K45	Anti-condensation heating 230 V AC	–	✔	✔
K69	Pipe connection prepared NDE right (Only possible with forced ventilation, not for G00 or G11)	–	–	✔
K70	Pipe connection prepared NDE left (Only possible with forced ventilation, not for G00 or G11)	–	–	✔
K71	Pipe connection prepared NDE top (Only possible with forced ventilation, not for G00 or G11)	–	–	✔
K80	Axial pipe connection NDE (Only possible with forced ventilation)	–	Only for SH 180 and SH 225	Options **K69**, **K70**, **K71**
K83	Rotation of terminal box through +90 degrees (Possible in combination with Options K09 or K10 or if 15th data position is "U", "V" or "W")	–	✔ 1)	✔
K84	Rotation of terminal box through -90 degrees (Possible in combination with Options K09 or K10 or if 15th data position is "U", "V", "W", or "X")	–	✔ 1)	✔
K85	Rotation of terminal box through +180 degrees (Possible in combination with Options K09 or K10 or if 15th data position is "U", "V", "W", or "X")	–	✔	✔
K90	Version with flange size A400 (Possible if 12th data position is "2", "3" and "5")	–	Only for SH 180	–
L00	Terminal box (standard) replaced by the next larger terminal box (note the impact on the dimensions in the Siemens Product Configurator!)	–	✔	✔
L03	Increased vibration stress (For SH 180 and SH 225 only for type of construction IM B3; 12th data position is "2")	–	Only for SH 180 and SH 225	–
L12	Condensation drain hole	–	Standard for water cooling	Only if 11th data position is "1"
L27	NDE bearing in insulated version	–	Only for SH 180	Standard
L29	Enhanced corrosion protection for installation in industrial/marine climates	–	–	✔
L72	Shaft manufactured out of special steel (Note: Option results in longer delivery times)	–	–	✔
L74	Fan version with IP65 degree of protection 2)	✔	–	–
L76	Connection 3-phase separately driven fan 400 V 3 AC 50/60 Hz	–	Only for SH180 and SH225	–
L77	2-phase version for connecting separately driven fans to the 400 V line supply	Only for SH 80	–	–
M03	Version for potentially explosive atmospheres Zone 2	Only for SH 100 to SH 160	–	
M39	Version for potentially explosive atmospheres Zone 22	Only for SH 100 to SH 160	Only for SH 180 and SH 225	–
M83	Additional forcing-off thread on motor feet (Possible, if 12th data position is "0" or "3")	–	–	✔
P00	Undrilled cable entry plate	–	✔	Not for 1XB7820-P00
P01	Cable entry plate 3 × M63 × 1.5	–	Only for 1XB7700-P02 1XB7712-P03	Only for 1XB7712-P03
P02	Cable entry plate 3 × M75 × 1.5	–	Only for 1XB7712-P03	Only for 1XB7712-P01 1XB7712-P03
P03	Cable entry plate 4 × M75 × 1.5	–	–	Only for 1XB7712-P01
P04	Cable entry plate 4 × M63 × 1.5	–	Only for 1XB7712-P03	Only for 1XB7712-P01 1XB7712-P03

–	Not possible
✔	Option available

1) Not possible for 1PH822 and terminal box 1XB7712-P03.
2) Regardless of the degree of protection, for high levels of atmospheric pollution, the fan must be cleaned.

© Siemens 2024

Options

Order code	Option description **-Z** must be attached to the Article No. to order a motor with options. The order code must also be specified for each additional required option (Order codes must not be repeated in plain text in the order)	For use with motors Shaft height 80 to 160	Shaft height 180 to 280	Shaft height 280 only for forced ventilation (11th data position "1" or "4")
Q00	Higher number of ground terminals in the terminal box	–	–	✔
Q12	Sealing air connection	✔	–	–
Q21	Screw locked with Loctite	–	✔	✔
Q25	Q25 fan connection NDE or at the top with M16 ×1.5	Only for SH 100 to SH 160	–	–
Q31	Metal rating plate instead of adhesive label	✔	–	–
Q81	Higher preloading of bearing (only possible when 14th data position is "B", "C" or "D")	✔		
U60	Holding brake 230 V	✔	–	–
U61	Holding brake 230 V with microswitch	✔	–	–
U62	Holding brake 230 V with manual brake release lever	✔	–	–
U63	Holding brake 230 V with microswitch and manual brake release lever	✔	Only for SH 180 and SH 225	–
U65	Holding brake 24 V DC	✔	–	–
U66	Holding brake 24 V DC with microswitch	✔	–	–
U67	Holding brake 24 V DC with manual brake release lever	✔	–	–
U68	Holding brake 24 V DC with microswitch and manual brake release lever	✔	–	–
U81	Holding brake with reduced braking torque	Only for SH 100 to SH 160	–	–
U82	Holding brake with reduced braking torque	Only for SH 100 to SH 160	–	–
U83	Holding brake with reduced braking torque	Only for SH 100 to SH 160	–	–
U84	Holding brake with reduced braking torque	Only for SH 100 to SH 160	–	–
U85	Holding brake with reduced braking torque	Only for SH 100 to SH 160	–	–
U86	Holding brake with reduced braking torque	Only for SH 100 to SH 160	–	–
V90	1PH7-compatible shaft end (d × l: 42 mm × 110 mm) (Reduced radial forces must be taken into consideration!)	Only for SH 132	–	–
V91	1FT6-compatible shaft end (d × l: 48 mm × 82 mm) (Only possible when 8th data position is "2")	Only for SH 132	–	–
V92	1PH7184-/1PL6184-compatible shaft end (d × l: 60 mm × 140 mm)	–	Only for 1PH8184	–
Y82	Additional plate with customer specifications (plain text required)	–	✔	✔
Y84	Customer specifications on rating plate (max. 30 characters)	✔	✔	✔

–	Not possible
✔	Option available

© Siemens 2024

Options for SIMOTICS M-1PH8 asynchronous and synchronous motors

Options

Order code	Option description **-Z** must be attached to the Article No. to order a motor with options. The order code must also be specified for each additional required option (Order codes must not be repeated in plain text in the order)	For use with motors Shaft height 80 to 160	Shaft height 180 to 280	Shaft height 280 only for forced ventilation (11th data position "1" or "4")
–	Standard: Paint finish anthracite gray RAL 7016	Standard	Standard	Standard
X01	Paint finish in RAL 9005 (jet black)	✔	✔	✔
X02	Paint finish in RAL 9001 (cream)	✔	✔	✔
X03	Paint finish in RAL 6011 (reseda green)	✔	✔	✔
X04	Paint finish in RAL 7032 (pebble gray)	✔	✔	✔
X05	Paint finish in RAL 5015 (sky blue).	✔	✔	✔
X06	Paint finish in RAL 1015 (light ivory).	✔	✔	✔
X08	Paint finish in RAL 9006 (white aluminum)	✔	✔	✔
X11	Paint finish in RAL 6019 (white green)	✔	✔	✔
X12	Paint finish in RAL 5010 (gentian blue)	✔	✔	✔
X13	Paint finish in RAL 5024 (pastel blue)	✔	✔	✔
X14	Paint finish in RAL 5017 (traffic blue)	✔	✔	✔
X15	Paint finish in RAL 9010 (pure white)	✔	✔	✔
X16	Paint finish in RAL 6018 (yellow green)	✔	✔	✔
X17	Paint finish in RAL 5014 (pigeon blue)	✔	✔	✔
X18	Paint finish in RAL 9018 (papyrus white)	✔	✔	✔
X19	Paint finish in RAL 2004 (pure orange)	✔	✔	✔
X20	Paint finish in HWS (gray)	✔	✔	✔
X21	Paint finish in RAL 9003 (signal white)	✔	✔	✔
X22	Paint finish in RAL 9002 (gray white)	✔	✔	✔
X23	Paint finish in RAL 5005 (signal blue)	✔	✔	✔
X24	Paint finish in RAL 7001 (silver gray)	✔	✔	✔
X25	Paint finish in RAL 1000 (green beige)	✔	✔	✔
X26	Paint finish in RAL 6017 (may green)	✔	✔	✔
X27	Paint finish in RAL 9023 (pearl dark gray)	✔	✔	✔
X28	Paint finish in RAL 5009 (azure blue)	✔	✔	✔
X29	Paint finish in RAL 7005 (mouse gray)	✔	✔	✔
X30	Paint finish in RAL 1014 (ivory)	✔	✔	✔
X31	Paint finish in RAL 5007 (brillant blue)	✔	✔	✔
X44	Paint finish in RAL 1023 (traffic yellow)	✔	✔	✔
X50	Paint finish in RAL 3004 (purple red)	✔	✔	✔
X51	Paint finish in RAL 2003 (pastel orange)	✔	✔	✔
X52	Paint finish in RAL 3000 (flame red)	✔	✔	✔
X53	Paint finish in RAL 7035 (light gray)	✔	✔	✔
X54	Paint finish in RAL 7004 (signal gray)	✔	✔	✔
X55	Paint finish in RAL 7038 (agate gray)	✔	✔	✔
X56	Paint finish in RAL 1013 (oyster white)	✔	✔	✔
X57	Paint finish in RAL 5012 (light blue)	✔	✔	✔
X58	Paint finish in RAL 2001 (red orange)	✔	✔	✔
X59	Paint finish in RAL 7030 (stone gray)	✔	✔	✔
X91	Paint finish in RAL 7011 (iron gray)	✔	✔	✔
K24	Primer	Pale green	Light gray	Light gray
K23	Special paint finish "Worldwide" (anthracite RAL 7016)	✔	✔	✔
K23 + X..	Special paint finish Worldwide in another color (X01 to X08)	✔	✔	✔

–	Not possible
✔	Option available

© Siemens 2024

Options

Terminal box type (See selection and ordering data for assignment)	Cable entry Power	External signals	Outer cable diameter, max.[1] mm (in)	Number of main terminals		Cross-section per terminal, max. mm²	Rated current, max.[2] A
gk803	1 × M25 × 1.5	1 × M16 × 1.5[3]	20 (0.79)	Phases:	3 × M5	1 × 10	52
				Grounding:	2 × M5		
gk806	1 × M25 × 1.5	1 × M16 × 1.5[3]	20 (0.79)	Phases:	6 × M5	1 × 10	52
				Grounding:	2 × M5		
gk813	1 × M32 × 1.5	1 × M16 × 1.5[3]	24.2 (0.95)	Phases:	3 × M5	1 × 16	70
				Grounding:	2 × M5		
gk823	1 × M32 × 1.5	1 × M16 × 1.5[3]	24.2 (0.95)	Phases:	3 × M5	1 × 16	70
				Grounding:	2 × M5		
gk826	1 × M32 × 1.5	1 × M16 × 1.5[3]	24.2 (0.95)	Phases:	6 × M5	1 × 10	52
				Grounding:	2 × M5		
gk833	1 × M40 × 1.5	1 × M16 × 1.5[3]	32 (1.26)	Phases:	3 × M6	1 × 35	110
				Grounding:	2 × M6		
gk843	1 × M50 × 1.5	1 × M16 × 1.5[3]	38 (1.50)	Phases:	3 × M6	1 × 50	133
				Grounding:	2 × M6		
gk846	1 × M50 × 1.5	1 × M16 × 1.5[3]	38 (1.50)	Phases:	6 × M6	1 × 25	88
				Grounding:	2 × M6		
gk863	1 × M50 × 1.5	1 × M16 × 1.5[3]	38 (1.50)	Phases:	3 × M6	1 × 50	133
				Grounding:	2 × M6		
gk873	1 × M63 × 1.5	1 × M16 × 1.5[3]	42.6 (1.68)	Phases:	3 × M6	1 × 50	133
				Grounding:	2 × M6		
gk874	1 × M63 × 1.5	1 × M16 × 1.5[3]	42.6 (1.68)	Phases:	3 × M10	2 × 70	240
				Grounding:	2 × M6		
1XB7322-P05	2 × M50 × 1.5	1 × M16 × 1.5[4]	38 (1.50)	Phases:	3 × M12	2 × 50	210
				Grounding:	2 × M6		
1XB7422-P06	2 × M63 × 1.5	1 × M16 × 1.5[4]	53 (2.09)	Phases:	3 × M12	2 × 70	270
				Grounding:	4 × M8		
1XB7700-P02	3 × M75 × 1.5	1 × M16 × 1.5[4]	68 (2.68)	Phases:	3 × 2 × M12	3 × 150	700
				Grounding:	3 × fixing eyelet		
1XB7712-P03	4 × M75 × 1.5	1 × M16 × 1.5[4]	68 (2.68)	Phases:	3 × 4 × M16	4 × 185	1150
				Grounding:	4 × M16		

For terminal box **1XB7712-P03**, other cable entries (power) can be ordered via P options, depending on the standard:

P00	Undrilled cable entry plate
P01	Cable entry plate 3 × M63 × 1.5 (not for 1XB7712-P01)
P02	Cable entry plate 3 × M75 × 1.5
P04	Cable entry plate 4 × M63 × 1.5

For terminal box **1XB7700-P02** other cable entries (power) can be ordered via P options, depending on the standard:

P00	Undrilled cable entry plate
P01	Cable entry plate 3 × M63 × 1.5

For terminal boxes **1XB7322-P05** and **1XB7422-P06**, another cable entry (power) can be ordered via the P option, depending on the standard:

P00	Undrilled cable entry plate

For options **K09** or **K10**, instead of terminal box **gk863**, terminal box **gk873** is used mounted on the side.

For options **K09** or **K10**, instead of terminal box **gk833**, terminal box **gk843** is used mounted on the side.

For options **K09** or **K10**, instead of terminal box **gk813**, terminal box **gk823** is used mounted on the side.

1) Depending on the version of metric cable gland (based on the MOTION-CONNECT cable type and cable glands from HUGRO or from AGRO)
2) Current-carrying capacity based on EN 60204-1/IEC 60364-5-52 with installation type E.
3) Thread M16 × 1.5 arranged at 90° to signal port; thread only with options A12, A25 and when 9th data position is A (without encoder).
4) Thread M16 × 1.5 arranged opposite the signal port (lateral to the cable entry plate); thread only with option A12 and encoder version A (without encoder).

© Siemens 2024

Technical specifications

Motor type	Fan motor current consumption, max.			Air flow direction	Volume of air, min.	Sound pressure level L_{pA} (1 m) Motor + separately driven fan operation 50 Hz, tolerance + 3 dB
	A	A	A		m^3/s (ft^3/s)	dB
Forced ventilation	**230 V 1 AC/50 Hz (± 10 %)**	**230 V 1 AC/60 Hz (± 10 %)**	**265 V 1 AC/60 Hz (± 10 %)**			
1PH808	0.33 0.20	0.25 0.16	0.32 0.19	NDE → DE DE → NDE	0.02 (0.71)	70 [1]
Forced ventilation	**400 V 3 AC/50 Hz (± 10 %)**	**400 V 3 AC/60 Hz (± 10 %)**	**480 V 3 AC/60 Hz (± 10 %)**			
1PH810	0.08 0.10	0.07 0.08	0.11 0.11	NDE → DE DE → NDE	0.04 (1.41)	70 [1]
1PH813	0.11 0.10	0.13 0.12	0.13 0.12	NDE → DE DE → NDE	0.09 (3.18)	70 [1]
1PH816	0.16 0.16	0.21 0.21	0.21 0.21	NDE → DE DE → NDE	0.16 (5.65)	73 [1]
Forced ventilation (EC fan)	**380 V ... 480 V 3 AC/ 50 Hz, 60 Hz (± 10 %)**					
1PH818	1.1 ... 1.3	–	–	NDE → DE DE → NDE	0.17 (6.00)	73 [2]
1PH822	0.75 ... 0.9	–	–	NDE → DE DE → NDE	0.31 (10.95)	73 [2]
Forced ventilation	**380 V ... 480 V 3 AC/ 50 Hz, 60 Hz (± 10 %)**					
1PH828	0.75 ... 0.9	–	–	NDE → DE DE → NDE	0.31 (10.95)	74 [2]

Note: For separately driven fans, e.g. explosion protection (options **M03** and **M39**), the technical specifications may differ. Additional information on separately driven fans is provided in the current Configuration Manual.

You can find the Configuration Manual for SIMOTICS M-1PH8 for SINAMICS S120 at:

https://support.industry.siemens.com/cs/ww/en/view/109744012

[1] At rated pulse frequencies 2 kHz and speed ranges:
Forced ventilation (IP55 degree of protection):
1PH818 up to 5000 r/min
1PH822 up to 3500 r/min
1PH828 up to 3300 r/min
Forced ventilation (IP23 degree of protection):
1PH818 up to 3000 r/min
1PH822 up to 2000 r/min
1PH828 up to 2800 r/min

[2] At a rated pulse frequency of 4 kHz and a speed range up to 5000 r/min.

© Siemens 2024

Technical specifications

Cooling data and sound pressure level

Motor type	Flow volume, min.	Pressure drop	Water connection at the NDE Thread	Sound pressure level L_{pA} (1 m) Motor Tolerance + 3 dB
	l/min (US gal./min.)	bar	Inches	dB
Water cooling				
1PH808	6 (1.59)	0.6	G 1/8	68[1)]
1PH810	8 (2.11)	0.4	G 1/4	68[1)]
1PH813	12 (3.17)	0.9	G 3/8	68[1)]
1PH816	15 (3.96)	0.2	G 1/2	69[1)]
1PH8184	15 (3.96)	0.6	G 3/8	70[2)]
1PH8186	15 (3.96)	0.7	G 3/8	70[2)]
1PH822.-1 (asynchronous version)	20 (5.28)	0.6	G 3/8	70[2)]
1PH822.-2 (synchronous version)	25 (6.60)	0.9	G 3/8	70[3)]
1PH828	35 (9.25)	0.6	G 1/2	72[3)]

Water specification

Cooling water quality	The values specified for the cooling water correspond to the requirements for a closed cooling circuit. Not all of the specified concentrations will occur in the cooling water at the same time. A filter can be installed to ensure fault-free operation. The filter fineness should be no less than 100 µm.	
Cooling water specifications	Quality of the water used as coolant for motors with stainless steel tubes + cast iron or steel jacket 1PH808 ... 1PH816	Quality of the water used as coolant for motors with stainless steel tubes 1PH818 ... 1PH828
pH value	6.0 ... 9.0	
Total hardness	< 170 ppm	
Conductivity	< 500 µS/cm	< 2000 µS/cm
Operating pressure, max.	< 6 bar	
Pressure drop at V(N)	< 1 bar	
Cooling water inlet temperature, max.	< 30 °C (86 °F)	
Frost protection / corrosion protection	20 ... 30 %	
NALCO 00GE056 inhibitor	0.2 ... 0.25 %	
Constituent elements		
Dissolved substances	< 340 ppm	
Particle size, max.	< 100 µm	
Chloride ions	< 40 ppm	< 250 ppm
Sulfate ions	< 50 ppm	< 240 ppm
Nitrate ions	< 50 ppm	

1) At a rated pulse frequency of 4 kHz and a speed range up to 5000 r/min.
2) At rated pulse frequencies 2 kHz or 4 kHz and speed ranges:
1PH818 up to 5000 r/min,
1PH822 up to 4500 r/min.
3) At rated pulse frequency 2 kHz and speed ranges:
1PH822 up to 4500 r/min,
1PH828 up to 3300 r/min.

© Siemens 2024

Characteristic curves

Permissible radial forces 1PH808 motors Standard and Standard with location bearing

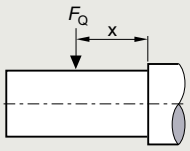

L_{10h} = 20000 h

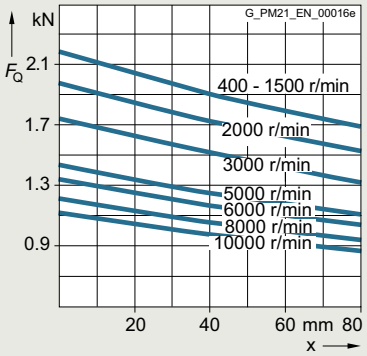

Permissible radial forces 1PH810 motors Standard and Standard with location bearing

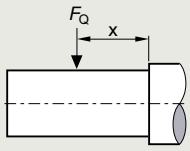

L_{10h} = 20000 h

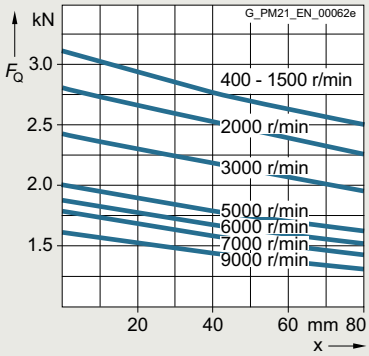

Permissible radial forces 1PH808 motors Performance

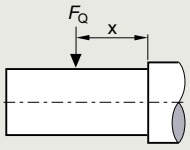

L_{10h} = 12000 h

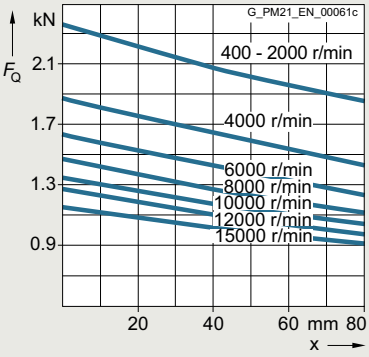

Permissible radial forces 1PH810 motors Performance

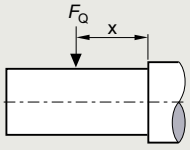

L_{10h} = 12000 h

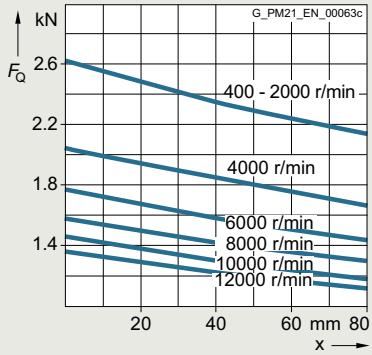

Permissible radial forces 1PH808 motors Advanced lifetime

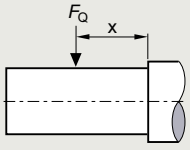

L_{10h} = 40000 h

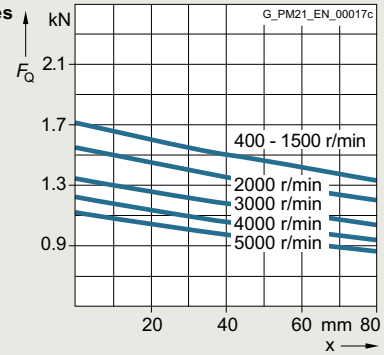

Permissible radial forces 1PH810 motors Advanced lifetime

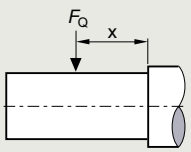

L_{10h} = 40000 h

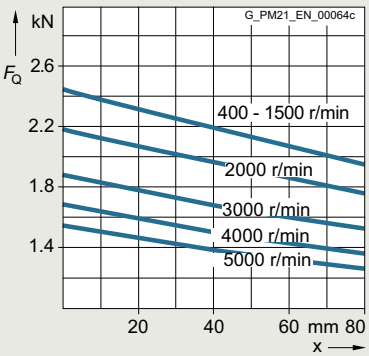

Permissible radial forces 1PH810 motors with increased radial force. Minimal radial force: 0.5 kN (112 lb_f)

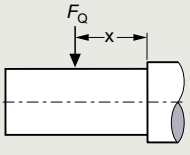

L_{10h} = 20000 h

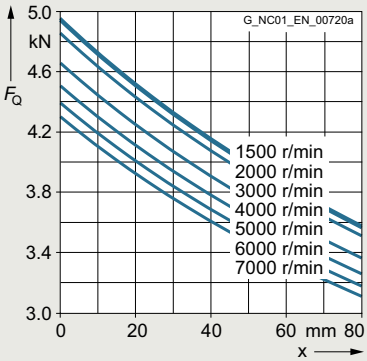

The roller bearings used here (bearings with increased radial force) could sustain damage if they are operated under no load. Observe the specified minimum radial forces. The permissible radial/axial forces can be found in the Configuration Manual.

© Siemens 2024

Characteristic curves

Permissible radial forces 1PH813 motors Standard and Standard with location bearing

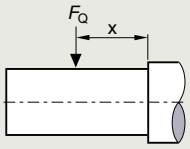

(1) Maximum load for 1PH7-compatible shaft end (42 x 110 mm (1.65 x 4.33 in)) (option V90)

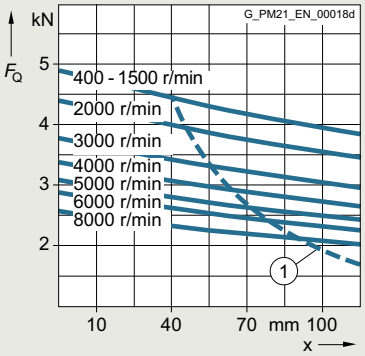

L_{10h} = 20000 h

Permissible radial forces 1PH816 motors Standard and Standard with location bearing

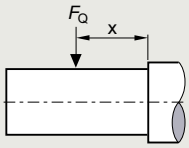

L_{10h} = 20000 h

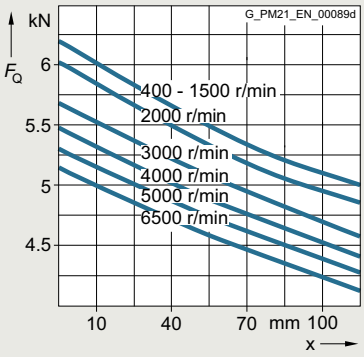

Permissible radial forces 1PH813 motors Performance

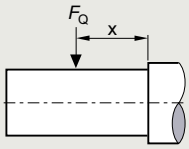

(1) Maximum load for 1PH7-compatible shaft end (42 x 110 mm (1.65 x 4.33 in)) (option V90)

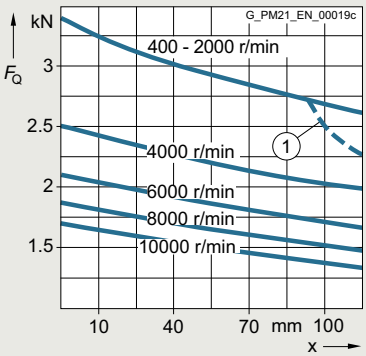

L_{10h} = 12000 h

Permissible radial forces 1PH816 motors Performance

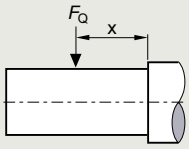

L_{10h} = 12000 h

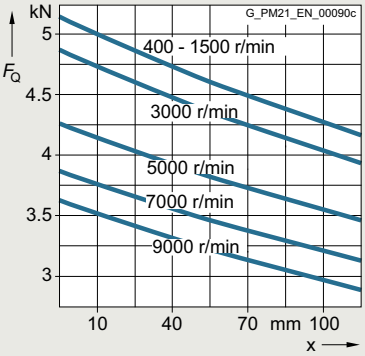

Permissible radial forces 1PH813 motors Advanced lifetime

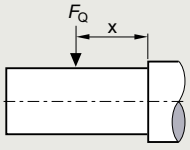

(1) Maximum load for 1PH7-compatible shaft end (42 x 110 mm (1.65 x 4.33 in)) (option V90)

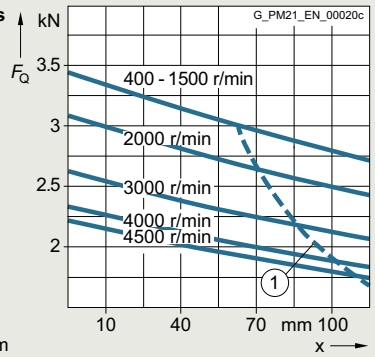

L_{10h} = 40000 h

Permissible radial forces 1PH816 motors Advanced Lifetime

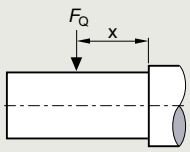

L_{10h} = 40000 h

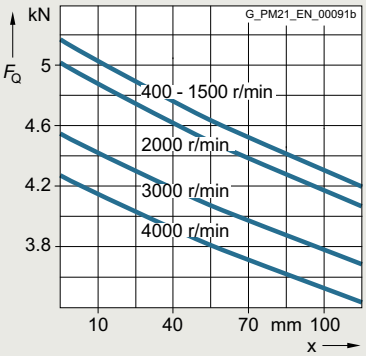

Permissible radial forces 1PH813 motors with increased radial force. Minimal radial force: 0.7 kN (157 lb_f)

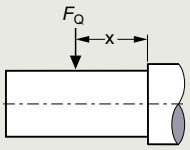

L_{10h} = 20000 h

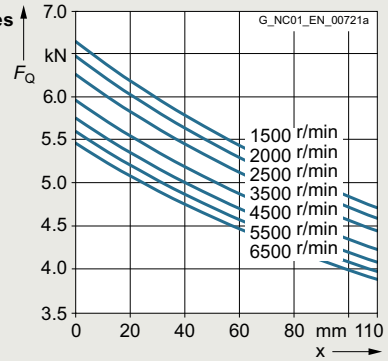

Permissible radial forces 1PH816 motors with increased radial force. Minimal radial force: 1 kN (225 lb_f)

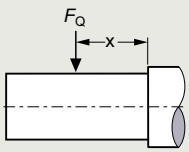

L_{10h} = 20000 h

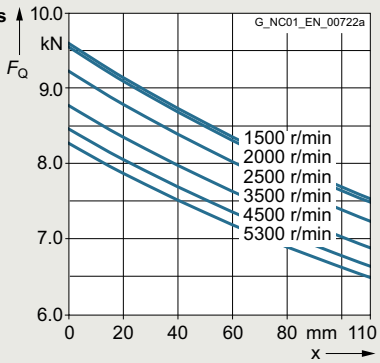

The roller bearings used here (bearings with increased radial force) could sustain damage if they are operated under no load. Observe the specified minimum radial forces. The permissible radial/axial forces can be found in the Configuration Manual.

© Siemens 2024

Characteristic curves

Permissible radial forces 1PH818 motors Standard with location bearing

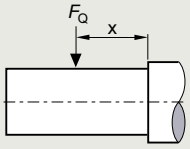

L_{10h} = 20000 h

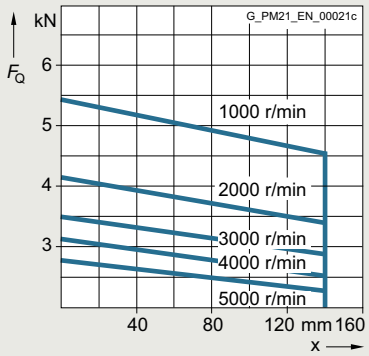

Permissible radial forces 1PH822 motors Standard with location bearing

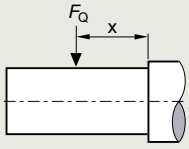

L_{10h} = 20000 h

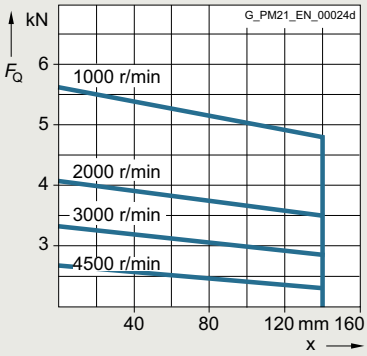

Permissible radial forces 1PH818 motors with increased radial force

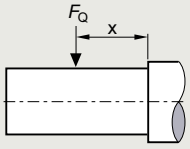

Minimum radial force 4 kN (899 lb_f)

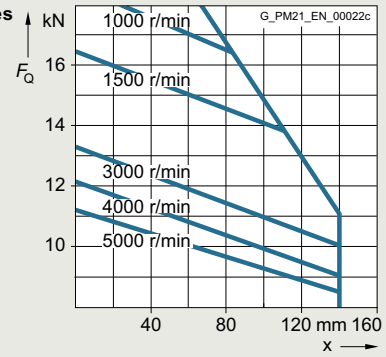

L_{10h} = 12000 h

Permissible radial forces 1PH822 motors with increased radial force

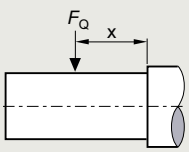

Minimum radial force 5 kN (1124 lb_f)

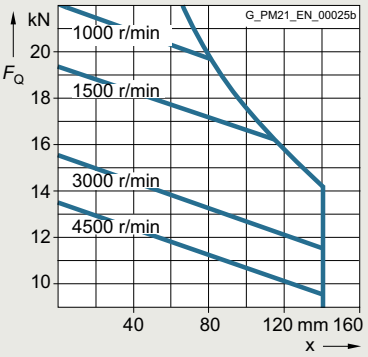

L_{10h} = 12000 h

Permissible radial forces 1PH818 motors Performance

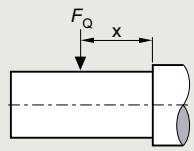

L_{10h} = 12000 h

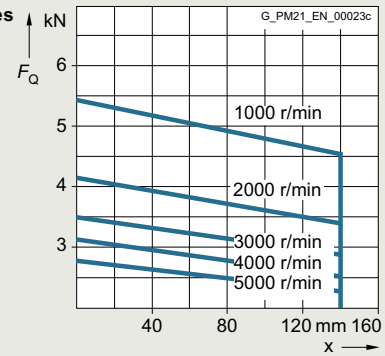

Permissible radial forces 1PH822 motors Performance

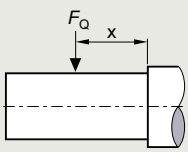

L_{10h} = 12000 h

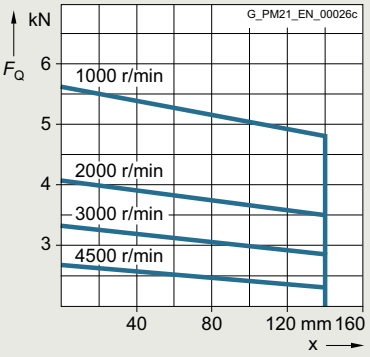

The roller bearings used here (bearings with increased radial force) could sustain damage if they are operated under no load. Observe the specified minimum radial forces. The permissible radial/axial forces can be found in the Configuration Manual.

© Siemens 2024

Characteristic curves

Permissible radial forces 1PH828 motors Standard with location bearing

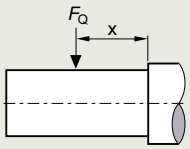

L_{10h} = 20000 h

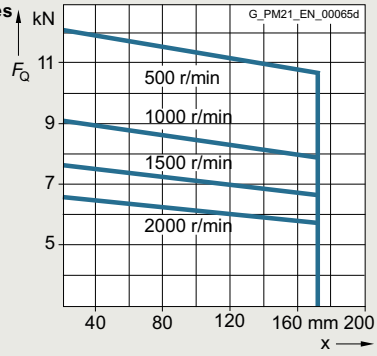

Permissible radial forces 1PH828 motors with increased radial force

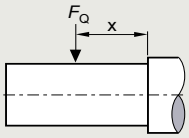

Minimum radial force 9 kN (2023 lb_f)

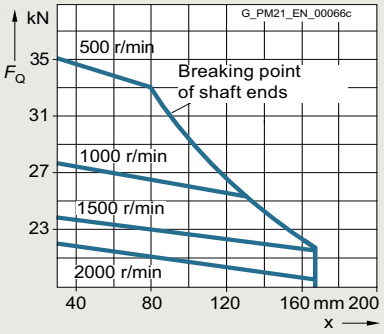

L_{10h} = 12000 h

The roller bearings used here (bearings with increased radial force) could sustain damage if they are operated under no load. Observe the specified minimum radial forces. The permissible radial/axial forces can be found in the Configuration Manual.

© Siemens 2024

Overview

Mounted holding brake for SIMOTICS M-1PH8 motors

A brake can be mounted on the DE of 1PH808 to 1PH822 motors.

These brakes are electromagnetic units for dry-running operation. An electromagnetic field is used to release the brake which is applied using spring force. They operate in accordance with the quiescent current principle, i.e. when no current is flowing, the spring-operated brake brakes and holds the drive. When current flows, the brake is released and the drive is free to rotate.

In the event of a voltage failure or an Emergency Stop, the drive is braked from its current speed down to standstill.

Connection of the brakes (must be provided on the system side)

- Alternating voltage 230 V 1 AC, 50/60 Hz
- Direct voltage 24 V DC up to 1PH816

The brake control module is designed for an ambient temperature of -5 °C to +40 °C (23 °F to 104 °F).

The maximum speed of a motor with brake is limited to the maximum speed of the brake (refer to the table).

The holding brakes for 1PH818 and 1PH822 are not UL-approved. As a consequence, these motors do not have the cUR marking when mounted on brakes.

Motor type	Brake type	Holding torque	Maximum speed	Moment of inertia	Weight	Coil current		Single operating energy, perm.	Total moment of inertia (emergency stop)	Speed (emergency stop)	Number of emergency stops[1)]	Opening time	Closing time
			n_{max}	J_{Br}	m_{Br}	230 V AC ± 10 %	24 V DC ± 10 %	W_E	J_{tot}	n	z		
		Nm (lb_f-ft)	r/min	kgm^2 (lb_f-in-s^2)	kg (lb)	A	A	kJ	kgm^2 (lb_f-in-s^2)	r/min		ms	ms
1PH808	Size 13	29 (21.4)	5000	0.00093 (0.00823)	10 (22.1)	0.8	4.1	2.2	0.0174 (0.1540)	4800	2000	150	300
1PH810	Size 19	60 … 150 (44.3 … 111)	5000	0.0048 (0.0425)	21 (46.3)	1.0	4.7	7	0.063 (0.558)	4500	2000	500	500
1PH813	Size 24	140 … 310 (103 … 229)	4500	0.0141 (0.1248)	46 (101)	1.3	6.9	15.5	0.218 (1.930)	3600	2000	650	1000
1PH816	Size 29	280 … 500 (207 … 369)	4000	0.0266 (0.2354)	66 (146)	1.9	6.7	24	0.456 (4.036)	3100	2000	750	1100
1PH818	NFF-A 63	1000 (738)	3500	0.022 (0.195)	63 (139)	2.2	–	98	1.3 (11.5)	3000	2000	300	80
1PH822	NFF-A 100	1600 (1180)	3100	0.051 (0.451)	88 (194)	2.7	–	210	3.9 (34.5)	2800	1200	300	100

Explanation of terms

Holding torque	For 1PH810 to 1PH816 motors, the holding torque can be continuously set in the specified value range using an adjustment ring. The dynamic braking torque is approximately 70 % of the set holding torque.
Single switching energy, perm. W_E	Permissible switching energy in the event of an emergency stop, $W_E = J_{tot} \times n^2/182.4 \times 10^{-3}$ (J in kgm^2, n in r/min)
Service life switching energy W_{max}	Maximum possible brake switching energy (for emergency stop) until the brake linings must be replaced, $W_{max} = W_E \times z$.
Number of emergency stops z	The specified number of emergency stops refers to the specified conditions. A conversion can be made for operation under different conditions: Number of emergency stops $z = W_{max}/W_E$
Coil current	Current to release the brake.
Opening time	Separating time until the brake releases (the specified values refer to the maximum braking torque and rated voltage).
Closing time	Application time until the brake closes (Values refer to the maximum braking torque and at rated voltage).

Note: You will find additional information on mounted holding brakes in the Configuration Manual.

© Siemens 2024

Overview



SIMOTICS M-1FE1 synchronous built-in motors

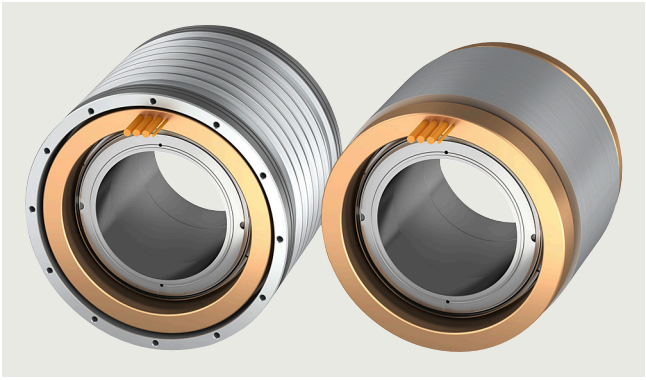

SIMOTICS M-1FE2 built-in motors

The SIMOTICS M-1FE built-in motors are water-cooled synchronous motors that are supplied as stator and rotor components. When the stator and rotor have been mounted to the spindle in the spindle box, a complete spindle unit is created.

Benefits

- Compact and rigid spindle design
- Optimum heat dissipation through water cooling for optimum power density and precision
- Broad portfolio for almost all spindle sizes and machining tasks: Maximum speeds up to 40000 r/min, torques up to 1530 Nm in S1 operation
- High dynamic response for maximum productivity due to permanent-magnet rotors with low inertia
- Low rotor temperatures, especially in the low speed range, and low power loss in the rotor, resulting in reduced bearing temperature rise/spindle expansion
- The stator and rotor are machined **ready for installation** to facilitate quick and simple installation
- Highest accuracy and surface quality on the workpiece due to smooth, accurate spindle motion over the entire speed range
- Large rotor inner bore – advantage for spindle stiffness and ejector rod guide for automatic turning machines
- Compatible system of SINUMERIK, SINAMICS S120 and motor, therefore fast commissioning is ensured

© Siemens 2024

SIMOTICS M-1FE synchronous built-in motors

Application

Water-cooled SIMOTICS M-1FE built-in motors are used in combination with the SINAMICS S120 drive system for applications that require the highest quality of machining, accuracy and running smoothness, as well as very short acceleration times.

There are two main versions of SIMOTICS M-1FE built-in motor available:

- High Torque series
  6-pole/8-pole and 16-pole synchronous motors are available that have been developed for turning and grinding machines with moderate maximum speeds.
  These motors are characterized by a very high torque utilization. The speed control range (n_n : n_{max}) here is approximately 1:2 to 1:4.
- High Speed series
  This series has 4-pole synchronous motors for milling applications. These motors are optimized for high maximum speeds and a speed control range of up to 1:6.

Design

The SIMOTICS M-1FE built-in motor comprises:

- A laminated, permanent-magnet rotor, which, as an option, can be designed with a sleeve for simple mounting and removal.
- A wound stator core with cooling jacket and encapsulated winding overhang
  - Free cable ends, length 0.5 m, 1.5 m and 3.5 m
  - Two integrated Pt1000 temperature sensors (of which 1 is reserve), optionally with full or universal protection
  - A cooling jacket into which the stator has been inserted

Rotor with sleeve

Torque is transmitted to the spindle mechanically with zero-backlash using a cylindrical stepped press fit. The rotor is mounted on the spindle by thermal shrinking.
The rotor with sleeve is pre-balanced and can be removed and subsequently remounted. The bond can be released by pressure-oil injection without affecting the joint surfaces.

Rotor without sleeve

Torque is transmitted to the spindle mechanically with zero-backlash using a cylindrical stepped press fit. The rotor is mounted on the spindle by thermal shrinking.
Removal of the rotor is not possible with this type of mounting. Rotors without sleeves are not pre-balanced.

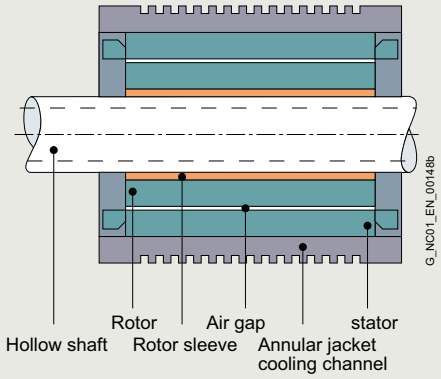

Technical specifications

Product name	SIMOTICS M-1FE synchronous built-in motors
Machine type	Synchronous spindle with permanent-magnet rotor
Constant power range	1:2 ... 1:4 (6-/8-/16-pole)/ 1:4 ... 1:6 (4-pole)
Recommended coolant inlet temperature, approx.	25 °C (77 °F)
Standard protection temperature monitoring	2 × Pt1000 PTC thermistor in the stator winding, 1 of which is reserve
Full protection optional Application example: Machining at motor standstill	In addition to standard protection 3 × PTC thermistor triplet Can be evaluated, e.g. using a thermal motor protection unit: Article No.: 3RN2013-1GW30
Universal protection optional	Full protection + NTC PT3-51F + NTC K227
Stator winding insulation according to EN 60034-1 (IEC 60034-1)	Temperature class 155 (F) for a coolant inlet temperature of 25 °C (77 °F)
Type of construction (similar to ISO)	Individual components: Stator, rotor
Degree of protection according to IEC 60034-5	IP00
Balance quality of rotor according to ISO 1940-1	
• Rotor with sleeve	Version-specific - Pre-balanced, balancing quality G 2.5 reference speed 3600 r/min - Unbalanced for full balancing after assembly
• Rotor without sleeve	Non-balanced
Encoder system	(not included in scope of supply)
Motor connection	Free cable ends with length of 0.5/1.5/3.5 m (1.64/4.92/11.48 ft)
Rating plate	2 units, enclosed separately

A Voltage Protection Module VPM is required for certain motor types if they are operated at max. speed > $n_{max\ Inv}$.

Configuration

You can find the Configuration Manual for SIMOTICS M-1FE1 for SINAMICS S120 at:

https://support.industry.siemens.com/cs/ww/en/ps/21744/man

© Siemens 2024

Characteristic curves

Examples for power/torque characteristics for SIMOTICS M-1FE1084-6WU11 synchronous built-in motor

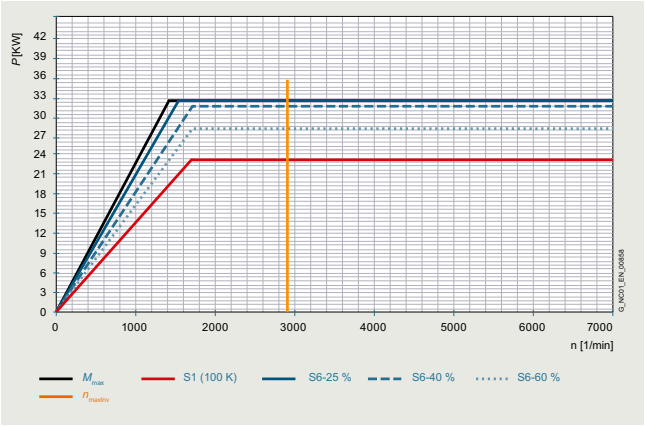

Power characteristic 1FE1084-6WU11

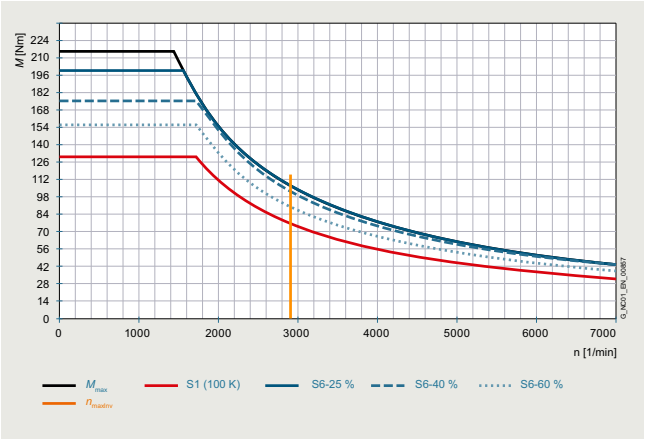

Torque characteristic 1FE1084-6WU11

Characteristics for the SIMOTICS motors are available via selectors through to the exact article number with the Siemens Product Configurator.

Access to the Siemens Product Configurator

The Siemens Product Configurator can be accessed without having to register or log in:

www.siemens.com/spc

→ SIMOTICS M-1FE1 in the SPC

→ SIMOTICS M-1FE2 in the SPC

More information

Liquid cooling

These are third-party products that are fundamentally suitable. It goes without saying that equivalent products from other manufacturers may be used. These recommendations are to be seen as helpful information, not as requirements or regulations. Siemens cannot accept any liability for the quality and properties/features of third-party products.

Please get in touch with the cooler manufacturers listed below for technical information.

ait-deutschland GmbH
www.kkt-chillers.com

BKW Kälte-Wärme-Versorgungstechnik GmbH
www.bkw-kuema.de

DELTATHERM Hirmer GmbH
www.deltatherm.com

Glen Dimplex Deutschland GmbH
Business unit RIEDEL cooling technology
www.riedel-kooling.com

Helmut Schimpke und Team Industriekühlanlagen GmbH + Co. KG
www.schimpke.de

Hydac System GmbH
www.hydac.com

Hyfra Industriekühlanlagen GmbH
www.hyfra.com

Lahntechnik GmbH
www.lahntechnik.com

Pfannenberg GmbH
www.pfannenberg.com

© Siemens 2024

SIMOTICS M-1FE1 synchronous built-in motors

Selection and ordering data

Rated power for duty type		Rated torque		Rated speed	Speed without VPM, max.	Speed, max.	SIMOTICS M-1FE1 synchronous built-in motors	Moment of inertia rotor without sleeve [8]	Weight, approx. stator + rotor without sleeve
P_N S1	S6-40 %	M_N S1	S6-40 %	n_N	$n_{max\ Inv}$	n_{max}		J	m
kW (hp)	kW (hp)	Nm (lb_f-ft)	Nm (lb_f-ft)	r/min	r/min	r/min	Article No.	kgm^2 (lb_f-in-s^2)	kg (lb)
SIMOTICS M-1FE1 High Torque series – water cooling – ΔT = 105 K - line voltage 400 V 3 AC, operation with Active Line Module									
7.4 (9.9)	9.9 (13.3)	4.5 (3.3)	6 (4.43)	15800	18000	18000	**1FE1041-6WM ■ 0 - 6 B A ■**	0.00019 (0.002)	2.8 (6.2)
4 (5.36)	5.3 (7.1)	4.5 (3.3)	6 (4.43)	8500	13100	18000	**1FE1041-6WU ■ ■ - 6 B A ■**	0.00019 (0.002)	2.8 (6.2)
14.4 (19.3)	18.3 (24.5)	11 (8.11)	14 (10.3)	12500	18000	18000	**1FE1042-6WN ■ 0 - 6 B A ■**	0.00033 (0.003)	6.5 (14.3)
11.5 (15.4)	14.7 (19.7)	11 (8.11)	14 (10.3)	10000	15000	18000	**1FE1042-6WR ■ ■ - 6 B A ■**	0.00033 (0.003)	6.5 (14.3)
9.2 (12.3)	11.7 (15.7)	11 (8.11)	14 (10.3)	8000	12000	18000	**1FE1042-6WT ■ ■ - 6 B A ■**	0.00033 (0.003)	6.5 (14.3)
8.3 (11.1)	10.4 (13.9)	10 (7.38)	12.4 (9.1)	8000	15000	15000	**1FE1051-6WK ■ 0 - 6 B ■ ■**	0.00106 (0.009)	5.5 (12.1)
6.3 (8.4)	7.9 (10.6)	10 (7.38)	12.6 (9.3)	6000	12300	15000	**1FE1051-6WN ■ ■ - 6 B ■ ■**	0.00106 (0.009)	5.5 (12.1)
14 (18.8)	18 (24.1)	18 (13.3)	23 (17.0)	7500	15000	15000	**1FE1052-6WK ■ 0 - 6 B ■ ■**	0.00195 (0.017)	8.2 (18.1)
11.5 (15.4)	14.5 (19.4)	20 (14.8)	25.2 (18.6)	5500	12300	15000	**1FE1052-6WN ■ ■ - 6 B ■ ■**	0.00195 (0.017)	8.2 (18.1)
5.7 (7.6)	7.2 (9.7)	18 (13.3)	23 (17.0)	3000	6000	14200	**1FE1052-6WY ■ ■ - 6 B ■ ■**	0.00195 (0.017)	8.2 (18.1)
23 (30.8)	29 (38.9)	37 (27.3)	46 (33.9)	6000	12000	12000	**1FE1054-6WN ■ 0 - 6 B A ■**	0.0038 (0.034)	14.3 (31.5)
20.2 (27.1)	28.9 (38.8)	42 (31.0)	60 (44.3)	4600	8500	12000	**1FE1054-6WR ■ ■ - 6 B A ■**	0.0038 (0.034)	14.3 (31.5)
11.6 (15.6)	15 (20.1)	13 (9.59)	17 (12.5)	8500	12000	12000	**1FE1061-6WH ■ 0 - 6 B ■ ■**	0.00141 (0.012)	5.5 (12.1)
4.8 (6.4)	6.2 (8.3)	13 (9.59)	17 (12.5)	3500	6300	12000	**1FE1061-6WV ■ ■ - 6 B ■ ■**	0.00141 (0.012)	5.5 (12.1)
4 (5.36)	5.3 (7.1)	13 (9.59)	17 (12.5)	3000	5300	10500	**1FE1061-6WY ■ ■ - 6 B ■ ■**	0.00141 (0.012)	5.5 (12.1)
14 (18.8)	17 (22.8)	23 (17.0)	28 (20.7)	5800	9700	12000	**1FE1062-6WQ ■ 1 - 6 B A ■**	0.0028 (0.025)	7.7 (17.0)
25 (33.5)	36.5 (48.9)	56 (41.3)	81 (59.7)	4300	8000	12000	**1FE1064-6WN ■ 1 - 6 B A ■**	0.00553 (0.049)	14.5 (32.0)
20 (26.8)	29 (38.9)	56 (41.3)	81 (59.7)	3400	6300	10000	**1FE1064-6WQ ■ 1 - 6 B A ■**	0.00553 (0.049)	14.5 (32.0)
34 (45.6)	42.5 (57.0)	65 (47.9)	81 (59.7)	5000	8500	9000	**1FE1082-6WP ■ ■ - 6 B ■ ■**	0.01048 (0.093)	14 (30.9)
29.3 (39.3)	36.5 (48.9)	65 (47.9)	81 (59.7)	4300	7700	9000	**1FE1082-6WQ ■ 1 - 6 B ■ ■**	0.01048 (0.093)	14 (30.9)
24.5 (32.9)	30 (40.2)	65 (47.9)	81 (59.7)	3600	6000	9000	**1FE1082-6WS ■ ■ - 6 B ■ ■**	0.01048 (0.093)	14 (30.9)
15 (20.1)	18.7 (25.1)	65 (47.9)	81 (59.7)	2200	3800	9000	**1FE1082-6WW ■ 1 - 6 B ■ ■**	0.01048 (0.093)	14 (30.9)
11.6 (15.6)	14.4 (19.3)	65 (47.9)	81 (59.7)	1700	3100	8000	**1FE1082-6WE ■ 1 - 6 B ■ ■**	0.01048 (0.093)	14 (30.9)
35.5 (47.6)	46.5 (62.4)	97 (71.5)	127 (93.7)	3500	5600	9000	**1FE1083-6WP ■ ■ - 6 B ■ ■**	0.016 (0.142)	24 (52.9)
31 (41.6)	42 (56.3)	130 (95.9)	175 (129)	2300	3800	9000	**1FE1084-6WR ■ 1 - 6 B ■ ■**	0.02067 (0.183)	30 (66.2)
23.1 (31.0)	31.1 (41.7)	130 (95.9)	175 (129)	1700	2900	7000	**1FE1084-6WU ■ 1 - 6 B ■ ■**	0.02067 (0.183)	30 (66.2)
15 (20.1)	19 (25.5)	130 (95.9)	174 (128)	1100	1900	4500	**1FE1084-6WX ■ 1 - 6 B ■ ■**	0.02067 (0.183)	30 (66.2)
10 (13.4)	13.2 (17.7)	28 (20.7)	36 (26.6)	3500	7000	7000	**1FE1091-6WN ■ 0 - 6 B ■ ■**	0.00814 (0.072)	17 (37.5)
6.3 (8.4)	7.5 (10.1)	30 (22.1)	36 (26.6)	2000	4100	7000	**1FE1091-6WS ■ ■ - 6 B ■ ■**	0.00814 (0.072)	17 (37.5)
24.2 (32.5)	31 (41.6)	66 (48.7)	85 (62.7)	3500	7000	7000	**1FE1092-6WN ■ 0 - 6 B ■ ■**	0.01566 (0.139)	26 (57.3)
22 (29.5)	28.5 (38.2)	66 (48.7)	85 (62.7)	3200	5100	7000	**1FE1092-6WR ■ 1 - 6 B ■ ■**	0.01566 (0.139)	26 (57.3)
36.6 (49.1)	47 (63.0)	100 (73.8)	128 (94.4)	3500	7000	7000	**1FE1093-6WN ■ 0 - 6 B ■ ■**	0.02317 (0.205)	36 (79.4)
27.2 (36.5)	34 (45.6)	100 (73.8)	130 (95.9)	2600	4300	7000	**1FE1093-6WS ■ ■ - 6 B ■ ■**	0.02317 (0.205)	36 (79.4)
16.8 (22.5)	21.5 (28.8)	100 (73.8)	128 (94.4)	1600	3400	7000	**1FE1093-6WV ■ 1 - 6 B ■ ■**	0.02317 (0.205)	36 (79.4)
15 (20.1)	18 (24.1)	98 (72.3)	130 (95.9)	1460	2500	6300	**1FE1093-6WX ■ 1 - 6 B ■ ■**	0.02317 (0.205)	36 (79.4)

• Standard protection: 2 × Pt1000 [1] • Full protection: 2 × Pt1000 + 3 × PTC thermistor triplet [2] • Universal protection [3]	1 3 5
• Operation without VPM module • Operation with VPM module	0 1
• Delivery of stator + rotor [1] [4] [5]	6
• Stator with cooling jacket [1] [7]	B
• Without rotor sleeve, d_i see dimensions table • With rotor sleeve, d^* see dimensions table (only for 1FE1061/1FE108/1FE109) • With rotor sleeve, d^{**} see dimensions table (only for 1FE1051/1FE1052/1FE108/1FE109) • With rotor sleeve, d^{**} see dimensions table (only for 1FE1082)	A B C D
• Free cable ends, length 1.5 m (4.92 ft) [6] Cable outlet at larger outer diameter of cooling jacket Cable outlet at smaller outer diameter of cooling jacket • Free cable ends, length 0.5 m (1.64 ft) [6] Cable outlet at larger outer diameter of cooling jacket Cable outlet at smaller outer diameter of cooling jacket	0 1 2 3

S1 = Continuous duty
S6 = Intermittent duty:
Type 1FE104/1FE105/1FE106/1FE1082: Duty cycle time 1 min
Type 1FE1084/1FE109: Duty cycle time 2 min

For footnotes, see next page.

© Siemens 2024

Motor type (repeated)	Rated current for duty type		Voltage Protection Module (VPM)	SINAMICS S120 Motor Module	
				Required rated current	Booksize format Internal air cooling For further components, see SINAMICS S120 drive system
	I_N S1 A	S6-40 % A		I_N S1 to n_{max} A	Article No.
SIMOTICS M-1FE1 High Torque series – water cooling					
1FE1041-6WM...	13	17.5	–	24 [10]	**6SL3120-1TE22-4AD0**
1FE1041-6WU...	8	11	VPM 120	18 [10]	**6SL3120-■TE21-8AD0**
1FE1042-6WN...	24	32	–	45 [10]	**6SL3120-1TE24-5AC0**
1FE1042-6WR...	19	26	VPM 120	30 [10]	**6SL3120-1TE23-0AD0**
1FE1042-6WT...	16	22	VPM 120	24 [9] [10]	**6SL3120-1TE22-0AD0**
1FE1051-6WK...	20	29	–	24 [10]	**6SL3120-1TE22-4AD0**
1FE1051-6WN...	15	22	VPM 120	18 [10]	**6SL3120-■TE21-8AD0**
1FE1052-6WK...	37	54	–	45 [10]	**6SL3120-1TE24-5AC0**
1FE1052-6WN...	30	44	VPM 120	30 [10]	**6SL3120-1TE23-0AD0**
1FE1052-6WY...	13.5	20	VPM 120	18	**6SL3120-■TE21-8AD0**
1FE1054-6WN...	60	88	–	60	**6SL3120-1TE26-0AC0**
1FE1054-6WR...	40	58	VPM 120	45 [9]	**6SL3120-1TE24-5AC0**
1FE1061-6WH...	21	30	–	24	**6SL3120-1TE22-4AD0**
1FE1061-6WV...	9	13	VPM 120	9 [9]	**6SL3120-1TE21-0AD0**
1FE1061-6WY...	8	11.5	VPM 120	9 [9]	**6SL3120-1TE21-0AD0**
1FE1062-6WQ...	28.5	36	VPM 120	30 [9]	**6SL3120-1TE23-0AD0**
1FE1064-6WN...	56	80	VPM 120	60 [9]	**6SL3120-1TE26-0AC0**
1FE1064-6WQ...	43	61	VPM 120	45 [9]	**6SL3120-1TE24-5AC0**
1FE1082-6WP...	65	91	VPM 120	85	**6SL3120-1TE28-5AA3**
1FE1082-6WQ...	60	84	VPM 120	60 [9]	**6SL3120-1TE26-0AC0**
1FE1082-6WS...	45	62	VPM 120	45 [9]	**6SL3120-1TE24-5AC0**
1FE1082-6WW...	30	42	VPM 120	30 [9]	**6SL3120-1TE23-0AD0**
1FE1082-6WE...	24	33	VPM 120	24 [9]	**6SL3120-1TE22-4AD0**
1FE1083-6WP...	66	92	VPM 120	85	**6SL3120-1TE28-5AA3**
1FE1084-6WR...	60	84	VPM 120	60 [9]	**6SL3120-1TE26-0AC0**
1FE1084-6WU...	45	64	VPM 120	45 [9]	**6SL3120-1TE24-5AC0**
1FE1084-6WX...	30	42	VPM 120	30 [9]	**6SL3120-1TE23-0AD0**
1FE1091-6WN...	24	35	–	24	**6SL3120-1TE22-4AD0**
1FE1091-6WS...	15	19	VPM 120	18	**6SL3120-■TE21-8AD0**
1FE1092-6WN...	58	84	–	60	**6SL3120-1TE26-0AC0**
1FE1092-6WR...	41	58	VPM 120	45	**6SL3120-1TE24-5AC0**
1FE1093-6WN...	83	120	–	85	**6SL3120-1TE28-5AA3**
1FE1093-6WS...	53	76	VPM 120	60	**6SL3120-1TE26-0AC0**
1FE1093-6WV...	43	60	VPM 120	45	**6SL3120-1TE24-5AC0**
1FE1093-6WX...	30	45	VPM 120	30 [9]	**6SL3120-1TE23-0AD0**

Motor Module:	
Single Motor Module	**1**
Double Motor Module	**2**

[1] Standard scope of supply: Encapsulated winding with 2 × Pt1000 (1 × reserve).
[2] Full protection option, application example: Load at motor standstill, external tripping device required; Article No.: 3RN2013-1GW30.
[3] Universal protection option: Full protection + NTC PT3-51F + NTC K227.
[4] Ordering a spare stator: 1FE1…-…..-7.W.
[5] Ordering a spare rotor: 1FE1…-…..-3W..
[6] For cable design, see Configuration Manual.
[7] Stator without cooling jacket on request.
[8] For moment of inertia with sleeve, see Configuration Manual.
[9] For operation without external VPM but with converter function IVP (Internal Voltage Protection), a larger Motor Module is required.
[10] PWM clock cycle must be increased.

© Siemens 2024

SIMOTICS M-1FE1 synchronous built-in motors

Selection and ordering data

Rated power for duty type		Rated torque		Rated speed	Speed without VPM, max.	Speed, max.	SIMOTICS M-1FE1 synchronous built-in motors	Moment of inertia rotor without sleeve [8]	Weight, approx. stator + rotor without sleeve
P_N S1	S6-40 %	M_N S1	S6-40 %	n_N	$n_{max\ Inv}$	n_{max}		J	m
kW (hp)	kW (hp)	Nm (lb_f-ft)	Nm (lb_f-ft)	r/min	r/min	r/min	Article No.	kgm^2 (lb_f-in-s^2)	kg (lb)
SIMOTICS M-1FE1 High Torque series – water cooling – ΔT = 105 K – line voltage 400 V 3 AC, operation with Active Line Module									
33 (44.3)	35 (46.9)	150 (111)	190 (140)	2100	3300	6500	**1FE1113-6WU ■ 1 - 6 B ■ ■**	0.047 (0.416)	53 (117)
22 (29.5)	24 (32.2)	150 (111)	190 (140)	1400	2300	5700	**1FE1113-6WX ■ 1 - 6 B ■ ■**	0.047 (0.416)	53 (117)
41.9 (56.2)	53.6 (71.9)	200 (148)	256 (189)	2000	4300	6500	**1FE1114-6WR ■ 1 - 6 B ■ ■**	0.06239 (0.552)	67 (148)
29.3 (39.3)	37.5 (50.3)	200 (148)	256 (189)	1400	3400	6500	**1FE1114-6WT ■ 1 - 6 B ■ ■**	0.06239 (0.552)	67 (148)
20.9 (28.0)	26.8 (35.9)	200 (148)	256 (189)	1000	2300	6000	**1FE1114-6WW ■ 1 - 6 B ■ ■**	0.06239 (0.552)	67 (148)
41.6 (55.8)	45 (60.3)	265 (195)	340 (251)	1500	2600	6500	**1FE1115-6WT ■ 1 - 6 B ■ ■**	0.078 (0.690)	81 (179)
29.1 (39.0)	30 (40.2)	265 (195)	340 (251)	1050	1800	4500	**1FE1115-6WW ■ 1 - 6 B ■ ■**	0.078 (0.690)	81 (179)
37.7 (50.6)	48.3 (64.8)	300 (221)	384 (283)	1200	2800	6500	**1FE1116-6WR ■ 1 - 6 B ■ ■**	0.09285 (0.822)	92 (203)
28.3 (38.0)	36.2 (48.5)	300 (221)	384 (283)	900	2200	5500	**1FE1116-6WT ■ 1 - 6 B ■ ■**	0.09285 (0.822)	92 (203)
22 (29.5)	28 (37.5)	300 (221)	384 (283)	700	1500	4000	**1FE1116-6WW ■ 1 - 6 B ■ ■**	0.09285 (0.822)	92 (203)
24 (32.2)	24 (32.2)	310 (229)	410 (302)	740	1100	3000	**1FE1116-6WY ■ 1 - 6 B ■ ■**	0.09285 (0.822)	92 (203)
61.3 (82.2)	78 (105)	325 (240)	440 (325)	1800	3200	8000	**1FE1143-8WM ■ 1 - 6 B A ■**	0.0859 (0.760)	74.4 (164.1)
38.5 (51.6)	47 (63.0)	320 (236)	440 (325)	1150	1900	5000	**1FE1143-8WQ ■ 1 - 6 B A ■**	0.0859 (0.760)	74.4 (164.1)
63 (84.5)	80 (107)	430 (317)	610 (450)	1400	2600	6500	**1FE1144-8WL ■ 1 - 6 B ■ ■**	0.1145 (1.013)	84.5 (186.3)
49.5 (66.4)	60 (80.5)	430 (317)	610 (450)	1100	2000	4900	**1FE1144-8WQ ■ 1 - 6 B ■ ■**	0.1145 (1.013)	84.5 (186.3)
40.5 (54.3)	51 (68.4)	430 (317)	610 (450)	900	1700	3800	**1FE1144-8WT ■ 1 - 6 B ■ ■**	0.1145 (1.013)	84.5 (186.3)
35.1 (47.1)	40 (53.6)	430 (317)	610 (450)	780	1400	3500	**1FE1144-8WV ■ 1 - 6 B ■ ■**	0.1145 (1.013)	84.5 (186.3)
104 (139)	124 (166) [10]	585 (431)	795 (586) [10]	1700	3100	8000	**1FE1145-8WN ■ 1 - 6 B ■ ■**	0.21636 (1.915) [9]	117 (258)
79.6 (106.7)	97 (130)	585 (431)	795 (586)	1300	2400	6000	**1FE1145-8WQ ■ 1 - 6 B ■ ■**	0.21636 (1.915) [9]	117 (258)
67.4 (90.4)	80 (107)	585 (431)	795 (586)	1100	1900	5000	**1FE1145-8WS ■ 1 - 6 B ■ ■**	0.21636 (1.915) [9]	117 (258)
48 (64.4)	52 (69.7)	585 (431)	795 (586)	780	1300	3500	**1FE1145-8WE ■ 1 - 6 B ■ ■**	0.21636 (1.915) [9]	117 (258)
103 (138)	124 (166) [10]	820 (605)	1110 (819) [10]	1200	2200	5500	**1FE1147-8WN ■ 1 - 6 B ■ ■**	0.28823 (2.551) [9]	155 (342)
81.6 (109.4)	97 (130)	820 (605)	1110 (819)	950	1700	4200	**1FE1147-8WQ ■ 1 - 6 B ■ ■**	0.28823 (2.551) [9]	155 (342)
64.4 (86.4)	80 (107)	820 (605)	1110 (819)	750	1400	3500	**1FE1147-8WS ■ 1 - 6 B ■ ■**	0.28823 (2.551) [9]	155 (342)

• Standard protection: 2 × Pt1000 [1] • Full protection: 2 × Pt1000 + 3 × PTC thermistor triplet [2] • Universal protection [3]	**1** **3** **5**
• Delivery of stator + rotor [1] [4] [5]	**6**
• Stator with cooling jacket [1] [7]	**B**
• Without rotor sleeve (only for 1FE111./1FE1143/1FE1144) • With rotor sleeve, *d** see dimensions table (only for 1FE1114/1FE1116) • With rotor sleeve, *d*** see dimensions table • With rotor sleeve, *d*** see dimensions table (only for 1FE1113/1FE1145/1FE1147) • With rotor sleeve, *d*** see dimensions table (only for 1FE1113/1FE1145)	**A** **B** **C** **D** **E**
• Free cable ends, length 1.5 m (4.92 ft) [6] Cable outlet at larger outer diameter of cooling jacket Cable outlet at smaller outer diameter of cooling jacket • Free cable ends, length 0.5 m (1.64 ft) [6] Cable outlet at larger outer diameter of cooling jacket Cable outlet at smaller outer diameter of cooling jacket	**0** **1** **2** **3**

S1 = Continuous duty
S6 = Intermittent duty:
Type 1FE111/1FE114: Duty cycle time 2 min

For footnotes, see next page.

© Siemens 2024

Motor type (repeated)	Rated current for duty type		Voltage Protection Module (VPM)	SINAMICS S120 Motor Module	
				Required rated current	**Booksize format** Internal air cooling For further components, see SINAMICS S120 drive system
	I_N S1 A	S6-40 % A		I_N S1 to n_{max} A	Article No.
SIMOTICS M-1FE1 High Torque series – water cooling					
1FE1113-6WU...	60	91	VPM 120	60	**6SL3120-1TE26-0AC0**
1FE1113-6WX...	43	62	VPM 120	45	**6SL3120-1TE24-5AC0**
1FE1114-6WR...	108	159	VPM 120	132	**6SL3120-1TE31-3AA3**
1FE1114-6WT...	84	123	VPM 120	85	**6SL3120-1TE28-5AA3**
1FE1114-6WW...	58	85	VPM 120	60	**6SL3120-1TE26-0AC0**
1FE1115-6WT...	85	123	VPM 120	85	**6SL3120-1TE28-5AA3**
1FE1115-6WW...	60	87	VPM 120	60	**6SL3120-1TE26-0AC0**
1FE1116-6WR...	109	160	VPM 120	132	**6SL3120-1TE31-3AA3**
1FE1116-6WT...	84	123	VPM 120	85	**6SL3120-1TE28-5AA3**
1FE1116-6WW...	60	87	VPM 120	60	**6SL3120-1TE26-0AC0**
1FE1116-6WY...	45	65	VPM 120	45	**6SL3120-1TE24-5AC0**
1FE1143-8WM...	120	180	VPM 200	132	**6SL3120-1TE31-3AA3**
1FE1143-8WQ...	77	113	VPM 120	85	**6SL3120-1TE28-5AA3**
1FE1144-8WL...	133	193	VPM 200	200	**6SL3120-1TE32-0AA4**
1FE1144-8WQ...	100	146	VPM 200	132	**6SL3120-1TE31-3AA3**
1FE1144-8WT...	85	124	VPM 120	85	**6SL3120-1TE28-5AA3**
1FE1144-8WV...	71	103	VPM 120	85	**6SL3120-1TE28-5AA3**
1FE1145-8WN...	200	290 [10]	VPM 200	200	**6SL3120-1TE32-0AA4**
1FE1145-8WQ...	158	230	VPM 200	200	**6SL3120-1TE32-0AA4**
1FE1145-8WS...	130	188	VPM 200	132	**6SL3120-1TE31-3AA3**
1FE1145-8WE...	85	128	VPM 120	85	**6SL3120-1TE28-5AA3**
1FE1147-8WN...	200	290 [10]	VPM 200	200	**6SL3120-1TE32-0AA4**
1FE1147-8WQ...	158	230	VPM 200	200	**6SL3120-1TE32-0AA4**
1FE1147-8WS...	130	190	VPM 200	132	**6SL3120-1TE31-3AA3**

Motor Module:	
Single Motor Module	**1**

1) Standard scope of supply: Encapsulated winding with 2 × Pt1000 (1 × reserve).
2) Full protection option, application example: Load at motor standstill, external tripping device required; Article No.: 3RN2013-1GW30.
3) Universal protection option: Full protection + NTC PT3-51F + NTC K227.
4) Ordering a spare stator: 1FE1…-…..-7.W.
5) Ordering a spare rotor: 1FE1…-…..-3W..
6) For cable design, see Configuration Manual.
7) Stator without cooling jacket on request.
8) For moment of inertia with sleeve, see Configuration Manual.
9) Moment of inertia rotor with rotor sleeve, "C" in 15th data position of Article No.
10) Observe the Motor Module limit value.

© Siemens 2024

SIMOTICS M-1FE1 synchronous built-in motors

Selection and ordering data

Rated power for duty type		Rated torque		Rated speed	Speed without VPM, max.	Speed, max.	SIMOTICS M-1FE1 synchronous built-in motors	Moment of inertia rotor	Weight, approx. stator + rotor without sleeve
P_N		M_N		n_N	$n_{max\ Inv}$	n_{max}		J	m
S1	S6-40 %	S1	S6-40 %						
kW (hp)	kW (hp)	Nm (lb_f-ft)	Nm (lb_f-ft)	r/min	r/min	r/min	Article No.	kgm^2 (lb_f-in-s^2)	kg (lb)
SIMOTICS M-1FE1 High Speed series – water cooling – ΔT = 105 K – line voltage 400 V 3 AC, operation with Active Line Module									
12.6 (16.9)	17.6 (23.6)	5 (3.69)	7 (5.16)	24000	40000	40000	**1FE1051-4HC ■ 0 - 6 B A ■**	0.00045 (0.004)	4.1 (9.0)
10 (13.4)	14 (18.8)	5 (3.69)	7 (5.16)	19000	34100	40000	**1FE1051-4HF ■ 1 - 6 B A ■**	0.00045 (0.004)	4.1 (9.0)
6.5 (8.7)	8 (10.7)	6.5 (4.8)	9 (6.64)	9500	17000	30000	**1FE1051-4WN ■ 1 - 6 B A ■**	0.00057 (0.005)	4.2 (9.3)
31.4 (42.1)	35 (46.9)	12 (8.85)	15 (11.1)	25000	40000	40000 [9]	**1FE1052-4HD ■ 0 - 6 B A ■**	0.00087 (0.008)	7.15 (15.77)
23.9 (32.0)	29.8 (40.0)	12 (8.85)	15 (11.1)	19000	32200	40000 [9]	**1FE1052-4HG ■ 1 - 6 B A ■**	0.00087 (0.008)	7.15 (15.77)
17.5 (23.5)	19 (25.5)	13 (9.59)	17 (12.5)	12500	20700	30000	**1FE1052-4WK ■ 1 - 6 B A ■**	0.00110 (0.010)	7.35 (16.21)
11 (14.8)	12 (16.1)	13 (9.59)	18 (13.3)	8000	13100	30000	**1FE1052-4WN ■ 1 - 6 B A ■**	0.00110 (0.010)	7.35 (16.21)
25.5 (34.2)	32.5 (43.6)	18 (13.3)	23 (17.0)	13500	23100	40000 [9]	**1FE1053-4HH ■ 1 - 6 B A ■**	0.00128 (0.011)	10.2 (22.5)
23 (30.8)	25 (33.5)	20 (14.8)	27 (19.9)	11000	14800	30000	**1FE1053-4WJ ■ 1 - 6 B A ■**	0.00163 (0.014)	10.5 (23.2)
16.5 (22.1)	18 (24.1)	20 (14.8)	27 (19.9)	7900	12800	30000	**1FE1053-4WN ■ 1 - 6 B A ■**	0.00163 (0.014)	10.5 (23.2)
28.5 (38.2)	28.5 (38.2)	28 (20.7)	40 (29.5)	9700	17500	24000	**1FE1072-4WH ■ 1 - 6 B A ■**	0.00287 (0.025)	11.2 (24.7)
20 (26.8)	20 (26.8)	28 (20.7)	40 (29.5)	6800	12600	24000	**1FE1072-4WL ■ 1 - 6 B A ■**	0.00287 (0.025)	11.2 (24.7)
16 (21.5)	16 (21.5)	28 (20.7)	40 (29.5)	5500	9900	24000	**1FE1072-4WN ■ 1 - 6 B A ■**	0.00287 (0.025)	11.2 (24.7)
7.3 (9.8)	8.5 (11.4)	28 (20.7)	40 (29.5)	2500	5100	12600	**1FE1072-4WV ■ 1 - 6 B A ■**	0.00287 (0.025)	11.2 (24.7)
45 (60.3)	45 (60.3)	44 (32.5)	67 (49.4)	9700	14800	24000	**1FE1073-4WL ■ 1 - 6 B A ■**	0.0043 (0.038)	16 (35.3)
30 (40.2)	30 (40.2)	42 (31.0)	59 (43.5)	6800	11800	24000	**1FE1073-4WN ■ 1 - 6 B A ■**	0.0043 (0.038)	16 (35.3)
15 (20.1)	15 (20.1)	45 (33.2)	64 (47.2)	3200	5500	14000	**1FE1073-4WT ■ 1 - 6 B A ■**	0.0043 (0.038)	16 (35.3)
48 (64.4)	51 (68.4)	60 (44.3)	86 (63.4)	7700	13400	20000	**1FE1074-4WM ■ 1 - 6 B A ■**	0.00573 (0.051)	21 (46.3)
41 (55.0)	41 (55.0)	56 (41.3)	79 (58.3)	7000	12300	20000	**1FE1074-4WN ■ 1 - 6 B A ■**	0.00573 (0.051)	21 (46.3)
30 (40.2)	33 (44.3)	60 (44.3)	85 (62.7)	4800	8200	20000	**1FE1074-4WR ■ 1 - 6 B A ■**	0.00573 (0.051)	21 (46.3)
25.8 (34.6)	28 (37.5)	60 (44.3)	85 (62.7)	4100	7200	18000	**1FE1074-4WT ■ 1 - 6 B A ■**	0.00573 (0.051)	21 (46.3)
23.9 (32.0)	25 (33.5)	60 (44.3)	80 (59.0)	3800	6300	15500	**1FE1074-4WV ■ 1 - 6 B A ■**	0.00573 (0.051)	21 (46.3)
23.6 (31.6)	27 (36.2)	75 (55.3)	100 (73.8)	3000	5700	14000	**1FE1075-4WQ ■ 1 - 6 B A ■**	0.00741 (0.066)	25.5 (56.2)
33 (44.3)	37 (49.6)	42 (31.0)	55 (40.6)	7500	16500	20000	**1FE1082-4WF ■ 1 - 6 B A ■**	0.00559 (0.049)	15.1 (33.3)
24.5 (32.9)	24.5 (32.9)	42 (31.0)	55 (40.6)	5600	10700	20000	**1FE1082-4WK ■ 1 - 6 B A ■**	0.00559 (0.049)	15.1 (33.3)
15.5 (20.8)	15.5 (20.8)	42 (31.0)	55 (40.6)	3500	7800	20000	**1FE1082-4WN ■ 1 - 6 B A ■**	0.00559 (0.049)	15.1 (33.3)
12 (16.1)	12 (16.1)	42 (31.0)	55 (40.6)	2700	5900	15000	**1FE1082-4WP ■ 1 - 6 B A ■**	0.00559 (0.049)	15.1 (33.3)
8.8 (11.8)	8.8 (11.8)	42 (31.0)	55 (40.6)	2000	4500	11000	**1FE1082-4WR ■ 1 - 6 B A ■**	0.00559 (0.049)	15.1 (33.3)
28 (37.5)	28 (37.5)	63 (46.5)	83 (61.2)	4200	9600	20000	**1FE1083-4WN ■ 1 - 6 B A ■**	0.00847 (0.075)	22 (48.5)
38 (51.0)	38 (51.0)	84 (62.0)	110 (81.1)	4300	9800	20000	**1FE1084-4WN ■ 1 - 6 B A ■**	0.01118 (0.099)	28.5 (62.8)
35 (46.9)	35 (46.9)	78 (57.5)	110 (81.1)	4300	8200	20000	**1FE1084-4WP ■ 1 - 6 B A ■**	0.01118 (0.099)	28.5 (62.8)
30 (40.2)	30 (40.2)	84 (62.0)	110 (81.1)	3400	7600	18000	**1FE1084-4WQ ■ 1 - 6 B A ■**	0.01118 (0.099)	28.5 (62.8)
26.4 (35.4)	26.4 (35.4)	84 (62.0)	110 (81.1)	3000	5900	15000	**1FE1084-4WT ■ 1 - 6 B A ■**	0.01118 (0.099)	28.5 (62.8)
22.9 (30.7)	23 (30.8)	84 (62.0)	110 (81.1)	2600	4900	12000	**1FE1084-4WV ■ 1 - 6 B A ■**	0.01118 (0.099)	28.5 (62.8)
38 (51.0)	38 (51.0)	105 (77.4)	138 (102)	3500	7700	18000	**1FE1085-4WN ■ 1 - 6 B A ■**	0.01388 (0.123)	35 (77.2)
33 (44.3)	33 (44.3)	105 (77.4)	140 (103)	3000	6500	16000	**1FE1085-4WQ ■ 1 - 6 B A ■**	0.01388 (0.123)	35 (77.2)
24 (32.2)	24 (32.2)	105 (77.4)	140 (103)	2200	4700	12000	**1FE1085-4WT ■ 1 - 6 B A ■**	0.01388 (0.123)	35 (77.2)

• Standard protection: 2 × Pt1000 [1]	**1**
• Full protection: 2 × Pt1000 + 3 × PTC thermistor triplet [2]	**3**
• Universal protection [3]	**5**
• Operation without VPM module	**0**
• Operation with VPM module	**1**
• Delivery of stator + rotor [1] [4] [5]	**6**
• Stator with cooling jacket [1] [7]	**B**
• Without rotor sleeve	**A**
• Free cable ends, length 1.5 m (4.92 ft) [6] Cable outlet at larger outer diameter of cooling jacket Cable outlet at smaller outer diameter of cooling jacket	**0** **1**
• Free cable ends, length 0.5 m (1.64 ft) [6] Cable outlet at larger outer diameter of cooling jacket Cable outlet at smaller outer diameter of cooling jacket	**2** **3**

S1 = Continuous duty
S6 = Intermittent duty:
Type 1FE105/1FE107: Duty cycle time 1 min
Type 1FE108: Duty cycle time 2 min

For footnotes, see next page.

© Siemens 2024

Motor type (repeated)	Rated current for duty type		Voltage Protection Module (VPM)	SINAMICS S120 Motor Module	
				Required rated current	**Booksize format** Internal air cooling For further components, see SINAMICS S120 drive system
	I_N			I_N	
	S1	S6-40 %		S1 to n_{max}	
	A	A		A	Article No.
SIMOTICS M-1FE1 High Speed series – water cooling					
1FE1051-4HC...	25	34.5	–	45 [8]	**6SL3120-1TE24-5AC0**
1FE1051-4HF...	21	29	VPM 120	45 [8]	**6SL3120-1TE24-5AC0**
1FE1051-4WN...	12	17	VPM 120	18 [8]	**6SL3120-1TE21-8AD0**
1FE1052-4HD...	57	75	–	132 [8]	**6SL3120-1TE31-3AA3**
1FE1052-4HG...	44	59	VPM 120	85 [8]	**6SL3120-1TE28-5AA3**
1FE1052-4WK...	30	39	VPM 120	45 [8]	**6SL3120-1TE24-5AC0**
1FE1052-4WN...	20	26	VPM 120	30 [8]	**6SL3120-1TE23-0AD0**
1FE1053-4HH...	46	63	VPM 120	85 [8]	**6SL3120-1TE28-5AA3**
1FE1053-4WJ...	36	49	VPM 120	45 [8]	**6SL3120-1TE24-5AC0**
1FE1053-4WN...	29	38	VPM 120	45 [8]	**6SL3120-1TE24-5AC0**
1FE1072-4WH...	64	96	VPM 120	85 [8]	**6SL3120-1TE28-5AA3**
1FE1072-4WL...	45	68	VPM 120	45	**6SL3120-1TE24-5AC0**
1FE1072-4WN...	36	54	VPM 120	45	**6SL3120-1TE24-5AC0**
1FE1072-4WV...	18	26.5	VPM 120	18	**6SL3120-1TE21-8AD0**
1FE1073-4WL...	83	124	VPM 120	132 [8]	**6SL3120-1TE31-3AA3**
1FE1073-4WN...	65	97	VPM 120	85 [8]	**6SL3120-1TE28-5AA3**
1FE1073-4WT...	30	44	VPM 120	30	**6SL3120-1TE23-0AD0**
1FE1074-4WM...	97	144	VPM 120	132	**6SL3120-1TE31-3AA3**
1FE1074-4WN...	91	136	VPM 120	132	**6SL3120-1TE31-3AA3**
1FE1074-4WR...	58	85	VPM 120	60	**6SL3120-1TE26-0AC0**
1FE1074-4WT...	53	77	VPM 120	60	**6SL3120-1TE26-0AC0**
1FE1074-4WV...	45	66	VPM 120	45	**6SL3120-1TE24-5AC0**
1FE1075-4WQ...	51	75	VPM 120	60	**6SL3120-1TE26-0AC0**
1FE1082-4WF...	81	115	VPM 120	85	**6SL3120-1TE28-5AA3**
1FE1082-4WK...	55	78	VPM 120	60	**6SL3120-1TE26-0AC0**
1FE1082-4WN...	42	60	VPM 120	45	**6SL3120-1TE24-5AC0**
1FE1082-4WP...	30	43	VPM 120	30	**6SL3120-1TE23-0AD0**
1FE1082-4WR...	24	34	VPM 120	24	**6SL3120-1TE22-4AD0**
1FE1083-4WN...	77	110	VPM 120	85	**6SL3120-1TE28-5AA3**
1FE1084-4WN...	105	150	VPM 120	132	**6SL3120-1TE31-3AA3**
1FE1084-4WP...	79	120	VPM 120	85	**6SL3120-1TE28-5AA3**
1FE1084-4WQ...	83	119	VPM 120	85	**6SL3120-1TE28-5AA3**
1FE1084-4WT...	60	85	VPM 120	60	**6SL3120-1TE26-0AC0**
1FE1084-4WV...	50	71	VPM 120	60	**6SL3120-1TE26-0AC0**
1FE1085-4WN...	105	150	VPM 120	132	**6SL3120-1TE31-3AA3**
1FE1085-4WQ...	85	120	VPM 120	85	**6SL3120-1TE28-5AA3**
1FE1085-4WT...	60	85	VPM 120	60	**6SL3120-1TE26-0AC0**

Motor Module: Single Motor Module	**1**

1) Standard scope of supply: Encapsulated winding with 2 × Pt1000 (1 × reserve).
2) Full protection option, application example: Load at motor standstill, external tripping device required; Article No.: 3RN2013-1GW30.
3) Universal protection option: Full protection + NTC PT3-51F + NTC K227.
4) Ordering a spare stator: 1FE1…-…..-7.W.
5) Ordering a spare rotor: 1FE1…-…..-3W..
6) For cable design, see Configuration Manual.
7) Stator without cooling jacket on request.
8) PWM clock cycle must be increased.
9) Series reactor required, see Configuration Manual.

© Siemens 2024

SIMOTICS M-1FE1 synchronous built-in motors

Selection and ordering data

Rated power for duty type		Rated torque		Rated speed	Speed without VPM, max.	Speed, max.	SIMOTICS M-1FE1 synchronous built-in motors	Moment of inertia rotor	Weight, approx. stator + rotor without sleeve
P_N		M_N		n_N	$n_{max\ Inv}$	n_{max}		J	m
S1	S6-40 %	S1	S6-40 %						
kW (hp)	kW (hp)	Nm (lb_f-ft)	Nm (lb_f-ft)	r/min	r/min	r/min	Article No.	kgm^2 (lb_f-in-s^2)	kg (lb)
SIMOTICS M-1FE1 High Speed series – water cooling – ΔT = 105 K – line voltage 400 V 3 AC, operation with Active Line Module									
16 (21.5)	16 (21.5)	45 (33.2)	60 (44.3)	3400	7300	18000	**1FE1092-4WP ■ 1 - 6 B R ■**	0.00916 (0.081) [8]	30 (66.2)
10.5 (14.1)	10.5 (14.1)	50 (36.9)	64 (47.2)	2000	4100	10000	**1FE1092-4WV ■ 1 - 6 B R ■**	0.00916 (0.081) [8]	30 (66.2)
35.3 (47.3)	35 (46.9)	75 (55.3)	103 (76.0)	4500	9500	18000	**1FE1093-4WH ■ 1 - 6 B ■ ■**	0.01350 (0.119) [8]	41.6 (91.7)
27.5 (36.9)	27.5 (36.9)	75 (55.3)	103 (76.0)	3500	7200	18000	**1FE1093-4WM ■ 1 - 6 B ■ ■**	0.01350 (0.119) [8]	41.6 (91.7)
26 (34.9)	26 (34.9)	75 (55.3)	103 (76.0)	3300	6800	16000	**1FE1093-4WN ■ 1 - 6 B ■ ■**	0.01350 (0.119) [8]	41.6 (91.7)
46 (61.7)	46 (61.7)	100 (73.8)	137 (101)	4400	9200	18000	**1FE1094-4WK ■ 1 - 6 B ■ ■**	0.01808 (0.160) [8]	48.5 (106.9)
40 (53.6)	40 (53.6)	100 (73.8)	137 (101)	3800	7600	18000	**1FE1094-4WL ■ 1 - 6 B ■ ■**	0.01808 (0.160) [8]	48.5 (106.9)
26 (34.9)	26 (34.9)	100 (73.8)	125 (92.2)	2500	5100	13000	**1FE1094-4WS ■ 1 - 6 B ■ ■**	0.01808 (0.160) [8]	48.5 (106.9)
18 (24.1)	18 (24.1)	95 (70.1)	119 (87.8)	1800	3900	10000	**1FE1094-4WU ■ 1 - 6 B ■ ■**	0.01808 (0.160) [8]	48.5 (106.9)
46 (61.7)	46 (61.7)	125 (92.2)	171 (126)	3500	7300	18000	**1FE1095-4WN ■ 1 - 6 B ■ ■**	0.02242 (0.198) [8]	56.8 (125.2)
52 (69.7)	52 (69.7)	150 (111)	206 (152)	3300	6800	16000	**1FE1096-4WN ■ 1 - 6 B ■ ■**	0.02700 (0.239) [8]	64.2 (141.6)
38.5 (51.6)	45 (60.3)	102 (75.2)	142 (105)	3600	7200	16000	**1FE1103-4WN ■ 1 - 6 B A ■**	0.01589 (0.141)	34 (75.0)
35 (46.9)	38 (51.0)	100 (73.8)	130 (95.9)	3300	6200	15000	**1FE1103-4WQ ■ 1 - 6 B A ■**	0.01589 (0.141)	34 (75.0)
26 (34.9)	29 (38.9)	100 (73.8)	130 (95.9)	2500	4700	12000	**1FE1103-4WT ■ 1 - 6 B A ■**	0.01589 (0.141)	34 (75.0)
75 (101)	75 (101)	136 (100)	175 (129)	5300	9300	16000	**1FE1104-4WL ■ 1 - 6 B A ■**	0.02098 (0.186)	42.5 (93.7)
54 (72.4)	64 (85.8)	136 (100)	189 (139)	3800	7700	16000	**1FE1104-4WN ■ 1 - 6 B A ■**	0.02098 (0.186)	42.5 (93.7)
53.4 (71.6)	64 (85.8)	170 (125)	236 (174)	3000	6100	16000	**1FE1105-4WN ■ 1 - 6 B A ■**	0.02608 (0.231)	52 (115)
46.3 (62.1)	55 (73.8)	170 (125)	230 (170)	2600	4900	12200	**1FE1105-4WQ ■ 1 - 6 B A ■**	0.02608 (0.231)	52 (115)
41 (55.0)	44 (59.0)	170 (125)	230 (170)	2300	4300	10500	**1FE1105-4WS ■ 1 - 6 B A ■**	0.02608 (0.231)	52 (115)
72.6 (97.4)	85 (114)	204 (150)	283 (209)	3400	6900	16000	**1FE1106-4WN ■ 1 - 6 B A ■**	0.03147 (0.279)	61.5 (135.6)
62 (83.1)	66 (88.5)	204 (150)	270 (199)	2900	5400	14000	**1FE1106-4WR ■ 1 - 6 B A ■**	0.03147 (0.279)	61.5 (135.6)
56.5 (75.8)	60 (80.5)	200 (148)	270 (199)	2700	5100	12500	**1FE1106-4WS ■ 1 - 6 B A ■**	0.03147 (0.279)	61.5 (135.6)
25 (33.5)	30 (40.2)	200 (148)	270 (199)	1200	2500	6000	**1FE1106-4WY ■ 1 - 6 B A ■**	0.03147 (0.279)	61.5 (135.6)
63 (84.5)	75 (101)	200 (148)	275 (203)	3000	6100	14000	**1FE1124-4WN ■ 1 - 6 B A ■**	0.05112 (0.452)	62.6 (138.0)
52.4 (70.3)	55.9 (75.0)	200 (148)	275 (203)	2500	4900	12000	**1FE1124-4WQ ■ 1 - 6 B A ■**	0.05112 (0.452)	62.6 (138.0)
78.5 (105.3)	90 (121)	250 (184)	345 (254)	3000	5800	14000	**1FE1125-4WN ■ 1 - 6 B A ■**	0.06337 (0.561)	76 (168)
65.5 (87.8)	82 (110)	250 (184)	345 (254)	2500	5300	12500	**1FE1125-4WP ■ 1 - 6 B A ■**	0.06337 (0.561)	76 (168)
57.6 (77.2)	65 (87.2)	250 (184)	345 (254)	2200	4200	10000	**1FE1125-4WQ ■ 1 - 6 B A ■**	0.06337 (0.561)	76 (168)
94 (126)	112 (150) [9]	300 (221)	410 (302) [9]	3000	6100	14000	**1FE1126-4WN ■ 1 - 6 B A ■**	0.07604 (0.673)	90 (198)
78.5 (105.3)	100 (134) [9]	300 (221)	410 (302) [9]	2500	5400	12500	**1FE1126-4WP ■ 1 - 6 B A ■**	0.07604 (0.673)	90 (198)
63 (84.5)	82 (110)	300 (221)	410 (302)	2000	4400	10000	**1FE1126-4WQ ■ 1 - 6 B A ■**	0.07604 (0.673)	90 (198)

• Standard protection: 2 × Pt1000 [1] • Full protection: 2 × Pt1000 + 3 × PTC thermistor triplet [2] • Universal protection [3]	**1** **3** **5**
• Delivery of stator + rotor [1] [4] [5]	**6**
• Stator with cooling jacket [1] [7]	**B**
• Without rotor sleeve • Without rotor sleeve, d_i = 80 mm (3.15 in) only for 1FE109.-4W...	**A** **R**
• Free cable ends, length 1.5 m (4.92 ft) [6] Cable outlet at larger outer diameter of cooling jacket Cable outlet at smaller outer diameter of cooling jacket	 **0** **1**
• Free cable ends, flexible, length 0.5 m (1.64 ft) [6] Cable outlet at larger outer diameter of cooling jacket Cable outlet at smaller outer diameter of cooling jacket	 **2** **3**

S1 = Continuous duty
S6 = Intermittent duty:
Type 1FE109/1FE110/1FE112: Duty cycle time 2 min

For footnotes, see next page.

© Siemens 2024

Motor type (repeated)	Rated current for duty type		Voltage Protection Module (VPM)	SINAMICS S120 Motor Module	
				Required rated current	**Booksize format** Internal air cooling For further components, see SINAMICS S120 drive system
	I_N S1 A	S6-40 % A		I_N S1 to n_{max} A	Article No.
SIMOTICS M-1FE1 High Speed series – water cooling					
1FE1092-4WP...	41	58	VPM 120	45	**6SL3120-1TE24-5AC0**
1FE1092-4WV...	24	35	VPM 120	24	**6SL3120-1TE22-4AD0**
1FE1093-4WH...	83	120	VPM 120	85	**6SL3120-1TE28-5AA3**
1FE1093-4WM...	64	92	VPM 120	85	**6SL3120-1TE28-5AA3**
1FE1093-4WN...	60	86	VPM 120	60	**6SL3120-1TE26-0AC0**
1FE1094-4WK...	108	156	VPM 120	132	**6SL3120-1TE31-3AA3**
1FE1094-4WL...	90	130	VPM 120	132	**6SL3120-1TE31-3AA3**
1FE1094-4WS...	60	85	VPM 120	60	**6SL3120-1TE26-0AC0**
1FE1094-4WU...	45	64	VPM 120	45	**6SL3120-1TE24-5AC0**
1FE1095-4WN...	108	156	VPM 120	132	**6SL3120-1TE31-3AA3**
1FE1096-4WN...	120	173	VPM 120	132	**6SL3120-1TE31-3AA3**
1FE1103-4WN...	84	127	VPM 120	85	**6SL3120-1TE28-5AA3**
1FE1103-4WQ...	68	98	VPM 120	85	**6SL3120-1TE28-5AA3**
1FE1103-4WT...	53	75	VPM 120	60	**6SL3120-1TE26-0AC0**
1FE1104-4WL...	140	200	VPM 200	200	**6SL3120-1TE32-0AA4**
1FE1104-4WN...	120	181	VPM 200	132	**6SL3120-1TE31-3AA3**
1FE1105-4WN...	120	180	VPM 200	132	**6SL3120-1TE31-3AA3**
1FE1105-4WQ...	95	135	VPM 120	132	**6SL3120-1TE31-3AA3**
1FE1105-4WS...	84	120	VPM 120	85	**6SL3120-1TE28-5AA3**
1FE1106-4WN...	159	240	VPM 200	200	**6SL3120-1TE32-0AA4**
1FE1106-4WR...	128	184	VPM 200	132	**6SL3120-1TE31-3AA3**
1FE1106-4WS...	120	170	VPM 200	132	**6SL3120-1TE31-3AA3**
1FE1106-4WY...	60	85	VPM 200	60	**6SL3120-1TE26-0AC0**
1FE1124-4WN...	135	198	VPM 200	200	**6SL3120-1TE32-0AA4**
1FE1124-4WQ...	110	162	VPM 200	132	**6SL3120-1TE31-3AA3**
1FE1125-4WN...	162	240	VPM 200	200	**6SL3120-1TE32-0AA4**
1FE1125-4WP...	147	215	VPM 200	200	**6SL3120-1TE32-0AA4**
1FE1125-4WQ...	116	169	VPM 200	132	**6SL3120-1TE31-3AA3**
1FE1126-4WN...	200	295 [9]	VPM 200	200	**6SL3120-1TE32-0AA4**
1FE1126-4WP...	180	265 [9]	VPM 200	200	**6SL3120-1TE32-0AA4**
1FE1126-4WQ...	147	215	VPM 200	200	**6SL3120-1TE32-0AA4**

Motor Module: Single Motor Module	**1**

[1] Standard scope of supply: Encapsulated winding with 2 × Pt1000 (1 × reserve).
[2] Full protection option, application example: Load at motor standstill, external tripping device required; Article No.: 3RN2013-1GW30.
[3] Universal protection option: Full protection + NTC PT3-51F + NTC K227.
[4] Ordering a spare stator: 1FE1…-…..-7.W.
[5] Ordering a spare rotor: 1FE1…-…..-3W..
[6] For cable design, see Configuration Manual.
[7] Stator without cooling jacket on request.
[8] For moment of inertia for version R without rotor sleeve d_i = 80 mm (3.15 in), see Configuration Manual.
[9] Observe the Motor Module limit value.

© Siemens 2024

SIMOTICS M-1FE2 synchronous built-in motors

Selection and ordering data

Rated power for duty type		Rated torque	Torque at low speeds for duty type	Rated speed	Speed without VPM, max.	Speed, max.	**SIMOTICS M-1FE2 synchronous built-in motors**	Moment of inertia rotor with C sleeve	Weight, stator with cooling jacket
P_N		M_N		n_N	$n_{max\ Inv}$	n_{max}		J	m
S1	S6-40 %	S1	S6-40 %						
kW (hp)	kW (hp)	Nm (lb_f-ft)	Nm (lb_f-ft)	r/min	r/min	r/min	Article No.	kgm^2 (lb_f-in-s^2)	kg (lb)
SIMOTICS M-1FE2 High Torque series – water cooling – ΔT = 100 K – line voltage 400 V 3 AC, operation with Active Line Module									
68 (91.2)	85.9 (115.2)	640 (472)	916 (676)	1000	2000	4200	**1FE2182-8LH ■ ■ - ■ ■ C 1**	0.75 (6.64)	110 (243)
34 (45.6)	40.8 (54.7)	650 (479)	925 (682)	500	1000	2400	**1FE2182-8LN ■ ■ - ■ ■ C 1**	0.75 (6.64)	110 (243)
88 (118)	110 (148)	840 (620)	1190 (878)	1000	2000	4200	**1FE2183-8LH ■ ■ - ■ ■ C 1**	0.9 (8.0)	130 (287)
44.5 (59.7)	52.4 (70.3)	840 (620)	1197 (883)	500	1000	2400	**1FE2183-8LN ■ ■ - ■ ■ C 1**	0.9 (8.0)	130 (287)
105 (141)	130.9 (175.5)	1000 (738)	1425 (1051)	1000	2000	4200	**1FE2184-8LH ■ ■ - ■ ■ C 1**	1.05 (9.29)	150 (331)
85 (114)	106.4 (142.7)	1010 (745)	1437 (1060)	800	1600	4010	**1FE2184-8LK ■ ■ - ■ ■ C 1**	1.05 (9.29)	150 (331)
53 (71.1)	62.8 (84.2)	1010 (745)	1437 (1060)	500	1000	2400	**1FE2184-8LN ■ ■ - ■ ■ C 1**	1.05 (9.29)	150 (331)
122 (164)	149.7 (200.7)	1160 (856)	1653 (1219)	1000	1900	4200	**1FE2185-8LH ■ ■ - ■ ■ C 1**	1.2 (10.6)	170 (375)
87 (117)	106.3 (142.5)	1180 (870)	1665 (1228)	700	1400	3440	**1FE2185-8LL ■ ■ - ■ ■ C 1**	1.2 (10.6)	170 (375)
62 (83.1)	73.8 (99.0)	1180 (870)	1646 (1214)	500	1000	2420	**1FE2185-8LN ■ ■ - ■ ■ C 1**	1.2 (10.6)	170 (375)
142 (190)	171.7 (230.2)	1350 (996)	1932 (1425)	1000	1900	4200	**1FE2186-8LH ■ ■ - ■ ■ C 1**	1.35 (11.95)	190 (419)
86 (115)	104.9 (140.7)	1370 (1011)	1936 (1428)	600	1200	3000	**1FE2186-8LM ■ ■ - ■ ■ C 1**	1.35 (11.95)	190 (419)
72 (96.6)	84.8 (113.7)	1370 (1011)	1941 (1432)	500	1000	2400	**1FE2186-8LN ■ ■ - ■ ■ C 1**	1.35 (11.95)	190 (419)
159 (213)	193.7 (259.8)	1510 (1114)	2151 (1587)	1000	1900	4200	**1FE2187-8LH ■ ■ - ■ ■ C 1**	1.49 (13.19)	210 (463)
80 (107)	100 (134)	1530 (1129)	2156 (1590)	500	1100	2670	**1FE2187-8LN ■ ■ - ■ ■ C 1**	1.49 (13.19)	210 (463)

Winding protection					
• Standard protection 2 × Pt1000 [1]	**1**				
• Full protection: 2 × Pt1000 + 3 × PTC thermistor triplet [2]	**3**				
• Universal protection [3]	**5**				
Cable outlet [6]					
• Free cable ends, length 0.5 m (1.64 ft), cable outlet large outer diameter or stator without cooling jacket		**0**			
• Free cable ends, length 0.5 m (1.64 ft), cable outlet small outer diameter		**1**			
• Free cable ends, length 1.5 m (4.92 ft), cable outlet large outer diameter or stator without cooling jacket		**2**			
• Free cable ends, length 1.5 m (4.92 ft), cable outlet small outer diameter		**3**			
Delivery					
• Delivery of stator + rotor [1] [4] [5] [7]			**1**		
Stator					
• Stator without cooling jacket				**A**	
• Stator with cooling jacket				**C**	
Rotor					
• Standard rotor sleeve					**C**
Version status					**1**

S1 = Continuous duty
S6 = Intermittent duty:

Additional options
Z = T00 ... Rotor prebalanced

For footnotes, see next page.

© Siemens 2024

Motor type (repeated)	Rated current for duty type		Voltage Protection Module (VPM)	SINAMICS S120 Motor Module		
				Quantity Motor Modules	Required rated current	**Booksize format** Internal air cooling For further components, see SINAMICS S120 drive system
	I_N S1 A	S6-40 % A			I_N S1 to n_{max} A	Article No.
SIMOTICS M-1FE2 High Torque series – water cooling						
1FE2182-8LH...	145	214	VPM 200	1	200	**6SL3120-1TE32-0AA4**
1FE2182-8LN...	73	108	VPM 120	1	85	**6SL3120-1TE28-5AA3**
1FE2183-8LH...	189	278	VPM 200	1	200	**6SL3120-1TE32-0AA4**
1FE2183-8LN...	95	140	VPM 200	1	132	**6SL3120-1TE31-3AA3**
1FE2184-8LH...	225	333	2 × VPM 200	2	2 × 132	**6SL3120-1TE31-3AA3**
1FE2184-8LK...	190	280	VPM 200	1	200	**6SL3120-1TE32-0AA4**
1FE2184-8LN...	114	168	VPM 200	1	132	**6SL3120-1TE31-3AA3**
1FE2185-8LH...	250	368	2 × VPM 200	2	2 × 132	**6SL3120-1TE31-3AA3**
1FE2185-8LL...	189	278	VPM 200	1	200	**6SL3120-1TE32-0AA4**
1FE2185-8LN...	132	194	VPM 200	1	132	**6SL3120-1TE31-3AA3**
1FE2186-8LH...	290	424	2 × VPM 200	2	2 × 200	**6SL3120-1TE32-0AA4**
1FE2186-8LM...	192	283	VPM 200	1	200	**6SL3120-1TE32-0AA4**
1FE2186-8LN...	154	227	VPM 200	1	200	**6SL3120-1TE32-0AA4**
1FE2187-8LH...	325	479	2 × VPM 200	2	2 × 200	**6SL3120-1TE32-0AA4**
1FE2187-8LN...	190	280	VPM 200	1	200	**6SL3120-1TE32-0AA4**

Motor Module:	
Single Motor Module	**1**

8
2

1) Standard scope of supply: Impregnated winding with 2 × Pt1000 (1 × reserve).
2) Full protection option, application example: Load at motor standstill, external tripping device required; Article No.: 3RN2013-1GW30.
3) Universal protection option: Full protection + NTC PT3-51F + NTC K227.
4) Ordering a spare stator: 1FE2…-…..-2...
5) Ordering a spare rotor: 1FE2…-…..-3...
6) For cable design, see Configuration Manual.
7) Standard rotor is not pre-balanced.

© Siemens 2024

SIMOTICS M-1FE2 asynchronous built-in motors

Overview

The SIMOTICS M-1FE2 product series is the new generation of built-in asynchronous motors for directly driven motor spindles in turning, milling, grinding and multitasking machines.

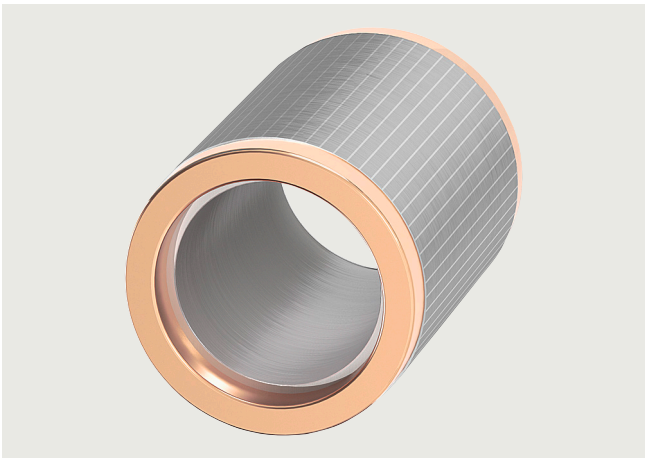

SIMOTICS M-1FE2 asynchronous built-in motor, CU rotor

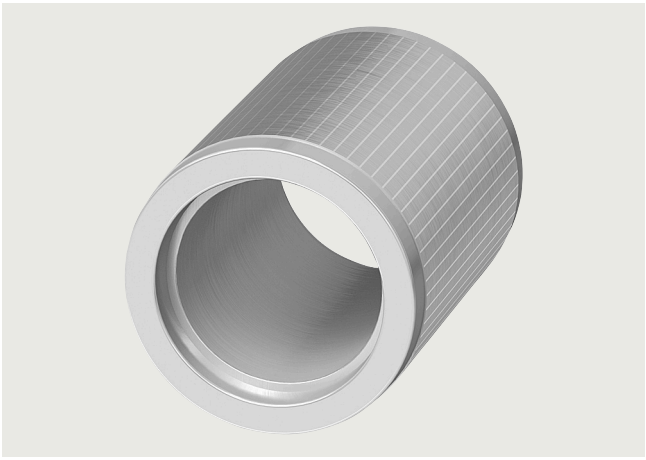

SIMOTICS M-1FE2 asynchronous built-in motor, AL rotor

Compared with the previous 1PH2 series, they are characterized by significantly improved torque density, higher maximum speeds, a wider constant power range and higher overload.

As a consequence, SIMOTICS M-1FE1/M-1FE2 built-in synchronous motors, this means that applications for machines in job shops and mold making, as well as turning, milling and grinding machines can be addressed more intensively.

Benefits

- Wide range of applications and high surface quality
- Optimum heat dissipation for maximum precision (encapsulated winding)
- Wide continuous power range and high overload:
  - for constant cutting performance when turning
  - short acceleration times for milling
- Safe temperature monitoring with Pt1000 (Option: PTC or NTC)
- Compact motor length compared with previous 1PH2 series and large internal rotor bore
  - advantage for the ejector rod guide of automatic turning machines and for higher spindle stiffnesses
- Harmonized system comprising SINUMERIK, SINAMICS S120 and motor
  - therefore ensuring fast commissioning.

Application

The water-cooled SIMOTICS M-1FE2 asynchronous built-in motors are used in combination with the SINAMICS S120 drive system for applications that require the highest quality of machining, accuracy and running smoothness, as well as very short acceleration times.

Mainly used for:

- Flexible combination for applications with high speeds or high torques
- Job shops and mold making
  - (high accuracy and high surface quality)
- Turning, milling and grinding applications

Design

All frame sizes are available in both winding versions, star connection and star-delta connection:

The following variants are possible:

- Stator version without cooling jacket (on request also with cooling jacket)
- Rotor version without rotor sleeve
  - in copper for the highest torque version
  - in aluminum for the highest speeds (on request also with rotor sleeve)
- Flexible connection cables 0.5/1.5 m

Additional lengths are available on request.

© Siemens 2024

Technical specifications

Product name	SIMOTICS M-1FE2 asynchronous built-in motor
Machine type	Asynchronous spindle with squirrel-cage rotor, aluminum or copper
Constant power range	Up to 1:8 (star connection) or 1:10 for star-delta connection (8-pole)
Recommended coolant inlet temperature, approx.	20 °C (68 °F) (max. 40 °C (104 °F) with derating)
Standard protection temperature monitoring	2 × Pt1000 PTC thermistors in the stator winding, 1 × spare
Full protection optional Application example: Machining when the motor is at a zero speed	In addition to standard protection 3 × PTC thermistor triplet Can be evaluated, e.g. using a thermal motor protection unit: Article No.: 3RN2013-1GW30
Universal protection optional	Full protection + NTC PT3-51F + NTC K227
Stator winding insulation according to EN 60034-1 (IEC 60034-1)	Temperature class 155 (F) for a coolant intake temperature of 20 °C (68 °F) (max. 40 °C (104 °F) with derating)
Type of construction (similar to ISO)	Individual components: Stator, rotor
Degree of protection according to IEC 60034-5	IP00
Balance quality of rotor according to ISO 1940-1	Not pre-balanced, balancing using external balancing planes
Encoder system	Typical: Hollow shaft incremental encoder sin/cos 1 V_{pp} (Not included in the scope of delivery)
Motor connection	Free cable ends with length of 0.5/1.5 m (1.64/4.92 ft)
Rating plate	2 units, enclosed separately

Configuration

You can find the Configuration Manual for SIMOTICS M-1FE2 for SINAMICS S120 at:

https://support.industry.siemens.com/cs/ww/en/view/109474362

Characteristic curves

Characteristics for the SIMOTICS motors are available via selectors through to the exact article number with the Siemens Product Configurator.

Access to the Siemens Product Configurator

The Siemens Product Configurator can be accessed having to register or log in:

www.siemens.com/spc

→ SIMOTICS M-1FE2 in the SPC

Characteristic curves

Examples for power/torque characteristics for SIMOTICS M-1FE2093-8AG..-...1 asynchronous built-in motor

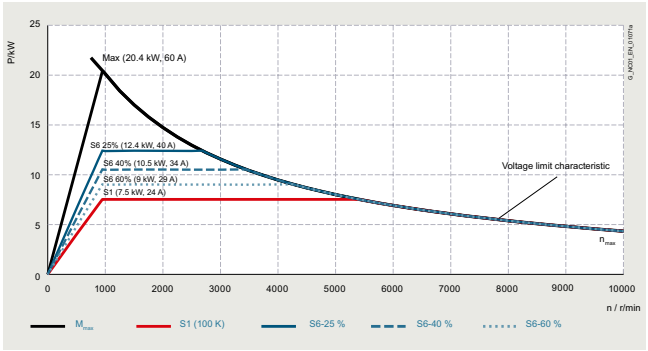

Power characteristic SIMOTICS M-1FE2093-8AG.. - ...1

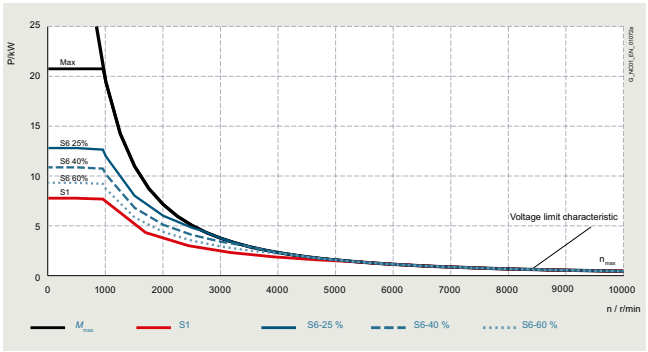

Torque characteristic SIMOTICS M-1FE2093-8AG.. - ...1

More information

You can find more information on the internet at:

https://siemens.com/online-support

Technical specifications and characteristic curves of SIMOTICS M-1FE2 can be found at:

https://support.industry.siemens.com/cs/ww/en/view/109783767

You can find the Hardware Installation Manual for SIMOTICS S-1FE2 for SINAMICS S120 at:

https://support.industry.siemens.com/cs/document/109475767

Cooling unit manufacturers, see
Liquid cooling for SIMOTICS M-1FE

© Siemens 2024

SIMOTICS M-1FE2 asynchronous built-in motors

Selection and ordering data

Rated power for Y or Y/Δ operation for duty type		Rated torque for Y or Y/Δ operation for operating mode		Rated speed for Y or Y/Δ operation	Speed range for constant power for Y or Y/Δ operation, max.	Speed, max. for Y or Y/Δ operation	**SIMOTICS M-1FE2 asynchronous built-in motors**	Moment of inertia rotor without sleeve	Weight, stator + rotor
P_N		M_N		n_N	N2 (S1)	n_{max}		J	m
S1	S6-40 %	S1	S6-40 %						
kW (hp)	kW (hp)	Nm (lb_f-ft)	Nm (lb_f-ft)	r/min	r/min	r/min	Article No.	kgm^2 (lb_f-in-s^2)	kg (lb)
SIMOTICS M-1FE2 High Torque series AL rotor – water cooling – ΔT = 105 K – line voltage 400 V 3 AC, operation with Active Line Module									
7.5 (10.1)	10.5 (14.1)	75 (55.3)	106 (78.2)	950	5400	10000	**1FE2093-8AG ■ ■ - 1 E A 1**	0.02028 (0.17950)	22.4 (49.4)
11/11.5 (14.8/15.4)	15.5/16.1 (20.8/21.6)	65/23 (47.9/17.0)	92/32 (67.9/23.6)	1600/4750	7400/13300	10000/19000	**1FE2093-8AM ■ ■ - 1 E A 2**	0.02028 (0.17950)	22.4 (49.4)
11 (14.8)	15.4 (20.7)	95 (70.1)	134 (98.8)	1100	8300	10000	**1FE2094-8AJ ■ ■ - 1 E A 1**	0.02662 (0.23561)	28.5 (62.8)
15/17 (20.1/22.8)	21.1/23.8 (28.3/31.9)	90/34 (66.4/25.1)	126/48 (92.9/35.4)	1600/4750	9700/14300	10000/19000	**1FE2094-8AM ■ ■ - 1 E A 2**	0.02662 (0.23561)	28.5 (62.8)
SIMOTICS M-1FE2 High Torque series CU rotor – water cooling – ΔT = 105 K – line voltage 400 V 3 AC, operation with Active Line Module									
18.5 (24.8)	26 (34.9)	136 (100)	191 (141)	1300	5700	10000	**1FE2094-8CJ ■ ■ - 1 E A 1**	0.03765 (0.33324)	32.2 (71.0)
15/18.5 (20.1/24.8)	21.1/26 (28.3/34.9)	136/55 (100/40.6)	192/78 (142/57.5)	1050/3200	5100/13700	10000/16000	**1FE2094-8CG ■ ■ - 1 E A 2**	0.03765 (0.33324)	32.2 (71.0)
22.5 (30.2)	31.6 (42.4)	172 (127)	241 (178)	1250	4500	10000	**1FE2095-8CJ ■ ■ - 1 E A 1**	0.04437 (0.39272)	38.3 (84.5)
18.5/22 (24.8/29.5)	26/30.8 (34.9/41.3)	17/70 (12.5/51.6)	248/98 (183/72.3)	1000/3000	5400/16000	10000/16000	**1FE2095-8CG ■ ■ - 1 E A 2**	0.04437 (0.39272)	38.3 (84.5)
33 (44.3)	46.3 (62.1)	420 (310)	590 (435)	750	2600	6000	**1FE2145-8CE ■ ■ - 1 E A 1**	0.26674 (2.36092)	99.1 (218.5)
22/25 (29.5/33.5)	30.8/35.3 (41.3/47.3)	420/159 (310/117)	589/225 (434/166)	500/1500	1800/4500	6000/10000	**1FE2145-8CC ■ ■ - 1 E A 2**	0.26674 (2.36092)	99.1 (218.5)
48 (64.4)	67.4 (90.4)	611 (451)	859 (634)	750	2800	6000	**1FE2147-8CE ■ ■ - 1 E A 1**	0.35886 (3.17627)	129.6 (285.8)
32/35 (42.9/46.9)	44.8/49.4 (60.1/66.2)	611/257 (451/190)	856/363 (631/268)	500/1300	1500/4300	6000/10000	**1FE2147-8CC ■ ■ - 1 E A 2**	0.35886 (3.17627)	129.6 (285.8)

Winding protection					
• Standard protection: Stator winding with 2 × Pt1000 (1 × reserve)	**1**				
• Full protection: 2 × Pt1000 + 3 × PTC thermistor triplets [1]	**3**				
• Universal protection full protection + NTC PT3-51F + NTC K227	**5**				
Connection type					
• Free cable ends: length 0.5 m (1.64 ft)		**0**			
• Free cable ends: length 1.5 m (4.92 ft)		**2**			
Delivery					
• Delivery of stator + rotor			**1**		
Stator version					
• Encapsulated winding without cooling jacket [2]				**E**	
Rotor version					
• Rotor core without sleeve, inner diameter unmachined [3]					**A**
Connection/winding					
• Y connection					**1**
• Can be switched between Y and Δ					**2**

© Siemens 2024

Motor type (repeated)	Rated current for Y or Y/Δ operation for duty type		SINAMICS S120 Motor Module	
			Required rated current	**Booksize format** Internal air cooling For further components, see SINAMICS S120 drive system
	I_N	I_N	I_N	
	S1	S6-40 %	S1	
	A	A	A	Article No.
SIMOTICS M-1FE2 High Torque series AL rotor – water cooling				
1FE2093-8AG...	24	34	24	–
1FE2093-8AM...	30/28.5	42/40	30 [4]	–
1FE2094-8AJ...	39	55	45	**6SL3120-1TE24-5AC0**
1FE2094-8AM...	45/45	65/63	45 [4]	**6SL3120-1TE24-5AC0**
SIMOTICS M-1FE2 High Torque series CU rotor – water cooling				
1FE2094-8CJ...	53	74	60	**6SL3120-1TE26-0AC0**
1FE2094-8CG...	45/45	63/63	45 [4]	**6SL3120-1TE24-5AC0**
1FE2095-8CJ...	59	83	60	**6SL3120-1TE26-0AC0**
1FE2095-8CG...	60/56	84/78	60 [4]	**6SL3120-1TE26-0AC0**
1FE2145-8CE...	85	119	85	**6SL3120-1TE28-5AA3**
1FE2145-8CC...	60/58	84/81	60	**6SL3120-1TE26-0AC0**
1FE2147-8CE...	130	180	132	**6SL3120-1TE31-3AA3**
1FE2147-8CC...	85/81	119/113	85	**6SL3120-1TE28-5AA3**

Motor Module: Single Motor Module	**1**

[1] Application example: Load at motor standstill, external tripping device required; Article No.: 3RN2013-1GW30.
[2] Stator with cooling jacket on request.
[3] Rotor with sleeve and/or final machining on request.
[4] Star/delta changeover required, incl. data set switchover with PWM 4 > 8 kHz with 62.5 µs.

© Siemens 2024

VPM Voltage Protection Module

Overview



The voltage protection function is used for SIMOTICS M-1FE motors and on the synchronous version of 2SP1 motor spindles with an EMF of $\hat{U}$ > 820 V to 2000 V (U_{rms} 570 V to 1400 V) in order to limit the DC link voltage in the drive system in the event of a fault.

If the line voltage fails with the motor operating at maximum speed, or if the drive system pulses are suppressed as a result of a line voltage failure, the synchronous motor feeds energy at high voltage back into the DC link.

The VPM detects that the DC link voltage is too high (DC > 820 V) and short-circuits the three motor supply cables to brake the motor. The power remaining in the motor is converted to heat via the short-circuit in the VPM and motor.

Integration

The VPM can be operated in conjunction with SINAMICS S120, and with SIMOTICS M-1FE motors and with 2SP1 motor spindles.

The VPM must be installed between the motor and drive system (maximum distance from drive system 1.5 m). 6FX8 shielded motor supply cables must be used in combination with the VPM.

The VPM can always be used with:

- SINAMICS S120
- SINUMERIK 840D sl
- SINUMERIK ONE
- SINUMERIK MC

8
2

Technical specifications

Article No.	6SN1113-1AA00-1JA1	6SN1113-1AA00-1KA1	6SN1113-1AA00-1KC1
Product short term	VPM 120	VPM 200	VPM 200 DYNAMIC
Product designation	Voltage Protection Module	Voltage Protection Module	Voltage Protection Module
Rated current, permissible	120 A	200 A	200 A
Short-circuit current, perm.	90 A	200 A	200 A
Degree of protection	IP20	IP20	IP20
Environmental category according to IEC 60721-3-3	Class 3K5, condensation and icing excluded. Low air temperature 0 °C (32 °F).		
Ambient temperature during			
• Storage	-25 ... +55 °C (-13 ... +131 °F)	-25 ... +55 °C (-13 ... +131 °F)	-25 ... +55 °C (-13 ... +131 °F)
• Transport	-25 ... +55 °C (-13 ... +131 °F)	-25 ... +55 °C (-13 ... +131 °F)	-25 ... +55 °C (-13 ... +131 °F)
• Operation	0 ... 55 °C (32 ... 131 °F)	0 ... 55 °C (32 ... 131 °F)	0 ... 55 °C (32 ... 131 °F)
Height	300 mm (11.81 in)	300 mm (11.81 in)	300 mm (11.81 in)
Width	150 mm (5.91 in)	250 mm (9.84 in)	250 mm (9.84 in)
Depth	180 mm (7.09 in)	190 mm (7.48 in)	260 mm (10.24 in)
Net weight	6 kg (13.2 lb)	11 kg (24.3 lb)	12 kg (26.5 lb)
Certificate of suitability	cULus	cULus	cULus

Selection and ordering data

Description	Article No.
Voltage Protection Module	
• VPM 120	**6SN1113-1AA00-1JA1**
• VPM 200	**6SN1113-1AA00-1KA1**
• VPM 200 DYNAMIC For large cable cross-sections up to 50 mm^2	**6SN1113-1AA00-1KC1**

© Siemens 2024

Dimensional drawings

1PH808

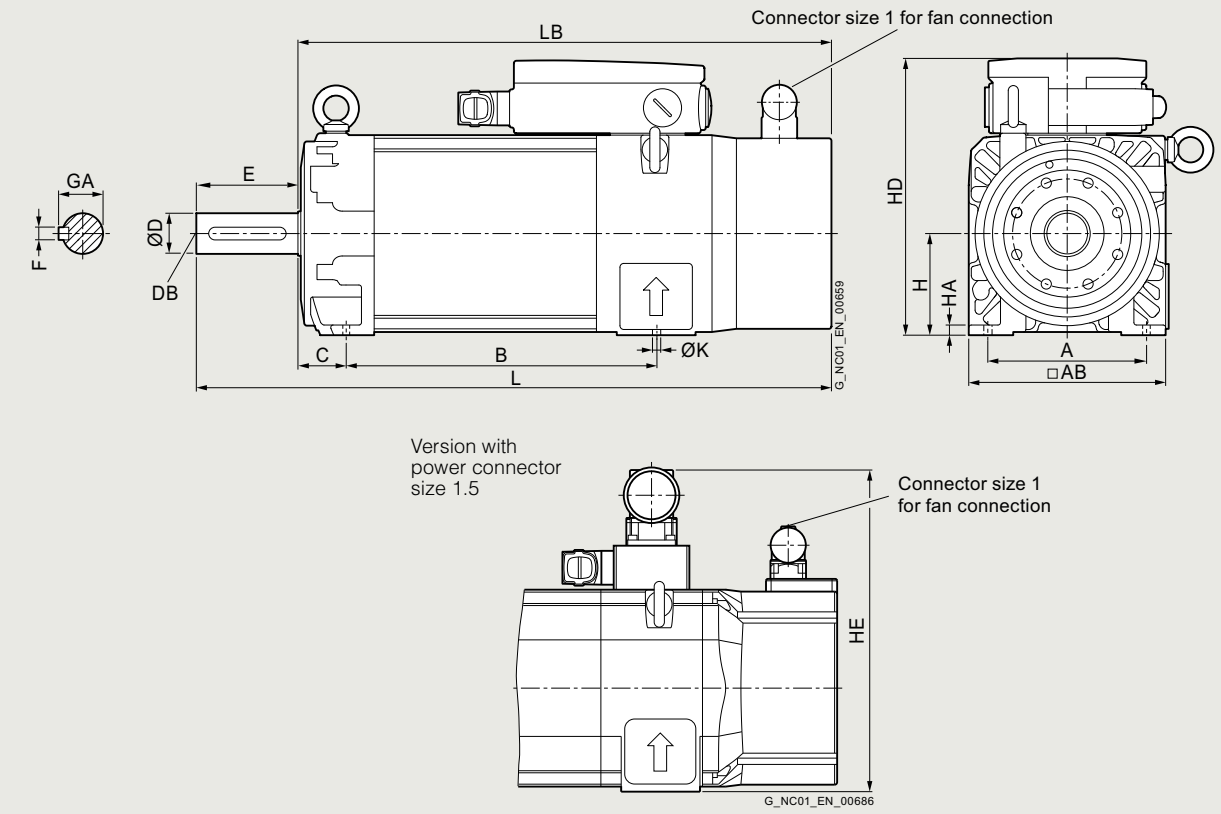

For motor		Dimensions in mm (inches)							
Shaft height	Type	IEC A	AB	B	C	H	HA	HD	HE
1PH8, type of construction IM B3, forced ventilation									
80	1PH8083	125 (4.92	155 (6.10)	194 (7.64)	38 (1.50)	80 (3.15)	8 (0.31)	216 (6.50)	253.5 (9.98)
	1PH8087			244 (9.61)					

					Shaft end DE				
Shaft height	Type	IEC L	LB	K	**D**	DB	E	F	GA
80	1PH8083	455 (17.91)	375 (14.76)	10 (0.39)	**32 (1.26)**	M12	80 (3.15)	10 (0.39)	35 (1.38)
	1PH8087	505 (19.88)	425 (16.73)						

© Siemens 2024

SIMOTICS M-1PH8 asynchronous motors – SH 80 – forced ventilation

Dimensional drawings

1PH808

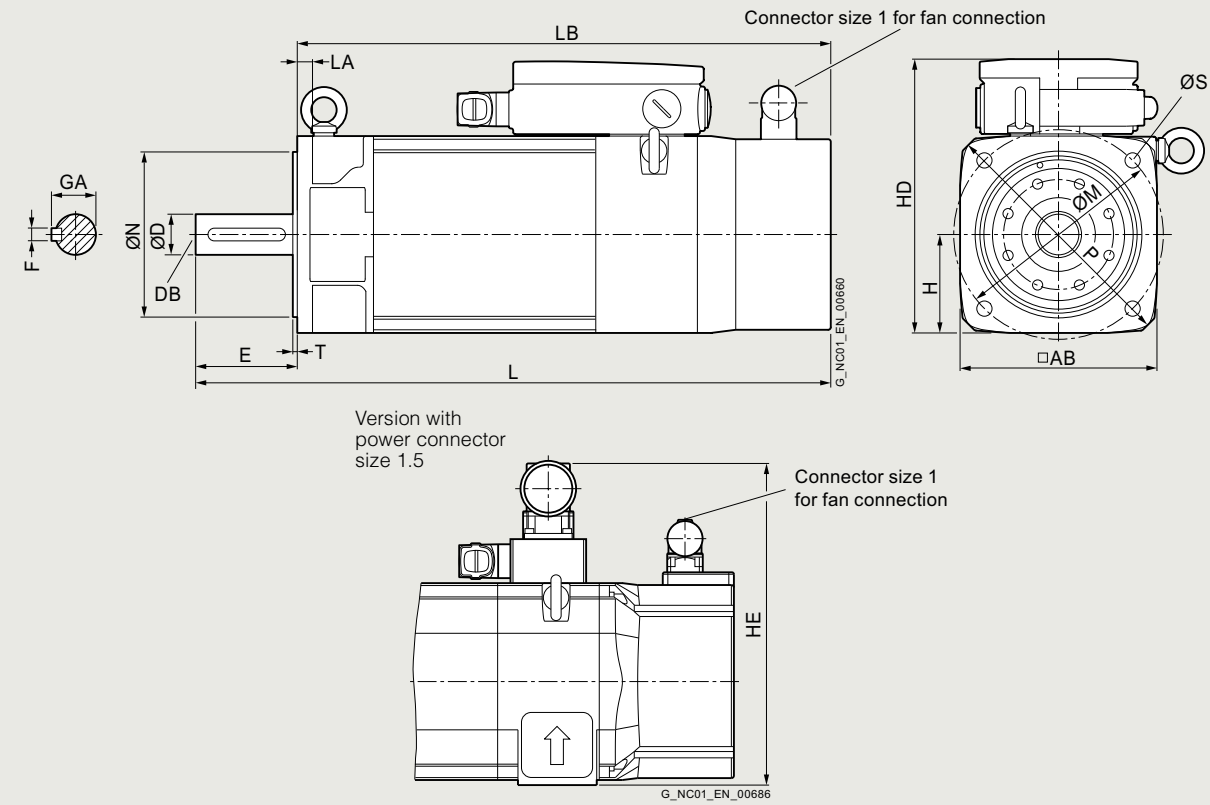

For motor		Dimensions in mm (inches)									
Shaft height	Type	IEC	AB	H	HD	HE	L	LA	LB	M	N
1PH8, type of construction IM B5, forced ventilation											
80	1PH8083		155 (6.10)	77.5 (3.05)	213.5 (8.41)	251 (9.88)	381.5 (15.02)	12 (0.47)	301.5 (6.57)	165 (6.50)	130 (5.12)
	1PH8087						431.5 (16.99)		351.5 (7.97)		

						Shaft end DE				
Shaft height	Type	IEC	P	S	T	**D**	DB	E	F	GA
80	1PH8083		200 (7.87)	12 (0.47)	3.5 (0.14)	**38 (1.50)**	M12	80 (3.15)	10 (0.39)	35 (1.38)
	1PH8087									

© Siemens 2024

Dimensional drawings

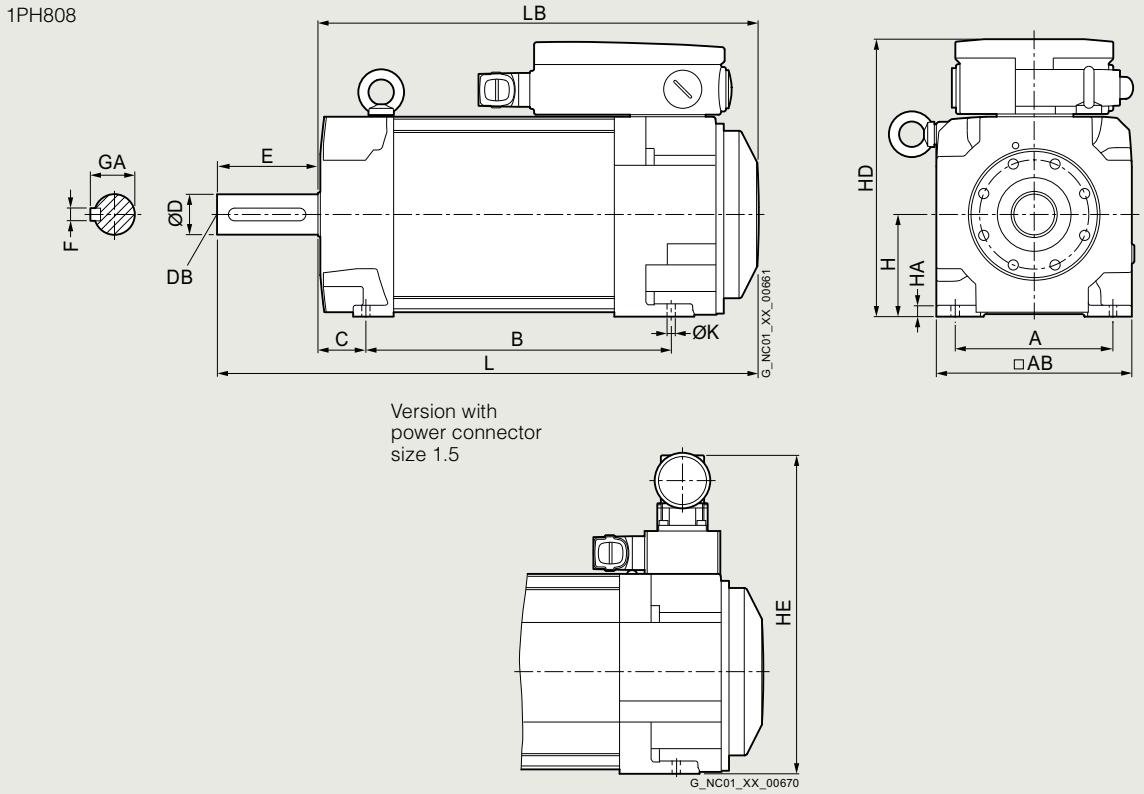

For motor		Dimensions in mm (inches)								
Shaft height	Type	IEC	A	AB	B	C	H	HA	HD	HE
1PH8, type of construction IM B3, water cooling										
80	1PH8083		125 (4.92)	155 (6.10)	194 (7.64)	38 (1.50)	80 (3.15)	8 (0.31)	216 (8.50)	253.5 (9.98)
	1PH8087				244 (9.61)					

						Shaft end DE				
Shaft height	Type	IEC	K	L	LB	**D**	DB	E	F	GA
80	1PH8093		10 (0.39)	381.5 (15.02)	301.5 (11.87)	**38 (1.50)**	M12	80 (3.15)	10 (0.39)	35 (1.38)
	1PH8087			431.5 (16.99)	351.5 (13.84)					

© Siemens 2024

SIMOTICS M-1PH8 asynchronous motors – SH 80 – water cooling

Dimensional drawings

1PH808

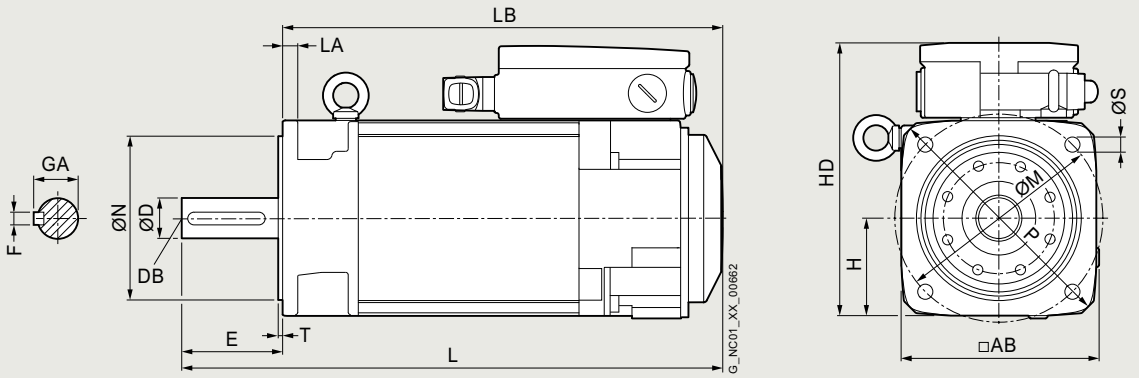

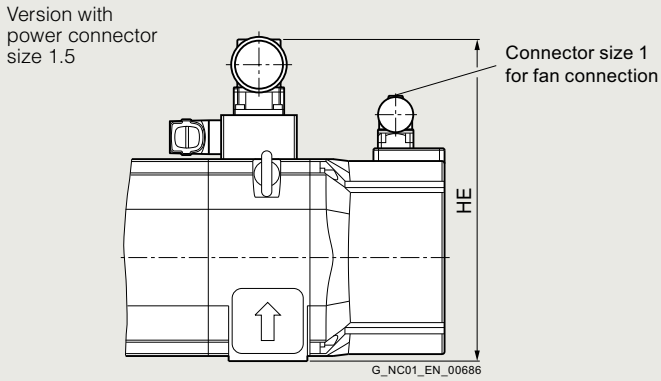

For motor		Dimensions in mm (inches)									
Shaft height	Type	IEC	AB	H	HD	HE	L	LA	LB	M	N
1PH8, type of construction IM B5, water cooling											
80	1PH8083		155 (6.10)	77.5 (3.05)	213.5 (8.41)	251 (9.88)	381.5 (15.02)	12 (0.47)	301.5 (11.87)	165 (6.50)	130 (5.12)
	1PH8087						431.5 (16.99)		351.5 (13.84)		

			Shaft end DE							
Shaft height	Type	IEC	P	S	T	**D**	DB	E	F	GA
80	1PH8083		200 (7.87)	12 (0.47)	3.5 (0.14)	**32 (1.26)**	M12	80 (3.15)	10 (0.39)	35 (1.38)
	1PH8087									

© Siemens 2024

Dimensional drawings

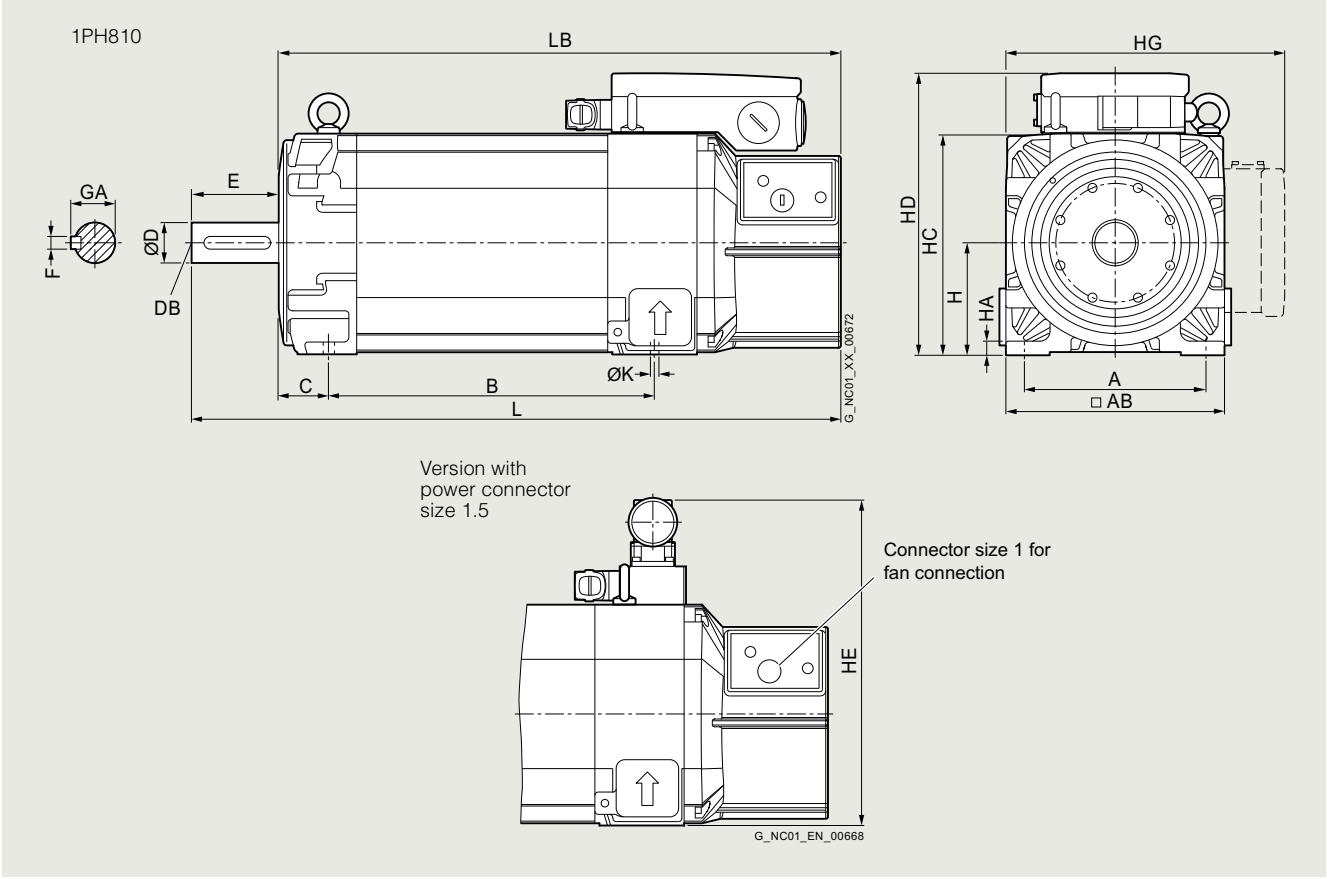

For motor		Dimensions in mm (inches)								
Shaft height	Type	IEC A	AB	C	B	H	HA	HC	HD	HE
1PH8, type of construction IM B3, forced ventilation										
100	1PH8101	160 (6.30)	196 (7.72)	43 (1.69)	167 (6.57)	100 (3.94)	11 (0.43)	198 (7.80)	252 (9.92)	294 (11.57)
	1PH8103				202.5 (7.97)					
	1PH8105				262 (10.31)					
	1PH8107				297.5 (11.71)					

						Shaft end DE				
Shaft height	Type	IEC HG	L	K	LB	**D**	DB	E	F	GA
100	1PH8101	276.5 (10.89)	449.5 (17.70)	12 (0.47)	369.5 (14.55)	**38 (1.50)**	M12	80 (3.15)	10 (0.39)	41 (1.61)
	1PH8103		485 (19.09)		405 (15.94)					
	1PH8105		544.5 (21.44)		464.5 (18.29)					
	1PH8107		580 (22.83)		500 (19.69)					

© Siemens 2024

SIMOTICS M-1PH8 asynchronous motors – SH 100 – forced ventilation

Dimensional drawings

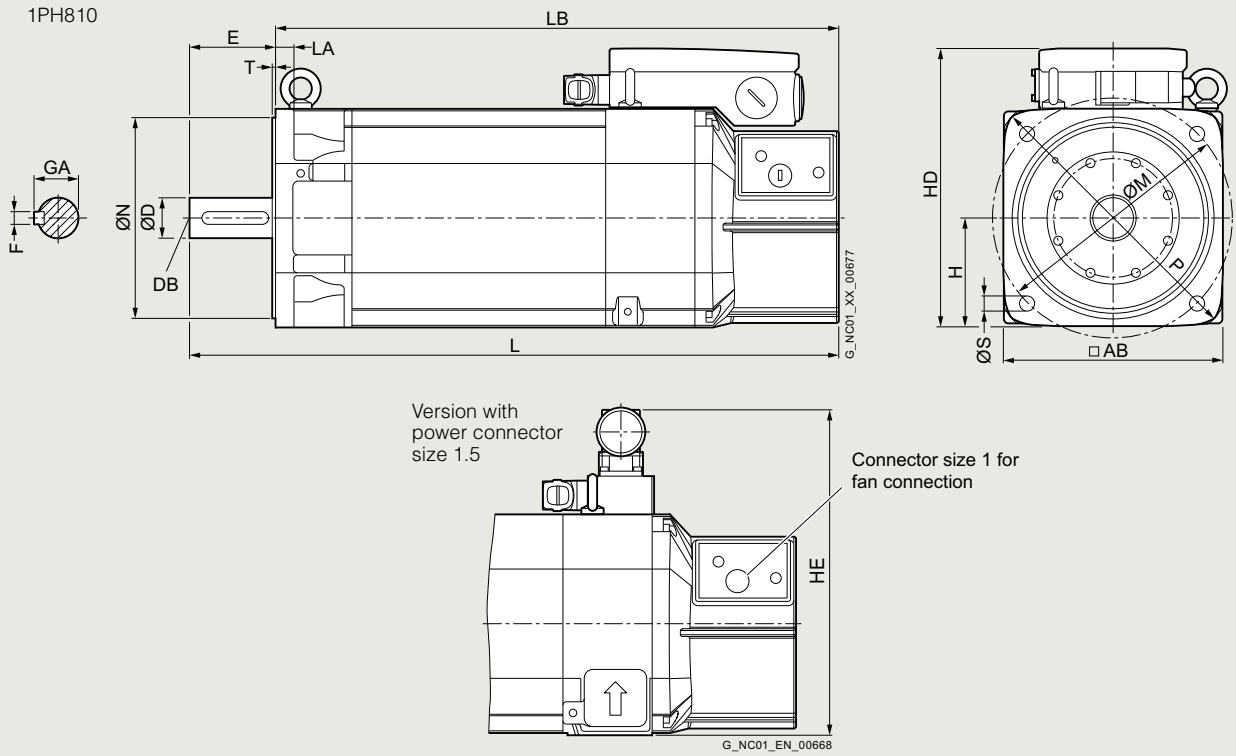

For motor		Dimensions in mm (inches)									
Shaft height	Type	IEC	AB	H	HD	HE	L	LA	LB	M	N
1PH8, type of construction IM B5, forced ventilation											
100	1PH8101		196 (7.72)	98 (3.86)	250 (9.84)	292 (11.50)	449.5 (17.70)	16 (0.63)	369.5 (14.55)	215 (8.46)	180 (7.09)
	1PH8103						485 (19.09)		405 (15.94)		
	1PH8105						544.5 (21.44)		464.5 (18.29)		
	1PH8107						580 (22.83)		500 (19.69)		

					Shaft end DE				
Shaft height	Type	IEC	P	S	T	**D**	DB	E	F	GA
100	1PH8101		250 (9.84)	14 (0.55)	4 (0.16)	**38 (1.50)**	M12	80 (3.15)	10 (0.39)	41 (1.61)
	1PH8103									
	1PH8105									
	1PH8107									

© Siemens 2024

Dimensional drawings

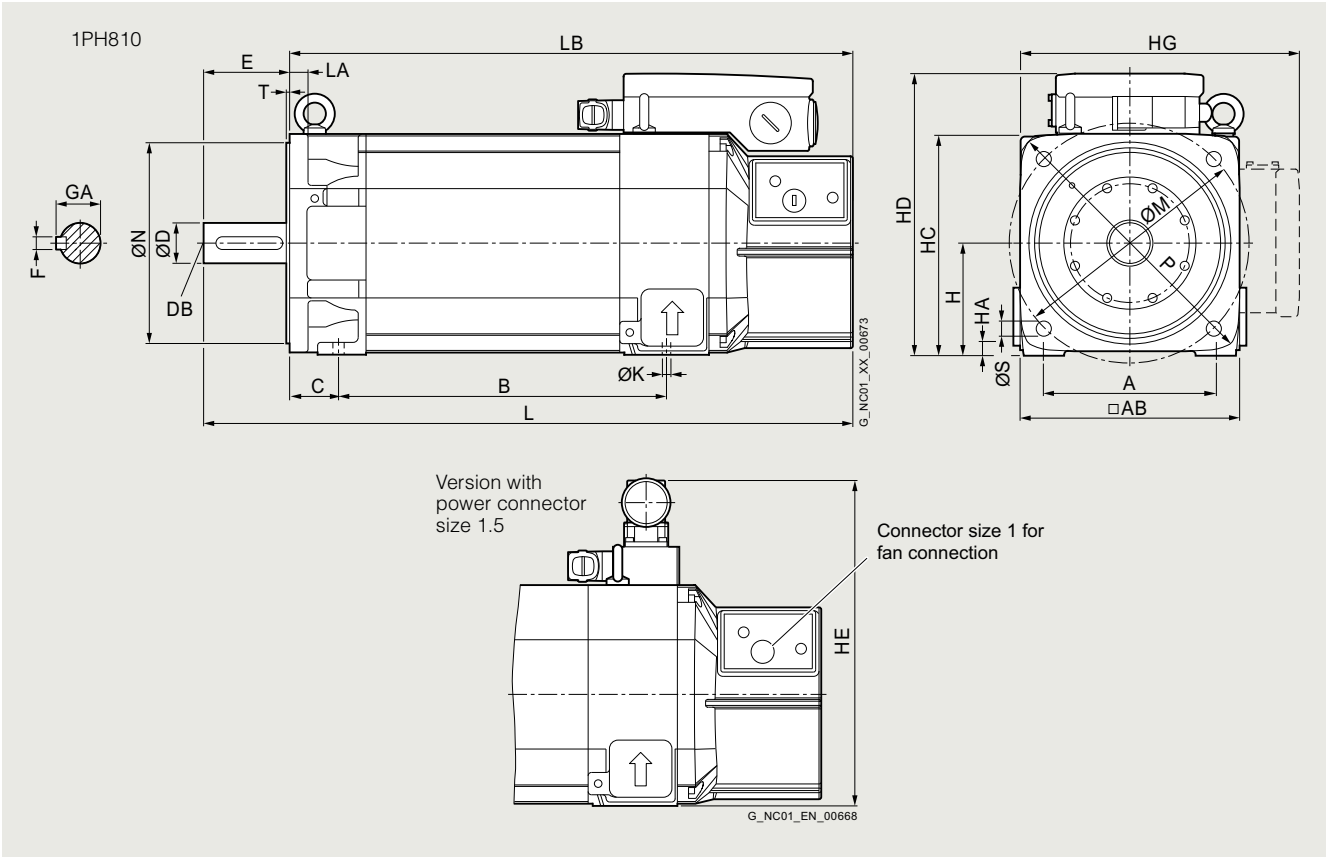

For motor		Dimensions in mm (inches)												
Shaft height	Type	IEC	A	AB	B	C	H	HA	HC	HD	HE	HG	K	L
1PH8, type of construction IM B35, forced ventilation														
100	1PH8101		160 (6.30)	196 (7.72)	167 (6.57)	43 (1.69)	100 (3.94)	11 (0.43)	198 (7.80)	252 (9.92)	294 (11.57)	276.5 (10.89)	12 (0.47)	449.5 (17.70)
	1PH8103				202.5 (7.97)									485 (19.09)
	1PH8105				262 (10.31)									544.5 (21.44)
	1PH8107				297.5 (11.71)									580 (22.83)

									Shaft end DE				
Shaft height	Type	IEC	LA	LB	M	N	P	S	T	**D**	DB	E	F	GA
100	1PH8101		16 (0.63)	369.5 (14.55)	215 (8.46)	180 (7.09)	250 (9.84)	14 (0.55)	4 (0.16)	**38 (1.50)**	M12	80 (3.15)	10 (0.39)	41 (1.61)
	1PH8103			405 (15.94)										
	1PH8105			464.5 (18.29)										
	1PH8107			500 (19.69)										

© Siemens 2024

SIMOTICS M-1PH8 asynchronous motors – SH 100 – water cooling

Dimensional drawings

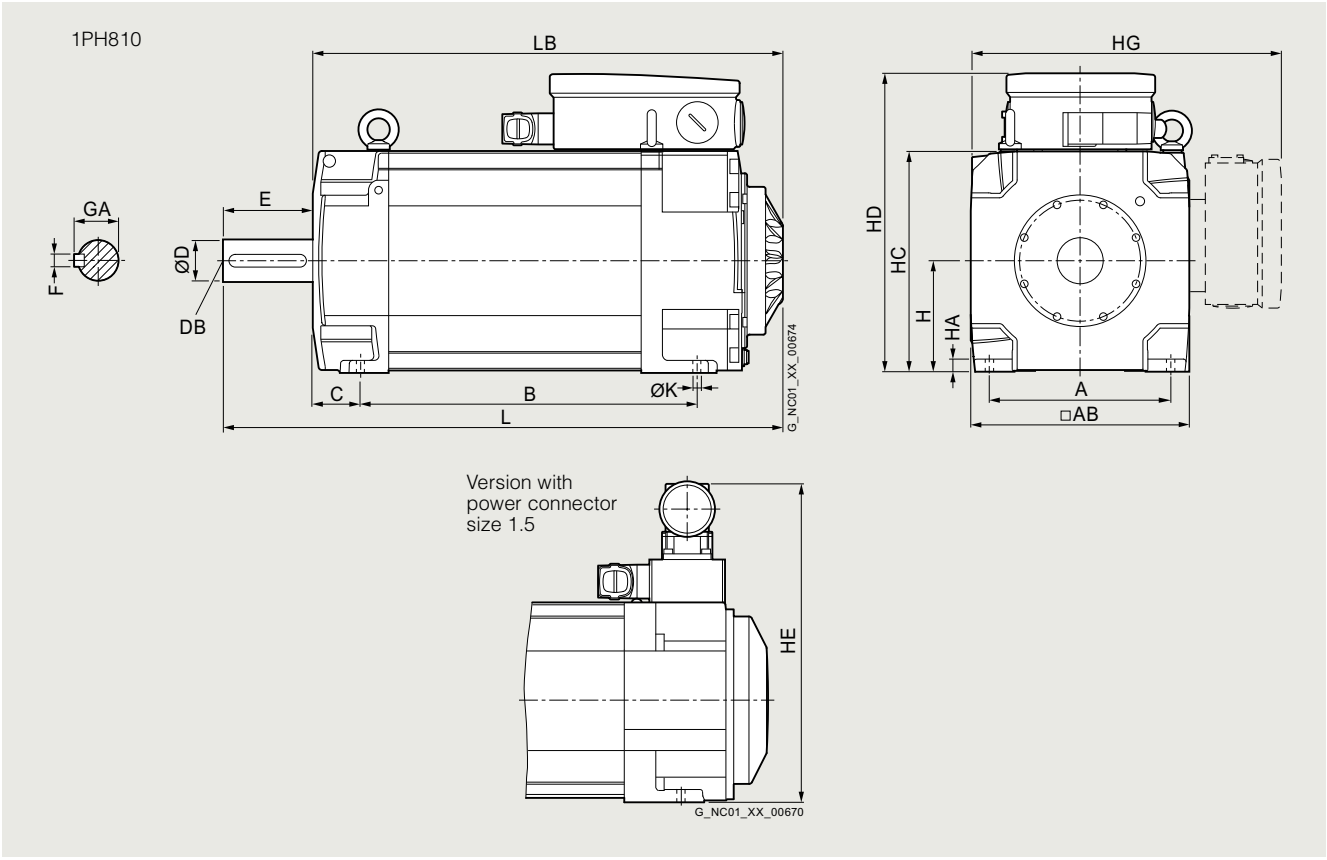

For motor		Dimensions in mm (inches)									
Shaft height	Type	IEC	A	AB	B	C	H	HA	HC	HD	HE
1PH8, type of construction IM B3, water cooling											
100	1PH8101		160 (6.30)	196 (7.72)	167 (6.57)	43 (1.69)	100 (3.94)	11 (0.43)	198 (7.80)	266.5 (10.49)	294 (11.57)
	1PH8103				202.5 (7.97)						
	1PH8105				262 (10.31)						
	1PH8107				297.5 (11.71)						

							Shaft end DE				
Shaft height	Type	IEC	HG	K	L	LB	**D**	DB	E	F	GA
100	1PH8101		276.5 (10.89)	12 (0.47)	369.5 (14.55)	289.5 (11.40)	**38 (1.50)**	M12	80 (3.15)	10 (0.39)	41 (1.61)
	1PH8103				405 (15.94)	325 (12.80)					
	1PH8105				464.5 (18.29)	384.5 (15.14)					
	1PH8107				500 (19.69)	420 (16.54)					

© Siemens 2024

Dimensional drawings

1PH810

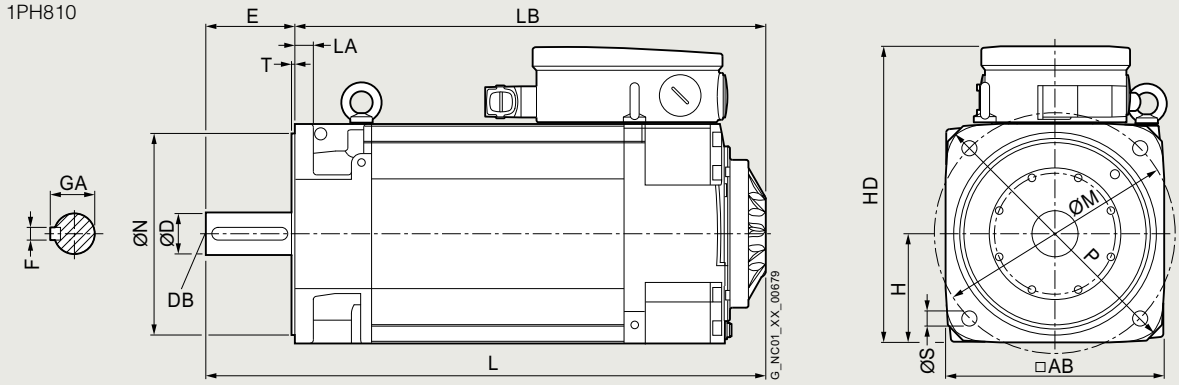

Version with power connector size 1.5

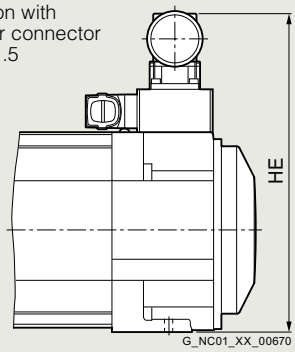

For motor		Dimensions in mm (inches)									
Shaft height	Type	IEC	AB	H	HD	HE	L	LA	LB	M	N
1PH8, type of construction IM B5, water cooling											
100	1PH8101		196 (7.72)	98 (3.86)	264.5 (10.41)	292 (11.50)	369.5 (14.55)	16 (0.63)	289.5 (11.40)	215 (8.46)	180 (7.09)
	1PH8103						405 (15.94)		325 (12.80)		
	1PH8105						464.5 (18.29)		384.5 (15.14)		
	1PH8107						500 (19.69)		420 (16.54)		

						Shaft end DE				
Shaft height	Type	IEC	P	S	T	**D**	DB	E	F	GA
100	1PH8101		250 (9.84)	14 (0.55)	4 (0.16)	**38 (1.50)**	M12	80 (3.15)	10 (0.39)	41 (1.61)
	1PH8103									
	1PH8105									
	1PH8107									

© Siemens 2024

SIMOTICS M-1PH8 asynchronous motors – SH 100 – water cooling

Dimensional drawings

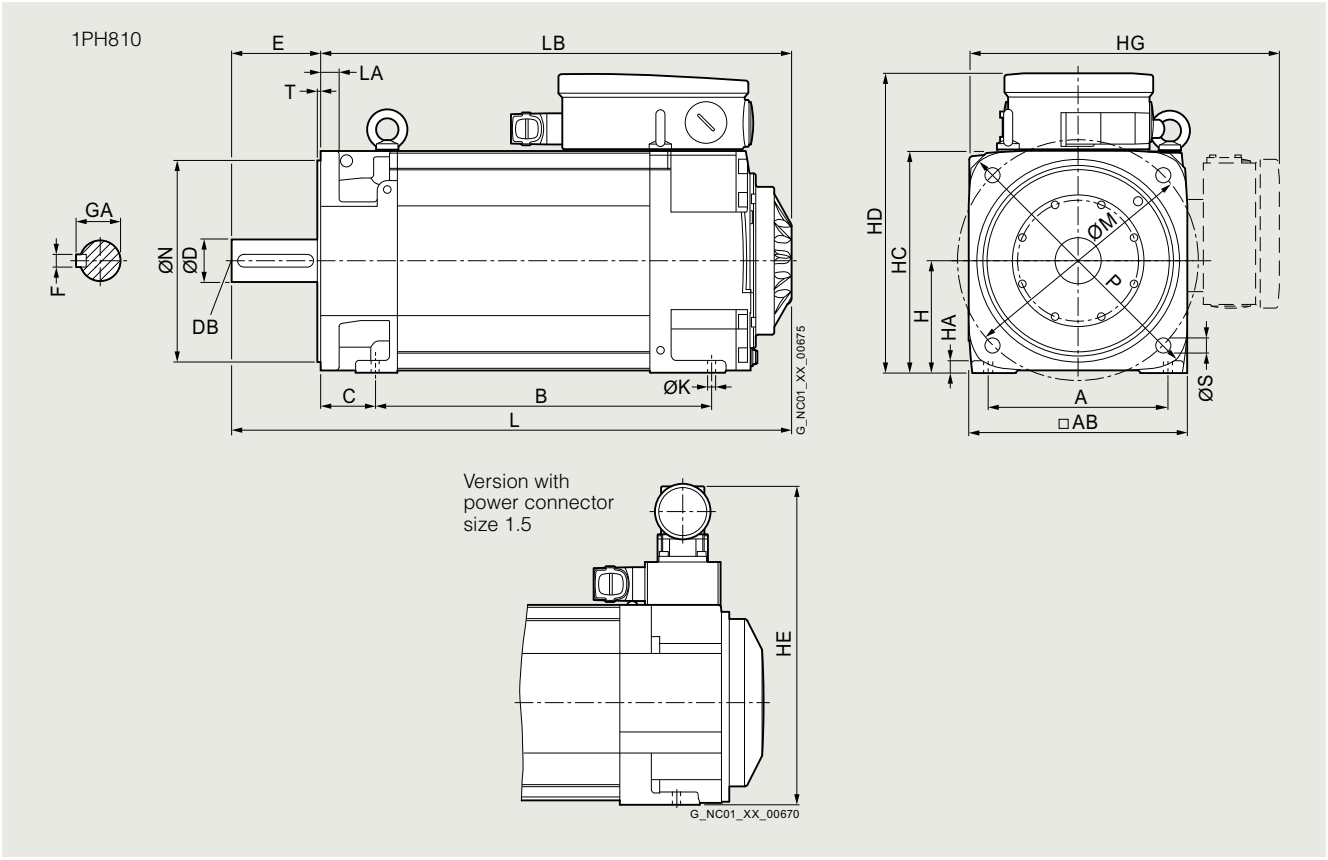

For motor		Dimensions in mm (inches)												
Shaft height	Type	IEC	A	AB	B	C	H	HA	HC	HD	HE	HG	K	L
1PH8, type of construction IM B35, water cooling														
100	1PH8101		160 (6.30)	196 (7.72)	167 (6.57)	43 (1.69)	100 (3.94)	11 (0.43)	198 (7.80)	266.5 (10.49)	294 (11.57)	276.5 (10.89)	12 (0.47)	369.5 (14.55)
	1PH8103				202.5 (7.97)									405 (15.94)
	1PH8105				262 (10.31)									464.5 (18.29)
	1PH8107				297.5 (11.71)									500 (19.69)

Shaft height	Type	IEC	LA	LB	M	N	P	S	T	Shaft end DE **D**	DB	E	F	GA
100	1PH8101		16 (0.63)	289.5 (11.40)	215 (8.46)	180 (7.09)	250 (9.84)	14 (0.55)	4 (0.16)	**38 (1.50)**	M12	80 (3.15)	10 (0.39)	41 (1.61)
	1PH8103			325 (12.80)										
	1PH8105			384.5 (15.14)										
	1PH8107			420 (16.54)										

© Siemens 2024

Dimensional drawings

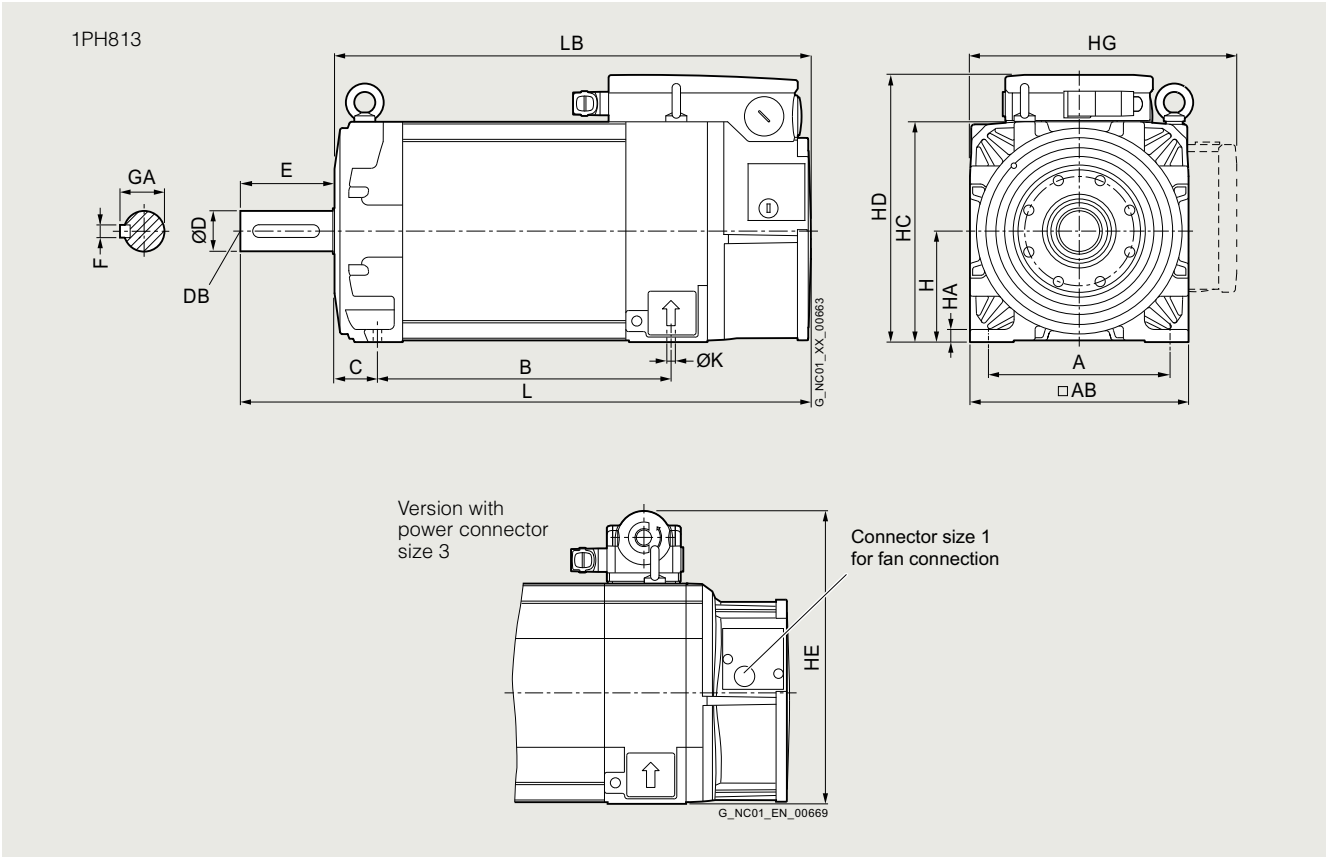

For motor		Dimensions in mm (inches)								
Shaft height	Type	IEC A	AB	B	C	H	HA	HC	HD	HE
1PH8, type of construction IM B3, forced ventilation										
132	1PH8131	216 (8.50)	260 (10.24)	220.5 (8.68)	53 (2.09)	132 (5.20)	15 (0.59)	262 (10.31)	317.5 (12.50)	347 (13.66)
	1PH8133			265.5 (10.45)						
	1PH8135			310.5 (12.22)						
	1PH8137			350.5 (13.80)						

						Shaft end DE				
Shaft height	Type	IEC HG	K	L	LB	**D**	DB	E	F	GA
132	1PH8131	357.5 (14.07)	12 (0.47)	549 (21.61)	439 (17.28)	**48 (1.89)**	M16	110 (4.33)	14 (0.55)	51.5 (2.03)
	1PH8133			594 (23.39)	484 (19.06)					
	1PH8135			639 (25.16)	529 (20.83)					
	1PH8137			679 (26.73)	569 (22.40)					

© Siemens 2024

SIMOTICS M-1PH8 asynchronous and synchronous motors – SH 132 – forced ventilation

Dimensional drawings

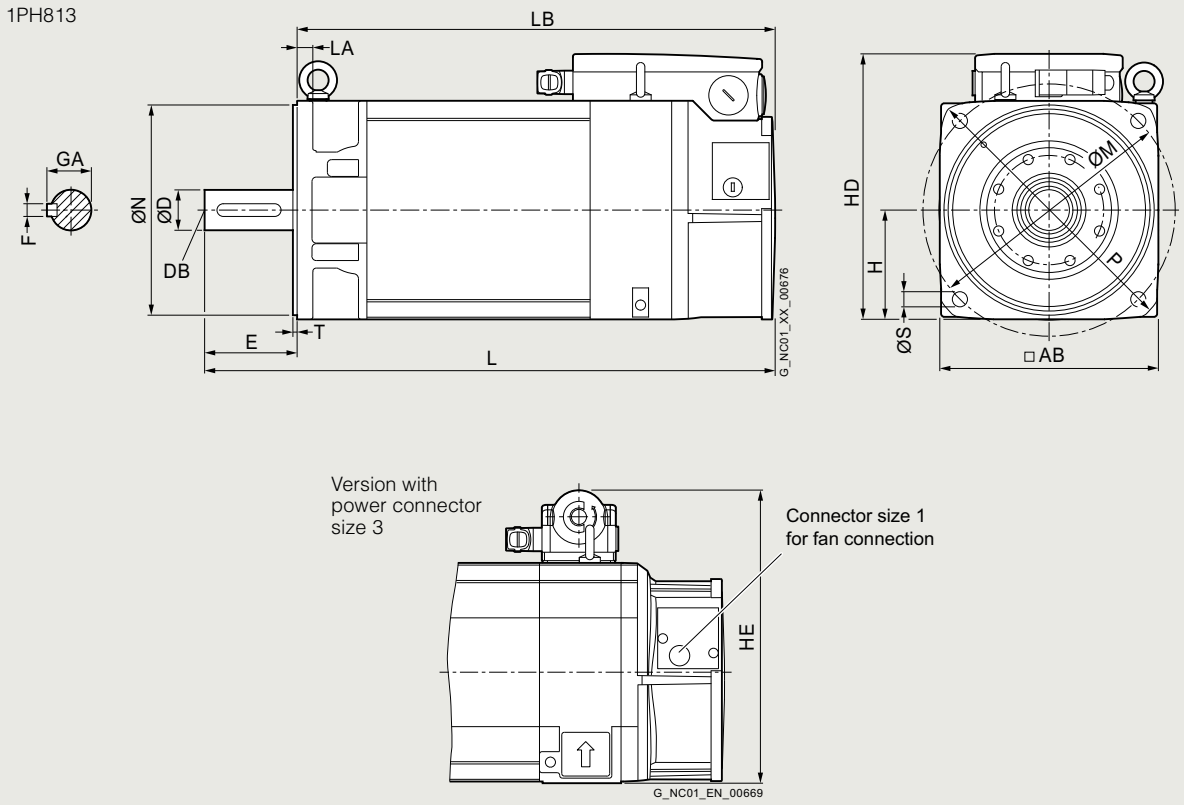

For motor		Dimensions in mm (inches)									
Shaft height	Type	IEC	AB	H	HD	HE	L	LA	LB	M	N
1PH8, type of construction IM B5, forced ventilation											
132	1PH8131		260 (10.24)	130 (5.12)	315.5 (12.42)	345 (13.58)	549 (21.61)	18 (0.71)	439 (17.28)	300 (11.81)	250 (9.84)
	1PH8133						594 (23.39)		484 (19.06)		
	1PH8135						639 (25.16)		529 (20.83)		
	1PH8137						679 (26.73)		569 (22.40)		

						Shaft end DE				
Shaft height	Type	IEC	P	S	T	**D**	DB	E	F	GA
132	1PH8131		340 (13.39)	18 (0.71)	5 (0.20)	**48 (1.89)**	M16	110 (4.33)	14 (0.55)	51.5 (2.03)
	1PH8133									
	1PH8135									
	1PH8137									

© Siemens 2024

Dimensional drawings

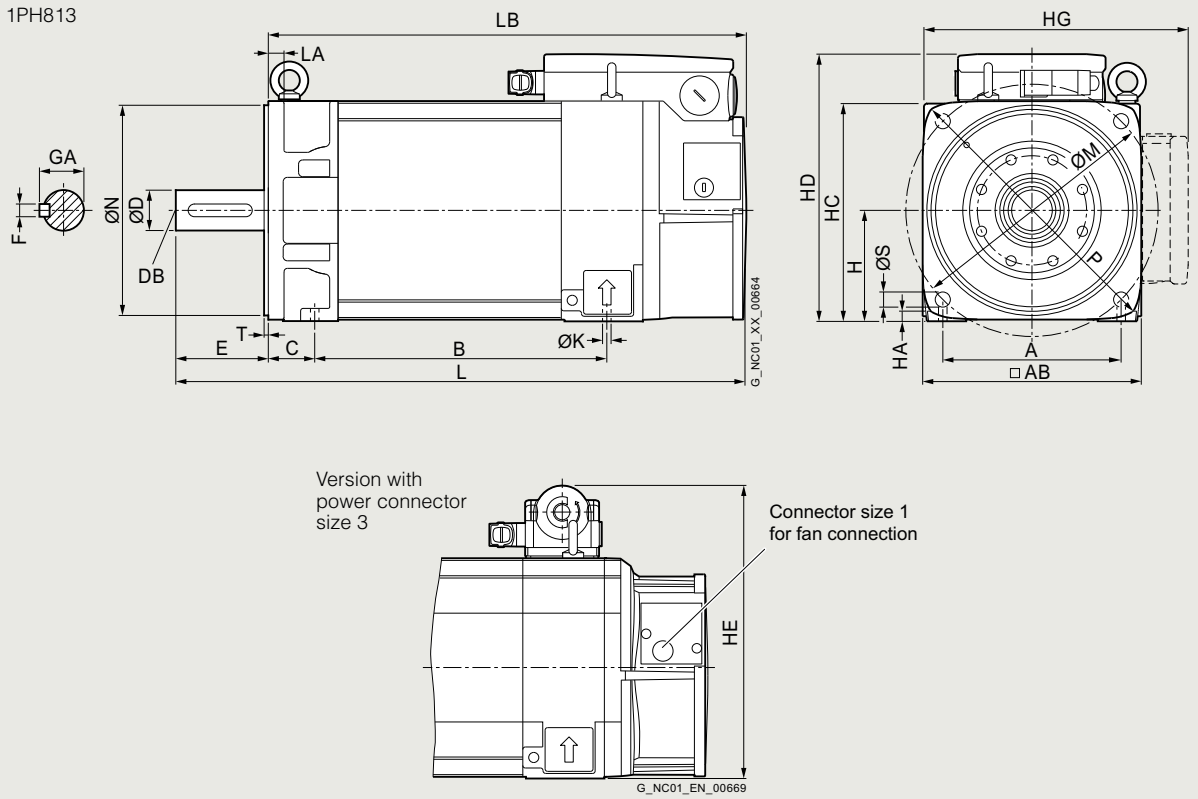

For motor		Dimensions in mm (inches)												
Shaft height	Type	IEC	A	AB	B	C	H	HA	HC	HD	HE	HG	K	L
1PH8, type of construction IM B35, forced ventilation														
132	1PH8131		216 (8.50)	260 (10.24)	220.5 (8.68)	53 (2.09)	132 (5.20)	15 (0.59)	262 (10.31)	317.5 (12.50)	347 (13.66)	357.5 (14.07)	12 (0.47)	549 (21.61)
	1PH8133				265.5 (10.45)									594 (23.39)
	1PH8135				310.5 (12.22)									639 (25.16)
	1PH8137				350.5 (13.80)									679 (26.73)

Shaft height	Type	IEC	LA	LB	M	N	P	S	T	Shaft end DE **D**	DB	E	F	GA
132	1PH8131		18 (0.71)	439 (17.28)	300 (11.81)	250 (9.84)	340 (13.39)	18 (0.71)	5 (0.20)	**48 (1.89)**	M16	110 (4.33)	14 (0.55)	51.5 (2.03)
	1PH8133			484 (19.06)										
	1PH8135			529 (20.83)										
	1PH8137			569 (22.40)										

© Siemens 2024

SIMOTICS M-1PH8 asynchronous and synchronous motors – SH 132 – water cooling

Dimensional drawings

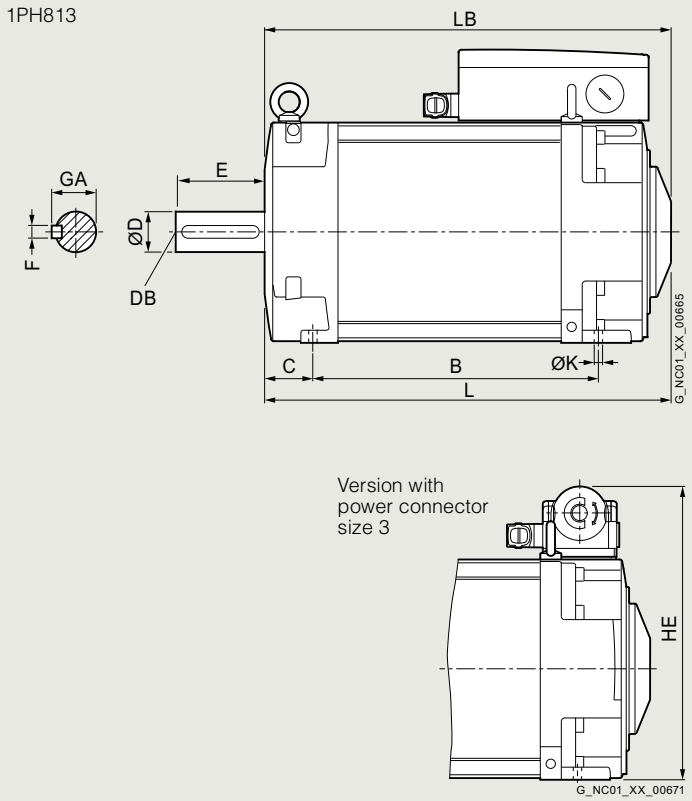

For motor		Dimensions in mm (inches)									
Shaft height	Type	IEC	A	AB	B	C	H	HA	HC	HD	HE
1PH8, type of construction IM B3, water cooling											
132	1PH8131		216 (8.50)	260 (10.24)	220.5 (8.68)	53 (2.09)	132 (5.20)	15 (0.59)	262 (10.31)	347.5 (13.68)	347 (13.66)
	1PH8133				265.5 (10.45)						
	1PH8135				310.5 (12.22)						
	1PH8137/ 1PH8138				350.5 (13.80)						

						Shaft end DE				
Shaft height	Type	IEC	HG	K	L	LB	**D**	DB	E	F	GA
132	1PH8131		357.5 (14.07)	12 (0.47)	457.5 (18.01)	347.5 (13.68)	**48 (1.89)**	M16	110 (4.33)	14 (0.55)	51.5 (2.03)
	1PH8133				502.5 (19.78)	392.5 (15.45)					
	1PH8135				547.5 (21.56)	437.5 (17.22)					
	1PH8137/ 1PH8138				587.5 (23.13)	477.5 (18.80)					

© Siemens 2024

Dimensional drawings

1PH813

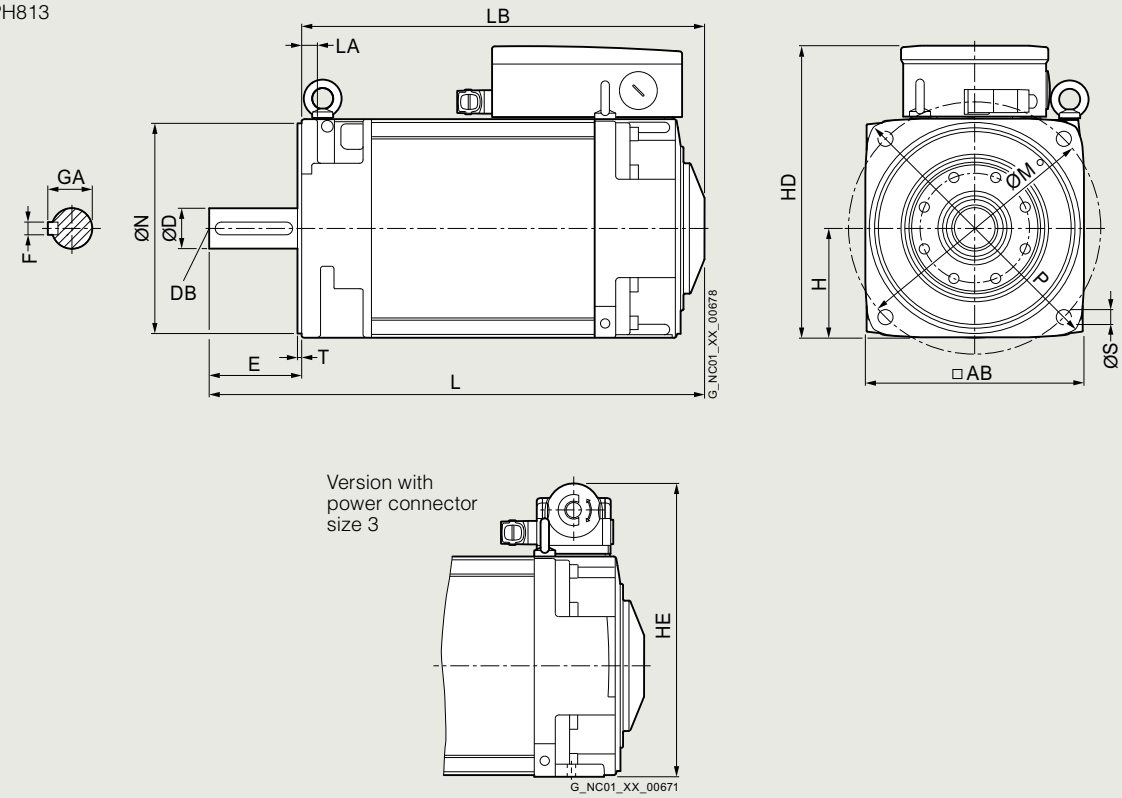

For motor — Dimensions in mm (inches)

Shaft height	Type	IEC	AB	H	HD	HE	L	LA	LB	M	N
1PH8, type of construction IM B5, water cooling											
132	1PH8131		260 (10.24)	132 (5.20)	345.5 (13.60)	345 (13.58)	457.5 (18.01)	18 (0.71)	347.5 (13.68)	300 (11.81)	250 (9.84)
	1PH8133						502.5 (19.78)		392.5 (15.45)		
	1PH8135						547.5 (21.56)		437.5 (17.22)		
	1PH8137/ 1PH8138						587.5 (23.13)		477.5 (18.80)		

Shaft height	Type	IEC	P	S	T	Shaft end DE **D**	DB	E	F	GA
132	1PH8131		340 (13.39)	18 (0.71)	5 (0.20)	**48 (1.89)**	M16	110 (4.33)	14 (0.55)	51.5 (2.03)
	1PH8133									
	1PH8135									
	1PH8137/ 1PH8138									

© Siemens 2024

SIMOTICS M-1PH8 asynchronous and synchronous motors – SH 132 – water cooling

Dimensional drawings

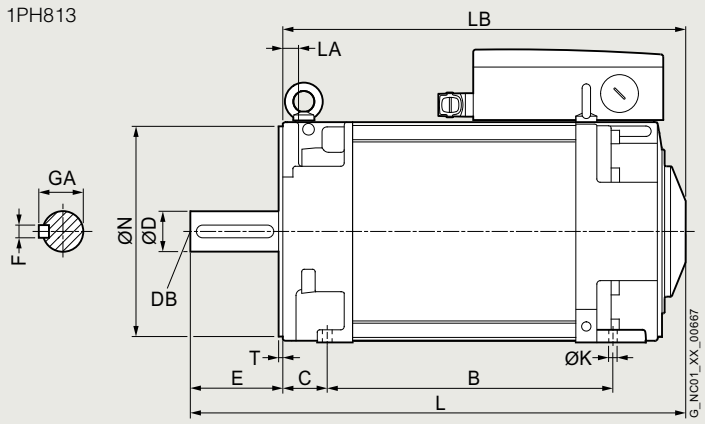

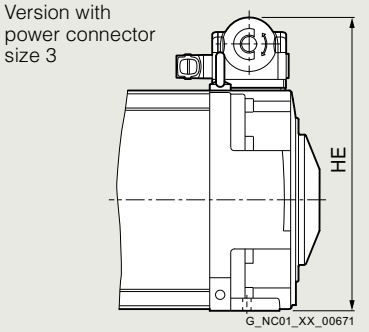

For motor		Dimensions in mm (inches)												
Shaft height	Type	IEC	A	AB	B	C	H	HA	HC	HD	HE	HG	K	L
1PH8, type of construction IM B35, water cooling														
132	1PH8131		216 (8.50)	260 (10.24)	220.5 (8.68)	53 (2.09)	132 (5.20)	15 (0.59)	262 (10.31)	347.5 (13.68)	347 (13.66)	357.5 (14.07)	12 (0.47)	457.5 (18.01)
	1PH8133				265.5 (10.45)									502.5 (19.78)
	1PH8135				310.5 (12.22)									547.5 (21.56)
	1PH8137/ 1PH8138				350.5 (13.80)									587.5 (23.13)

									Shaft end DE				
Shaft height	Type	IEC	LA	LB	M	N	P	S	T	**D**	DB	E	F	GA
132	1PH8131		18 (0.71)	347.5 (13.68)	300 (11.81)	250 (9.84)	340 (13.39)	18 (0.71)	5 (0.20)	**48 (1.89)**	M16	110 (4.33)	14 (0.55)	51.5 (2.03)
	1PH8133			392.5 (15.45)										
	1PH8135			437.5 (17.22)										
	1PH8137/ 1PH8138			477.5 (18.80)										

© Siemens 2024

Dimensional drawings

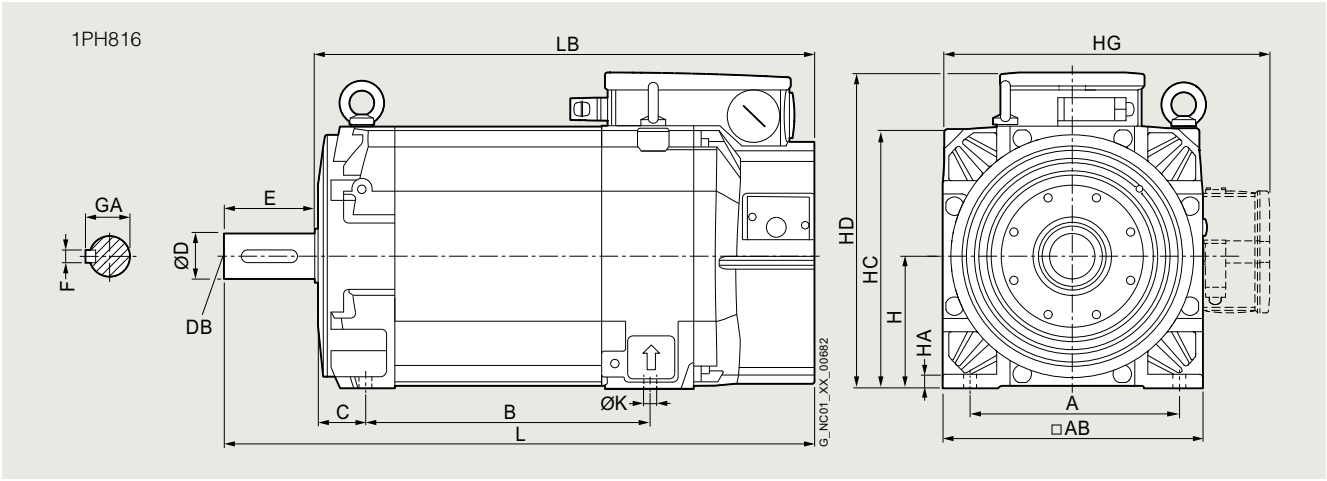

For motor — Dimensions in mm (inches)

Shaft height	Type	IEC	A	AB	B	C	H	HA	HC	HD	HG
1PH8, type of construction IM B3, forced ventilation											
160	1PH8163		254 (10.00)	314 (12.36)	346.5 (13.64)	61 (2.40)	160 (6.30)	17 (0.67)	317 (12.48)	382.5 (15.06)	412.5 (16.24)
	1PH8165				406.5 (16.00)						

Shaft end DE

Shaft height	Type	IEC	K	L	LB	**D**	DB	E	F	GA
160	1PH8163		14 (0.55)	720.5 (28.37)	610.5 (24.04)	**55 (2.17)**	M20	110 (4.33)	16 (0.63)	59 (2.32)
	1PH8165			780.5 (30.73)	670.5 (26.40)					

© Siemens 2024

SIMOTICS M-1PH8 asynchronous motors – SH 160 – forced ventilation

Dimensional drawings

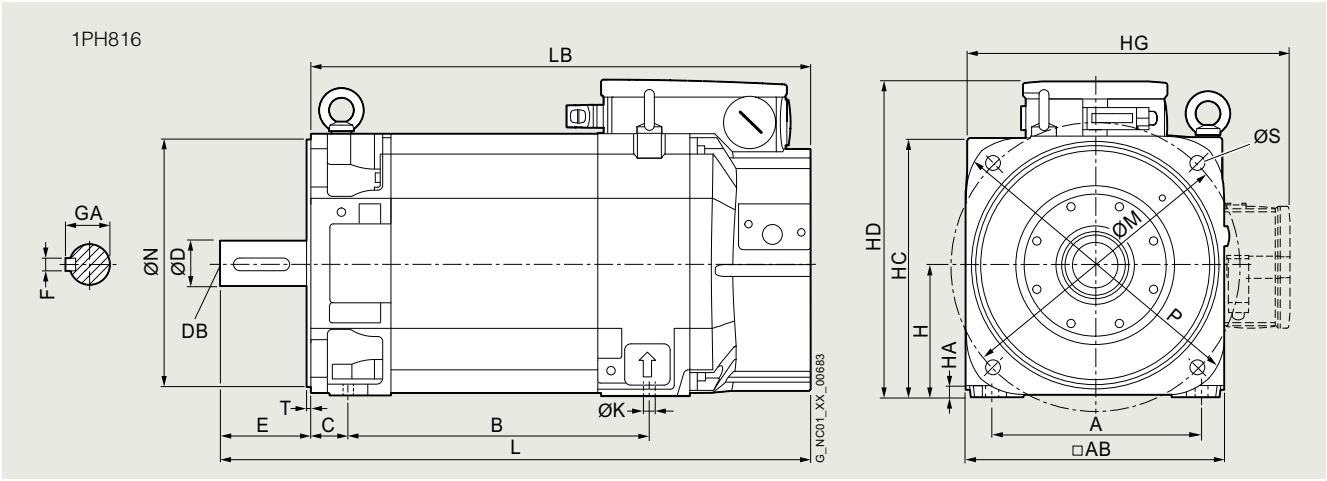

For motor — Dimensions in mm (inches)

Shaft height	Type	IEC	A	AB	B	C	H	HA	HC	HD	HG	K	L
1PH8, type of construction IM B5/IM B35, forced ventilation													
160	1PH8163		254 (10.00)	314 (12.36)	346.5 (13.64)	61 (2.40)	160 (6.30)	17 (0.67)	317 (12.48)	382.5 (15.06)	412.5 (16.24)	14 (0.55)	720.5 (28.37)
	1PH8165				406.5 (16.00)								780.5 (30.73)

Shaft height	Type	IEC	LB	M	N	P	S	T	Shaft end DE **D**	DB	E	F	GA
160	1PH8163		610.5 (24.04)	350 (13.78)	300 (11.81)	393 (15.47)	18 (0.71)	5 (0.20)	**55 (2.17)**	M20	110 (4.33)	16 (0.63)	59 (2.32)
	1PH8165		670.5 (26.40)										

© Siemens 2024

Dimensional drawings

1PH816

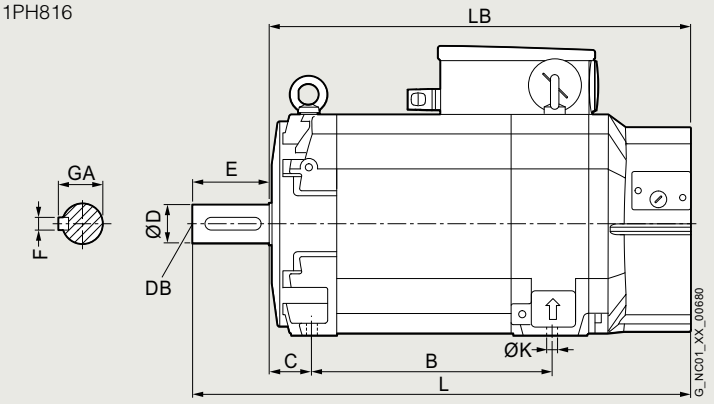

For motor — Dimensions in mm (inches)

Shaft height	Type	IEC	A	AB	B	C	H	HA	HC	HD	HG
1PH8, type of construction IM B3, forced ventilation											
160	1PH8165		254 (10.00)	314 (12.36)	406.5 (16.00)	61 (2.40)	160 (6.30)	17 (0.67)	317 (12.48)	415.5 (16.36)	412.5 (16.24)
	1PH8167				446.5 (17.58)						

Shaft height	Type	IEC	K	L	LB	Shaft end DE **D**	DB	E	F	GA
160	1PH8165		14 (0.55)	780.5 (30.73)	670.5 (26.40)	**55 (2.17)**	M20	110 (4.33)	16 (0.63)	59 (2.32)
	1PH8167			820.5 (32.30)	710.5 (27.97)					

© Siemens 2024

SIMOTICS M-1PH8 synchronous motors – SH 160 – forced ventilation

Dimensional drawings

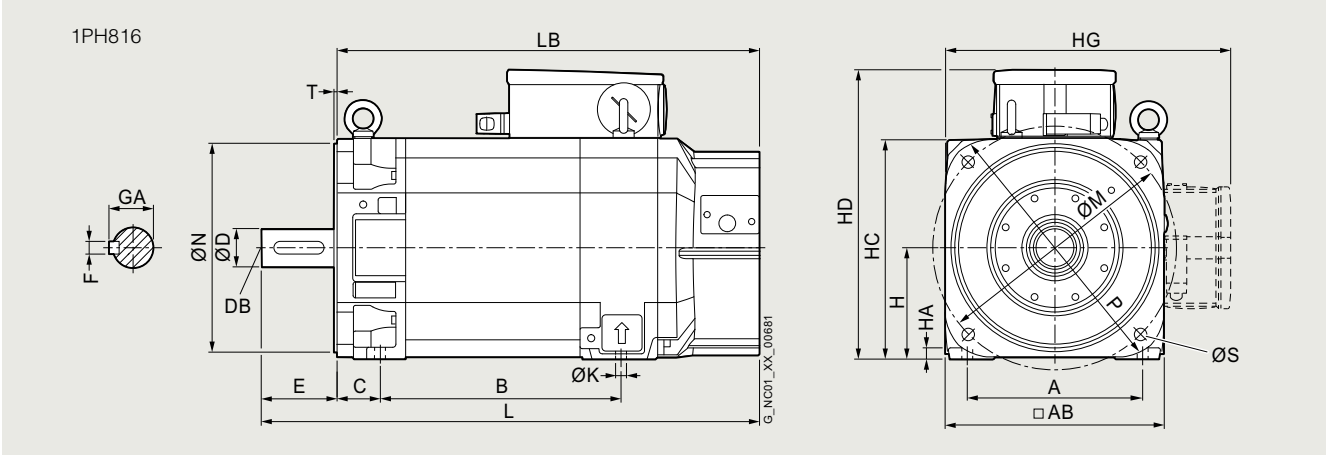

For motor — Dimensions in mm (inches)

Shaft height	Type	IEC	A	AB	B	C	H	HA	HC	HD	HG	K	L
1PH8, type of construction IM B5/IM B35, forced ventilation													
160	1PH8165		254 (10.00)	314 (12.36)	406.5 (16.00)	61 (2.40)	160 (6.30)	17 (0.67)	317 (12.48)	415.5 (16.36)	412.5 (16.24)	14 (0.55)	780.5 (30.73)
	1PH8167				446.5 (17.58)								820.5 (32.30)

Shaft height	Type	IEC	LB	M	N	P	S	T	Shaft end DE **D**	DB	E	F	GA
160	1PH8165		670.5 (26.40)	350 (13.78)	300 (11.81)	393 (15.47)	18 (0.71)	5 (0.20)	**55 (2.17)**	M20	110 (4.33)	16 (0.63)	59 (2.32)
	1PH8167		710.5 (27.97)										

© Siemens 2024

Dimensional drawings

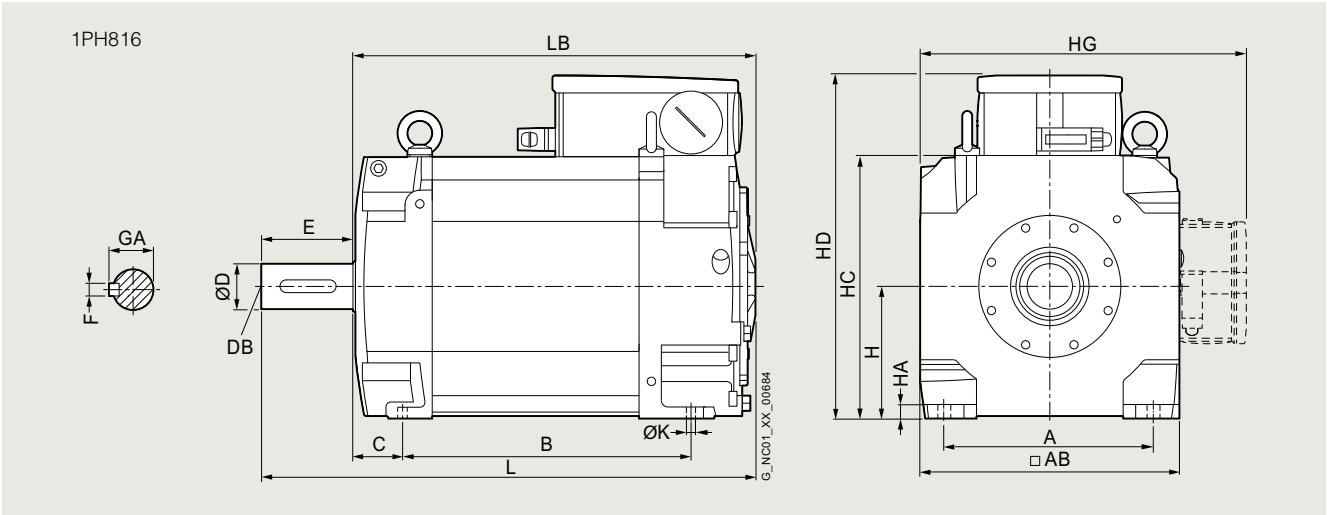

For motor — Dimensions in mm (inches)

Shaft height	Type	IEC	A	AB	B	C	H	HA	HC	HD	HG
1PH8, type of construction IM B3, water cooling											
160	1PH8163/ 1PH8164		254 (10.00)	314 (12.36)	346.5 (13.64)	61 (2.40)	160 (6.30)	17 (0.67)	317 (12.48)	415.5 (16.36)	412.5 (16.24)
	1PH8165/ 1PH8166				406.5 (16.00)						
	1PH8168				446.5 (17.58)						

Shaft end DE

Shaft height	Type	IEC	K	L	LB	**D**	DB	E	F	GA
160	1PH8163/ 1PH8164		14 (0.55)	598.5 (23.56)	488.5 (19.23)	**55 (2.17)**	M20	110 (4.33)	16 (0.63)	59 (2.32)
	1PH8165/ 1PH8166			658.5 (25.93)	548.5 (21.59)					
	1PH8168			698.5 (27.50)	588.5 (23.17)					

© Siemens 2024

SIMOTICS M-1PH8 asynchronous and synchronous motors – SH 160 – water cooling

Dimensional drawings

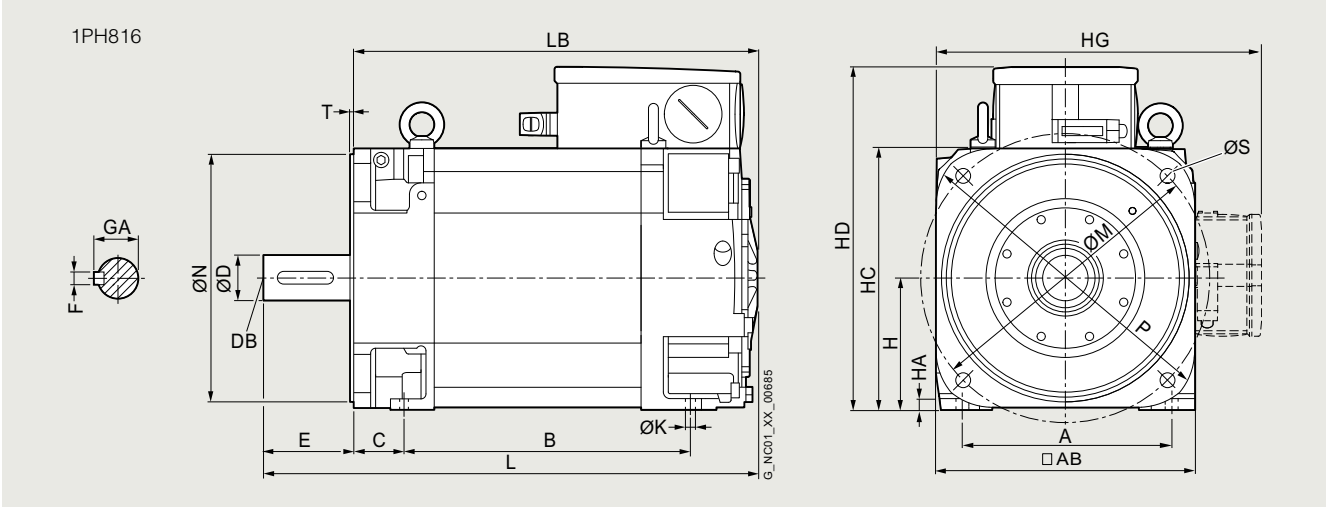

For motor — Dimensions in mm (inches)

Shaft height	Type	IEC	A	AB	B	C	H	HA	HC	HD	HG	K	L
1PH8, type of construction IM B5/IM B35, water cooling													
160	1PH8163/ 1PH8164		254 (10.00)	314 (12.36)	346.5 (13.64)	61 (2.40)	160 (6.30)	17 (0.67)	317 (12.48)	415.5 (16.36)	412.5 (16.24)	14 (0.55)	598.5 (23.56)
	1PH8165/ 1PH8166				406.5 (16.00)								658.5 (25.93)
	1PH8168				446.5 (17.58)								698.5 (27.50)

Shaft height	Type	IEC	LB	M	N	P	S	T	Shaft end DE **D**	DB	E	F	GA
160	1PH8163/ 1PH8164		488.5 (19.23)	350 (13.78)	300 (11.81)	393 (15.47)	18 (0.71)	5 (0.20)	**55 (2.17)**	M20	110 (4.33)	16 (0.63)	59 (2.32)
	1PH8165/ 1PH8166		548.5 (21.59)										
	1PH8168		588.5 (23.17)										

© Siemens 2024

Dimensional drawings

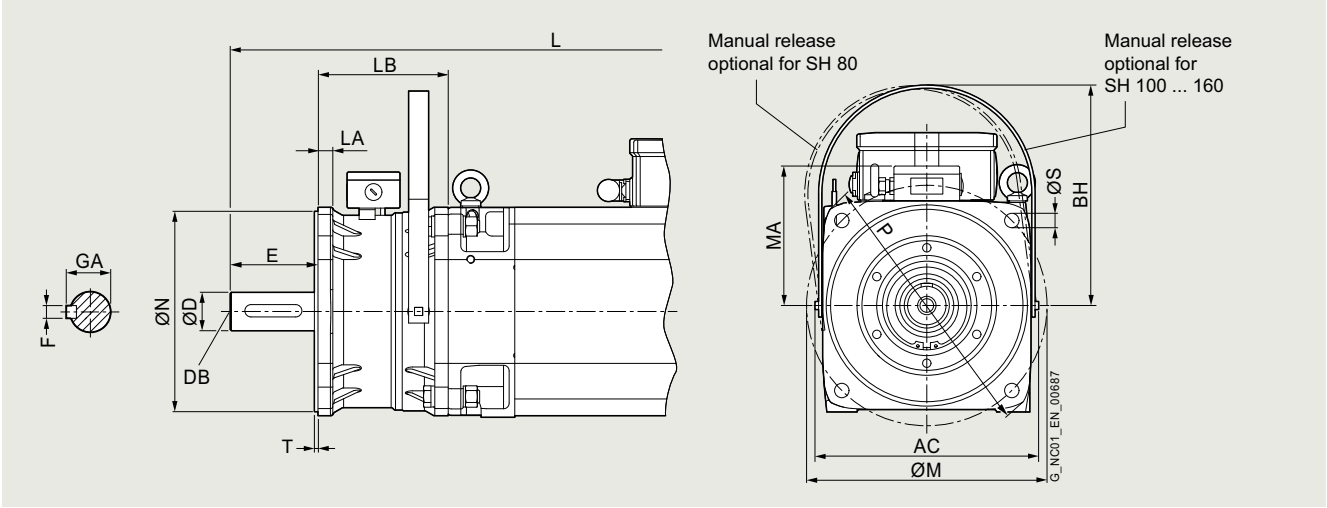

For motor		Dimensions in mm (inches)														Shaft end DE				
Shaft height	Type	IEC	AC	BH	L Forced ventilation	L Water cooling	LA	LB	M	MA	N	P	S	T	D	DB	E	F	GA
1PH8 shaft heights 80 to 132, types of construction IM B5 and IM B35, forced ventilation and water cooling – brake mounting																				
80	1PH8083		164 (6.46)	162 (6.38)	586 (23.07)	506.5 (19.94)	12 (0.47)	125 (4.92)	165 (6.50)	162 (6.38)	130 (5.12)	200 (7.87)	12 (0.47)	3.5 (0.14)	**32 (1.26)**	M12	80 (3.15)	10 (0.39)	35 (1.38)
	1PH8087				636 (25.04)	556.5 (21.91)													
100	1PH8101		220.5 (8.68)	224 (8.82)	579.5 (22.81)	499.5 (19.67)	16 (0.63)	130 (5.12)	215 (8.46)	224 (8.82)	180 (7.09)	250 (9.84)	14 (0.55)	4 (0.16)	**38 (1.50)**	M12	80 (3.15)	10 (0.39)	41 (1.61)
	1PH8103				615 (24.21)	535 (21.06)													
	1PH8105				674.5 (26.56)	594.5 (23.41)													
	1PH8107				710 (27.95)	630 (24.80)													
132	1PH8131		278.5 (10.96)	269 (10.59)	711 (27.99)	619.5 (24.39)	18 (0.71)	162 (6.38)	300 (11.81)	269 (10.59)	250 (9.84)	340 (13.39)	18 (0.71)	5 (0.20)	**48 (1.89)**	M16	110 (4.33)	14 (0.55)	51.5 (2.03)
	1PH8133				756 (29.76)	664.5 (26.16)													
	1PH8135				801 (31.54)	709.5 (27.93)													
	1PH8137/ 1PH8138				841 (33.11)	749.5 (29.51)													
1PH8 shaft height 160, type of construction IM B35, forced ventilation and water cooling – brake mounting																				
160	1PH8163/ 1PH8164		319 (12.56)	328 (12.91)	888.5 (34.98)	766.5 (30.18)	23 (0.91)	168 (6.61)	350 (13.78)	328 (12.91)	300 (11.81)	393 (15.47)	18 (0.71)	5 (0.20)	**55 (2.17)**	M20	110 (4.33)	16 (0.63)	59 (2.32)
	1PH8165/ 1PH8166				948.5 (37.34)	826.5 (32.54)													
	1PH8167/ 1PH8168				988.5 (38.92)	866.5 (34.11)													

© Siemens 2024

SIMOTICS M-1PH8 asynchronous and synchronous motors – SH 80 to 160 – forced ventilation with pipe connection

Dimensional drawings

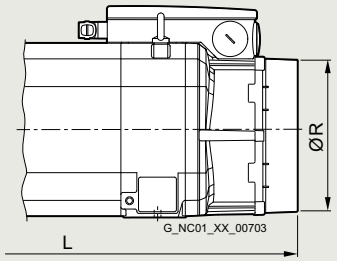

For motor		Dimensions in mm (inches)	
Shaft height	Type	IEC L	R
1PH8 asynchronous motors shaft heights 80 and 100, forced ventilation – pipe connection (option K80)			
80	1PH8083	503 (19.80)	143 (5.63)
	1PH8087	553 (21.77)	
100	1PH8101	496.5 (19.55)	158 (6.22)
	1PH8103	532 (20.94)	
	1PH8105	591.5 (23.29)	
	1PH8107	627 (24.68)	
1PH8 asynchronous and synchronous motors shaft heights 132 and 160, forced ventilation – pipe connection (option K80)			
132	1PH8131	595.5 (23.44)	222 (8.74)
	1PH8133	640.5 (25.22)	
	1PH8135	685.5 (26.99)	
	1PH8137	725.5 (28.56)	
160	1PH8163	792 (31.18)	276 (10.87)
	1PH8165	852 (33.54)	
	1PH8167	892 (35.12)	

© Siemens 2024

Dimensional drawings

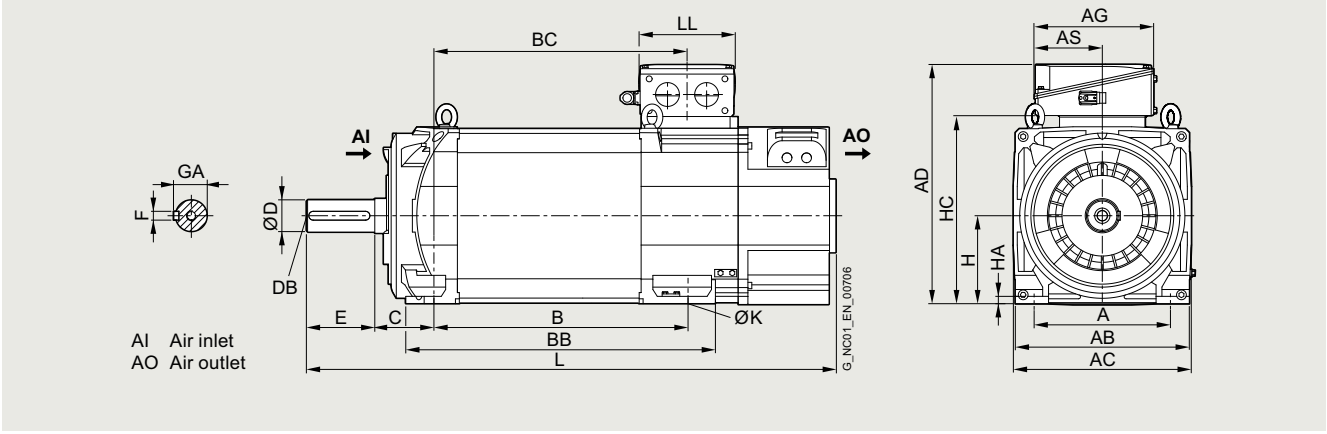

For motor		Dimensions in mm (inches)												Shaft end DE				
Shaft height	Type	IEC	A	AB	AC	B	BB	C	H	HA	HC	K	L	**D**	DB	E	F	GA
1PH8 type of construction IM B3, forced ventilation – direction of air flow DE → NDE																		
180	1PH8184		279 (10.98)	356 (14.02)	364 (14.33)	430 (16.93)	545 (21.46)	121 (4.76)	180 (7.09)	15 (0.59)	383 (15.08)	14.5 (0.57)	995 (39.17)	**65 (2.56)**	M20	140 (5.51)	18 (0.71)	69 (2.72)
	1PH8186					520 (20.47)	635 (25.00)						1085 (42.72)					

Terminal box		Dimensions in mm (inches)					
Shaft height	Type	IEC	AD	AG	AS	BC	LL
Terminal box type 1XB7322							
180	1PH8184		490 (19.29)	245 (9.65)	140 (5.51)	429 (16.89)	196 (7.72)
	1PH8186					519 (20.43)	
Terminal box type 1XB7422							
180	1PH8184		533 (20.98)	281 (11.06)	176 (6.93)	429 (16.89)	233 (9.17)
	1PH8186					519 (20.43)	
Terminal box type 1XB7700							
180	1PH8184		586 (23.07)	297 (11.69)	156 (6.14)	429 (16.89)	310 (12.20)
	1PH8186					519 (20.43)	

© Siemens 2024

SIMOTICS M-1PH8 asynchronous and synchronous motors – SH 180 – forced ventilation

Dimensional drawings

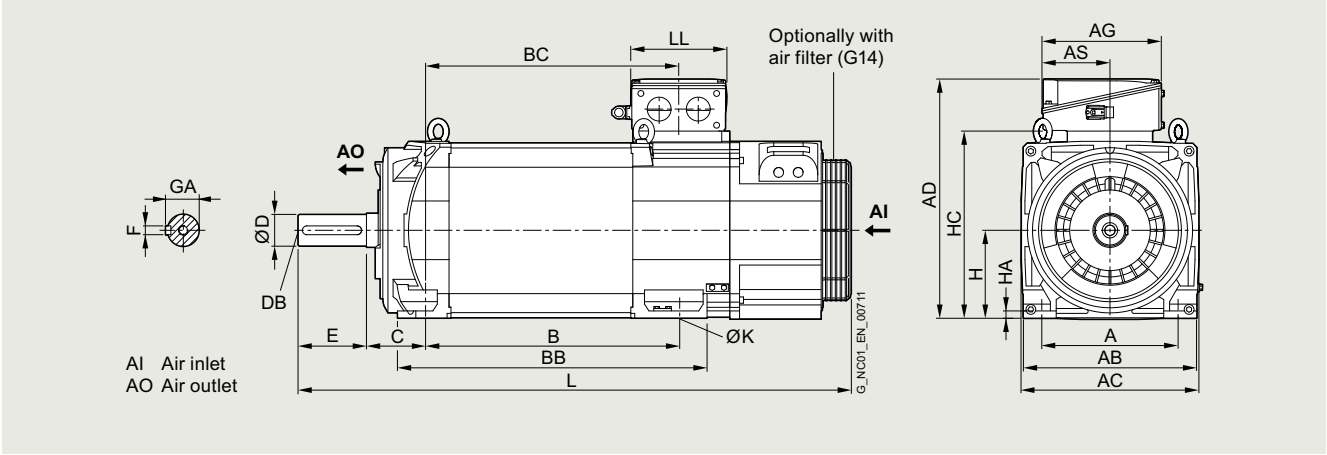

For motor		Dimensions in mm (inches)																
														Shaft end DE				
Shaft height	Type	IEC	A	AB	AC	B	BB	C	H	HA	HC	K	L	**D**	DB	E	F	GA
1PH8 type of construction IM B3, forced ventilation – direction of air flow NDE → DE																		
180	1PH8184		279 (10.98)	356 (14.02)	364 (14.33)	430 (16.93)	545 (21.46)	121 (4.76)	180 (7.09)	15 (0.59)	383 (15.08)	14.5 (0.57)	1047 (41.22)	**65 (2.56)**	M20	140 (5.51)	18 (0.71)	69 (2.72)
	1PH8186					520 (20.47)	635 (25.00)						1137 (44.76)					

Terminal box		Dimensions in mm (inches)					
Shaft height	Type	IEC	AD	AG	AS	BC	LL
Terminal box type 1XB7322							
180	1PH8184		490 (19.29)	245 (9.65)	140 (5.51)	429 (16.89)	196 (7.72)
	1PH8186					519 (20.43)	
Terminal box type 1XB7422							
180	1PH8184		533 (20.98)	281 (11.06)	176 (6.93)	429 (16.89)	233 (9.17)
	1PH8186					519 (20.43)	
Terminal box type 1XB7700							
180	1PH8184		586 (23.07)	297 (11.69)	156 (6.14)	429 (16.89)	310 (12.20)
	1PH8186					519 (20.43)	

© Siemens 2024

Dimensional drawings

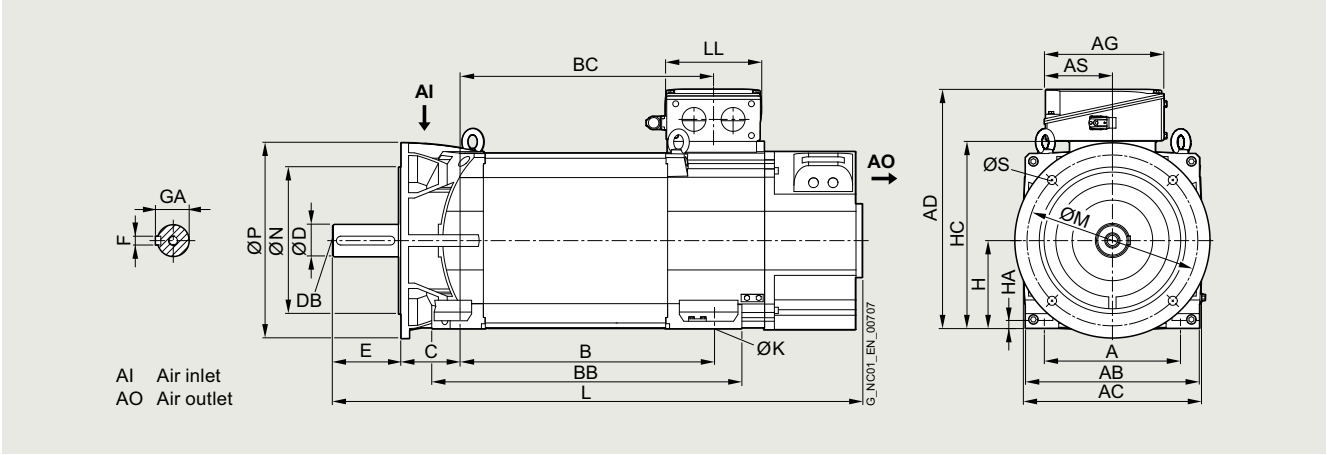

For motor		Dimensions in mm (inches)																Shaft end DE				
Shaft height	Type	IEC	A	AB	AC	B	BB	C	H	HA	HC	K	L	M	N	P	S	**D**	DB	E	F	GA
1PH8 type of construction IM B35, forced ventilation – direction of air flow DE → NDE, A400 flange (option K90)																						
180	1PH8184		279 (10.98)	356 (14.02)	364 (14.33)	430 (16.93)	545 (21.46)	121 (4.76)	180 (7.09)	15 (0.59)	383 (15.08)	14.5 (0.57)	995 (39.17)	350 (13.78)	300 (11.81)	400 (15.75)	18.5 (0.73)	**65 (2.56)**	M20	140 (5.51)	18 (0.71)	69 (2.72)
	1PH8186					520 (20.47)	635 (25.00)						1085 (42.72)									

Terminal box		Dimensions in mm (inches)					
Shaft height	Type	IEC	AD	AG	AS	BC	LL
Terminal box type 1XB7322							
180	1PH8184		490 (19.29)	245 (9.65)	140 (5.51)	429 (16.89)	196 (7.72)
	1PH8186					519 (20.43)	
Terminal box type 1XB7422							
180	1PH8184		533 (20.98)	281 (11.06)	176 (6.93)	429 (16.89)	233 (9.17)
	1PH8186					519 (20.43)	
Terminal box type 1XB7700							
180	1PH8184		586 (23.07)	297 (11.69)	156 (6.14)	429 (16.89)	310 (12.20)
	1PH8186					519 (20.43)	

© Siemens 2024

SIMOTICS M-1PH8 asynchronous and synchronous motors – SH 180 – forced ventilation

Dimensional drawings

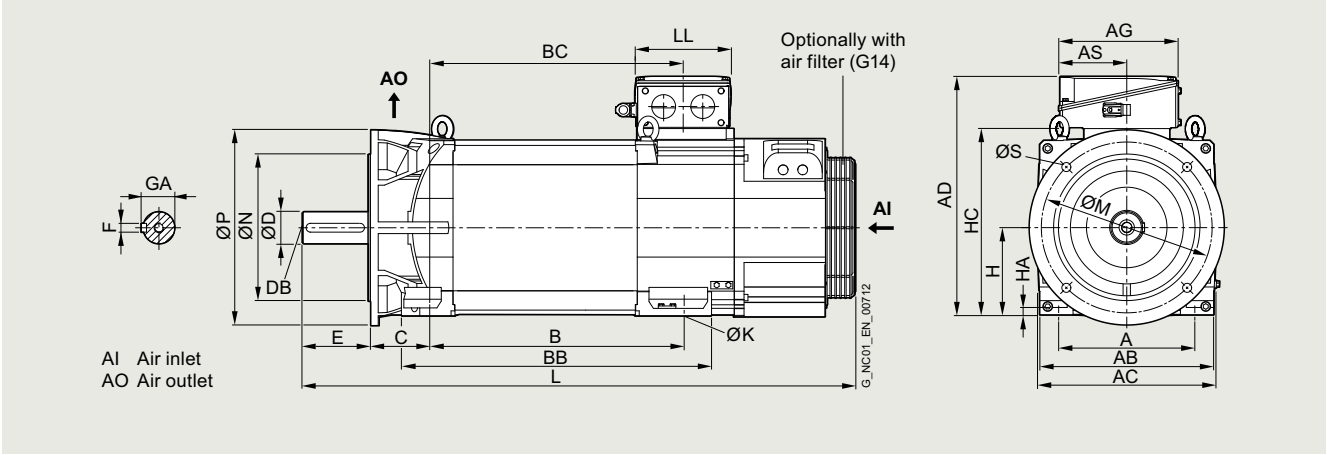

For motor		Dimensions in mm (inches)																Shaft end DE				
Shaft height	Type	IEC	A	AB	AC	B	BB	C	H	HA	HC	K	L	M	N	P	S	**D**	DB	E	F	GA
1PH8 type of construction IM B35, forced ventilation – direction of air flow NDE → DE, A400 flange (option K90)																						
180	1PH8184		279 (10.98)	356 (14.02)	364 (14.33)	430 (16.93)	545 (21.46)	121 (4.76)	180 (7.09)	15 (0.59)	383 (15.08)	14.5 (0.57)	1047 (41.22)	350 (13.78)	300 (11.81)	400 (15.75)	18.5 (0.73)	**65 (2.56)**	M20	140 (5.51)	18 (0.71)	69 (2.72)
	1PH8186					520 (20.47)	635 (25.00)						1137 (44.76)									

Terminal box		Dimensions in mm (inches)					
Shaft height	Type	IEC	AD	AG	AS	BC	LL
Terminal box type 1XB7322							
180	1PH8184		490 (19.29)	245 (9.65)	140 (5.51)	429 (16.89)	196 (7.72)
	1PH8186					519 (20.43)	
Terminal box type 1XB7422							
180	1PH8184		533 (20.98)	281 (11.06)	176 (6.93)	429 (16.89)	233 (9.17)
	1PH8186					519 (20.43)	
Terminal box type 1XB7700							
180	1PH8184		586 (23.07)	297 (11.69)	156 (6.14)	429 (16.89)	310 (12.20)
	1PH8186					519 (20.43)	

© Siemens 2024

Dimensional drawings

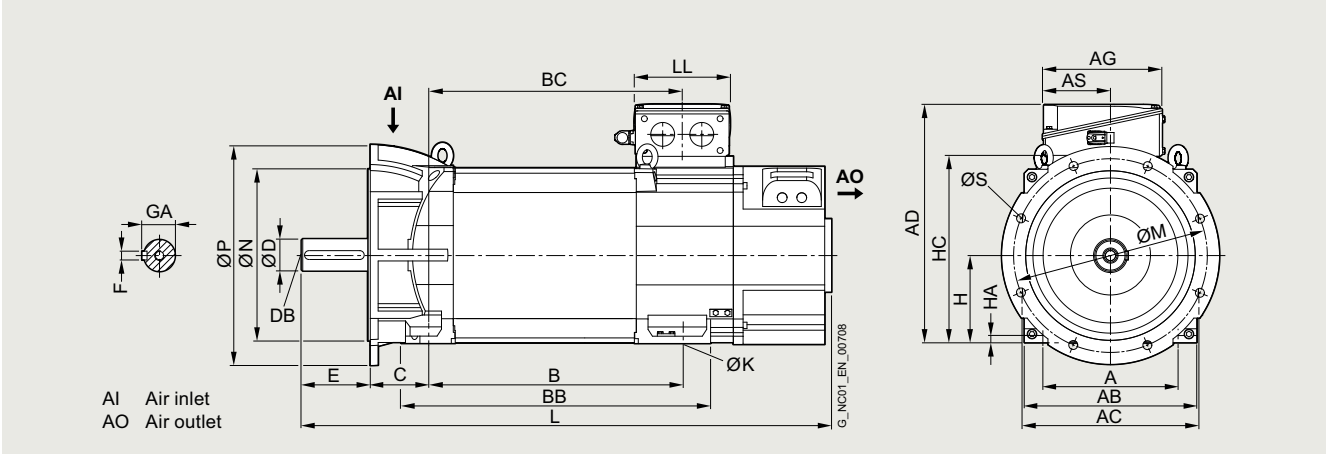

For motor		Dimensions in mm (inches)																Shaft end DE				
Shaft height	Type	IEC	A	AB	AC	B	BB	C	H	HA	HC	K	L	M	N	P	S	**D**	DB	E	F	GA
1PH8 type of construction IM B35, forced ventilation – direction of air flow DE → NDE, A450 flange																						
180	1PH8184		279 (10.98)	356 (14.02)	364 (14.33)	430 (16.93)	545 (21.46)	121 (4.76)	180 (7.09)	15 (0.59)	383 (15.08)	14.5 (0.57)	995 (39.17)	400 (15.75)	350 (13.78)	450 (17.72)	18.5 (0.73)	**65 (2.56)**	M20	140 (5.51)	18 (0.71)	69 (2.72)
	1PH8186					520 (20.47)	635 (25.00)						1085 (42.72)									

Terminal box		Dimensions in mm (inches)					
Shaft height	Type	IEC	AD	AG	AS	BC	LL
Terminal box type 1XB7322							
180	1PH8184		490 (19.29)	245 (9.65)	140 (5.51)	429 (16.89)	196 (7.72)
	1PH8186					519 (20.43)	
Terminal box type 1XB7422							
180	1PH8184		533 (20.98)	281 (11.06)	176 (6.93)	429 (16.89)	233 (9.17)
	1PH8186					519 (20.43)	
Terminal box type 1XB7700							
180	1PH8184		586 (23.07)	297 (11.69)	156 (6.14)	429 (16.89)	310 (12.20)
	1PH8186					519 (20.43)	

8
2

© Siemens 2024

SIMOTICS M-1PH8 asynchronous and synchronous motors – SH 180 – forced ventilation

Dimensional drawings

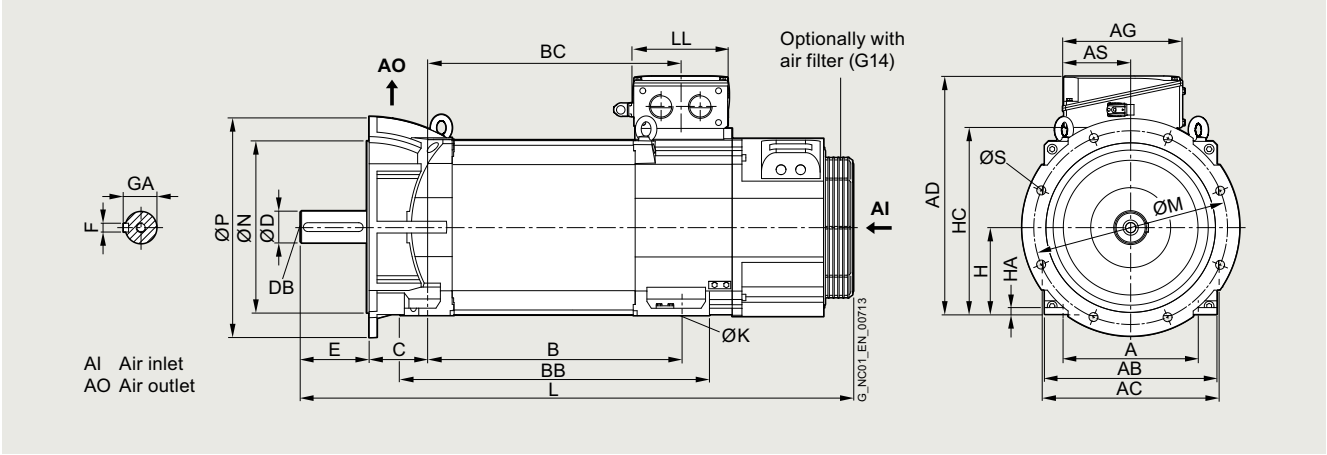

For motor		Dimensions in mm (inches)																Shaft end DE				
Shaft height	Type	IEC	A	AB	AC	B	BB	C	H	HA	HC	K	L	M	N	P	S	**D**	DB	E	F	GA
1PH8 type of construction IM B35, forced ventilation – direction of air flow NDE → DE, A450 flange																						
180	1PH8184		279 (10.98)	356 (14.02)	364 (14.33)	430 (16.93)	545 (21.46)	121 (4.76)	180 (7.09)	15 (0.59)	383 (15.08)	14.5 (0.57)	1047 (41.22)	400 (15.75)	350 (13.78)	450 (17.72)	18.5 (0.73)	**65 (2.56)**	M20	140 (5.51)	18 (0.71)	69 (2.72)
	1PH8186					520 (20.47)	635 (25.00)						1137 (44.76)									

Terminal box		Dimensions in mm (inches)					
Shaft height	Type	IEC	AD	AG	AS	BC	LL
Terminal box type 1XB7322							
180	1PH8184		490 (19.29)	245 (9.65)	140 (5.51)	429 (16.89)	196 (7.72)
	1PH8186					519 (20.43)	
Terminal box type 1XB7422							
180	1PH8184		533 (20.98)	281 (11.06)	176 (6.93)	429 (16.89)	233 (9.17)
	1PH8186					519 (20.43)	
Terminal box type 1XB7700							
180	1PH8184		586 (23.07)	297 (11.69)	156 (6.14)	429 (16.89)	310 (12.20)
	1PH8186					519 (20.43)	

© Siemens 2024

Dimensional drawings

1PH818

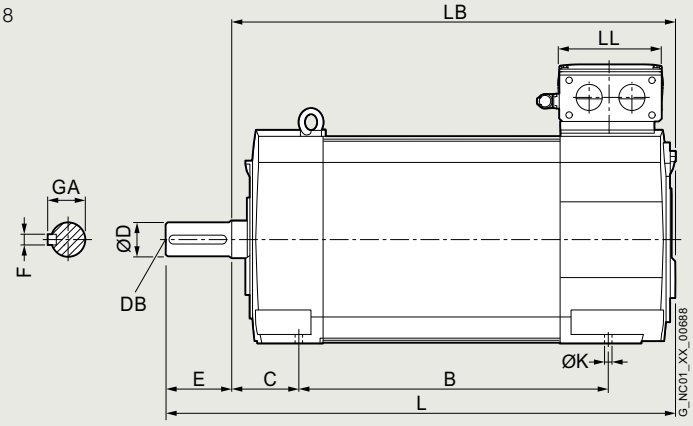

For motor		Dimensions in mm (inches)											
Shaft height	Type	IEC	A	AB	AC	B	C	H	HA	HC	K	L	LB
1PH8, types of construction IM B3/IM V5, water cooling													
180	1PH8184		279 (10.98)	356 (14.02)	384 (15.12)	430 (16.93)	121 (4.76)	180 (7.09)	15 (0.59)	372 (14.65)	14.5 (0.57)	810 (31.89)	670 (26.38)
	1PH8186					520 (20.47)						900 (35.43)	760 (29.92)

			Shaft end DE					Terminal box type								
								1XB7322			1XB7422			1XB7700		
Shaft height	Type	IEC	**D**	DB	E	F	GA	AG	HD	LL	AG	HD	LL	AG	HD	LL
180	1PH8184		**65 (2.56)**	M20	140 (5.51)	18 (0.71)	69 (2.72)	245 (9.65)	490 (19.29)	196 (7.72)	281 (11.06)	533 (20.98)	233 (9.17)	297 (11.69)	586 (23.07)	310 (12.20)
	1PH8186															

© Siemens 2024

SIMOTICS M-1PH8 asynchronous and synchronous motors – SH 180 – water cooling

Dimensional drawings

1PH818
A400 flange

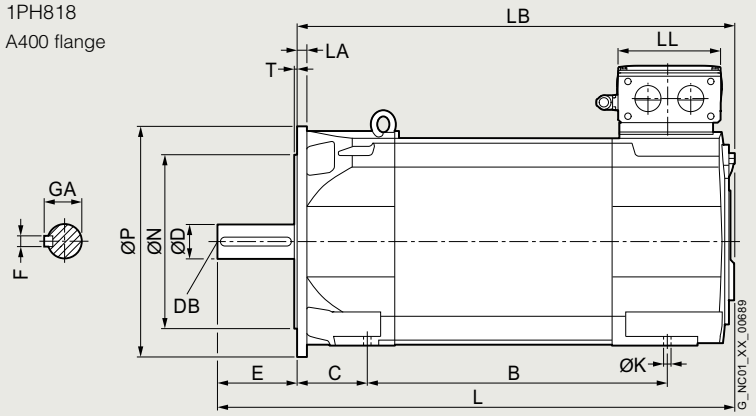

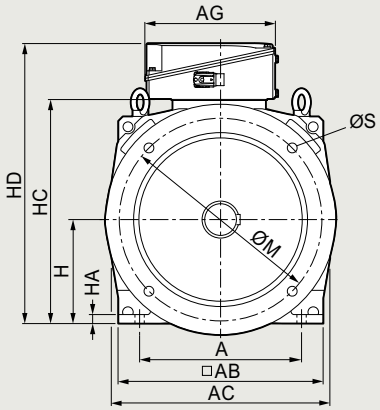

A450 flange

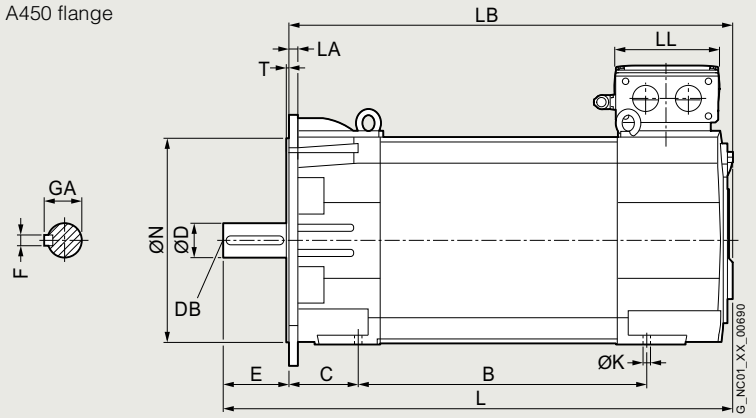

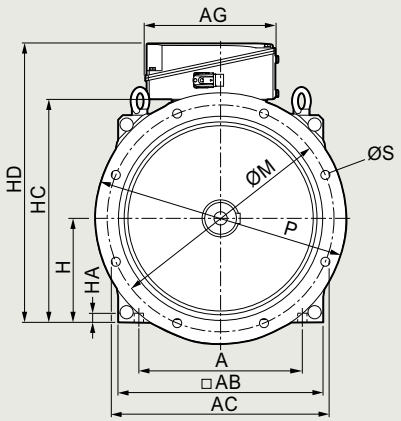

For motor		Dimensions in mm (inches)													A400	A450	A400	A450
Shaft height	Type	IEC	A	AB	AC	B	C	H	HA	HC	K	L	LA	LB	M		N	
1PH8, types of construction IM B5/IM B35/IM V15, water cooling																		
180	1PH8184		279 (10.98)	356 (14.02)	384 (15.12)	430 (16.93)	121 (4.76)	180 (7.09)	15 (0.59)	372 (14.65)	14.5 (0.57)	810 (31.89)	16 (0.63)	670 (26.38)	350 (13.78)	400 (15.75)	300 (11.81)	350 (13.78)
	1PH8186					520 (20.47)						900 (35.43)		760 (29.92)				

			Shaft end DE								Terminal box types 1XB7322, 1XB7422, 1XB7700
			A400	A450							Dimensions as for types of construction IM B3/IM V5
Shaft height	Type	IEC	P		S	T	**D**	DB	E	F	GA
180	1PH8184		400 (15.75)	450 (17.72)	18.5 (0.73)	5 (0.20)	**65 (2.56)**	M20	140 (5.51)	18 (0.71)	69 (2.72)
	1PH8186										

© Siemens 2024

Dimensional drawings

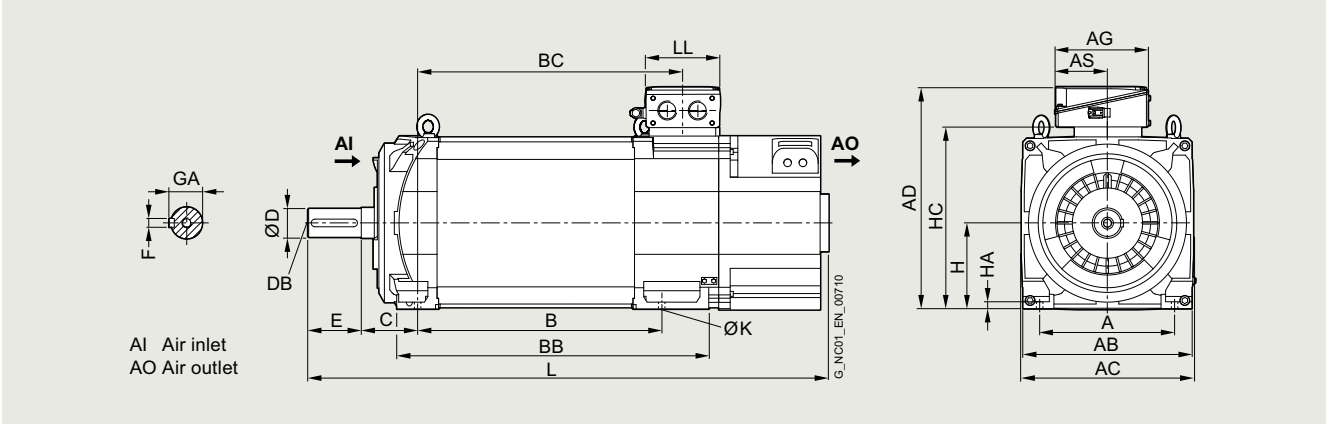

For motor		Dimensions in mm (inches)												Shaft end DE				
Shaft height	Type	IEC	A	AB	AC	B	BB	C	H	HA	HC	K	L	**D**	DB	E	F	GA
1PH8 type of construction IM B3, forced ventilation – direction of air flow DE → NDE																		
225	1PH8224		356 (14.02)	446 (17.56)	454 (17.87)	445 (17.52)	625 (24.61)	149 (5.87)	225 (8.86)	18 (0.71)	475 (18.70)	18.5 (0.73)	1171 (46.10)	**75 (2.95)**	M20	140 (5.51)	20 (0.79)	79.5 (3.13)
	1PH8226					545 (21.46)	725 (28.54)						1271 (40.04)					
	1PH8228					635 (25.00)	815 (32.09)						1361 (53.58)					

Terminal box		Dimensions in mm (inches)					
Shaft height	Type	IEC	AD	AG	AS	BC	LL
Terminal box type 1XB7322							
225	1PH8224		582 (22.91)	245 (9.65)	140 (5.51)	481 (18.94)	196 (7.72)
	1PH8226					581 (22.87)	
	1PH8228					671 (26.42)	
Terminal box type 1XB7422							
225	1PH8224		625 (24.61)	281 (11.06)	176 (6.93)	481 (18.94)	233 (9.17)
	1PH8226					581 (22.87)	
	1PH8228					671 (26.42)	
Terminal box type 1XB7700							
225	1PH8224		678 (26.69)	297 (11.69)	156 (6.14)	481 (18.94)	310 (12.20)
	1PH8226					581 (22.87)	
	1PH8228					671 (26.42)	

© Siemens 2024

SIMOTICS M-1PH8 asynchronous and synchronous motors – SH 225 – forced ventilation

Dimensional drawings

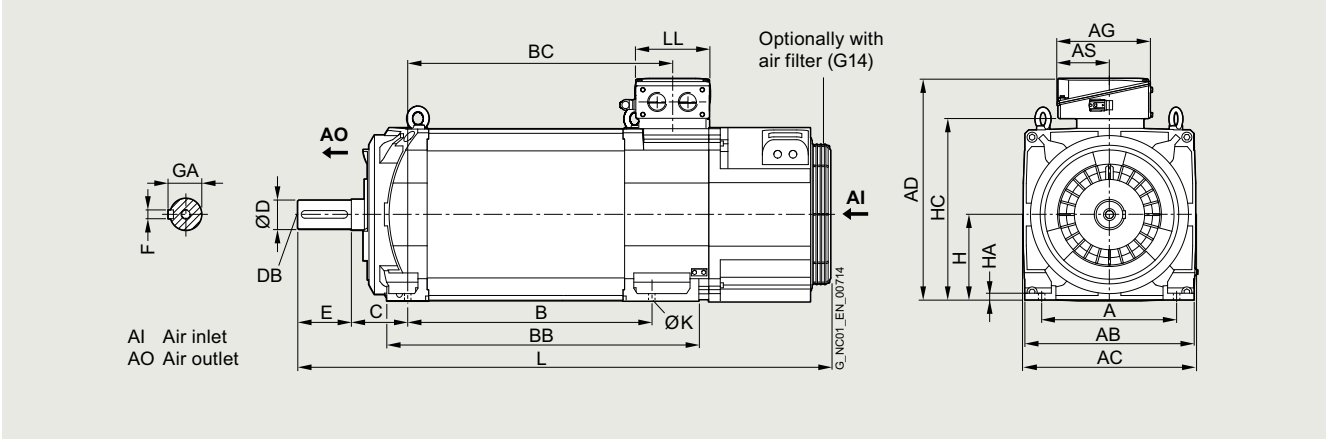

For motor		Dimensions in mm (inches)												Shaft end DE				
Shaft height	Type	IEC	A	AB	AC	B	BB	C	H	HA	HC	K	L	**D**	DB	E	F	GA
1PH8 type of construction IM B3, forced ventilation – direction of air flow NDE → DE																		
225	1PH8224		356 (14.02)	446 (17.56)	454 (17.87)	445 (17.52)	625 (24.61)	149 (5.87)	225 (8.86)	18 (0.71)	475 (18.70)	18.5 (0.73)	1206 (47.48)	**75 (2.95)**	M20	140 (5.51)	20 (0.79)	79.5 (3.13)
	1PH8226					545 (21.46)	725 (28.54)						1306 (51.42)					
	1PH8228					635 (25.00)	815 (32.09)						1396 (54.96)					

Terminal box		Dimensions in mm (inches)					
Shaft height	Type	IEC	AD	AG	AS	BC	LL
Terminal box type 1XB7322							
225	1PH8224		582 (22.91)	245 (9.65)	140 (5.51)	481 (18.94)	196 (7.72)
	1PH8226					581 (22.87)	
	1PH8228					671 (26.42)	
Terminal box type 1XB7422							
225	1PH8224		625 (24.61)	281 (11.06)	176 (6.93)	481 (18.94)	233 (9.17)
	1PH8226					581 (22.87)	
	1PH8228					671 (26.42)	
Terminal box type 1XB7700							
225	1PH8224		678 (26.69)	297 (11.69)	156 (6.14)	481 (18.94)	310 (12.20)
	1PH8226					581 (22.87)	
	1PH8228					671 (26.42)	

© Siemens 2024

Dimensional drawings

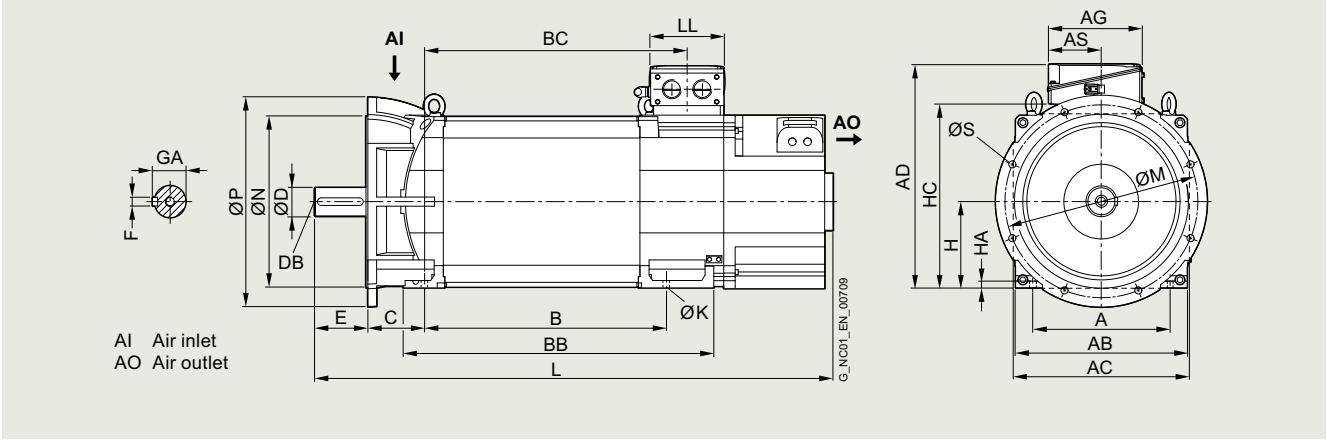

For motor		Dimensions in mm (inches)																Shaft end DE				
Shaft height	Type	IEC	A	AB	AC	B	BB	C	H	HA	HC	K	L	M	N	P	S	**D**	DB	E	F	GA
1PH8 type of construction IM B35, forced ventilation – direction of air flow DE → NDE, A550 flange																						
225	1PH8224		356 (14.02)	446 (17.56)	454 (17.87)	445 (17.52)	625 (24.61)	149 (5.87)	225 (8.86)	18 (0.71)	475 (18.70)	18.5 (0.73)	1171 (46.10)	500 (19.69)	450 (17.72)	550 (21.65)	18.5 (0.73)	**75 (2.95)**	M20	140 (5.51)	20 (0.79)	79.5 (3.13)
	1PH8226					545 (21.46)	725 (28.54)						1271 (50.04)									
	1PH8228					635 (25.00)	815 (32.09)						1361 (53.58)									

Terminal box		Dimensions in mm (inches)					
Shaft height	Type	IEC	AD	AG	AS	BC	LL
Terminal box type 1XB7322							
225	1PH8224		582 (22.91)	245 (9.65)	140 (5.51)	481 (18.94)	196 (7.72)
	1PH8226					581 (22.87)	
	1PH8228					671 (26.42)	
Terminal box type 1XB7422							
225	1PH8224		625 (24.61)	281 (11.06)	176 (6.93)	481 (18.94)	233 (9.17)
	1PH8226					581 (22.87)	
	1PH8228					671 (26.42)	
Terminal box type 1XB7700							
225	1PH8224		678 (26.69)	297 (11.69)	156 (6.14)	481 (18.94)	310 (12.20)
	1PH8226					581 (22.87)	
	1PH8228					671 (26.42)	

8
2

© Siemens 2024

SIMOTICS M-1PH8 asynchronous and synchronous motors – SH 225 – forced ventilation

Dimensional drawings

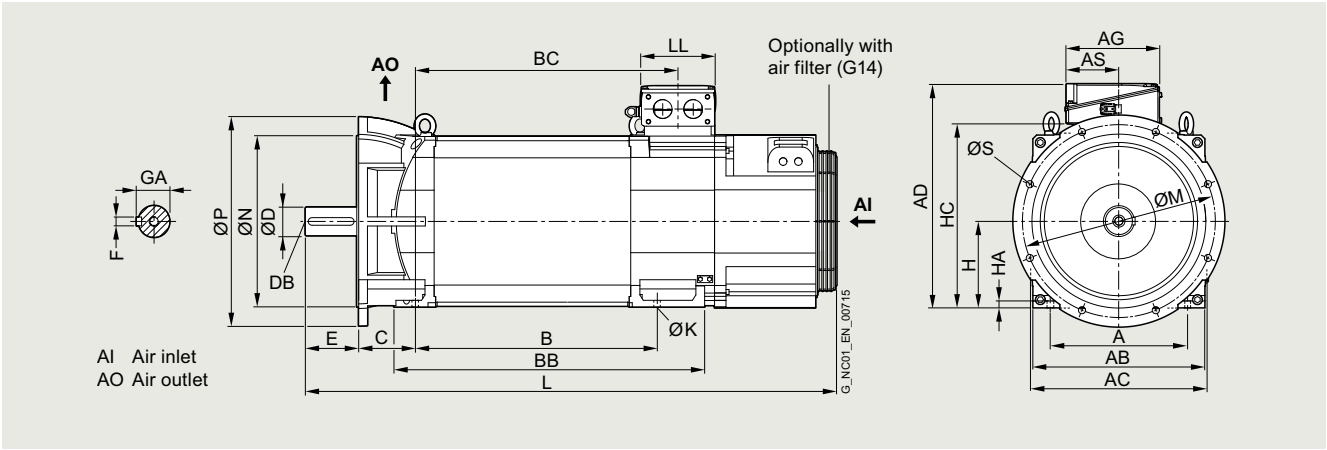

For motor		Dimensions in mm (inches)																Shaft end DE				
Shaft height	Type	IEC	A	AB	AC	B	BB	C	H	HA	HC	K	L	M	N	P	S	**D**	DB	E	F	GA
1PH8 type of construction IM B35, forced ventilation – direction of air flow NDE → DE, A550 flange																						
225	1PH8224		356 (14.02)	446 (17.56)	454 (17.87)	445 (17.52)	625 (24.61)	149 (5.87)	225 (8.86)	18 (0.71)	475 (18.70)	18.5 (0.73)	1206 (47.48)	500 (19.69)	450 (17.72)	550 (21.65)	18.5 (0.73)	**75 (2.95)**	M20	140 (5.51)	20 (0.79)	79.5 (3.13)
	1PH8226					545 (21.46)	725 (28.54)						1306 (51.42)									
	1PH8228					635 (25.00)	815 (32.09)						1396 (54.96)									

Terminal box		Dimensions in mm (inches)					
Shaft height	Type	IEC	AD	AG	AS	BC	LL
Terminal box type 1XB7322							
225	1PH8224		582 (22.91)	245 (9.65)	140 (5.51)	481 (18.94)	196 (7.72)
	1PH8226					581 (22.87)	
	1PH8228					671 (26.42)	
Terminal box type 1XB7422							
225	1PH8224		625 (24.61)	281 (11.06)	176 (6.93)	481 (18.94)	233 (9.17)
	1PH8226					581 (22.87)	
	1PH8228					671 (26.42)	
Terminal box type 1XB7700							
225	1PH8224		678 (26.69)	297 (11.69)	156 (6.14)	481 (18.94)	310 (12.20)
	1PH8226					581 (22.87)	
	1PH8228					671 (26.42)	

© Siemens 2024

Dimensional drawings

1PH822

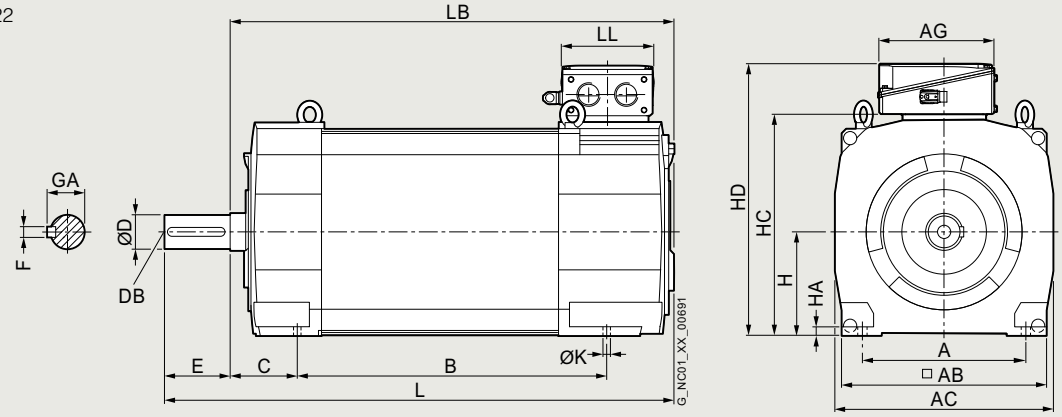

For motor		Dimensions in mm (inches)											
Shaft height	Type	IEC	A	AB	AC	B	C	H	HA	HC	K	L	LB
1PH8, types of construction IM B3/IM V5, water cooling													
225	1PH8224		356 (14.02)	446 (17.56)	474 (18.66)	445 (17.52)	149 (5.87)	225 (8.86)	18 (0.71)	462 (18.19)	18.5 (0.73)	915 (36.02)	775 (30.51)
	1PH8226					545 (21.46)						1015 (39.96)	875 (34.45)
	1PH8228					635 (25.0)						1105 (43.50)	965 (37.99)

			Shaft end DE					Terminal box type								
								1XB7322			1XB7422			1XB7700		
Shaft height	Type	IEC	**D**	DB	E	F	GA	AG	HD	LL	AG	HD	LL	AG	HD	LL
225	1PH8224		**75 (2.95)**	M20	140 (5.51)	20 (0.79)	79.5 (3.13)	245 (9.65)	585 (23.03)	196 (7.72)	281 (11.06)	628 (24.72)	233 (9.17)	297 (11.69)	677 (26.65)	310 (12.20)
	1PH8226															
	1PH8228															

8
2

© Siemens 2024

SIMOTICS M-1PH8 asynchronous and synchronous motors – SH 225 – water cooling

Dimensional drawings

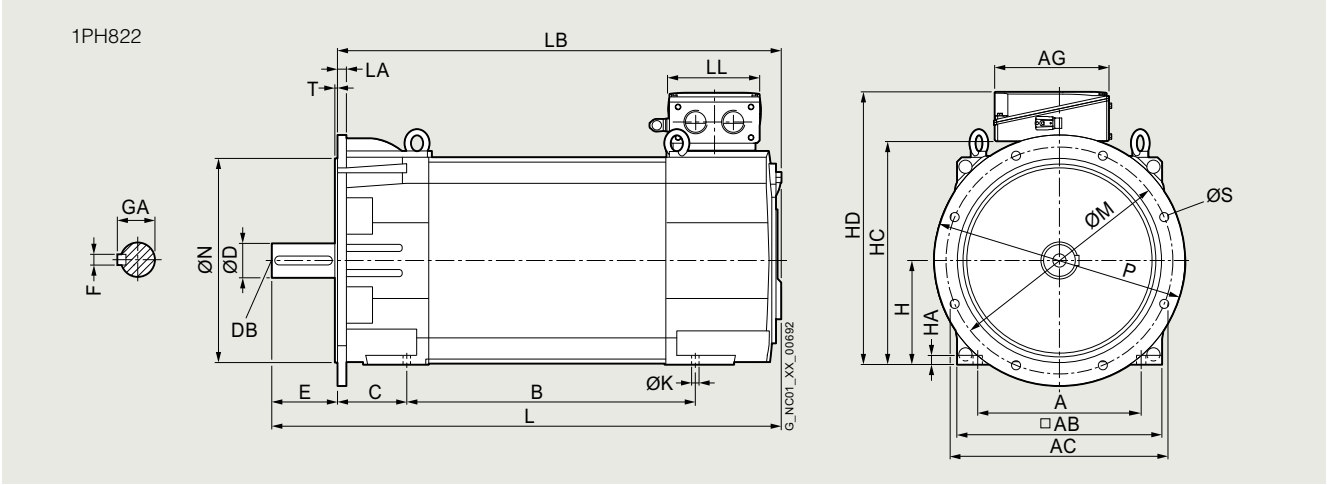

For motor — Dimensions in mm (inches)

Shaft height	Type	IEC	A	AB	AC	B	C	H	HA	HC	K	L	LA	LB	M	N	P	S	T
1PH8, types of construction IM B5/IM B35/IM V15, water cooling, A550 flange																			
225	1PH8224		356 (14.02)	446 (17.56)	474 (18.66)	445 (17.52)	149 (5.87)	225 (8.86)	18 (0.71)	462 (18.19)	18.5 (0.73)	910 (35.83)	20 (0.79)	770 (30.31)	500 (19.69)	450 (17.72)	550 (21.65)	18.5 (0.73)	5 (0.20)
	1PH8226					545 (21.46)						1012 (39.84)		872 (34.33)					
	1PH8228					635 (25.00)						1102 (43.39)		962 (37.87)					

Shaft end DE — Terminal box types 1XB7322, 1XB7422, 1XB7700

Dimensions as for types of construction IM B3/IM V5

Shaft height	Type	IEC	D	DB	E	F	GA
225	1PH8224		**75 (2.95)**	M20	140 (5.51)	20 (0.79)	79.5 (3.13)
	1PH8226						
	1PH8228						

© Siemens 2024

Dimensional drawings

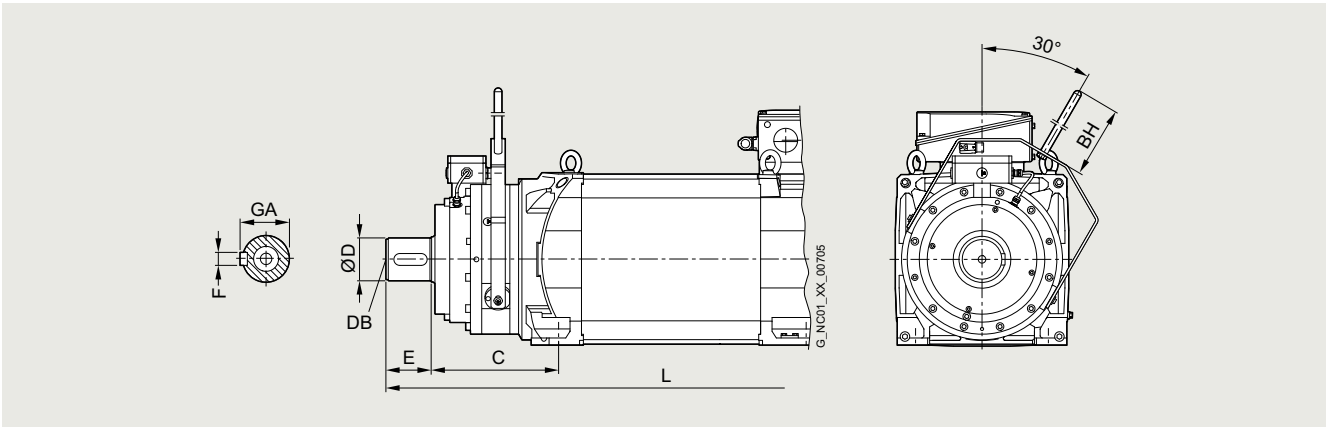

For motor		Dimensions in mm (inches)										
					Forced ventilation		Water cooling	Shaft end DE				
Shaft height	Type	IEC	BH	C	L DE → NDE	L NDE→ DE	L	**D**	DB	E	F	GA
1PH8 type of construction IM B3, forced ventilation – directions of air flow DE → NDE and NDE → DE, water cooling; brake mounting (option U63)												
180	1PH8184		252 (2.95)	268 (10.55)	1096 (43.15)	1148 (45.20)	911 (35.87)	**90** **(3.54)**	M20	95 (3.74)	25 (0.98)	95 (3.74)
	1PH8186				1186 (46.69)	1238 (48.74)	1001 (39.41)					
225	1PH8224		493 (19.41)		1295 (50.98)	1330 (52.36)	1040 (40.94)	95 (3.74)	M20	105 (4.13)	25 (0.98)	100 (3.94)
	1PH8226				1395 (54.92)	1430 (56.30)	1140 (44.88)					
	1PH8228				1495 (58.86)	1520 (59.84)	1230 (48.43)					

© Siemens 2024

SIMOTICS M-1PH8 asynchronous and synchronous motors – SH 180 and 225 – forced ventilation with pipe connection

Dimensional drawings

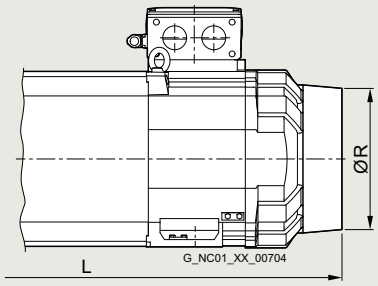

For motor		Dimensions in mm (inches)	
Shaft height	Type	IEC L	R
1PH8 forced ventilation – pipe connection (option K80)			
180	1PH8184	993 (39.09)	300 (11.81)
	1PH8186	1083 (42.64)	
225	1PH8224	1084 (42.68)	350 (13.78)
	1PH8226	1184 (46.61)	
	1PH8228	1274 (50.16)	

© Siemens 2024

Dimensional drawings

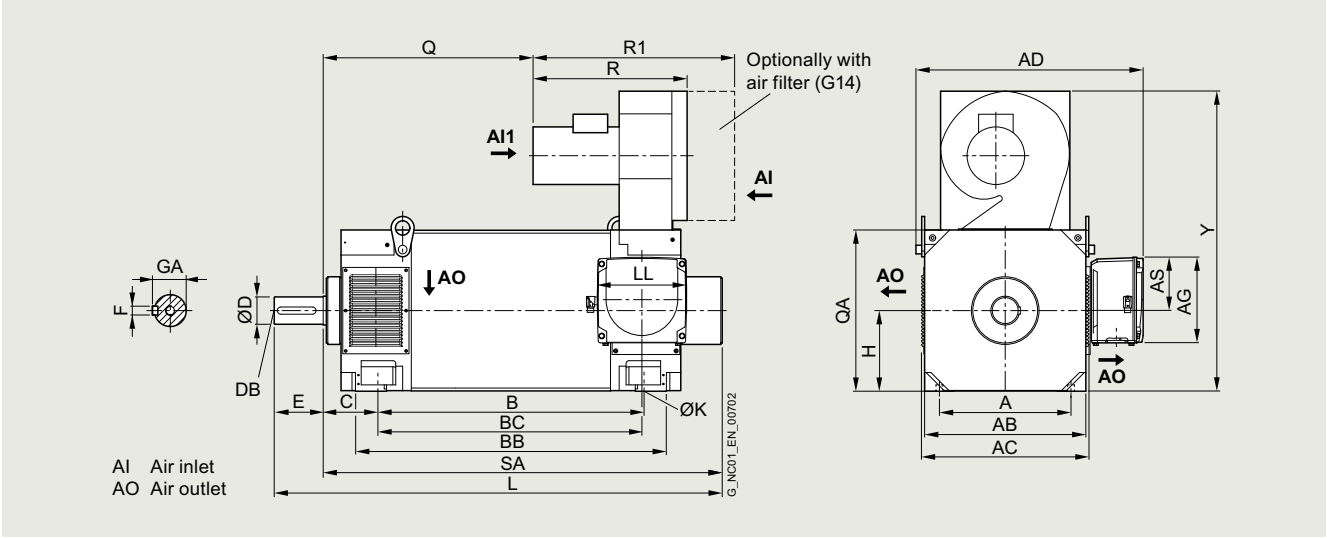

For motor		Dimensions in mm (inches)									
Shaft height	Type	IEC A	AB	AC	B	BB	C	D	DB	E	F
1PH8 type of construction IM B3, forced ventilation – direction of air flow NDE → DE											
280	1PH8284	457 (17.99)	560 (22.05)	582 (22.91)	684 (26.93)	840 (33.07)	190 (7.48)	95 (3.74)	M24	170 (6.69)	25 (0.98)
	1PH8286				794 (31.26)	950 (37.40)					
	1PH8288				924 (36.38)	1080 (42.52)					
		GA	H	K	L	Q	QA	R	R1	SA	Y
	1PH8284	100 (3.94)	280 (11.02)	24 (0.94)	1316 (51.81)	489 (19.25)	560 (22.05)	546 (21.50)	700 (27.56)	1146 (45.12)	1042 (41.02)
	1PH8286				1426 (56.14)	599 (23.58)				1256 (49.45)	
	1PH8288				1556 (61.26)	729 (28.70)				1386 (54.57)	

Terminal box		Dimensions in mm (inches)				
Shaft height	Type	IEC AD	AG	AS	BC	LL
Terminal box type 1XB7700						
280	1PH8284	789 (31.06)	297 (11.69)	186 (7.32)	677 (26.65)	310 (12.20)
	1PH8286				787 (30.98)	
	1PH8288				917 (36.10)	
Terminal box type 1XB7712						
280	1PH8284	836 (32.91)	371 (14.61)	201 (7.91)	691 (27.20)	370 (14.57)
	1PH8286				801 (31.54)	
	1PH8288				931 (36.65)	

© Siemens 2024

SIMOTICS M-1PH8 asynchronous motors – SH 280 – forced ventilation

Dimensional drawings

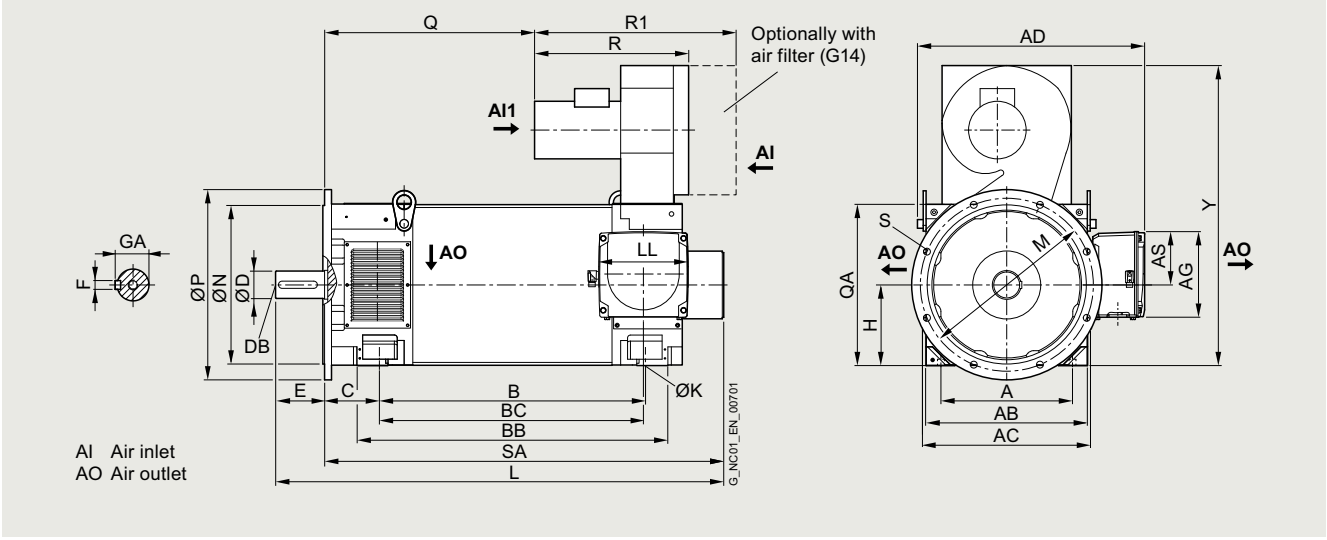

For motor		Dimensions in mm (inches)											
Shaft height	Type	IEC A	AB	AC	B	BB	C	D	DB	E	F	GA	H
1PH8 type of construction IM B35, forced ventilation – direction of air flow NDE → DE, A660 flange													
280	1PH8284	457 (17.99)	560 (22.05)	582 (22.91)	684 (26.93)	840 (33.07)	190 (7.48)	95 (3.74)	M24	170 (6.69)	25 (0.98)	100 (3.94)	280 (11.02)
	1PH8286				794 (31.26)	950 (37.40)							
	1PH8288				924 (36.38)	1080 (42.52)							
		K	L	M	N	P	Q	QA	R	R1	S	SA	Y
	1PH8284	24 (0.94)	1316 (51.81)	600 (23.62)	550 (21.65)	660 (25.98)	489 (19.25)	560 (22.05)	546 (21.50)	700 (27.56)	24 (0.94)	1146 (45.12)	1042 (41.02)
	1PH8286		1426 (56.14)				599 (23.58)					1256 (49.45)	
	1PH8288		1556 (61.26)				729 (28.70)					1386 (54.57)	

Terminal box		Dimensions in mm (inches)					
Shaft height	Type	IEC AD	AG	AS	BC	LL	
Terminal box type 1XB7700							
280	1PH8284	789 (31.06)	297 (11.69)	186 (7.32)	677 (26.65)	310 (12.20)	
	1PH8286				787 (30.98)		
	1PH8288				917 (36.10)		
Terminal box type 1XB7712							
280	1PH8284	836 (32.91)	371 (14.61)	201 (7.91)	691 (27.20)	370 (14.57)	
	1PH8286				801 (31.54)		
	1PH8288				931 (36.65)		

© Siemens 2024

Dimensional drawings

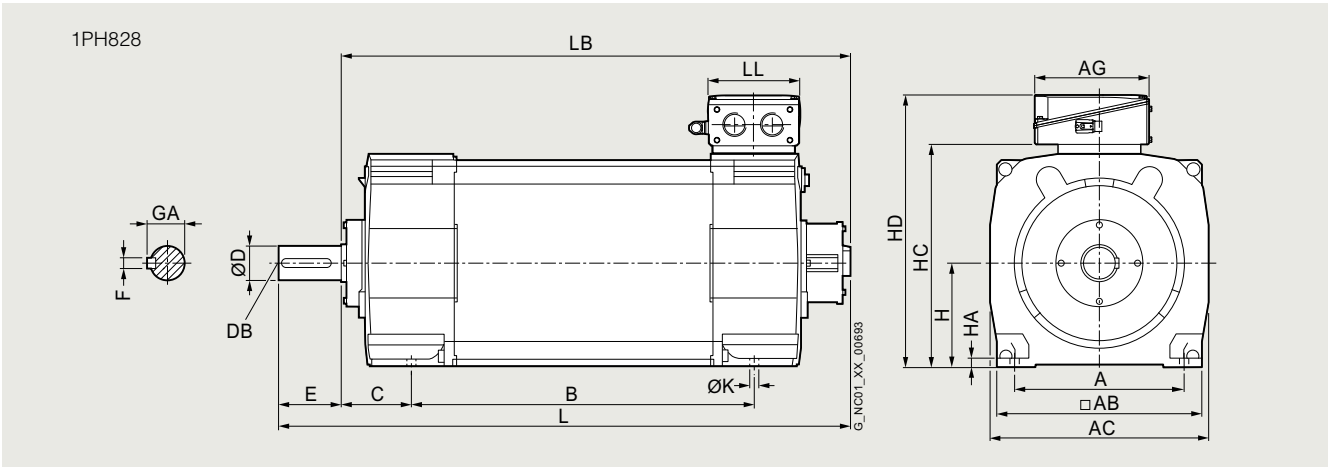

For motor			Dimensions in mm (inches)															
													Shaft end DE					
Shaft height	Type	IEC	A	AB	AC	B	C	H	HA	HC	K	LB	**D**	DB	E	F	GA	L
1PH8, types of construction IM B3/IM V5, water cooling																		
280	1PH8284		457 (17.99)	556 (21.89)	588 (23.15)	684 (26.93)	190 (7.48)	280 (11.02)	21 (0.83)	574 (22.60)	24 (0.94)	1134 (44.65)	**95**	M24	170 (6.69)	25 0.98)	100 (3.94)	1304 (51.34)
	1PH8286					794 (31.26)						1244 (48.98)						1414 (55.67)
	1PH8288					924 (36.38)						1374 (54.09)						1544 (60.79)

			Terminal box type												
			1XB7322			1XB7422			1XB7700			1XB7712			
Shaft height	Type	IEC	AG	HD	LL	AG	HD	LL	AG	HD	LL	AG	HD	LL	
280	1PH8284		245 (9.65)	674 (26.54)	196 (7.72)	281 (11.06)	717 (28.23)	233 (9.17)	297 (11.69)	751 (29.57)	310 (12.20)	371 (14.61)	813 (32.01)	370 (14.57)	
	1PH8286														
	1PH8288														

© Siemens 2024

SIMOTICS M-1PH8 asynchronous motors – SH 280 – water cooling

Dimensional drawings

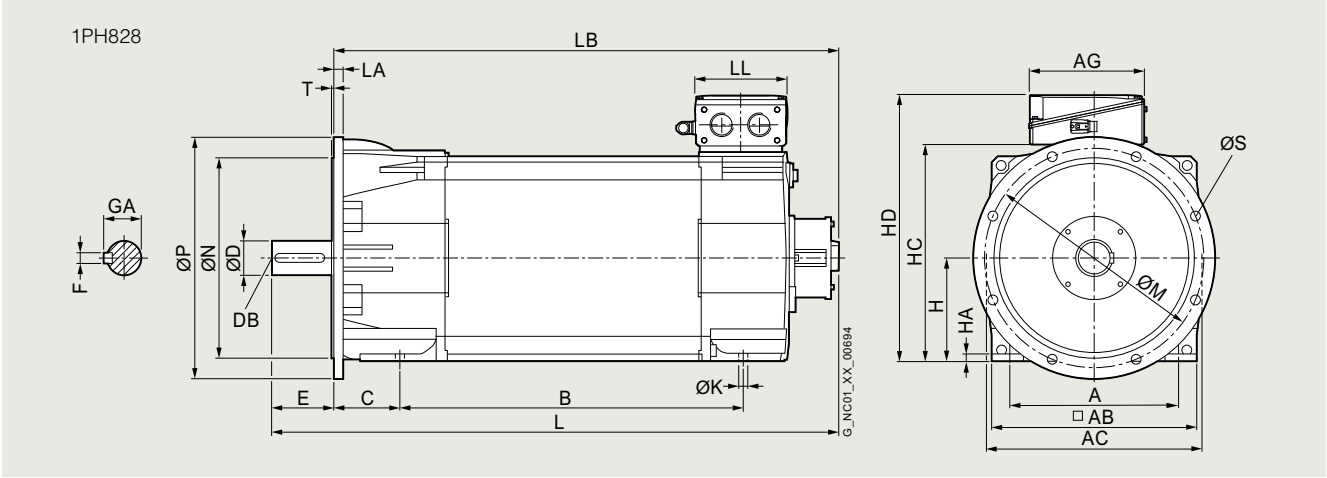

For motor — Dimensions in mm (inches)

Shaft height	Type	IEC	A	AB	AC	B	C	H	HA	HC	K	L	LA	LB	M	N	P
1PH8, types of construction IM B5/IM B35/IM V15, water cooling, A660 flange																	
280	1PH8284		457 (17.99)	556 (21.89)	588 (23.15)	684 (26.93)	190 (7.48)	280 (11.02)	21 (0.83)	574 (22.60)	24 (0.94)	1304 (51.34)	24 (0.94)	1134 (44.65)	600 (23.62)	550 (21.65)	660 (25.98)
	1PH8286					794 (31.26)						1414 (55.67)		1244 (48.98)			
	1PH8288					924 (36.38)						1544 (60.79)		1374 (54.09)			

Shaft height	Type	IEC	S	T	Shaft end DE **D**	DB	E	F	GA	Terminal box types 1XB77322, 1XB7422, 1XB7700, 1XB7712 Dimensions as for types of construction IM B3/IM V5
280	1PH8284		24 (0.94)	6 (0.24)	**95 (3.74)**	M24	170 (6.69)	25 (0.98)	100 (3.94)	
	1PH8286									
	1PH8288									

© Siemens 2024

Dimensional drawings

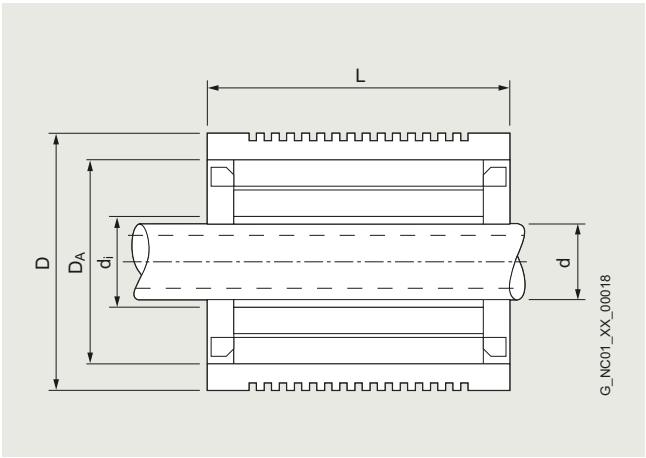

For motor Type	Dimensions in mm (inches) Total length L	Total outer diameter D	Stator outer diameter D_A	Rotor inner diameter[1] d_i
1FE1 High Speed series				
1FE1051-4.... -6BA.	130 (5.12)	120 (4.72)	106 (4.17)	46 (1.81)
1FE1052-4.... -6BA.	180 (7.09)			
1FE1053-4.... -6BA.	230 (9.06)			
1FE1072-4W...-6BA.	185 (7.28)	155 (6.10)	135 (5.31)	58 (2.28)
1FE1073-4W...-6BA.	235 (9.25)			
1FE1074-4W...-6BA.	285 (11.22)			
1FE1075-4W...-6BA.	335 (13.19)			
1FE1082-4W...-6BA.	190 (7.48)	180 (7.09)	160 (6.30)	68 (2.68)
1FE1083-4W...-6BA.	240 (9.45)			
1FE1084-4W...-6BA.	290 (11.42)			
1FE1085-4W...-6BA.	340 (13.39)			
1FE1092-4W...-6BR.	200 (7.87)	205 (8.07)	180 (7.09)	80 (3.15)
1FE1093-4W...-6BA.	250 (9.84)			72 (2.83)
1FE1093-4W...-6BR.	250 (9.84)			80 (3.15)
1FE1094-4W...-6BA.	300 (11.81)			72 (2.83)
1FE1094-4W...-6BR.	300 (11.81)			80 (3.15)
1FE1095-4W...-6BA.	350 (13.78)			72 (2.83)
1FE1095-4W...-6BR.	350 (13.78)			80 (3.15)
1FE1096-4W...-6BA.	400 (15.75)			72 (2.83)
1FE1096-4W...-6BR.	400 (15.75)			80 (3.15)
1FE1103-4W...-6BA.	265 (10.43)	230 (9.06)	200 (7.87)	96 (3.78)
1FE1104-4W...-6BA.	315 (12.40)			
1FE1105-4W...-6BA.	365 (14.37)			
1FE1106-4W...-6BA.	415 (16.34)			
1FE1124-4W...-6BA.	315 (12.40)	270 (10.63)	240 (9.45)	110 (4.33)
1FE1125-4W...-6BA.	365 (14.37)			
1FE1126-4W...-6BA.	415 (16.34)			

For motor Type	Dimensions in mm (inches) Total length L	Total outer diameter D	Stator outer diameter D_A	Rotor inner diameter without sleeve d_i -..A.	Rotor inner diameter with sleeve d -..B.	d -..C.	d -..D.	d -..E.
1FE1 High Torque series								
1FE1041-6W...	107 (4.21)	95 (3.74)	85 (3.35)	44 (1.73)	–	–	–	–
1FE1042-6W...	157 (6.18)	95 (3.74)	85 (3.35)	44 (1.73)	–	–	–	–
1FE1051-6W...	170 (6.69)	115 (4.53)	103.3 (4.06)	42 (1.65)	–	33 (1.30)	–	–
1FE1052-6W...	220 (8.66)	115 (4.53)	103.3 (4.06)	42 (1.65)	–	33 (1.30)	–	–
1FE1054-6W...	320 (12.60)	115 (4.53)	103.3 (4.06)	42 (1.65)	–	–	–	–
1FE1061-6W...	130 (5.12)	130 (5.12)	117.8 (4.63)	58 (2.28)	48 (1.89)	–	–	–
1FE1062-6W...	180 (7.09)	130 (5.12)	117.8 (4.63)	58 (2.28)	–	–	–	–
1FE1064-6W...	280 (11.02)	130 (5.12)	117.8 (4.63)	58 (2.28)	–	–	–	–
1FE1082-6W...	195 (7.68)	190 (7.48)	169.8 (6.68)	93 (3.66)	67 (2.64)	74 (2.91)	80 (3.15)	–
1FE1083-6W...	245 (9.65)	190 (7.48)	169.8 (6.68)	93 (3.66)	67 (2.64)	74 (2.91)	–	–
1FE1084-6W...	295 (11.61)	190 (7.48)	169.8 (6.68)	93 (3.66)	67 (2.64)	74 (2.91)	–	–
1FE1091-6W...	150 (5.91)	205 (8.07)	179.8 (7.07)	92 (3.62)	67 (2.64)	80 (3.15)	–	–
1FE1092-6W...	200 (7.87)	205 (8.07)	179.8 (7.07)	92 (3.62)	67 (2.64)	80 (3.15)	–	–
1FE1093-6W...	250 (9.84)	205 (8.07)	179.8 (7.07)	92 (3.62)	67 (2.64)	80 (3.15)	–	–
1FE1113-6W...	260 (10.24)	250 (9.84)	219.8 (8.65)	120 (4.72)	–	–	80 (3.15)	105.2 (4.14)
1FE1114-6W...	310 (12.20)	250 (9.84)	219.8 (8.65)	120 (4.72)	82 (3.23)	102 (4.02)	–	–
1FE1115-6W...	360 (14.17)	250 (9.84)	219.8 (8.65)	120 (4.72)	–	102 (4.02)	–	–
1FE1116-6W...	410 (16.14)	250 (9.84)	219.8 (8.65)	120 (4.72)	82 (3.23)	102 (4.02)	–	–
1FE1143-8W...	290 (11.42)	310 (12.20)	280 (11.02)	166.7 (6.56)	–	–	–	–
1FE1144-8W...	340 (13.39)	310 (12.20)	280 (11.02)	166.7 (6.56)	–	150.3 (5.92)	–	–
1FE1145-8W...	390 (15.35)	310 (12.20)	280 (11.02)	166.7 (6.56)	–	150.3 (5.92)	140.3 (5.52)	125 (4.92)
1FE1147-8W...	490 (19.29)	310 (12.20)	280 (11.02)	166.7 (6.56)	–	150.3 (5.92)	140.3 (5.52)	–

[1] if 15th position of the article number
=A → dimension d_i without rotor sleeve
=R → dimension d_i without rotor sleeve

© Siemens 2024

SIMOTICS M-1FE2 synchronous built-in motors – water cooling

Dimensional drawings

With cooling jacket

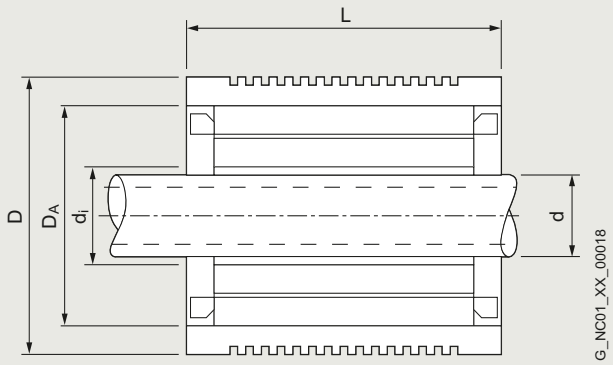

Without cooling jacket

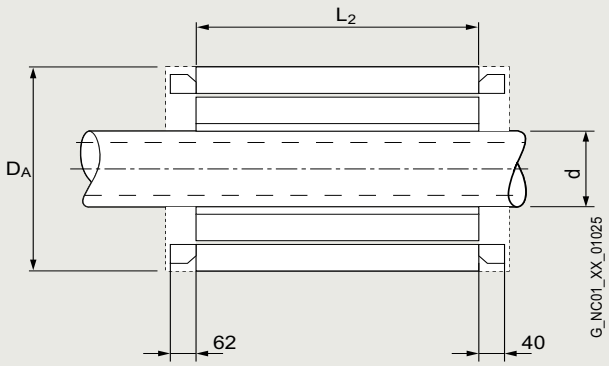

For motor	Dimensions in mm (inches)				
	Total length	Length	Total outer diameter	Stator outer diameter	Rotor inner diameter
Type	L	L_2	D	D_A	d
1FE2 High Torque series					
1FE2182-8...	320 (12.60)	200 (7.87)	400 (15.75)	397 (15.62)	200 (7.87)
1FE2183-8...	370 (14.57)	250 (9.84)			
1FE2184-8...	420 (16.54)	300 (11.81)			
1FE2185-8...	470 (18.50)	350 (13.78)			
1FE2186-8...	520 (20.47)	400 (15.75)			
1FE2187-8...	570 (22.44)	450 (17.72)			

© Siemens 2024

Dimensional drawings

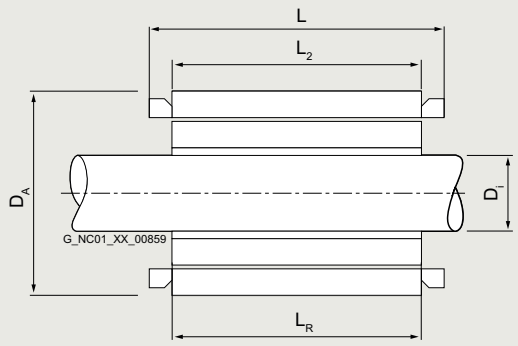

For motor Dimensions in mm (inches) Type	Total length L	Active part length L_2	Stator outer diameter D_A	Rotor inner diameter d_i [1]	Rotor length L_R
1FE2 High Torque series – AL rotor					
1FE2093-8A...-...	228 (8.98)	150 (5.91)	179.7 (7.08)	90 (3.54)	178 (7.01)
1FE2094-8A...-...	278 (10.95)	200 (7.87)	179.7 (7.08)	90 (3.54)	224 (8.82)
1FE2 High Torque series – CU rotor					
1FE2094-8C...-...	278 (10.95)	200 (7.87)	179.7 (7.08)	90 (3.54)	228 (8.98)
1FE2095-8C...-...	328 (12.91)	250 (9.84)	179.7 (7.08)	90 (3.54)	274 (10.78)
1FE2145-8C...-...	343 (13.50)	250 (9.84)	279.7 (11.01)	140 (5.51)	286 (11.26)
1FE2147-8C...-...	443 (17.44)	350 (13.78)	279.7 (11.01)	140 (5.51)	386 (15.20)

[1] Final dimension after final machining (delivery condition: Rotor unmachined with allowance).

© Siemens 2024

Notes

© Siemens 2024

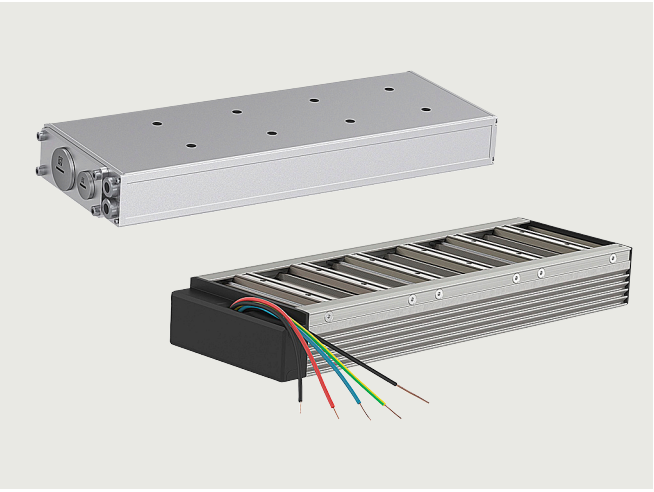

8.3/2 **SIMOTICS L-1FN3 linear motors for SINAMICS S120**
8.3/4 Version for peak load – water cooling
8.3/8 Version for continuous load – water cooling
8.3/12 Standard version – natural cooling
8.3/14 Optional components
8.3/16 Recommended linear measuring systems
8.3/16 Liquid cooling
8.3/17 **Dimensional drawings**

In addition, the Siemens Product Configurator can be used on the internet at the following address:
www.siemens.com/spc
See under:
Motors →
Motors for Motion Control →
SIMOTICS L linear motors

© Siemens 2024

SIMOTICS L-1FN3 linear motors with water cooling/natural cooling

Overview

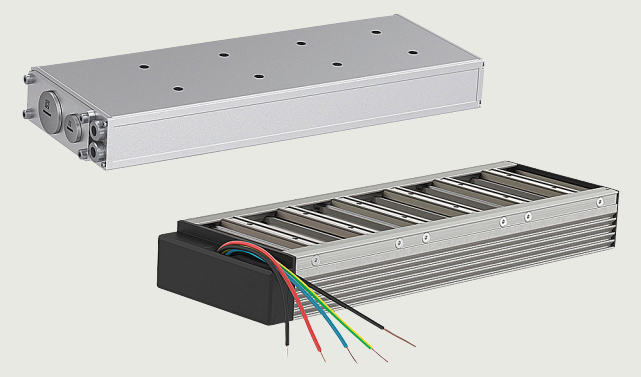

SIMOTICS L-1FN3 linear motor, primary section, water cooling/natural cooling (from left to right)

In combination with the SINAMICS S120 drive system, SIMOTICS L-1FN3 linear motors provide an optimally tuned linear direct drive system for the requirements of modern mechanical engineering.

The motors comprise a primary section and a secondary section track with magnets made of rare-earth material. The primary section has fixed dimensions, while the secondary section track is made up of individual elements (secondary sections) to correspond with the required traversing range. Through parallel operation of the motors, feedrate force and length can be scaled beyond the available spectrum.

Benefits

- Outstanding dynamic response and very high traversing velocity
- Excellent precision
- Easy installation
- Drive components are free of wear thanks to contactless drive force transmission

The main advantage of linear direct drive technology is the extensive avoidance of the effects of elasticity, play, and friction, as well as natural oscillation in the drive train. This results in a higher dynamic response and increased precision. When suitable measuring systems are used and the temperature conditions are appropriate, the motors can be positioned in the nanometer range.

Configuration

You can find the Configuration Manual for SIMOTICS L-1FN3 for SINAMICS S120 at:

https://support.industry.siemens.com/cs/ww/en/view/109475768

Application

Linear motors with water cooling

Version for peak load

Used in machine axes that are temporarily accelerated (e.g. S3 duty), or when large forces are required for a short time.

Typical applications:

- Highly dynamic, flexible machine tool and production machine construction
- Laser machining
- Handling

Version for continuous load

Used in machine axes with constant acceleration changes (e.g. S1 duty), with high process/weight forces or for operation without water cooling.

Typical applications:

- Grinding
- Non-circular machining, e.g. oscillating applications
- Z axes without weight compensation, quills
- Handling, Cartesian robots

Linear motors with natural cooling

The degree of protection depends on the design of the machine and must therefore be implemented by the machine manufacturer.

Typical applications:

- Handling axes
- Feed axes
- Woodworking machines
- 3D printing
- 2D/3D handling portals
- Laser cutting/water jet cutting machines
- Pick-and-place machines

Design

Linear motors with water cooling/natural cooling

The simple mechanical design without transmission elements such as ballscrew, coupling or belt, enhances the reliability of the drive components.

The stainless steel encapsulation of the primary section ensures the high mechanical ruggedness and resistance to dirt and pollution required for use in machine tools and production machines, as well as high resistance to corrosive liquids. In addition, the motor places minimal demands on the preparation of mounting surfaces thanks to the generous installation dimensions. The tolerance of the installation height for motor installation is + 0.3 mm.

Linear motors with water cooling

Heat loss occurs almost exclusively in the primary section and is dissipated via an integrated liquid cooling system. The Thermo-Sandwich dual-circuit cooling system allows the motor to be thermally decoupled from the machine, and is also an inexpensive cooling design.

Design variants (water/natural cooling)

SIMOTICS L-1FN3 linear motors are available as single-sided or double-sided motors.

- Single-sided motors
  The single-sided version consists of a primary section that is mounted in parallel to the associated secondary section.
- Double-sided motors
  The special secondary section of the double-sided version lies between two primary sections (one primary section with standard winding and one with complementary winding).
  The design as a double-sided motor is particularly suitable for applications where the secondary section is moved and small traversing paths with high acceleration levels, e.g. out-of-center machining.

© Siemens 2024

Technical specifications

Product name	SIMOTICS L-1FN3 linear motor
Motor type	Permanent-magnet linear motor
Magnet material	Rare-earth permanent magnets
Overload ratio (F_{max}:F_N) up to max. • Version for peak load • Version for continuous load	 2.75 1.7
Cooling	Water/natural cooling
Water cooler connections	G 1/8" internal thread on all primary and secondary section coolers
Temperature influence on the surrounding construction with precision cooling, max.	+4 K
Coolant inlet temperature, permissible	35 °C (95 °F) (avoid condensation) > 35 °C (95 °F) if rated motor power is reduced
Temperature monitoring installed in the primary section winding for water cooling [1]	2 monitoring circuits: Temp-S with PTC thermistor and Temp-F with Pt1000 temperature sensor
Thermal motor protection Temperature sensors for natural cooling installed in the primary section [1]	1 PTC thermistor triplet with response threshold +120 °C (248 °F) acc. to DIN 44081/44082
Insulation according to EN 60034-1 (IEC 60034-1)	Temperature class 155 (F) for a winding temperature of 120 °C (248 °F)
Degree of protection according to EN 60034-5 (IEC 60034-5) • Water cooling • Natural cooling	 IP65 IP23 The achievable degree of protection depends on the machine design and must be implemented by the machine manufacturer.
Design options	Different graduations due to the modular design
Secondary section cover	Exchangeable through the entire secondary section track or segment by segment
2nd rating plate	Enclosed separately
Encoder system [2] (Not included in scope of supply)	Select according to the constraints specific to the application and the drive.
Connection (water cooling)	
• 1FN3050	Permanently connected signal and power cable pre-assembled with connectors or with bare wire ends
• 1FN3100 ... 1FN3900	Connection cover prepared for separate power and signal cable
• 1FN3100 ... 1FN3900	Connection cover prepared for a heavy-gauge threaded joint Version for peak load
Connection (natural cooling)	
• 1FN3050 ... 1FN3150	Permanently connected signal and power cable as single cores with bare wire ends
Certificate of suitability	cURus UR for 1FN3900-4WC00-...

[1] Evaluation via SME120/SME125 Sensor Module External or TM120 Terminal Module, see SINAMICS S120 drive system.

[2] See recommended linear measuring systems.

Characteristic curves

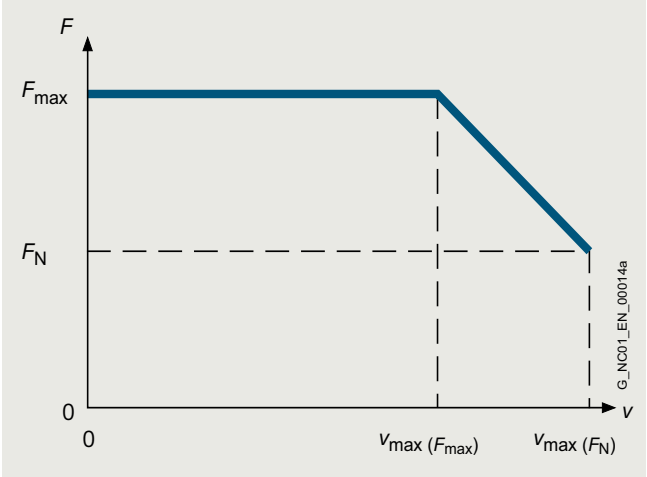

Velocity/force characteristic curve

The SIMOTICS L-1FN3 linear motors have an overload range available for acceleration processes.
The maximum force F_{max} can only be utilized up to a maximum velocity $v_{max(Fmax)}$;
up to velocity $v_{max(FN)}$ only the feedrate force F_N is available.

Characteristics for the SIMOTICS motors are available via selectors through to the exact article number with the Siemens Product Configurator.

Access to the Siemens Product Configurator

The Siemens Product Configurator can be accessed without having to register or log in:

www.siemens.com/spc

→ SIMOTICS L-1FN3 in the SPC

Dimensional drawings

Dimensional drawings for the SIMOTICS motors are available via selectors through to the exact article number with the Siemens Product Configurator.

Access to the Siemens Product Configurator

The Siemens Product Configurator can be accessed without having to register or log in:

www.siemens.com/spc

→ SIMOTICS L-1FN3 in the SPC

More information

Some motor types can be express delivered as replacement motors in the event of plant outages and offer the advantage of a quicker spare parts supply.

Siemens provides comprehensive support when selecting the optimum motor solution.
Any questions regarding SIMOTICS L-1FN3 linear motors can be emailed to:

motor.support.motioncontrol@siemens.com

© Siemens 2024

Selection and ordering data

Feedrate force		Maximum velocity [3]		SIMOTICS L-1FN3 linear motors Version for peak load			Weight, approx.	
				Primary section	**Secondary section** Standard – matching the motor of the relevant component size	**Secondary section** Standard extended – matching the motor of the relevant component size	Primary section without/with precision cooling	Secondary section without/with heatsink profiles
F_N [1) 2)]	F_{max}	v_{max} at F_{max}	v_{max} at F_N					
N (lb$_f$)	N (lb$_f$)	m/min (ft/min)	m/min (ft/min)	Article No.	Article No.	Article No.	kg (lb)	kg (lb)
Water cooling								
200 (45.0)	550 (124)	170 (558)	408 (1339)	**1FN3050-2WC00-0 E A3**	**1FN3050-4SA00-0AA0**		3.0/3.5 (6.6/7.7)	0.4/0.5 (0.9/1.1)
				1FN3050-2WC00-0 F A3				
200 (45.0)	490 (110)	147 (482)	335 (1099)	**1FN3100-1WC00-0 ■ A3**	**1FN3100-4SA00-0AA0**		2.0/– (4.4/–) [4]	0.7/0.8 (1.5/1.8)
450 (101)	1100 (247)	148 (486)	323 (1060)	**1FN3100-2WC00-0 ■ A3**			4.0/4.6 (8.8/10.1)	
		258 (846)	535 (1755)	**1FN3100-2WE00-0 ■ A3**				
		488 (1601)	984 (3229)	**1FN3100-2WJ20-0 ■ A3**				
675 (152)	1650 (371)	137 (449)	303 (994)	**1FN3100-3WC00-0 ■ A3**			5.6/6.4 (12.3/14.1)	
		258 (846)	534 (1752)	**1FN3100-3WE00-0 ■ A3**				
900 (202)	2200 (495)	148 (486)	324 (1063)	**1FN3100-4WC00-0 ■ A3**			7.4/8.5 (16.3/18.7)	
		258 (846)	535 (1755)	**1FN3100-4WE00-0 ■ A3**				
1120 (252)	2750 (618)	125 (410)	278 (912)	**1FN3100-5WC00-0 ■ A3**			9.1/10.4 (20.1/22.9)	
340 (76.4)	820 (184)	140 (459)	303 (994)	**1FN3150-1WC00-0 ■ A3**	**1FN3150-4SA00-0AA0**		2.9/– (6.4/–) [4]	1.2/1.3 (2.6/2.9)
		278 (912)	569 (1867)	**1FN3150-1WE00-0 ■ A3**			3.0/– (6.61/–) [4]	
675 (152)	1650 (371)	141 (463)	306 (1004)	**1FN3150-2WC00-0 ■ A3**			5.3/6.0 (11.7/13.2)	
1010 (227)	2470 (555)	138 (453)	302 (991)	**1FN3150-3WC00-0 ■ A3**			7.7/8.6 (17.0/19.0)	
1350 (303)	3300 (742)	141 (463)	306 (1004)	**1FN3150-4WC00-0 ■ A3**			10.4/11.6 (22.9/25.6)	
1690 (380)	4120 (926)	141 (463)	306 (1004)	**1FN3150-5WC00-0 ■ A3**			12.5/13.9 (27.6/30.6)	
610 (137)	1720 (387)	138 (453)	325 (1066)	**1FN3300-1WC00-0 ■ A3**	**1FN3300-4SA00-0AA0**	**1FN3300-4SA12-0AA0**	6.6/– (14.6/–) [4]	2.4/2.6 (5.3/5.7)
1220 (274)	3450 (776)	77 (253)	194 (637)	**1FN3300-2WB00-0 ■ A3**			11.5/12.5 (25.4/27.6)	
1230 (277)	3450 (776)	140 (459)	322 (1056)	**1FN3300-2WC00-0 ■ A3**				
		399 (1309)	868 (2848)	**1FN3300-2WG00-0 ■ A3**				
1840 (414)	5170 (1162)	142 (466)	327 (1073)	**1FN3300-3WC00-0 ■ A3**			17.0/18.4 (37.5/40.6)	
		405 (1329)	881 (2891)	**1FN3300-3WG00-0 ■ A3**				
2450 (551)	6900 (1551)	77 (253)	194 (637)	**1FN3300-4WB00-0 ■ A3**			22.2/24 (49.0/52.9)	
		140 (459)	323 (1060)	**1FN3300-4WC00-0 ■ A3**				

Type of connection:	
1FN3100 to 1FN3900 motors	
Power and signals connected using one cable Terminal box cover prepared for a heavy-gauge cable gland	**A**
Separate power and signal connections Terminal box cover prepared for metric cable gland	**B**
1FN3050 motors	
Separate power and signal connections, permanently connected with bare wire ends, length: 2 m (6.56 ft)	**E**
Separate power and signal connections, permanently connected, pre-assembled with connectors, length: 0.5 m (1.64 ft)	**F**

Description	Article No.
Signal cable, pre-assembled with M17 connector	
For SIMOTICS L-1FN3 linear motors	
• 1FN3100/1FN3150	**6FX8002-2SL01-....**
• 1FN3300 ... 1FN3900	**6FX8002-2SL02-....**

For more information about cables, see MOTION-CONNECT connection systems

For footnotes, see next page.

© Siemens 2024

Motor type Primary section (repeated)	Rated current	Maximum current	Calculated power	**SINAMICS S120 Motor Module [5] Booksize format** Internal air cooling		**Power cable with complete shield** Motor connection via adapter cable with power connector for increased velocity/acceleration			
				Required rated current	For further components, see SINAMICS S120 drive system	Pre-assembled adapter cable for motor [6]	Power connectors	Cable cross-section [7]	Pre-assembled basic cable to the drive system
	I_N [1]	I_{max}	$P_{el, max.}$	I_N / I_{max}					
	A	A	kW (hp)	A	Article No.	Article No.	Size	mm^2	Article No.
1FN3050-2WC00-...	2.7	8.2	4.0 (5.4)	3/9	**6SL3120-■TE13-0AD0**	Permanent cable connection	1	4 × 2.5	**6FX8002-5CS16-....**
1FN3050-2WC00-...	2.7	8.2	4.0 (5.4)	3/9	**6SL3120-■TE13-0AD0**	Permanent cable connection	1	4 × 2.5	**6FX8002-5CS16-....**
1FN3100-1WC00-...	2.4	6.5	3.1 (4.2)	3/9	**6SL3120-■TE13-0AD0**	**6FX7002-5LM42-....**	1	4 × 2.5	**6FX8002-5CS16-....**
1FN3100-2WC00-...	5.1	13.5	6.3 (8.4)	5/15	**6SL3120-■TE15-0AD0**	**6FX7002-5LM42-....**	1	4 × 2.5	**6FX8002-5CS16-....**
1FN3100-2WE00-...	8.0	21.4	8.3 (11.1)	9/27	**6SL3120-■TE21-0AD0**	**6FX7002-5LM42-....**	1	4 × 2.5	**6FX8002-5CS16-....**
1FN3100-2WJ20-...	14.4	38.3	12.5 (16.8)	18/54	**6SL3120-■TE21-8AD0**	**6FX7002-5LM42-....**	1	4 × 2.5	**6FX8002-5CS16-....**
1FN3100-3WC00-...	7.2	19.1	9.1 (12.2)	9/27	**6SL3120-■TE21-0AD0**	**6FX7002-5LM42-....**	1	4 × 2.5	**6FX8002-5CS16-....**
1FN3100-3WE00-...	12.1	32.1	12.4 (16.6)	18/36	**6SL3120-■TE21-8AC0**	**6FX7002-5LM42-....**	1	4 × 2.5	**6FX8002-5CS16-....**
1FN3100-4WC00-...	10.2	27.1	12.5 (16.8)	18/36	**6SL3120-■TE21-8AC0**	**6FX7002-5LM42-....**	1	4 × 2.5	**6FX8002-5CS16-....**
1FN3100-4WE00-...	16.1	42.9	16.6 (22.3)	18/54	**6SL3120-1TE21-8AD0**	**6FX7002-5LM42-....**	1	4 × 2.5	**6FX8002-5CS16-....**
1FN3100-5WC00-...	11.0	29.5	14.3 (19.2)	18/36	**6SL3120-■TE21-8AC0**	**6FX7002-5LM42-....**	1	4 × 2.5	**6FX8002-5CS16-....**
1FN3150-1WC00-...	3.6	9.5	4.3 (5.8)	5/15	**6SL3120-■TE15-0AD0**	**6FX7002-5LM42-....**	1	4 × 2.5	**6FX8002-5CS16-....**
1FN3150-1WE00-...	6.4	17.1	6.2 (8.3)	9/27	**6SL3120-■TE21-0AD0**	**6FX7002-5LM42-....**	1	4 x 2.5	**6FX8002-5CS16 ....**
1FN3150-2WC00-...	7.2	19.1	8.7 (11.7)	9/27	**6SL3120-■TE21-0AD0**	**6FX7002-5LM42-....**	1	4 × 2.5	**6FX8002-5CS16-....**
1FN3150-3WC00-...	10.7	28.6	12.8 (17.2)	18/36	**6SL3120-■TE21-8AC0**	**6FX7002-5LM42-....**	1	4 × 2.5	**6FX8002-5CS16-....**
1FN3150-4WC00-...	14.3	38.2	17.3 (23.2)	18/54	**6SL3120-1TE21-8AD0**	**6FX7002-5LM42-....**	1	4 × 2.5	**6FX8002-5CS16-....**
1FN3150-5WC00-...	17.9	47.7	21.6 (29.0)	18/54	**6SL3120-1TE21-8AD0**	**6FX7002-5LM42-....**	1	4 × 2.5	**6FX8002-5CS16-....**
1FN3300-1WC00-...	6.5	20.0	8.3 (11.1)	9/27	**6SL3120-■TE21-0AD0**	**6FX7002-5LM62-....**	1	4 × 2.5	**6FX8002-5CS16-....**
1FN3300-2WB00-...	8.0	24.7	12.6 (16.9)	9/27	**6SL3120-■TE21-0AD0**	**6FX7002-5LM62-....**	1	4 × 2.5	**6FX8002-5CS16-....**
1FN3300-2WC00-...	12.6	39.0	16.2 (21.7)	18/54	**6SL3120-1TE21-8AD0**	**6FX7002-5LM62-....**	1	4 × 2.5	**6FX8002-5CS16-....**
1FN3300-2WG00-...	32.4	100.0	30.8 (41.3)	60/120	**6SL3120-1TE26-0AC0**	**6FX7002-5LM82-....**	1.5	4 × 6	**6FX8002-5CS54-....**
1FN3300-3WC00-...	19.2	59.5	24.9 (33.4)	24/72	**6SL3120-1TE22-4AD0**	**6FX7002-5LM62-....**	1	4 × 2.5	**6FX8002-5CS16-....**
1FN3300-3WG00-...	49.4	153.0	47.0 (63.0)	132/210	**6SL3120-1TE31-3AA3**	**6FX7002-5LM32-....**	1.5	4 × 10	**6FX8002-5CS46-....**
1FN3300-4WB00-...	16.0	49.4	25.2 (33.8)	18/54	**6SL3120-1TE21-8AD0**	**6FX7002-5LM62-....**	1	4 × 2.5	**6FX8002-5CS16-....**
1FN3300-4WC00-...	25.3	78.3	32.6 (43.7)	30/90	**6SL3120-1TE23-0AD0**	**6FX7002-5LM72-....**	1.5	4 × 4	**6FX8002-5CS46-....**

Motor Module:	
Single Motor Module	**1**
Double Motor Module	**2**

....	Length code	**....**

For more information about cables, see MOTION-CONNECT connection systems

[1] For water cooling with inlet temperature 35 °C (95 °F).

[2] A reduction of up to 30 % must be expected in case of motor standstill, for very low velocities or very short traversing paths.

[3] Velocity values refer to a drive system DC link voltage of 600 V DC.

[4] No precision cooler available.

[5] Optimized selection for full performance of linear motors.

[6] Pre-assembled adapter cable for motor with connection type B/E/F.

[7] The current-carrying capacity of the power cables complies with EN 60204-1 for installation type C, under continuous operating conditions at an ambient air temperature of 40 °C (104 °F).

© Siemens 2024

Selection and ordering data

Feedrate force		Maximum velocity [3]		SIMOTICS L-1FN3 linear motors Version for peak load			Weight, approx.	
				Primary section	**Secondary section** Standard – matching the motor of the relevant component size	**Secondary section** Standard extended – matching the motor of the relevant component size	Primary section without/with precision cooling	Secondary section without/with heatsink profiles
F_N [1) 2)]	F_{max}	v_{max} at F_{max}	v_{max} at F_N					
N (lb$_f$)	N (lb$_f$)	m/min (ft/min)	m/min (ft/min)	Article No.	Article No.	Article No.	kg (lb)	kg (lb)
Water cooling								
1920 (432)	5180 (1165)	264 (866)	569 (1867)	**1FN3450-2WE00-0 ■ A3**	**1FN3450-4SA00-0AA0**	**1FN3450-4SA12-0AA0**	16.5/17.7 (36.4/39.0)	3.8/4 (8.4/8.82)
1930 (434)		41 (135)	112 (367)	**1FN3450-2WA50-0 ■ A3**				
		103 (338)	235 (771)	**1FN3450-2WB70-0 ■ A3**				
		135 (443)	275 (902)	**1FN3450-2WC00-0 ■ A3**				
		177 (581)	385 (1263)	**1FN3450-2WD00-0 ■ A3**				
2900 (652)	7760 (1745)	41 (135)	121 (397)	**1FN3450-3WA50-0 ■ A3**			24.0/25.7 (52.9/56.7)	3.8/4 (8.4/8.82)
		72.7 (238.5)	179 (587)	**1FN3450-3WB00-0 ■ A3**				
		102 (335)	236 (774)	**1FN3450-3WB50-0 ■ A3**				
		133 (436)	298 (978)	**1FN3450-3WC00-0 ■ A3**				
		260 (853)	561 (1841)	**1FN3450-3WE00-0 ■ A3**				
3860 (868)	10300 (2316)	72.9 (239.2)	179 (587)	**1FN3450-4WB00-0 ■ A3**			31.7/33.9 (69.9/74.7)	
		102 (335)	236 (774)	**1FN3450-4WB50-0 ■ A3**				
		133 (436)	298 (978)	**1FN3450-4WC00-0 ■ A3**				
		261 (856)	560 (1837)	**1FN3450-4WE00-0 ■ A3**				
2610 (587)	6900 (1551)	45.4 (149.0)	128 (420)	**1FN3600-2WA50-0 ■ A3**	**1FN3600-4SA00-0AA0**		22.5/23.9 (49.6/52.7)	4.6/5 (10.1/11.0)
		69.6 (228.4)	172 (564)	**1FN3600-2WB00-0 ■ A3**				
		105 (345)	238 (781)	**1FN3600-2WB50-0 ■ A3**				
		125 (410)	283 (929)	**1FN3600-2WC00-0 ■ A3**				
3920 (881)	10300 (2316)	69.4 (227.7)	171 (561)	**1FN3600-3WB00-0 ■ A3**			33.5/35.4 (73.9/78.1)	
		69.4 (227.7)	171 (561)	**1FN3600-3WB50-0 ■ A3**				
		128 (420)	282 (925)	**1FN3600-3WC00-0 ■ A3**				
5220 (1174)	13800 (3102)	35.5 (116.5)	112 (367)	**1FN3600-4WA30-0 ■ A3**			43.0/45.5 (94.8/100.3)	
		68.1 (223.4)	170 (558)	**1FN3600-4WB00-0 ■ A3**				
		102 (335)	234 (768)	**1FN3600-4WB50-0 ■ A3**				
		125 (410)	279 (915)	**1FN3600-4WC00-0 ■ A3**				
6530 (1468)	17200 (3867)	69.6 (228.4)	171 (561)	**1FN3600-5WB00-0 ■ A3**			56.0/59.1 (123.5/130.3)	
4050 (910)	10300 (2316)	78 (256)	179 (587)	**1FN3900-2WB00-0 ■ A3**	**1FN3900-4SA00-0AA0**		32.2/33.7 (71.0/74.3)	7.5/7.9 (16.5/17.4)
		123 (404)	269 (883)	**1FN3900-2WC00-0 ■ A3**				
6080 (1367)	15500 (3485)	78.7 (258.2)	188 (617)	**1FN3900-3WB00-0 ■ A3**			47.0/47.8 (103.6/105.4)	
8100 (1821)	20700 (4654)	31.1 (102.0)	98.9 (324.5)	**1FN3900-4WA50-0 ■ A3**			62.7/65.4 (138.3/144.2)	
		77.2 (253.3)	178 (584)	**1FN3900-4WB00-0 ■ A3**				
		98.6 (323.5)	222 (728)	**1FN3900-4WB50-0 ■ A3**				
		122 (400)	266 (873)	**1FN3900-4WC00-0 ■ A3**				

Type of connection:	
1FN3100 to 1FN3900 motors	
Power and signals connected using one cable Terminal box cover prepared for a heavy-gauge cable gland	**A**
Separate power and signal connections Terminal box cover prepared for metric cable gland	**B**

Description	Article No.
Signal cable, pre-assembled with M17 connector	
For SIMOTICS L-1FN3 linear motors	
• 1FN3100/1FN3150	**6FX8002-2SL01-....**
• 1FN3300 ... 1FN3900	**6FX8002-2SL02-....**

For more information about cables, see MOTION-CONNECT connection systems

For footnotes, see next page.

© Siemens 2024

Motor type Primary section (repeated)	Rated current	Maximum current	Calculated power	**SINAMICS S120 Motor Module** [4] **Booksize format** Internal air cooling		**Power cable with complete shield** Motor connection via adapter cable with power connector for increased velocity/acceleration			
				Required rated current	For further components, see SINAMICS S120 drive system	Pre-assembled adapter cable for motor [8]	Power connectors	Cable cross-section [5]	Pre-assembled basic cable to the drive system
	I_N [1]	I_{max}	$P_{el, max.}$	I_N/I_{max}					
	A	A	kW (hp)	A	Article No.	Article No.	Size	mm^2	Article No.
1FN3450-2WE00-...	36.3	102.0	33.8 (45.3)	60/120	**6SL3120-1TE26-0AC0**	**6FX7002-5LM32-....**	1.5	4 × 10	**6FX8002-5CS64-....**
1FN3450-2WA50-...	8.9	25.0	15.1 (20.2)	9/27	**6SL3120-■TE21-0AD0**	**6FX7002-5LM62-....**	1	4 x 2.5	**6FX8002-5CS16-....**
1FN3450-2WB70-...	16.2	45.4	20.6 (27.6)	18/54	**6SL3120-■TE21- 8AD0**	**6FX7002-5LM42-....**	1	4 x 2.5	**6FX8002-5CS16 ....**
1FN3450-2WC00-...	20.0	56.2	23.3 (31.2)	24/72	**6SL3120-1TE22-4AD0**	**6FX7002-5LM62-....**	1	4 × 2.5	**6FX8002-5CS16-....**
1FN3450-2WD00-...	25.0	70.2	25.8 (34.6)	24/72	**6SL3120-1TE22-4AD0**	**6FX7002-5LM72-....**	1.5	4 x 4	**6FX8002-5CS46 ....**
1FN3450-3WA50-...	12.9	38.0	22.6 (30.3)	18/54	**6SL3120-■TE21-8AD0**	**6FX7002-5LM42-....**	1	4 x 2.5	**6FX8002-5CS16 ....**
1FN3450-3WB00-...	17.9	52.7	26.7 (35.8)	18/54	**6SL3120-1TE21-8AD0**	**6FX7002-5LM62-....**	1	4 × 2.5	**6FX8002-5CS16-....**
1FN3450-3WB50-...	22.9	67.4	30.4 (40.8)	24/72	**6SL3120-1TE22-4AD0**	**6FX7002-5LM72-....**	1.5	4 × 4	**6FX8002-5CS46-....**
1FN3450-3WC00-...	28.3	83.5	34.3 (46.0)	30/90	**6SL3120-1TE23-0AD0**	**6FX7002-5LM82-....**	1.5	4 × 6	**6FX8002-5CS56-....**
1FN3450-3WE00-...	51.3	151.0	49.8 (66.8)	132/210	**6SL3120-1TE31-3AA3**	**6FX7002-5LM02-....**	1.5	4 × 16	**6FX8002-5CS24-....**
1FN3450-4WB00-...	23.8	70.1	35.5 (47.6)	24/72	**6SL3120-1TE22-4AD0**	**6FX7002-5LM72-....**	1.5	4 × 4	**6FX8002-5CS46-....**
1FN3450-4WB50-...	30.3	89.5	40.4 (54.2)	30/90	**6SL3120-1TE23-0AD0**	**6FX7002-5LM82-....**	1.5	4 × 6	**6FX8002-5CS56-....**
1FN3450-4WC00-...	37.6	111.0	45.6 (61.1)	60/120	**6SL3120-1TE26-0AC0**	**6FX7002-5LM32-....**	1.5	4 × 10	**6FX8002-5CS64-....**
1FN3450-4WE00-...	68.0	201.0	66.3 (88.9)	132/210	**6SL3120-1TE31-3AA3**	**6FX7008-1BB61-....** [6]	–	4 × 25	**6FX8008-1BA25-....** [7]
1FN3600-2WA50-...	13.2	35.9	21.4 (28.7)	18/36	**6SL3120-■TE21-8AC0**	**6FX7002-5LM62-....**	1	4 × 2.5	**6FX8002-5CS16-....**
1FN3600-2WB00-...	16.8	45.8	24.1 (32.3)	18/54	**6SL3120-■TE21-8AD0**	**6FX7002-5LM42-....**	1	4 x 2.5	**6FX8002-5CS16 ....**
1FN3600-2WB50-...	22.3	60.7	27.5 (36.9)	30/90	**6SL3120-1TE23-0AD0**	**6FX7002-5LM72-....**	1.5	4 × 4	**6FX8002-5CS46-....**
1FN3600-2WC00-...	26.1	70.9	29.2 (39.2)	30/90	**6SL3120-1TE23-0AD0**	**6FX7002-5LM72-....**	1.5	4 × 4	**6FX8002-5CS46-....**
1FN3600-3WB00-...	24.8	68.2	35.8 (48.0)	24/72	**6SL3120-1TE22-4AD0**	**6FX7002-5LM72-....**	1.5	4 × 4	**6FX8002-5CS46-....**
1FN3600-3WB50-...	24.8	68.2	35.8 (48.0)	30/90	**6SL3120-1TE23-0AD0**	**6FX7002-5LM72-....**	1.5	4 × 4	**6FX8002-5CS46-....**
1FN3600-3WC00-...	38.4	106.0	43.4 (58.2)	60/120	**6SL3120-1TE26-0AC0**	**6FX7002-5LM32-....**	1.5	4 × 10	**6FX8002-5CS64-....**
1FN3600-4WA30-...	22.3	63.7	39.7 (53.2)	24/72	**6SL3120-1TE22-4AD0**	**6FX7002-5LM72-....**	1.5	4 × 4	**6FX8002-5CS46-....**
1FN3600-4WB00-...	31.5	90.1	46.8 (62.8)	30/90	**6SL3120-1TE23-0AD0**	**6FX7002-5LM82-....**	1.5	4 × 6	**6FX8002-5CS56-....**
1FN3600-4WB50-...	41.8	120.0	53.4 (71.6)	85/141	**6SL3120-1TE28-5AA3**	**6FX7002-5LM32-....**	1.5	4 × 10	**6FX8002-5CG61-....**
1FN3600-4WC00-...	48.8	139.0	56.8 (76.2)	85/141	**6SL3120-1TE28-5AA3**	**6FX7002-5LM32-....**	1.5	4 × 10	**6FX8002-5CG61-....**
1FN3600-5WB00-...	42.7	114	60.2 (80.7)	85/141	**6SL3120-1TE28-5AA3**	**6FX7002-5LM32-....**	1.5	4 × 10	**6FX8002-5CS64-....**
1FN3900-2WB00-...	25.5	70.5	33.5 (44.9)	24/72	**6SL3120-1TE22-4AD0**	**6FX7002-5LM72-....**	1.5	4 × 4	**6FX8002-5CS46-....**
1FN3900-2WC00-...	37.0	102.0	42.2 (56.6)	60/120	**6SL3120-1TE26-0AC0**	**6FX7002-5LM32-....**	1.5	4 × 10	**6FX8002-5CS64-....**
1FN3900-3WB00-...	40.6	114.0	55.3 (74.2)	60/120	**6SL3120-1TE26-0AC0**	**6FX7002-5LM32-....**	1.5	4 × 10	**6FX8002-5CS64-....**
1FN3900-4WA50-...	30.7	86.3	54.4 (73.0)	30/90	**6SL3120-1TE23-0AD0**	**6FX7002-5LM82-....**	1.5	4 × 6	**6FX8002-5CS56-....**
1FN3900-4WB00-...	49.7	140.0	66.0 (88.5)	85/141	**6SL3120-1TE28-5AA3**	**6FX7002-5LM32-....**	1.5	4 × 10	**6FX8002-5CG61-....**
1FN3900-4WB50-...	61.4	173.6	77.7 (104)	132/210	**6SL3120-1TE31-3AA3**	**6FX7002-5LM02-....**	1.5	4 × 16	**6FX8002-5CG24-....**
1FN3900-4WC00-...	72.0	202.0	83.0 (111)	132/210	**6SL3120-1TE31-3AA3**	**6FX8008-1BB61-....** [6]	–	4 × 25	**6FX8008-1BB25-....** [7]

Motor Module:	
Single Motor Module	**1**
Double Motor Module	**2**

....	Length code	**....**

For more information about cables, see MOTION-CONNECT connection systems

1) For water cooling with inlet temperature 35 °C (95 °F).
2) A reduction of up to 30 % must be expected in case of motor standstill, for very low velocities or very short traversing paths.
3) Velocity values refer to a drive system DC link voltage of 600 V DC.
4) Optimized selection for full performance of linear motors.
5) The current-carrying capacity of the power cables complies with EN 60204-1 for installation type C, under continuous operating conditions at an ambient air temperature of 40 °C (104 °F).
6) Sold by the meter only (4 × 16 mm^2). Connected to primary section with 16 mm^2 (< 1.5 m (4.92 ft)), then routed onwards via the terminal box with 25 mm^2.
7) Sold by the meter only (4 × 25 mm^2).
8) Pre-assembled adapter cable for motor with connection type B.

© Siemens 2024

Selection and ordering data

Feedrate force		Maximum velocity [3]		SIMOTICS L-1FN3 linear motors Version for continuous load		Weight, approx.	
				Primary section	**Secondary section** Standard – matching the motor of the relevant component size	Primary section without/with precision cooling	Secondary section without/with heatsink profiles
F_N [1] [2]	F_{max}	v_{max} at F_{max}	v_{max} at F_N				
N (lb$_f$)	N (lb$_f$)	m/min (ft/min)	m/min (ft/min)	Article No.	Article No.	kg (lb)	kg (lb)
Water cooling							
151 (33.9)	255 (57.3)	236 (774)	429 (1408)	**1FN3050-1ND00-0■A3**	**1FN3050-4SA00-0AA0**	2.2/2.7 (4.9/6.0)	0.4/0.5 (0.9/1.1)
302 (67.9)	510 (115)	104 (341)	199 (653)	**1FN3050-2NB80-0■A3**		3.2/4.0 (7.1/8.8)	
		229 (751)	419 (1375)	**1FN3050-2NE00-0■A3**		3.9/4.6 (8.6/10.1)	
302 (67.9)	510 (115)	115 (377)	212 (696)	**1FN3100-1NC00-0BA3**	**1FN3100-4SA00-0AA0**	3.0/3.5 (6.6/7.7)	0.7/0.8 (1.5/1.8)
604 (136)	1020 (229)	164 (538)	300 (984)	**1FN3100-2NC80-0BA3**		5.4/6.2 (11.9/13.7)	
905 (203)	1530 (344)	491 (1611)	101 (331)	**1FN3100-3NA80-0■A3**		7.5/8.6 (16.5/19.0)	
905 (203)	1530 (344)	111 (364)	206 (676)	**1FN3100-3NC00-0BA3**		7.5/8.5 (16.5/18.7)	
1210 (272)	2040 (459)	162 (532)	296 (971)	**1FN3100-4NC80-0BA3**		9.9/11.2 (21.8/24.7)	
453 (102)	766 (172)	127 (417)	230 (755)	**1FN3150-1NC20-0BA3**	**1FN3150-4SA00-0AA0**	4.1/4.6 (9.0/10.1)	1.2/1.3 (2.6/2.9)
905 (203)	1530 (344)	106 (348)	197 (646)	**1FN3150-2NB80-0BA3**		7.3/8.2 (16.1/18.1)	
1360 (306)	2300 (517)	105 (345)	195 (640)	**1FN3150-3NB80-0BA3**		10.5/11.7 (23.2/25.8)	
		156 (512)	284 (932)	**1FN3150-3NC70-0BA3**			
1810 (407)	3060 (688)	105 (345)	195 (640)	**1FN3150-4NB80-0BA3**		13.9/15.3 (30.6/33.7)	

Type of connection:	
1FN3100 to 1FN3900 motors	
Separate power and signal connections Terminal box cover prepared for metric cable gland	**B**
1FN3050 motor	
Separate power and signal connections, permanently connected with bare wire ends, length: 2 m (6.56 ft)	**E**
Separate power and signal connections, permanently connected, pre-assembled with connectors, length: 0.5 m (1.64 ft)	**F**

Description	Article No.
Signal cable, pre-assembled with M17 connector	
For SIMOTICS L-1FN3 linear motors	
• 1FN3100/1FN3150	**6FX8002-2SL01-....**
• 1FN3300 ... 1FN3900	**6FX8002-2SL02-....**

For more information about cables, see MOTION-CONNECT connection systems

For footnotes, see next page.

© Siemens 2024

Motor type Primary section (repeated)	Rated current	Maximum current	Calculated power	**SINAMICS S120 Motor Module [4] Booksize format** Internal air cooling		**Power cable with complete shield** Motor connection via adapter cable with power connector for increased velocity/acceleration			
				Required rated current	For further components, see SINAMICS S120 drive system	Pre-assembled adapter cable for motor [6]	Power connectors	Cable cross-section [5]	Pre-assembled basic cable to the drive system
	I_N [1]	I_{max}	$P_{el, max.}$	I_N/I_{max}					
	A	A	kW (hp)	A	Article No.	Article No.	Size	mm^2	Article No.
1FN3050-1ND00-....	2.8	5.9	1.7 (2.3)	3/9	**6SL3120-■TE13-0AD0**	Permanent cable connection	1	4 × 2.5	**6FX8002-5CS16-....**
1FN3050-2NB80-....	2.8	5.9	2.3 (3.1)	3/9	**6SL3120-1TE13-0AD0**	Permanent cable connection	1	4 × 2.5	**6FX8002-5CS16-....**
1FN3050-2NE00-....	5.65	11.7	3.32 (4.45)	5/15	**6SL3120-■TE15-0AD0**	**6FX7002-5LM42-....**	1	4 × 2.5	**6FX8002-5CS16-....**
1FN3100-1NC00-....	2.8	5.9	2.1 (2.8)	3/9	**6SL3120-■TE13-0AD0**	**6FX7002-5LM42-....**	1	4 × 2.5	**6FX8002-5CS16-....**
1FN3100-2NC80-....	8	16.5	5.1 (6.8)	9/27	**6SL3120-■TE21-0AD0**	**6FX7002-5LM42-....**	1	4 × 2.5	**6FX8002-5CS16-....**
1FN3100-3NA80-....	4.52	9.39	4.51 (6.05)	5/15	**6SL3120-■TE15-0AD0**	**6FX7002-5LM42-....**	1	4 × 2.5	**6FX8002-5CS16-....**
1FN3100-3NC00-....	8.5	17.6	6.3 (8.4)	9/27	**6SL3120-■TE21-0AD0**	**6FX7002-5LM42-....**	1	4 × 2.5	**6FX8002-5CS16-....**
1FN3100-4NC80-....	15.9	33.1	10.2 (13.7)	18/36	**6SL3120-■TE21-8AC0**	**6FX7002-5LM42-....**	1	4 × 2.5	**6FX8002-5CS16-....**
1FN3150-1NC20-....	4.5	9.4	3.2 (4.3)	5/15	**6SL3120-■TE15-0AD0**	**6FX7002-5LM42-....**	1	4 × 2.5	**6FX8002-5CS16-....**
1FN3150-2NB80-....	8	16.5	5.8 (7.8)	9/27	**6SL3120-■TE21-0AD0**	**6FX7002-5LM42-....**	1	4 × 2.5	**6FX8002-5CS16-....**
1FN3150-3NB80-....	11.9	24.8	8.44 (11.32)	18/36	**6SL3120-■TE21-8AC0**	**6FX7002-5LM42-....**	1	4 x 2.5	**6FX8002-5CS16 ....**
1FN3150-3NC70-....	16.9	35.2	10.8 (14.5)	18/36	**6SL3120-■TE21-8AC0**	**6FX7002-5LM42-....**	1	4 × 2.5	**6FX8002-5CS16-....**
1FN3150-4NB80-....	15.9	33.1	11.6 (15.6)	18/36	**6SL3120-■TE21-8AC0**	**6FX7002-5LM42-....**	1	4 × 2.5	**6FX8002-5CS16-....**

Motor Module:	
Single Motor Module	**1**
Double Motor Module	**2**

....	Length code	....

For more information about cables, see MOTION-CONNECT connection systems

1) For water cooling with inlet temperature 35 °C (95 °F).
2) A reduction of up to 30 % must be expected in case of motor standstill, for very low velocities or very short traversing paths.
3) Velocity values refer to a drive system DC link voltage of 600 V DC.
4) Optimized selection for full performance of linear motors.
5) The current-carrying capacity of the power cables complies with EN 60204-1 for installation type C, under continuous operating conditions at an ambient air temperature of 40 °C (104 °F).
6) Pre-assembled adapter cable for motor with connection type B/E/F.

© Siemens 2024

Selection and ordering data

Feedrate force		Maximum velocity [3]		SIMOTICS L-1FN3 linear motors Version for continuous load			Weight, approx.	
				Primary section	**Secondary section** Standard – matching the motor of the relevant component size	**Secondary section** Standard extended – matching the motor of the relevant component size	Primary section without/with precision cooling	Secondary section without/with heatsink profiles
F_N [1) 2)]	F_{max}	v_{max} at F_{max}	v_{max} at F_N					
N (lb$_f$)	N (lb$_f$)	m/min (ft/min)	m/min (ft/min)	Article No.	Article No.	Article No.	kg (lb)	kg (lb)
Water cooling								
864 (194)	1470 (330)	127 (417)	228 (748)	**1FN3300-1NC10-0BA3**	**1FN3300-4SA00-0AA0**	**1FN3300-4SA12-0AA0**	8.8/9.5 (19.4/20.9)	2.4/2.6 (5.3/5.7)
1730 (389)	2940 (661)	127 (417)	224 (735)	**1FN3300-2NC10-0BA3**			15.9 (35.1)	17.0 (37.5)
		402 (1319)	715 (2346)	**1FN3300-2NH00-0BA3**			15.9/17.0 (35.1/37.5)	
2595 (583)	4400 (989)	88 (289)	160 (525)	**1FN3300-3NB50-0BA3**			23.0/24.3 (50.7/53.6)	
		144 (472)	257 (843)	**1FN3300-3NC40-0BA3**			23.0/24.4 (50.7/53.8)	
3460 (778)	5870 (1320)	105 (345)	193 (633)	**1FN3300-4NB80-0BA3**			29.9/31.8 (65.9/70.1)	
1300 (292)	2200 (495)	93.5 (306.8)	169 (554)	**1FN3450-1NB50-0BA3**	**1FN3450-4SA00-0AA0**	**1FN3450-4SA12-0AA0**	12/12.8 (26.5/28.2)	3.8/4 (8.4/8.82)
2590 (582)	4400 (989)	80 (262)	147 (482)	**1FN3450-2NB40-0BA3**			22.5/23.7 (49.6/52.3)	
		104 (341)	188 (617)	**1FN3450-2NB80-0BA3**				
		148 (486)	266 (873)	**1FN3450-2NC50-0BA3**				
3890 (875)	6600 (1484)	34.3 (112.5)	69.9 (229.3)	**1FN3450-3NA50-0BA3**			32.7/34.3 (72.1/75.6)	
		91 (299)	165 (541)	**1FN3450-3NB50-0BA3**				
		147 (482)	264 (866)	**1FN3450-3NC50-0BA3**				
5190 (1167)	8810 (1981)	67.5 (221.5)	126 (413)	**1FN3450-4NB20-0BA3**			42.0/44.0 (92.6/97.0)	
		102 (335)	186 (610)	**1FN3450-4NB80-0BA3**			42.0/44.1 (92.6/97.2)	
3460 (778)	5870 (1320)	56.8 (186.4)	107 (351)	**1FN3600-2NB00-0BA3**	**1FN3600-4SA00-0AA0**		30.4/32.0 (67.0/70.6)	4.6/5 (10.1/11.0)
		109 (358)	197 (646)	**1FN3600-2NB80-0BA3**				
		259 (850)	460 (1509)	**1FN3600-2NE50-0BA3**				
5190 (1167)	8810 (1981)	74.3 (243.8)	137 (449)	**1FN3600-3NB00-0BA3**			44.3/46.4 (97.7/102.3)	
		108 (354)	196 (643)	**1FN3600-3NB80-0BA3**				
6920 (1556)	11700 (2630)	43 (141)	86 (282)	**1FN3600-4NA70-0BA3**			58.2/60.8 (128.3/134.1)	
		108 (354)	195 (640)	**1FN3600-4NB80-0BA3**				
5190 (1167)	8810 (1981)	69 (226)	128 (420)	**1FN3900-2NB20-0BA3**	**1FN3900-4SA00-0AA0**		43.5/45.3 (95.9/99.9)	7.5/7.9 (16.5/17.4)
		170 (558)	307 (1007)	**1FN3900-2NC80-0BA3**				
7780 (1749)	13200 (2967)	69 (226)	127 (417)	**1FN3900-3NB20-0BA3**			63.0/65.5 (138.9/144.4)	
10400 (2338)	14600 (3282)	28 (91.9)	59 (194)	**1FN3900-4NA50-0BA3**			82.0/85.1 (180.8/187.6)	
	17600 (3957)	45.6 (149.6)	87.9 (288.4)	**1FN3900-4NA80-0BA3**				
	17610 (3959)	69 (226)	127 (417)	**1FN3900-4NB20-0BA3**				

Type of connection:	
1FN3100 to 1FN3900 motors	
Separate power and signal connections Terminal box cover prepared for metric cable gland	**B**

Description	Article No.
Signal cable, pre-assembled with M17 connector	
For SIMOTICS L-1FN3 linear motors	
• 1FN3100/1FN3150	**6FX8002-2SL01-....**
• 1FN3300 ... 1FN3900	**6FX8002-2SL02-....**

For more information about cables, see MOTION-CONNECT connection systems

For footnotes, see next page.

© Siemens 2024

Motor type Primary section (repeated)	Rated current	Maximum current	Calculated power	**SINAMICS S120 Motor Module [4] Booksize format** Internal air cooling		**Power cable with complete shield** Motor connection via adapter cable with power connector for increased velocity/acceleration			
				Required rated current	For further components, see SINAMICS S120 drive system	Pre-assembled adapter cable for motor [6]	Power connectors	Cable cross-section [5]	Pre-assembled basic cable to the drive system
	I_N [1]	I_{max}	$P_{el, max.}$	I_N / I_{max}					
	A	A	kW (hp)	A	Article No.	Article No.	Size	mm^2	Article No.
1FN3300-1NC10-....	8.1	17.1	5.4 (7.2)	9/27	**6SL3120-■TE21-0AD0**	**6FX7002-5LM62-....**	1	4 × 2.5	**6FX8002-5CS16-....**
1FN3300-2NC10-....	16.2	34.1	10.5 (14.1)	18/36	**6SL3120-■TE21-8AC0**	**6FX7002-5LM62-....**	1	4 × 2.5	**6FX8002-5CS16-....**
1FN3300-2NH00-....	49.9	105	24.5 (32.9)	132/210	**6SL3120-1TE31-3AA3**	**6FX7002-5LM32-....**	1.5	4 × 10	**6FX8002-5CS64-....**
1FN3300-3NB50-....	17.6	36.9	13 (17.4)	18/36	**6SL3120-■TE21-8AC0**	**6FX7002-5LM62-....**	1	4 × 2.5	**6FX8002-5CS16 ....**
1FN3300-3NC40-....	27.3	57.4	17.3 (23.2)	30/90	**6SL3120-1TE23-0AD0**	**6FX7002-5LM72-....**	1.5	4 × 4	**6FX8002-5CS46-....**
1FN3300-4NB80-....	28.4	59.6	19.3 (25.9)	30/90	**6SL3120-1TE23-0AD0**	**6FX7002-5LM82-....**	1.5	4 × 6	**6FX8002-5CS56-....**
1FN3450-1NB50-....	9.1	19.1	6.49 (8.70)	9/27	**6SL3120-■TE21-0AD0**	**6FX7002-5LM62-....**	1	4 × 2.5	**6FX8002-5CS16-....**
1FN3450-2NB40-....	16.2	34.1	12 (16.1)	18/36	**6SL3120-■TE21-8AC0**	**6FX7002-5LM62-....**	1	4 × 2.5	**6FX8002-5CS16 ....**
1FN3450-2NB80-....	20.4	42.9	13.7 (18.4)	24/48	**6SL3120-1TE22-4AC0**	**6FX7002-5LM62-....**	1	4 × 2.5	**6FX8002-5CS16 ....**
1FN3450-2NC50-....	28.4	59.6	17.0 (22.8)	30/90	**6SL3120-1TE23-0AD0**	**6FX7002-5LM82-....**	1.5	4 × 6	**6FX8002-5CS56-....**
1FN3450-3NA50-....	12.7	26.7	13.0 (17.4)	18/36	**6SL3120-■TE21-8AC0**	**6FX7002-5LM62-....**	1	4 × 2.5	**6FX8002-5CS16 ....**
1FN3450-3NB50-....	27.3	57.4	19.1 (25.6)	30/90	**6SL3120-1TE23-0AD0**	**6FX7002-5LM72-....**	1.5	4 × 4	**6FX8002-5CS46 ....**
1FN3450-3NC50-....	42.5	89.5	25.4 (34.1)	45/90	**6SL3120-1TE24-5AC0**	**6FX7002-5LM32-....**	1.5	4 × 10	**6FX8002-5CS64-....**
1FN3450-4NB20-....	28.4	59.6	22.2 (29.8)	30/90	**6SL3120-1TE23-0AD0**	**6FX7002-5LM72-....**	1.5	4 × 4	**6FX8002-5CS46 ....**
1FN3450-4NB80-....	40.8	85.8	27.3 (36.6)	45/90	**6SL3120-1TE24-5AC0**	**6FX7002-5LM32-....**	1.5	4 × 10	**6FX8002-5CS64-....**
1FN3600-2NB00-....	16.2	34.1	13.8 (18.5)	18/54	**6SL3120-■TE21-8AD0**	**6FX7002-5LM62-....**	1	4 × 2.5	**6FX8002-5CS16 ....**
1FN3600-2NB80-....	28.4	59.6	18.9 (25.3)	30/90	**6SL3120-1TE23-0AD0**	**6FX7002-5LM82-....**	1.5	4 × 6	**6FX8002-5CS56-....**
1FN3600-2NE50-....	64.2	135	34.4 (46.1)	85/141	**6SL3120-1TE28-5AA3**	**6FX7002-5LM02-....**	1.5	4 × 16	**6FX8002-5CS24 ....**
1FN3600-3NB00-....	30.6	64.4	23.3 (31.2)	30/90	**6SL3120-1TE23-0AD0**	**6FX7002-5LM82-....**	1.5	4 × 6	**6FX8002-5CS56-....**
1FN3600-3NB80-....	42.5	89.5	28.2 (37.8)	45/90	**6SL3120-1TE24-5AC0**	**6FX7002-5LM32-....**	1.5	4 × 10	**6FX8002-5CS64-....**
1FN3600-4NA70-....	26.3	55.3	24.8 (33.3)	30/56	**6SL3120-1TE23-0AC0**	**6FX7002-5LM72-....**	1.5	4 × 4	**6FX8002-5CS46 ....**
1FN3600-4NB80-....	56.7	119.3	37.6 (50.4)	60/120	**6SL3120-1TE26-0AC0**	**6FX7002-5LM02-....**	1.5	4 × 16	**6FX8002-5CS24-....**
1FN3900-2NB20-....	28.4	59.6	21.9 (29.4)	30/90	**6SL3120-1TE23-0AD0**	**6FX7002-5LM82-....**	1.5	4 × 6	**6FX8002-5CS56-....**
1FN3900-2NC80-....	64.2	135	37.8 (50.7)	85/141	**6SL3120-1TE28-5AA3**	**6FX7002-5LM02-....**	1.5	4 × 16	**6FX8002-5CS24 ....**
1FN3900-3NB20-....	42.5	89.5	32.7 (43.9)	45/90	**6SL3120-1TE24-5AC0**	**6FX7002-5LM32-....**	1.5	4 × 10	**6FX8002-5CS64-....**
1FN3900-4NA50-....	29.3	61.6	31.6 (42.4)	30/90	**6SL3120-1TE23-0AD0**	**6FX7002-5LM82-....**	1.5	4 × 6	**6FX8002-5CS56 ....**
1FN3900-4NA80-....	40.8	85.8	36.8 (49.3)	45/85	**6SL3120-1TE24-5AC0**	**6FX7002-5LM32-....**	1.5	4 × 10	**6FX8002-5CS64-....**
1FN3900-4NB20-....	56.7	119.3	43.5 (58.3)	60/120	**6SL3120-1TE26-0AC0**	**6FX7002-5LM02-....**	1.5	4 × 16	**6FX8002-5CS24-....**

Motor Module:	
Single Motor Module	**1**
Double Motor Module	**2**

....	Length code	....

For more information about cables, see MOTION-CONNECT connection systems

[1] For water cooling with inlet temperature 35 °C (95 °F).

[2] A reduction of up to 30 % must be expected in case of motor standstill, for very low velocities or very short traversing paths.

[3] Velocity values refer to a drive system DC link voltage of 600 V DC.

[4] Optimized selection for full performance of linear motors.

[5] The current-carrying capacity of the power cables complies with EN 60204-1 for installation type C, under continuous operating conditions at an ambient air temperature of 40 °C (104 °F).

[6] Pre-assembled adapter cable for motor with connection type B.

© Siemens 2024

Selection and ordering data

Feedrate force		Maximum velocity [2]		SIMOTICS L-1FN3 linear motors Standard version			Weight, approx.	
				Primary section	**Secondary section** Standard – matching the motor of the relevant component size	**Secondary section** Standard extended – matching the motor of the relevant component size	Primary section	Secondary section
F_N [1]	F_{max}	v_{max} at F_{max}	v_{max} at F_N					
N (lb_f)	N (lb_f)	m/min (ft/min)	m/min (ft/min)	Article No.	Article No.	Article No.	kg (lb)	kg (lb)
Natural cooling								
133 (29.9)	320 (71.9)	175 (574)	477 (1565)	**1FN3050-1KD00-0 S A0**	**1FN3050-4SA00-0AA0**	—	1.42 (3.13)	0.4 (0.9)
266 (59.8)	640 (144)	134 (440)	377 (1237)	**1FN3050-2KC40-0 S A0**			2.5 (5.5)	
242 (54.4)	676 (152)	145 (476)	406 (1332)	**1FN3100-1KC50-0 S A0**	**1FN3100-4SA00-0AA0**	—	2.3 (5.1)	0.7 (1.5)
483 (109)	1350 (303)	141 (463)	401 (1316)	**1FN3100-2KC50-0 S A0**			4.31 (9.50)	
725 (163)	2030 (456)	139 (456)	399 (1309)	**1FN3100-3KC50-0 S A0**			6.25 (13.78)	
331 (74.4)	1030 (232)	156 (512)	449 (1473)	**1FN3150-1KC70-0 S A0**	**1FN3150-4SA00-0AA0**	—	3.32 (7.32)	1.2 (2.6)
663 (149)	2060 (463)	152 (499)	445 (1460)	**1FN3150-2KC70-0 S A0**			6.0 (13.2)	
994 (223)	3100 (697)	150 (492)	443 (1453)	**1FN3150-3KC70-0 S A0**			8.91 (19.65)	

Type of connection:	
1FN3050 to 1FN3150 motors:	
Separate power and signal connections permanently connected with bare wire ends: Power cable: 0.5 m (1.64 ft) Signal cable: 0.26 m (0.82 ft)	**S**

Description	Article No.
Signal cable, pre-assembled with M17 connector For SIMOTICS L-1FN3 linear motors with natural cooling • 1FN3050/1FN3100/1FN3150	**6FX8002-2SL00-....**
Signal cable, sold by the meter For SIMOTICS L-1FN3 linear motors with natural cooling • 1FN3050/1FN3100/1FN3150	**6FX8008-1BD00-....**

For more information about cables, see MOTION-CONNECT connection systems

For footnotes, see next page.

© Siemens 2024

Motor type Primary section (repeated)	Rated current	Maximum current	Calculated power	**SINAMICS S120 Motor Module [3] Booksize format** Internal air cooling		**Power cable with complete shield** Motor connection via basis cable with power connector		
				Required rated current	For further components, see SINAMICS S120 drive system			
	I_N	I_{max}	$P_{el, max.}$	I_N / I_{max}		Power cable at the motor with bare wire ends	Cable cross-section [4]	Sold by the meter (ring) basic cable to the drive system
	A	A	kW (hp)	A	Article No.		mm^2	Article No.
1FN3050-1KD00-...	2.09	7.74	2.04 (2.74)	3/9	**6SL3120-■TE13-0AD0**	Permanent cable connection	4 × 1.5	**6FX8008-1BB11-** ....
1FN3050-2KC40-...	3.39	12.6	3.67 (4.92)	5/15	**6SL3120-■TE15-0AD0**	Permanent cable connection	4 × 1.5	**6FX8008-1BB11-** ....
1FN3100-1KC50-...	2.95	12.5	3.39 (4.55)	5/15	**6SL3120-■TE15-0AD0**	Permanent cable connection	4 × 1.5	**6FX8008-1BB11-** ....
1FN3100-2KC50-...	5.9	25.1	6.67 (8.94)	9/27	**6SL3120-■TE21-0AD0**	Permanent cable connection	4 × 1.5	**6FX8008-1BB11-** ....
1FN3100-3KC50-...	8.85	37.6	9.94 (13.33)	18/54	**6SL3120-■TE21-8AD0**	Permanent cable connection	4 × 1.5	**6FX8008-1BB11-** ....
1FN3150-1KC70-...	4.25	20.2	5.14 (6.89)	9/27	**6SL3120-■TE21-0AD0**	Permanent cable connection	4 × 1.5	**6FX8008-1BB11-** ....
1FN3150-2KC70-...	8.5	40.4	10.1 (13.5)	18/54	**6SL3120-■TE21-8AD0**	Permanent cable connection	4 × 1.5	**6FX8008-1BB11-** ....
1FN3150-3KC70-...	12.8	60.6	15.1 (20.2)	24/72	**6SL3120-1TE22-4AD0**	Permanent cable connection	4 × 1.5	**6FX8008-1BB11-** ....

Motor Module:	
Single Motor Module	**1**
Double Motor Module	**2**

Length code	....

For more information about cables, see MOTION-CONNECT connection systems

1) A reduction of up to 30 % must be expected in case of motor standstill, for very low velocities or very short traversing paths.

2) Velocity values refer to a drive system DC link voltage of 600 V DC.

3) Optimized selection for full performance of linear motors.

4) The current-carrying capacity of the power cables complies with EN 60204-1 for installation type C, under continuous operating conditions at an ambient air temperature of 40 °C (104 °F).

© Siemens 2024

Selection and ordering data

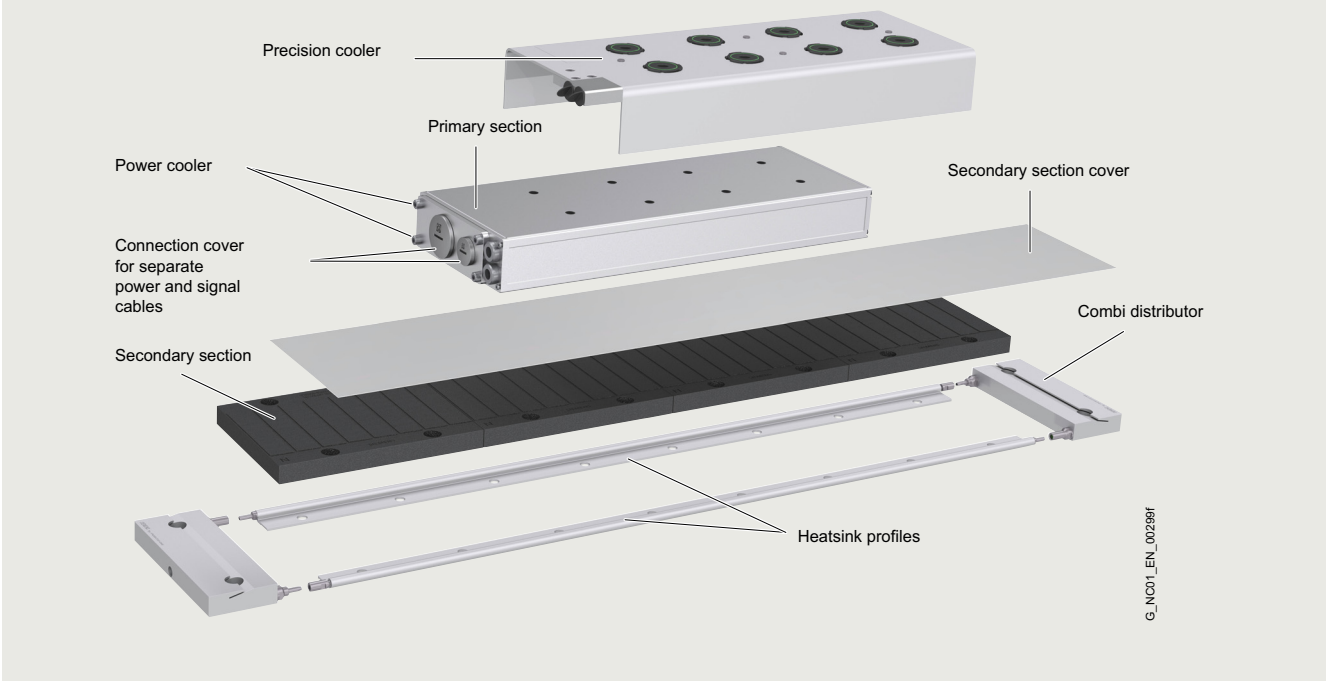

SIMOTICS L-1FN3 linear motors Version for peak load	**Optional components** **Precision cooler**
Type	Article No.
1FN3050-2W...	**1FN3050-2PK00-0AA0**
1FN3100-2W...	**1FN3100-2PK00-0AA0**
1FN3100-3W...	**1FN3100-3PK00-0AA0**
1FN3100-4W...	**1FN3100-4PK00-0AA0**
1FN3100-5W...	**1FN3100-5PK00-0AA0**
1FN3150-2W...	**1FN3150-2PK00-0AA0**
1FN3150-3W...	**1FN3150-3PK00-0AA0**
1FN3150-4W...	**1FN3150-4PK00-0AA0**
1FN3150-5W...	**1FN3150-5PK00-0AA0**
1FN3300-2W...	**1FN3300-2PK00-0AA0**
1FN3300-3W...	**1FN3300-3PK00-0AA0**
1FN3300-4W...	**1FN3300-4PK00-0AA0**
1FN3450-2W...	**1FN3450-2PK00-0AA0**
1FN3450-3W...	**1FN3450-3PK00-0AA0**
1FN3450-4W...	**1FN3450-4PK00-0AA0**
1FN3600-2W...	**1FN3600-2PK00-0AA0**
1FN3600-3W...	**1FN3600-3PK00-0AA0**
1FN3600-4W...	**1FN3600-4PK00-0AA0**
1FN3900-2W...	**1FN3900-2PK00-0AA0**
1FN3900-3W...	**1FN3900-3PK00-0AA0**
1FN3900-4W...	**1FN3900-4PK00-0AA0**
Can be ordered optionally in version with increased ruggedness, incl. O-rings	**1FN3...- ■ PK00-0AA0-Z R01**

SIMOTICS L-1FN3 linear motors Version for continuous load	**Optional components** **Precision cooler**
Type	Article No.
1FN3050-1N...	**1FN3050-1PK10-0AA0**
1FN3050-2N...	**1FN3050-2PK10-0AA0**
1FN3100-1N...	**1FN3100-1PK10-0AA0**
1FN3100-2N...	**1FN3100-2PK10-0AA0**
1FN3100-3N...	**1FN3100-3PK10-0AA0**
1FN3100-4N...	**1FN3100-4PK10-0AA0**
1FN3150-1N...	**1FN3150-1PK10-0AA0**
1FN3150-2N...	**1FN3150-2PK10-0AA0**
1FN3150-3N...	**1FN3150-3PK10-0AA0**
1FN3150-4N...	**1FN3150-4PK10-0AA0**
1FN3300-1N...	**1FN3300-1PK10-0AA0**
1FN3300-2N...	**1FN3300-2PK10-0AA0**
1FN3300-3N...	**1FN3300-3PK10-0AA0**
1FN3300-4N...	**1FN3300-4PK10-0AA0**
1FN3450-2N...	**1FN3450-2PK10-0AA0**
1FN3450-3N...	**1FN3450-3PK10-0AA0**
1FN3450-4N...	**1FN3450-4PK10-0AA0**
1FN3600-2N...	**1FN3600-2PK10-0AA0**
1FN3600-3N...	**1FN3600-3PK10-0AA0**
1FN3600-4N...	**1FN3600-4PK10-0AA0**
1FN3900-2N...	**1FN3900-2PK10-0AA0**
1FN3900-3N...	**1FN3900-3PK10-0AA0**
1FN3900-4N...	**1FN3900-4PK10-0AA0**
Can be ordered optionally in version with increased ruggedness, incl. O-rings	**1FN3...- ■ PK10-0AA0-Z R01**

© Siemens 2024

Selection and ordering data

SIMOTICS L-1FN3 linear motors	**Optional components**			
	Secondary section cover		**Cover end pieces for secondary section cover** [2]	**Protective mat with yoke function** [3]
Type	Continuous [1]	Segmented	Retains continuous cover without heatsink profile	
	Article No.	Article No.	Article No.	Article No.
1FN3050-...	**1FN3050-0TB00-1 ■ ■ 0**	**1FN3050-4TP00-1A ■ ■**	**1FN3050-0TC00-0AA0**	**–**
1FN3100-...	**1FN3100-0TB00-1 ■ ■ 0**	**1FN3100-4TP00-1A ■ ■**	**1FN3100-0TC00-0AA0**	**–**
1FN3150-...	**1FN3150-0TB00-1 ■ ■ 0**	**1FN3150-4TP00-1A ■ ■**	**1FN3150-0TC00-0AA0**	**–**
1FN3300-...	**1FN3300-0TB00-1 ■ ■ 0**	**1FN3300-4TP00-1A ■ ■**	**1FN3300-0TC00-0AA0**	**1FN3300-4RS00-0AB0**
1FN3450-...	**1FN3450-0TB00-1 ■ ■ 0**	**1FN3450-4TP00-1A ■ ■**	**1FN3450-0TC00-0AA0**	**1FN3450-4RS00-0AB0**
1FN3600-...	**1FN3600-0TB00-1 ■ ■ 0**	**1FN3600-4TP00-1A ■ ■**	**–**	**–**
1FN3900-...	**1FN3900-0TB00-1 ■ ■ 0**	**1FN3900-4TP00-1A ■ ■**	**–**	**–**

Number of secondary sections	0	**A**	**Number of secondary sections for all motors**	2.5	**C**	**5**
	10	**B**		3.0	**D**	**0**
	20	**C**		3.5	**D**	**5**
	30	**D**		4.0	**E**	**0**
	40	**E**		5.0	**F**	**0**
	50	**F**				
Example:	0	**A**	**Number of secondary sections for 1FN3600/ 1FN3900 motors**	5.5	**F**	**5**
Maximum length of the continuous secondary section cover for motors:	1	**B**		6.5	**G**	**5**
- 1FN3050 to 1FN3150	2	**C**				
corresponds to length code xxx-1FA0 50 units.	3	**D**				
- 1FN3100 to 1FN3900	4	**E**				
corresponds to length code xxx-1DC0 32 units.	5	**F**				
	6	**G**				
	7	**H**				
	8	**J**				
	9	**K**				

1) Continuous cover for several secondary sections. The maximum length of the secondary section cover is 6 m (19.69 ft). For the following motors, this corresponds to: 1FN3050 to 1FN3150, a maximum number of 50 secondary sections (AB to FA). 1FN3300 to 1FN3900, a maximum number of 32 secondary sections (AB to DC).

2) The secondary section end pieces are designed to allow clamping of the integrated secondary section cover.

3) Can be ordered with a batch size of 4 units.

SIMOTICS L-1FN3 linear motors	**Optional components**			
	Heatsink profile [4]	**Secondary section end pieces**		
		Combi distributor	**Combi adapter**	**Combi end piece**
		Parallel water connection for all heatsink profiles	Combi adapter and end piece can only be implemented together.	
			Single-sided water connection	Water diversion
Type	Article No.	Article No.	Article No.	Article No.
1FN3050-...	**1FN3002-0TK0 ■ -1 ■ ■ 0**	**1FN3050-0TJ01-0AA0**	**1FN3050-0TG01-0AA0**	**1FN3050-0TF01-0AA0**
1FN3100-...	**1FN3002-0TK0 ■ -1 ■ ■ 0**	**1FN3100-0TJ01-0AA0**	**1FN3100-0TG01-0AA0**	**1FN3100-0TF01-0AA0**
1FN3150-...	**1FN3002-0TK0 ■ -1 ■ ■ 0**	**1FN3150-0TJ01-0AA0**	**1FN3150-0TG01-0AA0**	**1FN3150-0TF01-0AA0**
1FN3300-...	**1FN3003-0TK0 ■ -1 ■ ■ 0**	**1FN3300-0TJ01-0AA0**	**1FN3300-0TG01-0AA0**	**1FN3300-0TF01-0AA0**
1FN3450-...	**1FN3003-0TK0 ■ -1 ■ ■ 0**	**1FN3450-0TJ01-0AA0**	**1FN3450-0TG01-0AA0**	**1FN3450-0TF01-0AA0**
1FN3600-...	**1FN3004-0TK0 ■ -1 ■ ■ 0**	**1FN3600-0TJ01-0AA0**	**–**	**–**
1FN3900-...	**1FN3005-0TK0 ■ -1 ■ ■ 0**	**1FN3900-0TJ01-0AA0**	**–**	**–**

Prepared with plug-in coupling for connection to combi distributor with plug-in coupling, combi adapter with plug-in coupling, combi end piece with plug-in coupling or as intermediate unit for heatsink profile with cable grommet nipple	**4**	**A**	**Number of secondary sections** 0	
		B	10	
		C	20	
1FN3050 to 1FN3450 motors[4]: **Grommet nipple only at the right-hand end** of secondary section track	**6**	**A**	0	
		B	1	
		C	2	
		D	3	
		E	4	
1FN3600/1FN3900 motors: **Grommet nipple at both ends** of secondary section track	**6**	**F**	5	
		G	6	
		H	7	
		J	8	
1FN3050 to 1FN3450 motors [5]: **Grommet nipple only at the left-hand end** of secondary section track	**7**	**K**	9	

4) 1FN3050 to 1FN3450 motors:
2 units required per secondary section track.
1FN3600 to 1FN3900:
3 units required per secondary section track.
The maximum available length of a single-part heatsink profile is 3 m (9.84 ft).
For the following motors, this corresponds to:
1FN3050 to 1FN3150, a maximum number of 24 secondary sections (AB to CE)
1FN3300 to 1FN3900, a maximum number of 16 secondary sections (AB to BG).

5) Available only in length AC (corresponds to 2 secondary sections).
The difference in the secondary section track length must be compensated through assembly using the heatsink profile 1FN300.-0TK04-1..0.

© Siemens 2024

Overview

Recommended linear measuring systems for SIMOTICS L-1FN3 linear motors

Type	Incremental encoder sin/cos 1 V_{pp} encapsulated	
	Heidenhain LS 187	**Heidenhain LS 487**
Signal cycle	20 µm	20 µm
Acceleration in measuring direction, max.	100 m/s^2 (328 ft/s^2)	100 m/s^2 (328 ft/s^2)
Traversing velocity, max.	120 m/min (394 ft/min)	120 m/min (394 ft/min)
Measuring length, max.	3040 mm (120 in)	2040 mm (80.3 in)
Output signal	1 V_{pp}	1 V_{pp}

Type	Incremental encoder sin/cos 1 V_{pp} open	
	Heidenhain LIDA 485	**Renishaw RTLC 20/TONIC**
Signal cycle	20 µm	20 µm
Acceleration in measuring direction, max. [1]	200 m/s^2 (656 ft/s^2)	600 m/s^2 (1969 ft/s^2)
Traversing velocity, max.	480 m/min (1575 ft/min)	600 m/min (1969 ft/min)
Measuring length, max.	30040 mm (1183 in)	25000 mm (984 in)
Output signal	1 V_{pp}	1 V_{pp}

Absolute encoders with DRIVE-CLiQ

Absolute measuring systems with integrated DRIVE-CLiQ interface are available from various manufacturers. The absolute encoders can be used as a motor feedback system.

A current overview of the various manufacturers and available measuring systems is available on the internet at:
http://support.automation.siemens.com/WW/view/en/65402168
It is also possible to use absolute measuring systems with EnDat 2.1.

Overview

Liquid cooling

These are third-party products whose fundamental suitability is familiar to us. It goes without saying that equivalent products from other manufacturers may be used. Our recommendations are to be seen as helpful information, not as requirements or regulations. We do not accept liability for the quality of non-Siemens products.

Please get in touch with the cooler manufacturers listed below for technical information.

ait-deutschland GmbH
www.kkt-chillers.com

BKW Kälte-Wärme-Versorgungstechnik GmbH
www.bkw-kuema.de

Helmut Schimpke und Team Industriekühlanlagen GmbH + Co. KG
www.schimpke.com

Hydac System GmbH
www.hydac.com

Pfannenberg GmbH
www.pfannenberg.com

Rittal GmbH & Co. KG
www.rittal.com

For design information about the coolers, refer to the SIMOTICS L-1FN3 Linear Motors Configuration Manual.

https://support.industry.siemens.com/cs/ww/en/view/109475768

[1] Data refers to the measuring head.

© Siemens 2024

Dimensional drawings

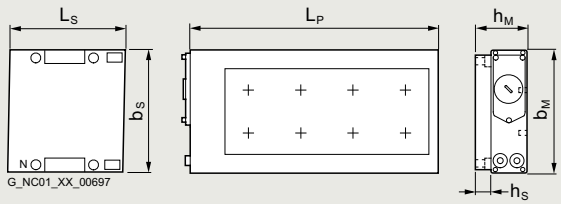

1FN3050 to 1FN3450 without precision cooling

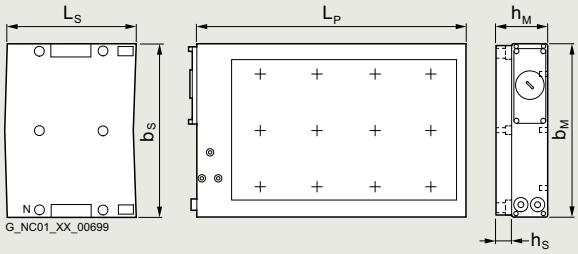

1FN3600 to 1FN3900 without precision cooling
Note: 4-row drilling pattern with 1FN3900 for fixing the primary section

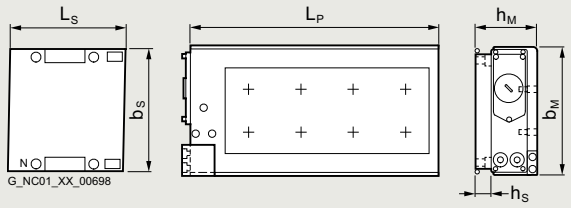

1FN3050 to 1FN3450 with precision cooling

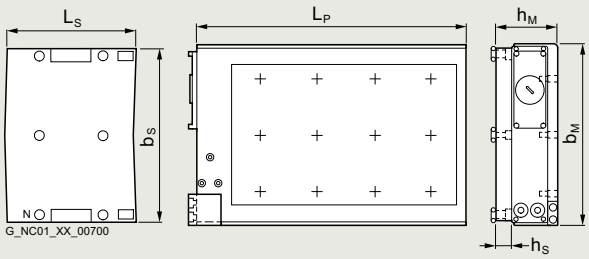

1FN3600 to 1FN3900 with precision cooling
Note: 4-row drilling pattern with 1FN3900 for fixing the primary section

Primary section	Dimensions in mm (inches)					Secondary section	Dimensions in mm (inches)				
	Without precision cooling		With precision cooling		Primary section length		Without cover and without precision cooling		With cover and with precision cooling		Secondary section length
Type	b_M	h_M	b_M	h_M	L_P	Type	b_S	h_S	b_S	h_S	L_S
SIMOTICS L-1FN3 linear motors, version for peak load – water cooling											
1FN3050-2W	67 (2.64)	48.5 (1.91)	76 (2.99)	63.4 (2.50)	255 (10.04)	1FN3050-4SA00-0AA0	58 (2.28)	11.8 (0.46)	75 (2.95)	14.8 (0.58)	120 (4.72)
1FN3100-1W	96 (3.78)	48.5 (1.91)	–	–	150 (5.91)	1FN3100-4SA00-0AA0	88 (3.46)	11.8 (0.46)	105 (4.13)	14.8 (0.58)	120 (4.72)
1FN3100-2W			105 (4.13)	63.4 (2.50)	255 (10.04)						
1FN3100-3W					360 (14.17)						
1FN3100-4W					465 (18.31)						
1FN3100-5W					570 (22.44)						
1FN3150-1W	126 (4.96)	50.5 (1.99)	–	–	150 (5.91)	1FN3150-4SA00-0AA0	118 (4.65)	13.8 (0.54)	135 (5.31)	16.8 (0.66)	120 (4.72)
1FN3150-2W			135 (5.31)	65.4 (2.57)	255 (10.04)						
1FN3150-3W					360 (14.17)						
1FN3150-4W					465 (18.31)						
1FN3150-5W					570 (22.44)						
1FN3300-1W	141 (5.55)	64.1 (2.52)	–	–	221 (8.70)	1FN3300-4SA00-0AA0	134 (5.28)	16.5 (0.65)	151 (5.94)	19.5 (0.77)	184 (7.24)
1FN3300-2W			150 (5.91)	79 (3.11)	382 (15.04)						
1FN3300-3W					543 (21.38)	1FN3300-4SA12-0AA0					276 (10.89)
1FN3300-4W					704 (27.72)						
1FN3450-2W	188 (7.40)	66.1 (2.60)	197 (7.76)	81 (3.19)	382 (15.04)	1FN3450-4SA00-0AA0	180 (7.09)	18.5 (0.73)	197 (7.76)	21.5 (0.85)	184 (7.24)
1FN3450-3W					543 (21.38)	1FN3450-4SA12-0AA0					276 (10.89)
1FN3450-4W					704 (27.72)						
1FN3600-2W	248 (9.76)	64.1 (2.52)	257 (10.12)	86 (3.39)	382 (15.04)	1FN3600-4SA00-0AA0	240 (9.45)	16.5 (0.65)	247 (9.72)	26.5 (1.04)	184 (7.24)
1FN3600-3W					543 (21.38)						
1FN3600-4W					704 (27.72)						
1FN3600-5W					865 (34.06)						
1FN3900-2W	342 (13.46)	66.1 (2.60)	351 (13.82)	88 (3.46)	382 (15.04)	1FN3900-4SA00-0AA0	334 (13.15)	18.5 (0.73)	341 (13.43)	28.5 (1.12)	184 (7.24)
1FN3900-3W					543 (21.38)						
1FN3900-4W					704 (27.72)						

© Siemens 2024

Dimensional drawings

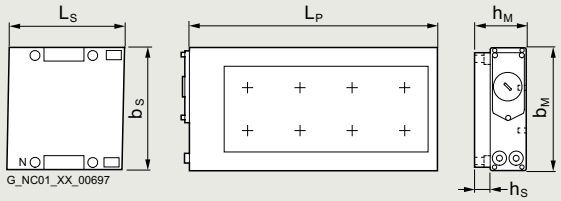

1FN3050 to 1FN3450 without precision cooling

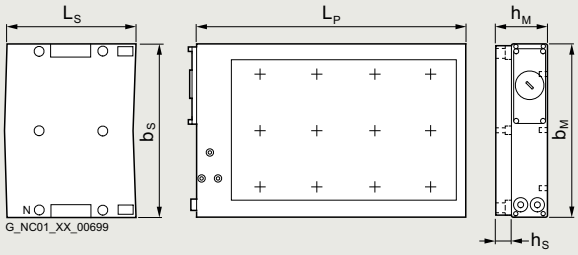

1FN3600 to 1FN3900 without precision cooling
Note: 4-row drilling pattern with 1FN3900 for fixing the primary section

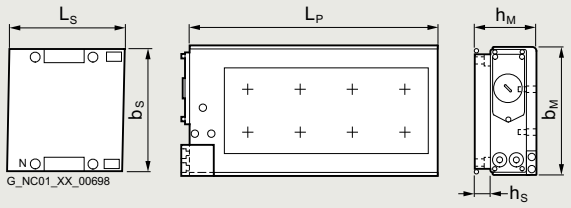

1FN3050 to 1FN3450 with precision cooling

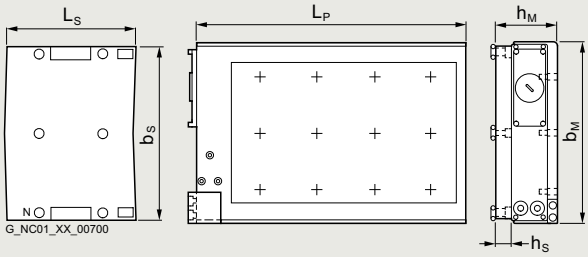

1FN3600 to 1FN3900 with precision cooling
Note: 4-row drilling pattern with 1FN3900 for fixing the primary section

Primary section	Dimensions in mm (inches)					Secondary section	Dimensions in mm (inches)				
	Without precision cooling		With precision cooling		Primary section length		Without cover and without precision cooling		With cover and with precision cooling		Secondary section length
Type	b_M	h_M	b_M	h_M	L_P	Type	b_S	h_S	b_M	h_M	L_S
SIMOTICS L-1FN3 linear motors, version for continuous load – water cooling											
1FN3050-1N	67 (2.64)	59.4 (2.34)	76 (2.99)	74.3 (2.93)	162 (6.38)	1FN3050-4SA00-0AA0	58 (2.28)	11.8 (0.46)	75 (2.95)	14.8 (0.58)	120 (4.72)
1FN3050-2N					267 (10.51)						
1FN3100-1N	96 (3.78)	59.4 (2.34)	105 (4.13)	74.3 (2.93)	162 (6.38)	1FN3100-4SA00-0AA0	88 (3.46)	11.8 (0.46)	105 (4.13)	14.8 (0.58)	120 (4.72)
1FN3100-2N					267 (10.51)						
1FN3100-3N					372 (14.65)						
1FN3100-4N					477 (18.78)						
1FN3150-1N	126 (4.96)	61.4 (2.42)	135 (5.31)	76.3 (3.00)	162 (6.38)	1FN3150-4SA00-0AA0	118 (4.65)	13.8 (0.54)	135 (5.31)	16.8 (0.66)	120 (4.72)
1FN3150-2N					267 (10.51)						
1FN3150-3N					372 (14.65)						
1FN3150-4N					477 (18.78)						
1FN3300-1N	141 (5.55)	78 (3.07)	150 (5.91)	92.9 (3.66)	238 (9.37)	1FN3300-4SA00-0AA0	134 (5.28)	16.5 (0.65)	151 (5.94)	19.5 (0.77)	184 (7.24)
1FN3300-2N					399 (15.71)						
1FN3300-3N					560 (22.05)	1FN3300-4SA12-0AA0					276 (10.89)
1FN3300-4N					721 (28.39)						
1FN3450-1N	188 (7.40)	80 (3.15)	197 (7.76)	94.9 (3.74)	238 (9.37)	1FN3450-4SA00-0AA0	180 (7.09)	18.5 (0.73)	197 (7.76)	21.5 (0.85)	184 (7.24)
1FN3450-2N					399 (15.71)						
1FN3450-3N					560 (22.05)	1FN3450-4SA12-0AA0					276 (10.89)
1FN3450-4N					721 (28.39)						
1FN3600-2N	248 (9.76)	78 (3.07)	257 (10.12)	99.9 (3.93)	399 (15.71)	1FN3600-4SA00-0AA0	240 (9.45)	16.5 (0.65)	247 (9.72)	26.5 (1.04)	184 (7.24)
1FN3600-3N					560 (22.05)						
1FN3600-4N					721 (28.39)						
1FN3900-2N	342 (13.46)	80 (3.15)	351 (13.82)	101.9 (4.01)	399 (15.71)	1FN3900-4SA00-0AA0	334 (13.15)	18.5 (0.73)	341 (13.43)	28.5 (1.12)	184 (7.24)
1FN3900-3N					560 (22.05)						
1FN3900-4N					721 (28.39)						

© Siemens 2024

Dimensional drawings

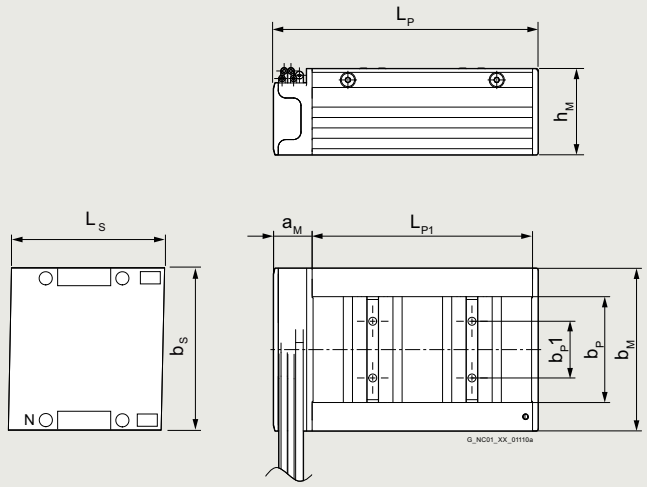

1FN3050 to 1FN3150 with natural cooling

h_S = height/thickness of the secondary section

Primary section	Dimensions in mm (inches)							Secondary section	Dimensions in mm (inches)		
							Primary section length				Secondary section length
Type	a_M	b_M	b_{P1}	b_P	h_M	L_{P1}	L_P	Type	b_S	h_S	L_S
SIMOTICS L-1FN3 linear motors, Standard version – natural cooling											
1FN3050-1K	20.4 (0.80)	58.0 (2.28)	20.0 (0.79)	28.0 (1.10)	45.7 (1.80)	116.6 (4.59)	140 (5.51)	1FN3050-4SA00-0AA0	58 (2.28)	11.8 (0.46)	120 (4.72)
1FN3100-1K	20.4 (0.80)	86.0 (3.39)	30.0 (1.18)	56.0 (2.20)	45.7 (1.80)	116.6 (4.59)	140 (5.51)	1FN3100-4SA00-0AA0	88 (3.46)	11.8 (0.46)	120 (4.72)
1FN3150-1K	20.4 (0.80)	115.5 (4.55)	45.0 (1.77)	85.5 (3.37)	45.7 (1.80)	116.6 (4.59)	140 (5.51)	1FN3150-4SA00-0AA0	118 (4.65)	13.8 (0.54)	120 (4.72)

© Siemens 2024

Dimensional drawings

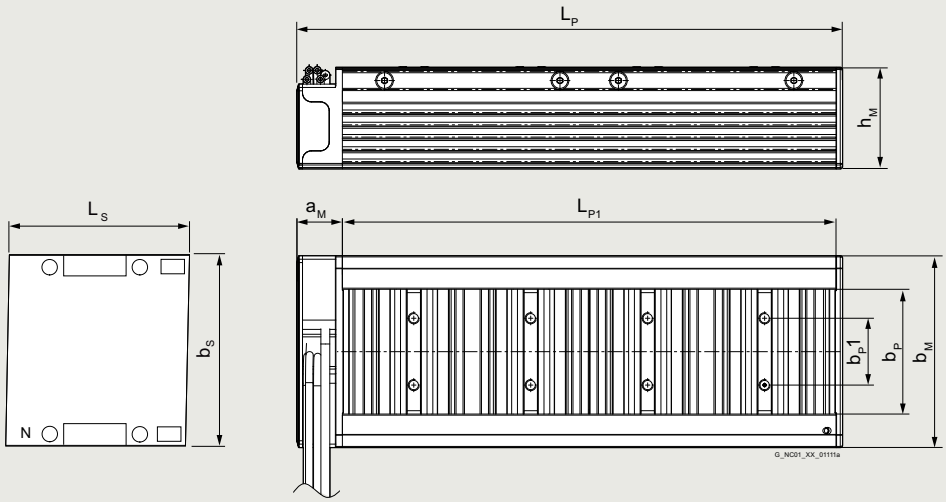

1FN3050 to 1FN3150 with natural cooling

h_S = height/thickness of the secondary section

Primary section	Dimensions in mm (inches)							Secondary section	Dimensions in mm (inches)		
							Primary section length				Secondary section length
Type	a_M	b_M	b_{P1}	b_P	h_M	LP1	L_P	Type	b_S	h_S	L_S
SIMOTICS L-1FN3 linear motors, Standard version – natural cooling											
1FN3050-2K	20.4 (0.80)	58.0 (2.28)	20.0 (0.79)	28.0 (1.10)	45.7 (1.80)	221.6 (8.72)	245 (9.65)	1FN3050-4SA00-0AA0	58 (2.28)	11.8 (0.46)	120 (4.72)
1FN3100-2K	20.4 (0.80)	86.0 (3.39)	30.0 (1.18)	56.0 (2.20)	45.7 (1.80)	221.6 (8.72)	245 (9.65)	1FN3100-4SA00-0AA0	88 (3.46)	11.8 (0.46)	120 (4.72)
1FN3150-2K	20.4 (0.80)	115.5 (4.55)	45.0 (1.77)	85.5 (3.37)	45.7 (1.80)	221.6 (8.72)	245 (9.65)	1FN3150-4SA00-0AA0	118 (4.65)	13.8 (0.54)	120 (4.72)

© Siemens 2024

Dimensional drawings

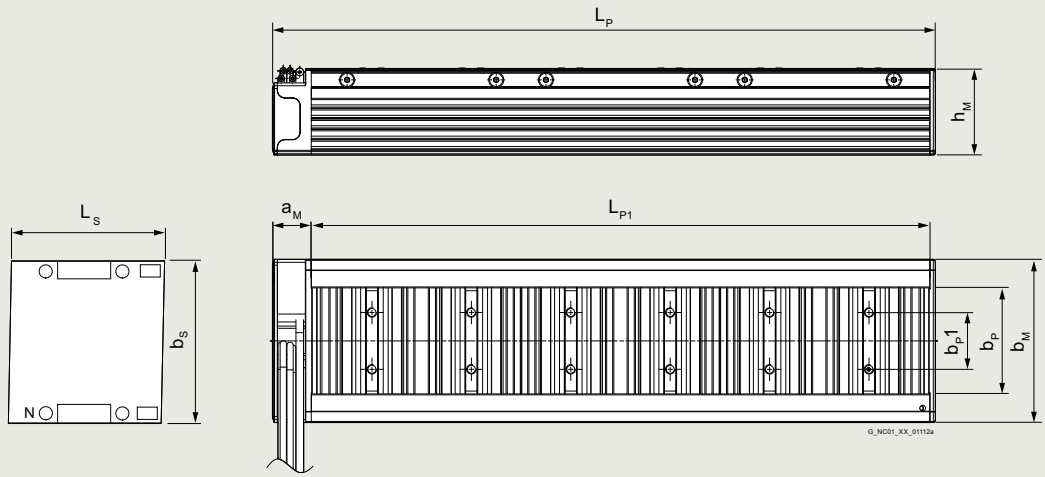

1FN3100 to 1FN3150 with natural cooling

h_S = height/thickness of the secondary section

Primary section	Dimensions in mm (inches)							Secondary section	Dimensions in mm (inches)		
							Primary section length				Secondary section length
Type	a_M	b_M	b_{P1}	b_P	h_M	LP1	L_P	Type	b_S	h_S	L_S
SIMOTICS L-1FN3 linear motors, Standard version – natural cooling											
1FN3100-3K	20.4 (0.80)	86.0 (3.39)	30.0 (1.18)	56.0 (2.20)	45.7 (1.80)	326.6 (12.86)	350 (13.78)	1FN3100-4SA00-0AA0	58 (2.28)	11.8 (0.46)	120 (4.72)
1FN3150-3K	20.4 (0.80)	115.0 (4.53)	45.0 (1.77)	85.5 (3.37)	45.7 (1.80)	326.6 (12.86)	350 (13.78)	1FN3150-4SA00-0AA0	88 (3.46)	13.8 (0.54)	120 (4.72)

© Siemens 2024

Notes

© Siemens 2024

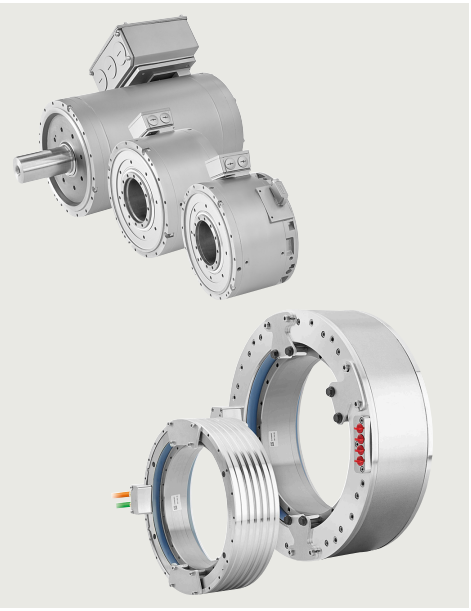

8.4/2	**SIMOTICS T-1FW6 built-in torque motors for SINAMICS S120**
8.4/6	Internal rotor, Standard – natural cooling
8.4/8	Internal rotor, Standard – water cooling
8.4/19	Accessories
8.4/20	Internal rotor, High Speed – water cooling
8.4/23	Accessories
8.4/24	External rotor, Standard – water cooling
8.4/28	**SIMOTICS T-1FW3 complete torque motors for SINAMICS S120**
8.4/30	Water cooling
8.4/40	Article No. supplements for shaft version
8.4/40	- Hollow shaft
8.4/41	- Plug-on shaft
8.4/42	- Solid shaft
8.4/43	Options
8.4/44	Accessories
8.4/45	**Dimensional drawings**
8.4/45	SIMOTICS T-1FW6 built-in torque motors with internal rotor
8.4/50	SIMOTICS T-1FW6 built-in torque motors with external rotor
8.4/51	SIMOTICS T-1FW3 complete torque motors

In addition, the Siemens Product Configurator can be used on the internet at the following address:
www.siemens.com/spc
See under:
Motors →
Motion Control →
SIMOTICS T torque motors

© Siemens 2024

SIMOTICS T-1FW6 built-in torque motors with internal rotor

Overview

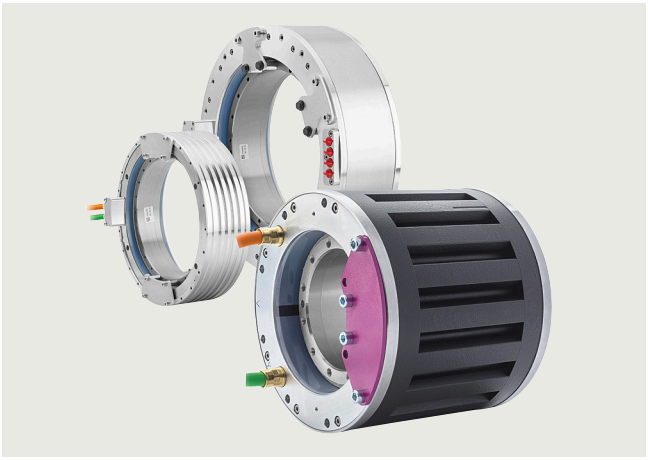

SIMOTICS T-1FW6 built-in torque motors with jacket cooling (center), naturally cooled (right), and with integrated cooling (left)

SIMOTICS T-1FW6 built-in torque motors are liquid-cooled or naturally cooled multi-pole permanent-magnet three-phase synchronous motors with a hollow shaft. The motors are supplied as built-in components. An additional bearing and a rotary encoder are required for a complete drive unit.

Each frame size is available in different axis lengths. For installation in the machine, stators and rotors are equipped with flanges with centering surfaces and threaded holes.

Benefits

- No elasticity in the drive train
- High degree of availability, as there are no gearbox components that are subject to wear in the drive train
- High torque, compact design, and low construction volume
- Low moment of inertia
- Directly flanged to the machine

Additionally for SIMOTICS T-1FW6 High Speed:

- Higher speeds while maintaining the main dimensions

Configuration

You can find the Configuration Manual for SIMOTICS T-1FW6 for SINAMICS S120 at:

https://support.industry.siemens.com/cs/ww/en/ps/13375/man

More information

Some motor types can be express delivered as replacement motors in the event of plant outages and offer the advantage of a quicker spare parts supply.

Siemens provides comprehensive support when selecting the optimum motor solution.
Any questions relating to SIMOTICS T-1FW6 torque motors can be emailed to:

motor.support.motioncontrol@siemens.com

Application

In conjunction with the SINAMICS S120 drive system, SIMOTICS T-1FW6 built-in torque motors can be used for the following machine applications:

- Rotary indexing tables and subunits
- Rotary indexing machines
- Swivel axes
- Tool turrets
- Tool spindles
- Roller and cylinder drives
- Infeed and handling axes
- Tablet presses
- Medical systems
- Measuring machines

Additional applications for SIMOTICS T-1FW6 High Speed:

- Rotary tables for milling/turning applications
- Gear cutting machines
- Turning spindles

Design

SIMOTICS T-1FW6 built-in torque motors comprise the following components:

Stator

Version with 3-phase winding. The stator is generally designed for operation with liquid cooling.

Rotor

Cylindrical hollow shaft equipped with permanent magnets.

If the main cooler and precision cooler are connected in parallel to a cooling unit for motors with integrated dual-circuit cooling, a cooling connection adapter (accessories) can be ordered to simplify the connection.

Cooling variants

The design of the cooling system is dependent on the size (outer diameter) of the motor.

SIMOTICS T-1FW6 built-in torque motor Type	**Cooling method**
1FW6050 and 1FW6060	Integrated water cooling with one cooling circuit
1FW6053 and 1FW6063	Natural cooling
1FW6090 ... 1FW6150 1FW6092 ... 1FW6152	Jacket water cooling
1FW6160 ... 1FW6290 1FW6192 and 1FW6232	Integrated dual circuit water cooling

© Siemens 2024

Design

Motors with natural cooling

The naturally cooled motors have the same dimensions as water-cooled motors in frame sizes 1FW6050 and 1FW6060, but have a lower continuous torque capability as a result of the cooling method. They can be used for any application for which liquid cooling is considered undesirable or unnecessary. As the mechanical interfaces are also compatible in addition to the dimensions, the cooling method can be simply changed.

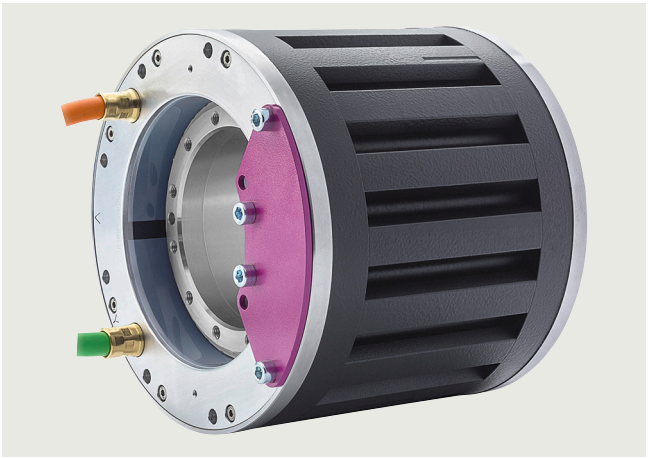

Motor components, frame sizes 1FW6053 and 1FW6063 with natural cooling (rotor and stator)

Motors with integrated single-circuit water cooling

These motors have a ready-to-connect, integrated single-circuit cooling system; they are compact, and can therefore be simply integrated into machines.

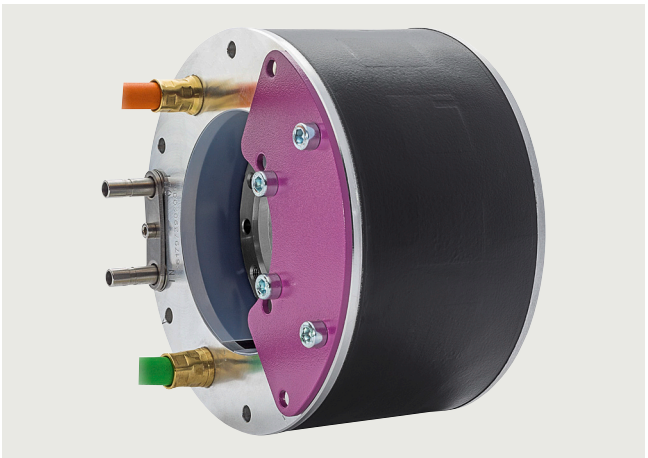

Motor components, frame sizes 1FW6050 and 1FW6060 with integrated single-circuit cooling (rotor, stator)

Motors with jacket water cooling

The coolant inlet/return circuit must be provided by the machine manufacturer in the machine itself.

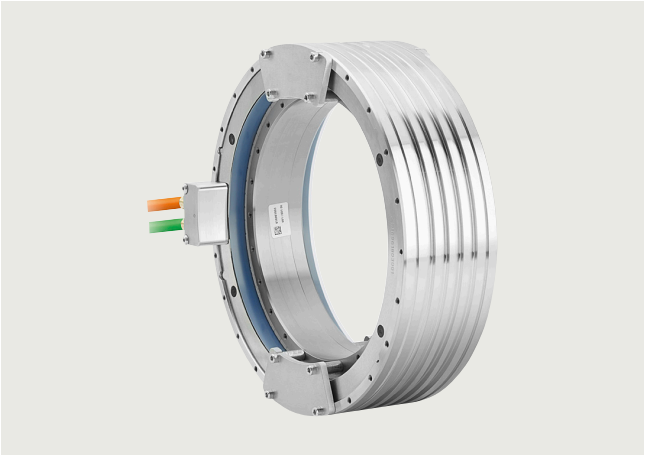

Motor components, frame sizes 1FW6090 to 1FW6150 with jacket water cooling (rotor and stator)

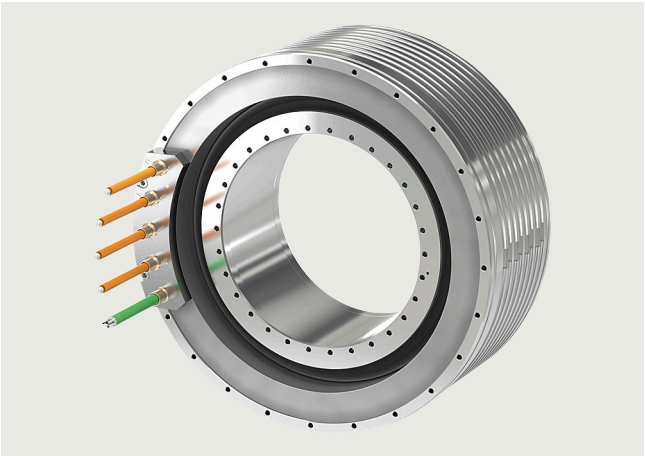

Motor components, frame sizes 1FW6092 to 1FW6152 in the High Speed version with jacket water cooling (rotor and stator)

© Siemens 2024

SIMOTICS T-1FW6 built-in torque motors with internal rotor

Design

Motors with integrated dual-circuit water cooling

These motors feature a ready-to-connect, integrated dual-circuit water cooling system and are therefore thermally insulated against the mechanical axis construction to a considerable extent.

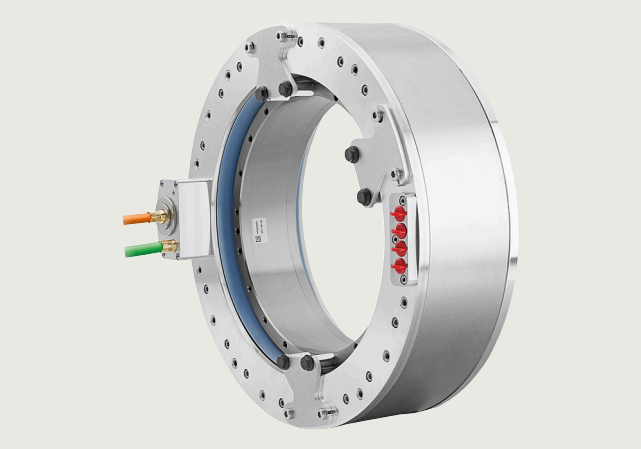

Motor components, frame sizes 1FW6160 to 1FW6290 with integrated dual-circuit water cooling (rotor and stator)

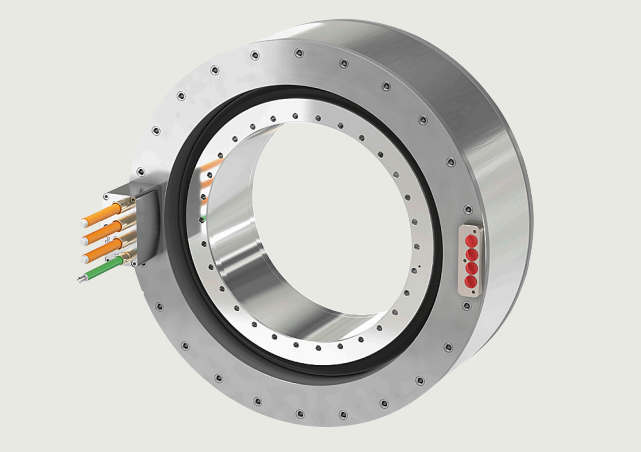

Motor components, frame sizes 1FW6192 and 1FW6232 in the High Speed version with integrated dual circuit water cooling (rotor and stator)

Integration

SIMOTICS T-1FW6 built-in torque motors controlled by a SINAMICS S120 drive system are designed for operation at a 600 V DC link voltage level.

The cable connection is brought out at the front face of the stator. The cable end either has a connector or bare wire ends depending on the motor design. The length of the power and signal cables from the motor to the drive system must not exceed 50 m.

Absolute measuring systems with DRIVE-CLiQ

Measuring systems with integrated DRIVE-CLiQ interface are available from various manufacturers. The encoders can be used as motor feedback system.

A current overview of the various manufacturers and available measuring systems is available on the internet at:

https://support.automation.siemens.com/WW/view/en/65402168

It is also possible to use absolute measuring systems with EnDat 2.1 or incremental systems with 1 V_{PP}.

Technical specifications

Product name	SIMOTICS T-1FW6 built-in torque motor
Motor type	Synchronous motor with permanent-magnet rotor
Torque ripple	≤ 1.5 % M_0
Coolant inlet temperature, maximum	35 °C (95 °F) for 1FW6 Standard 20 °C (68 °F) for 1FW6 High Speed
Pressure in cooling circuit, maximum	10 bar (static)
Thermal motor protection according to DIN 44081/DIN 44082 [1]	1 × PTC thermistor with response threshold +130 °C (266 °F)
Temperature monitoring according to DIN EN 60034-11) [1]	1 × Pt1000 temperature sensor
Stator winding insulation according to DIN EN 60034-1	Temperature class 155 (F)
Type of construction	Individual components: Stator, rotor
Degree of protection according to DIN EN 60034-5	IP23 The final degree of protection (minimum degree of protection is IP54) for the installed motor is determined by the machine manufacturer. Protection against touch, foreign bodies, and water for electrical equipment is specified in accordance with IEC 60034-5.
Measuring system (Not included in scope of supply)	Select based on application and drive-specific constraints.
Connection, electrical	Permanently connected power and signal cables
Paint finish	Without paint finish
Rating plate	2 units, inc. 1 unit enclosed separately
Certificate of suitability	cURus

[1] Evaluation via SME120/SME125 Sensor Module or TM120 Terminal Module (see SINAMICS S120 drive system).

© Siemens 2024

Characteristic curves

Characteristics for the SIMOTICS motors are available via selectors through to the exact article number with the Siemens Product Configurator.

Access to the Siemens Product Configurator

The Siemens Product Configurator can be accessed without having to register or log in:

www.siemens.com/spc

→ SIMOTICS T-1FW6 in the SPC

Dimensional drawings

Dimensional drawings for the SIMOTICS motors are available via selectors through to the exact article number with the Siemens Product Configurator.

Access to the Siemens Product Configurator

The Siemens Product Configurator can be accessed without having to register or log in:

www.siemens.com/spc

→ SIMOTICS T-1FW6 in the SPC

© Siemens 2024

SIMOTICS T-1FW6 built-in torque motors with internal rotor, Standard – natural cooling

Selection and ordering data

Maximum torque	Static torque [1]	Rated torque [2]	Speed at maximum torque, max. [2]	Rated speed [2]	**SIMOTICS T-1FW6 built-in torque motors Standard**	Moment of inertia rotor	Weight, approx. stator + rotor
M_{max}	M_0	M_N	n_{max} at M_{max}	n_N		J	m
Nm (lb$_f$-ft)	Nm (lb$_f$-ft)	Nm (lb$_f$-ft)	r/min	r/min	Article No.	10^{-2}kgm^2 (lb$_f$-in-s^2)	kg (lb)
Natural cooling							
34.4 (25.4)	11.3 (8.3)	9.91 (7.31)	695	600	**1FW6053-0■B03-0F■3**	0.139 (0.012)	3.7 (8.2)
57.5 (42.4)	16.6 (12.2)	13.8 (10.2)	374	600	**1FW6053-0■B05-0F■3**	0.267 (0.024)	6.5 (14.3)
81.2 (59.9)	19.2 (14.2)	15.2 (11.2)	677	600	**1FW6053-0■B07-0K■3**	0.39 (0.03)	8.5 (18.7)
116 (85.6)	24.6 (18.1)	18.6 (13.7)	428	600	**1FW6053-0■B10-0K■3**	0.488 (0.043)	12 (26.5)
174 (128)	32.5 (24.0)	22.9 (16.9)	653	600	**1FW6053-0■B15-1J■3**	0.691 (0.061)	19.8 (43.7)
64.5 (47.6)	15.5 (11.4)	14 (10.3)	325	400	**1FW6063-0■B03-0F■3**	0.347 (0.031)	7.7 (17.0)
123 (90.7)	25.7 (19.0)	22.2 (16.4)	396	400	**1FW6063-0■B05-0K■3**	0.665 (0.059)	10.5 (23.2)
166 (122)	31.5 (23.2)	25.9 (19.1)	250	400	**1FW6063-0■B07-0K■3**	0.904 (0.080)	13.1 (28.9)
226 (167)	38.1 (28.1)	28.5 (21.0)	470	400	**1FW6063-0■B10-1J■3**	1.21 (0.11)	16.8 (37.0)
332 (245)	49 (36.1)	38.9 (28.7)	257	400	**1FW6063-0■B15-1J■3**	1.72 (0.15)	23 (50.7)

Cable outlet only for 1FW6053 and 1FW6063:	
Axial	**K**
Tangential	**L**
Type of connection:	
Permanently connected power and signal cables with bare wire ends [4]	**C**
Length: 2 m (6.56 ft)	
Permanently connected power and signal cables pre-assembled with connectors	**D**
Length: 0.5 m (1.64 ft)	

8
4

For footnotes, see next page.

© Siemens 2024

SIMOTICS T-1FW6 built-in torque motors with internal rotor, Standard – natural cooling

Motor type (repeated)	Stall current [1]	Rated current [2]	Maximum current [2]	Calculated power	SINAMICS S120 Motor Module [3]		Power cable with complete shield Motor connection via power connector [4]		
					Required rated current	Booksize format Internal air cooling For further components, see SINAMICS S120 drive system	Power connector	Cable cross-section [5]	Pre-assembled basic cable to the drive system
	I_0	I_N	I_{max}	$P_{el, max}$	I_N / I_{max}				
	A	A	A	kW (hp)	A	Article No.	Size	mm^2	Article No.
Natural cooling									
1FW6053-0.B03-0F..	2.3	2.04	7.61	4.2 (5.6)	3/9	**6SL3120-■TE13-0AD0**	1	4 × 2.5	**6FX8002-5CS16-....**
1FW6053-0.B05-0F..	2	1.7	7.64	4.6 (6.2)	3/9	**6SL3120-■TE13-0AD0**	1	4 × 2.5	**6FX8002-5CS16-....**
1FW6053-0.B07-0K..	3.4	2.68	14.6	8.8 (11.8)	5/15	**6SL3120-■TE15-0AD0**	1	4 × 2.5	**6FX8002-5CS16-....**
1FW6053-0.B10-0K..	3.1	2.31	14.6	9.2 (12.3)	5/15	**6SL3120-■TE15-0AD0**	1	4 × 2.5	**6FX8002-5CS16-....**
1FW6053-0.B15-1J..	5.4	3.78	29.1	17.5 (23.5)	18/36	**6SL3120-■TE21-8AC0**	1	4 × 2.5	**6FX8002-5CS16-....**
1FW6063-0.B03-0F..	2.1	1.86	9.81	6 (8.05)	3/9	**6SL3120-■TE13-0AD0**	1	4 × 2.5	**6FX8002-5CS16-....**
1FW6063-0.B05-0K..	3.3	2.8	17.7	10.3 (13.8)	9/27	**6SL3120-■TE21-0AD0**	1	4 × 2.5	**6FX8002-5CS16-....**
1FW6063-0.B07-0K..	3	2.42	17.8	10.9 (14.6)	9/27	**6SL3120-■TE21-0AD0**	1	4 × 2.5	**6FX8002-5CS16-....**
1FW6063-0.B10-1J..	5	3.71	31.5	19.1 (25.6)	18/36	**6SL3120-■TE21-8AC0**	1	4 × 2.5	**6FX8002-5CS16-....**
1FW6063-0.B15-1J..	4.3	3.45	31.5	20.4 (27.4)	18/36	**6SL3120-■TE21-8AC0**	1	4 × 2.5	**6FX8002-5CS16-....**

Motor Module:	
Single Motor Module	**1**
Double Motor Module	**2**

Length code	**....**

For more information about cables, see MOTION-CONNECT connection systems

[1] Torque and current at low speeds.

[2] The values refer to a supply voltage of 400 V 3 AC ±10 % (drive system DC link voltage 600 V DC).

[3] Optimized selection for full performance of torque motors.

[4] For type of connection with bare wire ends, power and signal connectors are not included in the scope of supply of the motor and must be ordered separately.

[5] The current-carrying capacity of the power cables complies with EN 60204-1 for installation type C, under continuous operating conditions at an ambient air temperature of 40 °C (104 °F).

© Siemens 2024

SIMOTICS T-1FW6 built-in torque motors with internal rotor, Standard – water cooling

Selection and ordering data

Maximum torque	Static torque [1) 3)]	Rated torque [2) 3)]	Speed at maximum torque, max. [2)]	Rated speed [2)]	**SIMOTICS T-1FW6 built-in torque motors Standard**	Moment of inertia rotor	Weight, approx. stator + rotor
M_{max}	M_0	M_N	n_{max} at M_{max}	n_N		J	m
Nm (lb$_f$-ft)	Nm (lb$_f$-ft)	Nm (lb$_f$-ft)	r/min	r/min	Article No.	10^{-2}kgm^2 (lb$_f$-in-s^2)	kg (lb)
Water cooling							
34.4 (25.4)	24.2 (17.8)	23.2 (17.1)	697	940	**1FW6050-0■B03-0F■3**	0.139 (0.012)	3.1 (6.8)
57.5 (42.4)	40.4 (29.8)	39.5 (29.1)	376	525	**1FW6050-0■B05-0F■3**	0.267 (0.024)	5.9 (13.0)
80.6 (59.5)	56.6 (41.7)	55.7 (41.1)	236	349	**1FW6050-0■B07-0F■3**	0.39 (0.03)	7.9 (17.4)
81.2 (59.9)	53 (39.1)	50.9 (37.5)	685	895	**1FW6050-0■B07-0K■3**		
116 (85.6)	75.8 (55.9)	73.7 (54.4)	437	589	**1FW6050-0■B10-0K■3**	0.488 (0.043)	11.4 (25.1)
174 (128)	114 (84.1)	112 (82.6)	234	348	**1FW6050-0■B15-0K■3**	0.691 (0.061)	19.2 (42.3)
		109 (80.4)	658	850	**1FW6050-0■B15-1J■3**		
64.5 (47.6)	33.3 (24.6)	32 (23.6)	330	633	**1FW6060-0■B03-0F■3**	0.347 (0.031)	7.1 (15.7)
123 (90.7)	63.1 (46.5)	62 (45.7)	126	309	**1FW6060-0■B05-0F■3**	0.665 (0.059)	9.9 (21.8)
		60.6 (44.7)	399	663	**1FW6060-0■B05-0K■3**		
166 (122)	85.4 (63.0)	84.3 (62.2)	43.3	203	**1FW6060-0■B07-0F■3**	0.904 (0.080)	12.5 (27.6)
163 (120)	83.7 (61.7)	78.4 (57.8)	730	1040	**1FW6060-0■B07-1J■3**		
166 (122)	85.4 (63.0)	83 (61.2)	256	464	**1FW6060-0■B07-0K■3**		
231 (170)	119 (87.8)	117 (86.3)	133	302	**1FW6060-0■B10-0K■3**	1.21 (0.11)	16.2 (35.7)
226 (167)	116 (85.6)	111 (81.9)	471	708	**1FW6060-0■B10-1J■3**		
339 (250)	174 (128)	172 (127)	27.6	174	**1FW6060-0■B15-0K■3**	1.72 (0.15)	22.4 (49.4)
332 (245)	171 (126)	166 (122)	260	442	**1FW6060-0■B15-1J■3**		

Cable outlet only for 1FW6050 and 1FW6060:	
Axial	**W**
Tangential	**T**
Type of connection:	
Permanently connected power and signal cables with bare wire ends [4)]	**C**
Length: 2 m (6.56 ft)	
Permanently connected power and signal cables pre-assembled with connectors	**D**
Length: 0.5 m (1.64 ft)	

For footnotes, see next page.

© Siemens 2024

SIMOTICS T-1FW6 built-in torque motors with internal rotor, Standard – water cooling

Motor type (repeated)	Stall current [1) 3)]	Rated current [2) 3)]	Maximum current [2)]	Calculated power	SINAMICS S120 Motor Module [5)]		Power cable with complete shield Motor connection via power connector [4)]		
					Required rated current	Booksize format Internal air cooling For further components, see SINAMICS S120 drive system	Power connector	Cable cross-section [6)]	Pre-assembled basic cable to the drive system
	I_0	I_N	I_{max}	$P_{el, max}$	I_N / I_{max}				
	A	A	A	kW (hp)	A	Article No.	Size	mm^2	Article No.
Water cooling									
1FW6050-0.B03-0F..	5	4.8	7.6	4.23 (5.67)	5/15	**6SL3120-■TE15-0AD0**	1	4 × 2.5	**6FX8002-5CS16-....**
1FW6050-0.B05-0F..	5.1	4.9	7.6	4.59 (6.16)	5/15	**6SL3120-■TE15-0AD0**	1	4 × 2.5	**6FX8002-5CS16-....**
1FW6050-0.B07-0F..	5.1	5.2	7.6	4.85 (6.50)	5/15	**6SL3120-■TE15-0AD0**	1	4 × 2.5	**6FX8002-5CS16-....**
1FW6050-0.B07-0K..	9.3	9	14	8.79 (11.79)	9/27	**6SL3120-■TE21-0AD0**	1	4 × 2.5	**6FX8002-5CS16-....**
1FW6050-0.B10-0K..	9.3	9.1	14	9.16 (12.28)	9/27	**6SL3120-■TE21-0AD0**	1	4 × 2.5	**6FX8002-5CS16-....**
1FW6050-0.B15-0K..	9.3	9.2	14	9.74 (13.06)	9/27	**6SL3120-■TE21-0AD0**	1	4 × 2.5	**6FX8002-5CS16-....**
1FW6050-0.B15-1J..	18	18	29	17.5 (23.5)	18/36	**6SL3120-■TE21-8AC0**	1	4 × 2.5	**6FX8002-5CS16-....**
1FW6060-0.B03-0F..	4.5	4.3	9.8	5.91 (7.93)	5/15	**6SL3120-■TE15-0AD0**	1	4 × 2.5	**6FX8002-5CS16-....**
1FW6060-0.B05-0F..	4.5	4.4	9.8	6.65 (8.92)	5/15	**6SL3120-■TE15-0AD0**	1	4 × 2.5	**6FX8002-5CS16-....**
1FW6060-0.B05-0K..	8.1	7.7	17	10.2 (13.7)	9/27	**6SL3120-■TE21-0AD0**	1	4 × 2.5	**6FX8002-5CS16-....**
1FW6060-0.B07-0F..	4.5	4.4	9.8	7.06 (9.47)	5/15	**6SL3120-■TE15-0AD0**	1	4 × 2.5	**6FX8002-5CS16-....**
1FW6060-0.B07-1J..	15.3	14.3	31.4	18.3 (24.5)	18/36	**6SL3120-■TE21-8AC0**	1	4 × 2.5	**6FX8002-5CS16-....**
1FW6060-0.B07-0K..	8.1	7.9	17	10.8 (14.5)	9/27	**6SL3120-■TE21-0AD0**	1	4 × 2.5	**6FX8002-5CS16-....**
1FW6060-0.B10-0K..	8.1	7.9	17	11.8 (15.8)	9/27	**6SL3120-■TE21-0AD0**	1	4 × 2.5	**6FX8002-5CS16-....**
1FW6060-0.B10-1J..	15	14	31	19.1 (25.6)	18/36	**6SL3120-■TE21-8AC0**	1	4 × 2.5	**6FX8002-5CS16-....**
1FW6060-0.B15-0K..	8.1	8	17	12.9 (17.3)	9/27	**6SL3120-■TE21-0AD0**	1	4 × 2.5	**6FX8002-5CS16-....**
1FW6060-0.B15-1J..	15	14	31	20.3 (27.2)	18/36	**6SL3120-■TE21-8AC0**	1	4 × 2.5	**6FX8002-5CS16-....**

Motor Module:	
Single Motor Module	**1**
Double Motor Module	**2**

Length code	....

For more information about cables, see MOTION-CONNECT connection systems

1) Torque and current at low speeds.

2) The values refer to a supply voltage of 400 V 3 AC ±10 % (drive system DC link voltage 600 V DC).

3) For water cooling with inlet temperature e of 35 °C (95 °F) and maximum rotor flange temperature of 60 °C (140 °F).

4) For type of connection with bare wire ends, power and signal connectors are not included in the scope of supply of the motor and must be ordered separately.

5) Optimized selection for full performance of torque motors.

6) The current-carrying capacity of the power cables complies with EN 60204-1 for installation type C, under continuous operating conditions at an ambient air temperature of 40 °C (104 °F).

© Siemens 2024

SIMOTICS T-1FW6 built-in torque motors with internal rotor, Standard – water cooling

Selection and ordering data

Maximum torque	Static torque [1) 3)]	Rated torque [2) 3)]	Speed at maximum torque, max. [2)]	Rated speed [2)]	**SIMOTICS T-1FW6 built-in torque motors Standard**	Moment of inertia rotor	Weight, approx. stator + rotor
M_{max}	M_0	M_N	n_{max} at M_{max}	n_N		J	m
Nm (lb$_f$-ft)	Nm (lb$_f$-ft)	Nm (lb$_f$-ft)	r/min	r/min	Article No.	10^{-2}kgm^2 (lb$_f$-in-s^2)	kg (lb)
Water cooling							
179 (132)	119 (87.8)	113 (83.3)	50.2	142	**1FW6090-0■B05-0F■3**	1.52 (0.13)	9.2 (20.3)
		109 (80.4)	142	250	**1FW6090-0■B05-0K■3**		
251 (185)	166 (122)	154 (114)	128	224	**1FW6090-0■B07-0K■3**	2.2 (0.2)	12.2 (26.9)
		142 (105)	278	428	**1FW6090-0■B07-1J■2**		
358 (264)	238 (176)	231 (170)	12.4	83.9	**1FW6090-0■B10-0K■3**	3.09 (0.27)	17.2 (37.9)
		216 (159)	170	272	**1FW6090-0■B10-1J■3**		
537 (396)	357 (263)	338 (249)	80.6	154	**1FW6090-0■B15-1J■3**	4.65 (0.41)	27.2 (60.0)
		319 (235)	202	312	**1FW6090-0■B15-2J■3**		
439 (324)	258 (190)	241 (178)	46.5	132	**1FW6130-0■B05-0K■3**	6.37 (0.56)	13.2 (29.1)
		217 (160)	181	308	**1FW6130-0■B05-1J■3**		
614 (453)	361 (266)	344 (254)	21.5	96.1	**1FW6130-0■B07-0K■3**	8.92 (0.79)	18.2 (40.1)
		324 (239)	109	201	**1FW6130-0■B07-1J■3**		
878 (648)	516 (381)	484 (357)	50.9	123	**1FW6130-0■B10-1J■3**	12.7 (1.1)	25.2 (55.6)
		449 (331)	148	249	**1FW6130-0■B10-2J■3**		
1320 (974)	775 (572)	743 (548)	16	78.4	**1FW6130-0■B15-1J■3**	19.1 (1.7)	38.2 (84.2)
		714 (527)	78.8	152	**1FW6130-0■B15-2J■3**		
710 (524)	360 (266)	338 (249)	108	234	**1FW6150-0■B05-1J■3**	10.1 (0.9)	21.7 (47.8)
		298 (220)	332	654	**1FW6150-0■B05-4F■3**		
994 (733)	504 (372)	483 (356)	64.2	157	**1FW6150-0■B07-1J■3**	14.2 (1.3)	33.52 (73.91)
1420 (1047)	720 (531)	701 (517)	28.5	100	**1FW6150-0■B10-1J■3**	20.9 (1.8)	47.5 (104.7)
994 (733)	504 (372)	470 (347)	126	259	**1FW6150-0■B07-2J■3**	14.2 (1.3)	33.5 (73.9)
		444 (327)	230	449	**1FW6150-0■B07-4F■3**		
1420 (1047)	720 (531)	688 (507)	75.9	171	**1FW6150-0■B10-2J■3**	20.9 (1.8)	47.5 (104.7)
		663 (489)	152	301	**1FW6150-0■B10-4F■3**		
2130 (1571)	1080 (797)	1050 (774)	33.1	103	**1FW6150-0■B15-2J■3**	31.3 (2.8)	70.8 (156.1)
		1030 (760)	89.1	188	**1FW6150-0■B15-4F■3**		

Cable outlet only for 1FW6090/1FW6130/1FW6150:	
Axial	**P**
Radially outwards	**Q**
Tangential	**N**
Type of connection:	
Permanently connected power and signal cables with bare wire ends [4)] Length: 2 m (6.56 ft)	**C**
Permanently connected power and signal cables pre-assembled with connectors Length: 0.5 m (1.64 ft)	**D**

For footnotes, see next page.

© Siemens 2024

SIMOTICS T-1FW6 built-in torque motors with internal rotor, Standard – water cooling

Motor type (repeated)	Stall current [1) 3)]	Rated current [2) 3)]	Maximum current [2)]	Calculated power	SINAMICS S120 Motor Module [5)]		Power cable with complete shield Motor connection via power connector [4)]		
					Required rated current	Booksize format Internal air cooling For further components, see SINAMICS S120 drive system	Power connector	Cable cross-section [6)]	Pre-assembled basic cable to the drive system
	I_0	I_N	I_{max}	$P_{el, max}$	I_N / I_{max}				
	A	A	A	kW (hp)	A	Article No.	Size	mm^2	Article No.
Water cooling									
1FW6090-0.B05-0F..	5.9	5.6	9.5	6.66 (8.93)	5/15	**6SL3120-■TE15-0AD0**	1	4 × 2.5	**6FX8002-5CS16-....**
1FW6090-0.B05-0K..	8.2	7.5	13	8.23 (11.04)	9/27	**6SL3120-■TE21-0AD0**	1	4 × 2.5	**6FX8002-5CS16-....**
1FW6090-0.B07-0K..	10	9.5	16	10.4 (13.9)	9/27	**6SL3120-■TE21-0AD0**	1	4 × 2.5	**6FX8002-5CS16-....**
1FW6090-0.B07-1J..	16	14	26	14.3 (19.2)	18/36	**6SL3120-■TE21-8AC0**	1	4 × 2.5	**6FX8002-5CS16-....**
1FW6090-0.B10-0K..	8.2	8.0	13	9.64 (12.93)	9/27	**6SL3120-■TE21-0AD0**	1	4 × 2.5	**6FX8002-5CS16-....**
1FW6090-0.B10-1J..	16	15	27	15.5 (20.8)	18/36	**6SL3120-■TE21-8AC0**	1	4 × 2.5	**6FX8002-5CS16-....**
1FW6090-0.B15-1J..	16	15	27	17.3 (23.2)	18/36	**6SL3120-■TE21-8AC0**	1	4 × 2.5	**6FX8002-5CS16-....**
1FW6090-0.B15-2J..	27	24	43	24.4 (32.7)	30/56	**6SL3120-1TE23-0AC0**	1.5	4 × 4	**6FX8002-5CS46-....**
1FW6130-0.B05-0K..	9.7	9.1	18	12.5 (16.8)	9/27	**6SL3120-■TE21-0AD0**	1	4 × 2.5	**6FX8002-5CS16-....**
1FW6130-0.B05-1J..	17	14	32	18.7 (25.1)	18/36	**6SL3120-■TE21-8AC0**	1	4 × 2.5	**6FX8002-5CS16-....**
1FW6130-0.B07-0K..	11	10	20	14.5 (19.4)	18/36	**6SL3120-■TE21-8AC0**	1	4 × 2.5	**6FX8002-5CS16-....**
1FW6130-0.B07-1J..	17	15	32	20.1 (27.0)	18/36	**6SL3120-■TE21-8AC0**	1	4 × 2.5	**6FX8002-5CS16-....**
1FW6130-0.B10-1J..	17	16	32	21.8 (29.2)	18/36	**6SL3120-■TE21-8AC0**	1	4 × 2.5	**6FX8002-5CS16-....**
1FW6130-0.B10-2J..	28	25	53	31.2 (41.8)	30/56	**6SL3120-1TE23-0AC0**	1.5	4 × 4	**6FX8002-5CS46-....**
1FW6130-0.B15-1J..	19	19	36	25.9 (34.7)	18/36	**6SL3120-■TE21-8AC0**	1	4 × 2.5	**6FX8002-5CS16-....**
1FW6130-0.B15-2J..	28	27	54	34.6 (46.4)	30/56	**6SL3120-1TE23-0AC0**	1.5	4 × 4	**6FX8002-5CS46-....**
1FW6150-0.B05-1J..	18	17	44	23.3 (31.2)	18/54	**6SL3120-■TE21-8AD0**	1	4 × 2.5	**6FX8002-5CS16-....**
1FW6150-0.B05-4F..	44	36	106	39.8 (53.4)	60/120	**6SL3120-1TE26-0AC0**	1.5	4 × 10	**6FX8002-5CS64-....**
1FW6150-0.B07-1J..	18.4	17.6	44.1	26.1 (35.0)	18/54	**6SL3120-1TE21-8AD0**	1	4 × 2.5	**6FX8002-5CS16-....**
1FW6150-0.B10-1J..	18.4	17.9	44.1	29.6 (39.7)	18/54	**6SL3120-1TE21-8AD0**	1	4 × 2.5	**6FX8002-5CS16-....**
1FW6150-0.B07-2J..	28	26	66	32.5 (43.6)	30/90	**6SL3120-■TE23-0AD0**	1.5	4 × 4	**6FX8002-5CS46-....**
1FW6150-0.B07-4F..	44	39	106	43.2 (57.9)	60/120	**6SL3120-1TE26-0AC0**	1.5	4 × 10	**6FX8002-5CS64-....**
1FW6150-0.B10-2J..	28	26	66	36.9 (49.5)	30/90	**6SL3120-■TE23-0AD0**	1.5	4 × 4	**6FX8002-5CS46-....**
1FW6150-0.B10-4F..	44	40	106	47.9 (64.2)	60/120	**6SL3120-1TE26-0AC0**	1.5	4 × 10	**6FX8002-5CS64-....**
1FW6150-0.B15-2J..	28	27	66	43.2 (57.9)	30/90	**6SL3120-■TE23-0AD0**	1.5	4 × 4	**6FX8002-5CS46-....**
1FW6150-0.B15-4F..	44	41	106	55.3 (74.2)	60/120	**6SL3120-1TE26-0AC0**	1.5	4 × 10	**6FX8002-5CS64-....**

Motor Module:	
Single Motor Module	**1**
Double Motor Module	**2**

Length code	....

For more information about cables, see MOTION-CONNECT connection systems

1) Torque and current at low speeds.

2) The values refer to a supply voltage of 400 V 3 AC ±10 % (drive system DC link voltage 600 V DC).

3) For water cooling with inlet temperature of 35 °C (95 °F) and maximum rotor flange temperature of 60 °C (140 °F).

4) For type of connection with bare wire ends, power and signal connectors are not included in the scope of supply of the motor and must be ordered separately.

5) Optimized selection for full performance of torque motors.

6) The current-carrying capacity of the power cables complies with EN 60204-1 for installation type C, under continuous operating conditions at an ambient air temperature of 40 °C (104 °F).

© Siemens 2024

SIMOTICS T-1FW6 built-in torque motors with internal rotor, Standard – water cooling

Selection and ordering data

Maximum torque	Static torque [1) 3)]	Rated torque [2) 3)]	Speed at maximum torque, max. [2)]	Rated speed [2)]	**SIMOTICS T-1FW6 built-in torque motors Standard**	Moment of inertia rotor	Weight, approx. stator + rotor
M_{max}	M_0	M_N	n_{max} at M_{max}	n_N		J	m
Nm (lb$_f$-ft)	Nm (lb$_f$-ft)	Nm (lb$_f$-ft)	r/min	r/min	Article No.	10^{-2}kgm^2 (lb$_f$-in-s^2)	kg (lb)
Water cooling							
716 (528)	467 (344)	432 (319)	80.6	140	**1FW6160-0■B05-1J■3**	19.0 (1.7)	36.3 (80.0)
		405 (299)	142	242	**1FW6160-0■B05-2J■3**		
		317 (234)	308	574	**1FW6160-0■B05-5G■3**		
		453 (334)	20.3	53.4	**1FW6160-0■B05-0K■3**		
1000 (738)	653 (482)	621 (458)	51.7	93.5	**1FW6160-0■B07-1J■3**	25.8 (2.3)	48.3 (106.5)
		596 (440)	97.2	164	**1FW6160-0■B07-2J■3**		
		517 (381)	218	379	**1FW6160-0■B07-5G■3**		
		436 (322)	320	594	**1FW6160-0■B07-8F■B3**		
1430 (1055)	933 (688)	904 (667)	28.5	59	**1FW6160-0■B10-1J■3**	36.0 (3.2)	66.3 (146.2)
		893 (659)	44.3	80.7	**1FW6160-0■B10-2E■3**		
		880 (649)	62.4	108	**1FW6160-0■B10-2J■3**		
		807 (595)	149	250	**1FW6160-0■B10-5G■3**		
		737 (544)	221	383	**1FW6160-0■B10-8F■B3**		
		629 (464)	317	584	**1FW6160-0■B10-2P■B3**		67.4 (148.6)
2150 (1586)	1400 (1033)	1350 (996)	33.8	64.6	**1FW6160-0■B15-2J■3**	53.1 (4.7)	95.3 (210.1)
		1280 (944)	93.8	156	**1FW6160-0■B15-5G■3**		
		1220 (900)	142	237	**1FW6160-0■B15-8F■B3**		
		1130 (833)	208	355	**1FW6160-0■B15-2P■B3**		96.4 (212.6)
		970 (715)	304	551	**1FW6160-0■B15-0W■B3**		
2860 (2110)	1870 (1379)	1760 (1298)	65.5	111	**1FW6160-0■B20-5G■3**	70.1 (6.2)	124.3 (274.1)
		1700 (1254)	103	170	**1FW6160-0■B20-8F■B3**		
		1610 (1188)	152	253	**1FW6160-0■B20-2P■B3**		125.4 (276.5)
		1470 (1084)	225	387	**1FW6160-0■B20-0W■B3**		

Cable outlet only for 1FW6160 to 1FW6290:	
Axial	**W**
Radially outwards	**V**
Tangential (only for type of connection C and D)	**T**
Type of connection:	
Permanently connected power and signal cables with bare wire ends [4)] Length: 2 m (6.56 ft)	**C**
Permanently connected power and signal cables pre-assembled with connectors Length: 0.5 m (1.64 ft)	**D**
Type of connection only for specific motors (not selectable)**:**	
Permanently connected power and signal cables with bare wire ends [4)] Length: 1 m (3.28 ft)	**B**

For footnotes, see next page.

© Siemens 2024

SIMOTICS T-1FW6 built-in torque motors with internal rotor, Standard – water cooling

Motor type (repeated)	Stall current [1) 3)]	Rated current [2) 3)]	Maximum current [2)]	Calculated power	SINAMICS S120 Motor Module [5)]		Power cable with complete shield Motor connection via power connector [4)]		
					Required rated current	Booksize format Internal air cooling For further components, see SINAMICS S120 drive system	Power connector	Cable cross-section [6)]	Pre-assembled basic cable to the drive system
	I_0	I_N	I_{max}	$P_{el, max}$	I_N / I_{max}				
	A	A	A	kW (hp)	A	Article No.	Size	mm^2	Article No.
Water cooling									
1FW6160-0.B05-1J..	18	16	32	15.2 (20.4)	18/36	**6SL3120-■TE21-8AC0**	1	4 × 2.5	**6FX8002-5CS16-....**
1FW6160-0.B05-2J..	28	24	49	19.8 (26.6)	30/56	**6SL3120-1TE23-0AC0**	1.5	4 × 4	**6FX8002-5CS46-....**
1FW6160-0.B05-5G..	56	37	99	32.4 (43.4)	60/120	**6SL3120-1TE26-0AC0**	1.5	4 × 16	**6FX8002-5CS24-....**
1FW6160-0.B05-0K..	9.0	8.7	15.8	10.5 (14.1)	9/27	**6SL3120-■TE21-0AD0**	1	4 × 2.5	**6FX8002-5CS16-....**
1FW6160-0.B07-1J..	18	17	32	16.9 (22.7)	18/36	**6SL3120-■TE21-8AC0**	1	4 × 2.5	**6FX8002-5CS16-....**
1FW6160-0.B07-2J..	28	25	49	21.7 (29.1)	30/56	**6SL3120-1TE23-0AC0**	1.5	4 × 4	**6FX8002-5CS46-....**
1FW6160-0.B07-5G..	56	44	99	34.5 (46.3)	60/120	**6SL3120-1TE26-0AC0**	1.5	4 × 16	**6FX8002-5CS24-....**
1FW6160-0.B07-8FB.	80	52	141	45.5 (61.0)	85/141	**6SL3120-1TE28-5AA3**	–	–	**–**
1FW6160-0.B10-1J..	18	17	32	19.2 (25.7)	18/36	**6SL3120-■TE21-8AC0**	1	4 × 2.5	**6FX8002-5CS16-....**
1FW6160-0.B10-2E..	22.5	21.4	39.5	21.5 (28.8)	30/56	**6SL3120-■TE23-8AC0**	1.5	4 × 4	**6FX8002-5CS46-....**
1FW6160-0.B10-2J..	28	26	49	24.4 (32.7)	30/56	**6SL3120-1TE23-0AC0**	1.5	4 × 4	**6FX8002-5CS46-....**
1FW6160-0.B10-5G..	56	48	99	37.5 (50.3)	60/120	**6SL3120-1TE26-0AC0**	1.5	4 × 16	**6FX8002-5CS24-....**
1FW6160-0.B10-8FB.	80	62	141	48.6 (65.2)	85/141	**6SL3120-1TE28-5AA3**	–	–	**–**
1FW6160-0.B10-2PB.	112	74	198	62.8 (84.2)	132/210	**6SL3120-1TE31-3AA3**	–	–	**–**
1FW6160-0.B15-2J..	28	27	49	28.4 (38.1)	30/56	**6SL3120-1TE23-0AC0**	1.5	4 × 4	**6FX8002-5CS46-....**
1FW6160-0.B15-5G..	56	51	99	42.1 (56.5)	60/120	**6SL3120-1TE26-0AC0**	1.5	4 × 16	**6FX8002-5CS24-....**
1FW6160-0.B15-8FB.	80	69	141	53.6 (71.9)	85/141	**6SL3120-1TE28-5AA3**	–	–	**–**
1FW6160-0.B15-2PB.	112	89	198	67.8 (90.9)	132/210	**6SL3120-1TE31-3AA3**	–	–	**–**
1FW6160-0.B15-0WB.	160	109	282	89.9 (120.6)	200/282	**6SL3120-1TE32-0AA4**	–	–	**–**
1FW6160-0.B20-5G..	56	52	99	46.6 (62.5)	60/120	**6SL3120-1TE26-0AC0**	1.5	4 × 16	**6FX8002-5CS24-....**
1FW6160-0.B20-8FB.	80	72	141	58.4 (78.3)	85/141	**6SL3120-1TE28-5AA3**	–	–	**–**
1FW6160-0.B20-2PB.	112	96	198	72.6 (97.4)	132/210	**6SL3120-1TE31-3AA3**	–	–	**–**
1FW6160-0.B20-0WB.	160	124	282	95 (127)	200/282	**6SL3120-1TE32-0AA4**	–	–	**–**

Motor Module:	
Single Motor Module	**1**
Double Motor Module	**2**

Length code	....

For more information about cables, see MOTION-CONNECT connection systems

8 4

1) Torque and current at low speeds.

2) The values refer to a supply voltage of 400 V 3 AC ±10 % (drive system DC link voltage 600 V DC).

3) For water cooling with inlet temperature of 35 °C (95 °F) and maximum rotor flange temperature of 60 °C (140 °F).

4) For type of connection with bare wire ends, power and signal connectors are not included in the scope of supply of the motor and must be ordered separately.

5) Optimized selection for full performance of torque motors.

6) The current-carrying capacity of the power cables complies with EN 60204-1 for installation type C, under continuous operating conditions at an ambient air temperature of 40 °C (104 °F).

© Siemens 2024

SIMOTICS T-1FW6 built-in torque motors with internal rotor, Standard – water cooling

Selection and ordering data

Maximum torque	Static torque [1) 3)]	Rated torque [2) 3)]	Speed at maximum torque, max. [2)]	Rated speed [2)]	**SIMOTICS T-1FW6 built-in torque motors Standard**	Moment of inertia rotor	Weight, approx. stator + rotor
M_{max}	M_0	M_N	n_{max} at M_{max}	n_N		J	m
Nm (lb$_f$-ft)	Nm (lb$_f$-ft)	Nm (lb$_f$-ft)	r/min	r/min	Article No.	10^{-2}kgm^2 (lb$_f$-in-s^2)	kg (lb)
Water cooling							
990 (730)	672 (496)	634 (468)	51.7	92.7	**1FW6190-0■B05-1J■3**	35.8 (3.2)	42.8 (94.4)
		608 (448)	91	155	**1FW6190-0■B05-2J■3**		
		516 (381)	204	364	**1FW6190-0■B05-5G■3**		
1390 (1025)	941 (694)	907 (669)	31.2	61	**1FW6190-0■B07-1J■3**	48.6 (4.3)	55.8 (123.0)
		881 (650)	60.8	105	**1FW6190-0■B07-2J■3**		
		798 (589)	143	244	**1FW6190-0■B07-5G■3**		
		714 (527)	212	377	**1FW6190-0■B07-8F B3**		
1980 (1460)	1340 (988)	1310 (966)	14.2	37.2	**1FW6190-0■B10-1J■3**	67.8 (6.0)	75.8 (167.1)
		1290 (952)	37.1	67.6	**1FW6190-0■B10-2J■3**		
		1210 (892)	96.6	161	**1FW6190-0■B10-5G■3**		
		1140 (841)	145	246	**1FW6190-0■B10-8F B3**		
		971 (716)	238	431	**1FW6190-0■B10-2P B3**		77.1 (170.0)
2970 (2191)	2020 (1490)	1970 (1453)	16.9	39	**1FW6190-0■B15-2J■3**	99.8 (8.8)	107.8 (237.7)
		1890 (1394)	59.4	99.8	**1FW6190-0■B15-5G■3**		
		1830 (1350)	92.3	153	**1FW6190-0■B15-8F B3**		
		1680 (1239)	155	263	**1FW6190-0■B15-2P B3**		109.1 (240.6)
		1560 (1151)	201	352	**1FW6190-0■B15-0WB3**		
3960 (2921)	2690 (1984)	2580 (1903)	40.1	70.1	**1FW6190-0■B20-5G■3**	132.0 (11.7)	136.2 (300.3)
		2610 (1925)	26.5	51.1	**1FW6190-0■B20-4F■3**		
		2510 (1851)	65.4	109	**1FW6190-0■B20-8F B3**		
		2380 (1755)	113	188	**1FW6190-0■B20-2P B3**		137.5 (303.2)
		2270 (1674)	148	249	**1FW6190-0■B20-0WB3**		

Cable outlet only for 1FW6160 to 1FW6290: Axial Radially outwards Tangential (only for type of connection C and D)	**W** **V** **T**
Type of connection: Permanently connected power and signal cables with bare wire ends [4)] Length: 2 m (6.56 ft) Permanently connected power and signal cables pre-assembled with connectors Length: 0.5 m (1.64 ft)	**C** **D**
Type of connection only for specific motors (not selectable)**:** Permanently connected power and signal cables with bare wire ends [4)] Length: 1 m (3.28 ft)	**B**

For footnotes, see next page.

© Siemens 2024

SIMOTICS T-1FW6 built-in torque motors with internal rotor, Standard – water cooling

Motor type (repeated)	Stall current [1) 3)]	Rated current [2) 3)]	Maximum current [2)]	Calculated power	SINAMICS S120 Motor Module [5)]		Power cable with complete shield Motor connection via power connector [4)]		
					Required rated current	Booksize format Internal air cooling For further components, see SINAMICS S120 drive system	Power connector	Cable cross-section [6)]	Pre-assembled basic cable to the drive system
	I_0	I_N	I_{max}	$P_{el, max}$	I_N / I_{max}				
	A	A	A	kW (hp)	A	Article No.	Size	mm^2	Article No.
Water cooling									
1FW6190-0.B05-1J..	18	17	32	16.4 (22.0)	18/36	**6SL3120 - ■TE21-8AC0**	1	4 × 2.5	**6FX8002-5CS16-....**
1FW6190-0.B05-2J..	27	24	48	20.5 (27.5)	30/56	**6SL3120 - 1 TE23-0AC0**	1.5	4 × 4	**6FX8002-5CS46-....**
1FW6190-0.B05-5G..	55	41	95	32.2 (43.2)	60/120	**6SL3120 - 1 TE26-0AC0**	1.5	4 × 16	**6FX8002-5CS24-....**
1FW6190-0.B07-1J..	18	17	32	18.4 (24.7)	18/36	**6SL3120 - ■TE21-8AC0**	1	4 × 2.5	**6FX8002-5CS16-....**
1FW6190-0.B07-2J..	27	25	48	22.7 (30.4)	30/56	**6SL3120 - 1 TE23-0AC0**	1.5	4 × 4	**6FX8002-5CS46-....**
1FW6190-0.B07-5G..	55	45	95	34.6 (46.4)	60/120	**6SL3120 - 1 TE26-0AC0**	1.5	4 × 16	**6FX8002-5CS24-....**
1FW6190-0.B07-8FB.	78	57	136	45 (60.3)	85/141	**6SL3120 - 1 TE28-5AA3**	–	–	**–**
1FW6190-0.B10-1J..	18	18	32	21 (28.2)	18/36	**6SL3120 - ■TE21-8AC0**	1	4 × 2.5	**6FX8002-5CS16-....**
1FW6190-0.B10-2J..	27	26	48	25.8 (34.6)	30/56	**6SL3120 - 1 TE23-0AC0**	1.5	4 × 4	**6FX8002-5CS46-....**
1FW6190-0.B10-5G..	55	48	95	38.1 (51.1)	60/120	**6SL3120 - 1 TE26-0AC0**	1.5	4 × 16	**6FX8002-5CS24-....**
1FW6190-0.B10-8FB.	78	65	136	48.7 (65.3)	85/141	**6SL3120 - 1 TE28-5AA3**	–	–	**–**
1FW6190-0.B10-2PB.	123	86	214	67.7 (90.8)	132/210	**6SL3120 - 1 TE31-3AA3**	–	–	**–**
1FW6190-0.B15-2J..	27	26	48	30.4 (40.8)	30/56	**6SL3120 - 1 TE23-0AC0**	1.5	4 × 4	**6FX8002-5CS46-....**
1FW6190-0.B15-5G..	55	51	95	43.6 (58.5)	60/120	**6SL3120 - 1 TE26-0AC0**	1.5	4 × 16	**6FX8002-5CS24-....**
1FW6190-0.B15-8FB.	78	70	136	54.6 (73.2)	85/141	**6SL3120 - 1 TE28-5AA3**	–	–	**–**
1FW6190-0.B15-2PB.	123	100	214	73.7 (98.8)	132/210	**6SL3120 - 1 TE31-3AA3**	–	–	**–**
1FW6190-0.B15-0WB.	156	118	272	88.5 (118.7)	200/282	**6SL3120 - 1 TE32-0AA4**	–	–	**–**
1FW6190-0.B20-5G..	55	52	95	48.8 (65.4)	60/120	**6SL3120 - 1 TE26-0AC0**	1.5	4 × 16	**6FX8002-5CS24-....**
1FW6190-0.B20-4F..	43.4	41.9	75.6	43.7 (58.6)	60/120	**6SL3120 - 1 TE26-0AC0**	1.5	4 × 10	**6FX8002-5CS64-....**
1FW6190-0.B20-8FB.	78	72	136	60.3 (80.9)	85/141	**6SL3120 - 1 TE28-5AA3**	–	–	**–**
1FW6190-0.B20-2PB.	123	107	214	79.5 (106.6)	132/210	**6SL3120 - 1 TE31-3AA3**	–	–	**–**
1FW6190-0.B20-0WB.	156	129	272	94.6 (126.9)	200/282	**6SL3120 - 1 TE32-0AA4**	–	–	**–**

Motor Module:	
Single Motor Module	**1**
Double Motor Module	**2**

Length code	....

For more information about cables, see MOTION-CONNECT connection systems

1) Torque and current at low speeds.

2) The values refer to a supply voltage of 400 V 3 AC ±10 % (drive system DC link voltage 600 V DC).

3) For water cooling with inlet temperature of 35 °C (95 °F) and maximum rotor flange temperature of 60 °C (140 °F).

4) For type of connection with bare wire ends, power and signal connectors are not included in the scope of supply of the motor and must be ordered separately.

5) Optimized selection for full performance of torque motors.

6) The current-carrying capacity of the power cables complies with EN 60204-1 for installation type C, under continuous operating conditions at an ambient air temperature of 40 °C (104 °F).

© Siemens 2024

SIMOTICS T-1FW6 built-in torque motors with internal rotor, Standard – water cooling

Selection and ordering data

Maximum torque	Static torque [1) 3)]	Rated torque [2) 3)]	Speed at maximum torque, max. [2)]	Rated speed [2)]	**SIMOTICS T-1FW6 built-in torque motors Standard**	Moment of inertia rotor	Weight, approx. stator + rotor
M_{max}	M_0	M_N	n_{max} at M_{max}	n_N		J	m
Nm (lb$_f$-ft)	Nm (lb$_f$-ft)	Nm (lb$_f$-ft)	r/min	r/min	Article No.	10^{-2}kgm^2 (lb$_f$-in-s^2)	kg (lb)
Water cooling							
1320 (974)	841 (620)	801 (591)	32.6	66.1	**1FW6230-0■B05-1J■3**	62.2 (5.5)	44.8 (98.8)
		778 (574)	56	104	**1FW6230-0■B05-2J■3**		
		669 (493)	147	275	**1FW6230-0■B05-5G■3**		
1840 (1357)	1180 (870)	1140 (841)	18	43.2	**1FW6230-0■B07-1J■3**	84.3 (7.5)	58.8 (129.7)
		1120 (826)	35.9	69.8	**1FW6230-0■B07-2J■3**		
		1020 (752)	103	185	**1FW6230-0■B07-5G■3**		
		936 (690)	148	275	**1FW6230-0■B07-8FB3**		
2630 (1940)	1680 (1239)	1630 (1202)	19.8	44.4	**1FW6230-0■B10-2J■3**	118.0 (10.4)	81.8 (180.4)
		1530 (1129)	69.3	123	**1FW6230-0■B10-5G■3**		
		1460 (1077)	101	181	**1FW6230-0■B10-8FB3**		
		1330 (981)	150	278	**1FW6230-0■B10-2PB3**		
3950 (2914)	2520 (1859)	2450 (1807)	18.5	41.5	**1FW6230-0■B15-4C■3**	173.0 (15.3)	117.8 (259.7)
		2380 (1755)	41.8	76.2	**1FW6230-0■B15-5G■3**		
		2320 (1711)	64	113	**1FW6230-0■B15-8FB3**		
		2210 (1630)	97.1	172	**1FW6230-0■B15-2PB3**		
		2040 (1505)	141	258	**1FW6230-0■B15-0WB3**		119.4 (263.3)
5260 (3880)	3360 (2478)	3230 (2382)	27.5	53.4	**1FW6230-0■B20-5G■3**	228.0 (20.2)	153.8 (339.1)
		3170 (2338)	44.8	80.7	**1FW6230-0■B20-8FB3**		
		3060 (2257)	70	123	**1FW6230-0■B20-2PB3**		
		2910 (2146)	104	184	**1FW6230-0■B20-0WB3**		155.4 (342.7)

Cable outlet only for 1FW6160 to 1FW6290: Axial Radially outwards Tangential (only for type of connection C and D)	**W** **V** **T**
Type of connection: Permanently connected power and signal cables with bare wire ends [4)] Length: 2 m (6.56 ft) Permanently connected power and signal cables pre-assembled with connectors Length: 0.5 m (1.64 ft)	**C** **D**
Type of connection only for specific motors (not selectable)**:** Permanently connected power and signal cables with bare wire ends [4)] Length: 1 m (3.28 ft)	**B**

For footnotes, see next page.

© Siemens 2024

Motor type (repeated)	Stall current [1) 3)]	Rated current [2) 3)]	Maximum current [2)]	Calculated power	SINAMICS S120 Motor Module [5)]		Power cable with complete shield Motor connection via power connector [4)]		
					Required rated current	Booksize format Internal air cooling For further components, see SINAMICS S120 drive system	Power connector	Cable cross-section [6)]	Pre-assembled basic cable to the drive system
	I_0	I_N	I_{max}	$P_{el, max}$	I_N / I_{max}				
	A	A	A	kW (hp)	A	Article No.	Size	mm^2	Article No.
Water cooling									
1FW6230-0.B05-1J..	17	16	32	17.4 (23.3)	18/36	**6SL3120 - ■TE21-8AC0**	1	4 × 2.5	**6FX8002-5CS16-....**
1FW6230-0.B05-2J..	24	22	45	21.1 (28.3)	24/48	**6SL3120 - 1TE22-4AC0**	1.5	4 × 4	**6FX8002-5CS46-....**
1FW6230-0.B05-5G..	53	41	101	33.1 (44.4)	60/120	**6SL3120 - 1TE26-0AC0**	1.5	4 × 16	**6FX8002-5CS24-....**
1FW6230-0.B07-1J..	17	16	32	19.7 (26.4)	18/36	**6SL3120 - ■TE21-8AC0**	1	4 × 2.5	**6FX8002-5CS16-....**
1FW6230-0.B07-2J..	24	23	45	23.7 (31.8)	24/48	**6SL3120 - 1TE22-4AC0**	1.5	4 × 4	**6FX8002-5CS46-....**
1FW6230-0.B07-5G..	53	45	101	36.3 (48.7)	60/120	**6SL3120 - 1TE26-0AC0**	1.5	4 × 16	**6FX8002-5CS24-....**
1FW6230-0.B07-8FB.	74	57	139	45.1 (60.5)	85/141	**6SL3120 - 1TE28-5AA3**	–	–	**–**
1FW6230-0.B10-2J..	24	23	45	27.3 (36.6)	24/48	**6SL3120 - 1TE22-4AC0**	1.5	4 × 4	**6FX8002-5CS46-....**
1FW6230-0.B10-5G..	53	48	101	40.5 (54.3)	60/120	**6SL3120 - 1TE26-0AC0**	1.5	4 × 16	**6FX8002-5CS24-....**
1FW6230-0.B10-8FB.	74	63	139	49.5 (66.4)	85/141	**6SL3120 - 1TE28-5AA3**	–	–	**–**
1FW6230-0.B10-2PB.	106	81	199	63.5 (85.2)	132/210	**6SL3120 - 1TE31-3AA3**	–	–	**–**
1FW6230-0.B15-4C..	34	33	64	38.3 (51.4)	45/90	**6SL3120 - 1TE24-5AC0**	1.5	4 × 6	**6FX8002-5CS54-....**
1FW6230-0.B15-5G..	53	50	101	47.1 (63.2)	60/120	**6SL3120 - 1TE26-0AC0**	1.5	4 × 16	**6FX8002-5CS24-....**
1FW6230-0.B15-8FB.	74	67	139	56.4 (75.6)	85/141	**6SL3120 - 1TE28-5AA3**	–	–	**–**
1FW6230-0.B15-2PB.	106	91	199	70.8 (94.9)	132/210	**6SL3120 - 1TE31-3AA3**	–	–	**–**
1FW6230-0.B15-0WB.	148	117	279	88.3 (118.4)	200/282	**6SL3120 - 1TE32-0AA4**	–	–	**–**
1FW6230-0.B20-5G..	53	51	101	53.3 (71.5)	60/120	**6SL3120 - 1TE26-0AC0**	1.5	4 × 16	**6FX8002-5CS24-....**
1FW6230-0.B20-8FB.	74	69	139	63 (84.5)	85/141	**6SL3120 - 1TE28-5AA3**	–	–	**–**
1FW6230-0.B20-2PB.	106	95	199	77.9 (104.5)	132/210	**6SL3120 - 1TE31-3AA3**	–	–	**–**
1FW6230-0.B20-0WB.	148	126	279	95.5 (128.1)	200/282	**6SL3120 - 1TE32-0AA4**	–	–	**–**

Motor Module:	
Single Motor Module	**1**
Double Motor Module	**2**

Length code	....

For more information about cables, see MOTION-CONNECT connection systems

1) Torque and current at low speeds.

2) The values refer to a supply voltage of 400 V 3 AC ±10 % (drive system DC link voltage 600 V DC).

3) For water cooling with inlet temperature of 35 °C (95 °F) and maximum rotor flange temperature of 60 °C (140 °F).

4) For type of connection with bare wire ends, power and signal connectors are not included in the scope of supply of the motor and must be ordered separately.

5) Optimized selection for full performance of torque motors.

6) The current-carrying capacity of the power cables complies with EN 60204-1 for installation type C, under continuous operating conditions at an ambient air temperature of 40 °C (104 °F).

© Siemens 2024

SIMOTICS T-1FW6 built-in torque motors with internal rotor, Standard – water cooling

Selection and ordering data

Maximum torque	Static torque [1) 3)]	Rated torque [2) 3)]	Speed at maximum torque, max. [2)]	Rated speed [2)]	**SIMOTICS T-1FW6 built-in torque motors Standard**	Moment of inertia rotor	Weight, approx. stator + rotor
M_{max}	M_0	M_N	n_{max} at M_{max}	n_N		J	m
Nm (lb$_f$-ft)	Nm (lb$_f$-ft)	Nm (lb$_f$-ft)	r/min	r/min	Article No.	10^{-2}kgm^2 (lb$_f$-in-s^2)	kg (lb)
Water cooling							
4000 (2950)	2220 (1637)	2060 (1519)	57.5	106	**1FW6290-0■B07-5G■3**	228 (20.2)	103.6 (228.4)
		1920 (1416)	110	204	**1FW6290-0■B07-0L B3**		
		1810 (1335)	144	272	**1FW6290-0■B07-2P B3**		108.8 (239.9)
6280 (4632)	3490 (2574)	3320 (2449)	39.3	72.9	**1FW6290-0■B11-7A■3**	334 (29.6)	159 (351)
		3340 (2464)	34.1	64.3	**1FW6290-0■B11-5G■3**		
		3200 (2360)	68.6	125	**1FW6290-0■B11-0L B3**		
		3110 (2294)	90.4	165	**1FW6290-0■B11-2P B3**		164.2 (362.1)
8570 (6321)	4760 (3511)	4600 (3393)	26.6	51.3	**1FW6290-0■B15-7A■3**	440 (38.9)	214.6 (473.2)
		4480 (3304)	48.7	88.5	**1FW6290-0■B15-0L B3**		
		4390 (3238)	64.9	117	**1FW6290-0■B15-2P B3**		219.8 (484.7)
10900 (8040)	6030 (4448)	5760 (4249)	36.9	67.9	**1FW6290-0■B20-0L B3**	546 (48.3)	260.6 (574.6)
		5670 (4182)	49.9	90.3	**1FW6290-0■B20-2P B3**		265.8 (586.1)

Cable outlet only for 1FW6160 to 1FW6290: Axial Radially outwards Tangential (only for type of connection C and D)	**W** **V** **T**
Type of connection: Permanently connected power and signal cables with bare wire ends [4)] Length: 2 m (6.56 ft) Permanently connected power and signal cables pre-assembled with connectors Length: 0.5 m (1.64 ft)	**C** **D**
Type of connection only for specific motors (not selectable)**:** Permanently connected power and signal cables with bare wire ends [4)] Length: 1 m (3.28 ft)	**B**

For footnotes, see next page.

© Siemens 2024

SIMOTICS T-1FW6 built-in torque motors with internal rotor, Standard – water cooling

Motor type (repeated)	Stall current [1] [3]	Rated current [2] [3]	Maximum current [2]	Calculated power	SINAMICS S120 Motor Module [5]		Power cable with complete shield Motor connection via power connector [4]		
					Required rated current	Booksize format Internal air cooling For further components, see SINAMICS S120 drive system	Power connector	Cable cross-section [6]	Pre-assembled basic cable to the drive system
	I_0	I_N	I_{max}	$P_{el, max}$	I_N / I_{max}				
	A	A	A	kW (hp)	A	Article No.	Size	mm^2	Article No.
Water cooling									
1FW6290-0.B07-5G..	56	52	119	46.9 (62.9)	60/120	**6SL3120-1TE26-0AC0**	1.5	4 × 16	**6FX8002-5CS24-....**
1FW6290-0.B07-0LB.	101	86	212	68.9 (92.4)	132/210	**6SL3120-1TE31-3AA3**	–	–	**–**
1FW6290-0.B07-2PB.	129	105	272	83.2 (111.6)	200/282	**6SL3120-1TE32-0AA4**	–	–	**–**
1FW6290-0.B11-7A..	63	59.8	133	57.5 (77.1)	85/141	**6SL3120-1TE28-5AA3**	1.5	4 × 16	**6FX8002-5CS24-....**
1FW6290-0.B11-5G..	56.5	54	119	53.9 (72.3)	60/120	**6SL3120-1TE26-0AC0**	1.5	4 × 16	**6FX8002-5CS24-....**
1FW6290-0.B11-0LB.	101	92	212	76.6 (102.7)	132/210	**6SL3120-1TE31-3AA3**	–	–	**–**
1FW6290-0.B11-2PB.	129	114	272	91.2 (122.3)	200/282	**6SL3120-1TE32-0AA4**	–	–	**–**
1FW6290-0.B15-7A..	63	61	133	64 (85.8)	85/141	**6SL3120-1TE28-5AA3**	1.5	4 × 16	**6FX8002-5CS24-....**
1FW6290-0.B15-0LB.	101	94	212	83.8 (112.4)	132/210	**6SL3120-1TE31-3AA3**	–	–	**–**
1FW6290-0.B15-2PB.	129	118	272	98.8 (132.5)	200/282	**6SL3120-1TE32-0AA4**	–	–	**–**
1FW6290-0.B20-0LB.	101	96	212	90.8 (121.8)	132/210	**6SL3120-1TE31-3AA3**	–	–	**–**
1FW6290-0.B20-2PB.	129	121	272	106 (142)	200/282	**6SL3120-1TE32-0AA4**	–	–	**–**

Motor Module: Single Motor Module	**1**

Length code	**....**

For more information about cables, see MOTION-CONNECT connection systems

8
4

Accessories

Description	Article No.
Cooling connection adapter For SIMOTICS T-1FW6 built-in torque motors	
• 1FW6160 ... 1FW6230	**1FW6160-1BA00-0AA0**
• 1FW6290	**1FW6290-1BA00-0AA0**

Description	Article No.
Power connector [4] For SIMOTICS T-1FW6 built-in torque motors	
• Size 1 for 4 × 2.5 mm^2	**6FX2003-0LA00**
• Size 1.5 for 4 × 4/4 × 10/4 × 16 mm^2	**6FX2003-0LA10**
Signal connector [4] For SIMOTICS T-1FW6 built-in torque motors	
• M17 (socket) for 6 × 0.5 + 1 × 1.0 mm^2	**6FX2003-0SU07**
Signal cable, pre-assembled [7] For SIMOTICS T-1FW6 built-in torque motors	**6FX8002-2SL10-....**

1) Torque and current at low speeds.
2) The values refer to a supply voltage of 400 V 3 AC ±10 % (drive system DC link voltage 600 V DC).
3) For water cooling with inlet temperature of 35 °C (95 °F) and maximum rotor flange temperature of 60 °C (140 °F).
4) For type of connection with bare wire ends, power and signal connectors are not included in the scope of supply of the motor and must be ordered separately.
5) Optimized selection for full performance of torque motors.
6) The current-carrying capacity of the power cables complies with EN 60204-1 for installation type C, under continuous operating conditions at an ambient air temperature of 40 °C (104 °F).
7) For length code, see MOTION-CONNECT connection systems.

© Siemens 2024

SIMOTICS T-1FW6 built-in torque motors with internal rotor, High Speed – water cooling

Selection and ordering data

Maximum torque	Static torque [1) 3)]	Rated torque [2) 3)]	Speed at maximum torque, max. [2)]	Rated speed [2)]	Maximum speed	**SIMOTICS T-1FW6 built-in torque motors High Speed** **Stator** [4)]	Moment of inertia rotor	Weight, approx. stator + rotor
M_{max}	M_0	M_N	n_{max} at M_{max}	n_N	n_{max}		J	m
Nm (lb$_f$-ft)	Nm (lb$_f$-ft)	Nm (lb$_f$-ft)	r/min	r/min	r/min	Article No.	10^{-2}kgm^2 (lb$_f$-in-s^2)	kg (lb)
Water cooling								
214 (158)	157 (116)	153 (113)	434	571	1890	**1FW6092-8PC05-2EB3**	3.68 (0.33)	15.5 (34.2)
	157 (116)	150 (111)	814	1040	3000	**1FW6092-8PC05-4FB3**		
429 (316)	313 (231)	305 (225)	457	590	1890	**1FW6092-8PC10-4FB3**	6.89 (0.61)	26 (57.3)
	313 (231)	299 (221)	837	1060	3000	**1FW6092-8PC10-8FB3**		26.5 (58.4)
643 (474)	470 (347)	459 (339)	434	560	1790	**1FW6092-8PC15-6AB3**	10.1 (0.9)	37 (81.6)
	470 (347)	453 (334)	647	824	2520	**1FW6092-8PC15-8FB3**		
432 (319)	276 (204)	268 (198)	332	490	1730	**1FW6132-8PC05-3AB3**	11.8 (1.0)	28.5 (62.8)
	276 (204)	260 (192)	723	1050	3000	**1FW6132-8PC05-6AB3**		
864 (637)	552 (407)	537 (396)	344	500	1730	**1FW6132-8PC10-6AB3**	21.3 (1.9)	48.5 (106.9)
	552 (407)	519 (383)	735	1060	3000	**1FW6132-8PC10-2PB3**		49 (108)
1300 (959)	829 (611)	811 (598)	249	365	1290	**1FW6132-8PC15-6AB3**	30.8 (2.7)	67 (148)
	829 (611)	792 (584)	544	777	2400	**1FW6132-8PC15-2PB3**		67.5 (148.8)
800 (590)	545 (402)	536 (395)	121	203	890	**1FW6152-8PC05-3AB3**	29.2 (2.6)	41 (90.4)
	545 (402)	525 (387)	296	460	1800	**1FW6152-8PC05-6AB3**		
1600 (1180)	1090 (804)	1070 (789)	134	216	902	**1FW6152-8PC10-6AB3**	45.4 (4.0)	69.5 (153.2)
	1090 (804)	1050 (774)	303	467	1800	**1FW6152-8PC10-2PB3**		70 (154)
2400 (1770)	1630 (1202)	1610 (1188)	133	213	890	**1FW6152-8PC15-8FB3**	65.8 (5.8)	97.5 (215.0)
	1630 (1202)	1590 (1173)	222	343	1350	**1FW6152-8PC15-2PB3**		98 (216)

Type of connection only for specific motors (not selectable)**:** Permanently connected power and signal cables with bare wire ends [5)] Length: 1 m (3.28 ft)	**B**

For footnotes, see next page.

© Siemens 2024

Motor type (repeated)	Stall current [1) 3)]	Rated current [2) 3)]	Maximum current [2)]	Calculated power	Voltage Protection Module (VPM)	**SINAMICS S120 Motor Module [6)]**	
						Required rated current	**Booksize format** Internal air cooling. For further components, see SINAMICS S120 drive system
	I_0	I_N	I_{max}	$P_{el, max}$		I_N / I_{max}	
	A	A	A	kW (hp)		A	Article No.
Water cooling							
1FW6092-8PC05-2EB3	19.6	19	30.1	15.8 (21.2)	VPM 120	24/48	**6SL3120-1TE22-4AC0**
1FW6092-8PC05-4FB3	33	31.3	50.8	24.2 (32.5)	VPM 120	45/90 [7)]	**6SL3120-1TE24-5AC0**
1FW6092-8PC10-4FB3	39.1	38	60.2	30.5 (40.9)	VPM 120	45/90	**6SL3120-1TE24-5AC0**
1FW6092-8PC10-8FB3	66	62.5	102	47.5 (63.7)	VPM 200	85/141 [7)]	**6SL3120-1TE28-5AA3**
1FW6092-8PC15-6AB3	55.6	54	85.5	43.3 (58.1)	VPM 120	60/120	**6SL3120-1TE26-0AC0**
1FW6092-8PC15-8FB3	78.2	75	120	57.7 (77.4)	VPM 200	85/141 [7)]	**6SL3120-1TE28-5AA3**
1FW6132-8PC05-3AB3	28.1	27.2	52.9	23.6 (31.6)	VPM 120	30/56	**6SL3120-1TE23-0AC0**
1FW6132-8PC05-6AB3	56.2	52.3	106	41.2 (55.2)	VPM 120	85/141 [7)]	**6SL3120-1TE28-5AA3**
1FW6132-8PC10-6AB3	56.2	54.3	106	45.1 (60.5)	VPM 120	60/120	**6SL3120-1TE26-0AC0**
1FW6132-8PC10-2PB3	112	104	211	80.4 (107.8)	VPM 200	132/210 [7)]	**6SL3120-1TE31-3AA3**
1FW6132-8PC15-6AB3	62.9	61.3	118	53.2 (71.3)	VPM 120	60/120	**6SL3120-1TE26-0AC0**
1FW6132-2PC15-2PB3	126	119	237	93.2 (125.0)	VPM 200	132/210 [7)]	**6SL3120-1TE31-3AA3**
1FW6152-8PC05-3AB3	27.1	26.6	53	25.3 (33.9)	VPM 120	30/56	**6SL3120-1TE23-0AC0**
1FW6152-8PC05-6AB3	55	52.5	107	39.1 (52.4)	VPM 120	85/141 [7)]	**6SL3120-1TE28-5AA3**
1FW6152-8PC10-6AB3	55	53.8	107	46.2 (62.0)	VPM 120	60/120	**6SL3120-1TE26-0AC0**
1FW6152-8PC10-2BP3	110	105	215	74.4 (99.8)	VPM 200	132/210 [7)]	**6SL3120-1TE31-3AA3**
1FW6152-8PC15-8FB3	81.4	79.7	159	68.5 (91.9)	VPM 200	85/141	**6SL3120-1TE28-5AA3**
1FW6152-8PC15-2PB3	123	119	241	88.8 (119.1)	VPM 200	132/210 [7)]	**6SL3120-1TE31-3AA3**

Motor Module: Single Motor Module	**1**

[1)] Torque and current at low speeds.
[2)] The values refer to a supply voltage of 400 V 3 AC ±10 % (drive system DC link voltage 600 V DC).
[3)] For water cooling with inlet temperature of 20 °C (68 °F) and maximum rotor flange temperature of 60 °C (140 °F).
[4)] The corresponding rotor can be ordered with article number 1FW6. 2-8RA.. -0AA0
[5)] For type of connection with bare wire ends, power and signal connectors are not included in the scope of supply of the motor and must be ordered separately.
[6)] Dimensioned for motor continuous current, for full utilization of motor I_{max}, a larger Motor Module is required.
[7)] PWM clock cycle must be increased.

© Siemens 2024

SIMOTICS T-1FW6 built-in torque motors with internal rotor, High Speed – water cooling

Selection and ordering data

Maximum torque	Static torque [1) 3)]	Rated torque [2) 3)]	Speed at maximum torque, max. [2)]	Rated speed [2)]	Maximum speed	**SIMOTICS T-1FW6 built-in torque motors High Speed** **Stator** [4)]	Moment of inertia rotor	Weight, approx. stator + rotor
M_{max}	M_0	M_N	n_{max} at M_{max}	n_N	n_{max}		J	m
Nm (lb$_f$-ft)	Nm (lb$_f$-ft)	Nm (lb$_f$-ft)	r/min	r/min	r/min	Article No.	10^{-2}kgm^2 (lb$_f$-in-s^2)	kg (lb)
Water cooling								
1180 (870)	868 (640)	849 (626)	138	196	893	**1FW6192-8 ■ C05-4FB3**	70.3 (6.2)	62.5 (137.8)
	868 (640)	826 (609)	300	423	1500	**1FW6192-8 ■ C05-8FB3**		
2350 (1733)	1740 (1283)	1700 (1254)	142	200	893	**1FW6192-8 ■ C10-8FB3**	125 (11.1)	101.5 (223.8)
	1740 (1283)	1670 (1232)	235	329	1410	**1FW6192-8 ■ C10-2FB3**		104 (229)
3530 (2604)	2600 (1918)	2570 (1896)	89.9	128	596	**1FW6192-8 ■ C15-8FB3**	181 (16.0)	141.5 (312.0)
	2600 (1918)	2520 (1859)	198	277	1190	**1FW6192-8 ■ C15-0WB3**		144 (318)
4700 (3467)	3470 (2559)	3440 (2537)	63	92	447	**1FW6192-8 ■ C20-8FB3**	237 (21.0)	181 (399)
	3470 (2559)	3390 (2500)	145	203	893	**1FW6192-8 ■ C20-0WB3**		183.5 (404.6)
1490 (1099)	1090 (804)	1060 (782)	156	227	943	**1FW6232-8 ■ C05-6AB3**	167 (14.8)	75 (165)
	1090 (804)	1040 (767)	224	326	1300	**1FW6232-8 ■ C05-8FB3**		
2990 (2205)	2180 (1608)	2120 (1564)	159	230	934	**1FW6232-8 ■ C10-2PB3**	227 (20.1)	121 (267)
	2180 (1608)	2090 (1542)	230	331	1300	**1FW6232-8 ■ C10-0WB3**		123.5 (272.3)
4480 (3304)	3280 (2419)	3210 (2368)	102	148	623	**1FW6232-8 ■ C15-2PB3**	327 (28.9)	169 (373)
	3280 (2419)	3180 (2346)	150	215	872	**1FW6232-8 ■ C15-0WB3**		171.5 (378.2)
5980 (4411)	4370 (3223)	4310 (3179)	73.1	108	467	**1FW6232-8 ■ C20-2PB3**	427 (37.8)	216.5 (477.4)
	4370 (3223)	4280 (3157)	109	158	654	**1FW6232-8 ■ C20-0WB3**		219 (483)

Cable outlet only for 1FW6192 to 1FW6232: Axial Radially outwards	**W** **V**
Type of connection only for specific motors (not selectable)**:** Permanently connected power and signal cables with bare wire ends [5)] Length: 1 m (3.28 ft)	**B**

Accessories

Description	Article No.
Outer cooling sleeve mounted option: -Z R06	**1FW6092-8PC10-4FB3-Z R06** **1FW6092-8PC10-4FT3-Z R06** **1FW6092-8PC15-8FB3-Z R06** **1FW6092-8PC10-2PB3-Z R06**

For footnotes, see next page.

© Siemens 2024

SIMOTICS T-1FW6 built-in torque motors with internal rotor, High Speed – water cooling

Motor type (repeated)	Stall current [1) 3)]	Rated current [2) 3)]	Maximum current [2)]	Calculated power	Voltage Protection Module (VPM)	SINAMICS S120 Motor Module [6)] Required rated current	Booksize format Internal air cooling For further components, see SINAMICS S120 drive system
	I_0	I_N	I_{max}	$P_{el, max}$		I_N / I_{max}	
	A	A	A	kW (hp)		A	Article No.
Water cooling							
1FW6192-8.C05-4FB3	41.5	40.3	68	28.2 (37.8)	VPM 120	45/90	**6SL3120-1TE22-5AC0**
1FW6192-8.C05-8FB3	83	77.7	136	48.1 (64.5)	VPM 120	85/141	**6SL3120-1TE28-5AA3**
1FW6192-8.C10-8FB3	83	80.5	136	53.3 (71.5)	VPM 120	85/141	**6SL3120-1TE28-5AA3**
1FW6192-8.C10-2PB3	131	124	214	75.8 (101.6)	VPM 200	132/210	**6SL3120-1TE31-3AA3**
1FW6192-8.C15-8FB3	83	81.4	136	58.6 (78.6)	VPM 120	85/141	**6SL3120-1TE28-5AA3**
1FW6192-8.C15-0WB3	166	159	272	98.6 (132.2)	VPM 200	200/282	**6SL3120-1TE32-0AA4**
1FW6192-8.C20-8FB3	83	81.9	136	63.8 (85.6)	VPM 120	85/141	**6SL3120-1TE23-5AA3**
1FW6192-8.C20-0WB3	166	161	272	104 (139)	VPM 200	200/282	**6SL3120-1TE32-0AA4**
1FW6232-8.C05-6AB3	59	56.6	100	37.2 (49.9)	VPM 120	60/120	**6SL3120-1TE26-0AC0**
1FW6232-8.C05-8FB3	81.9	77.2	139	47.9 (64.2)	VPM 120	85/141	**6SL3120-1TE28-5AA3**
1FW6232-8.C10-2PB3	117	112	199	71.5 (95.9)	VPM 200	132/210	**6SL3120-1TE31-3AA3**
1FW6232-8.C10-0WB3	164	154	279	93 (125)	VPM 200	200/282	**6SL3120-1TE32-0AA4**
1FW6232-8.C15-2PB3	117	114	199	78 (105)	VPM 200	132/210	**6SL3120-1TE31-3AA3**
1FW6232-8.C15-0WB3	164	158	279	99.6 (133.6)	VPM 200	200/282	**6SL3120-1TE32-0AA4**
1FW6232-8.C20-2PB3	117	115	199	84.6 (113.4)	VPM 200	132/210	**6SL3120-1TE31-3AA3**
1FW6232-8.C20-0WB3	164	159	279	106 (142)	VPM 200	200/282	**6SL3120-1TE32-0AA4**

Motor Module: Single Motor Module	**1**

Accessories

Description	Article No.
Cooling connection adapter For SIMOTICS T-1FW6 built-in torque motors	
• 1FW6192 ... 1FW6232	**1FW6160-1BA00-0AA0**

Description	Article No.
Signal connector [5)] For SIMOTICS T-1FW6 built-in torque motors	
• M17 (socket) for 6 × 0.5 + 1 × 1.0 mm^2	**6FX2003-0SU07**
Signal cable, pre-assembled [7)] For SIMOTICS T-1FW6 built-in torque motors	**6FX8002-2SL10-....**

1) Torque and current at low speeds.
2) The values refer to a supply voltage of 400 V 3 AC ±10 % (drive system DC link voltage 600 V DC).
3) For water cooling with inlet temperature of 20 °C (68 °F) and maximum rotor flange temperature of 60 °C (140 °F).
4) The corresponding rotor can be ordered with article number 1FW6. 2-8RA.. -0AA0
5) For type of connection with bare wire ends, power and signal connectors are not included in the scope of supply of the motor and must be ordered separately.
6) Optimized selection for full performance of torque motors.
7) For length code, see MOTION-CONNECT connection systems.

© Siemens 2024

SIMOTICS T-1FW6 built-in torque motors with external rotor

Overview

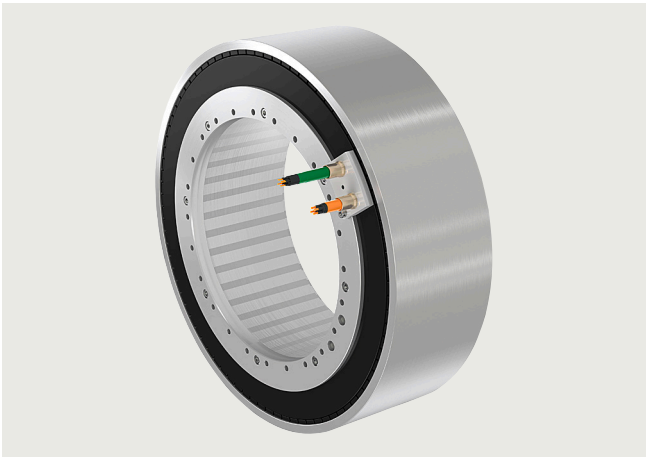

SIMOTICS T-1FW6 external rotor built-in torque motors with integrated single-circuit water cooling

SIMOTICS T-1FW6 external rotor built-in torque motors are designed as built-in motors for use as low-speed direct drives with a high torque output. These built-in torque motors are liquid-cooled, permanent-magnet-excited, (high pole number) three-phase synchronous motors.

The motors are supplied as built-in components. When delivered, the stators and rotors are separate and are inserted into the actual machine by the machine manufacturer during installation. Additional bearings and encoders are required for a complete drive unit.

The range of types includes a frame size with 4 lengths. For installation in the machine, stators and rotors are equipped with flanges with centering surfaces and threaded holes.

Benefits

- Very high power density
- High torque, compact design, and low construction volume
- High overload capability (factor 1.7)
- High degree of availability, as there are no gearbox parts that are subject to wear in the drive train
- No elasticity in the drive train
- Water cooling to increase the rated power
- Directly flanged to the machine
- Axial cable outlet
- Optimized for the SINAMICS S120 drive system

The water cooling system ensures that the stringent machine design requirements regarding thermal behavior are fulfilled by the motors.

Application

In conjunction with the SINAMICS S120 drive system, SIMOTICS T-1FW6 external rotor built-in torque motors can be used for the following machine applications:

- Rotary indexing tables and subunits
- Rotary indexing machines
- Swivel axes
- Roller and cylinder drives
- Tablet presses

Design

SIMOTICS T-1FW6 external rotor built-in torque motors comprise the following components:

Stator

Version with 3-phase winding and an iron core. The winding is encapsulated for better dissipation of the heat loss. The motor is designed for liquid cooling with water as coolant.

Rotor

Reaction part of the motor.

It comprises a cylindrical steel bell which has permanent magnets around its circumference on the inside.

Cooling variants

Motors with integrated single-circuit water cooling

These motors have a ready-to-connect, integrated single-circuit cooling system; they are compact, and can therefore be simply integrated into machines.

SIMOTICS T-1FW6 built-in torque motor Type	**Cooling method**
1FW67	Integrated water cooling with one cooling circuit

© Siemens 2024

Integration

The SIMOTICS T-1FW6 external rotor built-in torque motors supplied via the SINAMICS S120 drive system are designed for operation at a 600 V DC link voltage level.

The cable connection is brought out at the front face of the stator (B flange). The cables have open cable ends. The length of the power and signal cables from the motor to the drive system must not exceed 50 m.

Absolute measuring systems with DRIVE-CLiQ

Measuring systems with integrated DRIVE-CLiQ interface are available from various manufacturers. The encoders can be used as motor feedback system.

A current overview of the various manufacturers and available measuring systems is available on the internet at:

https://support.automation.siemens.com/WW/view/en/65402168

It is also possible to use absolute measuring systems with EnDat 2.1 or incremental systems with 1 V_{PP}.

Configuration

You can find the Configuration Manual for SIMOTICS T-1FW6 with external rotor for SINAMICS S120 at:

https://support.industry.siemens.com/cs/ww/en/view/109791889

Technical specifications

Product name	SIMOTICS T-1FW6 built-in torque motor with external rotor
Motor type	Synchronous motor with permanent-magnet rotor
Torque ripple	≤ 0.5 % M_0
Coolant inlet temperature, maximum	35 °C (95 °F) for 1FW6720
Pressure in cooling circuit, maximum	10 bar (static)
Thermal motor protection according to DIN 44081/DIN 44082 [1]	2 × PTC thermistor triplet with +130 °C (266 °F) response threshold (1 × reserve)
Temperature monitoring according to DIN EN 60034-11) [1]	2 × Pt1000 temperature sensor (1 × reserve)
Stator winding insulation according to DIN EN 60034-1	Temperature class 155 (F)
Type of construction	Individual components: Stator, rotor
Degree of protection according to DIN EN 60034-5	IP23 The final degree of protection (minimum degree of protection is IP54) for the installed motor is determined by the machine manufacturer. Protection against touch, foreign bodies, and water for electrical equipment is specified in accordance with IEC 60034-5.
Measuring system (Not included in scope of supply)	Select based on application and drive-specific constraints.
Connection, electrical	Permanently connected power and signal cables with bare wire ends (0.5 m (1.64 ft))
Paint finish	Without paint finish
Rating plate	1 unit enclosed separately
Certificate of suitability	cURus

More information

Some motor types can be express delivered as replacement motors in the event of plant outages and offer the advantage of a quicker spare parts supply.

Siemens provides comprehensive support when selecting the optimum motor solution. Any questions regarding SIMOTICS T-1FW6 torque motors can be emailed to:

motor.support.motioncontrol@siemens.com

[1] Evaluation via SME120/SME125 Sensor Module or TM120 Terminal Module (see SINAMICS S120 drive system).

© Siemens 2024

SIMOTICS T-1FW6 built-in torque motors with external rotor, Standard – water cooling

Selection and ordering data

Maximum torque	Static torque [1]	Rated torque [2]	Speed at maximum torque, max. [2]	Rated speed [2]	**SIMOTICS T-1FW6 built-in torque motors Standard** **Stator** [8]	Moment of inertia rotor	Weight, approx. stator + rotor
M_{max}	M_0	M_N	n_{max} at M_{max}	n_N		J	m
Nm (lb$_f$-ft)	Nm (lb$_f$-ft)	Nm (lb$_f$-ft)	r/min	r/min	Article No.	10^{-2}kgm^2 (lb$_f$-in-s^2)	kg (lb)
Water cooling							
2100 (1549)	1190 (878)	1150 (848)	66.2	110.0	**1FW6720-8 PB07-3AA3**	89.9/91.7 (8.0/8.1) [7]	69/72.2 (152/159.2) [7]
2790 (2058)	1660 (1224)	1640 (1210)	18.4	44.0	**1FW6720-8 PB10-2EA3**	108/113 (9.56/10.0) [7]	84/87 (185/192) [7]
2790 (2058)	1660 (1224)	1600 (1180)	72.9	116.0	**1FW6720-8 PB10-4FA3**	108/113 (9.56/10.0) [7]	84/87 (185/192) [7]
3210 (2368)	1910 (1409)	1850 (1365)	57.1	95.8	**1FW6720-8 PB12-4FA3**	114/120 (10.1/10.6) [7]	95/98 (209/216) [7]
3850 (2840)	2290 (1689)	2240 (1652)	43.0	76.2	**1FW6720-8 PB14-4FA3**	133/139 (11.8/12.3) [7]	111/114 (245/251) [7]

Cable outlet: Axial	**P**
Type of connection: Permanently connected power and signal cables with bare wire ends [4]	**A**

8
4

For footnotes, see next page.

© Siemens 2024

SIMOTICS T-1FW6 built-in torque motors with external rotor, Standard – water cooling

Motor type (repeated)	Stall current [1]	Rated current [2]	Maximum current [2]	Calculated power	SINAMICS S120 Motor Module [3] [5]		Power cable with complete shield Motor connection via power connector [4]		
					Required rated current	Booksize format Internal air cooling For further components, see SINAMICS S120 drive system	Power connector	Cable cross-section [6]	Pre-assembled basic cable to the drive system
	I_0	I_N	I_{max}	$P_{el, max}$	I_N / I_{max}				
	A	A	A	kW (hp)	A	Article No.	Size	mm^2	Article No.
1FW6720-8PB07-3A..	27.1	26.1	56.3	30.2 (40.5)	30/56	**6SL3120-1TE23-0AC0**	1.5	4 × 4	**6FX8002-5CS16-....**
1FW6720-8PB10-2E..	19.0	18.8	37.5	24.9 (33.4)	24/48	**6SL3120-1TE22-4AC0**	1.0	4 × 2.5	**6FX8002-5CS16-....**
1FW6720-8PB10-4F..	40.0	38.4	78.7	41.1 (55.1)	45/90	**6SL3120-1TE24-5AC0**	1.5	4 × 10	**6FX8002-5CS64-....**
1FW6720-8PB12-4F..	40.0	38.7	78.7	42.6 (57.1)	45/90	**6SL3120-1TE24-5AC0**	1.5	4 × 10	**6FX8002-5CS64-....**
1FW6720-8PB14-4F..	40.0	38.9	78.8	45.0 (60.3)	45/90	**6SL3120-1TE24-5AC0**	1.5	4 × 10	**6FX8002-5CS64-....**

Motor Module: Single Motor Module	**1**

Length code	**....**

For more information about cables, see MOTION-CONNECT connection systems

1) Torque and current at low speeds.
2) The values refer to a supply voltage of 400 V 3 AC ±10 % (drive system DC link voltage 600 V DC).
3) For water cooling with inlet temperature of 35 °C (95 °F) and maximum rotor flange temperature of 60 °C (140 °F).
4) For type of connection with bare wire ends, power and signal connectors are not included in the scope of supply of the motor and must be ordered separately.
5) Optimized selection for full performance of torque motors.
6) The current-carrying capacity of the power cables complies with EN 60204-1 for installation type C, under continuous operating conditions at an ambient air temperature of 40 °C (104 °F).
7) With Z-option S80, a flange variant with a smaller circle of fastening holes is available.
8) The corresponding rotor can be ordered with article number 1FW6720-8RA..-0AA0.

© Siemens 2024

SIMOTICS T-1FW3 complete torque motors

Overview

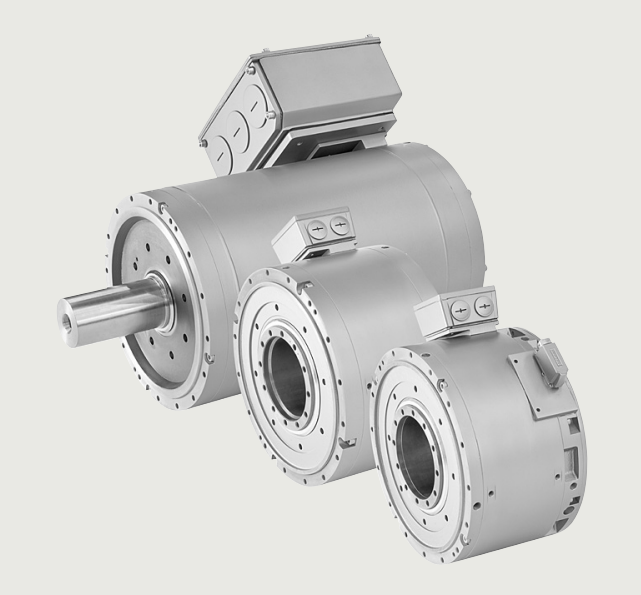

SIMOTICS T-1FW3 complete torque motors

The SIMOTICS T-1FW3 complete torque motors are water-cooled, high-pole (slow running) permanent-magnet synchronous motors. The operating characteristics are comparable to those of regular synchronous motors.

The motor spectrum comprises 3 outer diameters in various shaft lengths as well as 3 different shaft designs.

- Hollow shaft
  (not available in the High Speed version 1FW3200)
  - For feed-through of cooling and heating media, measurement cables, etc.
  - Motors with various lengths can be connected to the machine shaft
- Plug-on shaft with integrated shaft centering
  - Quick and easy installation as a result of the integrated shaft adapter with centering
  - Simple clamping element
  - Easy encoder replacement (safety-capability)
  - Longer bearing lifetime
- Solid shaft
  - Classic motor mounting
  - Simple replacement of a geared motor with a complete SIMOTICS T-1FW3 torque motor without having to change the connection at the machine
  - Easy encoder replacement (safety-capability)

The SIMOTICS T-1FW3 compact complete torque motors are flanged onto the machine using the specially-developed stator torque arms. The rotor is coupled to the machine shaft using the clamping element that will be supplied if required. This results in a perfectly rigid drive train that can be optimally controlled.

SIMOTICS T-1FW3 complete torque motors can be combined with the SINAMICS S120 drive system to create a powerful, high-performance system with a high degree of functionality. The integrated encoder systems for closed-loop speed and position control can be selected depending on the application.

Benefits

- High torque, compact design, and low construction volume
- Optimized mechatronic solution
  - Highest degree of stiffness
  - High speeds possible
  - Innovative machine concepts are possible
  - Increased productivity and quality
- The right design for every application
  - Large power range
  - Hollow shaft, plug-on shaft, or solid shaft
  - Different encoder types for speed control and high-precision positioning
- Excellent performance
  - Maximum speeds up to 1800 r/min
  - Excellent radial eccentricity
  - High dynamic response, i.e. short acceleration times and rotational accuracy
- The ideal motor for energy-saving solutions
- Simple encoder replacement without requiring any readjustment for plug-on and solid shafts

Application

The SIMOTICS T-1FW3 complete torque motors were developed as direct drives. These direct drives form a compact drive unit where the mechanical motor power is transferred directly to the driven machine without any mechanical transmission elements.

- Extruder main drives
- Screw drives for injection molding machines
- Roll drive
- Winder
- Fleece folding machines
- Pull-roll drives for foil drawing machines
- Stretch, calender, casting, and chill rolls
- Dynamic positioning tasks, e.g. rotary tables, clocked conveyor belts
- Replacing hydraulic motors
- Roll drives in paper machines
- Cross-cutter drives for continuous material webs, e.g. paper, textiles, sheet metal
- Wire drawing machines

Configuration

You can find the Configuration Manual for SIMOTICS T-1FW3 for SINAMICS S120 at:

https://support.industry.siemens.com/cs/ww/en/view/60151497

Characteristic curves

Characteristics for the SIMOTICS motors are available via selectors through to the exact article number with the Siemens Product Configurator.

Access to the Siemens Product Configurator

www.siemens.com/spc

→ SIMOTICS T-1FW3 in the SPC

© Siemens 2024

Technical specifications

Product name	SIMOTICS T-1FW3 complete torque motor
Motor type	Permanent-magnet synchronous motor
Magnet material	Rare-earth magnet material
Stator winding insulation according to EN 60034-1 (IEC 60034-1)	Temperature class 155 (F) for a winding temperature rise of ΔT = 100 K at a coolant (water) inlet temperature of 30 °C (86 °F)
Cooling according to EN 60034-6 (IEC 60034-6)	Water cooling
Thermal motor protection according to EN 60034-11 (IEC 60034-11)	Pt1000 thermistor in the stator winding
Type of construction according to EN 60034-7 (IEC 60034-7)	
• 1FW315/1FW320	IM B14, IM V18, IM V19
• 1FW328	IM B35, IM B34, IM B3, IM B5, IM V1, IM V3, IM V15, IM V35
Degree of protection according to EN 60034-5 (IEC 60034-5)	
• Hollow shaft	IP54
• Plug-on shaft	IP55 (IP54 for 1FW328)
• Solid shaft	IP55 (IP54 for 1FW328)
Shaft end according to DIN 748-3 (IEC 60072-1)	Hollow shaft, plug-on shaft, solid shaft
Shaft and flange accuracy according to DIN 42955 (IEC 60072-1) [1]	Tolerance N (at operating temperature)
Vibration severity according to EN 60034-14 (IEC 60034-14)	Grade A (is maintained up to the rated speed)
Sound pressure level L_{pA} (1 m) according to EN ISO 1680, max.	73 dB at 4 kHz rated pulse frequency at the rated operating point
Shock load	Maximum permissible radial acceleration 50 m/s^2 (164 ft/s^2) (not in operating state)
Bearing	Roller bearing with permanent grease lubrication (Bearing replacement interval with regreasing system up to L_{h10} = 60000 h)
Connection	Terminal box for power cable Connector for encoder signals and temperature sensor
Paint finish	Anthracite RAL 7016
2nd rating plate	Enclosed separately
Certificate of suitability	cURus

Dimensional drawings

Dimensional drawings for the SIMOTICS motors are available via selectors through to the exact article number with the Siemens Product Configurator.

Access to the Siemens Product Configurator

www.siemens.com/spc

→ SIMOTICS T-1FW3 in the SPC

More information

A list of motors with and without a DRIVE-CLiQ interface, as well as individual encoders and measuring systems used in conjunction with Safety Integrated, is available on the internet at:

https://support.industry.siemens.com/cs/ww/en/view/33512621

[1] Radial eccentricity of the shaft end, concentricity of the centering ring, and axial eccentricity of the mounting flange to the axis of the shaft end.

© Siemens 2024

SIMOTICS T-1FW3 complete torque motors – water cooling

Selection and ordering data

Rated speed	Shaft height	Rated power	Rated torque	Rated current	Rated voltage	Rated frequency	Operating speed, max. [1]	Speed, max. [2]	**SIMOTICS T-1FW3 complete torque motors Water cooling**
n_N	SH	P_N at ΔT=100 K	M_N at ΔT=100 K	I_N at ΔT=100 K	U_N	f_N	$n_{max, Inv}$	n_{max}	
r/min		kW (hp)	Nm (lb_f-ft)	A	V	Hz	r/min	r/min	Article No.
Line voltage 400 V 3 AC Active Line Module									
150	200	4.7 (6.3)	300 (221)	13	373	35	380	1000	**1FW3201-1■E■ 2-■■■0**
		7.9 (10.6)	500 (369)	21	350	35	380	1000	**1FW3202-1■E■ 2-■■■0**
		11.8 (15.8)	750 (553)	30	357	35	370	1000	**1FW3203-1■E■ 2-■■■0**
		15.7 (21.1)	1000 (738)	40	351	35	360	1000	**1FW3204-1■E■ 2-■■■0**
		23.6 (31.6)	1500 (1106)	65	331	35	390	1000	**1FW3206-1■E■ 2-■■■0**
		31.4 (42.1)	2000 (1475)	84	337	35	380	1000	**1FW3208-1■E■ 2-■■■0**
	280	39.0 (52.3)	2500 (1844)	82	390	25	290	1000	**1FW3281-2■E■■-■■■0**
		55.0 (73.8)	3500 (2582)	115	388	25	290	1000	**1FW3283-2■E■■-■■■0**
		79.0 (105.9)	5000 (3688)	160	391	25	290	1000	**1FW3285-2■E■■-■■■0**
		110.0 (147.5)	7000 (5163)	230	382	25	290	1000	**1FW3287-2■E■■-■■■0**
250	280	64.0 (85.8)	2450 (1807)	126	396	41.7	460	1000	**1FW3281-2■G■■-■■■0**
		90.0 (120.7)	3450 (2545)	176	397	41.7	460	1000	**1FW3283-2■G■■-■■■0**
		130 (174)	4950 (3651)	244	408	41.7	440	1000	**1FW3285-2■G■■-■■■0**
		181 (243)	6900 (5089)	352	393	41.7	460	1000	**1FW3287-2■G■■-■■■0**

Shaft design:	
Hollow shaft	**A**
Plug-on shaft	**S**
Solid shaft without feather key	**M**
Solid shaft with feather key (half-key balanced)	**H**

For more information on dependencies and other options, see Article No. supplements for shaft design
> Hollow shaft > Plug-on shaft > Solid shaft

Further rated speeds on request.

For footnotes, see next page.

© Siemens 2024

Motor type (repeated)	Static torque	Stall current	Effi-ciency [3]	Moment of inertia	Weight, approx.	Terminal box	SINAMICS S120 Motor Module	
							Rated output current [4]	Internal air cooling For further components, see SINAMICS S120 drive system
	M_0 at ΔT=100 K	I_0 at ΔT=100 K	η	J	m		I_N	
	Nm (lb_f-ft)	A	%	kgm^2 (lb_f-in-s^2)	kg (lb)	Type	A	Article No.
1FW3201-1.E.2-....	315 (232)	13	91	0.22 (1.95)	127 (280)	gk230	18	**6SL3120-1TE21-8AD0**
1FW3202-1.E.2-....	525 (387)	22	0.93	0.36 (3.19)	156 (344)	gk230	24	**6SL3120-1TE22-4AD0**
1FW3203-1.E.2-....	790 (583)	32	94	0.49 (4.34)	182 (401)	gk230	45	**6SL3120-1TE24-5AC0**
1FW3204-1.E.2-....	1050 (774)	42	94	0.70 (6.20)	225 (496)	gk230	45	**6SL3120-1TE24-5AC0**
1FW3206-1.E.2-....	1575 (1162)	68	94	0.97 (8.59)	280 (617)	gk420	85	**6SL3120-1TE28-5AA3**
1FW3208-1.E.2-....	2100 (1549)	88	94	1.31 (11.59)	350 (772)	gk420	85	**6SL3120-1TE28-5AA3**
1FW3281-2.E.3-....	2550 (1881)	84	94	3.78 (33.46)	600 (1323)	1XB7700	85	**6SL3120-1TE28-5AA3**
1FW3283-2.E.3-....	3550 (2618)	116	95	4.64 (41.07)	690 (1521)	1XB7700	132	**6SL3120-1TE31-3AA3**
1FW3285-2.E.3-....	5100 (3762)	163	95	5.98 (52.93)	860 (1896)	1XB7700	200	**6SL3120-1TE32-0AA4**
1FW3287-2.E.3-....	7150 (5274)	234	96	7.81 (69.13)	1030 (2271)	1XB7700	260	**6SL3320-1TE32-6AA3**
1FW3281-2.G.3-....	2550 (1881)	131	95	3.78 (33.46)	600 (1323)	1XB7700	132	**6SL3120-1TE31-3AA3**
1FW3283-2.G.3-....	3550 (2618)	181	96	4.64 (41.07)	690 (1521)	1XB7700	200	**6SL3120-1TE32-0AA4**
1FW3285-2.G.3-....	5100 (3762)	251	96	5.98 (52.93)	860 (1896)	1XB7700	260	**6SL3320-1TE32-6AA3**
1FW3287-2.G.3-....	7150 (5274)	365	96	7.81 (69.13)	1030 (2271)	1XB7700	380	**6SL3320-1TE33-8AA3**

Format:	
Booksize	**1**
Chassis	**3**
Motor Module:	
Single Motor Module	**1**

8
4

[1] Maximum permissible operating speed based on the voltage induced in the motor and the voltage strength of the converter (without protective circuit).
[2] Maximum speed that must not be exceeded. Certain constraints may apply, see article number supplements.
[3] Optimum efficiency in continuous duty.
[4] The rated pulse frequencies must be taken into account. The rated motor data is valid for 4 kHz or 2 kHz.

© Siemens 2024

SIMOTICS T-1FW3 complete torque motors – water cooling

Selection and ordering data

Rated speed	Shaft height	Rated power	Rated torque	Rated current	Rated voltage	Rated frequency	Operating speed, max. [1]	Speed, max. [2]	**SIMOTICS T-1FW3 complete torque motors Water cooling**
n_N	SH	P_N at ΔT=100 K	M_N at ΔT=100 K	I_N at ΔT=100 K	U_N	f_N	$n_{max, Inv}$	n_{max}	
r/min		kW (hp)	Nm (lb_f-ft)	A	V	Hz	r/min	r/min	Article No.
Line voltage 400 V 3 AC Active Line Module									
300	150	3.1 (4.2)	100 (73.8)	8	403	35	630	1700	**1FW3150-1■H■ 2-■■■0**
		6.3 (8.4)	200 (148)	14	404	35	630	1700	**1FW3152-1■H■ 2-■■■0**
		9.4 (12.6)	300 (221)	20.5	405	35	610	1700	**1FW3154-1■H■ 2-■■■0**
		12.6 (16.9)	400 (295)	28	395	35	630	1700	**1FW3155-1■H■ 2-■■■0**
		15.7 (21.1)	500 (369)	34	403	35	610	1700	**1FW3156-1■H■ 2-■■■0**
	200	9.4 (12.6)	300 (221)	23	377	70	680	1000	**1FW3201-1■H■ 2-■■■0**
		15.7 (21.1)	500 (369)	37	365	70	670	1000	**1FW3202-1■H■ 2-■■■0**
		23.6 (31.6)	750 (553)	59	343	70	710	1000	**1FW3203-1■H■ 2-■■■0**
		31.4 (42.1)	1000 (738)	74	355	70	670	1000	**1FW3204-1■H■ 2-■■■0**
		47.1 (63.2)	1500 (1106)	118	351	70	700	1000	**1FW3206-1■H■ 2-■■■0**
		62.8 (84.2)	2000 (1475)	153	346	70	690	1000	**1FW3208-1■H■ 2-■■■0**
400	280	98.0 (131.4)	2350 (1733)	188	389	66.7	720	1000	**1FW3281-3■J■■-■■■0**
		138.0 (185.1)	3300 (2434)	275	373	66.7	750	1000	**1FW3283-3■J■■-■■■0**
		197.0 (264.2)	4700 (3467)	376	386	66.7	720	1000	**1FW3285-3■J■■-■■■0**
		276.0 (370.1)	6600 (4868)	504	405	66.7	690	1000	**1FW3287-3■J■■-■■■0**

Shaft design:	
Hollow shaft	**A**
Plug-on shaft	**S**
Solid shaft without feather key	**M**
Solid shaft with feather key (half-key balanced)	**H**

For more information on dependencies and other options, see Article No. supplements for shaft design
> Hollow shaft > Plug-on shaft > Solid shaft

Further rated speeds on request.

For footnotes, see next page.

© Siemens 2024

Motor type (repeated)	Static torque	Stall current	Effi-ciency [3]	Moment of inertia	Weight, approx.	Terminal box	SINAMICS S120 Motor Module	
							Rated output current [4]	Internal air cooling For further components, see SINAMICS S120 drive system
	M_0 at ΔT=100 K	I_0 at ΔT=100 K	η	J	m		I_N	
	Nm (lb_f-ft)	A	%	kgm^2 (lb_f-in-s^2)	kg (lb)	Type	A	Article No.
1FW3150-1.H.2-....	105 (77.4)	7.3	89	0.12 (1.06)	87 (192)	gk230	9	**6SL3120-1TE21-0AD0**
1FW3152-1.H.2-....	210 (155)	15	92	0.16 (1.42)	108 (238)	gk230	18	**6SL3120-1TE21-8AD0**
1FW3154-1.H.2-....	315 (232)	21.5	93	0.20 (1.77)	129 (284)	gk230	24	**6SL3120-1TE22-4AD0**
1FW3155-1.H.2-....	420 (310)	29	94	0.24 (2.12)	150 (331)	gk230	30	**6SL3120-1TE23-0AD0**
1FW3156-1.H.2-....	525 (387)	35	94	0.28 (2.48)	171 (377)	gk230	45	**6SL3120-1TE24-5AA0**
1FW3201-1.H.2-....	315 (232)	24	92	0.22 (1.95)	127 (280)	gk230	24	**6SL3120-1TE22-4AD0**
1FW3202-1.H.2-....	525 (387)	39	94	0.36 (3.19)	156 (344)	gk230	45	**6SL3120-1TE24-5AA0**
1FW3203-1.H.2-....	790 (583)	62	95	0.49 (4.34)	182 (401)	gk420	60	**6SL3120-1TE26-0AA3**
1FW3204-1.H.2-....	1050 (774)	77	95	0.70 (6.20)	225 (496)	gk420	85	**6SL3120-1TE28-5AA3**
1FW3206-1.H.2-....	1575 (1162)	121	95	0.97 (8.59)	280 (617)	gk630	132	**6SL3120-1TE31-3AA3**
1FW3208-1.H.2-....	2100 (1549)	160	94	1.31 (11.59)	350 (772)	gk630	200	**6SL3120-1TE32-0AA4**
1FW3281-3.J.3-....	2500 (1844)	200	96	3.78 (33.46)	600 (1323)	1XB7700	200	**6SL3120-1TE32-0AA4**
1FW3283-3.J.3-....	3500 (2582)	292	96	4.64 (41.07)	690 (1521)	1XB7700	310	**6SL3320-1TE33-1AA3**
1FW3285-3.J.3-....	5000 (3688)	400	96	5.98 (52.93)	860 (1896)	1XB7700	380	**6SL3320-1TE33-8AA3**
1FW3287-3.J.3-....	7000 (5163)	534	97	7.81 (69.13)	1030 (2271)	1XB7712	618 [5]	**6SL3320-1TE37-5AA3**

Format:	
Booksize	**1**
Chassis	**3**
Motor Module:	
Single Motor Module	**1**

8
4

[1] Maximum permissible operating speed based on the voltage induced in the motor and the voltage strength of the converter (without protective circuit).
[2] Maximum speed that must not be exceeded. Certain constraints may apply, see article number supplements.
[3] Optimum efficiency in continuous duty.
[4] The rated pulse frequencies must be taken into account. The rated motor data is valid for 4 kHz or 2 kHz.
[5] The rated output current of the Motor Module was calculated with a derating factor based on the rated pulse frequency.

© Siemens 2024

SIMOTICS T-1FW3 complete torque motors – water cooling

Selection and ordering data

Rated speed	Shaft height	Rated power	Rated torque	Rated current	Rated voltage	Rated frequency	Operating speed, max. [1]	Speed, max. [2]	**SIMOTICS T-1FW3 complete torque motors Water cooling**
n_N	SH	P_N at ΔT=100 K	M_N at ΔT=100 K	I_N at ΔT=100 K	U_N	f_N	$n_{max, Inv}$	n_{max}	
r/min		kW (hp)	Nm (lb_f-ft)	A	V	Hz	r/min	r/min	Article No.
Line voltage 400 V 3 AC Active Line Module									
500	150	5.2 (7.0)	100 (73.8)	12	413	58.3	960	1700	**1FW3150-1■L■ 2-■■■0**
		10.5 (14.1)	200 (148)	22	415	58.3	960	1700	**1FW3152-1■L■ 2-■■■0**
		15.7 (21.1)	300 (221)	32	415	58.3	950	1700	**1FW3154-1■L■ 2-■■■0**
		20.9 (28.0)	400 (295)	43	412	58.3	960	1700	**1FW3155-1■L■ 2-■■■0**
		26.2 (35.1)	500 (369)	53	415	58.3	950	1700	**1FW3156-1■L■ 2-■■■0**
	200	15.7 (21.1)	300 (221)	37	386	116.7	1110	1000	**1FW3201-1■L■ 2-■■■0**
		26.2 (35.1)	500 (369)	59	376	116.7	1070	1000	**1FW3202-1■L■ 2-■■■0**
		39.3 (52.7)	750 (553)	92	366	116.7	1110	1000	**1FW3203-1■L■ 2-■■■0**
		52.3 (70.1)	1000 (738)	118	371	116.7	1060	1000	**1FW3204-1■L■ 2-■■■0**
		73.3 (98.3)	1400 (1033)	169	353	116.7	1090	1000	**1FW3206-1■L■ 2-■■■0**
		96.8 (129.8)	1850 (1365)	226	368	116.7	1100	1000	**1FW3208-1■L■ 2-■■■0**
600	280	138.0 (185.1)	2200 (1623)	256	387	100.0	1050	1000	**1FW3281-3■M■■-■■■0**
		195.0 (261.5)	3100 (2287)	357	394	100.0	1030	1000	**1FW3283-3■M■■-■■■0**
		276.0 (370.1)	4400 (3245)	469	415	100.0	960	1000	**1FW3285-3■M■■-■■■0**
		380.0 (509.6)	6050 (4462)	696	389	100.0	1030	1000	**1FW3287-3■M■■-■■■0**

Shaft design:

Hollow shaft	**A**
Plug-on shaft	**S**
Solid shaft without feather key	**M**
Solid shaft with feather key (half-key balanced)	**H**

For more information on dependencies and other options, see Article No. supplements for shaft design
> Hollow shaft > Plug-on shaft > Solid shaft

Further rated speeds on request.

For footnotes, see next page.

© Siemens 2024

Motor type (repeated)	Static torque	Stall current	Effi-ciency [3]	Moment of inertia	Weight, approx.	Terminal box	SINAMICS S120 Motor Module	
							Rated output current [4]	Internal air cooling For further components, see SINAMICS S120 drive system
	M_0 at ΔT=100 K	I_0 at ΔT=100 K	η	J	m		I_N	
	Nm (lb_f-ft)	A	%	kgm^2 (lb_f-in-s^2)	kg (lb)	Type	A	Article No.
1FW3150-1.L.2-....	105 (77.4)	11.5	90	0.12 (1.06)	87 (192)	gk230	18	**6SL3120-1TE21-8AD0**
1FW3152-1.L.2-....	210 (155)	22.5	92	0.16 (1.42)	108 (238)	gk230	24	**6SL3120-1TE22-4AD0**
1FW3154-1.L.2-....	315 (232)	33	93	0.20 (1.77)	129 (284)	gk230	45	**6SL3120-1TE24-5AC0**
1FW3155-1.L.2-....	420 (310)	45	94	0.24 (2.12)	150 (331)	gk230	45	**6SL3120-1TE24-5AC0**
1FW3156-1.L.2-....	525 (387)	55	94	0.28 (2.48)	171 (377)	gk420	60	**6SL3120-1TE26-0AC0**
1FW3201-1.L.2-....	315 (232)	38	92	0.22 (1.95)	127 (280)	gk230	45	**6SL3120-1TE24-5AC0**
1FW3202-1.L.2-....	525 (387)	62	94	0.36 (3.19)	156 (344)	gk420	60	**6SL3120-1TE26-0AC0**
1FW3203-1.L.2-....	790 (583)	100	95	0.49 (4.34)	182 (401)	gk420	132	**6SL3120-1TE31-3AA3**
1FW3204-1.L.2-....	1050 (774)	129	95	0.70 (6.20)	225 (496)	gk630	132	**6SL3120-1TE31-3AA3**
1FW3206-1.L.2-....	1575 (1162)	189	95	0.97 (8.59)	280 (617)	gk630	200	**6SL3120-1TE32-0AA4**
1FW3208-1.L.2-....	2100 (1549)	255	94	1.31 (11.59)	350 (772)	gk630	260	**6SL3320-1TE32-6AA3**
1FW3281-3.M.3-....	2500 (1844)	291	96	3.78 (33.46)	600 (1323)	1XB7700	310	**6SL3320-1TE33-1AA3**
1FW3283-3.M.3-....	3500 (2582)	402	96	4.64 (41.07)	690 (1521)	1XB7700	380	**6SL3320-1TE33-8AA3**
1FW3285-3.M.3-....	5000 (3688)	532	97	5.98 (52.93)	860 (1896)	1XB7712	490	**6SL3320-1TE35-0AA3**
1FW3287-3.M.3-....	6850 (5053)	787	97	7.81 (69.13)	1030 (2271)	1XB7712	734 [5]	**6SL3320-1TE38-4AA3**

Format:	
Booksize	**1**
Chassis	**3**
Motor Module:	
Single Motor Module	**1**

8
4

[1] Maximum permissible operating speed based on the voltage induced in the motor and the voltage strength of the converter (without protective circuit).
[2] Maximum speed that must not be exceeded. Certain constraints may apply, see article number supplements.
[3] Optimum efficiency in continuous duty.
[4] The rated pulse frequencies must be taken into account. The rated motor data is valid for 4 kHz or 2 kHz.
[5] The rated output current of the Motor Module was calculated with a derating factor based on the rated pulse frequency.

© Siemens 2024

SIMOTICS T-1FW3 complete torque motors – water cooling

Selection and ordering data

Rated speed	Shaft height	Rated power	Rated torque	Rated current	Rated voltage	Rated frequency	Operating speed, max. [1]	Speed, max. [2]	**SIMOTICS T-1FW3 complete torque motors Water cooling**
n_N	SH	P_N at ΔT=100 K	M_N at ΔT=100 K	I_N at ΔT=100 K	U_N	f_N	$n_{max, Inv}$	n_{max}	
r/min		kW (hp)	Nm (lb_f-ft)	A	V	Hz	r/min	r/min	Article No.
Line voltage 400 V 3 AC Active Line Module									
750	150	7.9 (10.6)	100 (73.8)	18	410	87.5	1470	1700	**1FW3150-1■P■2-■■■0**
		15.7 (21.1)	200 (148)	32.5	415	87.5	1450	1700	**1FW3152-1■P■2-■■■0**
		23.6 (31.6)	300 (221)	47.5	412	87.5	1420	1700	**1FW3154-1■P■2-■■■0**
		31.4 (42.1)	400 (295)	64	401	87.5	1450	1700	**1FW3155-1■P■2-■■■0**
		39.3 (52.7)	500 (369)	76	415	87.5	1380	1700	**1FW3156-1■P■2-■■■0**

Shaft design:	
Hollow shaft	**A**
Plug-on shaft	**S**
Solid shaft without feather key	**M**
Solid shaft with feather key (half-key balanced)	**H**

For more information on dependencies and other options, see Article No. supplements for shaft design
> Hollow shaft > Plug-on shaft > Solid shaft

Further rated speeds on request.

For footnotes, see next page.

© Siemens 2024

Motor type (repeated)	Static torque	Stall current	Effi-ciency [3]	Moment of inertia	Weight, approx.	Terminal box	SINAMICS S120 Motor Module	
							Rated output current [4]	Internal air cooling For further components, see SINAMICS S120 drive system
	M_0 at ΔT=100 K	I_0 at ΔT=100 K	η	J	m		I_N	
	Nm (lb_f-ft)	A	%	kgm^2 (lb_f-in-s^2)	kg (lb)	Type	A	Article No.
1FW3150-1.P.2-....	105 (77.4)	17.5	90	0.12 (1.06)	87 (192)	gk230	18	**6SL3■20-1TE21-8AD0**
1FW3152-1.P.2-....	210 (155)	33.5	93	0.16 (1.42)	108 (238)	gk230	45	**6SL3■20-1TE24-5AC0**
1FW3154-1.P.2-....	315 (232)	49	93	0.20 (1.77)	129 (284)	gk230	60	**6SL3■20-1TE26-0AC0**
1FW3155-1.P.2-....	420 (310)	67	94	0.24 (2.12)	150 (331)	gk420	85	**6SL3■20-1TE28-5AA3**
1FW3156-1.P.2-....	525 (387)	80	94	0.28 (2.48)	171 (377)	gk420	85	**6SL3■20-1TE28-5AA3**

Format:	
Booksize	**1**
Chassis	**3**
Motor Module:	
Single Motor Module	**1**

8
4

[1] Maximum permissible operating speed based on the voltage induced in the motor and the voltage strength of the converter (without protective circuit).
[2] Maximum speed that must not be exceeded. Certain constraints may apply, see article number supplements.
[3] Optimum efficiency in continuous duty.
[4] The rated pulse frequencies must be taken into account. The rated motor data is valid for 4 kHz or 2 kHz.

© Siemens 2024

SIMOTICS T-1FW3 complete torque motors – water cooling

Selection and ordering data

Rated speed	Shaft height	Rated power	Rated torque	Rated current	Rated voltage	Rated frequency	Operating speed, max. [1]	Speed, max. [2]	**SIMOTICS T-1FW3 complete torque motors Water cooling**
n_N	SH	P_N at ΔT=100 K	M_N at ΔT=100 K	I_N at ΔT=100 K	U_N	f_N	$n_{max, Inv}$	n_{max}	
r/min		kW (hp)	Nm (lb_f-ft)	A	V	Hz	r/min	r/min	Article No.
Line voltage 400 V 3 AC Active Line Module									
800	200	20.5 (27.5)	245 (181)	37	350	106.7	1320	1800	**1FW3201-3■P■2-■■■0**
		39.5 (53.0)	470 (347)	69	358	106.7	1290	1800	**1FW3202-3■P■2-■■■0**
		57 (76.4)	680 (502)	96	368	106.7	1250	1800	**1FW3203-3■P■2-■■■0**
		78 (105)	930 (686)	137	353	106.7	1310	1800	**1FW3204-3■P■2-■■■0**
		114 (153)	1360 (1003)	192	368	106.7	1260	1800	**1FW3206-3■P■2-■■■0**
		159 (213)	1900 (1401)	270	365	106.7	1270	1800	**1FW3208-3■P■2-■■■0**
1200	200	29 (38.9)	230 (170)	50	367	160	1890	1800	**1FW3201-3■S■2-■■■0**
		55 (73.8)	440 (325)	92	376	160	1850	1800	**1FW3202-3■S■2-■■■0**
		79 (106)	630 (465)	131	377	160	1840	1800	**1FW3203-3■S■2-■■■0**
		108 (145)	860 (634)	191	353	160	1970	1800	**1FW3204-3■S■2-■■■0**
		152 (204)	1210 (892)	270	351	160	1980	1800	**1FW3206-3■S■2-■■■0**
		215 (288)	1700 (1254)	385	342	160	2050	1800	**1FW3208-3■S■2-■■■0**

Shaft design:	
Hollow shaft	**A**
Plug-on shaft	**S**
Solid shaft without feather key	**M**
Solid shaft with feather key (half-key balanced)	**H**

For more information on dependencies and other options, see Article No. supplements for shaft design
> Hollow shaft > Plug-on shaft > Solid shaft

Further rated speeds on request.

For footnotes, see next page.

© Siemens 2024

Motor type (repeated)	Static torque	Stall current	Effi-ciency [3]	Moment of inertia	Weight, approx.	Terminal box	SINAMICS S120 Motor Module	
							Rated output current [4]	Internal air cooling For further components, see SINAMICS S120 drive system
	M_0 at ΔT=100 K	I_0 at ΔT=100 K	η	J	m		I_N	
	Nm (lb_f-ft)	A	%	kgm^2 (lb_f-in-s^2)	kg (lb)	Type	A	Article No.
1FW3201-3P..	260 (192)	38	88.7	0.27 (2.39)	159 (351)	gk420	45	**6SL3120-1TE24-5AC0**
1FW3202-3P..	500 (369)	72	91	0.40 (3.54)	188 (415)	gk420	85	**6SL3120-1TE28-5AA3**
1FW3203-3P..	730 (538)	102	92.2	0.52 (4.60)	215 (474)	gk420	132	**6SL3120-1TE31-3AA3**
1FW3204-3P..	1000 (738)	145	92.8	0.69 (6.11)	259 (571)	gk630	200	**6SL3120-1TE32-0AA4**
1FW3206-3P..	1500 (1106)	210	93.3	0.94 (8.32)	342 (754)	1XB7700	200	**6SL3120-1TE32-0AA4**
1FW3208-3P..	2100 (1549)	295	93.7	1.24 (10.98)	412 (908)	1XB7700	310	**6SL3320-1TE33-1AA3**
1FW3201-3S..	260 (192)	54	90.1	0.27 (2.39)	159 (351)	gk420	60	**6SL3120-1TE26-0AC0**
1FW3202-3S..	500 (369)	102	92.2	0.40 (3.54)	188 (415)	gk420	132	**6SL3120-1TE31-3AA3**
1FW3203-3S..	730 (538)	149	93.5	0.52 (4.60)	215 (474)	gk630	132	**6SL3120-1TE31-3AA3**
1FW3204-3S..	1000 (738)	220	94	0.69 (6.11)	259 (571)	gk630	200	**6SL3120-1TE32-0AA4**
1FW3206-3S..	1500 (1106)	330	94.3	0.94 (8.32)	342 (754)	1XB7700	310	**6SL3320-1TE33-1AA3**
1FW3208-3S..	2100 (1549)	470	94.6	1.24 (10.98)	412 (908)	1XB7700	490	**6SL3320-1TE35-0AA3**

Format:	
Booksize	**1**
Chassis	**3**
Motor Module:	
Single Motor Module	**1**

8
4

[1] Maximum permissible operating speed based on the voltage induced in the motor and the voltage strength of the converter (without protective circuit).
[2] Maximum speed that must not be exceeded.
[3] Optimum efficiency in continuous duty.
[4] The rated pulse frequencies must be taken into account. The rated motor data is valid for 4 kHz or 2 kHz.

© Siemens 2024

Selection and ordering data

Article No. supplements for shaft design: Hollow shaft

Data position of the Article No.	1	2	3	4	5	6	7	-	8	9	10	11	12	-	13	14	15	16	-	Z
Shaft height 150	**1**	**F**	**W**	**3**	**1**	**5**	**.**	**–**	**1**	■	**.**	■	**2**	**–**	■	■	**A**	**0**	**–**	**Z**
Shaft height 200	**1**	**F**	**W**	**3**	**2**	**0**	**.**	**–**	**1**	■	**.**	■	**2**	**–**	■	■	**A**	**0**	**–**	**Z**
Shaft height 280	**1**	**F**	**W**	**3**	**2**	**8**	**.**	**–**	**.**	■	**.**	■	**3**	**–**	■	■	**A**	**0**	**–**	**Z**
Length [1]							**.**													
Standard version shaft height 150/shaft height 200									**1**											
Standard version shaft height 280									**2**											
High Speed version, shaft height 280									**3**											
Encoder systems for motors without DRIVE-CLiQ interface					**Mounting**											**D**				
Without encoder					–					**W**		**6**								
IC2048S/R encoder					Via toothed belt					**A**		**7**								
AM2048S/R encoder					Via toothed belt					**E**		**7**								
Multi-pole resolver					Via toothed belt					**S**		**7**								
Encoder systems for motors with DRIVE-CLiQ interface					**Mounting**											**A**				
IC22DQ encoder					Via toothed belt					**D**		**7**								
AM22DQ encoder					Via toothed belt					**F**		**7**								
R15DQ resolver					Via toothed belt					**U**		**7**								
Rated speeds at 400 V 3 AC (winding design)																				
150 r/min for Standard version, shaft height 200/shaft height 280											**E**									
250 r/min for Standard version, shaft height 280											**G**									
300 r/min for Standard version shaft height 150/shaft height 200											**H**									
400 r/min for High Speed version, shaft height 280											**J**									
500 r/min for Standard version, shaft height 150/shaft height 200											**L**									
600 r/min for High Speed version, shaft height 280											**M**									
750 r/min for Standard version, shaft height 150											**P**									
Type of construction																				
IM B14 for shaft height 150/shaft height 200 (flange mounting without feet, with threaded hole)													**2**							
IM B35 for shaft height 280 (hollow shaft design (flange and foot mounting)													**3**							
Power connection (when viewing DE)					**Cable outlet**															
Terminal box top					Transverse right										**5**					
Terminal box top					Transverse left										**6**					
Terminal box top					NDE										**7**					
Terminal box top					DE										**8**					
Shaft version																				
Hollow shaft																	**A**			
Special version (order codes required for options)																			**–**	**Z**

[1] Not selectable. Determined by the choice of rated power.

© Siemens 2024

Selection and ordering data

Article No. supplements for shaft design: Plug-on shaft

Data position of the Article No.	1	2	3	4	5	6	7	-	8	9	10	11	12	-	13	14	15	16	-	Z
Shaft height 150	**1**	**F**	**W**	**3**	**1**	**5**	**.**	**–**	**1**	■	**.**	**6**	**2**	**–**	■	**A**	**S**	**0**	**–**	**Z**
Shaft height 200	**1**	**F**	**W**	**3**	**2**	**0**	**.**	**–**	**.**	■	**.**	**6**	**2**	**–**	■	**A**	**S**	**0**	**–**	**Z**
Shaft height 280	**1**	**F**	**W**	**3**	**2**	**8**	**.**	**–**	**1**	■	**.**	**6**	**2**	**–**	■	**A**	**S**	**0**	**–**	**Z**
Length [1]							**.**													
Standard version shaft height 150/shaft height 200									**1**											
Standard version shaft height 280									**2**											
High Speed version shaft height 200/shaft height 280									**3**											
Encoder systems for motors without DRIVE-CLiQ interface					**Mounting**															
AM2048S/R encoder					Coaxial					**E**		**6**								
Encoder systems for motors with DRIVE-CLiQ interface					**Mounting**															
AS24DQI encoder					Coaxial					**B**		**6**								
AM24DQI encoder					Coaxial					**C**		**6**								
Rated speeds at 400 V 3 AC (winding design)																				
150 r/min for Standard version, shaft height 200/shaft height 280											**E**									
250 r/min for Standard version, shaft height 280											**G**									
300 r/min for Standard version shaft height 150/shaft height 200											**H**									
400 r/min for High Speed version, shaft height 280											**J**									
500 r/min for Standard version, shaft height 150/shaft height 200											**L**									
600 r/min for High Speed version, shaft height 280											**M**									
750 r/min for Standard version, shaft height 150											**P**									
800 r/min for High Speed version, shaft height 200											**P**									
1200 r/min for High Speed version, shaft height 200											**S**									
Type of construction																				
Plug-on mounting performed by the customer for shaft height 150/shaft height 200 (not according to EN 60034-7 (IEC 60034-7))													**2**							
Plug-on mounting performed by the customer for shaft height 280 (not according to EN 60034-7 (IEC 60034-7))													**8**							
Power connection (when viewing DE)	**Cable outlet**																			
Terminal box top	Transverse right														**5**					
Terminal box top	Transverse left														**6**					
Terminal box top	NDE														**7**					
Terminal box top	DE														**8**					
Shaft version																				
Plug-on shaft																	**S**			
Special version (order codes required for options)																			**–**	**Z**

[1] Not selectable. Determined by the choice of rated power.

© Siemens 2024

Selection and ordering data

Article No. supplements for shaft design: Solid shaft

Data position of the Article No.	1	2	3	4	5	6	7	-	8	9	10	11	12	-	13	14	15	16	-	Z
Shaft height 150	**1**	**F**	**W**	**3**	**1**	**5**	**.**	**–**	**.**	■	**.**	**6**	**2**	**–**	■	**A**	■	**0**	**–**	**Z**
Shaft height 200	**1**	**F**	**W**	**3**	**2**	**0**	**.**	**–**	**.**	■	**.**	**6**	**2**	**–**	■	**A**	■	**0**	**–**	**Z**
Shaft height 280	**1**	**F**	**W**	**3**	**2**	**8**	**.**	**–**	**.**	■	**.**	**6**	■	**–**	■	**A**	■	**0**	**–**	**Z**
Length [1]							**.**													
Standard version shaft height 150/shaft height 200									**1**											
Standard version shaft height 280									**2**											
High Speed version shaft height 200/shaft height 280									**3**											
Encoder systems for motors without DRIVE-CLiQ interface					**Mounting**															
AM2048S/R encoder					Coaxial					**E**		**6**								
Encoder systems for motors with DRIVE-CLiQ interface					**Mounting**															
AS24DQI encoder					Coaxial					**B**		**6**								
AM24DQI encoder					Coaxial					**C**		**6**								
Rated speeds at 400 V 3 AC (winding design)																				
150 r/min for Standard version, shaft height 200/shaft height 280											**E**									
250 r/min for Standard version, shaft height 280											**G**									
300 r/min for Standard version shaft height 150/shaft height 200											**H**									
400 r/min for High Speed version, shaft height 280											**J**									
500 r/min for Standard version, shaft height 150/shaft height 200											**L**									
600 r/min for High Speed version, shaft height 280											**M**									
750 r/min for Standard version, shaft height 150											**P**									
1050 r/min for High Speed version, shaft height 200											**P**									
1200 r/min for High Speed version, shaft height 200											**S**									
Type of construction																				
IM B14 for shaft height 150/shaft height 200 (flange mounting without feet, with threaded hole)													**2**							
IM B3 for shaft height 280 (foot mounting)													**6**							
IM B34 for shaft height 280 (flange mounting with feet, with threaded hole)													**4**							
Power connection (when viewing DE)	**Cable outlet**																			
Terminal box top	Transverse right														**5**					
Terminal box top	Transverse left														**6**					
Terminal box top	NDE														**7**					
Terminal box top	DE														**8**					
Shaft version																				
Solid shaft without feather key																	**M**			
Solid shaft with feather key (half-key balanced)																	**H**			
Special version (order codes required for options)																			**–**	**Z**

[1] Not selectable. Determined by the choice of rated power.

© Siemens 2024

Options

Order code	Description
A11	Motor protection using PTC thermistor (3 × PTC thermistor)
B02	Acceptance test certificate acc. to EN 10 204-3.1
G50	Sensor bore M8; DE and NDE
K40	Regreasing device
L03	Heavy-duty design for increased shock load
M02	Terminal box GK 603 with removable front plate
P01	Cable entry plate with 3 × M63 × 1.5 for terminal box 1XB7-700
P04	Cable entry plate with 4 × M63 × 1.5 for terminal box 1XB7-712
Q95	Special paint finish ALEXIT in color (X01 to X91)
T20	Shaft cover at NDE for hollow shaft
V07	Special grease lubrication for low speeds
X01	Paint finish jet black, matt RAL 9005
X02	Paint finish cream RAL 9001
X03	Paint finish reseda green RAL 6011
X04	Paint finish pebble gray RAL 7032
X05	Paint finish sky blue RAL 5015
X06	Paint finish light ivory RAL 1015
X08	Paint finish white aluminum RAL 9006
X13	Paint finish pastel blue RAL 5024
X14	Paint finish traffic blue RAL 5017
X15	Paint finish pure white RAL 9010
X16	Paint finish yellow green RAL 6018
X17	Paint finish pigeon blue RAL 5014
X18	Paint finish papyrus white RAL 9018
X22	Paint finish gray white RAL 9002
X29	Paint finish mouse gray RAL 7005
X30	Paint finish ivory RAL 1014
X31	Paint finish brilliant blue RAL 5007
X32	Paint finish pale green RAL 6021
X36	Paint finish traffic white RAL 9016
X53	Paint finish light gray RAL 7035

-Z must be added to the article number to order a motor with options.

Example:
Article No. with Pt1000
1FW3150-1AH72-5DA0**-Z**
A11+**X05**

© Siemens 2024

Accessories

Order code	Description
T32	Stator torque arm [4) 5)]
Q30	Clamping element [5)] • 1-section for plug-on shaft • 2-section for hollow shaft (not available for 1FW328)

-Z must be added to the article number to order a motor with options.

Example:
1FW3150-1AH72-5ADA0**-Z**
T32

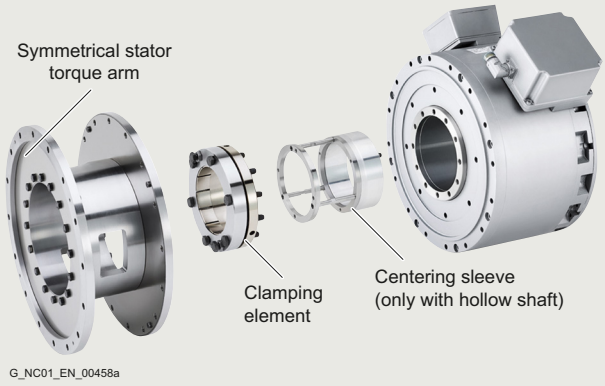

Terminal box, max. connectable cable cross-sections

Terminal box Type	Cable entry Power	 External signals	Outer cable diameter, max. [1)] mm (in)	Number of main terminals	Cross-section per terminal, max mm²	Rated current, max. [2)] A
gk230	2 × M32 × 1.5	1 × M16 × 1.5 [3)]	16 (0.63)	Phases: 3 × M5 Grounding: 1 × M4	2 × 16	50
gk420	2 × M40 × 1.5	1 × M16 × 1.5 [3)]	35 (1.38)	Phases: 3 × M10 Grounding: 1 × M6	2 × 35	105
gk630	2 × M50 × 1.5	2 × M16 ×1.5 [3)]	50 (1.97)	Phases: 3 × M10 Grounding: 1 × M10	2 × 50	260
1XB7700	3 × M75 × 1.5	2 × M16 × 1.5 [3)]	120 (4.72)	Phases: 3 × M12 Grounding: 1 × M12	3 × 120	450
1XB7712	4 × M75 × 1.5	4 × PG 13.5 1 × M20 × 1.5 1 × M25 × 1.5 [3)]	120 (4.72)	Phases: 3 × M16 Grounding: 1 × M16	4 × 120	800

[1)] Dependent on the design of the metric gland.
[2)] Current-carrying capacity based on EN 60204-1 and IEC 60364-5-52 for installation type C.
[3)] For option A11 or 9th data position W (without encoder).
[4)] Depending on motor type. Availability on request.
[5)] Not for solid shaft.

© Siemens 2024

SIMOTICS T-1FW6 built-in torque motors with internal rotor, Standard – water cooling or natural cooling

Dimensional drawings

Water cooling
1FW6050
1FW6060

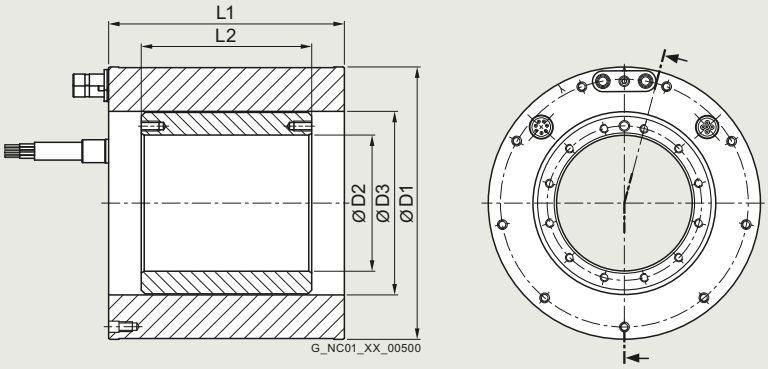

Natural cooling
1FW6053
1FW6063

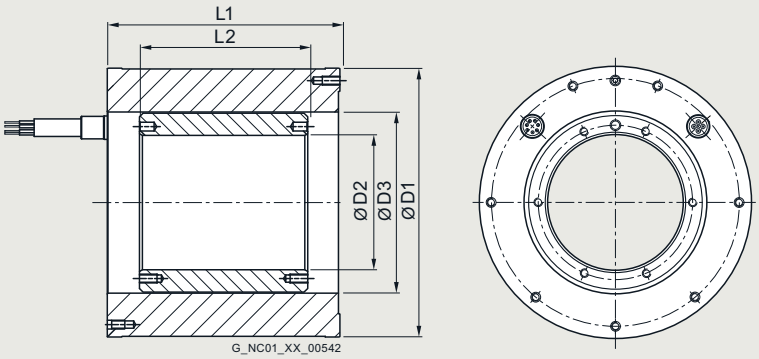

For motor	Dimensions in mm (inches)				
Type	D1	D2	D3	L1	L2
SIMOTICS T-1FW6 built-in torque motors Standard, water cooling or natural cooling					
1FW605.-0.B03	159 (6.26)	64 (2.52)	96 (3.78)	89 (3.50)	35 (1.38)
1FW605.-0.B05				109 (4.29)	65 (2.56)
1FW605.-0.B07				129 (5.08)	85 (3.35)
1FW605.-0.B10				159 (6.26)	115 (4.53)
1FW605.-0.B15				209 (8.23)	165 (6.50)
1FW606.-0.B03	184 (7.24)	92 (3.62)	124 (4.88)	89 (3.50)	35 (1.38)
1FW606.-0.B05				109 (4.29)	65 (2.56)
1FW606.-0.B07				129 (5.08)	85 (3.35)
1FW606.-0.B10				159 (6.26)	115 (4.53)
1FW606.-0.B15				209 (8.23)	165 (6.50)

© Siemens 2024

SIMOTICS T-1FW6 built-in torque motors with internal rotor, Standard – water cooling

Dimensional drawings

Water cooling
1FW6090
1FW6130
1FW6150

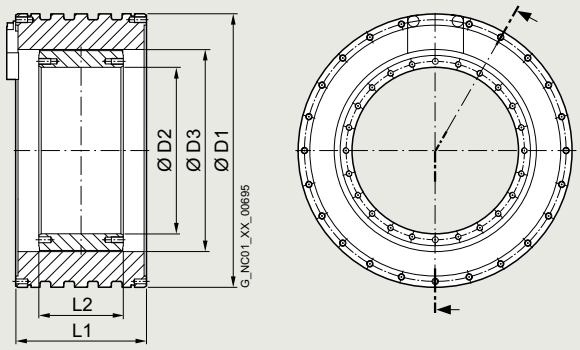

For motor	Dimensions in mm (inches)				
Type	D1	D2	D3	L1	L2
SIMOTICS T-1FW6 built-in torque motors Standard, water cooling					
1FW6090-0.B05	230 (9.06)	140 (5.51)	170 (6.69)	90 (3.54)	51 (2.01)
1FW6090-0.B07				110 (4.33)	71 (2.80)
1FW6090-0.B10				140 (5.51)	101 (3.98)
1FW6090-0.B15				190 (7.48)	151 (5.94)
1FW6130-0.B05	310 (12.20)	220 (8.66)	254 (10.00)	90 (3.54)	51 (2.01)
1FW6130-0.B07				110 (4.33)	71 (2.80)
1FW6130-0.B10				140 (5.51)	101 (3.98)
1FW6130-0.B15				190 (7.48)	151 (5.94)
1FW6150-0.B05	385 (15.16)	265 (10.43)	300 (11.81)	110 (4.33)	51 (2.01)
1FW6150-0.B07				130 (5.12)	71 (2.80)
1FW6150-0.B10				160 (6.30)	101 (3.98)
1FW6150-0.B15				210 (8.27)	151 (5.94)

© Siemens 2024

SIMOTICS T-1FW6 built-in torque motors with internal rotor, Standard – water cooling

Dimensional drawings

Water cooling
1FW6160
1FW6190
1FW6230
1FW6290

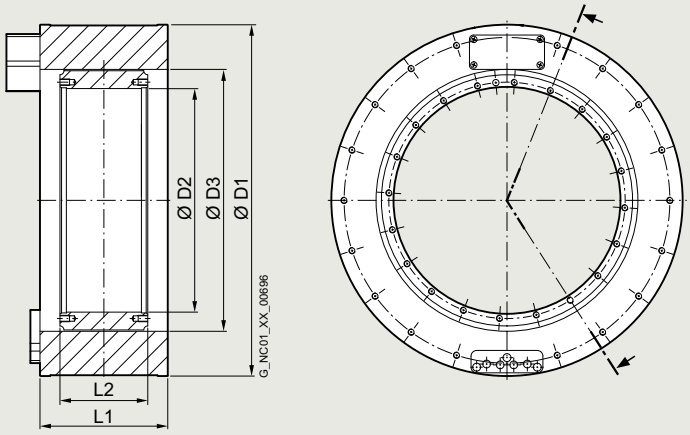

For motor	Dimensions in mm (inches)				
Type	D1	D2	D3	L1	L2
SIMOTICS T-1FW6 built-in torque motors Standard, water cooling					
1FW6160-0.B05	440 (17.32)	282 (11.10)	328 (12.91)	110 (4.33)	60 (2.36)
1FW6160-0.B07				130 (5.12)	80 (3.15)
1FW6160-0.B10-.J.2/-5G.2/-8FB2				160 (6.30)	110 (4.33)
1FW6160-0.B10-2PB2				170 (6.69)	110 (4.33)
1FW6160-0.B15-2J.2/-5G.2/-8FB2				210 (8.27)	160 (6.30)
1FW6160-0.B15-2PB2/-0WB2				220 (8.66)	160 (6.30)
1FW6160-0.B20-5G.2/-8FB2				260 (10.24)	210 (8.27)
1FW6160-0.B20-2PB2/-0WB2				270 (10.63)	210 (8.27)
1FW6190-0.B05	502 (19.76)	344 (13.54)	389 (15.31)	110 (4.33)	60 (2.36)
1FW6190-0.B07				130 (5.12)	80 (3.15)
1FW6190-0.B10-.J.2/-5G.2/-8FB2				160 (6.30)	110 (4.33)
1FW6190-0.B10-2PB2				170 (6.69)	110 (4.33)
1FW6190-0.B15-2J.2/-5G.2/-8FB2				210 (8.27)	160 (6.30)
1FW6190-0.B15-2PB2/-0WB2				220 (8.66)	160 (6.30)
1FW6190-0.B20-5G.2/-8FB2				260 (10.24)	210 (8.27)
1FW6190-0.B20-2PB2/-0WB2				270 (10.63)	210 (8.27)
1FW6230-0.B05	576 (22.68)	418 (16.46)	463 (18.23)	110 (4.33)	60 (2.36)
1FW6230-0.B07				130 (5.12)	80 (3.15)
1FW6230-0.B10				160 (6.30)	110 (4.33)
1FW6230-0.B15-4C.2/-5G.2/-8FB2/-2PB2				210 (8.27)	160 (6.30)
1FW6230-0.B15-0WB2				220 (8.66)	160 (6.30)
1FW6230-0.B20-5G.2/-8FB2/-2PB2				260 (10.24)	210 (8.27)
1FW6230-0.B20-0WB2				270 (10.63)	210 (8.27)
1FW6290-0.B07-5G.2/-0LB2	730 (28.74)	522 (20.55)	580 (22.83)	140 (5.51)	90 (3.54)
1FW6290-0.B07-2PB2				160 (6.30)	90 (3.54)
1FW6290-0.B11-7A.2/-0LB2				180 (7.09)	130 (5.12)
1FW6290-0.B11-2PB2				200 (7.87)	130 (5.12)
1FW6290-0.B15-7A.2/-0LB2				220 (8.66)	170 (6.69)
1FW6290-0.B15-2PB2				240 (9.45)	170 (6.69)
1FW6290-0.B20-0LB2				260 (10.24)	210 (8.27)
1FW6290-0.B20-2PB2				280 (11.02)	210 (8.27)

© Siemens 2024

SIMOTICS T-1FW6 built-in torque motors with internal rotor, High Speed – water cooling

Dimensional drawings

Water cooling
1FW6092
1FW6132
1FW6152

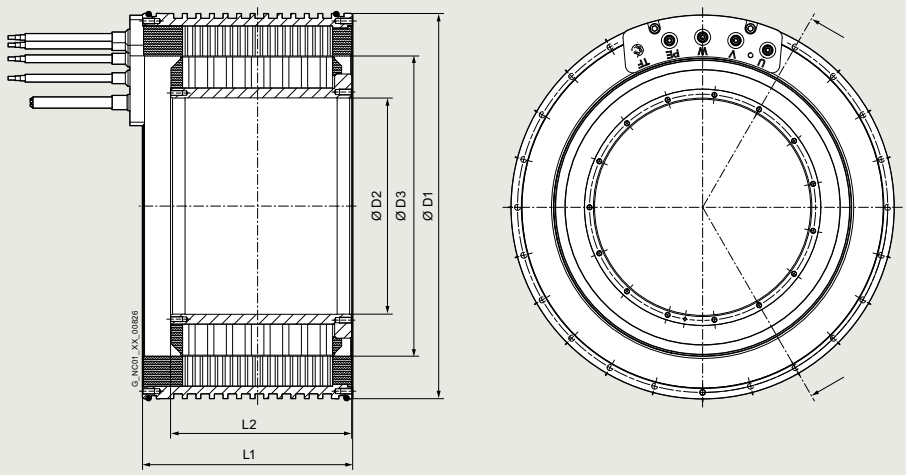

For motor	Dimensions in mm (inches)				
Type	D1	D2	D3	L1	L2
SIMOTICS T-1FW6 High Speed built-in torque motors, water cooling					
1FW6092-8PC05	230 (9.06)	89 (3.50)	170 (6.69)	100 (3.94)	81 (3.19)
1FW6092-8PC10				150 (5.91)	131 (5.16)
1FW6092-8PC15				200 (7.87)	181 (7.13)
1FW6132-8PC05	310 (12.20)	156 (6.14)	240 (9.45)	100 (3.94)	81 (3.19)
1FW6132-8PC10				150 (5.91)	131 (5.16)
1FW6132-8PC15				200 (7.87)	181 (7.13)
1FW6152-8PC05	385 (15.16)	216 (8.50)	300 (11.81)	110 (4.33)	81 (3.19)
1FW6152-8PC10				160 (6.30)	131 (5.16)
1FW6152-8PC15				210 (8.27)	181 (7.13)

© Siemens 2024

SIMOTICS T-1FW6 built-in torque motors with internal rotor, High Speed – water cooling

Dimensional drawings

Water cooling
1FW6192
1FW6232

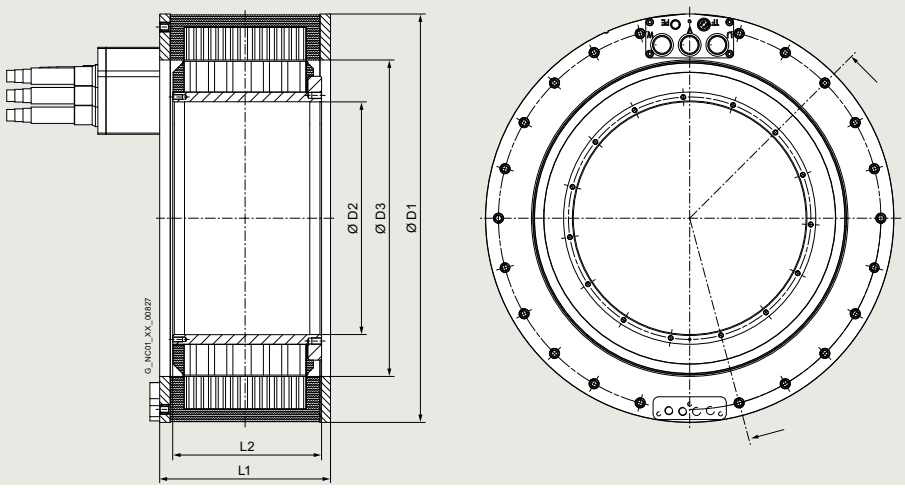

For motor	Dimensions in mm (inches)				
Type	D1	D2	D3	L1	L2
SIMOTICS T-1FW6 High Speed built-in torque motors, water cooling					
1FW6192-8.C05	502 (19.76)	286 (11.26)	389 (15.31)	110 (4.33)	83 (3.27)
1FW6192-8.C10-8F..				160 (6.30)	133 (5.24)
1FW6192-8.C10-2P..				170 (6.69)	133 (5.24)
1FW6192-8.C15-8F..				210 (8.27)	183 (7.20)
1FW6192-8.C15-0W..				220 (8.66)	183 (7.20)
1FW6192-8.C20-8F..				260 (10.24)	233 (9.17)
1FW6192-8.C20-0W..				270 (10.63)	233 (9.17)
1FW6232-8.C05	576 (22.68)	360 (14.17)	463 (18.23)	110 (4.33)	83 (3.27)
1FW6232-8.C10-2P..				160 (6.30)	133 (5.24)
1FW6232-8.C10-0W..				170 (6.69)	133 (5.24)
1FW6232-8.C15-2P..				210 (8.27)	183 (7.20)
1FW6232-8.C15-0W..				220 (8.66)	183 (7.20)
1FW6232-8.C20-2P..				260 (10.24)	233 (9.17)
1FW6232-8.C20-0W..				270 (10.63)	233 (9.17)

© Siemens 2024

SIMOTICS T-1FW6 built-in torque motors with external rotor, Standard – water cooling

Dimensional drawings

Water cooling
1FW6720

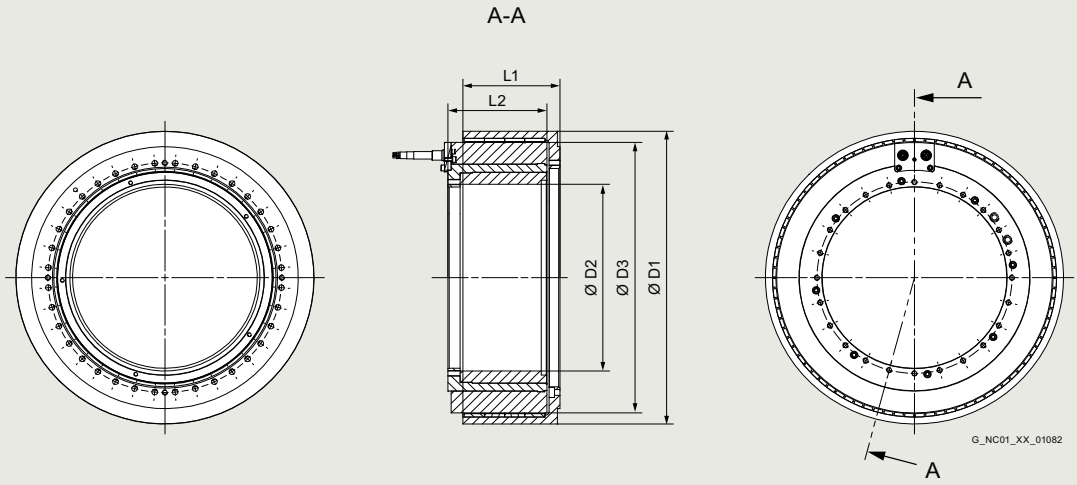

For motor	Dimensions in mm (inches)					
Type	D1 (outer diameter)	D2 (inner diameter stator)	D3 (inner diameter rotor)	L1 (total length)	L2 (rotor length)	L3 (stator length)
SIMOTICS T-1FW6 built-in torque motors with external rotor, water cooling						
1FW6720-8PB07	436 (17.70)	270 (10.36)	325 [1] (12.80)	140 (5.51)	116 (4.57)	121 (4.76)
1FW6720-8PB10				164 (6.46)	142 (5.59)	145 (5.71)
1FW6720-8PB12				186 (7.32)	153 (6.02)	167 (6.57)
1FW6720-8PB14				212 (8.35)	181 (7.13)	193 (7.60)

[1] With option S80, the inner diameter of the rotor is 260 mm (10.24 in).

© Siemens 2024

Dimensional drawings

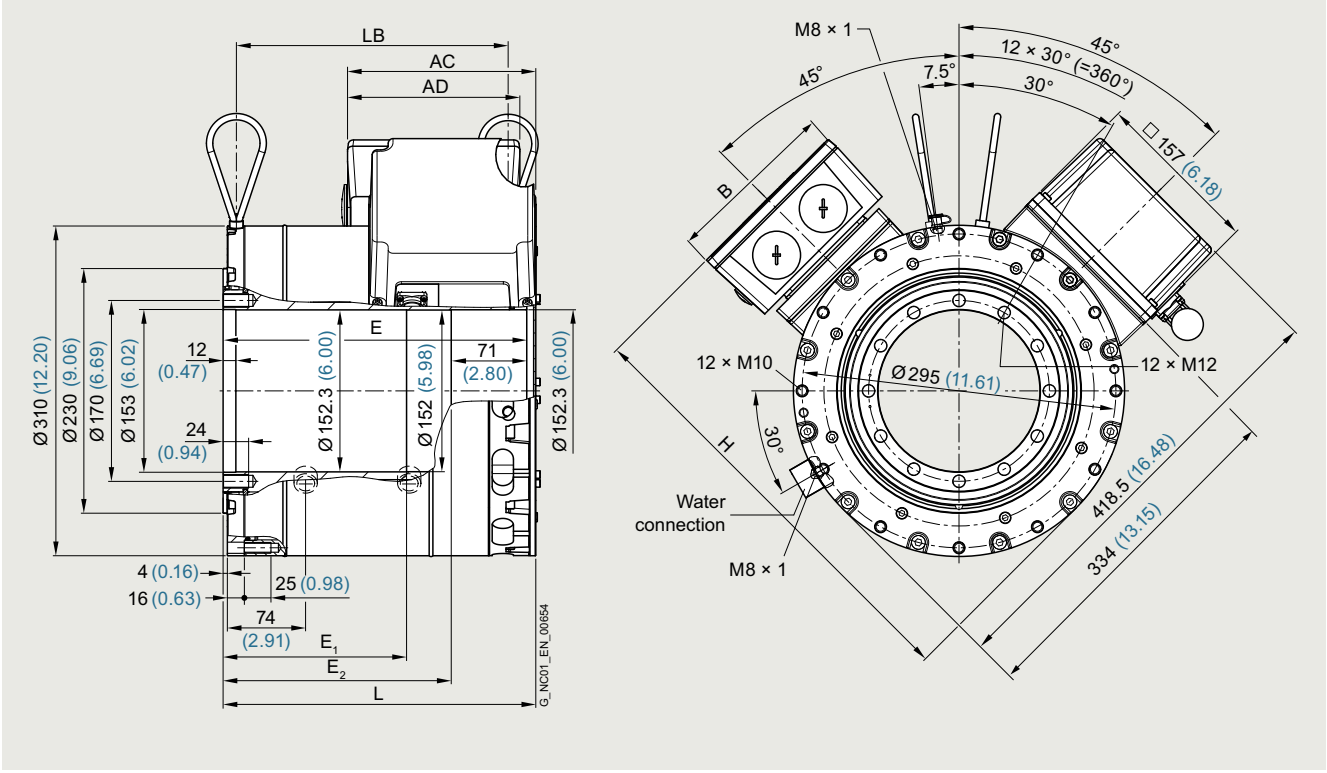

For motor		Dimensions in mm (inches)					
Shaft height	Type	IEC	L	LB	E	E_1	E_2
SIMOTICS T-1FW3 complete torque motors, type of construction IM B14, hollow shaft							
150	1FW3150		260.5 (10.26)	226 (8.90)	256 (10.08)	141 (5.55)	185 (7.28)
	1FW3152		317.5 (12.50)	283 (11.14)	313 (12.32)	198 (7.80)	242 (9.53)
	1FW3154		366.5 (14.43)	332 (13.07)	362 (14.52)	247 (9.72)	291 (11.46)
	1FW3155		418.5 (16.48)	384 (15.12)	414 (16.30)	299 (11.77)	343 (13.50)
	1FW3156		471.5 (18.56)	437 (17.20)	467 (18.39)	352 (13.86)	396 (15.59)

Terminal box type	H	AC	AD × B
gk 230	393 (15.47)	159.5 (6.28)	122 × 117 (4.80 × 4.61)
gk 420	410 (16.14)	177 (6.97)	162 × 162 (6.38 × 6.38)
gk 630	427 (16.81)	225.5 (8.88)	210 × 210 (8.27 × 8.27)

© Siemens 2024

Dimensional drawings

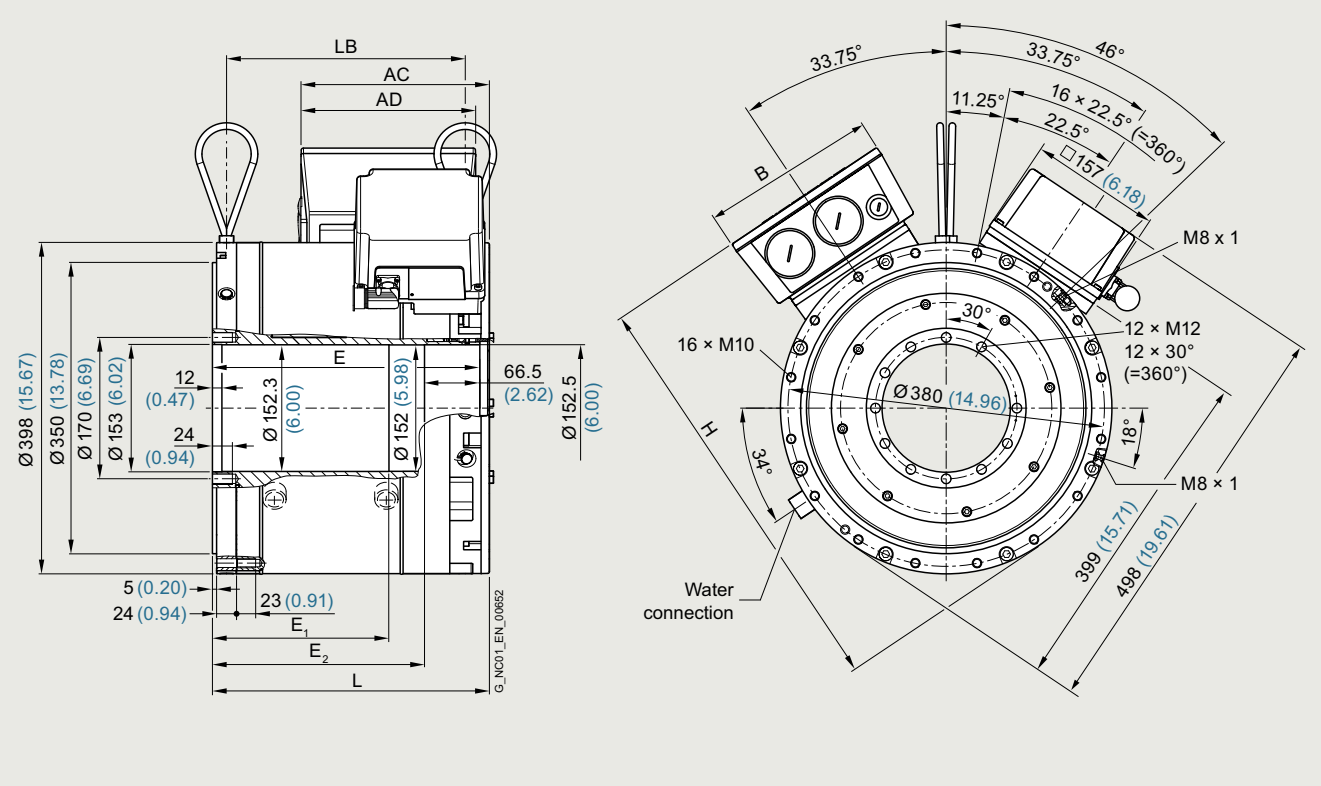

For motor			Dimensions in mm (inches)				
Shaft height	Type	IEC	L	LB	E	E_1	E_2
SIMOTICS T-1FW3 complete torque motors, type of construction IM B14, hollow shaft							
200	1FW3201		235.5 (9.27)	194.5 (7.66)	229 (9.02)	120 (4.72)	162.5 (6.40)
	1FW3202		281.5 (11.08)	240.5 (9.47)	275 (10.83)	166 (6.54)	208.5 (8.21)
	1FW3203		328 (12.91)	287 (11.30)	321.5 (12.66)	212 (8.35)	255 (10.04)
	1FW3204		397 (15.63)	356 (14.02)	390.5 (15.37)	281 (11.06)	324 (12.76)
	1FW3206		489.5 (19.27)	448.5 (17.66)	483 (19.02)	374 (14.72)	416.5 (16.40)
	1FW3208		604.5 (23.80)	563.5 (22.18)	598 (23.54)	489 (19.25)	531.5 (20.93)

Terminal box type	H	AC	AD × B
gk 230	475 (18.00)	158 (6.22)	122 × 117 (4.80 × 4.61)
gk 420	490 (19.29)	175 (6.89)	162 × 162 (6.38 × 6.38)
gk 630	508 (20.00)	226 (8.90)	210 × 210 (8.27 × 8.27)

© Siemens 2024

Dimensional drawings

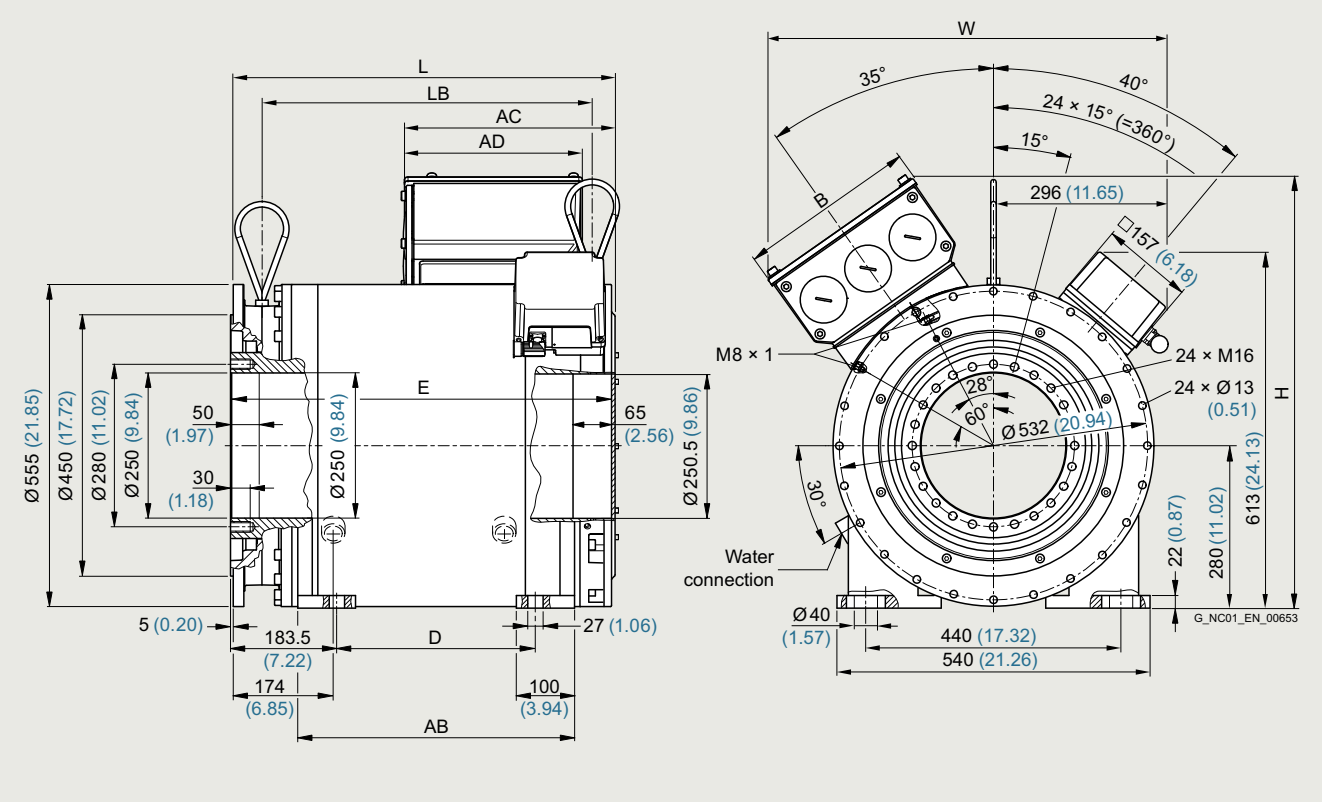

For motor		Dimensions in mm (inches)					
Shaft height	Type	IEC	L	LB	D	E	AB
SIMOTICS T-1FW3 complete torque motors, type of construction IM B35, hollow shaft							
280	1FW3281		574 (22.60)	483.5 (19.04)	258 (10.16)	571 (22.48)	393 (15.47)
	1FW3283		658.5 (26.99)	568 (22.36)	342.5 (13.48)	655.5 (25.81)	477.5 (18.80)
	1FW3285		784.5 (30.98)	694 (27.32)	468.5 (18.44)	781.5 (30.77)	603.5 (23.76)
	1FW3287		953 (37.52)	862.5 (33.96)	637 (25.08)	950 (37.40)	772 (30.39)

Terminal box type	H	W	AC	AD × B
1XB7700	743 (29.95)	684 (26.93)	363 (14.29)	306 × 306 (12.05 × 12.05)
1XB7712 (axial DE)	836 (32.91)	764 (30.08)	354 (13.94)	371 × 370 (14.61 × 14.57)
1XB7712 (axial NDE)	836 (32.91)	764 (30.08)	385 (15.16)	371 × 370 (14.61 × 14.57)
1XB7712 (radial left)	846 (33.31)	751 (29.57)	369 (14.53)	371 × 370 (14.61 × 14.57)
1XB7712 (radial right)	828 (32.60)	777 (30.59)	369 (14.53)	371 × 370 (14.61 × 14.57)

© Siemens 2024

Dimensional drawings

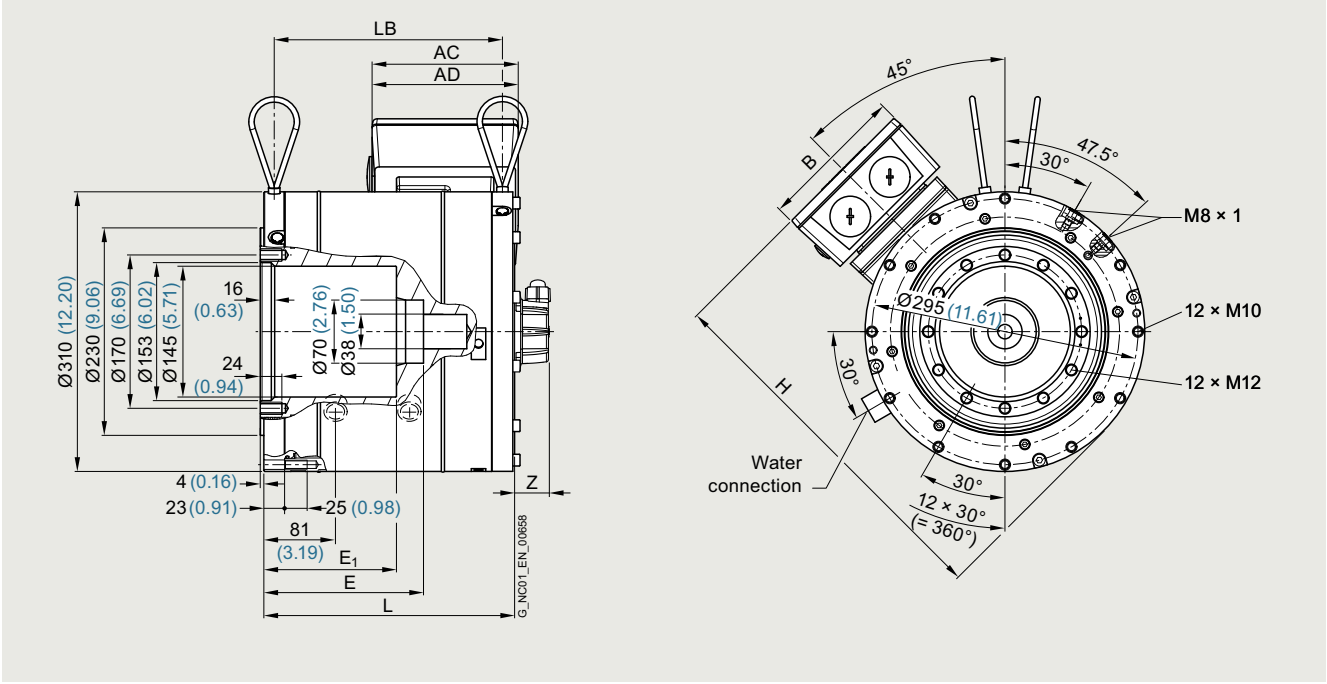

For motor		Dimensions in mm (inches)					
Shaft height	Type	IEC	L	LB	E	E_1	Z [1]
SIMOTICS T-1FW3 complete torque motors, plug-on mounting performed by the customer, plug-on shaft							
150	1FW3150		248.5 (9.78)	223.5 (8.80)	151.5 (5.96)	121.5 (4.78)	38 (1.50)
	1FW3152		305.5 (12.03)	280.5 (11.04)	204.5 (8.05)	174.5 (6.88)	
	1FW3154		354.5 (13.96)	329.5 (12.97)	255 (10.04)	225 (8.86)	
	1FW3155		406.5 (16.00)	381.5 (15.02)	307 (12.09)	277 (10.91)	
	1FW3156		459.5 (18.09)	434.5 (17.11)	360 (14.17)	330 (12.99)	

Terminal box type	H	AC	AD × B
gk 230	393 (15.47)	140.5 (5.53)	122 × 117 (4.80 × 4.61)
gk 420	409 (16.10)	158 (6.22)	162 × 162 (6.38 × 6.38)
gk 630	427 (16.81)	206.5 (8.13)	210 × 210 (8.27 × 8.27)

[1] Encoder without DRIVE-CLiQ: 43 mm (1.69 in).

© Siemens 2024

Dimensional drawings

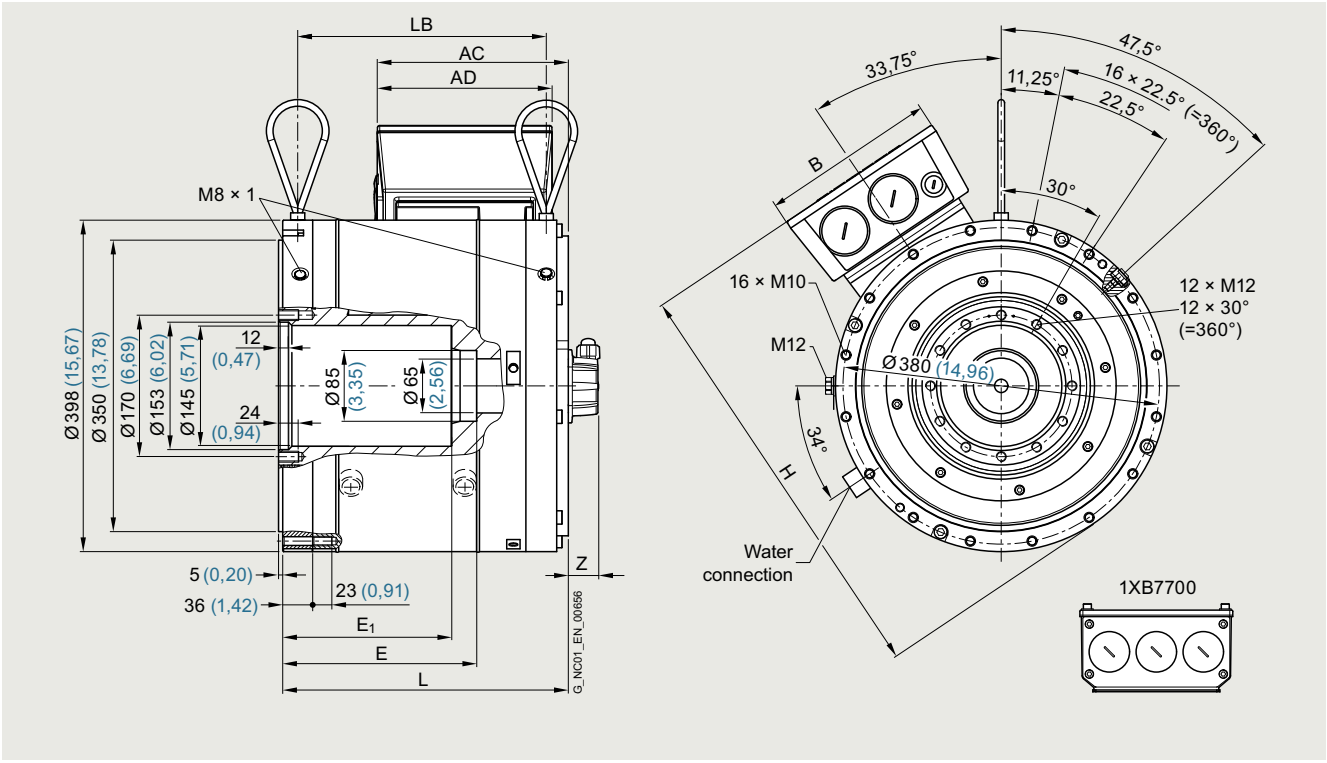

For motor		Dimensions in mm (inches)					
Shaft height	Type	IEC	L	LB	E	E_1	Z [1]
SIMOTICS T-1FW3 complete torque motors, plug-on mounting performed by the customer, plug-on shaft							
200	1FW3201		250.5 (9.86)	206 (8.11)	145.5 (5.53)	115.5 (4.35)	36 (1.42)
	1FW3202		296.5 (11.67)	252 (9.92)	192 (7.36)	162 (6.18)	
	1FW3203		343 (13.50)	298.5 (11.75)	238 (9.17)	208 (7.99)	
	1FW3204		412 (16.22)	367.5 (14.47)	307 (11.89)	277 (10.71)	
	1FW3206		504.5 (19.86)	460 (18.11)	400 (15.55)	370 (14.37)	
	1FW3208		619.5 (24.39)	575 (22.74)	514.5 (20.06)	484.5 (18.88)	

Terminal box type	H	AC	AD × B
gk 230	475 (18.70)	161 (6.34)	122 × 117 (4.80 × 4.61)
gk 420	491 (19.33)	178.5 (7.03)	162 × 162 (6.38 × 6.38)
gk 630	507 (19.96)	229.5 (9.04)	210 × 210 (8.27 × 8.27)
1XB7700	580 (22.83)	307 (12.09)	306 × 306 (12.05 × 12.05)

[1] Encoder without DRIVE-CLiQ: 41 mm (1.61 in).

© Siemens 2024

Dimensional drawings

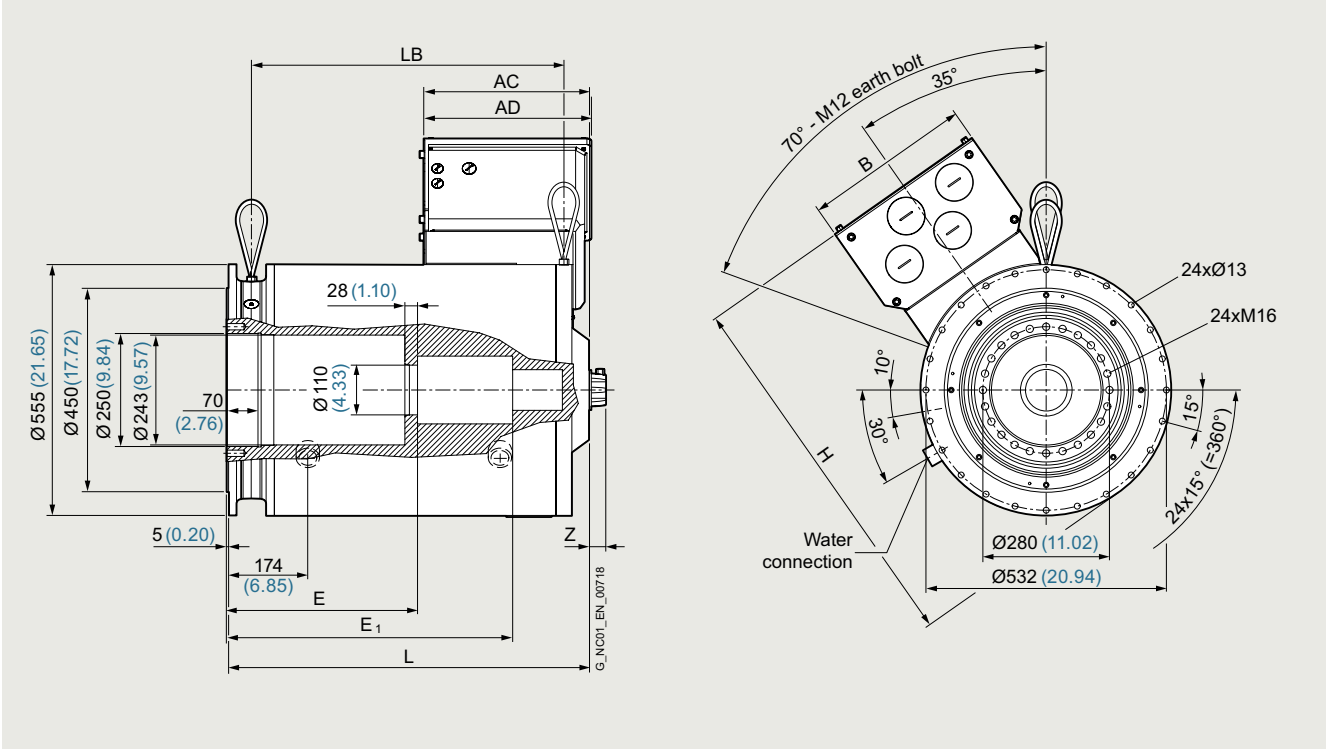

For motor		Dimensions in mm (inches)					
Shaft height	Type	IEC	L	LB	E	E_1	Z [1]
SIMOTICS T-1FW3 complete torque motors, plug-on mounting performed by the customer, plug-on shaft							
280	1FW3281		588 (23.50)	481 (18.94)	313 (12.32)	423 (16.65)	36 (1.42)
	1FW3283		672.5 (26.48)	565.5 (22.26)	358 (14.09)	507.5 (19.98)	
	1FW3285		798.5 (31.44)	691.5 (27.22)	423 (16.65)	633.5 (24.94)	
	1FW3287		967 (38.07)	860 (33.86)	508 (29.00)	802 (31.57)	

Terminal box type	H	AC	AD × B
1XB7700	737 (29.02)	413 (16.26)	306 × 306 (12.05 × 12.05)
1XB7712 (axial DE)	827 (32.56)	404 (15.91)	371 × 370 (14.61 × 14.57)
1XB7712 (axial NDE)	827 (32.56)	435 (17.17)	371 × 370 (14.61 × 14.57)
1XB7712 (radial left)	827 (32.56)	419 (16.50)	371 × 370 (14.61 × 14.57)
1XB7712 (radial right)	827 (32.56)	419 (16.50)	371 × 370 (14.61 × 14.57)

[1] Encoder without DRIVE-CLiQ: 41 mm (1.61 in).

© Siemens 2024

Dimensional drawings

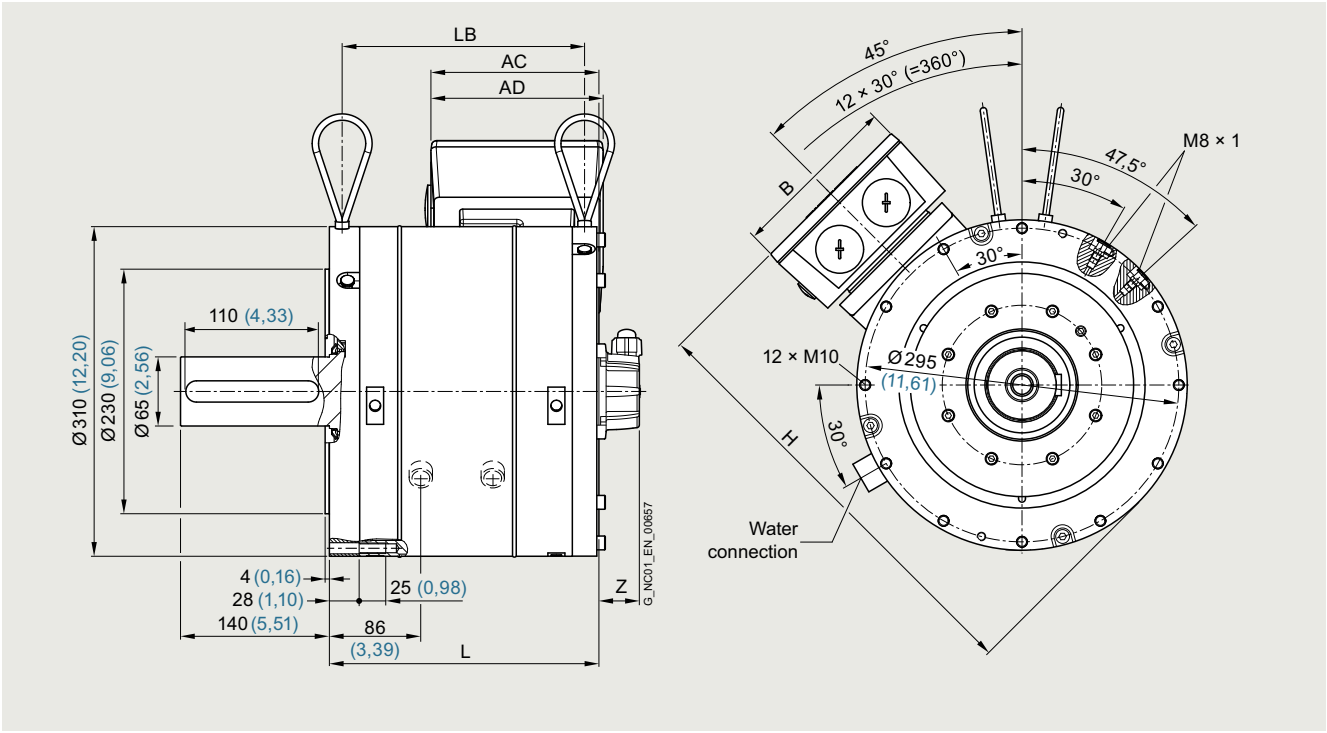

For motor		Dimensions in mm (inches)			
Shaft height	Type	IEC	L	LB	Z [1]
SIMOTICS T-1FW3 complete torque motors, type of construction IM B14, solid shaft with/without feather key					
150	1FW3150		253.5 (9.98)	228 (8.98)	38 (1.50)
	1FW3152		283 (11.14)	257.5 (10.14)	
	1FW3154		338 (13.31)	312.5 (12.30)	
	1FW3155		386.5 (15.22)	361 (14.21)	
	1FW3156		440.5 (17.34)	415 (16.34)	

Terminal box type	H	AC	AD × B
gk 230	393 (15.47)	140.5 (5.53)	122 × 117 (4.80 × 4.61)
gk 420	409 (16.10)	158 (6.22)	162 × 162 (6.38 × 6.38)
gk 630	427 (16.81)	206.5 (8.13)	210 × 210 (8.27 × 8.27)

[1] Encoder without DRIVE-CLiQ: 43 mm (1.69 in).

© Siemens 2024

Dimensional drawings

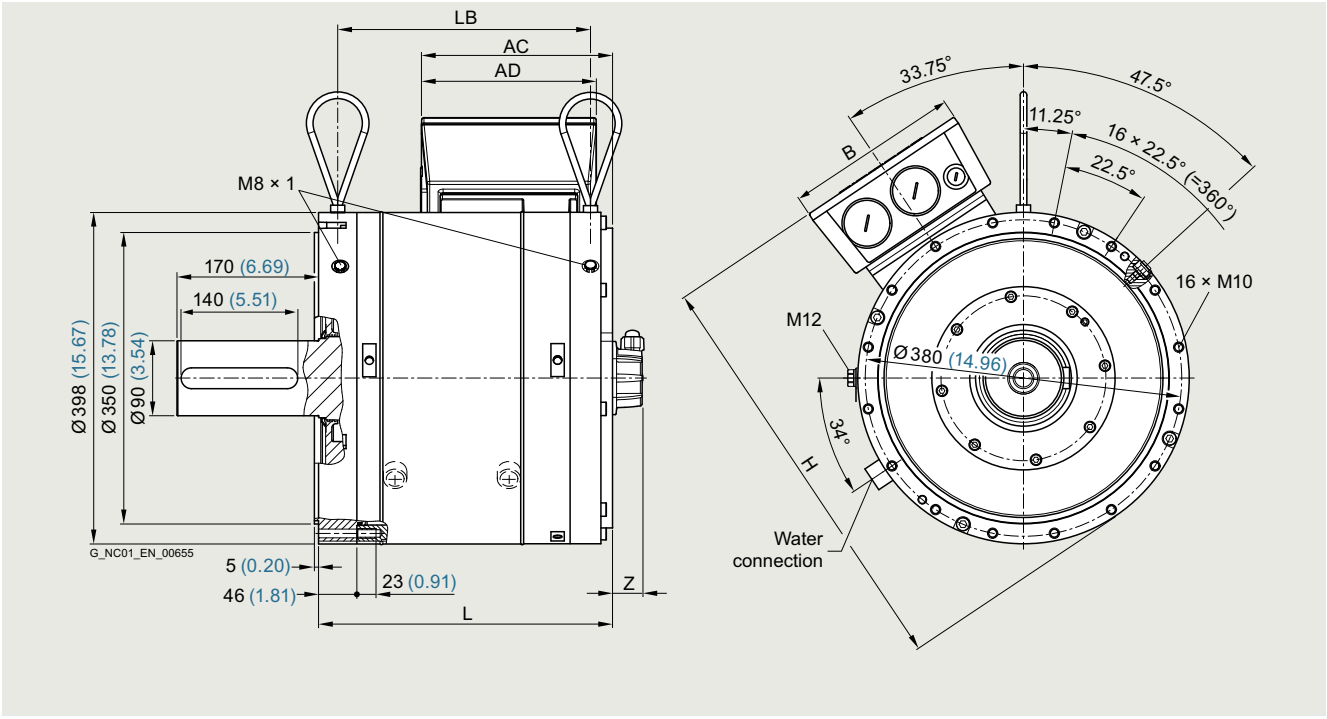

For motor		Dimensions in mm (inches)			
Shaft height	Type	IEC	L	LB	Z [1]
SIMOTICS T-1FW3 complete torque motors, type of construction IM B14, solid shaft with/without feather key					
200	1FW3201		260.5 (10.26)	211 (8.31)	36 (1.42)
	1FW3202		306.5 (12.07)	257 (10.12)	
	1FW3203		353 (13.90)	303.5 (11.95)	
	1FW3204		422 (16.61)	372.5 (14.67)	
	1FW3206		514.5 (20.26)	465 (18.31)	
	1FW3208		629.5 (24.78)	580 (22.83)	

Terminal box type	H	AC	AD × B
gk 230	475 (18.70)	167 (6.57)	122 × 117 (4.80 × 4.61)
gk 420	491 (19.33)	178.5 (7.03)	162 × 162 (6.38 × 6.38)
gk 630	507 (19.96)	229.5 (9.04)	210 × 210 (8.27 × 8.27)
1XB7700	580 (22.83)	307 (12.09)	306 × 306 (12.05 × 12.05)

[1] Encoder without DRIVE-CLiQ: 41 mm (1.61 in).

© Siemens 2024

Dimensional drawings

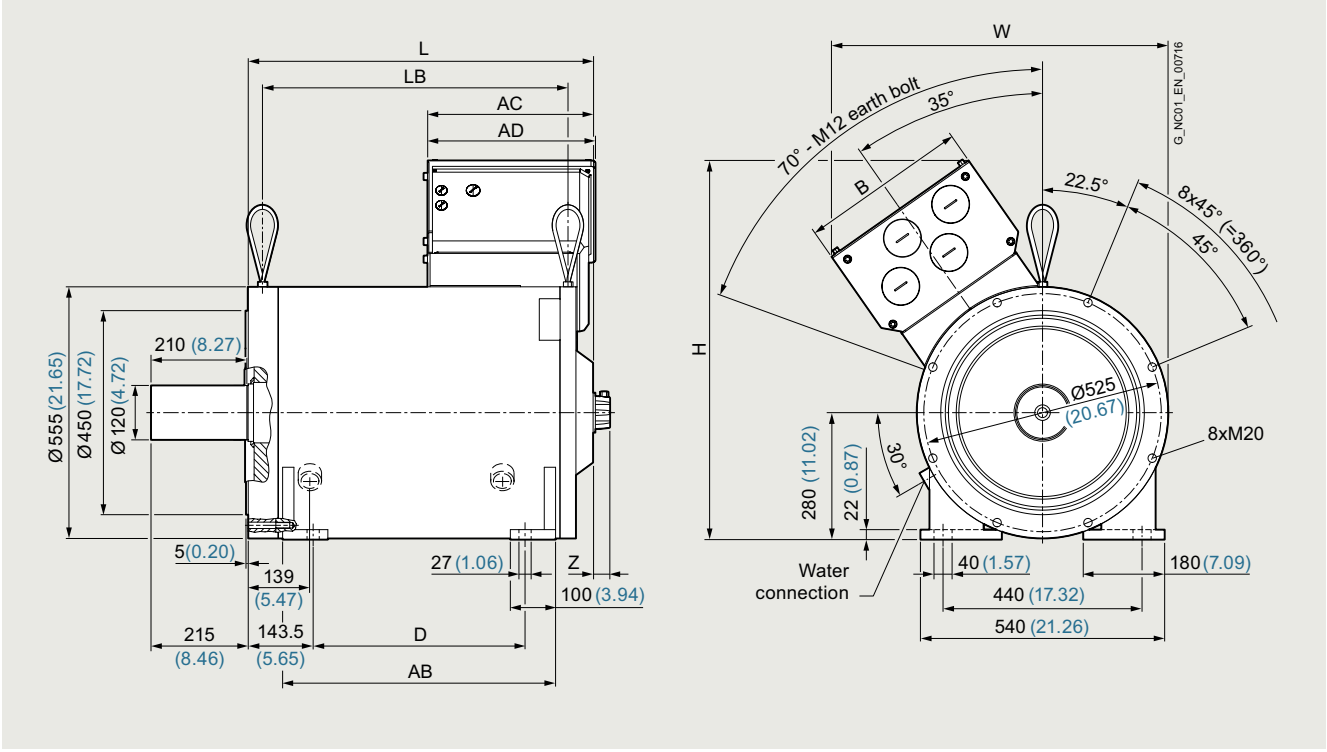

For motor		Dimensions in mm (inches)					
Shaft height	Type	IEC	L	LB	D	AB	Z [1]
SIMOTICS T-1FW3 complete torque motors, type of construction IM B34, solid shaft with/without feather key							
280	1FW3281		553 (21.77)	463.5 (18.25)	258 (10.16)	393 (15.47)	36 (1.42)
	1FW3283		637.5 (25.10)	548 (21.57)	342.5 (13.48)	477.5 (18.80)	
	1FW3285		763.5 (30.06)	674 (26.54)	468.5 (18.44)	603.5 (23.76)	
	1FW3287		932 (36.69)	842.5 (33.17)	637 (25.08)	772 (30.39)	

Terminal box type	H	W	AC	AD × B
1XB7700	742 (29.21)	665 (26.18)	377 (14.84)	306 × 306 (12.05 × 12.05)
1XB7712 (axial DE)	836 (32.91)	744 (29.29)	367 (14.45)	371 × 370 (14.61 × 14.57)
1XB7712 (axial NDE)	836 (32.91)	744 (29.29)	398 (15.67)	
1XB7712 (radial left)	846 (33.31)	732 (28.82)	382 (15.04)	
1XB7712 (radial right)	828 (32.60)	764 (30.08)	382 (15.04)	

[1] Encoder without DRIVE-CLiQ: 41 mm (1.61 in).

© Siemens 2024

Dimensional drawings

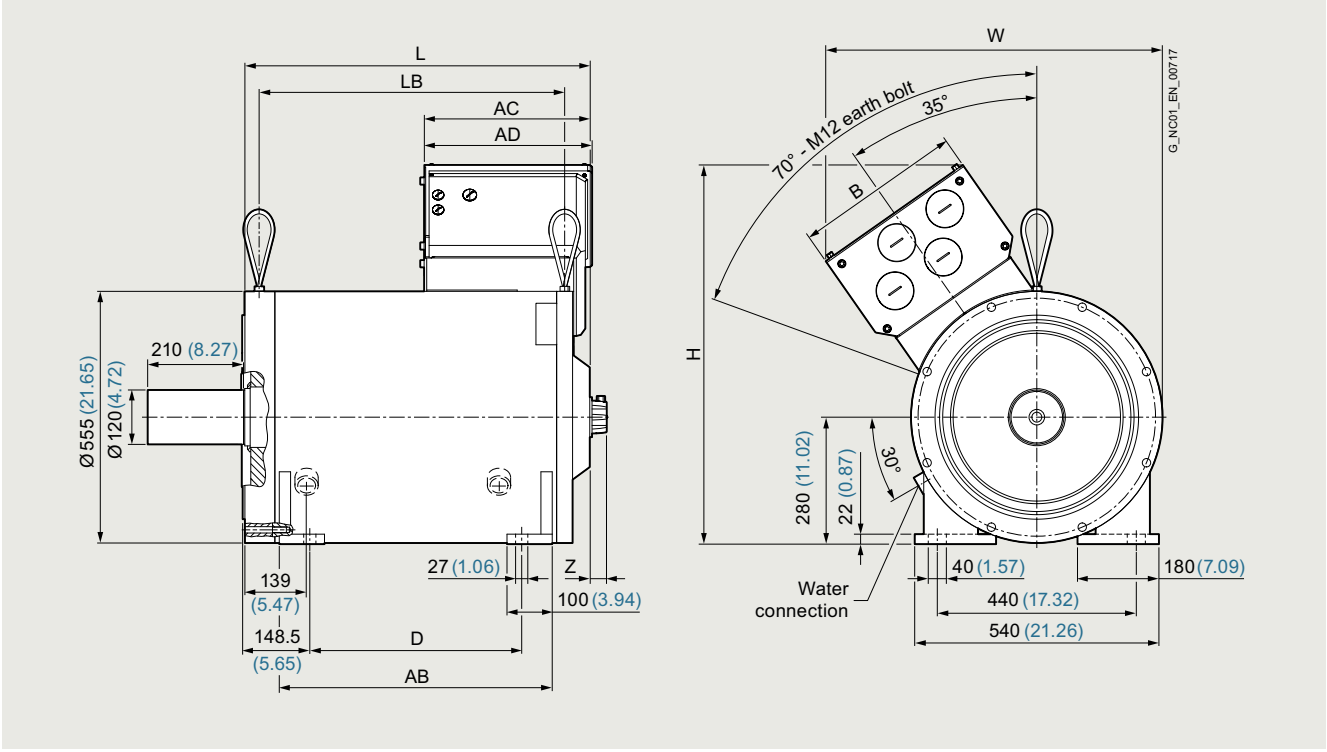

For motor		Dimensions in mm (inches)					
Shaft height	Type	IEC	L	LB	D	AB	Z [1]
SIMOTICS T-1FW3 complete torque motors, solid shaft, IM B3							
280	1FW3281		553 (21.77)	463.5 (18.25)	258 (10.16)	393 (15.47)	36 (1.42)
	1FW3283		637.5 (25.10)	548 (21.57)	342.5 (13.48)	477.5 (18.80)	
	1FW3285		763.5 (30.06)	674 (26.54)	468.5 (18.44)	603.5 (23.76)	
	1FW3287		932 (36.69)	842.5 (33.17)	637 (25.08)	772 (30.39)	

Terminal box type	H	W	AC	AD × B
1XB7700	742 (29.21)	665 (26.18)	377 (14.84)	306 × 306 (12.05 × 12.05)
1XB7712 (axial DE)	836 (32.91)	744 (29.29)	367 (14.45)	371 × 370 (14.61 × 14.57)
1XB7712 (axial NDE)	836 (32.91)	744 (29.29)	398 (15.67)	
1XB7712 (radial left)	846 (33.31)	732 (28.82)	382 (15.04)	
1XB7712 (radial right)	828 (32.60)	764 (30.08)	382 (15.04)	

[1] Encoder without DRIVE-CLiQ: 41 mm (1.61 in).

© Siemens 2024



9/2 **Built-on optoelectronic rotary encoders**
9/2 Introduction
9/4 Incremental encoders
9/7 Absolute encoders
9/13 Accessories

Part 12 **Siemens Product Configurator selection tool**
Product selection via selectors
www.siemens.com/spc

© Siemens 2024

Introduction

Overview

Motion control encoder	Interface	Built-on encoder usable for Safety Integrated[1)]	Resolution S/R = signals/revolution	Accuracy arcsec	Cable length m (ft)	Degree of protection at housing (at shaft input)
Incremental encoders						
	sin/cos 1 V_{pp}	No	1000 ... 2500 S/R	± 18 mech. × 3600/ PPR count *z*	150 (492)	IP67 (IP64)
	RS422 (TTL)	No	500 ... 5000 S/R	± 18 mech. × 3600/ PPR count *z*	100 (328)	IP67 (IP64)
	HTL	No	100 ... 2500 S/R	± 18 mech. × 3600/ PPR count *z*	300 (984)	IP67 (IP64)
Absolute encoders						
	DRIVE-CLiQ	Yes	Single-turn 24 bit Multi-turn 36 bit (2^{24} steps × 4096 revolutions)	± 20	100 (328)	IP67 (IP64)
	SSI	No	Single-turn 13 bit (8192 steps) Multi-turn 25 bit (8192 steps × 4096 revolutions)	± 60	100 (328)	IP67 (IP64)
	EnDat 2.1	Yes	Single-turn 13 bit (8192 steps) Multi-turn 25 bit (8192 steps × 4096 revolutions)	± 60 (incremental track)	150 (492)	IP67 (IP64)
	PROFIBUS DP-V2	No	Single-turn 13 bit (8192 steps) Multi-turn 27 bit (8192 steps × 16384 revolutions)	± 79	100 (328)	IP67 (IP64)
	PROFINET IO with RT/IRT	No	Single-turn 13 bit/16 bit (8192/65536 steps) Multi-turn 27 bit/30 bit (8192/65536 steps × 16384 revolutions)	± 79	100 (328)	IP67 (IP64)
Accessories for measuring systems						
Couplings Clamps Signal connectors as mating connectors MOTION-CONNECT DRIVE-CLiQ signal cables						

[1)] If you require information about the usability of motion control encoder measuring systems for Safety Integrated, please contact your local Siemens office.

© Siemens 2024

Overview

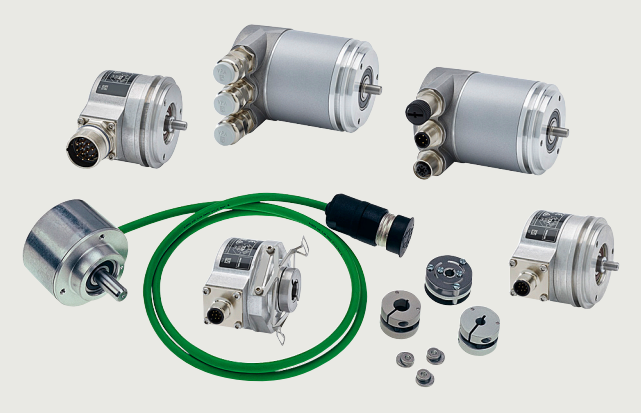

Incremental and absolute encoders with mounting accessories

Motion control encoders are optoelectronic built-on encoders that detect the traversing distances, angles of rotation, speeds or positions of machine axes. Motion control encoders are direct measuring systems that are built-on to shafts, axes or motors. They can be used in conjunction with numerical and programmable logic controllers, drives and position displays. Motion control encoders are system-tested, certified components that have been harmonized for use with the following systems:

- SINUMERIK CNCs
- SIMOTION Motion Control Systems
- SIMATIC programmable logic controllers
- SINAMICS drive systems

Application

Motion control encoders are used with machine tools and production machines as additional external measuring systems. They are available as incremental or absolute encoders.

Incremental encoders

In the case of incremental encoders, the machine must travel to a reference point after each power-off state, as the position is not usually stored in the controller. Movements of the machine while the power is off are not recorded.

Incremental encoders are suitable for use in simple machine concepts with mostly small dimensions.

Absolute encoders

Absolute encoders, on the other hand, also record movements while the power is off and return the actual position after power on. Travel to a reference point is not necessary.

Absolute encoders are suitable for complex machines or machines with large dimensions.

Design

All motion control encoders are available in Synchro flange and clamp flange versions. The absolute encoders are also available with a hollow shaft and torque arm.

The motion control encoders are driven via a plug-in coupling or spring disk coupling. Alternatively, pulleys can also be used.

The motor control encoder supply voltage is 5 V DC or alternatively 10 V to 30 V DC. The 10 V to 30 V DC version supports longer cable lengths. Most control systems supply the voltage directly at the measuring circuit connector. With SINAMICS, the measuring systems are provided with power via the Sensor Modules.

For motion control encoders with cables, the cable length including the connector is 1 m (3.28 ft).

The following bending radii must be observed for the cable to the built-on encoder:

- One-time bending: ≥ 20 mm (0.79 in)
- Continuous bending: ≥ 75 mm (2.95 in)

More information

Power supply

Absolute encoders with EnDat, SSI or DRIVE-CLiQ and incremental encoders with sin/cos 1 V_{pp}, HTL or TTL fulfill the requirements of IEC 61010-1 if power is supplied from a secondary circuit with limited energy (Low Voltage, Limited Energy) acc. to IEC 61010-1$^{3rd\ Ed.}$, Section 9.4 or from a Class 2 secondary circuit in accordance with UL 1310.

The corresponding sections of DIN EN 61010-1, EN 61010-1, UL 61010-1 and CAN/CSA-C22.2 No. 61010-1 can be used instead of IEC 61010-1$^{3rd\ Ed.}$, Section 9.4.

Absolute encoders with PROFIBUS DP and PROFINET IO fulfill the requirements of UL 508 and CAN/CSA-C22.2 No. 14 if power is supplied from a Class 2 secondary circuit as per National Electrical Code/Canadian Electrical Code.

© Siemens 2024

Function



Incremental encoder with sin/cos 1 V_{pp} and clamp flange incl. cable with connector as well as incremental encoder with RS422/HTL and Synchro flange

Incremental encoders detect relative movement and deliver a defined number of electrical pulses per revolution, which represent the measurement of the traveled distance or angle.

Incremental encoders operate on the principle of optoelectronic scanning of dividing discs with the transmitted light principle. The light source is a light emitting diode (LED). The light-dark modulation generated as the encoder shaft rotates is picked up by photoelectronic elements. With an appropriate arrangement of the line pattern on the dividing disk connected to the shaft and the fixed aperture, the photoelectronic elements provide two trace signals A and B at 90° to one another, as well as a reference signal R.

The encoder electronics amplify these signals and convert them to different output levels.

Signal levels

The following signal levels are available for the incremental encoders:

Signal level	Benefits
Analog signals sin/cos with level 1 V_{pp}	The analog signal allows the digitization of the trace signals. In order to obtain a fine resolution, the signals are interpolated in the higher-level controller.
RS422 differential signals (TTL)	The resolution can be quadrupled by means of edge evaluation.
HTL (High Voltage Transistor Logic)	Built-on encoders with an HTL interface are designed for applications with digital inputs with a 24 V level. The resolution can be quadrupled by means of edge evaluation.

Technical specifications

Article No.		6FX2001-3....	6FX2001-2....	6FX2001-4...0
Product name		Motion control encoder	Motion control encoder	Motion control encoder
Product designation		Incremental encoder with sin/cos 1 V_{pp}	Incremental encoder with RS422 (TTL)	Incremental encoder with HTL
Operating voltage DC V_p on encoder	V	5 ± 10 %	5 ± 10 % or 10 ... 30	10 ... 30
Limit frequency, typical	kHz	≥ 180 (- 3 dB) ≥ 450 (- 6 dB)	–	–
Scanning frequency, maximum	kHz	–	300	300
No-load current consumption, maximum	mA	150	150	150
Resolution, maximum	S/R	2500	5000	2500
Signal level		Sinusoidal 1 V_{pp}	RS422 (TTL)	V_H ≥ 21 V with I_H = 20 mA at 24 V V_L ≤ 2.8 V with I_L = 20 mA at 24 V
Outputs protected against short-circuit to 0 V		Yes Briefly	Yes	Yes Briefly
Switching time (10 … 90 %) rise/fall time t_+/t_- (for 1 m (3.28 ft) cable and recommended input circuit)	ns	–	≤ 50	≤ 200
Phase angle, signal A to B Edge spacing	Degrees	90 ± 10	90	90
• At 300 kHz	µs	–	≥ 0.45	≥ 0.45
Cable length to downstream electronics, maximum [1]	m (ft)	150 (492)	100 (328) without fault signal 50 (164) with fault signal	300 (984)
Accuracy	arcsec	± 18 mech. × 3600/PPR count z	± 18 mech. × 3600/PPR count z	± 18 mech. × 3600/PPR count z
LED failure monitoring		–	High-resistance driver	High-resistance driver
Maximum mechanical speed	r/min	12000	12000	12000
Starting torque at 20 °C (68 °F)	Nm (lb_f-ft)	≤ 0.01 (0.01)	≤ 0.01 (0.01)	≤ 0.01 (0.01)

S/R = signals/revolution

[1] With recommended cable and input circuitry of the downstream electronics, observe max. permissible cable length of module to be evaluated.

© Siemens 2024

Technical specifications

Article No.		6FX2001-3....	6FX2001-2....	6FX2001-4...0
Product name		Motion control encoder	Motion control encoder	Motion control encoder
Product designation		Incremental encoder with sin/cos 1 V_{pp}	Incremental encoder with RS422 (TTL)	Incremental encoder with HTL
Shaft loading capacity				
• $n \leq$ 6000 r/min				
- Axial	N (lb_f)	40 (8.99)	40 (8.99)	40 (8.99)
- Radial at shaft end	N (lb_f)	60 (13.5)	60 (13.5)	60 (13.5)
• $n >$ 6000 r/min				
- Axial	N (lb_f)	10 (2.25)	10 (2.25)	10 (2.25)
- Radial at shaft end	N (lb_f)	20 (4.50)	20 (4.50)	20 (4.50)
Shaft diameter				
• Synchro flange	mm (in)	6 (0.24)	6 (0.24)	6 (0.24)
• Clamp flange	mm (in)	10 (0.39)	10 (0.39)	10 (0.39)
Shaft length				
• Synchro flange	mm (in)	10 (0.39)	10 (0.39)	10 (0.39)
• Clamp flange	mm (in)	20 (0.79)	20 (0.79)	20 (0.79)
Angular acceleration, maximum	rad/s^2	10^5	10^5	10^5
Moment of inertia of rotor	kgm^2 (lb_f-in-s^2)	$\leq 2.9 \times 10^{-6}$ (2.57×10^{-5})	$\leq 2.9 \times 10^{-6}$ (2.57×10^{-5})	$\leq 2.9 \times 10^{-6}$ (2.57×10^{-5})
Vibration (55 ... 2000 Hz) according to EN 60068-2-6	m/s^2 (ft/s^2)	$\leq$ 300 (984)	$\leq$ 300 (984)	$\leq$ 300 (984)
Shock according to EN 60068-2-27				
• 6 ms	m/s^2 (ft/s^2)	$\leq$ 2000 (6562)	$\leq$ 2000 (6562)	$\leq$ 2000 (6562)
Degree of protection				
• At housing		IP67	IP67	IP67
• At shaft input		IP64	IP64	IP64
Ambient temperature during				
Operation				
• Flange outlet or fixed cable				
- At V_p = 5 V ± 10 %	°C (°F)	-40 ... +100 (-40 ...+212)	-40 ... +100 (-40 ...+212)	-40 ... +100 (-40 ...+212)
- At V_p = 10 ... 30 V	°C (°F)	–	-40 ... +70 (-40 ... +158)	–
• Flexible cable				
- At V_p = 5 V ± 10 %	°C (°F)	-10 ... +100 (+14 ... +212)	-10 ... +100 (+14 ... +212)	-10 ... +100 (+14 ... +212)
- At V_p = 10 ... 30 V	°C (°F)	–	-10 ... +70 (+14 ... +158)	–
Net weight	kg (lb)	0.3 (0.66)	0.3 (0.66)	0.3 (0.66)
EMC		EMC Directive 2014/30/EC and regulations of EMC directives (applicable basic standards)		
Certificate of suitability		CE, CSA, UL	CE, CSA, UL	CE, CSA, UL

© Siemens 2024

Selection and ordering data

Description	Article No.
Incremental encoder with sin/cos 1 V_{pp}	
5 V DC supply voltage	
• Synchro flange and connection via	
- Axial flange outlet	**6FX2001-3G** ■■■
- Radial flange outlet	**6FX2001-3E** ■■■
- Cable 1 m (3.28 ft) with connector[1)]	**6FX2001-3C** ■■■
Resolution	
1000 S/R	**B 0 0**
1024 S/R	**B 0 2**
2500 S/R	**C 5 0**
Incremental encoder with RS422 (TTL)	
5 V DC supply voltage	
• Synchro flange and connection via	
- Axial flange outlet	**6FX2001-2G** ■■■
- Radial flange outlet	**6FX2001-2E** ■■■
- Cable 1 m (3.28 ft) with connector [1)]	**6FX2001-2C** ■■■
• Clamp flange and connection via	
- Axial flange outlet	**6FX2001-2R** ■■■
- Radial flange outlet	**6FX2001-2P** ■■■
- Cable 1 m (3.28 ft) with connector [1)]	**6FX2001-2M** ■■■
10 ... 30 V DC supply voltage	
• Synchro flange and connection via	
- Axial flange outlet	**6FX2001-2H** ■■■
- Radial flange outlet	**6FX2001-2F** ■■■
- Cable 1 m (3.28 ft) with connector [1)]	**6FX2001-2D** ■■■
• Clamp flange and connection via	
- Axial flange outlet	**6FX2001-2S** ■■■
- Radial flange outlet	**6FX2001-2Q** ■■■
- Cable 1 m (3.28 ft) with connector [1)]	**6FX2001-2N** ■■■
Resolution	
500 S/R	**A 5 0**
1000 S/R	**B 0 0**
1024 S/R	**B 0 2**
1250 S/R	**B 2 5**
1500 S/R	**B 5 0**
2000 S/R	**C 0 0**
2048 S/R	**C 0 4**
2500 S/R	**C 5 0**
3600 S/R	**D 6 0**
5000 S/R	**F 0 0**

S/R = Signals/Revolution

Description	Article No.
Incremental encoder with HTL	
10 ... 30 V DC supply voltage	
• Synchro flange and connection via	
- Axial flange outlet	**6FX2001-4H** ■■ **0**
- Radial flange outlet	**6FX2001-4F** ■■ **0**
- Cable 1 m (3.28 ft) with connector[1)]	**6FX2001-4D** ■■ **0**
• Clamp flange and connection via	
- Axial flange outlet	**6FX2001-4S** ■■ **0**
- Radial flange outlet	**6FX2001-4Q** ■■ **0**
- Cable 1 m (3.28 ft) with connector[1)]	**6FX2001-4N** ■■ **0**
Resolution	
100 S/R	**A 1**
500 S/R	**A 5**
1000 S/R	**B 0**
2500 S/R	**C 5**

[1)] Universal integrated cable outlet for axial and radial outlet direction.

© Siemens 2024

Function



Absolute encoders with SSI/EnDat and PROFIBUS DP (top), and DRIVE-CLiQ and PROFINET IO (bottom)

Absolute encoders output an absolute angular position between 0° and 360°. They operate on the same scanning principle as incremental encoders, but have a greater number of tracks. For example, if there are 13 tracks, then 2^{13} = 8192 steps are coded in the case of single-turn encoders. The code used is a one-step code (gray code). This prevents any scanning errors from occurring. After switching on the machine, the position value is transferred immediately to the controller, travel to a reference point is not necessary.

All absolute encoders are available in single-turn and multi-turn versions.

Single-turn encoders

Single-turn encoders divide one rotation (360 degrees mechanical) into a specific number of steps, e.g. 8192. A unique code word is assigned to each position. After 360° the position values are repeated.

Multi-turn encoders

Multi-turn encoders record the number of revolutions in addition to the absolute position within one revolution. To do this, further code discs which are coupled via gear steps with the encoder shaft are scanned. When evaluating 12 additional tracks, this means that an additional 2^{12} = 4096 revolutions can be coded.

Interfaces

The following interfaces are supported by the absolute encoders:

Interface	Benefits
DRIVE-CLiQ	• Very high data transfer rates possible • Advantages in time-critical applications • Simple and quick automatic configuration using electronic rating plates • Fast and easy diagnostics with a single tool • One interface for connecting drives as well as indirect and direct measurement systems to the CNC.
SSI	• Advantages in time-critical applications
EnDat 2.1	• High data transfer rate, bidirectional • Advantages in time-critical applications • Incremental encoder sin/cos 1 V_{pp} • Connection via SINAMICS Sensor Modules SMC/SME
PROFIBUS DP-V2	• Parameterizable built-on encoder • Reduced wiring overhead in plants with a large number of encoders • Isochronous operation and direct data exchange
PROFINET IO	• Parameterizable built-on encoder • Reduced wiring overhead in plants with a large number of encoders • Supports conformity class C (IRT communication), B, A (RT communication) • IRT (isochronous mode) • 2 ports • Media redundancy with MRPD, MRP

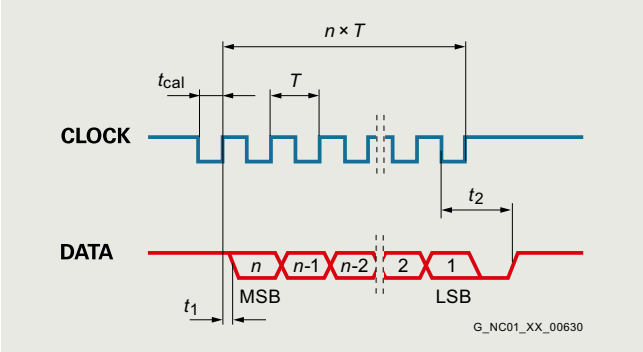

Data transfer for absolute encoders with SSI interface

n = data word length (13 bits for single-turn and 25 bits for multi-turn)
T = 1 ... 10 µs
t_{cal} = ≤ 5 µs
t_1 = ≤ 0.4 µs (without cable)
t_2 = 17 ... 20 µs

© Siemens 2024

Technical specifications

Article No.		6FX2001-5.D..-1AA0	6FX2001-5.S..	6FX2001-5.E..
Product name		Motion control encoder	Motion control encoder	Motion control encoder
Product designation		Absolute encoder with DRIVE-CLiQ	Absolute encoder with SSI	Absolute encoder with EnDat 2.1
Operating voltage DC V_p on encoder	V	24 - 15 % + 20 %	4.75 ... 30	3.6 ... 14
Current consumption, approx.				
• Single-turn	mA	37	90	90
• Multi-turn	mA	43	120	120
Interface		DRIVE-CLiQ	SSI	EnDat 2.1
Clock input		–	Differential cable receiver acc. to EIA standard RS 485	Differential cable receiver acc. to EIA standard RS 485
Data output		DRIVE-CLiQ	Differential cable driver acc. to EIA standard RS 485	Differential cable driver acc. to EIA standard RS 485
Short-circuit strength		Yes	Yes	Yes
Transfer rate	Mbps	100	–	–
Transfer rate	kHz	–	100 ... 1000	100 ... 2000
Maximum speed				
• Electrical	r/min	14000	–	–
- At ± 1 bit accuracy	r/min	–	5000	5000
- At ± 12 bit accuracy	r/min	12000	–	–
- At ± 100 bit accuracy	r/min	–	12000	12000
• Mechanical				
- Single-turn	r/min	15000	15000	15000
- Multi-turn	r/min	12000	12000	12000
Cable length to downstream electronics, maximum [1]	m (ft)	100 (328)	–	–
• Up to 300 kHz cycle	m (ft)	–	100 (328)	150 (492)
• Up to 1 MHz cycle	m (ft)	–	50 (164)	50 (164)
• Up to 2 MHz cycle	m (ft)	–	–	10 (32.8)
Connection		Radial flange outlet M12	Axial/radial flange outlet M23	Axial/radial flange outlet M23
Resolution				
• Single-turn	bit	24	13 (8192 steps)	13 (8192 steps)
• Multi-turn	bit	36 (2^{24} steps × 4096 revolutions)	25 (8192 steps × 4096 revolutions)	25 (8192 steps × 4096 revolutions)
Frame				
• Single-turn	bit	–	13 without parity	According to EnDat specification
• Multi-turn	bit	–	25 without parity	According to EnDat specification
Incremental track	S/R	2048, 1 V_{pp} (internal only)	–	512, 1 V_{pp}
Code type				
• Transfer		DRIVE-CLiQ	Gray, fir tree format	Dual
Parameterization capability				
• Preset		–	Set to zero	–
• Counting direction		–	Yes	–
Accuracy	arcsec	± 20	± 60 (with 8192 steps)	± 60 (incremental track)
Starting torque at 20 °C (68 °F)	Nm (lb_f-ft)	≤ 0.01 (0.01)	≤ 0.01 (0.01)	≤ 0.01 (0.01)

S/R = signals/revolution

[1] Observe the max. permissible cable length of the connected module.

© Siemens 2024

Technical specifications

Article No.		6FX2001-5.D..-1AA0	6FX2001-5.S..	6FX2001-5.E..
Product name		Motion control encoder	Motion control encoder	Motion control encoder
Product designation		Absolute encoder with DRIVE-CLiQ	Absolute encoder with SSI	Absolute encoder with EnDat 2.1
Solid shaft loading capacity				
• $n \leq$ 6000 r/min				
- Axial	N (lb_f)	40 (8.99)	40 (8.99)	40 (8.99)
- Radial at shaft end	N (lb_f)	60 (13.5)	60 (13.5)	60 (13.5)
• $n >$ 6000 r/min				
- Axial	N (lb_f)	10 (2.25)	10 (2.25)	10 (2.25)
- Radial at shaft end	N (lb_f)	20 (4.50)	20 (4.50)	20 (4.50)
Shaft diameter				
• Synchro flange	mm (in)	6 (0.24) with flat face	6 (0.24)	6 (0.24)
• Clamp flange	mm (in)	10 (0.39) with flat face	10 (0.39)	10 (0.39)
• Torque arm Hollow shaft	mm (in)	10 (0.39) or 12 (0.47)	–	–
Shaft length				
• Synchro flange	mm (in)	10 (0.39)	10 (0.39)	10 (0.39)
• Clamp flange	mm (in)	20 (0.79)	20 (0.79)	20 (0.79)
Angular acceleration, maximum	rad/s^2	10^5	10^5	10^5
Moment of inertia of rotor				
• Solid shaft	kgm^2 (lb_f-in-s^2)	2.9×10^{-6} (2.57×10^{-5})	2.9×10^{-6} (2.57×10^{-5})	2.9×10^{-6} (2.57×10^{-5})
• Hollow shaft	kgm^2 (lb_f-in-s^2)	4.6×10^{-6} (4.07×10^{-5})	–	–
Vibration (55 ... 2000 Hz) according to EN 60068-2-6				
• Solid shaft	m/s^2 (ft/s^2)	≤ 300 (984)	≤ 300 (984)	≤ 300 (984)
• Hollow shaft	m/s^2 (ft/s^2)	≤ 150 (492)	–	–
Shock according to EN 60068-2-27				
• 6 ms				
- Solid shaft	m/s^2 (ft/s^2)	≤ 2000 (6562)	≤ 2000 (6562)	≤ 2000 (6562)
- Hollow shaft	m/s^2 (ft/s^2)	≤ 1000 (3281)	–	–
Degree of protection				
• At housing		IP67	IP67	IP67
• At shaft input		IP64	IP64	IP64
Ambient temperature during				
• Operation	°C (°F)	-30 ... +100 (-22 ...+212)	-40 ... +100 (-40 ...+212)	-40 ... +100 (-40 ...+212)
Net weight				
• Single-turn	kg (lb)	0.35 (0.77)	0.35 (0.77)	0.35 (0.77)
• Multi-turn	kg (lb)	0.35 (0.77)	0.35 (0.77)	0.35 (0.77)
EMC		EMC Directive 2014/30/EC and regulations of EMC directives (applicable basic standards)		
Certificate of suitability		CE, CSA, UL	CE, CSA, UL	CE, CSA, UL

© Siemens 2024

Technical specifications

Article No.		6FX2001-5.P..	6FX2001-5.N..
Product name		Motion control encoder	Motion control encoder
Product designation		Absolute encoder with PROFIBUS DP	Absolute encoder with PROFINET IO
Operating voltage DC V_p on encoder	V	10 ... 30	10 ... 30
Current consumption, approx.			
• Single-turn	mA	300 ... 100 (2.5 W)	400 ... 130 (4 W)
• Multi-turn	mA	300 ... 100 (2.5 W)	400 ... 130 (4 W)
Interface		PROFIBUS DP-V2	PROFINET IO with RT/IRT
Clock input		Differential cable receiver acc. to EIA standard RS 485	2 ports IRT
Data output		Differential cable driver acc. to EIA standard RS 485	2 ports IRT
Short-circuit strength		Yes	Yes
Transfer rate	Mbps	12	100
LED for diagnostics		Green/red	Green/red/yellow/orange
Maximum speed			
• Electrical			
- At ± 1 bit accuracy	r/min	5000	5000
• Mechanical			
- Single-turn	r/min	12000	12000
- Multi-turn	r/min	6000	6000
Cable length to downstream electronics, maximum [1]			
• Up to 93.75 Kbps	m (ft)	1200 (3937)	–
• Up to 1.5 Mbps	m (ft)	200 (656)	–
• Up to 12 Mbps	m (ft)	100 (328)	100 (328)
Number of nodes		99	–
Connection		Terminal block with address selector switch and bus terminating resistor in removable cover with radial cable glands (3 units)	2 × M12 connectors, D-coded, 4-pole for PROFINET ports 1 × M12 connector, A-coded, 4-pole for operating voltage
• Cable diameter	mm (in)	6.5 ... 9 (0.26 ... 0.35) Removal of cover possible without interrupting bus	–
Resolution			
• Single-turn	bit	13 (8192 steps)	13 with V 4.1, 16 with V 4.2 (8192/65536 steps)
• Multi-turn	bit	27 (8192 steps × 16384 revolutions)	27 with V 4.1, 30 with V 4.2 (8192/65536 steps × 16384 revolutions)
Frame		According to PNO encoder profile V 4.1 Class 1, Class 2, Class 3, Class 4 Standard frame 81	According to PNO encoder profile V 4.1 and V 4.2 Class 1, Class 2, Class 3, Class 4 Standard frames 81/82/83/84/86/87/88/89 Siemens frame 860/862
Code type			
• Sampling		Gray	Gray
• Transfer		Binary, PROFIBUS	Binary, PROFINET
Bus load, approx.			
• At 12 Mbps per encoder	µs	20	–
Cycle time	ms	1	0.25 ... 100
Parameterization capability			
• Resolution per revolution		1 ... 8192	1 ... 8192/65536
• Total resolution		1 ... 134217728	1 ... 134217728/1073741824
• Preset		Yes	Yes
• Counting direction		Yes	Yes
• Velocity signal		Yes	Yes
• Limit switches		Yes, 2 units	No
• Isochronous mode		Yes	Yes
• Direct data exchange		Yes	No

[1] Observe the max. permissible cable length of the connected module.

© Siemens 2024

Technical specifications

Article No.		6FX2001-5.P..	6FX2001-5.N..
Product name		Motion control encoder	Motion control encoder
Product designation		Absolute encoder with PROFIBUS DP	Absolute encoder with PROFINET IO
Online parameterization		Yes	Yes
PNO certificate		Yes	Yes
Supported profiles		PNO encoder profile V 4.1	PNO encoder profile V 4.1 and V 4.2
Accuracy with 8192 steps	arcsec	± 79 (± ½ LSB)	± 79 (± ½ LSB)
Friction torque at 20 °C (68 °F)	Nm (lb_f-ft)	≤ 0.03 (0.02)	≤ 0.03 (0.02)
Starting torque at 20 °C (68 °F)	Nm (lb_f-ft)	≤ 0.03 (0.02)	≤ 0.03 (0.02)
Shaft loading capacity			
• $n \leq$ 6000 r/min			
- Axial	N (lb_f)	40 (8.99)	40 (8.99)
- Radial at shaft end	N (lb_f)	110 (24.7)	110 (24.7)
• $n >$ 6000 r/min			
- Axial	N (lb_f)	10 (2.25)	10 (2.25)
- Radial at shaft end	N (lb_f)	20 (4.50)	20 (4.50)
Shaft diameter			
• Synchro flange	mm (in)	6 (0.24)	6 (0.24)
• Clamp flange	mm (in)	10 (0.39)	10 (0.39)
Torque arm Hollow shaft [1]	mm (in)	15 (0.59)	15 (0.59)
Shaft length			
• Synchro flange	mm (in)	10 (0.39)	10 (0.39)
• Clamp flange	mm (in)	20 (0.79)	20 (0.79)
Angular acceleration, maximum	rad/s^2	10^5	10^5
Moment of inertia of rotor			
• Solid shaft	kgm^2 (lb_f-in-s^2)	1.90×10^{-6} (1.68×10^{-5})	1.90×10^{-6} (1.68×10^{-5})
• Hollow shaft	kgm^2 (lb_f-in-s^2)	2.80×10^{-6} (2.47×10^{-5})	2.80×10^{-6} (2.47×10^{-5})
Vibration (55 ... 2000 Hz) according to EN 60068-2-6	m/s^2 (ft/s^2)	≤ 100 (328)	≤ 100 (328)
Shock according to EN 60068-2-27			
• 2 ms	m/s^2 (ft/s^2)	≤ 2000 (6562)	≤ 2000 (6562)
• 6 ms	m/s^2 (ft/s^2)	≤ 1000 (3281)	≤ 1000 (3281)
Degree of protection			
• At housing		IP67	IP67
• At shaft input		IP64	IP64
Ambient temperature during			
• Operation	°C (°F)	-40 ... +85 (-40 ... +185)	-40 ... +85 (-40 ... +185)
Net weight			
• Single-turn	kg (lb)	0.4 (0.88)	0.4 (0.88)
• Multi-turn	kg (lb)	0.5 (1.1)	0.5 (1.1)
EMC		EMC Directive 2014/30/EC and regulations of EMC directives (applicable basic standards)	
Certificate of suitability		CE, CSA, UL	CE, CSA, UL

[1] Hollow shaft diameter 12 mm, 10 mm or 8 mm (0.47 in, 0.39 in or 0.31 in) possible using supplied reduction sleeves.

© Siemens 2024

Selection and ordering data

Description	Article No.
Absolute encoders with DRIVE-CLiQ	
24 V DC supply voltage	
• Radial connection	
- Synchro flange Solid shaft	**6FX2001-5FD■■-1AA0**
- Clamp flange Solid shaft	**6FX2001-5QD■■-1AA0**
- Torque arm Hollow shaft diameter 10 mm (0.39 in)	**6FX2001-5VD■■-1AA0**
- Torque arm Hollow shaft diameter 12 mm (0.47 in)	**6FX2001-5WD■■-1AA0**
Resolution	
• Single-turn 24 bit	**1 3**
• Multi-turn 36 bit	**2 5**
Absolute encoders with SSI	
4.75 ... 30 V DC supply voltage	
• Synchro flange and connection via	
- Axial flange outlet	**6FX2001-5HS■■**
- Radial flange outlet	**6FX2001-5FS■■**
• Clamp flange and connection via	
- Axial flange outlet	**6FX2001-5SS■■**
- Radial flange outlet	**6FX2001-5QS■■**
Resolution	
• Single-turn 8192 steps/revolution (13 bit)	**1 2**
• Multi-turn 8192 steps/revolution, 4096 revolutions (25 bit)	**2 4**
Absolute encoders with EnDat 2.1	
3.6 ... 14 V DC supply voltage	
• Synchro flange and connection via	
- Axial flange outlet	**6FX2001-5HE■■**
- Radial flange outlet	**6FX2001-5FE■■**
• Clamp flange and connection via	
- Axial flange outlet	**6FX2001-5SE■■**
- Radial flange outlet	**6FX2001-5QE■■**
Resolution	
• Single-turn 8192 steps/revolution (13 bit)	**1 3**
• Multi-turn 8192 steps/revolution, 4096 revolutions (25 bit)	**2 5**

Description	Article No.
Absolute encoders with PROFIBUS DP	
10 ... 30 V DC supply voltage	
• Radial connection	
- Synchro flange Solid shaft	**6FX2001-5FP■■**
- Clamp flange Solid shaft	**6FX2001-5QP■■**
- Torque arm Hollow shaft diameter 15 mm (0.59 in) [1]	**6FX2001-5WP■■**
Resolution	
• Single-turn 8192 steps/revolution (13 bit)	**1 2**
• Multi-turn 8192 steps/revolution, 16384 revolutions (27 bit)	**2 4**
Absolute encoders with PROFINET IO	
10 ... 30 V DC supply voltage	
• Radial connection	
- Synchro flange Solid shaft	**6FX2001-5FN■■**
- Clamp flange Solid shaft	**6FX2001-5QN■■**
- Torque arm Hollow shaft diameter 15 mm (0.59 in) [1]	**6FX2001-5WN■■**
Resolution	
• Single-turn 8192 steps/revolution (13 bit) 65536 steps/revolution (16 bit)	**1 3**
• Multi-turn 8192 steps/revolution, 16384 revolutions (27 bit) 65536 steps/revolution, 16384 revolutions (30 bit)	**2 5**

More information

Since the DRIVE-CLiQ interface has been disclosed, it is possible to use absolute encoders with integrated DRIVE-CLiQ interface from a range of different manufacturers.

You can find additional information on the internet at:

https://support.industry.siemens.com/cs/document/65402168

[1] Hollow shaft diameter 12 mm, 10 mm or 8 mm (0.47 in, 0.39 in or 0.31 in) possible using supplied reduction sleeves.

© Siemens 2024

Overview

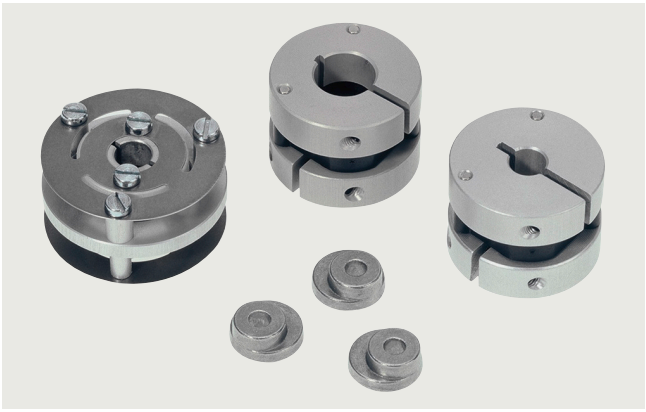

Couplings and clamps

Couplings

The motion control encoders are driven via a plug-in coupling or spring disk coupling. Alternatively, pulleys can also be used.

Clamps

Motion control encoders with Synchro flange can be axially mounted on the machine with screws or secured with 3 clamps.

Signal connectors as mating connectors

A signal connector is available as a mating connector for motion control encoders with flange outlet or with cable and connector.

The mating connector with 12 contacts is suitable for all incremental encoders.

The mating connector with 17 contacts is suitable for absolute encoders with EnDat.

Signal connector

A signal connector is available as a replacement for motion control encoders with cable and connector.

MOTION-CONNECT DRIVE-CLiQ signal cables

Pre-assembled MOTION-CONNECT DRIVE-CLiQ signal cables with M12 plug are available as basic cables and extensions for connecting motion control encoders with DRIVE-CLiQ interface.

For further information about the signal cables, refer to "MOTION-CONNECT connection systems".

Technical specifications

Article No.		6FX2001-7KF06	6FX2001-7KF10	6FX2001-7KS06	6FX2001-7KS10
Product designation		Spring disk coupling	Spring disk coupling	Plug-in coupling	Plug-in coupling
Diameter					
• 1st shaft diameter	mm (in)	6 (0.24)	6 (0.24)	6 (0.24)	10 (0.39)
• 2nd shaft diameter	mm (in)	5 (0.20)	6 (0.24)	6 (0.24)	10 (0.39)
Transferable torque, maximum	Nm (lb_f-ft)	0.8 (0.59)	0.8 (0.59)	0.7 (0.52)	0.7 (0.52)
Maximum mechanical speed	r/min	12000	12000	12000	12000
Center offset of shafts, maximum	mm (in)	0.4 (0.02)	0.4 (0.02)	0.5 (0.02)	0.5 (0.02)
Axial displacement	mm (in)	0.4 (0.02)	0.4 (0.02)	0.5 (0.02)	0.5 (0.02)
Angular displacement of shafts, maximum	°	3	3	1	1
Rigidity					
• Radial	Nm/rad (lb_f-ft/rad)	150 (111)	150 (111)	31 (22.9)	31 (22.9)
• Axial	N/mm (lb_f/mm)	6 (1.35)	6 (1.35)	10 (2.25)	10 (2.25)
Moment of inertia	kgcm^2 (lb_f-in-s^2)	0.019 (1.68 × 10^{-5})	0.019 (1.68 × 10^{-5})	0.02 (1.77 × 10^{-5})	0.02 (1.77 × 10^{-5})
Ambient temperature during					
• Operation	°C (°F)	-40 ... +150 (-40 ... +302)	-40 ... +150 (-40 ... +302)	-40 ... +80 (-40 ... +176)	-40 ... +80 (-40 ... +176)
Outer diameter	mm (in)	30 (1.18)	30 (1.18)	25 (0.98)	25 (0.98)
Length	mm (in)	18.3 (0.72)	18.3 (0.72)	19 (0.75)	19 (0.75)
Net weight	g (oz)	16 (0.56)	16 (0.56)	20 (0.7)	20 (0.7)

Article No.		6FX2001-7KP01
Product designation		Clamp
Outer diameter		
• 1st clamp diameter	mm (in)	9 (0.35)
• 2nd clamp diameter	mm (in)	12 (0.47)
Clamp hole diameter	mm (in)	3.2 (0.13)
Height	mm (in)	5.5 (0.22)
Net weight	g (oz)	3 (0.1)

© Siemens 2024

Selection and ordering data

Description	Article No.
Spring disk coupling	
For shaft diameter:	
• 6 mm/6 mm (0.24 in/0.24 in)	**6FX2001-7KF10**
• 6 mm/5 mm (0.24 in/0.20 in)	**6FX2001-7KF06**
Plug-in coupling	
For shaft diameter:	
• 6 mm/6 mm (0.24 in/0.24 in)	**6FX2001-7KS06**
• 10 mm/10 mm (0.39 in/0.39 in)	**6FX2001-7KS10**
Clamp (1 unit) For built-on encoder with Synchro flange (3 units are required.)	**6FX2001-7KP01**
Signal connector with cap nut (1 unit) Mating connector for incremental encoder with sin/cos 1 V_{pp}, RS422 (TTL) and HTL and absolute encoder with SSI 12-pole, insulator each with 12 socket contacts 0.08 ... 0.22 mm^2 and 0.20 ... 0.56 mm^2, 2 × cable clamping 6.5 ... 10 mm (0.26 ... 0.39 in) and 10.1 ... 13 mm (0.40 ... 0.51 in)	**6FX2003-0SU12**
Signal connector with cap nut (1 unit) Mating connector for absolute encoder with EnDat 17-pole, insulator with 17 socket contacts 0.20 ... 0.56 mm^2, 2 × cable clamping 6.5 ... 10 mm (0.26 ... 0.39 in) and 10.1 ... 13 mm (0.40 ... 0.51 in)	**6FX2003-0SU17**
Signal connector with external thread for encoders with cable (1 unit) Replacement connector for incremental encoders with sin/cos 1 V_{pp}, RS422 (TTL) and HTL 12-pole, insulator with 12 pin contacts 0.20 ... 0.56 mm^2, 2 × cable clamping 6.5 ... 10 mm (0.26 ... 0.39 in) and 10.1 ... 13 mm (0.40 ... 0.51 in)	**6FX2003-0SA12**

Description	Article No.
Power connecting cable Pre-assembled cable for power supply of the absolute encoders with PROFINET IO with M12 plug connector and M12 plug socket, A-coded, 4-pole	
• Length 2 m (6.56 ft)	**6XV1801-5DH20**
• Length 3 m (9.84 ft)	**6XV1801-5DH30**
• Length 5 m (16.4 ft)	**6XV1801-5DH50**
• Length 10 m (32.8 ft)	**6XV1801-5DN10**
• Length 15 m (49.2 ft)	**6XV1801-5DN15**
IE connecting cable Pre-assembled signal cable for absolute encoders PROFINET IO with M12 plug connector and RJ45, D-coded, 4-pole	
• Length 2 m (6.56 ft)	**6XV1871-5TH20**
• Length 3 m (9.84 ft)	**6XV1871-5TH30**
• Length 5 m (16.4 ft)	**6XV1871-5TH50**
• Length 10 m (32.8 ft)	**6XV1871-5TN10**
• Length 15 m (49.2 ft)	**6XV1871-5TN15**
IE FC RJ45 Plug 145 (1 unit) 2 × 2 RJ45 connector with rugged metal enclosure and FC connection technology, 145° cable outlet	**6GK1901-1BB30-0AA0**
IE FC M12 Plug PRO (1 unit) M12 connector with metal enclosure and FC connection technology, axial cable outlet, D-coded	**6GK1901-0DB20-6AA0**
IE POWER M12 CABLE CONNECTOR PRO (3 units) Connection socket for connecting SCALANCE W-700/X208pro for 24 V DC supply voltage, 4-pole, A-coded, including assembly instructions	**6GK1907-0DC10-6AA3**
IE FC TP Trailing Cable 2 × 2 (PROFINET Type C) 4-wire, shielded, PROFINET-compliant, TP installation cable for use in cable carriers, sold by the meter Max. length 2000 m (6562 ft) Minimum order 20 m (65.6 ft)	**6XV1840-3AH10**
MOTION-CONNECT DRIVE-CLiQ signal cable [1] For encoder systems with DRIVE-CLiQ and M12 connection	**6FX.002-2DC3.-1..0**

[1] For complete Article No. and length code, refer to "MOTION-CONNECT connection systems".

© Siemens 2024

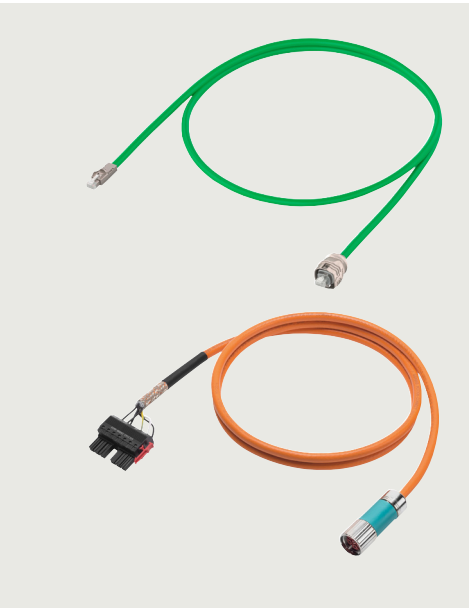

10/2 **Overview**

10/4 **Introduction**

10/7 **Power cables for SINAMICS S120**
Power cables for SIMOTICS S-1FT2/S-1FT7/ M-1PH8 motors
10/9 with SPEED-CONNECT connector
10/12 with full-thread connector
10/16 Extensions for power cables with SPEED-CONNECT connector or full-thread connector
Power cables for motors
10/17 SIMOTICS M-1PH8 with terminal box
10/20 SIMOTICS L-1FN3
10/22 SIMOTICS T-1FW3
10/23 SIMOTICS T-1FW6

10/7 **Hybrid cables for SINAMICS S120M**
10/24 Hybrid cables for SINAMICS S120M distributed servo drive

10/25 **Signal cables for SINAMICS S120**
DRIVE-CLiQ signal cables
10/29 without 24 V DC cores
10/30 MOTION CONNECT with 24 V DC cores
Signal cables for motors
10/33 with SPEED-CONNECT connector
10/34 with full-thread connector

10/36 **Article number code**
10/36 Power cables
10/38 Signal cables
10/40 Length code

10/41 **Connection overviews**
10/41 SINAMICS S120 CU320-2 Control Unit
10/42 SIMOTION D4x5-2 Control Unit
10/44 SINAMICS S120 Motor Modules
10/49 SINAMICS S120M distributed servo drive
10/50 SINAMICS S120 Power Modules
10/53 SINAMICS S120 Sensor Modules Cabinet-Mounted
10/55 SIMOTICS S-1FT2/-1FT7 motors with DRIVE-CLiQ interface
10/56 External measuring systems with DRIVE-CLiQ interface

10/57 **Accessories for power and signal cables**
10/57 Power and signal connectors
10/58 Mounting flange
10/58 HF (high-frequency) clamp
10/59 DRIVE-CLiQ cabinet bushing (RJ45)
10/59 DRIVE-CLiQ cabinet bushing (M12)
10/60 DRIVE-CLiQ coupler

Chap. 12 **Siemens Product Configurator**
Product selection via selectors
www.siemens.com/spc

© Siemens 2024

MOTION-CONNECT connection systems
Overview

Power cables

Cable	For motor	MOTION-CONNECT 500	MOTION-CONNECT 800PLUS	Page
Dynamic requirements	SIMOTICS	Medium	High	
Environmental requirements		Medium	High	
UL/CSA		✔	✔	
Halogen-free		–	✔	
RoHS		✔	✔	
Power cables with SPEED-CONNECT connector				
	S-1FT2	✔	✔	**10/9 ... 10/11**
	S-1FT7	✔	✔	**10/9 ... 10/11**
	M-1PH808 M-1PH810	✔	✔	**10/9**
Power cables with full-thread connector				
	S-1FT2	✔	✔	**10/12 ... 10/15**
	S-1FT7	✔	✔	**10/12 ... 10/15**
	M-1PH808 M-1PH810 M-1PH813	✔	✔	**10/12, 10/15**
	L-1FN3	–	✔	**10/20**
	T-1FW6	–	✔	**10/23**
Extensions for power cables with SPEED-CONNECT or full-thread connector				
	S-1FT2	✔	✔	**10/16**
	S-1FT7	✔	✔	**10/16**
	M-1PH808 M-1PH810 M-1PH813	✔	✔	**10/16**
	L-1FN3	–	✔	**10/20**
	T-1FW6	–	✔	**10/23**
Power cables for motors with terminal box				
	M-1PH8	✔ from 35 mm^2	✔ up to 16 mm^2	**10/17, 10/18**
	T-1FW3	✔	✔ up to 16 mm^2	**10/22**

Hybrid cables for SINAMICS S120M distributed servo drive

Cable	For distributed servo drive	MOTION-CONNECT 800PLUS	Page
Dynamic requirements	SINAMICS S120M	High	
Environmental requirements		High	
UL/CSA		✔	
Halogen-free		✔	
RoHS		✔	
Hybrid cables			
	6FX8002-7HY	✔	**10/24**

✔ = Possible
– = Not possible

© Siemens 2024

Cable	For motor	MOTION-CONNECT 500	MOTION-CONNECT 800PLUS	Page
Dynamic requirements	SIMOTICS	Medium	High	
Environmental requirements		Medium	High	
UL/CSA		✔	✔	
Halogen-free		–	✔	
RoHS		✔	✔	
MOTION-CONNECT DRIVE-CLiQ signal cables				
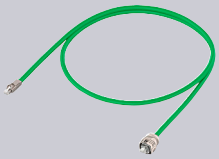	S-1FT7	✔	✔	**10/30**
	M-1PH8	✔	✔	**10/30**
	L-1FN3	✔	✔	**10/30**
	T-1FW3	✔	✔	**10/30**
	T-1FW6	✔	✔	**10/30**
DRIVE-CLiQ signal cables and extensions for connecting non-Siemens direct measuring systems				
	Non-Siemens direct measuring systems with DRIVE-CLiQ interface	✔	✔	**10/31**
DRIVE-CLiQ signal cables with M17 connection				
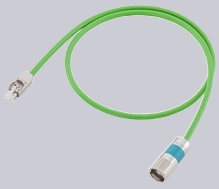	S-1FT2	✔	✔	**10/32**
	S-1FT7	✔	✔	**10/32**
Signal cables with SPEED-CONNECT connector				
	S-1FT7	✔	✔	**10/33**
	M-1PH8	✔	✔	**10/33**
Signal cables with full-thread connector				
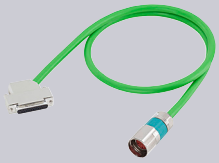	M-1PH8	✔	✔	**10/34**
	L-1FN3	–	✔	**10/34**
	T-1FW3	✔	✔	**10/34**
	T-1FW6	–	✔	**10/34**
Extensions for signal cables with SPEED-CONNECT and full-thread connector				
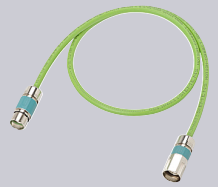		✔	✔	**10/33, 10/34**
Signal cables with full-thread connector				
	for temperature sensor	–	✔	**10/35**

✔ = Possible
– = Not possible

© Siemens 2024

General information

Overview

MOTION-CONNECT cables are suitable for use with many different types of machine tools and production machinery.

The following variants of MOTION-CONNECT cable are available as fully-assembled power and signal cables or sold by the meter:

- **MOTION-CONNECT 500**
  - Cost-effective solution for predominantly fixed installation
  - Suitable for low mechanical loading
  - Tested for travel distances up to 5 m (16.4 ft)
- **MOTION-CONNECT 800PLUS**
  - Meets requirements for use in cable carriers
  - Suitable for high mechanical loading
  - Oil resistance
  - Tested for travel distances of up to 50 m (164 ft)

Benefits

Pre-assembled MOTION-CONNECT cables provide high quality and perfect, system-tested functionality.

SPEED-CONNECT

Fast, stable and reliable connections can be made with the new, pre-assembled cables with SPEED-CONNECT connectors. With a short rotation as far as the stop, the cap nut of the connector secures the connection.

The cables with SPEED-CONNECT connectors supplement the previous offering of MOTION-CONNECT cables with full-thread connectors.

Application

MOTION-CONNECT cables are intended for use in machines. They are not suitable for building technology applications or outdoor installation.

MOTION-CONNECT cables have been tested in a cable carrier with horizontal travel distance and have also been designed for this type of application. They are not self-supporting.

The pre-assembled cables can be ordered in length units of 10 cm (3.94 in) and can be extended, if necessary.

When cable lengths (basic cables and extensions) are determined for the systems and applications described in this catalog, the technically permissible maximum cable lengths (e.g., 25 m (82 ft)) specified in the catalog must be observed. Malfunctions can occur if longer cables are used.

Siemens assumes no liability for correct transmission of signals or power in this case.

Compatibility between SPEED-CONNECT and full-thread connectors:

Connector on motor with external thread	Connector with cap nut on cable	Compatibility
SPEED-CONNECT	SPEED-CONNECT	✔
SPEED-CONNECT[1)]	Full-thread	✔
Full-thread	Full-thread	✔
Full-thread	SPEED-CONNECT	–

Function

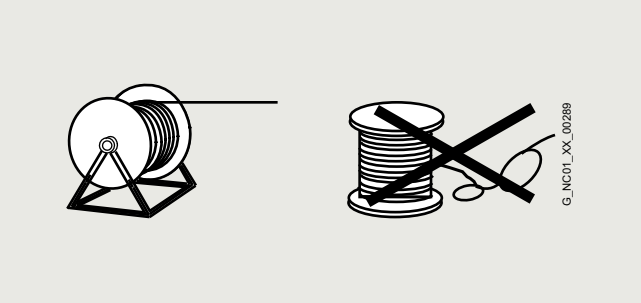

The cables must be removed from the drum without twisting, i.e., the cables must be unwound and must never be lifted over the drum flange in loops.

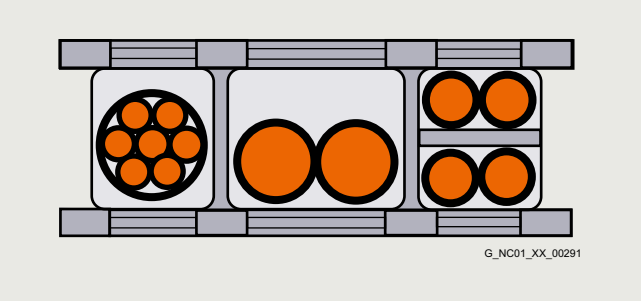

To maximize the service life of the cable carrier and cables, cables in the carrier made from different materials must be separated by spacers in the cable carrier. The spacers must be filled evenly to ensure that the position of the cables does not change during operation. The cables should be distributed as symmetrically as possible according to their weights and dimensions. Cables with very different outer diameters should also be separated by spacers.

When inserting pre-assembled cables into the cable carrier, do **not** pull at the connector, as this may damage the strain relief or cable clamping.

The cables must not be fixed in the cable carrier. They must be freely movable.

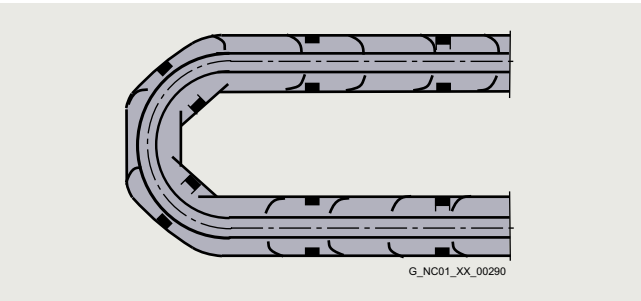

The cables must be able to be moved without applying force in particular in the bending radii of the carrier. The specified minimum bending radii must be adhered to.

The cable fixings must be attached at both ends at an appropriate distance away from the end points of the moving parts in a dead zone.

[1)] In case of shocks and vibrations, an additional O-ring is recommended to prevent the connection from loosening.

© Siemens 2024

Function

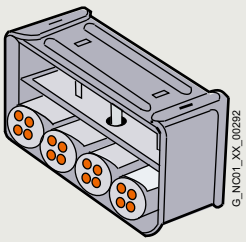

MOTION-CONNECT cables are tested in a cable carrier. The cables are attached at one end by means of strain relief to the moving ends of the cable carrier. Strain relief is applied over a wide area of the cable jacket surface without crimping the cable.

Cables must be installed in accordance with the instructions supplied by the cable carrier manufacturer.

Note:

If, for example, pre-assembled cables are installed in a cable carrier in such a way that the connector would inhibit assembly, pre-assembled cables without assembled connectors can also be supplied (power and signal cables [1]). In this case, the contacts of the cables are crimped and the connector is supplied separately. After installing the cables, the customer assembles the connector.

In case of vibration load and with horizontal or vertical cable entries, we recommend that the cable is additionally fixed if between the cable strain relief on the cable carrier and the terminal at the motor part of the cable is hanging loose or is not routed. To prevent machine vibrations being transmitted to the connectors, the cable should be fixed at the moving part where the motor is mounted.

Representation in connection overviews

Symbol	Explanation
▬—	Connector with pin contacts
›—	Connector with socket contacts
o—	Bare wire ends
- - - -	Cable must be supplied by the customer

Characteristic curves

The shaded area beneath the characteristic represents the potential range of use for the cables. The characteristics represent the tested operating points.

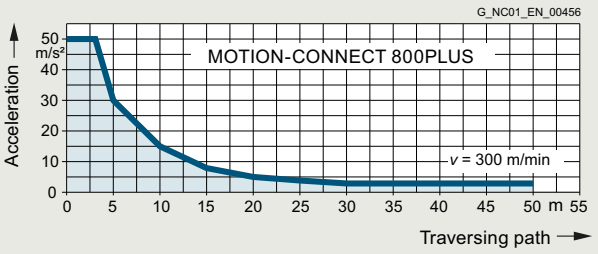

Acceleration for MOTION-CONNECT 800PLUS signal and power cables up to 16 mm^2

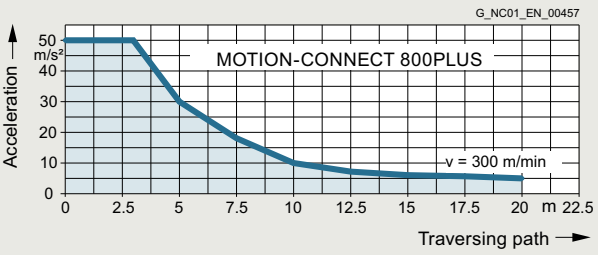

Permissible acceleration for MOTION-CONNECT 800PLUS cables of 25 mm^2, 35 mm^2, and 50 mm^2

10

[1] Not applicable to DRIVE-CLiQ signal cables.

© Siemens 2024

More information

Current carrying capacity for power and signal cables

The current carrying capacity of PVC/PUR-insulated copper cables is specified for installation types B1, B2, C, and E under continuous operating conditions in the table with reference to an ambient air temperature of 40 °C (104 °F). For other ambient temperatures, the values must be corrected by the derating factors from the table.

Cross-section	**Current carrying capacity** rms AC 50/60 Hz or DC in amps for installation type			
	B1 Single-core cables in conduits or installation ducts	**B2** Multi-core cables in conduits or cable ducts	**C** Multi-core cables, vertically or horizontally on walls/open, without conduits and installation ducts/with contact	**E** Multi-core cables, horizontally or vertically on perforated cable racks/ open, without conduits and installation ducts/with contact
mm²				
Electronics [1]				
0.20	–	4.3	4.4	4.4
0.50	–	7.5	7.5	7.8
0.75	–	9	9.5	10
Power [2]				
0.75	8.6	8.5	9.8	10.4
1.00	10.3	10.1	11.7	12.4
1.50	13.5	13.1	15.2	16.1
2.50	18.3	17.4	21	22
4	24	23	28	30
6	31	30	36	37
10	44	40	50	52
16	59	54	66	70
25	77	70	84	88
35	96	86	104	110
50	117	103	125	133
70	149	130	160	171
95	180	165	194	207
120	208	179	225	240

Derating factors for power and signal cables

Ambient air temperature °C (°F)	**Derating factor** according to EN 60204-1, Table D.1
30 (86)	1.15
35 (95)	1.08
40 (104)	1.00
45 (113)	0.91
50 (122)	0.82
55 (131)	0.71
60 (140)	0.58

[1] One control circuit pair.

[2] One symmetrically loaded three-phase AC cable.

© Siemens 2024

Overview

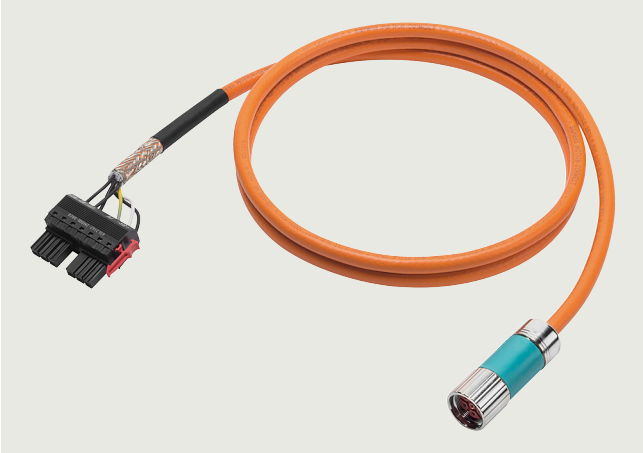

Power cable for connecting a SIMOTICS motor to a SINAMICS S120 Motor Module, C/D type 3 A to 30 A.

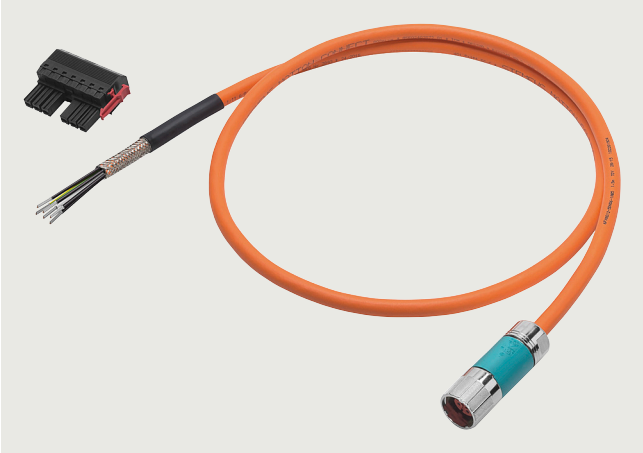

Power cable with separately supplied connector for connecting a SIMOTICS motor to a SINAMICS S120 Motor Module, C/D type 3 A to 30 A.

Power cables

The synchronous and asynchronous motors are connected to the Motor Modules or Power Modules by means of MOTION-CONNECT power cables.

The pre-assembled MOTION-CONNECT power cables are of high quality and offer safety with problem-free functioning.

Depending on the design, the MOTION-CONNECT power cables are either pre-assembled at one end or at both ends.

If pre-assembled power cables are to be installed in a cable carrier in such a way that the connector would inhibit assembly, pre-assembled cables without assembled connector can also be supplied. In this case, the contacts of the cables are crimped and the connector is supplied separately. After installing the cables, the customer assembles the connector.

The 6FX.002-5....-.... power cables are available with crimped contacts and with the connector supplied separately as an option (not applicable to power cables with bare wire ends or cable lugs).

Power cables with separately supplied **module-end** connector: in this case, the 6th position of the Article No. must be changed from **0** to **1**: 6FX.0**1**2-5....-.... (not for power cables for SINAMICS S120 Power Modules or Motor Modules in booksize compact format).

Power cables without **module-end** connector:
in this case, the 6th position of the Article No. must be changed from **0** to **2**: 6FX.0**2**2-5....-....
The connector can be ordered separately (see page 10/57).

Power cables with separately supplied **motor-end** connector: in this case, the 6th position of the Article No. must be changed from **0** to **4**: 6FX.0**4**2-5....-.... (not for power cables with bare wire ends on the motor end).

Type of delivery for pre-assembled power cables

Pre-assembled power cables can be ordered in units of 10 cm (3.94 in) up to a maximum length of 299 m (981 ft).

The cables are supplied as reels up to 30 kg (66.1 lb) or 100 m (328 ft). Above 30 kg or 100 m (66.1 lb or 328 ft), cable drums are used instead of reels.

Type of delivery for power cables sold by the meter

Fixed lengths

Cross-section	Brake cores	MOTION-CONNECT 500 MOTION-CONNECT 800PLUS
1.5 mm^2	without/with	50 m (164 ft), 100 m (328 ft), 200 m (656 ft), 500 m (1641 ft)
2.5 mm^2	without/with	50 m (164 ft), 100 m (328 ft), 200 m (656 ft), 500 m (1641 ft)

Variable length, available in exact meter lengths

Cross-section	Brake cores	MOTION-CONNECT 500	MOTION-CONNECT 800PLUS
4 mm^2	without/with	≤ 500 m (1641 ft)	≤ 500 m (1641 ft)
6 mm^2	without/with	≤ 500 m (1641 ft)	≤ 500 m (1641 ft)
10 mm^2	without/with	≤ 500 m (1641 ft)	≤ 500 m (1641 ft)
16 mm^2	without/with	≤ 200 m (656 ft)	≤ 200 m (656 ft)
25 mm^2	without with	≤ 200 m (656 ft) ≤ 200 m (656 ft)	– ≤ 200 m (656 ft)
35 mm^2	without with	≤ 200 m (656 ft) ≤ 200 m (656 ft)	– ≤ 200 m (656 ft)
50 mm^2	without with	≤ 200 m (656 ft) ≤ 200 m (656 ft)	– ≤ 200 m (656 ft)
70 mm^2	without	≤ 100 m (328 ft)	–
95 mm^2	without	≤ 100 m (328 ft)	–
120 mm^2	without	≤ 100 m (328 ft)	–

Above 30 kg or 100 m (66.2 lb or 328 ft), the cables are supplied on drums, otherwise as reels.

Hybrid cables

Hybrid cables connect AM600 Adapter Modules to the distributed components Hybrid Cabinet Bushings, DRIVE-CLiQ Extension and SINAMICS S120M, as well as the distributed components to one another. Hybrid cables are only delivered pre-assembled.

Type of delivery for pre-assembled hybrid cables

The pre-assembled cables can be delivered in length units of 10 cm (3.94 in) up to 75 m (246 ft) to suit the system.

© Siemens 2024

Technical specifications

Power cables	MOTION-CONNECT 500 6FX50..-.....-....	MOTION-CONNECT 800PLUS 6FX80..-.....-....	MOTION-CONNECT 800PLUS [1] 6FX8002-7HY..-....
Certificate of suitability			
• CE	Yes	Yes	Yes
• cURus or UR/CSA[2]	UL 758, CSA-C22.2-N.210.2-M90	UL 758, CSA-C22.2-N.210.2-M90	UL 758, CSA-C22.2-N.210.2-M90
• RoHS conformity	Yes	Yes	Yes
Rated voltage U_0/U according to EN 50395			
• Power conductors	600 V/1000 V	600 V/1000 V	4 mm^2: 600 V/1000 V 2.5 mm^2: 48 V (EN), 1000 V (UL/CSA)
• Signal conductors	24 V (EN), 1000 V (UL/CSA)	24 V (EN), 1000 V (UL/CSA)	AWG22: 30 V (EN), 1000 V (UL/CSA)
Test voltage, rms			
• Power conductors	4 kV	4 kV	4 kV
• Signal conductors	2 kV	2 kV	4 kV
Operating temperature on the surface			
• Fixed installation	-20 … +80 °C (-4 ... +176 °F)	-50 … +80 °C (-58 ... +176 °F)	-50 … +80 °C (-58 ... +176 °F)
• Flexible installation	0 … 60 °C (32 ... 140 °F)	-20 … +60 °C (-4 ... +140 °F)	-20 … +60 °C (-4 ... +140 °F)
Tensile stress, max.			
• Fixed installation	50 N/mm^2 (7252 lb_f/in^2)	50 N/mm^2 (7252 lb_f/in^2)	50 N/mm^2 (7252 lb_f/in^2)
• Flexible installation	20 N/mm^2 (2901 lb_f/in^2)	20 N/mm^2 (2901 lb_f/in^2)	20 N/mm^2 (2901 lb_f/in^2)
Smallest bending radius			
• Fixed installation	5 × D_{max}	4 × D_{max}	4 × D_{max}
• Flexible installation	See selection and ordering data	See selection and ordering data	See selection and ordering data
Torsional stress	Absolute 30°/m	Absolute 30°/m	Absolute 30°/m
Bending	100000	10 million	10 million
Traversing velocity	30 m/min (98.4 ft/min)	Up to 300 m/min (984 ft/min)	Up to 300 m/min (984 ft/min)
Acceleration	2 m/s^2 (6.56 ft/s^2)	Up to 50 m/s^2 (164 ft/s^2), see characteristics on page 10/5	Up to 50 m/s^2 (164 ft/s^2), see characteristics on page 10/5
Insulation material, incl. jacket	CFC/silicone-free	CFC/halogen-free/silicon-free IEC 60754-1/DIN VDE 0472-815	CFC/halogen-free/silicon-free IEC 60754-1/DIN VDE 0472-815
Oil resistance	EN 60811-2-1 (mineral oil only)	EN 60811-2-1	EN 60811-2-1
Outer jacket	PVC DESINA color orange RAL 2003	PUR, HD22.10 S2 (VDE 0282, Part 10) DESINA color orange RAL 2003	PUR, HD22.10 S2 (VDE 0282, Part 10) DESINA color orange RAL 2003
Flame-retardant	EN 60332-1-1 to 1-3	EN 60332-1-1 to 1-3	EN 60332-1-1 to 1-3

Degree of protection of the pre-assembled power cables and their extensions when closed and inserted: IP67.

[1] Hybrid cables
[2] The File No. is printed on the cable jacket.

© Siemens 2024

Power cables for SIMOTICS S-1FT2/S-1FT7/S-1FG1/M-1PH8 motors with SPEED-CONNECT connector

Selection and ordering data

For SIMOTICS S-1FT2/S-1FT7/S-1FG1/M-1PH808/M-1PH810 motors without holding brake, with SPEED-CONNECT connector on SINAMICS S120 Motor Modules in booksize format

Connection method, Motor Module end	No. of cores × cross-section	Connector size, motor end	**Pre-assembled cable without brake cores**	**Cable sold by the meter** [1] **without brake cores**	D_{max}		Weight (without connector)		Smallest bending radius [2]	
					6FX5	**6FX8**	**6FX5**	**6FX8**	**6FX5**	**6FX8**
	mm²		Article No.	Article No.	mm (in)	mm (in)	kg/m (lb/ft)	kg/m (lb/ft)	mm (in)	mm (in)
Connector [3]	4 × 1,5	M17 (0.5)	**6FX■0■2-5CN27-....**	**6FX■008-1BB11-....**	8.4 (0.33)	9.5 (0.37)	0.12 (0.08)	0.15 (0.10)	155 (6.10)	75 (2.95)
		M23 (1)	**6FX■0■2-5CN06-....**							
		M40 (1.5)	**6FX■0■2-5CN26-....**							
	4 × 2,5	M23 (1)	**6FX■0■2-5CN16-....**	**6FX■008-1BB21-....**	10.0 (0.39)	11.0 (0.43)	0.21 (0.14)	0.20 (0.13)	180 (7.09)	90 (3.54)
		M40 (1.5)	**6FX■0■2-5CN36-....**							
	4 × 4	M40 (1.5)	**6FX■0■2-5CN46-....**	**6FX■008-1BB31-....**	11.4 (0.45)	12.3 (0.48)	0.27 (0.18)	0.27 (0.18)	210 (8.27)	100 (3.94)
	4 × 6	M40 (1.5)	**6FX■0■2-5CN56-....**	**6FX■008-1BB41-....**	13.6 (0.54)	14.9 (0.59)	0.37 (0.25)	0.41 (0.28)	245 (9.65)	120 (4.72)
	4 × 10	M40 (1.5)	**6FX■0■2-5CN66-....**	**6FX■008-1BB51-....**	20.0 (0.79)	18.2 (0.72)	0.73 (0.49)	0.62 (0.42)	360 (14.17)	140 (5.51)
Ring cable lugs [4]	4 × 6	M40 (1.5)	**6FX■002-5CN54-....**	**6FX■008-1BB41-....**	13.6 (0.54)	14.9 (0.59)	0.37 (0.25)	0.41 (0.28)	245 (9.65)	120 (4.72)
			6FX■042-5CN54-....							
	4 × 10	M40 (1.5)	**6FX■002-5CN64-....**	**6FX■008-1BB51-....**	20.0 (0.79)	18.2 (0.72)	0.73 (0.49)	0.62 (0.42)	360 (14.17)	140 (5.51)
			6FX■042-5CN64-....							
	4 × 16	M40 (1.5)	**6FX■002-5CN24-....**	**6FX■008-1BB61-....**	24.2 (0.95)	22.3 (0.88)	1.10 (0.74)	1.01 (0.68)	440 (17.32)	170 (6.69)
			6FX■042-5CN24-....							
Bare wire ends [5]	4 × 10	M40 (1.5)	**6FX■002-5CG62-....**	**6FX■008-1BB51-....**	20.0 (0.79)	18.2 (0.72)	0.73 (0.49)	0.62 (0.42)	360 (14.17)	140 (5.51)
			6FX■042-5CG62-....							
	4 × 16	M40 (1.5)	**6FX■002-5CG25-....**	**6FX■008-1BB61-....**	24.2 (0.95)	22.3 (0.88)	1.10 (0.74)	1.01 (0.68)	440 (17.32)	170 (6.69)
			6FX■042-5CG25-....							

MOTION-CONNECT 500	**5**				**5**		
MOTION-CONNECT 800PLUS	**8**				**8**		
Power cable							
Pre-assembled		**0**					
Connector at module end supplied separately		**1**					
Connector at module end not supplied		**2**					
Connector at motor end supplied separately		**4**					
Length code			**....**			**....**	

[1] Note type of delivery.

[2] Valid for installation in a cable carrier.

[3] For Motor Modules in booksize format C/D type, 3 A to 30 A.

[4] For Motor Modules in booksize format, 45 A and 60 A.

[5] For Motor Modules in booksize format C type, 45 A and 60 A and booksize format from 85 A. Length of wire ends 250 mm (9.84 in). 5 M8 cable lugs and 5 M6 cable lugs are also included in the scope of supply of the cables.

© Siemens 2024

Power cables for SIMOTICS S-1FT2/S-1FT7/S-1FG1/M-1PH8 motors with SPEED-CONNECT connector

Selection and ordering data

For SIMOTICS S-1FT2/S-1FT7 motors with holding brake, with SPEED-CONNECT connector on SINAMICS S120 Motor Modules in booksize format

Connection method, Motor Module end	No. of cores × cross-section	Connector size, motor end	**Pre-assembled cable with brake cores**	**Cable sold by the meter** [1] **with brake cores**	D_{max}		Weight (without connector)		Smallest bending radius [2]	
					6FX5	**6FX8**	**6FX5**	**6FX8**	**6FX5**	**6FX8**
	mm²		Article No.	Article No.	mm (in)	mm (in)	kg/m (lb/ft)	kg/m (lb/ft)	mm (in)	mm (in)
Connector [3]	4 × 1.5+2 × 1.5	M17 (0.5)	**6FX■0■2-5DN27-....**	**6FX■008-1BA11-....**	10.8 (0.43)	12.0 (0.47)	0.22 (0.15)	0.23 (0.11)	195 (7.68)	90 (3.54)
		M23 (1)	**6FX■0■2-5DN06-....**							
		M40 (1.5)	**6FX■0■2-5DN26-....**							
	4 × 2.5+2 × 1.5	M23 (1)	**6FX■0■2-5DN16-....**	**6FX■008-1BA21-....**	12.4 (0.49)	13.8 (0.54)	0.25 (0.17)	0.30 (0.20)	225 (8.86)	105 (4.13)
		M40 (1.5)	**6FX■0■2-5DN36-....**							
	4 × 4+2 × 1.5	M40 (1.5)	**6FX■0■2-5DN46-....**	**6FX■008-1BA31-....**	14.0 (0.55)	15.2 (0.60)	0.35 (0.24)	0.38 (0.26)	255 (10.04)	115 (4.53)
	4 × 6+2 × 1.5	M40 (1.5)	**6FX■0■2-5DN56-....**	**6FX■008-1BA41-....**	16.1 (0.63)	17.3 (0.68)	0.49 (0.33)	0.50 (0.34)	290 (11.42)	130 (5.12)
	4 × 10+2 × 1.5	M40 (1.5)	**6FX■0■2-5DN66-....**	**6FX■008-1BA51-....**	21.7 (0.85)	20.1 (0.79)	0.81 (0.54)	0.71 (0.48)	395 (15.55)	150 (5.91)
Ring cable lugs [4]	4 × 6+2 × 1.5	M40 (1.5)	**6FX■002-5DN54-....**	**6FX■008-1BA41-....**	16.1 (0.63)	17.3 (0.68)	0.49 (0.33)	0.50 (0.34)	290 (11.42)	130 (5.12)
			6FX■042-5DN54-....							
	4 × 10+2 × 1.5	M40 (1.5)	**6FX■002-5DN64-....**	**6FX■008-1BA51-....**	21.7 (0.85)	20.1 (0.79)	0.81 (0.54)	0.71 (0.48)	395 (15.55)	150 (5.91)
			6FX■042-5DN64-....							

MOTION-CONNECT 500	**5**				**5**	
MOTION-CONNECT 800PLUS	**8**				**8**	
Power cable						
Pre-assembled		**0**				
Connector at module end supplied separately		**1**				
Connector at module end not supplied		**2**				
Connector at motor end supplied separately		**4**				
Length code			**....**			**....**

[1] Note type of delivery.
[2] Valid for installation in a cable carrier.
[3] For Motor Modules in booksize format C/D type, 3 A to 30 A.
[4] For Motor Modules in booksize format, 45 A and 60 A.

© Siemens 2024

Power cables for SIMOTICS S-1FT2/S-1FT7/S-1FG1/M-1PH8 motors with SPEED-CONNECT connector

Selection and ordering data

For SIMOTICS S-1FT2/S-1FT7/M-1PH808/M-1PH810 motors without holding brake, with SPEED-CONNECT connector on SINAMICS S120 Motor Modules in booksize compact format and Power Modules

Connection method, Power Module end	No. of cores × cross-section	Connector size, motor end	**Pre-assembled cable without brake cores**	**Cable sold by the meter** [1] **without brake cores**	D_{max}		Weight (without connector)		Smallest bending radius [2]	
					6FX5	**6FX8**	**6FX5**	**6FX8**	**6FX5**	**6FX8**
	mm²		Article No.	Article No.	mm (in)	mm (in)	kg/m (lb/ft)	kg/m (lb/ft)	mm (in)	mm (in)
Bare wire ends	4 × 1.5	M17 (0.5)	**use cable with holding brake**							
		M23 (1)	**6FX■0■2-5CG10-....**	**6FX■008-1BB11-....**	8.4 (0.33)	9.5 (0.37)	0.12 (0.08)	0.15 (0.10)	155 (6.10)	75 (2.95)
		M40 (1.5)	**6FX■0■2-5CG22-....**							
	4 × 2.5	M23 (1)	**6FX■0■2-5CG12-....**	**6FX■008-1BB21-....**	10.0 (0.39)	11.0 (0.43)	0.21 (0.69)	0.20 (0.13)	180 (7.09)	90 (3.54)
		M40 (1.5)	**6FX■0■2-5CG32-....**							
	4 × 4	M40 (1.5)	**6FX■0■2-5CG42-....**	**6FX■008-1BB31-....**	11.4 (0.45)	12.3 (0.48)	0.27 (0.18)	0.27 (0.18)	210 (8.27)	100 (3.94)
	4 × 6	M40 (1.5)	**6FX■0■2-5CG52-....**	**6FX■008-1BB41-....**	13.6 (0.54)	14.9 (0.59)	0.37 (0.25)	0.41 (0.28)	245 (9.65)	120 (4.72)
	4 × 10	M40 (1.5)	**6FX■0■2-5CG62-....**	**6FX■008-1BB51-....**	20.0 (0.79)	18.2 (0.72)	0.73 (0.49)	0.62 (0.42)	360 (14.17)	140 (5.51)

MOTION-CONNECT 500	**5**			**5**						
MOTION-CONNECT 800PLUS	**8**			**8**						
Power cable										
Pre-assembled		**0**								
Connector at motor end supplied separately		**4**								
Length code			**....**							

For SIMOTICS S-1FT2/S-1FT7 motors with holding brake, with SPEED-CONNECT connector on SINAMICS S120 Motor Modules in booksize compact format and Power Modules

Connection method, Power Module end	No. of cores × cross-section	Connector size, motor end	**Pre-assembled cable with brake cores**	**Cable sold by the meter** [1] **with brake cores**	D_{max}		Weight (without connector)		Smallest bending radius [2]	
					6FX5	**6FX8**	**6FX5**	**6FX8**	**6FX5**	**6FX8**
	mm²		Article No.	Article No.	mm (in)	mm (in)	kg/m (lb/ft)	kg/m (lb/ft)	mm (in)	mm (in)
Bare wire ends	4 × 1.5+2 × 1.5	M17 (0.5)	**6FX■0■2-5DN30-....**	**6FX■008-1BA11-....**	10.8 (0.43)	12.0 (0.47)	0.22 (0.15)	0.23 (0.15)	195 (7.68)	90 (3.54)
		M23 (1)	**6FX■0■2-5DG10-....**							
		M40 (1.5)	**6FX■0■2-5DG22-....**							
	4 × 2.5+2 × 1.5	M23 (1)	**6FX■0■2-5DG12-....**	**6FX■008-1BA21-....**	12.4 (0.49)	13.8 (0.54)	0.25 (0.17)	0.30 (0.20)	225 (8.86)	105 (4.13)
		M40 (1.5)	**6FX■0■2-5DG32-....**							
	4 × 4+2 × 1.5	M40 (1.5)	**6FX■0■2-5DG42-....**	**6FX■008-1BA31-....**	14.0 (0.55)	15.2 (0.60)	0.35 (0.24)	0.38 (0.26)	255 (10.04)	115 (4.53)
	4 × 6+2 × 1.5	M40 (1.5)	**6FX■0■2-5DG52-....**	**6FX■008-1BA41-....**	16.1 (0.63)	17.3 (0.68)	0.49 (0.33)	0.50	290 (11.42)	130 (5.12)
	4 × 10+2 × 1.5	M40 (1.5)	**6FX■0■2-5DG62-....**	**6FX■008-1BA51-....**	21.7 (0.85)	20.1 (0.79)	0.81 (0.54)	0.71 (0.48)	395 (15.55)	150 (5.91)

MOTION-CONNECT 500	**5**			**5**						
MOTION-CONNECT 800PLUS	**8**			**8**						
Power cable										
Pre-assembled		**0**								
Connector at motor end supplied separately		**4**								
Length code			**....**							

[1] Note type of delivery.
[2] Valid for installation in a cable carrier.

© Siemens 2024

Power cables for SIMOTICS S-1FT2/S-1FT7/M-1PH8 motors with full-thread connector

Selection and ordering data

For SIMOTICS S-1FT2/S-1FT7/M-1PH808/M-1PH810/M-1PH813 motors without holding brake, with full-thread connector on SINAMICS S120 Motor Modules in booksize format

Connection method, Motor Module end	No. of cores × cross-section	Connector size, motor end	**Pre-assembled cable without brake cores**	**Cable sold by the meter** [1] **without brake cores**	D_{max}		Weight (without connector)		Smallest bending radius [2]	
					6FX5	**6FX8**	**6FX5**	**6FX8**	**6FX5**	**6FX8**
	mm^2		Article No.	Article No.	mm (in)	mm (in)	kg/m (lb/ft)	kg/m (lb/ft)	mm (in)	mm (in)
Connector [3]	4 × 1.5	M23 (1)	**6FX■0■2-5CS06-....**	**6FX■008-1BB11-....**	8.4 (0.33)	9.5 (0.37)	0.12 (0.08)	0.15 (0.10)	155 (6.10)	75 (2.95)
		M40 (1.5)	**6FX■0■2-5CS26-....**							
		b. w. [4]	**6FX5002-5CW02-....**							
			6FX5012-5CW02-....							
			6FX5022-5CW02-....							
	4 × 2.5	M23 (1)	**6FX■0■2-5CS16-....**	**6FX■008-1BB21-....**	10.0 (0.39)	11.0 (0.43)	0.21 (0.69)	0.20 (0.13)	180 (7.09)	90 (3.54)
		M40 (1.5)	**6FX■0■2-5CS36-....**							
		b. w. [4]	**6FX5002-5CW12-....**							
			6FX5012-5CW12-....							
			6FX5022-5CW12-....							
	4 × 4	M40 (1.5)	**6FX■0■2-5CS46-....**	**6FX■008-1BB31-....**	11.4 (0.45)	12.3 (0.48)	0.27 (0.18)	0.27 (0.18)	210 (8.27)	100 (3.94)
		b. w. [4]	**6FX5002-5CW42-....**							
			6FX5012-5CW42-....							
			6FX5022-5CW42-....							
	4 × 6	M40 (1.5)	**6FX■0■2-5CS56-....**	**6FX■008-1BB41-....**	13.6 (0.54)	14.9 (0.59)	0.37 (0.25)	0.41 (0.28)	245 (9.65)	120 (4.72)
		b. w. [4]	**6FX5002-5CW52-....**							
			6FX5012-5CW52-....							
			6FX5022-5CW52-....							
	4 × 10	M40 (1.5)	**6FX■0■2-5CS66-....**	**6FX■008-1BB51-....**	20.0 (0.79)	18.2 (0.72)	0.73 (0.49)	0.62 (0.42)	360 (14.17)	140 (5.51)
		M58 (3)	**6FX■0■2-5CS17-....**							
		b. w. [4]	**6FX5002-5CW62-....**							
			6FX5012-5CW62-....							
			6FX5022-5CW62-....							
Ring cable lugs [5]	4 × 6	M40 (1.5)	**6FX■002-5CS54-....**	**6FX■008-1BB41-....**	13.6 (0.54)	14.9 (0.59)	0.37 (0.25)	0.41 (0.28)	245 (9.65)	120 (4.72)
			6FX■042-5CS54-....							
	4 × 10	M40 (1.5)	**6FX■002-5CS64-....**	**6FX■008-1BB51-....**	20.0 (0.79)	18.2 (0.72)	0.73 (0.49)	0.62 (0.42)	360 (14.17)	140 (5.51)
			6FX■042-5CS64-....							
		M58 (3)	**6FX■002-5CS14-....**							
			6FX■042-5CS14-....							
	4 × 16	M40 (1.5)	**6FX8002-5CS24-....**	**6FX■008-1BB61-....**	24.2 (0.95)	22.3 (0.88)	1.10 (0.74)	1.01 (0.68)	440 (17.32)	170 (6.69)
			6FX8042-5CS24-....							
		M58 (3)	**6FX■002-5CS23-....**							
			6FX■042-5CS23-....							

MOTION-CONNECT 500	**5**				**5**	
MOTION-CONNECT 800PLUS	**8**				**8**	
Power cable						
Pre-assembled		**0**				
Connector at module end supplied separately		**1**				
Connector at module end not supplied		**2**				
Connector at motor end supplied separately		**4**				
Length code			**....**			**....**

[1] Note type of delivery.
[2] Valid for installation in a cable carrier.
[3] For Motor Modules in booksize format C/D type, 3 A to 30 A
[4] b. w. bare wire ends; suitable for motors with terminal box.
[5] For Motor Modules in booksize format, 45 A and 60 A.

© Siemens 2024

Selection and ordering data

For SIMOTICS S-1FT7/M-1PH808/M-1PH810/M-1PH813 motors without holding brake, with full-thread connector on SINAMICS S120 Motor Modules in booksize format

Connection method, Motor Module end	No. of cores × cross-section	Connector size, motor end	**Pre-assembled cable without brake cores**	**Cable sold by the meter[1] without brake cores**	D_{max}		Weight (without connector)		Smallest bending radius[2]	
					6FX5	**6FX8**	**6FX5**	**6FX8**	**6FX5**	**6FX8**
	mm²		Article No.	Article No.	mm (in)	mm (in)	kg/m (lb/ft)	kg/m (lb/ft)	mm (in)	mm (in)
Bare wire ends[3]	4 × 10	M40 (1.5)	**6FX■002-5CG61-....**	**6FX■008-1BB51-....**	20.0 (0.79)	18.2 (0.72)	0.73 (0.49)	0.62 (0.42)	360 (14.17)	140 (5.51)
			6FX■042-5CG61-....							
		M58 (3)	**6FX■002-5CG13-....**							
			6FX■042-5CG13-....							
	4 × 16	M40 (1.5)	**6FX■002-5CG24-....**	**6FX■008-1BB61-....**	24.2 (0.95)	22.3 (0.88)	1.10 (0.74)	1.01 (0.68)	440 (17.32)	170 (6.69)
			6FX■042-5CG24-....							
		M58 (3)	**6FX■002-5CG23-....**							
			6FX■042-5CG23-....							

MOTION-CONNECT 500	**5**				**5**		
MOTION-CONNECT 800PLUS	**8**				**8**		
Power cable							
Pre-assembled		**0**					
Connector at module end supplied separately		**1**					
Connector at module end not supplied		**2**					
Connector at motor end supplied separately		**4**					
Length code			**....**			**....**	

[1] Note type of delivery.

[2] Valid for installation in a cable carrier.

[3] For Motor Modules in booksize format C type, 45 A and 60 A and booksize format from 85 A. Length of wire ends 250 mm (9.84 in). 5 M8 cable lugs and 5 M6 cable lugs are also included in the scope of supply of the cables.

© Siemens 2024

Power cables for SIMOTICS S-1FT2/S-1FT7/M-1PH8 motors with full-thread connector

Selection and ordering data

For SIMOTICS S-1FT2/S-1FT7 motors with holding brake, with full-thread connector on SINAMICS S120 Motor Modules in booksize format

Connection method, Motor Module end	No. of cores × cross-section	Connector size, motor end	Pre-assembled cable with brake cores	Cable sold by the meter [1] with brake cores	D_{max}		Weight (without connector)		Smallest bending radius [2]	
					6FX5	6FX8	6FX5	6FX8	6FX5	6FX8
	mm²		Article No.	Article No.	mm (in)	mm (in)	kg/m (lb/ft)	kg/m (lb/ft)	mm (in)	mm (in)
Connector [3]	4 × 1.5+2 × 1.5	M17 (0.5)	6FX■0■2-5DS27-....	6FX5008-1BA11-....	10.8 (0.43)	–	0.22 (0.15)	–	195 (7.68)	–
		M23 (1)	6FX■0■2-5DS06-....	6FX■008-1BA11-....	10.8 (0.43)	12.0 (0.47)	0.22 (0.15)	0.23 (0.15)	195 (7.68)	90 (3.54)
		M40 (1.5)	6FX■0■2-5DS26-....							
	4 × 2.5+2 × 1.5	M23 (1)	6FX■0■2-5DS16-....	6FX■008-1BA21-....	12.4 (0.49)	13.8 (0.54)	0.25 (0.17)	0.30 (0.20)	225 (8.86)	105 (4.13)
		M40 (1.5)	6FX■0■2-5DS36-....							
	4 × 4+2 × 1.5	M40 (1.5)	6FX■0■2-5DS46-....	6FX■008-1BA31-....	14.0 (0.55)	15.2 (0.60)	0.35 (0.24)	0.38 (0.26)	255 (10.04)	115 (4.53)
	4 × 6+2 × 1.5	M40 (1.5)	6FX■0■2-5DS56-....	6FX■008-1BA41-....	16.1 (0.63)	17.3 (0.68)	0.49 (0.33)	0.50 (0.34)	290 (11.42)	130 (5.12)
	4 × 10+2 × 1.5	M40 (1.5)	6FX■0■2-5DS66-....	6FX■008-1BA51-....	21.7 (0.85)	20.1 (0.79)	0.81 (0.54)	0.71 (0.48)	395 (15.55)	150 (5.91)
		M58 (3)	6FX■0■2-5DS17-....							
Ring cable lugs [4]	4 × 6+2 × 1.5	M40 (1.5)	6FX■002-5DS54-....	6FX■008-1BA41-....	16.1 (0.63)	17.3 (0.68)	0.49 (0.33)	0.50 (0.34)	290 (11.42)	130 (5.12)
			6FX■042-5DS54-....							
	4 × 10+2 × 1.5	M40 (1.5)	6FX■002-5DS64-....	6FX■008-1BA51-....	21.7 (0.85)	20.1 (0.79)	0.81 (0.54)	0.71 (0.48)	395 (15.55)	150 (5.91)
			6FX■042-5DS64-....							
		M58 (3)	6FX■002-5DS14-....							
			6FX■042-5DS14-....							
	4 × 16+2 × 1.5	M58 (3)	6FX■002-5DS23-....	6FX■008-1BA61-....	25.0 (0.98)	23.8 (0.94)	1.12 (0.75)	1.03 (0.69)	450 (17.72)	180 (7.09)
			6FX■042-5DS23-....							
Bare wire ends [5]	4 × 16+2 × 1.5	M58 (3)	6FX■002-5DG23-....	6FX■008-1BA61-....	25.0 (0.98)	23.8 (0.94)	1.12 (0.75)	1.03 (0.69)	450 (17.72)	180 (7.09)
			6FX■042-5DG23-....							
	4 × 25+2 × 1.5	M58 (3)	6FX■002-5DG33-....	6FX■008-1BA25-....	29.4 (1.16)	27.6 (1.09)	1.62 (1.09)	1.47 (0.99)	530 (20.87)	280 (11.02)
			6FX■042-5DG33-....							
	4 × 35+2 × 1.5	M58 (3)	6FX■002-5DG43-....	6FX■008-1BA35-....	32.6 (1.28)	31.9 (1.26)	2.06 (1.38)	1.92 (1.29)	590 (23.23)	320 (12.60)
			6FX■042-5DG43-....							
	4 × 50+2 × 1.5	M58 (3)	6FX■002-5DG53-....	6FX■008-1BA50-....	38.0 (1.50)	35.0 (1.38)	3.04 (2.04)	2.56 (1.72)	685 (26.97)	350 (13.78)
			6FX■042-5DG53-....							

MOTION-CONNECT 500	**5**					**5**						
MOTION-CONNECT 800PLUS	**8**					**8**						
Power cable												
Pre-assembled		**0**										
Connector at module end supplied separately		**1**										
Connector at module end not supplied		**2**										
Connector at motor end supplied separately		**4**										
Length code				**....**						**....**		

[1] Note type of delivery.
[2] Valid for installation in a cable carrier.
[3] For Motor Modules in booksize format C/D type, 3 A to 30 A.
[4] For Motor Modules in booksize format, 45 A and 60 A.
[5] For Motor Modules in booksize format C type, 45 A and 60 A and booksize format from 85 A. Length of wire ends 250 mm (9.84 in) for 4 × 16 mm² and 300 mm (11.81 in) for 4 × 25 mm² to 4 × 50 mm². 5 M8 cable lugs, 5 M6 cable lugs, and 1 spring-type terminal are also included in the scope of supply of the cables.

© Siemens 2024

Selection and ordering data

For SIMOTICS S-1FT2/S-1FT7/M-1PH808/M-1PH810/M-1PH813 motors without holding brake, with full-thread connector on SINAMICS S120 Motor Modules in booksize compact format and Power Modules

Connection method, Power Module end	No. of cores × cross-section	Connector size, motor end	**Pre-assembled cable without brake cores**	**Cable sold by the meter [1] without brake cores**	D_{max}		Weight (without connector)		Smallest bending radius [2]	
					6FX5	**6FX8**	**6FX5**	**6FX8**	**6FX5**	**6FX8**
	mm²		Article No.	Article No.	mm (in)	mm (in)	kg/m (lb/ft)	kg/m (lb/ft)	mm (in)	mm (in)
Bare wire ends	4 × 1.5	M23 (1)	**6FX■0■2-5CG01-....**	**6FX■008-1BB11-....**	8.4 (0.33)	9.5 (0.37)	0.12 (0.08)	0.15 (0.10)	155 (6.10)	75 (2.95)
		M40 (1.5)	**6FX■0■2-5CG21-....**							
	4 × 2.5	M23 (1)	**6FX■0■2-5CG11-....**	**6FX■008-1BB21-....**	10.0 (0.39)	11.0 (0.43)	0.21 (0.14)	0.20 (0.13)	180 (7.09)	90 (3.54)
		M40 (1.5)	**6FX■0■2-5CG31-....**							
	4 × 4	M40 (1.5)	**6FX■0■2-5CG41-....**	**6FX■008-1BB31-....**	11.4 (0.45)	12.3 (0.48)	0.27 (0.18)	0.27 (0.18)	210 (8.27)	100 (3.94)
	4 × 6	M40 (1.5)	**6FX■0■2-5CG51-....**	**6FX■008-1BB41-....**	13.6 (0.54)	14.9 (0.59)	0.37 (0.25)	0.41 (0.28)	245 (9.65)	120 (4.72)
	4 × 10	M40 (1.5)	**6FX■0■2-5CG61-....**	**6FX■008-1BB51-....**	20.0 (0.79)	18.2 (0.72)	0.73 (0.49)	0.62 (0.42)	360 (14.17)	140 (5.51)
		M58 (3)	**6FX■0■2-5CG13-....**							
	4 × 16	M58 (3)	**6FX■0■2-5CG23-....**	**6FX■008-1BB61-....**	24.2 (0.95)	22.3 (0.88)	1.10 (0.74)	1.01 (0.68)	440 (17.32)	170 (6.69)

MOTION-CONNECT 500	**5**			**5**		
MOTION-CONNECT 800PLUS	**8**			**8**		
Power cable						
Pre-assembled		**0**				
Connector at motor end supplied separately		**4**				
Length code			**....**		**....**	

For SIMOTICS S-1FT2/S-1FT7 motors with holding brake, with full-thread connector on SINAMICS S120 Motor Modules in booksize compact format and Power Modules

Connection method, Power Module end	No. of cores × cross-section	Connector size, motor end	**Pre-assembled cable with brake cores**	**Cable sold by the meter [1] with brake cores**	D_{max}		Weight (without connector)		Smallest bending radius [2]	
					6FX5	**6FX8**	**6FX5**	**6FX8**	**6FX5**	**6FX8**
	mm²		Article No.	Article No.	mm (in)	mm (in)	kg/m (lb/ft)	kg/m (lb/ft)	mm (in)	mm (in)
Bare wire ends	4 × 1.5+2 × 1.5	M17 (0.5)	**6FX■0■2-5DA30-....**	**6FX■008-1BA11-....**	10.8 (0.43)	12.0 (0.47)	0.22 (0.15)	0.23 (0.15)	195 (7.68)	90 (3.54)
		M23 (1)	**6FX■0■2-5DG01-....**							
		M40 (1.5)	**6FX■0■2-5DG21-....**							
	4 × 2.5+2 × 1.5	M23 (1)	**6FX■0■2-5DG11-....**	**6FX■008-1BA21-....**	12.4 (0.49)	13.8 (0.54)	0.25 (0.17)	0.30 (0.20)	225 (8.86)	105 (4.13)
		M40 (1.5)	**6FX■0■2-5DG31-....**							
	4 × 4+2 × 1.5	M40 (1.5)	**6FX■0■2-5DG41-....**	**6FX■008-1BA31-....**	14.0 (0.55)	15.2 (0.60)	0.35 (0.24)	0.38 (0.26)	255 (10.04)	115 (4.53)
	4 × 6+2 × 1.5	M40 (1.5)	**6FX■0■2-5DG51-....**	**6FX■008-1BA41-....**	16.1 (0.63)	17.3 (0.68)	0.49 (0.33)	0.50	290 (11.42)	130 (5.12)
	4 × 10+2 × 1.5	M40 (1.5)	**6FX■0■2-5DG61-....**	**6FX■008-1BA51-....**	21.7 (0.85)	20.1 (0.79)	0.81 (0.54)	0.71 (0.48)	395 (15.55)	150 (5.91)
		M58 (3)	**6FX■0■2-5DG13-....**							
	4 × 16+2 × 1.5	M58 (3)	**6FX■0■2-5DG23-....**	**6FX■008-1BA61-....**	25.0 (0.98)	23.8 (0.94)	1.12 (0.75)	1.03 (0.69)	450 (17.72)	180 (7.09)
	4 × 25+2 × 1.5	M58 (3)	**6FX■0■2-5DG33-....**	**6FX■008-1BA25-....**	29.4 (1.16)	27.6 (1.09)	1.62 (1.09)	1.47 (0.99)	530 (20.87)	280 (11.02)
	4 × 35+2 × 1.5	M58 (3)	**6FX■0■2-5DG43-....**	**6FX■008-1BA35-....**	32.6 (1.28)	31.9 (1.26)	2.06 (1.38)	1.92 (1.29)	590 (23.23)	320 (12.60)
	4 × 50+2 × 1.5	M58 (3)	**6FX■0■2-5DG53-....**	**6FX■008-1BA50-....**	38.0 (1.50)	35.0 (1.38)	3.04 (2.04)	2.56 (1.72)	685 (26.97)	350 (13.78)

MOTION-CONNECT 500	**5**			**5**		
MOTION-CONNECT 800PLUS	**8**			**8**		
Power cable						
Pre-assembled		**0**				
Connector at motor end supplied separately		**4**				
Length code			**....**		**....**	

[1] Note type of delivery.

[2] Valid for installation in a cable carrier.

© Siemens 2024

Extensions for power cables with SPEED-CONNECT or full-thread connector

Accessories

Extensions for power cables with SPEED-CONNECT or full-thread connector

No. of cores × cross-section		Connector size, motor end	Basic cable for motors on SINAMICS S120		**Extension**
without brake cores	with brake cores		Motor Modules booksize format	Power Modules Motor Modules booksize compact format	
mm^2	mm^2		Type	Type	Article No.
4 × 1.5	4 × 1.5+2 × 1.5	0.5	6FX . 002-5DS27-....	6FX . 002-5DA30-....	**6FX■002-5ME05-....**
			6FX . 002-5 . N27-....	6FX . 002-5DN30-....	**6FX■002-5MN05-....**
4 × 1.5	4 × 1.5+2 × 1.5	1	6FX . 002-5 . S06-....	6FX . 002-5 . G01-....	**6FX■002-5■A05-....**
			6FX . 002-5 . N06-....	6FX . 002-5 . G10-....	**6FX■002-5■N05-....**
		1.5	6FX . 002-5 . S26-....	6FX . 002-5 . G21-....	**6FX■002-5■A28-....**
			6FX . 002-5 . N26-....	6FX . 002-5 . G22-....	**6FX■002-5■Q28-....**
4 × 2.5	4 × 2.5+2 × 1.5	1	6FX . 002-5 . S16-....	6FX . 002-5 . G11-....	**6FX■002-5■A15-....**
			6FX . 002-5 . N16-....	6FX . 002-5 . G12-....	**6FX■002-5■Q15-....**
		1.5	6FX . 002-5 . S36-....	6FX . 002-5 . G31-....	**6FX■002-5■A38-....**
			6FX . 002-5 . N36-....	6FX . 002-5 . G32-....	**6FX■002-5■Q38-....**
4 × 4	4 × 4+2 × 1.5	1.5	6FX . 002-5 . S46-....	6FX . 002-5 . G41-....	**6FX■002-5■A48-....**
			6FX . 002-5 . N46-....	6FX . 002-5 . G42-....	**6FX■002-5■Q48-....**
4 × 6	4 × 6+2 × 1.5	1.5	6FX . 002-5 . S56-....	6FX . 002-5 . G51-....	**6FX■002-5■A58-....**
			6FX . 002-5 . S54-....	–	**6FX■002-5■A58-....**
			6FX . 002-5 . N56-....	6FX . 002-5 . G52-....	**6FX■002-5■Q58-....**
			6FX . 002-5 . N54-....	–	**6FX■002-5■Q58-....**
4 × 10	4 × 10+2 × 1.5	1.5	6FX . 002-5 . S66-....	6FX . 002-5 . G61-....	**6FX■002-5■A68-....**
			6FX . 002-5 . S64-....	–	**6FX■002-5■A68-....**
			6FX . 002-5 . N66-....	6FX . 002-5 . G62-....	**6FX■002-5■Q68-....**
			6FX . 002-5 . N64-....	–	**6FX■002-5■Q68-....**
		3 [1]	6FX . 002-5 . S17-....	6FX . 002-5 . G13-....	**6FX■002-5■X18-....**
			6FX . 002-5 . S14-....	–	**6FX■002-5■X18-....**
4 × 16	4 × 16+2 × 1.5	1.5	6FX8002-5CS24-....	6FX . 002-5CG24-....	**6FX8002-5YW12-....**
			6FX . 002-5CN24-....	6FX . 002-5CG25-....	**6FX8002-5YW12-....** [1)2)]
		3 [1]	6FX . 002-5 . S23-....	6FX . 002-5 . G23-....	**6FX■002-5■X28-....**
			6FX . 002-5 . G23-....	–	**6FX■002-5■X28-....**
–	4 × 25+2 × 1.5	3 [1]	6FX . 002-5DG33-....	6FX . 002-5DG33-....	**6FX■002-5DX38-....**
–	4 × 35+2 × 1.5	3 [1]	6FX . 002-5DG43-....	6FX . 002-5DG43-....	**6FX■002-5DX48-....**
–	4 × 50+2 × 1.5	3 [1]	6FX . 002-5DG53-....	6FX . 002-5DG53-....	**6FX■002-5DX58-....**

MOTION-CONNECT 500	**5**	
MOTION-CONNECT 800PLUS	**8**	
Without brake cores		**C**
With brake cores		**D**
Length code		**....**

The maximum specified cable length (basic cable and extensions) must not be exceeded. The total maximum length of power cables with brake cores is reduced by 2 m (6.56 ft) for each interruption point.

[1] Motor-end connector with full thread only.
[2] Module-end connector compatible with SPEED-CONNECT.

© Siemens 2024

Selection and ordering data

For SIMOTICS M-1PH808/M-1PH810/M-1PH813/M-1PH816 motors with terminal box on SINAMICS S120 Motor Modules

Motor	Thread	No. of cores × cross-section	Connection method Motor Module end	**Pre-assembled cable**	**Cable sold by the meter** [1]	D_{max}	Weight (without gland)	Smallest bending radius [2]
SIMOTICS		mm^2		Article No.	Article No.	mm (in)	kg/m (lb/ft)	mm (in)
M-1PH808	M25	4 × 2.5	Connector [3]	**6FX80■2-5CP17-....**	**6FX8008-1BB21-....**	11.0 (0.43)	0.20 (0.13)	90 (3.54)
		4 × 4		**6FX80■2-5CP27-....**	**6FX8008-1BB31-....**	12.3 (0.48)	0.27 (0.18)	100 (3.94)
M-1PH810	M32	4 × 2.5	Connector [3]	**6FX80■2-5CP16-....**	**6FX8008-1BB21-....**	11.0 (0.43)	0.20 (0.13)	90 (3.54)
		4 × 4		**6FX80■2-5CP26-....**	**6FX8008-1BB31-....**	12.3 (0.48)	0.27 (0.18)	100 (3.94)
		4 × 10		**6FX80■2-5CP46-....**	**6FX8008-1BB51-....**	18.2 (0.72)	0.62 (0.42)	140 (5.51)
		4 × 10	Bare wire ends [4]	**6FX8002-5CR41-....**				
M-1PH813	M40	4 × 10	Connector [3]	**6FX80■2-5CP47-....**	**6FX8008-1BB51-....**	18.2 (0.72)	0.62 (0.42)	140 (5.51)
			Bare wire ends [4]	**6FX8002-5CR42-....**				
	M50	4 × 10	Connector [3]	**6FX80■2-5CP45-....**				
			Bare wire ends [4]	**6FX8002-5CR43-....**				
	M40	4 × 16	Bare wire ends [4]	**6FX8002-5CR52-....**	**6FX8008-1BB61-....**	22.3 (0.88)	1.01 (0.68)	170 (6.69)
	M50	4 × 16		**6FX8002-5CR53-....**				
		4 × 35		**6FX5002-5CR73-....**	**6FX5008-1BB35-....**	31.5 (1.24)	1.93 (1.30)	570 (22.44)
		4 × 50		**6FX5002-5CR83-....**	**6FX5008-1BB50-....**	38.0 (1.50)	3.04 (2.04)	685 (26.97)
M-1PH816	M50	4 × 16	Bare wire ends [3]	**6FX8002-5CR53-....**	**6FX8008-1BB61-....**	22.3 (0.88)	1.01 (0.68)	170 (6.69)
				–	**6FX5008-1BB61-....**	24.2 (0.95)	1.10 (0.74)	440 (17.32)
		4 × 35		**6FX5002-5CR73-....**	**6FX5008-1BB35-....**	31.5 (1.24)	1.93 (1.30)	570 (22.44)
				–	**6FX8008-1BA35-....**	29.6 (1.17)	2.00 (1.34)	300 (11.81)
		4 × 50		**6FX5002-5CR83-....**	**6FX5008-1BB50-....**	38.0 (1.50)	3.04 (2.04)	685 (26.97)
				–	**6FX8008-1BA50-....**	34.4 (1.35)	2.66 (1.79)	345 (13.58)
	M63	4 × 25		–	**6FX5008-1BB25-....**	28.0 (1.10)	1.62 (1.09)	505 (19.88)
					6FX8008-1BA25-....	27.6 (1.09)	1.51 (1.01)	280 (11.02)
		4 × 35		–	**6FX5008-1BB35-....**	31.5(1.24)	1.93 (1.30)	570 (22.44)
					6FX8008-1BA35-....	29.6 (1.17)	2.00 (1.34)	300 (11.81)
		4 × 50		–	**6FX5008-1BB50-....**	38.0 (1.50)	3.04 (2.04)	685 (26.97)
					6FX8008-1BA50-....	35 (1.38)	2.56 (1.72)	350 (13.8)
		4 × 70		–	**6FX5008-1BB70-....**	42.6 (1.68)	3.96 (2.66)	770 (30.31)

MOTION-CONNECT 500	**5**				**5**	
MOTION-CONNECT 800PLUS	**8**				**8**	
Power cable						
Pre-assembled		**0**				
Connector at module end supplied separately		**1**				
Connector at module end not supplied		**2**				
Length code			**....**			**....**

[1] Note type of delivery.

[2] Valid for installation in a cable carrier.

[3] For Motor Modules in booksize format C/D type, 3 A to 30 A.

[4] For Motor Modules in booksize format C type, 45 A and 60 A and booksize format from 85 A. Length of wire ends 300 mm (11.81 in). 5 M8 cable lugs and 5 M6 cable lugs are also included in the scope of supply of the cables.

© Siemens 2024

Power cables for SIMOTICS M-1PH8 motors with terminal box

Selection and ordering data

For SIMOTICS M-1PH808/M-1PH810/M-1PH813/M-1PH816 motors with terminal box on SINAMICS S120 Power Modules

Motor	Thread	No. of cores × cross-section	Connection method Power Module end	**Pre-assembled cable**	**Cable sold by the meter** [1]	D_{max}	Weight (without gland)	Smallest bending radius [2]
SIMOTICS		mm²		Article No.	Article No.	mm (in)	kg/m (lb/ft)	mm (in)
M-1PH808	M25	4 × 2.5	Bare wire ends [3]	**6FX8002-5CR10-....** –	**6FX8008-1BB21-....** **6FX5008-1BB21-....**	11.0 (0.43) 10.0 (0.39)	0.20 (0.13) 0.21 (0.69)	90 (3.54) 180 (7.09)
		4 × 4		**6FX8002-5CR20-....** –	**6FX8008-1BB31-....** **6FX5008-1BB31-....**	12.3 (0.48) 11.4 (0.45)	0.27 (0.18) 0.27 (0.18)	100 (3.94) 210 (8.27)
M-1PH810	M32	4 × 2.5	Bare wire ends [3]	**6FX8002-5CR11-....** –	**6FX8008-1BB21-....** **6FX5008-1BB21-....**	11.0 (0.43) 10.0 (0.39)	0.20 (0.13) 0.21 (0.69)	90 (3.54) 180 (7.09)
		4 × 4		**6FX8002-5CR21-....** –	**6FX8008-1BB31-....** **6FX5008-1BB31-....**	12.3 (0.48) 11.4 (0.45)	0.27 (0.18) 0.27 (0.18)	100 (3.94) 210 (8.27)
		4 × 10		**6FX8002-5CR41-....** –	**6FX8008-1BB51-....** **6FX5008-1BB51-....**	18.2 (0.72) 20.0 (0.79)	0.62 (0.42) 0.73 (0.49)	140 (5.51) 360 (14.17)
M-1PH813	M40	4 × 10	Bare wire ends [3]	**6FX8002-5CR42-....** –	**6FX8008-1BB51-....** **6FX5008-1BB51-....**	18.2 (0.72) 20.0 (0.79)	0.62 (0.42) 0.73 (0.49)	140 (5.51) 360 (14.17)
	M50			**6FX8002-5CR43-....** –				
	M40	4 × 16		**6FX8002-5CR52-....** –	**6FX8008-1BB61-....** **6FX5008-1BB61-....**	22.3 (0.88) 24.2 (0.95)	1.01 (0.68) 1.10 (0.74)	170 (6.69) 440 (17.32)
	M50			**6FX8002-5CR53-....** –				
	M40	4 × 35		**6FX5002-5CR72-....**	**6FX5008-1BB35-....**	31.5 (1.24)	1.93 (1.30)	570 (22.44)
	M50			**6FX5002-5CR73-....**	**6FX8008-1BA35-....**	29.6 (1.17)	2.00 (1.34)	300 (11.81)
	M50	4 × 50		**6FX5002-5CR83-....**	**6FX5008-1BB50-....** **6FX8008-1BA50-....**	38.0 (1.50) 34.4 (1.35)	3.04 (2.04) 2.66 (1.79)	685 (26.97) 345 (13.58)
M-1PH816	M50	4 × 16	Bare wire ends [3]	**6FX8002-5CR53-....** –	**6FX8008-1BB61-....** **6FX5008-1BB61-....**	22.3 (0.88) 24.2 (0.95)	1.01 (0.68) 1.10 (0.74)	170 (6.69) 440 (17.32)
		4 × 35		**6FX5002-5CR73-....**	**6FX5008-1BB35-....** **6FX8008-1BA35-....**	31.5 (1.24) 29.6 (1.17)	1.93 (1.30) 2.00 (1.34)	570 (22.44) 300 (11.81)
		4 × 50		**6FX5002-5CR83-....**	**6FX5008-1BB50-....** **6FX8008-1BA50-....**	38.0 (1.50) 34.4 (1.35)	3.04 (2.04) 2.66 (1.79)	685 (26.97) 345 (13.58)
	M63	4 × 25		–	**6FX5008-1BB25-....** **6FX8008-1BA25-....**	28.0 (1.10) 27.6 (1.09)	1.62 (1.09) 1.51 (1.01)	505 (19.88) 280 (11.02)
		4 × 35		–	**6FX5008-1BB35-....** **6FX8008-1BA35-....**	31.5 (1.24) 29.6 (1.17)	1.93 (1.30) 2.00 (1.34)	570 (22.44) 300 (11.81)
		4 × 50		–	**6FX5008-1BB50-....** **6FX8008-1BA50-....**	38.0 (1.50) 34.4 (1.35)	3.04 (2.04) 2.66 (1.79)	685 (26.97) 345 (13.58)
		4 × 70		–	**6FX5008-1BB70-....**	42.6 (1.68)	3.96 (2.66)	770 (30.31)

MOTION-CONNECT 500	**5**			**5**	
MOTION-CONNECT 800PLUS	**8**			**8**	
Length code		**....**			**....**

[1] Note type of delivery.
[2] Valid for installation in a cable carrier.
[3] Length of wire ends: 300 mm (11.81). 4 M8 cable lugs and 4 M6 cable lugs are also included in the scope of supply of the cables.

© Siemens 2024

Selection and ordering data

For SIMOTICS M-1PH808/M-1PH810 motors with terminal box on SINAMICS S120 Motor Modules in booksize compact format

Motor	Thread	No. of cores × cross-section	Connection method Power Module end	**Pre-assembled cable**	**Cable sold by the meter** [1]	D_{max}	Weight (without gland)	Smallest bending radius [2]
SIMOTICS		mm^2		Article No.	Article No.	mm (in)	kg/m (lb/ft)	mm (in)
M-1PH808	M25	4 × 2.5	Bare wire ends [3]	**6FX8002-5CR10-....**	**6FX8008-1BB21-....**	11.0 (0.43)	0.20 (0.13)	90 (3.54)
M-1PH810	M32	4 × 2.5	Bare wire ends [3]	**6FX8002-5CR11-....**	**6FX8008-1BB21-....**	11.0 (0.43)	0.20 (0.13)	90 (3.54)
MOTION-CONNECT 500				**5**			**5**	
MOTION-CONNECT 800PLUS				**8**			**8**	
Length code				**....**			**....**	

Other cables sold by the meter for SIMOTICS M-1PH818/M-1PH822 motors with terminal box

	No. of cores × Cross-section	Connection method Motor Module end	**Pre-assembled cable**	**Cable sold by the meter** [1]	D_{max}	Weight (without gland)	Smallest bending radius [2]
	mm^2		Article No.	Article No.	mm (in)	kg/m (lb/ft)	mm (in)
	4 × 95		–	**6FX5008-1BB05-....**	51.7 (2.04)	5.55 (3.73)	935 (36.81)
	4 × 120		–	**6FX5008-1BB12-....**	56 (2.20)	6.60 (4.43)	1010 (39.76)
MOTION-CONNECT 500				**5**			
Length code				**....**			

[1] Note type of delivery.
[2] Valid for installation in a cable carrier.
[3] Length of wire ends: 300 mm (11.81). 4 M8 cable lugs and 4 M6 cable lugs are also included in the scope of supply of the cables.

© Siemens 2024

Power cables for SIMOTICS L-1FN3 motors – Water cooling

Selection and ordering data

For water-cooled SIMOTICS L-1FN3 linear motors, peak/continuous load versions, connection to SINAMICS S120 through adapter cable with full-thread connector

No. of cores × cross-section	Thread	**Pre-assembled adapter cable**	Connector size Interface	**Pre-assembled basic cable to the drive system**	**Cable sold by the meter** [1] **for pre-assembled adapter cable**	D_{max}	Weight (without connector)	Smallest bending radius [2]
mm²		Article No. [3]		Article No.	Article No.	mm (in)	kg/m (lb/ft)	mm (in)
4 × 2.5	M20	**6FX7002-5LM42-....** [4]	1	**6FX80■2-5CS16-....**	**6FX8008-1BB21-....**	11.0 (0.43)	0.20 (0.13)	90 (3.54)
4 × 2.5	M20	**6FX7002-5LM62-....** [5]	1	**6FX80■2-5CS16-....**	**6FX8008-1BB21-....**	11.0 (0.43)	0.20 (0.13)	90 (3.54)
4 × 4	M32	**6FX7002-5LM72-....**	1.5	**6FX80■2-5CS46-....** [6]	**6FX8008-1BB31-....**	12.3 (0.48)	0.27 (0.18)	100 (3.94)
4 × 6	M32	**6FX7002-5LM82-....**	1.5	**6FX8002-5CS54-....**	**6FX8008-1BB41-....**	14.9 (0.59)	0.41 (0.28)	120 (4.72)
4 × 10	M32	**6FX7002-5LM32-....**	1.5	**6FX8002-5CS64-....**	**6FX8008-1BB51-....**	18.2 (0.72)	0.62 (0.42)	140 (5.51)
4 × 16	M32	**6FX7002-5LM02-....**	1.5	**6FX8002-5CS24-....**	**6FX8008-1BB61-....**	22.3 (0.88)	1.01 (0.68)	170 (6.69)

MOTION-CONNECT 700	**7**								
MOTION-CONNECT 800PLUS				**8**				**8**	
Power cable									
Pre-assembled					**0**				
Connector at module end supplied separately					**1**				
Connector at module end not supplied					**2**				
Connector at motor end supplied separately					**4**				
Length code		**....**				**....**			**....**

Accessories

Power cable extensions for water-cooled SIMOTICS L-1FN3 linear motors, peak/continuous load versions with full-thread connector –

No. of cores × cross-section	Connector size	Pre-assembled basic cable to the drive system	**Extension**
mm²		Type	Article No.
4 × 2.5	1	6FX8002-5CS16-....	**6FX8002-5CA15-....**
4 × 4	1.5	6FX8002-5CS46-.... [6]	**6FX8002-5CA48-....**
4 × 6	1.5	6FX8002-5CS54-....	**6FX8002-5CA58-....**
4 × 10	1.5	6FX8002-5CS64-....	**6FX8002-5CA68-....**
4 × 16	1.5	6FX8002-5CS24-....	**6FX8002-5YW12-....**

MOTION-CONNECT 800PLUS		**8**	
Length code			**....**

The combinations of power cable extensions shown are only provided by way of example.

[1] Note type of delivery.
[2] Valid for installation in a cable carrier.
[3] The 6FX7002-5LM.. cables comprise MOTION-CONNECT 800PLUS cables which are sold by the meter.
[4] For SIMOTICS L-1FN30/-1FN31 motors only.
[5] For SIMOTICS L-1FN33/-1FN34/-1FN36/-1FN39 motors only.
[6] For SIMOTICS L-1FN3 linear motors in the peak load version, the pre-assembled basic cable 6FX8002-5CS54-.... (4 × 6 mm²) to the SINAMICS S120 drive system must be used.

© Siemens 2024

Selection and ordering data

For naturally cooled SIMOTICS L-1FN3 linear motors for connection to SINAMICS S120 via EMC-safe terminal strip

No. of cores × cross-section	**Cable sold by the meter** [1]	D_{max}	Weight (without connector)	Smallest bending radius [2]
		6FX8	**6FX8**	**6FX8**
mm^2	Article No.	mm (in)	kg/m (lb/ft)	mm (in)
4 × 1.5 + 4 × 0.5	**6FX7008-1BC11-....**	13.6 (0.54)	0.19 (0.13)	100 (3.94)
4 × 1.5	**6FX8008-1BB11-....**	9.5 (0.37)	0.15 (0.10)	75 (2.95)

MOTION-CONNECT 500	**7**		
MOTION-CONNECT 800PLUS	**8**		
Length code		**....**	

Accessories

Description	Article No.
Power connector For 3 ... 30 A Motor Modules SINAMICS S120 booksize, C/D type with screw terminal	**6SL3162-2MA00-0AC0**
Power connector For 3 ... 30 A Motor Modules SINAMICS S120 booksize, C/D type Push-in connection with snap-in actuators	**6SL3162-2MB00-0AC0**

[1] Note type of delivery.

[2] Valid for installation in a cable carrier.

© Siemens 2024

Power cables for SIMOTICS T-1FW3 motors

Selection and ordering data

For SIMOTICS T-1FW3 complete torque motors with terminal box

No. of cores × cross-section	**Cable sold by the meter** [1]	D_{max}		Weight (without connector)		Smallest bending radius [2]	
		6FX5	**6FX8**	**6FX5**	**6FX8**	**6FX5**	**6FX8**
mm^2	Article No.	mm (in)	mm (in)	kg/m (lb/ft)	kg/m (lb/ft)	mm (in)	mm (in)
4 × 1.5	**6FX■008-1BB11-....**	8.4 (0.33)	9.5 (0.37)	0.12 (0.08)	0.15 (0.10)	155 (6.10)	75 (2.95)
4 × 2.5	**6FX■008-1BB21-....**	10.0 (0.39)	11.0 (0.43)	0.21 (0.69)	0.20 (0.13)	180 (7.09)	90 (3.54)
4 × 4	**6FX■008-1BB31-....**	11.4 (0.45)	12.3 (0.48)	0.27 (0.18)	0.27 (0.18)	210 (8.27)	100 (3.94)
4 × 6	**6FX■008-1BB41-....**	13.6 (0.54)	14.9 (0.59)	0.37 (0.25)	0.41 (0.28)	245 (9.65)	120 (4.72)
4 × 10	**6FX■008-1BB51-....**	20.0 (0.79)	18.2 (0.72)	0.73 (0.49)	0.62 (0.42)	360 (14.17)	140 (5.51)
4 × 16	**6FX■008-1BB61-....**	24.2 (0.95)	22.3 (0.88)	1.10 (0.74)	1.01 (0.68)	440 (17.32)	170 (6.69)
4 × 25	**6FX5008-1BB25-....**	28.0 (1.10)	–	1.62 (1.09)	–	505 (19.88)	–
4 × 35	**6FX5008-1BB35-....**	31.5 (1.24)	–	1.93 (1.30)	–	570 (22.44)	–
4 × 50	**6FX5008-1BB50-....**	38.0 (1.50)	–	3.04 (2.04)	–	685 (26.97)	–
4 × 70	**6FX5008-1BB70-....**	42.6 (1.68)	–	3.96 (2.66)	–	770 (30.31)	–
4 × 95	**6FX5008-1BB05-....**	51.7 (2.04)	–	5.55 (3.73)	–	935 (36.81)	–
4 × 120	**6FX5008-1BB12-....**	56.0 (2.20)	–	6.60 (4.43)	–	1010 (39.76)	–

MOTION-CONNECT 500	**5**		
MOTION-CONNECT 800PLUS	**8**		
Length code		**....**	

[1] Note type of delivery.
[2] Valid for installation in a cable carrier.

© Siemens 2024

Selection and ordering data

For SIMOTICS T-1FW6 built-in torque motors with connection via adapter cable with full-thread connector

No. of cores × Cross-section	Connector size, Motor end	**Pre-assembled cable to the drive system**	**Cable sold by the meter** [1]	D_{max}	Weight (without connector)	Smallest bending radius [2]
mm²		Article No.	Article No.	mm (in)	kg/m (lb/ft)	mm (in)
4 × 2.5	1	**6FX80■2-5CS16-....**	**6FX8008-1BB21-....**	11.0 (0.43)	0.20 (0.13)	90 (3.54)
4 × 4	1.5	**6FX80■2-5CS46-....**	**6FX8008-1BB31-....**	12.3 (0.48)	0.27 (0.18)	100 (3.94)
4 × 6	1.5	**6FX8002-5CS54-....**	**6FX8008-1BB41-....**	14.9 (0.59)	0.41 (0.28)	120 (4.72)
		6FX8042-5CS54-....				
4 × 10	1.5	**6FX8002-5CS64-....**	**6FX8008-1BB51-....**	18.2 (0.72)	0.62 (0.42)	140 (5.51)
		6FX8042-5CS64-....				
4 × 16	1.5	**6FX8002-5CS24-....**	**6FX8008-1BB61-....**	22.3 (0.88)	1.01 (0.68)	170 (6.69)
		6FX8042-5CS24-....				

MOTION-CONNECT 800PLUS	**8**			**8**
Power cable				
Pre-assembled	**0**			
Connector at module end supplied separately	**1**			
Connector at module end not supplied	**2**			
Connector at motor end supplied separately	**4**			
Length code		**....**		**....**

Accessories

Power cable extensions for SIMOTICS T-1FW6 built-in torque motors with full-thread connector

No. of cores × cross-section	Connector size	Pre-assembled cable to the drive system	**Extension**
mm²		Type	Article No.
4 × 2.5	1	6FX8002-5CS16-....	**6FX8002-5CA15-....**
4 × 4	1.5	6FX8002-5CS46-....	**6FX8002-5CA48-....**
4 × 6	1.5	6FX8002-5CS54-....	**6FX8002-5CA58-....**
4 × 10	1.5	6FX8002-5CS64-....	**6FX8002-5CA68-....**
4 × 16	1.5	6FX8002-5CS24-....	**6FX8002-5YW12-....**

MOTION-CONNECT 800PLUS	**8**	
Length code		**....**

The combinations of power cable extensions shown are only provided by way of example.

[1] Note type of delivery.

[2] Valid for installation in a cable carrier.

© Siemens 2024

Selection and ordering data

For SINAMICS S120M distributed servo drive with AM600 adapter module

Connection method SINAMICS S120M	No. of cores × cross-section mm^2/AWG	for outgoing directions	**Pre-assembled cable** Article No.	D_{max} mm (in)	Weight (without connector) kg/m (lb/ft)	Smallest bending radius [1] mm (in)
Connector	4 × 2.5+ 3 × 4+ 4 × AWG22	Non-drive end (rear)/ non-drive end (rear)	**6FX8002-7HY00-....**	15 (0.59)	0.35 (0.24)	112.5 (4.43)
		Non-drive end (rear)/ drive end (front)	**6FX8002-7HY11-....**			
		Drive end (front)/ drive end (front)	**6FX8002-7HY22-....**			
MOTION-CONNECT 800PLUS			**8**			
Length code			**....**			

[1] Valid for installation in a cable carrier.

© Siemens 2024

Overview

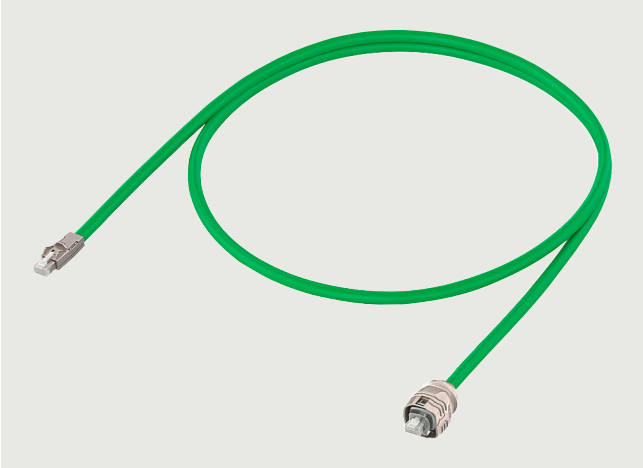

MOTION-CONNECT DRIVE-CLiQ signal cable with IP20/IP67 connector

Signal cables are pre-assembled and are sold by the meter for connecting a variety of components.

The following different types of cable are available:

- DRIVE-CLiQ signal cables
- MOTION-CONNECT DRIVE-CLiQ signal cables
- MOTION-CONNECT pre-assembled signal cables

Type of delivery for pre-assembled signal cables

Pre-assembled signal cables are available in units of 10 cm (3.94 in).

The cables are supplied on reels up to 30 kg or 100 m (66.2 lb or 328 ft). Above 30 kg or 100 m (66.2 lb or 328 ft), cable drums are used instead of reels.

Usage	Connection Module end/Motor end	24 V cores	MOTION-CONNECT 200 6FX2...	MOTION-CONNECT 500 6FX5...	MOTION-CONNECT 800PLUS 6FX8...	Length stages
DRIVE-CLiQ signal cables						
Components with DRIVE-CLiQ interface, with internal or external 24 V DC power supply in the control cabinet	RJ45 IP20/RJ45 IP20	Without	≤ 70 m (230 ft)	–	–	To the decimeter
Components with DRIVE-CLiQ interface in the control cabinet	RJ45 IP20/RJ45 IP20	With	–	≤ 100 m (328 ft)	≤ 75 m (246 ft)	To the decimeter
For built-in or built-on encoder systems with DRIVE-CLiQ interface.	RJ45 IP20/RJ45 IP67	With				
	RJ45 IP67/RJ45 IP67					
Basic cable	RJ45 IP20/M17	With				
Extension	M17/M17					
Adapter cable	RJ45 IP67/M17					
	M17/RJ45 IP67					
Basic cable	RJ45 IP20/M12	With	–	≤ 100 m (328 ft)	≤ 75 m (246 ft)	To the meter up to 20 m (65.6 ft), beyond that in steps of 5 m (16.4 ft)
Extension	M12/M12			≤ 30 m (98.4 ft)	≤ 30 m (98.4 ft)	
Adapter cable	RJ45 IP67/M12			≤ 100 m (328 ft)	≤ 75 m (246 ft)	
	M12/RJ45 IP67			≤ 30 m (98.4 ft)	≤ 30 m (98.4 ft)	
	M17/M12			≤ 100 m (328 ft)	≤ 75 m (246 ft)	

© Siemens 2024

Application

DRIVE-CLiQ signal cables without 24 V DC cores

are used to connect components with DRIVE-CLiQ connections which have a separate or external
24 V DC power supply.

MOTION-CONNECT DRIVE-CLiQ signal cables with 24 V DC cores

are used whenever components with DRIVE-CLiQ connections must meet high requirements such as mechanical stress and oil resistance, e.g., where a connection is made outside the cabinet between Power Modules, Motor Modules, and
SIMOTICS S-1FT7/SIMOTICS M-1PH8 motors with DRIVE-CLiQ interface.

MOTION-CONNECT pre-assembled signal cables

are used whenever motor encoders on motors without DRIVE-CLiQ interface need to be connected to Sensor Modules.

Design

If pre-assembled signal cables are to be installed in a cable carrier in such a way that the connector would inhibit assembly, pre-assembled cables without assembled connector can also be supplied. In this case, the contacts of the cables are crimped and the connector enclosure is supplied separately. After installing the cables, the customer assembles the connector enclosure.

The 6FX.002-2....-.... signal cables are available with crimped contacts and with the connector enclosure supplied separately (not in the case of DRIVE-CLiQ signal cables and signal cables with bare wire ends).

Signal cables with separately supplied **module-end** connector: in this case, the 6th position of the Article No. must be changed from **0** to **1**:
6FX.0**1**2-2C...-.... (not for signal cables for connecting via terminals or 6FX.002-2AH00-...., 6FX.002-2CA12-....).

Signal cables with separately supplied **motor-end** connector: in this case, the 6th position of the Article No. must be changed from **0** to **4**:
6FX.0**4**2-2C...-.... (not for signal cables for connecting via terminals or 6FX8002-2BA20-...., 6FX8002-2BA21-....).

Note:

Once the contacts have latched into the insulator, they can no longer be removed.

© Siemens 2024

Technical specifications

DRIVE-CLiQ signal cables	DRIVE-CLiQ 6FX2...-1DC..-....	DRIVE-CLiQ MOTION-CONNECT 500 6FX5...-.DC..-....	DRIVE-CLiQ MOTION-CONNECT 800PLUS 6FX8...-.DC..-....
Certificate of suitability			
• CE	Yes	Yes	Yes
• cURus or UR/CSA[1)]	UL STYLE 2502/CSA-N.210.2-M90	UL STYLE 2502/CSA-N.210.2-M90	UL STYLE 2502/CSA-N.210.2-M90
• RoHS conformity	Yes	Yes	Yes
Rated voltage according to EN 50395	30 V	30 V	30 V
Test voltage, rms	500 V	500 V	500 V
Operating temperature on the surface			
• Fixed installation	-20 … +80 °C (-4 ... +176 °F)	-20 … +80 °C (-4 ... +176 °F)	-20 … +80 °C (-4 ... +176 °F)
• Flexible installation	–	0 … 60 °C (32 ... 140 °F)	-20 … +60 °C (-4 ... +140 °F)
Tensile stress, max.			
• Fixed installation	45 N/mm^2 (6526 lb/in^2)	80 N/mm^2 (11603 lb/in^2)	50 N/mm^2 (7252 lb/in^2)
• Flexible installation	–	30 N/mm^2 (4351 lb/in^2)	20 N/mm^2 (2901 lb/in^2)
Smallest bending radius			
• Fixed installation	50 mm (1.97 in)	35 mm (1.38 in)	35 mm (1.38 in)
• Flexible installation	–	125 mm (4.92 in)	75 mm (2.95 in)
Torsional stress	–	Absolute 30°/m	Absolute 30°/m
Bending	–	100000	10 million
Traversing velocity	–	30 m/min (98.4 ft/min)	300 m/min (984 ft/min)
Acceleration	–	2 m/s^2 (6.56 ft/s^2)	Up to 50 m/s^2 (164 ft/s^2), see characteristics on page 10/5
Insulation material, incl. jacket	CFC/silicone-free	CFC/silicone-free	CFC/halogen-free/silicon-free IEC 60754-1/DIN VDE 0472-815
Oil resistance	EN 60811-2-1	EN 60811-2-1 (mineral oil only)	EN 60811-2-1
Outer jacket	PVC Gray RAL 7032	PVC DESINA color green RAL 6018	PUR, HD22.10 S2 (VDE 0282, Part 10) DESINA color green RAL 6018
Flame-retardant	EN 60332-1-1 to 1-3	EN 60332-1-1 to 1-3	EN 60332-1-1 to 1-3

Degree of protection of the pre-assembled signal cables and their extensions when closed and inserted: IP67.

1) The File No. is printed on the cable jacket.

© Siemens 2024

Technical specifications

Signal cables	MOTION-CONNECT 500 6FX50..-.....-....	MOTION-CONNECT 800PLUS 6FX80..-.....-....
Certificate of suitability		
• CE	Yes	Yes
• cURus or UR/CSA [1]	UL758-CSA-C22.2-N.210.2-M90	UL758-CSA-C22.2-N.210.2-M90
• RoHS conformity	Yes	Yes
Rated voltage according to EN 50395	30 V	30 V
Test voltage, rms	500 V	500 V
Operating temperature on the surface		
• Fixed installation	-20 … +80 °C (-4 ... +176 °F)	-50 … +80 °C (-58 ... +176 °F)
• Flexible installation	0 … 60 °C (32 ... 140 °F)	-20 … +60 °C (-4 ... +140 °F)
Tensile stress, max.		
• Fixed installation	50 N/mm^2 (7252 lb/in^2)	50 N/mm^2 (7252 lb/in^2)
• Flexible installation	20 N/mm^2 (2901 lb/in^2)	20 N/mm^2 (2901 lb/in^2)
Smallest bending radius		
• Fixed installation	60 mm (2.36 in)	4 × D_{max}
• Flexible installation	100 mm (3.94 in)	70 mm [2] (2.75 in)
Torsional stress	Absolute 30°/m	Absolute 30°/m
Bending	2 million	10 million
Traversing velocity	180 m/min (591 ft/min)	Up to 300 m/min (984 ft/min)
Acceleration	5 m/s^2 (16.41 ft/s^2)	Up to 50 m/s^2 (164 ft/s^2), see characteristics on page 10/5
Insulation material, incl. jacket	CFC/silicone-free	CFC/halogen-free/silicon-free IEC 60754-1/DIN VDE 0472-815
Oil resistance	EN 60811-2-1 (mineral oil only)	EN 60811-2-1
Outer jacket	PVC DESINA color green RAL 6018	PUR, HD22.10 S2 (VDE 0282, Part 10) DESINA color green RAL 6018
Flame-retardant	EN 60332-1-1 to 1-3	EN 60332-1-1 to 1-3

Degree of protection of the pre-assembled signal cables and their extensions when closed and inserted: IP67.

10

[1] The File No. is printed on the cable jacket.

[2] Exception: 6FX8002-2SL..-....; smallest bending radius (flexible): 85 mm (3.35 in).

© Siemens 2024

Selection and ordering data

Pre-assembled DRIVE-CLiQ signal cables without 24 V DC cores

Version	Length	D_{max}	Connector/degree of protection, module-end	Connector/degree of protection, motor-end	**DRIVE-CLiQ signal cable** without 24 V DC cores
	m (ft)	mm (in)			Article No.
Fixed lengths 	0.11 (0.36)		RJ45/IP20	RJ45/IP20	**6SL3060-4AB00-0AA0**
	0.16 (0.52)				**6SL3060-4AD00-0AA0**
	0.21 (0.69)				**6SL3060-4AF00-0AA0**
	0.26 (0.85)				**6SL3060-4AH00-0AA0**
	0.31 (1.02)				**6SL3060-4AK00-0AA0**
	0.36 (1.18)				**6SL3060-4AM00-0AA0**
	0.41 (1.35)				**6SL3060-4AP00-0AA0**
	0.60 (1.97)				**6SL3060-4AU00-0AA0**
	0.95 (3.12)				**6SL3060-4AA10-0AA0**
	1.20 (3.94)				**6SL3060-4AW00-0AA0**
	1.45 (4.76)				**6SL3060-4AF10-0AA0**
	2.10 (6.89)				**6SL3060-4AB20-0AA0**
	2.40 (7.87)				**6SL3060-4AE20-0AA0**
	2.80 (9.19)				**6SL3060-4AJ20-0AA0**
	5.00 (16.4)				**6SL3060-4AA50-0AA0**
To the decimeter 	Max. 70 (230)	7.0 (0.28)	RJ45/IP20	RJ45/IP20	**6FX2002-1DC00-....**
To the decimeter 	Max. 70 (230)	7.0 (0.28)	RJ45/IP67	RJ45/IP67	**6FX2002-1DC20-....**
Length code					**....**

© Siemens 2024

MOTION-CONNECT DRIVE-CLiQ signal cables with 24 V DC cores

Selection and ordering data

Pre-assembled MOTION-CONNECT DRIVE-CLiQ signal cables for SINAMICS S120 and motors with 24 V DC cores

Version	Usage	Length, max.	D_{max}	Connector/ degree of protection, module-end	Connector/ degree of protection, motor-end	**MOTION-CONNECT DRIVE-CLiQ signal cable** with 24 V DC cores
		m (ft)	mm (in)			Article No.
To the decimeter 	For components with DRIVE-CLiQ interface in the control cabinet.	100 (328)	7.1 (0.28)	RJ45/IP20	RJ45/IP20	**6FX5002-2DC00-....**
	For example, for making the connection between SINAMICS S120 Motor Modules or Power Modules and the DRIVE-CLiQ cabinet bushing.	75 (246)	7.1 (0.28)	RJ45/IP20	RJ45/IP20	**6FX8002-2DC00-....**
To the decimeter 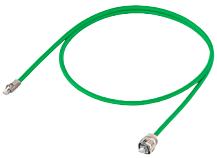	For built-in or built-on encoder systems with DRIVE-CLiQ interface.	100 (3.28)	7.1 (0.28)	RJ45/IP20	RJ45/IP67	**6FX5002-2DC10-....**
	For example, for making the connection between SIMOTICS S-1FT7/SIMOTICS M-1PH8/ SIMOTICS T-1FW3 motors and SINAMICS S120 Motor Modules or Power Modules.	75 (246)	7.1 (0.28)	RJ45/IP20	RJ45/IP67	**6FX8002-2DC10-....**
To the decimeter 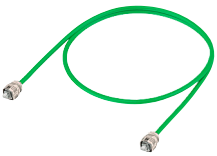	For built-in or built-on encoder systems with DRIVE-CLiQ interface.	100 (328)	7.1 (0.28)	RJ45/IP67	RJ45/IP67	**6FX5002-2DC20-....**
	For example, for making the connection between SIMOTICS S-1FT7/SIMOTICS M-1PH8/ SIMOTICS T-1FW3 motors and SINAMICS S120 via DRIVE-CLiQ cabinet bushings, couplings or DME20, or 2 couplings or DME20.	75 (246)	7.1 (0.28)	RJ45/IP67	RJ45/IP67	**6FX8002-2DC20-....**

MOTION-CONNECT 500	**5**	
MOTION-CONNECT 800PLUS	**8**	
Length code		**....**

10

© Siemens 2024

Selection and ordering data

Pre-assembled MOTION-CONNECT DRIVE-CLiQ signal cables with 24 V DC cores for SINAMICS S120 and direct measuring systems with M12 connection or SIMOTICS motors with M12 connection at disconnection point

Version	SIMOTICS motor/ encoder Usage	Length, max. m (ft)	D_{max} mm (in)	Module-end connector/ degree of protection	Encoder/ motor-end connector/ degree of protection	**Basic cable** Article No.	**Extension** Article No.
Basic cable between encoder and SINAMICS S120 Motor Module or Power Module							
To the meter [1] 	Absolute encoders with DRIVE-CLiQ interface and M12 connection Non-Siemens direct measuring systems with DRIVE-CLiQ interface and M12 connection	100 (328)	7.1 (0.28)	RJ45/IP20	M12/IP67 [2]	**6FX5002-2DC30-....**	**6FX5002-2DC34-....**
		75 (246)	7.1 (0.28)	RJ45/IP20	M12/IP67 [2]	**6FX8002-2DC30-....**	**6FX8002-2DC34-....**
Extension for all cables with M12 connection							
To the meter [1] 		30 (98.4)	7.1 (0.28)	M12/IP67 [2]	M12/IP67 [2]	**6FX5002-2DC34-....**	**6FX5002-2DC34-....**
		30 (98.4)	7.1 (0.28)	M12/IP67 [2]	M12/IP67 [2]	**6FX8002-2DC34-....**	**6FX8002-2DC34-....**
Adapter cable between SIMOTICS motor with DRIVE-CLiQ RJ45 interface and disconnection point with M12 connection							
To the meter [1] 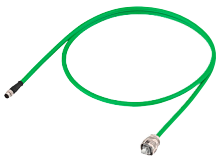	S-1FT7 M-1PH8	30 (98.4)	7.1 (0.28)	M12/IP67 [2]	RJ45/IP67 [3]	**6FX8002-2DC38-....**	**6FX8002-2DC34-....**
Adapter cable between encoder with DRIVE-CLiQ M12 interface and disconnection point with M17 connection							
To the meter [1] 		100 (328)	7.1 (0.28)	M17/IP67 [2]	M12/IP67 [2]	**6FX5002-2DC46-....**	**6FX5002-2DC34-....**
		75 (246)	7.1 (0.28)	M17/IP67 [2]	M12/IP67 [2]	**6FX8002-2DC46-....**	**6FX8002-2DC34-....**
Adapter cable between encoder with DRIVE-CLiQ M12 interface and disconnection point with RJ45/IP67 connection							
To the meter [1] 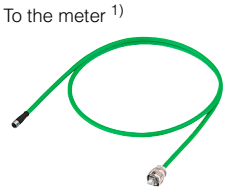	DRIVE-CLiQ coupler, DME20, cabinet bushing with RJ45 connection	100 (328)	7.1 (0.28)	RJ45/IP67 [3]	M12/IP67 [2]	**6FX5002-2DC36-....**	**6FX5002-2DC34-....**
		75 (246)	7.1 (0.28)	RJ45/IP67 [3]	M12/IP67 [2]	**6FX8002-2DC36-....**	**6FX8002-2DC34-....**

MOTION-CONNECT 500							**5**					**5**	
MOTION-CONNECT 800PLUS							**8**					**8**	
Length code										**....**			**....**

The combinations of signal cable extensions shown are only provided by way of example.
The maximum length of a DRIVE-CLiQ line (basic cable plus extensions and/or adapter cable) must be observed.

[1] To the meter up to 20 m (65.6 ft), beyond that in steps of 5 m (16.4 ft) up to the maximum length.

[2] Max. 3 M12 disconnection points or 4 M17 disconnection points permissible without reduction in maximum total length. With a combination of M17 and M12, a maximum number of 3 disconnection points is possible without shortening the maximum length.

[3] DRIVE-CLiQ coupler 6SL3066-2DA00-0AB0 required at disconnection point or between 2 cables with RJ45 connection. The total maximum length is reduced by 5 m (16.4 ft) for each coupler.

© Siemens 2024

MOTION-CONNECT DRIVE-CLiQ signal cables with 24 V DC cores

Selection and ordering data

Pre-assembled MOTION-CONNECT DRIVE-CLiQ signal cables with 24 V DC cores for SINAMICS S120 and for SIMOTICS S-1FT2/ S-1FT7 motors with M17 connection or direct measuring systems with M17 connection at disconnection point

Version	SIMOTICS motor/ encoder Usage	Length, max. m (ft)	D_{max} mm (in)	Module-end connector/ degree of protection	Motor-end connector/ degree of protection	**Basic cable** Article No.	**Extension** Article No.
Basic cable							
To the decimeter	S-1FT2/-1FT7 [1]	100 (328)	7.1 (0.28)	RJ45/IP20	M17/IP67 [2]	**6FX5002-2D■40-....**	**6FX5002-2D■44-....**
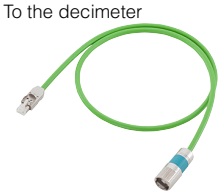	S-1FT2/-1FT7 [1]	75 (246)	7.1 (0.28)	RJ45/IP20	M17/IP67 [2]	**6FX8002-2D■40-....**	**6FX8002-2D■44-....**
Extension for all cables with M17 connection							
To the decimeter	S-1FT2/-1FT7 [1]	100 (328)	7.1 (0.28)	M17/IP67 [2]	M17/IP67 [2]	**6FX5002-2D■44-....**	**6FX5002-2D■44-....**
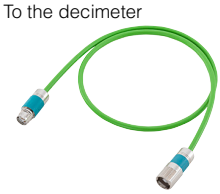	S-1FT2/-1FT7 [1]	75 (246)	7.1 (0.28)	M17/IP67 [2]	M17/IP67 [2]	**6FX8002-2D■44-....**	**6FX8002-2D■44-....**
Adapter cable between SIMOTICS motor with DRIVE-CLiQ RJ45 interface and disconnection point with M17 connection							
To the decimeter	S-1FT2/-1FT7 [1]	100 (328)	7.1 (0.28)	M17/IP67 [2]	RJ45/IP67 [3]	**6FX5002-2DC42-....**	**6FX5002-2D■44-....**
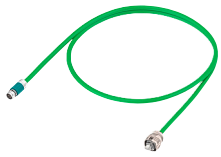	S-1FT2/-1FT7 [1]	75 (246)	7.1 (0.28)	M17/IP67 [2]	RJ45/IP67 [3]	**6FX8002-2DC42-....**	**6FX8002-2D■44-....**
Adapter cable between encoder with DRIVE-CLiQ M12 interface and disconnection point with M17 connection							
To the meter up to 20 m (65.6 ft), beyond that in steps of 5 m (16.4 ft)		100 (328)	7.1 (0.28)	M17/IP67 [2]	M12/IP67 [2]	**6FX5002-2DC46-....**	**6FX5002-2D■44-....**
		75 (246)	7.1 (0.28)	M17/IP67 [2]	M12/IP67 [2]	**6FX8002-2DC46-....**	**6FX8002-2D■44-....**
Adapter cable between SIMOTICS motor with DRIVE-CLiQ M17 interface and disconnection point with RJ45/IP67 connection							
To the decimeter	S-1FT2/-1FT7 [1]	100 (328)	7.1 (0.28)	RJ45/IP67 [3]	M17/IP67 [2]	**6FX5002-2D■48-....**	**6FX5002-2D■44-....**
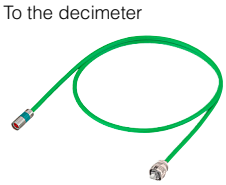	S-1FT2/-1FT7 [1] (e.g. for DRIVE-CLiQ coupler, DME20, cabinet bushing with RJ45 connection)	75 (246)	7.1 (0.28)	RJ45/IP67 [3]	M17/IP67 [2]	**6FX8002-2D■48-....**	**6FX8002-2D■44-....**

MOTION-CONNECT 500		5			5		
MOTION-CONNECT 800PLUS		8			8		
Connector, type:	**SPEED-CONNECT**		C			C	
Connector, type:	**Full thread**		D			D	
Length code				....			....

The combinations of signal cable extensions shown are only provided by way of example.
The maximum specified cable length (basic cable and extensions) must not be exceeded.

[1] For SIMOTICS S-1FT7 (1FT7...-.....-.K.. or 1FT7...-.....-.L.).

[2] Max. 3 M12 disconnection points or 4 M17 disconnection points permissible without reduction in maximum total length. With a combination of M17 and M12, a maximum number of 3 disconnection points is possible without shortening the maximum length.

[3] DRIVE-CLiQ coupler 6SL3066-2DA00-0AB0 required at disconnection point or between 2 cables with RJ45 connection. The total maximum length is reduced by 5 m (16.4 ft) for each coupler.

© Siemens 2024

Selection and ordering data

Pre-assembled MOTION-CONNECT signal cables for motors with SPEED-CONNECT connector

Encoder system	Motor	Connection via	Length, max.	D_{max}	Degree of protection Connector [1]	**Basic cable**	**Extension**
	SIMOTICS	SINAMICS	m (ft)	mm (in)		Article No.	Article No.
Absolute encoder with EnDat 2.1	S-1FT7/ M-1PH8 [2]	SMC20	100 (328)	9.8 (0.39)	IP20/IP67	**6FX■0■2-2EQ31-....**	**6FX■002-2EQ34-....**
Incremental encoder sin/cos 1 V_{pp} 2048 S/R, with C and D tracks	S-1FT7/ M-1PH8 [2]	SMC20	100 (328)	9.8 (0.39)	IP20/IP67	**6FX■0■2-2CQ31-....**	**6FX■002-2CQ34-....**
Incremental encoder sin/cos 1 V_{pp} 256 and 512 S/R, without C and D tracks	M-1PH8 [2]	SMC20	50 (164)	9.2 (0.36)	IP20/IP67	**6FX80■2-2CQ80-....**	**6FX■002-2CQ34-....**

MOTION-CONNECT 500						**5**				**5**		
MOTION-CONNECT 800PLUS						**8**				**8**		
Signal cable												
Pre-assembled							**0**					
Connector at module end supplied separately							**1**					
Connector at motor end supplied separately							**4**					
Length code								**....**				**....**

[1] The specification for the degree of protection refers to the basic cable.
[2] For SIMOTICS M-1PH808/-1PH810/-1PH813/-1PH816 motors.

© Siemens 2024

Signal cables for motors with full-thread connector

Selection and ordering data

Pre-assembled signal cables for motors with full-thread connector

Encoder system	Motor	Connection via	Length, max.	D_{max}	Degree of protection Connector [1]	Basic cable	Extension
	SIMOTICS	SINAMICS	m (ft)	mm (in)		Article No.	Article No.
Absolute encoder with EnDat 2.1	M-1PH8/T-1FW3	SMC20	100 (328)	9.8 (0.39)	IP20/IP67	**6FX■0■2-2EQ10-....**	**6FX■002-2EQ14-....**
Absolute encoder with EnDat 2.1 5 V DC		SME25	3 [2] (9.84)	9.2 (0.36)	IP67/IP67	**6FX■0■2-2AD04-....**	–
Absolute encoder with EnDat 2.1	L-1FN3/T-1FW6	SME125	3 [2] (9.84)	9.2 (0.36)	IP67/IP67	**6FX80■2-2AD04-....**	–
Absolute encoder with EnDat 2.1							
• 6FX2001-5.E..		SMC20	100 (328)	9.2 (0.36)	IP20/IP67	**6FX■0■2-2CH00-....**	**6FX■002-2AD04-....**
• 1XP8014-10/1XP8024-10		SMC20	100 (328)	9.2 (0.36)	IP20/IP67	**6FX■0■2-2CH00-....**	**6FX■002-2AD04-....**
Absolute encoder with SSI 5 V DC		SME25	3 (9.84)	9.2 (0.36)	IP67/IP67	**6FX■0■2-2AD04-....**	–
Absolute encoder with SSI 24 V DC							
• 6FX2001-5.S.. Clock-pulse rate 100 ... 250 kHz		SMC30	100 (328)	9.3 (0.37)	IP20/IP67	**6FX■002-2CC11-....**	**6FX■002-2CB54-....**
• 1XP8014-20/1XP8024-20/-21		SMC30	100 (328)	9.3 (0.37)	IP20/IP67	**6FX■0■2-2CC06-....**	–
Incremental encoder sin/cos 1 V_{pp} 2048 S/R, with C and D tracks	M-1PH8/ T-1FW3	SMC20	100 (328)	9.8 (0.39)	IP20/IP67	**6FX■0■2-2CA31-....**	**6FX■002-2CA34-....**
Incremental encoder sin/cos 1 V_{pp} 256 and 512 S/R, without C and D tracks	M-1PH8	SMC20	50 (164)	9.2 (0.36)	IP20/IP67	**6FX80■2-2CA80-....**	**6FX■002-2CA34-....**
HTL Incremental encoder	M-1PH8	SMC30	300 [3] (984)	9.3 (0.37)	–/IP67	**6FX■002-2AH00-....** **6FX■042-2AH00-....**	**6FX■002-2AH04-....**
		SMC30	300 [3] (984)	9.3 (0.37)	IP20/IP67	**6FX■0■2-2AH11-....**	**6FX■002-2AH04-....**
HTL Incremental encoder	M-1PH8	CU310-2/ D410-2	100 (328)	9.3 (0.37)	IP20/IP67	**6FX■0■2-2AH11-....**	–
Incremental encoder sin/cos 1 V_{pp} without C and D tracks 6FX2001-3		SMC20	50 (164)	9.3 (0.37)	IP20/IP67	**6FX■0■2-2CG00-....**	**6FX■002-2CB54-....**
HTL Incremental encoder, 24 V DC							
• 6FX2001-4		SMC30	100 (328)	9.3 (0.37)	–/IP67	**6FX5002-2CA12-....** **6FX5042-2CA12-....**	**6FX■002-2CB54-....**
• 1XP8012-10/-11, 1XP8032-10/-11/ -12		SMC30	100 (328)	9.3 (0.37)	–/IP67	**6FX5002-2CA12-....** **6FX5042-2CA12-....**	**6FX■002-2CB54-....**
TTL incremental encoder, RS422							
• 6FX2001-2, 5 V DC		SMC30	100 (328)	9.3 (0.37)	IP20/IP67	**6FX■0■2-2CR00-....**	**6FX■002-2CB54-....**
• 1XP8012-20/-21/-22, 1XP8032-20/ -21/-22, 5 V DC		SMC30	100 (328)	9.3 (0.37)	IP20/IP67	**6FX■0■2-2CR00-....**	**6FX■002-2CB54-....**
• 6FX2001-2, 24 V DC		SMC30	100 (328)	9.3 (0.37)	IP20/IP67	**6FX■0■2-2CD24-....**	**6FX■002-2CB54-....**
Incremental encoder sin/cos 1 V_{pp} 5 V DC, without C and D tracks		SME20	3 [2] (9.84)	9.3 (0.37)	IP67/IP67	**6FX■0■2-2CB54-....**	–
Direct incremental encoder sin/cos 1 V_{pp}	L-1FN3/T-1FW6	SME120	3 [2] (9.84)	9.3 (0.37)	IP67/IP67	**6FX80■2-2CB54-....**	–
Resolver	T-1FW3	SMC10	130 (426)	9.2 (0.36)	IP20/IP67	**6FX■0■2-2CF02-....**	**6FX■002-2CF04-....**
Resolver 1XP8013-10/-11/ 1XP8023-10/-11		SMC10	130 (426)	9.2 (0.36)	IP20/IP67	**6FX■0■2-2CF06-....**	–

MOTION-CONNECT 500	**5**								**5**			
MOTION-CONNECT 800PLUS	**8**								**8**			
Signal cable												
Pre-assembled		**0**										
Connector at module end supplied separately		**1**										
Connector at motor end supplied separately		**4**										
Length code							**....**					**....**

The combinations of signal cable extensions shown are only provided by way of example.

The maximum specified cable length (basic cable and extensions) must not be exceeded.
The total maximum length is reduced by 2 m (6.56 ft) for each interruption point.

[1] The specification for the degree of protection refers to the basic cable.

[2] Up to 10 m (32.8 ft) possible, depending on the current consumption of the 5 V encoder. Up to 30 m (98.4 ft) possible for encoders with 3.6 V operating voltage..

[3] With evaluation of difference signals A*, A, B*, B, otherwise ≤ 100 m (328 ft).

© Siemens 2024

Selection and ordering data

Signal cables for temperature sensors with full-thread connector

Temperature sensor	Motor	Connection via	Length, max.	D_{max}	Degree of protection Connector [1]	**Basic cable/ extension** [2]	**Adapter cable** [2]
	SIMOTICS	SINAMICS	m (ft)	mm (in)		Article No.	Article No.
Temperature sensor	L-1FN3100/L-1FN3150 [3]	SME120/SME125	10 (32.8)	11.0 (0.43)	IP67/IP67	**6FX8002-2SL10-....**	**6FX8002-2SL01-....**
Temperature sensor	L-1FN3300 ... L-1FN3900 [3]	SME120/SME125	10 (32.8)	11.0 (0.43)	IP67/IP67	**6FX8002-2SL10-....**	**6FX8002-2SL02-....**
Temperature sensor	T-1FW6	SME120/SME125	10 (32.8)	11.0 (0.43)	IP67/IP67	**6FX8002-2SL10-....**	**–**
Temperature sensor	L-1FN3100/L-1FN3150 [3]	TM120	100 (328)	11.0 (0.43)	–/IP67	**6FX8002-2SL20-....**	**6FX8002-2SL01-....**
Temperature sensor	L-1FN3300 ... L-1FN3900 [3]	TM120	100 (328)	11.0 (0.43)	–/IP67	**6FX8002-2SL20-....**	**6FX8002-2SL02-....**
Temperature sensor	T-1FW6	TM120	100 (328)	11.0 (0.43)	–/IP67	**6FX8002-2SL20-....**	**–**
MOTION-CONNECT 800PLUS						**8**	**8**
Length code						**....**	**....**

The combinations of signal cable extensions shown are only provided by way of example.

The maximum specified cable length (basic cable and extensions) must not be exceeded.
The total maximum length is reduced by 2 m (6.56 ft) for each interruption point.

[1] The specification for the degree of protection refers to the basic cable.

[2] The smallest bending radius (flexible) for signal cables 6FX8002-2SL..-.... is 85 mm (3.35 in).

[3] Continuous load version.

© Siemens 2024

Power cables

Overview

Power cables, pre-assembled

Data position of the Article No.	1	2	3	4	5	6	7		8	9	10	11	12		13	14	15	16
MOTION-CONNECT 500	**6**	**F**	**X**	**5**	**0**	■	**2**	**–**	**5**	■	■	■	■	**–**	.	.	.	.
MOTION-CONNECT 800PLUS	**6**	**F**	**X**	**8**	**0**	■	**2**	**–**	**5**	■	■	■	■	**–**	.	.	.	.
Pre-assembled at motor and module ends						**0**												
Pre-assembled at motor end, connector at module end supplied separately						**1**												
Pre-assembled at motor end, connector at module end not supplied						**2**												
Connector at motor end supplied separately, pre-assembled at module end						**4**												
Without brake cores										**C**								
With brake cores										**D**								
Basic cable between	and																	
SINAMICS S120 Motor Module C/D type, booksize format, up to 30 A	Motor connector, full-thread, size 0.5									**D**	**A**	**2**	**7**					
	Motor connector, full-thread, size 1 or 1.5										**S**		**6**					
	Motor connector, full-thread, size 3										**S**	**1**	**7**					
	Motor with terminal box (bare wire ends)										**W**		**2**					
	Motor connector, SPEED-CONNECT, size 0.5									**D**	**N**	**2**	**7**					
	Motor connector, SPEED-CONNECT, size 1 or 1.5										**N**		**6**					
SINAMICS S120 Motor Module, booksize format, 45 A or higher	Motor connector, full-thread, size 1.5										**S**		**4**					
	Motor connector, full-thread, size 3										**S**	**2**	**3**					
	Motor connector, SPEED-CONNECT, size 1.5										**N**		**4**					
SINAMICS S120 Power Module/ Motor Module, booksize compact format	Motor connector, full-thread, size 0.5									**D**	**A**	**3**	**0**					
	Motor connector, full-thread, size 1 or 1.5										**G**		**1**					
	Motor connector, full-thread, size 3										**G**		**3**					
	Motor connector, SPEED-CONNECT, size 0.5									**D**	**N**	**3**	**0**					
	Motor connector, SPEED-CONNECT, size 1										**G**[2)]	**1**	**0**					
	Motor connector, SPEED-CONNECT, size 1										**G**[3)]	**1**	**2**					
	Motor connector, SPEED-CONNECT, size 1.5										**G**		**2**					
SINAMICS S120 Combi Power Module[1)]	Motor connector, SPEED-CONNECT, size 1 or 1.5										**F**							
SINAMICS S120 Motor Module booksize format, up to 30 A	SIMOTICS M-1PH8 with terminal box									**C**	**P**							
SINAMICS S120 Power Module/ Motor Module, booksize format, 45 A or higher	SIMOTICS M-1PH8 with terminal box									**C**	**R**							
SINAMICS S120 Combi Power Module[1)]	SIMOTICS M-1PH8 with terminal box									**C**	**E**							
Extension between basic cable with connector	and motor connector																	
Full-thread, size 0.5	Full-thread, size 0.5									**M**	**E**	**0**	**5**					
Full-thread, size 1	Full-thread, size 1										**A**		**5**					
Full-thread, size 1.5	Full-thread, size 1.5										**A**		**8**					
Full-thread, size 3	Full-thread, size 3										**X**		**8**					
SPEED-CONNECT, size 0.5	SPEED-CONNECT, size 0.5									**M**	**N**	**0**	**5**					
SPEED-CONNECT, size 1	SPEED-CONNECT, size 1										**N**[2)]		**5**					
SPEED-CONNECT, size 1	SPEED-CONNECT, size 1										**Q**[3)]		**5**					
SPEED-CONNECT, size 1.5	SPEED-CONNECT, size 1.5										**Q**		**8**					
Adapter cable for SIMOTICS L-1FN3	**6**	**F**	**X**	**7**	**0**	**0**	**2**	**–**	**5**	**L**	**M**	.	.	**–**	.	.	.	.
Cross-section												.	.					
Length code																		
Units of 10 cm (3.94 in) or 1 meter (3.28 ft) or in fixed lengths															.	.	.	.

[1)] See SiePortal for MOTION-CONNECT connection system for SINAMICS S120 Combi.

[2)] Cable cross-section 1.5 mm^2

[1)] Cable cross-section 2.5 mm^2

© Siemens 2024

Overview

Power cables, sold by the meter

Data position in Article No.	1	2	3	4	5	6	7		8	9	10	11	12		13	14	15	16
MOTION-CONNECT 500	**6**	**F**	**X**	**5**	**0**	**0**	**8**	**–**	**1**	**B**	■	.	.	–	.	.	.	.
MOTION-CONNECT 800PLUS	**6**	**F**	**X**	**8**	**0**	**0**	**8**	**–**	**1**	**B**	■	.	.	–	.	.	.	.

Power cable with brake cores, sold by the meter	**A**
Power cable without brake cores, sold by the meter	**B**

No. of cores and cross-sections	. .

Length code

Units of 10 cm (3.94 in) or 1 meter (3.28 ft) or in fixed lengths	. . . .

© Siemens 2024

Signal cables

Overview

Data position of the Article No.	1	2	3	4	5	6	7		8	9	10	11	12		13	14	15	16
MOTION-CONNECT 500	**6**	**F**	**X**	**5**	**0**	■	**2**	**–**	**2**	■	■	■	■	**–**	.	.	.	.
MOTION-CONNECT 800PLUS	**6**	**F**	**X**	**8**	**0**	■	**2**	**–**	**2**	■	■	■	■	**–**	.	.	.	.
6FX2 cables	**6**	**F**	**X**	**2**	**0**	**0**	**2**	**–**	**1**	**D**	**C**	■	**0**	**–**	.	.	.	.

Pre-assembled at motor and module ends	**0**
Pre-assembled at motor end, connector at module end supplied separately[1]	**1**
Connector at motor end supplied separately, pre-assembled at module end[1]	**4**

Variant: Signal cables for integrated encoder

DRIVE-CLiQ basic cable between	and				
Power Module/Motor Module/SMC with IP20 connector	Power Module/Motor Module/SMC with IP20 connector	**D**	**C**	**0**	**0**
Power Module/Motor Module/SMC with RJ45/IP20 connector	Motor/encoder/SME RJ45/IP67 connector[2]	**D**	**C**	**1**	**0**
Power Module/Motor Module/SMC with RJ45/IP20 connector	M12 encoder connector	**D**	**C**	**3**	**0**
Power Module/Motor Module/SMC with RJ45/IP20 connector	M17 motor connector	**D**	**C**	**4**	**0**
DME20/cabinet bushing/coupler RJ45	Motor/encoder/SME RJ45/IP67 connector	**D**	**C**	**2**	**0**
Extension between DRIVE-CLiQ cable with connector	and				
RJ45	Motor/encoder/SME RJ45/IP67 connector	**D**	**C**	**2**	**0**
M12	M12 encoder connector	**D**	**C**	**3**	**4**
M17	M17 motor connector	**D**	**C**	**4**	**4**
DRIVE-CLiQ adapter cable between	and				
M12	RJ45 motor connector	**D**	**C**	**3**	**8**
M17	RJ45 motor connector	**D**	**C**	**4**	**2**
RJ45/IP67	M12 motor connector	**D**	**C**	**3**	**6**
RJ45/IP67	M17 encoder connector	**D**	**C**	**4**	**8**
M17	M12 encoder connector	**D**	**C**	**4**	**6**
Basic cable between	and motor with				
SMC20	Incremental encoder (sin/cos 1 V_{pp}), full-thread connector, M23	**C**	**A**	**3**	**1**
SMC30	Incremental encoder (HTL), full-thread connector, M23	**A**	**H**	**0**	**0**
CU310-2	Incremental encoder (HTL), full-thread connector, M23	**A**	**H**	**1**	**1**
SMC20	Absolute encoder, full-thread connector, M23	**E**	**Q**	**1**	**0**
SMC10	Resolver, full-thread connector, M23	**C**	**F**	**0**	**2**
SMC20	Incremental encoder (sin/cos 1 V_{pp}), SPEED-CONNECT connector, M23	**C**	**Q**	**3**	**1**
SMC20	Incremental encoder, SPEED-CONNECT connector, M17	**C**	**N**	**2**	**0**
SMC20	Absolute encoder, SPEED-CONNECT connector, M23	**E**	**Q**	**3**	**1**
SMC20	Absolute encoder, SPEED-CONNECT connector, M17	**E**	**N**	**2**	**0**
SMC10	Resolver, SPEED-CONNECT connector, M17	**F**	**N**	**2**	**0**
Extension between basic cable with connector	and motor connector				
Full-thread or SPEED-CONNECT	Full-thread or SPEED-CONNECT				**4**

Length code

Units of 10 cm (3.94 in) or 1 meter (3.28 ft) or in fixed lengths	.	.	.	.	

[1] Not with DRIVE-CLiQ.
[2] Not available as 6FX2002-1... cable.

© Siemens 2024

Overview

Data position of the Article No.	1	2	3	4	5	6	7		8	9	10	11	12		13	14	15	16
MOTION-CONNECT 500	**6**	**F**	**X**	**5**	**0**	■	**2**	**–**	**2**	■	■	■	■	**–**	.	.	.	.
MOTION-CONNECT 800PLUS	**6**	**F**	**X**	**8**	**0**	■	**2**	**–**	**2**	■	■	■	■	**–**	.	.	.	.
6FX2 cables	**6**	**F**	**X**	**2**	**0**	**0**	**2**	**–**	**1**	**D**	**C**	■	**0**	**–**	.	.	.	.

Pre-assembled at motor and module ends	**0**
Pre-assembled at motor end, connector at module end supplied separately	**1**
Connector at motor end supplied separately, pre-assembled at module end	**4**

Variant: Signal cables for external encoder

Basic cable between	and					
SMC30	Incremental encoder 6FX2001-2 (TTL/supply 5 V), full-thread connector	**C**	**R**	**0**	**0**	
SMC30	Incremental encoder 1XP8012-2./1XP8032-2. (TTL/supply 24 V), full-thread connector	**C**	**D**	**2**	**4**	
SMC20	Incremental encoder 6FX2001-3 (sin/cos 1 V_{pp}), full-thread connector	**C**	**G**	**0**	**0**	
SMC30	Incremental encoder 6FX2001-4 (HTL), full-thread connector	**C**	**A**	**1**	**2**	
SMC30	Incremental encoder 1XP8012-1./1XP8032-1. (HTL), full-thread connector	**C**	**A**	**1**	**2**	
SMC30	Absolute encoder with SSI 1XP8014-2./1XP8024-2., full-thread connector	**C**	**C**	**0**	**6**	
SMC30	Absolute encoder 6FX2001-5.S (SSI), full-thread connector	**C**	**C**	**1**	**1**	
SMC20	Absolute encoder 6FX2001-5.E (EnDat 2.1), full-thread connector	**C**	**H**	**0**	**0**	
SMC20	Absolute encoder 1XP8014-10/1XP8024-10 (EnDat 2.1), full-thread connector	**C**	**H**	**0**	**0**	
SMC10	Resolver 1XP8013-1./1XP8023-1., full-thread connector	**C**	**F**	**0**	**6**	
Extension between basic cable with connector	and motor connector					
Full thread	Full thread				**4**	

Variant: Signal cables for temperature sensor	**6**	**F**	**X**	**8**	**0**	**0**	**2**	**–**	**2**	**S**	**L**	■	■	**–**	.	.	.	.
Adapter cable with M17 socket on SIMOTICS T-1FW6 terminals												**0**	**0**					
Adapter cable with M17 socket on SIMOTICS L-1FN3100/L-1FN3150												**0**	**1**					
Adapter cable with M17 socket on SIMOTICS L-1FN3300 ... L-1FN3900												**0**	**2**					
Extension to basic cable between SME12x and SIMOTICS L-1FN3[1)]/SIMOTICS T-1FW6												**1**	**0**					
Basic cable between TM120 and SIMOTICS L-1FN3/SIMOTICS T-1FW6												**2**	**0**					

Length code

Units of 10 cm (3.94 in) or 1 meter (3.28 ft) or in fixed lengths	.	.	.	.

10

[1)] Adapter cable required for connecting to SIMOTICS L-1FN3.

© Siemens 2024

Length code

Overview

Description	Article No. supplement				
Length code for pre-assembled cables	**6FX.0.2-.....-**	■	■	■	■
0 m 100 m (328 ft) 200 m (656 ft)		**1** **2** **3**			
0 m 10 m (32.81 ft) 20 m (65.6 ft) 30 m (98.4 ft) 40 m (131 ft) 50 m (164 ft) 60 m (197 ft) 70 m (230 ft) 80 m (262 ft) 90 m (295 ft)			**A** **B** **C** **D** **E** **F** **G** **H** **J** **K**		
0 m 1 m (3.28 ft) 2 m (6.56 ft) 3 m (9.84 ft) 4 m (13.1 ft) 5 m (16.4 ft) 6 m (19.7 ft) 7 m (23.0 ft) 8 m (26.2 ft) 9 m (29.5 ft)				**A** **B** **C** **D** **E** **F** **G** **H** **J** **K**	
0 m 0.1 m (3.94 in) 0.2 m (7.87 in) 0.3 m (11.81 in) 0.4 m (15.75 in) 0.5 m (19.96 in) 0.6 m (23.62 in) 0.7 m (27.56 in) 0.8 m (31.5 in)					**0** **1** **2** **3** **4** **5** **6** **7** **8**
Examples:	1.0 m (3.28 ft):	1	A	B	0
	2.2 m (7.22 ft):	1	A	C	2
	8.0 m (26.3 ft):	1	A	J	0
	299.0 m (981 ft):	3	K	K	0

Note:

Pre-assembled cables with a length of 0 m (...-1AA0) can **not** be ordered!

Description	Article No. supplement				
Length code for cables sold by the meter [1]	**6FX.008-.....-**	■	■	**A**	**0**
50 m (164 ft)		**1**	**F**		
100 m (328 ft)		**2**	**A**		
200 m (656 ft)		**3**	**A**		
500 m (1641 ft)		**6**	**A**		

More information

Definition of lengths for pre-assembled cables

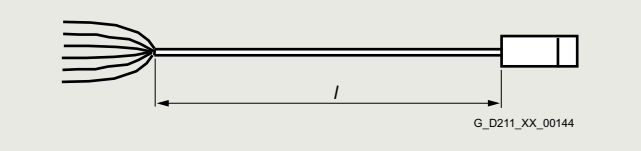

Cable with bare wire ends and pre-assembled connector

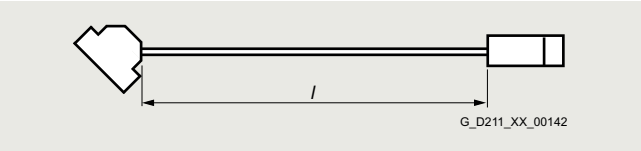

Cable with pre-assembled connectors at both ends

Tolerance:

- Cable lengths up to 10 m (32.8 ft): ± 2%
- Cable lengths of 10 m (32.8 ft) and longer: ± 1%

[1] Note type of delivery. Cables with core cross-section 4 × 4 mm² or 4 × 4 mm² with brake cores can be delivered at exact length in meters. Length code as for pre-assembled cables.

© Siemens 2024

Integration

The DRIVE-CLiQ signal cables of type 6SL3060-4A..0-0AA0 required for the standard configuration are part of the scope of supply of the Line Modules and Motor Modules. In this case, the modules must be mounted directly adjacent to one another in a row.

The same components can be connected to the DRIVE-CLiQ interfaces X100-X103 (SIMOTION D425-2, SIMOTION CX32-2) or X100-X105 (SIMOTION D435-2/D445-2/D455-2) as can be connected to the DRIVE-CLiQ interfaces X100-X103 of a CU320-2.

Connection overview of CU320-2 Control Unit with SINAMICS S120 in booksize compact and booksize formats

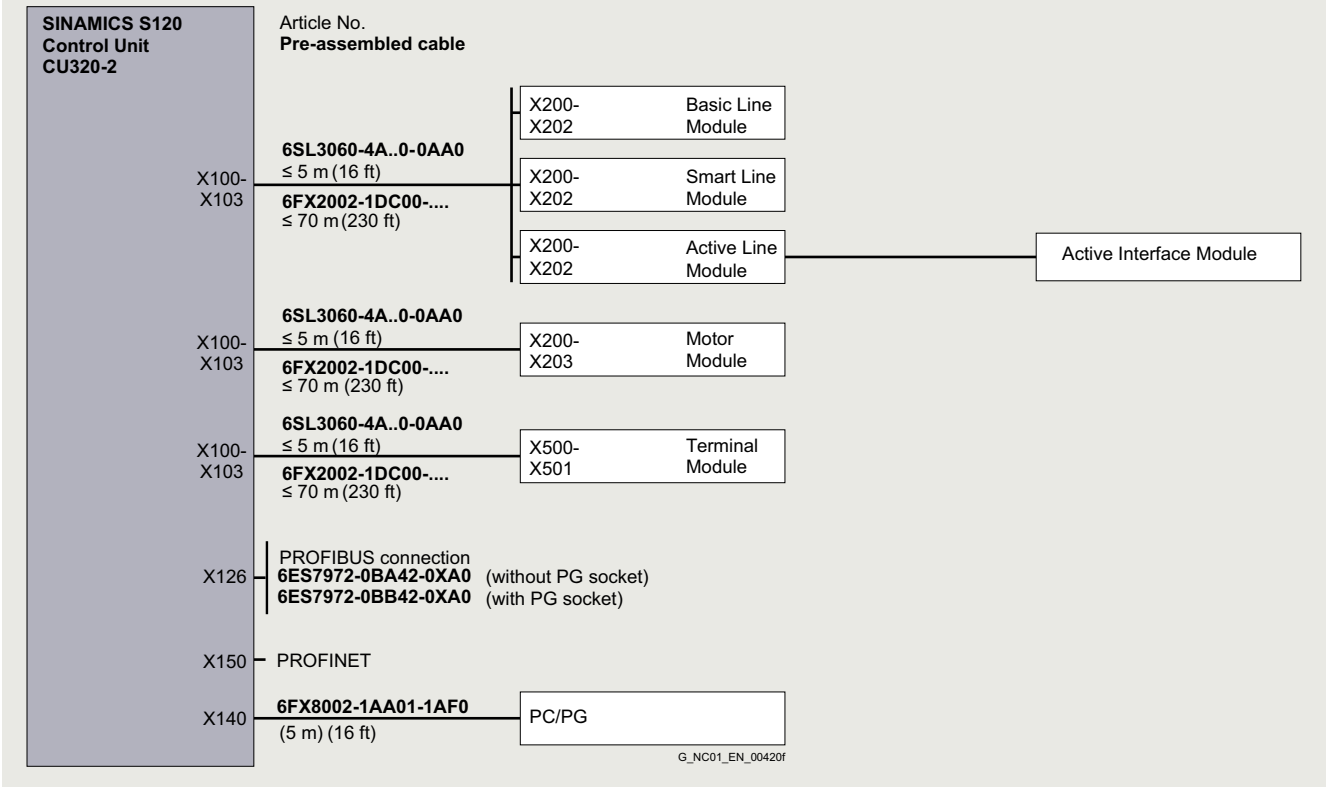

Connection overview of CU320-2 Control Unit with SINAMICS S120 in chassis format

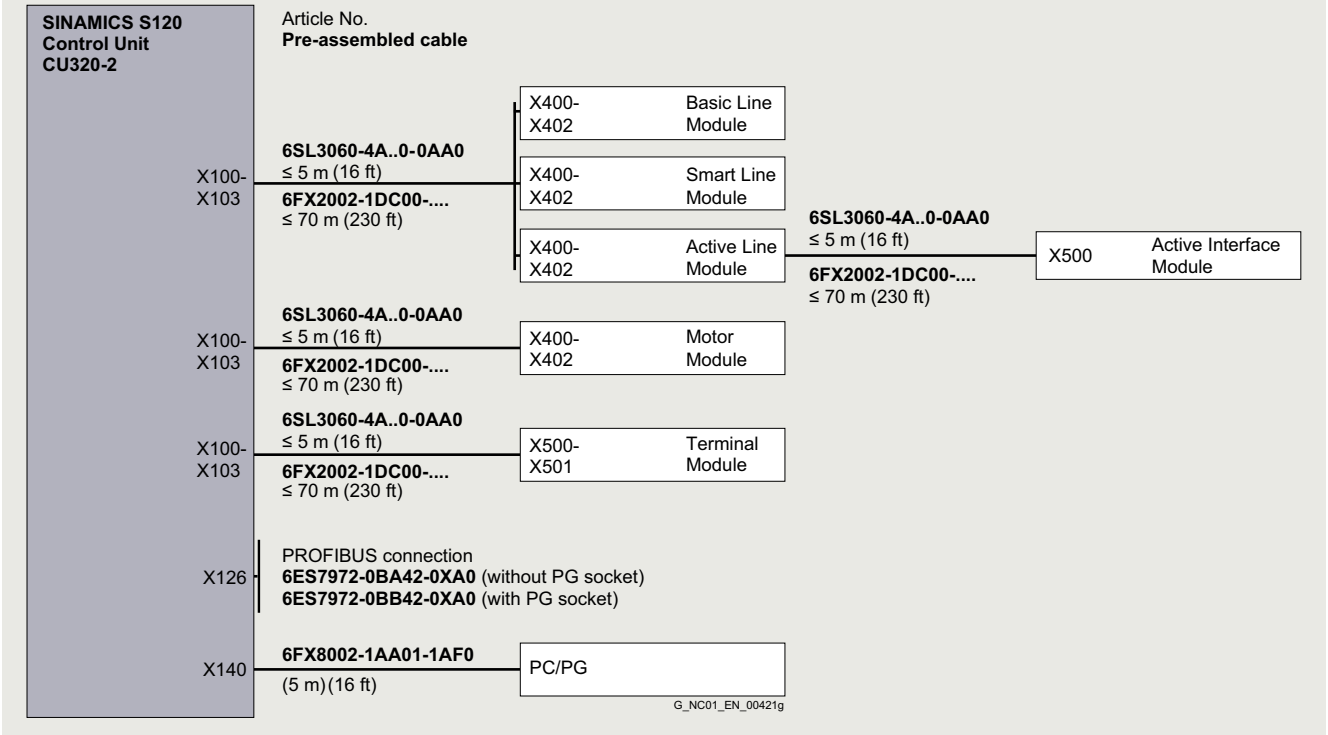

© Siemens 2024

SIMOTION D4x5-2 Control Unit

Integration

Connection overview of SIMOTION D4x5-2 Control Unit with SINAMICS S120 in booksize format

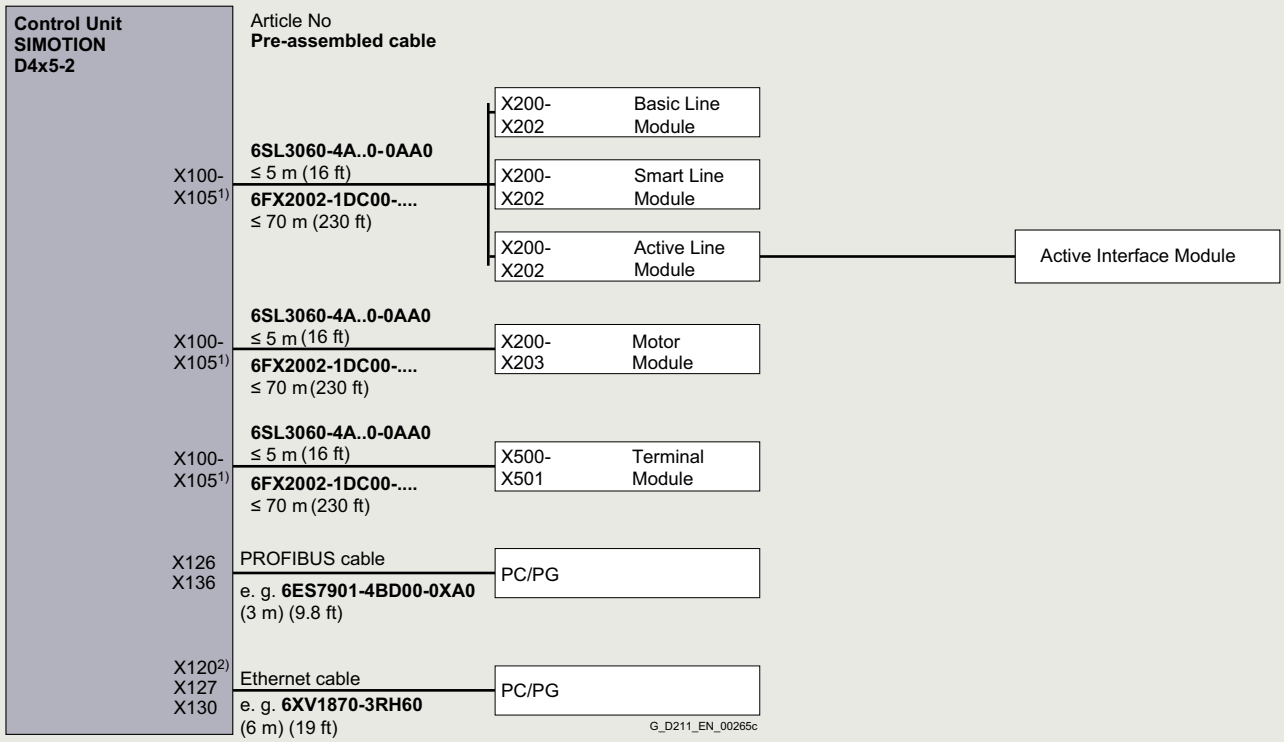

1) For SIMOTION D425/SIMOTION D435: X100-X103.
For SIMOTION D445-1: X100-X105.

2) X120 for D4x5-2 DP only.

Connection overview of SIMOTION D4x5-2 Control Unit with SINAMICS S120 in chassis format

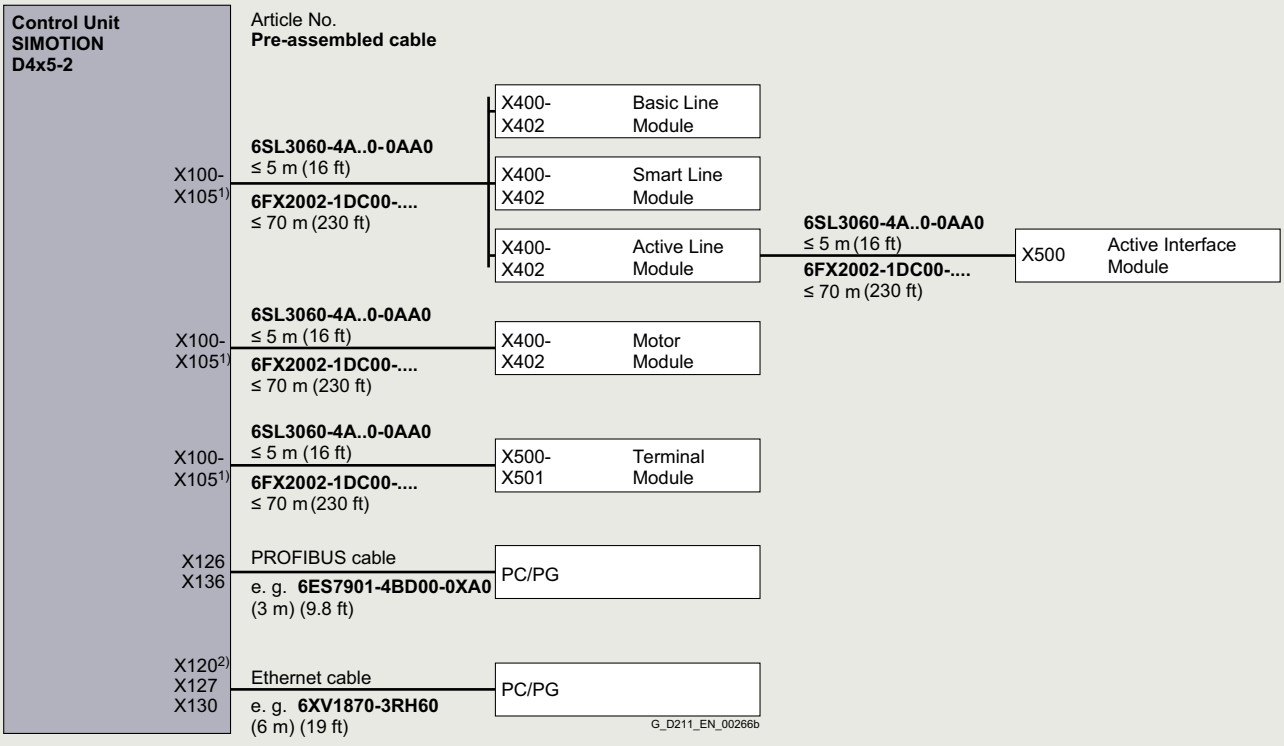

1) For SIMOTION D425-2: X100-X103.
For SIMOTION D435-2/D445-2/D455-2: X100-X105.

2) X120 for D4x5-2 DP only.

© Siemens 2024

Integration

Connection of a machine encoder (direct measuring system)

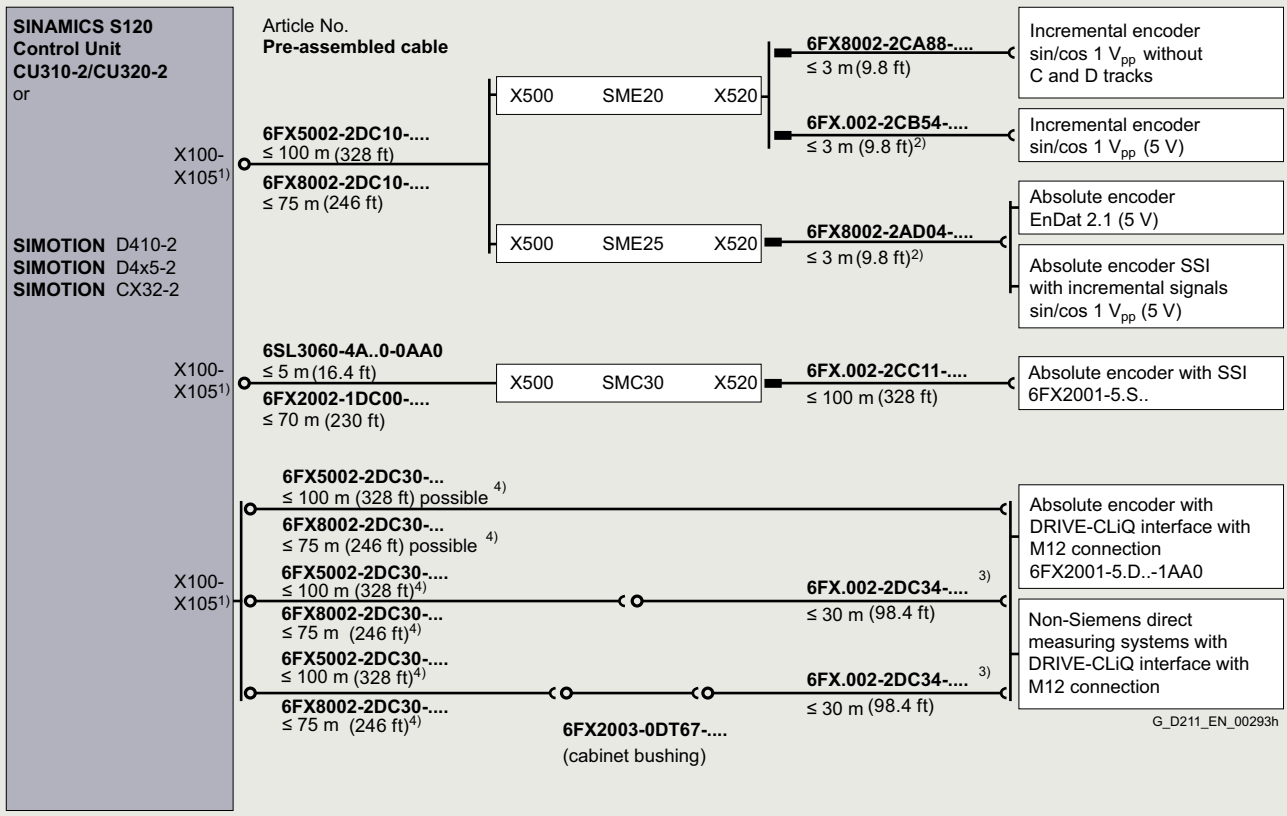

1) For Control Unit CU310-2/SIMOTION D410-2: X100.
For Control Unit CU320-2/SIMOTION D425-2/SIMOTION CX32-2: X100-X103.
For SIMOTION D435-2/D445-2/D455-2: X100-X105.

2) Up to 10 m (32.8 ft) possible, dependent on encoder current consumption.

3) The total cable length (basic cable and extension cable) must not exceed 30 m (98 ft).

4) See connection overview "SIMOTICS motors with RJ45 or M17 connection and external measuring systems with M12 connections" for further connection possibilities.

© Siemens 2024

SINAMICS S120 Motor Modules in booksize format

Integration

Connection overview of SINAMICS S120 Motor Modules in booksize compact and booksize formats for SIMOTICS motors with/without DRIVE-CLiQ interface

The DRIVE-CLiQ signal cables of type 6SL3060-4A..0-0AA0 required for the standard configuration are part of the scope of supply of the Line Modules and Motor Modules. In this case, the modules must be mounted directly adjacent to one another in a row.

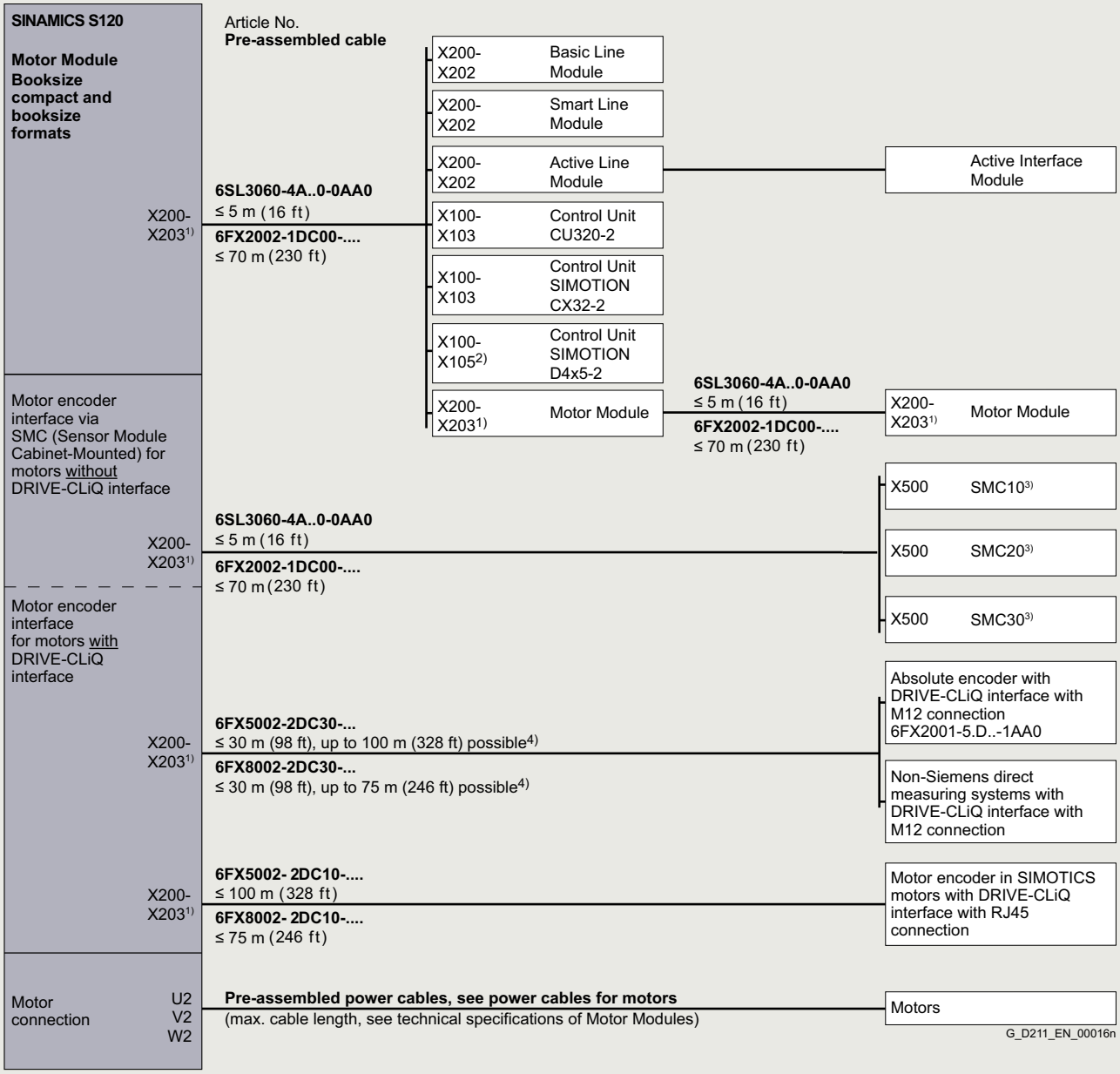

1) For Single Motor Module: X200-X202.
For Double Motor Module: X200-X203.
2) For SIMOTION D425-2: X100-X103.
For SIMOTION D435-2/D445-2/D455-2: X100-X105.
3) See connection overviews of SMC10/SMC20/SMC30.
4) Longer cable lengths possible when using disconnection points with M17 or RJ45, see connection overview "External measuring systems with DRIVE-CLiQ interface".

© Siemens 2024

Integration

Connection overview of SINAMICS S120 Motor Modules in booksize format with SME120/SME125 or TM120 with/without SMC20 and SIMOTICS L-1FN3 linear motors

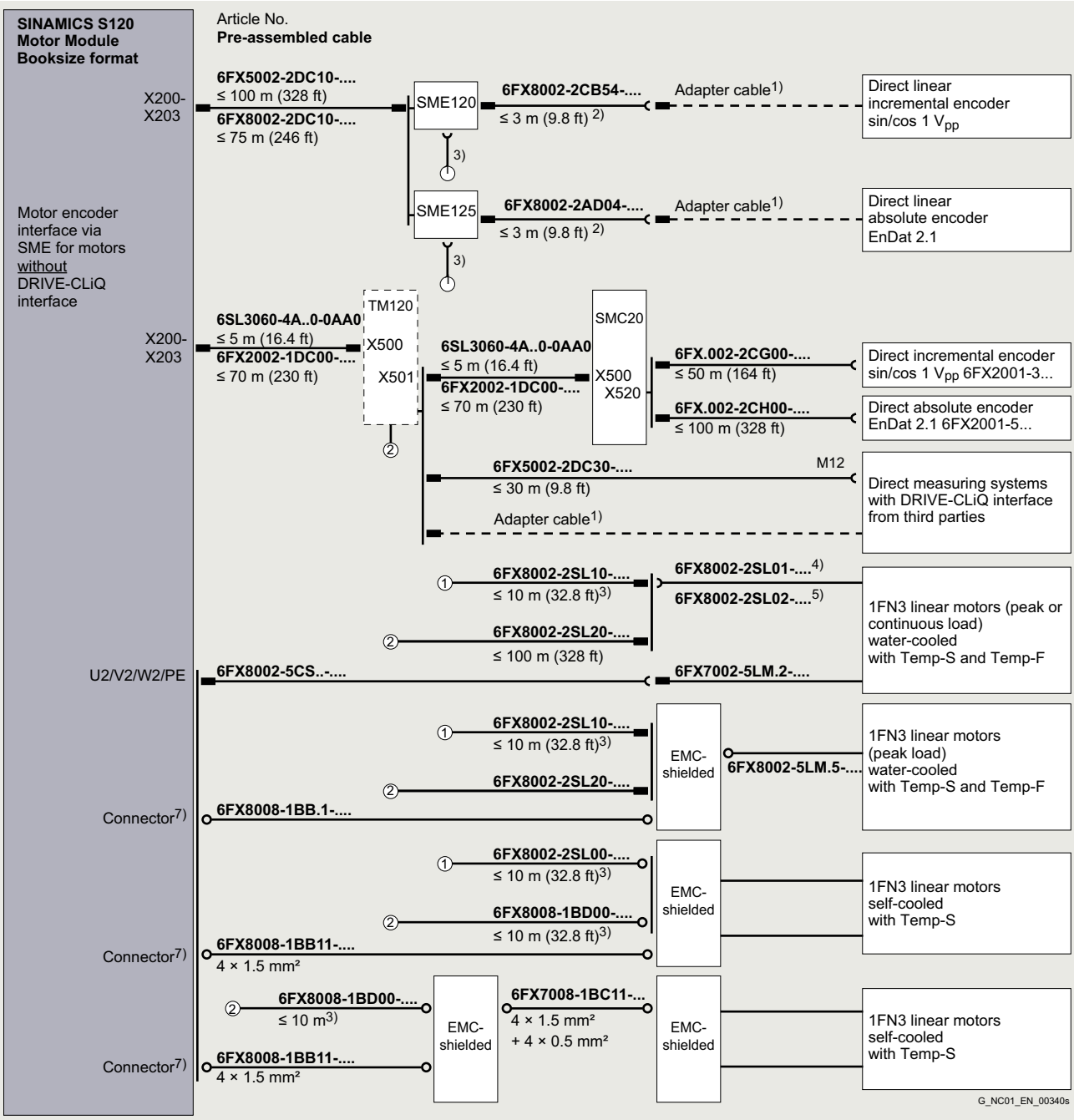

1) Adapter cable available from measuring system manufacturer.
2) Up to 10 m (32.8 ft) possible, depending on current consumption of the 5 V encoder. Up to 30 m (98.4 ft) possible for encoders with 3.6 V operating voltage.
3) The total cable length between SME120/SME125 and 1FN3 must not exceed 10 m (32.8 ft).
4) Adapter cable for 1FN3100/1FN3150 motors.
5) Adapter cable for 1FN3300 to 1FN3900 motors.
6) For further connection possibilities, refer to connection overview "SIMOTICS motors with RJ45 or M17 connection and external measuring systems with M12 connection".
7) Retrofitted connector 6SL3162-2MA00-0AC00 /6SL3162-2MA00-0AB00

© Siemens 2024

SINAMICS S120 Motor Modules in booksize format

Integration

Connection overview of SINAMICS S120 Motor Modules in booksize format with SME120/SME125 or TM120 with/without SMC20 and SIMOTICS T-1FW6 torque motors/SIMOTICS M-1FE1/-1FE2 built-in motors

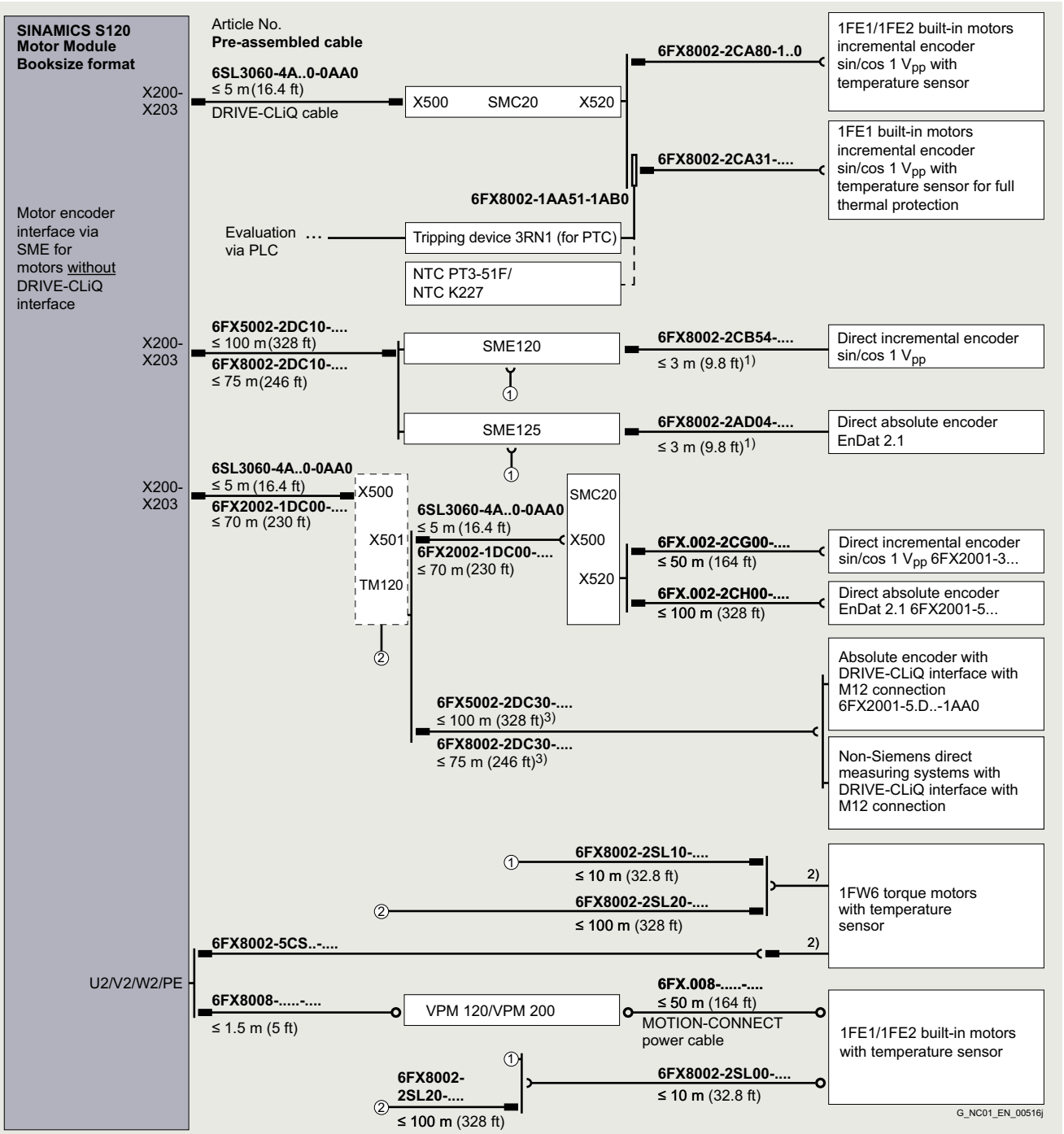

1) Up to 10 m (32.8 ft) possible, depending on current consumption of the 5 V encoder.
Up to 30 m (98.4 ft) possible for encoders with 3.6 V operating voltage.

2) For type of connection with bare wire ends, power and signal connectors are not included in the scope of supply of the motor, they must be ordered separately (see Accessories for power and signal cables).

3) For further connection possibilities, refer to connection overview "SIMOTICS motors with RJ45 or M17 connection and external measuring systems with M12 connection".

© Siemens 2024

Integration

Connection overview of SINAMICS S120 Motor Modules in booksize format and SIMOTICS 2SP1 main spindle motors

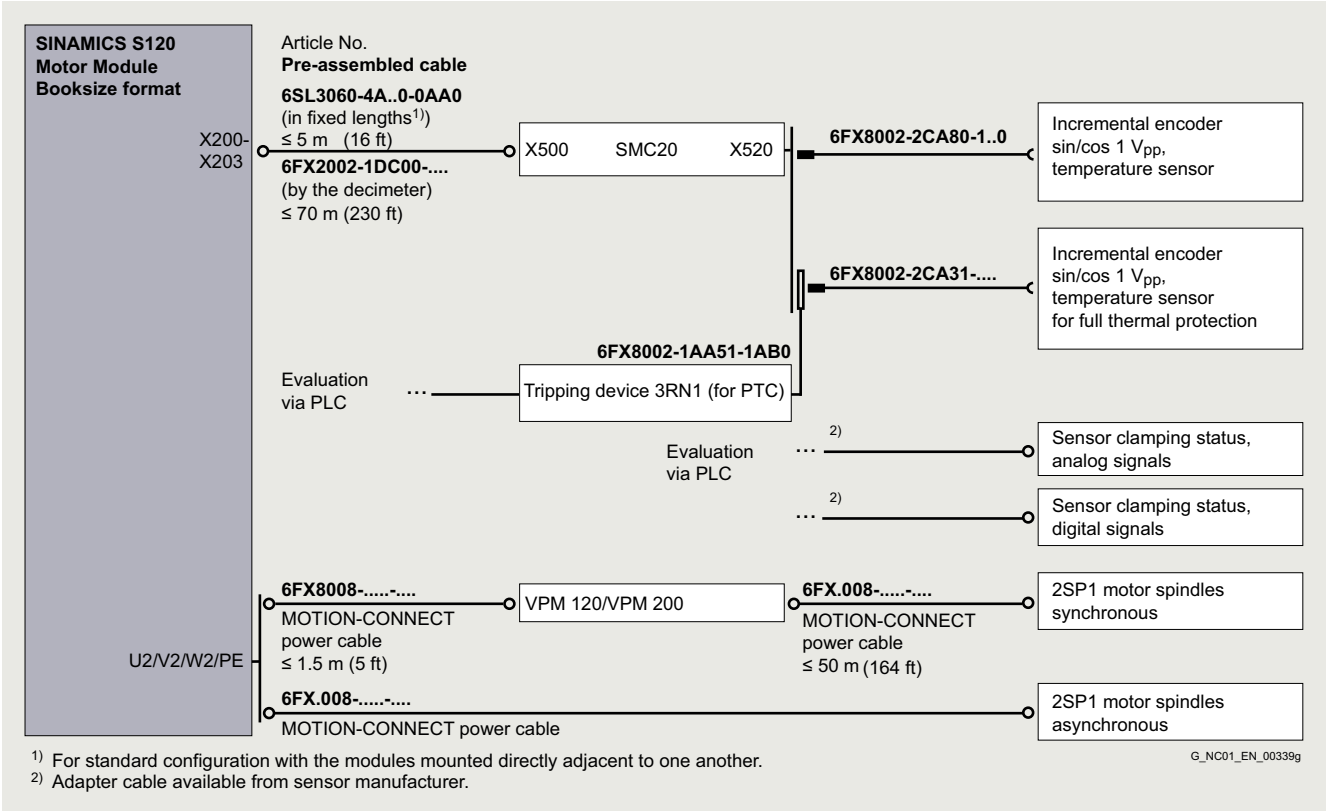

1) For standard configuration with the modules mounted directly adjacent to one another.
2) Adapter cable available from sensor manufacturer.

© Siemens 2024

SINAMICS S120 Motor Modules in chassis format

Integration

Connection overview of SINAMICS S120 Motor Modules and Line Modules in chassis format for SIMOTICS motors with/without DRIVE-CLiQ interface

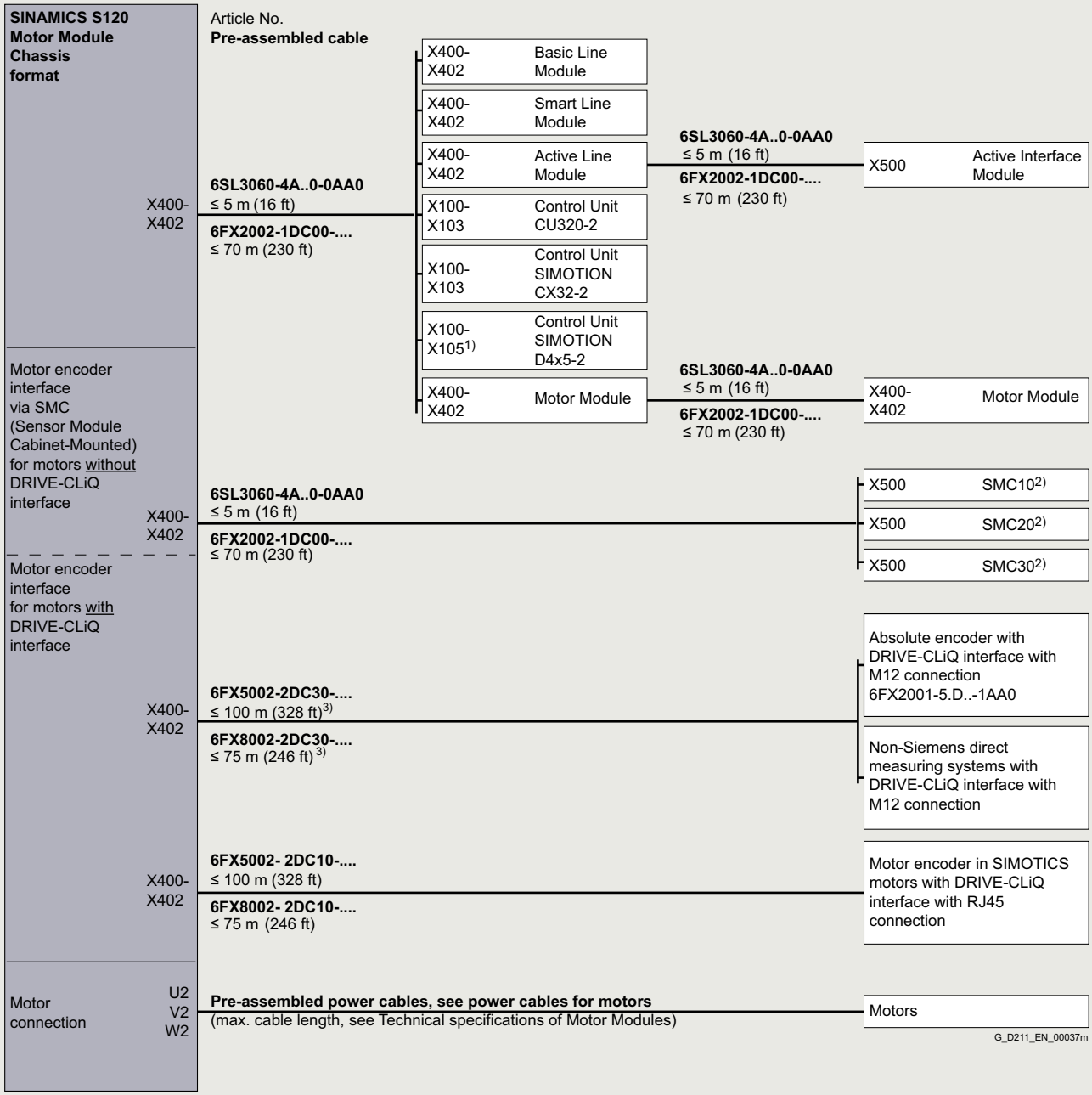

1) For SIMOTION D425-2: X100-X103.
For SIMOTION D435-2/D445-2/D455-2: X100-X105.
2) See connection overviews of SMC10/SMC20/SMC30.
3) See connection overview "SIMOTICS motors with RJ45 or M17 connection and external measuring systems with M12 connections" for further connection possibilities.

© Siemens 2024

Integration

Connection overview of SINAMICS S120M distributed servo drive

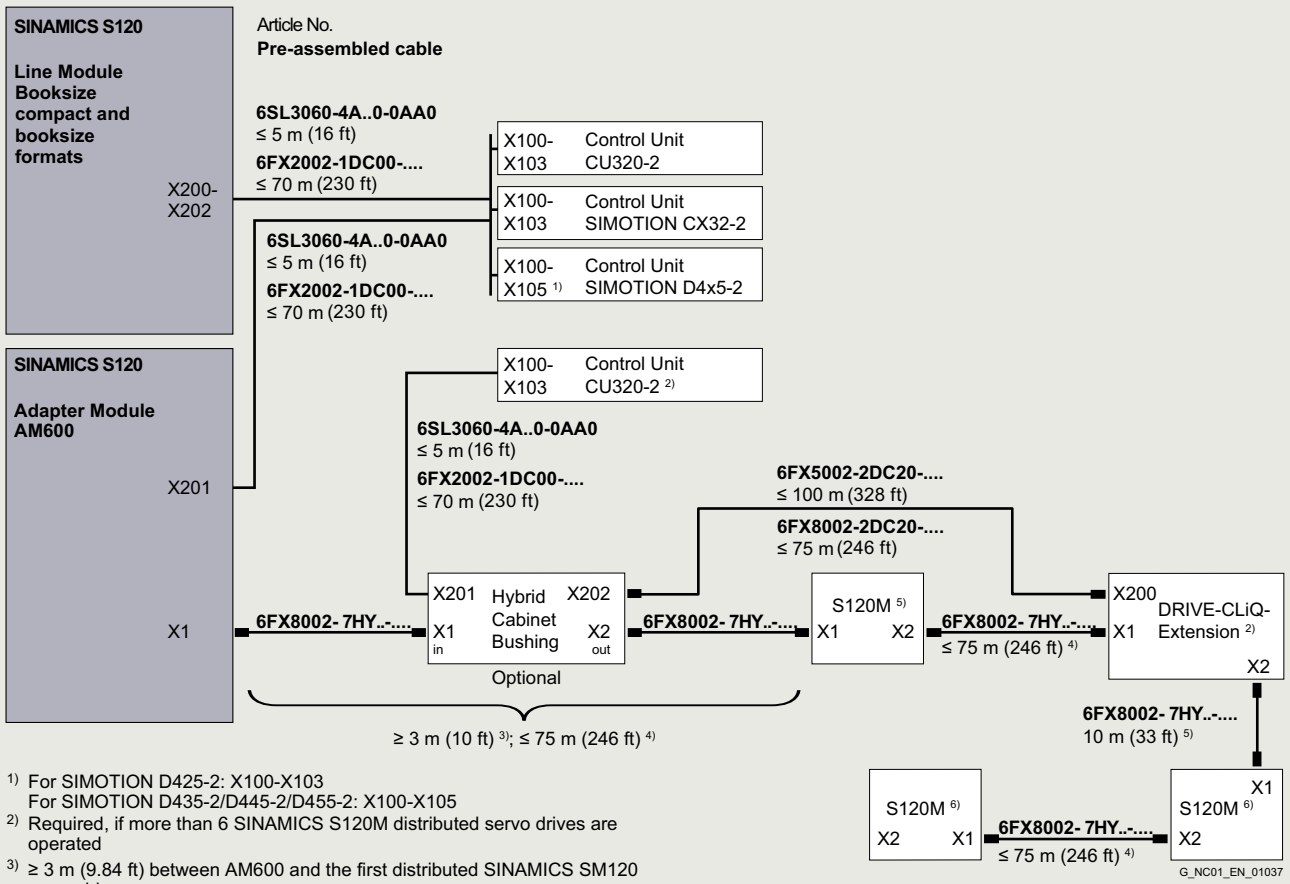

1) For SIMOTION D425-2: X100-X103
For SIMOTION D435-2/D445-2/D455-2: X100-X105
2) Required, if more than 6 SINAMICS S120M distributed servo drives are operated
3) ≥ 3 m (9.84 ft) between AM600 and the first distributed SINAMICS SM120 servo drive
4) The total length of the hybrid line must not exceed 100 m (328 ft) The overall length is reduced by 5 m (16 ft) for each DRIVE-CLiQ extension
5) A maximum of 6 SINAMICS S120M distributed servo drives per Control Unit is permissible
6) The maximum permissible number of SINAMICS S120M servo drives that can be connected to an AM600 Adapter Module depends on the power

© Siemens 2024

SINAMICS S120 Power Modules in blocksize format

Integration

Connection overview of SINAMICS S120 Power Modules in blocksize format with CU310-2/SIMOTION D410-2 Control Unit for SIMOTICS motors with/without DRIVE-CLiQ interface

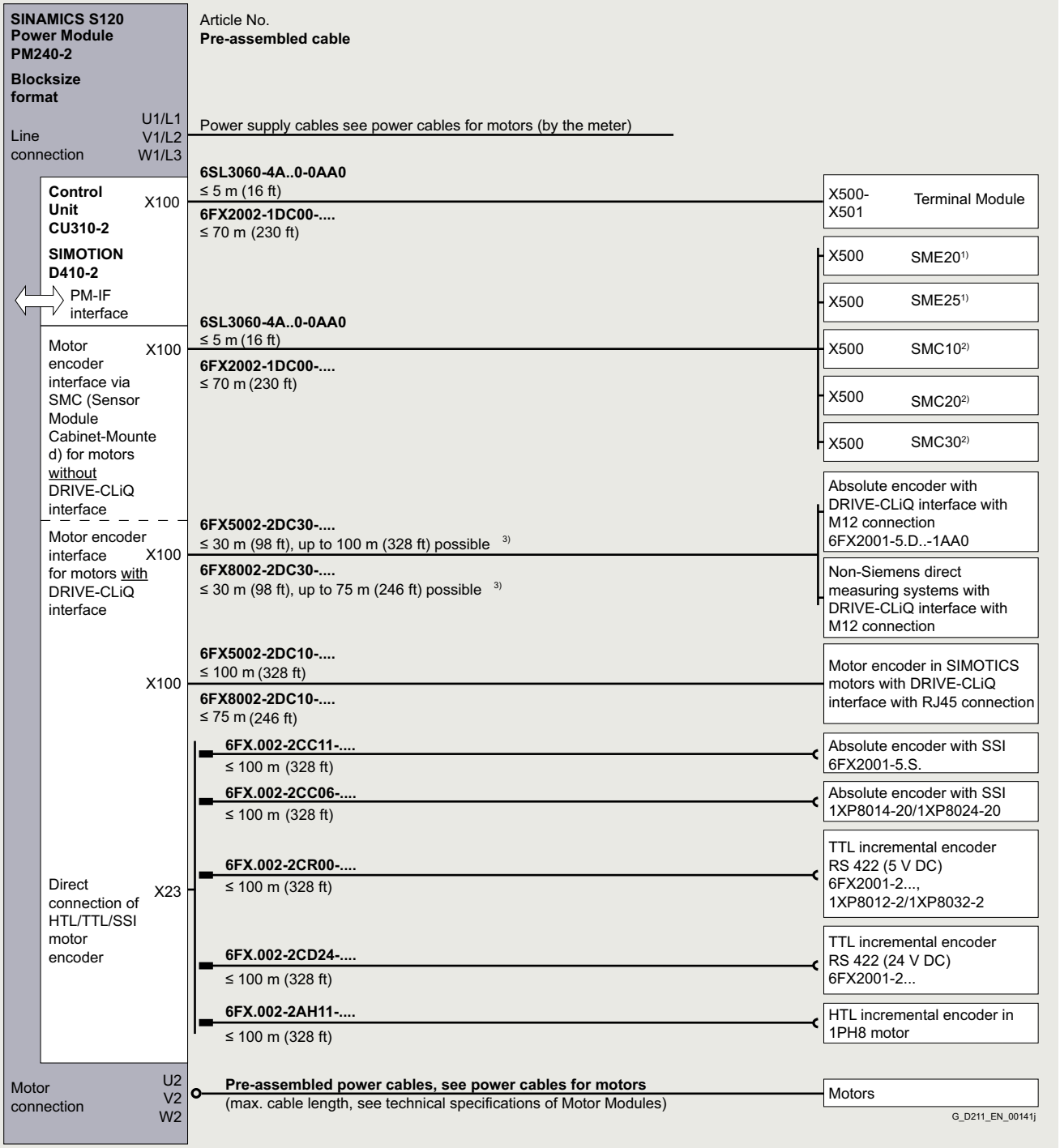

1) See connection overview for connection of a machine encoder.
2) See connection overviews of SMC10/SMC20/SMC30.
3) Longer cable lengths possible when using disconnection points with M17 or RJ45, see connection overview "External measuring systems with DRIVE-CLiQ interface".

© Siemens 2024

Integration

Connection overview of SINAMICS S120 Power Modules in blocksize format with CUA31/CUA32 Control Unit Adapter for SIMOTICS motors with/without DRIVE-CLiQ interface

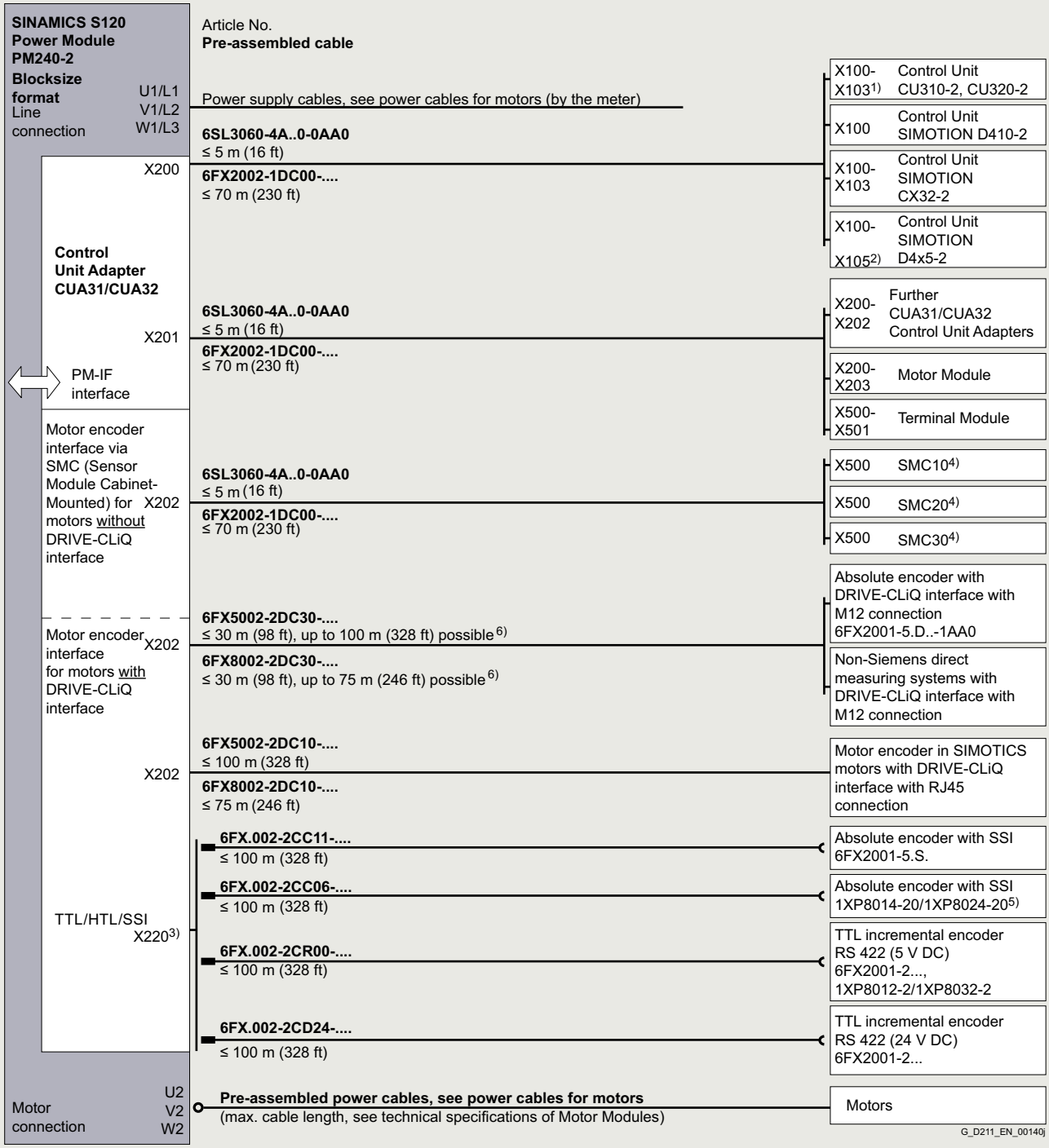

1) For Control Unit CU310-2: X100.
For Control Unit CU320-2: X100-X103.

2) For SIMOTION D425-2: X100-X103.
For SIMOTION D435-2/D445-2/D455-2: X100-X105.

3) Only for CUA32 Control Unit Adapter.

4) See connection overviews of SMC10/SMC20/SMC30.

5) Only for position control.

6) Longer cable lengths possible when using disconnection points with M17 or RJ45, see connection overview "External measuring systems with DRIVE-CLiQ interface".

© Siemens 2024

SINAMICS S120 Power Modules in chassis format

Integration

Connection overview of SINAMICS S120 Power Modules in chassis format for SIMOTICS motors with/without DRIVE-CLiQ interface

A DRIVE-CLiQ signal cable of type 6SL3060-4A..0-0AA0 for connection to the chassis-mounted CU310-2 Control Unit/ SIMOTION D410-2 Control Unit is already included in the scope of supply.

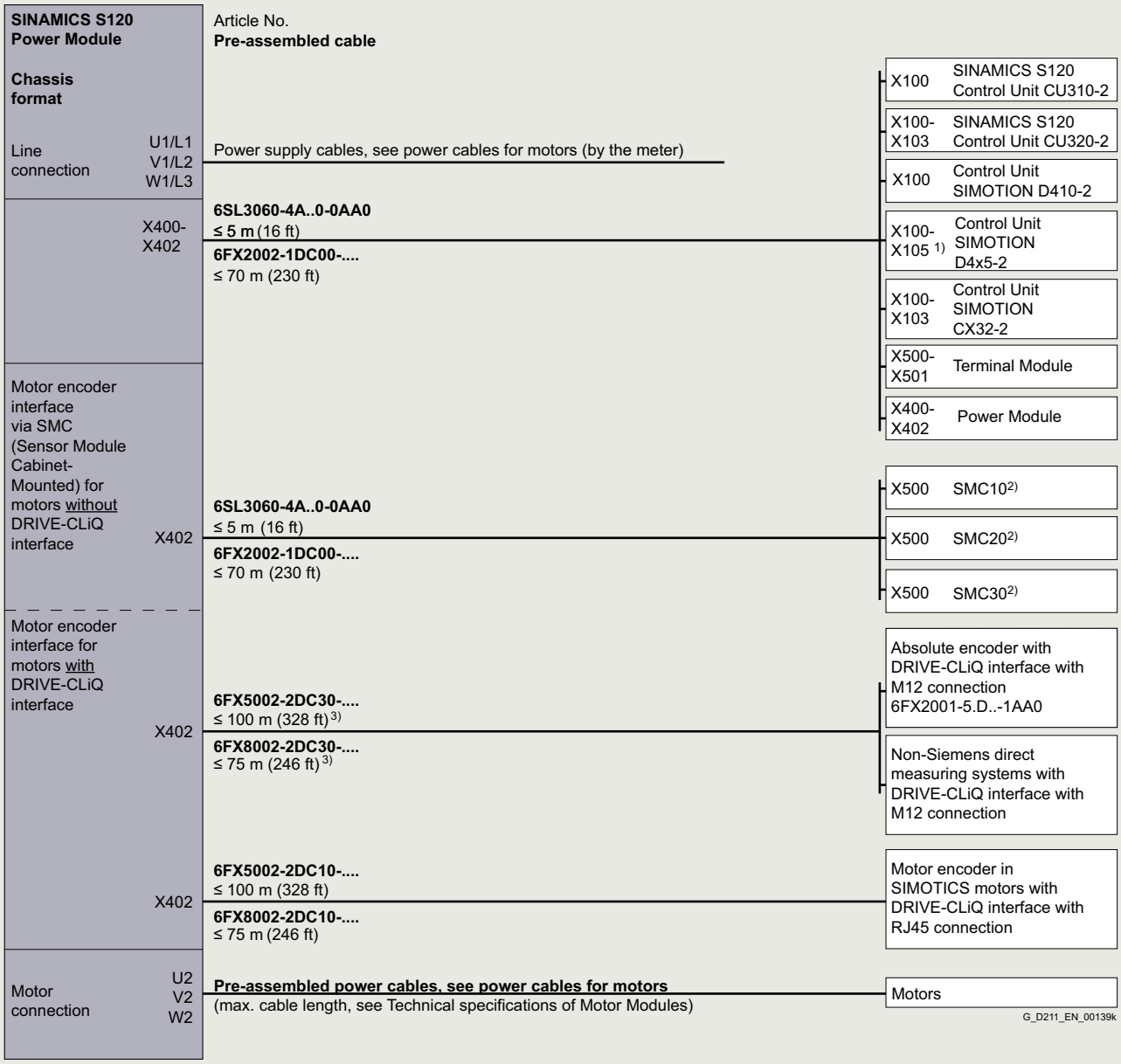

1) For SIMOTION D425-2: X100-X103.
For SIMOTION D435-2/D445-2/D455-2: X100-X105.
2) See connection overviews SMC10/SMC20/SMC30.
3) See connection overview "SIMOTICS motors with RJ45 or M17 connection and external measuring systems with M12 connections" for further connection possibilities.

© Siemens 2024

Integration

Connection overview of SINAMICS S120 Sensor Module Cabinet-Mounted SMC10

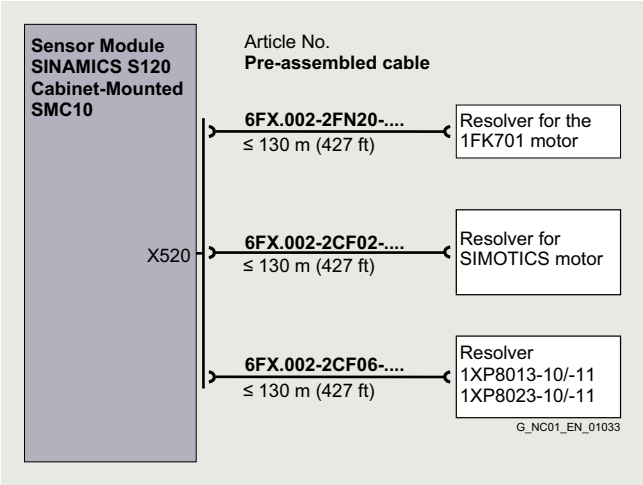

Connection overview of SINAMICS S120 Sensor Module Cabinet-Mounted SMC20

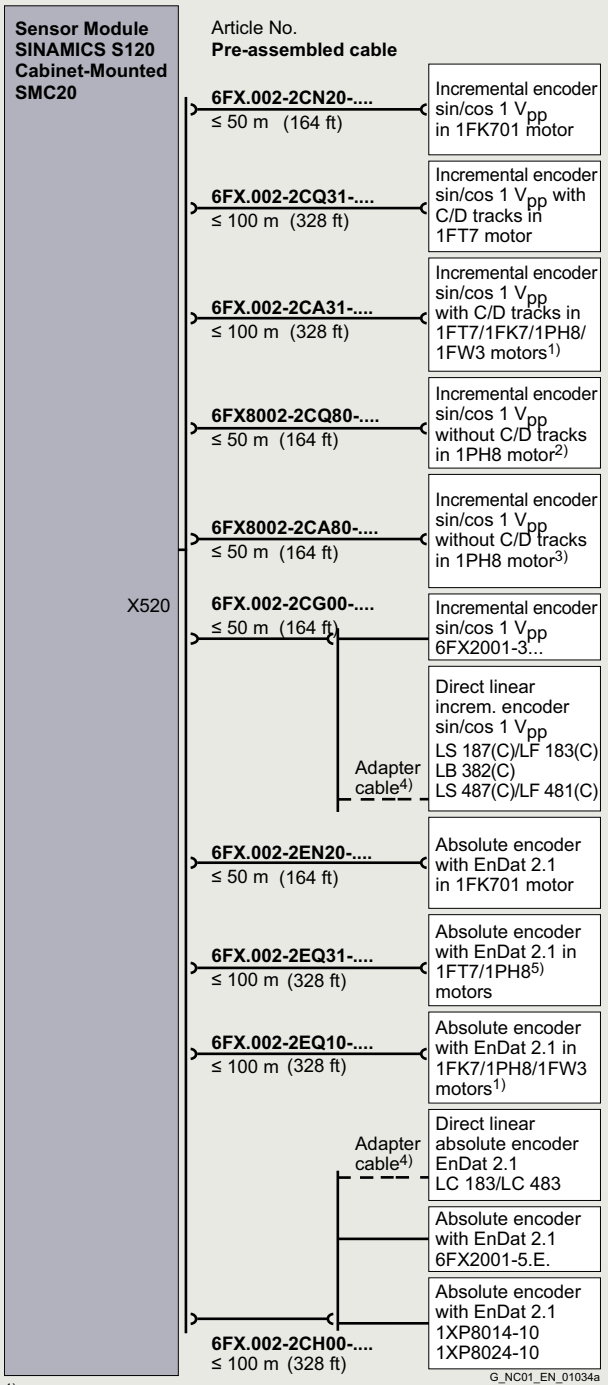

1) 1FW3 motor not suitable for machine tools.
2) Possible for 1PH808/1PH810/1PH813/1PH816 motors for encoders with 512 S/R and 256 S/R (for SPEED-CONNECT).
3) Possible for 1PH8 motors for encoders with 512 S/R and 256 S/R (for full thread).
4) Adapter cable available from measuring system manufacturer.
5) Possible for 1PH808/1PH810/1PH813/1PH816 motors.

© Siemens 2024

Integration

Connection overview of SINAMICS S120 Sensor Module Cabinet-Mounted SMC30

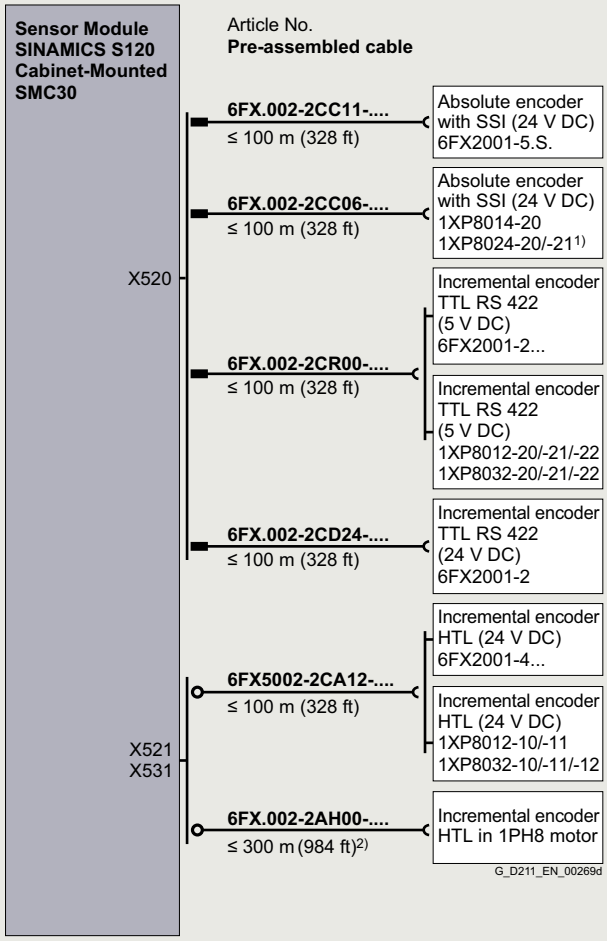

1) For position control only.

2) Applies to HTL encoders with bipolar signal evaluation or for evaluation of difference signals A*, A and B*, B; for HTL encoders with unipolar signal evaluation the permissible cable length is reduced to 100 m (328 ft).

10

© Siemens 2024

Integration

Connection overview of SINAMICS S120 for SIMOTICS S-1FT2, SIMOTICS S-1FT7/-1FK7 motors with RJ45 connection or option N16

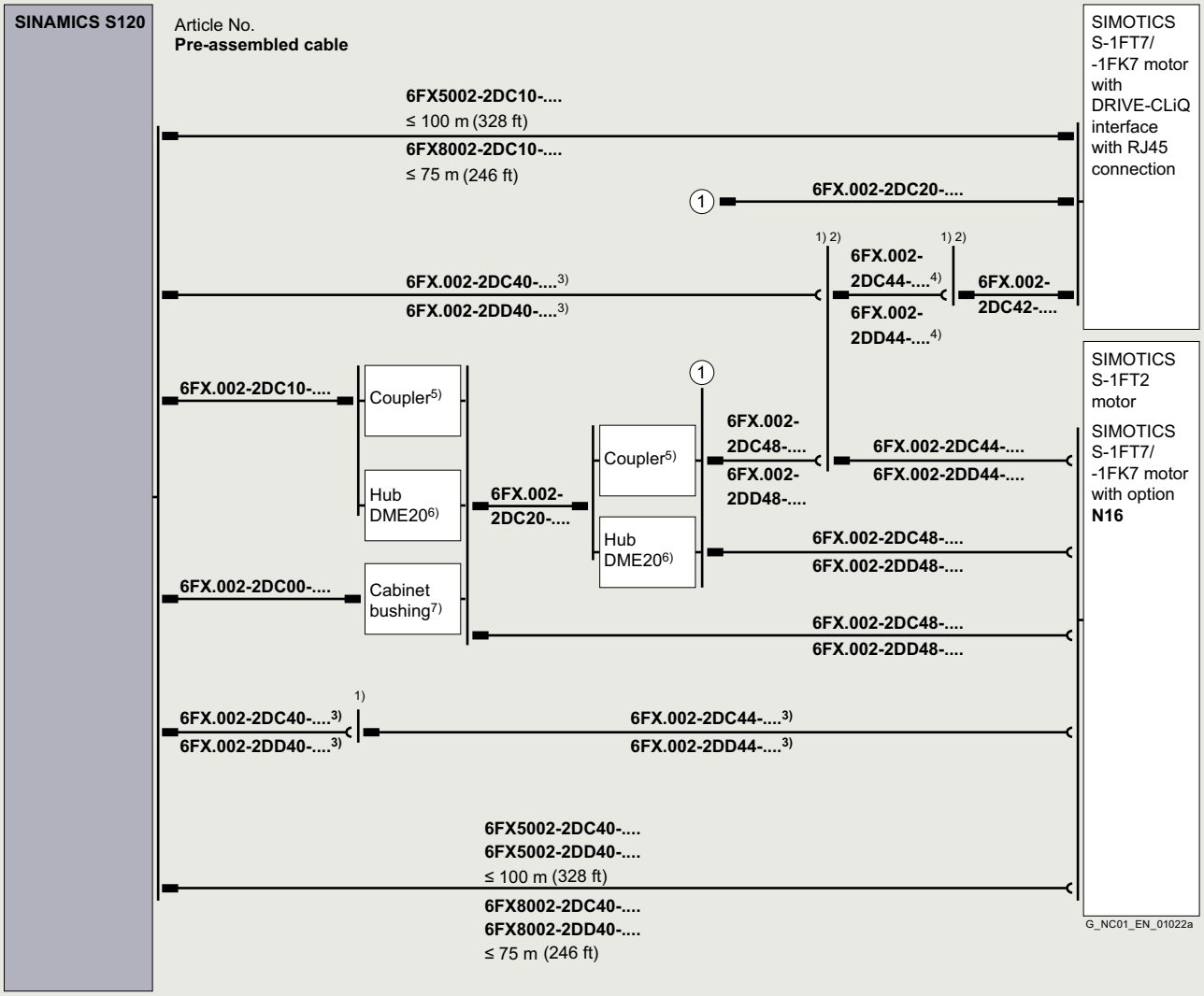

1) Max. 4 M17 disconnection points permissible without derating.
2) Optional mounting flange (6FX2003-7HX00).
3) Total permissible cable length ≤ 100 m (328 ft) (6FX5...) or ≤ 75 m (246 ft) (6FX8...).
4) Optional DRIVE-CLiQ cable 6FX.002-2DC44-.....
5) Optional DRIVE-CLiQ RJ45/IP67 coupler (6SL3066-2DA00-0AB0), max. 3 couplers permissible with derating (total permissible cable length ≤ 100 m (328 ft) (6FX5...) or ≤ 75 m (246 ft) (6FX8...) - 5 m (16.4 ft) per coupler).
6) Optional DME20 DRIVE-CLiQ Hub Module RJ45/IP67 (6SL3055-0AA00-6AB0), max. 2 DME20 Hub Modules possible.
7) Optional DRIVE-CLiQ RJ45/IP67, RJ45/IP20 cabinet bushing (6SL3066-2DA00-0AA0).

© Siemens 2024

External measuring systems with DRIVE-CLiQ interface

Integration

Connection overview of SINAMICS S120 for external measuring systems with M12 connection or RJ45 connection

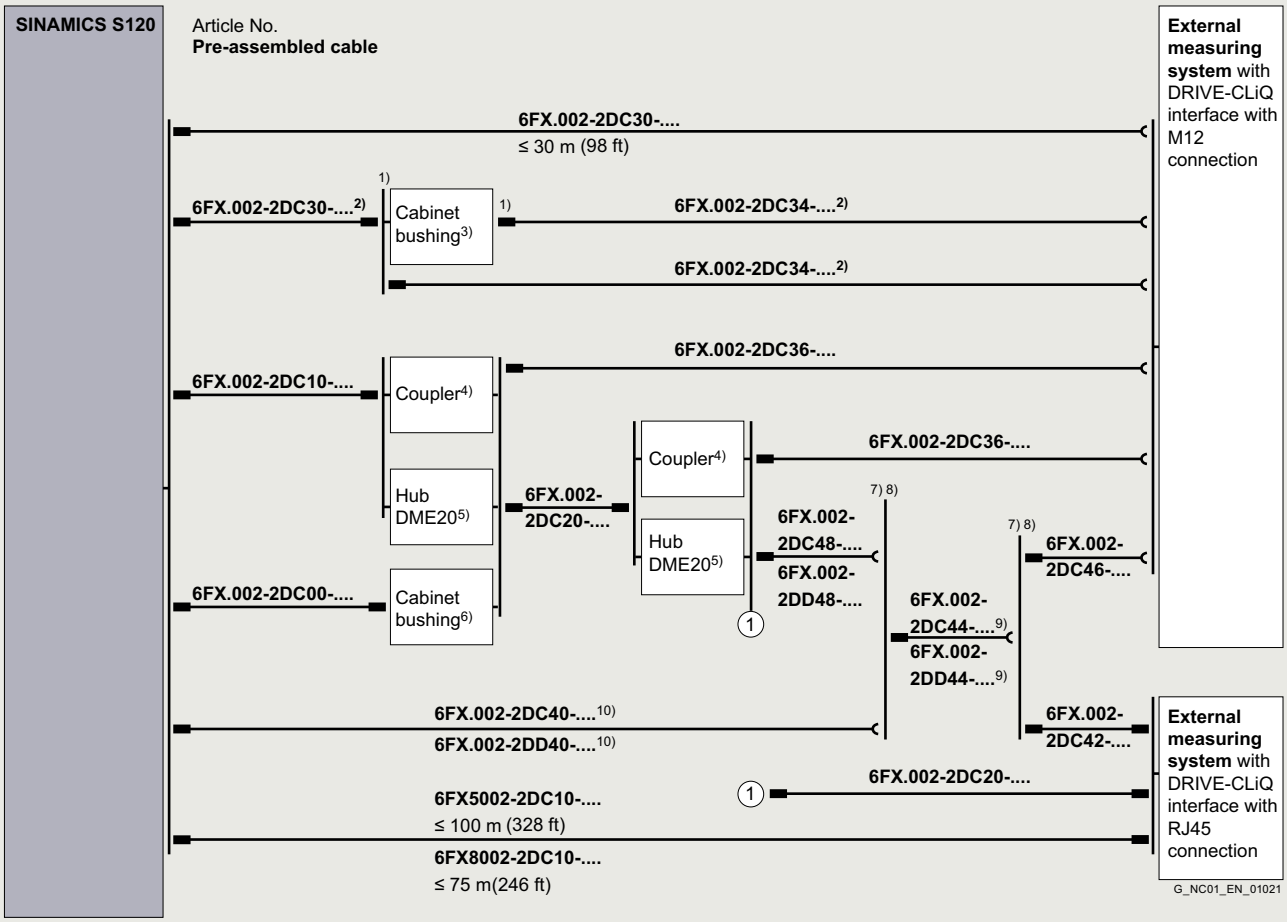

1) Max. 3 M12 disconnection points permissible without derating.
2) The total length of the DRIVE-CLiQ line must not exceed 30 m (98.4 ft).
3) Optional DRIVE-CLiQ M12/IP67 cabinet bushing (6FX2003-0DT67).
4) Optional DRIVE-CLiQ RJ45/IP67 coupler (6SL3066-2DA00-0AB0), max. 3 couplers permissible with derating (total permissible cable length ≤ 100 m (328 ft) (6FX5...) or ≤ 75 m (246 ft) (6FX8...) - 5 m (16.4 ft) per coupler).
5) Optional DME20 DRIVE-CLiQ Hub Module RJ45/IP67 (6SL3055-0AA00-6AB0), max. 2 DME20 Hub Modules possible.
6) Optional DRIVE-CLiQ RJ45/IP67, RJ45/IP20 cabinet bushing (6SL3066-2DA00-0AA0).
7) Max. 4 M17 disconnection points permissible without derating.
8) Optional mounting flange (6FX2003-7HX00).
9) Optional DRIVE-CLiQ cable 6FX.002-2DC44-.....
10) Total permissible cable length ≤ 100 m (328 ft) (6FX5...) or ≤ 75 m (246 ft) (6FX8...).

© Siemens 2024

Overview

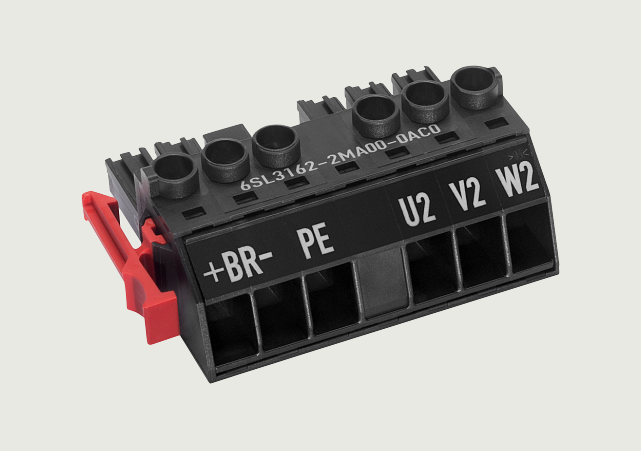

Power connector with screw terminal for Motor Modules, C/D type

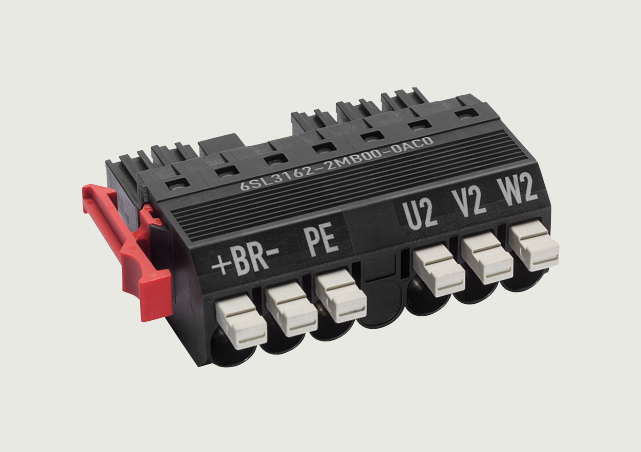

Power connector with push-in connection with snap-in actuators for Motor Modules, C/D type

Power connectors can also be ordered separately, e.g. for applications where installation of the motor cable would be difficult if a power connector were attached.

Selection and ordering data

Description	Article No.
Power connector For 3 ... 30 A Motor Modules SINAMICS S120 booksize, C/D type with screw terminal	**6SL3162-2MA00-0AC0**
Power connector For 3 ... 30 A Motor Modules SINAMICS S120 booksize, C/D type Push-in connection with snap-in actuators	**6SL3162-2MB00-0AC0**

Overview



Power and signal connectors for SIMOTICS T-1FW6 built-in torque motors

Power and signal connectors 6FX2003 are designed to ensure optimum connection of SIMOTICS T-1FW6 built-in torque motors to the drive system.

Selection and ordering data

Description	Article No.
Power connector for SIMOTICS T-1FW6 built-in torque motors	
• Size 1 for 4 × 2.5 mm^2 Connector with pins and full external thread	**6FX2003-0LA00**
• Size 1.5 for 4 × 4 mm^2/4 × 6 mm^2/ 4 × 10 mm^2/4 × 16 mm^2 Connector with pins and full external thread	**6FX2003-0LA10**
Signal connector for SIMOTICS T-1FW6 built-in torque motors	
• M17 for 5 × 0.5 mm^2 + 1 × 1.0 mm^2 Connector with sockets and full-thread cap nut	**6FX2003-0SU07**

More information

A special tool is needed to crimp the contacts. For further information, go to:
www.intercontec.biz

© Siemens 2024

HF (high-frequency) clamp/Mounting flange for cabinet bushing

Overview



HF (high-frequency) clamp for power connectors

To ensure correct grounding at the cable duct or cabinet wall, a ground clamp is optionally available together with the flanges for large-area discharging of high-frequency interferences. An HF (high-frequency) clamp is not required for size 3 power connectors.

Selection and ordering data

Description	Article No.
HF (high-frequency) clamp for	
• Power connector, size 0.5 and signal connector M17	**6FX2003-7FA00**
• Power connector, size 1 and signal connector M23	**6FX2003-7FX00**
• Power connector, size 1.5	**6FX2003-7GX00**

More Information

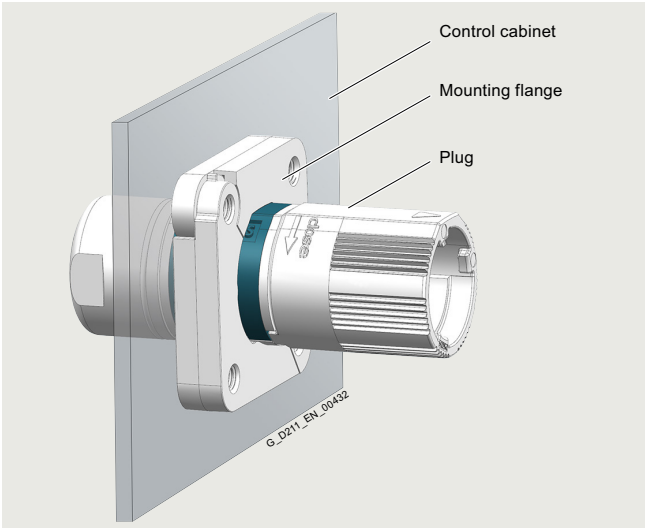

Arrangement of mounting flange and plug in a cabinet control panel

Overview



Mounting flange for power connectors

Mounting flanges are used to route or fix connectors in IP67 degree of protection, for example, in control cabinets. With the exception of angled connectors, a mounting flange can be retrofitted on connectors with a cap nut or with external thread.

Selection and ordering data

Description	Article No.
Mounting flange for	
• Power connector, size 0.5 and signal connector M17	**6FX2003-7HX00**
• Power connector, size 1	**6FX2003-7BX00**
• Power connector, size 1.5	**6FX2003-7CX00**
• Power connector, size 3	**6FX2003-7AX00**
• Signal connector M23	**6FX2003-7DX00**

Dimensional drawings

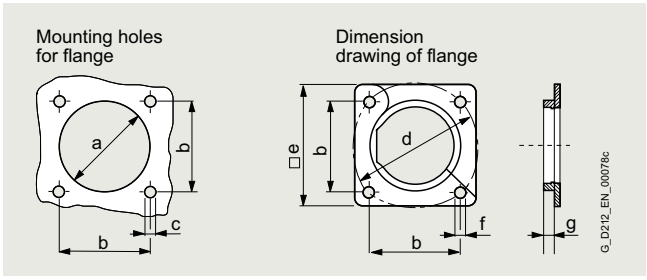

Dimensions	Power connector				Signal connector	
	Connector size 0.5	Connector size 1	Connector size 1.5	Connector size 3	M17	M23
	mm (in)	mm (in)	mm (in)	mm (in)	mm (in)	mm (in)
a	∅ 23 (0.91)	∅ 28.6 (1.13)	∅ 47 (1.85)	∅ 66 (2.6)	∅ 23 (0.91)	∅ 27.6 (1.09)
b	22.6 (0.89)	28.3 (1.11)	42.4 (1.67)	75 (246)	22.6 (0.89)	28.3 (1.11)
c	4 × M2.5	4 × M3	4 × M4	4 × M4	4 × M2.5	4 × M3
d	∅ 32 (1.26)	∅ 40 (1.57)	∅ 60 (2.36)	∅ 63 (2.48)	∅ 32 (1.26)	∅ 40 (1.57)
e	32 (1.26)	35 (1.38)	55 (2.17)	84.9 (3.34)	32 (1.26)	35 (1.38)
f	M3	M4	M5	M6	M3	M4
g	6.5 (0.26)	6.5 (0.26)	7 (0.28)	10 (0.39)	6.5 (0.26)	6.5 (0.26)

© Siemens 2024

Overview



DRIVE-CLiQ cabinet bushing for signal cables (RJ45)

The DRIVE-CLiQ cabinet bushing (RJ45) provides the high IP67 degree of protection for the appropriate MOTION-CONNECT DRIVE-CLiQ signal cables routed through openings in control cabinets. The DRIVE-CLiQ cabinet bushing offers IP54 degree of protection on the outside and IP20 on the inside of the control cabinet.

Selection and ordering data

Description	Article No.
DRIVE-CLiQ cabinet bushing For DRIVE-CLiQ signal cables MOTION-CONNECT (RJ45)	**6SL3066-2DA00-0AA0**

Dimensional drawings

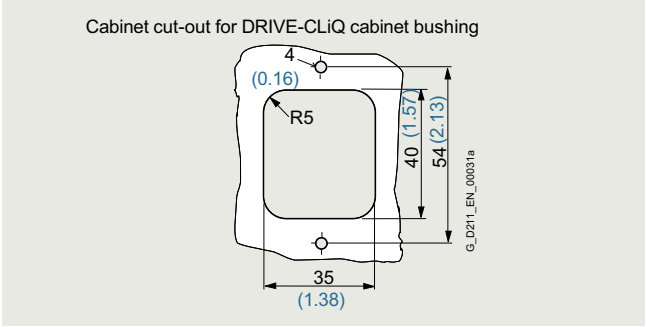

Dimensions in mm (in)

Overview

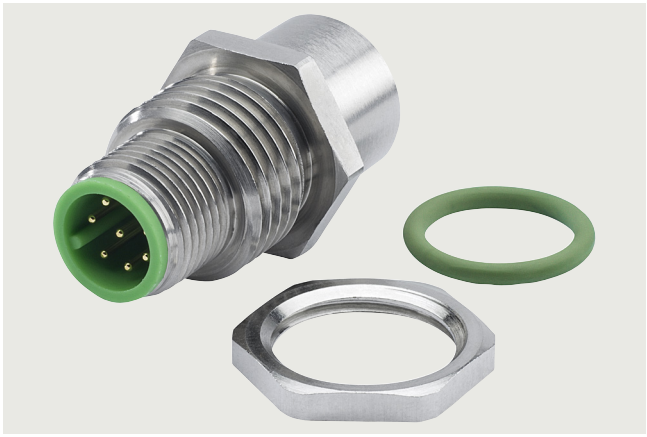

DRIVE-CLiQ cabinet bushing for signal cables (M12)

The DRIVE-CLiQ cabinet bushing (M12) provides the high IP67 degree of protection for the appropriate MOTION-CONNECT DRIVE-CLiQ signal cables routed through openings in control cabinets. The DRIVE-CLiQ cabinet bushing (M12) has IP67 degree of protection at both ends and is designed as a socket with internal thread on the outside of the cabinet and as pins with an external thread on the inside of the cabinet.

Note:

The IP67 degree of protection is only achieved with the DRIVE-CLiQ signal cables connected.

Selection and ordering data

Description	Article No.
DRIVE-CLiQ cabinet bushing For DRIVE-CLiQ signal cables MOTION-CONNECT (M12)	**6FX2003-0DT67**

Dimensional drawings

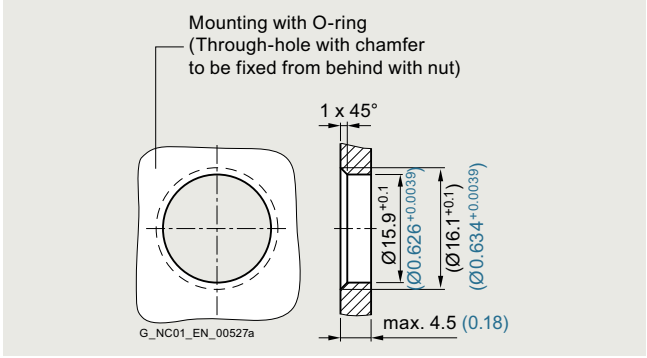

Dimensions in mm (in)

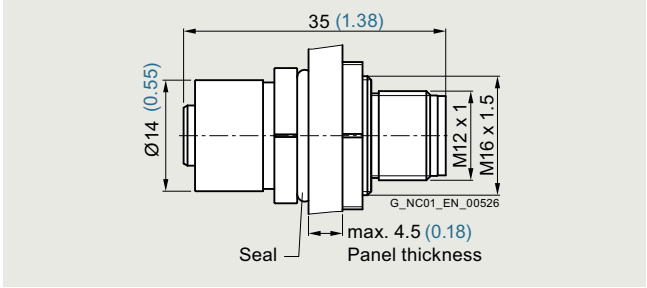

Cutout in cabinet for DRIVE-CLiQ cabinet bushing

10

© Siemens 2024

DRIVE-CLiQ coupler

Overview



DRIVE-CLiQ coupler for signal cables

The DRIVE-CLiQ coupler makes it possible to join two MOTION-CONNECT DRIVE-CLiQ signal cables with IP67 degree of protection.

Selection and ordering data

Description	Article No.
DRIVE-CLiQ coupler For MOTION-CONNECT DRIVE-CLiQ signal cables	**6SL3066-2DA00-0AB0**

© Siemens 2024

Digitalization in drive technology



11/2 Data analysis and apps

11/2 Analyze MyDrives Cloud

11/3 Drivetrain Analyzer Edge

11/4 Condition Monitoring System SIPLUS CMS1200

11/4 Overview
11/4 Benefits
11/4 Application
11/5 Design
11/6 SIPLUS CMS1200 SM 1281 Condition Monitoring System
11/6 Overview
11/6 Design
11/6 Function
11/6 Selection and ordering data
11/7 Technical specifications
11/7 More information
11/8 Accessories
11/8 Overview
11/8 Selection and ordering data
11/9 Technical specifications
11/10 More information

11/11 SIDRIVE IQ Fleet

11/12 Integration
11/13 More information

11/15 Connectivity

11/15 SIMOTICS CONNECT 400 connectivity module for LV motors

11/15 Overview
11/15 Benefits
11/16 Technical specifications
11/17 Design
11/18 Selection and ordering data
11/18 Dimensional drawings

11/19 Drive Connector SINAMICS

11/21 Virtualization

11/21 DriveSim Designer

More information about the Digitalization in drive technology topic is available at:
www.siemens.com/digital-drives

© Siemens 2024

Analyze MyDrives Cloud

Overview

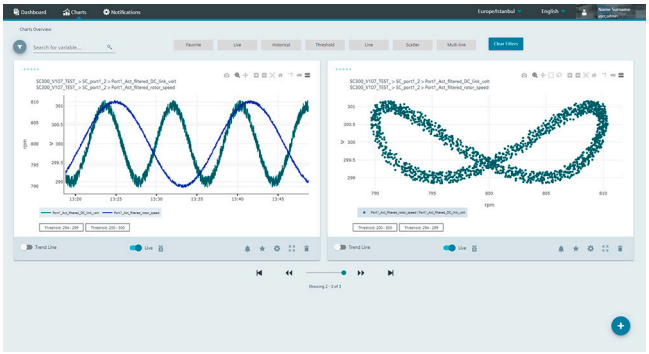

Analyze MyDrives Cloud overview

The Industrial IoT, Insights Hub application Analyze MyDrives allows you to centrally monitor drive systems in the manufacturing and process industry.

Data, such as electricity consumption, torque, frequency, and power flow, for example, are gathered and evaluated giving you a holistic overview of the electrical and mechanical domain of your drive train in one application.

Analyze MyDrives offers a range of filter options, trend analysis with time sequences and scatter plots, and an email-based notification service built around configurable limit values.

Key features include:

- Customizable and easy-to-use dashboard showing the actual status of the drive system
- View hour-by-hour, daily average and historical utilization at a glance
- Create multi-line charts or scatter plots to monitor and compare different parameters
- Adjustable, event-based notification system to give you more control over your notifications
- Import relevant vibration and status variables from SIPLUS Condition Monitoring Systems SM 1281

Benefits

- Easy overview of all relevant drive system and machine vibration data
- Simplify maintenance schedule and easily keep track of your drive system
- Understand machine performance over time, in comparison to other machines/ parameters
- Detect problems before they arise, enabling preventive maintenance and better maintenance scheduling
- Get a combined overview of the electrical and mechanical domain in one app

More information

This product can only be ordered via S-DEX, Industrial IoT store. Please find the link below for Analyze MyDrives Cloud on S-DEX, Industrial IoT store.

www.siemens.com/order-analyze-mydrives

© Siemens 2024

Overview

Drivetrain Analyzer Edge Product Details

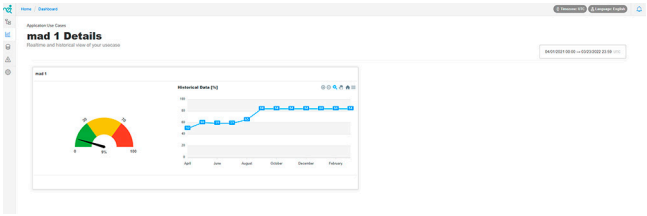

Drivetrain Analyzer Edge – Mechanical Anomaly Detector feature

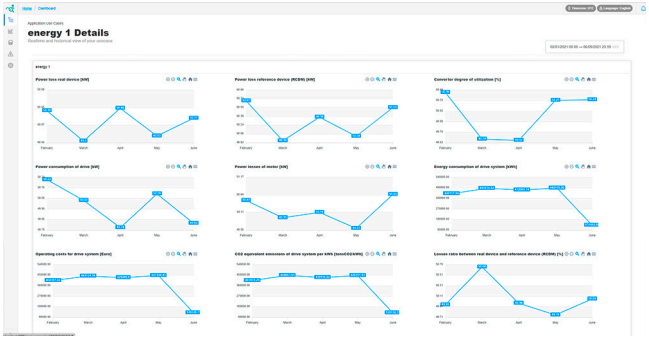

Drivetrain Analyzer Edge – Energy Efficiency feature

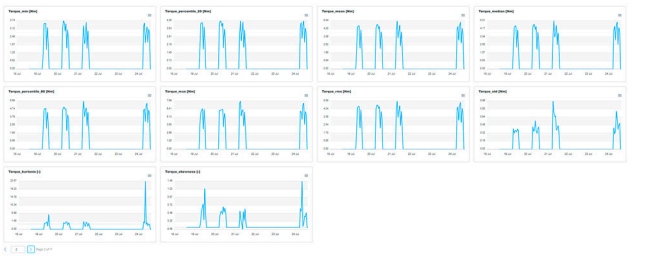

Drivetrain Analyzer Edge – Basic Anomaly Detection feature

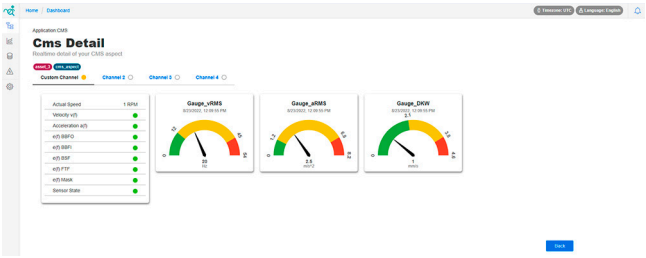

Drivetrain Analyzer Edge – CMS feature

Drivetrain Analyzer Edge provides data analytics models to increase the Overall Equipment Effectiveness and sustainability of all connected systems and applications by analyzing SINAMICS drives data.

Key features

- Detect deviations in the mechanical system with the Mechanical Anomaly Detector through drive data analysis.
- Get insights into the energy consumption including operation costs and CO2 footprint for the 2nd generation SINAMICS G drives through the Energy Efficiency feature.
- Monitor your drivetrain condition through the vibration data from SIPLUS CMS 1200 and the integrated CMS Dashboard.
- Monitor drivetrain anomalies specific to your application with the customizable AI model get operational insights into long-term degradation trends of your drivetrain through the Basic Operation Analysis as well as into dynamic and repetitive processes through the Dynamic Operation Analysis.

Benefits

- Increase the Overall Equipment Effectiveness of connected systems without the need for additional sensors or extended commissioning efforts.
- Optimize the service and maintenance strategies through analytics models for mechanical anomalies or connected SIPLUS CMS 1200 systems.
- Sustainability insights into the drive system, energy consumption, operating costs and CO2 footprint.
- Operational insights into dynamic and repetitive operating modes as well as long-term degradations.
- Flexible application design for the extension to address user specific use cases and failure patterns.
- Enable interactive workflows for the shopfloor through the extension of the Industrial Edge application with additional services (e.g. Industrial Edge Notifier).

More information

You can find Drivetrain Analyzer Edge manual at:
https://support.industry.siemens.com/cs/document/109827091

This product can also be ordered via S-DEX,
Industrial Edge Marketplace store. Please find the link below for Drivetrain Analyzer Edge on S-DEX,
Industrial Edge Marketplace store.
www.siemens.com/order-drivetrain-analyzer-edge

© Siemens 2024

SIPLUS CMS1200 Condition Monitoring System

Overview



The SIPLUS CMS1200 Condition Monitoring System is part of SIMATIC S7-1200 and is designed for the early detection of mechanical damage.

It provides the following benefits:

- vRMS machine monitoring in acc. with ISO 10816-3
- aRMS machine monitoring
- Detailed identification of damage with frequency-selective diagnostics
- Raw data recording and export for SIPLUS CMS X-Tools
- Trend recording and analysis
- Signaling of limit violations
- Permanent monitoring to protect the machines
- Effective monitoring of important processes and systems
- Early detection of damage
- Scheduled maintenance instead of spontaneous repair
- Reduction in maintenance costs
- Increase in system availability
- Optimum utilization of the service life of the units

Benefits

Easy integration of condition monitoring of mechanical components in SIMATIC S7-1200

Further advantages include:

- Monitoring of individual machines up to complex drive trains
- No additional software is required for parameterization and visualization
- Proactive maintenance through detailed and early localization of damage
- Fast full diagnostics at a glance
- Event-driven notification to the Service Center
- Expert analysis based on raw data

Application

In addition to the productivity of a plant, lifecycle costs are increasingly becoming the focus of attention. Increasing plant availability is an important topic in all sectors in which machines are used.

Continuous plant monitoring and thus the early detection of impending failures are an appropriate means of minimizing downtimes. Status-oriented maintenance permits an increase in availability with a simultaneous reduction of lifecycle costs.

As part of the SIMATIC S7-1200, the Condition Monitoring System is simple to integrate via the TIA Portal (Totally Integrated Automation) engineering framework.

Fundamental parameter assignment and characteristic value-based diagnostics of the SIPLUS CMS1200 take place via the TIA Portal, and frequency-selective diagnostics take place via a web browser.

© Siemens 2024

Design

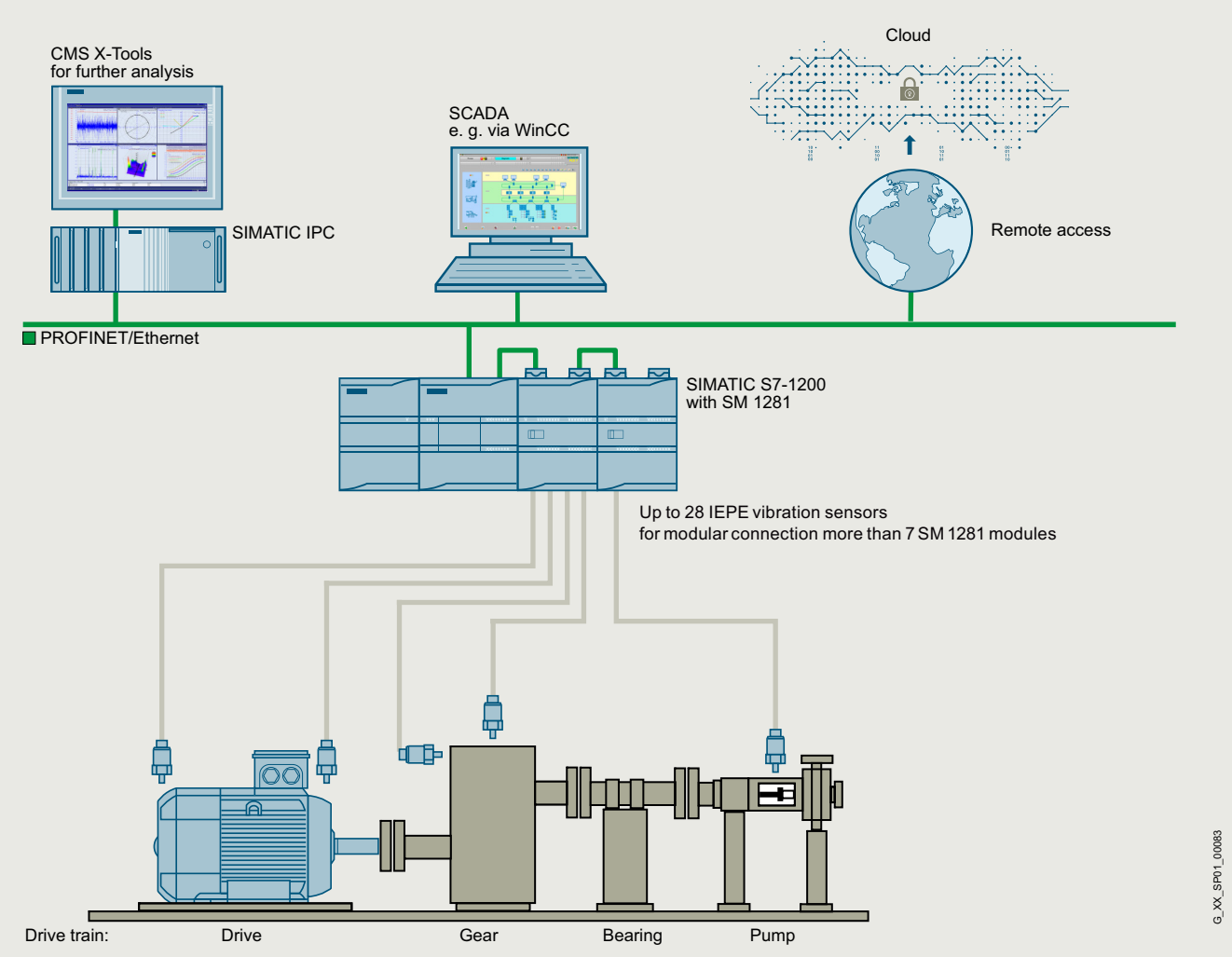

SIPLUS CMS1200 Condition Monitoring System

SIPLUS CMS1200 forms part of SIMATIC S7-1200 and is made up of a maximum of 7 SM 1281 Condition Monitoring modules.

Application range:	
Mechanical components	Motors, generators, fans, pumps, wind mills, etc.
Damage analysis	Unbalance, misalignment, roller bearings, etc.
Analytical procedures:	
Characteristic values	• Bearing monitoring: aRMS • Vibration monitoring: vRMS based on ISO 10816-3 • Diagnostic characteristic value: DKW
Vibration analysis	FFT, envelope curve, fingerprint comparison, trend analysis parameterizable
Monitoring function:	
Characteristic values	Adjustable limiting value for aRMS, vRMS and DKW: Warning, alarm
Frequency spectra	Adjustable warning and alarm bands
Recording function	
Saving	Raw data logging: Manually or event-triggered, FFT snapshot, characteristic values, long-term trend recording
Output	
Parameterization and visualization	TIA Portal and web browser

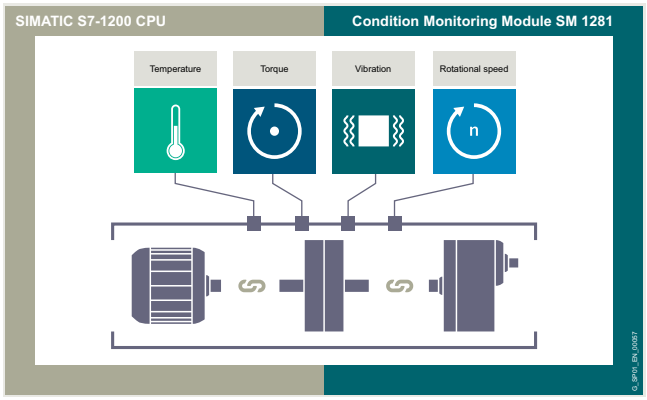

SM 1281, connections

© Siemens 2024

SIPLUS CMS1200 SM 1281 Condition Monitoring

Overview

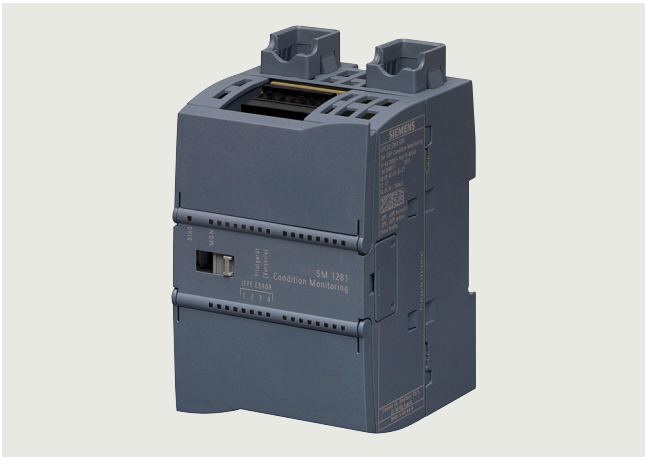

SIPLUS CMS1200 SM 1281 Condition Monitoring forms part of SIMATIC S7-1200 and is used for the:

- Monitoring of motors, generators, pumps, fans, wind mills or other mechanical components
- Recording and analysis of vibrations
- Expansion capability of up to 7 modules

Design

SIPLUS CMS1200 SM 1281 Condition Monitoring includes:

- Integrated diagnostics software
- 4 IEPE interfaces for vibration sensors
- 1 speed input

The following accessories can also be ordered, **see "Accessories"**:

- SIPLUS CMS1200 SM 1281 shield clamp set for EMC-compliant cable connection
- VIB-SENSOR vibration sensor for recording vibrations
- CABLE-MIL connecting cable, several cable length available

Function

SIPLUS CMS1200 SM 1281 Condition Monitoring comes with the following fixed functional scope as standard:

- Characteristic values (bearing, vibration monitoring)
- Frequency-selective analysis using FFT, H-FFT
- Trend analysis
- Limit value monitoring of frequency bands
- Recording with time stamp of trend values, raw data, frequency spectra, alarm log
- Simple localization of damage using fingerprint comparison
- Output of system and status messages
- Extraction of raw data for further diagnoses
- Web server
- OPC-UA server functionality

Selection and ordering data

Description	Article No.
SIPLUS CMS1200 SM 1281 Condition Monitoring Module for SIMATIC S7-1200 for monitoring vibrations in mechanical components based on characteristic values and frequency-selective analysis functions.	**6AT8007-1AA10-0AA0**
SIPLUS CMS1200 Ready to use Bundle Consisting of: • SM1281 Condition Monitoring • SM1281 Shield clamp set • S7-1214C CPU • S7-1200 Battery Board • Memory card with TIA project	**6AT8007-1AA30-0AA0**
Accessories	
SIPLUS CMS1200 SM 1281 Shield clamp set For EMC-compliant connection of signal and encoder cables to SIPLUS CMS1200 SM 1281 Condition Monitoring.	**6AT8007-1AA20-0AA0**
SIPLUS CMS VIB-SENSOR Piezoelectric sensor for connection to SIPLUS CMS1200 SM 1281 Condition Monitoring.	
SIPLUS CMS VIB-Sensor S01, frequency range 0,5 Hz to 15 kHz; measuring range 50G; sensitivity 100 mV/G (+/-10 %); MIL connector on top	**6AT8002-4AB00**
SIPLUS CMS VIB-Sensor S02, frequency range 1 Hz to 15 kHz; measuring range 500G; sensitivity 10 mV/G (+/-10 %); MIL connector on top	**6AT8008-2AA00-0AA0**
SIPLUS CMS VIB-Sensor S03, frequency range 0,2 Hz to 3 kHz; measuring range 10G; sensitivity 500 mV/G (+/-10 %); MIL connector on top	**6AT8008-2AA02-0AA0**
SIPLUS CMS CABLE-MIL For connection of VIB-SENSOR S01, S02 and S03 vibration sensor to SIPLUS CMS1200 SM 1281 Condition Monitoring.	
SIPLUS CMS CABLE-MIL-300; length 3 m	**6AT8002-4AC03**
SIPLUS CMS CABLE-MIL-1000; length 10 m	**6AT8002-4AC10**
SIPLUS CMS CABLE-MIL-3000; length 30 m	**6AT8008-2BA12-0AA0**

© Siemens 2024

Technical specifications

Article number	**6AT8007-1AA10-0AA0**
	SM1281_Condition_Monitoring
General information	
Product type designation	SM1281
Product description	S7-1200 module for the monitoring of vibrations on mechanical components based on parameters and frequency-selective analysis functions
Installation type/mounting	
Mounting type	Rail or wall mounting
Mounting position	Horizontal, vertical
Recommended mounting position	Horizontal
Supply voltage	
Type of supply voltage	DC
Rated value (DC)	24 V
permissible range, lower limit (DC)	20.4 V
permissible range, upper limit (DC)	28.8 V
Input current	
Current consumption, typ.	200 mA
Current consumption, max.	250 mA
from backplane bus 5 V DC, typ.	80 mA
from backplane bus 5 V DC, max.	85 mA
Power loss	
Power loss, typ.	4.8 W
Memory	
Total memory capacity	1 Gbyte
Hardware configuration	
Design of hardware configuration	Modular, up to 7 modules per CPU
Speed input	
Number of speed inputs	1
Input voltage	
• 24 V DC digital	Yes
Sensor input	
Number of IEPE sensor inputs	4
Sampling frequency, max.	46 875 Hz
Interfaces	
Type of data transmission	Export of raw data as WAV file for further analysis (e.g. using CMS X-Tools) can be downloaded via browser/FTP, online data transfer to CMS X-Tools
Ethernet interface	Yes
Protocols	
Bus communication	Yes
OPC-UA	Yes; OPC UA Server
Web server	
• HTTP	Yes
Interrupts/diagnostics/ status information	
Alarms	
• Diagnostic alarm	Yes
Diagnostics indication LED	
• for status of the inputs	Yes
• for maintenance	Yes
• Status indicator digital input (green)	No

Article number	**6AT8007-1AA10-0AA0**
	SM1281_Condition_Monitoring
Integrated Functions	
Monitoring functions	
• Monitoring of the sensor inputs	Yes; Cable break and short-circuit
• Vibration characteristic monitoring via RMS value of the vibration speed	Yes
• Vibration characteristic monitoring via RMS value of the vibration acceleration	Yes
• Vibration characteristic monitoring via diagnostic characteristic value	Yes
• Frequency-selective monitoring via vibration speed spectrum	Yes
• Frequency-selective monitoring via vibration acceleration spectrum	Yes
• Frequency-selective monitoring via envelope curve analysis	Yes
Measuring functions	
• Physical measuring principle	Vibration acceleration
Measuring range	
- Measurement range vibration frequency, min.	0.1 Hz
- Measurement range vibration frequency, max.	23 000 Hz
Standards, approvals, certificates	
Certificate of suitability	CE
CE mark	Yes
EAC (formerly Gost-R)	Yes
China RoHS compliance	Yes
Ambient conditions	
Free fall	
• Fall height, max.	0.3 m; five times, in product package
Software	
Browser software required	Web browser Mozilla Firefox (ESR31) or Microsoft Internet Explorer (10/11)
Connection method	
required front connector	Yes
Design of electrical connection	Screw connection
Mechanics/material	
Material of housing	Plastic: polycarbonate, abbreviation: PC- GF 10 FR
Dimensions	
Width	70 mm
Height	112 mm
Depth	75 mm
Weights	
Weight, approx.	260 g

More information

For further product details, **refer to the**

- **"SIPLUS SM 1281" Operating Instructions,** https://support.industry.siemens.com/cs/ww/en/view/109757963/110659638283
- www.siemens.com/siplus-cms

© Siemens 2024

Overview

SIPLUS CMS1200 SM 1281 shield clamp set

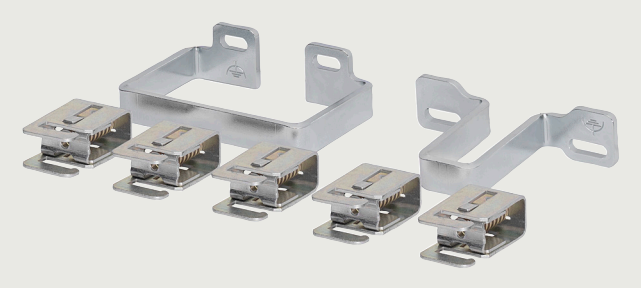

CMS1200 accessories

SIPLUS CMS1200 SM 1281 shield clamp set, 6AT8007-1AA20-0AA0

An additional shield clamp set must be ordered for the EMC-compliant connection of cables to the SIPLUS CMS1200 SM 1281 Condition Monitoring.

The shield clamp set comprises two shield clamps and five terminal clamps. One shield clamp is screwed on above and one below the module. The sensor cable shields are connected to the shield clamps by means of the terminal clamps.

VIB-SENSOR vibration sensors



VIB-SENSOR S01 vibration sensor

VIB-SENSOR S01 vibration sensor, 6AT8002-4AB00

VIB-SENSOR S02 vibration sensor, 6AT8008-2AA00-0AA0

VIB-SENSOR S03 vibration sensor, 6AT8008-2AA02-0AA0

The VIB-SENSOR vibration sensor with IEPE (integrated electronics piezo-electric) interface can be directly connected to the CMS1200 SM1281 Condition Monitoring module.

The sensor detects vibration accelerations.

A threaded screw with an M8 male thread for mounting to the measuring point is included in the scope of delivery. The connecting cable is connected to the vibration sensor via the MIL connector.

SIPLUS CABLE-MIL connecting cables



SIPLUS CABLE-MIL connecting cables

SIPLUS CABLE-MIL connecting cables 6AT8002-4AC03, 6AT8002-4AC10 and 6AT8008-2BA12-0AA0

The VIB-SENSOR vibration sensor is connected to the SIPLUS CMS1200 SM1281 Condition Monitoring module by means of the SIPLUS CMS CABLE-MIL connecting cable.

This high-quality industrial cable is made of black polyurethane and is pre-assembled on one end with a MIL connector (MIL-C5015). The open cable end of the shielded two-wire cable is connected directly to the screw terminals of the basic unit.

The connecting cable is available in lengths of 3 m, 10 m and 30 m.

Selection and ordering data

Description	Article No.
SIPLUS CMS1200 SM 1281 Shield clamp set	
For EMC-compliant connection of signal and encoder cables to SIPLUS CMS1200 SM 1281 Condition Monitoring.	**6AT8007-1AA20-0AA0**
VIB-SENSOR S01, S02 and S03 vibration sensors	
Piezoelectric sensor for connection to SIPLUS CMS1200 SM 1281 Condition Monitoring.	
SIPLUS CMS VIB sensor S01, frequency range 0.5 Hz to 15 kHz; measuring range 50G; sensitivity 100 mV/G (+/-10 %); MIL connector on top	**6AT8002-4AB00**
SIPLUS CMS VIB sensor S02, frequency range 1 Hz to 15 kHz; measuring range 500G; sensitivity 10 mV/G (+/-10 %); MIL connector on top	**6AT8008-2AA00-0AA0**
SIPLUS CMS VIB sensor S03, frequency range 0.2 Hz to 3 kHz; measuring range 10G; sensitivity 500 mV/G (+/-10 %); MIL connector on top	**6AT8008-2AA02-0AA0**
SIPLUS CABLE-MIL	
For connection of VIB-SENSOR S01 vibration sensor to SIPLUS CMS1200 SM 1281 Condition Monitoring.	
SIPLUS CABLE-MIL-300; length 3 m	**6AT8002-4AC03**
SIPLUS CABLE-MIL-1000; length 10 m	**6AT8002-4AC10**
SIPLUS CABLE-MIL-3000; length 30 m	**6AT8008-2BA12-0AA0**

© Siemens 2024

Technical specifications

Article number	**6AT8007-1AA20-0AA0**
	SM 1281 shield clamp set
General information	
Product type designation	Shield clamp set for SM1281
Product description	For the EMC-compliant connection of cables to the SIPLUS CMS1200 SM 1281 Condition Monitoring Module
Installation type/mounting	
Mounting type	Wall mount
Connection method	
Number of signal cables connectable to the shield support	5

Article number	**6AT8002-4AB00**	**6AT8008-2AA00-0AA0**	**6AT8008-2AA02-0AA0**
	SIPLUS CMS2000 VIB-SENSOR S01	SIPLUS CMS VIB-SENSOR S02	SIPLUS CMS VIB-SENSOR S03
General information			
Product type designation	VIB sensor S01	VIB-Sensor S02	VIB-Sensor S03
Product description	piezoelectric sensor for connection to the SIPLUS CMS2000 Basic Unit VIB or the SIPLUS CMS2000 VIB-MUX expansion module	piezoelectric sensor for connection to SIPLUS CMS1200 or SIPLUS CMS2000	
Installation type/mounting			
Installation and mounting instructions	incl. mounting bolts UNF1/4-28 on M6 and M8		
Input current			
Type of power supply	IEPE 2 to 10 mA		
Encoder			
Encoder signals, IEPE			
• Signal voltage (DC), min.	10 V		
• Signal voltage (DC), max.	14 V		
Integrated Functions			
Measuring functions			
• Physical measuring principle	Piezo-quartz recorder with integrated evaluation electronics		
• Operating range of sensor at +/- 3 dB, min.	0.5 Hz	1 Hz	0.2 Hz
• Operating range of sensor at +/- 3 dB, max.	15 000 Hz		3 000 Hz
• Resonance frequency	23 kHz		16 kHz
Measuring range			
- Measurement range vibration acceleration, max.	50 gn	500 gn	10 gn
- Sensitivity, typ.	100 mV/gn	10 mV/gn	500 mV/gn
Degree and class of protection			
IP degree of protection	IP65		
Ambient conditions			
Ambient temperature during operation			
• min.	-50 °C		
• max.	120 °C	121 °C	
Cables			
Cable length, max.	30 m		
Connection method			
Type of connection	MIL-C5015		
Mechanics/material			
Material of housing	Stainless steel		

© Siemens 2024

Technical specifications

Article number	**6AT8002-4AC03**	**6AT8002-4AC10**	**6AT8008-2BA12-0AA0**
	SIPLUS CMS2000 CABLE 3m	SIPLUS CMS2000 CABLE 10m	SIPLUS CMS CABLE 30m
General information			
Product type designation	Cable MIL-300	Cable MIL-1000	Cable-MIL-3000
Product description	For connection of the VIB-SENSOR S01 vibration sensor to the SIPLUS CMS2000 Basic Unit VIB or the SIPLUS CMS2000 VIB-MUX expansion module		for connection of VIB-Sensor vibration sensor to SIPLUS CMS1200 or SIPLUS CMS2000
Ambient conditions			
Ambient temperature during operation			
• min.	-25 °C		
• max.	122 °C		121 °C
Cables			
Type of insulation	black polyurethane		
Design of shield	Braided shielding with stranded drain wire		
Cable length	3 m	10 m	30 m
Connection method			
Type of connection	MIL-C5015 / open cable end		

More information

For further product details, **please refer to:**

- **SIPLUS CMS1200 SM 1281 Installation Instructions shield clamp set**
  https://support.industry.siemens.com/cs/ww/en/view/109481446
- www.siemens.com/siplus-cms

© Siemens 2024

Overview

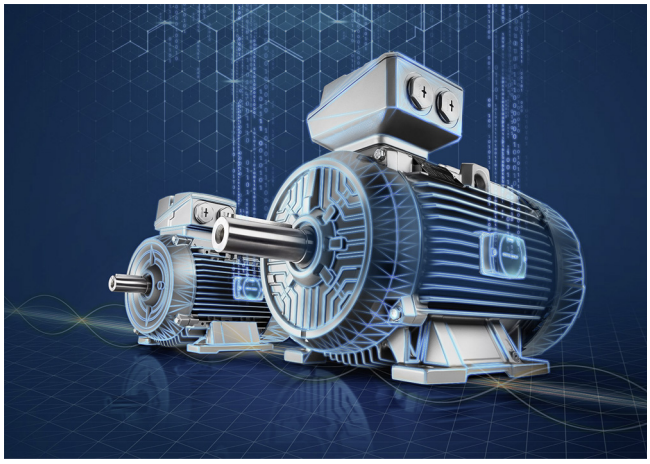

Drive systems keep production running and play a key role in countless production processes. Faults or the failure of individual drive components often result in costly production outages, which is why it's so important to monitor the condition of the machine park.

The prevention of failures through timely and planned action requires end-to-end operational transparency and measures such as targeted, proactive maintenance.

With the plug&play connectivity module SIMOTICS CONNECT 400 and the analytics app SIDRIVE IQ Fleet, you can implement a cost effective, cloud-based solution for continuous condition monitoring and comprehensive fleet management of your low-voltage motors – worldwide and 24/7.

Your low-voltage motors are equipped with SIMOTICS CONNECT 400, a connectivity module for measuring and preprocessing the motor-specific status data that's analyzed in SIDRIVE IQ Fleet.

Whether you're monitoring new motors or flexibly upgrading your installed base – in many use cases, the SIDRIVE IQ Fleet Insights Hub application improves the reliability, availability, efficiency, performance, and productivity of your low-voltage motors. You take advantage of preventive maintenance for your motors using reliable status data and information on maintenance intervals.

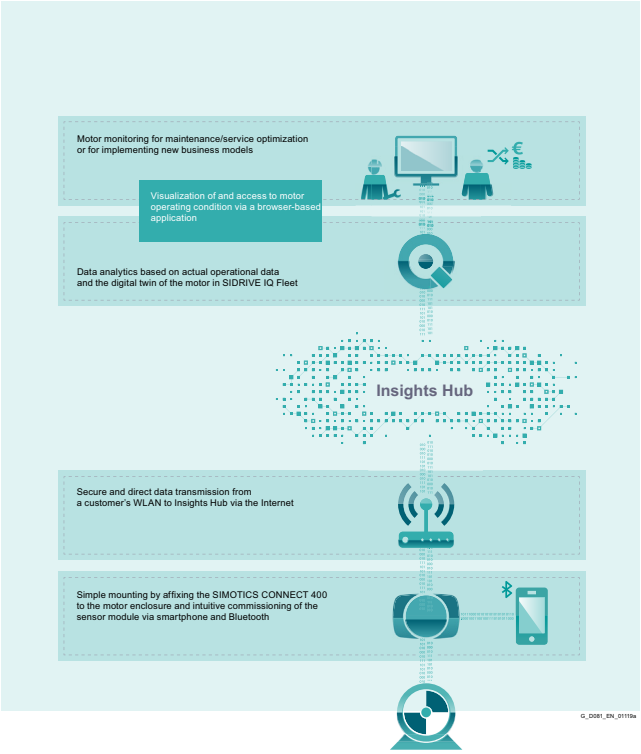

Besides monitoring the actual health of your motor fleet, the cloud-based SIDRIVE IQ Fleet application embedded in the Insights Hub ecosystem provides nearly endless opportunities for customer business models.

Enabling new digital business models is a key feature and differentiator in the architecture of SIDRIVE IQ Fleet.

Plug&play is key:

Installation, commissioning and configuration of SIMOTICS CONNECT 400 is as easy as it gets. Operators have the system up and running within minutes.

Data is transferred automatically and therefore guarantees a continuous condition monitoring of your motor fleet.

Benefits

- Simplicity and user-friendliness:
  - Simple mounting by gluing the sensor module SIMOTICS CONNECT 400 to the motor
  - Fast commissioning and configuration, thanks to the intuitively operated smartphone app SIDRIVE IQ Config
  - Use of standard network hardware (no manufacturer-specific gateways needed)
- Autonomous design: Power supply via battery pack and data transfer via WLAN require no connecting cables
- Optimized serviceability: Simple as well as ecologically and economically practical maintenance by replacing the battery pack
- Optimum operational transparency: SIMOTICS CONNECT 400 and SIDRIVE IQ Fleet help machine operators to better understand their machines and all relevant components. With knowledge of how the motors are currently running and what changes in operation have occurred, it's possible to make predictions about operational performance in the future.
- Anomaly detection and trend analyses based on historical data for optimizing your plant
- Adjustable limit values and automated alarms help you to detect impending failures well in advance and prevent them through maintenance activities
- Take advantage of our expert knowledge of drive technology by taking into account operational data (including historical), digital twins of the motors, intelligent algorithms, and analytics
- Access to cloud-based analytics in Insights Hub from any terminal device via a web browser, without software installation

Higher data quality and precision for Siemens motors, thanks to the use of equivalent electrical circuit diagrams, product-specific data from production, and other additional elements from the digital twin of the motor.

© Siemens 2024

Integration

Insights Hub – the Siemens IoT-as-a-service solution

Insights Hub is the leading industrial IoT as a service solution. Using advanced analytics and AI, Insights Hub powers IoT solutions from the edge to the cloud – with data from connected products, plants and systems – to optimize operations, create better quality products and deploy new business models. Insights Hub empowers customers and partners to quickly build and integrate personalized IoT applications or utilize the existing ones, such as SIDRIVE IQ Fleet.

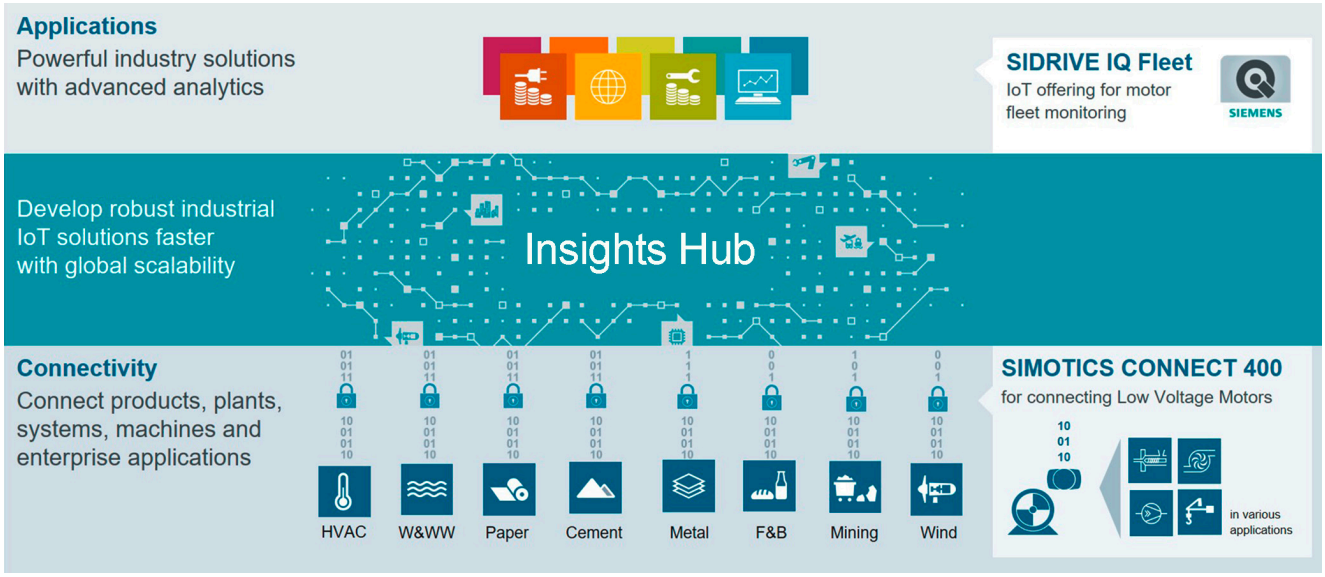

SIEMENS

SIDRIVE IQ Fleet – cloud-based solution for motor monitoring

The Insights Hub application SIDRIVE IQ Fleet allows you to access all relevant data of your installed motors.

The application includes a variety of functions which assist you in managing motors' maintenance and operations. SIDRIVE IQ Fleet provides you with aggregated statistics and localization of your fleet, as well as individual KPIs, logbook, motor profile and product documentation.

By using SIDRIVE IQ Fleet you can optimize your fleet maintenance tasks, reduce unscheduled downtime and increase your plant availability.

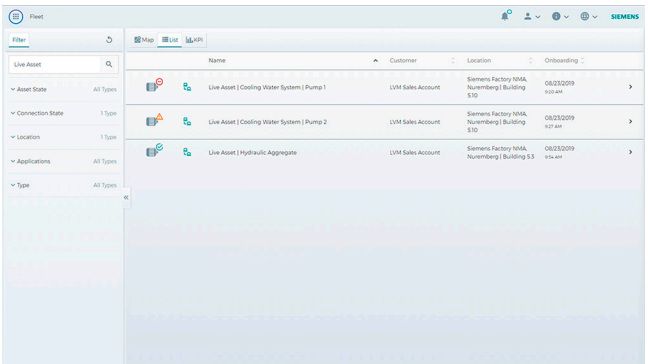

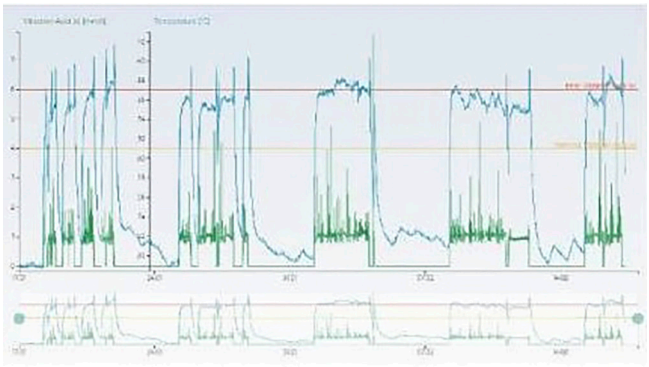

© Siemens 2024

More information

The SIDRIVE IQ Fleet offering consists of two main package types:

SIDRIVE IQ Fleet Package Basic includes the Insights Hub base tenant, the application SIDRIVE IQ Fleet and selected MindSphere resources which are required to access the Platform and to utilize the application.

SIDRIVE IQ Fleet Asset Packages enable you to connect additional motors to your tenant.

Benefit from the pre-defined SIDRIVE IQ Fleet Packages, tailored to your needs. Find the complete SIDRIVE IQ Fleet offering in the Insights Hub Store and choose between multiple packages to start your IoT experience by connecting your motors.

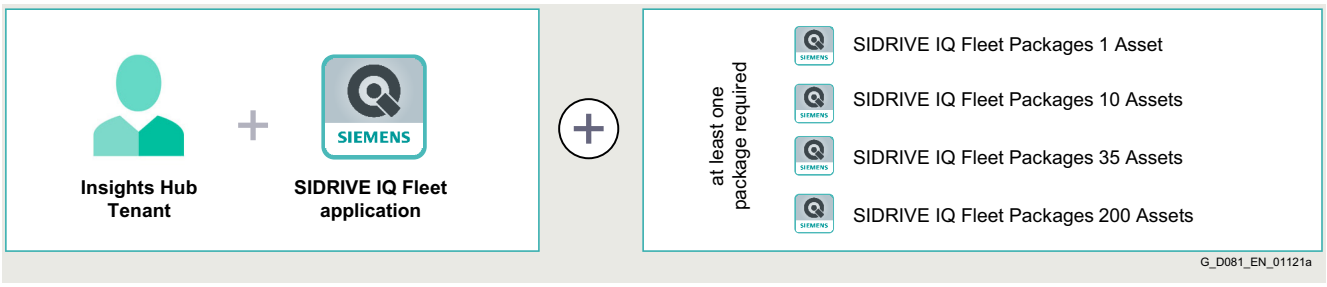

SIDRIVE IQ Fleet Package Baisc

Description:

- provides unique customer tenant with customizable URL and pre-installed SIDRIVE IQ Fleet application
- deployable also on existing customer IoT Value Plan

Provided value:

- free-of-charge access to Insights Hub and motor monitoring application SIDRIVE IQ Fleet
- easy-to-understand business model without any hidden costs

SIDRIVE IQ Fleet Asset Packages

Description:

- increases the connectable assets to the tenant by x assets, depending on the package you purchase
- provides the exact amount of Insights Hub recourses needed for connecting and monitoring x motors

Provided value:

- risk-free and convenient scalability thanks to a flexible asset-based payment model
- benefit of lower per-asset-prices ba selecting multiple-asset-packages

All the packages have a standard subscription duration of one year and get automatically renewed at the end of the 12 months. You can find additional information and the terms & conditions in the SIDRIVE IQ Fleet Package Product Sheet.

© Siemens 2024

More information

Purchasing process via Insights Hub Store

Process for your Insights Hub account creation and SIDRIVE IQ Fleet Packages purchase via Insights Hub Store

If you do not have yet a Insights Hub Account, access Insights Hub Store and follow the steps below to start your journey with SIDRIVE IQ Fleet.

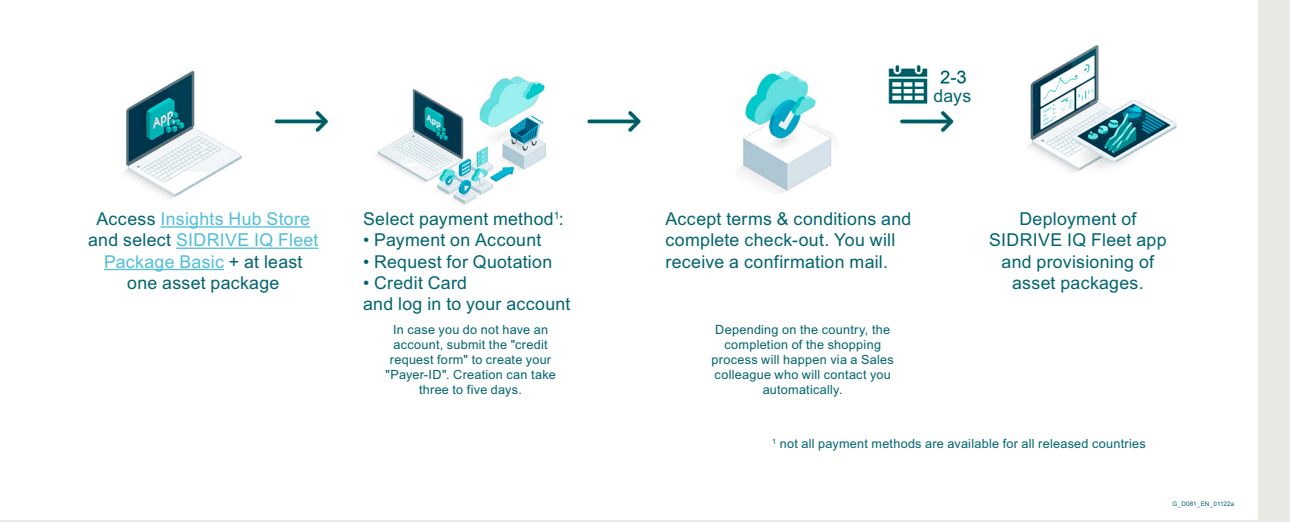

This product can only be ordered via S-DEX, Insights Hub store. Please find the link below for SIDRIVE IQ Fleet on S-DEX, Insights Hub store.
www.siemens.com/order-sidrive-iq-fleet

If you already have a Insights Hub payer account, you can purchase the packages starting directly with step 3.

You can find more information and a tutorial SIDRIVE IQ Fleet Packages purchasing process on our website www.siemens.com/digital-motor.

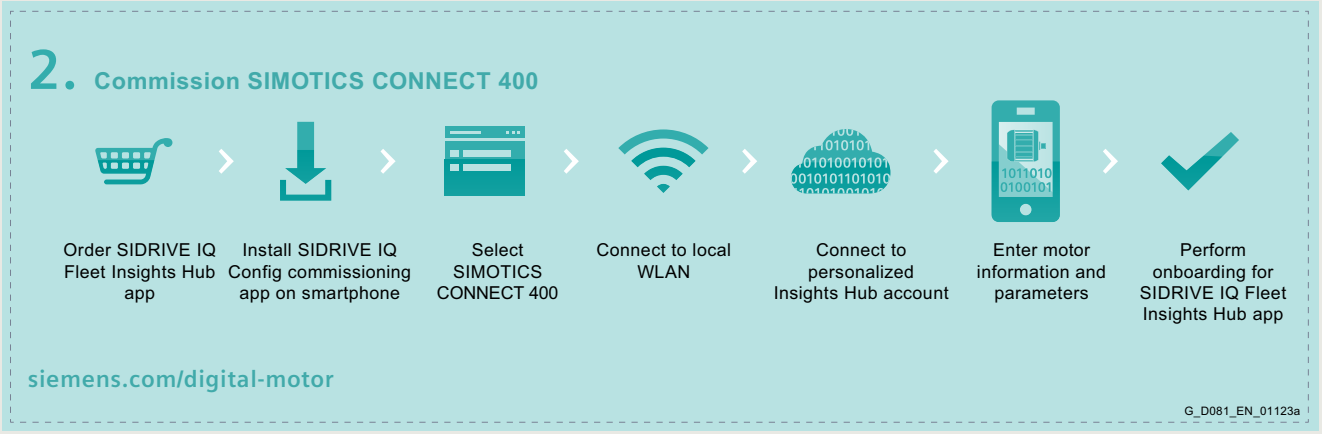

- **Get SIDRIVE IQ Fleet app via the Insights Hub Store**
  - Order SIDRIVE IQ Fleet Package Basic (tenant and application) plus at least one SIDRIVE IQ Fleet Asset Package,
  - e.g. SIDRIVE IQ Fleet Package 1 Asset
- **Download commissioning app onto your smartphone**
  Install SIDRIVE IQ Config on your mobile device to configure SIMOTICS CONNECT 400
- **Commission SIMOTICS CONNECT 400**
  Integrate the sensor module into the local WLAN network and onboard it to Insights Hub by using our intuitive mobile app SIDRIVE IQ Config

© Siemens 2024

Overview

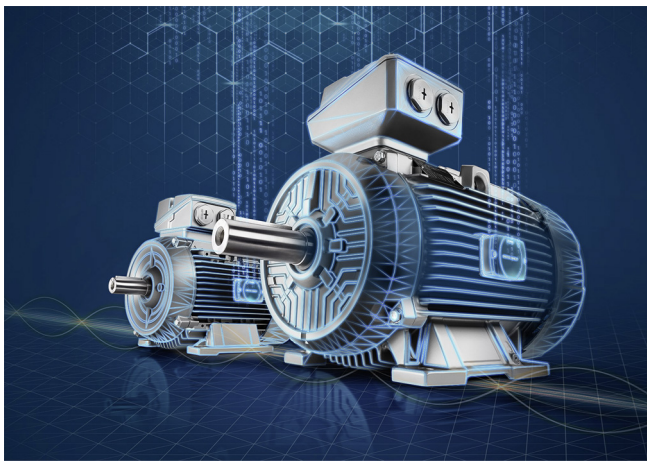

Drive systems keep production running and play a key role in countless production processes. Faults or the failure of individual drive components often result in costly production outages, which is why it's so important to monitor the condition of the machine park.

The prevention of failures through timely and planned action requires end-to-end operational transparency and measures such as targeted, proactive maintenance.

With the plug&play connectivity module SIMOTICS CONNECT 400 and the analytics app SIDRIVE IQ Fleet, you can implement a cost effective, cloud-based solution for continuous condition monitoring and comprehensive fleet management of your low-voltage motors – worldwide and 24/7.

Your low-voltage motors are equipped with SIMOTICS CONNECT 400, a connectivity module for measuring and preprocessing the motor-specific status data that's analyzed in SIDRIVE IQ Fleet.

Whether you're monitoring new motors or flexibly upgrading your installed base – in many use cases, the SIDRIVE IQ Fleet Insights Hub application improves the reliability, availability, efficiency, performance, and productivity of your low-voltage motors. You take advantage of preventive maintenance for your motors using reliable status data and information on maintenance intervals.

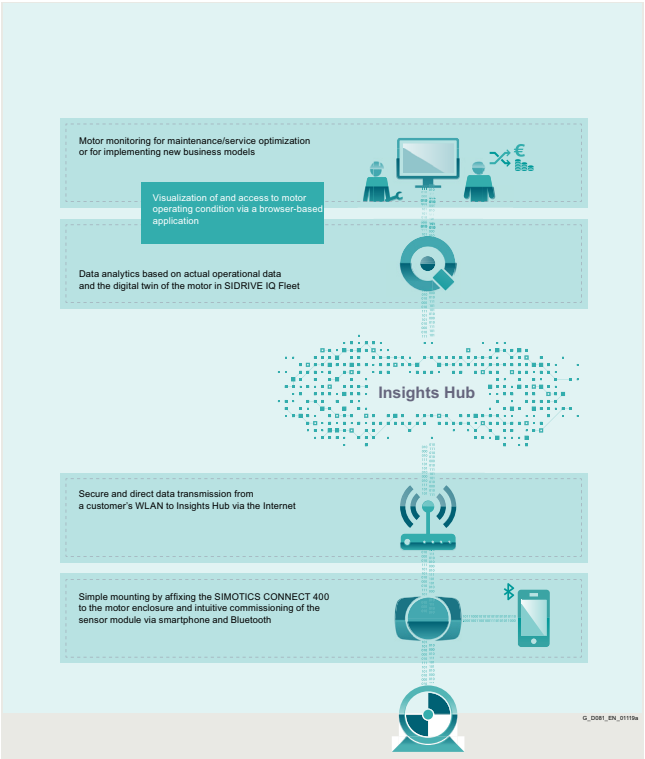

Besides monitoring the actual health of your motor fleet, the cloud-based SIDRIVE IQ Fleet application embedded in the Insights Hub ecosystem provides nearly endless opportunities for customer business models.

Enabling new digital business models is a key feature and differentiator in the architecture of SIDRIVE IQ Fleet.

Plug&play is key:

Installation, commissioning and configuration of SIMOTICS CONNECT 400 is as easy as it gets. Operators have the system up and running within minutes.

Data is transferred automatically and therefore guarantees a continuous condition monitoring of your motor fleet.

Benefits

- Simplicity and user-friendliness:
  - Simple mounting by gluing the sensor module SIMOTICS CONNECT 400 to the motor
  - Fast commissioning and configuration, thanks to the intuitively operated smartphone app SIDRIVE IQ Config
  - Use of standard network hardware (no manufacturer-specific gateways needed)
- Autonomous design: Power supply via battery pack and data transfer via WLAN require no connecting cables
- Optimized serviceability: Simple as well as ecologically and economically practical maintenance by replacing the battery pack
- Optimum operational transparency: SIMOTICS CONNECT 400 and SIDRIVE IQ Fleet help machine operators to better understand their machines and all relevant components. With knowledge of how the motors are currently running and what changes in operation have occurred, it's possible to make predictions about operational performance in the future.
- Anomaly detection and trend analyses based on historical data for optimizing your plant
- Adjustable limit values and automated alarms help you to detect impending failures well in advance and prevent them through maintenance activities
- Take advantage of our expert knowledge of drive technology by taking into account operational data (including historical), digital twins of the motors, intelligent algorithms, and analytics
- Access to cloud-based analytics in Insights Hub from any terminal device via a web browser, without software installation
- Higher data quality and precision for Siemens motors, thanks to the use of equivalent electrical circuit diagrams, product-specific data from production, and other additional elements from the digital twin of the motor

© Siemens 2024

SIMOTICS CONNECT 400 connectivity module for LV motors

Technical specifications

General information	
Product category	Sensor and communication module
Product description	SIMOTICS CONNECT 400 with integrated sensors monitors the condition of the motor to make its operation transparent, which facilitates application and process optimizations. SIMOTICS CONNECT 400 can be used in conjunction with the Insights Hub app SIDRIVE IQ Fleet only.
Monitoring application	Visualization of motor health status and data analytics based on digital motor twins are offered in the comprehensive SIDRIVE IQ Fleet Insights Hub app.
Measured motor parameters	Temperature, radial/tangential/axial vibration, electrical stator frequency, slip frequency.
Calculated motor parameters	Motor state (on/off), rotation speed, torque [1], electrical power [1], energy consumption [1], number of starts, hours of operation
Extended monitoring and maintenance support	External noise cancelling via peak detection for vibration monitoring, automatic threshold suggestions, maintenance requirements, such as relubrication interval
Supported motors	Fin-cooled, 3-phase asynchronous low-voltage motors in line operation (DOL) and converter operation (VSD), IEC frames sizes 80 to 450 and NEMA frame sizes 48 to 680.
Installation/mounting	
Mounting type and position	Externally mounted on the motor's cooling fins with a mounting bracket (glued). As described in the installation instructions.
Qualified adhesives	HENKEL LOCTITE HY 4090, Weicon Fast Metal Minute Adhesive, 3M Scotch-Weld DP 8407 NS
Power supply	
Type of supply	Battery pack (LI/$SOCl_2$, 3,6 V, 4 cells, AA size, non-rechargeable)
Battery lifetime	Operating time up to 2 years [2], replaceable for lifetime extension.
Internal data storage	
Internal flash	Data storage of min. 48 hours [3], when Insights Hub connection is interrupted.
Communication	
Bluetooth	Used for configuration and commissioning [4] • Compliance with Bluetooth v4.1 • Frequency: 2400 to 2482 GHz • Range: up to 10 m
WLAN	Used for data transmission [5] and firmware updates. • IEEE 802.11 b/g/n • Frequency: 2400 to 2485 GHz • Range: up to 100 m
Status information	
Indication LED (blue)	Status information during configuration process.
Integrated sensors	
Measurement interval	Configurable between 1 minute and 1 hour (default: 5 minutes).
Temperature measurement	
Range	-40 to +85 °C
Resolution	0,03° Temperature measured at the contact between connectivity module and mounting bracket.
Vibration measurement	
Physical measuring principle	Overall vibration V_{RMS} 3-axis
Range	0.02 to 180 mm/s 10 Hz to 1.6 kHz
Magnetic field measurement	
Range	0.01 to 300 Hz Rotary stray field
Standards, approvals, certificates	
	CE, FCC, IC, SRRC, RCM, ETA, SDPPI, ICASA, SUBTEL, ARCOTEL, MTC, FAC, CNC, CRC, NBTC, IMDA, OFCA, MOC, KVALITET, ICT, SIGET
Degree and class of protection	
Degree of protection acc. to EN 60529	IP54 (device variant ≤ FS03 up to 12-2021) IP65 (device variant FS03 from 12-2021)
Shock resistance	Max. 100 m/s^2 (tested acc. Class 3M4)

[1] For motors in converter operation (VSD) not available, extension via firmware update.

[2] At an ambient temperature of 0 to 40° C, a measurement interval of 5 minutes and a transmission of the stored data once every 24 hours.

[3] At measurement interval of 1 minute.

[4] Commissioning consists of integration into the local WLAN network and onboarding to Insights Hub.

[5] Insights Hub synchronization interval adjustable between 1 and 48 hours (default: 24 hours).

© Siemens 2024

Technical specifications

Ambient conditions	
Ambient temperature during operation	-40 to +80 °C
Ambient temperature during storage/ transportation	-20 to +40 °C
Relative humidity	5 to 95 % (without condensation)
Software	
Mobile app for commissioning and configuration	SIDRIVE IQ Config (iOS, Android)
SIMOTICS CONNECT Firmware Update	Prepared for remote firmware update via Insights Hub (v0.6.0.0 or newer)
Mechanics/material	
Housing material	Industrial Plastic Durethan (polyamide, halogen-free, glass-fiber reinforced)
Material of the	
• mounting bracket	stainless steel
• screws	steel, galvanized and passivated
Dimensions	
• Length x height x depth	IP54 version: 125 x 76 x 29 mm IP65 version: 125.4 x 77.5 x 29 mm
Weight	
Weight connectivity module, approx..	0.25 kg
Weight connectivity module including mounting material, approx.	0.5 kg
Documentation and information	
More technical product information and documentation is available at:	www.siemens.com/digital-motor

Design

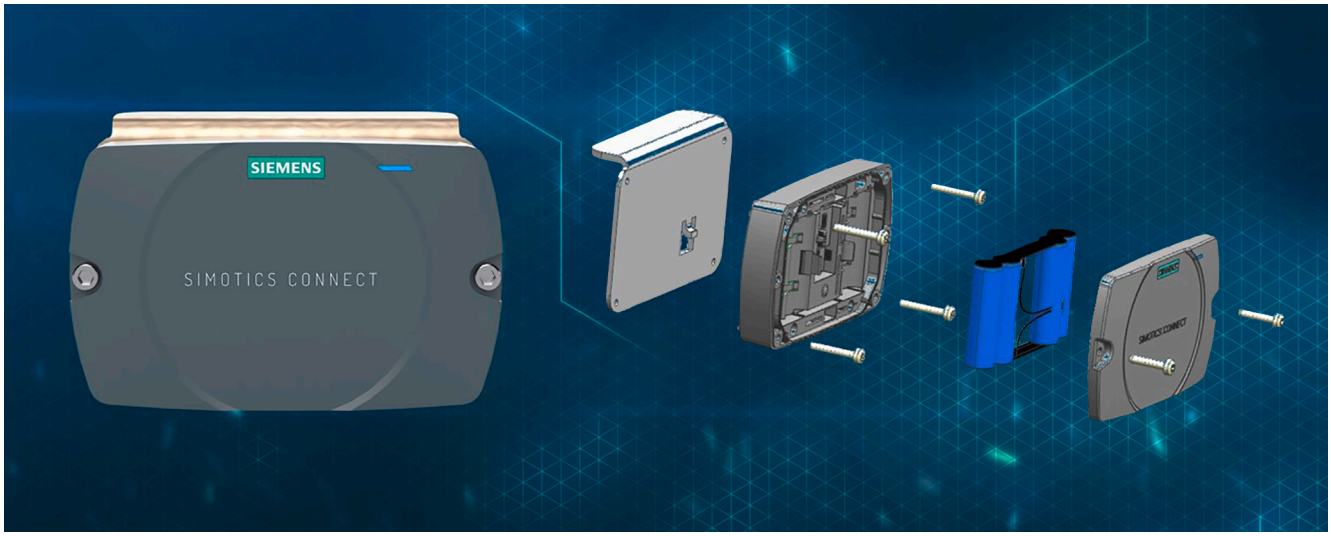

The delivery is made as a single product packaging:

- SIMOTICS CONNECT 400 connectivity module including batteries (battery plug disconnected during transport)
- Metal mounting bracket for installation on the motor housing
- Retaining screws
- Assembly instructions
- Safety and security information sheet
- CD with license texts

Note:

The adhesive is NOT included in the scope of delivery. We recommend using one of the below listed adhesives, which have been tested and qualified by Siemens:
Henkel LOCTITE HY 4090, Weicon Fast Metal Minute Adhesive, 3M Scotch-Weld DP 8407 NS

© Siemens 2024

SIMOTICS CONNECT 400 connectivity module for LV motors

Selection and ordering data

Description	Article No.
SIMOTICS CONNECT 400 Connectivity Kit (1 unit) for connecting low voltage motors to the Insights Hub application SIDRIVE IQ Fleet	**9LD2200-0BA00-0AA0**
SIMOTICS CONNECT 400 Connectivity Kit (10 units) for connecting low voltage motors to the Insights Hub application SIDRIVE IQ Fleet	**9LD2200-0BA00-0AB0**
SIMOTICS CONNECT 400 Connectivity Kit (35 units) for connecting low voltage motors to the Insights Hub application SIDRIVE IQ Fleet	**9LD2200-0BA00-0AC0**
SIMOTICS CONNECT 400 Connectivity Kit (200 units) for connecting low voltage motors to the Insights Hub application SIDRIVE IQ Fleet	**9LD2200-0BA00-0AD0**

One unit corresponds to one SIMOTICS CONNECT 400 Connectivity Kit as described above. Each kit is individually packed. Multi-unit packages are additionally bundled in a bigger outer packaging.

Dimensional drawings

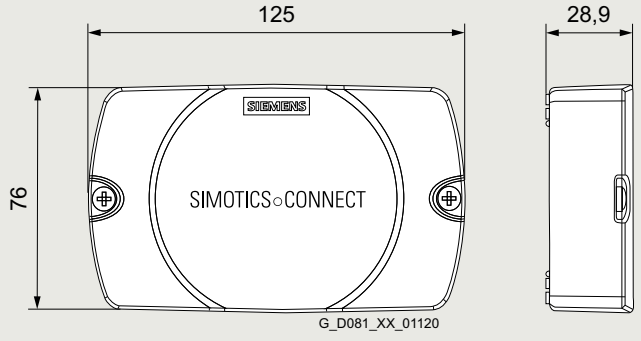

11

© Siemens 2024

Overview

Drive Connector SINAMICS product details

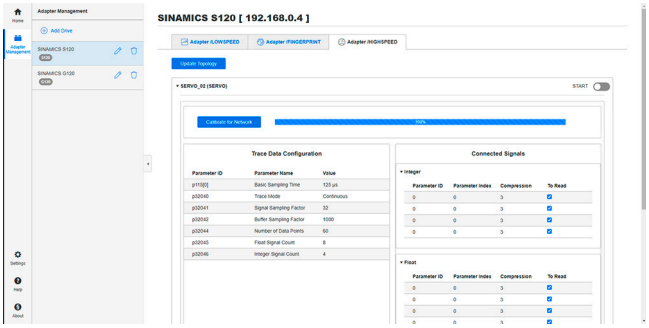

Drive Connector SINAMICS – High-Speed-Adapter

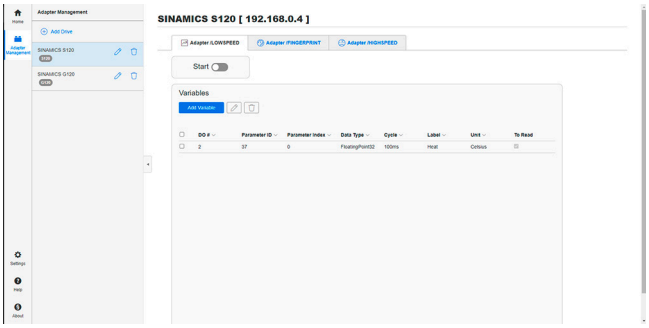

Drive Connector SINAMICS – Low-Speed-Adapter

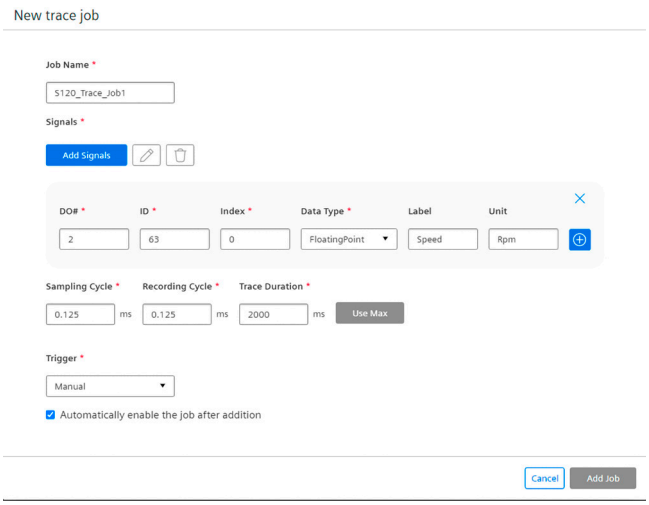

Drive Connector SINAMICS – Fingerprint-Adapter

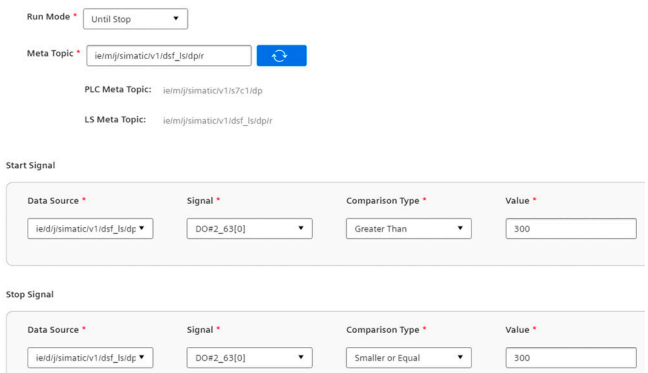

Drive Connector SINAMICS – Fingerprint-Adapter - Fingerprint triggering via IE-Databus

Drive Connector SINAMICS is an Industrial Edge application which supports easy connectivity with 2nd generation SINAMICS drives.

Drive Connector SINAMICS provides three adapters:

- High-Speed-Adapter (HS Adapter)
  - Supports CU320-2 Control Unit based drives SINAMICS S120, S150, G130, G150.
  - Supports continuous data streaming up to 8 kHz. Maximum speed depends on network and drive configuration.
  - Requires the extension TRCDATA running on CU320-2 Control Unit.
- Fingerprint-Adapter (Fingerprint)
  - Supports all 2nd generation SINAMICS S and SINAMICS G drives which support drive internal trace functionality.
  - Supports Trace configuration (e.g. number of parameters, sampling cycle, Trace duration).
  - Generates time defined snapshot of the drive data.
  - Fingerprint triggering via IE-Databus enables the user to trigger fingerprint traces via the signals that are published on IE-Databus by other IE applications (e.g. external devices such as PLCs).
  - Fingerprint-Adapter enables the user to receive traces that are configured via commissioning tools STARTER or SINAMICS Startdrive by Fingerprint-Adapter.
- Low-Speed-Adapter (LS Adapter)
  - Supports 2nd generation SINAMICS S and SINAMICS G drives.
  - Supports continuous data streaming up to 10 Hz.

Drive Connector SINAMICS has a dedicated Drive Status Information page for each connected 2nd generation SINAMICS drive.

- Provides basic nameplate information (article number, serial number and firmware) for connected drive objects of each connected 2nd generation SINAMICS drive.
- Provides drive status and temperature information for existing drive objects of each connected 2nd generation SINAMICS drive.

Other features:

- Export and import single drive configuration or single adapter configuration for Low-Speed and Fingerprint-Adapter into a new drive or a new adapter.
- Low-Speed-Adapter Simulator enables the user to simulate drive data (without a real drive) in the same format as LS adapter to be used in other IE applications such as Drivetrain Analyzer Edge.
- The web interface of Drive Connector SINAMICS supports configuration and starting the data acquisition process in a straightforward manner.
- By configuring Drive Connector SINAMICS, the target drive, drive object and signals can be selected easily.

Key features

Drive Connector SINAMICS provides continuous connection between 2nd generation of SINAMICS Drives and Edge Databus with following adapters:

- High-Speed-Adapter supports continuous data acquisition up to 8 kHz via Technology extension TRCDATA.
- Fingerprint-Adapter generates time defined snapshot of the drive data and supports data acquisition up to 2 kHz.
- Low-Speed-Adapter supports continuous data acquisition up to 10 Hz.

© Siemens 2024

Drive Connector SINAMICS

Benefits

- Provides transparency about the status of the drive system at any time in high quality.
- Enables basic and advanced analytics and maintenance scheduling like Mechanical Anomaly Detector and Basic Anomaly Detection.
- Enables basic statistics like Energy Efficiency.
- Opens doors for new innovative analysis approaches.
- Highly expandable with other Industrial Edge applications.
- Easy update on app functionality through central Industrial Edge Management system.
- Collects drive data for defined machine operational state by fingerprint triggering via IE-Databus functionality or trace configuration via commissioning tools STARTER or SINAMICS Startdrive.

More information

You can find the manual and additional information of Drive Connector SINAMICS at:
https://sieportal.siemens.com/su/bjTFD

This product can also be ordered via S-DEX, Industrial Edge Marketplace store. Please find the link below for Drive Connector SINAMICS on S-DEX, Industrial Edge Marketplace store.
www.siemens.com/order-drive-connector-sinamics

© Siemens 2024

Overview

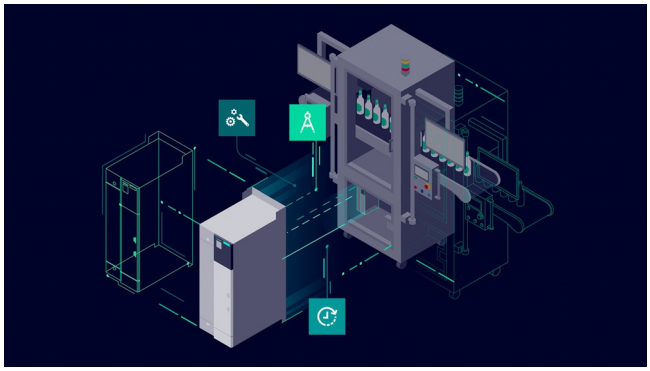

DriveSim Designer provides easy-to-use models for PROFIdrive-enabled SINAMICS converters, so you can create a digital twin of your drive.

The models are validated and tested against real SINAMICS converters and are available in the form of a standardized FMU (Functional Mockup Unit). Therefore, they are compatible with various standard time-based simulation programs such as SIMIT, Simcenter Amesim, ANSYS Twin Builder, MATLAB Simulink or Hopsan.

DriveSim Designer is another element in your engineering toolbox. Together with other virtual Siemens solutions, e.g. SIMATIC S7-PLCSIM Advanced or NX Mechatronics Concept Designer, a consistent model-based development process can be implemented.

Benefits

- Speed up time-to-market for OEMs
- Test validated SINAMICS models under real conditions already at the design or planning stage and make needed adjustments
- Identify issues and improvement capabilities early in the design stage and reduce testing effort to save time and cost
- Download the free-of-charge basic version with reduced functionality set, DriveSim Basic, to try the suitability of our solution before buying it
- The full version DriveSim Designer offers a wide range of additional functionalities to improve the SINAMICS simulation model, e. g. safety or position telegrams
- Valid for the most used Siemens drives

Advantages of DriveSim Designer compared to SIMIT PROFIdrive blocks:

- Increased level of detail due to speed controller, current setpoint filters and internal load model
- Identical parameter values and meaning as in the real SINAMICS device
- Direct reference to SINAMICS documentation
- Basic Safety functions
- Brake control functions for lifting applications
- Validated against the real SINAMICS drive
- No wiring effort to represent functional configurations
- Significant reduction of SIMIT simulation tags (even more is possible if unused in-/ outputs are deselected within the Component Type Editor (CTE)
- Enables simulation of an (internal) two-mass oscillator as application with realistic SINAMICS parameter settings, besides the known limitations by the minimum sample time in SIMIT
- Compatible with every FMU Co-Simulation 2.0 compatible simulation too

Application

With DriveSim Designer, you can implement three major use cases:

- Providing load characteristics for drive selection and dimensioning
- Virtual commission your PLC already in the design phase
- Test and improve interaction between PLC, drives and application virtually

Use case 1: Dimension and size the correct drive and motor for your application

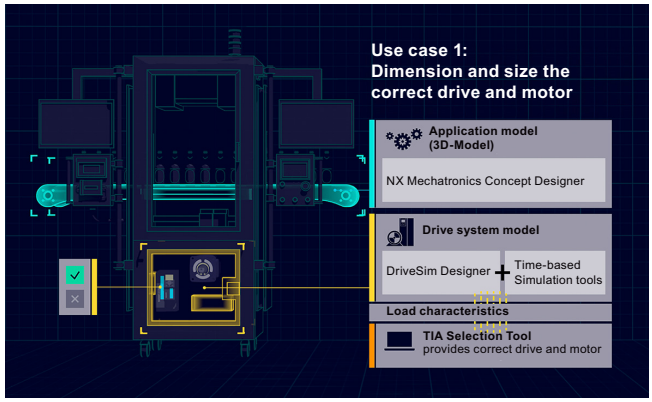

If you are designing a machine, you want to make sure that you select the SINAMICS converter and SIMOTICS motor most suitable for your drive application. As DriveSim Designer is control-unit-agnostic and thus represents a generic drive, you can parametrize it according to the functionality of your application. Running the simulation results in load characteristics, i.e. torque or speed curves over time. You can import these load profiles into TIA Selection Tool to select the suitable Control Unit and dimension the drive to best fit to the demand. So as a result you have well selected SINAMICS converters and SIMOTICS motors with the help of the digital twin.

Use case 2: Virtual commission your drive and PLC early in the design phase

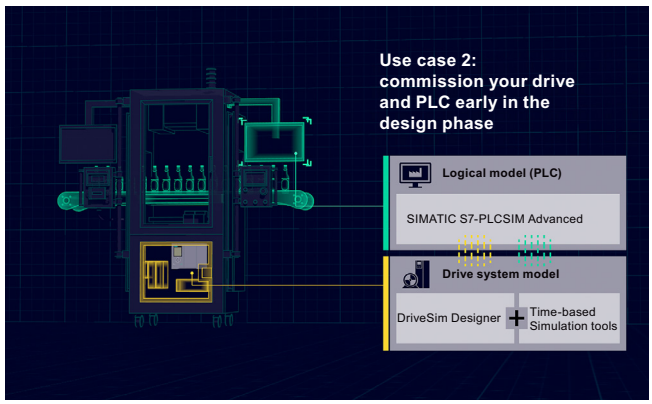

If you are designing a machine, you want to make sure the PLC code works with your SINAMICS drive. After writing the PLC code in TIA Portal, you can connect it via PLCSIM Advanced to any time-based simulation tool (e.g. SIMIT). Integrated into the simulation tool, DriveSim Designer acts as a realistic communication partner for the PLC. Next, you can commission the virtual PLC in TIA Portal as you would do with a real PLC connected to a real drive. Without simulation, you would need to do that on-site. With simulation, you not only save time, but also have the freedom to try out various configurations and optimize your PLC code early in the process.

© Siemens 2024

DriveSim Designer

Application

Use case 3: Combine the application model and automation model with realistic drive system behavior

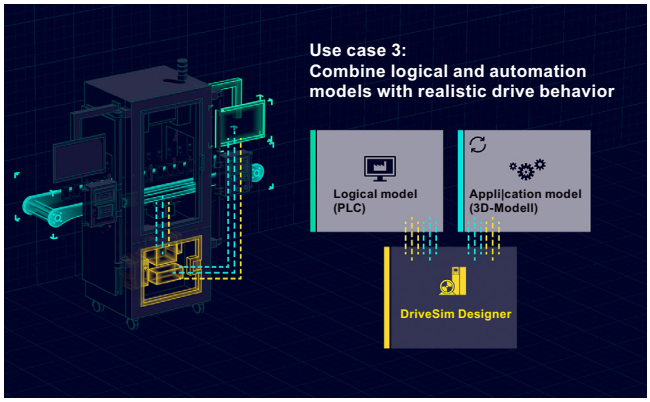

With the third Use case, you can connect a simulation tool such as NX Mechatronic Concept Designer to visualize the mechanical movements of your application. This way, you ensure that the drive behaves according to the desired machine performance. You can test several fault scenarios and optimize the interaction between PLC, application and drive virtually so overall, you can avoid unplanned machine behavior and increase the performance of your setup.

Integration

DriveSim Designer can be run in tools that support FMU 2.0 Co-Simulation Import (https://fmi-standard.org/tools/).

The FMU has been tested in the following simulation environments and is available in the attached application examples.

Tool	Manufacturer	DriveSim*** variant	PLC Sim Advanced interface	Notes
SIMIT	Siemens	***.fmu	Yes	• Permissible configuration: ExternalLoad = 1 & . Speed-Controller = 0 or ExternalLoad = 0 & . Speed-Controller = 1 • Simulation with external load can provide wrong results because the minimum possible time step is 1 ms
Simcenter Amesim	Siemens	***_double.fmu	Yes	
MATLAB Simulink	MathWorks	< 2019a ***_unstruct.fmu ≥ 2019a ***.fmu	Yes	
ANSYS Twin Builder	ANSYS	***.fmu	No	
Hopsan	Linköping University	***_double.fmu	No	• Open Source • Install "win64-with_compiler-installer.exe" package

Selection and ordering data

Description	Article No.
DriveSim Designer	**9SV1110-3AA00-0AA0**

More information

More information is provided on the internet at:
www.siemens.com/drive-virtualization
https://support.industry.siemens.com/cs/document/109812859

You can find more videos on the topic at:

- Simulation of drive systems - Quick, Easy and Validated
- Simulation of drive systems - An introduction to SINAMICS
- Getting started with DriveSim Designer
- How to import DriveSim Designer into SIMIT, Matlab Simulink, Amesim and ANSYS TwinBuilder
- How to connect DriveSim Designer via PLCSim Advance to TIA Portal
- How to use DriveSim Designer for drive sizing with TIA Selection Tool
- How to visualize drive system behavior in NX Mechatronics Concept Designer

© Siemens 2024



Cybersecurity information

Siemens provides products and solutions with industrial cybersecurity functions that support the secure operation of plants, systems, machines and networks.

In order to protect plants, systems, machines and networks against cyber threats, it is necessary to implement – and continuously maintain – a holistic, state-of-the-art industrial cybersecurity concept. Siemens' products and solutions constitute one element of such a concept.

Customers are responsible for preventing unauthorized access to their plants, systems, machines and networks. Such systems, machines and components should only be connected to an enterprise network or the internet if and to the extent such a connection is necessary and only when appropriate security measures (e.g. firewalls and/or network segmentation) are in place.

For additional information on industrial cybersecurity measures that may be implemented, please visit
www.siemens.com/cybersecurity-industry

Siemens' products and solutions undergo continuous development to make them more secure. Siemens strongly recommends that product updates are applied as soon as they are available and that the latest product versions are used. Use of product versions that are no longer supported, and failure to apply the latest updates may increase customer's exposure to cyber threats.

To stay informed about product updates, subscribe to the Siemens Industrial Cybersecurity RSS Feed under
www.siemens.com/cert

12/2 Engineering tools
12/2 Siemens Product Configurator
12/3 TIA Selection Tool
12/4 SIZER for Siemens Drives engineering tool (integrated in the TIA Selection Tool)
12/5 STARTER Commissioning tool
12/7 SINAMICS DCC (STARTER)
12/8 SINAMICS Startdrive commissioning tool
12/10 SINAMICS DCC (Drive Control Chart) in the TIA Portal
12/12 SINAMICS web server for SINAMICS S120
12/13 Drive ES engineering software

12/15 Configuration notes
12/15 Planning
12/16 EMC notes for the application of the product standard EN 61800-3
12/20 SINAMICS S120 Control Units
12/31 Motors
12/32 Power units
12/41 System components
12/45 Mechanical configuration of the drive system
12/48 Heat dissipation

© Siemens 2024

Overview

The Siemens Product Configurator helps you to configure the optimum drive technology products for a number of applications. The product portfolio comprises the full drive technology range of gearbox, motor, converter and connection system as well as corresponding controller with suitable software license. The intuitive user interface in conjunction with product-specific preliminary selectors makes it simple, fast and efficient to configure products. The result is a bill of materials with extensive documentation consisting of technical data sheets, motor characteristic curves, 2D dimensional drawings / 3D CAD models, EPLAN macros and much more. You can order the products directly by transferring the bill of materials to the shopping cart of SiePortal.



Siemens Product Configurator at a glance

- Quick and easy configuration of drive products and associated components – gearboxes, motors, converters, controllers, connection systems
- Extensive documentation for all products and components, such as
  - Data sheets in up to 12 languages
  - Motor characteristic curves
  - 2D dimensional drawings / 3D CAD models in different formats
  - Terminal box drawing and terminal connection diagram
  - Certificates
  - EPLAN macros
- Ability to order products directly through SiePortal

Access to the Siemens Product Configurator

The Siemens Product Configurator can be accessed without the need for registration or logging in:
www.siemens.com/spc

© Siemens 2024

Overview

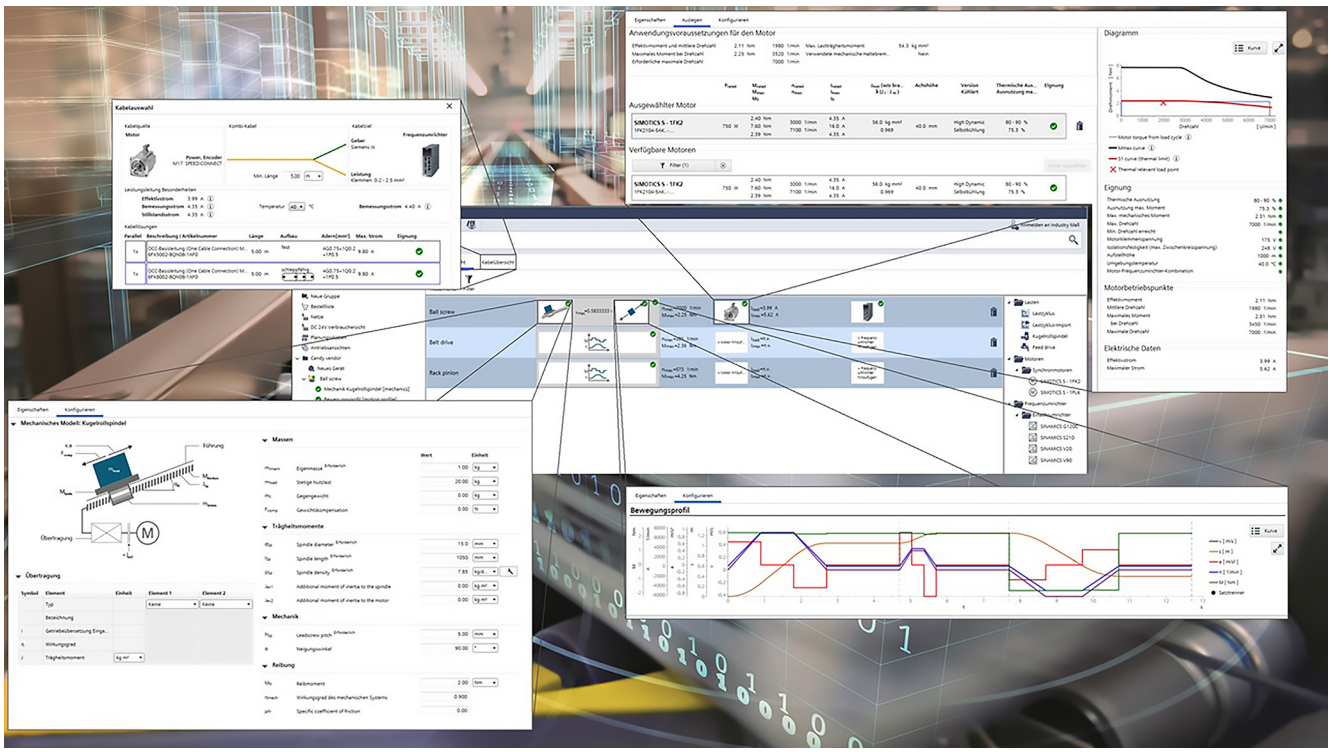

Selection guide and configurator for automation technology

Error-free configuration without expert knowledge through intelligent configurators and selection wizards. Desktop and cloud versions enable cross-team collaboration with maximum flexibility.

There are two versions of the TIA Selection Tool:

- for downloading and executing on Windows PCs (from Microsoft Windows 10)
- One for running from the cloud, which is launched from mobile devices directly in the browser (we recommend Safari, Chrome and Firefox)

Projects stored in the cloud can be edited with both tools. This makes it possible to work on-the-go using a tablet, at home on a PC – and vice versa, or together with colleagues and customers.

In order to use the full functionality, we recommended setting up a SiePortal account for both cases. This gives you access to prices and enables you to save your projects to our cloud.

You can find additional information about the TIA Selection Tool at:
www.siemens.com/tia-selection-tool

Drive dimensioning in the TIA Selection Tool

Application-specific requirements can be determined using drive technology dimensioning in the TIA Selection Tool. This can include motors, gearboxes and converters. The tool supports the configuration and dimensioning of control functions with an open and closed control loop. The technical documentation with features of the technical drive system, as well as a product list for ordering via SiePortal can also be compiled.

You can find more information on the SIZER for Siemens Drives engineering tool at
https://support.industry.siemens.com/cs/ww/en/ps/13434/dl

© Siemens 2024

SIZER for Siemens Drives engineering tool (integrated in the TIA Selection Tool)

Overview

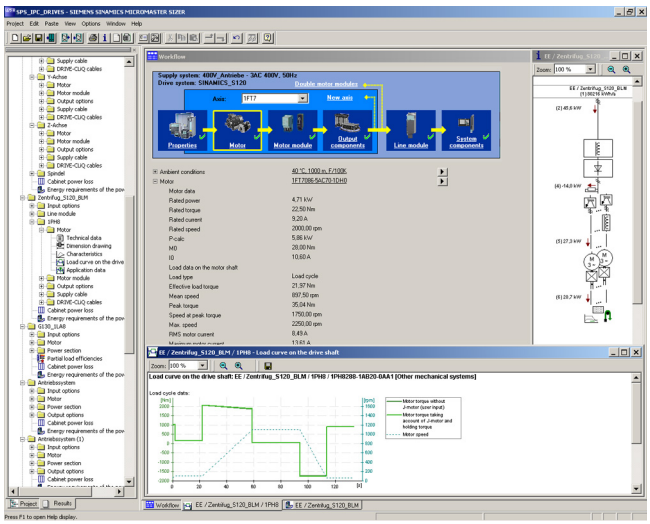

The following drives and controls can be engineered in a user-friendly way using the SIZER for Siemens Drives engineering tool:

- SIMOTICS motors, including servo geared motors
- SINAMICS low-voltage drive systems
- Motor starters
- SINUMERIK CNC
- SIMOTION Motion Control controller
- SIMATIC controller

It provides support when selecting the technologies involved in the hardware and firmware components required for a drive task. SIZER for Siemens Drives covers the full range of operations required to configure a complete drive system, from basic single drives to demanding multi-axis applications.

SIZER for Siemens Drives supports all of the engineering steps in one workflow:

- Configuring the power supply
- Designing the motor and gearbox, including calculation of mechanical transmission elements
- Configuring the drive components
- Compiling the required accessories
- Selecting the line-side and motor-side power options, e.g. cables, filters, and reactors

When SIZER for Siemens Drives was being designed, particular importance was placed on a high degree of usability and a universal, function-based approach to the drive application. The extensive user guidance makes it easy to use the tool. Status information keeps you continually informed about the progress of the configuration process.

The drive configuration is saved in a project. In the project, the components and functions used are displayed in a hierarchical tree structure.

The project view permits the configuration of drive systems and the copying/inserting/modifying of drives already configured.

The configuration process produces the following results:

- A parts list of the required components (export to Excel, use of the Excel data sheet for import to SAP)
- Technical specifications of the system
- Characteristic curves
- Comments on line harmonic distortions
- Mounting arrangement of drive and control components and dimensional drawings of motors
- Energy requirements of the configured application

These results are displayed in a results tree and can be reused for documentation purposes.

Support is provided by the technological online help menu:

- Detailed technical specifications
- Information about the drive systems and their components
- Decision-making criteria for the selection of components
- Online help in English, French, German, Italian, Chinese and Japanese

System requirements

- PG or PC, with Pentium III min. 800 MHz (recommended > 1 GHz)
- 512 MB RAM (1 GB RAM recommended)
- At least 2 GB of free hard disk space
- An additional 100 MB of free hard disk space on Microsoft Windows system drive
- Screen resolution 1024 × 768 pixels
- Operating system:
  - Microsoft Windows 7 (32/64-bit) Professional, Enterprise, Ultimate, Home
  - Microsoft Windows 8.1 (32/64-bit) Professional, Enterprise, Ultimate, Home
  - Microsoft Windows 365
  - Microsoft Windows 10 (64-bit) Professional, Enterprise
- Microsoft Office 2003/2007/2010/2013/2016/365
- Microsoft Internet Explorer V8.0
- Microsoft .NET Framework 2.0
- OpenGL 2.1

More information

Drive dimensioning in the TIA Selection Tool

Application-specific requirements can be determined using drive technology dimensioning in the TIA Selection Tool. This can include motors, gearboxes and converters. The tool supports the configuration and dimensioning of control functions with an open and closed control loop. The technical documentation with features of the technical drive system, as well as a product list for ordering via SiePortal can also be compiled.

You can find more information on the SIZER for Siemens Drives engineering tool at
https://support.industry.siemens.com/cs/ww/en/ps/13434/dl

You can find more information about the TIA Selection Tool at:
www.siemens.com/tia-selection-tool

© Siemens 2024

Overview

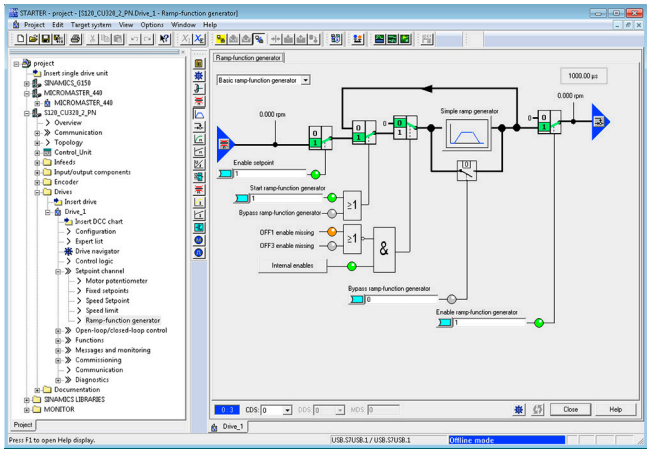

The user-friendly STARTER commissioning tool can be used for:

- Commissioning
- Optimization
- Diagnostics

This software can be operated as a standalone PC application, or integrated as a TIA-compatible program in SIMATIC STEP 7, or highly integrated into the SCOUT Engineering System (for SIMOTION). The basic functions and handling are the same in both cases.

In addition to the SINAMICS drives, STARTER also supports MICROMASTER 4 devices.

The project wizards can be used to create the drives within the structure of the project tree.

Beginners are supported by solution-based dialog guidance, whereby a standard graphics-based display maximizes clarity when setting the drive parameters.

First commissioning is guided by a wizard which makes all the basic settings in the drive. Therefore, getting a motor up and running is merely a question of setting a few of the drive parameters as part of the drive configuration process.

The individual settings required are made using graphics-based parameterization screens, which also precisely visualize the principle of operation of the drive.

Examples of individual settings that can be made include:

- Use of terminals
- Bus interface
- Setpoint channel (e.g. fixed setpoints)
- Closed-loop speed control (e.g. ramp-function generator, limits)
- BICO interconnections
- Diagnostics

For experts, the expert list can be used to specifically and quickly access individual parameters at any time. An individual compilation of frequently used parameters can be saved in dedicated user lists and watch tables.

In addition, the following functions are available for optimization purposes:

- Self-optimization of the controller settings (depending on drive unit)
- Setup and evaluation of trace recordings [1)]
  Tool function for recording 2 × 8 signals with
  - Measuring cursor function
  - Extensive trigger functions
  - Several Y scales
  - Sampling times in the current controller cycle clock

Diagnostics functions provide information about:

- Control/status words
- Parameter status
- Operating conditions
- Communication states

Performance features

- User-friendly: Only a small number of settings need to be made for successful first commissioning: The motor starts to rotate
- Solution-oriented dialog-based user guidance simplifies commissioning
- Self-optimization functions reduce manual effort for optimization.

System requirements

The following minimum requirements must be complied with:

- Hardware
  - PG or PC with Pentium III min. 1 GHz (recommended >1 GHz)
  - Work memory 2 GB (4 GB recommended)
  - Screen resolution 1024 × 768 pixels, 16-bit color depth
  - Free hard disk memory: min. 5 GB
- Software
  - Microsoft Internet Explorer V6.0 or higher
  - 64-bit operating systems:
    Microsoft Windows Server 2019
    Microsoft Windows Server 2022
    Microsoft Windows 10 Pro
    Microsoft Windows 10 Enterprise
    Microsoft Windows 11 Home, Pro and Enterprise (64 bit)

Supported virtualization platforms

STARTER (V5.1 SP1 and higher) can be installed on a virtual machine. For this purpose, one of the following virtualization platforms in the specified version or a newer version can be used:

- VMware vSphere Hypervisor ESX(i) V8.0
- VMware Workstation Pro 17
- VMware Player 17
- Microsoft Hyper-V Server 2022

You can use the following guest operating systems to install STARTER within the selected virtualization platform:

- Microsoft Windows 10 Pro/Enterprise (64 bit)
- Microsoft Windows 11 Pro/Enterprise (64 bit)

Notes:

- The same hardware requirements apply to the guest operating system as for STARTER and SINAMICS DCC.
- The system operator must ensure that the guest operating systems have sufficient system resources.
- The use of manufacturer-certified hardware is recommended for the operation of VMware vSphere Hypervisor ESX(i).

[1)] Depending on drive unit. Not supported for MICROMASTER 4, SINAMICS G110, SINAMICS G120 <firmware V4.4, SINAMICS G110D and SINAMICS G120D <firmware V4.5.

© Siemens 2024

STARTER commissioning tool

Integration

Data can be exchanged (depending on the version) via PROFIBUS or PROFINET/Ethernet or via a serial interface.

For commissioning and service, a PG/PC can be connected to the CU320-2 Control Unit via PROFIBUS. A PROFIBUS connection must be available with a connecting cable at the PG/PC.

Further, communication between a CU320-2 Control Unit and PG/PC can also be established via Ethernet, either via an (optional) CBE20 Communication Board or the Ethernet interface -X127 on the CU320-2 Control Unit.

Note:
The terminal strip -X127 is suitable as a communication link to the PG/PC only for the purposes of servicing and commissioning.

Selection and ordering data

Description	Article No.
STARTER commissioning tool	
Single license and certificate of license	
German, English, French, Italian, Spanish	
• On DVD-ROM	**6SL3072-0AA00-0AG0**
• Software download	**6SL3072-0AA00-0AK0**
(email address required for delivery)	

Note:
In addition to the STARTER commissioning tool, SINAMICS Drive Control Chart (SINAMICS DCC) can be installed. This allows the device functionality in the SINAMICS drive system to be expanded with dedicated technology functions as required.

Further information about SINAMICS DCC can be found in the section SINAMICS DCC (Drive Control Chart) with STARTER.

Accessories

Depending on the version of the Control Unit (CU), the Control Unit of the drive unit can communicate with the programming device (PG) or PC via PROFIBUS or PROFINET/Ethernet or via a serial interface. The following accessories are available for the particular drive system as listed in the following table.

Description		**Recommended accessories** For communication between the drive unit and the programming device or PC Article No.
SINAMICS S120		
• RS232	**Standard null modem cable**	**-**
• PROFIBUS	**CP 5711 communication module** USB adapter for connecting a PG or notebook to PROFIBUS or MPI USB cable (2 m (6.56 ft)) included in scope of supply	**6GK1571-1AA00**
	SIMATIC DP plug-in cable 12 MBaud, for PG connection, pre-assembled with 2 × 9-pin SUB D connector, 3 m (9.84 ft)	**6ES7901-4BD00-0XA0**
• PROFINET/ Ethernet	Standard CAT5 Ethernet cable or PROFINET cable	–

More information

The STARTER commissioning tool is also available on the internet under
www.siemens.com/starter

© Siemens 2024

Overview

SINAMICS DCC (Drive Control Chart) is a technological expansion for the SINAMICS S120/S150/G130/G150/ MV/DCM/DCP drive systems. This allows the device functions of the SINAMICS drive system to be expanded individually with freely available closed-loop control, arithmetic and logic blocks. SINAMICS DCC for STARTER enables simple, graphic configuration of these blocks and integrates them in the drive unit.

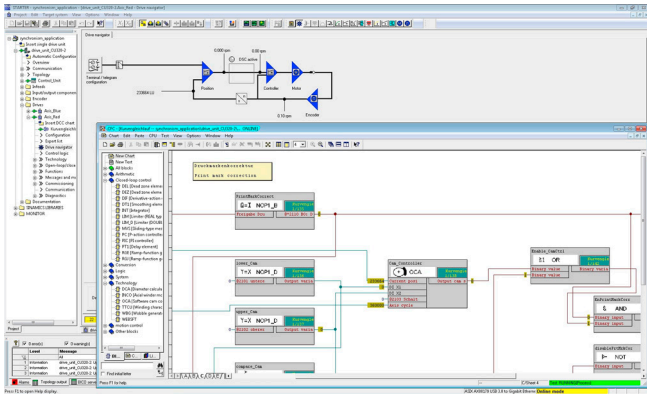

A comprehensive standard library is available for the configuration, which can be expanded by additional libraries, the so-called DCB Extension.

Via the Siemens application support, a range of example applications (winder, synchronous operation, cross-cutter, etc.) are available for download on the basis of SINAMICS DCC with STARTER and can be used as a ready-to-use solution or be individually adapted or expanded.

Minimum hardware and software requirements

See STARTER commissioning tool.

Minimum software requirements for existing SIMATIC CFC Editor

The installation of STARTER V5.6 HF1 and SINAMICS DCC V3.6 HF1 results in the following minimum requirements:

- When using STEP 7 OEM V5.7 in the standalone installation: SIMATIC CFC Editor V9.0 SP5 Upd4
- When using STEP 7 V5.7 SP1 full version (with monitoring of application integrity): SIMATIC CFC Editor V9.0 SP5 Upd4
- When using STEP 7 V5.7 SP1 full version (without monitoring of the application integrity): SIMATIC CFC Editor V9.0 SP3 Upd4

Please check the minimum requirements in relation to the product SIMATIC CFC when installing STEP 7 or SIMATIC PCS 7.

Selection and ordering data

SINAMICS DCC consists of a graphic configuration tool (DCC Editor based on SIMATIC CFC) and the standard library. SINAMICS DCC is installed as an add-on to the STARTER commissioning tool.

The SINAMICS DCC V3.6 HF1 with SIMATIC CFC Editor V9.0 SP8 Upd1 software package is a component of STARTER V5.6 HF1.
The necessary license key (floating license) for the configuration of SINAMICS DCC V3.6 HF1 must be ordered separately.

The included DCB standard library of SINAMICS DCC V3.6 HF1 does not require a runtime license. Existing licenses for SINAMICS DCC V2.1 and higher can also be used for SINAMICS DCC V3.6 HF1.

An upgrade variant for the application in STARTER V5.6 HF1 and SINAMICS DCC V3.6 HF1 is available for an existing license key of SINAMICS DCC V2.0 SPx.

Description	Article No.
SINAMICS DCC V3.4 SP2 License Key for SINAMICS DCC V3.4, V3.5 and V3.6	
• License key on USB flash drive	**6AU1810-1HA34-0XB0**
• Upgrade license key on USB flash drive	**6AU1810-1HA34-0XF0**
SINAMICS DCB Extension license Runtime license for license upgrading with firmware version V4.6 or later (can also be ordered in conjunction with the CompactFlash card, see CompactFlash card for CU310-2 and CU320-2 Control Units)	
• Electronic license	**6SL3077-0AA00-0AH0**
SINAMICS DCB Studio V2.3 SP1 Development tool for programming blocks that can be imported as an additional library (DCB Extension) for SINAMICS DCC in STARTER or in the TIA Portal	On request

Further information about SINAMICS DCB Extension and SINAMICS DCB Studio can be found in the section SINAMICS DCC (Drive Control Chart) in the TIA Portal.

© Siemens 2024

SINAMICS Startdrive commissioning tool

Overview

SINAMICS Startdrive is integrated in the TIA Portal and is a tool for the configuration, commissioning and diagnostics of the SINAMICS family of converters.

The SINAMICS Startdrive commissioning tool has been optimized with regard to user friendliness and consistent use of the TIA Portal benefits of a common working environment for PLC, HMI and drives. Time-saving and guided step-by-step commissioning with maximum flexibility is complemented by user-friendly graphic function views for all drive functions, including functional safety (Safety Integrated) and drive-based technology functions (e.g. EPOS). The automatic message display, the powerful real-time trace and the context-sensitive online help make converter diagnostics very easy.

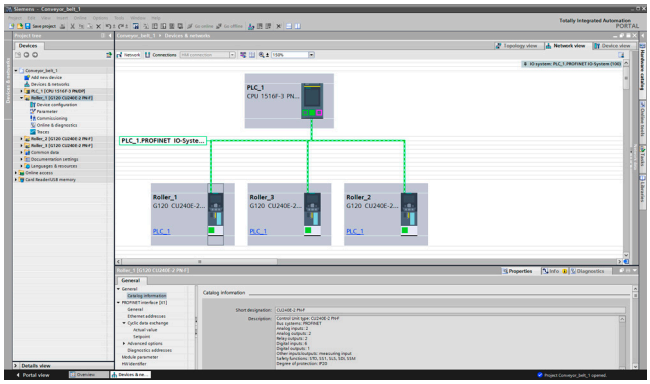

The software packages based on the TIA Portal are harmonized with each other and offer important benefits, the main advantage being a shared project storage. The TIA Portal enables simple integration of SINAMICS converters in your automation solution. Thanks to the standardization of operator actions and the integration in general TIA Portal operating concepts (e.g. UMAC, Openness) as well as standard TIA Portal functions (e.g. Undo/Redo), familiarization is easy both for drive experts as well as SIMATIC users. Special focus is placed on the interaction between SIMATIC and SINAMICS, especially when connecting the SINAMICS drives to SIMATIC technology objects.

Integration

Supported frequency converters

SINAMICS Startdrive Basic enables complete commissioning, diagnostics, parameterization, optimization and connection to the PLC for the following SINAMICS converters integrated in SINAMICS Startdrive:

- SINAMICS G120, G120C, G120D, G120P
- SINAMICS G115D
- SINAMICS G130, G150
- SINAMICS G220 (as of V18 SP2)
- SINAMICS S120 [1], S150
- SINAMICS S200 (as of V18 SP2)
- SINAMICS S210 and SINAMICS S210 (New) (as of V18 SP1)
- SINAMICS MV

SINAMICS Startdrive Advanced

With SINAMICS Startdrive Advanced (available as of V15) you benefit from powerful engineering functions that save you considerable time and ultimately costs.

- Safety acceptance test:
  - Guided acceptance test wizard for all drive-based Safety Integrated functions
  - Automatic and safety function-specific generation of traces to analyze the machine behavior
  - Generation of an acceptance report as Excel file (xlsx format, can also be used with OpenOffice)
  - Safety Activation Test
- Improved optimization options in the drive: Extended measuring functions (available for CU320-2 PN/DP and CU310-2 PN as of V5.2 SP3, SINAMICS S210 (New) as of V6.1 and SINAMICS S200 as of V6.2), long-term trace
- Also contains all Startdrive Basic functions
- Only license key required, no additional installation

New in V19

Startdrive Basic V19

- Support of the shared device functionality for SINAMICS S210, S120, G220 for separate control of the drives by separate controllers
- Improvement of the library function for individual drive objects in the multi-axis system
- Integration of the decentralised SINAMICS S120M drives
- Integration of the drive version V6.3 for SINAMICS S200 and SINAMICS S210 (New):
  - Introduction of the positioning function EPOS for SINAMICS S210 (New)

Startdrive Advanced V19

- Long-term trace functionality for CU320-2 PN/DP and CU310-2 PN-based drive units

[1] Includes SINAMICS S220 Smart Line Modules booksize format as of SINAMICS Startdrive V17 Update 1.

© Siemens 2024

Integration

Installation versions

SINAMICS Startdrive can be installed as an optional package to SIMATIC STEP 7 or as a stand-alone application (without SIMATIC STEP 7).

System requirements

The following table shows the recommended hardware and system equipment for the operation of SINAMICS Startdrive.

Hardware	Recommendation
Computer	As of SIMATIC FIELD PG M6 Comfort (or comparable PC)
Processor	Intel Core i5-8400H (2.5 ... 4.2 GHz; 4 cores + hyper-threading; 8 MB Smart Cache)
RAM	16 GB or more (32 GB for large projects)
Hard disk	SSD with at least 50 GB available memory
Screen resolution	15.6" Full HD display (1920 × 1080 or larger)
Operating systems	• **Microsoft Windows 10 (64 bit)** - Windows 10 Professional Version 22H2 - Windows 10 Enterprise 21H2, 22H2 - Windows 10 Enterprise 2016 LTSC - Windows 10 Enterprise 2019 LTSC - Windows 10 Enterprise 2021 LTSC • **Microsoft Windows 11 (64 bit)** - Windows 11 Home Version 21H2, 22H2 - Windows 11 Professional Version 21H2, 22H2 - Windows 11 Enterprise 21H2, 22H2 • **Microsoft Windows Server (64 bit)** - Windows Server 2016 Standard (full installation) - Windows Server 2019 Standard (full installation) - Windows Server 2022 Standard (full installation)

Compatibility with other products

- SINAMICS Startdrive V19 operates with STEP 7, WinCC and Scout TIA V19 in one framework
- SINAMICS Startdrive V19 can be installed on the same computer in parallel with other versions of SINAMICS Startdrive V12 to V18
- SINAMICS Startdrive can be installed on the same computer as SINAMICS MICROMASTER STARTER

Supported virtualization platforms

SINAMICS Startdrive can be installed in a virtual machine. For this purpose, one of the following virtualization platforms in the specified version or a newer version can be used:

- VMware vSphere Hypervisor (ESXi) 6.7
- VMware Workstation 15.5.0
- VMware Player 15.5.0
- Microsoft Hyper-V Server 2019

Supported safety programs

The following safety programs have been tested with SINAMICS Startdrive V19:

- Virus scanners:
  - Symantec Endpoint Protection 14.6
  - Trend Micro OfficeScan 14.0
  - McAfee Endpoint Security (ENS) 10.6 and 10.7
  - Microsoft Defender
  - Qihoo 360 "Safe Guard 12.1" + "Virus Scanner"
- Encryption software:
  - Microsoft Bitlocker
- Host-based Intrusion Detection System
  - McAfee Application Control 8.3.3

Selection and ordering data

Description	Article No.
SINAMICS Startdrive Basic V19 commissioning tool Single license and certificate of license English, French, German, Italian, Spanish, Chinese Simplified	
• Software download (email address required for delivery)	**6SL3072-4KA02-0XG0**
SINAMICS Startdrive Advanced V19 commissioning tool License key (floating license) English, French, German, Italian, Spanish, Chinese Simplified	
• On DVD-ROM with license key on USB flash drive	**6SL3072-4KA02-0XA5**
• Software download incl. license key (email address required for delivery)	**6SL3072-4KA02-0XG5**
Upgrade SINAMICS Startdrive Advanced V15 ... V18 to V19	
• On DVD-ROM with license key on USB flash drive	**6SL3072-4KA02-0XE5**
• Software download incl. license key (email address required for delivery)	**6SL3072-4KA02-0XK5**
Software Update Service with SINAMICS Startdrive Advanced in the TIA Portal Delivery is performed according to the number of ordered SUS products (e.g. 10 upgrade license keys (floating license) with 10 DVD-ROMs, 10 USB flash drives, etc.)	
• On DVD-ROM with upgrade license key on USB flash drive	**6SL3072-4AA02-0XL8**
• Software download incl. license key (email address required for delivery)	**6SL3072-4AA02-0XY8**

Note:

SINAMICS DCC can be installed in addition to the SINAMICS Startdrive commissioning tool. This allows the device functionality in the SINAMICS drive system to be expanded with dedicated technological functions as required.

Further information about SINAMICS DCC can be found in the section SINAMICS DCC (Drive Control Chart) in the TIA Portal.

More information

The SINAMICS Startdrive Basic commissioning tool is available free on the internet at
www.siemens.com/startdrive

© Siemens 2024

SINAMICS DCC (Drive Control Chart) in the TIA Portal

Overview

SINAMICS DCC (Drive Control Chart) is a technological expansion for the SINAMICS S120/S150/G130/G150/MV drive systems and for SIMATIC Drive Controller. This allows the device functions of the converter systems to be expanded individually with freely available closed-loop control, arithmetic and logic blocks and thus opens up a new dimension of adaptation capabilities for the specific functions of the machine for the user. The user-friendly configuration tool in the TIA Portal enables simple, graphic configuration of these blocks and integrates them in the drive unit. SINAMICS DCC is available as an option for SINAMICS Startdrive Basic and Advanced in the TIA Portal.

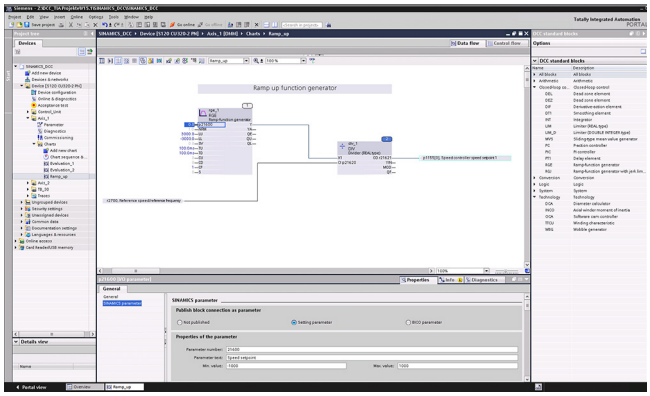

With the integration into the TIA Portal, the focus is on simple usability. For this reason, closed loop control and open loop control functions can be graphically interconnected in just a few steps via drag and drop.

The SINAMICS DCC installation contains a comprehensive standard block library. Furthermore, additional libraries can be installed as DCB Extension to expand the range of functions of the blocks. The diagnostics functions allow the program behavior to be verified and, in the case of a fault, the cause to be identified.

Via the Siemens application support, a range of example applications (winder, synchronous operation, cross-cutter, etc.) are available for download on the basis of SINAMICS DCC and can be used as a ready-to-use solution or be individually adapted or expanded.

New in V19

- Upload of complex charts that were created with the SINAMICS MICROMASTER STARTER commissioning software
- Simplified localization of DCC parameters in the plan by cross-referencing them in the parameter view
- Statistics overview of plan contents
- Openness extensions for editing charts

Licenses

SINAMICS DCC V19 is delivered with a SINAMICS DCC V19 combo floating license. The floating license allows the use of software on any number of computers. This allows one user per license to use the software independently of the computer being used or a specific workstation. The number of existing licenses determines the number of computers on which the software can be used simultaneously.

- Existing SINAMICS DCC combo licenses V15 ... V18 can be upgraded to V19. This requires an upgrade license.
- The combo license allows parallel use of SINAMICS DCC V3.3/V3.4 and SINAMICS DCC V19 if both tools are installed on the same PC.

Installation versions

SINAMICS DCC is an option package for SINAMICS Startdrive Basic and Advanced.

System requirements

The SINAMICS DCC V19 option package has the same system requirements and supports the same virtualization platforms and safety programs as SINAMICS Startdrive V19.

Compatibility with other products

- SINAMICS DCC V19 operates with Startdrive, STEP 7 and WinCC in one framework
- SINAMICS DCC V19 can be installed on a computer in parallel with SINAMICS MICROMASTER STARTER with SINAMICS DCC

Supported languages

- Standard installation: English, German, Chinese (simplified)
- Language packages: French, Italian, Spanish

© Siemens 2024

Selection and ordering data

SINAMICS DCC in the TIA Portal, consisting of the graphical configuration tool and the standard library, is the continuation of SINAMICS DCC in the STARTER.

No runtime license is required for the standard library included in the scope of supply.

Description	Article No.
SINAMICS DCC V19 for TIA Portal incl. Floating as an option package for SINAMICS Startdrive Basic or Advanced V19	
Combo license key (floating license) German, English, French, Italian, Spanish, Chinese Simplified	
• On DVD-ROM with license key on USB flash drive	**6SL3070-4KA01-0XA5**
• Software download incl. license key (email address required for delivery)	**6SL3070-4KA01-0XG5**
Upgrade SINAMICS DCC V15.1 ... V18 to V19	
• On DVD-ROM with license key on USB flash drive	**6SL3070-4KA01-0XE5**
• Software download incl. license key (email address required for delivery)	**6SL3070-4KA01-0XK5**
Software Update Service with SINAMICS DCC in the TIA Portal [1]	
Delivery is performed according to the number of ordered SUS products (e.g. 10 upgrade license keys with 10 DVD-ROMs, 10 USB flash drives, etc.)	
• On DVD-ROM with license key on USB flash drive	**6SL3070-4AA01-0XL8**
• Software download incl. license key (email address required for delivery)	**6SL3070-4AA01-0XY8**

DCB Extension

With DCB Extension, additional libraries can be added as specifically programmed blocks to the standard block library. As a result, complex tasks can be implemented in the drive and the internal know-how protection can be increased as a Black Box. These blocks or libraries are programmed with the separate SINAMICS DCB Studio development tool in the C/C++ high-level language and can be used as a DCB Extension library for SINAMICS DCC in the TIA Portal and SINAMICS DCC in STARTER. The use of these blocks from DCB Extension libraries requires a SINAMICS DCB Extension runtime license.

SINAMICS DCB Extension license

Runtime license for re-licensing as of firmware V4.6 for the use of additional blocks/libraries (can also be ordered together with the CompactFlash card, see CompactFlash card for the Control Units CU310-2 and CU320-2) 6SL3077-0AA00-0AH0

SINAMICS DCB Studio V2.3

Development tool for programming blocks that can be imported as an additional library (DCB Extension) for SINAMICS DCC in the TIA Portal or in STARTER (upon request)

More information

TIA Portal highlights
www.siemens.com/tiaportal

The SINAMICS DCC option package as trial version is available free on the internet at
www.siemens.com/startdrive

[1] See Software Update Service section.

© Siemens 2024

SINAMICS web server for SINAMICS S120

Overview

Web server for efficient diagnostics and maintenance – available everywhere at all times

The SINAMICS drive system can be expanded with the web server to provide an efficient diagnostics and maintenance option. The web server provides access to multi-faceted new options for drive diagnostics and remote maintenance for every network-compatible PC with a Web browser. For example:

- Downloading a configuration
- Updating firmware
- Providing a status overview of the drive
- Evaluating warnings and fault messages
- Monitoring and adapting parameter settings
- Saving machine documentation, including notes
- Setting up of a user administration to provide access protection

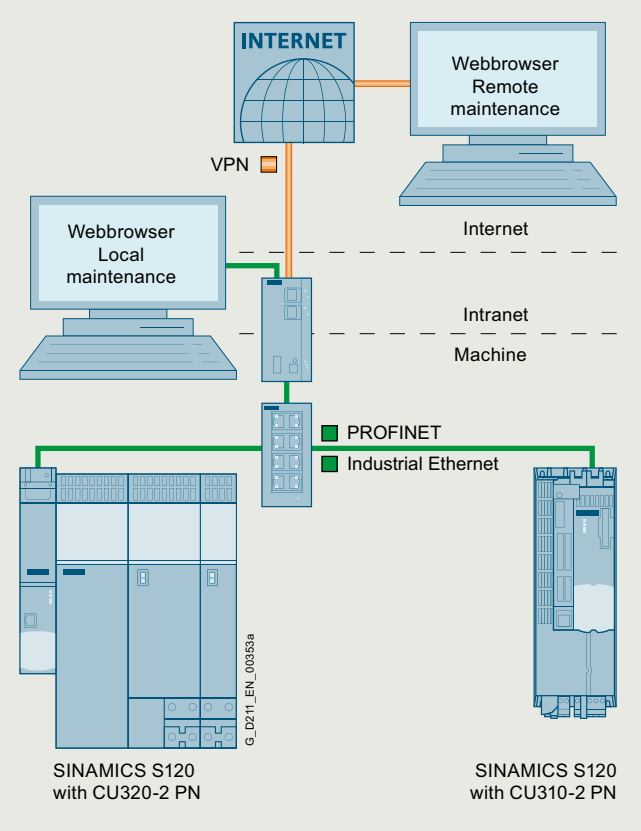

Integration of the SINAMICS web server as shown by the example of the SINAMICS S120 and PROFINET communication

The SINAMICS web server is available from SINAMICS firmware V4.7 or higher on the CompactFlash card for the Control Units

- CU310-2 DP
- CU310-2 PN
- CU320-2 DP
- CU320-2 PN

For further information, refer to CU310-2 and CU320-2 Control Units.

Benefits

Shorter machine downtimes
- Efficient diagnostics and maintenance

Direct language selection
- English, German, Chinese, Italian, French, Spanish

Accessibility
- Via all LAN or PROFINET interfaces

Two users with different rights can be configured
- e. g. for operators and service personnel

Diagnostic functions
- Quick overview of the current configuration and the state of the drive
- Understandable diagnostic information and messages are displayed in plain text in multiple languages

Freely configurable parameter lists
- Monitoring parameters for diagnostic purposes, for example for operating personnel
- Adapting/optimizing existing projects, for example for service personnel

Updating functions
- The device functionality can be updated from any network-compatible PC (locally or by remote access)
- Series commissioning is possible without the STARTER commissioning tool

Archiving machine documentation
- Appropriate documentation and the state of the service and maintenance work are available on site to the operating and service personnel

Access security
- Protection against unauthorized access to the drive information

Integration of customer-specific websites
- Integrating customer know-how into the websites enables the quick, purposeful diagnostics of the customer application

Application

The web server is ideal for applications not requiring any special software (STARTER) or version dependencies. Easy diagnostics and maintenance are possible both locally and remotely, provided appropriate security measures are applied.

More information

Further information about the SINAMICS web server is available on the internet at
www.siemens.com/sinamics-webserver

© Siemens 2024

Overview

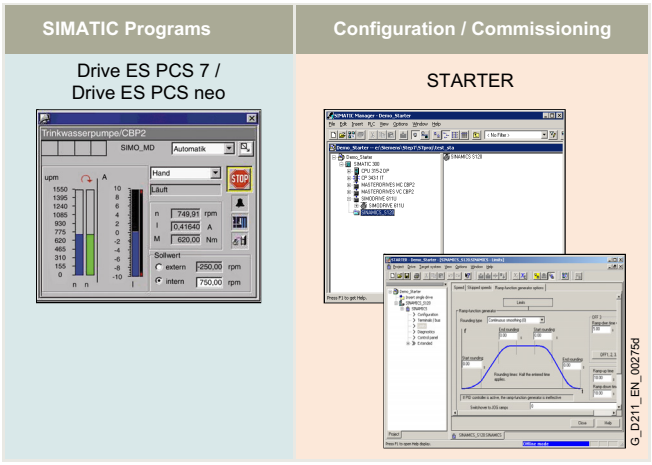

Drive ES/STARTER is the engineering system used to integrate the communication, configuration and data management functions of Siemens drive technology into the SIMATIC automation world easily, efficiently and cost-effectively.

The following software packages are available for selection:

- STARTER
- Drive ES PCS 7 / Drive ES PCS neo

The Drive ES (**D**rive **E**ngineering **S**oftware) fully integrates drives from Siemens into the world of Totally Integrated Automation (STEP 7 V5.x).

Design

The following software packages are available for selection:

- **STARTER**
- **Drive ES PCS 7** (APL Style or Classic Style) / **Drive ES PCS neo**

STARTER

The STARTER commissioning tool is for first-time users of the world of Totally Integrated Automation and the basic software for setting the parameters of the SINAMICS and MICROMASTER 4 drives online and offline in this environment. The STARTER integration enables both the automation system and the drives to be handled using the SIMATIC Manager software. STARTER is the starting point for common data archiving in complete projects and for extending the use of the routing and the SIMATIC teleservice to drives. STARTER provides the configuration tools for the Motion Control functions – device-to-device communication, equidistance and isochronous operation with PROFIBUS DP and ensures that drives with PROFINET IO are simply integrated into the SIMATIC environment.

Drive ES PCS 7 (APL Style or Classic Style)

Drive ES PCS 7 links the drives with a PROFIBUS DP interface into the SIMATIC PCS 7 process control system, and it requires that SIMATIC PCS 7, V6.1 and higher has first been installed. Drive ES PCS 7 provides a block library with blocks for the drives and the corresponding faceplates for the operator station, which enables the drives to be operated from the PCS 7 process control system. From V6.1 and higher, drives will also be able to be represented in the PCS 7 Maintenance Station.

From Drive ES PCS 7 V8.0 and higher, two versions of the library are available: The APL (Advanced Process Library) variant and the previous version in the so-called Classic Style.

Detailed contents of the Drive ES PCS 7 (APL Style or Classic Style)

- **Block library for SIMATIC PCS 7** Faceplates and control blocks for SIMOVERT MASTERDRIVES VC and MC, as well as MICROMASTER/MIDIMASTER of the third and fourth generation and SIMOREG DC MASTER and SINAMICS
- **STEP 7 V5.x slave object manager** for user-friendly configuration of drives and non-cyclic PROFIBUS DP communication with the drives
- **STEP 7 V5.x device object manager** for easy configuration of drives with PROFINET-IO interfaces (V8.0 SP1 and higher)
- **SETUP program** for installing the software in the SIMATIC PCS 7 environment

Drive ES PCS neo

Siemens SINAMICS drives can be controlled via SIMATIC PCS neo and operated and monitored on the OCM client with the SINAMICS library Drive ES PCS neo. The drive ES PCS neo faceplates make the data relevant for system operation available on the OCM client. The STARTER commissioning tool on the engineering server can also be used for parameter assignment, commissioning and detailed diagnostics of the SINAMICS drives.

© Siemens 2024

Selection and ordering data

Description	Article No.
Drive ES PCS 7 V8.2 SPx *)	
Block library for PCS 7 for the integration of drives in Classic Style (as predecessor)	
Requirement: PCS 7 V8.2 and higher	
Type of delivery: CD-ROM Languages: en, de, fr, it, es With electronic documentation	
• Single-user license incl. 1 runtime license	**6SW1700-8JD00-2AA0**
• Runtime license (without data storage medium)	**6SW1700-5JD00-1AC0**
• Update service for single-user license	**6SW1700-0JD00-0AB2**
Drive ES PCS 7 APL V8.2 SPx *)	
Block library for PCS 7 for the integration of drives in APL Style (Advanced Process Library)	
Requirement: PCS 7 V8.2 and higher	
Type of delivery: CD-ROM Languages: en, de, fr, it, es With electronic documentation	
• Single-user license incl. 1 runtime license	**6SW1700-8JD01-2AA0**
• Runtime license (without data storage medium)	**6SW1700-5JD00-1AC0**
• Update service for single-user license	**6SW1700-0JD01-0AB2**
Drive ES PCS 7 V9.0 SPx *)	
Block library for PCS 7 for the integration of drives in Classic Style (as predecessor)	
Requirement: PCS 7 V9.0 or higher	
Type of delivery: CD-ROM Languages: en, de, fr, it, es With electronic documentation	
• Single-user license incl. 1 runtime license	**6SW1700-1JD00-0AA0**
• Runtime license (without data storage medium)	**6SW1700-5JD00-1AC0**
• Update service for single-user license	**6SW1700-0JD00-0AB2**
• Upgrade from V6.x/V7.x/V8.x/V9.x to V9.0 SPx *)	**6SW1700-1JD00-0AA4**
Drive ES PCS 7 APL V9.0 SPx *)	
Block library for PCS 7 for the integration of drives in APL Style (Advanced Process Library)	
Requirement: PCS 7 V9.0 or higher	
Type of delivery: CD-ROM Languages: en, de, fr, it, es With electronic documentation	
• Single-user license incl. 1 runtime license	**6SW1700-1JD01-0AA0**
• Runtime license (without data storage medium)	**6SW1700-5JD00-1AC0**
• Update service for single-user license	**6SW1700-0JD01-0AB2**
• Upgrade of APL V8.x, V9.x to V9.0 SPx *) or Drive ES PCS 7 V6.x, V7.x, V8.x, V9.x classic to Drive ES PCS 7 APL V9.0 SPx *)	**6SW1700-1JD01-0AA4**
Drive ES PCS 7 V9.1 SPx *)	
Block library for PCS 7 for the integration of drives in Classic Style (as predecessor)	
Requirement: PCS 7 V9.1 or higher	
Type of delivery: DVD-ROM Languages: en, de, fr, it, es With electronic documentation	
• Single-user license incl. 1 runtime license	**6SW1700-2JD00-0AA0**
• Runtime license (without data storage medium)	**6SW1700-5JD00-1AC0**
• Update service for single-user license	**6SW1700-0JD00-0AB2**
• Upgrade from V6.x/V7.x/V8.x/V9.x to V9.1 SPx *)	**6SW1700-2JD00-0AA4**
Drive ES PCS 7 APL V9.1 SPx *)	
Block library for PCS 7 for the integration of drives in APL Style (Advanced Process Library)	
Requirement: PCS 7 V9.1 or higher	
Type of delivery: DVD-ROM Languages: en, de, fr, it, es With electronic documentation	
• Single-user license incl. 1 runtime license	**6SW1700-2JD01-0AA0**
• Runtime license (without data storage medium)	**6SW1700-5JD00-1AC0**
• Update service for single-user license	**6SW1700-0JD01-0AB2**
• Upgrade of APL V8.x, V9.x to V9.1 SPx *) or Drive ES PCS 7 V6.x, V7.x, V8.x, V9.x classic to Drive ES PCS 7 APL V9.1 SPx *)	**6SW1700-2JD01-0AA4**
Drive ES PCS neo V3.0 / V3.1 / V4.0	
Block library for SIMATIC PCS neo for the integration of SINAMICS drives	
Requirement: PCS neo V3.0 or higher	
Type of delivery at V3.0: The SINAMICS library is a component of the SIMATIC PCS neo V3.0 product. Type of delivery at V3.1 / V4.0: Integration via the import of a SINAMICS device type file (product support). License reference for the license code and the Certificate of License for the Drive ES PCS neo SINAMICS library via OSD Languages: de, en	
License for the Drive ES PCS neo SINAMICS library (engineering and runtime software)	**6SW1700-1JE01-0AH0**
Floating license for 1 engineering user on the engineering server	
A runtime license for a PCS neo Controller (single license for 1 installation)	
Runtime license Drive ES PCS neo SINAMICS library	**6SW1700-1JE00-1AH0**
To execute the function blocks for a SIMATIC PCS neo Controller	
Language-neutral, single license for 1 installation	
Type of delivery: Electronic Certificate of License (OSD)	

Options

Drive ES PCS 7 Software Update Service

A software update service can also be purchased for the Drive ES PCS 7 software. The user will automatically receive the latest software, service packs and full versions for one year after ordering.

The update service can only be ordered in addition to an existing (i.e. previously ordered) full version.

- Period of update service: 1 year

The update service is automatically extended by 1 further year unless canceled up to 6 weeks prior to expiration.

Description	Article No.
Drive ES PCS 7	
• Update service for single-user license	**6SW1700-0JD00-0AB2**
Drive ES PCS 7 APL	
• Update service for single-user license	**6SW1700-0JD01-0AB2**

More information

Further information is available on the internet at:
www.siemens.com/drive-es

*) Orders are automatically supplied with the latest Service Pack (SP).

© Siemens 2024

Overview

General configuration sequence

The function description of the machine provides the basis for the configuration. The definition of the components is based on physical dependencies and is usually carried out as follows:

Step	Description of configuration activity
1	Clarification of type of drive
2	Definition of boundary conditions and integration into automated system
3	Definition of loading case, calculation of max. load torque, definition of motor
4	Definition of the Motor Module
5	Repetition of steps 3 and 4 for additional axes
6	Calculation of the required infeed power and defining the Line Module
7	Specification of the required control performance and selection of the Control Unit, definition of component cabling
8	Specification of the line-side power options (main switch, fuses, line filters, etc.) and cable cross-sections for connecting to the line supply and motor
9	Definition of additional system components
10	Calculation of the current requirement for the 24 V DC supply for the components and specification of power supplies (SITOP devices, Control Supply Modules)
11	Specification of components for connection system
12	Configuration of drive line-up components
13	Thermal design of the control cabinet

Configuration begins with the mechanical interface to the machine. A suitable motor is selected according to the specified torques and speeds. A matching power unit is then also chosen. Depending on the requirements of the machine, the motor is supplied as a single drive via a Power Module or within a multi-motor drive group via a Motor Module. Once the basic components have been defined, the system components for matching to the electrical and mechanical interfaces are selected.

The SIZER for Siemens Drives (integrated in the TIA Selection Tool) engineering tool allows the correct components to be selected quickly and easily. Based on the torque and speed characteristics entered, SIZER for Siemens Drives (integrated in the TIA Selection Tool) guides the user through the configuring process, identifying suitable motors and matching SINAMICS power units and other system components.

The following sections describe those SINAMICS S120 components which are needed to create a drive system subject to certain boundary conditions. For information about individual components, please also refer to the online help of the SIZER for Siemens Drives engineering tool (integrated in the TIA Selection Tool).

© Siemens 2024

EMC notes for the application of the product standard EN 61800-3

Overview

The electromagnetic compatibility describes – according to the definition of the EMC directive – the "capability of a device to work satisfactorily in an electromagnetic environment without itself causing electromagnetic interference which is unacceptable for other devices present in this environment". To guarantee that the appropriate EMC standards are observed, the devices must demonstrate a sufficiently high noise immunity, and also the emitted interference must be limited to acceptable values.

Product standard EN 61800-3 describes the EMC requirements placed on "Variable-speed drive systems".

A variable-speed drive system (or Power Drive System PDS) consists of the Control Unit and Power Module or Control Unit, Line Module and Motor Module plus the relevant electric motors and encoders including connecting cables.

The driven machine is not part of the drive system.

Environments

EN 61800-3 defines different requirements depending on the location where the drive is installed, designated as a first and second environment.
Residential buildings or locations where the drive system is directly connected to a public low-voltage supply without intermediate transformer are defined
as the **first environment**.
All locations outside a residential area are defined as the **second environment**. These are basically industrial areas which are supplied from the medium-voltage network via their own transformers.

Categories

Four different categories are defined in EN 61800-3 depending on the installation site of the drive:

Category C1: Drive systems for rated voltages < 1000 V for unlimited use in the first environment.

Category C2: Stationary drive systems for rated voltages < 1000 V for use in the second environment. Use in the first environment is possible if the drive system is operated and installed by qualified personnel. The warning information and installation instructions supplied by the manufacturer must be observed.

Category C3: Drive systems for rated voltages < 1000 V for exclusive use in the second environment.

Category C4: Drive systems for rated voltages ≥ 1000 V, for rated currents ≥ 400 A or IT supply systems for use in complex systems in the second environment. An EMC plan must be drawn up.

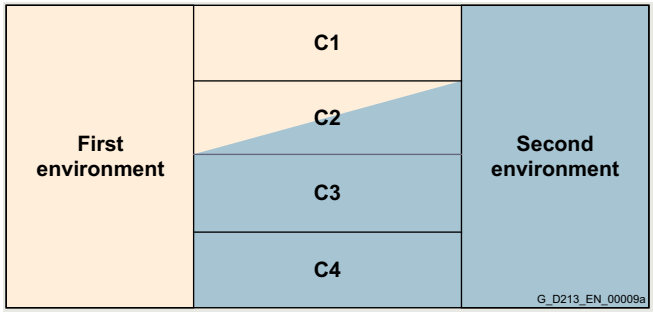

© Siemens 2024

Configuration

SINAMICS S120 Power Drive Systems (PDS) can be operated in the first and second environments. The measures necessary for operation in the respective environment are subsequently listed.

Measures for complying with product standard EN 61800-3 second environment

Interference immunity

The SINAMICS S120 drive system is suitable for operation in the second environment.

Regarding interference immunity, SINAMICS S120 can be used in the **first and second environments**.

Interference emission – complying with Category C2 second environment

Regarding interference emission, to comply with the limit values according to EN 61800-3 second environment, Category C2, the following measures must be applied:

- The drive system must be installed in compliance with EMC regulations by appropriately trained professionals.
- The SINAMICS S120 drive system requires a radio interference suppression filter, Category C2 (integrated as line filter, or as optional external line filter with/without line reactor)
- The pulse frequency is less than or equal to the rated pulse frequency
- The maximum motor cable length is complied with (shielded)
- Line supply with grounded neutral point (TN/TT supply system)

Device-specific assignment of the measures to comply with product standard EN 61800-3 second environment, Category C2

SINAMICS S120 drive system			Measures for		
			Radio interference suppression filter, Category C2	Maximum pulse frequency f_p	Maximum motor cable length (shielded)
Device format	Supply voltage	Frame size		kHz	m (ft)
Booksize Line Modules	380 ... 480 V 3 AC	–	External line filter required [1]	4 [2]	350 (1148)
Chassis Active Line Modules Smart Line Modules	380 ... 480 V 3 AC	FX ... JX	External line filter required	4 [2]	300 (984)
	500 ... 690 V 3 AC	FX ... JX	External line filter required	4 [2]	300 (984)
Chassis Basic Line Modules	380 ... 480 V 3 AC	FB ... GD	External line filter plus line reactor required [1]	4 [2]	100 (328)
	500 ... 690 V 3 AC	FB ... GD	External line filter plus line reactor required [1]	4 [2]	100 (328)
Chassis Power Modules	380 ... 480 V 3 AC	FX and GX	External line filter plus line reactor required [1]	2	100 (328)
Blocksize Power Modules with integrated line filter	200 ... 240 V 1/3 AC	FSA ... FSC	No measure required, as a line filter is integrated	4	50 (164)
	380 ... 480 V 3 AC	FSA ... FSC	No measure required, as a line filter is integrated	4	50 (164)
		FSD ... FSF (75 and 90 kW)	No measure required, as a line filter is integrated	4	150 (492)
		FSF (110 and 132 kW)	No measure required, as a line filter is integrated	2	150 (492)
		FSG	No measure required, as a line filter is integrated	2	150 (492)
	500 ... 690 V 3 AC	FSD and FSE	No measure required, as a line filter is integrated	2	100 (328)
		FSF	No measure required, as a line filter is integrated (Category C3)	2	150 (492)
		FSG	No measure required, as a line filter is integrated (category C3)	2	300 (984)
Blocksize Power Modules without integrated line filter	200 ... 240 V 3 AC	FSD ... FSF	External line filter required	4	150 (492)
	380 ... 480 V 3 AC	FSA ... FSC	External line filter required [1]	4	50 (164)
		FSD ... FSF (75 and 90 kW)	Version with integrated line filter available	4	150 (492)
		FSF (110 and 132 kW)	Version with integrated line filter available	2	150 (492)
		FSG	Version with integrated line filter available	2	150 (492)
	500 ... 690 V 3 AC	FSD ... FSF	Version with integrated line filter available (Category C3)	2	100 (328)
		FSG	Version with integrated line filter available (Category C3)	2	300 (984)

Interference emission – complying with Category C3 second environment

All Active Line Modules in booksize format, Basic Line Modules in booksize format 100 kW as well as Line Modules in chassis format in the standard version are compliant.
A line reactor is required for Power Modules in chassis format.

The maximum cable lengths and pulse frequencies (see the previous table) must be taken into account.
For Active Line Modules in booksize format, when using an external line filter, the maximum cable length can be increased to 1000 m (3281 ft).

Interference emission – complying with Category C4 second environment

When connected to IT line supplies, only devices without integrated filter, Basic Line Modules in booksize format up to 40 kW, and all Smart Line Modules in booksize format are permissible. To limit symmetrical interference emission, suitable external filters without capacitors connected to ground must be used.

Further selected accessories are available from "Siemens Product Partner for Drives Options":
www.siemens.com/drives-options-partner

[1] Selection and ordering data for line filters and line reactors see sections Line-side power components.

[2] Refers to the pulse frequency of the Motor Modules.

© Siemens 2024

EMC notes for the application of the product standard EN 61800-3

Configuration

Measures for complying with product standard EN 61800-3 first environment

Only PM240-2 Power Modules in blocksize format can be used in the first environment.

Interference immunity

The SINAMICS S120 drive system is suitable for operation in the second environment.

Regarding interference immunity, SINAMICS S120 can be used in the **first and second environments**.

Interference emission – complying with Category C2 first environment

For use in the first environment, **in addition** to the requirements for use in the second environment, device-specific notes to maintain the **harmonic current** limits must be **taken into consideration**. Here, EMC product standard EN 61800-3 makes reference to the standards pertaining to harmonic currents: EN 61000-3-2 and EN 61000-3-12.

Device-specific notes for complying with harmonic current limit values according to EN 61000-3

- Power Modules with a power $P_N \leq 1$ kW
  Complying with limit values according to EN 61000-3-2 cannot be guaranteed in this case. The installation company or company operating professionally used devices must obtain authorization to connect the device to the low-voltage grid from the responsible power utility company.
- Power Modules with a power $P_N > 1$ kW and a rated input current $I_{N, input} < 16$ A
  These devices are not subject to any limit values regarding the harmonic currents, and can therefore be connected to the public low-voltage grid without prior authorization.
- Power Modules with a rated input current > 75 A
  There are no applicable standards when installing these types of devices. However, it is recommended that the utility company (grid operator) be informed when connecting such a device.

Device-specific measures to comply with harmonic current limit values:

Power Modules in **blocksize** format with a rated input current $I_{N, input} > 16$ A and ≤ 75 A				Measures to comply with harmonic current limits according to EN 61000-3-12	
Rated power	Rated input current $I_{N, input}$	Supply voltage	Frame size	Line reactor $u_k = 4$ %	Minimum short-circuit power S_{SC} at the connection point of the customers plant or system
3 ... 7.5 kW	20.7 ... 37 A	200 ... 240 V 3 AC	FSC	Required [1]	$S_{SC} \geq 120 \times \sqrt{3} \times U_{line} \times I_{N, input}$
5.5 ... 15 kW	17.2 ... 39.9 A	380 ... 480 V 3 AC	FSB and FSC	Required [1]	
11 ... 18.5 kW	40 ... 64 A	200 ... 240 V 3 AC	FSD	Not required	$S_{SC} \geq 120 \times \sqrt{3} \times U_{line} \times I_{N, input}$
18.5 ... 37 kW	36 ... 70 A	380 ... 480 V 3 AC	FSD	Not required	

Example of calculating the minimum short-circuit power required

Determining the minimum short-circuit power S_{SC} for the Power Module in blocksize format FSD: 37 kW with $U_{line} = 400$ V and $I_{N, input} = 70$ A

$S_{SC} \geq 120 \times \sqrt{3} \times U_{line} \times I_{N, input}$

The short-circuit power must be greater than $120 \times 1.73 \times 400$ V $\times 70$ A = 5812 kVA

As guide value, this typically corresponds to a low-voltage transformer with an apparent power of approximately 300 ... 400 kVA.

Note:

The installation company or company operating the device is responsible for ensuring that this device is only connected at a connection point with an appropriate short-circuit power (fault level), if this is necessary after consulting the power utility (grid operator).
The installation company or company operating the device requires authorization from the power utility (grid operator) in the following situations:
- Three-phase connection to a line supply with lower short-circuit power
- Three-phase connection without a line reactor
- Connecting single-phase devices with a rated input current $I_{N, input}$ >16 A

[1] Available from the "Siemens Product Partner for Drives Options": www.siemens.com/drives-options-partner

© Siemens 2024

Configuration

Maximum permissible cable lengths from the motor to the converter when using output reactors, sine-wave filters, dv/dt filters plus VPL or filters depending on the voltage range and the Power Module being used

Frame size	Maximum permissible motor cable lengths (shielded/unshielded) in m (ft) FSA	FSB	FSC	FSD	FSE	FSF	FSG
PM240-2 Power Module with integrated braking chopper							
Without optional power components							
• 200 V versions without integrated line filter	50/100 (164/328)	50/100 (164/328)	50/100 (164/328)	200/300 (656/984)	200/300 (656/984)	300/450 (984/1476)	–
• 200 V versions with integrated line filter	50/100 (164/328)	50/100 (164/328)	50/100 (164/328)	–	–	–	–
• 400 V versions without integrated line filter	150/150 (492/492)	150/150 (492/492)	150/150 (492/492)	200/300 (656/984)	200/300 (656/984)	300/450 (984/1476)	300/450 (984/1476)
• 400 V versions with integrated line filter	50/100 (164/328)	100/100[1] (328/328)[1]	150/150[1] (492/492)[1]	200/300 (656/984)	200/300 (656/984)	300/450 (984/1476)	300/450 (984/1476)
• 690 V versions	–	–	–	200/300 (656/984)	200/300 (656/984)	300/450 (984/1476)	300/450 (984/1476)
With optional output reactor							
• At 200 ... 240 V 1 AC/3 AC	150/225 (492/738)	150/225 (492/738)	150/225 (492/738)	200/300 (656/984)[2]	200/300 (656/984)[2]	300/450 (984/1476)[2]	–
• At 380 ... 415 V 3 AC	150/225 (492/738)	150/225 (492/738)	150/225 (492/738)	200/300 (656/984)[2]	200/300 (656/984)[2]	300/450 (984/1476)[2]	300/450 (984/1476)[2]
• At 440 ... 480 V 3 AC	100/150 (328/492)	100/150 (328/492)	100/150 (328/492)	200/300 (656/984)[2]	200/300 (656/984)[2]	300/450 (984/1476)[2]	300/450 (984/1476)[2]
• At 500 ... 690 V 3 AC	–	–	–	350/525 (1148/1723)	350/525 (1148/1723)	525/800 (1723/2625)	525/800 (1723/2625)
With optional sine-wave filter							
• At 380 ... 480 V 3 AC	200/300 (656/984)	200/300 (656/984)	200/300 (656/984)	–	–	–	–
With optional dv/dt filter plus VPL							
• At 380 ... 480 V 3 AC	–	–	–	30 kW: 350/525 (1148/1723) 37 kW: 450/650 (1476/2133) [3]	450/650 (1476/2133) [3]	450/650 (1476/2133) [3]	–
• At 500 ... 690 V 3 AC	–	–	–	350/525 (1148/1723)	350/525 (1148/1723)	450/650 (1476/2133) [3]	450/650 (1476/2133) [3]
With integrated line filter According to EN 55011 to comply with radio interference emissions according to EN 61800-3 EMC Category C2							
• At 200 ... 240 V 1 AC/3 AC	50/– (164/–)	50/– (164/–)	50/– (164/–)	–	–	–	–
• At 380 ... 480 V 3 AC	50/– (164/–)	100/– (328/–)[4]	150/– (492/–)[4]	150/– (492/–)	150/– (492/–)	150/– (492/–)	150/– (492/–) (Category C2) 300/– (984/–) (Category C3[5])
• At 500 ... 690 V 3 AC	–	–	–	100/– (328/–)	100/– (328/–)	150 /– (492/–) (Category C3)	300/– (984/–) (Category C3[5])
With optional, external line filter class B According to EN 55011 to comply with conducted radio interference emissions according to EN 61800-3 EMC Category C1 [6], **together with unfiltered Power Module**							
• At 380 ... 480 V 3 AC	50/– (164/–)	50/– (164/–)	50/– (164/–)	–	–	–	–
With optional, external line filter class B According to EN 55011 to comply with conducted radio interference emissions according to EN 61800-3 EMC Category C2 [6], **together with unfiltered Power Module**							
• At 380 ... 480 V 3 AC	150/– (492/–)[4]	100/– (328/–)[4]	100/– (328/–)[4]	–	–	–	–
With optional, external line filter class B According to EN 55011 **and optional output reactor** to comply with radio interference emissions according to EN 61800-3 EMC Category C2 [6], **together with unfiltered Power Module**							
• At 380 ... 415 V 3 AC	150/– (492/–)	150/– (492/–)	150/– (492/–)	–	–	–	–
• At 440 ... 480 V 3 AC	100/– (328/–)	100/– (328/–)	100/– (328/–)	–	–	–	–

More information

Converters are equipment used on a professional basis, deployed in certain areas of business and industry – and are not operated in the general public domain.

For EMC-compliant installation, observe the information in the Configuration Manual EMC installation guideline:
https://support.industry.siemens.com/cs/document/60612658

1) The values apply with low-capacitance CY cables – the max. permissible motor cable length is 50 m (164 ft) (shielded) and 100 m (328 ft) (unshielded) as standard.

2) For frame sizes FSD to FSG the maximum permissible cable lengths are not increased with an output reactor. By means of the output reactor, the loading of the motor windings is reduced by lower rates of voltage rise (dv/dt). By means of two output reactors connected in series, the maximum permissible cable lengths for frame sizes FSD and FSE are increased to 350 m (1148 ft) (shielded) and 525 m (1723 ft) (unshielded), and for frame sizes FSF and FSG to 525 m (1723 ft) (shielded) and 800 m (2625 ft) (unshielded).

3) Maximum overvoltage at the motor terminals <1350 V with cable lengths up to 450 m (1476 ft) shielded or 650 m (2133 ft) unshielded – maximum overvoltage at the motor terminals <1500 V with cable lengths up to 525 m (1723 ft) shielded or 800 m (2625 ft) unshielded.

4) The values apply with low-capacitance CY cables – the max. permissible motor cable length is 50 m (164 ft) (shielded) as standard.

5) The 690 V versions of the PM240-2 Power Modules frame size FSG are only available with an integrated Category C3 filter. To operate the converter also within TN systems with grounded outer conductor, you must remove the grounding screw.

6) More information is available on the internet at www.siemens.com/sinamics-g120/documentation

© Siemens 2024

Overview

For the closed-loop control of drives and the implementation of basic technological tasks, for SINAMICS S120 the CU320-2 Control Unit is available for multi-axis applications, and the CU310-2 Control Unit is available for individual drives.

Sophisticated Motion Control tasks are best supported using the powerful SIMOTION D Control Units (D410-2, D425-2, D435-2, D445-2, D455-2) with scaled performance.

Each of these Control Units is based on object-orientated SINAMICS S120 standard firmware, which includes all of the usual V/f control modes, scalable so that even the highest performance requirements can be satisfied.

The following are ready-to-configure drive objects (drive controls):

- The control for a line infeed:
  Infeed Control
- The control for the broad scope of rugged asynchronous (induction) motors and torque motors, including sensorless:
  Vector Control
- The control for permanent-magnet excited synchronous and servo asynchronous motors with demanding dynamic requirements:
  Servo Control

All these control versions are based on the principle of field-oriented, closed-loop vector control, with a special expansion for reluctance motors.

The most commonly used V/f control modes are stored in the "Vector control" drive object and are ideal for implementing even simple applications such as group drives with SIEMOSYN motors.

Configuration

Guide to selecting a closed-loop control variant

SINAMICS S closed-loop control properties

Criteria for assessing control quality	Explanations, definitions
Rise time	The rise time is the period which elapses between an abrupt change in a setpoint and the moment the actual value first reaches the tolerance band (2 %) around the setpoint. The dead time is the period which elapses between the abrupt change in the setpoint and the moment the actual value begins to increase. The dead time is partially determined by the read-in, processing and output cycles of the digital closed-loop control. Where the dead time constitutes a significant proportion of the rise time, it must be separately identified.
Characteristic angular frequency -3 dB	The limit frequency is a measure of the dynamic response of a closed-loop control. A pure sinusoidal setpoint is input to calculate the limit frequency; no part of the control loop must reach the limit. The actual value is measured under steady-state conditions and the ratio between the amplitudes of actual value and setpoint is recorded. -3 dB limit frequency: Frequency at which the absolute value of the actual value drops by 3 dB (to 71 %) for the first time. The closed-loop control can manage frequencies up to this value and remain stable.
Ripple	The ripple is the undesirable characteristic of the actual value which is superimposed on the mean value (useful signal). Oscillating torque is another term used in relation to torque. Typical oscillating torques are caused by certain motor slot arrangements, by limited encoder resolution or by the limited resolution of the voltage control of the IGBT power unit. The torque ripple is also reflected in the speed ripple as being indirectly proportional to the mass inertia of the drive.
Accuracy	The accuracy defines the magnitude of the average, repeatable deviation between the actual value and setpoint under rated operating conditions. Deviations between the actual value and setpoint are caused by internal inaccuracies in the measuring and control systems. External influencing factors, such as temperature or speed, are not included in the accuracy assessment. The closed-loop and open-loop controls should be optimized with respect to the relevant variable.

© Siemens 2024

Configuration

SINAMICS S performance characteristics

Characteristics	**Servo Control**	**Vector Control**	**V/f control**	Notes
Typical application	• Drives with high dynamic motion control • Angular-locked synchronism with isochronous PROFIBUS/ PROFINET in conjunction with SIMOTION • For use in machine tools and clocked production machines	• Variable-speed drives with high speed and torque stability in general machinery construction • Especially suitable for induction motors and reluctance motors (1FP1)	• Drives with low requirements on dynamic response and accuracy • Group drives running with a high degree of precision, e.g. on textile machines with SIEMOSYN motors	Mixed operation of Servo Control and Vector Control is not possible on CU320-2. Mixed operation is possible for V/f control modes.
Dynamic response	Very high	High	Low	Highest dynamic response with 1FK7/1FT2 High Dynamic synchronous motors and Servo Control.
Control modes with encoder	Position control/ Speed control/ Torque control	Position control/ Speed control/ Torque control	None	SIMOTION D with Servo Control is standard for motion control.
Control modes without encoder	Speed control	Speed control/torque control	All V/f control modes	With Servo for induction motors only. With V/f control, the speed can be kept constant by means of selectable slip compensation.
Asynchronous motor (induction motor)	Yes	Yes	Yes	V/f control (textiles) is recommended for SIEMOSYN motors.
Synchronous motor	Yes	Yes	No	
Reluctance motor (1FP1)	No	Yes	No	
Torque motor	Yes	Yes	No	
Linear motor	Yes	No	No	
Permissible ratio of motor rated current to rated current of Motor Module	1:1 to 1:4	1.3:1 to 1:4	1:1 to 1:12	For Servo Control and Vector Control, maximum control quality up to 1:4. Between 1:4 and 1:8, increasing restrictions regarding torque and rotational accuracy. V/f control is recommended for < 1:8.
Maximum number of parallel-connected motors per Motor Module	4	8	Unlimited in theory	Motors with identical power ratings can only be connected in parallel if they are induction motors. With V/f Control, the motors can have different power ratings.
Setpoint resolution position controller	31 bit + sign	31 bit + sign	–	
Setpoint resolution speed/ frequency	31 bit + sign	31 bit + sign	0.001 Hz	
Setpoint resolution torque	31 bit + sign	31 bit + sign	–	
Maximum output frequency				Values valid for the factory setting High output frequencies can only be achieved when using suitable motors and the appropriate parameterization. For synchronous motors, observe the voltage limit (2 kV) and use a VPM module.
• For current controller clock cycle/pulse frequency	660 Hz [1] with 125 µs/4 kHz	330 Hz with 250 µs/4 kHz	400 Hz with 250 µs/4 kHz	
• For current controller clock cycle/pulse frequency (chassis frame sizes FX and GX)	330 Hz with 250 µs/2 kHz	160 Hz with 250 µs/2 kHz	200 Hz with 250 µs/2 kHz	
• For current controller clock cycle/pulse frequency (chassis frame sizes HX and JX)	Not permitted	100 Hz with 400 µs/1.25 kHz	100 Hz with 400 µs/1.25 kHz	Only for induction motors: When using edge modulation, 600 Hz is possible at 4 kHz, or 300 Hz at 2 kHz and 200 Hz at 1.25 kHz.
Maximum field weakening				With Servo Control combined with encoder and appropriate special motors, field weakening up to 16 times the field-weakening threshold speed is possible. These values refer to 1FT7/1FT2 synchronous motors. Note voltage limit (k_E factor) for third-party motors.
• For asynchronous (induction) motors	5 times	5 times	4 times	
• For synchronous motors	2 times	2 times	–	
• For reluctance motors (1FP1)	–	2 times	–	

[1] The high output frequency option is required to enable output frequencies above 550 Hz.

For additional information see section Control Units, and on the internet at https://support.industry.siemens.com/cs/document/104020669

© Siemens 2024

Configuration

Fundamental closed-loop control characteristics of SINAMICS S

- Booksize format, pulse frequency 4 kHz, closed-loop torque control

	Servo Control		Vector Control		Notes
Synchronous motor	**1FT7**		Vector Control is not designed as an operating mode for 1FT7/1FT2 synchronous motors.		
Controller cycle	125 µs				
Rise time (without delay)	0.5 ms				At a speed operating range from 50 r/min for resolver.
Characteristic angular frequency -3 dB	900 Hz				In this case, the dynamic response is determined primarily by the encoder system.
Torque ripple	0.6 % of M_0				For a speed operating range of 20 r/min up to rated speed. A ripple of < 1 % is possible with an absolute encoder ≤ 1 r/min. Not possible with resolver.
Torque accuracy	± 1.5 % of M_0				Measured value averaged over 3 s. With motor identification and friction compensation. In the torque operating range up to ± M_0. Speed operating range 1:10 up to rated speed. Attention: External influences such as motor temperature can cause an additional long-time inaccuracy (constancy) of about ±2.5 %. Approx. ±1 % lower accuracy in field-weakening range.
Induction motor	**1PH8 without encoder**	**1PH8 with incremental encoder 1024 S/R**	**1PH8 without encoder**	**1PH8 with incremental encoder 1024 S/R**	
Controller cycle	125 µs	125 µs	250 µs	250 µs	
Total rise time (without delay)	–	0.8 ms	2 ms	1.2 ms	With encoderless operation in speed operating range 1:10, with encoder 50 r/min and above up to rated speed.
Characteristic angular frequency -3 dB	–	600 Hz	250 Hz	400 Hz	With encoderless operation in speed operating range 1:10. The dynamic response is improved when using an encoder (feedback signal).
Torque ripple	–	1.5 % of M_N	2 % of M_N	2 % of M_N	With encoderless operation in speed operating range 1:20, with encoder 20 r/min and above up to rated speed.
Torque accuracy	–	± 3.5 % of M_N	± 2 % of M_N	± 1.5 % of M_N	Measured value averaged over 3 s. With motor identification and friction compensation, temperature effects compensated by KTY84 and mass model. In torque operating range up to ± M_N. Approx. additional inaccuracy of ± 2.5 % in field-weakening range. Servo: Speed operating range 1:10 referred to rated speed. Vector: Speed operating range 1:50 referred to rated speed.

© Siemens 2024

Configuration

Fundamental closed-loop control characteristics of SINAMICS S (continued)

- Booksize format, pulse frequency 4 kHz, closed-loop speed control

	Servo Control		**Vector Control**		Notes
Synchronous motor	**1FT7**		Vector Control is not designed as an operating mode for 1FT7/1FT2 synchronous motors.		
Controller cycle	125 µs				
Total rise time (without delay)	2.3 ms				With encoderless operation in speed operating range 1:10, with encoder 50 r/min and above up to rated speed.
Characteristic angular frequency -3 dB	250 Hz				In this case, the dynamic response is determined primarily by the encoder system.
Speed ripple	See note				Determined primarily by the total mass moment of inertia, the torque ripple and especially the mechanical configuration. It is therefore not possible to specify a generally applicable value.
Speed accuracy	≤ 0.001 % of n_N				Determined primarily by the resolution of the control deviation and encoder evaluation in the converter. This is implemented on a 32-bit basis for SINAMICS.
Induction motor	**1PH8 without encoder**	**1PH8 with incremental encoder 1024 S/R**	**1PH8 without encoder**	**1PH8 with incremental encoder 1024 S/R**	
Controller cycle	125 µs	125 µs	250 µs	250 µs	
Total rise time (without delay)	12 ms	5 ms	20 ms	10 ms	With encoderless operation in speed operating range 1:10, with encoder 50 r/min and above up to rated speed.
Characteristic angular frequency -3 dB	40 Hz	120 Hz	50 Hz	80 Hz	With encoderless operation in speed operating range 1:10. The dynamic response is enhanced by an encoder feedback. Servo with encoder is slightly more favorable than Vector with encoder, as the speed controller cycle with Servo is quicker.
Speed ripple	See note	See note	See note	See note	Determined primarily by the total mass moment of inertia, the torque ripple and especially the mechanical configuration. It is therefore not possible to specify a generally applicable value.
Speed accuracy	0.1 × f_{slip}	≤ 0.001 % of n_N	0.05 × f_{slip}	≤ 0.001 % of n_N	Without encoder: Determined primarily by the accuracy of the calculation model for the torque-producing current and rated slip of the induction motor (see table "Typical slip values"). With speed operating range 1:50 (Vector) or 1:10 (Servo) and with activated temperature evaluation.

© Siemens 2024

Configuration

Fundamental closed-loop control characteristics of SINAMICS S (continued)

- Blocksize, booksize compact, booksize and chassis, pulse frequency 4 kHz, position control

	Servo Control		Vector Control		Notes
Synchronous motor	**1FT7**		Vector Control is not designed as an operating mode for 1FT7/1FT2 synchronous motors.		
Position controller cycle	1 ms				
Resolution	4.19×10^6 incr./rev.				Correspondingly better with multi-pole resolver.
Achievable positioning accuracy in relation to the motor shaft	10^5 … 10^6 incr./rev.				In practice, the resolution must be higher than the required positioning accuracy by a factor of 4 to 10. These values are approximate nominal values only.
• In relation to the motor shaft, approx.	0.00072 °				
Induction motor	**1PH8 with AM22DQ [1)]**	**1PH8 with incremental encoder 1024 S/R**	**1PH8 with AM22DQ [1)]**	**1PH8 with incremental encoder 1024 S/R**	
Position controller cycle	1 ms	1 ms	2 ms	2 ms	
Resolution	4.19×10^6 incr./rev.	4096 incr./rev.	4.19×10^6 incr./rev.	4096 incr./rev.	
Attainable positioning accuracy	10^5 … 10^6 incr./rev.	1024 incr./rev.	10^5 … 10^6 incr./rev.	512 incr./rev.	In practice, the resolution must be higher than the required positioning accuracy by a factor of 4 to 10. These values are approximate nominal values only. Vector is less accurate than servo by a factor of approximately 2.
• In relation to the motor shaft, approx.	0.00072 °	0.35 °	0.00072 °	0.7 °	

[1)] AM22DQ: Absolute encoder 22 bit singleturn (resolution 4194304, encoder-internal 2048 S/R) + 12 bit multiturn (traversing range 4096 revolutions).

© Siemens 2024

Configuration

Fundamental closed-loop control characteristics of SINAMICS S (continued)

- Chassis format, pulse frequency 2 kHz, closed-loop torque control

	Servo Control		Vector Control		Notes
Synchronous motor	**1FT7 without encoder**	**1FT7 with AM22DQ [1)]**	Vector Control is not designed as an operating mode for 1FT7/1FT2 synchronous motors.		
Controller cycle	250 µs	250 µs			
Total rise time (without delay)	–	1.2 ms			
Characteristic angular frequency -3 dB	–	400 Hz			In this case, the dynamic response is determined primarily by the encoder system.
Torque ripple	–	1.3 % of M_0			A ripple of < 1 % is possible with an absolute encoder ≤ 1 r/min. Not possible with resolver.
Torque accuracy	–	± 1.5 % of M_0			Measured value averaged over 3 s. With motor identification and friction compensation. In torque operating range up to ± M_0. Speed operating range 1:10 up to rated speed. Attention: External influences such as motor temperature can cause an additional long-time inaccuracy (constancy) of about ±2.5 %. Approx. ±1 % lower accuracy in field-weakening range.
Induction motor	**1PH8 without encoder**	**1PH8 with incremental encoder 1024 S/R**	**1PH8 without encoder**	**1PH8 with incremental encoder 1024 S/R**	
Controller cycle	250 µs	250 µs	250 µs	250 µs	
Total rise time (without delay)	–	1.6 ms	2.5 ms	1.6 ms	With encoderless operation in speed operating range 1:10, with encoder 50 r/min and above up to rated speed.
Characteristic angular frequency -3 dB	–	350 Hz	200 Hz	300 Hz	With encoderless operation in speed operating range 1:10. The dynamic response is improved when using an encoder (feedback signal).
Torque ripple	–	2 % of M_N	2.5 % of M_N	2 % of M_N	With encoderless operation in speed operating range 1:20, with encoder 20 r/min and above up to rated speed.
Torque accuracy	–	± 3.5 % of M_N	± 2 % of M_N	± 1.5 % of M_N	Measured value averaged over 3 s. With motor identification and friction compensation, temperature effects compensated by KTY84 and mass model. In torque operating range up to ± M_N. Approx. additional inaccuracy of ± 2.5 % in field-weakening range. Servo: Speed operating range 1:10 referred to rated speed. Vector: Speed operating range 1:50 referred to rated speed.

[1)] AM22DQ: Absolute encoder 22 bit singleturn (resolution 4194304, encoder-internal 2048 S/R) + 12 bit multiturn (traversing range 4096 revolutions).

© Siemens 2024

Configuration

Fundamental closed-loop control characteristics of SINAMICS S (continued)

- Chassis format, pulse frequency 2 kHz, closed-loop speed control

	Servo Control		Vector Control		Notes
Synchronous motor	**1FT7 without encoder**	**1FT7 with AM22DQ [1]**	Vector Control is not designed as an operating mode for 1FT7/1FT2 synchronous motors.		
Controller cycle	250 µs	250 µs			
Total rise time (without delay)	–	5 ms			With encoderless operation in speed operating range 1:10, with encoder 50 r/min and above up to rated speed.
Characteristic angular frequency -3 dB	–	100 Hz			In this case, the dynamic response is determined primarily by the encoder system.
Speed ripple	–	See note			Determined primarily by the total mass moment of inertia, the torque ripple and especially the mechanical configuration. It is therefore not possible to specify a generally applicable value.
Speed accuracy	–	≤ 0.001 % of n_N			Determined primarily by the resolution of the control deviation and encoder evaluation in the converter. This is implemented on a 32-bit basis for SINAMICS.
Induction motor	**1PH8 without encoder**	**1PH8 with incremental encoder 1024 S/R**	**1PH8 without encoder**	**1PH8 with incremental encoder 1024 S/R**	
Controller cycle	250 µs	250 µs	250 µs	250 µs	
Total rise time (without delay)	21 ms	8 ms	20 ms	12 ms	With encoderless operation in speed operating range 1:10, with encoder 50 r/min and above up to rated speed.
Characteristic angular frequency -3 dB	25 Hz	80 Hz	35 Hz	60 Hz	For encoderless operation in speed operating range 1:10. The dynamic response is improved when using an encoder (feedback signal). Servo with encoder is slightly more favorable than Vector with encoder, as the speed controller cycle with Servo is quicker.
Speed ripple	See note	See note	See note	See note	Determined primarily by the total mass moment of inertia, the torque ripple and especially the mechanical configuration. It is therefore not possible to specify a generally applicable value.
Speed accuracy	0.1 × f_{slip}	≤ 0.001 % of n_N	0.05 × f_{slip}	≤ 0.001 % of n_N	Without encoder: Determined primarily by the accuracy of the calculation model for the torque-generating current and rated slip of the induction motor (see table "Typical slip values"). For a speed operating range 1: 50 (Vector) or 1:10 (Servo) and with active temperature evaluation.

[1] AM22DQ: Absolute encoder 22 bit singleturn (resolution 4194304, encoder-internal 2048 S/R) + 12 bit multiturn (traversing range 4096 revolutions).

© Siemens 2024

Configuration

Typical slip values for standard asynchronous motors (induction motors)

Motor output	Slip values	Notes
< 1 kW	6 % of n_N e.g. motor with 1500 r/min: 90 r/min	The slip values of 1PH asynchronous motors are very similar to those of standard motors
< 10 kW	3 % of n_N e.g. motor with 1500 r/min: 45 r/min	
< 30 kW	2 % of n_N e.g. motor with 1500 r/min: 30 r/min	
< 100 kW	1 % of n_N e.g. motor with 1500 r/min: 15 r/min	
> 500 kW	0.5 % of n_N e.g. motor with 1500 r/min: 7.5 r/min	

CU320-2: Axis licensing according to performance enhancement (firmware version 4.3 and higher)

The CU320-2 is licensed purely according to axis number. The expanded performance is essentially required with four or more servo axes, four or more vector axes and seven or more V/f axes, irrespective of computing capacity.

	Dynamic response (current controller clock cycle)	Number of axes without performance enhancement	Number of axes with performance enhancement	Note
Servo Control	62.5 µs	3	3	3 servo axes are possible with a cycle time of 62.5 µs. The performance enhancement is therefore ineffective. The performance enhancement is required with 4 or more servo axes irrespective of computing capacity.
	125 µs	3	6	
	250 µs	3	6	
Vector Control	250 µs	3	3	For 250 µs, 3 vector axes are possible. This means that the performance enhancement is not active. The performance enhancement is required with 4 or more vector axes irrespective of computing capacity.
	500 µs	3	6	
V/f control	250 µs	6	6	For 250 µs, 6 V/f axes are possible. This means that the performance enhancement is not active. The performance enhancement is required with 7 or more V/f axes irrespective of computing capacity.
	500 µs	6	12	
Mixed operation				
Servo Control plus V/f Control	125 µs/500 µs	3+0; 2+2; 1+4; 0+6	6+0; 5+2; 4+4; 3+6 2+8; 1+10; 0+12	Two V/f axes can be computed instead of a servo or vector axis.
Vector Control plus V/f Control	500 µs/500 µs	3+0; 2+2; 1+4; 0+6	6+0; 5+2; 4+4; 3+6 2+8; 1+10; 0+12	

CU320-2: Possible quantity structures, maximum configurations

In addition to the number of axes, for example, the following functions and hardware components also have an influence on the possible quantity structure (maximum configuration) of the CU320-2:

- Extended Safety
- EPOS
- DCC
- CAN bus
- High-speed Terminal Modules (task = 250 µs)

The SIZER for Siemens Drives engineering tool (integrated in the TIA Selection Tool) can be used to very quickly perform reliability checks on more complex quantity structures.

© Siemens 2024

Configuration

Influencing variables on minimum required pulse frequency of power unit

Basic requirements such as maximum speed or necessary dynamic response of the control have a direct effect in determining the minimum pulse frequency of the power unit. If the minimum pulse frequency required exceeds the rated pulse frequency, derating must be implemented accordingly (see section SINAMICS S120 drive system).

The following table provides a general overview.

Influencing variables		Minimum pulse frequency	Notes
Servo Control, Vector Control (required max. output frequency/speed)	100 Hz correspond to: 3000 r/min for Z_p = 2 1500 r/min for Z_p = 4 428 r/min for Z_p = 14 352 r/min for Z_p = 17	1.25 kHz	Z_p is the number of pole pairs of the motor. This equals 2 on 1PH asynchronous motors (induction motors). 1FT7/1FT2 synchronous motors have between 3 and 5 pairs of poles. For torque motors, the numbers of pole pairs are typically 14 and 17. When edge modulation is used (only possible for asynchronous motors), the output frequency is increased by a factor of 2.
	160 Hz correspond to: 4800 r/min for Z_p = 2 2400 r/min for Z_p = 4 685 r/min for Z_p = 14 565 r/min for Z_p = 17	2 kHz	
	200 Hz correspond to: 6000 r/min for Z_p = 2 3000 r/min for Z_p = 4 856 r/min for Z_p = 14 704 r/min for Z_p = 17	2.5 kHz	
	300 Hz correspond to: 9000 r/min for Z_p = 2 4500 r/min for Z_p = 4 1284 r/min for Z_p = 14 1056 r/min for Z_p = 17	4 kHz	
	400 Hz correspond to: 12000 r/min for Z_p = 2 6000 r/min for Z_p = 4	4 kHz	Notice: For Servo Control with 1FT7/1FT2 motors only. Note field weakening requirements and suitable encoder system for higher speeds.
V/f control (required max. output frequency/speed)	100 Hz correspond to: 6000 r/min for Z_p = 1 3000 r/min for Z_p = 2	1.25 kHz	V/f Control is only intended for induction motors and SIEMOSYN motors. Z_p is the number of pole pairs of the motor. This is mainly between 1 and 4 on 1LA/1LG standard asynchronous motors (induction motors). SIEMOSYN motors have 1 or 2 pole pairs or, with larger shaft heights, 3 pairs.
	160 Hz correspond to: 9600 r/min for Z_p = 1 4800 r/min for Z_p = 2	2 kHz	
	200 Hz correspond to: 12000 r/min for Z_p = 1 6000 r/min for Z_p = 2	2.5 kHz	
	300 Hz correspond to: 18000 r/min for Z_p = 1 9000 r/min for Z_p = 2	4 kHz	
	400 Hz correspond to: 24000 r/min for Z_p = 1 12000 r/min for Z_p = 2	4 kHz	
Dynamic response requirement (current controller clock cycle)	125 µs 250 µs 400 µs 500 µs	4 kHz 2 kHz 2.5 kHz 1 kHz	Servo Control requires a minimum pulse frequency of 2 kHz.
Sine-wave filters	–	4 kHz	Notice: If sine-wave filters are operated at low pulse frequencies, resonance problems can occur and cause the filters to severely overheat.
Output reactor to motor	Max. frequency: 150 Hz correspond to 4500 r/min for Z_p = 2		The output reactor can be operated at minimum 2 kHz only.

© Siemens 2024

Configuration

Core topologies: Component cabling with DRIVE-CLiQ

The components communicate with one another via the standard DRIVE-CLiQ interface.

This couples a Control Unit with the power components, encoders and additional system components, for example Terminal Modules. Setpoints and actual values, control commands, status messages and rating plate data of the components is transferred via DRIVE-CLiQ.

Basic rules for wiring with DRIVE-CLiQ

The following rules apply when wiring components with DRIVE-CLiQ:

- A maximum of 14 nodes can be connected to a DRIVE-CLiQ socket on the CU320-2 Control Unit
- Up to 8 nodes can be connected in a line. A line is always seen from the perspective of the Control Unit
- A maximum of 6 Motor Modules can be operated in a line
- Ring wiring is not permitted
- Components must not be double-wired
- The motor encoder should be connected to the associated Motor Module
- Up to 9 encoders can be operated on one Control Unit
- A maximum of 8 Terminal Modules can be connected
- It is not permissible for the TM54F Terminal Module to be operated on the same DRIVE-CLiQ line as Motor Modules
- The Terminal Modules TM15, TM17 High Feature and TM41 have faster sampling cycles than the TM31 and TM54F. For this reason, the two groups of Terminal Modules must be connected in separate DRIVE-CLiQ lines.
- A DRIVE-CLiQ Hub DMC20/DME20 counts as two nodes

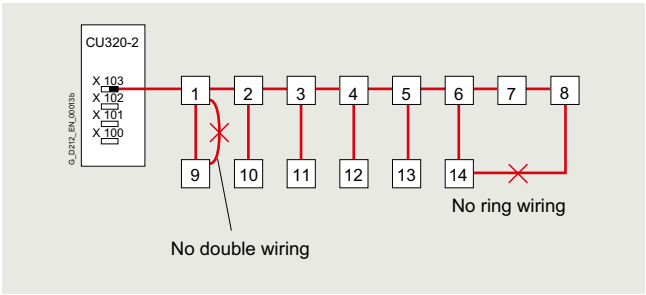

DRIVE-CLiQ configuration examples

There is a basic clock cycle within a DRIVE-CLiQ connection. For this reason, only combinations of modules with the same sampling cycle or integer-divisible sampling times can be operated on a DRIVE-CLiQ connection. To simplify the configuring process, it is advisable to supply the Line Module and Motor Modules via separate DRIVE-CLiQ connections.

The power components are supplied with the required DRIVE-CLiQ connecting cable for connection to the adjacent DRIVE-CLiQ node in the axis grouping (line topology). Prefabricated DRIVE-CLiQ cables in various lengths up to 100 m (328 ft) are available for connecting motor encoders, direct measuring encoders, Terminal Modules, etc.

The DRIVE-CLiQ cable connections inside the control cabinet must not exceed 70 m (230 ft) in length, e.g. connection between the CU320-2 Control Unit and the first Motor Module or between Motor Modules. The maximum permissible length of DRIVE-CLiQ MOTION-CONNECT cables to external components is 100 m (328 ft).

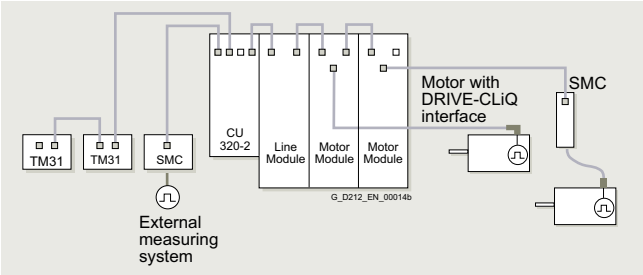

Example of a line topology for standard solutions

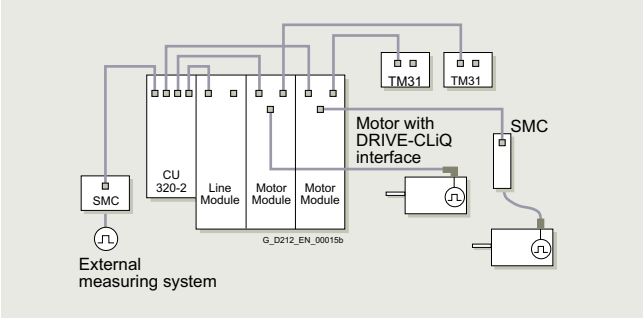

Example of a tree topology for high-performance solutions, e.g. high-speed axes in direct motion control group, selective access to individual axes/axis groupings for maintenance activities, etc.

© Siemens 2024

Configuration

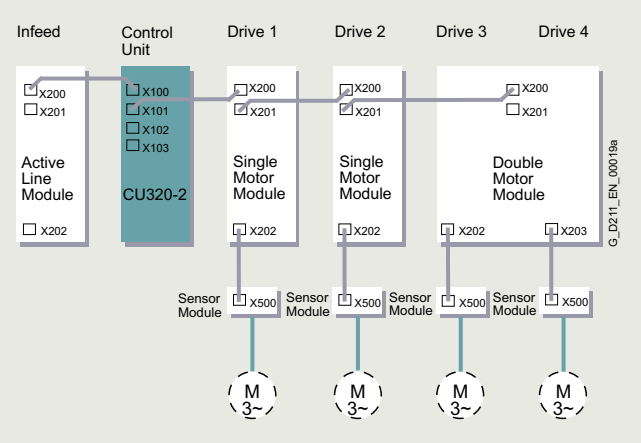

Preferred wiring of DRIVE-CLiQ connections illustrated using booksize format
Active Line Module as example: 250 µs current controller clock cycle
Motor Modules: 4 × vector control = current controller clock cycle 500 µs

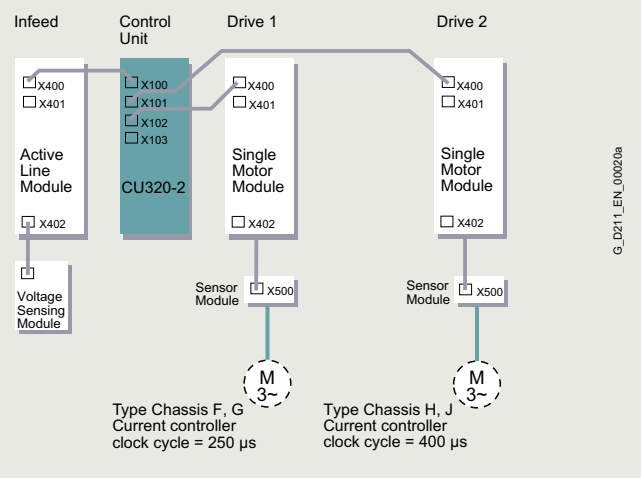

Wiring illustrated by example of chassis format with different current controller clock cycles

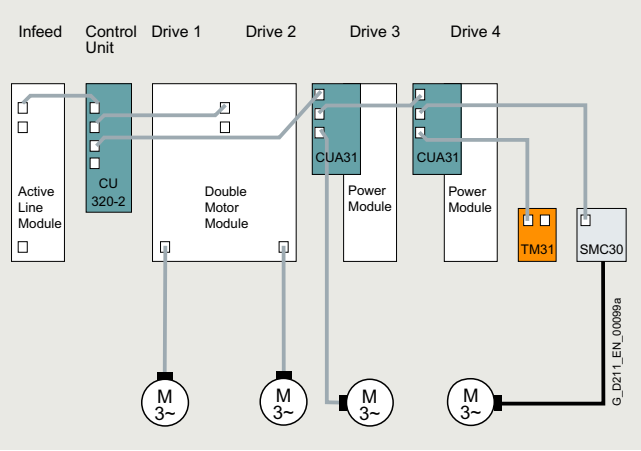

Example of wiring: Power Modules can also be operated on a CU320-2 when connected via a CUA3

12

© Siemens 2024

Configuration

Motor selection

The motor is selected on the basis of the required torque, which is defined by the application, e.g. drives for gantries, hoists, test stands, centrifuges, paper and rolling mill drives, feed drives and main spindle drives. Gear units for movement conversion or for adapting the motor speed and motor torque to the load conditions must also be considered.

As well as the load torque which is determined by the application, the following mechanical data are among those required to calculate the torque to be provided by the motor:

- Masses to be moved
- Diameter of the drive wheel/diameter
- Leadscrew pitch, gear ratios
- Frictional resistance data
- Mechanical efficiency
- Traversing paths
- Maximum velocity
- Maximum acceleration and maximum deceleration
- Cycle time

You must decide whether synchronous, induction or our especially energy-efficient synchronous-reluctance motors are to be used.

Synchronous motors should be selected for compact construction volume, low rotor moment of inertia and therefore maximum dynamic response.

Asynchronous motors (induction motors) can be used to increase maximum speeds in the field-weakening range. Asynchronous motors (induction motors) for higher powers are also available.

The following factors are of prime importance during configuration:

- The line supply configuration when using specific types of motor and/or line filters on IT systems (non-grounded systems)
- The ambient temperatures and the installation altitude of the motors and drive components

The motor-specific limiting characteristics provide the basis for defining the motors.

These define the torque or power characteristic with respect to speed and take into account the motor limits based on the DC link voltage of the Power Module or Motor Module. The DC link voltage in turn is dependent on the line voltage and, with multi-motor drives, on the type of Line Module.

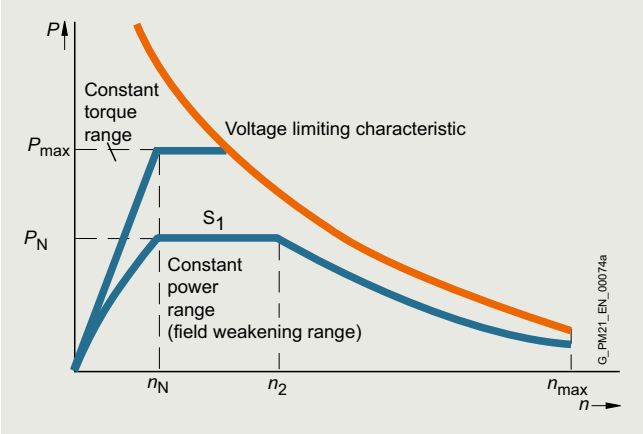

Typical speed/power graph for asynchronous (induction) motors

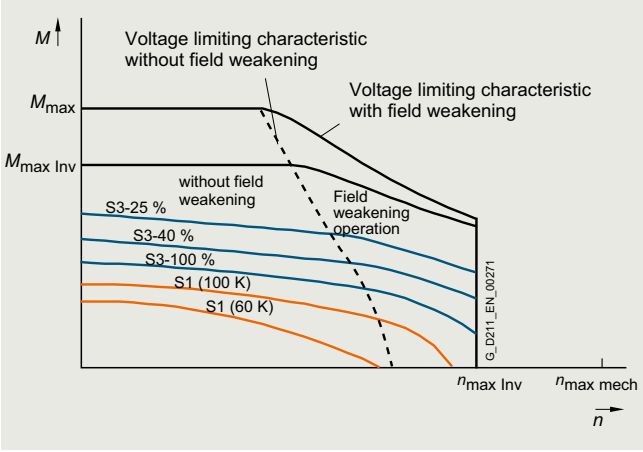

Torque characteristics of synchronous motors

For detail engineering information, please refer to the motor configuration manuals.

An updated overview of configuration manuals is available in a number of languages on the internet at:
https://support.industry.siemens.com/cs/document/108993276

The SIZER for Siemens Drives engineering tool (integrated in the TIA Selection Tool) is available to assist you with configuring.

© Siemens 2024

Configuration

Overload capability

The power units of the Line Modules, Motor Modules and Power Modules are designed for brief overloads, i.e. the Modules are capable of supplying more than the rated current I_N for short periods. In this instance, the thermal capacity of the heat sink is utilized, allowing for the relevant thermal time constants. The power semiconductors and actual current sensing circuit are rated for a maximum current I_{max} which must not be exceeded. The overload capability is determined by I_{max}, I_N and the thermal time constants. A number of characteristic duty cycles are defined in the technical specifications for the power units. The SIZER for Siemens Drives engineering tool (integrated in the TIA Selection Tool) calculates the load on the basis of a specified duty cycle with optional time characteristic and then identifies the power unit which is required.

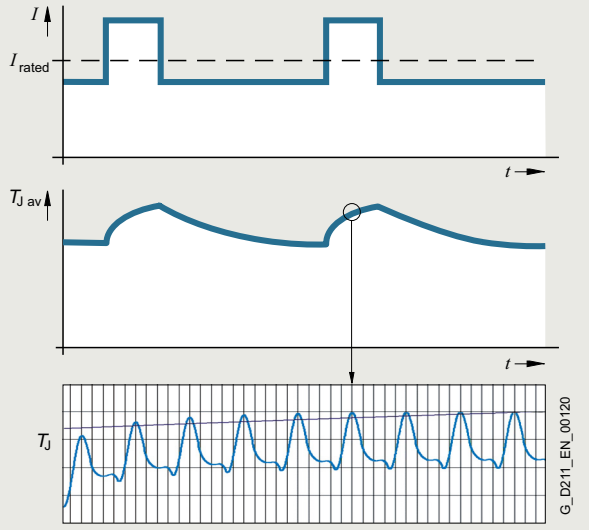

$T_{J\,av}$ average junction temperature of the power semiconductor
T_J junction temperature of the power semiconductor

The thermal time constant of a power semiconductor chip is typically within the range of 100 ms. With frequencies below 10 Hz, the overload capacity is therefore limited. The software takes account of these limitations by means of a thermal model and protects the devices against overload in all operating states. It must be noted, especially at frequencies around 0 Hz, that the specified rated current I_N is the root-mean-square value of a sinusoidal current. If the frequency of the three-phase system is reduced to 0 Hz, a pure direct current flows in all phases at standstill. The root-mean-square value of this direct current can reach the peak value of the sinusoidal current depending on the phase relation.

The output current in this state is greater than the rated current I_N by a factor of √2. The individual motor terminals and cables are designed thermically for the rated current in normal operation, so the devices are protected against this overload while taking account of the thermal time constant.

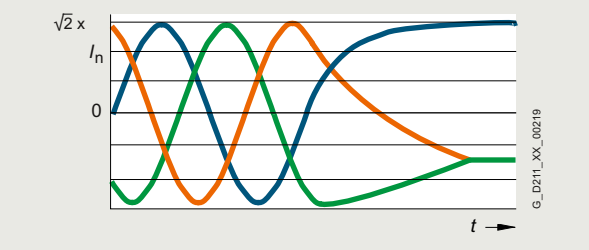

Derating characteristics

The power units can be operated with their rated current or power and the specified pulse frequency up to an ambient temperature of 40 °C (104 °F). The heat sink reaches the maximum permissible temperature at this operating point. If the ambient temperature increases above 40 °C (104 °F), the resulting heat loss must be reduced to prevent the heat sink from overheating.

At a given current, the heat loss increases in proportion to the pulse frequency. The rated output current I_N must be reduced to ensure that the maximum heat loss or heat sink temperature for higher pulse frequencies is not exceeded. When the correction factor k_f for the pulse frequency is applied, the rated output current I_{Nf} that is valid for the selected pulse frequency is adjusted.

When configuring a drive, please note that power units may not be capable of supplying the full current or power in the temperature range between 40 °C (104 °F) and 55 °C (131 °F). The power units measure the heat sink temperature and protect themselves against thermal overloading at temperatures > 40 °C (104 °F).

The air pressure, and therefore air density, drops at altitudes above sea level. At these altitudes, the same quantity of air does not have the same cooling effect and the air gap between two electrical conductors can only insulate a lower voltage. Typical air pressure values are:

0 m (0 ft) above sea level: 100 kPa

2000 m (6562 ft) above sea level: 80 kPa

3000 m (9843 ft) above sea level: 70 kPa

4000 m (13124 ft) above sea level: 62 kPa

5000 m (16405 ft) above sea level: 54 kPa

At installation altitudes above 2000 m (6562 ft), the line voltage must not exceed certain limits to ensure that surge voltages can be insulated in accordance with EN 60664-1 for surge voltage category III. If the line voltage is higher than this limit at installation altitudes > 2000 m (6562 ft), measures must be taken to reduce transient category III surge voltages to category II values, e.g. equipment must be supplied via an isolating transformer.

In order to calculate the permissible output current or power, the derating factors must be multiplied for the effects described above. The derating factor k_I for current as a function of installation altitude can be offset against the derating factor k_T for ambient temperature. If the result of multiplying derating factor k_T by derating factor k_I is greater than 1, then the calculation must be based on a rated current of I_N or I_{Nf}. If the result is < 1, then it must be multiplied by the rated current I_N or I_{Nf} to calculate the maximum permissible continuous current. The derating factor $k = k_f \times k_T \times k_I$ calculated by this method to obtain the total derating value must be applied to all current values in the specified duty cycles (I_N, I_H, I_L).

The derating characteristic curves of Power Modules, Line Modules and Motor Modules can be found in the technical specifications of the relevant modules (see section SINAMICS S120 drive system).

© Siemens 2024

Configuration

Examples of derating characteristic curves and calculation of the permissible output current:

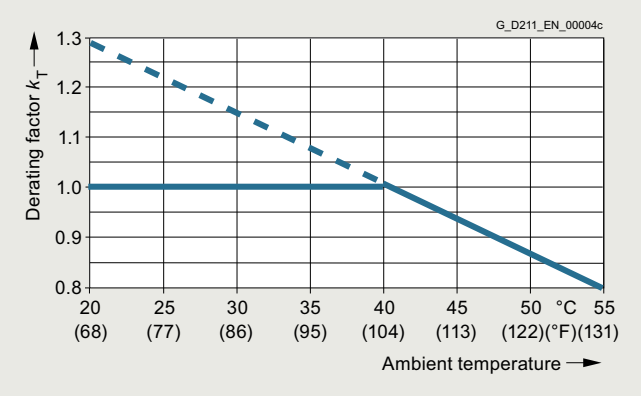

Current derating as a function of the ambient temperature

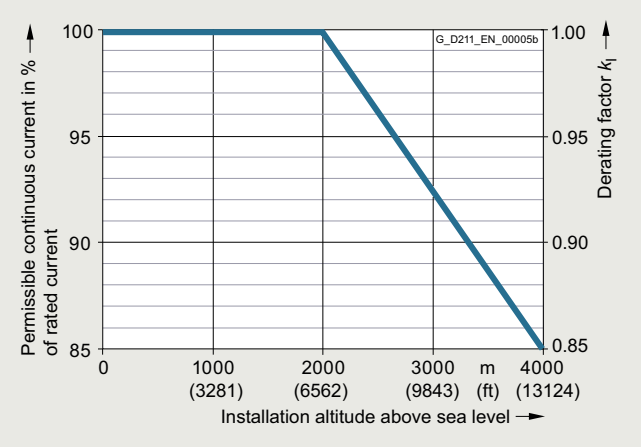

Current derating as a function of the installation altitude

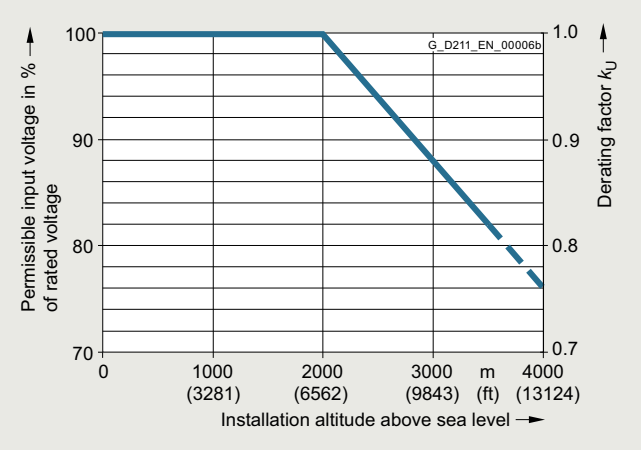

Voltage derating as a function of the installation altitude

Example 1

A drive system is to be operated at an altitude of 2500 m (8203 ft) at a maximum ambient temperature of 30 °C (86 °F) and rated pulse frequency.

Since the ambient temperature is below 40 °C (104 °F), a compensation calculation (installation altitude/ambient temperature) can be applied.

Installation altitude 2500 m (8203 ft): Derating factor $k_I = 0.965$, $k_U = 0.94$

Max. ambient temperature 30 °C (86 °F): Derating factor $k_T = 1.133$

$k_I \times k_T = 0.965 \times 1.133 = 1.093 \Rightarrow 1.0$ due to installation altitude/ambient temperature compensation

$k = k_f \times (k_I \times k_T) = 1.0 \times (1.0) = 1.0$

Result: Current derating is not required.

However, IEC 60664-1 stipulates that voltage derating is required.

The units in voltage range 380 V to 480 V can be operated up to a voltage of 480 V x 0.94 = 451 V, and the units in voltage range 660 V to 690 V up to 690 V × 0.94 = 648 V.

Example 2

When a drive line-up is configured, a Motor Module with Article No. 6SL3320-1TE32-1AA0 is selected (rated output current 210 A, base load current for high overload 178 A). The drive line-up is to be operated at an altitude of 3000 m (9843 ft) where ambient temperatures could reach 35 °C (95 °F) as a result of the installation conditions. The pulse frequency must be set to 4 kHz to provide the required dynamic response.

Installation altitude 3000 m (9843 ft): Derating factor $k_I = 0.925$, $k_U = 0.88$

Max. ambient temperature 35 °C (95 °F): Derating factor $k_T = 1.066$

$k_I \times k_T = 0.925 \times 1.066 = 0.987 \Rightarrow$ not fully compensated by installation altitude/ambient temperature

$k = k_f \times (k_I \times k_T) = 0.82 \times (0.925 \times 1.066) = 0.809$

Result: Current derating is required.

Where these boundary conditions apply,

- the max. permissible continuous current of the Motor Module is: 210 A × 0.809 = 170 A
- the base-load current for high overloading is: 178 A × 0.809 = 144 A

IEC 60664-1 stipulates that voltage derating is required.

The selected unit can be operated up to a voltage of 480 V 3 AC × 0.88 or 720 V DC× 0.88 = 422 V 3 AC or 634 V DC. This means that a 400 V induction motor can be operated without any restrictions. Due to the installation altitude, however, derating might be required for the asynchronous motor (induction motor).

© Siemens 2024

Configuration

Selection of the Power Module or Motor Module

The Motor Module is selected initially on the basis of standstill current $I_{0\ 100\ K}$ (rated current for winding temperature rise 100 K) for synchronous motors and the rated current I_N for asynchronous motors (induction motors), and is specified in the motor description. Dynamic overloads, e.g. during acceleration, must be taken into account by duty cycles and may demand a more powerful Power Module or Motor Module. In this context, it is also important to remember that the output current of the Power Module or Motor Module decreases as a function of installation altitude, ambient temperature and pulse frequency setting (see explanations of derating characteristics).

For an optimum configuration, the rms motor current I_{load} calculated from the duty cycle is replicated on the Power Module or Motor Module. The following must apply:

$I_{N,\ module} \geq I_{load}$

$I_{N,\ module}$ = permissible continuous current of Power Module or Motor Module taking derating characteristic curves into account

The Power Modules or Motor Modules can be required to supply a higher output current for specific time periods. The characteristics or overload capability must be noted (see section SINAMICS S120 drive system) when modules are engineered for overload.

The SIZER for Siemens Drives engineering tool (integrated in the TIA Selection Tool) is capable of performing precise overload calculations.

Rated current – permissible and non-permissible motor/converter combinations

- Motor rated current higher than rated output current of the Power Module or Motor Module:
  In cases where a motor with a higher rated current than the rated output current of the Power Module or Motor Module is to be connected, the motor will only be able to operate under partial load. The following limit applies:
  The short-time current (= 1.5 × base-load current I_H) should be higher or equal to the rated current of the connected motor. Adhering to this dimensioning rule is important because the low leakage inductance of large motors causes current peaks which may result in drive system shutdown or in continuous output limiting by the internal protective electronic circuitry.
- Motor rated current significantly lower than rated output current of the Power Module or Motor Module:
  With the vector control system used, the rated motor current must equal at least 1/8 of the rated output current of the Power Module or Motor Module. With lower motor currents, the drive can be operated in V/f control mode.

Using pulse width modulation, the Power Modules or Motor Modules generate an AC voltage to feed the connected motor from the DC voltage of the DC link. The magnitude of the DC link voltage is determined by the line voltage and, in the case of a Motor Module, by the Line Module used and thus the maximum possible output voltage (see section SINAMICS S120 drive system). The speed and loading of the connected motor define the required motor voltage. The maximum possible output voltage must be greater than or equal to the required motor voltage; it may be necessary to select a motor with a different winding.

It is not possible to utilize all modes of pulse width modulation when a sine-wave filter is connected. The maximum possible output voltage (see sine-wave filter) is lower as a result.

© Siemens 2024

Configuration

Long motor cables

Using pulse width modulation, the Power Modules or Motor Modules generate an AC voltage to feed the connected motor from the DC voltage of the DC link. Capacitive leakage currents are generated in clocked operation and these limit the permissible length of the motor cable. The maximum permissible motor cable length is specified for each Power Module or Motor Module in the component description.

Motor reactors limit the rate of rise and magnitude of the capacitive leakage currents, thereby allowing longer motor cables to be used. The motor reactor and motor cable capacitance form an oscillating circuit which must not be stimulated by the pulse pattern of the output voltage. The resonant frequency of this oscillating circuit must therefore be significantly higher than the pulse frequency. The longer the motor cable, the higher the cable capacitance and the lower the resonant frequency. To provide a sufficient safety margin between this resonant frequency and the pulse frequency, the maximum possible motor cable length is limited, even when several motor reactors are connected in series. The maximum cable lengths in combination with motor reactors are specified in the technical specifications for the motor reactors.

Where a longer motor cable is required, a higher rating power unit must be selected or the permissible continuous output current $I_{continuous}$ must be reduced in relation to the rated output current I_N.

Rated output current I_N	**Length of the MOTION-CONNECT motor cable (shielded)**			
	> 50 … 100 m (164 … 328 ft)	> 100 … 150 m (328 … 492 ft)	> 150 … 200 m (492 … 656 ft)	> 200 m (656 ft)
Motor Module booksize format				
3 A/5 A	Use Motor Module 9 A	Use Motor Module 9 A	Not permissible	Not permissible
9 A	Use Motor Module 18 A	Use Motor Module 18 A	Not permissible	Not permissible
18 A	Use Motor Module 30 A or $I_{max} \leq 1.5 \times I_N$ $I_{continuous} \leq 0.95 \times I_N$	Use Motor Module 30 A	Not permissible	Not permissible
30 A	Always permissible	$I_{max} \leq 1.35 \times I_N$ $I_{continuous} \leq 0.9 \times I_N$	$I_{max} \leq 1.1 \times I_N$ $I_{continuous} \leq 0.85 \times I_N$	Not permissible
45 A/60 A	Always permissible	$I_{max} \leq 1.75 \times I_N$ $I_{continuous} \leq 0.9 \times I_N$	$I_{max} \leq 1.5 \times I_N$ $I_{continuous} \leq 0.85 \times I_N$	Not permissible
85 A/132 A	Always permissible	$I_{max} \leq 1.35 \times I_N$ $I_{continuous} \leq 0.95 \times I_N$	$I_{max} \leq 1.1 \times I_N$ $I_{continuous} \leq 0.9 \times I_N$	Not permissible
200 A	Always permissible	$I_{max} \leq 1.25 \times I_N$ $I_{continuous} \leq 0.95 \times I_N$	$I_{max} \leq 1.1 \times I_N$ $I_{continuous} \leq 0.9 \times I_N$	Not permissible

Notes for blocksize format Power Modules PM240-2

Motor reactors can be used for frame sizes FSA to FSG to allow longer motor cables to be used. Sine-wave filters can also be used for frame sizes FSA to FSC (400 V versions only).

The maximum cable lengths are shorter in order to comply with EMC compatibility according to EN 61800-3. See section EMC notes.

© Siemens 2024

Configuration

Line Modules

In multi-axis drive applications, a number of Motor Modules are operated on a common DC link, which is supplied with power by a Line Module.

The first task is to decide whether a Basic Line Module, Smart Line Module or an Active Line Module will be used. On one hand, this depends on whether the drive must be capable of regenerative feedback into the line supply and, on the other hand, whether the line infeed is uncontrolled, and therefore dependent on the line supply voltage, or controlled to obtain a constant DC link voltage. For an uncontrolled infeed Basic Line Modules/ Smart Line Modules, line voltage changes can influence the output power of the Line Modules.

The chassis format units are available in the 380 V to 480 V voltage range, but also include units in the 500 V to 690 V range. Basic Line Modules are designed for infeed operation only. Active Line Modules have regulated infeeds which feature a step-up function.

In order to calculate the required DC link power and select the correct Line Module, it is important to analyse the entire operating sequence of the drive line-up connected to the DC link. Factors such as partial load, redundancies, duty cycles, coincidence factors and the operating mode (motor / generator mode) must be taken into account.

The DC link power P_d of a single Motor Module is calculated from the shaft output P_{mech} of the motor and the efficiency of the motor η_m and Motor Module η_{wr}.

The following applies in motor mode: $P_d = P_{mech} / (\eta_m \times \eta_{wr})$

The following applies in generator mode: $P_d = P_{mech} \times \eta_m \times \eta_{wr}$

The motor and generator outputs must be added with the corresponding sign in order to calculate the total DC link power. For the power calculation, the DC link voltage U_d can be assumed to be constant. Therefore, the required DC link current can be calculated as $I_d = P_d/U_d$

Basic Line Modules

The DC link voltage U_d of the Basic Line Modules is load-dependent. Under no-load conditions, the DC link is charged to the line voltage crest value U_L, i.e. $U_d = \sqrt{2} \times U_L$, e.g. U_d = 566 V when a 400 V supply system is connected.

Under load conditions, the DC link voltage reaches the average value of the rectified line voltage applied to the terminals. This mean value results from the line voltage times a factor of 1.35. Under full load, the voltage in the DC link is slightly less than the theoretical value due to the voltage drop across the line reactor and the line feeder cable. In practice, the range of the DC link voltage U_d is as follows:

$1.41 \times U_L > U_d > 1.32 \times U_L$ (no load → rated power)

Smart Line Modules

The DC link voltage U_d of Smart Line Modules is regulated to the average value of the rectified line voltage U_L, i.e. $U_d \approx 1.35 \times U_L$

Due to the voltage drop across the line reactor and in the line feeder cable, the DC link voltage decreases in motor operation and increases in generator operation. The DC link voltage U_d thus varies within the same range as on drives with a Basic Line Module:

$1.41 \times U_L > U_d > 1.32 \times U_L$ (rated power, generating → rated power, motoring)

Active Line Modules

The DC link voltage U_d is regulated to an adjustable value (Active Mode). An Active Line Module can also be switched to Smart Mode and then operates like a Smart Line Module. In Active Mode, the Active Line Module draws a virtually sinusoidal current from the supply system.

The rated infeed power of the Line Module refers to a line voltage of 380 V, 400 V or 690 V (690 V applies only to chassis format Line Modules).

Depending on the ambient conditions (installation altitude, ambient temperature), the rated infeed power of the Line Modules may need to be reduced (see section SINAMICS S120 drive system).

The coincidence factor takes into account the time characteristic of the torque for each individual axis.

On the basis of these principles, the following procedure can be used to dimension the Line Module:

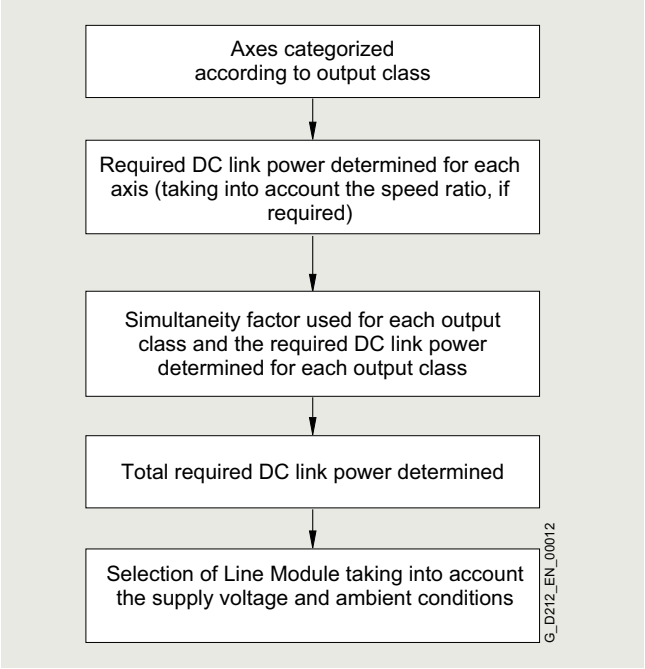

© Siemens 2024

Configuration

The following factors must also be taken into account when dimensioning the DC link:

Braking operation

As device losses are important in motor mode, the dimensioning for motor mode is also applicable to generator mode. With respect to motor braking operation, check that the energy fed back into the DC link does not exceed the permissible peak load capability of the Line Module.

In the case of higher regenerative outputs and to control the "line failure" operating scenario, a Braking Module must be provided, the Smart or Active Line Module must be overdimensioned or the regenerative output reduced by longer braking times.

For the configuration of the "EMERGENCY STOP" operating scenario, the Line Module must either be overdimensioned or an additional Braking Module must be used, so that the DC link energy can be dissipated as quickly as possible.

Checking the DC link capacitance

During power-up, the Line Modules limit the charging current for the DC link capacitors. Due to the limits imposed by the pre-charging circuit, it is essential to observe the maximum permissible DC link capacitance values for the drive line-up specified in the technical specifications.

Frequency with which the DC link is precharged

For chassis format Line Modules, the maximum permissible DC link pre-charging interval is 3 minutes.

Parallel connection of power units

Up to 4 Motor Modules or Line Modules in chassis format can be connected in parallel. Parallel connections can operate only in the Vector Control mode.

Parallel connections may only include Motor Modules or Line Modules of the same type and with the same voltage and output ratings. Mixtures of different modules, e.g. Basic Line Modules and Active Line Modules, cannot be connected in parallel. The CU320-2, SIMOTION D4x5-2 or CX32-2 Control Unit can control only one drive object of type "Parallel connection Line Modules" and one of type "Parallel connection Motor Modules". It is assumed that all Line Modules or Motor Modules linked to the Control Unit are connected in parallel. A Control Unit can control, for example, the following components:

- 1 Line Module + 2 parallel-connected Motor Modules
- 2 parallel-connected Line Modules + 3 parallel-connected Motor Modules

Combinations such as the following are not permissible:
2 Line Modules + 2 parallel-connected Motor Modules + 1 Motor Module

Further information can be found in the following Engineering Manual:
https://support.industry.siemens.com/cs/document/83180185

System disturbances

The voltage drops across the impedance between the supply system and a load as soon as the load draws current. In a symmetrical three-phase supply system, this is the network impedance Z_n which is calculated from the impedance Z_s of the supply system and the line-side impedance Z_e of the load.

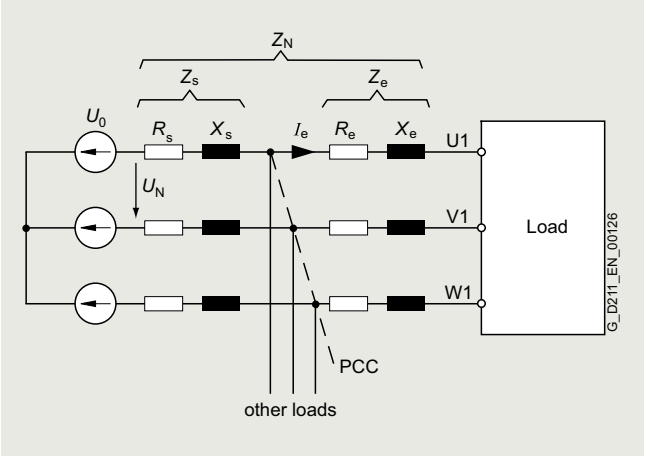

Effective impedances when a load is connected to a three-phase supply system

$Z_n = Z_s + Z_e = R_s + j\,X_s + R_e + j\,X_e = R_n + j\,X_n$

On a variable-speed drive, the line-side impedance Z_e is normally the total impedance provided by the line reactor and the feeder cable up to the PCC (Point of Common Coupling) for further loads. The ohmic component R_n is generally negligible as compared to the inductive component X_n. The inductance of an RI suppression filter is irrelevant for the purpose of this calculation, as this inductance is effective only for asymmetrical interference voltages, but not for a symmetrical line current.

If a load causes voltage drops across the impedance Z_s, this system disturbance has an impact at the PCC and thus also in the supply voltage to all other loads.

The voltage drop is proportional to current I_e and the impedance. To facilitate comparison of voltage drops under different supply and load conditions, the voltage drop is specified – normally at rated current – with reference to the phase voltage U_o. The calculation formula, e.g. for the per unit voltage drop u_k across an impedance Z is as follows:

$u_k = Z \times I_e / U_o$

© Siemens 2024

Configuration

Example 1:

A Power Module with rated line current I_e is directly connected to a low-voltage transformer and the PCC is the transformer connection terminal. The equation for the ratio between rated line current I_e of the Power Module and rated current I_N of the transformer is $I_e = 0.25 \times I_N$. The per unit voltage drop u_k of the 400 V transformer is 4 %. If the transformer is loaded with its rated current I_N, the voltage drop across impedance Z_s is 9.2 V (corresponding to 4 % of the phase voltage U_o = 230 V).

$u_k = (Z_s \times I_N) / 230\ V = 0.04$

The following formula applies to the rated line current I_e of the Power Module: $I_e = k \times I_N$

The per unit voltage drop across the transformer when loaded with I_e is thus: $u_k = Z_s \times I_e / U_o = Z_s \times k \times I_N / U_o$

With the specified ratio between I_e and I_N, the per unit voltage drop is calculated as u_k = 1 % or 2.3 V. In relation to the Power Module, this transformer therefore functions like a line impedance in accordance with u_k = 1 %.

The magnitude of system disturbance in converter systems is assessed on the basis of short-circuit power ratio R_{sc}:

$R_{sc} = S_{cv} / P$

According to this definition in accordance with EN 60146-1, P is the fundamental-wave apparent power drawn by the converter. S_{cv} is the short-circuit power drawn from the mains in the event of a short-circuit on the terminals U1, V1, W1. Since the ohmic components of impedances are negligible in practice, $Z_n \approx j\ X_n$ applies

$S_{cv} \approx 3 \times U_o^2 / X_n$

and thus $R_{sc} \approx 3 \times U_o^2 / (X_n \times P)$

The short-circuit power ratio R_{sc} is therefore dependent on the current output power P of the converter and is determined by network impedance X_n.

If we assume the power to be $P \approx 3 \times U_o \times I_e = \sqrt{3} \times U_N \times I_e$

the short-circuit power ratio R_{sc} is in inverse proportion to the per unit voltage drop u_k across the effective line impedance.

$R_{sc} \approx 3 \times U_o^2 / (X_n \times P) = 3 \times U_o^2 / (X_n \times 3 \times U_o \times I_e) = U_o / (X_n \times I_e) = 1 / u_k$

The short-circuit power ratio for example 1 is $R_{sc} \approx 100$ if no line reactor is installed (Z_e = 0).

Note:

The term "short-circuit power ratio" as used in technical standards is not a harmonized definition. The short-circuit power ratio R_{sce} defined according to IEC 61000-3-12 is calculated from the short-circuit power S_{SC} at the PCC referred to the power $S_{equ} = 3 \times U_o \times I_e$ consumed by the load.

Basic Line Modules and Power Modules are designed with a rectifier bridge on the line side. An inherent feature of the principle of rectification with load-side capacitance for DC link voltage smoothing are harmonics in the line current which result in a non-sinusoidal power input. The diagram shows the basic current waveform of a Power Module or Basic Line Module as a function of short-circuit power ratio R_{sc}.

Active Line Modules generate virtually no current harmonics (Active Mode) at all and are employed when system disturbance needs to be minimized, e.g. stipulation of IEEE 519 that THD (Total Harmonic Distortion) must be < 10 %.

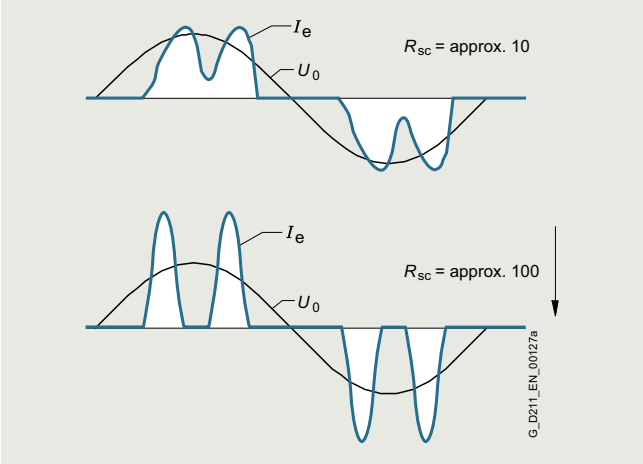

Line current of a Basic Line Module or Power Module as a function of the short-circuit power ratio R_{sc}

The rms of the line current I_e for which the line-side components must be rated comprises fundamental wave I_{e1} and the current harmonics, which increase in relation to the rise in short-circuit power ratio R_{sc}. If the DC link power P_d has been calculated (see Line Modules), the required line-side active power is a known quantity with Line Module efficiency, or the rectifier efficiency in the case of a Power Module. However, this active power is connected only with the current fundamental wave I_{e1}. The rms of the line current I_e is always greater than I_{e1} as a result of the current harmonics. The following applies for a short-circuit power ratio R_{sc} = 100:

$I_e \approx 1.3 \times I_{e1}$

The apparent power of a transformer selected to supply the drive must be greater than the drive power by a factor of about 1.3.

The harmonic currents produce only alternating power, but no active power. The following applies to the apparent power S on the line side:

$S^2 = P^2 + Q_1^2 + D^2$

- with active component
  $P = 3 \times U_o \times I_1 \times \cos \varphi_1$, which is solely produced by the current fundamental
- reactive component
  $Q_1 = 3 \times U_o \times I_1 \times \sin \varphi_1$
- and the distortion component

$$D = 3 \times U_0 \sqrt{\sum_{\nu=2}^{\infty} I_\nu^2}$$

The ratio between active power and apparent power is referred to as power factor λ or total power factor:

$$\lambda = \frac{P}{S} = \frac{P}{\sqrt{P^2 + Q_1^2 + D^2}}$$

© Siemens 2024

Configuration

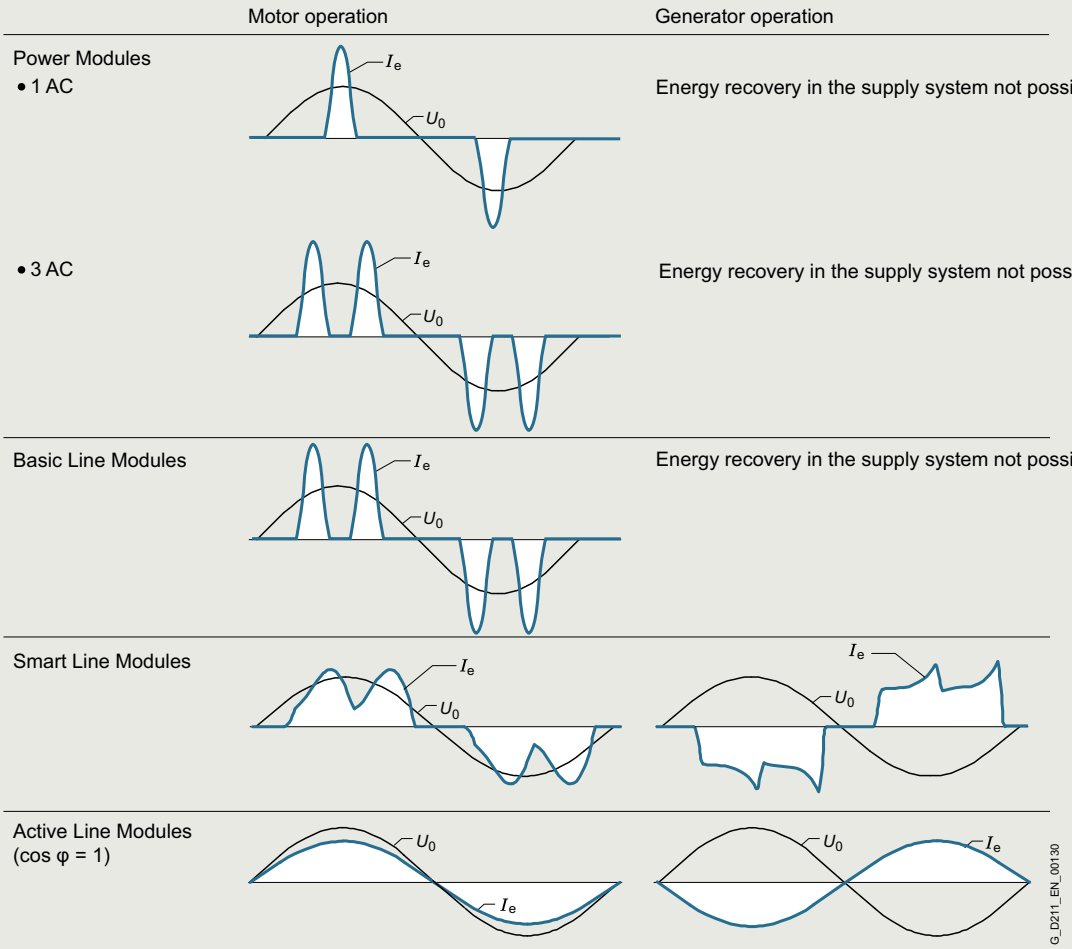

Typical waveform of the line current with Power Modules and Line Modules

© Siemens 2024

Configuration

Line-side power options (main switch, fuses, line filters, etc.)

The following line-side options are recommended for the drive configuration:

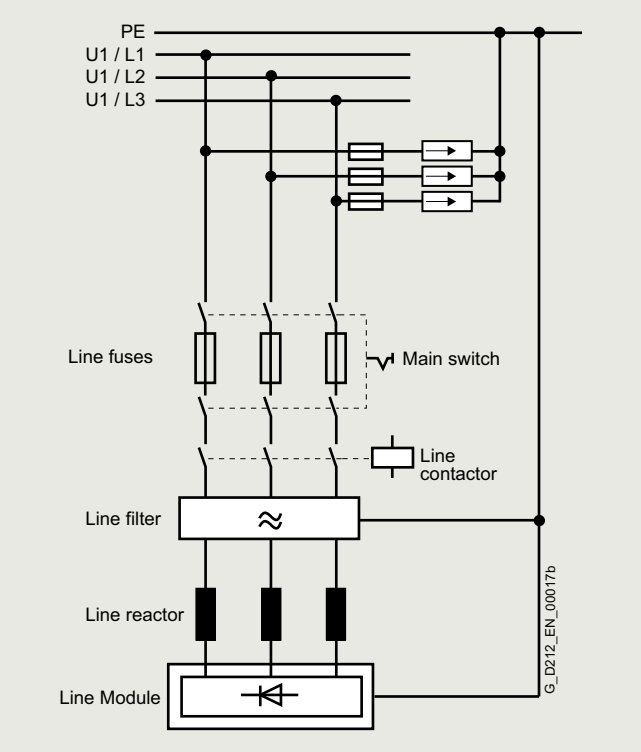

General overview of line infeed

The main switch may take various formats:

- Main and EMERGENCY STOP switch + fuse switch disconnector (with leading signal via auxiliary contact for trip mode)
- Load interruptor with fuses
- Circuit breaker

To protect the units against line-side surge voltages, it is advisable to install overvoltage protection directly at the infeed point (upcircuit of main switch). Surge protection is essential in order to satisfy the requirements of Canadian standard CSA C22.2 No. 14-05. For examples of suitable surge voltage arresters, go to
www.raycap.com or www.dehn-international.com

Depending on the power rating required, a fuse switch disconnector combined with a contactor or a circuit breaker can be used as the main switch.

A line contactor can be used, for example, if the drive has to be disconnected from the line supply in the event of a fault or for remote tripping. Follow the instructions in the SINAMICS S120 Configuration Guides to interlock the line contactor in the context of safety functions.

A line filter should be used on TN (grounded) systems to reduce system disturbance.

© Siemens 2024

Configuration

Motor reactors

High-speed switching of the power transistors causes capacitive recharging currents in the motor cable and motor, as well as steep voltage rises and peak voltages in the motor windings. These currents can be reduced by installing a motor reactor.

The voltage drop across the motor reactor is normally negligible at output frequencies of 60 Hz and below. The per unit voltage drop u_k across the reactor is between 1 % and 4 % at rated current and 50 Hz. With a cos φ of 0.86 and an output frequency of 50 Hz, the motor voltage is about 2 % lower (as a result of the motor reactor) than in systems without a motor reactor.

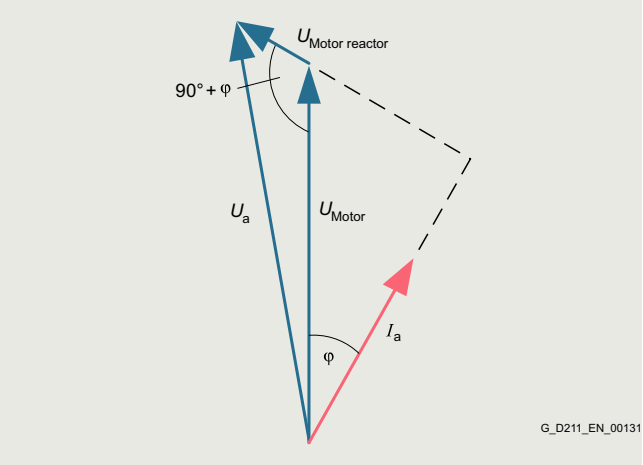

Phasor diagram of motor with motor reactor

Motor reactors are compatible with all modulation types (space vector modulation, edge modulation).

Sine-wave filters

Sine-wave filters are low-pass LC filters which only let through the fundamental component of the square-wave, pulse-width-modulation output voltage of a Power Module or Motor Module. The resonant frequency of the sine-wave filter must be significantly lower than the pulse frequency of the Power Module or Motor Module and be dimensioned with a sufficient margin to the maximum permissible output frequency. Sine-wave filters therefore define the choice of pulse frequency and place a limit on the maximum possible output frequency. This type of filter is compatible only with space vector modulation. The output voltage of a Power Module or Motor Module is thus limited to an output voltage (rms value) of approximately 0.67 x DC link voltage. With the voltage drop across the sine-wave filter, the maximum possible output voltage (rms value) is approximately 0.63 x DC link voltage. Parameters are used to register a sine-wave filter with the Control Unit. This ensures that all those values that are dependent on it, such as permissible modulation modes and maximum output frequency, are correctly preassigned.

Sine-wave filters can be used only in conjunction with Vector Control and V/f Control modes.

dv/dt filter plus VPL and dv/dt filter compact plus VPL

The dv/dt filter plus VPL and dv/dt filter compact plus VPL comprise two components, i.e. a dv/dt reactor and a voltage limiting network (Voltage Peak Limiter). As a consequence, the use of dv/dt filters plus VPL and dv/dt filters compact plus VPL represents a suitable method of reducing the voltage load on the motor winding for line supply voltages of 500 V to 690 V to such an extent that a special motor insulation is not required. The bearing currents are also significantly reduced. Using these filters therefore allows standard motors with standard insulation and without insulated bearings to be operated with SINAMICS converters up to line supply voltages of 690 V. This applies to both Siemens motors and third-party motors.

Sensor Modules

Signal conditioning for various encoders (incremental encoder sin/cos 1 V_{pp}, absolute encoder, resolver) takes place remotely, i.e. in the vicinity of the encoder, with customized Sensor Modules. Depending on the measuring system, SMC10, SMC20 or SMC30 Sensor Modules are used. The Sensor Modules are designed to be mounted on DIN rails. They are also used for the signal conditioning of external (machine) encoders.

Expansion modules

The CU320-2 Control Unit features interfaces and terminals for communication as standard. SINAMICS S120 offers the following expansion modules:

- TB30 Terminal Board (terminal expansion for plugging into the option slot on the CU320-2 Control Unit)
- TM31 Terminal Module (terminal expansion for connection via DRIVE-CLiQ)

The following criteria regarding the use of expansion modules must be taken into account:

- Only one option board can be plugged into the option slot on the CU320-2 Control Unit.
- A maximum of 8 Terminal Modules may be operated in a drive line-up.

Braking Modules and braking resistors

Braking units comprise a Braking Module and a braking resistor, which must be attached externally.

Braking units are used when

- regenerative energy occurs occasionally and briefly, for example when the drive brakes (EMERGENCY STOP) and the drive has no regenerative feedback capability
- the drive features regenerative feedback units but cannot return the energy fast enough to the supply on an "EMERGENCY STOP"
- the drive needs to be shut down after a power failure

The braking units for Power Modules in blocksize format consist of braking resistors only, as they feature a braking chopper as standard.

In keeping with the brake resistors for the blocksize format, the braking choppers integrated in the Power Modules PM240-2 are basically designed for a load clearance of 5 %, corresponding to a load cycle of 12 s with a playing time of 240 s. In addition, the integrated braking choppers can carry 100 % of the maximum regenerative power in frame sizes FSA to FSC, and 50 % in frame sizes FSD to FSF, each at an ambient temperature of 40 °C. This extension does not apply to frame size FSG.

A number of Braking Modules can be connected in parallel to the DC link in order to increase the braking power. Each Braking Module requires its own braking resistor. It is not permissible to operate a mix of braking units in booksize and chassis format on the same DC link.

The braking power required is calculated from the DC link power P_d of the drive line-up or Power Module in generator operation.

© Siemens 2024

Configuration

Braking Modules and braking resistors for booksize format

To operate booksize format Braking Modules, a minimum capacitance is required in the DC link. This capacitance is determined by the braking resistor used.

Braking resistor 0.3 kW/25 kW → DC link capacitance 220 µF

Braking resistor 1.5 kW/100 kW → DC link capacitance 330 µF

The capacitance of the booksize format Braking Module of 110 µF is included in the total capacitance value. If the DC link capacitance is not sufficient for the use of one or more Braking Modules, a Capacitor Module can be added to increase the effective DC link capacitance of the drive line-up.

When booksize format Braking Modules are connected in parallel, the minimum capacitance specified above must be available for each Braking Module.

Note: Only booksize format modules that are directly connected to each other via the DC link busbar can be included in the total capacitance.

If the DC link capacitance is not sufficient for the operation of a number of Braking Modules, Capacitor Modules can be used to increase the DC link capacitance. The max. permissible DC link capacitance of a drive line-up on a Line Module must be taken into account. The max. DC link capacitances to be taken into account for pre-charging current limiting on the Line Modules are listed in the technical specifications for the Line Modules.

The braking resistor discharges the excess energy from the DC link:

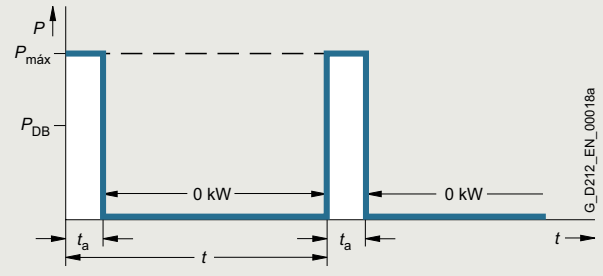

t Period of braking duty cycle in s
t_a Load duration in s
P_{DB} Continuous power of braking resistor in kW
P_{max} Peak power of braking resistor in kW

Duty cycle for braking resistors

Braking Modules and braking resistors for chassis format

Braking Modules with a braking power of 25 kW (for frame size FX) and 50 kW (for frame sizes GX, HX and JX) are available with matching braking resistors for chassis format units. Braking units can be connected in parallel to obtain higher braking powers. In this case, the units can be installed at the Line Module end or Motor Module end.

When a Braking Module is installed in a Basic Line Module of size GB/GD, the cables supplied for the DC link connection are too short. In this case, the cable harness set 6SL3366-2NG00-0AA0 must be ordered to make the Braking Module connection.

Frame size	**Rated power P_{DB} power**	**Peak power P_{15}**	**Max. possible mounting locations for Braking Module**
FB	25 kW	125 kW	1
GB/GD	50 kW	250 kW	1
FX	25 kW	125 kW	1
GX	50 kW	250 kW	1
HX	50 kW	250 kW	2
JX	50 kW	250 kW	3

The Braking Module features an electronics interface (X21) with monitoring function. The braking resistor housing contains a monitoring thermocontact. Both these monitors can be integrated into the warning or shutdown circuits of the drive system.

Calculation of Braking Module and braking resistor requirements

- For periodic duty cycles with a cycle duration of ≤ 90 s, the average value of the braking power within this duty cycle must be defined. The relevant cycle duration must be applied as the time base.
- For periodic duty cycles with a cycle duration of ≥ 90 s or for sporadic braking operations, a time interval of 90 s in which the highest average value occurs must be selected. The 90 s period must be applied as the time base.

Apart from the average braking power, the required peak braking power must also be taken into account when braking units are selected (Braking Module and braking resistor).

© Siemens 2024

Configuration

Basic data

Supply voltage	Power range Motor Modules	**Braking Module continuous power P_{DB}**	**Braking Module power P_{40}**	**Braking Module power P_{20}**	**Braking Module peak power P_{15}**
380 … 480 V	110 … 132 kW	25 kW	50 kW	100 kW	125 kW
	160 … 800 kW	50 kW	100 kW	200 kW	250 kW
660 … 690 V	75 … 132 kW	25 kW	50 kW	100 kW	125 kW
	160 … 1200 kW	50 kW)	100 kW	200 kW	250 kW

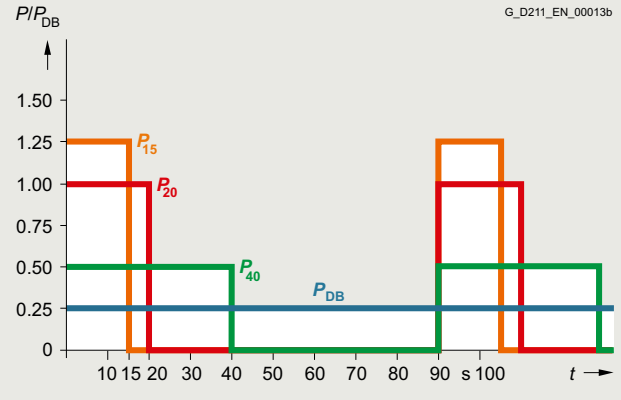

Load diagram

Braking resistors for Power Modules in blocksize format

The braking resistors for frame sizes FSA and FSB must be externally mounted. Braking resistors for frame sizes FSC to FSG should be mounted outside the control cabinet due to their high heat losses.

The Control Unit monitors the pulse/pause ratio (ON time/OFF time) of the braking resistor and shuts it down on faults if it calculates that the resistor could overheat.

Braking resistors feature a temperature switch with NC contacts that open when the permissible temperature is exceeded. The temperature switch must be evaluated to prevent consequential damage if the braking resistor overheats.

The braking power P_{mech} on the motor shaft is higher than the power loss of the braking resistor, as this only needs to convert the DC link energy into heat. The DC link power P_d of the Power Module in generator mode is calculated from the shaft power P_{mech} of the motor and the power loss in the motor $P_{v\ Motor}$ and in the Power Module $P_{v\ Power\ Module}$ as:

$$P_d = P_{mech} - P_{v\ Motor} - P_{v\ Power\ Module} = P_{braking\ resistor}$$

The power losses can be estimated from the efficiency values of the motor η_m and Power Module η_{wr}:

$$P_{braking\ resistor} = P_d = P_{mech} \times \eta_m \times \eta_{wr}$$

Booksize format Capacitor Module

The Capacitor Module functions as a short-term energy buffer, e.g. for bridging brief power failures or for storing braking energy. The buffered energy W can be calculated with the following formula:

$$W = ½ \times C \times (U_{d1}^2 - U_{d2}^2)$$

C = effective capacity of Capacitor Module 4 mF

U_{d1} = DC link voltage when buffering starts

U_{d2} = DC link voltage when buffering ends

Example:

U_{d1} = 600 V; U_{d2} = 430 V

The resultant energy calculation is W = 350 Ws

With this energy, for example, it is possible to buffer a Motor Module with 3 kW load for about 100 ms.

Booksize format Control Supply Module

The Control Supply Module provides a 24 V DC power supply via the line or DC link in order to maintain the electronics power supply for the components in the event of a line failure. This makes it possible, for example, to make emergency retraction movements in the event of the failure of the line supply.

© Siemens 2024

Configuration

External 24 V DC supply of components

Power units (Line Modules and Motor Modules) and other system components must be provided with a 24 V DC voltage via an electronics power supply made available externally.

SITOP devices, which are available as a modular solution, are provided as the external 24 V DC electronic power supply.

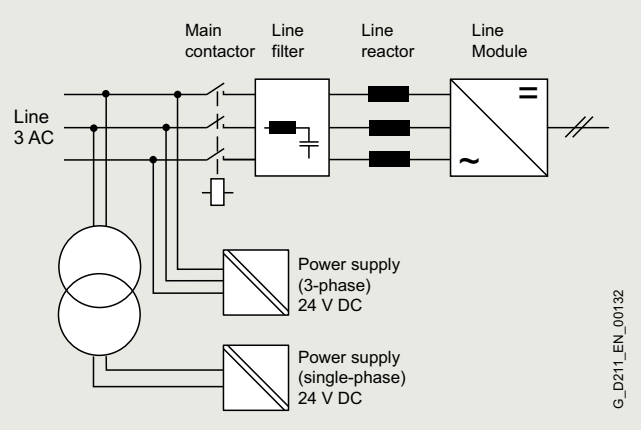

Connecting the external electronics power supply

The current requirement $I_{DC\ ext}$ is calculated using the following formula:

Σ [Control Unit + built-in options (e.g. TB30 + CBC10) + system components + Line Module + Σ (Motor Modules + SMCxx + motor brake control)]

The other system components (e.g. line contactor) must also be taken into account.

The current requirement of individual components can be found in the relevant technical specifications.

Limit values when configuring the system:

- The current-carrying capacity of the integrated 24 V DC busbar (featured only in booksize format) is max. 20 A.
- In the event of higher current requirements, a number of 24 V DC power supplies must be provided in one drive line-up. The other infeeds are implemented by means of 24 V terminal adapters (booksize format only).
- Cable cross sections of up to 2.5 mm² may be connected to the Control Units, Terminal Boards, Terminal Modules and Sensor Modules.
- Cable cross sections of up to 6 mm² may be connected to the 24 V terminal adapters (booksize format only) for the Line Modules and Motor Modules.
- The external 24 V DC power supply should only be used for the SINAMICS components and the direct loads.

Capacitors in the electronics supply of most components must be charged when the 24 V DC supply is first switched on. To charge these capacitors, the power supply must first supply a current peak which can be a multiple of the current requirement $I_{DC\ ext}$ calculated above. Allowance must be made for this current peak when selecting protective elements, e.g. miniature circuit breakers, for incorporation in the 24 V DC supply system (types with let-through I^2t values according to characteristic D). The current peak flows for an interval t_e of less than 100 ms. The crest value is determined by the impedance of the 24 V DC supply and its electronically limited maximum current.

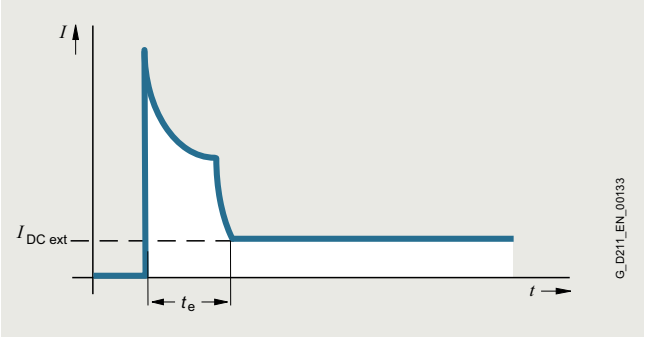

Typical waveform of the switch-on current of the external 24 V DC supply

© Siemens 2024

Configuration

Specification of components for connection system

To complete the drive system, components such as motors and encoders must be connected to it via cables.

For motors with DRIVE-CLiQ interface, the DRIVE-CLiQ cables carry the 24 V DC power supply. On all other Sensor Modules, a separate 24 V DC power supply must be provided.

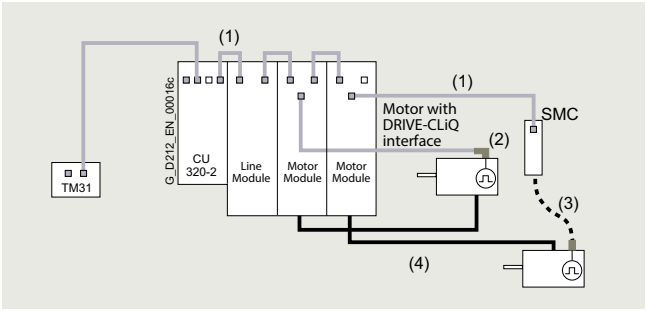

Drive connection system

Legend	Cable	Description
(1)	DRIVE-CLiQ cables	Standard cables for cabinet-internal configuration without 24 V cores
(2)	DRIVE-CLiQ MOTION-CONNECT 500/800 cables	Shielded cables with 24 V cores MOTION-CONNECT 500 for fixed installation (e.g. in a cable channel) and MOTION-CONNECT 800 for flexible installation (e.g. in cable carriers)
(3)	MOTION-CONNECT 500/800 signal cables	Suitable for the relevant measuring system; in versions MOTION-CONNECT 500 for fixed installation (e.g. in a cable channel) and MOTION-CONNECT 800 for flexible installation (e.g. in cable carriers)
(4)	MOTION-CONNECT 500/800 power cables	Shielded motor cables MOTION-CONNECT 500 for fixed installation (e.g. in a cable channel) and MOTION-CONNECT 800 for flexible installation (e.g. in cable carriers)

DRIVE-CLiQ cables are available in different versions and lengths (see section MOTION-CONNECT connection systems).

The required bending radii apply particularly to short cables. In addition to the distance between the two DRIVE-CLiQ sockets that the cable is to connect, a cable length of at least 60 mm (2.36 in) must be added to allow for bending radii. When defining lengths of prefabricated cables, see section MOTION-CONNECT connection systems.

Unused DRIVE-CLiQ sockets can be sealed with a blanking plug to prevent the ingress of contaminants. Suitable blanking plugs are supplied in the accessories pack for the units.

Mechanical configuration of the drive

A SINAMICS S drive line-up comprises a Line Module, Motor Modules, DC link components, a Control Unit, and the optional expansion modules.

Configuration of a drive line-up in booksize format

The following criteria must be taken into account when a drive line-up of booksize format units is configured:

- The Smart Line Modules 5 kW and 10 kW must always be arranged on the left as the first module. All other Line Modules should be arranged on the left as the first module. The CU320-2 Control Unit in this case can be "snapped onto" the left-hand side of the Line Module.
- The DC link busbars can be connected on the right and left with Basic Line Modules, Active Line Modules and Smart Line Modules rated 16 kW and larger. In this case, the modules can be arranged in reverse order (from right to left) or on both sides (see arrangement for units in chassis format).
- Only one Line Module is permitted in each drive line-up.
- A number of drive line-ups must be configured for power supplies which cannot be provided by the highest rating.
- The Motor Modules must be arranged beside the Line Module in descending order of the rated currents, that is, the Motor Module with the highest rated current is to be mounted immediately adjacent to the Line Module, and the Motor Module with the lowest rated current is positioned furthest away from the Line Module.
- DC link busbars are integrated in the Line Modules, Motor Modules, Braking Modules, Capacitor Modules and Control Supply Modules so that the modules can be connected to the drive line-up. The current carrying capacity of the integrated DC link busbars is determined by the module rating and is either 100 A or 200 A (see technical specifications). It must be ensured that the DC link busbars have the required current carrying capacity at every point within the drive line-up. When high-output Motor Modules (DC link busbars 200 A) and low-output Motor Modules (DC link busbars 100 A) are used, for example, the Braking Module (DC link busbars 100 A) must be installed downstream of the high-output Motor Modules.
- DC link adapters can be used to implement multi-tier configurations.
- The drive line-ups should be configured such that the total length of all power cables for the motor cables and the line cable, which should preferably be shielded, in each individual line-up does not exceed the permissible total cable length.

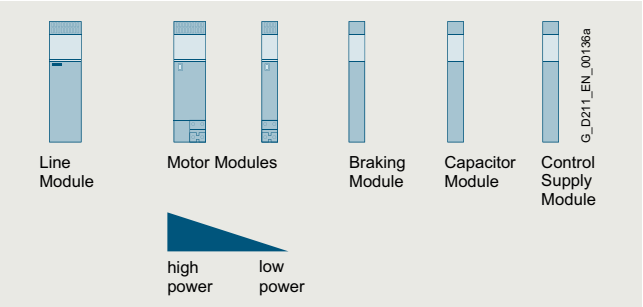

Power-oriented arrangement of booksize format Motor Modules

- The Control Unit configuration is flexible. The following configuration options are possible:
  - "Docking" on the left-hand side of the Line Module
  - Direct mounting next to the drive line-up on a mounting plate
  - Mounting in other cabinet panels taking into account the permissible DRIVE-CLiQ cable lengths

© Siemens 2024

Configuration

Configuration of a drive line-up in chassis format

- The Motor Modules must be positioned to the left or right of the Line Module with decreasing rated currents (i.e. the Motor Module with the highest rated current is positioned next to the Line Module, while the Motor Module with the lowest rated current is at the end on the left or right). You must ensure that the cables/busbars for the DC link meet the current-carrying capacity requirements for all connected Motor Modules.
- The inductance of the DC link busbars must be low, achieved, for example, by arranging the bars as close as possible in parallel, but observing the required creepage distances and air gaps.
- The Control Unit configuration is flexible. The following configuration options are possible:
  - "Docking" on the left-hand side of the Line Module
  - Direct mounting next to the drive line-up on a mounting plate
  - Mounting in other cabinet panels taking into account the permissible DRIVE-CLiQ cable lengths

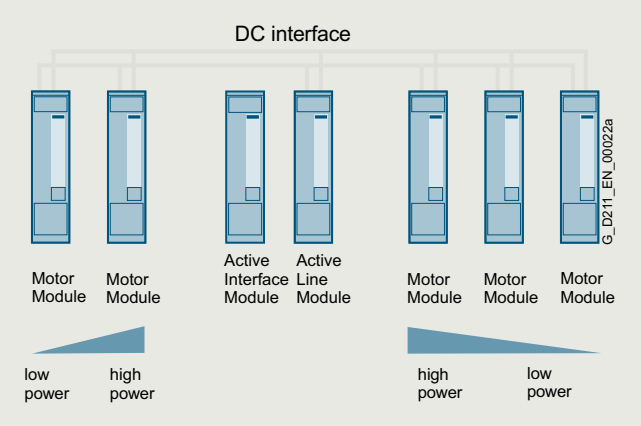

Configuration of a mixed drive line-up in chassis and booksize formats

A mixed drive line-up must be configured according to the rules for chassis format units. The Motor Modules in booksize format can be connected to the higher-level DC link busbars by means of DC link rectifier adapters. There are two possible connection options - A and B. With A, each Motor Module in booksize format is connected using the appropriate DC link rectifier adapter. With B, Motor Modules in booksize format are connected to one another and the internal DC link busbars and a DC link rectifier adapter are used on the last Motor Module to make the connection to the higher-level DC link busbars. In the latter case, the DC link rectifier adapter must be attached to the last Motor Module on the right-hand side of the line. As regards the arrangement of modules with different current ratings, the guidelines specified under "Configuration of a drive line-up in booksize format" also apply to mixed drive line-ups.

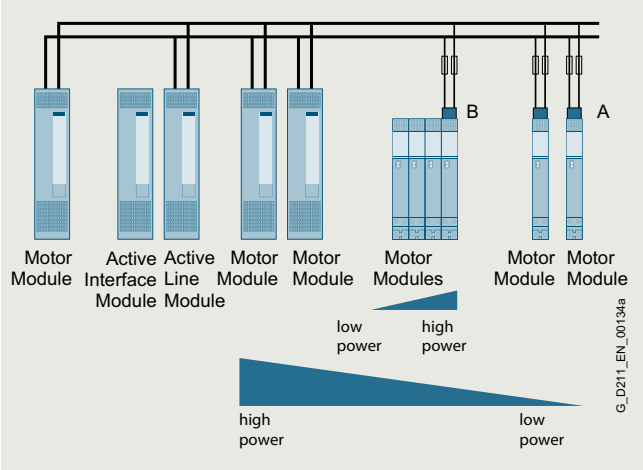

Ideally, the entire length of the higher-level DC link busbars can be dimensioned for the rated DC link current of the Line Module. The busbars are then protected by the line fuses at the infeed end.

If the cross section of the DC link busbars or cabling is reduced, this branch must be designed to be short-circuit-proof. The current limiting mechanism of the Motor Modules connected to the branch with reduced cross section then protects it against overloading. It is not advisable to reduce busbars or cables down to the mandatory minimum cross section. No additional overload protection (fuse) is required on the assumption that overloading cannot occur as a result of cable damage on the cable route to the Motor Module and that the circuit branch is protected against overloading by the Motor Module.

Where the cross section has been significantly reduced, or the circuit design is not inherently short-circuit-proof, a branch fuse must be installed at the beginning of the section with reduced cross section in order to protect the DC link connections involved. In the event of a fault, the fuse must be capable of interrupting DC fault currents; other types of miniature circuit breaker are not suitable.

Allocation of branch fuses for option (A) in a supply system with grounded neutral (TN system). The calculations are based on the assumption that $\tau = L/R < 10$ ms applies to the time constant τ in the DC fault circuit and that the fault current is interrupted by the fuse after maximum 1 s.

© Siemens 2024

Configuration

Motor Module booksize format I_N	Recommended cable cross-section for Cu conductors and PVC insulation with a permissible operating temperature of 70 °C (158°F) on the conductor	**DC link rectifier adapter**	**LV HRC fuse**		
				with knife contacts	with screw contacts
A	mm^2	Article No.	A	Article No.	Article No.
3	2.5	**6SL3162-2BD00-0AA0**	25	**3NE8015-1**	**3NE8715-1**
5	2.5		25	**3NE8015-1**	**3NE8715-1**
9	4		50	**3NE8017-1**	**3NE8717-1**
18	10		63	**3NE8018-1**	**3NE8718-1**
30	10		80	**3NE8020-1**	**3NE8720-1**
45	35	**6SL3162-2BM00-0AA0**	125	**3NE8022-1**	**3NE8722-1**
60	70		160	**3NE8024-1**	**3NE8724-1**
85	95		250	**3NE3227**	**3NE8727-1**
132	95		315	**3NE3230-0B**	**3NE8731-1**
200	95		315	**3NE3230-0B**	**3NE8731-1**
2 × 3	2.5	**6SL3162-2BD00-0AA0**	25	**3NE8015-1**	**3NE8715-1**
2 × 5	4		50	**3NE8017-1**	**3NE8717-1**
2 × 9	10		63	**3NE8018-1**	**3NE8718-1**
2 × 18	10		125	**3NE8022-1**	**3NE8722-1**

© Siemens 2024

Configuration

Mandatory minimum installation clearances

Ventilation clearances for Sensor Modules and Terminal Modules

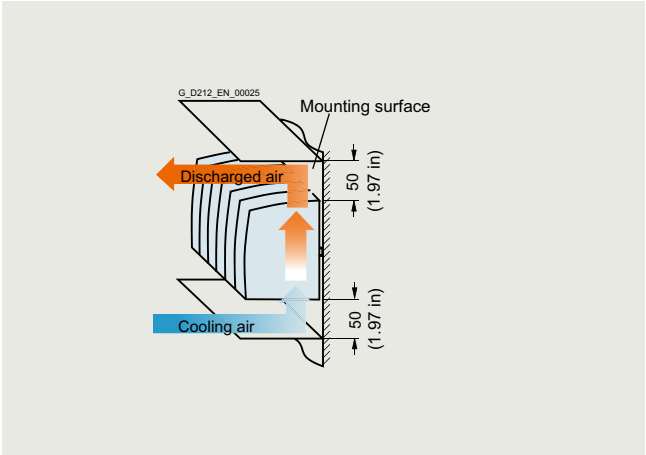

Sensor Modules and Terminal Modules can be mounted directly adjacent to one another.

When mounted on the wall, line reactors and line filters require a ventilation space of 100 mm (3.94 in) above and below respectively.

Ventilation clearances for booksize format components

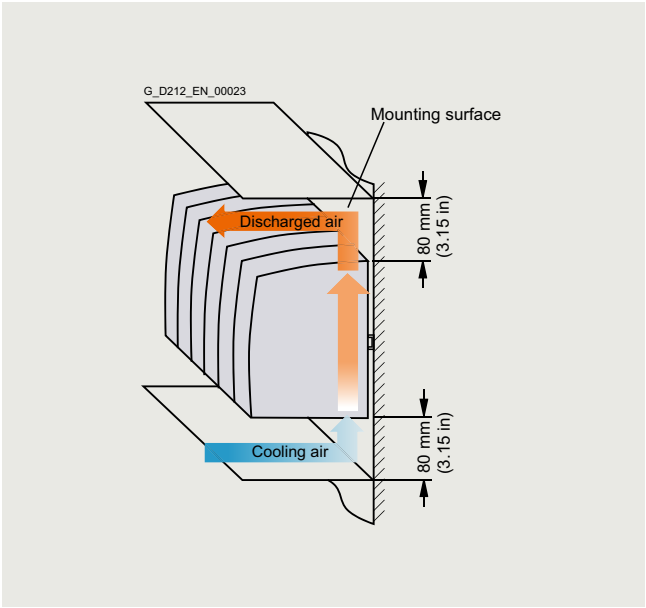

Line Modules 5 kW up to 55 kW
Active Interface Modules
Motor Modules up to 85 A

Ventilation clearances for blocksize format components

The Power Modules PM240-2 can be mounted side by side. A side clearance of 1 mm (0.04 in) is recommended for tolerance-related reasons.

The ventilation clearances for Power Modules PM240-2 frame sizes FSA to FSC are:

- Top: 80 mm (3.15 in)
- Bottom: 100 mm (3.94 in)
- Front: 0

The ventilation clearances for Power Modules PM240-2 frame sizes FSD to FSG are:

- Top: 300 mm (11.81 in)
- Bottom: 350 mm (13.78 in)
- Front: 100 mm (3.94 in)

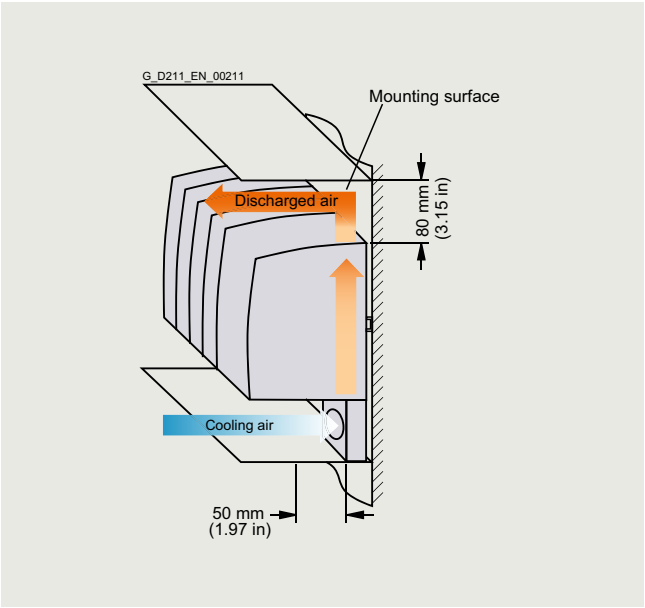

Active Line Modules 80 kW and 120 kW
Motor Modules 132 A and 200 A

© Siemens 2024

Configuration

Ventilation clearances for chassis format components

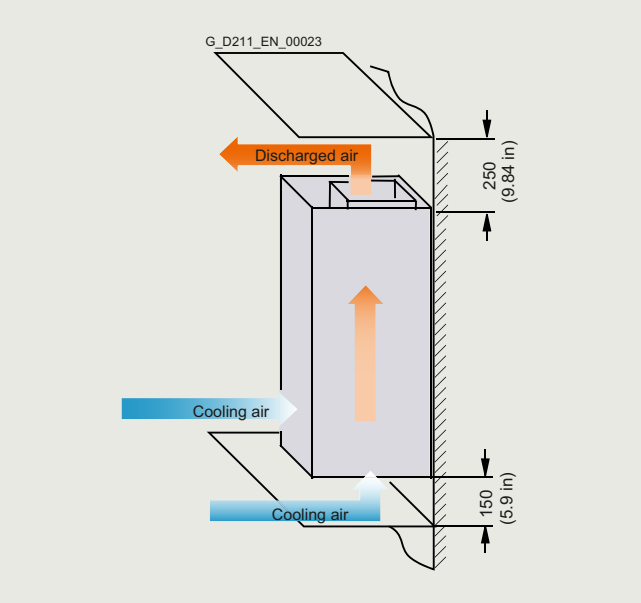

Basic Line Modules

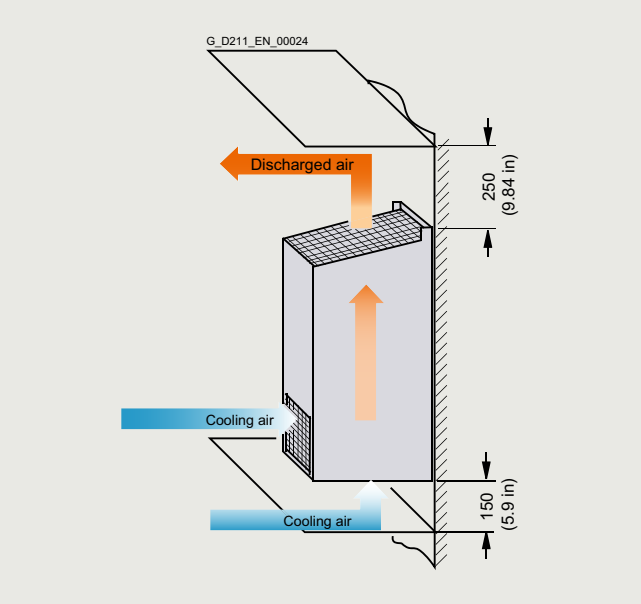

Active Interface Modules in frame sizes FI and GI

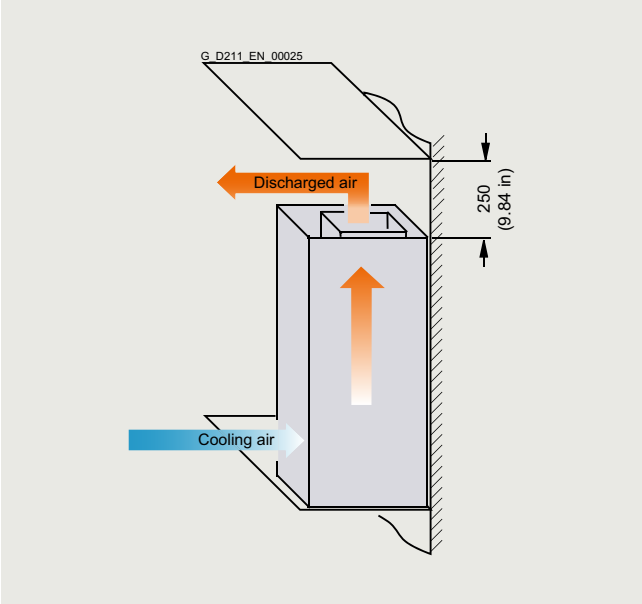

Active Interface Modules in frame sizes HI and JI

© Siemens 2024

Configuration

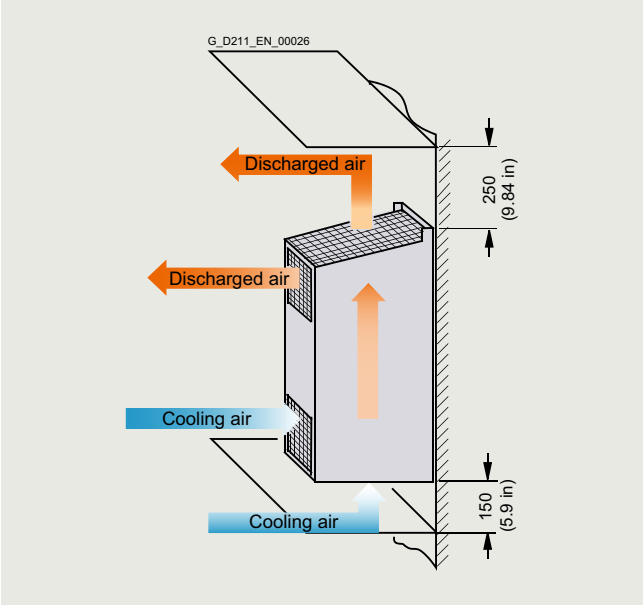

Power Modules, Motor Modules and Active Line Modules in frame sizes FX and GX

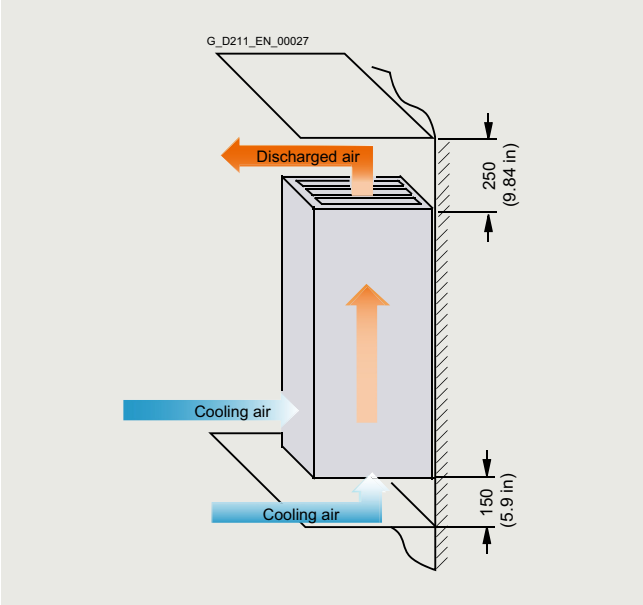

Active Line Modules in frame sizes HX and JX
Motor Modules in frame sizes HX and JX

Calculation of internal control cabinet temperature

Control cabinet with forced ventilation

In a control cabinet with forced ventilation, the heat loss P_V passes to the through-flowing air that then rises in temperature by $\Delta\varphi$. In the time interval Δt, the air absorbs the heat $Q = c \times m \times \Delta\varphi = P_V \times \Delta t$, and at the same time the air volume V flows through the control cabinet (c is the specific heat capacity of the air). Mass m and volume V are linked via density ρ. $m = \rho \times V$ applies. When inserted in the formula above, the following equation is obtained: $P_V = c \times \rho \times (V/\Delta t) \times \Delta\varphi$

The heat loss P_V, that can be dissipated by forced ventilation, is thus proportional to the volume flow $\dot{V} = V/\Delta t$ that the fan delivers through the control cabinet and the permissible degree of heating $\Delta\varphi = T_c - T_a$

The heat capacity and density of the air depend on the humidity level and atmospheric pressure. For this reason, the equation is dependent on other parameters. To estimate the temperature rise in the control cabinet in a typical industrial environment, c = 1 kJ/kg × K and ρ = 1.2 kg/m^3 can be assumed. This results in the following quantity equation:

P_V [W] = 1200 × $\dot{V}$ [m^3/s] × $\Delta\vartheta$ [K]

with $\Delta\varphi = T_c - T_a$

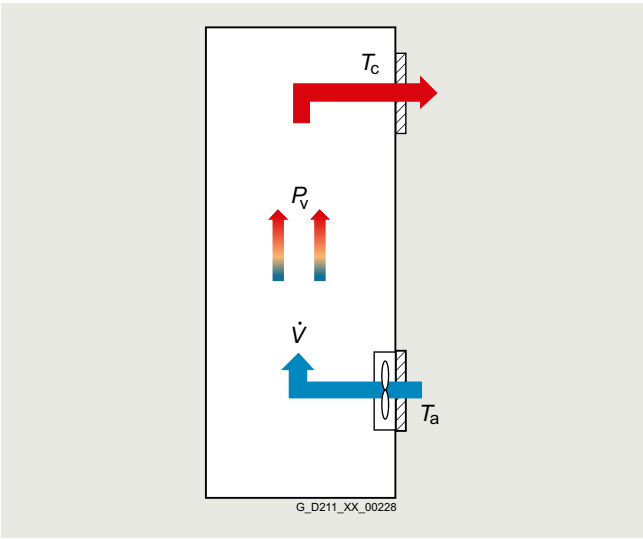

The temperature T_c as the ambient temperature of the components in the interior of the control cabinet can be estimated with the formula given and must be checked by means of measurements for each application because local hot spots can form, e.g. in close proximity to a source of heat or hotspot caused by unfavorable air circulation.

© Siemens 2024

Configuration

Control cabinet without forced ventilation

A control cabinet without forced ventilation conducts the heat loss P_v generated in the interior to the surrounding air (external temperature T_a) through the surface. For the heat flow, $\dot{Q}$ the following applies in the steady state:

$$\dot{Q} = k \times A \times \Delta\vartheta = P_v$$

k is the heat transfer coefficient, A is the effective cooling surface of the control cabinet, and $\Delta\varphi$ is the temperature difference between the internal cabinet temperature and the external temperature $\Delta\varphi = T_c - T_a$

The transfer of heat through the walls of the control cabinet is determined by the heat transfer of the interior air to the cabinet wall, heat conduction within the cabinet wall and heat transfer from the cabinet wall to the external air. The heat transfer is to be calculated by the heat transfer coefficient α, and heat conduction by the heat conductivity λ and the thickness d of the cabinet wall. The resulting equation for the possible heat loss P_v is:
$P_v = [1/(1/\alpha_i + d/\lambda + 1/\alpha_a)] \times A \times \Delta\varphi = k \times A \times \Delta\varphi$

$$P_v = k \times A \times \Delta\varphi$$

Typical values for the heat transfer coefficient k in the case of control cabinets with walls of painted stainless steel which are up to 2 mm (0.08 in) thick:

	k value
Stationary (non circulating) air in the control cabinet and stationary (non circulating) external air $\alpha_i = \alpha_a = 6$ W/(m² × K)	approx. 3 W/(m² × K)
Circulating air in the control cabinet and non-circulating external air $\alpha_i = 40$ W/(m² × K); $\alpha_a = 6$ W/(m² × K)	approx. 5.2 W/(m² × K)

The calculating procedures of IEC 60890 (VDE 0660 Part 507) can be used for determining the ambient temperature T_c in the interior of the control cabinet. All heat sources in the control cabinet must be taken into account in the calculation, e.g. Line Modules, Motor Modules, power supplies, filters, reactors. It is important to determine the effective cooling surface dependent on the method of setting up the control cabinet. The standard can also be used for control cabinets with ventilation openings (natural convection).

The estimated temperature T_c and the temperature distribution in the control cabinet should be checked with measurements for every application since local hotspots can form, e.g. in close proximity to a source of heat or a hotspot.

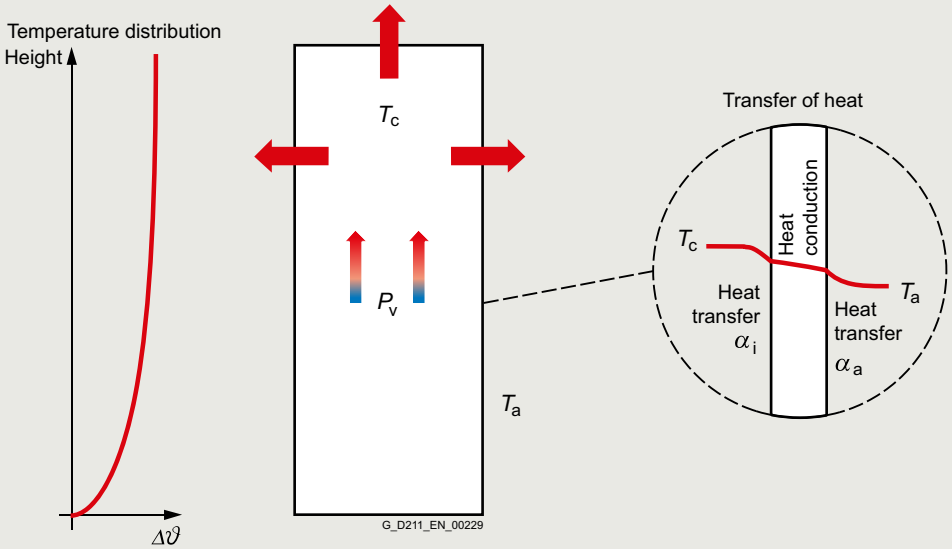

Control cabinet with air conditioner

The control cabinet emits heat via its surface and the air conditioner.

Manufacturers provide information on the design of the air conditioner, e.g. Rittal:

www.rittal.de/produkte/system-klimatisierung/index.asp

© Siemens 2024

Notes

© Siemens 2024

Drive applications

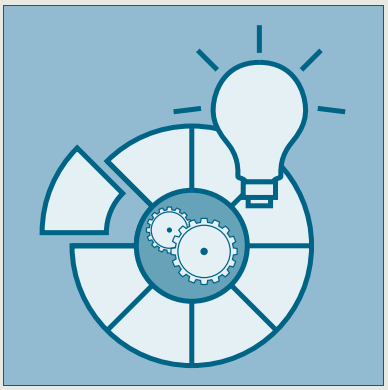

13/2 Drive applications
13/6 Test stands
13/7 Storage and retrieval machines
13/9 Converting

© Siemens 2024

Overview

Standard applications: Understanding and profiting from know-how

The development of standard applications is a major area of activity within the Siemens automation and drive environment. The scope of these standard applications ranges from clearly organized documentation that focuses on one or several technologies (e.g. Safety Integrated) to complete, comprehensive, standardized solutions for complex tasks (e.g. cross cutters).

Standard application requirements

One feature that all application examples have in common is that they are designed to help users help themselves. They have been created by developers with extensive tool, commissioning and application know-how to make them as user-friendly as possible. Standard applications generally provide the user with reusable components.

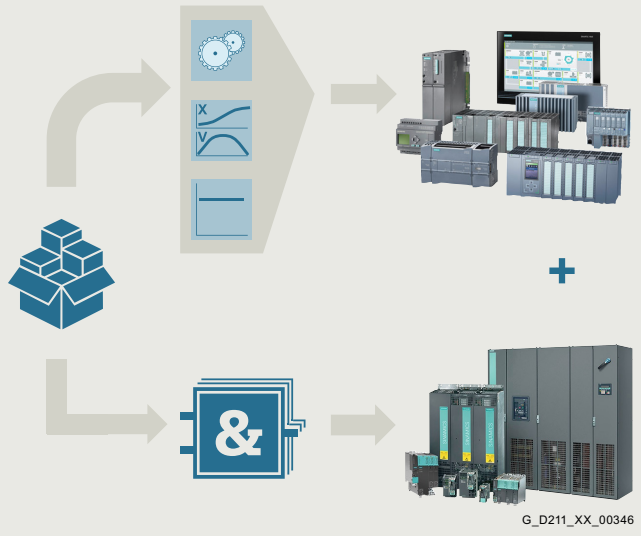

Technology functions in the higher-level control system

- Tested SIMATIC PLC blocks
- Reusable HMIs and faceplates

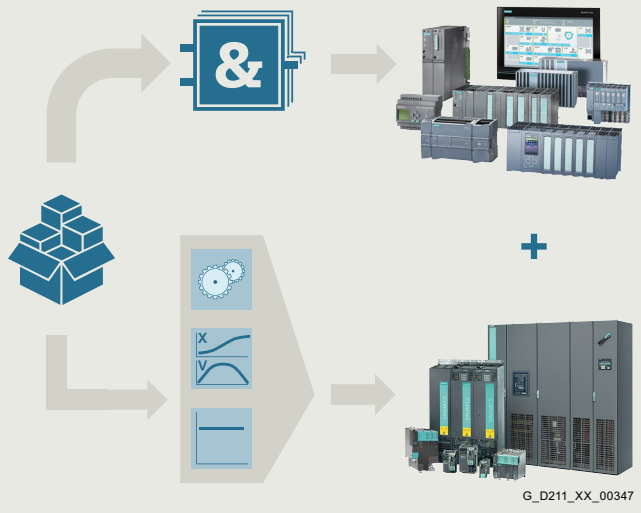

Technology functions in the drive

- Tested SIMATIC PLC blocks
- Reusable HMIs and faceplates
- Application-specific Drive Control Charts (DCC)

Expandable drive technologies

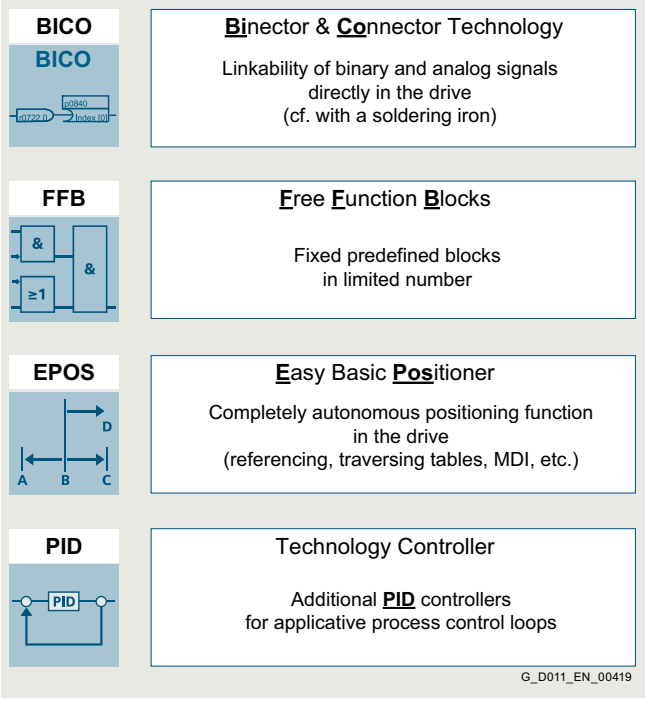

Standard technology functions

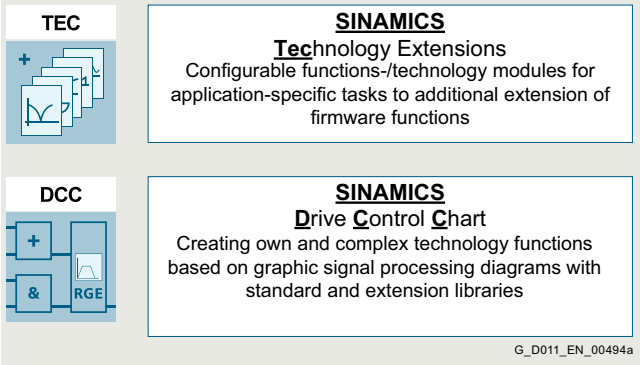

Advanced technology functions

The development of standard technological applications is a dedicated area of activity within the Siemens automation and drive environment. Owing to the generally large size of the applications, they are supplied with detailed documentation and example codes.

These applications focus on the use of product features such as SINAMICS Drive Control Chart (DCC) with its Drive Control Block (DCB) libraries of DCB Standard and DCB Extension, SINAMICS Technology Extensions (TEC) and Free Function Blocks (FFB).

This enables extensive, complete and standardized solutions to be developed for complex drive tasks.

These solutions can be flexibly adapted while at the same time allowing the user to expand them with additional elements or special functions as required.

© Siemens 2024

Overview

Application examples

Freely available application examples offer:

- Explanation of the necessary configuring steps with Siemens engineering tools
- Reusable standardized blocks for SIMATIC PLC
- Functionally coordinated programs and blocks
- Significantly shorter commissioning times

Various application examples also explain how to use Free Function Blocks (FFB), logic processing integrated in the drive with Drive Control Chart (DCC) and Safety Integrated.

The following application examples are just a selection of some of the many applications that are available on the internet at:

- SINAMICS G: Controlling a speed axis with the "SINA_SPEED" block
  https://support.industry.siemens.com/cs/document/109485727
- SIMATIC S7-1200 / S7-1500: Encoderless Positioning with SINAMICS G
  https://support.industry.siemens.com/cs/document/109767951
- Configuring Technology Objects with SIMATIC S7-1500 and SINAMICS S210 in TIA Portal
  https://support.industry.siemens.com/cs/document/109749795
- SINAMICS S: SINAMICS S120 web server – user-defined sample pages
  https://support.industry.siemens.com/cs/document/78388880
- SIMATIC – Fail-safe LDrvSafe library for controlling Safety Integrated Functions for the SINAMICS converter family
  https://support.industry.siemens.com/cs/document/109485794

You can find additional information on the internet at:

www.siemens.com/sinamics-applications

https://support.industry.siemens.com

Integration

Overview of drive applications for SINAMICS drives, including SIMATIC ET 200pro FC-2 frequency converters

Drive applications	Low voltage									
	Standard Performance frequency converters						Distributed frequency converters			
	SINAMICS						SINAMICS			SIMATIC
	V20	G120C	G120			G130 G150	G115D	G120D		ET 200pro FC-2 [1]
			CU230P-2	CU240E-2	CU250S-2	CU320-2		CU240D-2	CU250D-2	
Standard technology functions										
BICO technology	✓	✓	✓	✓	✓	✓	✓	✓	✓	✓
Free Function Blocks (FFB)	✓	✓	✓	✓	✓	✓	✓	✓	✓	–
Basic positioner (EPOS)	–	–	–	–	✓	–	–	–	✓	–
Technology controller (PID)	✓	✓	✓	✓	✓	✓	✓	✓	✓	–
Advanced technology functions										
SINAMICS Drive Control Chart (DCC)	–	–	–	–	–	✓	–	–	–	–
SINAMICS Technology Extensions (TEC)	–	–	–	–	–	✓	–	–	–	–
Applications & Branch know-how										
Siemens has applied these technology functions (standard and/or advanced) to generate numerous application solutions. These applications can be downloaded from the Siemens application support website at: www.siemens.com/sinamics-applications										

[1] Information on the SIMATIC ET 200pro FC-2 frequency converter with PROFINET, PROFIBUS DP or EtherNet/IP – depending on the SIMATIC ET 200pro station – is available at:
www.siemens.com/et200pro-fc

© Siemens 2024

Drive applications

Integration

Drive applications	Low voltage								
	Industry-specific frequency converters SINAMICS			Servo converters			High performance frequency converters		
	G120P	G120X	G180 [1]	V90	S110	S210	S120 S120M		S150
	CU230P-2		CB08		CU305		CU310-2	CU320-2	CU320-2
Standard technology functions									
BICO technology	✓	✓	✓	–	✓	–	✓	✓	✓
Free Function Blocks (FFB)	✓	✓	–	–	✓	–	✓	✓	✓
Basic positioner (EPOS)	–	–	–	✓	✓	–	✓	✓	✓
Technology controller (PID)	✓	✓	✓	–	✓	–	✓	✓	✓
Advanced technology functions									
SINAMICS Drive Control Chart (DCC)	–	–	–	–	–	–	✓	✓	✓
SINAMICS Technology Extensions (TEC)	–	–	–	–	–	–	✓	✓	✓
Applications & Branch know-how									

Siemens has applied these technology functions (standard and/or advanced) to generate numerous application solutions.
These applications can be downloaded from the Siemens application support website at:
www.siemens.com/sinamics-applications

More information

Technological applications for SINAMICS S120

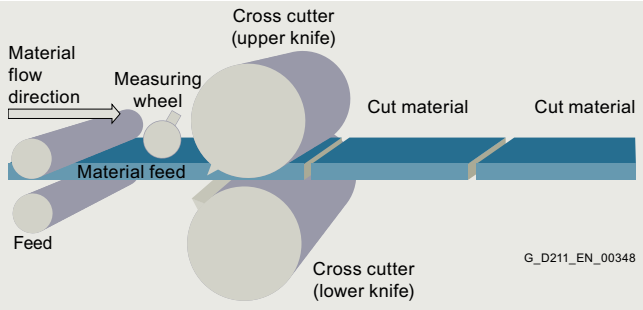

Another focal point are the technologically sophisticated application examples such as:

- Cross cutter
- Flying saw
- Winder
- Angular-locked synchronism in four different variants

[1] SINAMICS G180 has its own Control Unit with its own firmware. Compared to the SINAMICS firmware, some functionalities are not available or implemented differently.

© Siemens 2024

More information

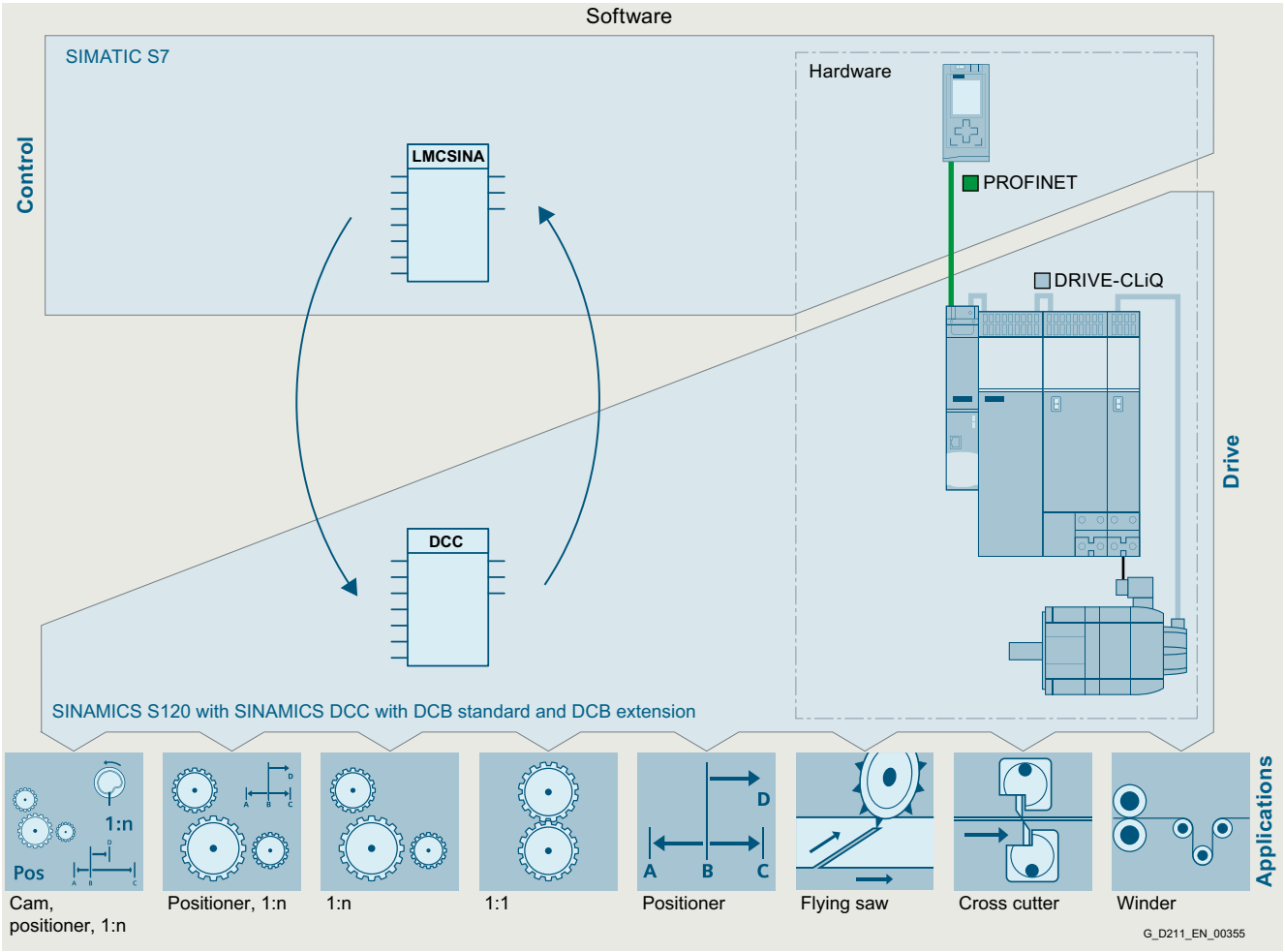

The technological applications make selective use of the relevant engineering concepts in order to facilitate implementation.

Customer benefits:

- Drive-oriented solutions of positioning and synchronous operation applications
- Significant expansion of the DCC scope of functions
- Drive-oriented interpretation of application technology know-how in dedicated solutions
- Drive-oriented complex mechanical calculations

Basis for the technological applications

The technological applications supplied by Siemens are based on the DCB Extension libraries [1] "**GMC**" or "**Math Extended**".

GMC: for Motion Control applications [1]

- For applications with an extensive range of Motion Control functions (positioning, synchronous operation, cam, etc.)
- Individual functions are implemented as elementary function blocks
- Functions that can be combined are linked to form complex elementary function blocks
- These functions can be optionally combined to implement complex tasks

Math Extended: for extended mathematical and logical functions [1]

- Provision of supplementary mathematical functions
- Additional trigonometric functions such as arc sine and arc cosine
- Additional logarithmic functions (common/natural logarithm)
- Additional logic functions (word-serial AND / OR, etc.)

Requirement of the technological applications

Technological applications are generally complex in terms of process engineering, mathematics and concept. They are designed to provide the user with reusable components in the form of a standard application.

Reusable components:

- Tested SIMATIC PLC blocks
- Finished commissioning/configuration scripts
- Application-specific Drive Control Charts (DCC)
- With application-specific DCB Extension libraries
- Reusable HMIs and faceplates

For more information and support, please get in touch with your local Siemens contact person.

www.siemens.com/automation-contact

[1] Use of the internal drive interface to integrate a DCB library requires a license. See SINAMICS Drive Control Chart (SINAMICS DCC).

© Siemens 2024

Overview



Machines for performing reproducible characteristic tests

Test stands are available for many areas. Irrespective whether an automotive, roller, gearbox, motor, power or some other component test stand is involved.

In addition to the mechanical design for mounting the test object, the drive and control equipment as well as sensors must be provided to be able to produce the characteristics and record the measured values.

Test stand requirements

Test stands require a variety of different technological functions, for example:

- Consistent speed and torque
- An open and flexible closed-loop control system with BICO engineering to provide outstanding torque quality
- Rotating field frequencies up to 3200 Hz
- Energy recovery for braking without dangerous current harmonics with adjustable power factor
- Resistance to power fluctuations
- Energy exchange in the coupled DC link for multi-axis test stands
- Integration of modern simulation tools, such as Matlab or Labview
- Computer link for long-term data recording and a continuous trace (including ability to export measurements for evaluation by external tools)
- Extremely high dynamic response, e.g. for the simulation of internal combustion engines
- Safety Integrated functions, e.g. SLS on entering the test cell
- Battery simulation integrated in test stand
- Setpoint specification in real time by PROFINET IRT or an internal drive function

These functions can be implemented by combining a SINAMICS S120 multi-axis converter with SIMOTICS motors.
The SIMOTION control system is a freely programmable platform for control structures that can be configured and connected for optimum isochronous operation with PROFINET.

Benefits

In addition to supplying the appropriate products, Siemens can also support you:

- With the planning of a test stand
- By conducting extensive vibration calculations:
  - Rotor dynamics analyses
  - Multi-body simulations
- With engineering tasks by providing openness for external setpoint sources (e.g. simulation tools)
- By supplying extended drive technologies (e.g. SINAMICS TEC for simulating combustion engines).

Design

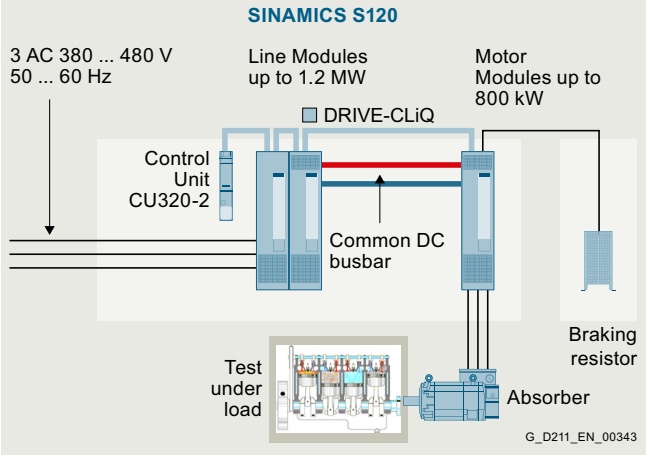

The solution illustrated in the diagram demonstrates how combustion engines in the automotive industry are tested "cold" in the end-of-line area.

Combustion engines are quality-tested directly in the assembly line. In cold testing as opposed to hot testing, the engine is not powered by fuel but electrically, which allows for more eco-friendly testing On completion of the leak test, the engine is filled with oil and, if required, with fuel. The cold test results will show whether the engine complies with quality requirements.

The challenge in this case is to identify any asymmetry or deviation in relation to a stored reference engine.

More information

You can find additional information on the internet at:

www.siemens.de/pruefstandstechnik

© Siemens 2024

Overview

Benefits to the power of three – outstanding productivity, all-encompassing safety technology and optimized energy efficiency



The more flexible, speedy and precise they are, the greater the competitive edge they deliver: Storage and retrieval machines are a core component of conveyor, logistics and stock movement systems. They offer enormous potential for saving time and money. Furthermore, they play a substantial role in reducing energy consumption. Operator protection is another core issue – the relevant requirements for storage and retrieval machines are clearly defined in the C standard EN 528. As a complete provider of components and systems, Siemens can supply the solutions to all these challenges.

Throughput increased by up to 15 %

Siemens has developed the right solutions for raising the performance of storage and retrieval machines. These are designed to maximize acceleration potential while minimizing wear. They also use sway control to reduce mast vibrations, helping to
deliver material savings.

Performance boost thanks to intelligent all-wheel drive

With two powered wheels on the chassis, the drive torque can be distributed in such a way as to maximize acceleration and prevent the drive wheels from spinning. Siemens can supply a specially developed application that allows the drive torque to be statically and dynamically distributed between both drive wheels.

Integral sway control in drive increases throughput

Fast acceleration rates inevitably lead to mast vibration. With the assistance of the SINAMICS technology extension VIBX (Vibration Extinction), this vibration can be prevented without restricting the dynamic performance of the machine. With VIBX, the acceleration/deceleration of the travel axes is unable to excite the natural frequency of the storage and retrieval machine. The frequency can be adapted as a function of the cargo load and the position of the load handling device while the machine is in operation. There is no need to install a sensor to detect mast vibration. The sway control function is proven to shorten the time that it takes a mast to reach a sufficiently still position to allow load handling devices to move into a rack, pick up goods and move out again so that the storage and retrieval machine can travel to the handover station. This boosts throughput by up to 10 % and also increases warehouse capacity. Thanks to the reduction in wear and tear on the machine, less expensive materials can be used in the machine construction. Energy consumption can be reduced as a result of the lower masses

By combining sway control (VIBX) with an intelligent all-wheel drive, it is possible to boost performance by up to 15 %.

100 % compliance with DIN / EN 528 – standards-compliant safety concepts

A comprehensive, but flexible safety concept is needed in order to protect operator and machine and to optimize the entire plant. Using the safety modules supplied free of charge by Siemens, it is possible to implement safety concepts in accordance with the storage and retrieval machine standard DIN EN 528. These modules are certified by TÜV (German Technical Inspectorate) and are therefore a "plug&play" solution. The optimum interaction between the Safety Integrated functions of SIMATIC S7-F controllers and SINAMICS S120 drives allows customers to develop their own safety concepts. Siemens is offering concepts for warehouses with reduced or without buffer area, safety strategies for systems subject to slip and monitoring devices for typical storage and
retrieval machine applications (e.g. slack rope or overload detection).

Up to 80 % reduction in grid power input – by use of self-generated energy

Drives often need to brake heavy weights in hoisting applications. Frequency converters with energy recovery capability help significantly reduce energy requirements. By using Line Modules capable of regenerative feedback, energy can be recovered and used to supply other loads. No braking resistors are required which means that a smaller control cabinet and a simpler cooling system can be used. Energy consumption is balanced via the common DC link of the SINAMICS S120, so minimizing the overall losses in the system. Furthermore, Siemens has used ultracapacitors to implement a strategy for storing energy in the DC link. In addition to reducing power input by up to 80 % [1], electrical braking remains possible even during power failures. Wear to brakes and wheels is also minimized and the availability of the storage and retrieval machine is increased.

[1] Applies to electromechanical systems with an overall efficiency of 90 %. With an efficiency of 80 %, the power input is reduced by 64 %.

© Siemens 2024

Design

Flexibility based on standard components

The storage and retrieval machine solutions comprise the following standard components:

- SINAMICS S120 converter
- SIMOTICS S-1FG1 servo geared motors
- SINAMICS Drive Control Chart (SINAMICS DCC)
- SINAMICS Technology Extensions VIBX

These components allow users to implement their own individual requirements of storage and retrieval machines down to the very last detail.

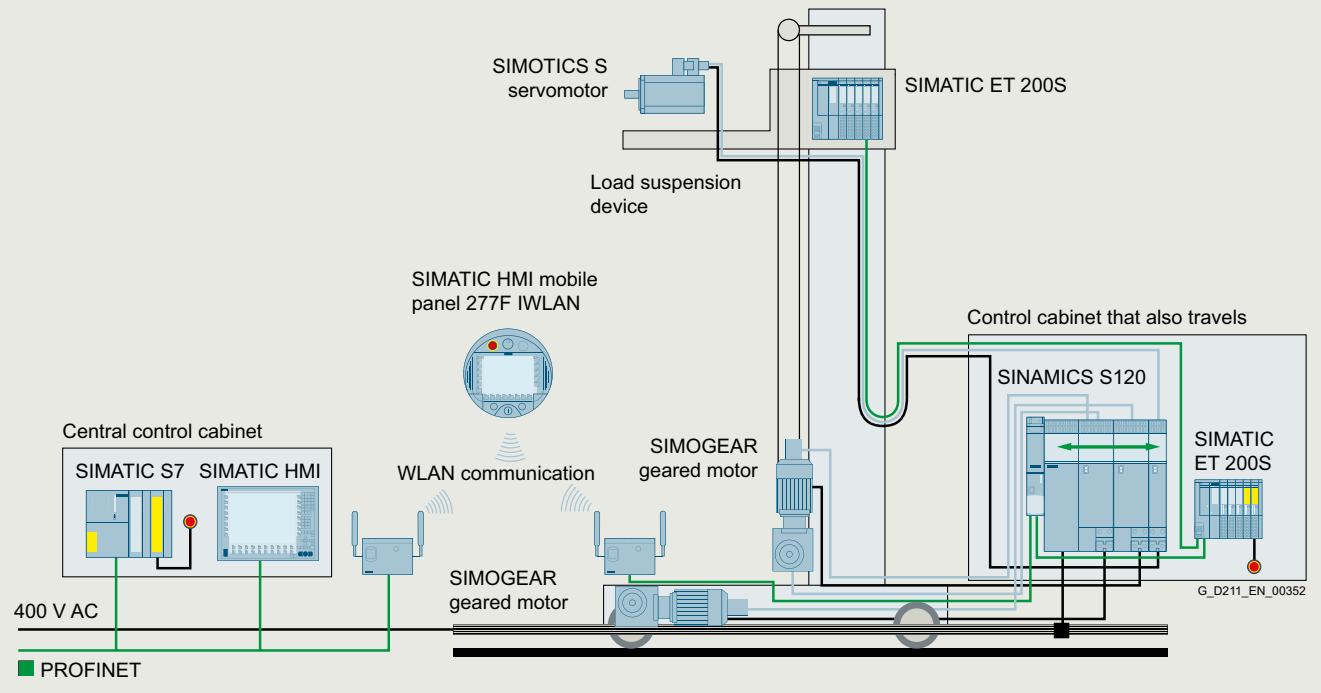

Schematic representation of storage and retrieval machine

More information

You can find additional information on the internet at:

www.siemens.de/foerdertechnik-rbg

© Siemens 2024

Overview


SIMATIC HMI

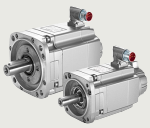
SIMOTICS S servomotors


SIMATIC S7

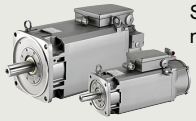
SIMOTICS M main motors


SIMOTION


SIMOTICS T torque motors


SINAMICS S120

G_D211_EN_00345

Converting – unwinding, cutting, stamping, sealing, laminating, printing, coating, crosscutting, winding, … – many functions that are used in a broad range of industrial sectors. Sectors such as paper production, the printing industry, the manufacture of cables and wires and the textile and packaging industries, to name but a few.

Siemens is offering complete, standardized drive and automation systems that are capable of performing all of these tasks. These range from an extensive spectrum of motors (asynchronous and synchronous motors, torque and linear motors, reluctance motors) to single-axis and multi-axis drive controllers, from simple vector converters to highly sophisticated multi-axis systems with integral motion controller, SIMOTION Motion Control system, safety controller and bus system up to the market-leading SIMATIC S7 automation controller in variants 300, 400, 1200 and 1500. The portfolio is rounded off by a large selection of operator panels and other system components such as filters and reactors.

But it is precisely those highly technological standards that different sectors demand of converting functions that are fulfilled in many cases by the technology functions included in the Converting Toolbox developed by Siemens.

The fully operational, tested standard functions integrated in the Siemens Converting Toolbox can be used to reduce the amount of time and money that need to be invested in all phases of the machine lifecycle.

The Converting Toolbox

Contains standard functions for converting processes with the following automation platforms:



SIMOTION
For high performance motion control applications with central intelligence



SIMATIC
For applications with a PLC as central control system



SINAMICS, SINAMICS DCC
for drive-based applications where the process control is realized in the drive system
SINAMICS S120 with the use of DCC (Drive Control Chart)



Center winder
Identical closed-loop control concepts on all platforms



Web tension control
Identical closed-loop control concepts on all platforms



Automatic roll change
Basic functionality in a drive-based solution



Material web accumulator



Traversing drive
Basic functionality in a drive-based solution



Cross cutter



Flying saw



Load balancing

G_D211_EN_00344

More information

You can find additional information on the internet at:

www.siemens.com/converting

© Siemens 2024

Notes

© Siemens 2024

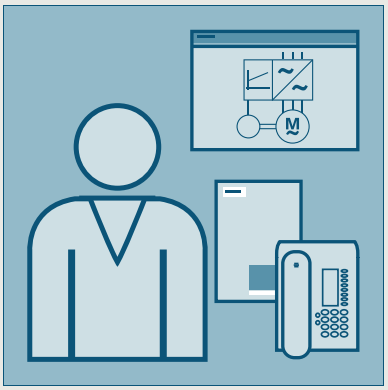

14/2	**Partners**
14/3	**Industry Services**
14/4	Industry Services – Portfolio overview
14/5	Online Support
14/6	**Training**
14/6	SITRAIN – Digital Industry Academy
14/8	Training courses for SINAMICS low-voltage converters
14/9	SINAMICS S120 training case
14/10	**Siemens Automation Cooperates with Education (SCE)**
14/13	**Switchgear**
14/16	**Repair Service Contract**
14/19	**Mechatronic Support**
14/20	**Applications**
14/21	**Field and Maintenance Service**
14/21	Overview
14/21	General overhaul
14/21	Function check
14/22	**Spare parts services**
14/22	Overview
14/22	Delivery of spare parts
14/23	Delivery as exchange product
14/23	Component upgrade service
14/24	Return of diagnostic parts
14/24	Stock reduction in spare parts store
14/24	Extended spare part availability
14/25	**Repair services**
14/26	**Spares on Web**
14/27	**Drives Options Partner**
14/28	**mySupport documentation**
14/29	**Documentation**
14/29	General documentation

© Siemens 2024

Overview

Partners at Siemens

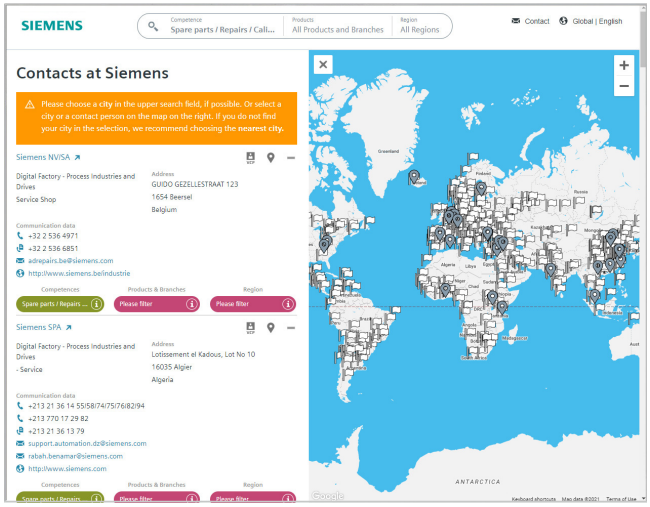

At your service locally, around the globe for consulting, sales, training, service, support, spare parts on the entire portfolio of Siemens.

Your partner can be found in our Personal Contacts Database at:
www.siemens.com/automation-contact

You start by selecting

- the required competence,
- products and branches,
- a country and a city

or by a

- location search or free text search.

© Siemens 2024

Overview

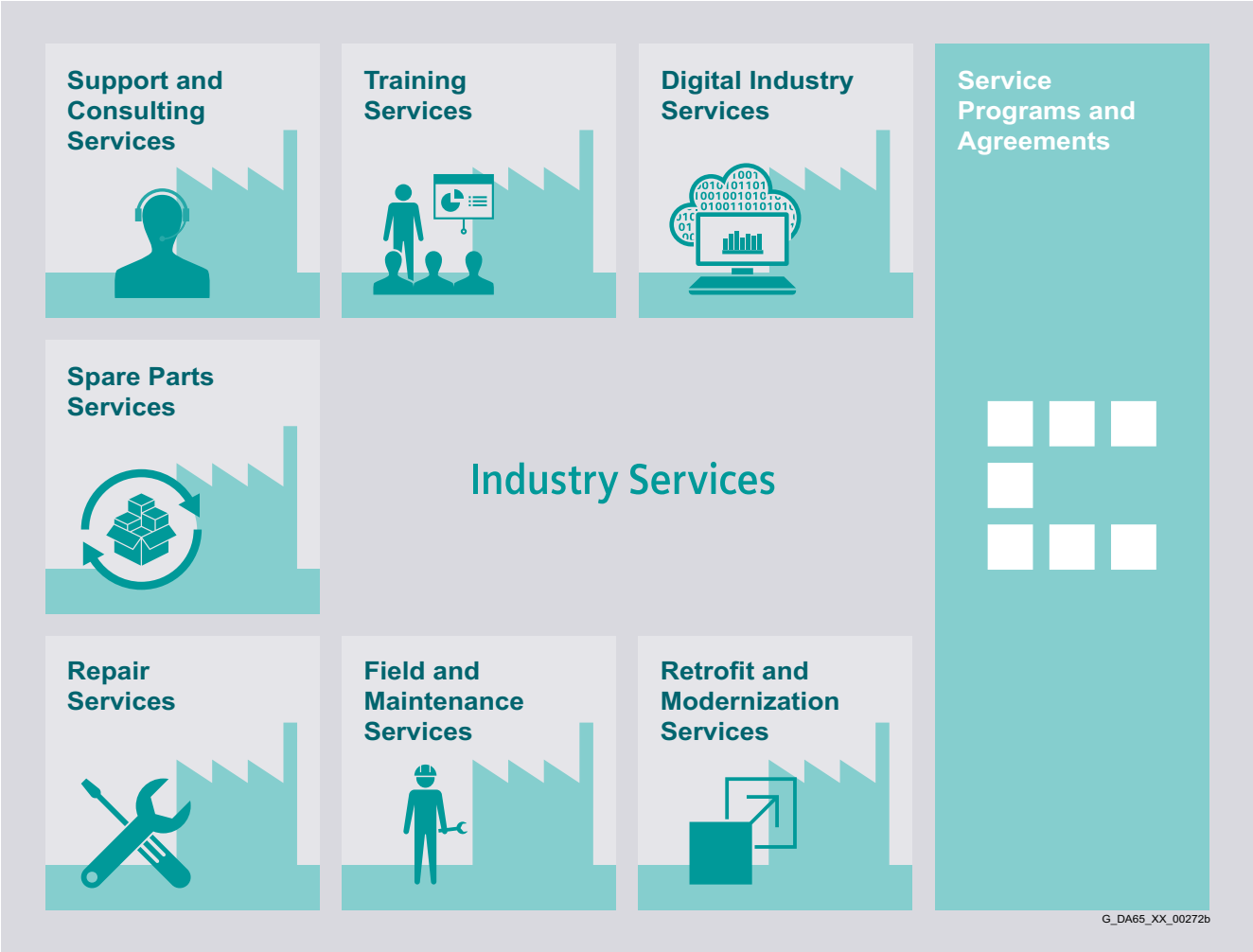

Keep your business running and shaping your digital future – with Industry Services

Optimizing the productivity of your equipment and operations can be a challenge, especially with constantly changing market conditions. Working with our service experts makes it easier.

We understand your industry's unique processes and provide the services needed so that you can better achieve your business goals.

You can count on us to maximize your uptime and minimize your downtime, increasing your operations' productivity and reliability. When your operations have to be changed quickly to meet a new demand or business opportunity, our services give you the flexibility to adapt. Of course, we take care that your production is protected against cyber threats. We assist in keeping your operations as energy and resource efficient as possible and reducing your total cost of ownership. As a trendsetter, we ensure that you can capitalize on the opportunities of digitalization and by applying data analytics to enhance decision making: You can be sure that your plant reaches its full potential and retains this over the longer lifespan.

You can rely on our highly dedicated team of engineers, technicians and specialists to deliver the services you need – safely, professionally and in compliance with all regulations. We are there for you, where you need us, when you need us.

www.siemens.com/digital-enterprise-services

© Siemens 2024

Industry Services – Portfolio overview

Overview



Digital Industry Services

Digital Industry Services make your industrial processes transparent to gain improvements in productivity, asset availability, and energy efficiency.

Production data is generated, filtered and translated with intelligent analytics to enhance decision-making.

This is done whilst taking data security into consideration and with continuous protection against cyber-attack threats.
www.siemens.com/digital-enterprise-services



Training Services

From the basics and advanced to specialist skills, SITRAIN courses provide expertise right from the manufacturer – and encompass the entire spectrum of Siemens products and systems for the industry.

Worldwide, SITRAIN courses are available wherever you need a training course in more than 170 locations in over 60 countries.
https://support.industry.siemens.com/cs/ww/en/sc/2226



Support and Consulting Services

Industry Online Support site for comprehensive information, application examples, FAQs and support requests.

Technical and Engineering Support for advice and answers for all inquiries about functionality, handling, and fault clearance. The Service Card as prepaid support for value added services such as Priority Call Back or Extended Support offers the clear advantage of quick and easy purchasing.

Information & Consulting Services, e.g. SIMATIC System Audit; clarity about the state and service capability of your automation system or Lifecycle Information Services; transparency on the lifecycle of the products in your plants.
https://support.industry.siemens.com/cs/ww/en/sc/2235

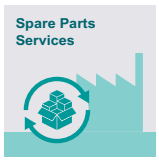

Spare Parts

Spare Parts Services are available worldwide for smooth and fast supply of spare parts – and thus optimal plant availability. Genuine spare parts are available for up to ten years. Logistic experts take care of procurement, transport, custom clearance, storage and order management. Reliable logistics processes ensure that components reach their destination as needed.

Since not all spare parts can be kept in stock at all times, Siemens offers a preventive measure for spare parts provisioning on the customer's premises with optimized **Spare Parts Packages** for individual products, custom-assembled drive components and entire integrated drive trains – including risk consulting.

Asset Optimization Services help you design a strategy for parts supply where your investment and carrying costs are reduced and the risk of obsolescence is avoided.
https://support.industry.siemens.com/cs/ww/en/sc/2110



Repair Services

Repair Services are offered on-site and in regional repair centers for fast restoration of faulty devices' functionality.

Also available are extended repair services, which include additional diagnostic and repair measures, as well as emergency services.
https://support.industry.siemens.com/cs/ww/en/sc/2154



Field and Maintenance Services

Siemens specialists are available globally to provide expert field and maintenance services, including commissioning, functional testing, preventive maintenance and fault clearance.

All services can be included in customized service agreements with defined reaction times or fixed maintenance intervals.
https://support.industry.siemens.com/cs/ww/en/sc/2265



Retrofit and Modernization Services

Provide a cost-effective solution for the expansion of entire plants, optimization of systems or upgrading existing products to the latest technology and software, e.g. migration services for automation systems.

Service experts support projects from planning through commissioning and, if desired over the entire extended lifespan, e.g. Retrofit for Integrated Drive Systems for an extended lifetime of your machines and plants.
https://support.industry.siemens.com/cs/ww/en/sc/2286



Service Programs and Agreements

A technical Service Program or Agreement enables you to easily bundle a wide range of services into a single annual or multi-year agreement.

You pick the services you need to match your unique requirements or fill gaps in your organization's maintenance capabilities.

Programs and agreements can be customized as KPI-based and/or performance-based contracts.
https://support.industry.siemens.com/cs/ww/en/sc/2275

© Siemens 2024

Overview



Siemens Industry and Online Support with some 1.7 million visitors per month is one of the most popular web services provided by Siemens. It is the central access point for comprehensive technical know-how about products, systems and services for automation and drives applications as well as for process industries.

In connection with the challenges and opportunities related to digitalization you can look forward to continued support with innovative offerings.

© Siemens 2024

Introduction



SITRAIN - Digital Industry Academy stands for a modern learning culture that focuses on the needs of learners and the demands of innovative companies.

SITRAIN offers a comprehensive range of knowledge on Siemens industrial products and, under the vision "Future of Learning", pursues a holistic approach that combines different forms and methods of learning. Different learning formats allow for more effective, flexible and continuous learning depending on the type of learning.

Education and training directly from the manufacturer



Industrial Automation Systems SIMATIC
Training available for:
SIMATIC S7-1500. TIA Portal, SIMATIC S7-300/400, SIMATIC S7-1200



Drive Technology
Training available for:
SINAMICS S120 and SINAMICS G120 low-voltage converters, SINAMICS G130 / G150 / G180 / S150



SINUMERIK CNC automation system
Training available for:
SINUMERIK 840D, SINUMERIK 840D sl and SINUMERIK ONE



Process Control Systems
Training available for:
SIMATIC PCS 7, SIMATIC PCS neo



Digital Enterprise
Training available for:
Openness, SIMIT, OPC UA, Industrial Edge, Virtual commissioning



Industrial Communications
Training available for:
PROFINET, SCALANCE, R UGGEDOM, Industrial Ethernet, Fieldbus communication, Industrial Security, Remote communication



Identification and Locating
Training available for:
RFID, RTLS-Systems



Operator Control and Monitoring Systems
Training available for:
SIMATIC WinCC Unified in TIA Portal, SIMATIC WinCC in TIA Portal, SIMATIC WinCC V7x

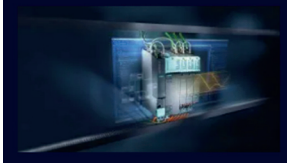

Motion Control System SIMOTION
Training available for:
SIMOTION (Programming, Commissioning, Diagnostics, Service)



Smart Infrastructure
Training available for:
SIRIUS, SENTRON, SIVACON, ALPHA, SIMOCODE, Circuit breakers



Process Analytics & I nstrumentation
Training is available for process analytics and instrumentation, explosion protection, process gas chromatographs



Additional training offer
SIMOVE with Automated Guided Vehicles (AGV), SIPLUS CMS, Guidelines and standards for control cabinets

© Siemens 2024

Introduction

Different learning formats and methods for maximum learning success

Face-to-face training in the training center or in the virtual classroom, with fixed dates and course times, learning in a group with a learning guide? Or digital training, on your own responsibility and location-independent, on demand, 24/7?

With the learning formats "Learning Journey", "Learning Membership" and "Learning Event", SITRAIN offers a wide range of different learning options in connection with didactically effective methods and modular possibilities.



Learning Journey

The combination for sustainable learning success

- The optimal mix of self-study units and guided live modules
- Includes a Learning Membership to work through the self-study modules and access on-demand content
- The SITRAIN learning consultant is available for questions and one-on-one consultations
- Ideal integration into the daily work routine and adaptation to one's own learning pace.



Learning Membership

Securing knowledge through continuous learning on your own responsibility

- With access to the comprehensive and constantly growing range of self-study units on SITRAIN access, the digital learning platform
- Search and find specific learning content or simply have a look around – anytime and anywhere
- A modern learning culture through continuous learning on your own responsibility and transparency about your learning success in the team or company.



Learning Event

Acquire theoretical and practical knowledge in a compact and guided format

- You achieve a defined learning goal in the shortest possible time
- The learning consultant guides you through the practical exercises and is also exclusively available to you during the theoretical sessions for the entire duration
- Focused learning, outside of the daily work routine, in a protected learning environment – virtually, in the training center, or at your company.

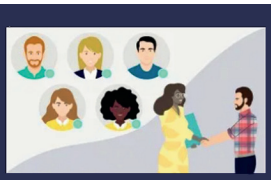

Live

Learn together with others, simultaneously and guided by a learning consultant. Online, in the SITRAIN training center or at your company.

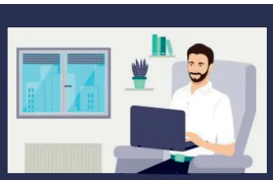

Self-reliant

Expand your knowledge self-determined with industry learning and work on your learning units at your own pace and according to your own schedule.

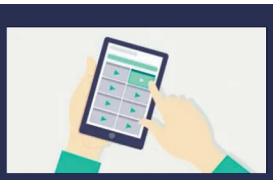

On demand

Get the knowledge you need, exactly when you need it. Be it to answer a current question or to work on a special topic.

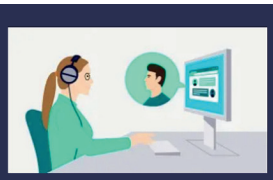

Individuell

Talk directly with the learning consultant, clarify detailed questions and get personal coaching for transferring the learned topics to your own application.



Training cases catalog

www.siemens.com/
sitrain-catalog-training-cases

Find your local offer here

SITRAIN – Digital Industry Academy worldwide

You will find the regional knowledge offer in the country selection. One click will take you to the corresponding website.

© Siemens 2024

Training courses for SINAMICS low-voltage converters

Overview

Training courses for SINAMICS drive system



This provides an overview of the training courses available for the SINAMICS drive system.

The courses are modular in design and are directed at a variety of target groups as well as individual customer requirements.

The system overview will acquaint decision-makers and sales personnel with the system very quickly.

The engineering course provides all the information you need to configure the drive system.

The courses dedicated to diagnostics and servicing, parameterization and commissioning, communication as well as extended functions such as Safety Integrated are sure to provide all the technical knowledge service engineers will need.

All courses contain as many practical exercises as possible to enable intensive and direct training on the drive system and with the tools in small groups.

Please also take note of the training options available for SIMOTICS motors. You will find more information about course contents and dates on the internet.

Title (all courses are available in English and German)	Target group Planners, decision-makers, sales personnel	 Commissioning engineers, configuring engineers	 Service personnel, maintenance technicians	Duration	Order code
Course Fundamentals and overview					
SINAMICS and SIMOTICS - Basics of drive technology	✓	✓	✓	5 days	DR-GAT
Courses SINAMICS S120					
SINAMICS S120 Designing and Engineering	✓	–	–	5 days	DR-S12-PL
SINAMICS S120 Parameterizing and Commissioning with STARTER	–	✓	–	5 days	DR-S12-PM
SINAMICS S120 Parameterizing and Commissioning in the TIA Portal	–	✓	–	5 days	DR-S12-PMT
SINAMICS S120 Parameterizing Safety Integrated	–	✓	–	4 days	DR-S12-SAF
SINAMICS S120 Parameterizing and Optimization	–	✓	–	5 days	DR-S12-OPT
SINAMICS S120 Diagnostics and Service	–	–	✓	5 days	DR-S12-DG
SINAMICS S120 Diagnostics and Service in the TIA Portal	–	–	✓	5 days	DR-S12-DGT
SINAMICS S120 Diagnostics on Chassis and Cabinet Units	–	✓	✓	3 days	DR-S12-CHA
Course SINAMICS G120 (including SINAMICS G120X, SINAMICS G120D and SINAMICS G115D)					
Parameterizing and Commissioning	–	✓	–	2 days	DR-G12-PM
Courses SINAMICS G130/G150/G180/S150					
SINAMICS G150/G130/S150 - Diagnostics and Service	–	✓	✓	5 days	DR-G15-DG
SINAMICS G180 - Diagnostics and Service	–	–	✓	2.5 days	DR-G18-DG

© Siemens 2024

Overview



SINAMICS S120 training case with CU320 Control Unit



SINAMICS S120 training case without Control Unit

The SINAMICS S120 training case is used to teach students to use and understand the SINAMICS S120 drive system. It is suitable for direct customer presentations as well as for tests in technical departments.

The case is optimized in terms of weight and volume and is assembled complete with castors and ready for connection. It contains the following components:

- SINAMICS CU320-2 PN Control Unit with memory card with project for functional test
- SINAMICS Smart Line Module 5 kW
- SINAMICS Double Motor Module 2 x 3 A
- 2 motors SIMOTICS S-1FK7022 servomotors with DRIVE-CLiQ interface (absolute encoder or incremental encoder) Stroboscope for testing synchronous operation
- SIMATIC ET 200SP IM 155-6PN with 4 modules DI, DO, TM, AI
- Operator control box, removable for I/Os of the CU320-2 Control Unit or SIMATIC ET 200
- Reference discs for position monitoring
- Prefabricated connections for an external motor (e.g., asynchronous motor) (SIMATIC S7 mounting rail 85 mm with 24 V and PN connection).

The SINAMICS S120 training case is supplied ready-to-use with a demo project on the CompactFlash card and documentation.

Selection and ordering data

Description	Article No.
SINAMICS S120 training case	
• PROFIBUS variant with SINAMICS CU320-2 DP Control Unit	**6ZB2480-0CM00**
• PROFINET variant with CU320-2 PN Control Unit	**6ZB2480-0CN00**
Accessories	
SIMOTION D425-2 DP/PN upgrade kit	**6ZB2470-0AM00**
Operator control box	**6AG1064-1AA01-0AA0**

Technical specifications

SINAMICS S120 training case	6ZB2480-0CM00 6ZB2480-0CN00
Supply voltage	230 V 1 AC 50 Hz
Degree of protection	IP20
Dimensions	
• Width	320 mm (12.60 in)
• Height	650 mm (25.59 in)
• Depth	330 mm (12.99 in)
Weight, approx.	30 kg (66.2 lb)

© Siemens 2024

Teaching made easy - Comprehensive support on the way to Industry 4.0

Knowledge & technology – the keystones to success in digitalization





Digitalization is quickly and radically changing our world. What does this mean for education?

In the world of Industry 4.0, companies can expect a host of new opportunities and challenges. New systems are verified on the spot through simulations. Automated mass production processes can make every product on the conveyor belt a unique product.

New products are now market-ready much faster. Siemens is shaping this transformation as a technology leader in the field of automation and process lifecycle management (PLM).

These new digitalization processes are changing the know-how requirements for employees. Many educational institutions are facing the challenge of conveying Industry 4.0 know-how as part of their teaching and training. The Siemens Automation Cooperates with Education (SCE) program is supporting educators on the way to Industry 4.0.

The SCE digitalization concept for educators

The SCE digitalization concept presented here shows how digitalization can be implemented in educational institutions – from vocational schools to universities.

Digitalization (or Industry 4.0) know-how is now introduced through computer aided technology, Industrial Edge and IIoT as well as Cloud technologies. It is founded on the basics of automation, such as digital technologies, PLC and information technologies, and on advanced automation and industrial communication technologies.

The level of digitalization knowledge can be weighted, depending on the vocational field or branch of study –
e.g. mechanical engineering, automation engineering or computer science.

	Digital Twin	Digital Workflow	Factory Intelligence
CAx, IIoT and cloud technologies	**Computer-assisted technologies** Virtual commissioning using simulation models	**Industrial Edge & IIoT** Analysis and further processing of data	**Cloud technologies** Connection and data analysis with smart data, manufacturing execution system and enterprise resource planning
Automation and industrial communication technologies	**Industrial automation** e.g. distributed IO, HMI, RFID, IO-Link, drive systems, safety technologies		**Industrial IT technologies** e.g. Industrial Ethernet, interface with software of third-party providers (OPC UA), security, communication networks
Basics of automation technologies	**Digital technologies** Boolean functions	**PLC technologies** PLC programming according to IEC 61131	**IT technologies** Ethernet and high-level programming languages, e.g. Python, Node-RED, JSON, C/C++, Linux

© Siemens 2024

The SCE digitalization concept for educators

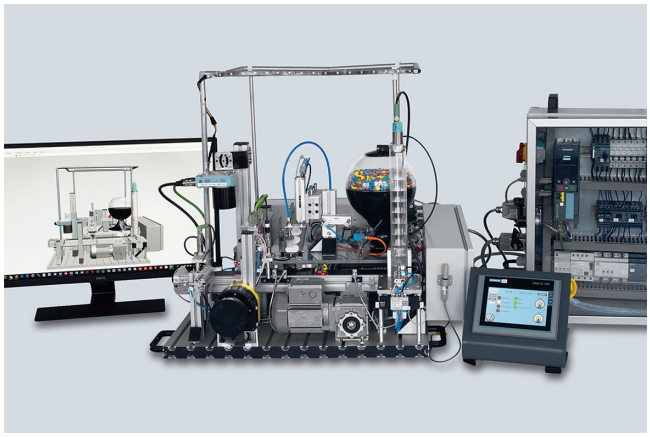

As part of their project work, students at Vocational School 2 in Wolfsburg, Germany, have implemented the three levels of the SCE Industry 4.0 concept. A virtual twin created with the Siemens NX Mechatronics Designer (MCD) CAD software was used for the design and virtual commissioning. This enables fast and efficient assembly of the real automation system, e.g. with SIMATIC S7-1500/ET 200SP/RFID, for use in classes. Production data, such as the number of bottles filled, production date and system parameters, are uploaded to a cloud using SIMATIC IOT2000.

siemens.com/sce/iot2000

siemens.com/nx

The SCE offers



Learning and training documents

More than 100 didactically prepared learning and training documents are available through SCE and incorporate the digitalization concept. They are designed for use in classes, but can also be customized or used for individual study. These documents are available for free download, most of them in 7 languages.

siemens.com/sce/documents

Educator courses

Excellent teaching content is needed to introduce students to digitalization. For this purpose, SCE holds educator courses in certain regions. Based on our learning and training documents and through practical exercises, educators acquire the latest Industry 4.0 know-how.

siemens.com/sce/courses



Trainer packages

The 90 SCE trainer packages help educators teaching and implementing the SCE digitalization concept. Trainer packages comprise specially compiled, genuine Siemens hardware and software products. The trainer packages are based on the learning and training documents and are offered to schools, colleges and universities at special terms.

siemens.com/sce/tp

Support for your projects / textbooks

We support you on selected projects with advice and assistance from SCE contact partners.

As a special service, we support textbook authors. We maintain a list of textbooks on the SCE website.

siemens.com/sce/contact

siemens.com/sce/books

© Siemens 2024

Partnerships for proliferation of Industry 4.0 in education



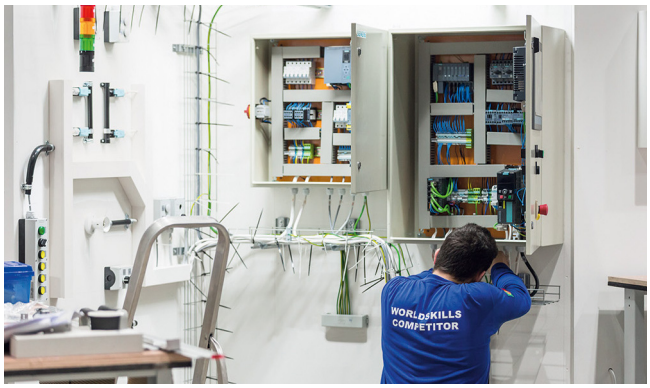

Partnership with WorldSkills

As a technology powerhouse, we support vocational training of students around the world. Since 2010, we have partnered with WorldSkills as a Global Industry Partner in order to amplify this cause.

WorldSkills is an international organization whose mission is to raise the profile and recognition of skilled people, and show how important vocational skills are in achieving economic growth and personal success. Every two years, WorldSkills hosts the world championships of skills.

Siemens provides the competitors with automation products, such as SIMATIC S7-1500 and LOGO!, for the disciplines: industrial control, electrical installations, Polymechanics/Automation and manufacturing technology.

Additionally, we support selected continental and regional competitions.

siemens.com/worldskills

Partnerships with educators

We provide support to educators and educational organizations in the form of one-on-one advice through SCE contact partners and Siemens experts as well as long-term cooperation.

siemens.com/sce/contact

Partnerships with producers of learning systems

For practical training in classrooms and labs, numerous producers of learning systems offer a wide range of complete didactic solutions based on SCE trainer packages.

siemens.com/sce/learningsystems

Information portal



To facilitate your teaching assignment and/or for selfstudy, we offer educators and students a comprehensive SCE information portal. At this portal you have quick access to all SCE offers, e.g. learning and training documents including projects, Getting Started information, videos, manuals, trial software and newsletters.

siemens.com/sce

Global Industry Partner

worldskills

© Siemens 2024

Overview

Systems Engineering Plant Chemnitz (WKC) - Electrical equipment for machines and plants

The Siemens Systems Engineering Plant Chemnitz (WKC) is the European market leader in control cabinet construction for machine tools and manufactures equipment for numerous segments the machine and plant construction industry, as well as for project business in the logistics and automotive sectors.



WKC - Control cabinet wiring

Scope of services offered

The WKC offers a complete portfolio of services for development and production: From concept support and hardware engineering, construction including complete material procurement to testing, advance commissioning support and worldwide inbound delivery. Each customer decides individually what extent of these services the WKC is to provide.



WKC - Engineering - SSB

Competence center for standardization and air conditioning

The WKC is also competence center for the air conditioning of switchgear, has its own test laboratory, and is a certified UL Panels shop. Siemens WKC therefore is happy to support you with advice on design in accordance with standards and concepts for your drive systems, control, operation and safety. In addition, our engineers configure for you in EPLAN and other CAD systems, execute Design-To-Cost projects, and adapt your documents where necessary to UL or new automation and digitalization technologies.

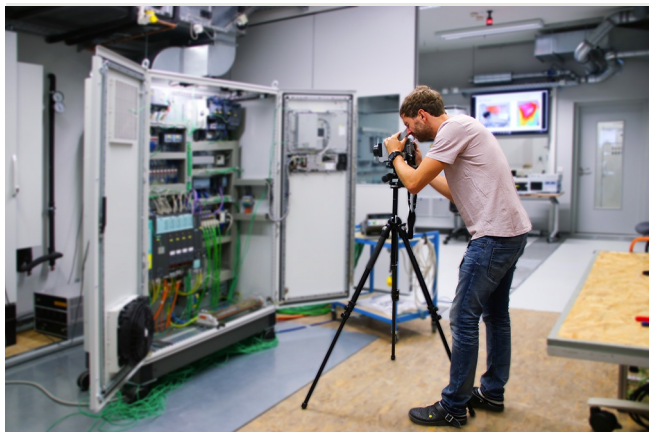

WKC - Test laboratory - Heat measurement

© Siemens 2024

Overview

Individual support and maximum flexibility

Our technical consultants for complete equipment support customers and sales departments in the various regions. Our customers are supported by job centers and permanently assigned manufacturing teams. As a customer, you will benefit from individual logistics models, flexible production capacities and production areas, change management in all process phases, as well as maximum flexibility for your orders..

Distance is no problem: For coordination with our customers, we use various digital communication and business applications with user-friendly and powerful functions for screensharing, videoconferencing, file transfer, as we all options for a customer acceptance via webcam (mobile circuit meeting room).



WKC - Automated testing SICAT

Your advantages

We offer complete services from a single source with Siemens quality and stability, extensive specialist support, and flexible resources. We will be glad to accompany you into international markets as well. With us you have a strong partner at your side - from the design stage to final delivery. Whether for series or individual units, Siemens WKC works together with you to implement your projects according to your requirements.

Overview of the portfolio of services

Order coordination

- Project manager with permanent customer assignment
- Complete material purchasing
- Change management in all process phases

Manufacturing

- Creation of a digital twin
- CNC processing of enclosure parts and mounting plates
- In-house painting
- Auto-routing of the wiring
- Automated prefabrication of cables
- Production teams with permanent customer assignment
- Batch or flow production

Automated test (standard)

- Current path test
- Function of switching, operating and signaling devices
- Observance of protective measures and safety

Optional test services / pre-commissioning

- Error-free function of the programmable controllers / I/O devices
- Parameterization and checking of bus systems
- First commissioning of Siemens NC and PLC
- Installation of customer software

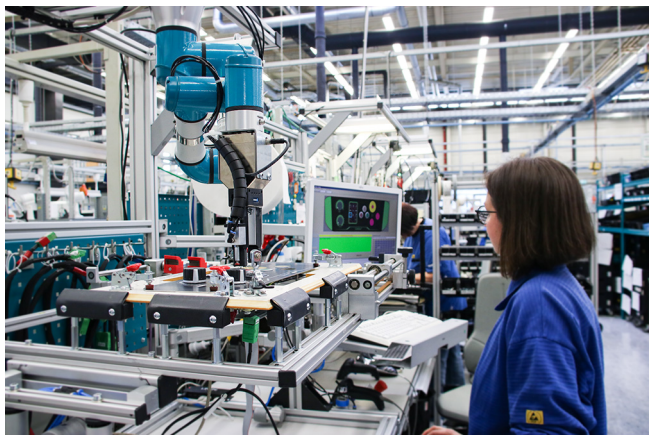

WKC - Collaborative robotics

© Siemens 2024

Overview

Additional services for different project phases

Our portfolio is supplemented by a host of additional services for many different project phases.

Planning

- Evaluation of requirement specifications, requirements
- Advice regarding standard applications and certifications (conformity)
- Advice regarding EMC, air conditioning, and electrical safety
- Design-To-Cost analyses
- Special rated conditions

Implementation/realization

- Creation of an electrical design in various CAE systems
- Creation of an air conditioning design through calculation and simulation
- CAE revision of production documents

Validation/certification

- International standard and certification know-how, e.g.: IEC 60204-1, IEC 61439, UL or cULus
- Checking of air conditioning / EMC designs in own Siemens laboratory or at customer premises
- Execution of EMC precompliance measurements in own laboratory or at your plant location

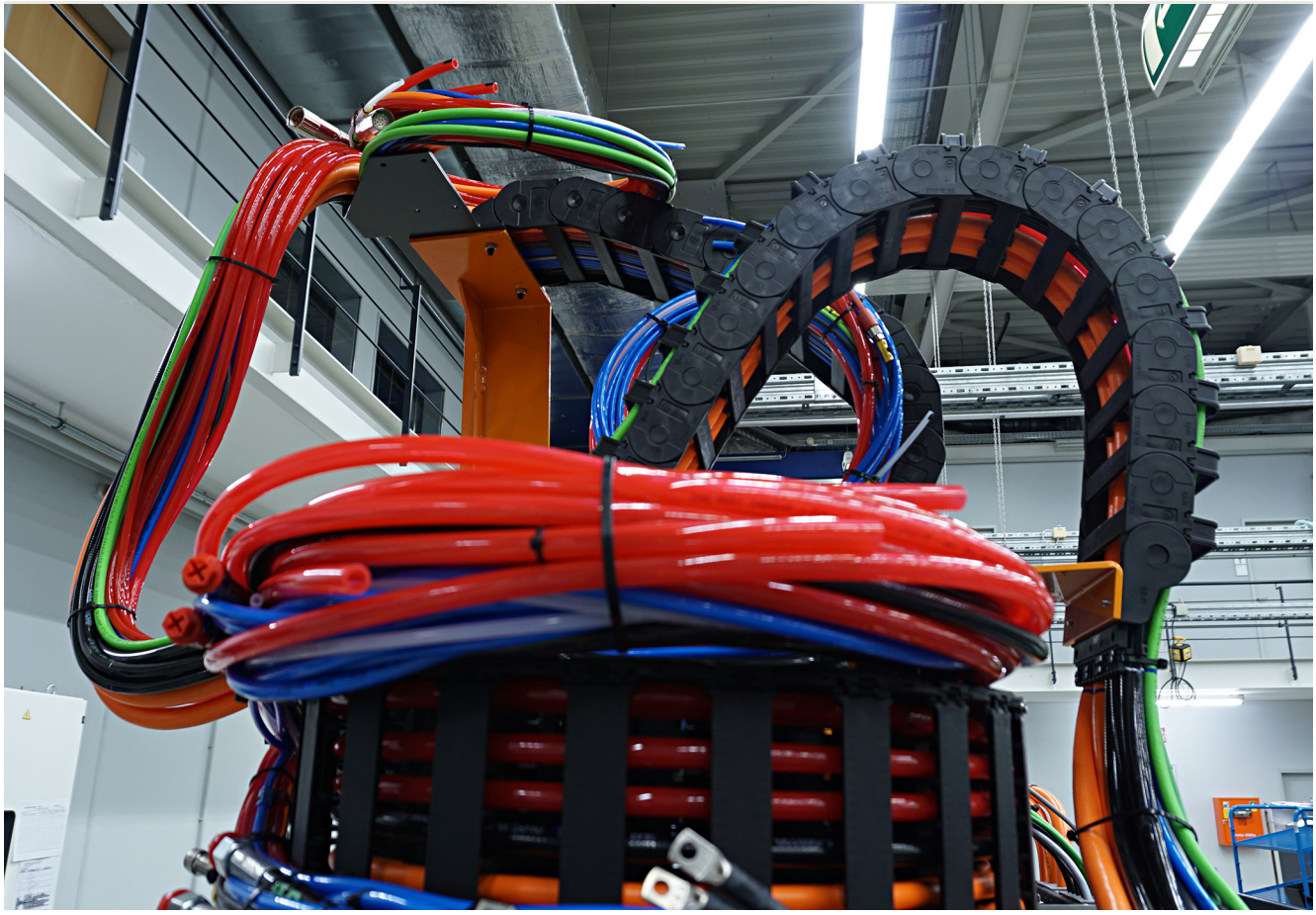

WKC - Additional service - Festoon cable system

More information

You can find additional information on the internet at:

www.siemens.com/panelbuilding

Or contact us by

email: info.wkc.industry@siemens.com

© Siemens 2024

Repair Service Contract

Overview

Repair Service Contract for Machine Tools (RSC) offers machine manufacturers and machine dealers the opportunity to cover repair costs with a lump sum by minimizing cost risks.

Your need:

- Assured availability through reduction of machine downtimes
- Improved machine productivity and total cost of ownership
- Modular services tailored to your requirements
- Regular, periodical inspection of important and critical machines

Our service offer:

- The Repair Service Contract (RSC) was developed especially for machine manufacturers and machine distributors. The RSC offers machine producers and distributors the option to cover the repair costs by a flat rate price and therefore minimize the cost risk
- The RSC ensures the subsequent rectifications of defects at the location where the machine is installed
- This contractual service covers personnel and material replacement costs for removing any trouble in Siemens Industry products after the second commissioning at the user's end
- The period of the contract can be chosen by year tranches, up to a duration of five years

Benefits

- Risks resulting from liability for defects are limited through fixed prices (planning certainty and calculable costs)
- Repair Service Contract can be synchronized with the machine warranty period
- Higher machine availability due to shorter reaction times and fast fault rectification
- Easier processing of service calls and faster response to machine faults (contract priority)
- RSC can be ordered for machine deliveries to numerous countries (see country list below)
- Worldwide service infrastructure with experienced service experts
- No obligation to provide proof of warranty claims throughout the warranty period

Application

- SINUMERIK 840 SINUMERIK ONE
- 6FC5371, 6FC5372, 6FC5373, 6FC5317

Options

RSC service description

Siemens provides for the machine manufacturer and dealer (in the following referred to as customer) at the machine installation site the services described under the scope of services on the components included in the bill of materials of the RSC certificate by Siemens DI.
The RSC is ordered by the customer stating the necessary article numbers, which can be requested from the Siemens sales partner or which are stated in the catalogs and SiePortal. Siemens hands over the customer a proof of delivery, which concludes the RSC.
Following the final destination notification by the customer, Siemens hands the customer an RSC certificate stating the place of performance and the service period.
The services to be rendered by Siemens shall be called via a service order submitted by the customer. The services must be ordered within the RSC service period.

Place of performance

The service shall be rendered at the machine installation site (in the following called on site). This corresponds to the end customer's country stated in the final destination certificate and his complete address. Services covered by this RSC shall only be provided in the countries listed in the country list.

Scope of services offered

The following services shall be provided:

- Provision of service personnel
  Siemens provides qualified personnel for error diagnostics and fault correction. The services are provided during the usual working hours in the country of installation.
- On-site fault diagnostics
  Fault diagnostics refer to components from Siemens DI which are listed in the bill of materials of the RSC certificate.
- Fault correction on site
  Fault correction is carried out by repairing and/or replacing faulty components by Siemens DI.
- Documentation of the fault correction
  A service report shall be created on site in the end customer's national language; it is then signed by the end customer. One copy remains with the end customer.

Contract periods / service period

The RSC is offered for the period of liability (warranty period) of the Siemens customers to their end customers. Different RSC periods permit various market requirements to be addressed. The service period of the RSC begins on the date notified to Siemens in the final destination notification when commissioning has been completed at the end customer's site and ends on expiry of the selected RSC term. The beginning and end of the service period are stated in the RSC certificate1).

RSC certificate

The Customer is provided with an RSC certificate once the final destination notification has been handed over. This certificate shall contain the contract number and essential contract data such as machine number, machine type, bill of materials, beginning and end of the service period and the place of performance (address for the provision of services).

© Siemens 2024

Options

Country list

A repair service is offered for the following countries:

Continent	Country/Region
Country group 1	
Americas	Mexico, USA
Asia	China, India, Japan, South Korea, Taiwan, Thailand
Australia	Australia
Europe	Andorra, Austria, Belgium, Czech Republic, Denmark, Finland, France, Germany, Great Britain, Hungary, Italy, Liechtenstein, Luxembourg, Monaco, the Netherlands, Poland, Portugal, Romania, Slovakia, Spain, Sweden, Switzerland, Turkey
Country group 2	
Africa	South Africa
Americas	Brazil, Canada
Asia	Indonesia, Israel, Malaysia, Singapore
Australia	New Zealand
Europe	Bosnia-Herzegovina, Bulgaria, Croatia, Estonia, Ireland, Latvia, Lithuania, Norway, Slovenia
Country group 3	
Africa	Egypt
Americas	Argentina, Chile, Colombia, Ecuador, Peru, Venezuela
Asia	Bahrain, Hong Kong, Kuwait, Oman, Qatar, Saudi Arabia, United Arab Emirates, Vietnam
Europe	Greece, Malta, Serbia, Montenegro, Ukraine

Response time

As a rule, the following response times apply when the RSC is implemented in the case of a machine standstill:

Country groups	
CG 1	Next working day
CG 2	Within two working days
CG 3	Depending on country-specific conditions
Countries not listed	Depending on country-specific conditions, only for customers with framework contracts for the price of the individual contract.

The response time is the time period between the receipt of the service order which has been technically clarified by the customer and the start of travel of the service engineer to the place of performance or the beginning of fault clearance via teleservice. The specified response times apply to "technically clarified fault notifications" within the normal working hours of the region (e.g. Monday to Friday 8 a.m. to 5 p.m.) excluding public holidays.

Spare parts

Spare parts are provided from our central spare parts warehouse or from regional spare parts warehouses using our worldwide spare parts logistics infrastructure. All of the essential spare parts are stocked in our central spare parts stores. Regional spare parts warehouses are adapted to include the components specified in the final destination certificate2). The following components are not defined as spare parts:

- Motors: these are repaired at an authorized repair workshop. For selected motors, Siemens in Germany stocks components for express delivery. These motors can be manufactured and delivered within a few working days. You can obtain the current list from your Siemens sales partner.
- Cables: The delivery times known to you usually apply.
- Special or customer-specific modules and components not available from Siemens as spare parts

The RSC shall only be processed in accordance with the terms and conditions applying to repair service contracts (RSC) available from your Siemens contact persons.

- For example, in the case of an RSC with 12 months contract period, this is a maximum of 24 months from the transfer of risk (delivery of components).
- Since the export of standard versions (components/system) is subject to a time-consuming official approval procedure, which applies in equal measure to the supply of such components for the purpose of servicing and spare parts supply, we offer an export version for individual components. This has usually less options than the standard version of the component and is not subject to an export authorization. Please refer to the information about export.

Options

For the Repair Service Contract for machine tools, the following supplementary options are offered. Contact your Siemens sales office/Regional Company for more information.

Flexible RSC start

Commissioning at the end customer's site can be concluded up to 24 months after delivery of the components installed in the machine. If this takes place later, the service period of the RSC will, however, begin no later than 24 months after the earliest delivery date of an installed DI Siemens component.

[1] Countries not listed, for customers with framework contracts only. Embargo countries are excluded from service activities. Embargo countries are e.g.: Belarus, Cuba, Iran, North-Korea, Russia, Syria

© Siemens 2024

Options

Earlier start of the service period

The services of the RSC can already be used before commissioning at the end customer's site. Upon conclusion of first commissioning, an additional service period starts at the place of performance that deviates from the final destination. The service period on site commences with the final destination notification.
The customer is obliged to provide Siemens in writing the following information directly following first commissioning:

- Machine number
- Machine type
- Machining technology
- Control system
- Drive system
- Number of measuring circuits
- OEM application data
- Date of first commissioning
- Country and complete address of the machine manufacturer and, if applicable, of the dealer and the BOM of the components from Siemens DI that are used, with article numbers and serial numbers

The customer then receives a preliminary RSC certificate, which states the start of the additional service period and the current place of performance of the machine. After commissioning at the end customer's site is reported, the customer receives the RSC certificate with the final destination information and the end of the service period.

Extension of an RSC

An existing RSC can be extended multiple times by 6 or 12 months, up to a maximum total RSC duration of 60 months. The contract extension must be ordered during the RSC service period. The customer will receive a new RSC certificate each time.

Data Handling

To simplify data handling, information relating to the final destination certificate for SINUMERIK Operate 2.6 and later products can be stored on the CNC. The PC tool identSNAPSHOT is needed in order to transfer the data to Siemens. The PC tool can be run directly without installing it on a computer and is available on the internet at:
www.siemens.com/identSNAPSHOT
The PC tool can also be used to generate final destination certificates for older versions of SINUMERIK CNCs and offers various options for acquiring machine parts lists. The PC tool is also capable of generating machine logbooks in PDF format. The generated data can also be kept with the machine as data backup.
For more information about identSNAPSHOT and handling the bill of materials of components used, please contact your Siemens sales office or Regional Company.

Contract versions

The framework contract is for machine manufacturers who agree to order one RSC for each machine with Siemens equipment. The individual contract is for machine manufacturers who order an RSC only for certain machines but not for ale machines equipped with Siemens equipment.

OEM service levels

To guarantee repair service for OEM applications, an assessment is necessary based on the OEM service guideline. The assessment grades the OEM application from OEM service levels 0 to 4. A surcharge will be levied for OEM service levels 1 to 4.

More information

Contact information for your local Siemens office or national company is available on the internet at:

www.siemens.com/automation-contact

© Siemens 2024

Overview

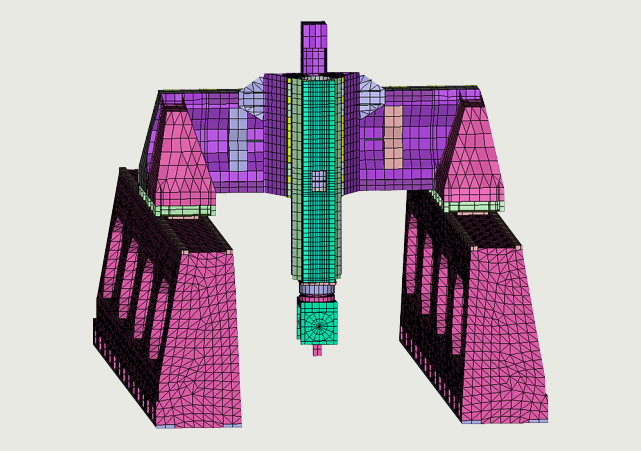

Achieve your optimized machine quicker and more efficiently with Mechatronic Support

The Mechatronic Support service ensures that right from the design stage, all the systems involved in the mechanics, electronics, and IT of the new machine are modeled, tested and optimized in a simulation environment in terms of their functionality and interaction, before they are actually built.

Mechatronic Support is thus the intelligent alternative to "trial and error". Innovative machine concepts are compared with one another, and modified and optimized at the outset – a process which of course also takes account of your ideas for new mechatronic components.

Virtual simulation - real build

With the help of the Mechatronic Support service, machine ideas and new developments can be tested mechatronically and modified in a short time at low cost. The first real prototype can be built immediately afterwards as a functioning machine.

As the machine manufacturer, you have the benefit of shorter development phases and faster time-to-market; end users benefit from an optimized high-performance machine solution.

Benefits

- Shorter development times – shorter time to market
- Reliable achievement of development objectives
- Risk-free testing of innovative machine concepts
- Higher quality and productivity from the outset
- Get to the finished machine more quickly with specialist support

Selection and ordering data

Description	Type
Consultation Technical consultation with customer	**6FC5088-1....**
Machine analysis and optimization • Analysis of the existing machine and its limits • Recommendations for manufacturer	**6FC5088-3....**
Machine simulation • Simulation of individual axes and complete machines • Analysis of dynamic behavior in the simulation	**6FC5088-4....**

More information

You can find more information on the internet at:

support.industry.siemens.com/cs/sc/2248

Contact information for your local Siemens office or national company is available on the internet at:

www.siemens.com/automation-contact

© Siemens 2024

Overview



Our understanding of an application is the customer-specific solution of an automation task based on standard hardware and software components. In this respect, industry knowledge and technological expertise are just as important as expert knowledge about how our products and systems work. We are setting ourselves this challenge with more than 280 application engineers in 20 countries.

Application centers

We currently have application centers in:

- Germany:
  Head Office in Erlangen and in other German regions, e.g. in Munich, Nuremberg, Stuttgart, Mannheim, Frankfurt, Chemnitz, Cologne, Bielefeld, Bremen, Hanover, Hamburg
- Belgium: Brussels
- Brazil: Sao Paulo
- China: Beijing and 12 regions
- Denmark: Ballerup
- France: Paris
- Great Britain: Manchester
- India: Mumbai
- Italy: Bologna, Milan
- Japan: Tokyo, Osaka
- The Netherlands: The Hague
- Austria: Vienna
- Poland: Warsaw
- Sweden: Göteborg
- Switzerland: Zurich, Lausanne
- Spain: Madrid
- South Korea: Seoul
- Taiwan: Taipei
- Turkey: Istanbul
- USA: Atlanta

These application centers specialize in the use of SIMATIC/SIMOTION/SINAMICS. You therefore can rely on automation and drive specialists for implementing successful applications. By involving your personnel at an early stage in the process, we can provide a solid basis for rapid knowledge transfer, maintenance and further development of your automation solution.

Advice on applications and implementation

We offer a variety of consultation services to help you find the optimum solution for the SIMATIC/SIMOTION/SINAMICS application you want to implement:

The quotation phase includes

- clarification of technical questions,
- discussion of machine concepts and customer-specific solutions,
- selection of suitable technology and
- suggestions for implementation.

A technical feasibility study is also performed at the outset. In this way, difficult points of the application can be identified and solved early on. We can also configure and implement your application as a complete solution from a single source.

A large number of proven standard applications are available for use during the implementation phase. This saves engineering costs.

The system can be commissioned by experienced, competent personnel, if required. This saves time and trouble.

If servicing is required, we can support you on site or remotely. For further information about servicing, please see the section "Industry Services".

On-site application training

Training for the implemented applications can also be organized and carried out on site. This training for machine manufacturers and their customers does not deal with individual products, but the entire hardware and software system (for example, automation, drives and visualization).

From an initial concept to successful installation and commissioning: We provide complete support for SIMATIC/SIMOTION/SINAMICS! Contact your Siemens representative.

You can find further information at
www.siemens.com/machinebuilding

© Siemens 2024

Overview

Efficient and cost-effective maintenance strategies for the entire product lifecycle



For you as an industry plant operator, maximum system productivity is your top priority.

Regular machine and plant maintenance performed by qualified service experts helps you ensure top plant performance for the long term.

For more information visit us at:
www.siemens.com/field-maintenance-services

General overhaul

Overview

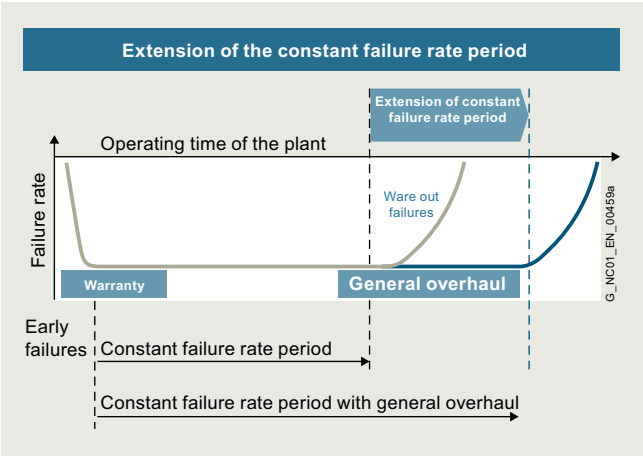

Extension of phases with a constant failure rate

Machines and plants are expected to have a long service life. The service life of electronic components and mechanical parts is, however, limited and normally shorter than the planned machine/plant operating times. For higher availability of the machines or plants, we offer a general overhaul (preventive maintenance) for electronic components and motors at favorable conditions.

During the planned general overhaul, wear parts and aging parts are replaced in accordance with their stated service life so as to reduce unplanned downtimes. In the case of motors, replacement of bearings and encoders is also offered in addition to a general overhaul.

If a fault is detected during a general overhaul, troubleshooting and repair will be performed after requesting confirmation.

In the case of severe wear or major damage, we offer an "as new" spare part instead of a general overhaul for reasons of quality.

Benefits

- Preventive replacement of wear parts and aging parts in accordantce with their stated service life
- Reduction in unplanned plant stoppages
- Enhanced production reliability
- Extended availability of your machines/plants
- New liability for defects for 12 months for components which have undergone a general overhaul
- Low price

More information

You can find more information on the internet at:
https://support.industry.siemens.com/cs/sc/2120

Contact information for your local Siemens office or national company is available on the internet at:
www.siemens.com/automation-contact

Function check

Overview

A check is made to ensure that the components function reliably.

The first step involves cleaning the components. After that, all hardware, software and firmware enhancements are implemented that are known to the development, production, suppliers, service and quality management departments. Using a comprehensive test concept of series production, all functions of the software, firmware, ASICs, and complex and less complex function blocks are checked.

If a fault is detected during an overhaul, troubleshooting and repair will be performed after requesting confirmation. In the case of severe wear or major damage, we offer an "as new" spare part.

Benefits

- The component is checked and can be deployed again
- The component contains all the known improvements
- The customer's own spare parts stock is up-to-date
- Low price

More information

You can find more information on the internet at:
https://support.industry.siemens.com/cs/sc/2122

Contact information for your local Siemens office or national company is available on the internet at:
www.siemens.com/automation-contact

© Siemens 2024

Overview

Be safe in an emergency – always the right spare part at hand



Minimum downtimes and optimum use of staff and equipment are key to long-term success in industry.

But when a failure happens, it can bring the entire plant to a standstill in the worst case. Since even the best components will eventually reach the end of their lifecycle, our Spare Parts Services form the essential basis for smooth operation.

For more information visit us at:
www.siemens.com/spare-parts-services

Delivery of spare parts

Overview

In every sector worldwide, plants and systems are required to operate with ever increasing availability. Not having a specific spare part at the right time can result in considerable costs.

We will provide you with the support you need to prevent a standstill from occurring in the first place: with a worldwide network and optimized logistics chains.

Order type	Logistics service	Remark
Standard	Cost-optimized: Contracted shipping company	Delivery within the normal national delivery times by the contracted shipping company
Plant downtime	Time-optimized: Express, courier, collection	You choose the shortest possible delivery time as it suits you best: • Delivery by means of collection or courier service • Delivery by means of express delivery
Emergency service	Special logistics: Courier	Spare parts can be ordered from us 24/7 – even outside normal working hours, as well as on weekends or national holidays. • Delivery by means of courier service

Benefits

- New liability for spare part defects
- Long-term spare parts availability
- Optimum system compatibility

More information

You can find more information on the internet at:
https://support.industry.siemens.com/cs/sc/2112

Contact information for your local Siemens office or national company is available on the internet at:
www.siemens.com/automation-contact

© Siemens 2024

Delivery as exchange product

Overview

With many products, we also offer you the option of an exchange in addition to the simple delivery of spare parts. This has the advantage that you not only receive the spare part quickly, but are able to return the defective device to us for a credit. You therefore receive our spare part at the lower exchange price.

A credit will be awarded on condition that the repair code indicates that repurchasing is admissible, a replacement is obtained from the spare parts store, and that the returned product is repairable.

The order type and logistics service determine the delivery of spare parts:

Order type	Logistics service	Remark
Standard	Cost-optimized: Contracted shipping company	Delivery within the normal national delivery times by the contracted shipping company
Plant downtime	Time-optimized: Express, courier, collection	You choose the shortest possible delivery time as it suits you best: • Delivery by means of collection or courier service • Delivery by means of express delivery
Emergency service	Special logistics: Courier	Spare parts can be ordered from us 24/7 – even outside normal working hours, as well as on weekends or national holidays. • Delivery by means of courier service

Return

For product returns, we require the following information:

- Reason for return
- If defective: detailed description of the fault
- Machine number
- Machine/system manufacturer
- End user

We will then be able to provide you with additional information in the repair report/inspection report regarding the diagnosis/ inspection as well as information about the completed repair.

Benefits

- Price benefits through the option of returning defective parts
- A spare part is available immediately in the event of failure
- New liability for spare part defects
- Long-term spare parts availability
- Optimum system compatibility

More information

You can find more information on the internet at:
https://support.industry.siemens.com/cs/sc/2112

Contact information for your local Siemens office or national company is available on the internet at:
www.siemens.com/automation-contact

Component upgrade service

Overview

Upgrade service for components: From OLD to NEW

Machines and plant are expected to have a long service life. The service life of the electronic components is, however, limited and normally shorter than the planned machine/plant operating times. To ensure that the required extended availability of the machines/plants is achieved, we offer an upgrade service for components at an attractive price.

In the course of their lifecycle, electronic components are normally redesigned/upgraded several times. With the upgrade service for components, you will always receive the latest technology.

A planned component upgrade from OLD to NEW helps to prevent unplanned machine stoppages and supports a safer and longer machines/plant availability. The upgrade service is mainly offered for older components that will soon be discontinued.

For information about the latest potential upgrades, please contact your local contact person. The upgrade service for components can only be offered to machine manufacturers or operators.

Benefits

- Price benefit through upgrade service
- New liability for new component defects
- Extended availability of your machines/plants
- Prevention of component failures due to wear and aging
- Prevention of machine stoppages due to unavailability of spare parts
- Reduced spare parts inventories
- Latest technology
- Easier servicing due to fewer variants
- Industry Services through Siemens are assured for the future

More information

You can find more information on the internet at:
https://support.industry.siemens.com/cs/sc/2112

Contact information for your local Siemens office or national company is available on the internet at:
www.siemens.com/automation-contact

© Siemens 2024

Return of diagnostic parts

Overview

Spare parts used for diagnostic purposes from the spare parts store can be returned within 3 months and a credit note for up to 85 % is issued.

For unused spare parts in their original packaging, you will receive a credit of 100 % in which case you will be charged a fixed price for handling.

Benefits

- Can be used for diagnostics
- Reduced spare parts inventories
- Low costs

More information

You can find more information on the internet at:
https://support.industry.siemens.com/cs/sc/2112

Contact information for your local Siemens office or national company is available on the internet at:
www.siemens.com/automation-contact

Stock reduction in spare parts store

Overview

Fast spare part delivery by Siemens enables manufacturers and plant operators to reduce their spare part stocks. For this purpose, we offer an analysis that shows exactly which parts should remain in the customer warehouse for a particular machine stock and which can be purchased directly from Siemens.

Benefits

- Reduced costs
- Stock optimization
- Minimization of fault downtimes

More information

You can find more information on the internet at:
https://support.industry.siemens.com/cs/sc/2112

Contact information for your local Siemens office or national company is available on the internet at:
www.siemens.com/automation-contact

Extended spare part availability

Overview

We normally retain spare parts for all products and systems for a period of 10 years after discontinuation of product marketing.

In individual cases, when we do not carry spare parts, we will offer a repair.

For a wide range of products and systems, spare parts availability is extended. We can provide you with the current spare parts availability for your machines/plants as a service once you have registered online with identSNAPSHOT.
www.siemens.com/identsnapshot

If you require longer availability of spare parts for your machines/plants, please contact your local contact person.

Benefits

- Higher plant availability
- Security of investment
- Reduction of lifecycle costs

More information

You can find more information on the internet at:
https://support.industry.siemens.com/cs/sc/2112

Contact information for your local Siemens office or national company is available on the internet at:
www.siemens.com/automation-contact

© Siemens 2024

Overview

High quality support in a breakdown – either at your premises or at a certified Siemens workshop

Even the best components eventually reach the end of their lifecycle. The result: downtimes and reduced productivity.

Our Repair Services comprise all service tasks over the entire product lifecycle, from functional maintenance to increasing performance. In this way, our service experts analyze, repair, maintain and optimize your components at Siemens manufacturer level, so that costly downtimes are minimized.

For more information visit us at:
www.siemens.com/repair-services

Downtimes cause problems in the plant as well as unnecessary costs. We can help you to reduce both to a minimum – with our worldwide repair facilities. The advantages for you are: Defects can be rectified before they cause further harm.

Repair is a favorable option when you have specific reasons for not wanting to replace the defective device or part with a new one (delivery as exchange product).

We maintain a global network of Siemens repair shops and certified partners to ensure that we will always be able to process your repairs quickly.

We can offer you different types of repair depending on your requirements:

Normal repair

Normal repair at standard conditions normally takes 10 working days following receipt of the defective item at our repair shop.

Fast repair

In particularly urgent cases, we offer you the option of a fast repair within 1 or 2 working days for many products at additional cost.

Mobile repair service

We come to you and perform the required repairs on site, for example, when the device or component cannot be removed due to its weight.

Function repair

A function repair is the same as a normal repair but excludes the repair of cosmetic defects, e.g. scratches, inscriptions, discoloration. The conditions applicable to function repairs should be observed in this case. The function repair can only be offered to machine manufacturers or operators. Please contact your local contact person for more information.

Long Life Repair

As a rule, a spare parts and repair service is offered for electronics products for a period of up to ten years after the period of active marketing. After this time, these services are generally only available in the case of acknowledged warranty conditions. Not so at Siemens. The Long Life Repair Service is available for selected electronic products and standard motors. Siemens thus offers a complete solution that includes short delivery times, long availability of original spare parts, economical repairs and a service availability of up to 25 years.

Benefits

- Short downtimes for machines and plants
- Only certified original parts are used
- Additional services from Siemens:
  - Longer availability of your machine/plant through the early replacement of wear parts and aging parts
  - Highest standards of quality
  - Use of the comprehensive test concept of series production, including software, firmware, ASICs, complex function blocks, etc.
  - Implementation of all the hardware and software/firmware enhancements known from development, production, suppliers, and service and quality management departments.
- Information supplied by repair report/inspection report

More information

You can find more information on the internet at:
https://support.industry.siemens.com/cs/sc/3098

Contact information for your local Siemens office or national company is available on the internet at:
www.siemens.com/automation-contact

© Siemens 2024

Overview

Spares on Web – online identification of spare parts

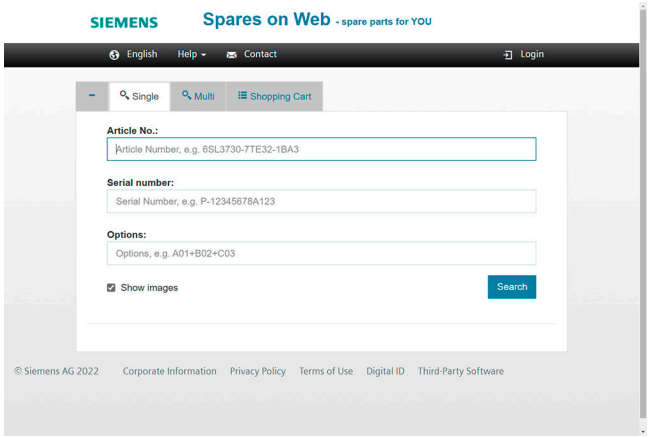

Spares on Web is a web-based tool for identifying spare parts. After you have entered the Article No. and serial number, the spare parts available for the relevant unit are displayed.

www.siemens.com/sow

© Siemens 2024

Overview

Siemens Product Partner for Drives Options

Individual options for our drives

In order to meet as many customer requirements as possible in the field of drive technology, in addition to its own products, Siemens also relies on the individual and complementary services of selected partners.

We are increasingly focusing on the standard drive options, and our Siemens Product Partners for Drives Options supplement our drives with individual drive options.

This gives Siemens a unique flexibility to meet all application requirements. Naturally, we support our Siemens Product Partners for Drives Options in tailoring their options perfectly to our drives.

For you as our customer, there are multiple benefits:

- The Siemens Product Partners for Drives Options meet the same high standards of quality and performance that we place on our own products
- Drive options can be adapted to individual requirements/ designs
- The Siemens Product Partners for Drives Options know our Siemens converter portfolio and can advise you individually and quickly

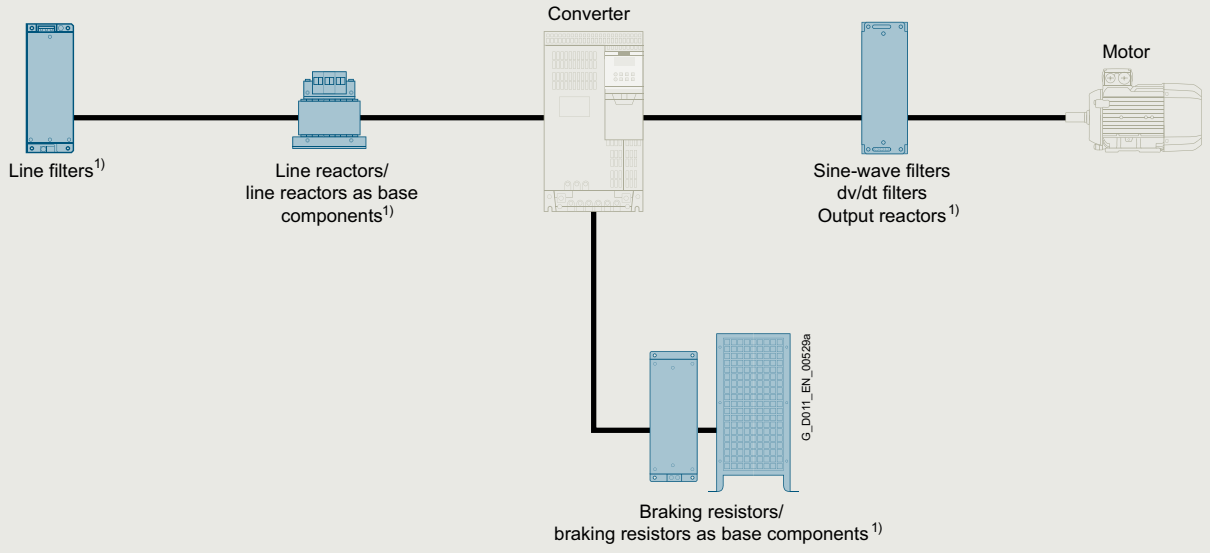

1) Options that can be supplied from Siemens as well as from Product Partners for Drives Options.

Schematic circuit diagram

More information

You can find more information on the internet at
www.siemens.com/drives-options-partner

© Siemens 2024

Overview

mySupport documentation – Compiling personal documents



mySupport documentation is a web-based system for generating personalized documentation based on standard documents and is part of the Siemens Industry Online Support portal.

In mySupport, a personal document library can be created in the "Documentation" category. This library can be accessed online in mySupport or also be generated in various formats for offline use.

Previously, this functionality was available in the My Documentation Manager for configurable manuals. Due to the integration in mySupport, all entries of the Industry Online Support can now be imported into the personal document library, including FAQs or product notifications.

If you have already worked with the My Documentation Manager, all of the previously created libraries will continue to be available without restrictions in mySupport.

In addition, the personal library in mySupport can be shared with other mySupport users. In this way, a collection of relevant documents can be created very effectively and used together with other mySupport users all over the world.

You must register/log in for configuring and generating/ managing

Benefits

- Display
  View, print or download standard documents or personalized documents
- Configure
  Transfer standard documents or parts of them to personalized documents
- Generate/Manage
  Generate and manage personalized documents in the formats PDF, RTF or XML in all available languages

Function

Opening mySupport documentation in the Industry Online Support portal

- About the product support, entry type "Manual":
  https://support.industry.siemens.com/cs/ww/en/ps/man
  By clicking on the required version of the manual and then "Show and configure", the manual opens in a modular view, where you can navigate from topic to topic. Here the direct link to a topic can be used and made available to other users. The selected document can be added to the personal library via "mySupport Cockpit" > "Add to mySupport documentation".
- Via the direct link
  https://support.industry.siemens.com/my/ww/en/documentation/advanced
  After logon/registration, the online help is displayed as the current document.

More information

You can find additional information on the internet at

- https://support.industry.siemens.com/my/ww/en/documentation
- https://support.industry.siemens.com/cs/helpcenter/en/index.htm?#persoenliche_bibliothek_aufbauen.htm

© Siemens 2024

Overview

A high-quality programmable control or drive system can be used to maximum effect only if the user is aware of the performance of the products used as a result of intensive training and good technical documentation.

This is becoming more important due to the shorter innovation cycles of modern automation products and the convergence of electronics and mechanical engineering.

A comprehensive range of documentation is available which includes a Getting Started guide, operating instructions, installation manuals and a list manual.

In addition to technical information for SINUMERIK, SINAMICS, SIMOTION and SIMOTICS, the documentation is available for downloading as a PDF file from the internet:

- SINUMERIK
  https://support.industry.siemens.com/cs/document/108464614
- SINAMICS
  https://support.industry.siemens.com/cs/document/109807358
- SIMOTION
  https://support.industry.siemens.com/cs/document/109479653
- SIMOTICS
  https://support.industry.siemens.com/cs/document/109813641

Application

Explanations of the manuals:

- **Operating Instructions**
  contain all the information needed to install the device and make electrical connections, information about commissioning and a description of the converter functions.
  Phases of use: Control cabinet construction, commissioning, operation, maintenance and servicing.
- **Hardware Installation Manual**
  contains all relevant information about the intended use of the components of a system (technical specifications, interfaces, dimensional drawings, characteristics, or possible applications), information about installation and electrical connections and information about maintenance and servicing.
  Phases of use: Control cabinet configuration/construction, maintenance and servicing.
- **Operating and Installation Instructions**
  (for converter and accessories)
  contain all relevant information about the intended use of the components, such as technical specifications, interfaces, dimensional drawings, characteristics, or possible applications.
  Phases of use: Control cabinet configuration/construction.
- **Manual/Configuration Manual**
  contains all necessary information about the intended use of the components of a system, e.g. technical specifications, interfaces, dimensional drawings, characteristics, or possible applications.
  Phases of use: Cabinet configuration/setup, circuit diagram configuration/drawing.
- **Commissioning Manual**
  contains all information relevant to commissioning after installation and wiring. It also contains all safety and warning notices relevant to commissioning in addition to overview drawings.
  Phases of use: Commissioning of components that have already been connected, configuration of system functions.
- **List Manual**
  contains all parameters, function diagrams, and faults/alarms for the product/system as well as their meanings and setting options. It contains parameter data and fault/alarm descriptions with functional correlations.
  Phases of use: Commissioning of components that have already been connected, configuration of system functions, fault cause/diagnosis.
- **Getting Started**
  provides information about getting started for the first-time user as well as references to additional information. It contains information about the basic steps to be taken during commissioning. The information in the other documentation should be carefully observed for all of the other work required.
  Phases of use: Commissioning of components that have already been connected.
- **Function Manual Drive Functions**
  contains all the relevant information about individual drive functions: Description, commissioning and integration in the drive system.
  Phases of use: Commissioning of components that have already been connected, configuration of system functions.

© Siemens 2024

Notes

© Siemens 2024

Appendix

15



15/2	Certificates of suitability
15/4	Software licenses
15/6	Conversion tables
15/8	Metal surcharges
15/11	Conditions of sale and delivery

© Siemens 2024

Certificates of suitability

Overview

Many of the products in this Catalog fulfill requirements, e.g. for UL, CSA or FM and are labeled with the corresponding approval designation.

All of the certificates of suitability, approvals, certificates, declarations of conformity, test certificates, e.g. CE, UL, Safety Integrated etc. have been performed with the associated system components as they are described in the Catalogs and Configuration Manuals.

The certificates are only valid if the products are used with the described system components, are installed according to the Installation Guidelines and used for their intended purpose.

In other cases, the vendor of these products is responsible for arranging for the issue of new certificates.

Test code	Tested by	Device series/ Component	Test standard	Product category/ File-No.
UL: Underwriters Laboratories ***Independent public testing body in North America***				
	UL according to UL standard	SINUMERIK	Standard UL 508, CSA C22.2 No. 142	NRAQ/7.E164110 NRAQ/7.E217227
		SIMOTION	Standard UL 508, CSA C22.2 No. 142	NRAQ/7.E164110
	UL according to CSA standard	SINAMICS	Standard UL 508, 508C, 61800-5-1 CSA C22.2 No. 142, 274	NRAQ/7.E164110, NMMS/2/7/8.E192450, NMMS/2/7/8.E203250, NMMS/7.E214113, NMMS/7.E253831
	UL according to UL and CSA standards			NMMS/2/7/8.E121068 NMMS/7.E355661 NMMS/7.E323473
	UL according to UL standard	SIMODRIVE	Standard UL 508C, CSA C22.2 No. 274	NMMS/2/7/8.E192450 NMMS/7.E214113
	UL according to CSA standard	SIMOTICS	Standard UL 1004-1, 1004-6, 1004-8, CSA C22.2 No. 100	PRGY2/8.E227215 PRHZ2/8.E93429 PRHJ2/8.E342747 PRGY2/8.E253922 PRHZ2/8.E342746
	UL according to UL and CSA standard			
		Line/motor reactors	Standard UL 508, 506, 5085-1, 5085-2, 1561, CSA C22.2 No. 14, 47, 66.1-06, 66.2-06	XQNX2/8.E257859 NMTR2/8.E219022 NMMS2/8.E333628 XPTQ2/8.E257852 XPTQ2/8.E103521 NMMS2/8.E224872 XPTQ2/8.E354316 XPTQ2/8.E198309 XQNX2/8.E475972
		Line filters, dv/dt filters, sine-wave filters	UL 1283, CSA C22.2 No. 8	FOKY2/8.E70122
		Resistors	UL 508, 508C, CSA C22.2 No. 14, 274	NMTR2/8.E224314 NMMS2/8.E192450 NMTR2/8.E221095 NMTR2/8.E226619
TUV: TUV Rheinland of North America Inc. ***Independent public testing body in North America, Nationally Recognized Testing Laboratory (NRTL)*** ***TÜV: TÜV SÜD Product Service*** ***Independent public testing body in Germany, Nationally Recognized Testing Laboratory (NRTL) for North America***				
	TUV according to UL and CSA standards	SINAMICS	NRTL Listing according to standard UL 508C	U7V 12 06 20078 013 U7 11 04 20078 009 U7 11 04 20078 010 U7 11 04 20078 011
		SIMOTION	NRTL Listing according to standard UL 508	U7V 13 03 20078 01
		SIMODRIVE	NRTL Listing according to standard UL 508C, CSA C22.2. No. 14	CU 72090702
		Motion Control Encoder	NRTL Listing according to UL 61010-1 CSA C22.2 No. 61010-1	U8V 10 06 20196 024

© Siemens 2024

Overview

Test code	Tested by	Device series/ Component	Test standard	Product category/ File-No.
CSA: Canadian Standards Association Independent public testing body in Canada				
	CSA according to CSA standard	SINUMERIK	Standard CSA C22.2 No. 142	2252-01 : LR 102527
FMRC: Factory Mutual Research Corporation Independent public testing body in North America				
	FM according to FM standard	SINUMERIK	Standard FMRC 3600, FMRC 3611, FMRC 3810, ANSI/ISA S82.02.1	–
EAC: Independent public testing body within the Eurasian Conformity Area				
	EAC in accordance with EAC Directive	SINAMICS SINUMERIK SIMOTION	Standard IEC 61800-5-1/-2, IEC 61800-3	–
RCM: Australian Communications and Media Authority Independent public testing body in Australia				
	RCM according to EMV standard	SINAMICS SINUMERIK SIMOTION	Standard IEC AS 61800-3, EN 61800-3	–
KC: National Radio Research Agency Independent public testing body in South Korea				
	KC according to EMV standard	SINAMICS SINUMERIK SIMOTION	Standard KN 11	–
BIA Federal Institute for Occupational Safety				
–	Functional safety	SINAMICS SINUMERIK SIMOTION	Standard EN 61800-5-2	–
TÜV SÜD Rail				
–	Functional safety	SINAMICS SINUMERIK SIMOTION	Standard EN 61800-5-2	–

More information about certificates can be found online at:
https://support.industry.siemens.com/cs/ww/en/ps/cert

© Siemens 2024

Software licenses

Overview

Software types

Software requiring a license is categorized into types.
The following software types have been defined:

- Engineering software
- Runtime software

Engineering software

This includes all software products for creating (engineering) user software, e.g. for configuring, programming, parameterizing, testing, commissioning or servicing.

Data generated with engineering software and executable programs can be duplicated for your own use or for use by third-parties free-of-charge.

Runtime software

This includes all software products required for plant/machine operation, e.g. operating system, basic system, system expansions, drivers, etc.

The duplication of the runtime software and executable programs created with the runtime software for your own use or for use by third-parties is subject to a charge.

You can find information about license fees according to use in the ordering data (e.g. in the catalog). Examples of categories of use include per CPU, per installation, per channel, per instance, per axis, per control loop, per variable, etc.

Information about extended rights of use for parameterization/configuration tools supplied as integral components of the scope of supply can be found in the readme file supplied with the relevant product(s).

License types

Siemens Digital Industries and Smart Infrastructure offers various types of software license:

- Floating license
- Single license
- Rental license
- Rental floating license
- Trial license
- Demo license
- Demo floating license

Floating license

The software may be installed for internal use on any number of devices by the licensee. Only the concurrent user is licensed. The concurrent user is the person using the program. Use begins when the software is started.
A license is required for each concurrent user.

Single license

Unlike the floating license, a single license permits only one installation of the software per license.

The type of use licensed is specified in the ordering data and in the Certificate of License (CoL). Types of use include for example per instance, per axis, per channel, etc.

One single license is required for each type of use defined.

Rental license

A rental license supports the "sporadic use" of engineering software. Once the license key has been installed, the software can be used for a specific period of time (the operating hours do not have to be consecutive).
One license is required for each installation of the software.

Rental floating license

The rental floating license corresponds to the rental license, except that a license is not required for each installation of the software. Rather, one license is required per object (for example, user or device).

Trial license

A trial license supports "short-term use" of the software in a non-productive context, e.g. for testing and evaluation purposes. It can be transferred to another license.

Demo license

The demo license support the "sporadic use" of engineering software in a non-productive context, for example, use for testing and evaluation purposes. It can be transferred to another license. After the installation of the license key, the software can be operated for a specific period of time, whereby usage can be interrupted as often as required.

One license is required per installation of the software.

Demo floating license

The demo floating license corresponds to the demo license, except that a license is not required for each installation of the software. Rather, one license is required per object (for example, user or device).

Certificate of License (CoL)

The CoL is the licensee's proof that the use of the software has been licensed by Siemens. A CoL is required for every type of use and must be kept in a safe place.

Downgrading

The licensee is permitted to use the software or an earlier version/release of the software, provided that the licensee owns such a version/release and its use is technically feasible.

Delivery versions

Software is constantly being updated.
The following delivery versions

- PowerPack
- Upgrade

can be used to access updates.

Existing bug fixes are supplied with the ServicePack version.

PowerPack

PowerPacks can be used to upgrade to more powerful software. The licensee receives a new license agreement and CoL (Certificate of License) with the PowerPack. This CoL, together with the CoL for the original product, proves that the new software is licensed.
A separate PowerPack must be purchased for each original license of the software to be replaced.

Upgrade

An upgrade permits the use of a new version of the software on the condition that a license for a previous version of the product is already held.
The licensee receives a new license agreement and CoL with the upgrade. This CoL, together with the CoL for the previous product, proves that the new version is licensed.
A separate upgrade must be purchased for each original license of the software to be upgraded.

© Siemens 2024

Overview

ServicePack

ServicePacks are used to debug existing products. ServicePacks may be duplicated for use as prescribed according to the number of existing original licenses.

License key

Siemens Digital Industries and Smart Infrastructure supplies software products with and without license keys.

The license key serves as an electronic license stamp and is also the "switch" for activating the software (floating license, rental license, etc.).

The complete installation of software products requiring license keys includes the program to be licensed (the software) and the license key (which represents the license).

Software Update Service (SUS)

As part of the SUS contract, all software updates for the respective product are made available to you free of charge for a period of one year from the invoice date. The contract will automatically be extended for one year if it is not canceled three months before it expires.

The possession of the current version of the respective software is a basic condition for entering into an SUS contract.

You can download explanations concerning license conditions from https://mall.industry.siemens.com/legal/ww/en/terms_of_trade_en.pdf

© Siemens 2024

Appendix

Conversion tables

Rotary inertia (to convert from A to B, multiply by entry in table)

A \ B	lb-in^2	lb-ft^2	lb-in-s^2	lb-ft-s^2 slug-ft^2	kg-cm^2	kg-cm-s^2	gm-cm^2	gm-cm-s^2	oz-in^2	oz-in-s^2
lb-in^2	1	6.94×10^{-3}	2.59×10^{-3}	2.15×10^{-4}	2.926	2.98×10^{-3}	2.92×10^{3}	2.984	16	4.14×10^{-2}
lb-ft^2	144	1	0.3729	3.10×10^{-2}	421.40	0.4297	4.21×10^{5}	429.71	2304	5.967
lb-in-s^2	386.08	2.681	1	8.33×10^{-2}	1.129×10^{3}	1.152	1.129×10^{6}	1.152×10^{3}	6.177×10^{3}	16
lb-ft-s^2 slug-ft^2	4.63×10^{3}	32.17	12	1	1.35×10^{4}	13.825	1.355×10^{7}	1.38×10^{4}	7.41×10^{4}	192
kg-cm^2	0.3417	2.37×10^{-3}	8.85×10^{-4}	7.37×10^{-5}	1	1.019×10^{-3}	1000	1.019	5.46	1.41×10^{-2}
kg-cm-s^2	335.1	2.327	0.8679	7.23×10^{-2}	980.66	1	9.8×10^{5}	1000	5.36×10^{3}	13.887
gm-cm^2	3.417×10^{-4}	2.37×10^{-6}	8.85×10^{-7}	7.37×10^{-8}	1×10^{-3}	1.01×10^{-6}	1	1.01×10^{-3}	5.46×10^{-3}	1.41×10^{-5}
gm-cm-s^2	0.335	2.32×10^{-3}	8.67×10^{-4}	7.23×10^{-5}	0.9806	1×10^{-3}	980.6	1	5.36	1.38×10^{-2}
oz-in^2	0.0625	4.34×10^{-4}	1.61×10^{-4}	1.34×10^{-5}	0.182	1.86×10^{-4}	182.9	0.186	1	2.59×10^{-3}
oz-in-s^2	24.13	0.1675	6.25×10^{-2}	5.20×10^{-3}	70.615	7.20×10^{-2}	7.09×10^{4}	72.0	386.08	1

Torque (to convert from A to B, multiply by entry in table)

A \ B	lb-in	lb-ft	oz-in	N-m	kg-cm	kg-m	gm-cm	dyne-cm
lb-in	1	8.333×10^{-2}	16	0.113	1.152	1.152×10^{-2}	1.152×10^{3}	1.129×10^{6}
lb-ft	12	1	192	1.355	13.825	0.138	1.382×10^{4}	1.355×10^{7}
oz-in	6.25×10^{-2}	5.208×10^{-3}	1	7.061×10^{-3}	7.200×10^{-2}	7.200×10^{-4}	72.007	7.061×10^{4}
N-m	8.850	0.737	141.612	1	10.197	0.102	1.019×10^{4}	1×10^{7}
kg-cm	0.8679	7.233×10^{-2}	13.877	9.806×10^{-2}	1	10^{-2}	1000	9.806×10^{5}
kg-m	86.796	7.233	1.388×10^{3}	9.806	100	1	1×10^{5}	9.806×10^{7}
gm-cm	8.679×10^{-4}	7.233×10^{-5}	1.388×10^{-2}	9.806×10^{-5}	1×10^{-3}	1×10^{-5}	1	980.665
dyne-cm	8.850×10^{-7}	7.375×10^{-8}	1.416×10^{-5}	10^{-7}	1.0197×10^{-6}	1.019×10^{-8}	1.019×10^{-3}	1

Length (to convert from A to B, multiply by entry in table)

A \ B	inches	feet	cm	yd	mm	m
inches	1	0.0833	2.54	0.028	25.4	0.0254
feet	12	1	30.48	0.333	304.8	0.3048
cm	0.3937	0.03281	1	1.09×10^{-2}	10	0.01
yd	36	3	91.44	1	914.4	0.914
mm	0.03937	0.00328	0.1	1.09×10^{-3}	1	0.001
m	39.37	3.281	100	1.09	1000	1

Power (to convert from A to B, multiply by entry in table)

A \ B	hp	Watts
hp (English)	1	745.7
(lb-in) (deg./s)	2.645×10^{-6}	1.972×10^{-3}
(lb-in) (r/min)	1.587×10^{-5}	1.183×10^{-2}
(lb-ft) (deg./s)	3.173×10^{-5}	2.366×10^{-2}
(lb-ft) (r/min)	1.904×10^{-4}	0.1420
Watts	1.341×10^{-3}	1

Force (to convert from A to B, multiply by entry in table)

A \ B	lb	oz	gm	dyne	N
lb	1	16	453.6	4.448×10^{5}	4.4482
oz	0.0625	1	28.35	2.780×10^{4}	0.27801
gm	2.205×10^{-3}	0.03527	1	1.02×10^{-3}	N.A.
dyne	2.248×10^{-6}	3.59×10^{-5}	980.7	1	0.00001
N	0.22481	3.5967	N.A.	100000	1

Mass (to convert from A to B, multiply by entry in table)

A \ B	lb	oz	gm	kg	slug
lb	1	16	453.6	0.4536	0.0311
oz	6.25×10^{-2}	1	28.35	0.02835	1.93×10^{-3}
gm	2.205×10^{-3}	3.527×10^{-2}	1	10^{-3}	6.852×10^{-5}
kg	2.205	35.27	10^{3}	1	6.852×10^{-2}
slug	32.17	514.8	1.459×10^{4}	14.59	1

Rotation (to convert from A to B, multiply by entry in table)

A \ B	r/min	rad/s	degrees/s
r/min	1	0.105	6.0
rad/s	9.55	1	57.30
degrees/s	0.167	1.745×10^{-2}	1

© Siemens 2024

Temperature Conversion

°F	°C	°C	°F
0	–17.8	–10	14
32	0	0	32
50	10	10	50
70	21.1	20	68
90	32.2	30	86
98.4	37	37	98.4
212	100	100	212
subtract 32 and multiply by $^5/_9$		multiply by $^9/_5$ and add 32	

Mechanism Efficiencies

Acme-screw with brass nut	~0.35–0.65
Acme-screw with plastic nut	~0.50–0.85
Ball-screw	~0.85–0.95
Chain and sprocket	~0.95–0.98
Preloaded ball-screw	~0.75–0.85
Spur or bevel-gears	~0.90
Timing belts	~0.96–0.98
Worm gears	~0.45–0.85
Helical gear (1 reduction)	~0.92

Friction Coefficients

Materials	μ
Steel on steel (greased)	~0.15
Plastic on steel	~0.15–0.25
Copper on steel	~0.30
Brass on steel	~0.35
Aluminum on steel	~0.45
Steel on steel	~0.58

Mechanism	μ
Ball bushings	<0.001
Linear bearings	<0.001
Dove-tail slides	~0.2++
Gibb ways	~0.5++

Material Densities

Material	lb-in^3	gm-cm^3
Aluminum	0.096	2.66
Brass	0.299	8.30
Bronze	0.295	8.17
Copper	0.322	8.91
Hard wood	0.029	0.80
Soft wood	0.018	0.48
Plastic	0.040	1.11
Glass	0.079–0.090	2.2–2.5
Titanium	0.163	4.51
Paper	0.025–0.043	0.7–1.2
Polyvinyl chloride	0.047–0.050	1.3–1.4
Rubber	0.033–0.036	0.92–0.99
Silicone rubber, without filler	0.043	1.2
Cast iron, gray	0.274	7.6
Steel	0.280	7.75

Wire Gauges[1)]

Cross-section mm^2	Standard Wire Gauge (SWG)	American Wire Gauge (AWG)
0.2	25	24
0.3	23	22
0.5	21	20
0.75	20	19
1.0	19	18
1.5	17	16
2.5	15	13
4	13	11
6	12	9
10	9	7
16	7	6
25	5	3
35	3	2
50	0	1/0
70	000	2/0
95	00000	3/0
120	0000000	4/0
150	–	6/0
185	–	7/0

[1)] The table shows approximate SWG/AWG sizes nearest to standard metric sizes; the cross-sections do not match exactly.

© Siemens 2024

Explanation of the raw material/metal surcharges[1)]

Surcharge calculation

To compensate for variations in the price of the raw materials silver, copper, aluminum, lead, gold, dysprosium[2)] and/or neodym[2)], surcharges are calculated on a daily basis using the so-called metal factor. These apply to products containing these raw materials and are calculated per raw material. These surcharges are added to the price of a product if the basic official price (BOP) of the raw material in question is exceeded.

Surcharges are calculated in accordance with the following criteria:

Basic official price (BOP) of the raw material

- BOP of the workday prior to receipt of the order or prior to release order (Daily Price) for:
  - Silver (processed) [3)]
  - Gold (processed) [3)]
  - Aluminum (temporary constant 360.31 EUR per 100 kg, due to loss of DEL-Notiz)
  - Lead (constant 199.50 EUR per 100 kg)
- BOP of two workdays prior to receipt of the order or prior to release order (Daily Price) per 100 kg for:
  - Copper (LME-notation/10, converted from USD to EUR using LME-FX-Rate [MTLE] +1.2 %) + 1 % [4)]
- If BOP is suspended, the last one is used.

Metal factor of the products

Certain products are displayed with a metal factor. The metal factor determines the official price (for those raw materials concerned) as of which the metal surcharges are applied and the calculation method used (weight or percentage method). An exact explanation is given below.

Structure of the metal factor

Metal factor consists of several digits; the first digit indicates whether the percentage method of calculation refers to the list price or a discounted price (customer net price) (L = list price / N = customer net price).

The remaining digits indicate the method of calculation used for the respective raw material. If no surcharge is added for a raw material, a "-" is used.

1st digit	List or customer net price using the percentage method
2nd digit	for silver (AG)
3rd digit	for copper (CU)
4th digit	for aluminum (AL)
5th digit	for lead (PB)
6th digit	for gold (AU)
7th digit	for dysprosium (Dy)[2)]
8th digit	for neodym (Nd)[2)]

Weight method

The weight method uses the BOP, the daily price and the raw material weight. In order to calculate the surcharge, the BOP must be subtracted from the daily price. The difference is then multiplied by the raw material weight.

The BOP can be found in the table below using the number (1 to 9) of the respective digit of the metal factor. The raw material weight can be found in the respective product descriptions.

Percentage method

Use of the percentage method is indicated by the letters A-Z at the respective digit of the metal factor.

The surcharge is increased - dependent on the deviation of the daily price compared with the BOP - using the percentage method in "steps" and consequently offers surcharges that remain constant within the framework of this "step range". A higher percentage rate is charged for each new step. The respective percentage level can be found in the table below.

Metal factor examples

L E A – – – – –

- Basis for % surcharge: List price
- Silver Basis 150 €, Step 50 €, 0.5 %
- Copper Basis 150 €, Step 50 €, 0.1 %
- No surcharge for aluminum
- No surcharge for lead
- No surcharge for gold
- No surcharge for dysprosium
- No surcharge for neodym

N – A 6 – – – –

- Basis for % surcharge: Customer net price
- No surcharge for silver
- Copper Basis 150 €, Step 50 €, 0.1 %
- Aluminum acc. to weight, basic offic. price 225 €
- No surcharge for lead
- No surcharge for gold
- No surcharge for dysprosium
- No surcharge for neodym

– – 3 – – – – –

- No basis necessary
- No surcharge for silver
- Copper acc. to weight, basic official price 150 €
- No surcharge for aluminum
- No surcharge for lead
- No surcharge for gold
- No surcharge for dysprosium
- No surcharge for neodym

1) Refer to the separate explanation on the next page regarding the raw materials dysprosium and neodym (= rare earths).

2) For a different method of calculation, refer to the separate explanation for these raw materials on the next page.

3) Source: Umicore, Hanau (www.metalsmanagement.umicore.com).

4) Source: The London Metal Exchange – an HKEX Company (https://www.lme.com/).
Siemens uses LME's data and trademarks within the scope of a license granted by LME, LME has no involvement and accepts no responsibility to any third party in connection with the use of data and trademarks, onward distribution of data and trademarks by third parties is not permitted.

© Siemens 2024

Explanation of the raw material/metal surcharges for dysprosium and neodym (rare earths)

Surcharge calculation

To compensate for variations in the price of the raw materials silver[1], copper[1], aluminum[1], lead[1], gold[1], dysprosium and/or neodym, surcharges are calculated on a daily basis using the so-called metal factor. This applies to products containing at least one of these raw materials. The surcharge for dysprosium and neodym is calculated as a supplement to the price of a product if the basic official price (BOP) of the raw material in question is exceeded.

The surcharge is calculated in accordance with the following criteria:

- Basic official price (BOP) of the raw material[2]
  Three-month basic average price (see below) in the period before the quarter in which the order was received or the release order took place (average official price) for
  - Dysprosium (Dy metal, 99 % min. FOB China; USD/kg)
  - Neodym (Nd metal, 99 % min. FOB China; USD/kg)
- Metal factor of the products
  Certain products are displayed with a metal factor. The metal factor indicates (for those raw materials concerned) the BOP as of which the surcharges for dysprosium and neodym are calculated using the weight method. An exact explanation of the metal factor is given below.

Three-month average price

The prices of rare earths vary according to the foreign currency, and there is no freely accessible stock exchange listing. This makes it more difficult for all parties involved to monitor changes in price. In order to avoid continuous adjustment of the surcharges, but to still ensure fair, transparent pricing, an average price is calculated over a three-month period using the average monthly foreign exchange rate from USD to EUR (source: European Central Bank). Since not all facts are immediately available at the start of each month, a one-month buffer is allowed before the new average price applies.

Examples of calculation of the average official price:

Period for calculation of the average price:	Period during which the order/release order is effected and the average price applies:
Sep 2012 - Nov 2012	Q1 in 2013 (Jan - Mar)
Dec 2012 - Feb 2013	Q2 in 2013 (Apr - Jun)
Mar 2013 - May 2013	Q3 in 2013 (Jul - Sep)
Jun 2013 - Aug 2013	Q4 in 2013 (Oct - Dec)

Structure of the metal factor

The metal factor consists of several digits; the first digit is not relevant to the calculation of dysprosium and neodym.

The remaining digits indicate the method of calculation used for the respective raw material. If no surcharge is added for a raw material, a "-" is used.

1st digit	List or customer net price using the percentage method
2nd digit	for silver (AG)[1]
3rd digit	for copper (CU)[1]
4th digit	for aluminum (AL)[1]
5th digit	for lead (PB)[1]
6th digit	for gold (AU)[1]
7th digit	for dysprosium (Dy)
8th digit	for neodym (Nd)

Weight method

The weight method uses the basic official price, the average price and the raw material weight. In order to calculate the surcharge, the BOP must be subtracted from the average price. The difference is then multiplied by the raw material weight.

The basic official price can be found in the table below using the number (1 to 9) of the respective digit of the metal factor. Your Sales contact can inform you of the raw material weight.

Metal factor examples

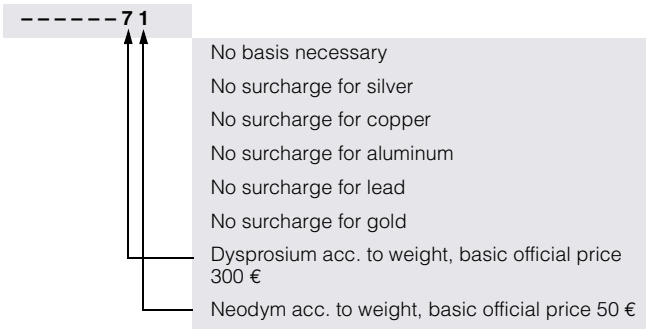

1) For a different method of calculation, refer to the separate explanation for these raw materials on the previous page.
2) Source: Asian Metal Ltd (www.asianmetal.com)

© Siemens 2024

Metal surcharges

Values of the metal factor

Percentage method	Basic official price in €	Step range in €	% surcharge 1st step	% surcharge 2nd step	% surcharge 3rd step	% surcharge 4th step	% surcharge per additional step
			Price in €	Price in €	Price in €	Price in €	
			150.01 - 200.00	200.01 - 250.00	250.01 - 300.00	300.01 - 350.00	
A	150	50	0.1	0.2	0.3	0.4	0.1
B	150	50	0.2	0.4	0.6	0.8	0.2
C	150	50	0.3	0.6	0.9	1.2	0.3
D	150	50	0.4	0.8	1.2	1.6	0.4
E	150	50	0.5	1.0	1.5	2.0	0.5
F	150	50	0.6	1.2	1.8	2.4	0.6
G	150	50	1.0	2.0	3.0	4.0	1.0
H	150	50	1.2	2.4	3.6	4.8	1.2
I	150	50	1.6	3.2	4.8	6.4	1.6
J	150	50	1.8	3.6	5.4	7.2	1.8
			175.01 - 225.00	225.01 - 275.00	275.01 - 325.00	325.01 - 375.00	
O	175	50	0.1	0.2	0.3	0.4	0.1
P	175	50	0.2	0.4	0.6	0.8	0.2
R	175	50	0.5	1.0	1.5	2.0	0.5
			225.01 - 275.00	275.01 - 325.00	325.01 - 375.00	375.01 - 425.00	
S	225	50	0.2	0.4	0.6	0.8	0.2
U	225	50	1.0	2.0	3.0	4.0	1.0
V	225	50	1.0	1.5	2.0	3.0	1.0
W	225	50	1.2	2.5	3.5	4.5	1.0
			150.01 - 175.00	175.01 - 200.00	200.01 - 225.00	225.01 - 250.00	
Y	150	25	0.3	0.6	0.9	1.2	0.3
			400.01 - 425.00	425.01 - 450.00	450.01 - 475.00	475.01 - 500.00	
Z	400	25	0.1	0.2	0.3	0.4	0.1
	Price basis (1st digit)						
L	Calculation based on the list price						
N	Calculation based on the customer net price (discounted list price)						
Weight method	**Basic official price in €**						
1	50	Calculation based on raw material weight					
2	100						
3	150						
4	175						
5	200						
6	225						
7	300						
8	400						
9	555						
Miscellaneous							
-	No metal surcharge						

© Siemens 2024

1. General Provisions

By using this catalog you can purchase hard- and software products as well as services (together hereinafter referred to as "products") described therein from Siemens Aktiengesellschaft subject to the following Terms and Conditions of Sale and Delivery (hereinafter referred to as "T&C"). Note, for products purchased from any Siemens entity having a registered office outside of Germany, the respective terms and conditions of sale and delivery of the respective Siemens entity apply exclusively. The following T&C apply exclusively for orders placed with Siemens Aktiengesellschaft, Germany.

1.1 For customers with a seat or registered office in European Union

For customers with a seat or registered office in European Union, the following terms and conditions apply subordinate to T&C:

- for products, which include specific terms and conditions in the text of the product description, these specific terms and conditions shall apply and subordinate thereto,,
- for stand-alone software products and software products forming a part of a product or project, the "General Conditions for Software Products for Infrastructure & Industry Business (German law)"[1] and/or
- for consulting services the "Allgemeine Geschäftsbedingungen für Beratungsleistungen für Infrastructure & Industry Geschäft (Deutsches Recht)"[1] (available only in German) and/or
- for other services, the „Supplementary Terms and Conditions for Services for Infrastructure & Industry Business (German Law) ("BL")"[1] and/or
- for other products the "General Conditions for the Supply of Products and Services of the Electrical and Electronics Industry"[1].
  In case such products should contain Open Source Software, the conditions of which shall prevail over the "General Conditions for the Supply of Products and Services of the Electrical and Electronics Industry"[1], the Product will be given a note as to which special conditions apply to this open source software. This shall apply mutatis mutandis for notices referring to other third-party software components.

1.2 For customers with a seat or registered office outside European Union

For customers with a seat or registered office outside European Union, the following terms and conditions apply subordinate to T&C:

- for products, which include specific terms and conditions in the description text, these specific terms and conditions shall apply and subordinate thereto,
- for consulting services the "Standard Terms and Conditions for Consulting Services for Infrastructure & Industry Business (Swiss Law)"[1] and/or
- for other services the "International Terms & Conditions for Services"[1] supplemented by "Software Licensing Conditions"[1] and/or
- for other products the "International Terms & Conditions for Products"[1] supplemented by "Software Licensing Conditions"[1]

1.3 For customers with master or framework agreement

To the extent products offered are covered by an existing master or framework agreement, the terms and conditions of that agreement shall apply instead of T&C.

2. Prices

The prices are in € (Euro) ex point of delivery, exclusive of packaging.

The sales tax (value added tax) is not included in the prices. It shall be charged separately at the respective rate according to the applicable statutory legal regulations.

Prices are subject to change without prior notice. We will charge the prices valid at the time of delivery.

To compensate for variations in the price of raw materials (e.g. silver, copper, aluminum, lead, gold, dysprosium and neodym), surcharges are calculated on a daily basis using the so-called metal factor for products containing these raw materials.
A surcharge for the respective raw material is calculated as a supplement to the price of a product if the basic official price of the raw material in question is exceeded.

The metal factor of a product indicates the basic official price (for those raw materials concerned) as of which the surcharges on the price of the product are applied, and with what method of calculation. The metal factor, provided it is relevant, can be found in the respective product description.

You will find a detailed explanation of the metal factor on the page headed "Metal surcharges".

To calculate the surcharge (except in the cases of copper, dysprosium and neodym), the official price from the day prior to that on which the order was received or the release order was effected is used.

To calculate the surcharge applicable to copper, the official price from two days prior to that on which the order was received or the release order was effected is used.

To calculate the surcharge applicable to dysprosium and neodym ("rare earths"), the corresponding three-month basic average price in the quarter prior to that in which the order was received or the release order was effected is used with a one-month buffer (details on the calculation can be found in the explanation of the metal factor).

3. Additional Terms and Conditions

The dimensions are in mm. In Germany, according to the German law on units in measuring technology, data in inches apply only to devices for export.

Illustrations are not binding.

Insofar as there are no remarks on the individual pages of this catalog – especially with regard to data, dimensions and weights given – these are subject to change without prior notice.

[1] The text of the Terms and Conditions of Siemens AG can be downloaded at https://mall.industry.siemens.com/legal/ww/en/terms_of_trade_en.pdf

© Siemens 2024

4. Export Control and Sanctions Compliance

4.1 General

Customer shall comply with all applicable sanctions, embargoes and (re-)export control laws and regulations, and, in any event, with those of the European Union, the United States of America and any locally applicable jurisdiction (collectively "Export Regulations").

4.2 Checks for Products

Prior to any transaction by customer concerning products (including hardware, documentation and technology) delivered by Siemens, or products (including maintenance and technical support) performed by Siemens with a third party, customer shall check and certify by appropriate measures that

- (i) the customer's use, transfer, or distribution of such products, the brokering of contracts or the provision of other economic resources in connection with products will not be in violation of any Export Regulations, also taking into account any prohibitions to circumvent these (e.g., by undue diversion)
- (ii) the products are not intended or provided for prohibited or unauthorized non-civilian purposes (e.g. armaments, nuclear technology, weapons, or any other usage in the field of defense and military);
- (iii) customer has screened all direct and indirect parties involved in the receipt, use, transfer, or distribution of the products against all applicable restricted party lists of the Export Regulations concerning trading with entities, persons and organizations listed therein and
- (iv) products within the scope of items-related restrictions, as specified in the respective annexes to the Export Regulations, will not, unless permitted by the Export Regulations, be
  (a) exported, directly or indirectly (e.g., via Eurasian Economic Union (EAEU) countries), to Russia or Belarus, or
  (b) resold to any third party business partner that does not take a prior commitment not to export such products to Russia or Belarus.

4.3 Non-Acceptable Use of Software and Cloud Services

Customer shall not, unless permitted by the Export Regulations or respective governmental licenses or approvals,

(i) download, install, access or use the products from or in any location prohibited by or subject to comprehensive sanctions or subject or to license requirements according to the Export Regulations;
(ii) grant access to, transfer, (re-)export (including any "deemed (re-)exports"), or otherwise make available the products to any entity, person, or organization identified on a restricted party list of the Export Regulations;
(iii) use the products for any purpose prohibited by the Export Regulations (e.g. use in connection with armaments, nuclear technology or weapons);
(iv) upload to a products platform any customer content unless it is non-controlled (e.g. in the EU: AL = N;
in the U.S.: ECCN = N or EAR99);
(v) facilitate any of the afore mentioned activities by any user. Customer shall provide all users with all information necessary to ensure compliance with the Export Regulations.

4.4 Semiconductor Development

Customer will not, without advance written authorization from Siemens, use offerings for the development or production of integrated circuits at any semiconductor fabrication facility located in China meeting the criteria specified in the U.S. Export Administration Regulations, 15 C.F.R. 744.23.

4.5 Information

Upon request by Siemens, customer shall promptly provide Siemens with all information pertaining to users, the intended use and the location of use or the final destination (in the case of hardware, documentation and technology) of the products. Customer will notify Siemens prior to customer disclosing any information to Siemens that is defense-related or requires controlled or special data handling pursuant to applicable government regulations, and will use the disclosure tools and methods specified by Siemens.

4.6 Reservation

Siemens shall not be obligated to fulfill this agreement if such fulfillment is prevented by any impediments arising out of national or international foreign trade or customs requirements or any embargoes or other sanctions. Customer acknowledges that Siemens may be obliged under the Export Regulations to limit or suspend access by customer and/or users to products.

5. Miscellaneous

Errors excepted and subject to change without prior notice.

© Siemens 2024

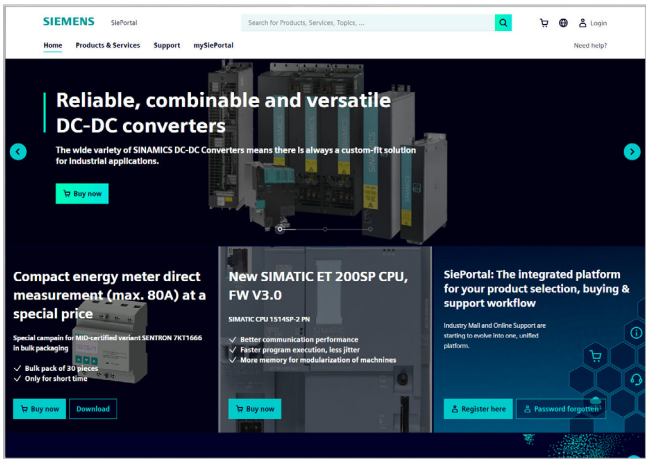

Easy product selection and ordering with SiePortal

SiePortal > Products & Services

The internet ordering platform of Siemens AG is located in SiePortal. It provides you with online access to a comprehensive product spectrum that is presented in an informative, well-organized way.

Powerful search functions help you select the required products, while configurators enable you to configure complex product and system components quickly and easily. CAx data are also available for you to use.

Data transfer allows the entire procedure, from selection through ordering to tracking and tracing, to be carried out online. Availability checks, individual customer discounting, and quotation preparation are also possible.

https://sieportal.siemens.com

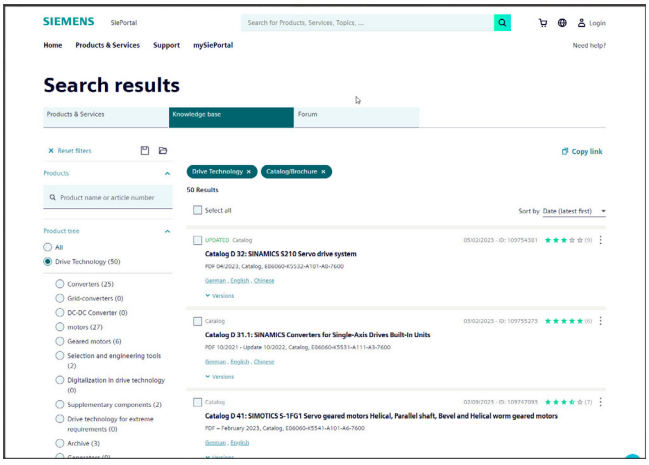

Downloading catalogs

SiePortal > Support > Knowledge base

You can download catalogs and brochures in PDF format from Siemens Industry Online Support without having to register.

The filter box makes it possible to perform targeted searches.

https://sieportal.siemens.com

© Siemens 2024

Get more information

The SINAMICS converter family:
www.siemens.com/sinamics

Motion Control Systems and Solutions for production machine and machine tool equipment:
www.siemens.com/motioncontrol

Local partners worldwide:
www.siemens.com/automation-contact

Published by
Siemens AG

Digital Industries
Motion Control
Postfach 31 80
91050 Erlangen, Germany

For the U.S. published by
Siemens Industry Inc.

100 Technology Drive
Alpharetta, GA 30005
United States

PDF (Article No. E86060-K5521-A141-A2-7600)
V6.MKKATA.GMC.130
KG 1223 948 En
Produced in Germany
© Siemens 2024

Cybersecurity information

Siemens provides products and solutions with industrial cybersecurity functions that support the secure operation of plants, systems, machines and networks.

In order to protect plants, systems, machines and networks against cyber threats, it is necessary to implement – and continuously maintain – a holistic, state-of-the-art industrial cybersecurity concept. Siemens' products and solutions constitute one element of such a concept.

Customers are responsible for preventing unauthorized access to their plants, systems, machines and networks. Such systems, machines and components should only be connected to an enterprise network or the internet if and to the extent such a connection is necessary and only when appropriate security measures (e.g. firewalls and/or network segmentation) are in place.

For additional information on industrial cybersecurity measures that may be implemented, please visit
www.siemens.com/cybersecurity-industry

Siemens' products and solutions undergo continuous development to make them more secure. Siemens strongly recommends that product updates are applied as soon as they are available and that the latest product versions are used. Use of product versions that are no longer supported, and failure to apply the latest updates may increase customer's exposure to cyber threats.

To stay informed about product updates, subscribe to the Siemens Industrial Cybersecurity RSS Feed under
www.siemens.com/cert

Subject to changes and errors. The information given in this document only contains general descriptions and/or performance features which may not always specifically reflect those described, or which may undergo modification in the course of further development of the products. The requested performance features are binding only when they are expressly agreed upon in the concluded contract.

All product designations may be trademarks or product names of Siemens AG or other companies whose use by third parties for their own purposes could violate the rights of the owners.

