Reyrolle
Protection
Devices

7SR11 & 7SR12 Argus

Overcurrent Relay

Energy Management

SIEMENS

Contents

Technical Manual Chapters

1. Description of Operation

2. Settings, Configuration & Instruments

3. Performance Specification

4. Data Communications

5. Installation

6. Commissioning and Maintenance

7. Applications Guide

The copyright and other intellectual property rights in this document, and in any model or article produced from it (and including any registered or unregistered design rights) are the property of Siemens Protection Devices Limited. No part of this document shall be reproduced or modified or stored in another form, in any data retrieval system, without the permission of Siemens Protection Devices Limited, nor shall any model or article be reproduced from this document unless Siemens Protection Devices Limited consent.

While the information and guidance given in this document is believed to be correct, no liability shall be accepted for any loss or damage caused by any error or omission, whether such error or omission is the result of negligence or any other cause. Any and all such liability is disclaimed.

7SR11 and 7SR12

Description of Operation

Document Release History

This document is issue 2019/06. The list of revisions up to and including this issue is:

2019/06	Software R4k-3d - Background CRC error handling improved.
2019/05	AC Binary Input application removed
2019/04	Minor clarification to handling notes.
2018/03	Special variant with Turkish language pre-installed added to mlfb listing.
2017/08	Software R4h-3d. Additional logic point for SNTP time not received
2017/05	Universal PSU introduced. Clauses added to suit IEC 60255-27
2017/04	Universal PSU introduced and Software maintenance
2017/02	Minor mods. General pickup added, Fibre Optic safety note added
2015/12	Minor error corrected, 50LC diagram showed directional inputs
2015/08	Additional software features added.
2015/06	Software Version added. No changes to document
2014/12	Minor modifications and corrections
2014/10	Addition of optional IEC 61850 communication protocol.
2013/09	Software Maintenance
2013/01	Software Maintenance
2012/02	AC auxiliary power supply added
2012/01	Software Maintenance
2011/06	Software Maintenance
2010/04	Amendments following technical review
2010/02	Document reformat due to rebrand
2009/09	Format and relay fascia revised.
2009/04	First Issue

Unrestricted The copyright and other intellectual property rights in this document, and in any model or article produced from it (and including any registered or unregistered design rights) are the property of Siemens Protection Devices Limited. No part of this document shall be reproduced or modified or stored in another form, in any data retrieval system, without the permission of Siemens Protection Devices Limited, nor shall any model or article be reproduced from this document unless Siemens Protection Devices Limited consent.

While the information and guidance given in this document is believed to be correct, no liability shall be accepted for any loss or damage caused by any error or omission, whether such error or omission is the result of negligence or any other cause. Any and all such liability is disclaimed.

Software Revision History

2019/06	7SR11 2436H80003 R4k-3d 7SR12 2436H80004 R4k-3d	Background memory CRC error handling improved
2017/08	7SR11 2436H80003 R4h-3d 7SR12 2436H80004 R4h-3d	Additional logic point for SNTP time not received. IEC870-5-103 time stamp improvement for IDMTL op.
2017/04	7SR11 2436H80003 R4g-3c 7SR12 2436H80004 R4g-3c	PTRC Trip time upgrade. RFLT Logical node change to add fault currents. Operating system upgrade.
2015/08	7SR11 2436H80003 R4b-3b 7SR12 2436H80004 R4b-3b	Addition of 50AFD Arc Detection and 32, 32S and 55 Power Protection elements. ACB Phase Rotation added.
2015/06	7SR11 2436H80003 R3b-3a 7SR12 2436H80004 R3b-3a	Minor changes to IEC 61850 implementation prior to release of E6 models.
2014/10	7SR11 2436H80003 R3a-3a 7SR12 2436H80004 R3a-3a	Addition of optional IEC 61850 communication protocol. IDMTL Time multiplier resolution increased. UV Guard added to 47NPS 27/59 elements phase segregated output added.
2013/09	7SR11 2436H80003 R2c-2b 7SR12 2436H80004 R2c-2b	Further improvement to startup routines.
2013/01	7SR11 2436H80003 R2b-2b 7SR12 2436H80004 R2b-2b	Frequency(Hz) added to Fault Record & minor Fault Record corrections. Default Control password added. Improvement to startup routines to prevent loss of data
2012/01	7SR11 2436H80003 R2a-2a 7SR12 2436H80004 R2a-2a	Power-on counter added. Data Comms improvements
2011/06	7SR11 2436H80003 R2-2 7SR12 2436H80004 R2-2	First Maintenance, IEC reset curves added 37G Undercurrent added, UV Guard added to 37 elements. Line Check added to non-AR variants. Minor changes to suit customer requests.
2009/04	2436H80003R1g-1c 7SR11 2436H80004R1g-1c 7SR12	First Release

Hardware Revision History

2015/08	FF	Segregated Outputs variant introduced NXP4337 microprocessor support added
2015/06	EE	E6 hardware variants with IEC 61850 functionality introduced. No changes to non-IEC61850 E4 hardware.
2014/01	DD	Circuit changes to improve startup
2012/04	CC	Support for AC PSU
2009/05	BB	First Release

 ©2019 Siemens Protection Devices Limited

Contents

Section 1: Introduction 8

Section 2: Hardware Description 18
2.1 General 18
2.2 Case 19
2.3 Front Cover 20
2.4 Power Supply Unit (PSU) 21
2.5 Operator Interface/ Fascia 22
2.6 Current Inputs 25
2.7 Voltage Inputs 25
2.8 Binary Inputs 25
2.9 Binary Outputs (Output Relays) 26
2.10 Virtual Input/Outputs 27
2.11 Self Monitoring 28
2.11.1 Protection Healthy/Defective 30

Section 3: Protection Functions 31
3.1 Current Protection: Phase Overcurrent (67, 51, 50) 31
3.1.1 Directional Control of Overcurrent Protection (67) – 7SR12 31
3.1.2 Instantaneous Overcurrent Protection (50) 32
3.1.3 Time Delayed Overcurrent Protection (51) 33
3.1.4 Current Protection: Voltage Controlled Overcurrent (51V) - 7SR12 35
3.2 Current Protection: Derived Earth Fault (67N, 51N, 50N) 36
3.2.1 Directional Control of Derived Earth Fault Protection (67N) – 7SR12 36
3.2.2 Instantaneous Derived Earth Fault Protection (50N) 37
3.2.3 Time Delayed Derived Earth Fault Protection (51N) 37
3.3 Current Protection: Measured Earth Fault (67G, 51G, 50G) 39
3.3.1 Directional Control of Measured Earth Fault Protection (67G) – 7SR12 39
3.3.2 Instantaneous Measured Earth Fault Protection (50G) 40
3.3.3 Time Delayed Measured Earth Fault Protection (51G) 41
3.4 Current Protection: Sensitive Earth Fault (67SEF, 51SEF, 50SEF) 42
3.4.1 Directional Control of Sensitive Earth Fault Protection (67SEF) – 7SR12 42
3.4.2 Instantaneous Sensitive Earth Fault Protection (50SEF) 43
3.4.3 Time Delayed Sensitive Earth Fault Protection (51SEF) 45
3.5 Current Protection: High Impedance Restricted Earth Fault - (64H) 47
3.6 Current Protection: Cold Load (51c) 47
3.7 Current Protection: Negative Phase Sequence Overcurrent - (46NPS) 48
3.8 Current Protection: Under-Current (37) 49
3.9 Current Protection: Thermal Overload (49) 50
3.10 Current Protection: Line Check 50LC, 50G LC and 50SEF LC – Only software option ‘C’ 51
3.11 Current Protection: Arc Flash Detector (50 AFD) 53
3.12 Voltage Protection: Phase Under/Over Voltage (27/59) – 7SR12 54
3.13 Voltage Protection: Negative Phase Sequence Overvoltage (47) – 7SR12 55
3.14 Voltage Protection: Neutral Overvoltage (59N) – 7SR12 55
3.15 Voltage Protection: Under/Over Frequency (81) – 7SR12 57
3.16 Power Protection: Power (32) – 7SR12 58
3.17 Power Protection: Sensitive Power (32S) – 7SR12 59
3.18 Power Protection: Power Factor (55) – 7SR12 60

Section 4: Control & Logic Functions 61
4.1 Auto-Reclose (79) Optional Function 61
4.1.1 Overview 61
4.1.2 Auto Reclose sequences 62
4.1.3 Autoreclose Prot’n Menu 63
4.1.4 Autoreclose Config Menu 63
4.1.5 P/F Shots sub-menu 65
4.1.6 E/F Shots sub-menu 65

©2019 Siemens Protection Devices Limited

4.1.7 SEF Shots sub-menu 65
4.1.8 Extern Shots sub-menu 66
4.2 Manual CB Control 68
4.3 Circuit Breaker 69
4.4 Quick Logic 71
Section 5: Supervision Functions 73
5.1 Circuit Breaker Failure (50BF) 73
5.2 VT Supervision (60VTS) – 7SR1205 & 7SR1206 74
5.3 CT Supervision (60CTS) 76
5.3.1 60CTS for 7SR11 (60CTS-I for 7SR12) 76
5.3.2 60CTS for 7SR12 76
5.4 Broken Conductor (46BC) 77
5.5 Trip/ Close Circuit Supervision (74TCS & 74CCS) 78
5.6 2nd Harmonic Block/Inrush Restraint (81HBL2) phase elements only 79
Section 6: Other Features 80
6.1 Data Communications 80
6.2 IEC 61850 Communications 80
6.3 Maintenance 81
6.3.1 Output Matrix Test 81
6.3.2 CB Counters 81
6.3.3 I^2t CB Wear 81
6.4 General Pickup 81
6.5 Data Storage 82
6.5.1 General 82
6.5.2 Demand 82
6.5.3 Event Records 82
6.5.4 Waveform Records. 83
6.5.5 Fault Records 83
6.5.6 Energy Storage - 7SR12 84
6.5.7 Disk Activity Warning 85
6.6 Metering 85
6.7 Operating Mode 86
6.8 Control Mode 86
6.9 Real Time Clock 87
6.9.1 Time Synchronisation – Data Communication Interface 87
6.9.2 Time Synchronisation – Binary Input 87
6.10 Settings Groups 87
6.11 Password Feature 88

 ©2019 Siemens Protection Devices Limited

List of Figures

Figure 1-1 Functional Diagram of 7SR1101-1_A12-_CA0 Relay 11
Figure 1-2 Functional Diagram of 7SR1101-3_A12-_CA0 Relay 11
Figure 1-3 Functional Diagram of 7SR1103-1_A_ _-_DA0 Relay 11
Figure 1-4 Functional Diagram of 7SR1103-3_A_ _-_DA0 Relay 11
Figure 1-5 Connections Diagram for 7SR11 Relay 12
Figure 1-6 Functional Diagram of 7SR1204-2_A12-_CA0 Relay 15
Figure 1-7 Functional Diagram of 7SR1204-4_A12-_CA0 Relay 15
Figure 1-8 Functional Diagram of 7SR1205-2_A_ _-_DA0 Relay 15
Figure 1-9 Functional Diagram of 7SR1205-4_A_ _-_DA0 Relay 16
Figure 1-10 Connections Diagram for 7SR12 Relay 17
Figure 2-1 E4 relay shown withdrawn 19
Figure 2-2 Rear view of Relay (E6 Case with optional IEC61850 module) 20
Figure 2-3 Earth connection Symbol 20
Figure 2-4 Relay with standard transparent cover (E6 Case with optional IEC61850 module) 20
Figure 2-5 Relay with transparent cover and push buttons 21
Figure 2-6 Relay with Transparent cover removed (E6 Case with optional IEC61850 module) 22
Figure 2-7 Close up of Relay Label 22
Figure 2-8 Close up of Relay Identifier 23
Figure 2-9 LED Indication Label 25
Figure 2-10 Binary Input Logic 26
Figure 2-11 Binary Output Logic 27
Figure 2-12 Start-up Counter Meter 28
Figure 2-13 Unexpected Restarts Lockout Text 28
Figure 2-14 Start-up Events 29
Figure 3-1 Logic Diagram: Directional Overcurrent Element (67) 32
Figure 3-2 Logic Diagram: Instantaneous Over-current Element 33
Figure 3-3 Logic Diagram: Time Delayed Overcurrent Element 34
Figure 3-4 Logic Diagram: Voltage Controlled Overcurrent Protection 35
Figure 3-5 Logic Diagram: Derived Directional Earth Fault Element 36
Figure 3-6 Logic Diagram: Derived Instantaneous Earth Fault Element 37
Figure 3-7 Logic Diagram: Derived Time Delayed Earth Fault Protection 38
Figure 3-8 Logic Diagram: Measured Directional Earth Fault Protection 39
Figure 3-9 Logic Diagram: Measured Instantaneous Earth-fault Element 40
Figure 3-10 Logic Diagram: Measured Time Delayed Earth Fault Element (51G) 41
Figure 3-11 Logic Diagram: SEF Directional Element (67SEF) 43
Figure 3-12 Logic Diagram: 7SR11 SEF Instantaneous Element 43
Figure 3-13 Logic Diagram: 7SR12 SEF Instantaneous Element 44
Figure 3-14 Logic Diagram: 7SR11 SEF Time Delayed Element (51SEF) 45
Figure 3-15 Logic Diagram: 7SR12 SEF Time Delayed Element (51SEF) 46
Figure 3-16 Logic Diagram: High Impedance REF (64H) 47
Figure 3-17 Logic Diagram: Cold Load Settings (51c) 48
Figure 3-18 Logic Diagram: Negative Phase Sequence Overcurrent (46NPS) 49
Figure 3-19 Logic Diagram: Phase Current Inputs Undercurrent Detector (37) 50
Figure 3-20 Logic Diagram: Earth Current Inputs Undercurrent Detector (37G) 50
Figure 3-21 Logic Diagram: Sensitive Earth Current Inputs Undercurrent Detector (37SEF) 50
Figure 3-22 Logic Diagram: Thermal Overload Protection (49) 51
Figure 3-23 Logic Diagram: 50G Line Check Elements (50G LC) 52
Figure 3-24 Logic Diagram: 50SEF Line Check Elements (50SEF LC) 52
Figure 3-25 Logic Diagram: 50 Line Check Elements (50LC) 52
Figure 3-26 Logic Diagram: Arc Flash Detector (50 AFD) 53

©2019 Siemens Protection Devices Limited

Figure 3-27 Logic Diagram: Under/Over Voltage Elements (27/59) 54
Figure 3-28 Logic Diagram: NPS Overvoltage Protection (47) 55
Figure 3-29 Logic Diagram: Neutral Overvoltage Element (59N) 56
Figure 3-30 Logic Diagram: Under/Over Frequency Detector (81) 57
Figure 3-31 Logic Diagram: Power Protection (32) 58
Figure 3-32 Logic Diagram: Sensitive Power Protection (32S) 59
Figure 3-33 Logic Diagram: Power Factor Protection (55) 60
Figure 4-1 Typical AR Sequence with 3 Inst and 1 Delayed trip 63
Figure 4-2 Basic Auto-Reclose Sequence Diagram 67
Figure 4-3 Logic Diagram: Circuit Breaker Status 70
Figure 4-4 Sequence Diagram: Quick Logic PU/DO Timers (Counter Reset Mode Off) 72
Figure 5-1 Logic Diagram: Circuit Breaker Fail Protection (50BF) 73
Figure 5-2 Logic Diagram: VT Supervision Function (60VTS) 75
Figure 5-3 Logic Diagram: CT Supervision Function (60CTS) – 7SR11 76
Figure 5-4 Logic Diagram: CT Supervision Function (60CTS) – 7SR12 77
Figure 5-5 Logic Diagram: Broken Conductor Function (46BC) 77
Figure 5-6 Logic Diagram: Trip Circuit Supervision Feature (74TCS) 78
Figure 5-7 Logic Diagram: Close Circuit Supervision Feature (74CCS) 78
Figure 5-8 Functional Diagram for Harmonic Block Feature (81HBL2) 79
Figure 6-1 Energy Direction Convention 84

List of Tables

Table 1-1 7SR11 Ordering Options 9
Table 1-2 7SR12 Ordering Options 13
Table 2-1 Summary of 7SR1 Relay Configurations 18
Table 2-2 Power Supply Unit (PSU) options 21
Table 6-1 Operating Mode 86

SYMBOLS AND NOMENCLATURE

The following notational and formatting conventions are used within the remainder of this document:

- Setting Menu Location — MAIN MENU>SUB-MENU
- Setting: — ***Elem name -Setting***
- Setting value: — **value**
- Alternatives: — **[1st] [2nd] [3rd]**

 ©2019 Siemens Protection Devices Limited

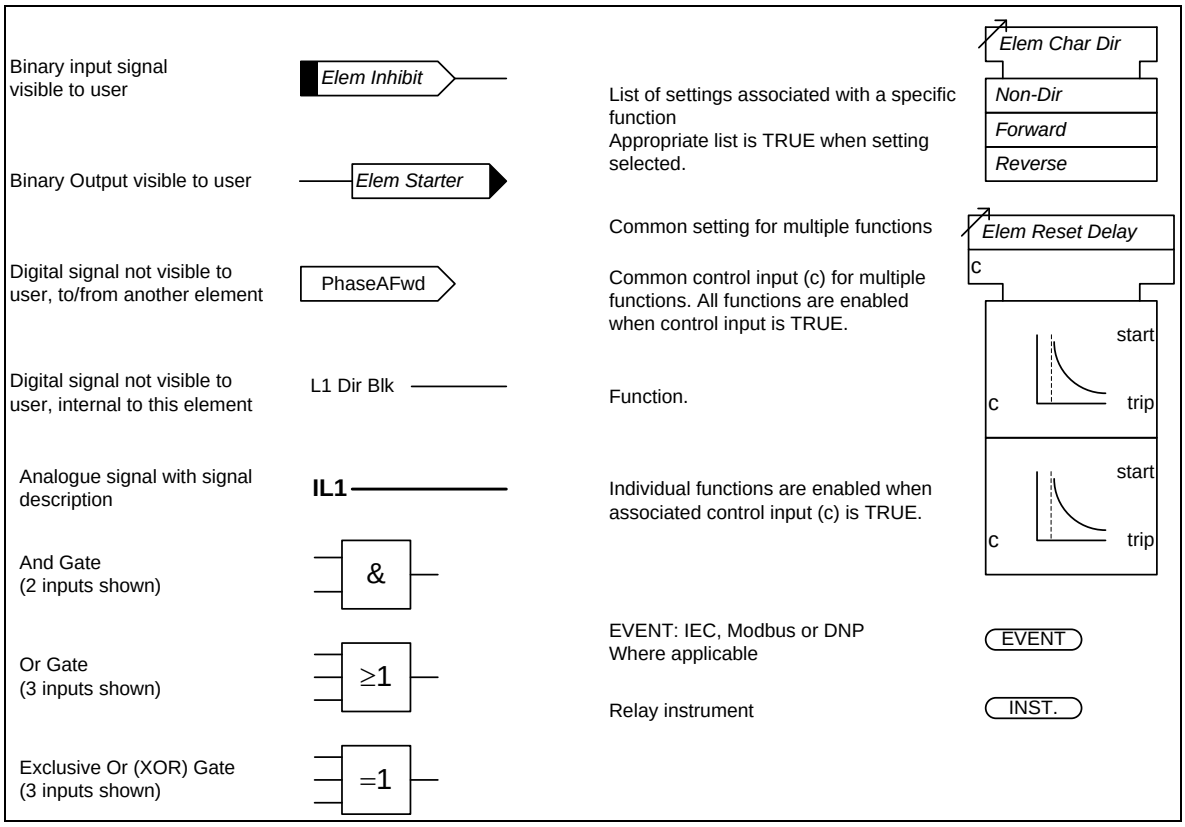
Binary input signal visible to user
Elem Inhibit
Binary Output visible to user
Elem Starter
Digital signal not visible to user, to/from another element
PhaseAFwd
Digital signal not visible to user, internal to this element
L1 Dir Blk
Analogue signal with signal description
IL1
And Gate (2 inputs shown)
&
Or Gate (3 inputs shown)
≥1
Exclusive Or (XOR) Gate (3 inputs shown)
=1
List of settings associated with a specific function
Appropriate list is TRUE when setting selected.
Elem Char Dir
Non-Dir
Forward
Reverse
Common setting for multiple functions
Elem Reset Delay
c
Common control input (c) for multiple functions. All functions are enabled when control input is TRUE.
start
c
trip
Function.
Individual functions are enabled when associated control input (c) is TRUE.
EVENT: IEC, Modbus or DNP Where applicable
EVENT
Relay instrument
INST.

Section 1: Introduction

This manual is applicable to the following relays:

- 7SR11 Overcurrent and Earth Fault Relay
- 7SR12 Directional Overcurrent and Directional Earth Fault Relay

The 'Ordering Option' Tables summarise the features available in each model

General Safety Precautions

It is the responsibility of the user to ensure that the equipment is installed, operated and used for its intended function in the manner specified by the manufacturer. If this is not the case, then any safety protection provided by the equipment may be impaired.

The equipment shall be isolated or disconnected from hazardous live voltage before access to potentially hazardous live parts is affected.

Current Transformer Circuits

The secondary circuit of a live CT must not be open circuited. Non-observance of this precaution can result in injury to personnel or damage to equipment.

External Resistors

Where external resistors are connected to the relay circuitry, these may present a danger of electric shock or burns, if touched.

Front Cover

The front cover provides additional securing of the relay element within the case. The relay cover should be in place during normal operating conditions.

Fibre Optic Communication

Where fibre optic communication ports are fitted, the lasers are Class 1 devices but recommend they should not be viewed directly.

 ©2019 Siemens Protection Devices Limited

Table 1-1 7SR11 Ordering Options

Product description	Variants	Order No.
		1 2 3 4 5 6 7 - 8 9 10 11 12 - 13 14 15 16
Nondirectional O/C Relay (Argus)		7 S R 1 1 0 □ - □ □ A □ □ - □ □ A 0
Overcurrent and earth fault Protection relay		
	Protection Product	
	Overcurrent – Non Directional	1
	Housing I/O and Fascia	
	1 CT, 3 Binary Inputs / 5 Binary Outputs, 10 LEDs	1 1 C
	4 CT, 3 Binary Inputs / 5 Binary Outputs, 10 LEDs	2 A/C/D
	4 CT, 6 Binary Inputs / 8 Binary Outputs, 10 LEDs	3 C/D
	4 CT, 4 Binary Inputs / 8 Binary Outputs, 10 LEDs [8]	7 C/D
	Measuring Input	
	1/5 A, 50/60Hz[1]	1 A/C/D
	1/5 A, 50/60Hz with SEF Input [2]	3 C/D
	Auxiliary voltage	
	PSU Rated: 80-250V DC / 115V AC[6]. BI threshold 19V DC (Rated: 24-250V DC)	G
	PSU Rated: 80-250V DC. BI threshold 88V DC (Rated: 110-250V DC)	H
	PSU Rated: 24-60V DC. BI threshold 19V DC (Rated: 24-250V DC)	J
	PSU Rated: 24-250V DC / 100-230V AC. BI threshold 19V DC (Rated: 24-250V DC)	M
	PSU Rated: 24-250V DC / 100-230V AC. BI threshold 88V DC (Rated: 110-250V DC)	N
	Communication Interface	
	Standard version – included in all models, USB front port, RS485 rear port (E4 Case)	1 2
	Standard version – plus additional rear electrical Ethernet RJ45 (x2), E6 Case [7]	7 7 C/D
	Standard version – plus additional rear optical Ethernet duplex (x2), E6 Case [7]	8 7 C/D
	Protocol	
	IEC 60870-5-103 Modbus RTU and DNP3 (user selectable)	2
	IEC 60870-5-103 Modbus RTU, DNP3 and IEC 61850 (user selectable settings) [7]	7
	Relay Cover	
	Standard Version – No Push Buttons	1
	Push Buttons – Down and Right Arrows	2
	Protection Function Packages	
	Basic version [5]	A
	46BC[3] Broken conductor/load unbalance	
	50[3] Instantaneous phase fault overcurrent	
	50BF[3] Circuit breaker fail	
	50G/50N Instantaneous earth fault	
	51[3] Time delayed phase fault overcurrent	
	51G/51N Time delayed earth fault	
	60CTS[3] CT Supervision	
	64H High impedance REF	
	74T&C Trip & Close circuit supervision	
	86 Hand reset contacts	
	Standard version	C
	37 Undercurrent	
	46BC[3] Broken conductor/load unbalance	
	46NPS[3] Negative phase sequence overcurrent	
	49[3] Thermal overload	
	50[3] Instantaneous phase fault overcurrent	
	50AFD Arc Flash Detection	
	50BF[3] Circuit breaker fail	
	50G/50N Instantaneous earth fault	
	50SEF[2] Instantaneous sensitive earth fault	
	51[3] Time delayed phase fault overcurrent	
	51G/51N Time delayed earth fault	
	51SEF[2] Time delayed sensitive earth fault	
	60CT[3] CT Supervision	
	64H High Impedance REF	
	74T/CC Trip and Close circuit supervision	
	81HBL2[4] 2nd harmonic block/inrush restraint	
	51C[3] Cold load pickup	
	86 Hand reset contacts	
	Programmable logic	

(continued on next page)

Product description	Variants	Order No.
Nondirectional O/C Relay (Argus)		1 2 3 4 5 6 7 8 9 10 11 12 13 14 15 16 7 S R 1 1 0 □ - □ □ A □ □ - □ □ A 0
continued from previous page		
	Standard version – plus 79 Autoreclose	D
	Additional Functionality	
	No Additional Functionality	A

1) 4CT is configured as 3PF + EF
2) 4CT is configured as 3PF + SEF/REF.
3) Functions only available in 4CT relay
4) Not available on SEF input
5) Protection function package ordering option A is only available on hardware variant 7SR1102-1XA12-XAA0- 4CT 3BI 5BO
6) AC 115 V supported by devices with hardware version CC or later
7) E4 case is standard, E6 case is required if IEC61850 model ordered
8) 4 Binary Input variant provides segregated Binary Outputs without a common terminal

Special versions.

Turkish language file pre-installed (for Turkey only)	1 2 3 4 5 6 7 8 9 10 11 12 13 14 15 16 17 18 19 7 S R 1 1 0 3 - 1 M A 7 7 - 1 D A 0 - Y 2 0

©2019 Siemens Protection Devices Limited

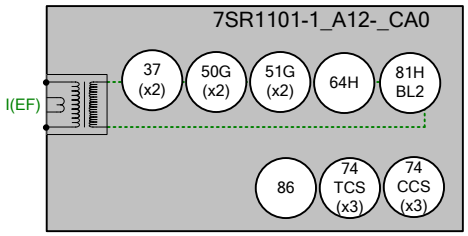

Figure 1-1 Functional Diagram of 7SR1101-1_A12-_CA0 Relay

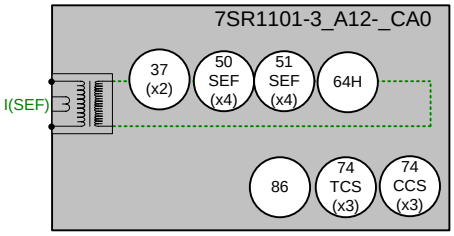

Figure 1-2 Functional Diagram of 7SR1101-3_A12-_CA0 Relay

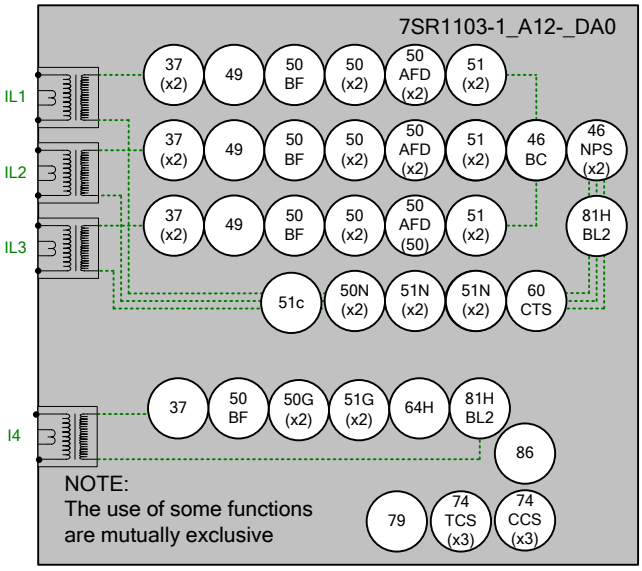

Figure 1-3 Functional Diagram of 7SR1103-1_A_ _-_DA0 Relay

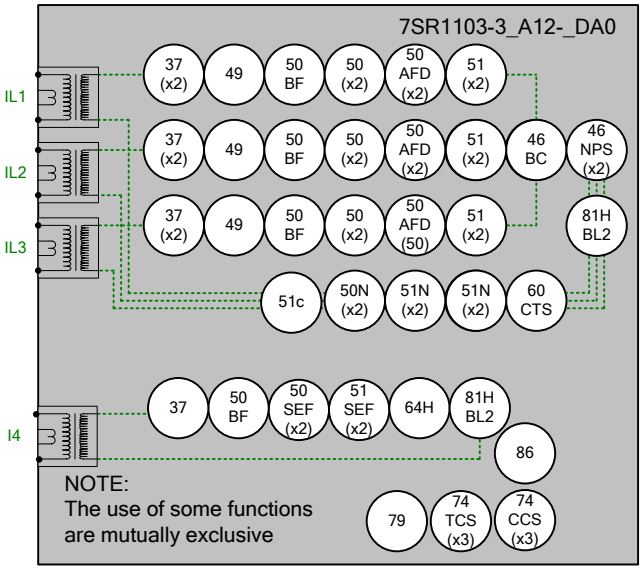

Figure 1-4 Functional Diagram of 7SR1103-3_A_ _-_DA0 Relay

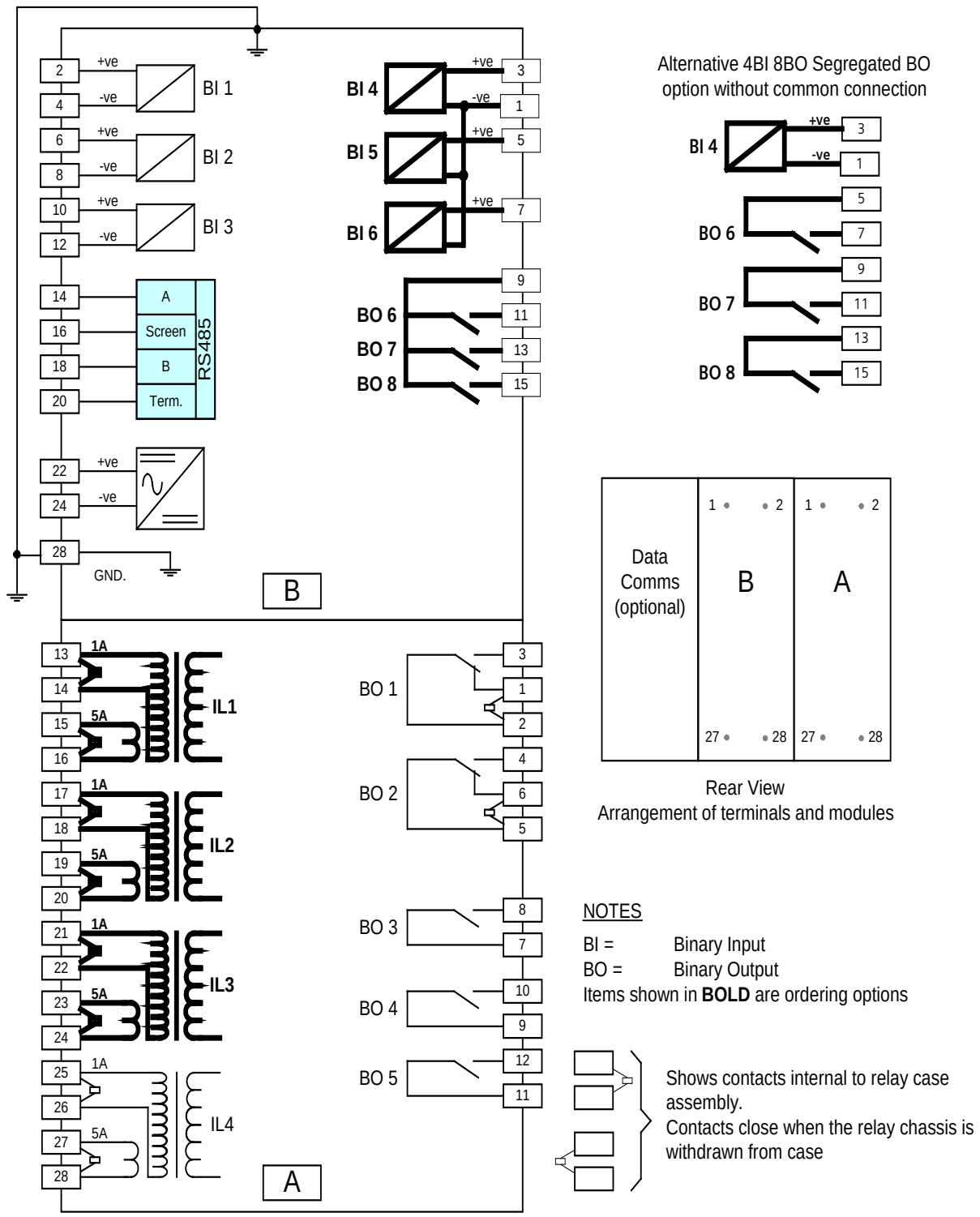

Figure 1-5 Connections Diagram for 7SR11 Relay

©2019 Siemens Protection Devices Limited

Table 1-2 7SR12 Ordering Options

Product description	Variants	Order No.
Directional O/C Relay (Argus)		1 2 3 4 5 6 7 8 9 10 11 12 13 14 15 16 7 S R 1 2 0 □ - □ □ A □ □ - □ □ A 0
Directional overcurrent and earth fault protection relay	<u>Protection Product</u> Overcurrent – Directional	2
	<u>Housing I/O and Fascia</u>	
	1 CT, 3 VT, 3 Binary Inputs / 5 Binary Outputs, 10 LEDs	4
	4 CT, 3 VT, 3 Binary Inputs / 5 Binary Outputs, 10 LEDs	5
	4 CT, 3 VT, 6 Binary Inputs / 8 Binary Outputs, 10 LEDs	6
	4 CT, 3 VT, 4 Binary Inputs / 8 Binary Outputs, 10 LEDs [7]	8
	<u>Measuring Input</u>	
	1/5 A, 40 to 160 V, 50/60Hz[1]	2
	1/5 A, 40 to 160 V, 50/60Hz with SEF Input[2]	4
	<u>Auxiliary voltage</u>	
	PSU Rated: 80-250V DC / 115V AC[5]. BI threshold 19V DC (Rated: 24-250V DC)	G
	PSU Rated: 80-250V DC. BI threshold 88V DC (Rated: 110-250V DC)	H
	PSU Rated: 24-60V DC. BI threshold 19V DC (Rated: 24-250V DC)	J
	PSU Rated: 24-250V DC / 100-230V AC. BI threshold 19V DC (Rated: 24-250V DC)	M
	PSU Rated: 24-250V DC / 100-230V AC. BI threshold 88V DC (Rated: 110-250V DC)	N
	<u>Communication Interface</u>	
	Standard version – included in all models, USB front port, RS485 rear port (E4 Case)	1 2
	Standard version – plus additional rear electrical Ethernet RJ45 (x2), E6 Case [6]	7 7
	Standard version – plus additional rear optical Ethernet duplex (x2), E6 Case [6]	8 7
	<u>Protocol</u>	
	IEC 60870-5-103, Modbus RTU and DNP3 (user selectable)	2
	IEC 60870-5-103 Modbus RTU, DNP3 and IEC 61850 (user selectable settings) [6]	7
	<u>Relay Cover</u>	
	Standard Version – No Push Buttons	1
	Push Buttons – Down and Right Arrows	2
	<u>Protection Function Packages</u>	
	Standard version – Included in all models	C
	27/59 Under/overvoltage	
	32[3] Power	
	32S[8] Sensitive Power	
	37 Undercurrent	
	46BC[3] Broken conductor/load unbalance	
	46NPS[3] Negative phase sequence overcurrent	
	47 Negative phase sequence voltage	
	49[3] Thermal overload	
	50AFD Arc Flash Detection	
	50BF[3] Circuit breaker fail	
	51V[3] Voltage controlled overcurrent	
	55[3] Power Factor	
	59N Neutral voltage displacement	
	60CTS[3] CT supervision	
	60VTS[3] VT supervision	
	64H High Impedance REF	
	67/50 Directional instantaneous phase fault overcurrent	
	67/50G 67/50N Directional instantaneous earth fault	
	67/50SEF[2] Instantaneous sensitive earth fault	
	67/51 Directional time delayed phase fault overcurrent	
	67/51G 67/51N Directional time delayed earth fault	
	67/51/SEF[2] Time delayed sensitive earth fault	
	81HBL2[4] 2nd harmonic block/inrush restraint	
	74T/CC Trip & Close circuit supervision	
	51C[3] Cold load pickup	
	81U/0 Under/Over Frequency	
	86 Hand reset contacts	
	Programmable logic	
	Standard version – plus	D
	79 Autoreclose	
	<u>Additional Functionality</u>	
	No Additional Functionality	A

1) 4CT is configured as 3PF + EF
2) 4CT is configured as 3PF + SEF/REF
3) Functions only available in 4CT relay
4) Not available on SEF input
5) AC 115 V supported by devices with hardware version CC or later
6) E4 case is standard, E6 case is required if IEC61850 model ordered
7) 4 Binary Input variant provides segregated Binary Outputs without a common terminal
8) Functions only available in 4CT SEF relay

Special versions.

	1	2	3	4	5	6	7		8	9	10	11	12		13	14	15	16		17	18	19
Turkish language file pre-installed (for Turkey only)	7	S	R	1	2	0	5	-	2	M	A	7	7	-	1	D	A	0	-	Y	2	0
	7	S	R	1	2	0	6	-	2	M	A	7	7	-	1	D	A	0	-	Y	2	0

 ©2019 Siemens Protection Devices Limited

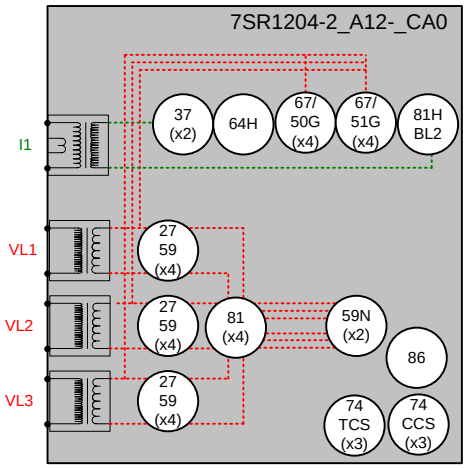

Figure 1-6 Functional Diagram of 7SR1204-2_A12-_CA0 Relay

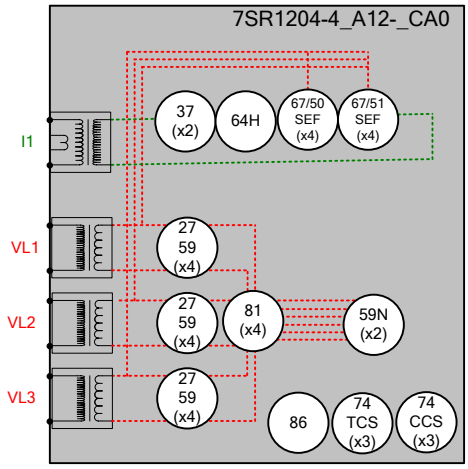

Figure 1-7 Functional Diagram of 7SR1204-4_A12-_CA0 Relay

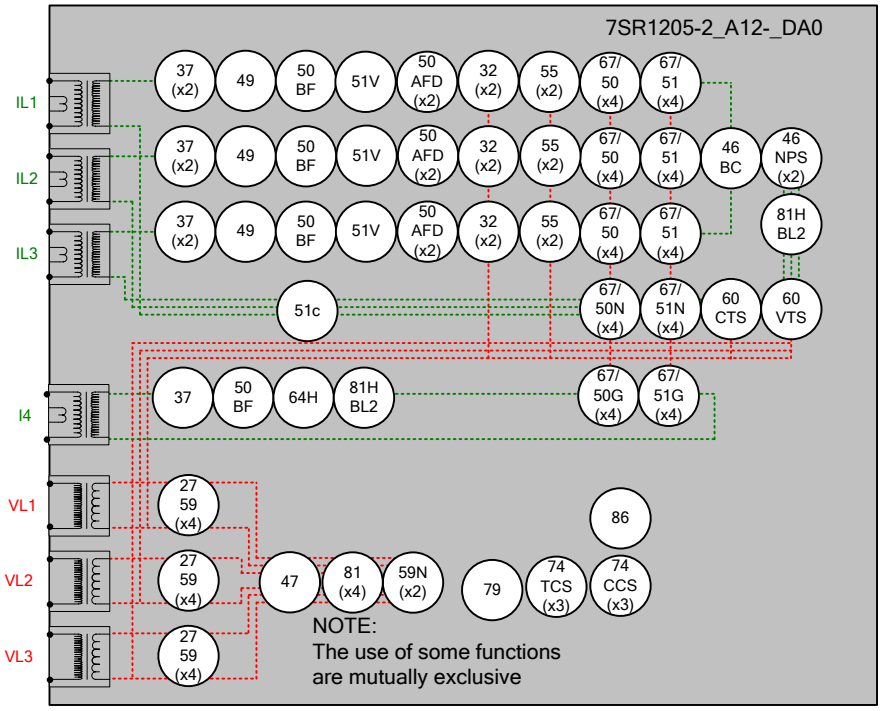

Figure 1-8 Functional Diagram of 7SR1205-2_A_ _-_DA0 Relay

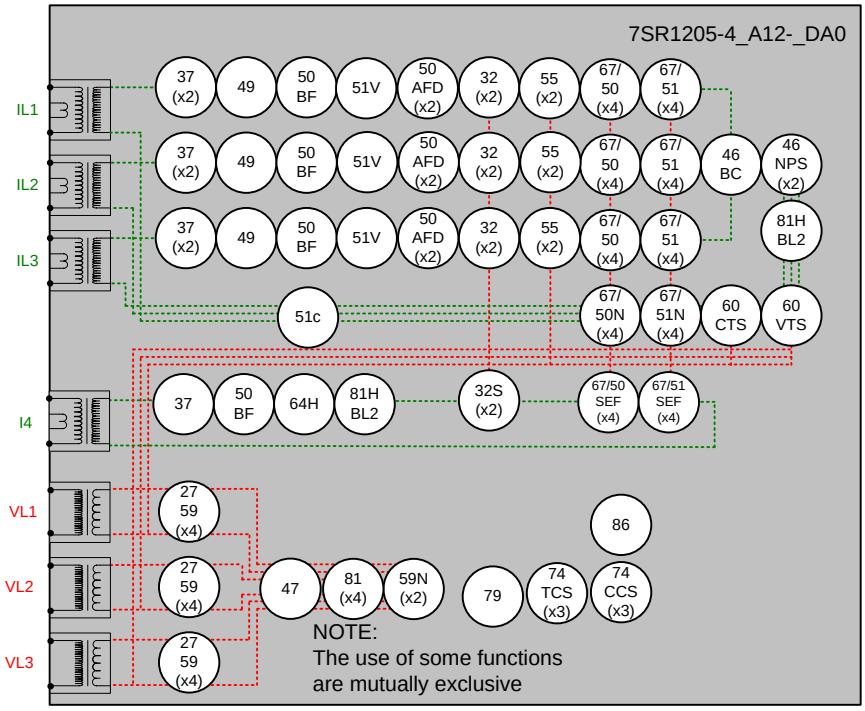

Figure 1-9 Functional Diagram of 7SR1205-4_A_ _-_DA0 Relay

©2019 Siemens Protection Devices Limited

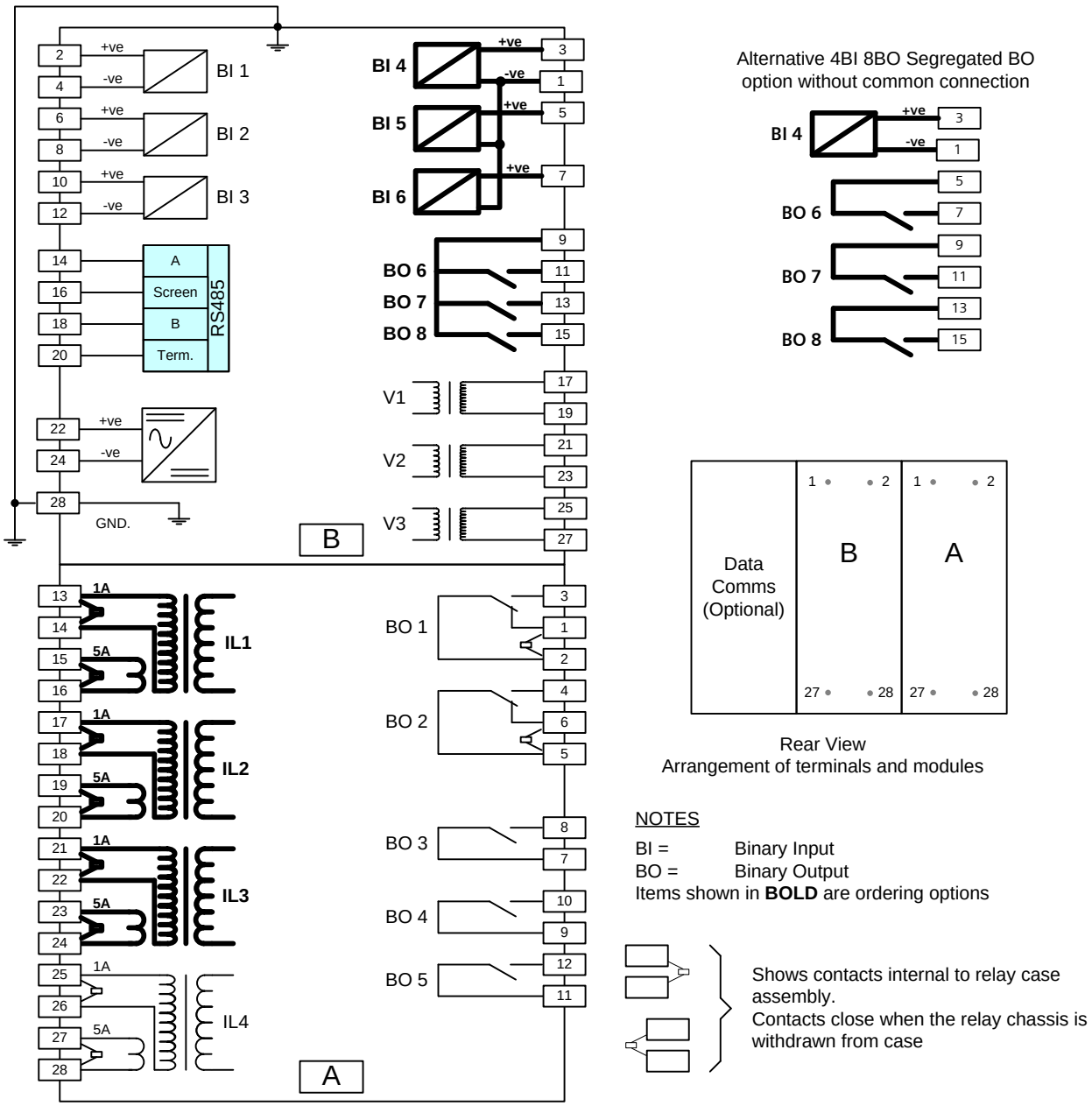

Figure 1-10 Connections Diagram for 7SR12 Relay

Section 2: Hardware Description

2.1 General

The structure of the relay is based upon the Reyrolle Compact hardware platform. The relays are supplied in a size E4 or E6 case (where 1 x E = width of approx. 26mm). The hardware design provides commonality between products and components across the Reyrolle Compact range of relays.

Table 2-1 Summary of 7SR1 Relay Configurations

Relay	Current Inputs	SEF Inputs	Voltage Inputs	Binary Inputs	Binary Outputs	LEDs
7SR1101-1	1	0	0	3	5	10
7SR1101-3	1	1	0	3	5	10
7SR1102-1	4	0	0	3	5	10
7SR1102-3	4	1	0	3	5	10
7SR1103-1	4	0	0	6	8	10
7SR1103-3	4	1	0	6	8	10
7SR1107-1	4	0	0	4	8	10
7SR1107-3	4	1	0	4	8	10
7SR1204-2	1	0	3	3	5	10
7SR1204-4	1	1	3	3	5	10
7SR1205-2	4	0	3	3	5	10
7SR1205-4	4	1	3	3	5	10
7SR1206-2	4	0	3	6	8	10
7SR1206-4	4	1	3	6	8	10
7SR1208-2	4	0	3	4	8	10
7SR1208-4	4	1	3	4	8	10

Relays are assembled from the following modules:

1) Front Fascia

9 configurable LEDs + 1 Relay Healthy LED

2) Processor module

3) Current Analogue / Output module

1 x Current + 5 x Binary Outputs (BO)

4 x Current + 5 x Binary Outputs (BO)

4) Voltage Analogue / Input / output module

3 x Voltage + 3 x Binary Input (BI) + 3 x Binary Output (BO)

3 x Voltage + 1 x Binary Input (BI) + 3 x Binary Output (BO) without common terminals

 ©2019 Siemens Protection Devices Limited

3 x Binary Input (BI) + 3 x Binary Output (BO)

1 x Binary Input (BI) + 3 x Binary Output (BO) without common terminals

5) Power Supply

3 x Binary Input (BI) + RS485

6) Optional Communications Module (2x Electrical Ethernet for IEC 61850) or (2x Optical Ethernet for IEC 61850).

2.2 Case

The relays are housed in cases designed to fit directly into standard panel racks. The two case options have a width of 104mm (E4) and 156 mm (E6), both have a height of 177 mm (4U). The required panel depth is 216.5mm, with wiring clearance a total of 242 mm. 290mm depth clearance should be allowed to accommodate the bending radius of fibre optic data communications cables if fitted.

The complete relay assembly is withdrawable from the front of the case. Contacts in the case ensure that the CT circuits and normally closed contacts remain short-circuited when the relay is removed. To withdraw the relay, remove the plastic fascia cover by rotating the two securing pins and withdraw using the plastic handles. The relay should not be carried using these handles. The relay should only be held by the top and bottom plates and the user should not touch the exposed PCB's. The exposed relay should be treated as an electronic device and should not be handled roughly or exposed to contamination and should be protected from damage. The relay should be re-inserted into the case with care and without the use of excessive force.

Figure 2-1 E4 relay shown withdrawn

The rear terminal blocks comprise M4 threaded female terminals for wiring connections. Each terminal can accept two ring crimps with a maximum diameter of 8mm with right angle wire entry.

Figure 2-2 Rear view of Relay (E6 Case with optional IEC61850 module)

Located at the top rear of the case is a screw clamp earthing point, this must be connected to terminal 28 and directly to the main panel earth. This connection point is indicated by the following symbol.

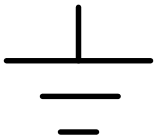

Figure 2-3 Earth connection Symbol

2.3 Front Cover

As standard the relay is supplied with a transparent front cover. The front cover is used to secure the relay assembly in the case and it is recommended that the cover is always fitted when the relay is in service.

Figure 2-4 Relay with standard transparent cover (E6 Case with optional IEC61850 module)

If access is required to view the menus without removing the cover, an alternative transparent cover with push buttons may be ordered. With the cover in place the user will only has access to the ▼ and TEST/RESET► buttons, allowing all areas of the menu system to be viewed, but preventing setting changes and control actions. The only ‘action’ that is permitted is to reset the Fault Data display, latched binary outputs and LEDs by using the

 ©2019 Siemens Protection Devices Limited

TEST/RESET ▸ button. The push buttons are recessed in housings to prevent accidental operation and small enough that the fascia data is not obscured. Some users may prefer to use a suitable blunt stylus for pressing buttons if operation is difficult.

Figure 2-5 Relay with transparent cover and push buttons

2.4 Power Supply Unit (PSU)

There are five variants of the relay PSU:

Ordering Option	Auxiliary Voltage	Binary Input Threshold
G	80V - 250V DC 110 / 115 V AC	19V DC
H	80V - 250V DC	88V DC
J	24V - 60V DC	19V DC
M	24V - 250V DC 100 - 230V AC	19V DC
N	24V - 250V DC 100 - 230V AC	88V DC

Table 2-2 Power Supply Unit (PSU) options

The rated auxiliary supply voltage (Vx) is clearly stated on the relay fascia rating label, see below.

7SR1 devices with variant G power supply manufactured before February 2012, prior to hardware version /CC, cannot be operated from AC supplies and the rating is shown as DC only. From hardware version /CC, option G devices are available which will operate normally for DC or AC supplies. These 80-250 V DC/110/115 V AC devices of hardware version /CC or later will operate normally for reversed polarity DC auxiliary voltages – devices of previous hardware versions and 24-60V DC devices will not start-up with reversed polarity supplies.

All binary inputs are polarity conscious and will not operate if the DC supply polarity is reversed.

In the event of the supply voltage level falling below the relay minimum operate level the PSU will automatically switch itself off and latch out – this prevents any PSU overload conditions occurring. The PSU is reset by switching the auxiliary supply off and on.

The PSU does not contain any fuses or user serviceable protection components. For fuse rating see Chapter 5 Installation Guide.

2.5 Operator Interface/ Fascia

The operator interface is designed to provide a user-friendly method of controlling, entering settings and retrieving data from the relay.

Figure 2-6 Relay with Transparent cover removed (E6 Case with optional IEC61850 module)

The fascia is an integral part of the relay. Handles are located at each side of the relay which allow it to be withdrawn from the relay case. The relay should not be carried by these handles.

Relay Information

Above the LCD two labels are provided, these provide the following information:

1) Product Information & Rating Label, containing

   Product name

   MLFB ordering code, with hardware version suffix.

   Nominal current rating

   Rated frequency

   Voltage rating

   Auxiliary supply rating

   Binary input supply rating

   Serial number

2) Blank label for user defined information.

Figure 2-7 Close up of Relay Label

A ‘template’ is available in Reydisp Software to allow users to create and print customised labels.

 ©2019 Siemens Protection Devices Limited

For safety reasons the following symbols are displayed on the fascia

Caution: Refer to Equipment Documentation

Caution: Risk of Electric Shock

Liquid Crystal Display (LCD)

A 4 line by 20-character alpha-numeric liquid crystal display indicates settings, instrumentation, fault data and control commands.

To conserve power the display backlighting is extinguished when no buttons are pressed for a user defined period. The 'backlight timer' setting within the "SYSTEM CONFIG" menu allows the timeout to be adjusted from 1 to 60 minutes and "Off" (backlight permanently on). Pressing any key will re-activate the display.

The LCD contrast can be adjusted using a flat blade screwdriver to turn the screw located below the contrast symbol ◑. Turning the screw clockwise increases the contrast, anti-clockwise reduces the contrast.

User defined indentifying text can be programmed into the relay using the ***System config/Relay Identifier and System config/Circuit Identifier*** setting. The 'Identifier' texts are displayed on the LCD display, over two lines, at the top level of the menu structure. The 'Relay Identifier' is used in communication with Reydisp to identify the relay. Pressing the Cancel button several times will always return the user to this screen.

Figure 2-8 Close up of Relay Identifier

LCD Indication

General Alarms are user defined text messages displayed on the LCD when mapped to binary or virtual inputs. Up to six general alarms of 16 characters can be programmed, each triggered from one or more input. Each general alarm will also generate an event.

If multiple alarms are activated simultaneously the messages are displayed on a separate page in a rolling display on the LCD. The System Config>***General Alarm Alert*** setting ***Enabled/Disabled*** allows the user to select if the alarms are to be displayed on the LCD when active.

All general alarms raised when a fault trigger is generated will be logged into the Fault Data record.

Standard Keys

The relay is supplied as standard with five pushbuttons. The buttons are used to navigate the menu structure and control relay functions. They are labelled:

▲	Increases a setting or moves up menu.
▼	Decreases a setting or moves down menu.
TEST/RESET►	Moves right, can be used to reset selected functionality and for LED test (at relay identifier screen).
ENTER	Used to initiate and accept settings changes.
CANCEL	Used to cancel settings changes and/or move up the menu structure by one level per press.

NOTE: All settings and configuration of LEDs, BI and BO can be accessed and set by the user using these keys. Alternatively configuration/settings files can be loaded into the relay using 'Reydisp'. When the System Config>***Setting Dependencies*** is ENABLED, only the functions that are enabled will appear in the menu structure.

'PROTECTION HEALTHY' LED

This green LED is steadily illuminated to indicate that DC voltage has been applied to the relay power supply and that the relay is operating correctly. If the internal relay watchdog detects an internal fault then this LED will continuously flash.

Indication LEDs

Relays have 9 user programmable LED indicators. Each LED can be programmed to be illuminated as either green, yellow or red. Where an LED is programmed to be lit both red and green it will illuminate yellow. The same LED can be assigned two different colours dependent upon whether a Start/Pickup or Operate condition exists. LED's can be assigned to the pick up condition and colour selected in the OUTPUT CONFIG>LED CONFIG menu.

Functions are assigned to the LEDs in the OUTPUT CONFIG>OUTPUT MATRIX menu.

Each LED can be labelled by withdrawing the relay and inserting a label strip into the pocket behind the front fascia. A 'template' is available in the Reydisp software tool to allow users to create and print customised legends.

Each LED can be user programmed as hand or self–resetting. Hand reset LEDs can be reset by either pressing the TEST/RESET► button, energising a suitably programmed binary input, or, by sending an appropriate command over the data communications channel(s).

The status of hand reset LEDs is maintained by a back up storage capacitor in the event of an interruption to the d.c. supply voltage.

 ©2019 Siemens Protection Devices Limited

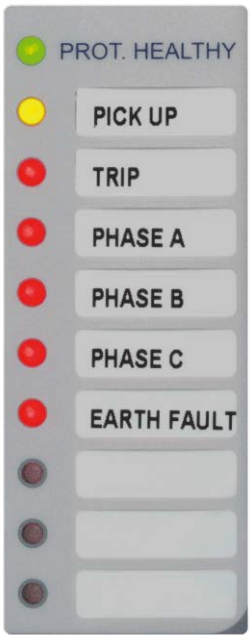

Figure 2-9 LED Indication Label

2.6 Current Inputs

Either one or four current inputs are provided on the Analogue Input module. Terminals are available for both 1A and 5A inputs.

Two types of current input are incorporated within the relay, one type is used for phase fault and earth fault protection, while the other is used for sensitive earth fault (SEF) and restricted earth fault (REF).

Relays with one current input, can be ordered with an earth fault input or a sensitive earth fault input (SEF).

Relays with four current inputs, can be ordered as an earth fault input or a sensitive earth fault input (SEF).

Current is sampled at 1600Hz for both 50Hz and 60Hz system frequencies. Protection and monitoring functions of the relay use either the Fundamental Frequency RMS or the True RMS value of current appropriate to the individual function.

The waveform recorder samples and displays current input waveforms at 1600Hz.

The primary CT ratio used for the relay instruments can be set in the CT/VT configuration menu.

2.7 Voltage Inputs

Three voltage inputs are provided on the Analogue Input module on the 7SR12 relay.

Voltage is sampled at 1600Hz for both 50Hz and 60Hz system frequencies. Protection and monitoring functions of the relay use fundamental frequency voltage measurement.

The waveform recorder samples and displays voltage input waveforms at 1600Hz.

The primary VT ratio used for the relay instruments can be set in the CT/VT configuration menu.

2.8 Binary Inputs

The binary inputs are opto-couplers operated from a suitably rated dc power supply.

Relays are fitted with 3, 4 or 6 binary inputs (BI) depending on the variant. The user can assign any binary input to any of the available functions (INPUT CONFIG > INPUT MATRIX).

Each binary input can be independently programmed to operate with time delayed pickup or time delayed drop-off. The inputs have a default pickup delay setting of 20ms which provides security against operation in the presence of ac input voltage. If instantaneous operation is preferred the pickup delay should be set to zero.

©2019 Siemens Protection Devices Limited

Each input may be logically inverted to facilitate integration of the relay within the user scheme. When inverted the relay indicates that the BI is energised when no voltage is applied. Inversion occurs before the PU & DO time delay, see fig. 2.8-1.

Each input may be mapped to any front Fascia indication LED and/or to any Binary output contact and can also be used with the internal user programmable logic. This allows the relay to provide panel indications and alarms.

Each binary input is set by default to be read when the relay is in both the local or remote condition. A setting is provided to allow the user to select if each individual input shall be read when the relay is in the local or remote condition in the INPUT CONFIG > BINARY INPUT CONFIG menu.

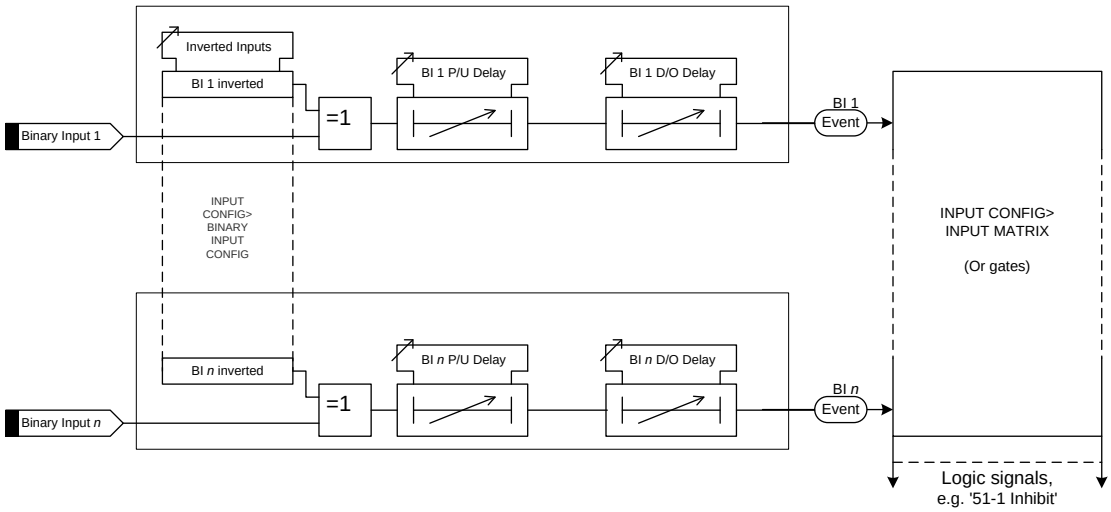

Figure 2-10 Binary Input Logic

2.9 Binary Outputs (Output Relays)

Relays are fitted with 5 or 8 binary outputs (BO). All outputs are fully user configurable and can be programmed to operate from any or all of the available functions.

In the default mode of operation binary outputs are self reset and remain energised for a user configurable minimum time of up to 60 seconds. If required, outputs can be programmed to operate as ‘hand reset’ or ‘pulsed’. If the output is programmed to be ‘hand reset’ and ‘pulsed’ then the output will be ‘hand reset’ only.

Operating a binary output as ‘hand reset’ fulfils the requirements of ANSI function 86 (Lockout).

The binary outputs can be used to operate the trip coils of the circuit breaker directly where the trip coil current does not exceed the 'make and carry' contact rating. The circuit breaker auxiliary contacts or other in-series auxiliary device must be used to break the trip coil current.

Any BO can be assigned as a ‘Trip Contact’ in the OUTPUT CONFIG>TRIP CONFIG menu. Operation of a ‘Trip Contact’ will operate any LED or virtual assigned from the ‘Trip Triggered’ feature in the same menu and will initiate the fault record storage, actuate the ‘Trip Alert’ screen where enabled and CB Fail protection when enabled.

Where a protection function is mapped to an output contact, the output contact can be configured to trigger when the protection function picks-up rather than when it operates. Such output contacts are configured via the OUTPUT CONFIG>BINARY OUTPUT CONFIG>*Pickup Outputs* setting.

Notes on Pulsed Outputs

When operated, the output will reset after a user configurable time of up to 60 seconds regardless of the initiating condition.

Notes on Self Reset Outputs

Self reset operation has a minimum reset time of 100ms

With a failed breaker condition the relay may remain operated until current flow is interrupted by an upstream device. When the current is removed the relay will then reset and attempt to interrupt trip coil current flowing via

 ©2019 Siemens Protection Devices Limited

its output contact. Where this current level is above the break rating of the output contact an auxiliary relay with heavy-duty contacts should be utilised in the primary system to avoid damage to the relay.

Notes on Hand Reset Outputs – 86 Lockout

Any binary output can be programmed to provide an 86 lockout function by selecting it to be hand reset. Hand reset outputs can be reset by either pressing the **TEST/RESET►** button, by energising a suitably programmed binary input, or, by sending an appropriate command over the data communications channel(s).

On loss of the auxiliary supply hand-reset outputs will reset. When the auxiliary supply is re-established the binary output will remain in the reset state unless the initiating condition is still present.

Notes on General Pickup

An output, General Pickup, is available to indicate that the pickup level has been exceeded for one or more protection functions. Any protection function can be mapped to trigger this output in the OUTPUT CONFIG>PICKUP CONFIG menu.

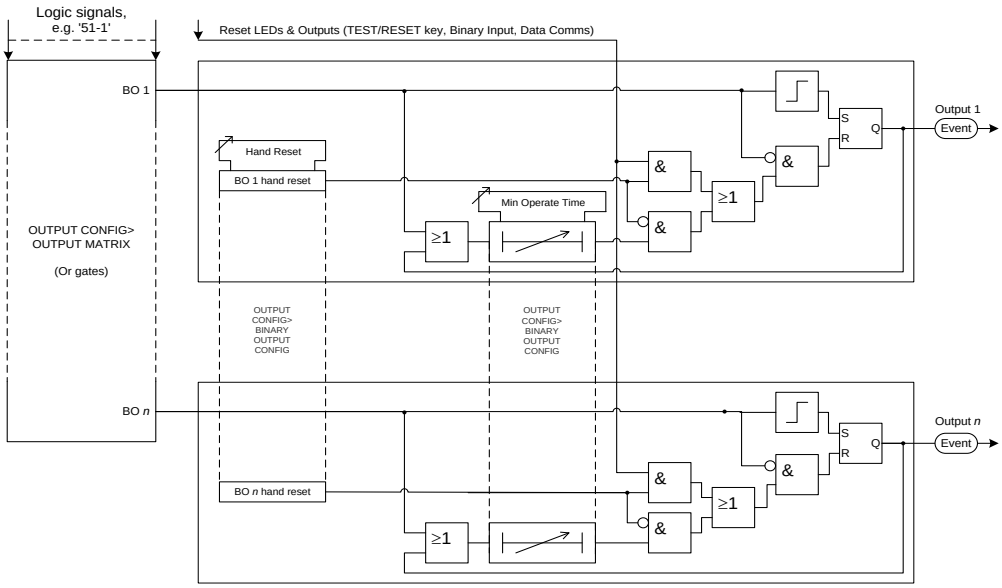

Figure 2-11 Binary Output Logic

2.10 Virtual Input/Outputs

The relays have 8 virtual input/outputs, these are internal binary stores. By assigning the status of data items like starters, alarms, equations etc. to a virtual input/output, the status of these items can be used to fulfil higher levels of functionality.

The status of various data items can be assigned to virtual inputs/outputs using the INPUT CONFIG > OUTPUT MATRIX menu.

Virtual input/outputs can be used as inputs to various functions - including blocks, inhibits, triggers, alarms etc. - using the INPUT CONFIG > INPUT MATRIX menu.

Virtual input/outputs can also be used as data items in equations.

The status of the virtual inputs and outputs is volatile i.e. not stored during power loss.

2.11 Self Monitoring

The relay incorporates a number of self-monitoring features. Each of these features can initiate a controlled reset recovery sequence.

Supervision includes a power supply watchdog, code execution watchdog, memory checks by checksum and processor/ADC health checks. When all checks indicate the relay is operating correctly the 'Protection Healthy' LED is illuminated.

If an internal failure is detected, a message will be displayed. The relay will reset in an attempt to rectify the failure. This will result in de-energisation of any binary output mapped to 'protection healthy' and flashing of the protection healthy LED. If a successful reset is achieved by the relay the LED and output contact will revert back to normal operational mode, and the relay will restart, therefore ensuring the circuit is protected for the maximum time.

A Start-up Counter Meter is provided to display the number of start-ups the relay has performed. Once the number of start-ups has exceeded a set number, an Alarm output can be given.

```
 --------------------
|Start Alarm         |
|Count             1|
|Target          100|
|                    |
 --------------------
```

Figure 2-12 Start-up Counter Meter

Reset of the counter can be done from the meter or via a binary input or a command.

Various types of start-up are monitored by the relay:

1. **power-on starts**
2. **expected starts** (user initiated via comms)
3. **unexpected starts** (caused by the relay watchdog)

Any combination of these can be selected for the start-up count. This is done in the MAINTENANCE MENU>START COUNT menu using the ***Start Up Types*** setting. All the start-up types selected (ticked) will be added to the overall start-up count.

The number of restarts before the alarm output is raised is set in the MAINTENANCE MENU>START COUNT menu using the ***Start Up Count Target*** setting.

When the number of relay start-ups reaches the target value an output is raised, OUTPUT MATRIX>***Start Up Count Alarm***, which can be programmed to any combination of binary outputs, LED's or virtual outputs.

The following screen-shot shows the events which are generated when the relay re-starts. The highlighted events show the cause of the re-start. The event which comes next shows the type of restart followed by the relay: Warm, Cold or Re-Start.

As a further safeguard, if the Relay performs a number of unexpected starts **SYSTEM CONFIG>*Unexpected Restart Count*** in a given time **SYSTEM CONFIG>*Unexpected Restart Period***, it can be configured using the **SYSTEM CONFIG>*Unexpected Restart Blocking*** setting to remove itself from service. In this case the Relay will display an error message:

```
 --------------------
|UNEXPECTED RESTART  |
|COUNTS EXCEEDED!    |
|DEVICE LOCKED OUT   |
|                    |
 --------------------
```

Figure 2-13 Unexpected Restarts Lockout Text

And enter a locked-up mode. In this mode the Relay will disable operation of all LED's and Binary Outputs, including Protection Healthy, all pushbuttons and any data communications.

Once the Relay has failed in this manner, it is non-recoverable at site and must be returned to the manufacturer for repair.

 ©2019 Siemens Protection Devices Limited

A meter, Miscellaneous Meters>Unexpected Restarts, is provided to show how many Unexpected Restarts have occurred during the previous Unexpected Restart Period. This is resettable from the front fascia.

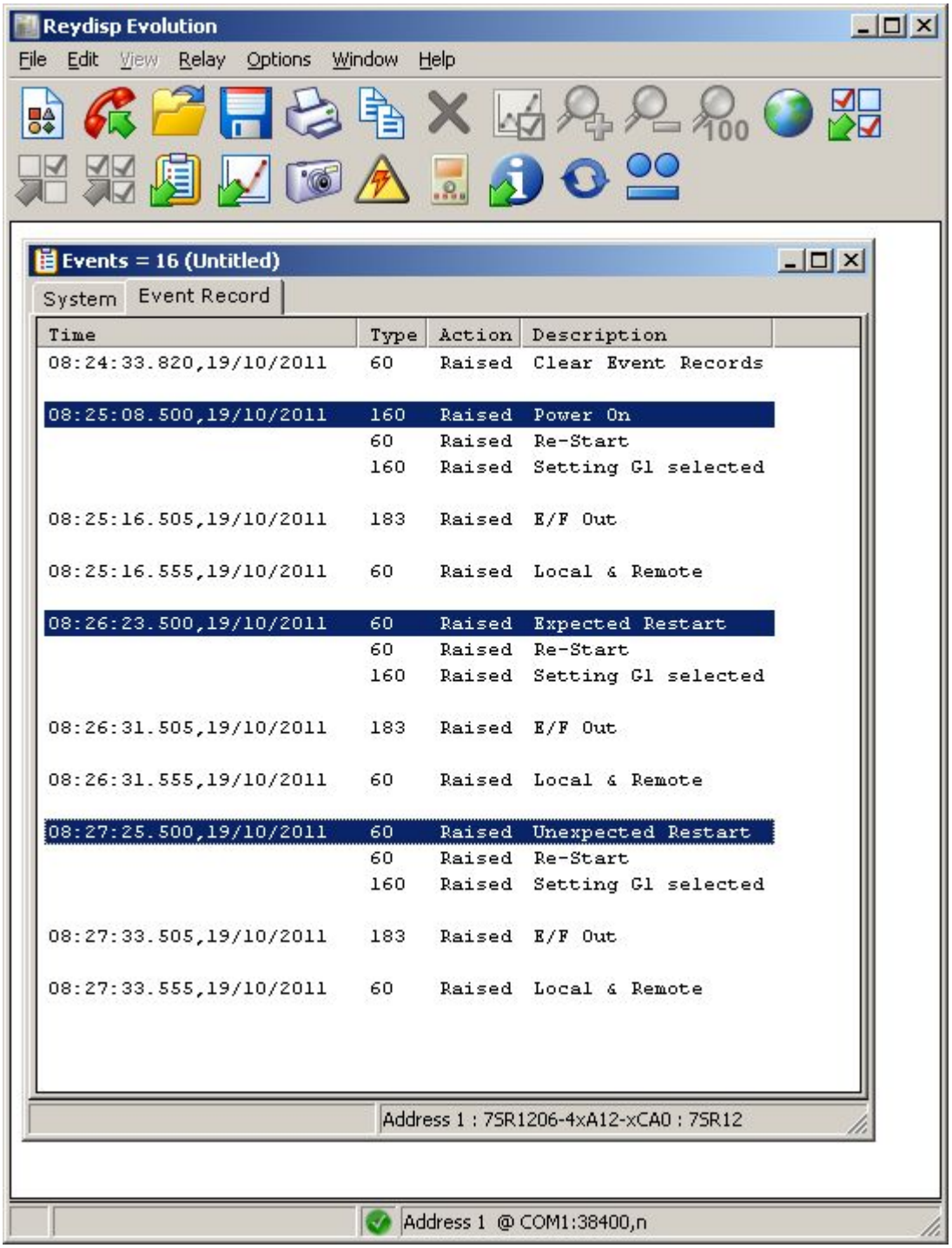

Figure 2-14 Start-up Events

2.11.1 PROTECTION HEALTHY/DEFECTIVE

When the relay has an auxiliary DC supply and it has successfully passed its self-checking procedure then the front facia Protection Healthy LED is turned on.

A changeover or open contact can be mapped via the binary output matrix to provide an external protection healthy signal.

A changeover or closed contact can be mapped via the binary output matrix to provide an external protection defective signal. With the 'Protection Healthy' this contact is open. When the auxiliary DC supply is not applied to the relay or a problem is detected within the relay then this output contact closes to provide external indication.

If the relay is withdrawn from the case, the case shorting contact will make across the normally closed contacts to provide and external alarm.

 ©2019 Siemens Protection Devices Limited

Section 3: Protection Functions

3.1 Current Protection: Phase Overcurrent (67, 51, 50)

All phase overcurrent elements have a common setting for the 50 elements and 51 elements to measure either fundamental frequency RMS or True RMS current:

True RMS current: ***50 Measurement* = RMS, *51 Measurement* = RMS**

Fundamental Frequency RMS current: ***50 Measurement* = Fundamental, *51 Measurement* = Fundamental**

3.1.1 DIRECTIONAL CONTROL OF OVERCURRENT PROTECTION (67) – 7SR12

The directional element produces forward and reverse outputs for use with overcurrent elements. These outputs can then be mapped as controls to each shaped and instantaneous over-current element.

If a protection element is set as non-directional then it will operate independently of the output of the directional detector. However, if a protection element is programmed for forward directional mode then operation will occur only for a fault lying within the forward operate zone. Conversely, if a protection element is programmed for reverse directional mode then operation will occur only for a fault lying within the reverse operate zone. Typically the forward direction is defined as being 'away' from the busbar or towards the protected zone.

The Characteristic angle is the phase angle by which the polarising voltage must be adjusted such that the directional detector gives maximum sensitivity in the forward operate zone when the current is in phase with it. The reverse operate zone is the mirror image of the forward zone.

Voltage polarisation is achieved for the phase-fault elements using the quadrature voltage i.e. at unity power factor I leads V by 90°. Each phase current is compared to the voltage between the other two phases i.e for normal phase sequence 1-2-3:

$$I_{L1} \sim V_{23} \qquad I_{L2} \sim V_{31} \qquad I_{L3} \sim V_{12}$$

When the device is applied to reverse sequence networks, i.e. 1-3-2, the polarizing is corrected internally by the *Gn Phase* Rotation setting in the *CT/VT Config menu.*

The characteristic angle can be user programmed to any angle between -95° and +95° using the ***67 Char Angle*** setting. The voltage is the reference phasor (Vref) and the ***67 Char Angle*** setting is added to this to adjust the forward and reverse zones.

The centre of the forward zone is set by (Vref Angle + ***67 Char Angle***) and should be set to correspond with Ifault Angle for maximum sensitivity i.e.

For fault current of -60° (I lagging V by 60°) a ***67 Char Angle*** of **+30°** is required for maximum sensitivity (i.e. due to quadrature connection 90° - 60° = 30°).

OR

For fault current of -45° (I lagging V by 45°) a ***67 Char Angle*** of **+45°** is required for maximum sensitivity (i.e. due to quadrature connection 90° - 45° = 45°).

TWO-OUT-OF-THREE GATE

When the ***67 2-Out-Of-3 Logic*** setting is set to **Enabled**, the directional elements will only operate for the majority direction, e.g. if I_{L1} and I_{L3} are detected as forward flowing currents and I_{L2} is detected as reverse current flow, phases L_1 and L_3 will operate forwards, while phase L_2 will be inhibited.

MINIMUM POLARISING VOLTAGE

The ***67 Minimum Voltage*** setting defines the minimum polarising voltage level. Where the measured polarising voltage is below this level no directional control signal is given and operation of protection elements set as directional will be inhibited. This prevents mal-operation under fuse failure/MCB tripped conditions where noise voltages can be present.

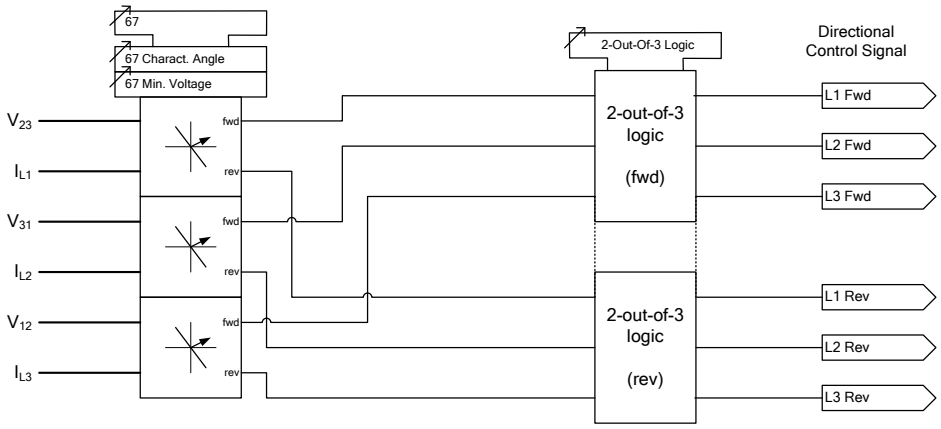

Figure 3-1 Logic Diagram: Directional Overcurrent Element (67)

3.1.2 INSTANTANEOUS OVERCURRENT PROTECTION (50)

Two Instantaneous overcurrent elements are provided in the 7SR11 relay and four elements are provided in the 7SR12 relay.

50-1, 50-2, (50-3 & 50-4 – 7SR12)

Each instantaneous element (50-n) has independent settings. ***50-n Setting*** for pick-up current and ***50-n Delay*** follower time delay. The instantaneous elements have transient free operation.

Where directional elements are present the direction of operation can be set using ***50-n Dir. Control*** setting. Directional logic is provided independently for each 50-n element, e.g. giving the option of using two elements set to forward and two to reverse.

Operation of the instantaneous overcurrent elements can be inhibited from:

Inhibit 50-n	A binary or virtual input.
79 P/F Inst Trips: **50-n**	When 'delayed' trips only are allowed in the auto-reclose sequence (***79 P/F Prot'n Trip n*** = **Delayed**).
50-n Inrush Action: **Block**	Operation of the inrush current detector function.
50-n VTS Action: **Inhibit**	Operation of the VT Supervision function (7SR1205 & 7SR1206).

 ©2019 Siemens Protection Devices Limited

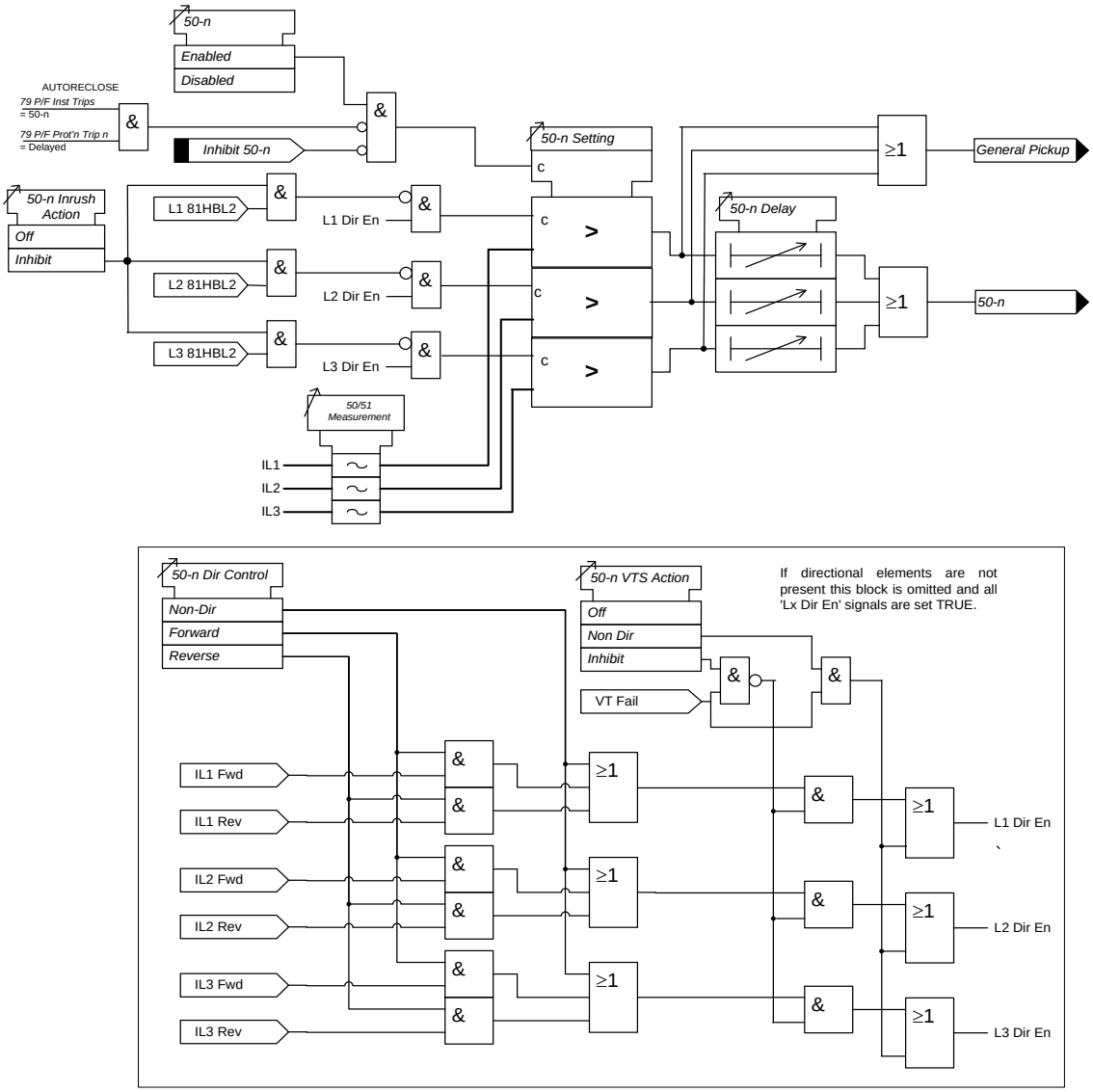

Figure 3-2 Logic Diagram: Instantaneous Over-current Element

3.1.3 TIME DELAYED OVERCURRENT PROTECTION (51)

Two time delayed overcurrent elements are provided in the 7SR11 relay and four elements are provided in the 7SR12 relay.

51-1, 51-2, (51-3 & 51-4 – 7SR12)

51-n Setting sets the pick-up current level. Where the voltage controlled overcurrent function (51VCO) is used a multiplier is applied to this setting where the voltage drops below the setting ***VCO Setting***, see Section 3.2.

A number of shaped characteristics are provided. An inverse definite minimum time (IDMT) characteristic is selected from IEC, ANSI or user specific curves using ***51-n Char***. A time multiplier is applied to the characteristic curves using the ***51-n Time Mult*** setting. Alternatively, a definite time lag delay (DTL) can be chosen using ***51-n Char***. When Definite Time Lag (DTL) is selected the time multiplier is not applied and the ***51-n Delay (DTL)*** setting is used instead. The full list of operating curves is given in Chapter 2 – 'Settings and Instruments Guide'. Operating curve characteristics are illustrated in Chapter 3 – 'Performance Specification'.

The ***51-n Reset*** setting can apply a **definite time delayed** reset**,** or when the operation is configured as an IEC or ANSI or user characteristic if the reset is selected as (**IEC/ANSI) DECAYING** reset the associated reset curve will be used. The reset mode is significant where the characteristic has reset before issuing a trip output – see 'Applications Guide'.

A minimum operate time for the characteristic can be set using ***51-n Min. Operate Time*** setting.

A fixed additional operate time can be added to the characteristic using ***51-n Follower DTL*** setting.

Where directional elements are present the direction of operation can be set using ***51-n Dir. Control*** setting. Directional logic is provided independently for each 51-n element

Operation of the time delayed overcurrent elements can be inhibited from e.g. giving the option of using two elements set to forward and two to reverse.

Inhibit 51-n	A binary or virtual input.
79 P/F Inst Trips: **51-n**	When 'delayed' trips only are allowed in the auto-reclose sequence (***79 P/F Prot'n Trip n*** = **Delayed**).
51c	Activation of the cold load settings.
50-n Inrush Action: **Block**	Operation of the inrush current detector function.
51-n VTSAction: **Inhibit**	Operation of the VT Supervision function (7SR1205 & 7SR1206).

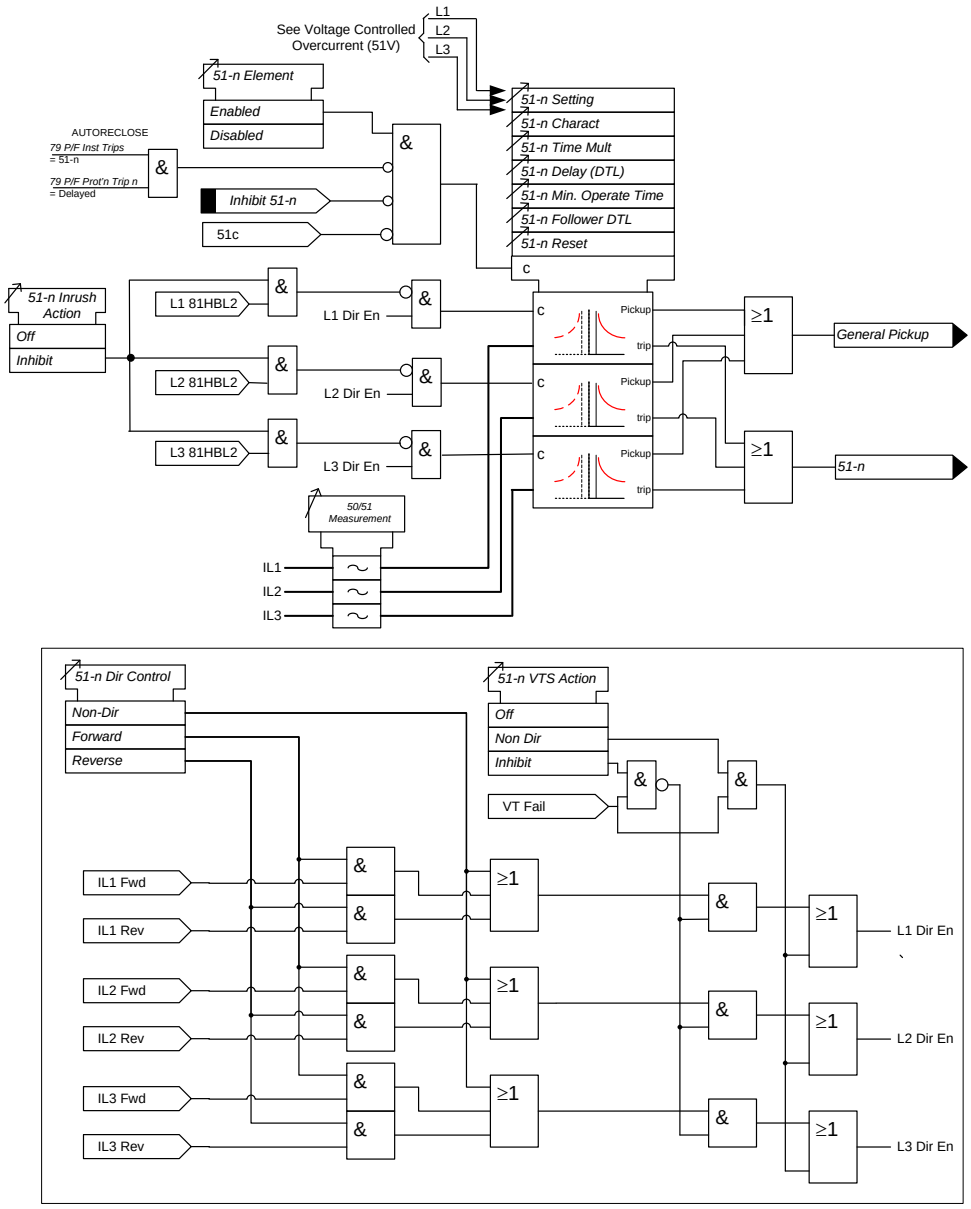

Figure 3-3 Logic Diagram: Time Delayed Overcurrent Element

 ©2019 Siemens Protection Devices Limited

3.1.4 CURRENT PROTECTION: VOLTAGE CONTROLLED OVERCURRENT (51V) - 7SR12

Voltage controlled overcurrent is only available in relays with four current inputs.

Each shaped overcurrent element ***51-n Setting*** can be independently controlled by the level of measured (control) input voltage.

For applied voltages above ***VCO Setting*** the 51-n element operates in accordance with its normal current setting (see 3.1.3). For input Ph-Ph control voltages below ***VCO Setting*** a multiplier (***51-n Multiplier***) is applied to reduce the 51-n pickup current setting.

51-n Multiplier is applied to each phase independently when its control phase-phase voltage falls below ***VCO Setting.*** The voltage levels used for each phase over-current element are shown in the table below. Relays with a Ph-N connection automatically calculate the correct Ph-Ph control voltage.

Current Element	Control Voltage
I_{L1}	V_{12}
I_{L2}	V_{23}
I_{L3}	V_{31}

The Voltage Controlled Overcurrent function (51V) can be inhibited from:

VCO VTSAction: **Inhibit** Operation of the VT Supervision function.

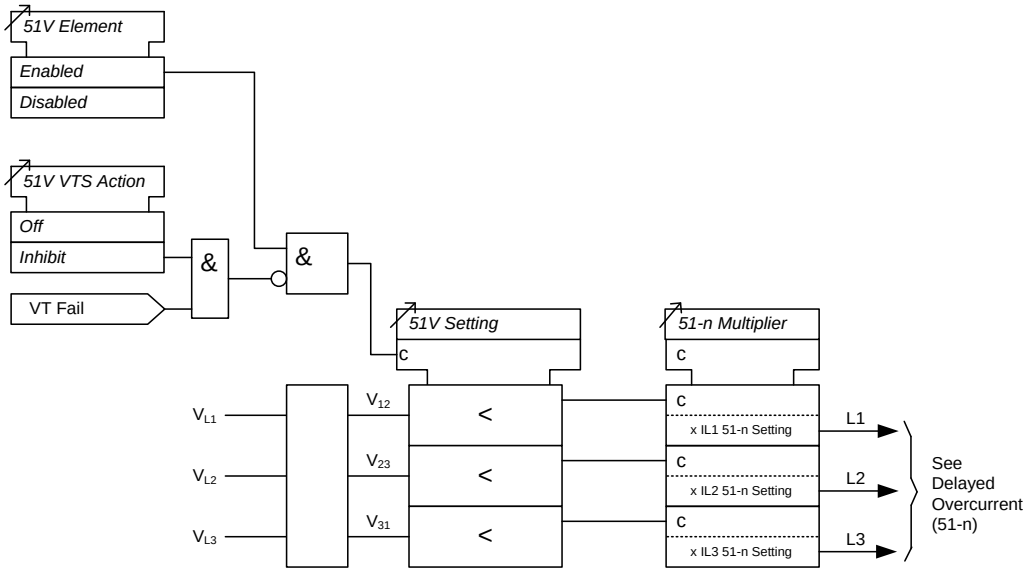

Figure 3-4 Logic Diagram: Voltage Controlled Overcurrent Protection

3.2 Current Protection: Derived Earth Fault (67N, 51N, 50N)

The earth current is derived by calculating the sum of the measured line currents. The elements measure the fundamental frequency RMS current.

3.2.1 DIRECTIONAL CONTROL OF DERIVED EARTH FAULT PROTECTION (67N) – 7SR12

The directional element produces forward and reverse outputs for use with derived earth fault elements. These outputs can be mapped as controls to each shaped and instantaneous element.

If a protection element is set as non-directional then it will operate independently of the output of the directional detector. However, if a protection element is programmed for forward directional mode then operation will occur only for a fault lying within the forward operate zone. Conversely, if a protection element is programmed for reverse directional mode then operation will occur only for a fault lying within the reverse operate zone. Typically the forward direction is defined as being 'away' from the busbar or towards the protected zone.

The Characteristic angle is the phase angle by which the polarising voltage must be adjusted such that the directional detector gives maximum sensitivity in the forward operate zone when the current is in phase with it. The reverse operate zone is the mirror image of the forward zone.

The derived directional earth fault elements can use either zero phase sequence (ZPS) or negative phase sequence (NPS) polarising. This is selected using the ***67N Polarising Quantity*** setting. Whenever a zero-sequence voltage is available (a five-limb VT that can provide a zero sequence path or an open-delta VT connection) the earth-fault element can use zero-sequence voltage and current for polarisation. If zero-sequence polarising voltage is not available e.g. when a two phase (phase to phase) connected VT is installed, then negative-sequence voltage and negative-sequence currents must be used. The type of VT connection is specified by ***Voltage Config*** (CT/VT CONFIG menu). Settings advice is given in the Applications Guide.

Voltage polarisation is achieved for the earth-fault elements by comparison of the appropriate current with its equivalent voltage:

***67N Polarising Quantity*: ZPS** $I_0 \sim V_0$

***67N Polarising Quantity*: NPS** $I_2 \sim V_2$

The characteristic angle can be user programmed to any angle between -95° and +95° using the ***67N Char Angle*** setting. The voltage is the reference phasor (Vref) and the ***67N Char Angle*** setting is added to this to adjust the forward and reverse zones.

The centre of the forward zone is set by (Vref Angle + ***67N Char Angle***) and should be set to correspond with Ifault Angle for maximum sensitivity e.g.

For fault current of -15° (I lagging V by 15°) a ***67N Char Angle*** of **-15°** is required for maximum sensitivity.

OR

For fault current of -45° (I lagging V by 45°) a ***67 Char Angle*** of **-45°** is required for maximum sensitivity.

MINIMUM POLARISING VOLTAGE

The ***67N Minimum Voltage*** setting defines the minimum polarising voltage level. Where the measured polarising voltage is below this level no directional output is given and operation of protection elements set as directional will be inhibited. This prevents mal-operation under fuse failure/MCB tripped conditions where noise voltages can be present.

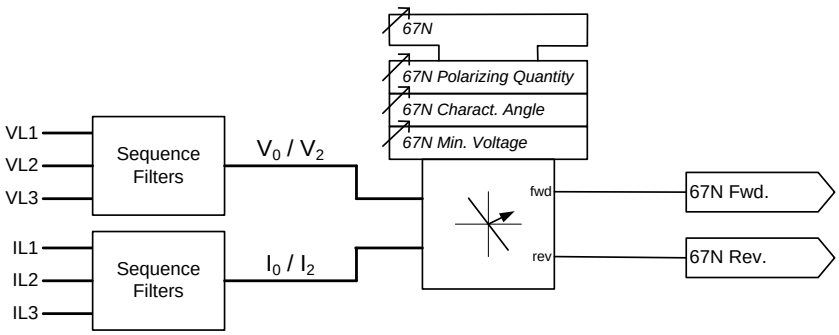

Figure 3-5 Logic Diagram: Derived Directional Earth Fault Element

 ©2019 Siemens Protection Devices Limited

3.2.2 INSTANTANEOUS DERIVED EARTH FAULT PROTECTION (50N)

Two instantaneous derived earth fault elements are provided in the 7SR11 relay and four elements are provided in the 7SR12 relay.

50N-1, 50N-2, (50N-3 & 50N-4 – 7SR12)

Each instantaneous element has independent settings for pick-up current ***50N-n Setting*** and a follower time delay ***50N-n Delay***. The instantaneous elements have transient free operation.

Where directional elements are present the direction of operation can be set using ***50N-n Dir. Control*** setting. Directional logic is provided independently for each 50-n element.

Operation of the instantaneous earth fault elements can be inhibited from:

Inhibit 50N-n	A binary or virtual input.
79 E/F Inst Trips: **50N-n**	When 'delayed' trips only are allowed in the auto-reclose sequence (***79 E/F Prot'n Trip n*** = **Delayed**).
50-n Inrush Action: **Block**	Operation of the inrush current detector function.
50N-n VTSAction: **Inhibit**	Operation of the VT Supervision function (7SR1205 & 7SR1206).

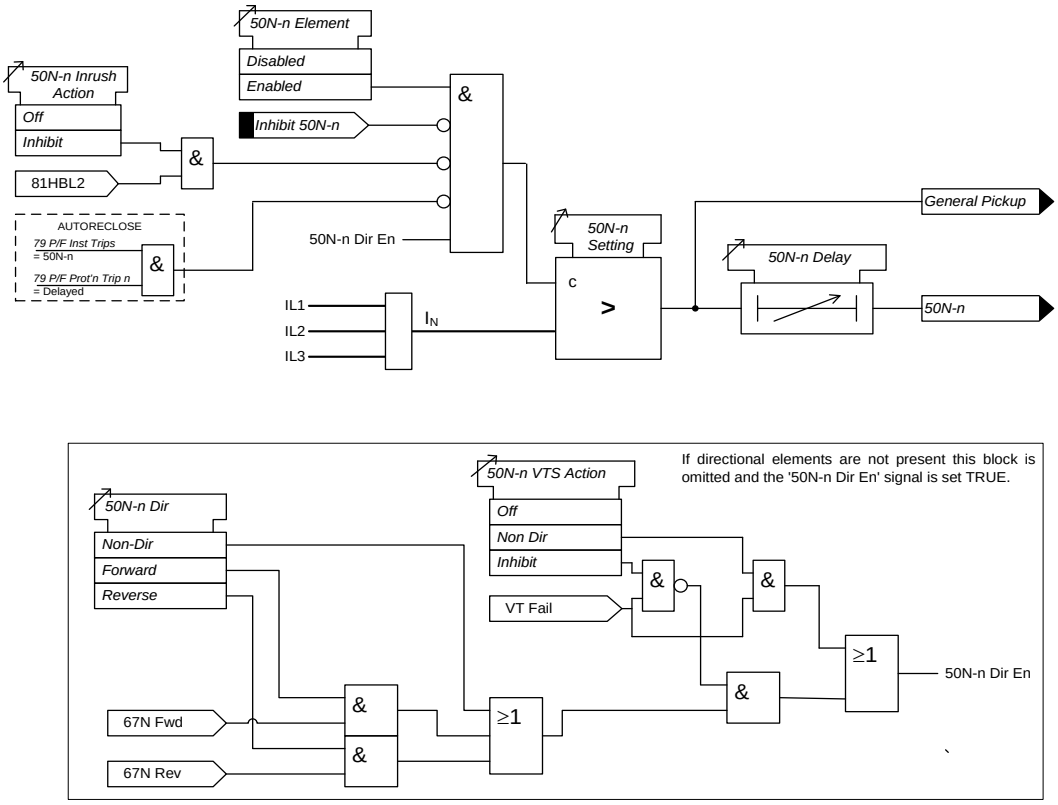

Figure 3-6 Logic Diagram: Derived Instantaneous Earth Fault Element

3.2.3 TIME DELAYED DERIVED EARTH FAULT PROTECTION (51N)

Two time delayed derived earth fault elements are provided in the 7SR11 relay and four elements are provided in the 7SR12 relay.

51N-1, 51N-2, (51N-3 & 51N-4 – 7SR12)

51N-n Setting sets the pick-up current level.

A number of shaped characteristics are provided. An inverse definite minimum time (IDMT) characteristic is selected from IEC and ANSI curves using ***51N-n Char***. A time multiplier is applied to the characteristic curves using the ***51N-n Time Mult*** setting. Alternatively, a definite time lag delay (DTL) can be chosen using ***51N-n Char***. When definite time lag (DTL) is selected the time multiplier is not applied and the ***51N-n Delay (DTL)*** setting is used instead.

The ***51-n Reset*** setting can apply a **definite time delayed** reset**,** or when the operation is configured as an IEC or ANSI or user characteristic if the reset is selected as **IEC/ANSI (DECAYING)** reset the associated reset curve will be used. The reset mode is significant where the characteristic has reset before issuing a trip output – see 'Applications Guide'

A minimum operate time for the characteristic can be set using the ***51N-n Min. Operate Time*** setting.

A fixed additional operate time can be added to the characteristic using the ***51N-n Follower DTL*** setting.

Where directional elements are present the direction of operation can be set using ***51N-n Dir. Control*** setting. Directional logic is provided independently for each 51N-n element.

Operation of the time delayed earth fault elements can be inhibited from:

Inhibit 51N-n	A binary or virtual input.
79 E/F Inst Trips: **51N-n**	When 'delayed' trips only are allowed in the auto-reclose sequence (***79 E/F Prot'n Trip n*** = **Delayed**).
50-n Inrush Action: **Block**	Operation of the inrush current detector function.
51N-n VTSAction: **Inhibit**	Operation of the VT Supervision function (7SR1205 & 7SR1206).

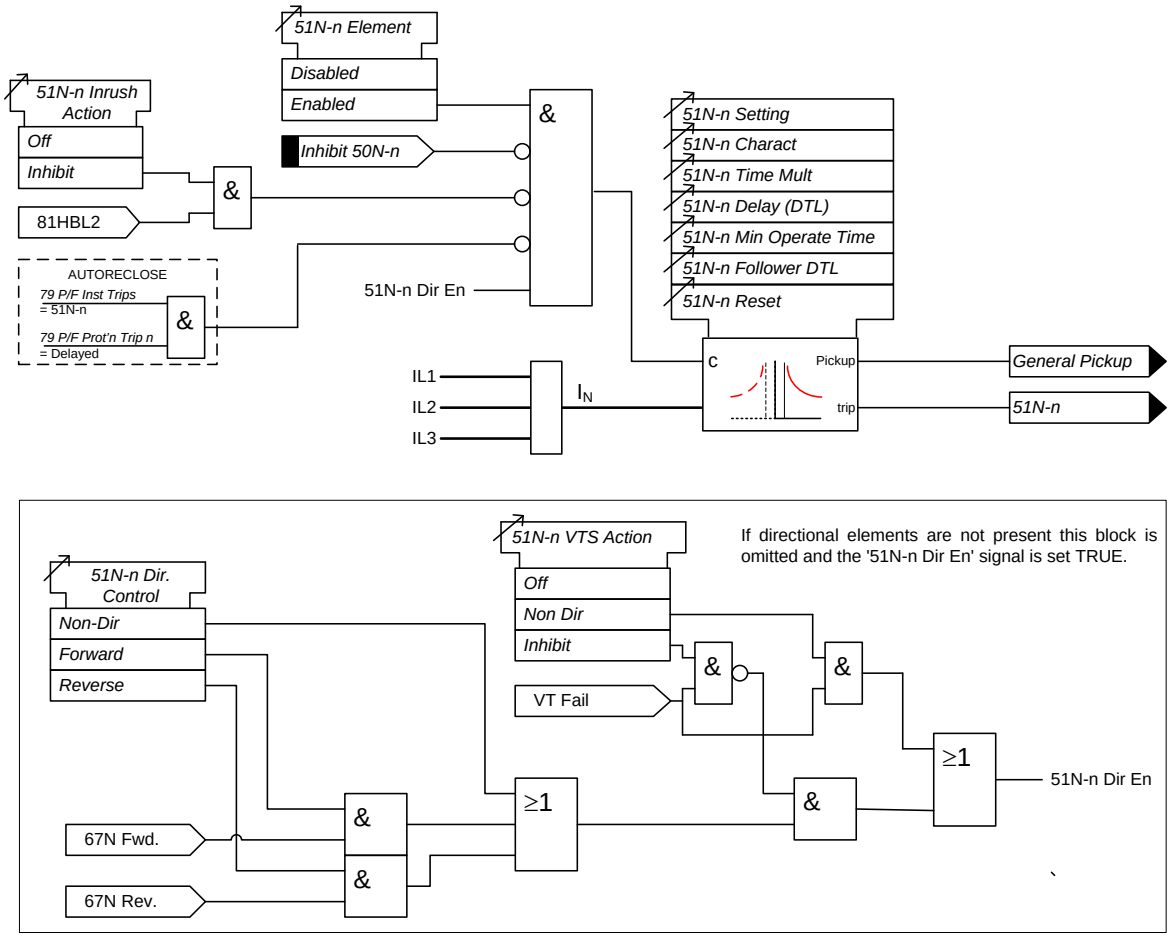

Figure 3-7 Logic Diagram: Derived Time Delayed Earth Fault Protection

 ©2019 Siemens Protection Devices Limited

3.3 Current Protection: Measured Earth Fault (67G, 51G, 50G)

The earth current is measured directly via a dedicated current analogue input, IL4.

All measured earth fault elements have a common setting to measure either fundamental frequency RMS or True RMS current:

True RMS current: ***50 Measurement* = RMS, *51 Measurement* = RMS**

Fundamental Frequency RMS current: ***50 Measurement* = Fundamental, *51 Measurement* = Fundamental**

3.3.1 DIRECTIONAL CONTROL OF MEASURED EARTH FAULT PROTECTION (67G) – 7SR12

The directional element produces forward and reverse outputs for use with measured earth fault elements. These outputs can be mapped as controls to each shaped and instantaneous element.

If a protection element is set as non-directional then it will operate independently of the output of the directional detector. However, if a protection element is programmed for forward directional mode then operation will occur only for a fault lying within the forward operate zone. Conversely, if a protection element is programmed for reverse directional mode then operation will occur only for a fault lying within the reverse operate zone. Typically the forward direction is defined as being 'away' from the busbar or towards the protected zone.

The Characteristic angle is the phase angle by which the polarising voltage must be adjusted such that the directional detector gives maximum sensitivity in the forward operate zone when the current is in phase with it. The reverse operate zone is the mirror image of the forward zone.

The measured directional earth fault elements use zero phase sequence (ZPS) polarising.

Voltage polarisation is achieved for the earth-fault elements by comparison of the appropriate current with its equivalent voltage:

$I_0 \sim V_0$

The characteristic angle can be user programmed to any angle between -95° and +95° using the ***67G Char Angle*** setting. The voltage is the reference phasor (V_{ref}) and the ***67G Char Angle*** setting is added to this to adjust the forward and reverse zones.

The centre of the forward zone is set by (V_{ref} Angle + ***67G Char Angle***) and should be set to correspond with I_{fault} Angle for maximum sensitivity e.g.

For fault current of -15° (I lagging V by 15°) a ***67G Char Angle*** of **-15°** is required for maximum sensitivity, OR

For fault current of -45° (I lagging V by 45°) a ***67G Char Angle*** of **-45°** is required for maximum sensitivity.

MINIMUM POLARISING VOLTAGE

The ***67G Minimum Voltage*** setting defines the minimum polarising voltage level. Where the measured polarising voltage is below this level no directional output is given and. Operation of protection elements set as directional will be inhibited. This prevents mal-operation under fuse failure/MCB tripped conditions where noise voltages can be present.

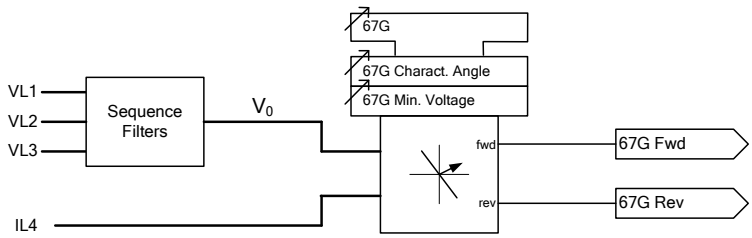

Figure 3-8 Logic Diagram: Measured Directional Earth Fault Protection

3.3.2 INSTANTANEOUS MEASURED EARTH FAULT PROTECTION (50G)

Two instantaneous derived earth fault elements are provided in the 7SR11 relay and four elements are provided in the 7SR12 relay.

50G-1, 50G-2, (50G-3 & 50G-4 – 7SR12)

Each instantaneous element has independent settings for pick-up current ***50G-n Setting*** and a follower time delay ***50G-n Delay***. The instantaneous elements have transient free operation.

Where directional elements are present the direction of operation can be set using ***50G-n Dir. Control*** setting. Directional logic is provided independently for each 50G-n element e.g. giving the option of using two elements set to forward and two to reverse.

Operation of the instantaneous measured earth fault elements can be inhibited from:

Inhibit 50G-n	A binary or virtual input.
79 E/F Inst Trips: **50G-n**	When 'delayed' trips only are allowed in the auto-reclose sequence (***79 E/F Prot'n Trip n*** = **Delayed**).
50-n Inrush Action: **Block**	Operation of the inrush current detector function.
50G-n VTSAction: **Inhibit**	Operation of the VT Supervision function (7SR1205 & 7SR1206).

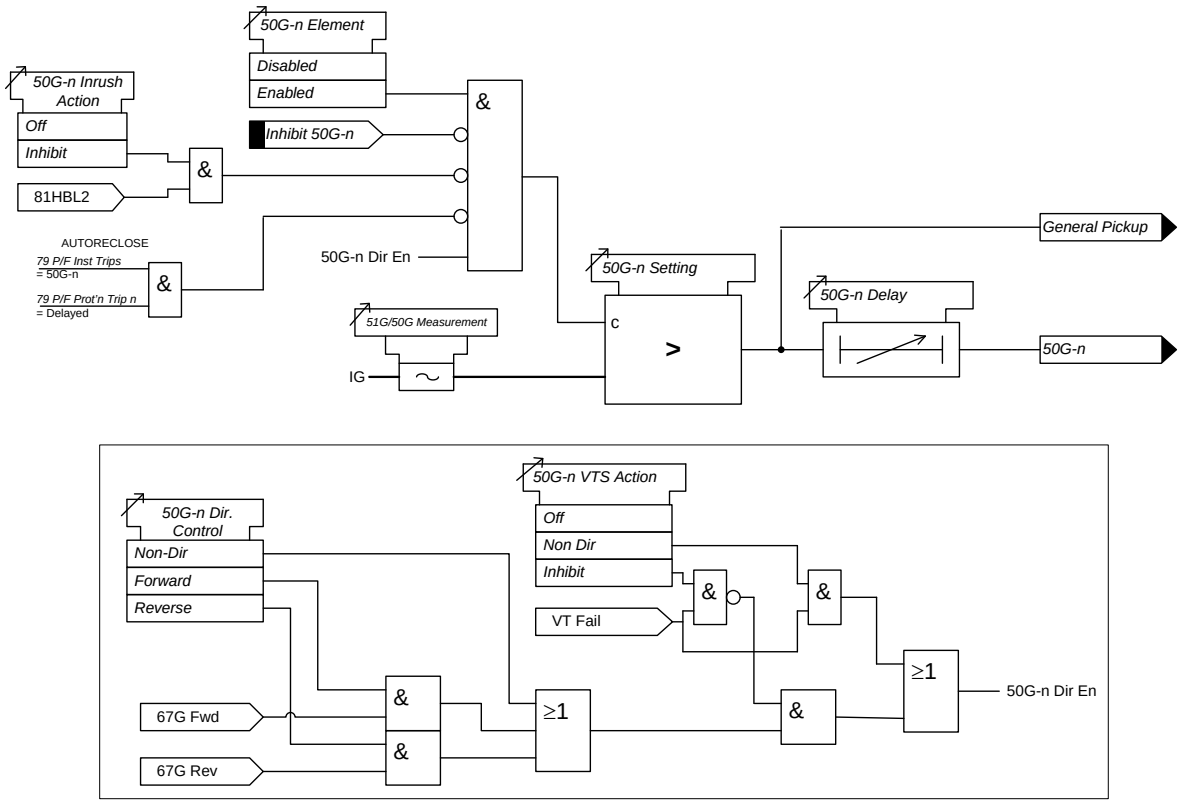

Figure 3-9 Logic Diagram: Measured Instantaneous Earth-fault Element

 ©2019 Siemens Protection Devices Limited

3.3.3 TIME DELAYED MEASURED EARTH FAULT PROTECTION (51G)

Two instantaneous derived earth fault elements are provided in the 7SR11 relay and four elements are provided in the 7SR12 relay.

51G-1, 51G-2, (51G-3 & 51G-4 – 7SR12)

51G-n Setting sets the pick-up current level.

A number of shaped characteristics are provided. An inverse definite minimum time (IDMT) characteristic is selected from IEC and ANSI curves using ***51G-n Char***. A time multiplier is applied to the characteristic curves using the ***51G-n Time Mult*** setting. Alternatively, a definite time lag (DTL) can be chosen using ***51G-n Char***. When DTL is selected the time multiplier is not applied and the ***51G-n Delay (DTL)*** setting is used instead. The full list of operating curves is given in Section 2 – 'Settings, Configuration and Instruments Guide'. Operating curve characteristics are illustrated in Section 3 – 'Performance Specification'.

The ***51-n Reset*** setting can apply a **definite time delayed** reset**,** or when the operation is configured as an IEC or ANSI or user characteristic if the reset is selected as **IEC/ANSI (DECAYING)** reset the associated reset curve will be used. The reset mode is significant where the characteristic has reset before issuing a trip output – see 'Applications Guide'

A minimum operate time for the characteristic can be set using ***51G-n Min. Operate Time*** setting.

A fixed additional operate time can be added to the characteristic using ***51G-n Follower DTL*** setting.

Where directional elements are present the direction of operation can be set using ***51G-n Dir. Control*** setting. Directional logic is provided independently for each 51G-n element e.g. giving the option of using two elements set to forward and two to reverse.

Operation of the time delayed measured earth fault elements can be inhibited from:

Inhibit 51G-n	A binary or virtual input.
79 E/F Inst Trips: **51G-n** (***79 E/F Prot'n Trip n*** = **Delayed**).	When 'delayed' trips only are allowed in the auto-reclose sequence
50-n Inrush Action: **Block**	Operation of the inrush current detector function.
51G-n VTSAction: **Inhibit**	Operation of the VT Supervision function (7SR1205 & 7SR1206).

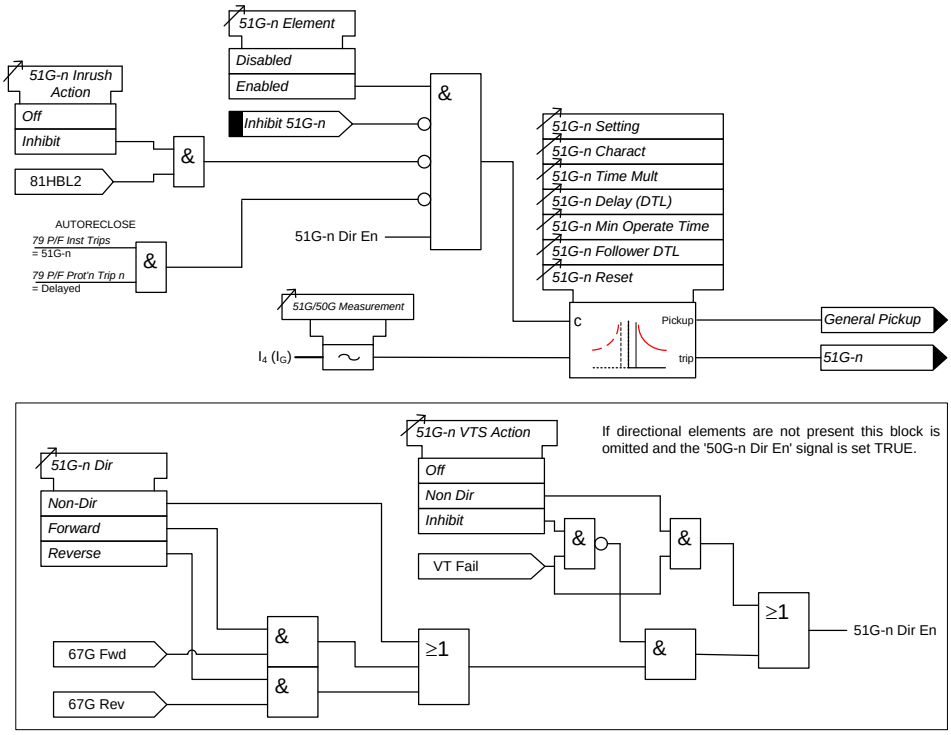

Figure 3-10 Logic Diagram: Measured Time Delayed Earth Fault Element (51G)

3.4 Current Protection: Sensitive Earth Fault (67SEF, 51SEF, 50SEF)

Current for the Sensitive Earth Fault (SEF) elements is measured directly via a dedicated current analogue input which requires different hardware that must be specially ordered. SEF elements measure the fundamental frequency RMS current.

3.4.1 DIRECTIONAL CONTROL OF SENSITIVE EARTH FAULT PROTECTION (67SEF) – 7SR12

The directional element produces forward and reverse outputs for use with SEF elements. These outputs can be mapped as controls to each shaped and instantaneous element.

If a protection element is set as non-directional then it will operate independently of the output of the directional detector. However, if a protection element is programmed for forward directional mode then operation will occur only for a fault lying within the forward operate zone. Conversely, if a protection element is programmed for reverse directional mode then operation will occur only for a fault lying within the reverse operate zone. Typically the forward direction is defined as being 'away' from the busbar or towards the protected zone.

The forward directional zone of the relay is defined by the characteristic angle setting which is the angle by which the polarising voltage differs from the operating current. The forward directional zone is symmetrical around the characteristic angle with angular limits defined in the performance specification. The reverse operate zone is the mirror image of the forward zone.

The directional sensitive earth fault elements use zero phase sequence (ZPS) polarising.

Voltage polarisation is achieved for the earth-fault elements by comparison of the appropriate current with its equivalent voltage:

$I_0 \sim V_0$

The characteristic angle can be user programmed to any angle between -95° and +95° using the ***67SEF Char Angle*** setting. The voltage is the reference phasor (V_{ref}) and the ***67SEF Char Angle*** setting is added to this to adjust the forward and reverse zones.

The centre of the forward zone is set by (V_{ref} Angle + ***67SEF Char Angle***) and should be set to correspond with I_{fault} Angle for maximum sensitivity i.e.

For fault current of -15° (I lagging V by 15°) a ***67SEF Char Angle*** of **-15°** is required for maximum sensitivity.

OR

For fault current of -45° (I lagging V by 45°) a ***67SEF Char Angle*** of **-45°** is required for maximum sensitivity.

For resonant grounded systems where compensation (Petersen) coils are fitted, earth fault current is deliberately reduced to zero and therefore is difficult to measure for protection purposes. However, the wattmetric component in the capacitive charging currents, which are close to the directional zone boundary, can be used to indicate fault location. It is advantageous to increase the directional limits towards ±90º so that the directional boundary can be used to discriminate between faulted and healthy circuits. A ***67SEF Compensated Network Enable*** user setting is provided to provide this feature for use with compensated networks only.

MINIMUM POLARISING VOLTAGE

The ***67SEF Minimum Voltage*** setting defines the minimum polarising voltage level. Where the measured polarising voltage is below this level no directional output is given and. Operation of protection elements set as directional will be inhibited. This prevents mal-operation under fuse failure/MCB tripped conditions where noise voltages can be present.

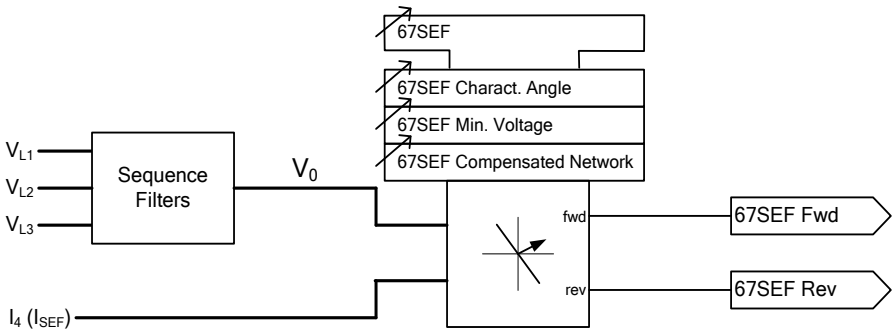

 ©2019 Siemens Protection Devices Limited

Figure 3-11 Logic Diagram: SEF Directional Element (67SEF)

3.4.2 INSTANTANEOUS SENSITIVE EARTH FAULT PROTECTION (50SEF)

Two sensitive earth fault elements are provided in the 7SR11 relay and four elements are provided in the 7SR12 relay.

50SEF-1, 50SEF-2, (50SEF-3 & 50SEF-4– 7SR12)

Each instantaneous element has independent settings for pick-up current ***50SEF-n Setting*** and a follower time delay ***50SEF-n Delay***. The instantaneous elements have transient free operation.

Where directional elements are present the direction of operation can be set using ***50SEF-n Dir. Control*** setting. Directional logic is provided independently for each 50SEF-n element e.g. giving the option of using two elements set to forward and two to reverse.

Operation of the instantaneous earth fault elements can be inhibited from:

Inhibit 50SEF-n	A binary or virtual input.
79 SEF Inst Trips: **50SEF-n**	When 'delayed' trips only are allowed in the auto-reclose sequence (***79 SEF Prot'n Trip n*** = **Delayed**).
50SEF-n VTSAction: **Inhibit**	Operation of the VT Supervision function (7SR1205 & 7SR1206).

Directional elements will not operate unless the zero sequence voltage (V_0) is above the ***67SEF Minimum Voltage*** setting i.e. the residual voltage is greater than 3 times this setting and the phase is in the Forward/Reverse operating range. If ***67SEF Wattmetric*** is set to Enabled, the calculated residual real power must be above the ***67SEF Wattmetric Power*** setting for any SEF element operation. The residual power P_{res} is equal to the wattmetric component of $3V_0I_{SEF}$ and therefore the wattmetric component of $9V_0I_0$

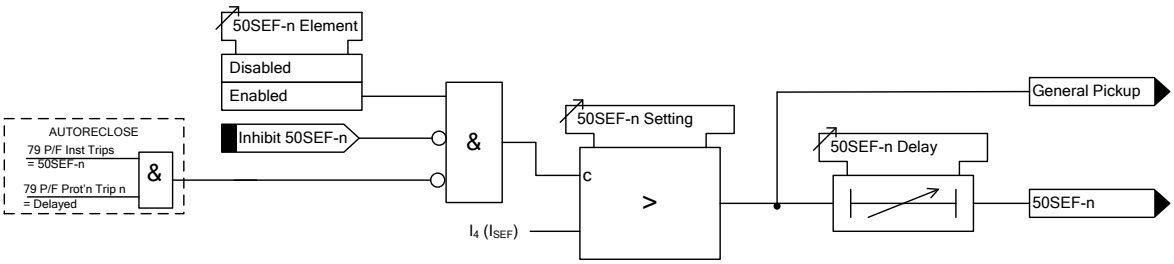

Figure 3-12 Logic Diagram: 7SR11 SEF Instantaneous Element

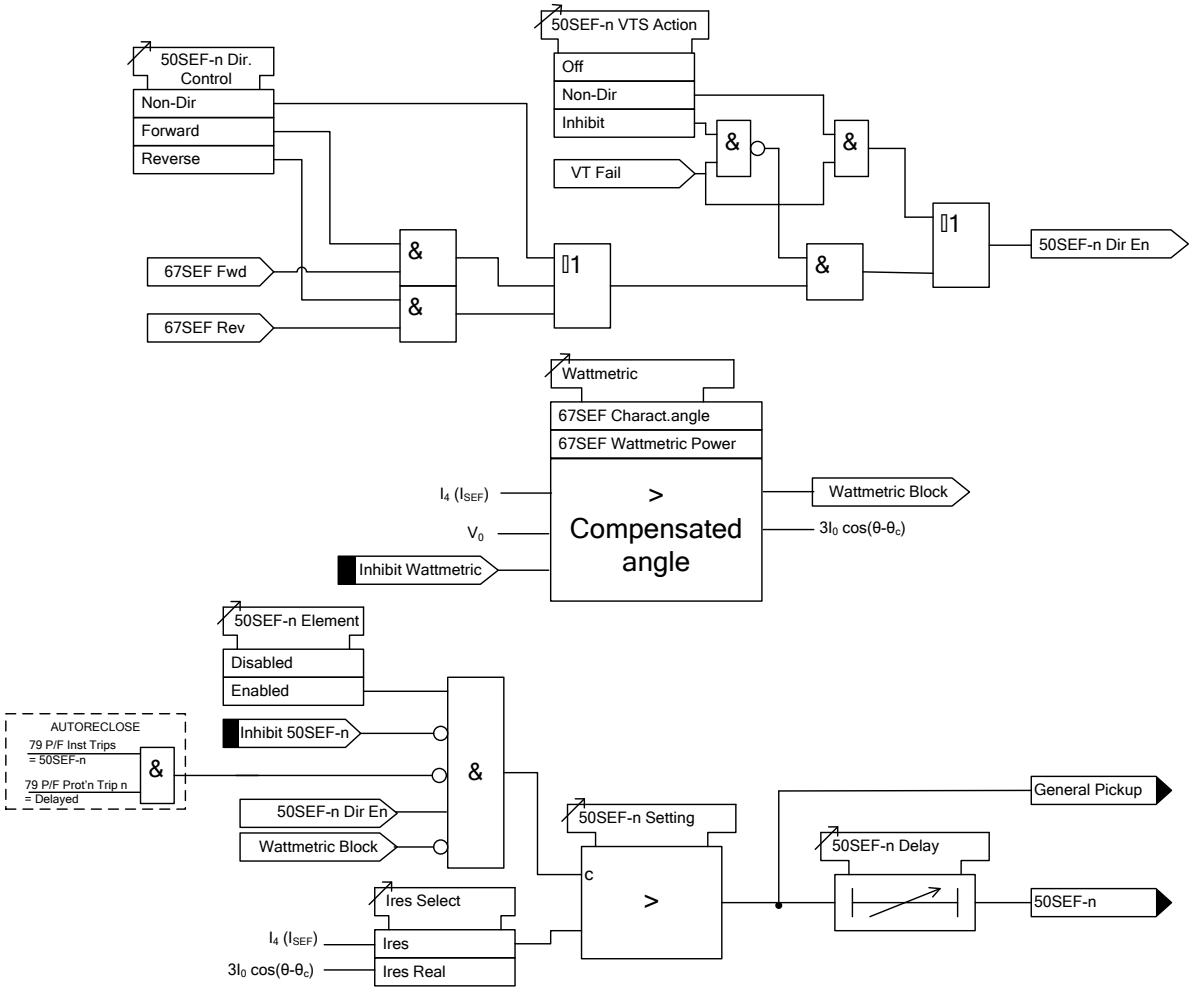

Figure 3-13 Logic Diagram: 7SR12 SEF Instantaneous Element

 ©2019 Siemens Protection Devices Limited

3.4.3 TIME DELAYED SENSITIVE EARTH FAULT PROTECTION (51SEF)

Two sensitive earth fault elements are provided in the 7SR11 relay and four elements are provided in the 7SR12 relay.

51SEF-1, 51SEF-2, (51SEF-3 & 51SEF-4– 7SR12)

51SEF-n Setting sets the pick-up current level.

A number of shaped characteristics are provided. An inverse definite minimum time (IDMT) characteristic is selected from IEC and ANSI curves using ***51SEF-n Char***. A time multiplier is applied to the characteristic curves using the ***51SEF-n Time Mult*** setting. Alternatively, a definite time lag (DTL) can be chosen using ***51SEF-n Char***. When DTL is selected the time multiplier is not applied and the ***51SEF-n Delay (DTL)*** setting is used instead.

The ***51SEF-n Reset*** setting can apply a **definite time delayed** reset**,** or when configured as an IEC or ANSI characteristic an **IEC/ANSI (DECAYING)** reset. The reset mode is significant where the characteristic has reset before issuing a trip output – see 'Applications Guide'.

A minimum operate time for the characteristic can be set using ***51SEF-n Min. Operate Time*** setting.

A fixed additional operate time can be added to the characteristic using ***51SEF-n Follower DTL*** setting.

Where directional elements are present the direction of operation can be set using ***51SEF-n Dir. Control*** setting. Directional logic is provided independently for each 51SEF-n element e.g. giving the option of using two elements set to forward and two to reverse.

Operation of the time delayed earth fault elements can be inhibited from:

Inhibit 51SEF-n	A binary or virtual input
79 SEF Inst Trips: **51SEF-n**	When 'delayed' trips only are allowed in the auto-reclose sequence (***79 SEF Prot'n Trip n*** = **Delayed**).
51SEF-n VTSAction: **Inhibit**	Operation of the VT Supervision function (7SR1205 & 7SR1206).

Directional elements will not operate unless the zero sequence voltage (V_0) is above the ***67SEF Minimum Voltage*** setting i.e. the residual voltage is greater than 3 times this setting and the phase is in the Forward/Reverse operating range. If ***67SEF Wattmetric*** is set to Enabled, the calculated residual real power must be above the ***67SEF Wattmetric Power*** setting. The residual power P_{res} is equal to the wattmetric component of $3V_0I_{SEF}$ and therefore the wattmetric component of $9V_0I_0$

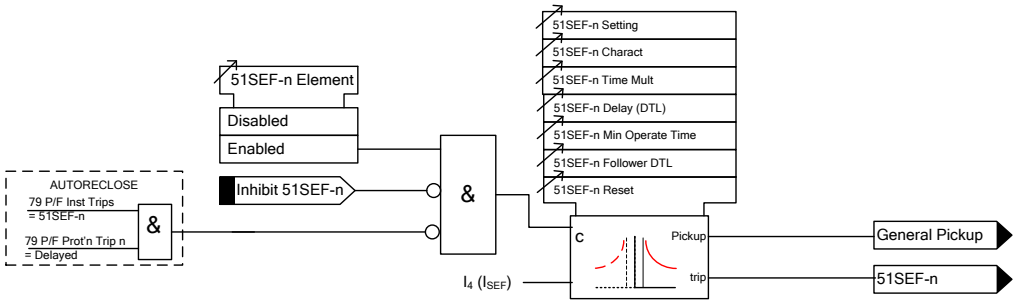

Figure 3-14 Logic Diagram: 7SR11 SEF Time Delayed Element (51SEF)

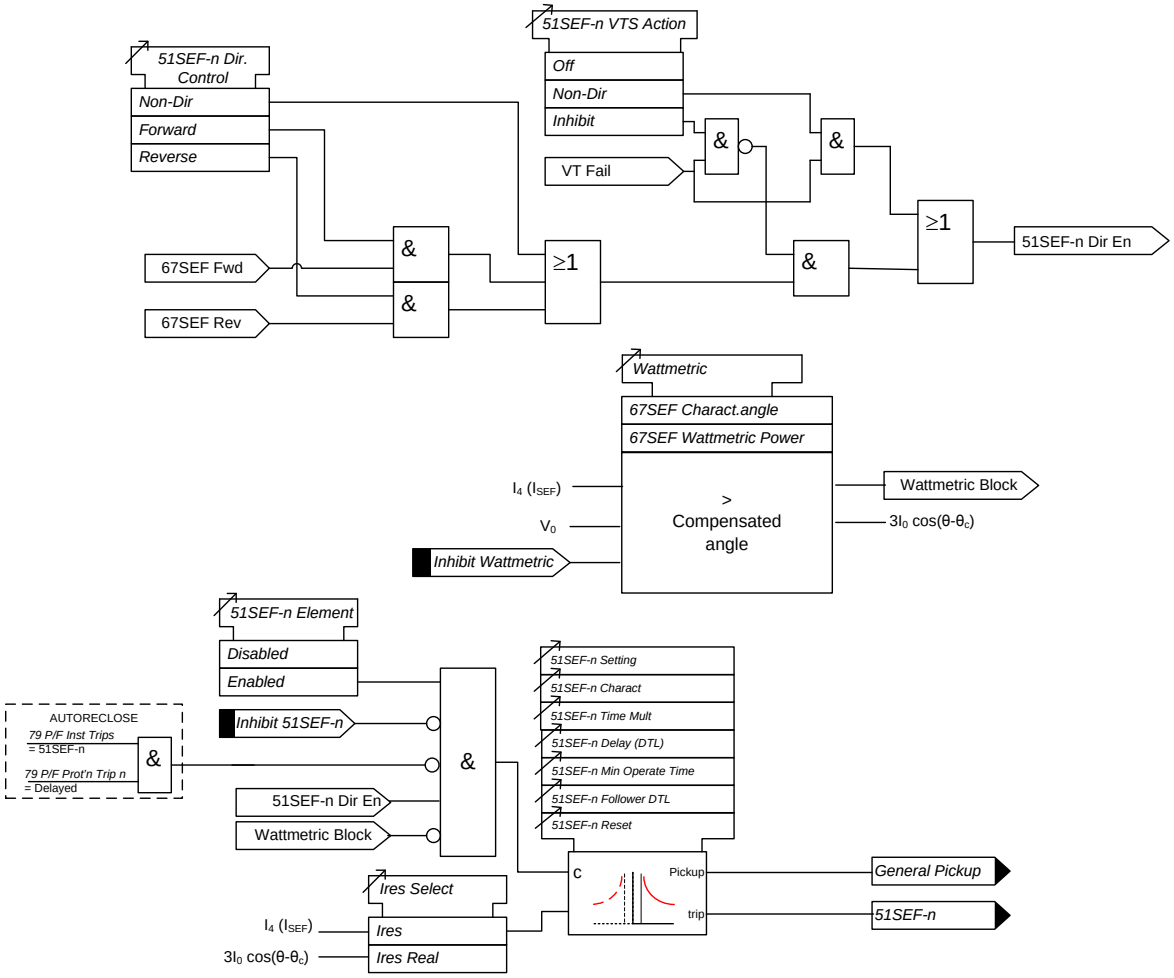

Figure 3-15 Logic Diagram: 7SR12 SEF Time Delayed Element (51SEF)

©2019 Siemens Protection Devices Limited

3.5 Current Protection: High Impedance Restricted Earth Fault - (64H)

One high impedance Restricted Earth Fault (REF) element is provided ***64H-1***.

The relay utilises fundamental current measurement values for this function.

The single phase current input is derived from the residual output of line/neutral CTs connected in parallel. An external stabilising resistor must be connected in series with this input to ensure that this element provides a high impedance path.

64H Current Setting sets the pick-up current level. An output is given after elapse of the ***64H Delay*** setting.

External components – a series stabilising resistor and a non-linear resistor – are used with this function. See 'Applications Guide' for advice in specifying suitable component values.

Operation of the high impedance element can be inhibited from:

Inhibit 64H A binary or virtual input.

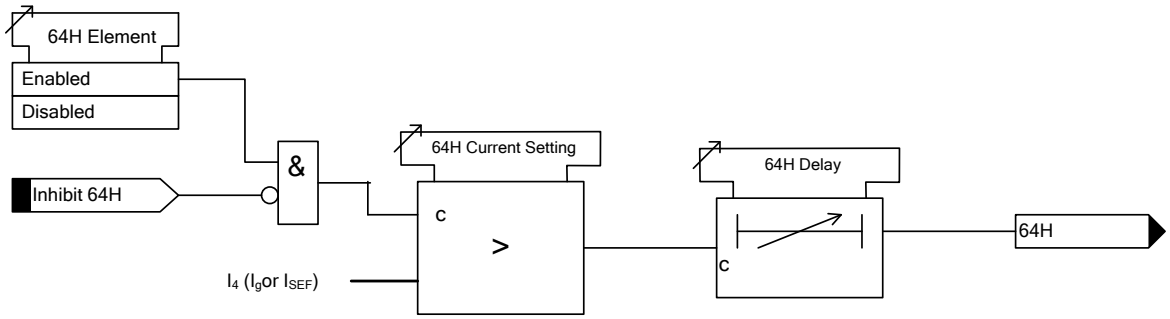

Figure 3-16 Logic Diagram: High Impedance REF (64H)

3.6 Current Protection: Cold Load (51c)

The setting of each shaped overcurrent element (51-n) can be inhibited and alternative 'cold load' settings (51c-n) can be applied for a period following circuit switch in.

The Cold Load settings are applied after the circuit breaker has been open for longer than the ***Pick-Up Time*** setting.

Following circuit breaker closure the 'cold load' overcurrent settings will revert to those defined in the Phase Overcurrent menu (51-n) after either elapse of the ***Drop-Off Time*** setting or when the measured current falls below the ***Reduced Current Level*** setting for a time in excess of ***Reduced Current Time*** setting.

During cold load settings conditions any directional settings applied in the Phase Overcurrent menu are still applicable.

A CB 'Don't Believe It' (DBI) alarm condition, see Section 4.3, is not acted on, causing the element to remain operating in accordance with the relevant 51-n settings. Where the ***Reduced Current*** setting is set to **OFF** reversion to 51-n settings will only occur at the end of the ***Drop-Off Time***. If any element is picked up on expiry of ***Drop-Off Time*** the relay will issue a trip (and lockout if a recloser is present).

If the circuit breaker is re-opened before expiry of the ***Drop-Off Time*** the drop-off timer is held but not reset. Resetting the timer for each trip could result in damaging levels of current flowing for a prolonged period during a rapid sequence of trips/closes.

Cold load trips use the same binary output(s) as the associated 51-n element.

Operation of the cold load element can be inhibited from:

Inhibit Cold Load A binary or virtual input.

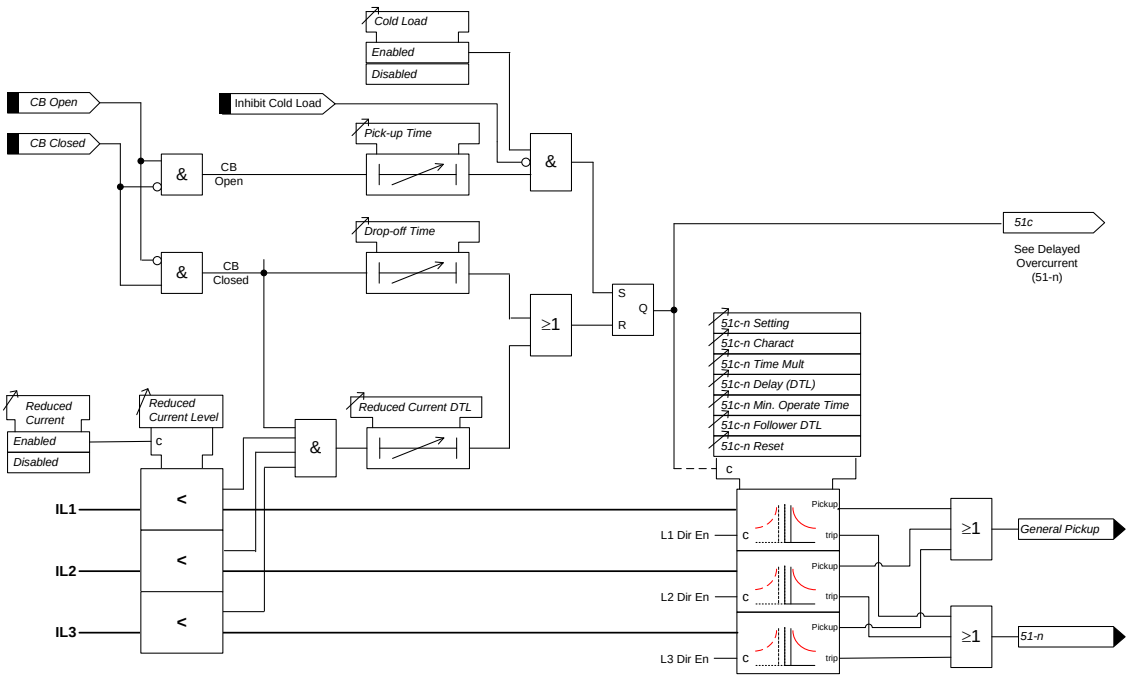

Figure 3-17 Logic Diagram: Cold Load Settings (51c)

3.7 Current Protection: Negative Phase Sequence Overcurrent - (46NPS)

The negative sequence phase (NPS) component of current (I2) is derived from the three phase currents. It is a measure of the quantity of unbalanced current in the system.

When the device is applied to reverse sequence networks, i.e. 1-3-2, the NPS/PPS sequence is corrected automatically by the *Gn Phase* Rotation setting in the *CT/VT Config menu.*

Two NPS current elements are provided – ***46IT and 46DT***.

The 46IT element can be configured to be either definite time lag (DTL) or inverse definite minimum time (IDMT),

46IT Setting sets the pick-up current level for the element.

A number of shaped characteristics are provided. An inverse definite minimum time (IDMT) characteristic is selected from IEC and ANSI curves using ***46IT Char***. A time multiplier is applied to the characteristic curves using the ***46IT Time Mult*** setting. Alternatively, a definite time lag delay (DTL) can be chosen using ***46ITChar***. When Definite Time Lag (DTL) is selected the time multiplier is not applied and the ***46IT Delay (DTL)*** setting is used instead.

The ***46IT Reset*** setting can apply a **definite time delayed** or **ANSI (DECAYING)** reset.

The 46DT element has a DTL characteristic. ***46DT Setting*** sets the pick-up current and ***46DT Delay*** the follower time delay.

Operation of the negative phase sequence overcurrent elements can be inhibited from:

Inhibit 46IT	A binary or virtual input.
Inhibit 46DT	A binary or virtual input.

 ©2019 Siemens Protection Devices Limited

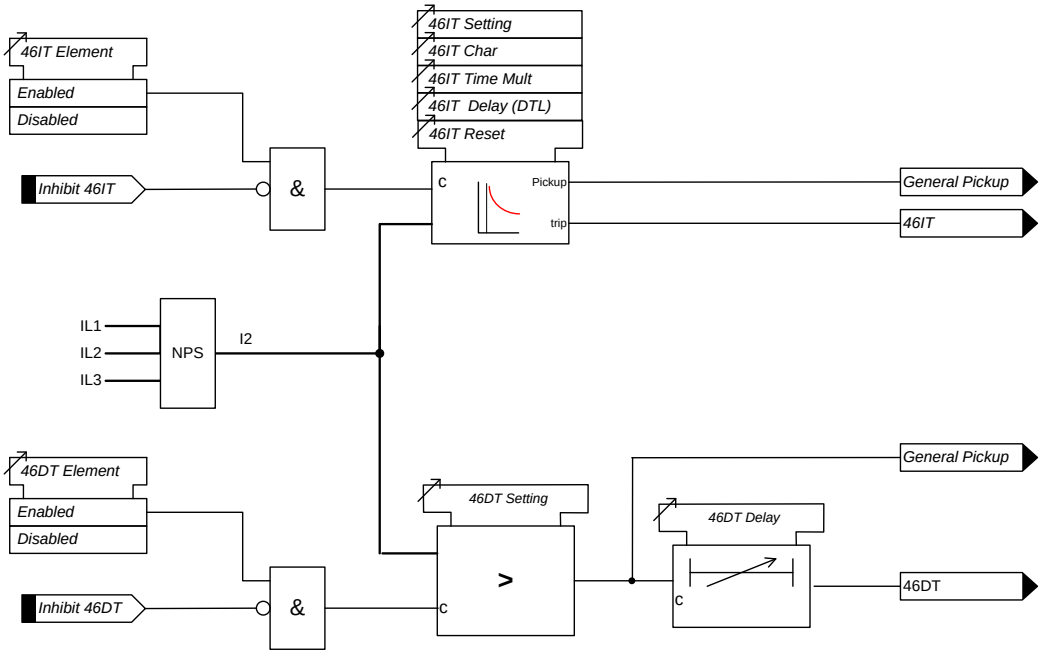

Figure 3-18 Logic Diagram: Negative Phase Sequence Overcurrent (46NPS)

3.8 Current Protection: Under-Current (37)

Two under-current elements are provided ***37-1 & 37-2*** for phase currents and two for the earth or sensitive earth fault input ***37G-1 & 37G-2 or 37SEF-1 & 37SEF-2***

Each phase has an independent level detector and current-timing element. ***37-n Setting*** sets the pick-up current. An output is given after elapse of the ***37-n Delay*** setting.

An output is also given to indicate the operated phase.

All under-current elements work with True RMS currents.

Operation of the under-current elements can be inhibited from:

Inhibit 37-n	A binary or virtual input.
37U/I Guard Setting	0.05,0.1..5xIn

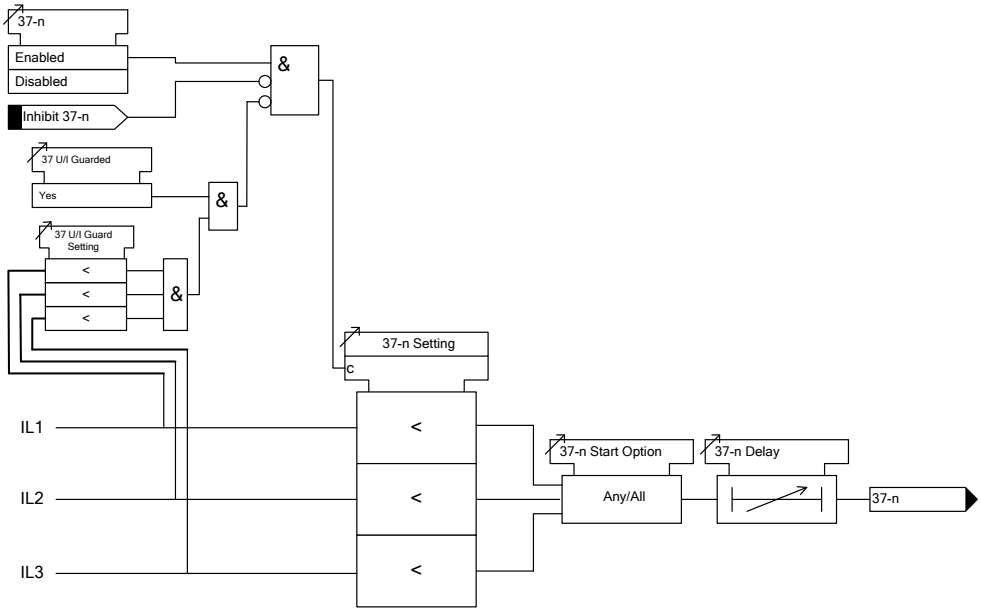

Figure 3-19 Logic Diagram: Phase Current Inputs Undercurrent Detector (37)

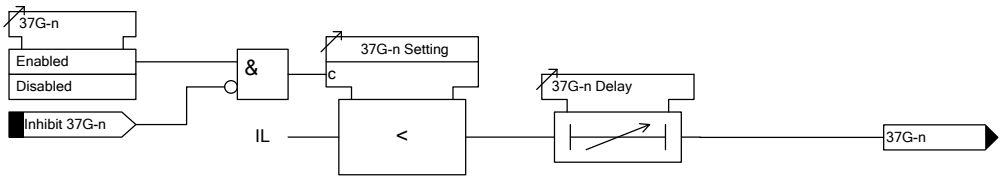

Figure 3-20 Logic Diagram: Earth Current Inputs Undercurrent Detector (37G)

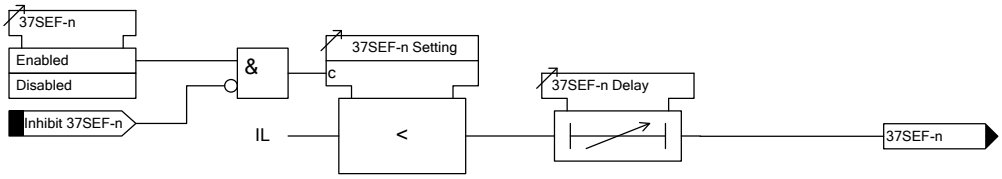

Figure 3-21 Logic Diagram: Sensitive Earth Current Inputs Undercurrent Detector (37SEF)

3.9 Current Protection: Thermal Overload (49)

The relay provides a thermal overload suitable for the protection of static plant. Phase segregated elements are provided. The temperature of the protected equipment is not measured directly. Instead, thermal overload conditions are calculated using the measure True RMS current.

Should the current rise above the ***49 Overload Setting*** for a defined time an output signal will be initiated. The operating time is a function of thermal time constant ***49 Time Constant*** and previous current levels.

Operate Time (t):-

$$t = \tau \times \ln\left\{\frac{I^2 - I_P^2}{I^2 - (k \times I_B)^2}\right\}$$

Where T = Time in minutes

τ = ***49 Time Constant*** setting (minutes)

In = Log Natural

I = measured current

IP = Previous steady state current level

k = Constant

IB = Basic current, typically the same as In

k.IB = ***49 Overload*** Setting ($I\theta$)

Additionally, an alarm can be given if the thermal state of the system exceeds a specified percentage of the protected equipment's thermal capacity ***49 Capacity Alarm*** setting.

For the heating curve:

$$\theta = \frac{I^2}{I_\theta^2} \cdot (1 - e^{-t/\tau}) \times 100\%$$

Where: θ = thermal state at time t

I = measured thermal current

$I\theta$ = ***49 Overload*** setting (or k.IB)

The final steady state thermal condition can be predicted for any steady state value of input current where t >τ,

 ©2019 Siemens Protection Devices Limited

$$\theta_F = \frac{I^2}{I_\theta^2} \times 100\%$$

Where: θF = final thermal state before disconnection of device

49 Overload Setting I_θ is expressed as a multiple of the relay nominal current and is equivalent to the factor $k_{.IB}$ as defined in the IEC255-8 thermal operating characteristics. It is the value of current above which 100% of thermal capacity will be reached after a period of time and it is therefore normally set slightly above the full load current of the protected device.

The thermal state may be reset from the fascia or externally via a binary input.

Thermal overload protection can be inhibited from:

Inhibit 49 A binary or virtual input.

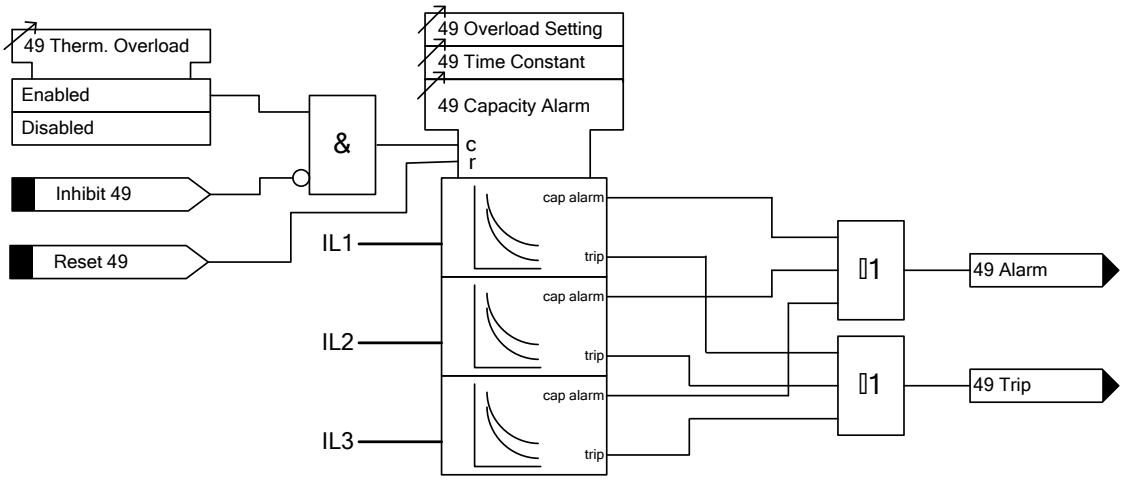

Figure 3-22 Logic Diagram: Thermal Overload Protection (49)

3.10 Current Protection: Line Check 50LC, 50G LC and 50SEF LC – Only software option 'C'

This feature prevents a CB being repeatedly manually closed onto a faulted line. It is enabled upon the ***Manual CB Close*** output being issued.

If a fault is detected following closure, the Relay will trip for ***Line Check***. A fault is detected if the measured current is above the ***LC-n Setting*** level for a period greater than the ***LC-n Delay***.

Two line check elements are provided, ***LC-1 and LC-2***, for each fault type - phase and earth / sensitive earth – in the CURRENT PROT'N > LINE CHECK menu.

The feature will remain enabled until the CB has been closed for a duration equal to the ***Close CB Pulse*** + ***Reclaim Timer*** settings in the CIRCUIT BREAKER MENU. Alternatively, the element will remain enabled as long as the ***Line Check*** binary input is energised.

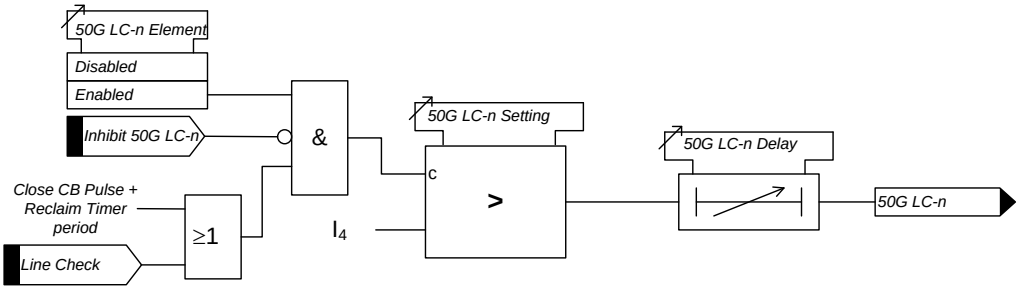

Figure 3-23 Logic Diagram: 50G Line Check Elements (50G LC)

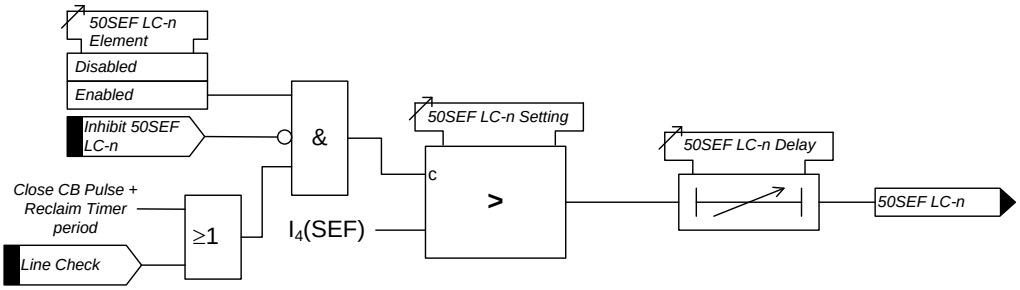

Figure 3-24 Logic Diagram: 50SEF Line Check Elements (50SEF LC)

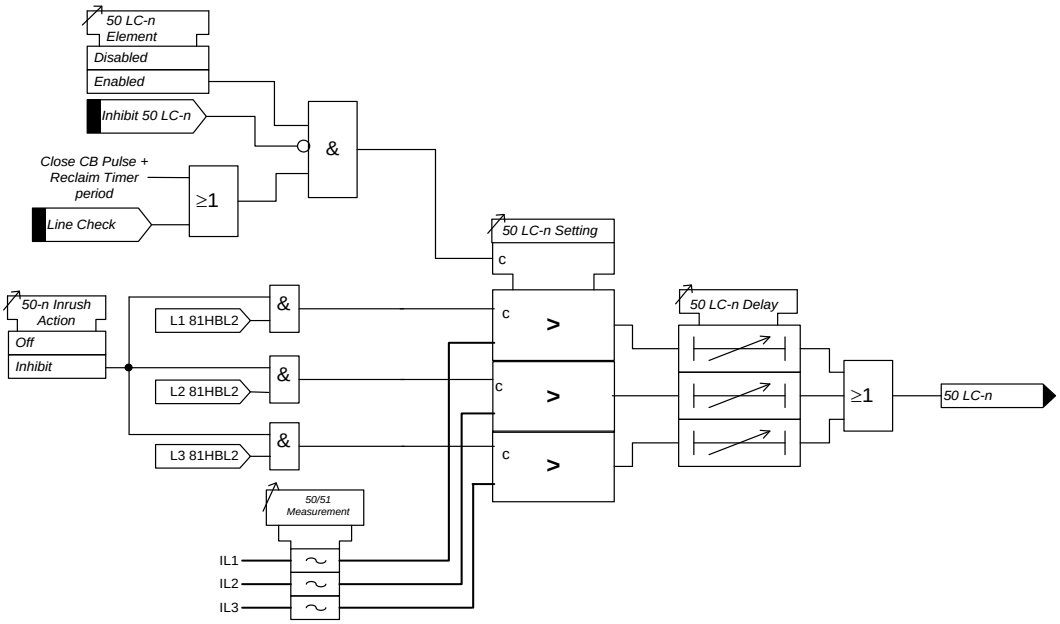

Figure 3-25 Logic Diagram: 50 Line Check Elements (50LC)

©2019 Siemens Protection Devices Limited

3.11 Current Protection: Arc Flash Detector (50 AFD)

By employing an optical detection technique, Arc Fault Protection results in fast clearance of arcing faults.

Arc fault protection is achieved in the 7SR1 range of relays via the 7XG31xx series of equipment being connected to the binary inputs.

Should the sensor operate when the phase current is above the ***50AFD Setting*** in any phase then an output signal will be initiated.

Refer to 7XG31 documentation for further details.

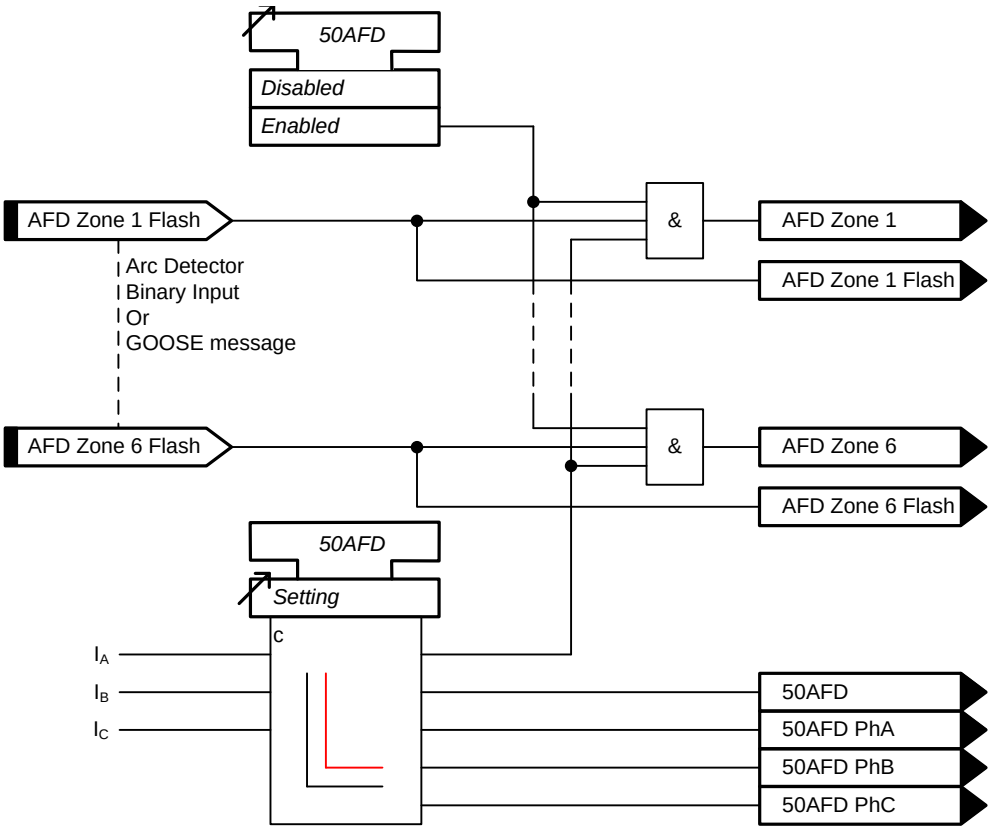

Figure 3-26 Logic Diagram: Arc Flash Detector (50 AFD)

3.12 Voltage Protection: Phase Under/Over Voltage (27/59) – 7SR12

In total four under/over voltage elements are provided ***27/59-1, 27/59-2, 27/59-3 & 27/59-4.***

The relay utilises fundamental frequency RMS voltage for this function. All under/over voltage elements have a common setting to measure phase to phase **(Ph-Ph)** or phase to neutral **(Ph-N)** voltage using the ***Voltage Input Mode*** setting.

Voltage elements can be blocked if all phase voltages fall below the ***27/59 U/V Guard*** setting.

27/59-n Setting sets the pick-up voltage level for the element.

The sense of the element (undervoltage or overvoltage) is set by the ***27/59-n Operation*** setting.

The ***27/59-n O/P Phases*** setting determines whether the time delay is initiated for operation of any phase or only when all phases have detected the appropriate voltage condition. An output is given after elapse of the ***27/59-n Delay*** setting.

The ***27/59-n Hysteresis*** setting allows the user to vary the pick-up/drop-off ratio for the element.

Operation of the under/over voltage elements can be inhibited from:

Inhibit 27/59-n	A binary or virtual input.
***27/59-n VTSInhibit:* Yes**	Operation of the VT Supervision function (7SR1205 & 7SR1206).
27/59-n U/V Guarded	Under voltage guard element.

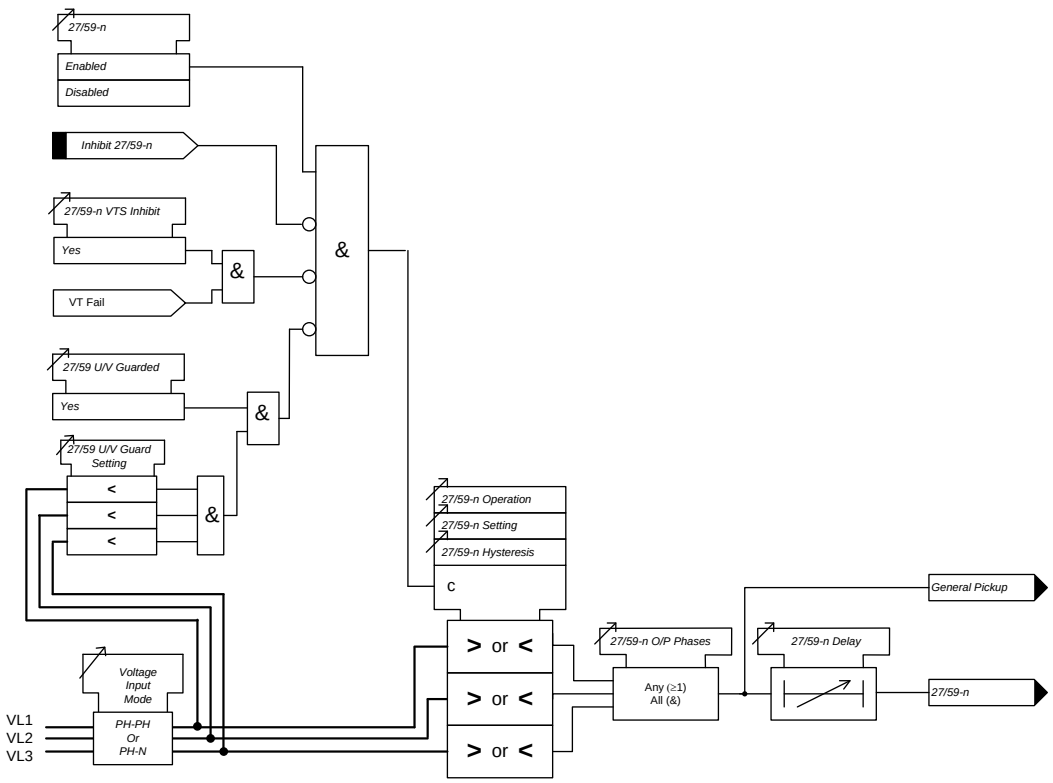

Figure 3-27 Logic Diagram: Under/Over Voltage Elements (27/59)

 ©2019 Siemens Protection Devices Limited

3.13 Voltage Protection: Negative Phase Sequence Overvoltage (47) – 7SR12

Negative phase sequence (NPS) voltage (V2) is a measure of the quantity of unbalanced voltage in the system. The relay derives the NPS voltage from the three input voltages (VL1, VL2 and VL3).

Two elements are provided ***47-1 & 47-2.***

Voltage elements can be blocked if all phase voltages fall below the ***47 U/V Guard*** setting.

47-n Setting sets the pick-up voltage level for the element.

The ***47-n Hysteresis*** setting allows the user to vary the pick-up/drop-off ratio for the element.

An output is given after elapse of the ***47-n Delay*** setting.

Operation of the negative phase sequence voltage elements can be inhibited from:

Inhibit 47-n	A binary or virtual input.
47-n U/V Guarded	Under voltage guard element.

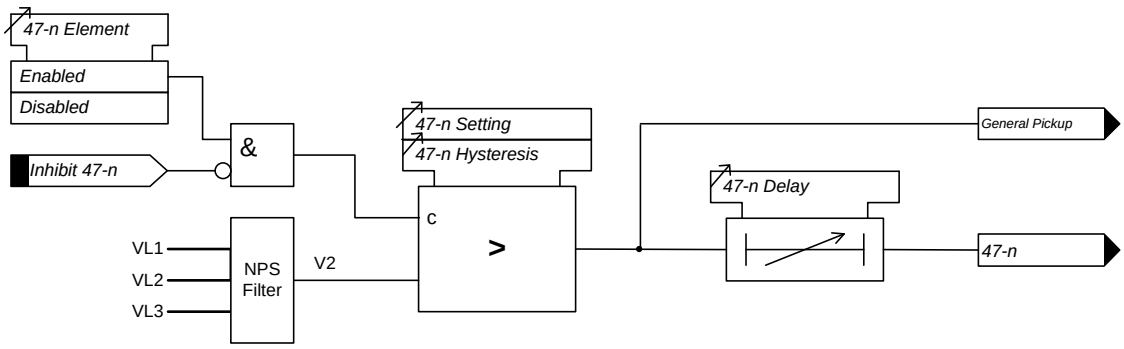

Figure 3-28 Logic Diagram: NPS Overvoltage Protection (47)

3.14 Voltage Protection: Neutral Overvoltage (59N) – 7SR12

Two Neutral Overvoltage (or Neutral Voltage Displacement) elements are provided ***59NIT & 59NDT***.

The relay utilises fundamental voltage measurement values for this function. The element can use a direct measurement 3Vo connection from the voltage transformer or calculate values from a phase to neutral connections from the voltage transformer.

The 59NIT element can be configured to be either definite time lag (DTL) or inverse definite minimum time (IDMT),

59NIT Setting sets the pick-up voltage level (3V0) for the element.

An inverse definite minimum time (IDMT) can be selected using ***59NIT Char***. A time multiplier is applied to the characteristic curves using the ***59NIT Time Mult*** setting (M):

$$t_{op} = \left[\frac{1000 * M}{\left[\frac{3Vo}{Vs}\right] - 1} \right] ms$$

Alternatively, a definite time lag delay (DTL) can be chosen using ***59NITChar***. When Delay (DTL) is selected the time multiplier is not applied and the ***59NIT Delay (DTL)*** setting is used instead.

An instantaneous or definite time delayed reset can be applied using the ***59NIT Reset*** setting.

The 59NDT element has a DTL characteristic. ***59NDT Setting*** sets the pick-up voltage (3V0) and ***59NDT Delay*** the follower time delay.

Operation of the neutral overvoltage elements can be inhibited from:

Inhibit 59NIT	A binary or virtual input.
Inhibit59NDT	A binary or virtual input.

It should be noted that neutral voltage displacement can only be applied to VT arrangements that allow zero sequence flux to flow in the core i.e. a 5-limb VT or 3 single phase VTs. The VT primary winding neutral must be earthed to allow the flow of zero sequence current.

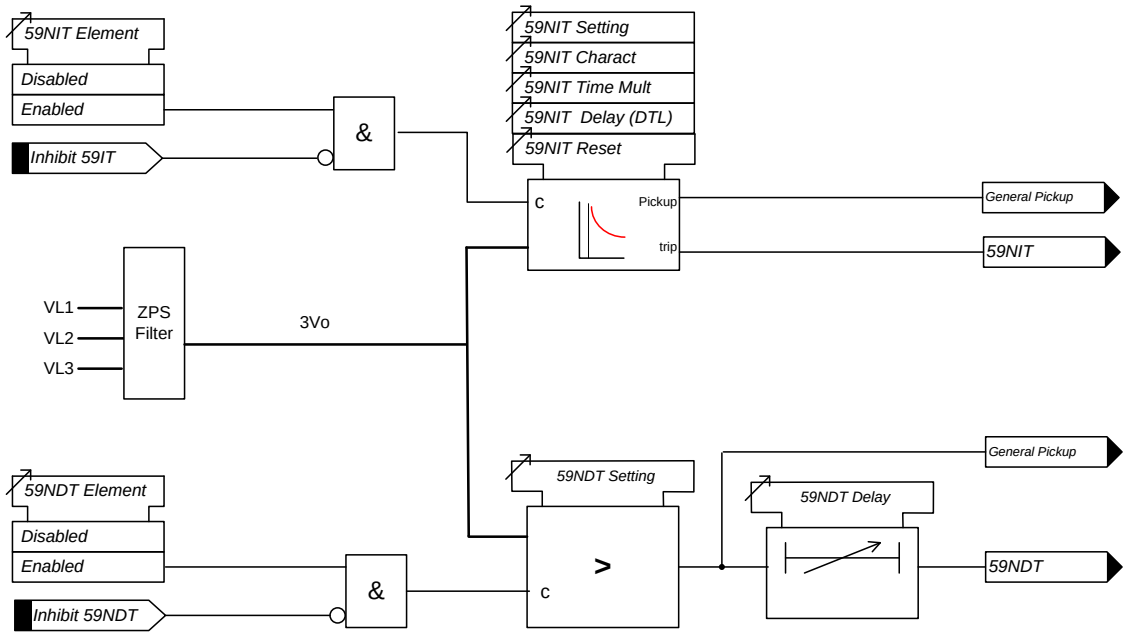

Figure 3-29 Logic Diagram: Neutral Overvoltage Element (59N)

©2019 Siemens Protection Devices Limited

3.15 Voltage Protection: Under/Over Frequency (81) – 7SR12

Four under/over frequency elements are provided in the 7SR12 relay – ***81-1, 81-2, 81-3 & 81-4.***

The relay utilises fundamental voltage measurement values for this function. The frequency calculation is based on the highest input voltage derived from the voltage selection algorithm.

The relay utilises fundamental frequency RMS voltage for this function. All under/over frequency elements have a common setting to measure phase to phase **(Ph-Ph)** or phase to neutral **(Ph-N)** voltage using the **Frequency Input mode** setting.

Frequency elements are blocked if all phase voltages fall below the ***81 U/V Guard*** setting.

The sense of the element (under-frequency or over-frequency) is set by the ***81-n Operation*** setting.

81-n Setting sets the pick-up voltage level for the element.

An output is given after elapse of the ***81-n Delay*** setting.

The ***81-n Hysteresis*** setting allows the user to vary the pick-up/drop-off ratio for the element.

Operation of the under/over frequency elements can be inhibited from:

Inhibit 81-n	A binary or virtual input, or function key.
81-n U/V Guarded	Under voltage guard element.

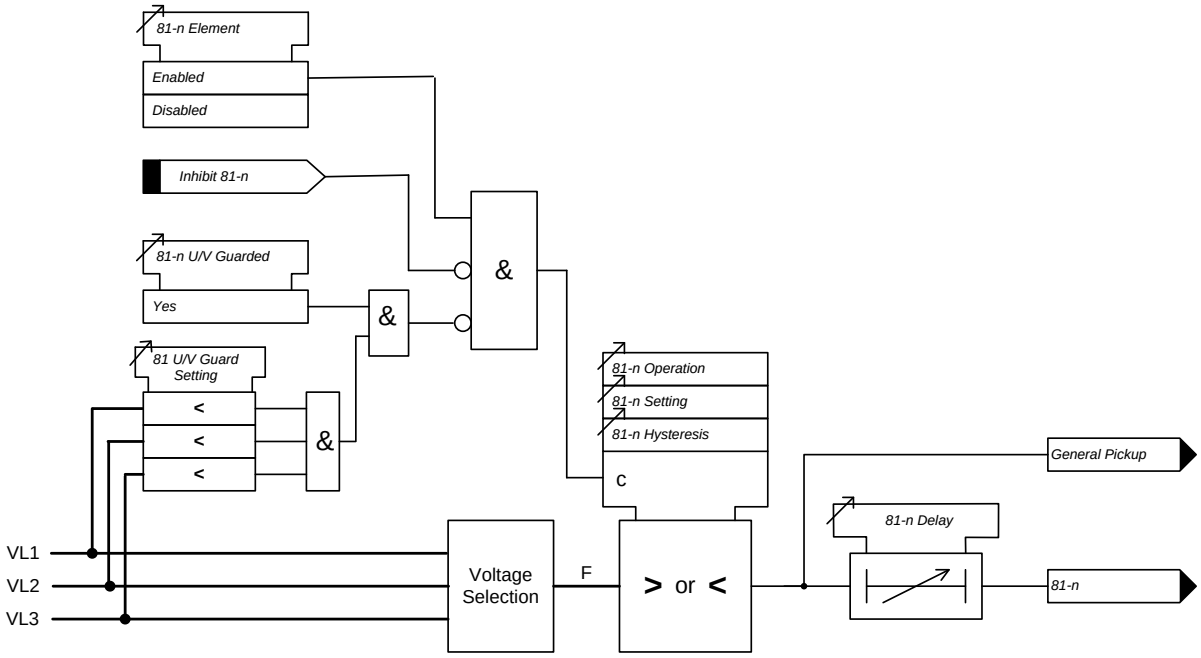

Figure 3-30 Logic Diagram: Under/Over Frequency Detector (81)

3.16 Power Protection: Power (32) – 7SR12

Two under/over power elements are provided and can measure real, reactive or apparent power. Power protection is not provided in the single pole devices.

Gn 32-n Setting sets the pick-up power level for the element.

Under-power or over-power operation can be set by the ***Gn 32-n Operation*** setting.

Gn 32-n 1ph/3ph Power allows the settings to be based on any one phase exceeding the power pick up level or on the total power of all three phases.

An output is given after elapse of the ***Gn 32-n Delay*** setting.

Operation of the under/over power elements can be inhibited when:

The measured current is below the ***Gn 32-n U/C Guard*** setting

A VT Fail condition is detected

Inhibit 32-n A binary or virtual input.

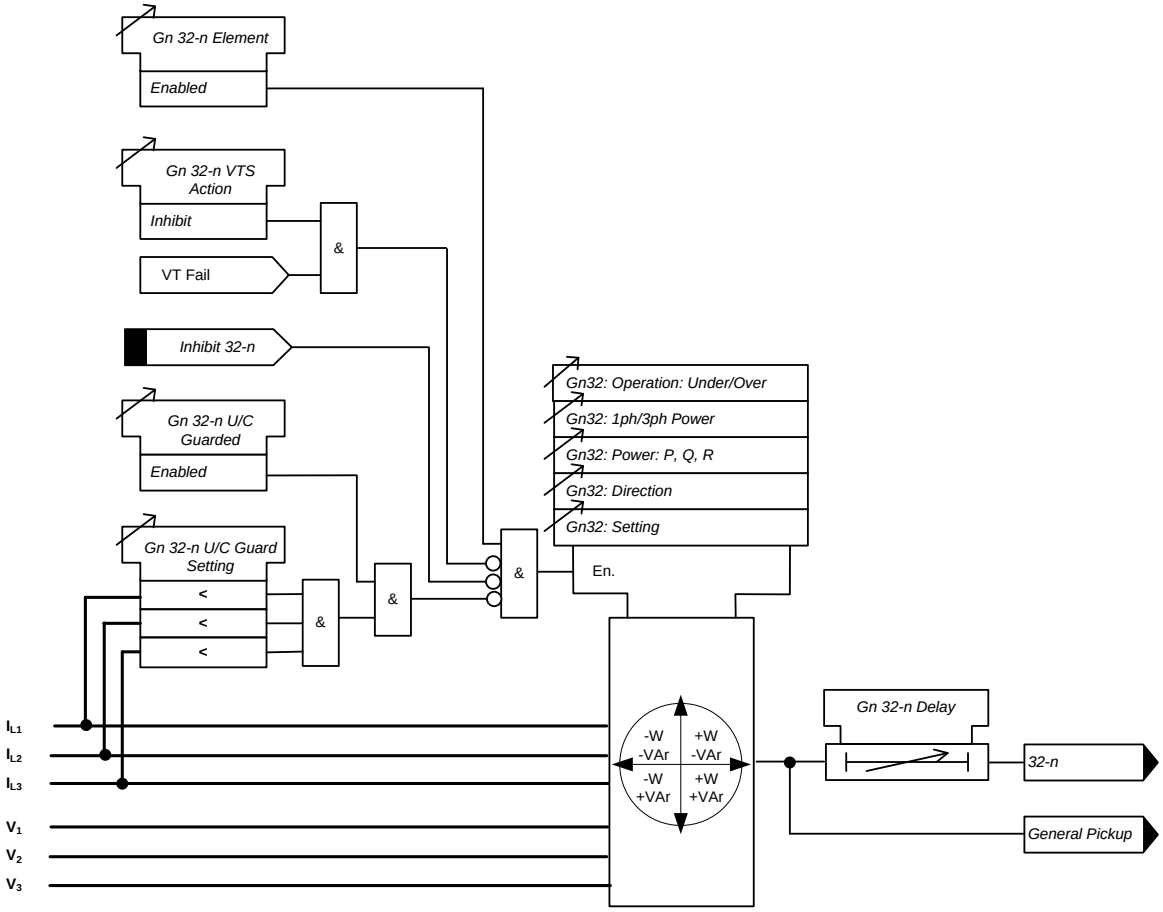

Figure 3-31 Logic Diagram: Power Protection (32)

 ©2019 Siemens Protection Devices Limited

3.17 Power Protection: Sensitive Power (32S) – 7SR12

Two under/over sensitive power elements are provided in the 4 pole 7SR12 SEF models, The elements can measure real, reactive or apparent power.

Sensitive power functionality utilises the I_{SEF} current input i.e. a single CT input is used. Balanced load conditions are assumed. Any one of the three phase currents can be wired to the I_G current input – the POWER PROT'N > SENSITIVE POWER > ***Gn 32S Phase Selection*** setting is used to ensure that the correct power is measured.

Gn 32S-n Setting sets the pick-up power level for the element.

Under-power or over-power operation can be set by the ***Gn 32S-n Operation*** setting.

An output is given after elapse of the ***Gn 32S-n Delay*** setting.

Operation of the under/over power elements can be inhibited when:

The measured current is below the ***Gn 32S U/C Guard*** setting

A VT Fail condition is detected

Inhibit 32S-n A binary or virtual input.

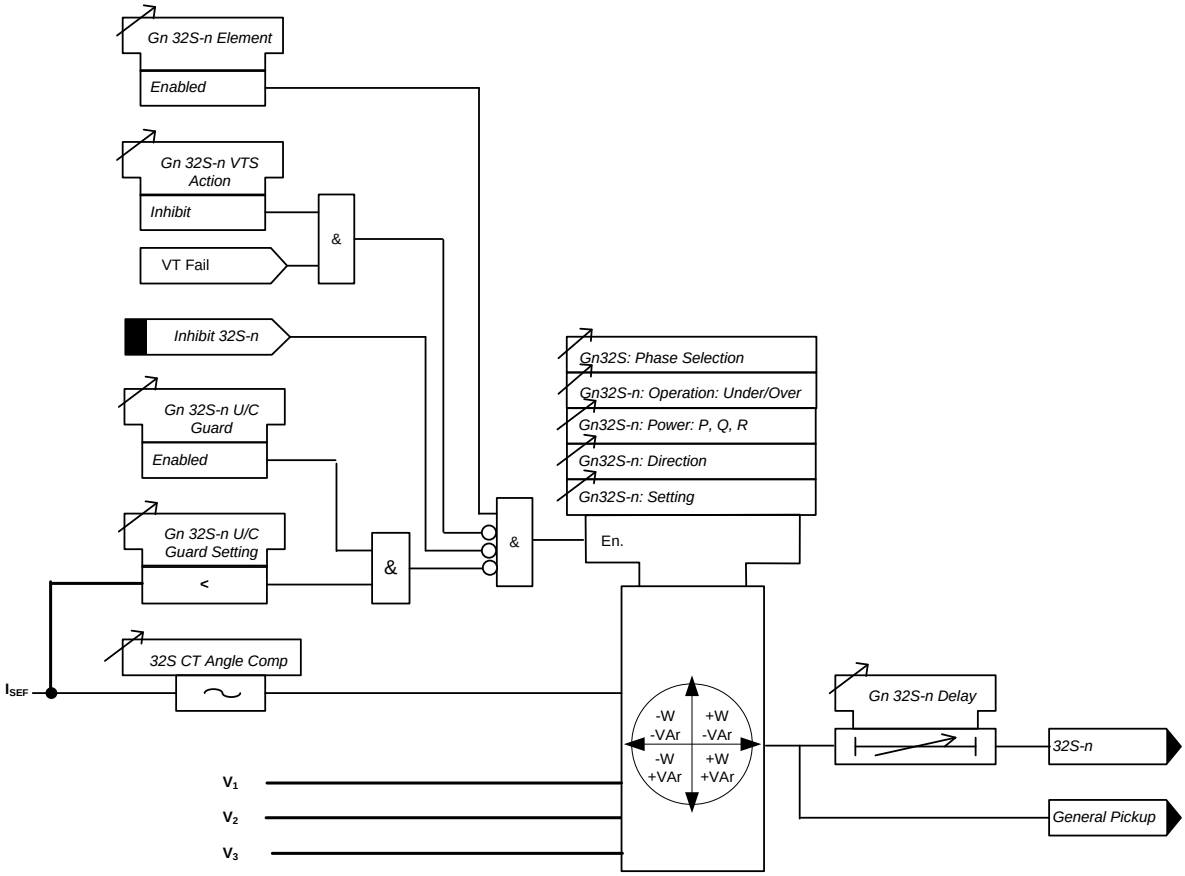

Figure 3-32 Logic Diagram: Sensitive Power Protection (32S)

3.18 Power Protection: Power Factor (55) – 7SR12

Two power factor elements are provided in the 4 pole devices. Power protection is not provided in the single pole devices.

Gn 55-n Setting sets the pick-up power factor of the element.

Under-power factor or over-power factor operation can be set by the ***Gn 55-n Operation*** setting.

Gn 55-n 1ph/3ph Power allows the settings to be based on any one phase power factor or the average power factor of all three phases.

An output is given after elapse of the ***Gn 55-n Delay*** setting.

Operation of the power factor elements can be inhibited when:

The measured current is below the ***Gn 55 U/C Guard*** setting

A VT Fail condition is detected

Inhibit 55-n A binary or virtual input.

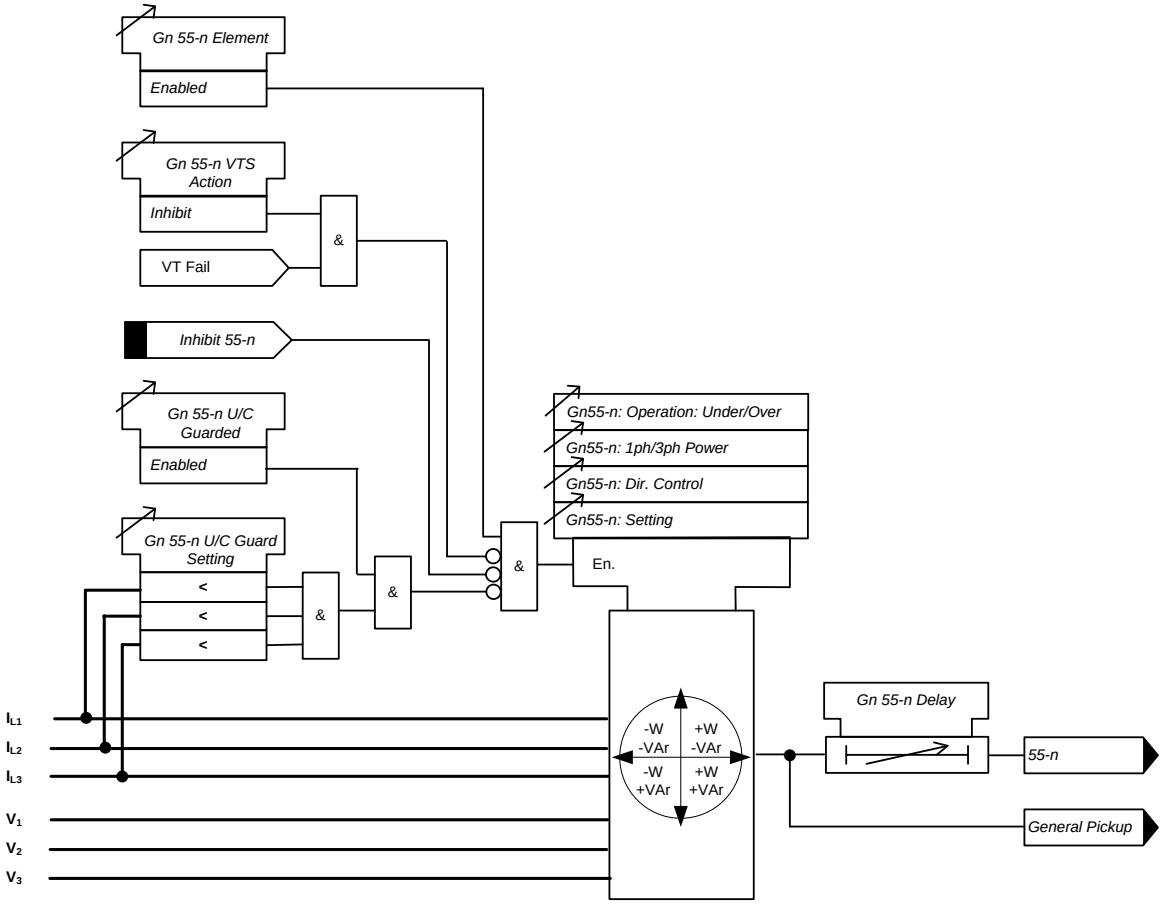

Figure 3-33 Logic Diagram: Power Factor Protection (55)

 ©2019 Siemens Protection Devices Limited

Section 4: Control & Logic Functions

4.1 Auto-Reclose (79) Optional Function

4.1.1 OVERVIEW

A high proportion of faults on an Overhead Line (OHL) network are transient. These faults can be cleared and the network restored quickly by using Instantaneous (Fast) Protection trips followed by an automated sequence of Circuit Breaker reclosures after the line has been dead for a short time, this 'deadtime' allows the fault current arc to fully extinguish.

Typically this auto reclose (AR) sequence of Instantaneous Trip(s) and Reclose Delays (Dead times) followed by Delayed Trip(s) provide the automatic optimum method of clearing all types of fault i.e. both Transient and Permanent, as quickly as possible and achieving the desired outcome of keeping as much of the Network in-service as possible.

The AR function, therefore, has to:

Control the type of Protection trip applied at each stage (shot) of a sequence

Control the Auto Reclose of the Circuit Breaker to provide the necessary network Dead times, to allow time for Arc extinction

Co-ordinate its Protection and Auto Reclose sequence with other fault clearing devices.

A typical sequence would be – 2 Instantaneous/Highset+1Delayed/HighSet Trips with 1 sec & 10 sec dead times.

The Autoreclose feature may be switched in and out of service by a number of methods, these are:

Changing Relay Setting ***79 Autoreclose*** **ENABLE/DISABLE** (AUTORECLOSE CONFIG menu)

Enable/Disable in the CONTROL MODE accessed from the fascia

Via the data communications channel(s),

From a ***79 OUT*** binary input. Note the ***79 OUT*** binary input has priority over the ***79 IN*** binary input - if both are raised the auto-reclose will be Out of Service.

Knowledge of the CB position status is integral to the auto-reclose functionality. CB auxiliary switches must be connected to ***CB Closed*** and ***CB Open*** binary inputs. A circuit breaker's service status is determined by its position i.e. from the binary inputs programmed ***CB Open*** and ***CB Closed***. The circuit breaker is defined as being in service when it is closed. The circuit memory functionality prevents autoreclosing when the line is de-energised, or normally open.

AR is started by a valid protection operation that is internally mapped to trip in the 79 Autoreclose protection menu or an external trip received via a binary input ***79 Ext Trip***, while the associated circuit breaker is in service.

The transition from AR started to deadtime initiation takes place when the CB has opened and the protection pickups have reset and the trip relay has reset. If any of these do not occur within the ***79 Sequence Fail Timer*** setting the relay will Lockout. This prevents the AR being primed indefinitely. ***79 Sequence Fail Timer*** can be switched to **0** (= OFF).

Once an AR sequence has been initiated, up to 4 reclose operations can be attempted before the AR is locked-out. The relay is programmed to initiate a number of AR attempts, the number is determined by ***79 Num Shots***. Each reclosure (shot) is preceded by a time delay - ***79 Elem Deadtime n*** - giving transient faults time to clear. Separate dead-time settings are provided for each of the 4 recloses and for each of the four fault types – P/F, E/F, SEF and External.

Once a CB has reclosed and remained closed for a specified time period (the Reclaim time), the AR sequence is re-initialised and a Successful Close output issued. A single, common Reclaim time is used (***Reclaim Timer***). When an auto-reclose sequence does not result in a successful reclosure the relay goes to the lockout state.

Indications

The Instruments Menu includes the following meters relevant to the status of the Auto-Reclose and Manual Closing of the circuit breaker: -

Status of the AR sequence , AR Shot Count, CB Open Countdown Timer and CB Close Countdown Timer

Inputs

External inputs to the AR functionality are wired to binary inputs. Functions which can be mapped to these binary inputs include: -

79 In (edge triggered)	79 Block Reclose	79 Line Check
79 Out (level detected)	Block Close CB	79 Reset Lockout
CB Closed	Close CB	79 Lockout
CB Open	Open CB	Hot Line In
79 Ext Trip	79 Trip & Reclose	Hot Line Out
79 Ext Pickup	79 Trip & Lockout	

Outputs

Outputs are fully programmable to either binary outputs or LEDs. Programmable outputs include: -

79 Out Of Service	79 Successful AR	79 Block External
79 In Service	79 Lockout	Successful Manual Close
79 In Progress	79 Close Onto Fault	79 Last Trip Lockout
79 AR Close CB	79 Trip & Reclose	CB fail to close
Manual Close CB	79 Trip & Lockout	

4.1.2 AUTO RECLOSE SEQUENCES

The CONTROL & LOGIC>AUTO RECLOSE PROT'N and CONTROL & LOGIC>AUTORECLOSE CONFIG' menus, allow the user to set independent Protection and Auto Reclose sequences for each type of fault i.e. Phase Fault (P/F), Derived/Measured Earth Fault (E/F), Sensitive Earth Fault (SEF) or External Protections (EXTERN). Each Auto Reclose sequence can be user set to up to four-shots i.e. five trips + four reclose sequence, with independently configurable type of Protection Trip. Overcurrent and earth fault elements can be assigned to any combination of Fast (**Inst**), **Delayed** or highset **(HS)** trips**.** ***Deadtime*** Delay time settings are independent for each AR shot. The user has programming options for Auto Reclose Sequences up to the maximum shot count i.e.:-

Inst or **Delayed** Trip 1 + (***DeadTime 1*: 0.1s-14400s**)

\+ **Inst** or **Delayed** Trip 2 + (***DeadTime 2:* 0.1s-14400s**)

\+ **Inst** or **Delayed** Trip 3 + (***DeadTime 3*: 0.1s-14400s**)

\+ **Inst** or **Delayed** Trip 4 + (***DeadTime 4*: 0.1s-14400s**)

\+ **Inst** or **Delayed** Trip 5 – Lockout.

The AR function recognizes developing faults and, as the shot count advances, automatically applies the correct type of Protection and associated Dead time for that fault-type at that point in the sequence.

A typical sequence would consist of two **Inst** trips followed by at least one **Delayed** trip. This sequence enables transient faults to be cleared quickly by the **Inst** trip(s) and permanent fault to be cleared by the combined Delayed trip. The delayed trip must be 'graded' with other Recloser/CB's to ensure system discrimination is maintained, ie.. that as much of the system as possible is live after the fault is cleared.

A ***HS trips to lockout*** setting is provided such that when the number of operations of elements assigned as HS trips reach the setting the relay will go to lockout.

The number of Shots (Closes) is user programmable, note: - only one Shot Counter is used to advance the sequence, the Controller selects the next Protection characteristic/Dead time according to the type of the last Trip in the sequence e.g. PF, EF, SEF or EXTERNAL.

Reclose Dead Time

User programmable dead times are available for each protection trip operation.

 ©2019 Siemens Protection Devices Limited

The dead time is initiated when the trip output contact reset, the pickup is reset and the CB is open.

The CB close output relay is energised after the dead time has elapsed.

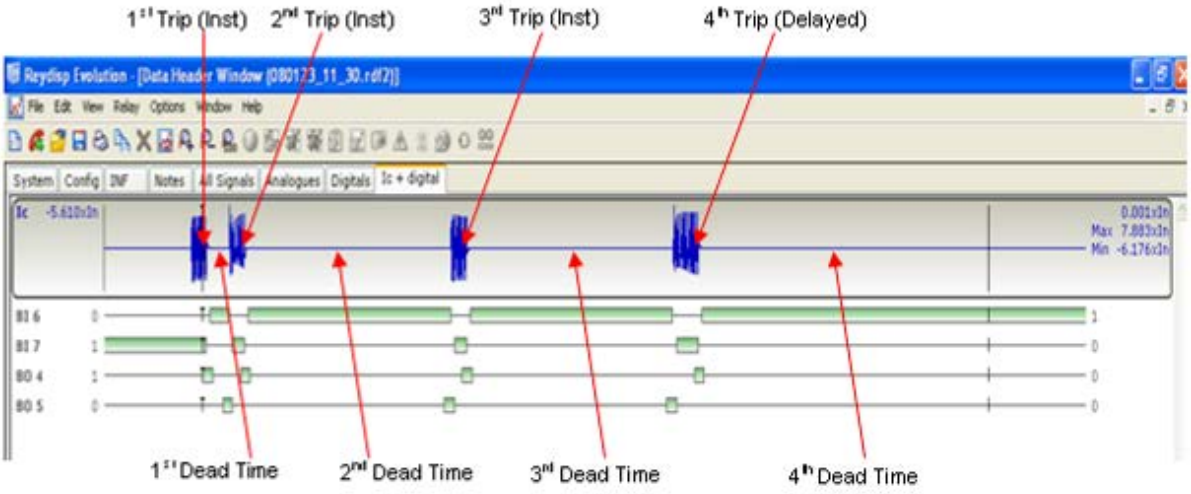

Figure 4-1 Typical AR Sequence with 3 Inst and 1 Delayed trip

4.1.3 AUTORECLOSE PROT'N MENU

This menu presents the Overcurrent Protection elements available for each type of Fault i.e. P/F, E/F (N/G) or SEF and allows the user to select those that are to be applied as **Inst trips**; those that are to be applied as **Delayed Trips**; and those that are to be applied as **HS Trips** (HighSet), as required by the selected sequence. There is no corresponding setting for External as the External protection type is not normally controlled by the Auto Reclose Relay. The resultant configuration enables the Auto Reclose function to correctly apply the required Protection for each shot in a sequence.

4.1.4 AUTORECLOSE CONFIG MENU

This menu allows the following settings to be made:-

79 Autoreclose	**Enabled** turns ON all AutoReclose Functions.
79 Num Shots	Sets the allowed number of AutoReclose attempts in a sequence.
79 Retry Enable	**Enabled** configures the relay to perform further attempts to automatically Close the Circuit Breaker where the CB has initially failed to close in response to a Close command. If the first attempt fails the relay will wait for the ***79 Retry Interval*** to expire then attempt to Close the CB again.
79 Retry Attempts	Sets the maximum number of retry attempts.
79 Retry Interval	Sets the time delay between retry attempts.
79 Reclose Blocked Delay	If the CB is not ready to receive a Close command or if system conditions are such that the CB should not be closed immediately e.g. a close-spring is not charged, then a Binary input mapped to **Reclose Block** can be raised and the Close pulse will not be issued but will be held-back. The ***79 Reclose Blocked Delay*** sets the time **Reclose Block** is allowed to be raised, if this time delay expires the Relay will go to Lockout. If Reclose Block is cleared, before this time expires, then the CB Close pulse will be issued at that point in time. Dead Time + Reclose Blocked Delay = Lockout.
79 Sequence Fail Timer	Sets the time that AutoReclose start can be primed. Where this time expires before all the DAR start signals are not received i.e. the CB has opened, protection pickups have reset and the trip relay has reset, the Relay goes to Lockout.

79 Sequence Co-Ord When set to **Enabled** the Relay will co-ordinate its sequence and shot count such that it automatically keeps in step with downstream devices as they advance through their sequence. The Relay detects that a pickup has operated but has dropped-off before its associated time delay has expired, it then increments its Shot count and advances to the next stage of the auto-reclose sequence without issuing a trip, this is repeated as long as the fault is being cleared by the downstream device such that the Relay moves through the sequence bypassing the INST Trips and moving on to the Delayed Trip to maintain Grading margins.

Notes on the 'Lockout' State

The Lockout state can be reached for a number of reasons. Lockout will occur for the following: -

- At the end of the ***79 Sequence Fail Timer***.
- At the end of the ***Reclaim timer*** if the CB is in the open position.
- A protection operates during the final Reclaim time.
- If a Close Pulse is given and the CB fails to close.
- The ***79 Lockout*** binary input is active.
- At the end of the ***79 Reclose Blocked Delay*** due to presence of a persistent Block signal.
- When the ***79 Elem HS Trips to Lockout*** count is reached.
- When the ***79 Elem Delayed Trips to Lockout*** count is reached.

An alarm output is provided to indicate ***last trip to lockout***.

Once lockout has occurred, an alarm (***79 Lockout***) is issued and all further Close commands, except manual close, are inhibited.

If the Lockout command is received while a Manual Close operation is in progress, the feature is immediately locked-out.

Once the Lockout condition has been reached, it will be maintained until reset. The following will reset lockout: -

- By a Manual Close command, from fascia, comms or ***Close CB*** binary input.
- By a ***79 Reset Lockout*** binary input, provided there is no signal present that will cause Lockout.
- At the end of the ***79 Minimum LO Delay*** time setting if ***79 Reset LO by Timer*** is selected to **ENABLED**, provided there is no signal present which will cause Lockout.
- Where Lockout was entered by an A/R Out signal during an Autoreclose sequence then a ***79 In*** signal must be received before Lockout can reset.
- By the ***CB Closed*** binary input, provided there is no signal present which will cause Lockout.

The Lockout condition has a delayed drop-off of 2s. The Lockout condition can not be reset if there is an active lockout input.

 ©2019 Siemens Protection Devices Limited

4.1.5 P/F SHOTS SUB-MENU

This menu allows the Phase fault trip/reclose sequence to be parameterized:-

79 P/F Prot'n Trip1 The first protection Trip in the P/F sequence can be set to either **Inst** or **Delayed.**

79 P/F Deadtime 1 Sets the first Reclose Delay (Dead time) in the P/F sequence.

79 P/F Prot'n Trip2 The second protection Trip in the P/F sequence can be set to either **Inst** or **Delayed.**

79 P/F Deadtime 2 Sets the second Reclose Delay (Dead time) in the P/F sequence.

79 P/F Prot'n Trip3 The third protection Trip in the P/F sequence can be set to either **Inst** or **Delayed.**

79 P/F Deadtime 3 Sets the third Reclose Delay (Dead time) in the P/F sequence.

79 P/F Prot'n Trip 4 The fourth protection Trip in the P/F sequence can be set to either **Inst** or **Delayed.**

79 P/F Deadtime 4 Sets the fourth Reclose Delay (Dead time) in the P/F sequence.

79 P/F Prot'n Trip5 The fifth and last protection Trip in the P/F sequence can be set to either **Inst** or **Delayed.**

79 P/F HighSet Trips to Lockout Sets the number of allowed HighSet trips. The relay will go to Lockout on the last HighSet Trip. This function can be used to limit the duration and number of high current trips that the Circuit Breaker is required to perform, if the fault is permanent and close to the Circuit Breaker then there is no point in forcing a number of Delayed Trips before the Relay goes to Lockout – that sequence will be truncated.

79 P/F Delayed Trips to Lockout Sets the number of allowed Delayed trips, Relay will go to Lockout on the last Delayed Trip. This function limits the number of Delayed trips that the Relay can perform when the Instantaneous protection Elements are externally inhibited for system operating reasons - sequences are truncated.

4.1.6 E/F SHOTS SUB-MENU

This menu allows the Earth Fault trip/reclose sequence to be parameterized:-

As above but E/F settings.

4.1.7 SEF SHOTS SUB-MENU

This menu allows the Sensitive Earth trip/reclose sequence to be parameterized:-

As above but SEF Settings, Note: - SEF does not have HighSets

4.1.8 EXTERN SHOTS SUB-MENU

This menu allows the External Protection auto-reclose sequence to be parameterized:-

79 P/F Prot'n Trip1 **Not Blocked/Blocked** - Blocked raises an output which can be mapped to a Binary output to Block an External Protection's Trip Output.

79 P/F Deadtime 1 Sets the first Reclose Delay (Deadtime) for the External sequence.

79 P/F Prot'n Trip2 **Not Blocked/Blocked** - Blocked raises an output which can be mapped to a Binary Output to Block an External Protection's second Trip output.

79 P/F Deadtime 2 Sets the second Reclose Delay (Deadtime) in the External sequence.

79 P/F Prot'n Trip3 **Not Blocked/Blocked -** Blocked raises an output which can be mapped to a Binary output to Block an External Protection's third Trip Output.

79 P/F Deadtime 3 Sets the third Reclose Delay (Deadtime) in the External sequence.

79 P/F Prot'n Trip4 **Not Blocked/Blocked** - Blocked raises an output which can be mapped to a Binary output to Block an External Protection's fourth Trip Output.

79 P/F Deadtime 4 Sets the fourth Reclose Delay (Deadtime) in the External sequence.

79 P/F Prot'n Trip5 **Not Blocked/Blocked** - Blocked raises an output which can be mapped to a Binary output to Block an External Protection's fifth Trip Output.

79 P/F Extern Trips to Lockout - Sets the number of allowed External protection' trips, Relay will go to Lockout on the last Trip.

These settings allow the user to set-up a separate AutoReclose sequence for external protection(s) having a different sequence to P/F, E/F or SEF protections. The ***' Blocked '*** setting allows the Autoreclose sequence to raise an output at any point in the sequence to Block further Trips by the External Protection thus allowing the Overcurrent P/F or Earth Fault or SEF elements to apply Overcurrent Grading to clear the fault.

Other Protection Elements in the Relay can also be the cause of trips and it may be that AutoReclose is required; the External AutoReclose sequence can be applied for this purpose. By setting-up internal Quick Logic equation(s) the user can define and set what should occur when any one of these other elements operates.

 ©2019 Siemens Protection Devices Limited

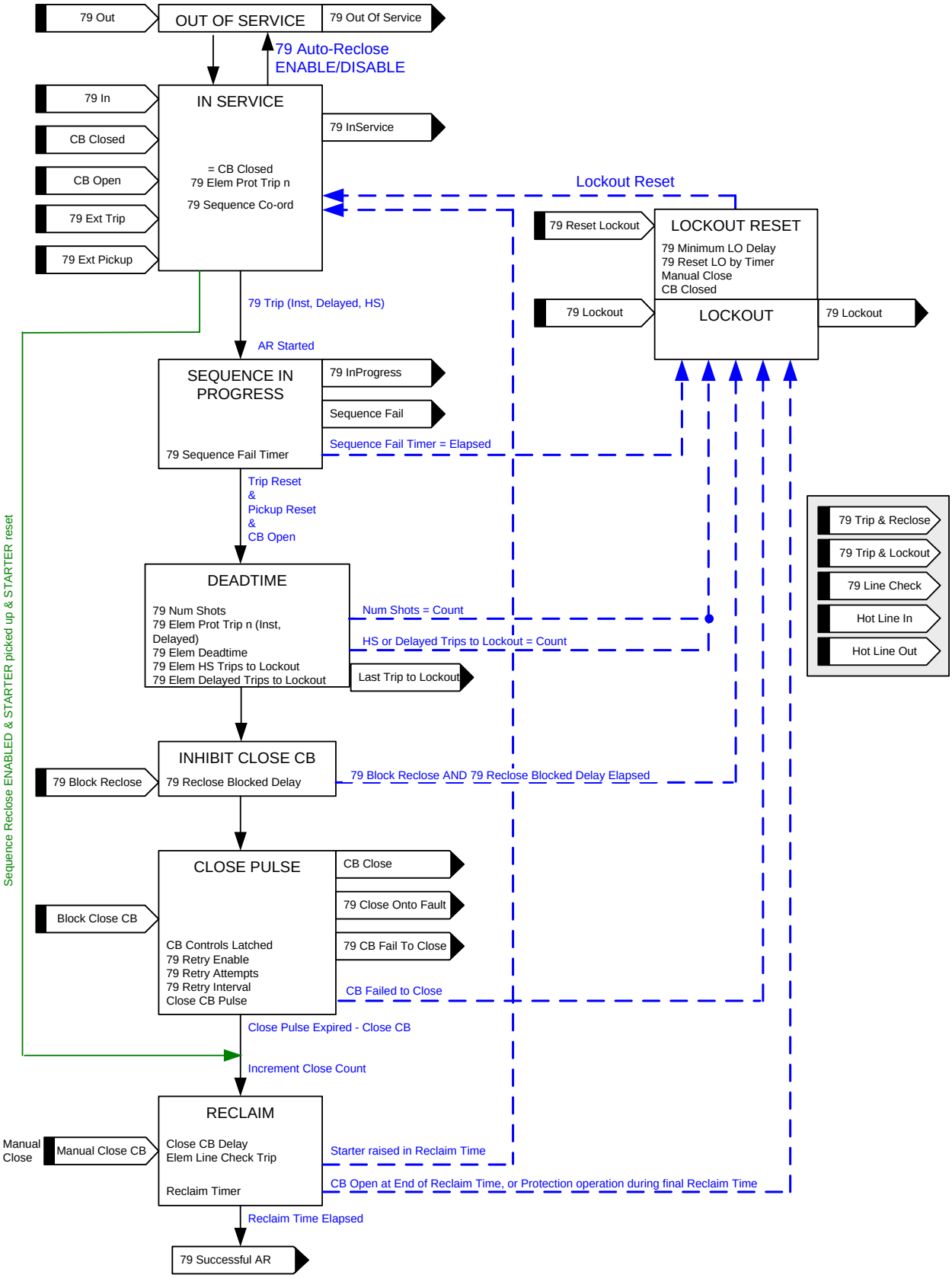

Figure 4-2 Basic Auto-Reclose Sequence Diagram

4.2 Manual CB Control

CB Control is not supported by the 7SR1102-1*A12-*AA0 models with 'A' variant software.

A Manual Close Command can be initiated in one of three ways: via a ***Close CB*** binary input, via the data communication Channel(s) or from the relay CONTROL MODE menu. It causes an instantaneous operation via ***Manual Close CB*** binary output, over-riding any DAR sequence in progress.

Repeated Manual Closes are avoided by checking for Positive edge triggers. Even if the Manual Close input is constantly energised the relay will only attempt one close.

A Manual Close will initiate Line Check if ***Line Check Trip*** is enabled. If a fault appears on the line during the Close Pulse or during the Reclaim Time with Line Check enabled, the relay will initiate a Trip and Lockout. This prevents a CB being repeatedly closed onto a faulted line. Where ***Line Check Trip*** = **DELAYED** then instantaneous protection is inhibited until the reclaim time has elapsed.

Manual Close resets Lockout, if the conditions that caused Lockout have reset, i.e. there is no trip or Lockout input present.

Manual Close cannot proceed if there is a Lockout input present.

With the Autoreclose function set to Disabled the Manual Close control is still active.

Close CB Delay

The Close CB Delay is applicable to manual CB close commands received through a ***Close CB*** binary input or via the Control Menu. Operation of the ***Manual Close CB*** binary output is delayed by the ***Close CB Delay*** setting. The status of this delay is displayed on the relay fascia as it decrements towards zero. Only when the delay reaches zero will the close command be issued and related functionality initiated.

Blocked Close Delay

The close command may be delayed by a ***Block Close CB*** signal applied to a binary input. This causes the feature to pause before it issues the CB close command and can be used, for example, to delay CB closure until the CB energy has reached an acceptable level. If the Block signal has not been removed before the end of the defined time, ***Blocked Close Delay***, the relay will go to the lockout state. The output ***Close CB Blocked*** indicates this condition.

Open CB Delay

The Open CB Delay setting is applicable to CB trip commands received through an ***Open CB*** binary input or via the Control Menu. Operation of the ***Open CB*** binary output is delayed by the ***Open CB Delay*** setting. The status of this delay is displayed on the relay fascia as it decrements towards zero. Only when the delay reaches zero will the trip command be issued and related functionality initiated.

It should be noted that a CB trip initiated by an *Open CB* command is fundamentally different from a CB trip initiated by a protection function. A CB trip caused by a *CB Open* command will not initiate functionality such as circuit-breaker fail, fault data storage, I^2t measurement and operation counter.

CB Controls Latched

CB controls for manually closing and tripping can be latched for extra security.

With Reset operation, the control resets when the binary input drops off. This can lead to multiple control restarts due to bounce on the binary input signal.

With Latch operation, the close or trip sequence always continues to completion (or sequence failure) and bounce on the binary input is ignored.

Reset operation can be useful, however, as it allows a close or trip sequence to be aborted by dropping off the binary input signal.

 ©2019 Siemens Protection Devices Limited

4.3 Circuit Breaker

This menu includes relay settings applicable to both manual close (MC) and auto-reclose (AR) functionality.

'CB Failed To Open' and 'CB Failed to Close' features are used to confirm that a CB has not responded correctly to each Trip and Close Command. If a CB fails to operate, the DAR feature will go to lockout.

Close CB Pulse

The duration of the ***CB Close Pulse*** is settable to allow a range of CBs to be used. . The ***Close CB Pulse*** must be long enough for the CB to physically close.

The Close pulse will be terminated if any protection pick-up operates or a trip occurs. This is to prevent Close and Trip Command pulses existing simultaneously. A ***79 Close Onto Fault*** output is given if a pick-up or trip operates during the Close Pulse. This can be independently wired to Lockout.

The output ***CB Fail to Close*** is issued if the CB is not closed at the end of the close pulse, ***Close CB Pulse***.

Reclaim Timer

The 'Reclaim time' will start each time a Close Pulse has timed out and the CB has closed.

Where a protection pickup is raised during the reclaim time the relay advances to the next part of the reclose sequence.

The relay goes to the Lockout state if the CB is open at the end of the reclaim time or a protection operates during the final reclaim time.

CB Control Trip Time

When this is set to **Enabled**, the relay will measure the CB trip time following operation of either a CB control open output or a CB Trip output. The trip time is displayed by the MAINTENANCE METERS > CB Trip Time meter.

When this is set to **Disabled**, the relay will measure the trip time following operation of a CB Trip output only. Operation of a CB control open output will then not cause the trip time to be measured.

Open CB Pulse

The duration of the CB open pulse is user settable to allow a range of CBs to be used.

The CB open pulse must be long enough for the CB to physically open.

CB Travel Alarm

The ***CB Open*** and ***CB Closed*** binary inputs are continually monitored to track the CB Status.

The CB should only ever be in 3 states:

CB Status	***CB Open*** **binary input**	***CB Closed*** **binary input**
CB is Open	1	0
CB is Closed	0	1
CB is Travelling between the above 2 states	0	0

The Relay goes to Lockout and the ***CB Alarm*** output is given where the Travelling condition exists for longer than the ***CB Travel Alarm*** setting.

An instantaneous ***CB Alarm*** is given for a 1/1 state – i.e. where the CB indicates it is both Open and Closed at the same time.

CB DBI Delay

The ***CB Open*** and ***CB Closed*** binary inputs are continually monitored to track the CB Status.

A Don't Believe it (DBI) condition exists for a 1/1 state– i.e. where the CB indicates it is both Open and Closed at the same time

The Relay goes to Lockout and the ***CB Alarm*** output is given where the DBI condition exists for longer than the ***CB DBI Delay*** setting.

Hot Line In/Out

When 'Hot Line' is enabled all auto reclose sequences are inhibited and any fault causes an instantaneous trip to lockout.

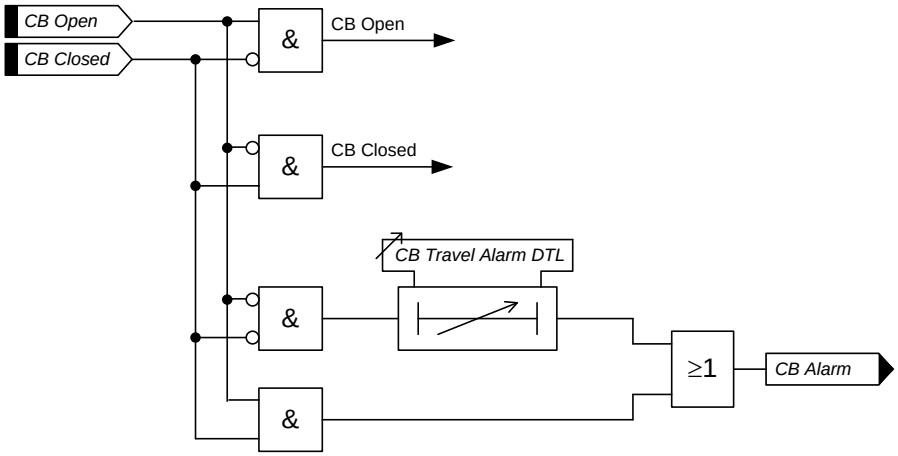

Figure 4-3 Logic Diagram: Circuit Breaker Status

79 Minimum LO Delay (Only in Auto-reclose models)

Sets the time that the Relay's Lockout condition is maintained. After the last allowed Trip operation in a specific sequence the Circuit Breaker will be left locked-out in the open position and can only be closed by manual or remote SCADA operation. The ***79 Minimum Lockout Delay*** timer can be set to delay a too-fast manual close after lockout, this prevents an operator from manually closing onto the same fault too quickly and thus performing multiple sequences and possibly burning-out Plant.

79 Reset LO by Timer(Only in Auto-reclose models)

Set to **Enabled** this ensures that the Lockout condition is reset when the timer expires, Lockout indication will be cleared; otherwise, set to Disabled, the Lockout condition will be maintained until the CB is Closed by a Close command.

Trip Time Alarm

The CB Trip Time meter displays the measured time between the trip being issued and the CB auxiliary contacts changing state. If this measured time exceeds the ***Trip Time Alarm*** time, a Trip Time Alarm output is issued.

Trip Time Adjust

This allows for the internal delays caused by the relay – especially the delay before a binary input operates – to be subtracted from the measured CB trip time. This gives a more accurate measurement of the time it took for the CB to actually trip.

 ©2019 Siemens Protection Devices Limited

4.4 Quick Logic

The 'Quick Logic' feature allows the user to input up to 4 logic equations (E1 to E4) in text format. Equations can be entered using Reydisp or at the relay fascia.

Each logic equation is built up from text representing control characters. Each can be up to 20 characters long. Allowable characters are:

0, 1, 2, 3, 4, 5, 6, 7, 8, 9	Digit
( )	Parenthesis
!	'NOT' Function
.	'AND' Function
^	'EXCLUSIVE OR' Function
+	'OR' Function
E*n*	Equation (number)
I*n*	Binary Input (number)
	'1' = Input energised, '0' = Input de-energised
L*n*	LED (number)
	'1' = LED energised, '0' = LED de-energised
O*n*	Binary output (number)
	'1' = Output energised, '0' = Output de-energised
V*n*	Virtual Input/Output (number)
	'1' = Virtual I/O energised, '0' = Virtual I/O de-energised

<u>Example Showing Use of Nomenclature</u>

***E1*= ((I1^V1).!O2)+L1**

Equation 1 = ((Binary Input 1 XOR Virtual I/O 1) AND NOT Binary Output 2) OR LED 1

When the equation is satisfied (=1) it is routed through a pick-up timer (***En Pickup Delay***), a drop-off timer (***En Dropoff Delay***), and a counter which instantaneously picks up and increments towards its target (***En Counter Target***).

The counter will either maintain its count value ***En Counter Reset Mode*** = **OFF**, or reset after a time delay:

> ***En Counter Reset Mode*** = **Single Shot**: The ***En Counter Reset Time*** is started only when the counter is first incremented (i.e. counter value = 1) and not for subsequent counter operations. Where ***En Counter Reset Time*** elapses and the count value has not reached its target the count value is reset to zero.
>
> ***En Counter Reset Mode*** = **Multi Shot**: The ***En Counter Reset Time*** is started each time the counter is incremented. Where ***En Counter Reset Time*** elapses without further count increments the count value is reset to zero.

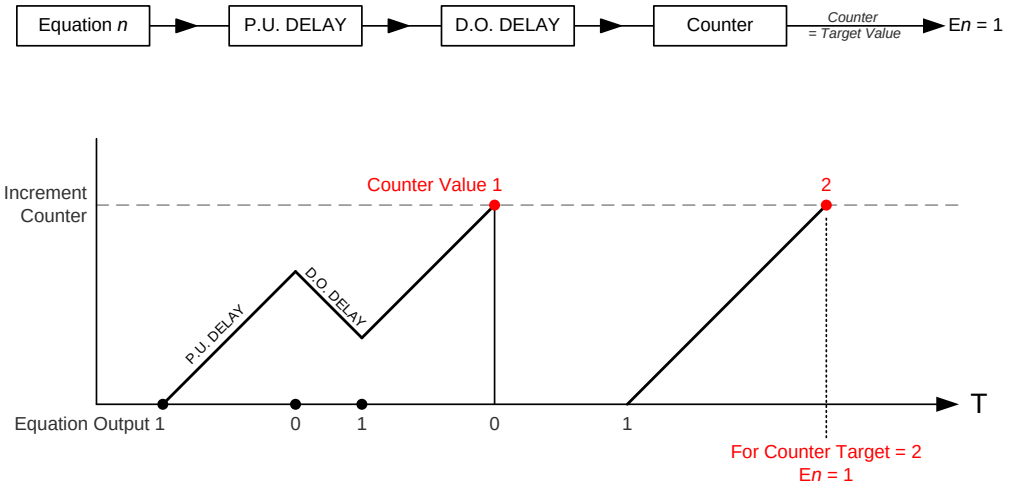

Figure 4-4 Sequence Diagram: Quick Logic PU/DO Timers (Counter Reset Mode Off)

When the count value = ***En Counter Target*** the output of the counter (En) = 1 and this value is held until the initiating conditions are removed when En is instantaneously reset.

The output of E*n* is assigned in the OUTPUT CONFIG>OUTPUT MATRIX menu where it can be programmed to any binary output (O), LED (L) or Virtual Input/Output (V) combination.

Protection functions can be used in Quick Logic by mapping them to a Virtual Input / Output.

Refer to Chapter 7 – Applications Guide for examples of Logic schemes.

 ©2019 Siemens Protection Devices Limited

Section 5: Supervision Functions

5.1 Circuit Breaker Failure (50BF)

The circuit breaker fail function has two time delayed outputs that can be used for combinations of re-tripping or back-tripping. CB Fail outputs are given after elapse of the ***50BF-1 Delay*** or ***50BF-2 Delay*** settings. The two timers run concurrently.

The circuit breaker fail protection time delays are initiated either from:

An output **Trip Contact** of the relay (MENU: OUTPUT CONFIG\TRIP CONFIG\Trip Contacts), or

A binary or virtual input assigned to **50BF Ext Trig** (MENU: INPUT CONFIG\INPUT MATRIX\50BF Ext Trig).

A binary or virtual input assigned to **50BF Mech Trip** (MENU: INPUT CONFIG\INPUT MATRIX\ 50BF Mech Trip).

CB Fail outputs will be issued providing any of the 3 phase currents are above the ***50BF Setting*** or the current in the fourth CT is above ***50BF-I4*** for longer than the ***50BF-n Delay*** setting, or for a mechanical protection trip the circuit breaker is still closed when the ***50BF-n Delay*** setting has expired – indicating that the fault has not been cleared.

Both ***50BF-1*** and ***50BF-2*** can be mapped to any output contact or LED.

An output is also given to indicate the faulted phase, ***50BF PhA*** , ***50BF PhB, 50BF PhC and 50BF EF***

If the ***CB Faulty*** input (MENU: INPUT CONFIG\INPUT MATRIX\CB Faulty) is energised when a CB trip is given the time delays ***50BF-n Delay*** will be by-passed and the output given immediately.

Operation of the CB Fail elements can be inhibited from:

Inhibit 50BF A binary or virtual input.

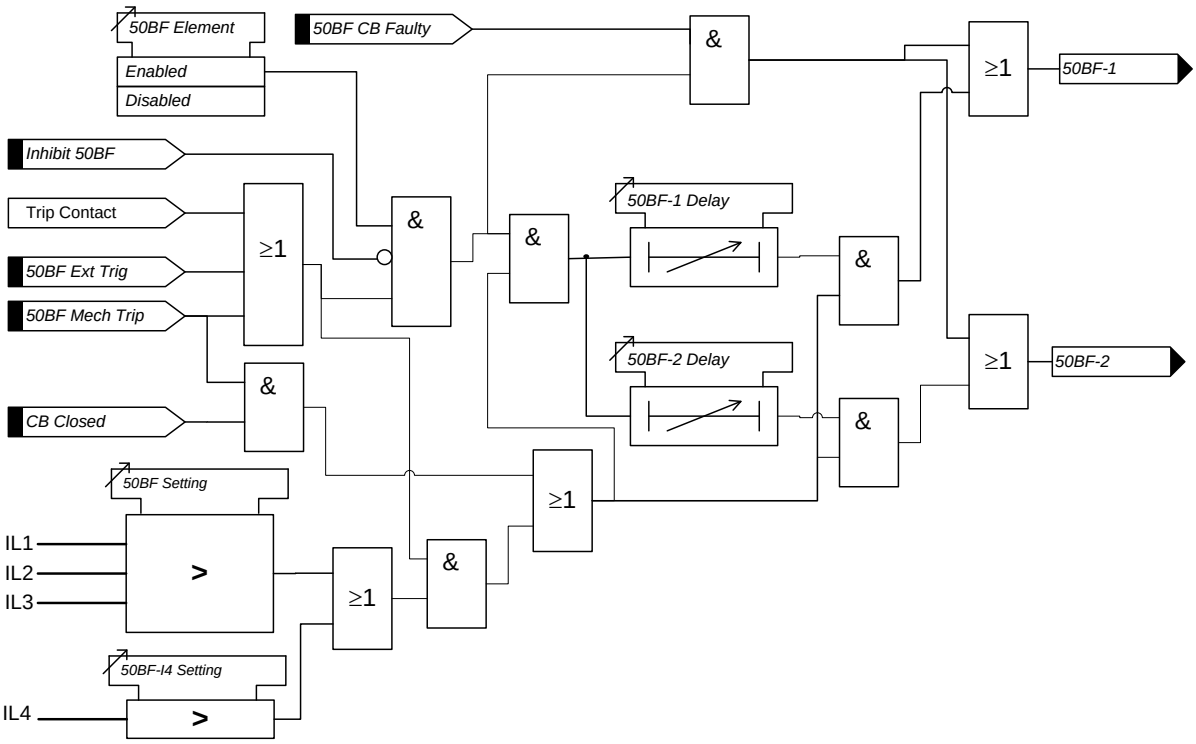

Figure 5-1 Logic Diagram: Circuit Breaker Fail Protection (50BF)

5.2 VT Supervision (60VTS) – 7SR1205 & 7SR1206

1 OR 2 PHASE FAILURE DETECTION

Normally the presence of negative phase sequence (NPS) or zero phase sequence (ZPS) voltage in a power system is accompanied by NPS or ZPS current. The presence of either of these sequence voltages without the equivalent level of the appropriate sequence current is used to indicate a failure of one or two VT phases.

The ***60VTS Component*** setting selects the method used for the detection of loss of 1 or 2 VT phases i.e. **ZPS** or **NPS** components. The sequence component voltage is derived from the line voltages; suitable VT connections must be available. The relay utilises fundamental voltage measurement values for this function.

The element has user settings ***60VTS V*** and ***60VTS I.*** A VT is considered to have failed where the voltage exceeds ***60VTS V*** while the current is below ***60VTS I*** for a time greater than ***60VTS Delay***.

3 PHASE FAILURE DETECTION

Under normal load conditions rated PPS voltage would be expected along with a PPS load current within the circuit rating. Where PPS load current is detected without corresponding PPS voltage this could indicate a three phase VT failure. To ensure these conditions are not caused by a 3 phase fault the PPS current must also be below the fault level.

The element has a ***60VTS VPPS*** setting, an ***60VTS IPPS Load*** setting and a setting for ***60VTS IPPS Fault***. A VT is considered to have failed where positive sequence voltage is below ***60VTS VPPS*** while positive sequence current is above ***IPPS Load*** and below ***IPPS Fault*** level for more than ***60VTS Delay.***

EXTERNAL MCB

A binary input can be set as ***Ext_Trig 60VTS*** to allow the ***60VTS Delay*** element to be started from an external MCB operating.

Once a VT failure condition has occurred the output is latched on and is reset by any of the following:-

Voltage is restored to a healthy state i.e. above ***VPPS*** setting while NPS voltage is below ***VNPS*** setting.

Ext Reset 60VTS	A binary or virtual input, or function key and a VT failure condition no longer exists.
Inhibit 60VTS	A binary or virtual input.

 ©2019 Siemens Protection Devices Limited

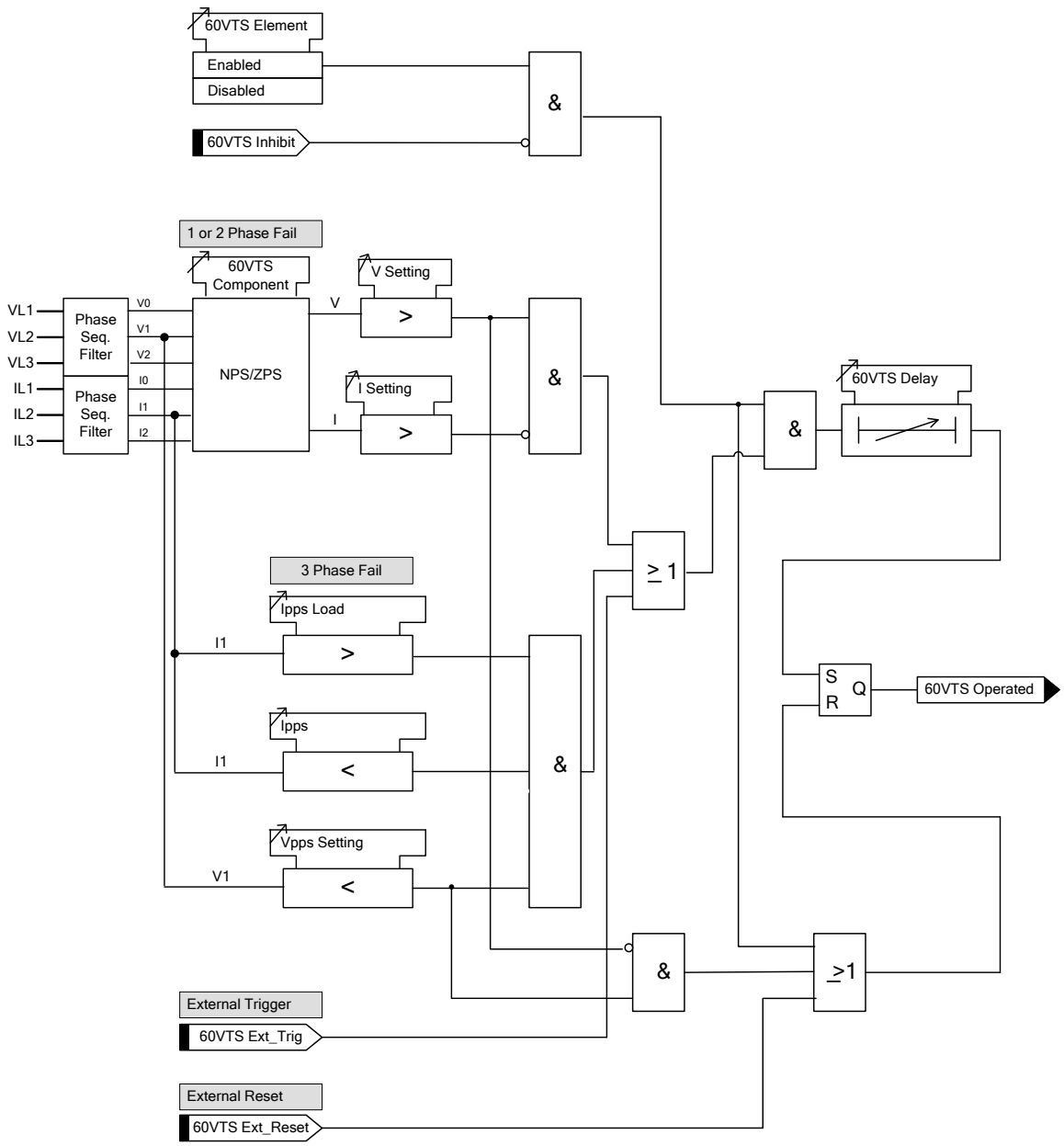

Figure 5-2 Logic Diagram: VT Supervision Function (60VTS)

5.3 CT Supervision (60CTS)

The relay has two methods of detecting a CT failure, depending on the relay model. CT Supervision is only available in relays with four current inputs.

5.3.1 60CTS FOR 7SR11 (60CTS-I FOR 7SR12)

The current from each of the Phase Current Transformers is monitored. If one or two of the three input currents falls below the CT supervision current setting ***CTS I*** for more than ***60CTS Delay*** then a CT failure output (***60CTS Operated***) is given. If all three input currents fall below the setting, CT failure is not raised.

An output is also given to indicate the faulted phase, ***60CTS-I PhA*** , ***60CTS-I PhB, and 60CTS-I PhC***

Operation of the CT supervision elements can be inhibited from:

Inhibit 60CTS A binary or virtual input.

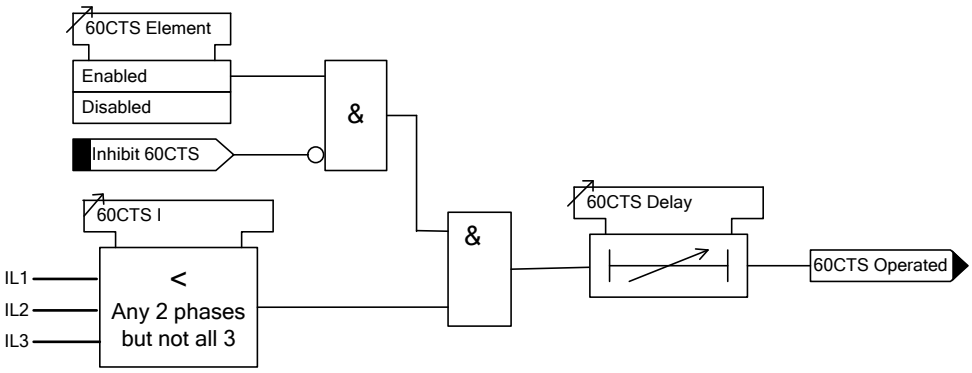

Figure 5-3 Logic Diagram: CT Supervision Function (60CTS) – 7SR11

This function is retained in the 7SR12 as it provides phase discrimination, whereas the standard function provided in the 7SR12 does not.

5.3.2 60CTS FOR 7SR12

Normally the presence of negative phase sequence (NPS) current in a power system is accompanied by NPS voltage. The presence of NPS current without NPS voltage is used to indicate a current transformer failure.

The element has a setting for NPS current level ***60CTS Inps*** and a setting for NPS voltage level ***60CTS Vnps*** If the negative sequence current exceeds its setting while the negative sequence voltage is below its setting for more than ***60CTS Delay*** then a CT failure output (***60CTS Operated***) is given.

Operation of the CT supervision elements can be inhibited from:

Inhibit 60CTS A binary or virtual input.

 ©2019 Siemens Protection Devices Limited

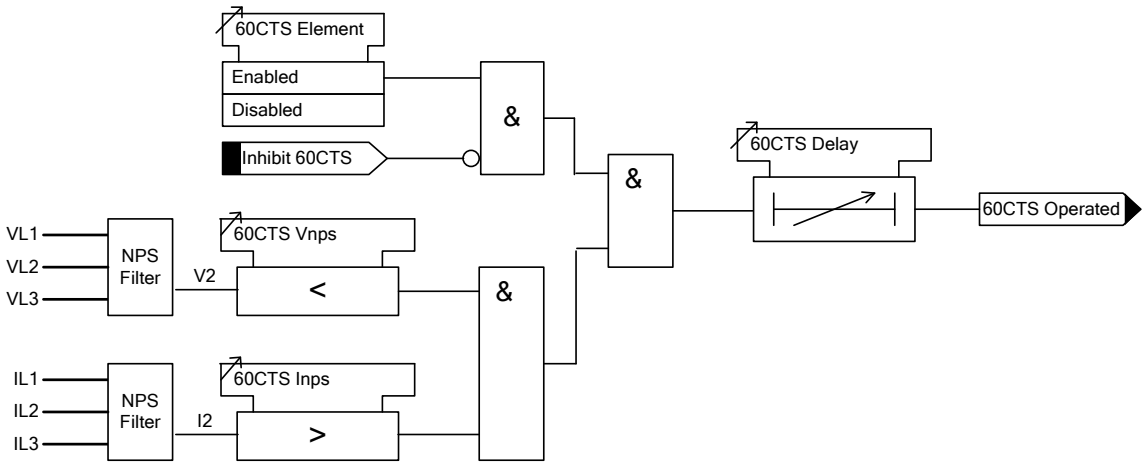

Figure 5-4 Logic Diagram: CT Supervision Function (60CTS) – 7SR12

5.4 Broken Conductor (46BC)

The element calculates the ratio of NPS to PPS currents. Where the NPS:PPS current ratio is above ***46BC Setting*** an output is given after the ***46BC Delay***.

The Broken Conductor function can be inhibited from

Inhibit 46BC	A binary or virtual input.
46BC U/I Guard	A minimum load current

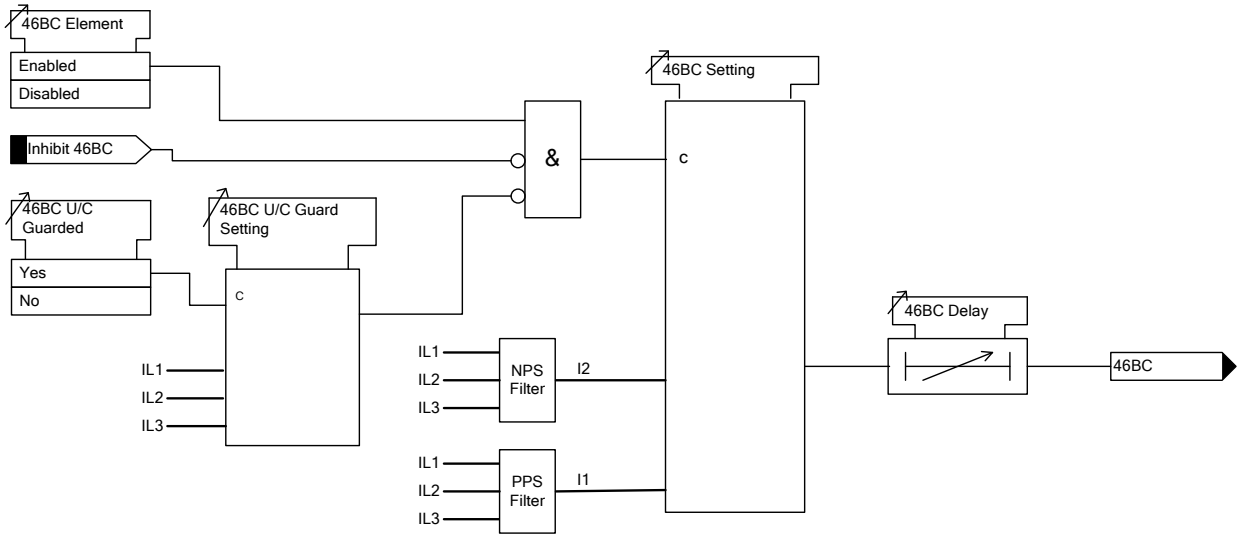

Figure 5-5 Logic Diagram: Broken Conductor Function (46BC)

5.5 Trip/ Close Circuit Supervision (74TCS & 74CCS)

The relay provides three trip and three close circuit supervision elements, all elements are identical in operation and independent from each other allowing 3 trip and 3 close circuits to be monitored.

One or more binary inputs can be mapped to ***74TCS-n.*** The inputs are connected into the trip circuit such that at least one input is energised when the trip circuit wiring is intact. If all mapped inputs become de-energised, due to a break in the trip circuit wiring or loss of supply an output is given.

The ***74TCS-n Delay*** setting prevents failure being incorrectly indicated during circuit breaker operation. This delay should be greater than the operating time of the circuit breaker.

The use of one or two binary inputs mapped to the same Trip Circuit Supervision element (e.g. 74TCS-n) allows the user to realise several alternative monitoring schemes.

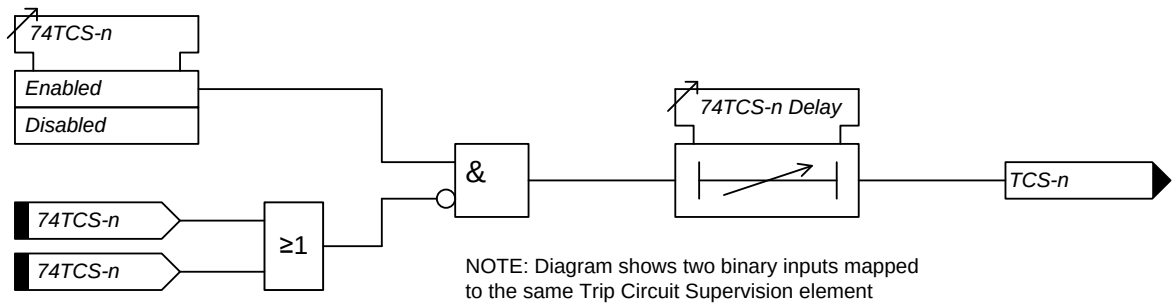

Figure 5-6 Logic Diagram: Trip Circuit Supervision Feature (74TCS)

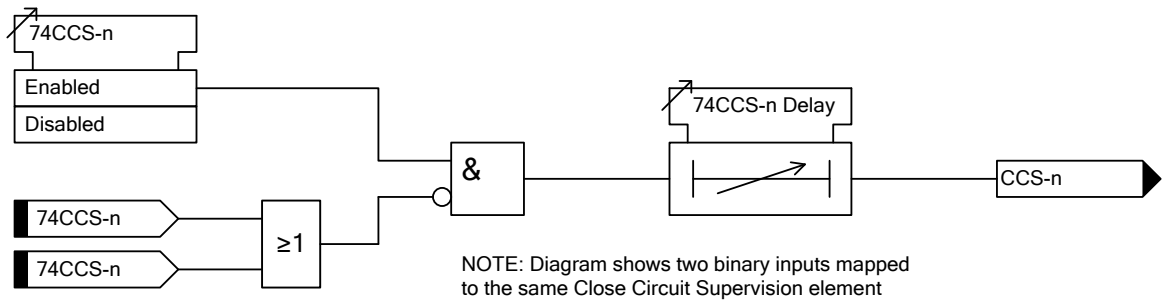

Figure 5-7 Logic Diagram: Close Circuit Supervision Feature (74CCS)

 ©2019 Siemens Protection Devices Limited

5.6 2nd Harmonic Block/Inrush Restraint (81HBL2) phase elements only

Inrush restraint detector elements are provided, these monitor the line currents.

The inrush restraint detector can be used to block the operation of selected elements during transformer magnetising inrush conditions.

The ***81HBL2 Bias*** setting allows the user to select between **Phase**, **Sum** and **Cross** methods of measurement:

Phase Each phase is inhibited separately.

Sum With this method the square root of the sum of the squares of the second harmonic in each phase is compared to each operate current individually.

Cross All phases are inhibited when any phase detects an inrush condition.

An output is given where the measured value of the second harmonic component is above the **81HBL2** setting.

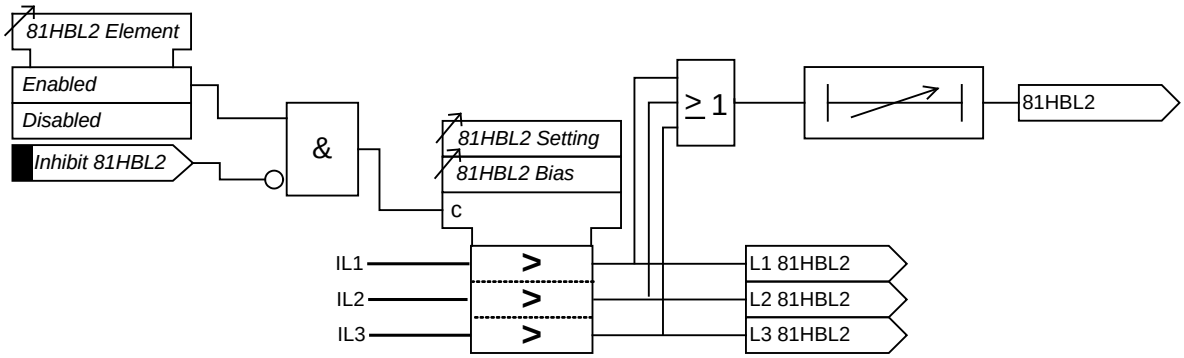

Figure 5-8 Functional Diagram for Harmonic Block Feature (81HBL2)

Section 6: Other Features

6.1 Data Communications

Two communication ports, COM1 and COM2 are provided. RS485 connections are available on the terminal blocks at the rear of the relay (COM1). A USB port, (COM 2), is provided at the front of the relay for local access using a PC.

Optionally, additional IEC61850 communication ports are available: -

2x Electrical Ethernet with RJ45 connectors IEC 61850 - (COM 3),

2x Optical Ethernet with Duplex LC 100BaseF connectors IEC 61850 - (COM 3)

The rear com1 port can be selected to operate as a local or a remote port operation.

Communication is compatible with Modbus-RTU, IEC60870-5-103 and DNP 3.0 transmission and application standards.

For communication with the relay via a PC (personal computer) a user-friendly software package, Reydisp Evoultion/Manager, is available to allow transfer of relay settings, waveform records, event records, fault data records, Instruments/meters and control functions. Reydisp is compatible with IEC60870-5-103.

Data communications operation is described in detail in Section 4 of this manual.

6.2 IEC 61850 Communications

The relay can optionally be provided with IEC61850 comms.

IEC61850 is provided with an added EN100 communication module.

The following EN100 output alarms are provided:

EN100 Life:	When the relay is powered up, the EN100 Module initializes with the relay. When initialization is successful this point becomes true.
EN100 Error:	During relay operation, if an error occurs with the data communication between the EN100 module and the relay, this point becomes true. - This does not specify if there is an error with one of the communication channels (Link 1/2)
IEC61850 Configured:	This point will become true when an IEC 61850 station/network has been configured and the all 61850 associated data has been synchronized to the relay
EN100 Ch1 Link Down:	When communication is lost on the Channel 1 Ethernet port this point becomes true.
EN100 CH2 Link Down:	When communication is lost on the Channel 2 Ethernet port this point becomes true.

For further details refer to the following publications:

Model Implementation Conformance Statement (MICS)

Protocol Implementation Conformance Statement (PICS)

Protocol Implementation Extra Information for Testing (PIXIT)

 ©2019 Siemens Protection Devices Limited

6.3 Maintenance

6.3.1 OUTPUT MATRIX TEST

The feature is only visible from the Relay fascia and allows the user to operate the relays functions. The test of the function will automatically operate any Binary Inputs or LED's already assigned to that function.

Any protection function which is enabled in the setting menu will appear in the Output Matrix Test.

6.3.2 CB COUNTERS

The following CB maintenance counters are provided:

CB Total Trip Count:	Increments on each trip command issued.
CB Total Trip Manual Open	Selects whether the CB Total Trip Counter is incremented for Manual Open Operations. If disabled, the CB Total Counter will only increment for protection trip commands.
CB Delta Trip Count:	Additional counter which can be reset independently of the Total Trip Counter. This can be used, for example, for recording trip operations between visits to a substation.
CB Delta Trip Manual Open	Selects whether the CB Delta Trip Counter is incremented for Manual Open Operations. If disabled, the CB Delta Trip Counter will only increment for protection trip commands.
CB Count to AR Block: (Only in Auto-reclose models)	Displays the number of CB trips experienced by the CB before the AR is blocked. When the target is reached the relay will only do 1 Delayed Trip to Lockout. An output is available to reset this value.
CB Count to AR Block Manual Open: (Only in Auto-reclose models)	Selects whether the CB Count to AR Block is incremented for Manual Open Operations. If disabled, the CB Count to AR Block will only increment for protection trip commands.
CB Frequent Ops Count	Logs the number of trip operations in a rolling window period of one hour. An output is available to reset this counter.

Binary outputs can be mapped to each of the above counters, these outputs are energised when the user defined ***Count Target*** or ***Alarm Limit*** is reached.

6.3.3 I^2T CB WEAR

An I^2t counter is also included, this can provide an estimation of contact wear and maintenance requirements. The algorithm works on a per phase basis, measuring the arcing current during faults. The I^2t value at the time of trip is added to the previously stored value and an alarm is given when any one of the three phase running counts exceeds the set ***Alarm limit***. The time for which the current is incorporated begins after the ***Separation Time*** has elapsed following a trip being initiated and the duration is as specified by the CB ***Clearance time.*** This therefore is the time between CB contacts separation when an arc is formed and the extinction of the arc. Although the CB ***Clearance time*** generally extends beyond the arc extinction, the current will be zero and have no effect on the total.

The I_2t value can also triggered from a binary input or command. ***Separation Time*** is applied after the trigger.

The I_2t value can also reset from a binary input or command.

The I^2t value and I^2t capacity remaining can be viewed as an instrument.

6.4 General Pickup

The ***General Pickup*** output is provided in OUTPUT CONFIG>OUTPUT MATRIX and can be mapped to operate any binary output, led or virtual I/O. It is operated by instantaneous pick up of protection elements without their associated time delay. Any combination of elements can be selected to initiate ***General Pickup*** operation so that elements used for alarm only purposes can be ignored. All available elements are listed and controlled by settings in the OUTPUT CONFIG>PICKUP CONFIG menu, separated by type as Voltage or Frequency elements.

6.5 Data Storage

6.5.1 GENERAL

The relay stores three types of data: relay event records, analogue/digital waveform records and fault records. Data records are backed up in non-volatile memory and are permanently stored even in the event of loss of auxiliary supply voltage. The data storage menu contains the settings for the Demand, Waveform and Fault storage features.

6.5.2 DEMAND

Maximum, minimum and mean values of line currents, voltages and power (where applicable) are available as instruments which can be read in the relay INSTRUMENTS MENU or via Reydisp.

The ***Gn Demand Window*** setting defines the maximum period of time over which the demand values are valid. A new set of demand values is established after expiry of the set time.

The ***Gn Demand Window Type*** can be set to **FIXED** or **PEAK** or **ROLLING**.

When set to **FIXED** the maximum, minimum and mean values demand statistics are calculated over fixed Window duration. At the end of each window the internal statistics are reset and a new window is started.

When set to **PEAK** the maximum and minimum values since the feature was reset are recorded.

When set to **ROLLING** the maximum, minimum and mean values demand statistics are calculated over a moving Window duration. The internal statistics are updated when the window advances every ***Updated Period***.

The statistics can be reset from a binary input or communication command, after a reset the update period and window are immediately restarted.

6.5.3 EVENT RECORDS

The event recorder feature allows the time tagging of any change of state (Event) in the relay. As an event occurs, the actual event condition is logged as a record along with a time and date stamp to a resolution of 1 millisecond. There is capacity for a maximum of 1000 event records that can be stored in the relay and when the event buffer is full any new record will over-write the oldest. Stored events can be erased using the DATA STORAGE>***Clear Events*** setting or from Reydisp.

The following events are logged:

Change of state of Binary outputs.

Change of state of Binary inputs.

Change of Settings and Settings Group.

Change of state of any of the control functions of the relay.

Protection element operation.

All events can be uploaded over the data communications channel(s) and can be displayed in the 'Reydisp' package in chronological order, allowing the sequence of events to be viewed. Events can be selected to be made available spontaneously to an IEC 60870-5-103, Modbus RTU or DNP 3.0 compliant control system. The function number and event number can also be changed. The events are selected and edited using the Reydisp software tool.

For a complete listing of events available in each model, refer to Technical Manual Section 4 'Data Communication'.

 ©2019 Siemens Protection Devices Limited

6.5.4 WAVEFORM RECORDS.

Relay waveform storage can be triggered either by user selected relay operations, from the relay fascia, from a suitably programmed binary input or via the data comms channel(s). The stored analogue and digital waveforms illustrate the system and relay conditions at the time of trigger. An output is provided to indicate when a new record has been stored.

A waveform can also be stored from the fascia using the DATA STORAGE/Waveform Storage>***Trigger Waveform*** setting

Waveform records are stored in real time into RAM memory and then archived to non-volatile memory as a background task during quiescent periods, see 6.4.7 below. Sufficient RAM is allocated for 10 seconds of waveform data. This is allocated to records according to the user setting ***Record Duration*** which has options of 10x1s, 5x2s, 2x5s or 1x10s. 10 records are always stored in the archive regardless of their duration and of the value of this user setting but if a new record is triggered before the oldest record in RAM is archived, data can be lost. If records are expected in rapid succession, such as with short deadtime autoreclose, this setting should be selected to suit. The most recent is waveform 1. The user can also specify the percentage of waveform storage prior to waveform triggering. When the waveform archive buffer is full (i.e. 10 records are stored) the triggering of a new waveform record causes the oldest record - waveform 10 – to be overwritten.

'A' variant software devices provide 5 waveform records.

Waveforms are sampled at a rate of 32 samples per cycle.

Stored waveforms can be erased using the DATA STORAGE/Waveform Storage>***Clear Waveforms*** setting or from Reydisp.

6.5.5 FAULT RECORDS

Up to ten fault records can be stored and displayed on the Fascia LCD. Fault records can be triggered by user selected relay operations or via a suitably programmed binary input. An output is provided to indicate when a new record has been stored.

Fault records provide a summary of the relay status at the time of trip, i.e. the element that issued the trip, any elements that were picked up, the fault type, LED indications, date and time. The ***Max Fault Rec. Time*** setting sets the time period from fault trigger during which the operation of any LEDs is recorded.

The relay can be set to automatically display the fault record on the LCD when a fault occurs by enabling the SYSTEM CONFIG> ***Trip Alert*** setting. When the trip alert is enabled the fault record will be displayed until the fault is removed.

With the ***Trip Alert*** setting enabled the user will have to press the **TEST/RESET►** button three times in order to return to the home screen after a trip has occurred. The user will then have to press the **TEST/RESET►** button a further time (four in total) to reset the relay.

1. After a trip occurs the ***Trip Alert*** displays the time and date of the trip. The user then presses the **TEST/RESET►** button.
2. The fault type is then displayed with the date the fault occurred. The fascia prompts the user to press the **TEST/RESET►** button to view the details of this fault.
3. The information regarding the fault is then displayed. The user then presses the **TEST/RESET►** button to return to the home screen.
4. Pressing the **TEST/RESET►** button one further time will reset the relay.

With the ***Trip Alert*** setting disabled the user only has to press the trip reset button once to reset the relay.

When examined together the event records and the fault records will detail the full sequence of events leading to a trip.

Fault records are stored in a rolling buffer, with the oldest faults overwritten. The fault storage can be cleared with the DATA STORAGE/Fault Storage>***Clear Faults*** setting or from Reydisp.

©2019 Siemens Protection Devices Limited

6.5.6 ENERGY STORAGE - 7SR12

The measured Power is continuously integrated (over a one-second window) to produce 4 Energy quantities:

- Active Export Energy (W)
- Active Import Energy (W)
- Reactive Export Energy (VAr)
- Reactive Import Energy (VAr)

The Direction of Energy transfer is set by: SYSTEM CONFIG> **Export Power/Lag VAr**. With both ***Export Power*** (W) and ***Lag VAr*** (VAr) set to be **+ve**, the Direction of Energy transfer will follow the IEC convention, as shown in the figure.

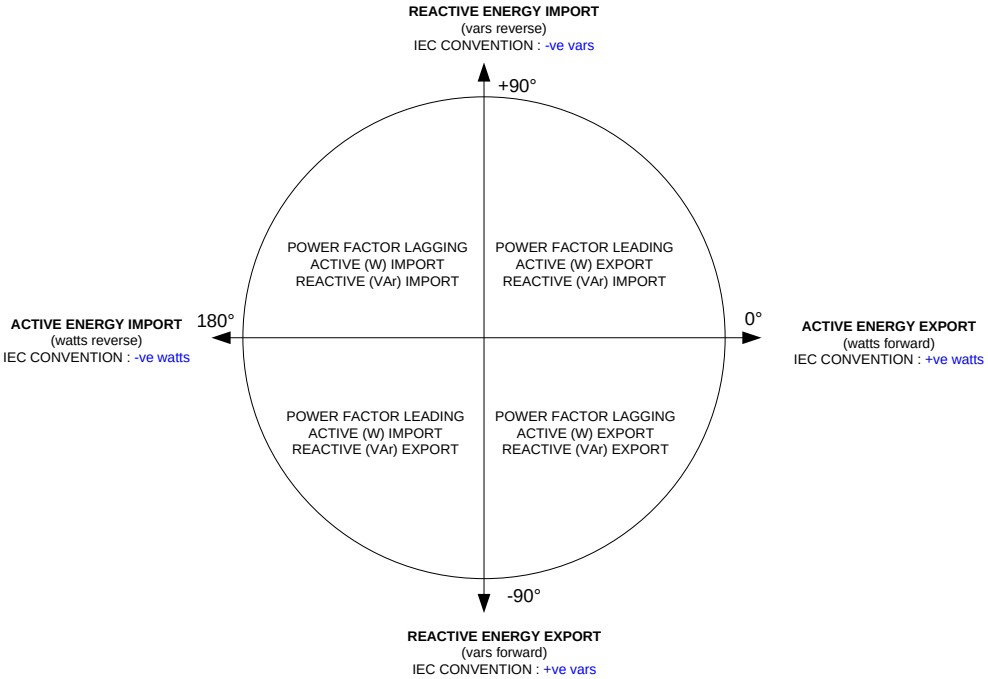

Figure 6-1 Energy Direction Convention

Setting either the ***Export Power*** (W) or ***Lag VAr*** (VAr) to be **-ve**, will reverse the Direction of the Energy transfer for these quantities. So forward VAr will then be reported as Imported Reactive Energy, and forward Watts will be reported as Exported Active Energy.

When the accumulated Energy quantities reach a set increment, the Relay issues a pulse to the binary outputs: OUTPUT CONFIG/OUTPUT MATRIX> ***Active Exp Pulse***, ***Active Imp Pulse***, ***Reactive Exp Pulse*** and ***Reactive Imp Pulse***.

The Energy increments are set by the settings: DATA STORAGE/ENERGY STORAGE> ***Active Exp Energy Unit***, ***Active Imp Energy Unit***, ***Reactive Exp Energy Unit*** and ***Reactive Imp Energy Unit***. These setting also define the resolution of the stored energy values reported by instruments and communications protocols. The value is stored in the range 0-999999 which continues from zero automatically when 999999 is reached.

 ©2019 Siemens Protection Devices Limited

6.5.7 DISK ACTIVITY WARNING

The Data Storage facilities offered by the Relay involve archiving a huge amount of data to non-volatile memory. Since such functionality is always secondary to the Protection functionality offered by the Relay, this means that data transfers can take significant amounts of time; perhaps several minutes. If the Relay is power-cycled during a storage cycle, some of the data will be lost. For this reason, the Relay can provide a visual warning (at the top-right position of the LCD) that data storage is taking place:

> The 'œ' disk symbol shows that the copying of Events, Waveform Records or Fault Records, to non volatile disk storage, is currently in progress.

Whether this symbol is displayed or not is set by the SYS CONFIG > ***Disk Activity Symbol*** setting.

> The 'A' symbol at the top-right position of the LCD indicates that new Events, Waveform Records or Fault Records are currently being held in volatile RAM and the archiving, to non-volatile flash disk storage, is being temporarily blocked.

6.6 Metering

The metering feature provides real-time data available from the relay fascia in the ‘Instruments Mode’ or via the data communications interface.

The Primary values are calculated using the CT and VT ratios set in the ***CT/VT Config*** menu.

The text displayed in the relays ‘Instruments Mode’ associated with each value can be changed from the default text using the Reydisp software tool.

The user can add the meters that are most commonly viewed to a ‘Favourites’ window by pressing ‘ENTER’ key when viewing a meter. The relay will scroll through these meters at an interval set in the ***System Config/Favourite Meters Timer*** menu.

The energy storage meters can be reset from a binary input and have a user selectable setting for their measurement in the ***Data Storage/Energy storage menu.***

For a detailed description refer to Technical Manual Chapter 2 – Settings and Instruments.

6.7 Operating Mode

The relay has three operating modes, Local, Remote and Out of Service. The following table identifies the functions operation in each mode.

The modes can be selected by the following methods:

SETTINGS MODE>SYSTEM CONFIG>***Relay Mode*** setting, a Binary Input or Command

Table 6-1 Operating Mode

OPERATION	REMOTE MODE	LOCAL MODE	OUT OF SERVICE MODE
Control			
USB/Rear Ports set to REMOTE *	Enabled	Disabled	Disabled
Fascia (Control Mode)	Disabled	Enabled	Disabled
USB/Rear Ports set to LOCAL *	Disabled	Enabled	Disabled
Binary Inputs	Setting Option	Setting Option	Disabled
Binary Outputs	Enabled	Enabled	Disabled
Reporting			
Spontaneous			
IEC	Enabled	Enabled	Disabled
DNP	Enabled	Enabled	Disabled
General Interrogation			
IEC	Enabled	Enabled	Disabled
DNP	Enabled	Enabled	Disabled
MODBUS	Enabled	Enabled	Disabled
Changing of Settings			
USB/Rear Ports defined REMOTE *	Enabled	Disabled	Enabled
Fascia	Enabled	Enabled	Enabled
USB/Rear Ports defined as LOCAL *	Disabled	Enabled	Enabled
USB/Rear Ports defined LOCAL or REMOTE *	Enabled	Enabled	Enabled
Historical Information			
Waveform Records	Enabled	Enabled	Enabled
Event Records	Enabled	Enabled	Enabled
Fault Information	Enabled	Enabled	Enabled
Setting Information	Enabled	Enabled	Enabled

*Each Communication port has a setting to allow the user to determine which port is used for local operation and which port is used for remote operation. If the port is set to Local or Remote, the port can be used for all operations and has no priority.

The communication port modes can be selected at:

SETTINGS MODE>SYSTEM CONFIG>***Communications***

6.8 Control Mode

This mode provides convenient access to commonly used relay control and test functions. When any of the items listed in the control menu are selected control is initiated by pressing the ENTER key. The user is prompted to confirm the action, again by pressing the ENTER key, before the command is executed.

7SR1102-1*A12-*AA0 models with ‘A’ variant software do not support Control Mode.

Note that a CB must be in a Closed state before an Open command will be accepted. And that a CB must be in an Open state before a Close command will be accepted. If not, the Relay reports that the requested command is ‘Interlocked’.

Note also that switching a protection function IN / OUT via the Control Menu will not change that function’s ENABLED / DISABLED setting. The Control Menu selection will over-ride the setting, however.

Control Mode commands are password protected using the Control Password function – see Section 6.11.

 ©2019 Siemens Protection Devices Limited

6.9 Real Time Clock

Time and date can be set either via the relay fascia using appropriate commands in the System Config menu or via the data comms channel(s). Time and date are maintained while the relay is de-energised by a back up storage capacitor. The length of time for which this data will be maintained will depend on such things as temperature, length of time in service, etc. However the data will be maintained for a minimum of 1.8 days.

In order to maintain synchronism within a substation, the relay can be synchronised to the nearest second or minute using the communications interface, or a binary input.

The default date is set at 01/01/2000 deliberately to indicate the date has not yet been set. When editing the **Time**, only the hours and minutes can be edited. When the user presses **ENTER** after editing the seconds are zeroed and the clock begins running.

6.9.1 TIME SYNCHRONISATION – DATA COMMUNICATION INTERFACE

Where the data comms channel(s) is connected to a dedicated substation automation system the relay can be time synchronised using the relevant command within IEC 60870-5-103, DNP3.0 or optional IEC 61850 protocols. The time can also be synchronised from 'Reydisp' which utilises the communications support software.

6.9.2 TIME SYNCHRONISATION – BINARY INPUT

A binary input can be mapped ***Clock Sync from BI***. The seconds or minutes will be rounded up or down to the nearest vale when the BI is energised. This input is leading edge triggered.

6.10 Settings Groups

The relay provides four groups of settings – Group number (Gn) 1 to 4. At any one time only one group of settings can be 'active' – SYSTEM CONFIG>***Active Group*** setting. An output is provided to indicate which setting group is active.

It is possible to edit one group while the relay operates in accordance with settings from another 'active' group using the ***View/Edit Group*** setting.

Some settings are independent of the active group setting i.e. they apply to all settings groups. This is indicated on the top line of the relay LCD – where only the **Active Group No**. is identified. Where settings are group dependent this is indicated on the top line of the LCD by both the **Active Group No**. and the **View Group No**. being displayed.

A change of settings group can be achieved either locally at the relay fascia, remotely over the data comms channel(s) or via a binary input. When using a binary input an alternative settings group is selected only whilst the input is energised (***Select Grp Mode*: Level triggered**) or latches into the selected group after energisation of the input (***Select Grp Mode*: Edge triggered**).

Settings are stored in non-volatile memory.

6.11 Password Feature

The relay incorporates two levels of password protection – one for settings, the other for control functions.

The programmable password feature enables the user to enter a 4 character alpha numeric code to secure access to the relay functions. A Password of **NONE** indicates that a Password has not been set and that the Password feature is disabled. Where a Relay is delivered with the Password already set, this will be "AAAA".

The password must be entered twice as a security measure against accidental changes. Once a password has been entered then it will be required thereafter to change settings or initiate control commands. Passwords can be de-activated by using the password to gain access and by entering the password **NONE**. Again this must be entered twice to de-activate the security system.

As soon as the user attempts to change a setting or initiate control the password is requested before any changes are allowed. Once the password has been validated, the user is 'logged on' and any further changes can be made without re-entering the password. If no more changes are made within 1 hour then the user will automatically be 'logged off', re-enabling the password feature.

The Settings Password prevents unauthorised changes to settings from the front fascia or over the data comms channel(s). The Control Password prevents unauthorised operation of controls in the relay Control Menu from the front fascia.

The password validation screen also displays a numerical code. If the password is lost or forgotten, this code should be communicated to Siemens Protection Devices Ltd. and the password can be retrieved.

 ©2019 Siemens Protection Devices Limited

7SR11 and 7SR12

Settings and Instruments

Document Release History

This document is issue 2017/02. The list of revisions up to and including this issue is:

2017/02	Formatting errors corrected
2015/08	Additional software features added.
2015/06	Software Maintenance
2014/10	Addition of optional IEC 61850 communication protocol.
2013/09	Software Maintenance
2013/01	Software Maintenance
2012/01	Software Maintenance
2011/06	Software Maintenance
2010/04	Amendments following PLM review
2010/02	Document reformat due to rebrand
2009/09	Revised format
2009/04	First Issue

The copyright and other intellectual property rights in this document, and in any model or article produced from it (and including any registered or unregistered design rights) are the property of Siemens Protection Devices Limited. No part of this document shall be reproduced or modified or stored in another form, in any data retrieval system, without the permission of Siemens Protection Devices Limited, nor shall any model or article be reproduced from this document unless Siemens Protection Devices Limited consent.

While the information and guidance given in this document is believed to be correct, no liability shall be accepted for any loss or damage caused by any error or omission, whether such error or omission is the result of negligence or any other cause. Any and all such liability is disclaimed.

©2017 Siemens Protection Devices Limited

Contents

Section 1: Introduction 4
1.1 Relay Menus And Display 4
1.2 Operation Guide 6
1.2.1 User Interface Operation 6
1.3 Setting Mode 8
1.4 Instruments Mode 9
1.5 Fault Data Mode 15
Section 2: Setting & Configuring the Relay Using Reydisp Evolution 16
2.1 Physical Connection 16
2.1.1 Front USB connection 16
2.1.2 Rear RS485 connection 16
2.1.3 Optional Rear EN100 Ethernet Module (COM3) 17
2.1.4 Configuring Relay Serial Data Communication 18
2.1.5 Connecting to the Relay for setting via Reydisp 19
2.1.6 Configuring the user texts using Reydisp Language Editor 20

List of Figures

Figure 1.1-1 Menu 4
Figure 1.1-2 Fascia Contrast symbol 4
Figure 2.1-1 USB connection to PC 16
Figure 2.1-2 RS485 connection to PC 16
Figure 2-3 EN100 Ethernet Module 17
Figure 2.1-4 PC Comm Port Selection 19
Figure 2.1-5 PC Language File Editor 20

Section 1: Introduction

1.1 Relay Menus And Display

All relay fascias have the same appearance and support the same access keys. The basic menu structure is also the same in all products and consists of four main menus, these being,

Settings Mode - allows the user to view and (if allowed via passwords) change settings in the relay.

Instruments Mode - allows the user to see the conditions that the relay is experiencing i.e. current, voltage etc.

Fault Data Mode - allows the user to see type and data of any fault that the relay has detected.

Control Mode - allows the user to control external plant under the relays control for example the CB

All menus may be viewed without entering a password but actions will not be permitted if the relevant passwords have been set.

The menus can be viewed via the LCD by pressing the access keys as below,

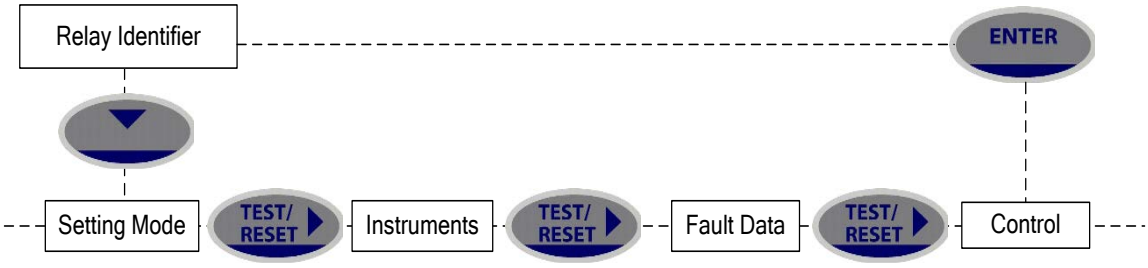

Figure 1.1-1 Menu

Pressing CANCEL returns to the Identifier screen

This document describes the text descriptions as they appear in the menu structure when the relay is using the default files. The user can programme the relay to use alternative text descriptions by installing user language files through the Reydisp Evolution software language configuration tool – see 2.1.5

LCD Contrast

To change the contrast on the LCD insert a flat bladed screwdriver into the screwhead below the contrast symbol, turning the screwhead left (anti-clockwase) lightens the contrast of the LCD and turning it right (clockwise) darkens the display.

Figure 1.1-2 Fascia Contrast symbol

 ©2017 Siemens Protection Devices Limited

Figure 1.1-3 Fascia of a 7SR11 relay (E4 Case)

Figure 1.1-4 Fascia of a 7SR11 relay (E6 Case with IEC61850)

1.2 Operation Guide

1.2.1 User Interface Operation

The basic menu structure flow diagram is shown in Figure 1.2-2. This diagram shows the main modes of display: Settings Mode, Instrument Mode, Fault Data Mode and Control Mode.

When the relay leaves the factory all data storage areas are cleared and the settings set to default as specified in settings document.

When the relay is first energised the user is presented with the following, or similar, message: -

7SR12 _____ ENTER to CONTROL

Figure 1.2-1 Relay Identifier Screen

On the factory default setup the relay LCD should display the relay identifier, on each subsequent power-on the screen that was showing before the last power-off will be displayed.

The push-buttons on the fascia are used to display and edit the relay settings via the LCD, to display and activate the control segment of the relay, to display the relays instrumentation and Fault data and to reset the output relays and LED's.

The five push-buttons have the following functions:

READ DOWN

READ UP

Used to navigate the menu structure.

ENTER

The ENTER push-button is used to initiate and accept setting changes.

When a setting is displayed pressing the ENTER key will enter the edit mode, the setting will flash and can now be changed using the▲ or ▼ buttons. When the required value is displayed the ENTER button is pressed again to accept the change.

When an instrument is displayed pressing ENTER will toggle the instruments favourite screen status.

CANCEL

This push-button is used to return the relay display to its initial status or one level up in the menu structure. Pressed repeatedly will return to the Relay Identifier screen. It is also used to reject any alterations to a setting while in the edit mode.

TEST/RESET

This push-button is used to reset the fault indication on the fascia. When on the Relay Identifier screen it also acts as a lamp test button, when pressed all LEDs will momentarily light up to indicate their correct operation. It also moves the cursor right ► when navigating through menus and settings.

 ©2017 Siemens Protection Devices Limited

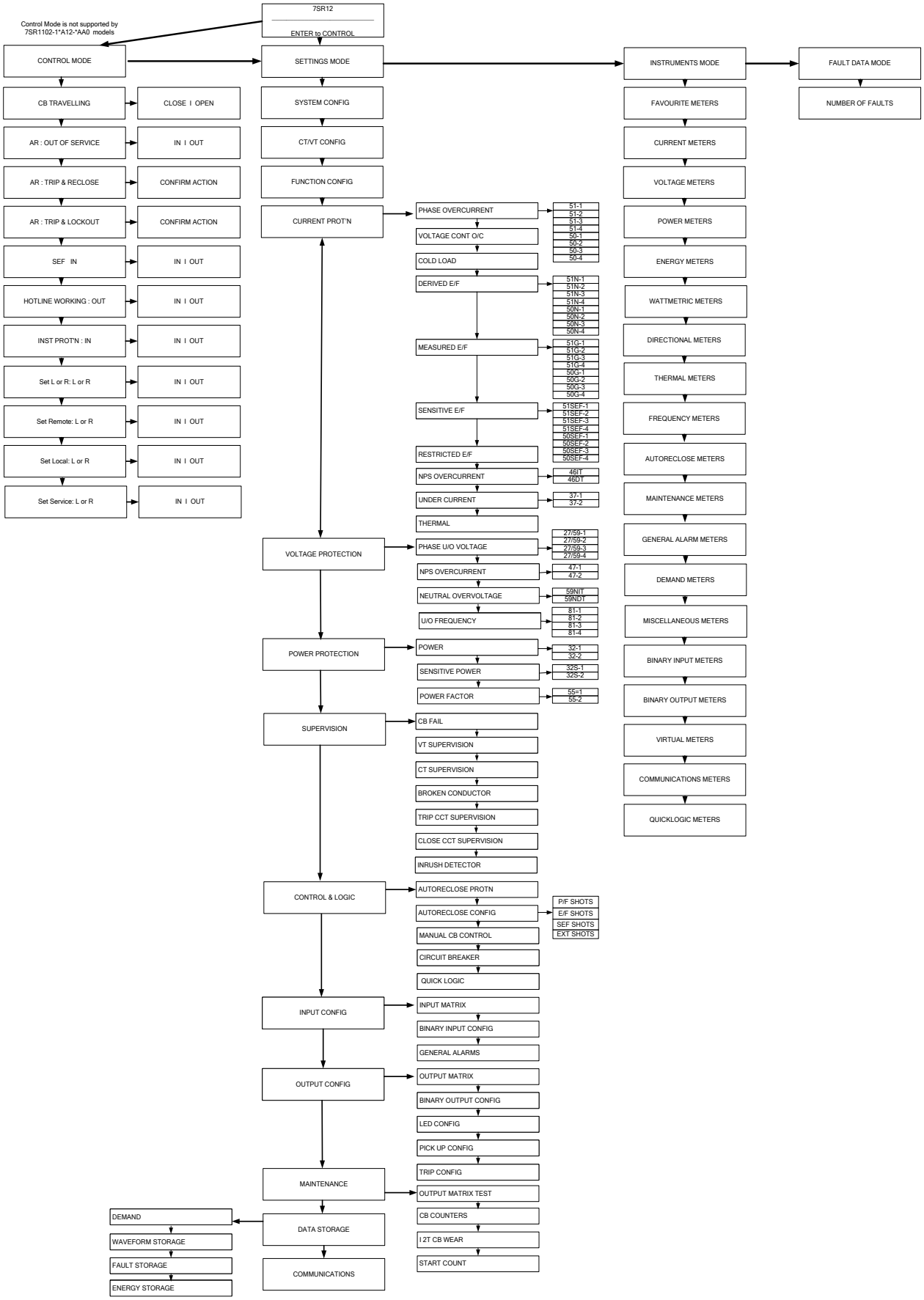

Figure 1.2-2 Menu Structure

1.3 Setting Mode

The Settings Mode is reached by pressing the READ DOWN ▼ button from the relay identifier screen.

Once the Settings Mode title screen has been located pressing the READ DOWN ▼ button takes the user into the Settings mode sub-menus.

Each sub-menu contains the programmable settings of the relay in separate logical groups. The sub menus are accessed by pressing the TEST/RESET► button. Pressing the ▼ button will scroll through the settings, after the last setting in each sub menu is reached the next sub menu will be displayed. If a particular sub menu is not required to be viewed then pressing ▼ will move directly to the next one in the list.

While a setting is being displayed on the screen the ENTER button can be pressed to edit the setting value. If the relay is setting password protected the user will be asked to enter the password. If an incorrect password is entered editing will not be permitted. All screens can be viewed if the password is not known.

While a setting is being edited flashing characters indicate the edit field. Pressing the ▲ or ▼ buttons will scroll through the valid field values. If these buttons are held on, the rate of scrolling will increase.

Once editing is complete pressing the ENTER button stores the new setting into the non-volatile memory.

The actual setting ranges and default values for each relay model can be found in the Reydisp Evolution application. A settings document hard copy can be produced by exporting the required settings file as RTF format. A document is produced which presents the settings as a table in a user friendly format.

 ©2017 Siemens Protection Devices Limited

1.4 Instruments Mode

The Instrument Mode sub-menu displays key quantities and information to aid with commissioning. The following meters are available and are navigated around by using the ▲,▼and TEST/REST buttons. The text description shown here is the default information. Depending upon the relay model you have, you may not have all of the meters shown.

Instrument	Description
FAVOURITE METERS →to view	This allows the user to view his previously constructed list of 'favourite meters' by pressing TEST/RESET ► button and the READ DOWN button to scroll though the meters added to this sub-group To construct a sub-group of favourite meters, first go to the desired meter then press ENTER this will cause a message to appear on the LCD 'Add To Favourites YES pressing ENTER again will add this to the FAVOURITE METERS Sub-menu. To remove a meter from the FAVOURITE METERS sub-menu go to that meter each in the FAVOURITE METERS sub-menu or at its Primary location press ENTER and the message 'Remove From Favourites' will appear press ENTER again and this meter will be removed from the FAVOURITE METERS sub-group
CURRENT METERS →to view	This is the sub-group that includes all the meters that are associated with Current TEST/RESET ► allows access to this sub-group
Primary Current Ia 0.00A Ib 0.00A Ic 0.00A	Displays the 3 phase currents Primary RMS values
Secondary Current Ia 0.00A Ib 0.00A Ic 0.00A	Displays the 3 phase currents Secondary RMS values
Nom Current Ia 0.00xIn ---^{o} Ib 0.00xIn ---^{o} Ic 0.00xIn ---^{o}	Displays the 3 Phase currents Nominal RMS values & phase angles with respect to PPS voltage.
Pri Earth Current In 0.00A Ig 0.00A	Displays the 3 Earth currents Primary RMS values
Sec Earth Current In 0.00A Ig 0.00A	Displays the 3 Earth currents Secondary RMS values
Nom Earth Current In 0.00xIn ---^{o} Ig 0.00xIn ---^{o}	Displays the 3 Earth currents Nominal RMS values & phase angles with respect to PPS voltage.
I Seq Components Izps 0.00xIn --^{o} Ipps 0.00xIn --^{o} Inps 0.00xIn --^{o}	Displays the Current Sequence components Nominal RMS values & phase angles with respect to PPS voltage.
2nd Harmonic Current Ia 0.00xIn Ib 0.00xIn Ic 0.00xIn	Displays the Second Harmonic Current.
Last Trip P/F Ia 0.00A Ib 0.00A Ic 0.00A	Displays the Last Trip Fault Current..
Last Trip E/F	Displays the Last Trip Fault Current..

Instrument	Description
In 0.00A Ig 0.00A	
VOLTAGE METERS →to view	This is the sub-group that includes all the meters that are associated with Voltage TEST/RESET ► allows access to this sub-group
Prim Ph-Ph Voltage Vab 0.00kV Vbc 0.00kV Vca 0.00kV	Displays the Phase to Phase Voltage Primary RMS values
Sec Ph-Ph Voltage Vab 0.00V Vbc 0.00V Vca 0.00V	Displays the Phase to Phase Voltage Secondary RMS values & Angles with respect to PPS voltage.
Nominal Ph-Ph Voltage Vab 0.00V ----° Vbc 0.00V ----° Vca 0.00V ----°	Displays the Phase to Phase Voltage Nominal RMS values
Prim Ph-N Voltage Va 0.00kV Vb 0.00kV Vc 0.00kV	Displays the Phase to Neutral Voltage Primary RMS values
Sec Ph-N Voltage Va 0.00V Vb 0.00V Vc 0.00V	Displays the Phase to Neutral Voltage Secondary RMS values & Angles with respect to PPS voltage.
Nom Ph-N Voltage Va 0.00V ----° Vb 0.00V ----° Vc 0.00V ----°	Displays the Phase to Neutral Voltage Nominal RMS values
V Seq Components Vzps 0.00V ----° Vpps 0.00V ----° Vnps 0.00V ----°	Displays the Voltage Sequence components Nominal RMS values & phase angles with respect to PPS voltage.
Calc Earth Voltage Pri 0.00V Sec 0.00V ----°	Displays the calculated Earth voltage both primary and secondary which also shows the secondary angle
Last Trip Voltage Va 0.00V Vb 0.00V Vc 0.00V	Displays the Phase to Neutral Voltage Nominal RMS values from Last Trip
POWER METERS →to view	This is the sub-group that includes all the meters that are associated with Power TEST/RESET ► allows access to this sub-group
Phase A 0.0MW Phase B 0.0MW Phase C 0.0MW P (3P) 0.0MW	Displays Real Power
Phase A 0.0MVAr Phase B 0.0MVAr Phase C 0.0MVAr Q (3P) 0.0MVAr	Displays Reactive Power
Phase A 0.0MVA Phase B 0.0MVA Phase C 0.0MVA S (3P) 0.0MVA	Displays Apparent Power
PF A 0.00 PF B 0.00 PF C 0.00 PF (3P) 0.00	Displays Power factor

 ©2017 Siemens Protection Devices Limited

Instrument	Description
ENERGY METERS →to view	This is the sub-group that includes all the meters that are associated with Energy TEST/RESET ► allows access to this sub-group
Active Energy Exp 0.00MWh Imp 0.00MWh	Displays both imported and exported Active Energy
Reactive Energy Exp 0.00MVArh Imp 0.00MVArh	Displays both imported and exported Reactive Energy
WATTMETRIC METERS →to view	This is the sub-group that includes all the meters that are associated with Wattmetric TEST/RESET ► allows access to this sub-group
Ires R 0.0xIn W Pres 0.0 xIn W Ires R Angle 0.0º I0-V0 Angle 0.0º	The Wattmetric component of residual current Wattmetric residual power Compensated residual phase angle Applied residual phase angle
DIRECTIONAL METERS →to view	This is the sub-group that includes all the meters that are associated with Directional elements TEST/RESET ► allows access to this sub-group. Only on models that have the 67 option
P/F Dir (67) ---------- No Dir, PhA Fwd, PhA Rev, PhB Fwd, PhB Rev, PhC Fwd, PhC Rev	The appropriate values from the selection will be displayed.
Calc E/F Dir (67N) ---------- No Dir, E/F Fwd, E/F Rev	The appropriate values from the selection will be displayed.
Meas E/F Dir (67G) ---------- No Dir, E/F Fwd, E/F Rev	The appropriate values from the selection will be displayed.
SEF Dir (67SEF) ---------- No Dir, SEF Fwd, SEF Rev	The appropriate values from the selection will be displayed.
THERMAL METERS →to view	This is the sub-group that includes all the meters that are associated with Thermal TEST/RESET ► allows access to this sub-group
Thermal Status Phase A 0.0% Phase B 0.0% Phase C 0.0%	Displays the thermal capacity
FREQUENCY METERS →to view	This is the sub-group that includes all the meters that are associated with Thermal TEST/RESET ► allows access to this sub-group
Frequency 0.000Hz Last Trip 0.000Hz	Displays the frequency
AUTORECLOSE METERS →to view	This is the sub-group that includes all the meters that are associated with Autoreclose TEST/RESET ► allows access to this sub-group. Only seen on models that have the 79 option
Autoreclose Status 79 AR State AR Close Shot 0	
MAINTENANCE METERS →to view	This is the sub-group that includes all the meters that are associated with Maintenance TEST/RESET ► allows access to this sub-group
CB Total Trips Count 0 Target 100	Displays the number of CB trips experienced by the CB

Instrument	Description
CB Delta Trips Count 0 Target 100	Displays the number of CB trips experienced by the CB
CB Count To AR Block Count 0 Target 100	Displays the number of CB trips experienced by the CB. When the target is reached the relay will only do 1 Delayed Trip to Lockout.
CB Freq Ops Count Count 0 Target 10	Displays the number of CB trips experienced by the CB over the last rolling 1 hr period. When the target is reached the relay will only do 1 Delayed Trip to Lockout.
CB Wear Phase A 0.00MA^2s Phase B 0.00MA^2s Phase C 0.00MA^2s	Displays the current measure of circuit breaker wear.
CB Trip Time Time 0.0ms	Displays the circuit breaker trip time to open time. Measured from CB auxiliary contacts.
GENERAL ALARM METERS →to view	This is the sub-group that includes all the meters that are associated with the Binary inputs TEST/RESET ► allows access to this sub-group
General Alarms ALARM 1 Cleared	Displays the state of General Alarm
General Alarms ALARM 2 Cleared	
General Alarms ALARM 3 Cleared	
General Alarms ALARM 4 Cleared	
General Alarms ALARM 5 Cleared	
General Alarms ALARM 6 Cleared	
DEMAND METERS →to view	This is the sub-group that includes all the meters that are associated with DEMAND. TEST/RESET ► allows access to this sub-group
I Phase A Demand Max 0.00A Min 0.00A Mean 0.00A	Displays the Current demand based on Ia.
I Phase B Demand Max 0.00A Min 0.00A Mean 0.00A	Displays the Current demand based on Ib.
I Phase C Demand Max 0.00A Min 0.00A Mean 0.00A	Displays the Current demand based on Ic.
V Phase A Demand Max 0.00V Min 0.00V Mean 0.00V	Displays the Voltage demand based on Va.
V Phase B Demand Max 0.00V Min 0.00V Mean 0.00V	Displays the Voltage demand based on Vb.
V Phase C Demand Max 0.00V Min 0.00V Mean 0.00V	Displays the Voltage demand based on Vc.

 ©2017 Siemens Protection Devices Limited

Instrument	Description
V Phase AB Demand Max 0.00V Min 0.00V Mean 0.00V	Displays the Voltage demand based on Vab.
V Phase BC Demand Max 0.00V Min 0.00V Mean 0.00V	Displays the Voltage demand based on Vbc.
V Phase CA Demand Max 0.00V Min 0.00V Mean 0.00V	Displays the Voltage demand based on Vca.
Power P 3P Demand Max 0.00W Min 0.00W Mean 0.00W	Displays the Active Power demand.
Power Q 3P Demand Max 0.00VAr Min 0.00VAr Mean 0.00VAr	Displays the Reactive Power demand.
Power S 3P Demand Max 0.00VA Min 0.00VA Mean 0.00VA	Displays the Apparent Power demand.
Frequency Demand Max 0.000Hz Min 0.000Hz Mean 0.000Hz	Displays the Frequency demand.
MISCELLANEOUS METERS →to view	This is the sub-group that includes indication such as the relays time and date, the amount of fault and waveform records stored in the relay TEST/RESET ► allows access to this sub-group
Start Alarm Count 0 Target 100	Count of configurable type of Relay starts
Date 01/01/2000 Time 22:41:44 Waveform Recs 0 Fault Recs 0	This meter displays the date and time and the number of Fault records and Event records stored in the relay
Event Recs 0 Data Log Recs 0 Setting Group 1	
BINARY INPUT METERS →to view	This is the sub-group that includes all the meters that are associated with the Binary inputs TEST/RESET ► allows access to this sub-group
BI 1-6 ---- --	Displays the state of DC binary inputs 1 to 6 (The number of binary inputs may vary depending on model)
BINARY OUTPUT METERS →to view	This is the sub-group that includes all the meters that are associated with the Binary Outputs TEST/RESET ► allows access to this sub-group
BO 1-8 ---- ----	Displays the state of DC binary Outputs 1 to 8. (The number of binary outputs may vary depending on model)
VIRTUAL METERS →to view	This is the sub-group that shows the state of the virtual status inputs in the relay TEST/RESET ► allows access to this sub-group
V 1-8 ---- ----	Displays the state of Virtual Outputs 1 to 8 (The number of virtual

Instrument	Description
	inputs will vary depending on model)
COMMUNICATION METERS →to view	This is the sub-group that includes all the meters that are associated with Communications ports TEST/RESET ► allows access to this sub-group
COM1 X COM2	Displays which com ports are currently active
COM1 TRAFFIC COM1 Tx1 0 COM1 Rx1 Error 0 COM1 Rx1 0	Displays data traffic on Communications Port 1
COM2 TRAFFIC COM2 Tx1 0 COM2 Rx1 Error 0 COM2 Rx1 0	Displays data traffic on Communications Port 2
EN100 INFORMATION Version : EN100 Version Info Part# BF1111111111	Displays EN100 information
Network Config Mac 00000000 IP 000.000.000.000 NM 255.255.255.000	Displays EN100 network information
Gateway: 000.000.000.000 EN100 NTP info: EN100 Link ½ status info: EN100 Rx/Tx Count	Displays further EN100 61850 information
En100 Rx/Tx Error En100 Rx/Tx 10s CPU Load % EN100 Info Meters : 1-n	Displays further EN100 61850 information
QUICK LOGIC METERS →to view	This is the sub-group that includes all the meters that are associated with QuickLogic Equations TEST/RESET ► allows access to this sub-group
E 1-4 ----	
E1 Equation EQN =0 TMR 0-0 =0 CNT 0-1 =0	
E2 Equation EQN =0 TMR 0-0 =0 CNT 0-1 =0	
E3 Equation EQN =0 TMR 0-0 =0 CNT 0-1 =0	
E4 Equation EQN =0 TMR 0-0 =0 CNT 0-1 =0	

 ©2017 Siemens Protection Devices Limited

1.5 Fault Data Mode

The Fault Data Mode sub menu lists the time and date of the previous ten protection operations. The stored data about each fault can be viewed by pressing the TEST/RESET► button. Each record contains data on the operated elements, analogue values and LED flag states at the time of the fault. The data is viewed by scrolling down using the ▼ button.

Section 2: Setting & Configuring the Relay Using Reydisp Evolution

To set the relay using a communication port the user will need the following:-

PC with Reydisp Evolution Version 7.1.5.6 or later Installed. (This can be downloaded from our website and found under the submenu 'Software') This software requires windows 2000-service pack 4 or above, or windows XP with service pack 2 or above and Microsoft.NET framework for tools.

Configuration and download of IEC 61850 data and programming of graphical user logic requires the use of the Reydisp Manager software which is supplied with online instructions and help and is not documented here.

2.1 Physical Connection

The relay can be connected to Reydisp via any of the communication ports on the relay. Suitable communication Interface cable and converters are required depending which port is being used.

2.1.1 Front USB connection

To connect your pc locally via the front USB port.

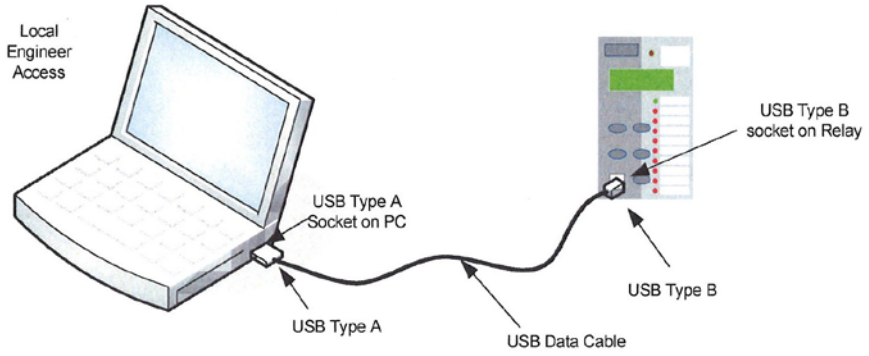

Figure 2.1-1 USB connection to PC

2.1.2 Rear RS485 connection

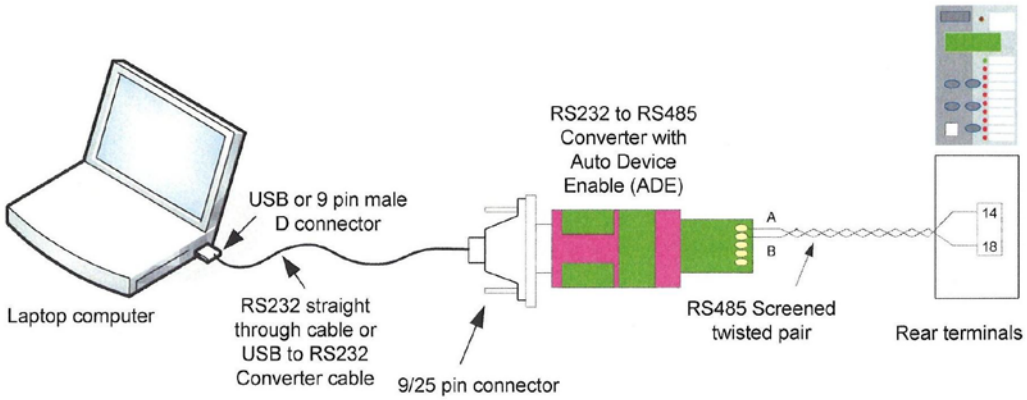

Figure 2.1-2 RS485 connection to PC

 ©2017 Siemens Protection Devices Limited

2.1.3 Optional Rear EN100 Ethernet Module (COM3)

The optional ethernet interface is primarily provided for support of IEC 61850 protocol. Support for IEC 870-5-103 is also provided over this interface to allow connection with Reydisp Evolution and Reydisp Manager software for interrogation, editing and download of relay settings and other data. Ordering options are available with two RJ45 electrical connectors or with two duplex LC fibre optic connectors.

Setting name	Range	Default	Setting	Notes
LAN Protocol	OFF, IEC60870-5-103	IEC60870-5-103		

If this setting is set to Off, access to relay data using Reydisp Evolution and Reydisp Manager software via the Ethernet interface is not available.

Connections to the optional EN100 ethernet module are made on the rear side of the relay.

Connections are made to either RJ45 sockets (electrical) or Duplex LC (fibre optic) connectors.

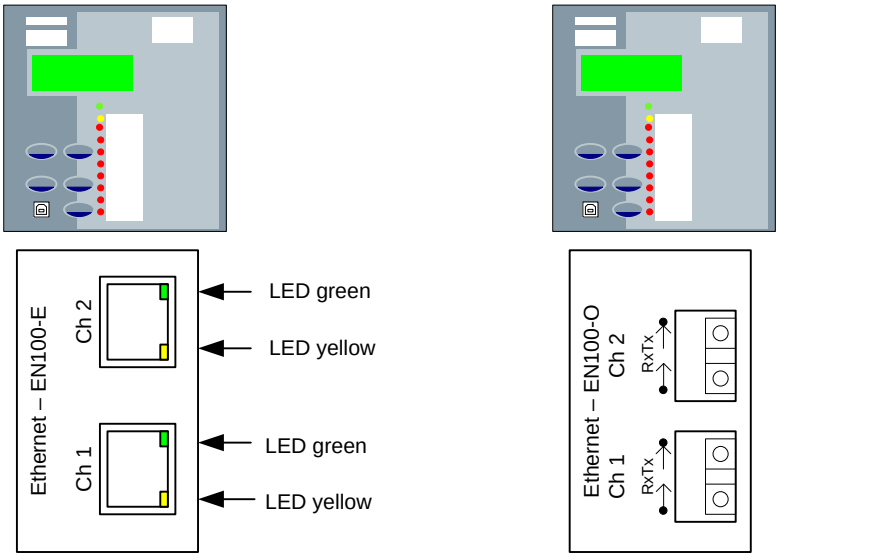

EN100 Module – RJ45 Interface

EN100 Module – Duplex-LC Interface

Green LED (Physical Link)
Off – No link
On – Link present

Yellow LED (Activity)
Off – No traffic
On/flashing - Traffic

Figure 2-3 EN100 Ethernet Module

2.1.4 Configuring Relay Serial Data Communication

Using the keys on the relay fascia scroll down the settings menus into the ‘communications’ menu and if necessary change the settings for the communication port you are using on the relay. Reydisp software uses IEC60870-5-103 protocol to communicate.
When connecting the relay to a pc using the front USB port, the Reydisp setting software will automatically detect the relay without making any setting changes in the relay first as long as the USB is selected to IEC60870-5-103.

COM1-RS485 Port and COM2-USB Port

Description	**Range**	**Default**	**Notes**
COM1-RS485 Protocol *Selects protocol to use for COM1-RS485*	OFF, IEC60870-5-103, MODBUS-RTU, DNP3	IEC60870-5-103	
COM1-RS485 Station Address *IEC 60870-5-103 Station Address*	0, 1 ... 65533, 65534	0	Address given to relay to identify that relay from others which may be using the same path for communication as other relays for example in a fibre optic hub
COM1-RS485 Baud Rate *Sets the communications baud rate for COM1-RS485*	75, 110, 150, 300, 600, 1200, 2400, 4800, 9600, 19200, 38400	19200	19200
COM1-RS485 Parity *Selects whether parity information is used*	NONE, ODD, EVEN	EVEN	EVEN
COM1-RS485 Mode *Selects whether the port is Local or Remote.*	Local, Remote, Local Or Remote	Remote	Remote
COM2-USB Protocol *Selects protocol to use for COM2-USB*	OFF, DNP3, ASCII, MODBUS-RTU, IEC60870-5-103	IEC60870-5-103	
COM2-USB Station Address *IEC 60870-5-103 Station Address*	0, 1 ... 65533, 65534	0	Address given to relay to identify it for connection to the USB front port
COM2-USB Mode *Selects whether the port is Local or Remote.*	Local, Remote, Local Or Remote	Local	Local
DNP3 Unsolicited Events *Allows unsolicited event support in the relay. When Enabled, unsolicited event transmission can be controlled by the Master. When Disabled, Master requests are ignored.*	Disabled, Enabled	Disabled	Disabled
DNP3 Destination Address *The address of the master to which unsolicited events will be sent.*	0, 1 ... 65533, 65534	0	This setting is only visible when DNP3 Unsolicited Events is Enabled
DNP3 Application Timeout	5, 6 ... 299, 300	10s	10s

 ©2017 Siemens Protection Devices Limited

2.1.5 Connecting to the Relay for setting via Reydisp

When Reydisp software is running all available communication ports will automatically be detected.
On the start page tool bar open up the sub-menu ‘File’ and select ‘Connect’.

The ‘Connection Manager’ window will display all available communication ports. With the preferred port highlighted select the ‘Properties’ option and ensure the baud rate and parity match that selected in the relay settings. Select ‘Connect’ to initiate the relay-PC connection.

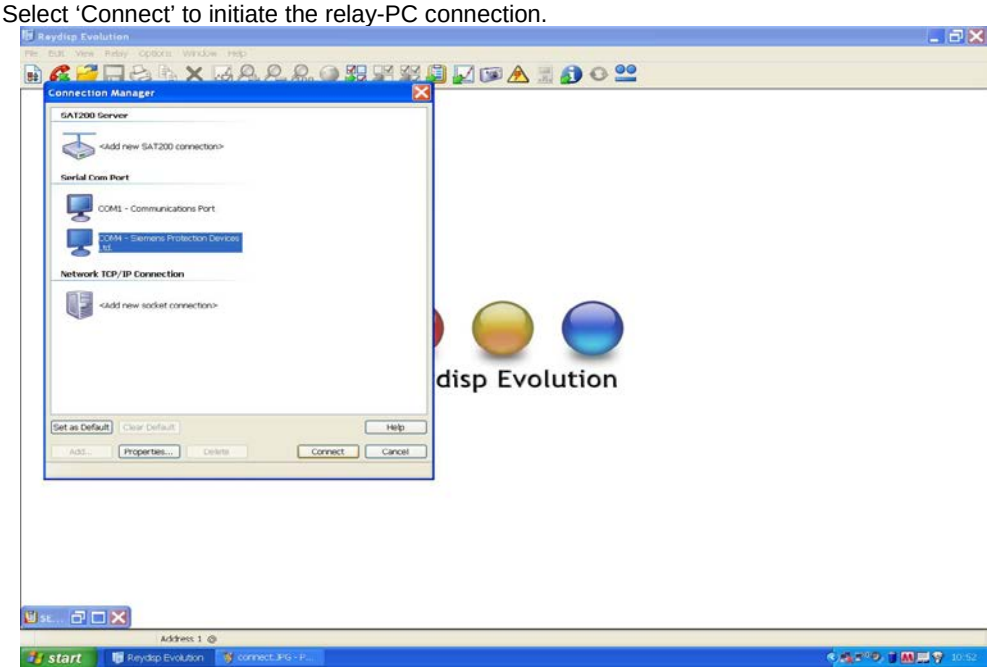

Figure 2.1-4 PC Comm Port Selection

The relay settings can now be configured using the Reydisp software. Please refer to the Reydisp Evolution Manual for further guidance.

2.1.6 Configuring the user texts using Reydisp Language Editor

As default the relay uses the text descriptions in all menus as they appear in this manual. These descriptions can be changed by installing a user language file in the relay, allowing the user to edit all views to meet their needs and provide easier operation.

The Reyrolle Language File Editor tool and its user manual are installed as part of the Reydisp Evolution software package. They can be found in your pc as sub menus of the Reydisp Evolution installation.

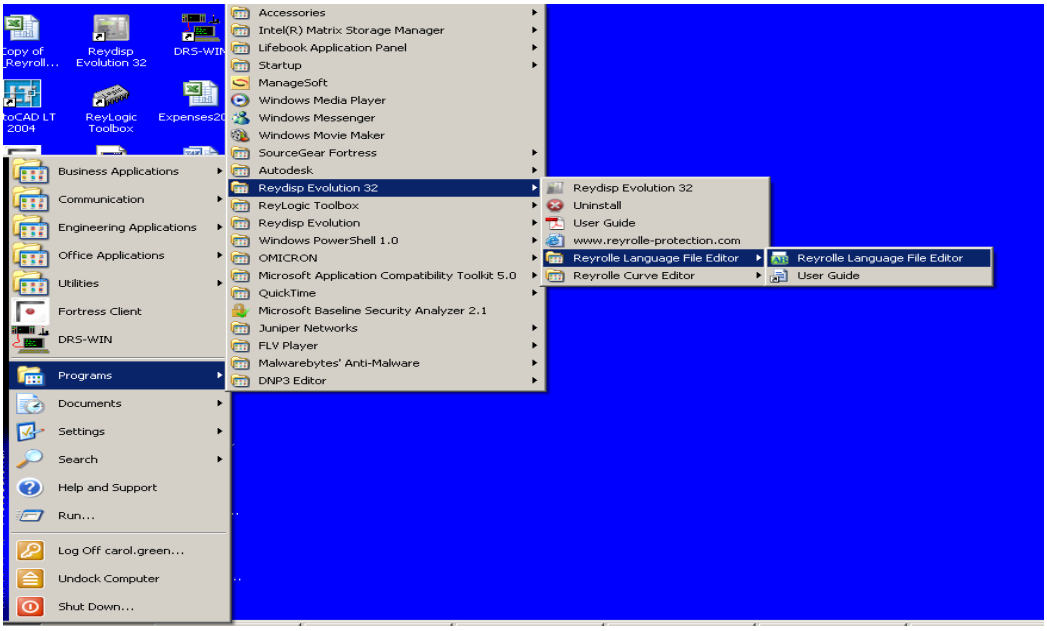

Figure 2.1-5 PC Language File Editor

When the software is opened a 'new project from template' should be used to generate your file. The file will display all default 'Original' text descriptions in one column and the 'Alternative' text in the other column. The descriptions in the 'Alternative' list can be changed and will be used in the relays menu structures. Once the file is complete, a language file can be created and loaded into the relay using the 'send file to relay' function. The communication properties in the software and on the relay must be set. The relay must be restarted after the file is installed.

To activate the language file it must be selected in the relay configuration menu, the 'Original' file is the file labelled 'ENGLISH' and the new file will be displayed using the file name allocated by the user.

Care should be taken to ensure a unique file name is given including a version control reference. The user will be prompted to restart the relay to activate the language file.

Please refer to the Language Editor Manual for further guidance.

 ©2017 Siemens Protection Devices Limited

7SR11 and 7SR12

Performance Specification

Document Release History

This document is issue 2020/02. The list of revisions up to and including this issue is:

2020/02	Standards updated to latest. 1.5.1.5 Insulation voltage across open contacts increased to 1.5kV
2019/05	AC binary input operation performance removed
2018/09	Minor change to 51SEF reference range which was larger than device.
2018/04	1.5.1.3 Cyclic Temperature with Humidity added
2017/05	Universal PSU added. 1.5.1.5 & 1.5.1.6 added.
2017/02	Detail added to PSU burden values.
2015/08	Additional software features added.
2015/06	Software Maintenance
2015/03	Minor modification
2014/10	Addition of optional IEC 61850 communication protocol.
2013/09	Software Maintenance
2013/01	Software Maintenance
2012/02	AC auxiliary power supply added
2012/01	Software Maintenance
2011/06	Software Maintenance
2010/04	Amendments following PLM review
2010/02	Reformat due to rebrand
2009/09	Revised format
2009/04	First issue

Unrestricted The copyright and other intellectual property rights in this document, and in any model or article produced from it (and including any registered or unregistered design rights) are the property of Siemens Protection Devices Limited. No part of this document shall be reproduced or modified or stored in another form, in any data retrieval system, without the permission of Siemens Protection Devices Limited, nor shall any model or article be reproduced from this document unless Siemens Protection Devices Limited consent.

While the information and guidance given in this document is believed to be correct, no liability shall be accepted for any loss or damage caused by any error or omission, whether such error or omission is the result of negligence or any other cause. Any and all such liability is disclaimed.

Contents

Section 1: Common Functions 6
1.1 General 6
1.1.1 CE Conformity 6
1.1.2 Reference 6
1.1.3 Dimensions 6
1.1.4 Weights 7
1.2 Energising Quantities 8
1.2.1 Auxiliary Power Supply 8
1.2.2 AC Analogue Current 10
1.2.3 AC Analogue Voltage 10
1.2.4 Binary (Digital) Outputs 11
1.2.5 Binary (Digital) Inputs 11
1.3 Functional performance 12
1.3.1 Instrumentation 12
1.3.2 Real Time Clock 12
1.4 Data Communication Interfaces 13
1.4.1 USB 2.0 Data Communication Interface 13
1.4.2 RS485 Data Communication Interface 13
1.4.3 Fibre Optic Ethernet Data Communication Interface (IEC 61850 Option) 13
1.4.4 Electrical Ethernet Data Communication Interface (IEC 61850 Option) 13
1.5 Environmental Performance 14
1.5.1 General 14
1.5.2 Emissions 15
1.5.3 Immunity 16
1.5.4 Mechanical 18
Section 2: Protection Functions 19
2.1 27/59 Under/over voltage 19
2.1.1 Reference 19
2.1.2 Operate and Reset Level 19
2.1.3 Operate and Reset Time 19
2.2 32 Power 20
2.2.1 Reference 20
2.2.2 Operate and Reset Level 20
2.2.3 Operate and Reset Time 20
2.2.4 Operate Threshold 20
2.3 32S Sensitive Power 21
2.3.1 Reference 21
2.3.2 Operate and Reset Level 21
2.3.3 Operate and Reset Time 21
2.3.4 Operate Threshold 21
2.4 37 Undercurrent 22
2.4.1 Reference 22
2.4.2 Operate and Reset Level 22
2.4.3 Operate and Reset Time 22
2.5 46 Negative Phase Sequence Overcurrent 23
2.5.1 Reference (46DT) 23
2.5.2 Operate and Reset Level (46DT) 23
2.5.3 Operate and Reset Time (46DT) 23
2.5.4 Reference (46IT) 23
2.5.5 Operate and Reset Level (46IT) 23
2.5.6 Operate and Reset Time (46IT) 24
2.6 47 Negative Phase Sequence Voltage 25
2.6.1 Reference (47) 25
2.6.2 Operate and Reset Level (47) 25
2.6.3 Operate and Reset Time (47) 25
2.7 49 Thermal Overload 26
2.7.1 Reference 26
2.7.2 Operate and Reset Level 26
2.7.3 Operate and Reset Time 26
2.8 50 Instantaneous Overcurrent 28

©2020 Siemens Protection Devices Limited

2.8.1 Reference 28
2.8.2 Operate and Reset Level 28
2.8.3 Operate and Reset Time 28
2.9 50G Instantaneous Measured Earth Fault 29
2.9.1 Reference 29
2.9.2 Operate and Reset Level 29
2.9.3 Operate and Reset Time 29
2.10 50N Instantaneous Derived Earth Fault 30
2.10.1 Reference 30
2.10.2 Operate and Reset Level 30
2.10.3 Operate and Reset Time 30
2.11 50SEF Instantaneous Sensitive Earth Fault 31
2.11.1 Reference 31
2.11.2 Operate and Reset Level 31
2.11.3 Operate and Reset Time 31
2.12 51 Time Delayed Overcurrent 32
2.12.1 Reference 32
2.12.2 Operate and Reset Level 32
2.12.3 Operate and Reset Time 32
2.13 51G Time Delayed Measured Earth Fault 38
2.13.1 Reference 38
2.13.2 Operate and Reset Level 38
2.13.3 Operate and Reset Time 38
2.14 51N Time Delayed Derived Earth Fault 40
2.14.1 Reference 40
2.14.2 Operate and Reset Level 40
2.14.3 Operate and Reset Time 40
2.15 51SEF Time Delayed Sensitive Earth Fault 42
2.15.1 Reference 42
2.15.2 Operate and Reset Level 42
2.15.3 Operate and Reset Time 42
2.16 51V Voltage Controlled Overcurrent 44
2.16.1 Reference 44
2.16.2 Operate and Reset Level 44
2.17 50AFD ARC Flash Detector 45
2.17.1 Reference 45
2.17.2 Operate and Reset Level 45
2.17.3 Operate and Reset Time 45
2.18 55 Power Factor 46
2.18.1 Reference 46
2.18.2 Operate and Reset Level 46
2.18.3 Operate and Reset Time 46
2.18.4 Operate Threshold 46
2.19 59N Neutral Voltage Displacement 47
2.19.1 Reference (59NDT) 47
2.19.2 Operate and Reset Level (59NDT) 47
2.19.3 Operate and Reset Time (59NDT) 47
2.19.4 Reference (59NIT) 47
2.19.5 Operate and Reset Level (59NIT) 47
2.20 64H Restricted Earth Fault Protection 49
2.20.1 Reference 49
2.20.2 Operate and Reset Level 49
2.20.3 Operate and Reset Time 49
2.21 67/67N Directional Overcurrent & Earth Fault 50
2.21.1 Reference 50
2.21.2 Operate Angle 50
2.21.3 Operate Threshold 50
2.21.4 Operate and Reset Time 50
2.22 Directional SEF - Wattmetric 51
2.22.1 Reference 51
2.22.2 Operate and Reset Level 51
2.22.3 Operate and Reset Time 51
2.23 81 Under/over frequency 52

2.23.1 Reference ... 52
2.23.2 Operate and Reset Level ... 52
2.23.3 Operate and Reset Time ... 52

Section 3: Supervision Functions ... 53

3.1 46BC Broken Conductor ... 53
3.1.1 Reference ... 53
3.1.2 Operate and Reset Level ... 53
3.1.3 Operate and Reset Time ... 53

3.2 50BF Circuit Breaker Fail ... 54
3.2.1 Reference ... 54
3.2.2 Operate and Reset Level ... 54
3.2.3 Operate and Reset Time ... 54

3.3 60CTS & 60CTS-I Current Transformer Supervision ... 55
3.3.1 Reference ... 55
3.3.2 Current & Voltage Threshold ... 55
3.3.3 Operate and Reset Time ... 55

3.4 60VTS Voltage Transformer Supervision ... 56
3.4.1 Reference ... 56
3.4.2 Operate and Reset Level ... 56
3.4.3 Operate and Reset Time ... 56

3.5 74TCS & 74CCS Trip & Close Circuit Supervision ... 57
3.5.1 Reference ... 57
3.5.2 Operate and Reset Time ... 57

3.6 81HBL2 Inrush Detector ... 57
3.6.1 Reference ... 57
3.6.2 Operate and Reset Time ... 57

List of Figures

Figure 2.7-1 Thermal Overload Protection Curves ... 27
Figure 2.12-1 IEC IDMTL Curves (Time Multiplier=1) ... 34
Figure 2.12-2 ANSI IDMTL Operate Curves (Time Multiplier=1) ... 35
Figure 2.12-3 ANSI Reset Curves (Time Multiplier=1) ... 36
Figure 2.12-4 IEC Reset Curves (Time Multiplier=1) ... 37

©2020 Siemens Protection Devices Limited

Section 1: Common Functions

1.1 General

1.1.1 CE Conformity

CE This product is CE compliant to relevant EU directives.

1.1.2 Reference

This product complies with IEC 60255-1, IEC 60255-26, IEC 60255-27, IEC 60255-12, IEC61000-4-8

and ENATS 48-5

and withdrawn standards IEC 60255-3, IEC 60255-6, IEC60255-11,

1.1.2.1 Accuracy Reference Conditions

This product has been tested under the following conditions, unless specifically stated otherwise.

Parameter	Value
Auxiliary supply	nominal
Frequency	nominal
Ambient temperature	20 °C

1.1.3 Dimensions

Parameter	Value
E4 case width	103.5 mm
E6 case width	155.5 mm
Height	177 mm
Depth behind panel, including clearance for: -	
Wiring	241.5 mm
Fibre Optic	286.5 mm
Ethernet enclosure	261.5 mm
Depth below Ethernet variant for cables	75 mm
Projection (from front of panel)	31 mm

See appropriate case outline and panel drilling drawing, as specified in Diagrams and Parameters of the Installation section, for complete dimensional specifications.

1.1.4 Weights

Parameter		Value
Net Weight	7SR1101, E4 case	2.7 kg
	7SR1102, E4 case	3.2 kg
	7SR1103, E4 case	3.2 kg
	7SR1107, E4 case	3.2 kg
	7SR1204, E4 case	2.7 kg
	7SR1205, E4 case	3.2.kg
	7SR1206, E4 case	3.2 kg
	7SR1208, E4 case	3.2 kg
	7SR1102, E6 case	4.15 kg
	7SR1103, E6 case	4.15 kg
	7SR1107, E6 case	4.15 kg
	7SR1205, E6 case	4.15 kg
	7SR1206, E6 case	4.15 kg
	7SR1208, E6 case	4.15 kg

Additional Transport packaging: add 0.4kg

©2020 Siemens Protection Devices Limited

1.2 Energising Quantities

1.2.1 Auxiliary Power Supply

ENATS 48-4

Nominal Operating Range		Absolute Range*	Comments
V_{aux}	24 to 60 VDC	18 to 72 VDC	Low voltage (LV) PSU suitable for 24VDC, 30VDC, 48VDC and 60VDC systems
	80 to 250 VDC 115 VAC 50/60Hz	64 to 300 VDC 92 to 138 V rms AC	High Voltage (HV) PSU suitable for 110VDC, 220VDC and 115VA systems.
	24 to 250 VDC 100 to 230 VAC 50/60Hz	19.2 to 275 VDC 80 – 253VAC	Universal PSU (UPSU) suitable for 24 - 250 Volts DC and 100 - 230 Volts AC systems

***No relay operation outside of this range is permissible or implied**.

1.2.1.1 Burden

IEC 60255-1, IEC 60255-27

Battery loading can be estimated from the following maximum figures (LV and HV PSU):

Attribute		Watts					VA
Voltage		24V	30V	48V	110V	220V	115V AC rms 50/60Hz
Quiescent Relay (inc.'PROT HEALTHY' LED)		3.7			3.6		9
Backlight		1.3					3.2
LED - Red or Green)	Each led	0.03					0.05
LED – Yellow	Each led	0.06					0.1
Binary Output	Each output	0.35					0.7
Optional IEC 61850 Comms Interface		2.5					5.5

Battery loading can be estimated from the following approximate figures (Universal PSU):

Attribute	Watts (DC)						
Voltage	24	48	60	110	125	220	250
Quiescent Relay (inc. 'PROT HEALTHY' LED)	3.8	3.5	3.4	3.3	3.2	3.0	3.0
Backlight	1.4	1.3	1.2	1.2	1.2	1.1	1.1
Per LED – (Red or Green)	0.03	0.03	0.03	0.03	0.03	0.03	0.03
Per LED – Yellow	0.06	0.06	0.06	0.06	0.06	0.06	0.06
Per Binary Output	0.4	0.35	0.35	0.35	0.35	0.3	0.3
Optional IEC 61850 Comms Interface	2.7	2.6	2.5	2.5	2.5	2.5	2.5

©2020 Siemens Protection Devices Limited

AC supply loading

Attribute	VA (RMS)					
Voltage	100	110	115	120	200	230
Quiescent Relay (inc. 'PROT HEALTHY' LED)	7.5	7.5	7.5	7.5	8	9
Backlight	2	2	2	2	2.1	2.1
Per LED – (Red or Green)	0.04	0.04	0.04	0.04	0.04	0.04
Per LED – Yellow	0.08	0.08	0.08	0.08	0.08	0.08
Per Binary Output	0.6	0.6	0.6	0.6	0.7	0.7
Optional IEC 61850 Comms Interface	5	5	5	5	5.5	5.5

1.2.1.2 Operational Features

Attribute	Value	Comments
0% Dip Withstand Period	50ms	
Dip Immunity Acquisition Period	5minutes	Typical time after switch on to attain claimed immunity to dips
NOTE: Dips in supply that fall below the minimum voltage for a period greater than the 0% Dip With stand Period will invoke a relay reset.		
During conditions of auxiliary input voltage variations which are not described (1) in section 1.2.1 relays with HV or LV PSU modules may enter a safety protection mode where a power supply shutdown occurs. This condition is designed to protect the power supply from damage as well as prevent internal relay faults from developing into dangerous situations. Once the relay has entered this safety mode, it may be necessary to reduce the auxiliary input voltage to zero volts for up to 30 seconds before re-application of the auxiliary supply will cause the relay to power up and operate normally. (1) Using fuses as on/off switches or allowing batteries to run at very low cell voltages for extended periods and then attempting to re-charge them are examples of such auxiliary supply conditions.		

1.2.2 AC Analogue Current

Nominal		Measuring Range
In	1, 5 A Phase, Earth	80 *xIn*
	1, 5 A SEF	10 *xIn*
fn	50, 60Hz	47.5 to 52.5Hz and 57 to 63Hz

Note. 1A and 5A nominal inputs are user selectable on each model.

1.2.2.1 Burden

Attribute	Value - Phase, Earth and SEF	
	1A	5A
AC Burden	≤ 0.1 VA	≤ 0.3 VA
Input Impedance (typical)	0.05 Ω	0.01 Ω

1.2.2.2 Thermal Withstand

ENATS48-5

Overload Period	Overload Current Phase, Earth and SEF	
	1A	5A
Continuous	3.0 *xIn*	
10 minutes	3.5 *xIn*	
5 minutes	4.0 *xIn*	
3 minutes	5.0 *xIn*	
2 minutes	6.0 *xIn*	
3 seconds	57.7A	202A
2 seconds	70.7A	247A
1 second	100A	350A
1 cycle	700A	2500A

1.2.3 AC Analogue Voltage

Attribute	Nominal	Operating Range
Vn	40 to 160 Vrms	0 to 200 Vrms
fn	50, 60Hz	47.5 to 52.5Hz and 57 to 63Hz

1.2.3.1 Burden

Attribute	Value
AC Burden	- 0.02 VA @ 63.5 V , ≤ 0.06 VA @ 110 Vrms

1.2.3.2 Thermal Withstand

Attribute	Value
Overvoltage Withstand (Continuous)	300 Vrms

1.2.4 Binary (Digital) Outputs

Contact rating to IEC 60255-0-2

Attribute		**Value**
Carry continuously		5A AC or DC
Make and carry (L/R ≤ 40 ms and V ≤ 300 V)	for 0.5 s	20A AC or DC
	for 0.2 s	30A AC or DC
Break (≤ 5 A and ≤ 300 V)	AC resistive	1250 VA
	AC inductive	250 VA at p.f. ≤ 0.4
	DC resistive	75 W
	DC inductive	30 W at L/R ≤ 40ms 50 W at L/R ≤ 10ms
Contact Operate / Release Time		7ms / 3ms
Minimum number of operations		1000 at maximum load
Minimum recommended load		0.5 W at minimum of 10mA or 5V

1.2.5 Binary (Digital) Inputs

Operation ENATS48-4

	Type (maximum threshold)	**Nominal Voltage**	**Minimum threshold**	**Maximum withstand**
V_{BI}	19 VDC	24, 48, 60 110, 220 V DC	17 VDC	320 VDC
	88 VDC	110, 220 V DC	74 VDC	320 VDC

Attribute		**Value**
Maximum DC current for operation	V_{BI} = 19 V	1.5mA
	V_{BI} = 88 V	1.5mA
Reset/Operate voltage ratio		≥ 90 %
Response time		< 9ms*
Response time when programmed to energise an output relay contact (i.e. includes output relay operation)		< 20ms*

* The binary inputs have a low minimum operate current and can be set for high speed operation. To achieve immunity from AC interference, a BI pick-up delay of typically one-cycle can be applied. This setting is applied by default.

1.3 Functional performance

1.3.1 Instrumentation

	Instrument Value	Reference	Typical accuracy
I	Current	0.1 xIn ≤ I ≤ 3.0 xIn	± 1 % In
V	Voltage	0.8 xVn ≤ V ≤ 1.2 xVn	± 1 % Vn
W,Var, VA	Power, real and apparent	V = Vn, I ≥ 0.1 - 2 xIn, pf ≥ 0.8	± 3% Pn, where Pn = Vn x In
pf	Power factor	V = Vn, I ≥ 0.1 – 2 xIn, pf ≥ 0.8	± 0.05
F	Frequency	F = 47.5 to 52.5Hz @ 50Hz and 57 to 63Hz @60Hz	± 10mHz

1.3.2 Real Time Clock

1.3.2.1 Internal Clock

The specification below applies only while no external synchronisation signal (e.g. 60870-5-103) is being received.

Attribute	Value
Accuracy (-10 to +55ºC)	± 3.5 p.p.m

1.4 Data Communication Interfaces

1.4.1 USB 2.0 Data Communication Interface

Attribute	Value
Physical layer	Electrical
Connectors	USB-Type B

1.4.2 RS485 Data Communication Interface

Attribute	Value
Physical layer	Electrical
Connectors	4mm Ring Crimp

1.4.3 Fibre Optic Ethernet Data Communication Interface (IEC 61850 Option)

Attribute	Value
Physical layer	Fibre-optic
Connectors	Duplex LC 100BaseF in acc. With IEEE802.3
Recommended fibre	62.5/125 μm glass fibre with Duplex-LC connector
Transmission Speed	100 MBits/s
Optical Wavelength	1300 nm
Bridgeable distance	2 km

1.4.4 Electrical Ethernet Data Communication Interface (IEC 61850 Option)

Attribute	Value
Physical layer	Electrical
Connectors	RJ45 100BaseT in acc. With IEEE802.3
Recommended Cable	Minimum: Category 5 S/FTP (shielded/screened twisted pair)
Transmission Speed	100 MBits/s
Test Voltage (with regard to socket)	500 VAC 50 Hz
Bridgeable distance	20 m

©2020 Siemens Protection Devices Limited

1.5 Environmental Performance

1.5.1 General

1.5.1.1 Temperature

IEC 60255-1 & IEC 60068-2-1/2

Type	Level
Operating range	-10 °C to +55 °C
Storage range	-25 °C to +70 °C

1.5.1.2 Humidity

IEC 60255-1 & IEC 60068-2-78

Type	Level
Operational test	56 days at 40 °C and 93 % relative humidity

1.5.1.3 Cyclic Temperature and Humidity

IEC 60255-1 & IEC 60068-2-30

Type	Level
Operational test	25°C to 55 °C (Outdoor equipment) and 97/93 % relative humidity, 6 x 24h (12h + 12h) cycles.

1.5.1.4 Impulse (Transient Overvoltage)

IEC 60255-27

IEC 60255-5 (withdrawn)

Type	Level
Between all terminals and earth, or between any two independent circuits	5.0 kV, 1.2/50 μs 0.5j

1.5.1.5 Dielectric Insulation

IEC 60255-27

IEC 60255-5 (withdrawn)

Type	Level
Between any terminal and earth	2.5 kV AC RMS for 1 min
Between independent circuits	
Across normally open contacts	1.5 kV AC RMS for 1 min

1.5.1.6 Installation Category

IEC 60255-27

Type	Level
Installation Category (Overvoltage Category)	Class III

1.5.1.7 Pollution

IEC 60255-27

Level
Pollution Degree 2

1.5.1.8 IP Ratings

IEC60529

Type		Level
Installed with cover on	Front	IP 51
	Rear Enclosure (case)	IP 20
Installed with cover removed	Front	IP 20
	Rear Enclosure (case)	IP 20
Rear wiring terminal access	IEC 60255-27:2014 (5.1.5.2.6)	IP 10

1.5.2 Emissions

IEC 60255-26

IEC 60255-25 (withdrawn)

1.5.2.1 Radiated Emissions: Enclosure

IEC 60255-26 & CISPR 11

Type	Limits at 10 m, Quasi-peak
30 to 230 MHz	40 dB(μV/m)
230 to 1000 MHz	47 dB(μV/m)

1.5.2.2 Radiated Emissions: Conducted

IEC 60255-26 & CISPR 22

Type	Limits	
	Quasi-peak	Average
0.15 to 0.5 MHz	79 dB(μV)	66 dB(μV)
0.5 to 30 MHz	73 dB(μV)	60 dB(μV)

©2020 Siemens Protection Devices Limited

1.5.3 Immunity

1.5.3.1 Auxiliary Supply Variation

IEC 60255-26, IEC 60255-27

EN/IEC 61000-4-11, EN/IEC 61000-4-29, EN/IEC 61000-4-17

EATS 48-5

IEC 60255-11 (withdrawn)

Type of Phenomena	Standard	Test Specifications	Duration	Declared Operation
Voltage Dips (DC auxiliary supply)	IEC 60255-26 IEC 61000-4-11 IEC 61000-4-29	0% RV	50ms (Claimed)	Normal Operation[1]
		40% RV	200ms	Normal operation[1] except where Dip falls below the relay minimum voltage then Relay Restart[2]
		70% RV	500ms	Normal operation[1] except where Dip falls below the relay minimum voltage then Relay Restart[2]
Voltage Dips (AC auxiliary supply)		0% RV	2.5/3 cycles @50/60Hz (claimed)	Normal Operation[1]
		40% RV	10/12 cycles @50/60Hz	Normal Operation[1]
		70% RV	25/30 cycles @50/60Hz	Normal Operation[1]
Voltage Interruptions (DC auxiliary supply)		0% RV	5s	Relay Reset[2]
Voltage Interruptions (AC auxiliary supply)		0% RV	250/300 cycles @50/60Hz	Relay Reset[2]
Alternating Component In DC (Ripple) (DC auxiliary supply)	IEC 60255-26 IEC 61000-4-17	15% max and min RV	Continuous	Normal operation[1]
Gradual Shut-down/ Start-up (DC auxiliary supply)	IEC 60255-26	Max & min RV to 0V	60s	Relay Reset
		0V	5minutes	Relay Off
		0V to min & max RV	60s	Relay Restart[2]
Reversal of DC Power Supply polarity		Max reversed RV	1minute	24-60 V Dc models: No operation 80-250 V DC, 115 V AC models: Normal Operation[1] Universal PSU models Normal Operation[1]

Key:

RV = Residual Voltage Test Value. Two conditions: (a) range voltage low-20% and
(b) range voltage high +20%

[1] No effect on relay performance

[2] Restart with no mal-operation, loss of data or relay damage

1.5.3.2 Slow Damped Oscillatory Wave (High Frequency Disturbance)

IEC 60255-26 & IEC 61000-4-18

IEC 60255-22-1 (withdrawn)

Type	**Level**
Common (longitudinal) mode	2.5 kV
Series (transverse) mode	1.0 kV

1.5.3.3 Electrostatic Discharge

IEC 60255-26 & IEC 61000-4-2

IEC 60255-22-2 (withdrawn)

	Level	**Variation**
With front cover fitted	Air discharge Level IV, 15kV	≤ 5 %
With front cover removed for access	Air discharge Level III, 8 kV	≤ 5 %

1.5.3.4 Radiated Immunity

IEC 60255-26 & IEC 61000-4-3

IEC 60255-22-3 2 (withdrawn)

Type		**Level**
80 MHz to 1000 MHz	Sweep	10 V/m
1.4GHz to 2.7GHz	Sweep	10V/m
80,160,380,450,900,1850,2150 MHz	Spot	10V/m

1.5.3.5 Fast Transients

IEC 60255-26

Type		**Level**
5/50 ns 5 kHz repetitive	Analog inputs, Aux Power & I/O	4kV
	RS485 communications port	2kV

1.5.3.6 Surge Immunity

IEC 60255-26 & IEC 61000-4-5

IEC 60255-22-5 (withdrawn)

Type	**Level**	**Variation**
Analog Inputs: Line to Earth	4.0 kV	≤ 10%
Case, Aux Power & I/O: Line to Earth	2.0 kV	≤ 10%
RS485 Comms port: Line to Earth	1.0 kV	No Data Loss
Analog Inputs: Line to Line	1.0 kV	≤ 10%
Case, Aux Power & I/O: Line to Line	1.0 kV *	≤ 10%

* Note 50ms DTL pick-up delay applied to binary inputs

©2020 Siemens Protection Devices Limited

1.5.3.7 Conducted Radio Frequency Interference

IEC 60255-26 & IEC 61000-4-6

IEC 60255-22-6 (withdrawn

Type	Level
0.15 to 80 MHz	10 V
Spot Frequencies 27 MHz & 68 MHz	10 V

1.5.3.8 Magnetic Field with Power Frequency

IEC 60255-26 & IEC 61000-4-8 Level 5

100A/m, (0.126mT) continuous	50Hz
1000A/m, (1.26mT) for 3s	

1.5.4 Mechanical

1.5.4.1 Vibration (Sinusoidal)

IEC 60255-27 & IEC 60255-21-1 Class I

Type	Level	Variation
Vibration response	0.5 gn	≤ 5 %
Vibration endurance	1.0 gn	

1.5.4.2 Shock and Bump

IEC 60255-27 & IEC 60255-21-2 Class I

Type	Level	Variation
Shock response	5 gn, 11 ms	≤ 5 %
Shock withstand	15 gn, 11 ms	
Bump test	10 gn, 16 ms	

1.5.4.3 Seismic

IEC 60255-27 & IEC 60255-21-3 Class I

Type	Level	Variation
Seismic response	X-plane - 3.5mm displacement below crossover freq (8-9Hz) 1.0gn above	≤ 5 %
	Y-plane - 1.5mm displacement below crossover freq (8-9Hz) 0.5gn above	

1.5.4.4 Mechanical Classification

Type	Level
Durability	> 10^6 operations

Section 2: Protection Functions

2.1 27/59 Under/over voltage

2.1.1 Reference

	Parameter	Value
V_s	Setting	5, 5.5…200V
hyst	Hysteresis setting	0, 0.1… 80.0%
t_d	Delay setting	0.00, 0.01…20.00, 20.50… 100, 101… 1000, 1010… 10000, 10100… 14400 s

2.1.2 Operate and Reset Level

	Attribute		Value
V_{op}	Operate level		100 % *Vs*, ± 1 % or ±0.25V
	Reset level	Overvoltage	= (100 % - *hyst*) x V_{op}, ± 1 % or ± 0.25V
		Undervoltage	= (100 % + *hyst*) x V_{op} ± 1 % or ± 0.25V
	Repeatability		± 1 %
	Variation	-10 °C to +55 °C	≤ 5 %
		f_{nom} ± 5 %	≤ 5 %

2.1.3 Operate and Reset Time

	Attribute		Value
t_{basicE}	Element basic operate time	Overvoltage	0 to 1.1 x *Vs*: 73 ms, ± 10ms
			0 to 2.0 x*Vs*: 63 ms, ± 10ms
		Undervoltage	1.1 to 0.5 x*Vs*: 58 ms, ± 10ms
t_{op}	Operate time following delay		t_{basic} + t_d, ± 1 % or ± 10ms
	Repeatability		± 1 % or ± 10ms
	Disengaging time		< 80 ms

2.2 32 Power

2.2.1 Reference

	Parameter	Value
Ss	*32-n Setting*	*0.05…2 x Sn*
t_d	32-n Delay setting	0.00 … 14400 s

2.2.2 Operate and Reset Level

	Attribute		**Value**
S_{op}	Operate level		100 % *Ss*, ± 5% or ± 2% Sn
	Reset level	Over-power	≥ 95 % S_{op}
		Under-power	≤ 105 % S_{op}
	Variation	-10 °C to +55 °C	≤ 5 %
		f_{nom} – 3 Hz to f_{nom} + 2 Hz	≤ 5 %

2.2.3 Operate and Reset Time

	Attribute		**Value**
t_{basic}	Element basic operate time	Over-power	1.1 x *Ss*: 60 ms ± 10 ms
			2.0 x *Ss*: 45 ms ± 10ms
		Under-power	0.5 x *Ss*: 30 ms ± 10ms
t_{op}	Operate time following delay		t_{basic} + t_d, ± 1 % or ± 10ms
	Disengaging time		< 40 ms

2.2.4 Operate Threshold

	Attribute		**Value**
	Minimum levels for operation	I	2.5 % In
		V	2.5% Vn

2.3 32S Sensitive Power

2.3.1 Reference

	Parameter	Value
S_s	32S-n Setting	0.005…2 x Sn
t_d	32S-n Delay setting	0.00 … 14400 s

2.3.2 Operate and Reset Level

	Attribute		Value
S_{op}	Operate level		100 % *Ss*, ± 5% or ± 2% Sn
	Reset level	Over-power	≥ 95 % S_{op}
		Under-power	≤ 105 % S_{op}
	Variation	-10 °C to +55 °C	≤ 5 %
		f_{nom} – 3 Hz to f_{nom} + 2 Hz	≤ 5 %

2.3.3 Operate and Reset Time

	Attribute		Value
t_{basicE}	Element basic operate time	Over-power	1.1 x *Ss*: 60 ms ± 10 ms
			2.0 x *Ss*: 45 ms ± 10ms
		Under-power	0.5 x *Ss*: 30 ms ± 10ms
t_{op}	Operate time following delay		t_{basic} + t_d, ± 1 % or ± 10ms
	Disengaging time		< 40 ms

2.3.4 Operate Threshold

	Attribute		Value
	Minimum levels for operation	I	2.5 % In
		V	2.5% Vn

2.4 37 Undercurrent

2.4.1 Reference

	Parameter	Value
Is	Setting	0.05, 0.10…5.0 *xIn*
t_d	Delay setting	0.00, 0.01…20.00, 20.10… 100, 101… 1000, 1010… 10000, 10100… 14400 s

2.4.2 Operate and Reset Level

	Attribute		Value
I_{op}	Operate level		100 % *Is*, ± 5 % or ± 1% *In*
	Reset level		≤ 105 % I_{op}
	Repeatability		± 1 %
	Variation	-10 °C to +55 °C	≤ 5 %
		f_{nom} ± 5 %	≤ 5 %

2.4.3 Operate and Reset Time

	Attribute	Value
t_{basic}	Element basic operate time	1.1 to 0.5 x*Is*: 35 ms, ± 10ms
t_{op}	Operate time following delay	t_{basic} + t_d, ± 1 % or ± 10ms
	Repeatability	± 1 % or ± 10ms
	Overshoot time	< 40 ms
	Disengaging time	< 60 ms

2.5 46 Negative Phase Sequence Overcurrent

2.5.1 Reference (46DT)

	Parameter	Value
I_s	Setting	0.05, 0.06... 4.0*xIn*
t_d	Delay setting	0.00, 0.01…20.00, 20.10… 100, 101… 1000, 1010… 10000, 10100… 14400 s

2.5.2 Operate and Reset Level (46DT)

	Attribute		Value
I_{op}	Operate level		100 % *Is*, ± 5 % or ± 1% *In*
	Reset level		≥ 95 % I_{op}
	Repeatability		± 1 %
	Transient overreach (X/R ≤ 100)		≤ -5 %
	Variation	-10 °C to +55 °C	≤ 5 %
		f_{nom} ± 5 %	≤ 5 %

2.5.3 Operate and Reset Time (46DT)

	Attribute	Value
t_{basic}	Element basic operate time	0 to 2 x*Is*: 40 ms, ± 10ms
		0 to 5 xIs: 30 ms, ± 10ms
t_{op}	Operate time following delay	t_{basic} + t_d, ± 1 % or ± 10ms
	Repeatability	± 1 % or ± 10ms
	Overshoot time	<40 ms
	Disengaging time	< 60 ms

2.5.4 Reference (46IT)

	Parameter	Value
char	Characteristic setting	IEC-NI, -VI, -EI, -LTI; ANSI-MI, -VI, -EI; DTL
Tm	Time Multiplier setting	0.025, 0.030… 1.0
I_s	Setting	0.05, 0.06… 2.5*xIn*
I	Applied Current (for operate time) IDMTL	2 to 20 x Is
t_d	Delay setting	0, 0.01… 20 s
t_{res}	Reset setting	ANSI DECAYING, 0, 1… 60 s

2.5.5 Operate and Reset Level (46IT)

	Attribute		Value
I_{op}	Operate level		105 % *Is*, ± 4 % or ± 1% *In*
	Reset level		≥ 95 % I_{op}
	Repeatability		± 1 %
	Variation	-10 °C to +55 °C	≤ 5 %
		f_{nom} ± 5 %	≤ 5 %

2.5.6 Operate and Reset Time (46IT)

	Attribute		Value
	Starter operate time (≥ 2*xIs*)		35 ms, ± 10ms
t_{op}	Operate time	*char* = IEC-NI, IEC-VI, IEC-EI, IEC-LTI	$t_{op} = \frac{K}{\left[\frac{I}{Is}\right]^{\alpha} - 1} \times Tm$, ± 5 % absolute or ± 50 ms, for char = IEC-NI : K = 0.14, α = 0.02 IEC-VI : K = 13.5, α = 1.0 IEC-EI : K = 80.0, α = 2.0 IEC-LTI : K = 120.0, α = 1.0
		char = ANSI-MI, ANSI-VI, ANSI-EI	$t_{op} = \left[\frac{A}{\left[\frac{I}{Is}\right]^{P} - 1} + B\right] \times Tm$, ± 5 % absolute or ± 50 ms, (ANSI-EI +5% -10 % absolute for I/Is>10 with TMS >2) for char = ANSI-MI : A = 0.0515, B = 0.114, P = 0.02 ANSI-VI : A = 19.61, B = 0.491, P = 2.0 ANSI-EI : A = 28.2, B = 0.1217, P = 2.0
		char = DTL	t_d, ± 1 % or ± 20ms
	Reset time	ANSI DECAYING	$t_{res} = \frac{R}{\left[\frac{I}{Is}\right]^{2} - 1} \times Tm$, ± 5 % absolute or ± 50 ms, for char = ANSI-MI : R = 4.85 ANSI-VI : R = 21.6 ANSI-EI : R = 29.1
		IEC DECAYING	$t_{res} = \frac{R}{\left[\frac{I}{Is}\right]^{2} - 1} \times Tm$, ± 5 % absolute or ± 50 ms, for char = IEC-NI : R = 9.7 IEC-VI : R = 43.2 IEC-EI : R = 58.2 IEC-LTI : R = 80
		t_{res}	t_{res}, ± 1 % or ± 20ms
	Repeatability		± 1 % or ± 20ms
	Overshoot time		< 40 ms
	Disengaging time		< 60 ms

2.6 47 Negative Phase Sequence Voltage

2.6.1 Reference (47)

	Parameter	Value
Vs	Setting	1, 1.5… 90V
V_s *Guard*	Guard Setting	1, 1.5, …199.5, 200 V
Hyst.	Hysteresis	0, 0.1… 80%
t_d	Delay setting	0.00, 0.01…20.00, 20.10… 100, 101… 1000, 1010… 10000, 10100… 14400 s

2.6.2 Operate and Reset Level (47)

	Attribute		Value
V_{op}	Operate level		100 % *Vs*, ± 2 % or ± 0.5 V
	Reset level		(100%-Hyst.) x V_{op} ± 1% or ± 0.25V
	Repeatability		± 1 %
	Variation	-10 °C to +55 °C	≤ 5 %
		f_{nom} ± 5 %	≤ 5 %

2.6.3 Operate and Reset Time (47)

	Attribute	Value
t_{basic}	Element basic operate time	0V to 2.0 *xVs*, 80 ms, ± 20ms
		0V to 10 *xVs*, 55ms, ± 20ms
t_{op}	Operate time following delay	t_{basic} + t_d, ± 2 % or ± 20ms
	Repeatability	± 1 % or ± 20ms
	Overshoot time	< 40 ms
	Disengaging time	< 90 ms

©2020 Siemens Protection Devices Limited

2.7 49 Thermal Overload

2.7.1 Reference

	Parameter	Value
Is	Overload setting	1.0 x*In*
i	Applied Current (for operate time)	1.2 to 10 x Is
τ	Time constant setting	1, 10, 100, 1000 min

2.7.2 Operate and Reset Level

	Attribute		Value
I_{ol}	Overload level		100 % *Is*, ± 5 % or ± 1% *In*
	Reset level		≥ 95 % I_{ol}
	Repeatability		± 1 %
	Variation	-10 °C to +55 °C	≤ 5 %
		f_{nom} ± 5 %	≤ 5 %

2.7.3 Operate and Reset Time

	Attribute	Value	
t_{op}	Overload trip operate time	$t = \tau \times \ln\left\{\frac{I^2 - I_P^2}{I^2 - (k \times I_B)^2}\right\}$ where I_P = prior current	± 5 % absolute or ± 100ms, (Is: 0.3 – 3 x In)
	Repeatability	± 100ms	
Note:- Fastest operate time is at 10 xIs			

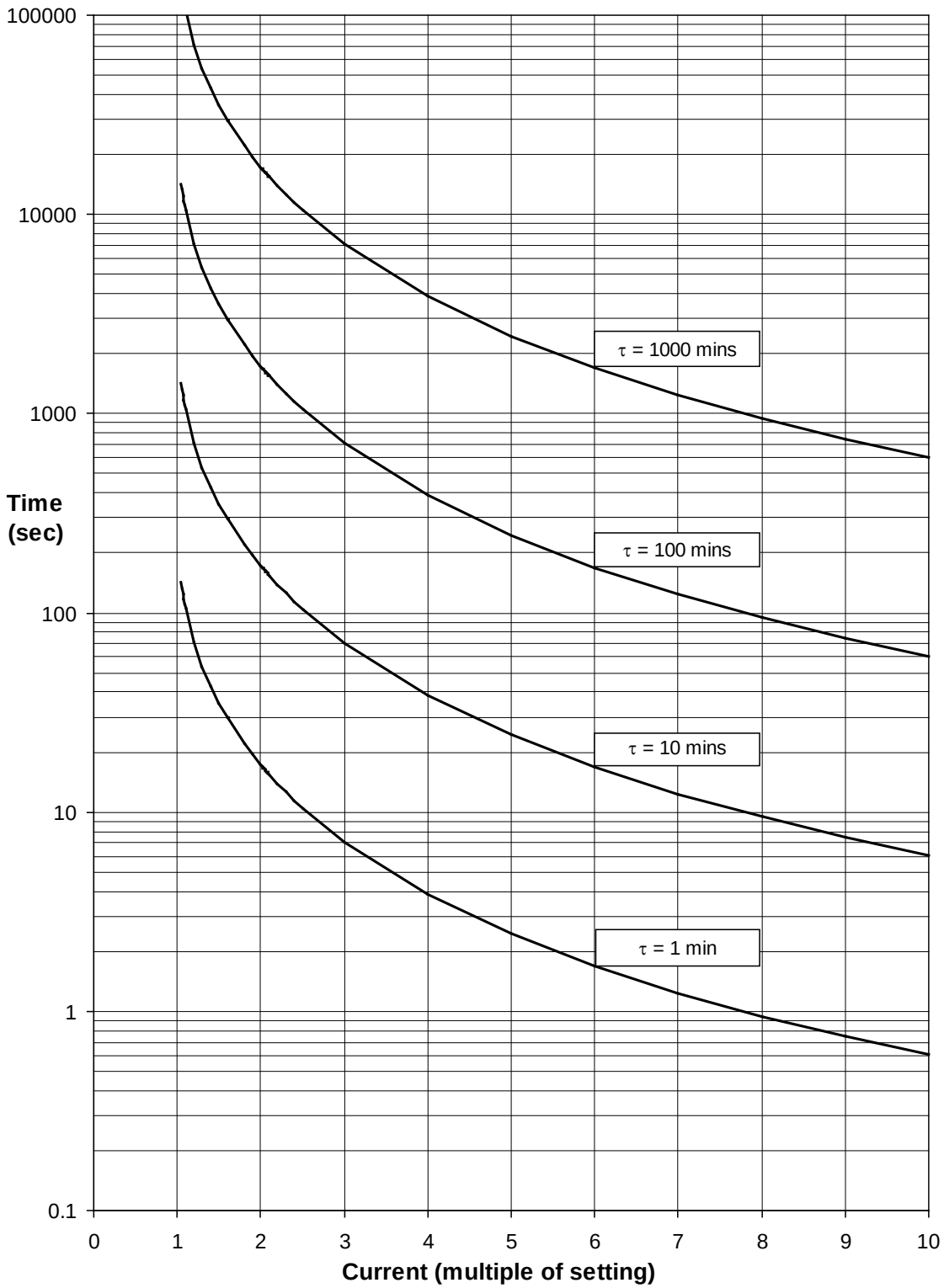

Figure 2.7-1 Thermal Overload Protection Curves

2.8 50 Instantaneous Overcurrent

2.8.1 Reference

	Parameter	Value
Is	Setting	0.05, 0.06… 2.5, 2.55… 50 x*In*
t_d	Delay setting	0.00, 0.01…20.00, 20.10… 100, 101… 1000, 1010… 10000, 10100… 14400 s

2.8.2 Operate and Reset Level

	Attribute		Value
I_{op}	Operate level		100 % *Is*, ± 5 % or ± 1% *In*
	Reset level		≥ 95 % I_{op}
	Repeatability		± 1 %
	Transient overreach (X/R ≤ 100)		≤ -5 %
	Variation	-10 °C to +55 °C	≤ 5 %
		f_{nom} ± 5 %	≤ 5 %

2.8.3 Operate and Reset Time

	Attribute	Value
t_{basic}	Element basic operate time	0 to 2 x*Is*: 35 ms, ± 10ms
		0 to 5 xIs: 25 ms, ± 10ms
t_{op}	Operate time following delay	t_{basic} + t_d, ± 1 % or ± 10ms
	Repeatability	± 1 % or ± 10ms
	Overshoot time	< 40 ms
	Disengaging time	< 50 ms

2.9 50G Instantaneous Measured Earth Fault

2.9.1 Reference

	Parameter	Value
Is	Setting	0.05, 0.06…2.5,2.55 …25.0,25.5…. 50 x*In*
t_d	Delay setting	0.00, 0.01…20.00, 20.10… 100, 101… 1000, 1010… 10000, 10100… 14400 s

2.9.2 Operate and Reset Level

	Attribute		Value
I_{op}	Operate level		100 % *Is*, ± 5 % or ± 1% *In*
	Reset level		≥ 95 % I_{op}
	Repeatability		± 1 %
	Transient overreach (X/R ≤ 100)		≤ -5 %
	Variation	-10 °C to +55 °C	≤ 5 %
		f_{nom} ± 5 %	≤ 5 %

2.9.3 Operate and Reset Time

	Attribute	Value
t_{basic}	Element basic operate time	0 to 2 x*Is*: 35 ms, ± 10ms
		0 to 5 xIs: 25 ms, ± 10ms
t_{op}	Operate time following delay	t_{basic} + t_d, ± 1 % or ± 10ms
	Repeatability	± 1 % or ± 10ms
	Overshoot time	< 40 ms
	Disengaging time	< 50 ms

2.10 50N Instantaneous Derived Earth Fault

2.10.1 Reference

	Parameter	Value
Is	Setting	0.05, 0.06…2.5,2.55 …25.0,25.5…. 50 x*In*
t_d	Delay setting	0.00, 0.01…20.00, 20.10… 100, 101… 1000, 1010… 10000, 10100… 14400 s

2.10.2 Operate and Reset Level

	Attribute		Value
I_{op}	Operate level		100 % *Is*, ± 5 % or ± 1% *In*
	Reset level		≥ 95 % I_{op}
	Repeatability		± 1 %
	Transient overreach (X/R ≤ 100)		≤ -5 %
	Variation	-10 °C to +55 °C	≤ 5 %
		f_{nom} ± 5 %	≤ 5 %

2.10.3 Operate and Reset Time

	Attribute	Value
t_{basic}	Element basic operate time	0 to 2 x*Is*: 40 ms, ± 10ms
		0 to 5 xIs: 30 ms, ± 10ms
t_{op}	Operate time following delay	t_{basic} + t_d, ± 1 % or ± 10ms
	Repeatability	± 1 % or ± 10ms
	Overshoot time	< 40 ms
	Disengaging time	< 57 ms

2.11 50SEF Instantaneous Sensitive Earth Fault

2.11.1 Reference

	Parameter	Value
Is	Setting	0.005, 0.006,0.010,0.105,… 5.0 x*In*
t_d	Delay setting	0.00, 0.01…20.00, 20.10… 100, 101… 1000, 1010… 10000, 10100… 14400 s

2.11.2 Operate and Reset Level

	Attribute		Value
I_{op}	Operate level		100 % *Is*, ± 5 % or ± 1% In
	Reset level		≥ 95 % I_{op} or I_{op} - 0.1% In
	Repeatability		± 1 %
	Transient overreach (X/R ≤ 100)		≤ -5 %
	Variation	-10 °C to +55 °C	≤ 5 %
		f_{nom} ± 5 % harmonics to f_{cutoff}	≤ 5 %

2.11.3 Operate and Reset Time

	Attribute		Value
t_{basic}	Element basic operate time		0 to 2 x*Is*: 35 ms, ± *10ms*
			0 to 5 xIs: 25 ms, ± *10ms*
t_{op}	Operate time following delay		t_{basic} + t_d, ± 1 % or ± 10ms
	Repeatability		± 1 % or ± *10ms*
	Overshoot time		< 40 ms
	Disengaging time		< 50 ms
	Variation	f_{nom} ± 5 %	≤ 5 %

2.12 51 Time Delayed Overcurrent

2.12.1 Reference

	Parameter		Value
Is	Setting		0.05, 0.06… 2.5 *xIn*
char	Characteristic setting		IEC-NI, -VI, -EI, -LTI; ANSI-MI, -VI, -EI; DTL
Tm	Time Multiplier setting		IEC: 0.025, 0.030… 1.6 ANSI: 0.025, 0.030… 1.6 1.7… 5, 6… 15
t_d	Delay setting		0, 0.01… 20 s
t_{res}	Reset setting		ANSI DECAYING, 0, 1… 60 s
I	Applied Current (for operate time)	IDMTL	2 to 20 x Is
		DTL	5 x Is

2.12.2 Operate and Reset Level

	Attribute		Value
I_{op}	Operate level		105 % *Is*, ± 4 % or ± 1% *In*
	Reset level		≥ 95 % I_{op}
	Repeatability		± 1 %
	Variation	-10 °C to +55 °C	≤ 5 %
		f_{nom} ± 5 %	≤ 5 %

2.12.3 Operate and Reset Time

	Attribute		Value
	Starter operate time (≥ 2*xIs*)		20 ms, ± 20ms
t_{op}	Operate time	*char* = IEC-NI, IEC-VI, IEC-EI, IEC-LTI	$t_{op} = \frac{K}{\left[\frac{I}{Is}\right]^{\alpha} - 1} \times Tm$, ± 5 % absolute or ± 30 ms, for char = IEC-NI : K = 0.14, α = 0.02 IEC-VI : K = 13.5, α = 1.0 IEC-EI : K = 80.0, α = 2.0 IEC-LTI : K = 120.0, α = 1.0
		char = ANSI-MI, ANSI-VI, ANSI-EI	$t_{op} = \left[\frac{A}{\left[\frac{I}{Is}\right]^{P} - 1} + B\right] \times Tm$, ± 5 % absolute or ± 30 ms, (ANSI-EI +5% -10 % absolute for I/Is>10 with TMS >2) for char = ANSI-MI : A = 0.0515, B = 0.114, P = 0.02 ANSI-VI : A = 19.61, B = 0.491, P = 2.0 ANSI-EI : A = 28.2, B = 0.1217, P = 2.0
		char = DTL	t_d, ± 1 % or ± 20ms
	Reset time	ANSI DECAYING	$t_{res} = \frac{R}{\left[\frac{I}{Is}\right]^{2} - 1} \times Tm$, ± 5 % absolute or ± 30 ms, for char = ANSI-MI : R = 4.85 ANSI-VI : R = 21.6 ANSI-EI : R = 29.1

	Attribute		Value
		IEC DECAYING	$t_{res} = \frac{R}{\left[\frac{I}{Is}\right]^2 - 1} \times Tm$, ± 5 % absolute or ± 50 ms, for char = IEC-NI : R = 9.7 IEC-VI : R = 43.2 IEC-EI : R = 58.2 IEC-LTI : R = 80
		t_{res}	t_{res}, ± 1 % or ± 20ms
	Repeatability		± 1 % or ± 20ms
	Overshoot time		< 40 ms
	Disengaging time		< 50 ms

Figure 2.12-1and Figure 2.12-4 show the operate and reset curves for the four IEC IDMTL curves with a time multiplier of 1.

Figure 2.12-2 and Figure 2.12-3 show the ANSI operate and reset curves. These operate times apply to non-directional characteristics. Where directional control is applied then the directional element operate time should be added to give total maximum operating time.

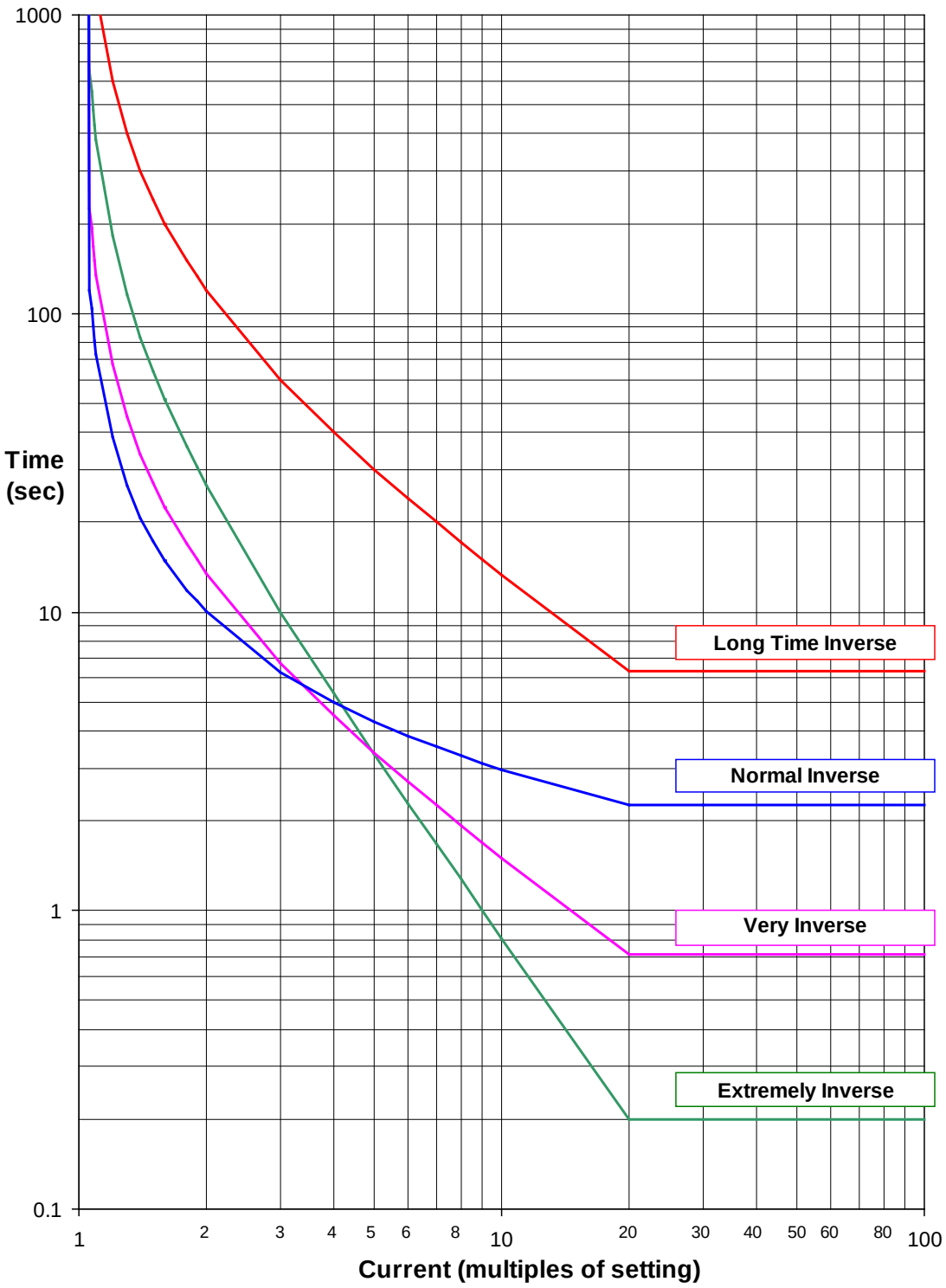

Figure 2.12-1 IEC IDMTL Curves (Time Multiplier=1)

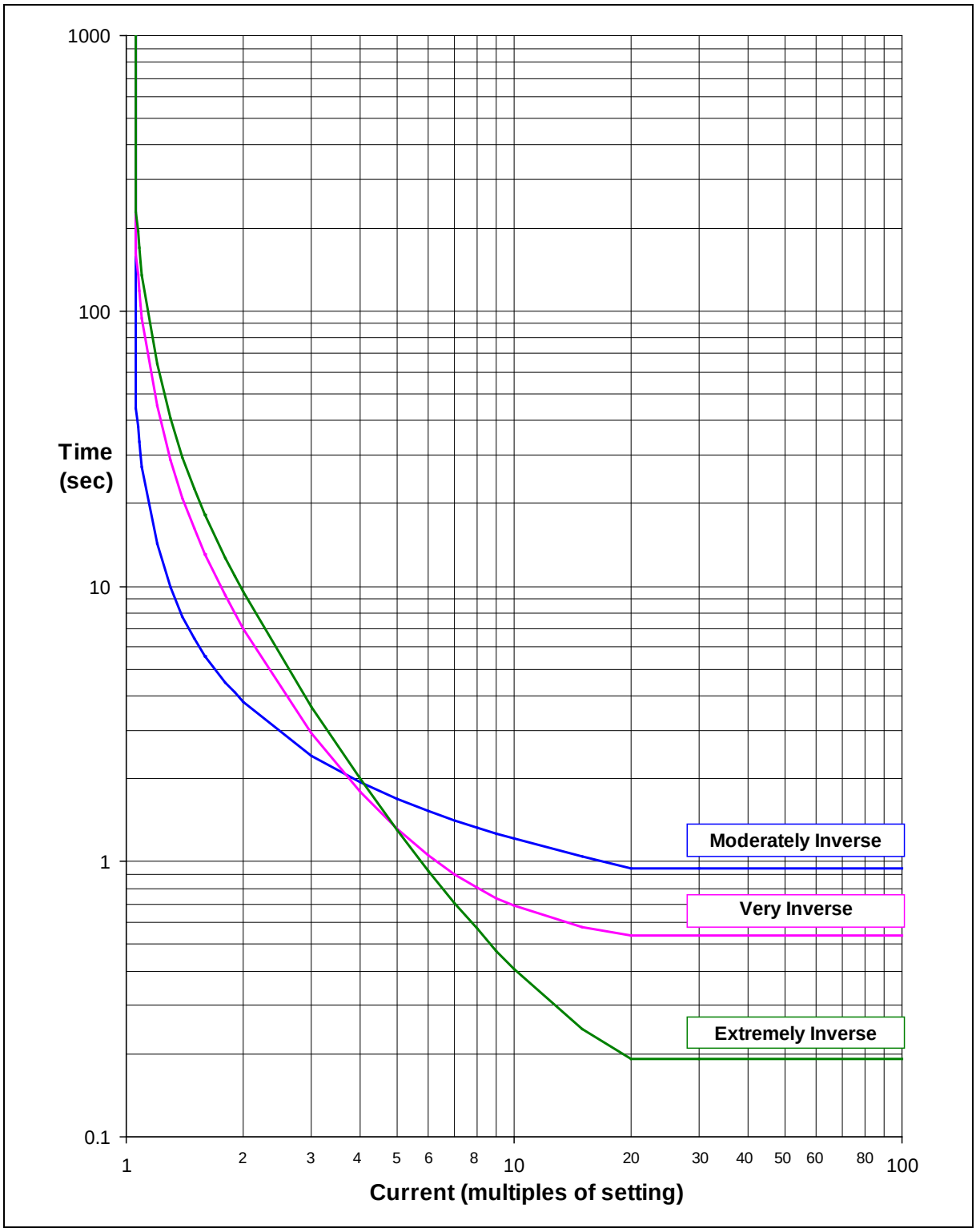

Figure 2.12-2 ANSI IDMTL Operate Curves (Time Multiplier=1)

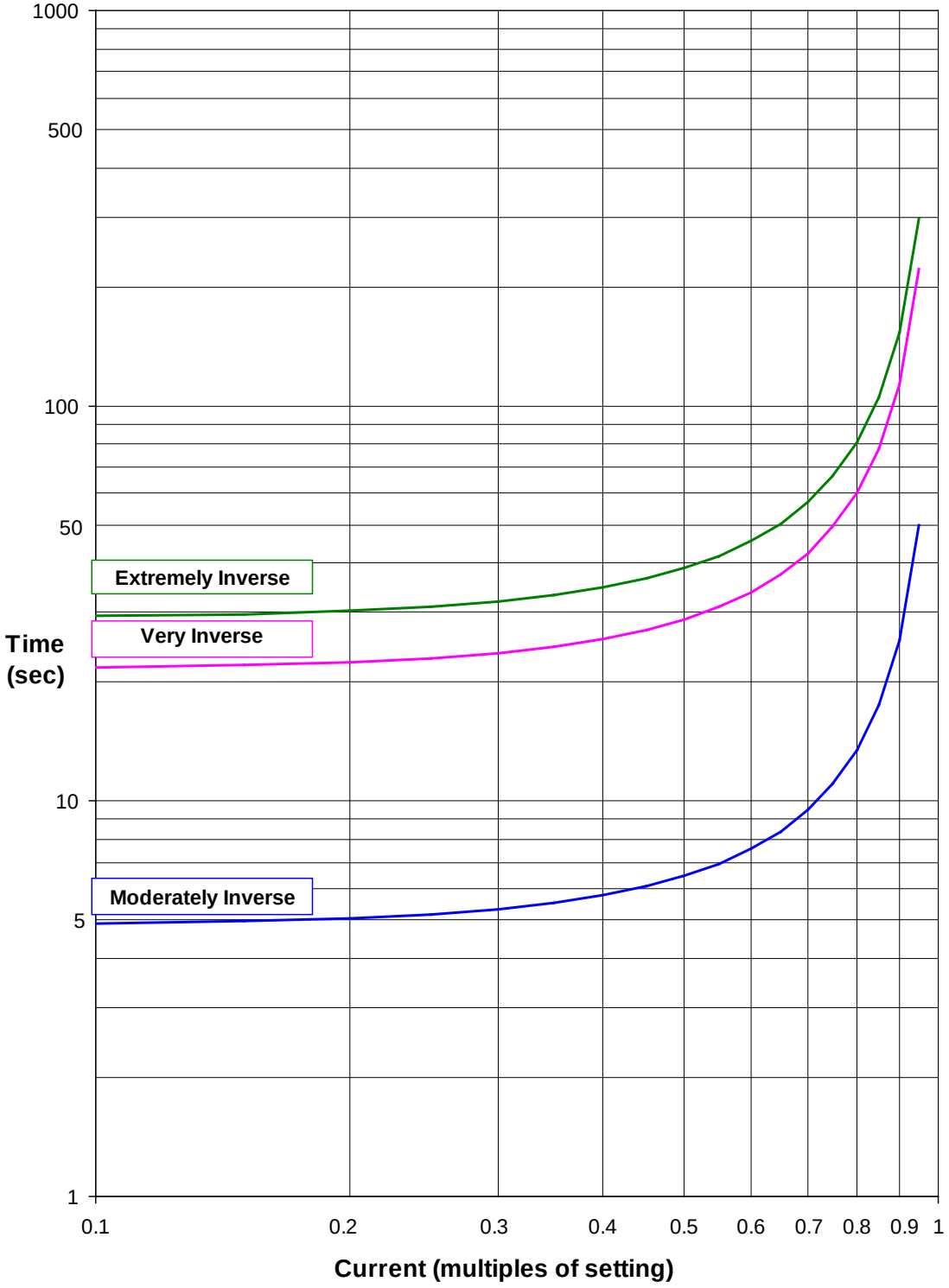

Figure 2.12-3 ANSI Reset Curves (Time Multiplier=1)

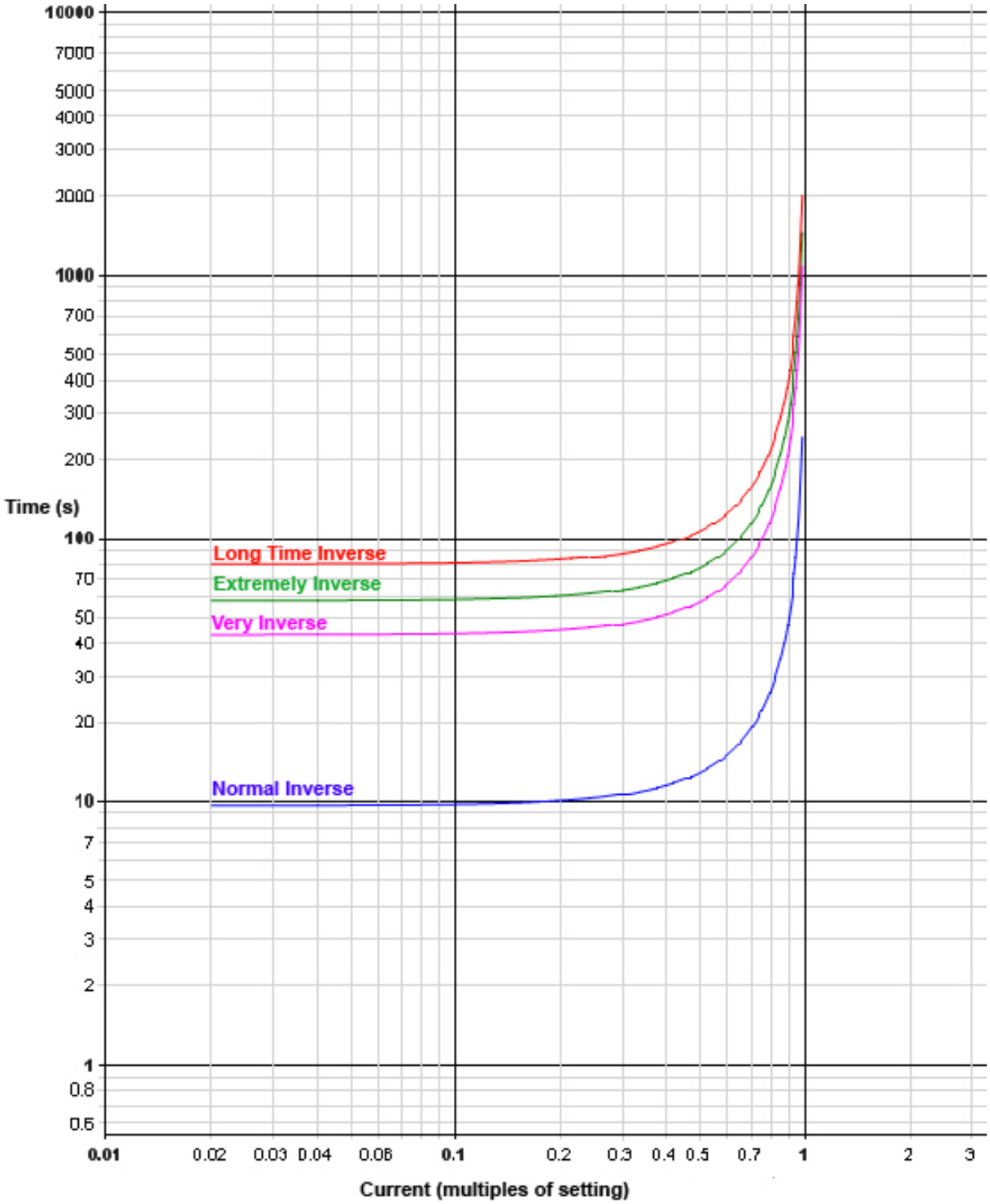

Figure 2.12-4 IEC Reset Curves (Time Multiplier=1)

2.13 51G Time Delayed Measured Earth Fault

2.13.1 Reference

	Parameter		Value
Is	Setting		0.05, 0.06… 2.5 *xIn*
Char	Characteristic setting		IEC-NI, -VI, -EI, -LTI; ANSI-MI, -VI, -EI; DTL
Tm	Time Multiplier setting		IEC: 0.025, 0.030… 1.6 ANSI: 0.025, 0.030… 1.6 1.7… 5, 6… 15
t_d	Delay setting (DTL)		0, 0.01… 20 s
t_{res}	Reset setting		ANSI DECAYING, 0, 1… 60 s
I	Applied current (for operate time)	IDMTL	2 to 20 x*Is*
		DTL	5 x*Is*

2.13.2 Operate and Reset Level

	Attribute		Value
I_{op}	Operate level		105 % *Is*, ± 4 % or ± 1% *In*
	Reset level		≥ 95 % I_{op}
	Repeatability		± 1 %
	Variation	-10 °C to +55 °C	≤ 5 %
		f_{nom} ± 5 %	≤ 5 %

2.13.3 Operate and Reset Time

	Attribute		Value
	Starter operate time (≥ 2x*Is*)		20 ms, ± 20ms
t_{op}	Operate time	*char* = IEC-NI, IEC-VI, IEC-EI, IEC-LTI	$t_{op} = \frac{K}{\left[\frac{I}{Is}\right]^{\alpha} - 1} \times Tm$, ± 5 % absolute or ± 30 ms, for char = IEC-NI : K = 0.14, α = 0.02 IEC-VI : K = 13.5, α = 1.0 IEC-EI : K = 80.0, α = 2.0 IEC-LTI : K = 120.0, α = 1.0
		char = ANSI-MI, ANSI-VI, ANSI-EI	$t_{op} = \left[\frac{A}{\left[\frac{I}{Is}\right]^{P} - 1} + B\right] \times Tm$, ± 5 % absolute or ± 30 ms, (ANSI-EI +5% -10 % absolute for I/Is>10 with TMS >2) for char = ANSI-MI : A = 0.0515, B = 0.114, P = 0.02 ANSI-VI : A = 19.61, B = 0.491, P = 2.0 ANSI-EI : A = 28.2, B = 0.1217, P = 2.0
		char = DTL	t_d, ± 1 % or ± 20ms
	Reset time	ANSI DECAYING	$t_{res} = \frac{R}{\left[\frac{I}{Is}\right]^{2} - 1} \times Tm$, ± 5 % absolute or ± 30 ms, for char = ANSI-MI : R = 4.85 ANSI-VI : R = 21.6 ANSI-EI : R = 29.1

	Attribute		Value
		IEC DECAYING	$t_{res} = \frac{R}{\left[\frac{I}{Is}\right]^2 - 1} \times Tm$, ± 5 % absolute or ± 50 ms, for char = IEC-NI : R = 9.7 IEC-VI : R = 43.2 IEC-EI : R = 58.2 IEC-LTI : R = 80
		t_{res}	t_{res}, ± 1 % or ± 20ms
	Repeatability		± 1 % or ± 20ms
	Overshoot time		< 40 ms
	Disengaging time		< 50 ms

Figure 2.12-1and Figure 2.12-4 show the operate and reset curves for the four IEC IDMTL curves with a time multiplier of 1.

Figure 2.12-2 and Figure 2.12-3 show the ANSI operate and reset curves. These operate times apply to non-directional characteristics. Where directional control is applied then the directional element operate time should be added to give total maximum operating time.

2.14 51N Time Delayed Derived Earth Fault

2.14.1 Reference

	Parameter		Value
Is	Setting		0.05, 0.6… 2.5 *xIn*
char	Characteristic setting		IEC-NI, -VI, -EI, -LTI; ANSI-MI, -VI, -EI; DTL
Tm	Time Multiplier setting		IEC: 0.025, 0.030… 1.6 ANSI: 0.025, 0.030… 1.6 1.7… 5, 6… 15
t_d	Delay setting		0, 0.01… 20 s
t_{res}	Reset setting		ANSI DECAYING, 0, 1… 60 s
I	Applied Current (for operate time)	IDMTL	2 to 20 x Is
		DTL	5 x Is

2.14.2 Operate and Reset Level

	Attribute		Value
I_{op}	Operate level		105 % *Is*, ± 4 % or ± 1% *In*
	Reset level		≥ 95 % I_{op}
	Repeatability		± 1 %
	Variation	-10 °C to +55 °C	≤ 5 %
		f_{nom} ± 5 %	≤ 5 %

2.14.3 Operate and Reset Time

	Attribute		Value
	Starter operate time (≥ 2*xIs*)		30 ms, ± 20ms
t_{op}	Operate time	*char* = IEC-NI, IEC-VI, IEC-EI, IEC-LTI	$t_{op} = \frac{K}{\left[\frac{I}{Is}\right]^{\alpha} - 1} \times Tm$, ± 5 % absolute or ± 30 ms, for char = IEC-NI : K = 0.14, α = 0.02 IEC-VI : K = 13.5, α = 1.0 IEC-EI : K = 80.0, α = 2.0 IEC-LTI : K = 120.0, α = 1.0
		char = ANSI-MI, ANSI-VI, ANSI-EI	$t_{op} = \left[\frac{A}{\left[\frac{I}{Is}\right]^{P} - 1} + B\right] \times Tm$, ± 5 % absolute or ± 30 ms, (ANSI-EI +5% -10 % absolute for I/Is>10 with TMS >2) for char = ANSI-MI : A = 0.0515, B = 0.114, P = 0.02 ANSI-VI : A = 19.61, B = 0.491, P = 2.0 ANSI-EI : A = 28.2, B = 0.1217, P = 2.0
		char = DTL	t_d, ± 1 % or ± 20ms
	Reset time	ANSI DECAYING	$t_{res} = \frac{R}{\left[\frac{I}{Is}\right]^{2} - 1} \times Tm$, ± 5 % absolute or ± 30 ms, for char = ANSI-MI : R = 4.85 ANSI-VI : R = 21.6 ANSI-EI : R = 29.1

	Attribute		Value
		IEC DECAYING	$t_{res} = \frac{R}{\left[\frac{I}{Is}\right]^2 - 1} \times Tm$, ± 5 % absolute or ± 50 ms, for char = IEC-NI : R = 9.7 IEC-VI : R = 43.2 IEC-EI : R = 58.2 IEC-LTI : R = 80
		t_{res}	t_{res}, ± 1 % or ± 20ms
	Repeatability		± 1 % or ± 20ms
	Overshoot time		< 40 ms
	Disengaging time		< 57 ms

Figure 2.12-1and Figure 2.12-4 show the operate and reset curves for the four IEC IDMTL curves with a time multiplier of 1.

Figure 2.12-2 and Figure 2.12-3 show the ANSI operate and reset curves. These operate times apply to non-directional characteristics. Where directional control is applied then the directional element operate time should be added to give total maximum operating time.

2.15 51SEF Time Delayed Sensitive Earth Fault

2.15.1 Reference

	Parameter		Value
Is	Setting		0.005, 0.006 … 0.1, 0.105, … 0.5 x*In*
char	Characteristic setting		IEC-NI, -VI, -EI, -LTI; ANSI-MI, -VI, -EI; DTL
Tm	Time multiplier		IEC: 0.025, 0.030… 1.6 ANSI: 0.025, 0.030… 1.6, 1.7… 5, 6… 15
t_d	Delay setting		0.00…20.00 s
t_{res}	Reset setting		DECAYING, 0, 1…60 s
I	Applied Current (for operate time)	IDMTL	2 to 20 x Is
		DTL	5 x Is

2.15.2 Operate and Reset Level

	Attribute		Value
I_{op}	Operate level		105 % *Is*, ± 4 % or ± 1% In
	Reset level		95 % I_{op} ± 4 % or ± 1% In
	Repeatability		± 1 %
	Variation	-10 °C to +55 °C	≤ 5 %
		f_{nom} ± 5 % harmonics to f_{cutoff}	≤ 5 %

2.15.3 Operate and Reset Time

	Attribute		Value
	Starter operate time		20 ms, ± *20ms*
t_{op}	Operate time	char = IEC-NI, IEC-VI, IEC-EI, IEC-LTI	$t_{op} = \frac{K}{\left[\frac{I}{Is}\right]^{\alpha} - 1} \times Tm$, ± 5 % absolute or ± 30 ms, for char = IEC-NI : K = 0.14, α = 0.02 IEC-VI : K = 13.5, α = 1.0 IEC-EI : K = 80.0, α = 2.0 IEC-LTI : K = 120.0, α = 1.0
		char = ANSI-MI, ANSI-VI, ANSI-EI,	$t_{op} = \left[\frac{A}{\left[\frac{I}{Is}\right]^{P} - 1} + B\right] \times Tm$, ± 5 % absolute or ± 30 ms, (ANSI-EI +5% -10 % absolute for I/Is>10 with TMS >2) for char = ANSI-MI : A = 0.0515, B = 0.114, P = 0.02 ANSI-VI : A = 19.61, B = 0.491, P = 2.0 ANSI-EI : A = 28.2, B = 0.1217, P = 2.0

	Attribute		Value
		char = DTL	t_d, ± 1 % or ± t_{cycle}
	Reset time	char = ANSI and t_{res} = DECAYING	$t_{res} = \frac{R}{\left[\frac{I}{Is}\right]^2 - 1} \times Tm$, ± 5 % absolute or ± 30 ms, for char = ANSI-MI : R = 4.85 ANSI-VI : R = 21.6 ANSI-EI : R = 29.1
		IEC DECAYING	$t_{res} = \frac{R}{\left[\frac{I}{Is}\right]^2 - 1} \times Tm$, ± 5 % absolute or ± 50 ms, for char = IEC-NI : R = 9.7 IEC-VI : R = 43.2 IEC-EI : R = 58.2 IEC-LTI : R = 80
		$t_{res} \neq$ DECAYING	t_{res}, ± 1 % or ± *20ms*
	Repeatability		± 1 % or ± *20ms*
	Overshoot time		< 40 ms
	Disengaging time		< 50 ms
	Variation	f_{nom} ± 5 % harmonics to f_{cutoff}	≤ 5 %

Figure 2.12-1and Figure 2.12-4 show the operate and reset curves for the four IEC IDMTL curves with a time multiplier of 1.

Figure 2.12-2 and Figure 2.12-3 show the ANSI operate and reset curves. These operate times apply to non-directional characteristics. Where directional control is applied then the directional element operate time should be added to give total maximum operating time.

2.16 51V Voltage Controlled Overcurrent

2.16.1 Reference

	Parameter	Value
Vs	Setting	60V
m	multiplier	0.5
Is	Setting	1xIn

2.16.2 Operate and Reset Level

	Attribute		Value
V_{op}	Operate level		100 % *Vs*, ± 1 % or ± 0.25V
	Reset level		≤ 105 % V_{op}
	Repeatability		± 1 %
	Variation	-10 °C to +55 °C	≤ 5 %
		f_{nom} ± 5 % harmonics to f_{cutoff}	≤ 5 %

Operate and Reset Time

As per Phase Fault Shaped Characteristic Element (ANSI 51).

Where Pickup Level = Is for Voltage > Vs

Pickup Level = (Is x m) for Voltage < Vs

2.17 50AFD ARC Flash Detector
(Refer to 7XG31 Technical Manual for performance characteristics)

2.17.1 Reference

	Parameter	Value
50 AFD	Setting	1, 2,...10 xIn

2.17.2 Operate and Reset Level

	Attribute		Value
I_{op}	Operate level (no DC transient)		100 % *Is*, ± 10 %
	Transient overreach (X/R ≤ 100)		≤ -30%
	Reset level		≥ 95 % I_{op}
	Repeatability		± 5 %
	Variation	-10 °C to +55 °C	≤ 5 %
		f_{nom} - 3 Hz to f_{nom} + 2 Hz	≤ 5 %

2.17.3 Operate and Reset Time

	Attribute	Value
t_{basic}	50AFD Overcurrent operate time	10 ms – 16 ms
t_{op}	AFD Zone Operate time (Flash & 50AFD)	15 ms – 25 ms
	Repeatability	± 10 ms
	Disengaging time	< 50 ms

©2020 Siemens Protection Devices Limited

2.18 55 Power Factor

2.18.1 Reference

	Parameter	Value
PF_s	55-n Setting	0.05…0.99
t_d	55-n Delay setting	0.00 … 14400 s

2.18.2 Operate and Reset Level

	Attribute		Value
PF_{op}	Operate Level		PF_s ± 0.05
	Reset Level	Under PF	≤PF_{op} + 0.02
		Over PF	≥PF_{op} - 0.02
	Repeatability		± 0.05
	Variation	-10 °C to +55 °C	± 0.05
		f_{nom} – 3 Hz to f_{nom} + 2 Hz	± 0.05

2.18.3 Operate and Reset Time

	Attribute	Value
t_{basic}	Element basic operate time	≤ 70 ms
t_{op}	Operate time following delay	t_{basic} + t_d, ± 1 % or ± 10ms
	Disengaging time	< 80 ms

2.18.4 Operate Threshold

	Attribute		Value
	Minimum levels for operation	I	2.5 % In
		V	2.5% Vn

2.19 59N Neutral Voltage Displacement

2.19.1 Reference (59NDT)

	Parameter	Value
Vs	Setting	1.0, 1.5 ... 100V
t_d	Delay setting	0.00, 0.01…20.00, 20.10… 100, 101… 1000, 1010… 10000, 10100… 14400 s

2.19.2 Operate and Reset Level (59NDT)

	Attribute		Value
V_{op}	Operate level		100 % *Vs*, ± 2 % or ± 0.5 V
	Reset level		≥ 95 % V_{op} or ± 0.5 V
	Repeatability		± 1 %
	Variation	-10 °C to +55 °C	≤ 5 %
		f_{nom} ± 5 %	≤ 5 %

2.19.3 Operate and Reset Time (59NDT)

	Attribute	Value
t_{basic}	Element basic operate time	0V to 1.5 *xVs*, 76 ms, ± 20ms
		0V to 10 *xVs*, 63 ms, ± 20ms
t_{op}	Operate time following delay	t_{basic} + t_d, ± 1 % or ± 20ms
	Repeatability	± 1 % or ± 20ms
	Overshoot time	< 40 ms
	Disengaging time	<100 ms

2.19.4 Reference (59NIT)

	Parameter	Value
M	Time Multiplier setting	1
Vs	Setting	1, 1.5… 100V
$3V_o$	Applied Current (for Operate-Time) IDMTL	2 x Vs
t_d	Delay setting	0, 0.01… 20 s
t_{res}	Reset setting	0, 1…60 s

2.19.5 Operate and Reset Level (59NIT)

	Attribute		Value
V_{op}	Operate level		100 % *Vs*, ± 2 % or ± 0.5 V
	Reset level		≥ 95 % V_{op} or ± 0.5 V
	Repeatability		± 1 %
	Variation	-10 °C to +55 °C	≤ 5 %
		f_{nom} ± 5 %	≤ 5 %

Operate and Reset Time (59NIT)

	Attribute	Value
t_{basic}	Starter operate time	65 ms, ± 20ms
$3V_o$	Applied Current (for Operate-Time) DTL	10 x Vs

	Attribute		Value
t_{op}	Operate time	char = IDMTL	$t_{op} = \frac{M}{\left[\frac{3V0}{Vs}\right] - 1}$, ± 5 % or ± 65 ms
		char = DTL	t_d, ± 1 % or ± 40ms
	Reset Time	char = IDMTL	t_{res}, ± 5 % or ± 65ms
		char = DTL	t_{res}, ± 1 % or ± 40ms
	Repeatability		± 1 % or ± 20ms
	Overshoot time		< 40 ms
	Disengaging time		< 100 ms

2.20 64H Restricted Earth Fault Protection

2.20.1 Reference

	Parameter	Value	
Is	Setting	SEF Input	0.005, 0.006 … 0.100, 0.105 … 0.950 x*In*
		EF Input	0.05, 0.055…. 0.95 x*In*
t_d	Delay setting	0.00, 0.01…20.00, 20.10… 100, 101… 1000, 1010… 10000, 10100… 14400 s	

2.20.2 Operate and Reset Level

	Attribute		Value
I_{op}	Operate level		100 % *Is*, ± 5 % or ±1% *xIn*
	Reset level		95 % I_{op}, ± 5 % or ±0.1% *xIn*
	Repeatability		± 1 %
	Transient overreach (X/R ≤ 100)		≤ -5 %
	Variation	-10 °C to +55 °C	≤ 5 %
		f_{nom} ± 5 %	≤ 5 %

2.20.3 Operate and Reset Time

	Attribute	Value
t_{basic}	Element basic operate time	0 to 2 x*Is*, 45 ms, ± 10ms
		0 to 5 xIs, 35 ms, ± 10ms
t_{op}	Operate time following delay	t_{basic} + t_d, ± 1% or ± 10ms
	Repeatability	± 1% or ± 10ms
	Overshoot time	< 40 ms
	Disengaging time	< 50 ms

2.21 67/67N Directional Overcurrent & Earth Fault

2.21.1 Reference

	Parameter	Value
θ_s	Angle setting	-95…+95 °
I	Applied current	*In*
V	Applied voltage	110 V phase-phase (63.5 V phase-earth)

2.21.2 Operate Angle

	Attribute		Value
CA	Characteristic angle (I with respect to V)		θ_s, ± 5 °
	Operating angle	forward	*CA* - 85 ° ± 5 ° to *CA* + 85° ± 5 °
		reverse	(*CA* - 180°) - 85° ± 5 ° to (*CA* - 180°) + 85° ± 5 °
	Variation in characteristic angle	10°C to +55°C	± 5 °
		f_{nom} ± 5 %	± 5 °

2.21.3 Operate Threshold

	Attribute		Value
	Minimum levels for operation	I (p/f)	> 5 % In
		I (e/f)	> 10 % In
		V (p/f)	> 1 V
		V (e/f)	> 1 V

2.21.4 Operate and Reset Time

	Attribute	Value
	Operate time	typically 32, < 40 ms at characteristic angle + 50/51 element operate time
	Reset time	typically < 65 ms at characteristic angle

2.22 Directional SEF - Wattmetric

2.22.1 Reference

	Parameter	Value
P_o	Setting	0.05, 0.10,… 20.0 x*InxW* (Where In = 1A or 5A)
I	Applied current @ In = 1A	10mA…5A
V	Applied voltage	10V…200V
θ	Angle	<87.5deg
CA	67SEF Char Angle (θc)	0
f	Nominal	50/60Hz

2.22.2 Operate and Reset Level

	Attribute		Value
P_{op}	Operate level		100 % P_o, ± 25 % or ± 25mW
	Reset level		≥ 95 % P_{op}
	Variation	-10 °C to +55 °C	≤ 5 %

2.22.3 Operate and Reset Time

	Attribute		Value
t_{basic}	Element basic operate time		<50ms
	Repeatability		± 1 % or ± *10ms*

2.23 81 Under/over frequency

2.23.1 Reference

	Parameter	Value
Fs	Setting	43, 43.01… 68 Hz
V_s *Guard*	Guard Setting	35, 35.5, …199.5, 200 V
Hyst	Hysteresis setting	0, 0.1… 2%
td	Delay setting	0.00, 0.01… 20.0, 20.1… 100.0, 101….1000, 1010 … 10000 , 10100 … 14400 s

2.23.2 Operate and Reset Level

	Attribute		Value
F_{op}	Operate level		100 % F_s, ± 10mHz
	Reset level	overfrequency	(100 % - *hyst*) $xF_{op,}$ ± 10mHz
		underfrequency	(100 % + *hyst*) $xF_{op,}$ ± 10mHz
	Repeatability		± 1 %
	Variation	-10 °C to +55 °C	≤ 5 %

2.23.3 Operate and Reset Time

	Attribute		Value
t_{basic}	Element basic operate time (for ROCOF between 1 and 5.0 Hz/sec)	overfrequency	Typically < 110ms
			Maximum < 150ms
		underfrequency	Typically < 110ms
			Maximum < 150ms
	Element basic operate time (for ROCOF between 0.1 and 1.0 Hz/sec)	overfrequency	Typically < 150ms
			Maximum < 200ms
		underfrequency	Typically < 150ms
			Maximum < 200ms
t_{op}	Operate time following delay		t_{basic} + t_d, ± 1 % or ± 10ms
	Repeatability		± 1 % or ± 10ms
	Disengaging time		< 100 ms

Section 3: Supervision Functions

3.1 46BC Broken Conductor

3.1.1 Reference

	Parameter	Value
	NPS to PPS ratio	20,21…100%
t_f	Delay setting	0.03,04,20.0,20.1,100,101,1000,1010…..14400 s

3.1.2 Operate and Reset Level

	Attribute		Value
I_{curr}	Operate level		100 % I_{set} ± 5 %
	Reset level		90 % I_{curr} , ± 5 %
	Repeatability		± 1 %
	Variation	-10 °C to +55 °C	≤ 5 %
		f_{nom} ± 5 % harmonics to f_{cutoff}	≤ 5 %

3.1.3 Operate and Reset Time

	Attribute		Value
t_{basic}	Basic operate time	1x In to 0 A	40 ms
	Operate time		$t_f + t_{basic}$, ± 1 % or ± *20ms*
	Repeatability		± 1 % or ± *20ms*
	Variation	f_{nom} ± 5 % harmonics to f_{cutoff}	≤ 5 %

3.2 50BF Circuit Breaker Fail

3.2.1 Reference

	Parameter	Value
Is	Setting	0.050, 0.055… 2.0 x*In*
I4	Setting	0.050, 0.055… 2.0 x*In*
t_{CBF1}	Stage 1 Delay setting	20, 25… 60000ms
t_{CBF2}	Stage 2 Delay setting	20, 25… 60000ms

3.2.2 Operate and Reset Level

	Attribute		Value
I_{op}	Operate level		100 % *Is*, ± 5 % or ± 1% *In*
I_{reset}	Reset level		<100 % I_{op}, ± 5 % or ± 1% *In*
	Repeatability		± 1 %
	Variation	-10 °C to +55 °C	≤ 5 %
		f_{nom} ± 5 %	≤ 5 %

3.2.3 Operate and Reset Time

	Attribute	Value
t_{op}	Stage 1	t_{CBF1}, ± 1 % or ± 20ms
	Stage 2	t_{CBF2}, ± 1 % or ± 20ms
	Repeatability	± 1 % or ± 20ms
	Overshoot	< 2 x 20ms
	Disengaging time	< 20ms

3.3 60CTS & 60CTS-I Current Transformer Supervision

3.3.1 Reference

	Parameter		Value
I_{thresh}	CTS-I Current Threshold		0.05, 0.1… 2 x*In*
I	Applied Current (for operate time)	Healthy CT Phases	5 x I_{thresh}
		Failed CT phase	0
t_d	Delay setting		0.3, 20.00, 20.50… 100, 101… 1000, 1010… 10000, 10100… 14400 s
Directional Relays have additional VT settings			
V_{thresh}	Voltage Threshold		7, 8… 110V

3.3.2 Current & Voltage Threshold

	Attribute		Value
I_{op}	CT failed current level		100 % I_{thresh}, ± 5% or ± 1% In
	Reset level		90 % I_{op}, ± 5% or ± 1% In
V_{op}	CT failed voltage level		100 % V_{thresh}, ± 2% or ± 0.5V
	Reset level		110 % V_{op}, ± 2 % or ± 0.5V
	Repeatability		± 1 %
	Variation	-10 °C to +55 °C	≤ 5 %
		f_{nom} ± 5 % harmonics to f_{cutoff}	≤ 5 %

3.3.3 Operate and Reset Time

	Attribute	Value
t_{basic}	Basic operate time	50 ms ± 20ms
	Operate time	t_d + t_{basic}, ± 1 % or ± 20ms
	Repeatability	± 1 % or ± 20ms

3.4 60VTS Voltage Transformer Supervision

3.4.1 Reference

	Parameter	Value
V_{nps}	Vnps Level	7, 8 … 110V
I_{nps}	Inps Level	0.05, 0.1 … 1 x In
I_{pps}	Ipps Load Level	0.05, 0.1 … 1 x In
IF_{pps}	Ipps Fault Level	0.05, 0.1 … 20 x In
V_{pps}	Vpps Level	1, 2 … 110V
t_d	60VTS Delay	0.00, 0.01…20.00, 20.10… 100, 101… 1000, 1010… 10000, 10100… 14400 s

3.4.2 Operate and Reset Level

	Attribute		Value
V_{NPSop}	Voltage NPS operate level		100 % V_{nps}, ± 5 % *Vn*
	Voltage NPS reset level		90 % V_{NPSop}, ± 5 % *Vn*
V_{PPSop}	Voltage PPS operate level		100 % V_{pps}, ± 5 % *Vn*
	Voltage PPS reset level		110 % V_{PPSop}, ± 5 % *Vn*
I_{NPSblk}	Current NPS operate level		100 % I_{nps}, ± 5 % x*In*
	Current NPS reset level		90 % I_{NPSblk}, ± 5 % x*In*
I_{PPSblk}	Current PPS operate level		100 % IF_{pps}, ± 5 % x*In*
	Current PPS reset level		90 % I_{PPSblk}, ± 5 % x*In*
$I_{PPSload}$	Current PPS operate level		100 % I_{pps}, ± 5 % x*In*
	Current PPS reset level		90 % $I_{PPSload}$, ± 5 % x*In*
	Repeatability		± 1 %
	Variation	-10 °C to +55 °C	≤ 5 %
		f_{nom} ± 5 %	≤ 5 %

3.4.3 Operate and Reset Time

	Attribute		Value
t_{basic}	Basic operate time	0V to 2 x *Vs*	32 ms ± 10ms
	Operate time		t_d + t_{basic} ± 1 % or ± 10ms
	Repeatability		± 1 % or ± 10ms

3.5 74TCS & 74CCS Trip & Close Circuit Supervision

3.5.1 Reference

	Parameter	Value
t_d	Delay setting	0, 0.02…60 s

3.5.2 Operate and Reset Time

	Attribute		Value
t_{basic}	Element basic operate time		30ms ± 10ms
t_{op}	Operate time following delay		t_{basic} + t_d, ± 1 % or ± 10ms
	Repeatability		± 1 % or ± 10ms
	Variation	-10 °C to +55 °C	≤ 5 %
		f_{nom} ± 5 %	≤ 5 %

3.6 81HBL2 Inrush Detector

3.6.1 Reference

	Parameter	Value
I	Setting (Ratio of 2nd Harmonic current to Fundamental component current)	0.10, 0.11... 0.5

3.6.2 Operate and Reset Time

	Attribute	Value
t_{basic}	Element basic operate time	Will pick-up before operation of any protection element due to magnetic inrush
	Reset Time	Will operate until drop-off of any protection element due to magnetic inrush

7SR110

7SR110x-xxxxx-xxA0

Document Release History

This document is issue **2019/04**. The list of revisions up to and including this issue is:

Date	Description
2019/04	R4k-3d : No changes from R4h-3d

The copyright and other intellectual property rights in this document, and in any model or article produced from it (and including any registered or unregistered design rights) are the property of Siemens Protection Devices Limited. No part of this document shall be reproduced or modified or stored in another form, in any data retrieval system, without the permission of Siemens Protection Devices Limited, nor shall any model or article be reproduced from this document unless Siemens Protection Devices Limited consent.

While the information and guidance given in this document is believed to be correct, no liability shall be accepted for any loss or damage caused by any error or omission, whether such error or omission is the result of negligence or any other cause. Any and all such liability is disclaimed.

© 2019 Siemens Protection Devices Limited

Contents

1. Introduction.....5

2. Physical Connection.....7

2.1 Introduction.....7

2.2 USB Interface (COM2).....8

2.3 RS485 Interface (COM1).....8

3. IEC 60870-5-103 Definitions.....11

3.1 Introduction.....11

3.2 Cause of Transmission.....12

3.3 Application Service Data Unit (ASDU) Type.....13

3.4 Point List.....14

3.4.1 Event Function (FUN) & Information (INF) Numbers.....14

3.4.2 Measurands.....20

3.4.3 Disturbance Recorder Actual Channel (ACC) Numbers.....20

4. MODBUS Definitions.....23

4.1 Introduction.....23

4.2 MODBUS Register Data Types.....24

4.2.1 FLOAT_IEEE_754.....24

4.2.2 FP_32BITS_3DP.....25

4.2.3 UINT32.....25

4.2.4 UINT16.....25

4.2.5 EVENT.....26

4.2.6 EVENTCOUNT.....27

4.2.7 TIME_METER.....27

4.2.8 STR32 & STR64.....27

4.2.9 BITSTRING.....27

4.3 Point List.....29

4.3.1 Coils (Read Write Binary values).....29

4.3.2 Inputs (Read Only Binary values).....30

4.3.3 Input Registers (Read Only Registers).....33

4.3.4 Holding Registers (Read Write Registers).....35

5. DNP3 Definitions.....37

5.1 Device Profile.....37

5.2 Implementation Table.....40

5.3 Point List.....46

5.3.1 Binary Input Points.....46

5.3.2 Double Bit Input Points.....50

5.3.3 Binary Output Status Points and Control Relay Output Blocks.....51

5.3.4 Counters.....56

5.3.5 Analog Inputs.....57

5.4 Additional Settings.....59

6. Not Applicable.....61

7. IEC61850 Protocol Support.....63

7.1 Introduction.....63

8. Serial Modems.....65

8.1 Introduction....65
8.2 Connecting a Modem to the Relay(s).... 65
8.3 Setting the Remote Modem....65
8.4 Connecting to the Remote Modem.... 65
9. Configuration.... 67
10. Glossary....69
Appendix 1....71

List of Figures

Fig. 2-1 Communication to Front USB Port....8
Fig. 2-2 Communication to Multiple Devices using RS485 (Standard Port).... 10
Fig. A1 Operating Mode Table.... 71

 © 2019 Siemens Protection Devices Limited

1. Introduction

This section describes how to use the Communication Interface with a control system or interrogating computer.

The interface is compatible with control and automation systems using industry standard communications protocols ***DNP3*** , ***IEC 60870-5-103*** , ***IEC 61850*** and ***MODBUS-RTU***. Note, not all protocols are available on all devices.

Reydisp Evolution or Reydisp Manager Software is available, for computers running Microsoft Windows™, to connect to devices to provide operational information, post-fault analysis, setting interrogation and editing facilities etc. Configuration software can be downloaded from our website http://www.siemens.com/energy.

This section specifies connection details and lists the information available through the individual protocols.

© 2019 Siemens Protection Devices Limited

© 2019 Siemens Protection Devices Limited

2. Physical Connection

2.1 Introduction

The relay provides one “Front” USB communication interface (Com2) located on the fascia and one RS485 (Com1) located on the “Rear” as standard.

A detailed description of the ports is given below.

COM1-RS485:	This port can be used for IEC60870-5-103, MODBUS-RTU or DNP3 communications to a substation SCADA or integrated control system or for engineer remote access. This port can also be used for connection to Reydisp software.
COM2-USB:	This port is used for IEC60870-5-103 (default setting) communication with the Reydisp software. An ASCII protocol is also available through this port, the main use of this protocol is to allow the Relay firmware to be updated via the front connection. MODBUS-RTU or the optional DNP3 protocols are also available.
COM3-LAN:	When the Ethernet module is fitted, in addition to IEC61850 a LAN connection is provided to allow the Reydisp software to connect to the Relay via the network. This port only supports the IEC60870-5-103 protocol.

Any or all serial ports can be mapped to the IEC60870-5-103, DNP3 or MODBUS-RTU protocol at any one time, protocols available will depend upon relay model. The optional ethernet port uses IEC 61850 protocol and can also provide an IEC 60870-5-103 protocol connection to Reydisp. Any port not required can be disabled by setting its protocol to OFF.

When connecting to Reydisp Evolution software the protocol for the relevant port should be set to IEC60870-5-103.

© 2019 Siemens Protection Devices Limited

2.2 USB Interface (COM2)

The USB communication port is connected using a standard USB cable with a type B connection to the relay and type A to the PC.

The PC will require a suitable USB driver to be installed; this will be carried out automatically when the Reydisp software is installed. When the Reydisp software is running with the USB cable connected to a device an additional connection is shown. Connections to these devices are not shown when they are not connected.

The USB communication interface on the relay is labelled Com 2 and its associated settings are located in the Data communications menu. When connecting to Reydisp using this connection the default settings can be used without the need to first change any settings.

Access to the communication settings for the USB port is only available from the relay front fascia via the key pad setting menu COMMUNICATIONS MENU.

Setting Name	Range/Options	Default	Setting	Notes
COM2-USB Protocol	OFF IEC60870-5-103 MODBUS-RTU ASCII DNP3	IEC60870-5-103		Reydisp software requires IEC60870-5-103.
COM2-USB Station Address	0 - 254 for IEC60870-5-103 1 - 247 for Modbus RTU 0 - 65534 for DNP3.0	0		An address within the range of the relevant protocol must be given to identify the relay. Each relay in a network must have a unique address.
COM2-USB Mode	Local Local or Remote Remote	Local		Refer to Appendix 1, page 71, for further explanation

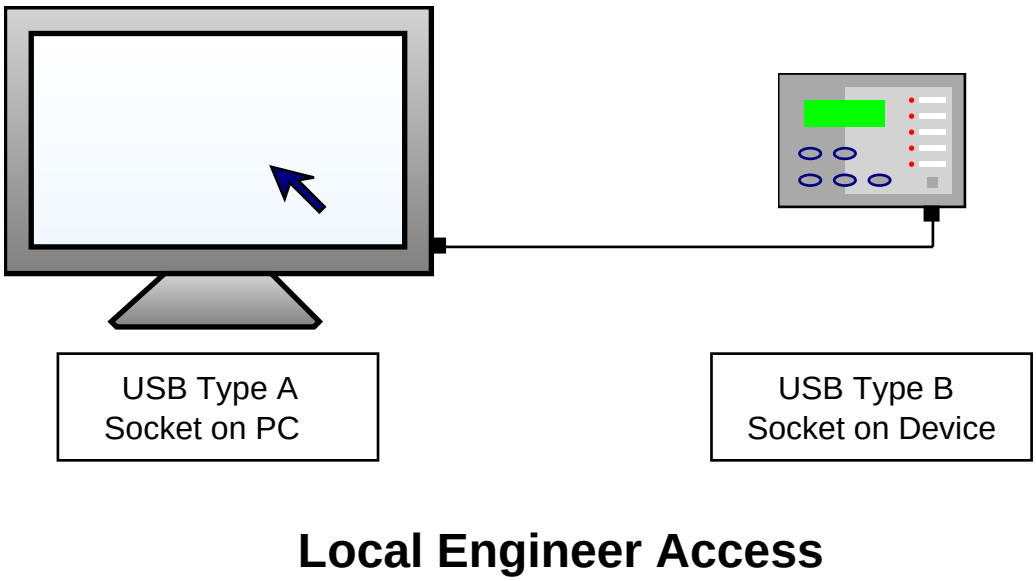

Fig. 2-1 Communication to Front USB Port

2.3 RS485 Interface (COM1)

The 2-wire RS485 communication port is located on the rear of the relay and can be connected using a suitable RS485 120 Ohm screened twisted pair cable.

© 2019 Siemens Protection Devices Limited

The RS485 electrical connection can be used in a single or multi-drop configuration. The RS485 master must support and use the Auto Device Enable (ADE) feature. The last device in the connection must be terminated correctly in accordance with the master device driving the connection. This can be done via the internal 120 ohm terminating resistor, which can be connected between 14 (A) and 18 (B) by fitting an external wire loop between terminals 18 and 20 on the power supply module.

The polarity of the signal terminals is marked as A and B in line with the RS485 standard. The polarity is that when the bus is in the quiescent state and no communication is taking place, the B terminal is more positive than A. This can be used to identify the polarity of any equipment to be connected, typically measured at each terminal in turn to ground. Connection of the device to a termination network at the end of the bus will also be to suit the quiescent state as shown in the diagram below.

The polarity marking is often found to be reversed or marked as +/- on other equipment so care is required. If the devices are connected in reverse, communication to all devices will be disturbed but no damage will occur. If problems are experienced during commissioning, the connections should be tried in reverse.

The maximum number of relays that can be connected to the bus is 64.

The RS485 data comms link will be broken for that particular relay element if it is withdrawn from the case but the chain of communication to the other relays is maintained.

The following settings, on the COMMUNICATIONS MENU, must be configured when using the RS485 interface.

Setting Name	Range/Options	Default	Setting	Notes
COM1-RS485 Protocol	OFF IEC60870-5-103 MODBUS-RTU DNP3	IEC60870-5-103		The protocol used to communicate on the standard RS485 connection.
COM1-RS485 Station Address	0 - 254 for IEC60870-5-103 1 - 247 for Modbus RTU 0 - 65534 for DNP3.0	0		An address within the range of the relevant protocol must be given to identify the relay. Each relay in a network must have a unique address.
COM1-RS485 Baud Rate	75 110 150 300 600 1200 2400 4800 9600 19200 38400	19200		The baud rate set on all of the relays connected to the control system must be the same as the one set on the master device.
COM1-RS485 Parity	NONE ODD EVEN	EVEN		The parity set on all of the relays connected to the control system must be the same and in accordance with the master device.
COM1-RS485 Mode	Local Local or Remote Remote	Remote		Refer to Appendix 1, page 71, for further explanation

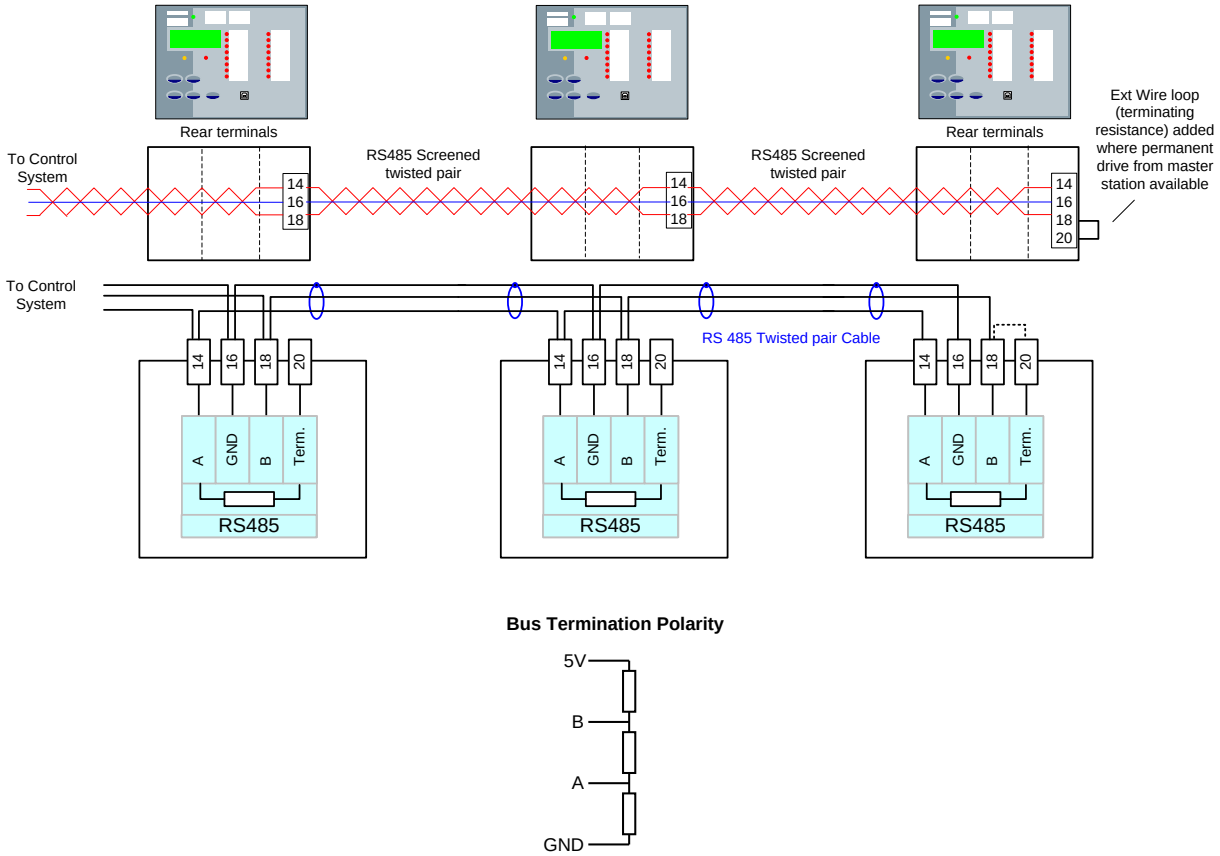

Bus Termination Polarity

Fig. 2-2 Communication to Multiple Devices using RS485 (Standard Port)

© 2019 Siemens Protection Devices Limited

3. IEC 60870-5-103 Definitions

3.1 Introduction

This section describes the IEC 60870-5-103 protocol implementation in the relays. This protocol is used for the communication with Reydisp software and can also be used for communication with a suitable control system. The control system or local PC acts as the master in the system with the relay operating as a slave responding to the master's commands. The implementation provides event information, time synchronising, commands and measurands and also supports the transfer of disturbance records.

This protocol can be set to use any or all of the relays hardware interfaces (USB, Fibre Optic, RS232, RS485 and Ethernet) where fitted and is the standard protocol used by the USB port. The relay can communicate simultaneously on all ports regardless of protocol used.

The Station Address of the port being used must be set to a suitable address within the range 0 - 254 to enable communication. This can be set by the **Communications Menu : COM *n-xxxxx* Station Address** setting.

© 2019 Siemens Protection Devices Limited

3.2 Cause of Transmission

The cause of transmission (COT) column of the "Information Number and Function" table lists possible causes of transmission for these frames. The following abbreviations are used:

Abbreviation	Description
SE	spontaneous event
T	test mode
GI	general interrogation
Loc	local operation
Rem	remote operation
Ack	command acknowledge
Nak	Negative command acknowledge

Note: Events listing a GI cause of transmission can be raised and cleared; other events are raised only.

© 2019 Siemens Protection Devices Limited

3.3 Application Service Data Unit (ASDU) Type

The Application Service Data Unit (ASDU) column of the "Information Number and Function" table lists the possible ASDUs returned for a point.

ASDU #	Description
1	Time tagged message (monitor direction)
2	Time tagged message (relative time) (monitor direction)
3.1	Measurands I
4	Time-tagged measurands with relative time
5	Identification message
6	Time synchronisation
7	General Interrogation Initialization
9	Measurands II
20	General command

© 2019 Siemens Protection Devices Limited

3.4 Point List

The following sub-sections contain tables listing the data points available via the IEC60870-5-103 protocol.

The information shown below is the default configuration. This can be modified using the Communications Configuration Editor tool, refer section 9 for details.

The information shown below is the default configuration. This can be modified using the Communications Configuration Editor tool, refer section 9 for details.

3.4.1 Event Function (FUN) & Information (INF) Numbers

The following Event EVT and INF numbers apply to this device.

FUN	INF	Description	ASDU	COT
60	4	Remote Mode	1	SE, GI
			20	Ack, Nak
60	5	Out Of Service Mode	1	SE, GI
			20	Ack, Nak
60	6	Local Mode	1	SE, GI
			20	Ack, Nak
60	7	Local & Remote	1	SE, GI
			20	Ack, Nak
60	12	Control Received	1	SE
60	13	Command Received	1	SE
60	128	Cold Start	1	SE
60	129	Warm Start	1	SE
60	130	Re-Start	1	SE
60	131	Expected Restart	1	SE, GI
60	132	Unexpected Restart	1	SE, GI
60	133	Reset Start Count	1	SE
			20	Ack, Nak
60	135	Trigger Storage	1	SE
60	136	Clear Waveform Records	1	SE
60	137	Clear Fault Records	1	SE
60	138	Clear Event Records	1	SE
60	140	Demand metering reset	1	SE
			20	Ack, Nak
60	170	General Alarm 1	1	SE, GI
60	171	General Alarm 2	1	SE, GI
60	172	General Alarm 3	1	SE, GI
60	173	General Alarm 4	1	SE, GI
60	174	General Alarm 5	1	SE, GI
60	175	General Alarm 6	1	SE, GI
60	182	Quick Logic E1	1	SE, GI
60	183	Quick Logic E2	1	SE, GI
60	184	Quick Logic E3	1	SE, GI
60	185	Quick Logic E4	1	SE, GI
70	5	Binary Input 5	1	SE, GI
70	6	Binary Input 6	1	SE, GI
75	1	Virtual Input 1	1	SE, GI

 © 2019 Siemens Protection Devices Limited

FUN	INF	Description	ASDU	COT
75	2	Virtual Input 2	1	SE, GI
75	3	Virtual Input 3	1	SE, GI
75	4	Virtual Input 4	1	SE, GI
75	5	Virtual Input 5	1	SE, GI
75	6	Virtual Input 6	1	SE, GI
75	7	Virtual Input 7	1	SE, GI
75	8	Virtual Input 8	1	SE, GI
80	1	Binary Output 1	1	SE, GI
			20	Ack, Nak
80	2	Binary Output 2	1	SE, GI
			20	Ack, Nak
80	3	Binary Output 3	1	SE, GI
			20	Ack, Nak
80	4	Binary Output 4	1	SE, GI
			20	Ack, Nak
80	5	Binary Output 5	1	SE, GI
			20	Ack, Nak
80	6	Binary Output 6	1	SE, GI
			20	Ack, Nak
80	7	Binary Output 7	1	SE, GI
			20	Ack, Nak
80	8	Binary Output 8	1	SE, GI
			20	Ack, Nak
90	1	LED 1	1	SE, GI
90	2	LED 2	1	SE, GI
90	3	LED 3	1	SE, GI
90	4	LED 4	1	SE, GI
90	5	LED 5	1	SE, GI
90	6	LED 6	1	SE, GI
90	7	LED 7	1	SE, GI
90	8	LED 8	1	SE, GI
90	9	LED 9	1	SE, GI
91	1	LED PU 1	1	SE, GI
91	2	LED PU 2	1	SE, GI
91	3	LED PU 3	1	SE, GI
91	4	LED PU 4	1	SE, GI
91	5	LED PU 5	1	SE, GI
91	6	LED PU 6	1	SE, GI
91	7	LED PU 7	1	SE, GI
91	8	LED PU 8	1	SE, GI
91	9	LED PU 9	1	SE, GI
160	2	Reset FCB	5	SE
160	3	Reset CU	5	SE
160	4	Start/Restart	5	SE
160	5	Power On	1	SE, GI
160	16	Auto-reclose active	1	SE, GI
			20	Ack, Nak
160	19	LED Reset	1	SE

© 2019 Siemens Protection Devices Limited

FUN	INF	Description	ASDU	COT
			20	Ack, Nak
160	22	Settings changed	1	SE
160	23	Setting G1 selected	1	SE, GI
			20	Ack, Nak
160	24	Setting G2 selected	1	SE, GI
			20	Ack, Nak
160	25	Setting G3 selected	1	SE, GI
			20	Ack, Nak
160	26	Setting G4 selected	1	SE, GI
			20	Ack, Nak
160	27	Binary Input 1	1	SE, GI
160	28	Binary Input 2	1	SE, GI
160	29	Binary Input 3	1	SE, GI
160	30	Binary Input 4	1	SE, GI
160	36	Trip Circuit Fail	1	SE, GI
160	64	Start/Pick-up L1	2	SE, GI
160	65	Start/Pick-up L2	2	SE, GI
160	66	Start/Pick-up L3	2	SE, GI
160	67	Start/Pick-up N	2	SE, GI
160	68	General Trip	2	SE
160	69	Trip L1	2	SE
160	70	Trip L2	2	SE
160	71	Trip L3	2	SE
160	84	General Start/Pick-up	2	SE, GI
160	85	Breaker Failure	2	SE
160	90	Trip I>	2	SE
160	91	Trip I>>	2	SE
160	92	Trip In>	2	SE
160	93	Trip In>>	2	SE
160	128	CB on by auto reclose	1	SE
183	10	51-1	2	SE, GI
183	11	50-1	2	SE, GI
183	12	51N-1	2	SE, GI
183	13	50N-1	2	SE, GI
183	14	51G-1	2	SE, GI
183	15	50G-1	2	SE, GI
183	16	51-2	2	SE, GI
183	17	50-2	2	SE, GI
183	18	51N-2	2	SE, GI
183	19	50N-2	2	SE, GI
183	20	51G-2	2	SE, GI
183	21	50G-2	2	SE, GI
183	34	50BF Stage 2	2	SE, GI
183	35	49-Alarm	2	SE, GI
183	36	49-Trip	2	SE, GI
183	41	51SEF-1	2	SE, GI
183	42	50SEF-1	2	SE, GI
183	43	51SEF-2	2	SE, GI
183	44	50SEF-2	2	SE, GI

© 2019 Siemens Protection Devices Limited

FUN	INF	Description	ASDU	COT
183	49	SEF Out	2	SE, GI
			20	Ack, Nak
183	50	46IT	2	SE, GI
183	51	46DT	2	SE, GI
183	52	64H	2	SE, GI
183	53	E/F Out	2	SE, GI
			20	Ack, Nak
183	56	50BF Stage 1	2	SE, GI
183	62	37-1	2	SE, GI
183	63	37-2	2	SE, GI
183	64	37G-1	2	SE, GI
183	65	37G-2	2	SE, GI
183	66	37SEF-1	2	SE, GI
183	67	37SEF-2	2	SE, GI
183	70	46BC	2	SE, GI
183	96	81HBL2	1	SE, GI
183	100	CB Alarm	1	SE, GI
183	101	Trip Circuit Fail 1	2	SE, GI
183	102	Trip Circuit Fail 2	2	SE, GI
183	103	Trip Circuit Fail 3	2	SE, GI
183	114	Close CB Failed	1	SE, GI
183	115	Open CB Failed	1	SE, GI
183	116	Reclaim	1	SE, GI
183	117	Lockout	1	SE, GI
183	119	Successful DAR Close	1	SE
183	120	Successful Man Close	1	SE
183	121	HotLine Working	1	SE, GI
			20	Ack, Nak
183	122	Inst Protection Out	1	SE, GI
			20	Ack, Nak
183	123	CB Total Trip Count	1	SE, GI
183	124	CB Delta Trip Count	1	SE, GI
183	125	CB Count To AR Block	1	SE, GI
183	126	Reset CB Total Trip Count	1	SE
			20	Ack, Nak
183	127	Reset CB Delta Trip Count	1	SE
			20	Ack, Nak
183	128	Reset CB Count To AR Block	1	SE
			20	Ack, Nak
183	129	I^2t CB Wear	1	SE, GI
183	130	Reset I^2t CB Wear	1	SE
			20	Ack, Nak
183	131	79 AR In progress	1	SE, GI
183	132	CB Frequent Ops Count	1	SE, GI
183	133	Reset CB Frequent Ops Count	1	SE
			20	Ack, Nak
183	137	CB on by auto reclose	1	SE, GI
183	140	Cold Load Active	1	SE, GI

© 2019 Siemens Protection Devices Limited

FUN	INF	Description	ASDU	COT
183	141	P/F Inst Protection Inhibited	1	SE, GI
183	142	E/F Inst Protection Inhibited	1	SE, GI
183	143	SEF Inst Protection Inhibited	1	SE, GI
183	144	Ext Inst Protection Inhibited	1	SE, GI
183	163	Trip Time Alarm	1	SE
183	164	Close Circuit Fail 1	2	SE, GI
183	165	Close Circuit Fail 2	2	SE, GI
183	166	Close Circuit Fail 3	2	SE, GI
183	167	Close Circuit Fail	2	SE, GI
183	171	60 CTS-I	2	SE, GI
183	181	CB Total Trip Count	4	SE
183	182	CB Delta Trip Count	4	SE
183	183	CB Count To AR Block	4	SE
183	184	CB Freq Ops Count	4	SE
183	222	37-PhA	2	SE, GI
183	223	37-PhB	2	SE, GI
183	224	37-PhC	2	SE, GI
183	225	50 LC-1	2	SE, GI
183	226	50 LC-2	2	SE, GI
183	227	50G LC-1	2	SE, GI
183	228	50G LC-2	2	SE, GI
183	231	50BF-PhA	2	SE, GI
183	232	50BF-PhB	2	SE, GI
183	233	50BF-PhC	2	SE, GI
183	234	50BF-EF	2	SE, GI
183	235	79 Last Trip Lockout	2	SE, GI
183	237	CB DBI	1	SE, GI
183	238	CB Travelling	1	SE, GI
183	239	In Fault Current	4	SE
183	240	Ia Fault Current	4	SE
183	241	Ib Fault Current	4	SE
183	242	Ic Fault Current	4	SE
183	243	Ig Fault Current	4	SE
183	249	60 CTS-I-PhA	2	SE, GI
183	250	60 CTS-I-PhB	2	SE, GI
183	251	60 CTS-I-PhC	2	SE, GI
183	252	Trip PhA	2	SE, GI
183	253	Trip PhB	2	SE, GI
183	254	Trip PhC	2	SE, GI
185	43	General Trip	2	SE, GI
185	110	CB Wear CB A	4	SE
185	111	CB Wear CB B	4	SE
185	112	CB Wear CB C	4	SE
185	113	CB Wear CB A Remaining	4	SE
185	114	CB Wear CB B Remaining	4	SE
185	115	CB Wear CB C Remaining	4	SE
185	241	Start Count Alarm	1	SE, GI
186	1	50AFD PhA	1	SE, GI
186	2	50AFD PhB	1	SE, GI

© 2019 Siemens Protection Devices Limited

FUN	INF	Description	ASDU	COT
186	3	50AFD PhC	1	SE, GI
186	4	50AFD	1	SE, GI
186	5	AFD Zone 1 Flash	1	SE, GI
186	6	AFD Zone 1	1	SE, GI
186	7	AFD Zone 2 Flash	1	SE, GI
186	8	AFD Zone 2	1	SE, GI
186	9	AFD Zone 3 Flash	1	SE, GI
186	10	AFD Zone 3	1	SE, GI
186	11	AFD Zone 4 Flash	1	SE, GI
186	12	AFD Zone 4	1	SE, GI
186	13	AFD Zone 5 Flash	1	SE, GI
186	14	AFD Zone 5	1	SE, GI
186	15	AFD Zone 6 Flash	1	SE, GI
186	16	AFD Zone 6	1	SE, GI
186	17	AFD Zone1 Count	4	SE
186	18	AFD Zone2 Count	4	SE
186	19	AFD Zone3 Count	4	SE
186	20	AFD Zone4 Count	4	SE
186	21	AFD Zone5 Count	4	SE
186	22	AFD Zone6 Count	4	SE
200	1	CB 1	1	SE
			20	Ack, Nak
200	6	CB 1 Opened	1	SE, GI
200	7	CB 1 Closed	1	SE, GI
200	150	User SP Command 1	1	SE, GI
			20	Ack, Nak
200	151	User SP Command 2	1	SE, GI
			20	Ack, Nak
200	152	User SP Command 3	1	SE, GI
			20	Ack, Nak
200	153	User SP Command 4	1	SE, GI
			20	Ack, Nak
200	154	User SP Command 5	1	SE, GI
			20	Ack, Nak
200	155	User SP Command 6	1	SE, GI
			20	Ack, Nak
200	156	User SP Command 7	1	SE, GI
			20	Ack, Nak
200	157	User SP Command 8	1	SE, GI
			20	Ack, Nak
200	158	User DP Command 1	1	SE
			20	Ack, Nak
200	159	User DP Command 2	1	SE
			20	Ack, Nak
200	160	User DP Command 3	1	SE
			20	Ack, Nak
200	161	User DP Command 4	1	SE
			20	Ack, Nak

© 2019 Siemens Protection Devices Limited

FUN	INF	Description	ASDU	COT
200	162	User DP Command 5	1	SE
			20	Ack, Nak
200	163	User DP Command 6	1	SE
			20	Ack, Nak
200	164	User DP Command 7	1	SE
			20	Ack, Nak
200	165	User DP Command 8	1	SE
			20	Ack, Nak
200	200	CB 1 Trip & Reclose	1	SE
			20	Ack, Nak
200	201	CB 1 Trip & Lockout	1	SE
			20	Ack, Nak
200	255	Blocked By Interlocking	1	SE, GI
255	0	General Interrogation (GI) Initiation	7	Init. GI
255	0	General Interrogation (GI) End	8	End of GI
255	0	Time Synchronisation	6	Time Synch.

3.4.2 Measurands

The following Measurand EVT and INF numbers apply to this device.

FUN	INF	Description	ASDU	COT
183	148	Measurand $I_{L1,2,3,}$ $V_{L1,2,3,}$ P, Q, F, $V_{L1-2,L2-3,L3-1}$ --- I_{L1} (2.4x) (Window 5%) I_{L2} (2.4x) (Window 5%) I_{L3} (2.4x) (Window 5%) V_{L1} (1.2x) (Window 1%) V_{L2} (1.2x) (Window 5%) V_{L3} (1.2x) (Window 5%) P (2.4x) (Window 5%) Q (2.4x) (Window 5%) F (1.2x) (Window 0.1%)	9	Cyclic - Refresh rate 5 seconds or value change greater than Window x %.
183	236	Measurand Max $I_{a,b,c,}$ $V_{an,bn,cn,}$ P, Q, $V_{ab,bc,ca}$ --- Ia Max (2.4x) (Window 1%) Ib Max (2.4x) (Window 1%) Ic Max (2.4x) (Window 1%) Van Max_1 (1.2x) (Window 1%) Vbn Max_2 (1.2x) (Window 1%) Vcn Max_3 (1.2x) (Window 1%) P Max (2.4x) (Window 1%) Q Max (2.4x) (Window 1%) Vab Max (1.2x) (Window 1%) Vbc Max (1.2x) (Window 1%) Vca Max (1.2x) (Window 1%)	9	Cyclic - Refresh rate 5 seconds or value change greater than Window x %.

3.4.3 Disturbance Recorder Actual Channel (ACC) Numbers

 © 2019 Siemens Protection Devices Limited

The following Disturbance Recorder channel numbers apply to this device.

FUN	ACC	Description
182	5	Ia
182	6	Ib
182	7	Ic
182	8	Ig1

© 2019 Siemens Protection Devices Limited

© 2019 Siemens Protection Devices Limited

4. MODBUS Definitions

4.1 Introduction

This section describes the MODBUS-RTU protocol implementation in the relays. This protocol is used for communication with a suitable control system.

This protocol can be set to use any or all of the relays hardware interfaces (USB, Fibre Optic, RS232 and RS485) where fitted. The relay can communicate simultaneously on all ports regardless of protocol used.

The Station Address of the port being used must be set to a suitable address within the range 1 - 247 to enable communication. This can be set by the **Communications Menu : COM *n-xxxxx* Station Address** setting.

Communication via MODBUS over Ethernet requires external devices. Please refer to the documents ***TCPIP Catalogue Sheet*** and ***TCPIP Interface Technical Guidance Notes*** for more information.

Definitions with shaded area are not available on all relay models.

© 2019 Siemens Protection Devices Limited

4.2 MODBUS Register Data Types

4.2.1 FLOAT_IEEE_754

The float data type conforms to the IEEE 754 floating point definition. This specifies that 32 bits of data will be formatted as a sign bit in the most significant bit (MSB) followed by an 8 bit exponent then a 23 bit mantissa, down to the least significant bit (LSB).

MSB																																LSB
Sign	Exponent								Mantissa																							

FLOAT_IEEE_754 IN DETAIL

The exponent is an 8 bit unsigned integer. To allow for negative exponents, it is offset by 127. Therefore the actual exponent is e - 127. The following table shows a detailed layout of the exponent.

2^7	2^6	2^5	2^4	2^3	2^2	2^1	2^0
128	64	32	16	8	4	2	1

The mantissa contains the fractional part of a number normalized to the form 1.xyz i.e. in this instance xyz. The mantissa represents the binary fraction of a number; therefore the MSB represents 2^{-1} (or $1/2^1$) and its LSB 2^{-23} (or $1/2^{23}$). The following table shows a detailed layout of the mantissa.

$\frac{1}{2^1}$	$\frac{1}{2^2}$	$\frac{1}{2^3}$	$\frac{1}{2^4}$																	$\frac{1}{2^{21}}$	$\frac{1}{2^{22}}$	$\frac{1}{2^{23}}$
0.5	0.25	0.125	0.0625																	4.768e-7	2.384e-7	1.192e-7

As an example 1,000,000 would be represented as follows (hex 49742400).

4				9				7				4				2				4				0				0			
0	1	0	0	1	0	0	1	0	1	1	1	0	1	0	0	0	0	1	0	0	1	0	0	0	0	0	0	0	0	0	0

This calculates out as:

Sign = +1

Exponent = 10010010_2 = 128 + 16 + 2 = 146, subtract 127 = 19.

$$\text{Mantissa} = 1 + \frac{1}{2^1} + \frac{1}{2^2} + \frac{1}{2^3} + \frac{1}{2^5} + \frac{1}{2^{10}} + \frac{1}{2^{13}}$$

$$= 1 + \frac{4096 + 2048 + 1024 + 256 + 8 + 1}{2^{13}} = 1 + \frac{7433}{2^{13}} = 1.907348632$$

Therefore $Sign * 2^{Exponent} * Mantissa = 1 * 2^{19} * 1.907348632 = 1000000$

FLOAT_IEEE_754 & MODBUS

In this MODBUS implementation the 32 bit float is stored in 2 16 registers in Big-Endian format. As an example, if we take the hex representation of 1,000,000 as a float (from above) we have 49742400h. Assume this is stored in the registers 30001 and 30002, it would look as follows.

Address	Value
30001	4974

© 2019 Siemens Protection Devices Limited

Address	Value
30002	2400

On reception these two registers should be interpreted in the correct order as IEEE754 floating point representation.

4.2.2 FP_32BITS_3DP

The FP_32BITS_3DP is a 32 bit integer fixed point value, containing 3 decimal places of information. It is used to send a real value to 3 decimal places as an integer. For example, if the value in a device is 123.456 it will be sent as 123456. As it is an integer, negative numbers are sent as 2's complement.

FP_32BITS_3DP & MODBUS

In this MODBUS implementation the 32 bit value is stored in 2 16 registers in Big-Endian format. As an example, if we take the hex representation of 123456, we have 1E240h. Assume this is stored in the registers 30001 and 30002, it would look as follows:

Address	Value
30001	1
30002	E240

On reception these two registers should be interpreted in the correct order as a 32 bit integer.

4.2.3 UINT32

The UINT32 is a signed 32 bit integer. As it is an integer, negative numbers are sent as 2's complement.

UINT32 & MODBUS

In this MODBUS implementation the 32 bit value is stored in 2 16 bit registers in Big-Endian format. As an example, if we take the hex representation of -123456, in 2's complement, we have FFFE1DC0h. Assume this is stored in the registers 30001 and 30002, it would look as follows:

Address	Value
30001	FFFE
30002	1DC0

On reception these two registers should be interpreted in the correct order as a 32 bit integer.

4.2.4 UINT16

The UINT16 is a signed 16 bit integer. As it is an integer, negative numbers are sent as 2's complement.

UINT16 & MODBUS

In this MODBUS implementation the 16 bit value is stored in a 16 bit register in Big-Endian format. As an example, if we take the hex representation of 5678 we have 162Eh. Assume this is stored in the register 30001, it would look as follows:

Address	Value
30001	162E

On reception this register should be interpreted as a 16 bit integer.

© 2019 Siemens Protection Devices Limited

Truncation

Calculations are performed as 32 bit. The 16 bit value is the lowest 16 bits of the 32 bit value. Therefore, when values overflow the returned value is the lowest 16 bits of the calculated value. For Example, if the value is 85400 = 14D98h, the value returned would be the lowest 16 bits = 4D98h which equals 19864.

4.2.5 EVENT

MODBUS does not define a method for extracting events; therefore a private method has been defined based on that defined by IEC60870-5-103.

The EVENT register contains the earliest event record available. The event record is 8 registers (16 bytes) of information, whose format is described below. When this record has been read it will be replaced by the next available record. Event records must be read completely; therefore the quantity value must be set to 8 before reading. Failing to do this will result in an exception code 2. If no event record is present the exception code 2 will be returned. The EVENT register should be polled regularly by the master for events.

The EVENTCOUNT register can be checked periodically to determine how many events are stored.

The format of the event record is defined by the zero byte. It signifies the type of record which is used to decode the event information. The zero byte can be one of the following.

Format

The format of the event record is defined by the zero byte. It signifies the type of record which is used to decode the event information. The zero byte can be one of the following.

Type	Description
1	Event
2	Event with Relative Time
4	Measurand Event with Relative Time

The following table describes the fields in the event record.

Key	Description
FUN	Function Type, as defined for IEC870-5-103.
INF	Information Number, as defined for IEC870-5-103.
DPI	Measurand Event with Relative Time, values 1 = OFF, 2 = ON.
ms L	Time Stamp Milliseconds low byte.
ms H	Time Stamp Milliseconds high byte.
Mi	Time Stamp Minutes (MSB = invalid, time not set > 23 hours).
Ho	Time Stamp Hours (MSB = Summer time flag).
RT L	Relative Time low byte.
RT H	Relative Time high byte.
F# L	Fault Number low byte.
F# H	Fault Number high byte.
Meas	Measurand format R32.23, sent least significant byte first.

The following tables show the fields in the different event records as they are returned.

Byte	0	1	2	3	4	5	6	7	8	9	10	11	12	13	14	15
Content	1	0	FUN	INF	DPI	0	0	0	0	0	0	0	ms L	ms H	Mi	Ho

Event Type 1 Format.

 © 2019 Siemens Protection Devices Limited

Byte	0	1	2	3	4	5	6	7	8	9	10	11	12	13	14	15
Content	2	0	FUN	INF	DPI	RT L	RT H	F# L	F# H	0	0	0	ms L	ms H	Mi	Ho

Event Type 2 Format.

Byte	0	1	2	3	4	5	6	7	8	9	10	11	12	13	14	15
Content	4	0	FUN	INF	Meas				0	0	0	0	ms L	ms H	Mi	Ho

Event Type 4 Format.

4.2.6 EVENTCOUNT

The EVENTCOUNT register contains the current number of events in the relay's event buffer.

On reception this register should be interpreted as a 16 bit integer.

4.2.7 TIME_METER

The TIME_METER register contains the device's time. The time must be read or written in one step; therefore the quantity should be 4 registers. Failing to do this will result in an exception code 2. The time format is 8 bytes as follows.

The following table describes the fields in the time.

Key	Description
ms L	Time Stamp Milliseconds low byte.
ms H	Time Stamp Milliseconds high byte.
Mi	Time Stamp Minutes (MSB = invalid, time not set > 23 hours).
Ho	Time Stamp Hours (MSB = Summer time flag).
Da	Time Stamp Days.
Mo	Time Stamp Months.
Ye L	Time Stamp Years low byte.
Ye H	Time Stamp Years high byte (Not Used).

The following table shows the fields in the time as they are returned.

Byte	0	1	2	3	4	5	6	7
Content	ms L	ms H	Mi	Ho	Da	Mo	Ye L	Ye H

Time Format.

4.2.8 STR32 & STR64

4.2.9 BITSTRING

A Bit-String (or Bit-Array) is a method of compactly storing a number of bits of data. In this instance we store up to 16 bit values, for example the states of binary inputs, in a single 16 bit register. The first bit value is stored in the Least Significant Bit (LSB) of the register. The 16th value would be in the Most Significant Bit (MSB). Bit values can only be zero or one. Any unused bits will be set to zero.

BITSTRING & MODBUS

In this MODBUS implementation the 16 bit value is stored in a 16 bit register in Big-Endian format. As an example, assume bits 1, 3, 9 and 12 are set. The binary representation of this would be 0000100100000101_2 giving a hex representation of 0905h. Assume this is stored in the register 30001, it would look as follows:

Address	Value
30001	0905

On reception this register should be interpreted as a 16 bit integer.

© 2019 Siemens Protection Devices Limited

4.3 Point List

The information shown below is the default configuration. This can be modified using the Communications Configuration Editor tool, refer section 9 for details.

4.3.1 Coils (Read Write Binary values)

Address	Description
00001	Binary Output 1
00002	Binary Output 2
00003	Binary Output 3
00004	Binary Output 4
00005	Binary Output 5
00006	Binary Output 6
00007	Binary Output 7
00008	Binary Output 8
00101	Setting G1 selected
00102	Setting G2 selected
00103	Setting G3 selected
00104	Setting G4 selected
00109	CB 1
00112	Auto-reclose active
00113	HotLine Working
00114	E/F Out
00115	SEF Out
00116	Inst Protection Out
00155	Remote Mode
00156	Out Of Service Mode
00157	Local Mode
00158	Local & Remote
00165	Reset Start Count
00180	CB 1 Opened
00181	CB 1 Closed
00200	User SP Command 1
00201	User SP Command 2
00202	User SP Command 3
00203	User SP Command 4
00204	User SP Command 5
00205	User SP Command 6
00206	User SP Command 7
00207	User SP Command 8
00208	User DP Command 1
00209	User DP Command 2
00210	User DP Command 3
00211	User DP Command 4
00212	User DP Command 5
00213	User DP Command 6
00214	User DP Command 7

© 2019 Siemens Protection Devices Limited

Address	Description
00215	User DP Command 8

4.3.2 Inputs (Read Only Binary values)

Address	Description
10001	Binary Input 1
10002	Binary Input 2
10003	Binary Input 3
10004	Binary Input 4
10005	Binary Input 5
10006	Binary Input 6
10102	Remote Mode
10103	Out Of Service Mode
10104	Local Mode
10105	Local & Remote
10110	General Trip
10111	Trip Circuit Fail
10112	Start/Pick-up L1
10113	Start/Pick-up L2
10114	Start/Pick-up L3
10115	General Start/Pick-up
10119	Start/Pick-up N
10122	51-1
10123	50-1
10124	51N-1
10125	50N-1
10126	51G-1
10127	50G-1
10128	51-2
10129	50-2
10130	51N-2
10131	50N-2
10132	51G-2
10133	50G-2
10146	50BF Stage 2
10147	49-Alarm
10148	49-Trip
10150	46IT
10151	46DT
10154	46BC
10167	64H
10168	37-1
10169	37-2
10171	Auto-reclose active
10172	CB on by auto reclose
10173	Reclaim
10174	Lockout
10175	HotLine Working

 © 2017 Siemens Protection Devices Limited

Address	Description
10176	Inst Protection Out
10177	CB Total Trip Count
10178	CB Delta Trip Count
10179	CB Count To AR Block
10180	I^2t CB Wear
10181	79 AR In progress
10182	Cold Load Active
10183	E/F Out
10184	P/F Inst Protection Inhibited
10185	E/F Inst Protection Inhibited
10186	SEF Inst Protection Inhibited
10187	Ext Inst Protection Inhibited
10202	51SEF-1
10203	50SEF-1
10204	51SEF-2
10205	50SEF-2
10210	SEF Out
10211	Trip Circuit Fail 1
10212	Trip Circuit Fail 2
10213	Trip Circuit Fail 3
10214	CB Total Trip Count
10215	CB Delta Trip Count
10216	CB Count To AR Block
10217	CB Frequent Ops Count
10218	I^2t CB Wear
10219	CB 1 Opened
10220	CB 1 Closed
10283	Close Circuit Fail 1
10284	Close Circuit Fail 2
10285	Close Circuit Fail 3
10286	Close Circuit Fail
10290	General Alarm 1
10291	General Alarm 2
10292	General Alarm 3
10293	General Alarm 4
10294	General Alarm 5
10295	General Alarm 6
10302	Quick Logic E1
10303	Quick Logic E2
10304	Quick Logic E3
10305	Quick Logic E4
10334	60 CTS-I
10335	81HBL2
10336	37G-1
10337	37G-2
10338	37SEF-1
10339	37SEF-2
10367	50BF Stage 1

© 2019 Siemens Protection Devices Limited

Address	Description
10369	37-PhA
10370	37-PhB
10371	37-PhC
10372	50 LC-1
10373	50 LC-2
10374	50G LC-1
10375	50G LC-2
10378	50BF-PhA
10379	50BF-PhB
10380	50BF-PhC
10381	50BF-EF
10383	60 CTS-I-PhA
10384	60 CTS-I-PhB
10385	60 CTS-I-PhC
10390	Trip PhA
10391	Trip PhB
10392	Trip PhC
10410	CB Alarm
10501	Virtual Input 1
10502	Virtual Input 2
10503	Virtual Input 3
10504	Virtual Input 4
10505	Virtual Input 5
10506	Virtual Input 6
10507	Virtual Input 7
10508	Virtual Input 8
10601	LED 1
10602	LED 2
10603	LED 3
10604	LED 4
10605	LED 5
10606	LED 6
10607	LED 7
10608	LED 8
10609	LED 9
10701	LED PU 1
10702	LED PU 2
10703	LED PU 3
10704	LED PU 4
10705	LED PU 5
10706	LED PU 6
10707	LED PU 7
10708	LED PU 8
10709	LED PU 9
10800	Cold Start
10801	Warm Start
10802	Re-Start
10803	Power On
10804	Expected Restart

© 2019 Siemens Protection Devices Limited

Address	Description
10805	Unexpected Restart
10806	Reset Start Count
10900	User SP Command 1
10901	User SP Command 2
10902	User SP Command 3
10903	User SP Command 4
10904	User SP Command 5
10905	User SP Command 6
10906	User SP Command 7
10907	User SP Command 8
10908	User DP Command 1
10909	User DP Command 2
10910	User DP Command 3
10911	User DP Command 4
10912	User DP Command 5
10913	User DP Command 6
10914	User DP Command 7
10915	User DP Command 8
11073	CB DBI
11074	CB Travelling
11075	Close CB Failed
11076	Open CB Failed
11077	Start Count Alarm
11078	50AFD PhA
11079	50AFD PhB
11080	50AFD PhC
11081	50AFD
11082	AFD Zone 1 Flash
11083	AFD Zone 1
11084	AFD Zone 2 Flash
11085	AFD Zone 2
11086	AFD Zone 3 Flash
11087	AFD Zone 3
11088	AFD Zone 4 Flash
11089	AFD Zone 4
11090	AFD Zone 5 Flash
11091	AFD Zone 5
11092	AFD Zone 6 Flash
11093	AFD Zone 6

4.3.3 Input Registers (Read Only Registers)

Address	Description	Format	Mult	Description
30001	Event Count	EVENTCOUNT	0.000000	Events Counter
30002	Event	EVENT	0.000000	8 Registers
30060	Frequency	FP_32BITS_3DP	1.000000	Frequency Hz
30064	Ia Primary	FP_32BITS_3DP	1.000000	Ia A

© 2019 Siemens Protection Devices Limited

Address	Description	Format	Mult	Description
30066	Ib Primary	FP_32BITS_3DP	1.000000	Ib A
30068	Ic Primary	FP_32BITS_3DP	1.000000	Ic A
30070	Ia Secondary	FP_32BITS_3DP	1.000000	Ia A
30072	Ib Secondary	FP_32BITS_3DP	1.000000	Ib A
30074	Ic Secondary	FP_32BITS_3DP	1.000000	Ic A
30076	Ia Nominal	FP_32BITS_3DP	1.000000	Ia xIn
30078	Ib Nominal	FP_32BITS_3DP	1.000000	Ib xIn
30080	Ic Nominal	FP_32BITS_3DP	1.000000	Ic xIn
30082	Ia Nominal	FP_32BITS_3DP	1.000000	Ia Degrees
30084	Ib Nominal	FP_32BITS_3DP	1.000000	Ib Degrees
30086	Ic Nominal	FP_32BITS_3DP	1.000000	Ic Degrees
30088	In Primary	FP_32BITS_3DP	1.000000	In A
30090	In Secondary	FP_32BITS_3DP	1.000000	In A
30092	In Nominal	FP_32BITS_3DP	1.000000	In xInom
30094	Ig Primary	FP_32BITS_3DP	1.000000	Ig A
30096	Ig Secondary	FP_32BITS_3DP	1.000000	Ig A
30098	Ig Nominal	FP_32BITS_3DP	1.000000	Ig xInom
30100	Izps Nominal	FP_32BITS_3DP	1.000000	Izps xIn
30102	Ipps Nominal	FP_32BITS_3DP	1.000000	Ipps xIn
30104	Inps Nominal	FP_32BITS_3DP	1.000000	Inps xIn
30106	Izps Nominal	FP_32BITS_3DP	1.000000	Izps Degrees
30108	Ipps Nominal	FP_32BITS_3DP	1.000000	Ipps Degrees
30110	Inps Nominal	FP_32BITS_3DP	1.000000	Inps Degrees
30152	Thermal Status Ph A	UINT16	1.000000	Thermal Status Ph A %
30153	Thermal Status Ph B	UINT16	1.000000	Thermal Status Ph B %
30154	Thermal Status Ph C	UINT16	1.000000	Thermal Status Ph C %
30167	Fault Records	UINT16	1.000000	Fault Records
30168	Event Records	UINT16	1.000000	Event Records
30169	Waveform Records	UINT16	1.000000	Waveform Records
30193	I Phase A Max	FP_32BITS_3DP	1.000000	Ia Max Demand
30195	I Phase B Max	FP_32BITS_3DP	1.000000	Ib Max Demand
30197	I Phase C Max	FP_32BITS_3DP	1.000000	Ic Max Demand
30207	Isef Primary	FP_32BITS_3DP	1.000000	Isef A
30209	Isef Secondary	FP_32BITS_3DP	1.000000	Isef A
30211	Isef Nominal	FP_32BITS_3DP	1.000000	Isef xInom
30241	CB Total Trip Count	UINT32	1.000000	CB Total Trip Count
30243	CB Delta Trip Count	UINT32	1.000000	CB Delta Trip Count
30245	CB Count To AR Block	UINT32	1.000000	CB Count to AR Block
30247	CB Frequent Ops Count	UINT32	1.000000	CB Frequent Ops Count
30301	Ia Last Trip	FP_32BITS_3DP	1.000000	Ia Fault
30303	Ib Last Trip	FP_32BITS_3DP	1.000000	Ib Fault
30305	Ic Last Trip	FP_32BITS_3DP	1.000000	Ic Fault
30313	In Last Trip	FP_32BITS_3DP	1.000000	In Fault
30315	Ig Last Trip	FP_32BITS_3DP	1.000000	Ig Fault
30341	LED1-n	BITSTRING	0.000000	Led 1-16 status
30342	LED1-n	BITSTRING	0.000000	Led 17-32 status
30343	INP1-n	BITSTRING	0.000000	Input 1-16 status
30344	INP1-n	BITSTRING	0.000000	Input 17-32 status
30345	OUT1-n	BITSTRING	0.000000	Output 1-16 status

© 2019 Siemens Protection Devices Limited

Address	Description	Format	Mult	Description
30346	OUT1-n	BITSTRING	0.000000	Output 17-32 status
30347	VRT1-n	BITSTRING	0.000000	Virtual 1-16 status
30348	VRT1-n	BITSTRING	0.000000	Virtual 17-32 status
30349	EQN1-n	BITSTRING	0.000000	Equation 1-16 status
30350	EQN1-n	BITSTRING	0.000000	Equation 17-32 status
30354	CB Wear A	FP_32BITS_3DP	0.000001	CB Wear A
30356	CB Wear B	FP_32BITS_3DP	0.000001	CB Wear B
30358	CB Wear C	FP_32BITS_3DP	0.000001	CB Wear C
30360	CB Wear A Remaining	FP_32BITS_3DP	1.000000	CB Wear A Remaining
30362	CB Wear B Remaining	FP_32BITS_3DP	1.000000	CB Wear B Remaining
30364	CB Wear C Remaining	FP_32BITS_3DP	1.000000	CB Wear C Remaining
30366	CB Wear Minimum	FP_32BITS_3DP	1.000000	CB Wear Minimum
30380	StartCount	FP_32BITS_3DP	1.000000	Start Count
30382	Start Count Target	FP_32BITS_3DP	1.000000	Start Count Target
30392	Active Setting Group	UINT16	1.000000	Active Setting Group
30400	Frequency Max	FP_32BITS_3DP	1.000000	Frequency Max
30468	CB Trip Time Meter	FP_32BITS_3DP	1.000000	CB Trip Time

4.3.4 Holding Registers (Read Write Registers)

Address	Description	Format	Mult	Description
40001	Time	TIME_METER	0.000000	Time
40060	Frequency	FP_32BITS_3DP	1.000000	Frequency Hz
40064	Ia Primary	FP_32BITS_3DP	1.000000	Ia A
40066	Ib Primary	FP_32BITS_3DP	1.000000	Ib A
40068	Ic Primary	FP_32BITS_3DP	1.000000	Ic A
40070	Ia Secondary	FP_32BITS_3DP	1.000000	Ia A
40072	Ib Secondary	FP_32BITS_3DP	1.000000	Ib A
40074	Ic Secondary	FP_32BITS_3DP	1.000000	Ic A
40076	Ia Nominal	FP_32BITS_3DP	1.000000	Ia xIn
40078	Ib Nominal	FP_32BITS_3DP	1.000000	Ib xIn
40080	Ic Nominal	FP_32BITS_3DP	1.000000	Ic xIn
40082	Ia Nominal	FP_32BITS_3DP	1.000000	Ia Degrees
40084	Ib Nominal	FP_32BITS_3DP	1.000000	Ib Degrees
40086	Ic Nominal	FP_32BITS_3DP	1.000000	Ic Degrees
40088	In Primary	FP_32BITS_3DP	1.000000	In A
40090	In Secondary	FP_32BITS_3DP	1.000000	In A
40092	In Nominal	FP_32BITS_3DP	1.000000	In xInom
40094	Ig Primary	FP_32BITS_3DP	1.000000	Ig A
40096	Ig Secondary	FP_32BITS_3DP	1.000000	Ig A
40098	Ig Nominal	FP_32BITS_3DP	1.000000	Ig xInom
40100	Izps Nominal	FP_32BITS_3DP	1.000000	Izps xIn
40102	Ipps Nominal	FP_32BITS_3DP	1.000000	Ipps xIn
40104	Inps Nominal	FP_32BITS_3DP	1.000000	Inps xIn
40106	Izps Nominal	FP_32BITS_3DP	1.000000	Izps Degrees
40108	Ipps Nominal	FP_32BITS_3DP	1.000000	Ipps Degrees
40110	Inps Nominal	FP_32BITS_3DP	1.000000	Inps Degrees

© 2019 Siemens Protection Devices Limited

Address	Description	Format	Mult	Description
40152	Thermal Status Ph A	UINT16	1.000000	Thermal Status Ph A %
40153	Thermal Status Ph B	UINT16	1.000000	Thermal Status Ph B %
40154	Thermal Status Ph C	UINT16	1.000000	Thermal Status Ph C %
40167	Fault Records	UINT16	1.000000	Fault Records
40168	Event Records	UINT16	1.000000	Event Records
40169	Waveform Records	UINT16	1.000000	Waveform Records
40193	I Phase A Max	FP_32BITS_3DP	1.000000	Ia Max Demand
40195	I Phase B Max	FP_32BITS_3DP	1.000000	Ib Max Demand
40197	I Phase C Max	FP_32BITS_3DP	1.000000	Ic Max Demand
40207	Isef Primary	FP_32BITS_3DP	1.000000	Isef A
40209	Isef Secondary	FP_32BITS_3DP	1.000000	Isef A
40211	Isef Nominal	FP_32BITS_3DP	1.000000	Isef xInom
40241	CB Total Trip Count	UINT32	1.000000	CB Total Trip Count
40243	CB Delta Trip Count	UINT32	1.000000	CB Delta Trip Count
40245	CB Count To AR Block	UINT32	1.000000	CB Count to AR Block
40247	CB Frequent Ops Count	UINT32	1.000000	CB Frequent Ops Count
40301	Ia Last Trip	FP_32BITS_3DP	1.000000	Ia Fault
40303	Ib Last Trip	FP_32BITS_3DP	1.000000	Ib Fault
40305	Ic Last Trip	FP_32BITS_3DP	1.000000	Ic Fault
40313	In Last Trip	FP_32BITS_3DP	1.000000	In Fault
40315	Ig Last Trip	FP_32BITS_3DP	1.000000	Ig Fault
40341	LED1-n	BITSTRING	0.000000	Led 1-16 status
40342	LED1-n	BITSTRING	0.000000	Led 17-32 status
40343	INP1-n	BITSTRING	0.000000	Input 1-16 status
40344	INP1-n	BITSTRING	0.000000	Input 17-32 status
40345	OUT1-n	BITSTRING	0.000000	Output 1-16 status
40346	OUT1-n	BITSTRING	0.000000	Output 17-32 status
40347	VRT1-n	BITSTRING	0.000000	Virtual 1-16 status
40348	VRT1-n	BITSTRING	0.000000	Virtual 17-32 status
40349	EQN1-n	BITSTRING	0.000000	Equation 1-16 status
40350	EQN1-n	BITSTRING	0.000000	Equation 17-32 status
40354	CB Wear A	FP_32BITS_3DP	0.000001	CB Wear A
40356	CB Wear B	FP_32BITS_3DP	0.000001	CB Wear B
40358	CB Wear C	FP_32BITS_3DP	0.000001	CB Wear C
40360	CB Wear A Remaining	FP_32BITS_3DP	1.000000	CB Wear A Remaining
40362	CB Wear B Remaining	FP_32BITS_3DP	1.000000	CB Wear B Remaining
40364	CB Wear C Remaining	FP_32BITS_3DP	1.000000	CB Wear C Remaining
40366	CB Wear Minimum	FP_32BITS_3DP	1.000000	CB Wear Minimum
40368	Active Setting Group	UINT16	1.000000	Active Setting Group
40394	Ia 2nd Harmonic Nominal	FP_32BITS_3DP	1.000000	81HBL2 PhA xIn
40396	Ib 2nd Harmonic Nominal	FP_32BITS_3DP	1.000000	81HBL2 PhB xIn
40398	Ic 2nd Harmonic Nominal	FP_32BITS_3DP	1.000000	81HBL2 PhC xIn
40401	Event Count	EVENTCOUNT	0.000000	Events Counter
40402	Event	EVENT	0.000000	8 Registers
40404	Frequency Max	FP_32BITS_3DP	1.000000	Frequency Max
40472	CB Trip Time Meter	FP_32BITS_3DP	1.000000	CB Trip Time

© 2019 Siemens Protection Devices Limited

5. DNP3 Definitions

5.1 Device Profile

The following table provides a “Device Profile Document” in the standard format defined in the DNP 3.0 Subset Definitions Document. While it is referred to in the DNP 3.0 Subset Definitions as a “Document,” it is in fact a table, and only a component of a total interoperability guide. The table, in combination with the Implementation Table provided in Section 5.2 (beginning on page 40), and the Point List Tables provided in Section 5.3 (beginning on page 46), should provide a complete configuration/interoperability guide for communicating with a device implementing the Triangle MicroWorks, Inc. DNP 3.0 Slave Source Code Library.

DNP V3.0 DEVICE PROFILE DOCUMENT (Also see the DNP 3.0 Implementation Table in Section 5.2, beginning on page 40).	
Vendor Name: **Siemens Protection Devices Ltd.**	
Device Name: **7SR110, using the Triangle MicroWorks, Inc. DNP3 Slave Source Code Library, Version 3.**	
Highest DNP Level Supported: For Requests: **Level 3** For Responses: **Level 3**	Device Function: ☐ Master ☒ **Slave**
Notable objects, functions, and/or qualifiers supported in addition to the Highest DNP Levels Supported (the complete list is described in the attached table): For static (non-change-event) object requests, request qualifier codes 07 and 08 (limited quantity), and 17 and 28 (index) are supported. Static object requests sent with qualifiers 07, or 08, will be responded with qualifiers 00 or 01. **Output Event Object 11 is supported.**	
Maximum Data Link Frame Size (octets): Transmitted: **256** Received: **256**	Maximum Application Fragment Size (octets): Transmitted: **2048** Received: **2048**
Maximum Data Link Re-tries: ☐ None ☐ Fixed (3) ☒ **Configurable from 0 to 65535 (Default 3)**	Maximum Application Layer Re-tries: ☒ **None** ☐ Configurable
Requires Data Link Layer Confirmation: ☐ Never ☐ Always ☐ Sometimes ☒ **Configurable as: Never, Only for multi-frame messages, or Always**	
Requires Application Layer Confirmation: ☐ Never ☐ Always ☒ **When reporting Event Data (Slave devices only)** ☒ **When sending multi-fragment responses (Slave devices only)** ☐ Sometimes ☐ Configurable as: “Only when reporting event data”, or “When reporting event data or multi-fragment messages.”	

Timeouts while waiting for:

Data Link Confirm:	☐ None	☐ Fixed at ____	☐ Variable	☒ **Configurable (2sec)**
Complete Appl. Fragment:	☒ **None**	☐ Fixed at ____	☐ Variable	☐ Configurable
Application Confirm:	☐ None	☐ Fixed at ____	☐ Variable	☒ **Configurable (10sec)**
Complete Appl. Response:	☒ **None**	☐ Fixed at ____	☐ Variable	☐ Configurable

Others:

Transmission Delay, (Configurable, default 0 sec)

Select/Operate Arm Timeout, (Configurable, default 5 sec)

Need Time Interval, (Configurable, default 30 minutes)

DNP V3.0
DEVICE PROFILE DOCUMENT
(Also see the DNP 3.0 Implementation Table in Section 5.2, beginning on page 40).

Unsolicited Notification Delay, (Configurable, default 5 seconds)
Unsolicited Response Retry Delay, (Configurable (between 3 - 9), default 5 seconds)
Unsolicited Offline Interval, (Configurable, default 30 seconds)
Binary Change Event Scan Period, (Polled, Not Applicable)
Double Bit Change Event Scan Period, (Polled - Not Applicable)
Analog Change Event Scan Period, (Polled - Not Applicable)
Counter Change Event Scan Period, (Polled - Not Applicable)
Frozen Counter Change Event Scan Period, (Polled - Not Applicable)
String Change Event Scan Period, (Unsupported - Not Applicable)
Virtual Terminal Event Scan Period, (Unsupported - Not Applicable)

Sends/Executes Control Operations:

WRITE Binary Outputs	☒ **Never**	☐ Always	☐ Sometimes	☐ Configurable
SELECT/OPERATE	☐ Never	☒ **Always**	☐ Sometimes	☐ Configurable
DIRECT OPERATE	☐ Never	☒ **Always**	☐ Sometimes	☐ Configurable
DIRECT OPERATE - NO ACK	☐ Never	☒ **Always**	☐ Sometimes	☐ Configurable
Count > 1	☒ **Never**	☐ Always	☐ Sometimes	☐ Configurable
Pulse On	☐ Never	☐ Always	☒ **Sometimes**	☐ Configurable
Pulse Off	☐ Never	☐ Always	☒ **Sometimes**	☐ Configurable
Latch On	☐ Never	☐ Always	☒ **Sometimes**	☐ Configurable
Latch Off	☐ Never	☐ Always	☒ **Sometimes**	☐ Configurable
Queue	☒ **Never**	☐ Always	☐ Sometimes	☐ Configurable
Clear Queue	☒ **Never**	☐ Always	☐ Sometimes	☐ Configurable

Attach explanation if “Sometimes” or “Configurable” was checked for any operation.

Reports Binary Input Change Events when no specific variation requested:
- ☐ Never
- ☐ Only time-tagged
- ☐ Only non-time-tagged
- ☒ **Configurable to send one or the other**

Reports time-tagged Binary Input Change Events when no specific variation requested:
- ☐ Never
- ☐ Binary Input Change With Time
- ☐ Binary Input Change With Relative Time
- ☒ **Configurable**

Sends Unsolicited Responses:
- ☐ Never
- ☒ **Configurable**
- ☐ Only certain objects
- ☐ Sometimes (attach explanation)
- ☒ **ENABLE/DISABLE UNSOLICITED Function codes supported**

Sends Static Data in Unsolicited Responses:
- ☒ **Never**
- ☐ When Device Restarts
- ☐ When Status Flags Change

No other options are permitted.

Default Counter Object/Variation:
- ☐ No Counters Reported
- ☒ **Configurable**
- ☐ Default Object
  Default Variation: _____
- ☒ **Point-by-point list attached**

Counters Roll Over at:
- ☐ No Counters Reported
- ☐ Configurable (attach explanation)
- ☐ 16 Bits
- ☒ **32 Bits**
- ☐ Other Value: _____
- ☒ **Point-by-point list attached**

Sends Multi-Fragment Responses:
- ☒ **Yes**
- ☐ No
- ☐ Configurable

Sequential File Transfer Support:

© 2019 Siemens Protection Devices Limited

DNP V3.0 DEVICE PROFILE DOCUMENT (Also see the DNP 3.0 Implementation Table in Section 5.2, beginning on page 40).		
File Transfer Support	☐ Yes	☒ **No**
Append File Mode	☐ Yes	☒ **No**
Custom Status Code Strings	☐ Yes	☒ **No**
Permissions Field	☐ Yes	☒ **No**
File Events Assigned to Class	☐ Yes	☒ **No**
File Events Send Immediately	☐ Yes	☒ **No**
Multiple Blocks in a Fragment	☐ Yes	☒ **No**
Max Number of Files Open	**0**	

© 2019 Siemens Protection Devices Limited

5.2 Implementation Table

The following table identifies which object variations, function codes, and qualifiers the Triangle MicroWorks, Inc. DNP 3.0 Slave Source Code Library supports in both request messages and in response messages. For static (non-change-event) objects, requests sent with qualifiers 00, 01, 06, 07, or 08, will be responded with qualifiers 00 or 01. Requests sent with qualifiers 17 or 28 will be responded with qualifiers 17 or 28. For change-event objects, qualifiers 17 or 28 are always responded.

In the table below, text shaded as 00, 01 (start stop) indicates Subset Level 3 functionality (beyond Subset Level 2).

In the table below, text shaded as 07, 08 (limited qty) indicates functionality beyond Subset Level 3.

OBJECT			REQUEST (Library will parse)		RESPONSE (Library will respond with)	
Object Number	**Variation**	**Description**	**Function Codes (dec)**	**Qualifier Codes (hex)**	**Function Codes (dec)**	**Qualifier Codes (hex)**
1	0	Binary Input - Any Variation	1 (read) 22 (assign class)	00, 01 (start-stop) 06 (no range, or all) 07, 08 (limited qty) 17, 27, 28 (index)		
1	1	Binary Input	1 (read)	00, 01 (start-stop) 06 (no range, or all) 07, 08 (limited qty) 17, 27, 28 (index)	129 (response)	00, 01 (start-stop) 17, 28 (index - see note 2)
1	2 (default - see note 1)	Binary Input with Status	1 (read)	00, 01 (start-stop) 06 (no range, or all) 07, 08 (limited qty) 17, 27, 28 (index)	129 (response)	00, 01 (start-stop) 17, 28 (index - see note 2)
2	0	Binary Input Change - Any Variation	1 (read)	06 (no range, or all) 07, 08 (limited qty)		
2	1	Binary Input Change without Time	1 (read)	06 (no range, or all) 07, 08 (limited qty)	129 (response) 130 (unsol. resp)	17, 28 (index)
2	2 (default - see note 1)	Binary Input Change with Time	1 (read)	06 (no range, or all) 07, 08 (limited qty)	129 (response) 130 (unsol. resp)	17, 28 (index)
2	3	Binary Input Change with Relative Time	1 (read)	06 (no range, or all) 07, 08 (limited qty)	129 (response) 130 (unsol. resp)	17, 28 (index)
3	0	Double Bit Input - Any Variation	1 (read) 22 (assign class)	00, 01 (start-stop) 06 (no range, or all) 07, 08 (limited qty) 17, 27, 28 (index)		
3	1 (default - see note 1)	Double Bit Input	1 (read)	00, 01 (start-stop) 06 (no range, or all) 07, 08 (limited qty) 17, 27, 28 (index)	129 (response)	00, 01 (start-stop) 17, 28 (index - see note 1)
3	2	Double Bit Input with Status	1 (read)	00, 01 (start-stop) 06 (no range, or all) 07, 08 (limited qty) 17, 27, 28 (index)	129 (response)	00, 01 (start-stop) 17, 28 (index - see note 1)
4	0	Double Bit Input Change - Any Variation	1 (read)	06 (no range, or all) 07, 08 (limited qty)		
4	1	Double Bit Input Change without Time	1 (read)	06 (no range, or all) 07, 08 (limited qty)	129 (response) 130 (unsol. resp)	17, 28 (index)
4	2	Double Bit Input Change with Time	1 (read)	06 (no range, or all) 07, 08 (limited qty)	129 (response) 130 (unsol. resp)	17, 28 (index)
4	3 (default - see note 1)	Double Bit Input Change with Relative Time	1 (read)	06 (no range, or all) 07, 08 (limited qty)	129 (response) 130 (unsol. resp)	17, 28 (index)
10	0	Binary Output - Any Variation	1 (read) 22 (assign class)	00, 01 (start-stop) 06 (no range, or all) 07, 08 (limited qty) 17, 27, 28 (index)		

© 2019 Siemens Protection Devices Limited

OBJECT			REQUEST (Library will parse)		RESPONSE (Library will respond with)	
Object Number	**Variation**	**Description**	**Function Codes (dec)**	**Qualifier Codes (hex)**	**Function Codes (dec)**	**Qualifier Codes (hex)**
10	1	Binary Output	1 (read)	00, 01 (start-stop) 06 (no range, or all) 07, 08 (limited qty) 17, 27, 28 (index)	129 (response)	00, 01 (start-stop) 17, 28 (index - see note 2)
			2 (write)	00, 01 (start-stop)		
10	2 (default - see note 1)	Binary Output Status	1 (read)	00, 01 (start-stop) 06 (no range, or all) 07, 08 (limited qty) 17, 27, 28 (index)	129 (response)	00, 01 (start-stop) 17, 28 (index - see note 2)
11	0	Binary Output Change - Any Variation	1 (read)	06 (no range, or all) 07, 08 (limited qty)		
11	1	Binary Output Change without Time	1 (read)	06 (no range, or all) 07, 08 (limited qty)	129 (response) 130 (unsol. resp)	17, 28 (index)
11	2 (default - see note 1)	Binary Output Change with Time	1 (read)	06 (no range, or all) 07, 08 (limited qty)	129 (response) 130 (unsol. resp)	17, 28 (index)
12	0	Control Relay Output Block	22 (assign class)	00, 01 (start-stop) 06 (no range, or all) 07, 08 (limited qty) 17, 27, 28 (index)		
12	1	Control Relay Output Block	3 (select) 4 (operate) 5 (direct op) 6 (dir. op, noack)	17, 28 (index)	129 (response)	echo of request
12	2	Pattern Control Block	3 (select) 4 (operate) 5 (direct op) 6 (dir. op, noack)	7 (limited quantity)	129 (response)	echo of request
12	3	Pattern Mask	3 (select) 4 (operate) 5 (direct op) 6 (dir. op, noack)	00, 01 (start-stop)	129 (response)	echo of request
13	0	Binary Output Command Event - Any Variation	1 (read)	06 (no range, or all) 07, 08 (limited qty)		
13	1 (default - see note 1)	Binary Output Command Event without Time	1 (read)	06 (no range, or all) 07, 08 (limited qty)	129 (response) 130 (unsol. resp)	17, 28 (index)
13	2	Binary Output Command Event with Time	1 (read)	06 (no range, or all) 07, 08 (limited qty)	129 (response) 130 (unsol. resp)	17, 28 (index)
20	0	Binary Counter - Any Variation	1 (read) 22 (assign class)	00, 01 (start-stop) 06 (no range, or all) 07, 08 (limited qty) 17, 27, 28 (index)		
			7 (freeze) 8 (freeze noack) 9 (freeze clear) 10 (frz. cl. noack)	00, 01 (start-stop) 06 (no range, or all) 07, 08 (limited qty)		
20	1	32-Bit Binary Counter (with Flag)	1 (read)	00, 01 (start-stop) 06 (no range, or all) 07, 08 (limited qty) 17, 27, 28 (index)	129 (response)	00, 01 (start-stop) 17, 28 (index - see note 2)
20	2	16-Bit Binary Counter (with Flag)	1 (read)	00, 01 (start-stop) 06 (no range, or all) 07, 08 (limited qty) 17, 27, 28 (index)	129 (response)	00, 01 (start-stop) 17, 28 (index - see note 2)
20	3	32-Bit Delta Counter (with Flag)				
20	4	16-Bit Delta Counter (with Flag)				
20	5 (default see note 1)	32-Bit Binary Counter (without Flag)	1 (read)	00, 01 (start-stop) 06 (no range, or all) 07, 08 (limited qty) 17, 27, 28 (index)	129 (response)	00, 01 (start-stop) 17, 28 (index - see note 2)

© 2019 Siemens Protection Devices Limited

OBJECT			REQUEST (Library will parse)		RESPONSE (Library will respond with)	
Object Number	**Variation**	**Description**	**Function Codes (dec)**	**Qualifier Codes (hex)**	**Function Codes (dec)**	**Qualifier Codes (hex)**
20	6	16-Bit Binary Counter (without Flag)	1 (read)	00, 01 (start-stop) 06 (no range, or all) 07, 08 (limited qty) 17, 27, 28 (index)	129 (response)	00, 01 (start-stop) 17, 28 (index - see note 2)
20	7	32-Bit Delta Counter (without Flag)				
20	8	16-Bit Delta Counter (without Flag)				
21	0	Frozen Counter - Any Variation	1 (read) 22 (assign class)	00, 01 (start-stop) 06 (no range, or all) 07, 08 (limited qty) 17, 27, 28 (index)		
21	1	32-Bit Frozen Counter (with Flag)	1 (read)	00, 01 (start-stop) 06 (no range, or all) 07, 08 (limited qty) 17, 27, 28 (index)	129 (response)	00, 01 (start-stop) 17, 28 (index - see note 2)
21	2	16-Bit Frozen Counter (with Flag)	1 (read)	00, 01 (start-stop) 06 (no range, or all) 07, 08 (limited qty) 17, 27, 28 (index)	129 (response)	00, 01 (start-stop) 17, 28 (index - see note 2)
21	3	32-Bit Frozen Delta Counter (with Flag)				
21	4	16-Bit Frozen Delta Counter (with Flag)				
21	5	32-Bit Frozen Counter (without Time Of Freeze)	1 (read)	00, 01 (start-stop) 06 (no range, or all) 07, 08 (limited qty) 17, 27, 28 (index)	129 (response)	00, 01 (start-stop) 17, 28 (index - see note 2)
21	6	16-Bit Frozen Counter (without Time Of Freeze)	1 (read)	00, 01 (start-stop) 06 (no range, or all) 07, 08 (limited qty) 17, 27, 28 (index)	129 (response)	00, 01 (start-stop) 17, 28 (index - see note 2)
21	7	32-Bit Frozen Delta Counter (with Time Of Freeze)				
21	8	16-Bit Frozen Delta Counter (with Time Of Freeze)				
21	9 (default - see note 1)	32-Bit Frozen Counter (without Flag)	1 (read)	00, 01 (start-stop) 06 (no range, or all) 07, 08 (limited qty) 17, 27, 28 (index)	129 (response)	00, 01 (start-stop) 17, 28 (index - see note 2)
21	10	16-Bit Frozen Counter (without Flag)	1 (read)	00, 01 (start-stop) 06 (no range, or all) 07, 08 (limited qty) 17, 27, 28 (index)	129 (response)	00, 01 (start-stop) 17, 28 (index - see note 2)
21	11	32-Bit Frozen Delta Counter (without Flag)				
21	12	16-Bit Frozen Delta Counter (without Flag)				
22	0	Counter Change Event - Any Variation	1 (read)	06 (no range, or all) 07, 08 (limited qty)		
22	1 (default - see note 1)	32-Bit Counter Change Event (without Time)	1 (read)	06 (no range, or all) 07, 08 (limited qty)	129 (response) 130 (unsol. resp)	17, 28 (index)
22	2	16-Bit Counter Change Event (without Time)	1 (read)	06 (no range, or all) 07, 08 (limited qty)	129 (response) 130 (unsol. resp)	17, 28 (index)
22	3	32-Bit Delta Counter Change Event (without Time)				
22	4	16-Bit Delta Counter Change Event (without Time)				
22	5	32-Bit Counter Change Event (with Time)	1 (read)	06 (no range, or all) 07, 08 (limited qty)	129 (response) 130 (unsol. resp)	17, 28 (index)
22	6	16-Bit Counter Change Event (with Time)	1 (read)	06 (no range, or all) 07, 08 (limited qty)	129 (response) 130	17, 28 (index)

© 2019 Siemens Protection Devices Limited

OBJECT			REQUEST (Library will parse)		RESPONSE (Library will respond with)	
Object Number	**Variation**	**Description**	**Function Codes (dec)**	**Qualifier Codes (hex)**	**Function Codes (dec)**	**Qualifier Codes (hex)**
					(unsol. resp)	
22	7	32-Bit Delta Counter Change Event (with Time)				
22	8	16-Bit Delta Counter Change Event (with Time)				
23	0	Frozen Counter Event (Variation 0 is used to request default variation)	1 (read)	06 (no range, or all) 07, 08 (limited qty)		
23	1 (default - see note 1)	32-Bit Frozen Counter Event	1 (read)	06 (no range, or all) 07, 08 (limited qty)	129 (response)	17, 28 (index)
23	2	16-Bit Frozen Counter Event	1 (read)	06 (no range, or all) 07, 08 (limited qty)	129 (response)	17, 28 (index)
23	3	32-Bit Frozen Delta Counter Event				
23	4	16-Bit Frozen Delta Counter Event				
23	5	32-Bit Frozen Counter Event (with Time)	1 (read)	06 (no range, or all) 07, 08 (limited qty)	129 (response) 130 (unsol. resp)	17, 28 (index)
23	6	32-Bit Frozen Counter Event (with Time)	1 (read)	06 (no range, or all) 07, 08 (limited qty)	129 (response) 130 (unsol. resp)	17, 28 (index)
23	7	32-Bit Frozen Delta Counter Event (with Time)				
23	8	16-Bit Frozen Delta Counter Event (with Time)				
30	0	Analog Input - Any Variation	1 (read) 22 (assign class)	00, 01 (start-stop) 06 (no range, or all) 07, 08 (limited qty) 17, 27, 28 (index)		
30	1	32-Bit Analog Input	1 (read)	00, 01 (start-stop) 06 (no range, or all) 07, 08 (limited qty) 17, 27, 28 (index)	129 (response)	00, 01 (start-stop) 17, 28 (index - see note 2)
30	2 (default - see note 1)	16-Bit Analog Input	1 (read)	00, 01 (start-stop) 06 (no range, or all) 07, 08 (limited qty) 17, 27, 28 (index)	129 (response)	00, 01 (start-stop) 17, 28 (index - see note 2)
30	3	32-Bit Analog Input (without Flag)	1 (read)	00, 01 (start-stop) 06 (no range, or all) 07, 08 (limited qty) 17, 27, 28 (index)	129 (response)	00, 01 (start-stop) 17, 28 (index - see note 2)
30	4	16-Bit Analog Input (without Flag)	1 (read)	00, 01 (start-stop) 06 (no range, or all) 07, 08 (limited qty) 17, 27, 28 (index)	129 (response)	00, 01 (start-stop) 17, 28 (index - see note 2)
30	5	short floating point	1 (read)	00, 01 (start-stop) 06 (no range, or all) 07, 08 (limited qty) 17, 27, 28 (index)	129 (response)	00, 01 (start-stop) 17, 28 (index - see note 2)
30	6	long floating point	1 (read)	00, 01 (start-stop) 06 (no range, or all) 07, 08 (limited qty) 17, 27, 28 (index)	129 (response)	00, 01 (start-stop) 17, 28 (index - see note 2)
31	0	Frozen Analog Input - Any Variation				
31	1	32-Bit Frozen Analog Input				
31	2	16-Bit Frozen Analog Input				
31	3	32-Bit Frozen Analog Input (with Time of freeze)				
31	4	16-Bit Frozen Analog Input (with Time of freeze)				
31	5	32-Bit Frozen Analog Input (without Flag)				
31	6	16-Bit Frozen Analog Input (without Flag)				

© 2019 Siemens Protection Devices Limited

OBJECT			REQUEST (Library will parse)		RESPONSE (Library will respond with)	
Object Number	**Variation**	**Description**	**Function Codes (dec)**	**Qualifier Codes (hex)**	**Function Codes (dec)**	**Qualifier Codes (hex)**
32	0	Analog Change Event - Any Variation)	1 (read)	06 (no range, or all) 07, 08 (limited qty)		
32	1	32Bit-Analog Change Event (without Time)	1 (read)	06 (no range, or all) 07, 08 (limited qty)	129 (response) 130 (unsol. resp)	17, 28 (index)
32	2	16Bit-Analog Change Event (without Time)	1 (read)	06 (no range, or all) 07, 08 (limited qty)	129 (response) 130 (unsol. resp)	17, 28 (index)
32	3	32Bit-Analog Change Event (with Time)	1 (read)	06 (no range, or all) 07, 08 (limited qty)	129 (response) 130 (unsol. resp)	17, 28 (index)
32	4 (default - see note 1)	16Bit-Analog Change Event (with Time)	1 (read)	06 (no range, or all) 07, 08 (limited qty)	129 (response) 130 (unsol. resp)	17, 28 (index)
32	5	short floating point Analog Change Event (without Time)	1 (read)	06 (no range, or all) 07, 08 (limited qty)	129 (response) 130 (unsol. resp)	17, 28 (index)
32	6	long floating point Analog Change Event (without Time)	1 (read)	06 (no range, or all) 07, 08 (limited qty)	129 (response) 130 (unsol. resp)	17, 28 (index)
32	7	short floating point Analog Change Event (with Time)	1 (read)	06 (no range, or all) 07, 08 (limited qty)	129 (response) 130 (unsol. resp)	17, 28 (index)
32	8	long floating point Analog Change Event (with Time)	1 (read)	06 (no range, or all) 07, 08 (limited qty)	129 (response) 130 (unsol. resp)	17, 28 (index)
33	0	Frozen Analog Event - Any Variation				
33	1	32-Bit Frozen Analog Event (without Time)				
33	2	16-Bit Frozen Analog Event (without Time)				
33	3	32-Bit Frozen Analog Event (with Time)				
33	4	16-Bit Frozen Analog Event (with Time)				
33	5	Short Floating Point Frozen Analog Event				
33	6	Long Floating Point Frozen Analog Event				
33	7	Extended Floating Point Frozen Analog Event				
34	0	Analog Input Deadband (Variation 0 is used to request default variation)	1 (read)	00, 01 (start-stop) 06 (no range, or all) 07, 08 (limited qty) 17, 27, 28 (index)		
34	1	16 bit Analog Input Deadband	1 (read)	00, 01 (start-stop) 06 (no range, or all) 07, 08 (limited qty) 17, 27, 28 (index)	129 (response)	00, 01 (start-stop) 17, 28 (index - see note 2)
			2 (write)	00, 01 (start-stop) 07, 08 (limited qty) 17, 27, 28 (index)		
34	2 (default - see note 1)	32 bit Analog Input Deadband	1 (read)	00, 01 (start-stop) 06 (no range, or all) 07, 08 (limited qty) 17, 27, 28 (index)	129 (response)	00, 01 (start-stop) 17, 28 (index - see note 2)
			2 (write)	00, 01 (start-stop) 07, 08 (limited qty) 17, 27, 28 (index)		
34	3	Short Floating Point Analog Input Deadband	1 (read)	00, 01 (start-stop) 06 (no range, or all) 07, 08 (limited qty)	129 (response)	00, 01 (start-stop) 17, 28 (index - see note 2)

© 2019 Siemens Protection Devices Limited

OBJECT			REQUEST (Library will parse)		RESPONSE (Library will respond with)	
Object Number	**Variation**	**Description**	**Function Codes (dec)**	**Qualifier Codes (hex)**	**Function Codes (dec)**	**Qualifier Codes (hex)**
				17, 27, 28 (index)		
			2 (write)	00, 01 (start-stop) 07, 08 (limited qty) 17, 27, 28 (index)		
50	0	Time and Date				
50	1 (default - see note 1)	Time and Date	1 (read)	07, 08 (limited qty)	129 (response)	07 (limited qty = 1)
			2 (write)	00, 01 (start-stop) 07, 08 (limited qty) 17, 27, 28 (index)		
50	3	Time and Date Last Recorded Time	2 (write)	07 (limited qty)		
51	1	Time and Date CTO			129 (response) 130 (unsol. resp)	(limited qty = 1)
51	2	Unsynchronized Time and Date CTO			129 (response) 130 (unsol. resp)	(limited qty = 1)
52	1	Time Delay Coarse			129 (response)	(limited qty = 1)
52	2	Time Delay Fine			129 (response)	(limited qty = 1)
60	0	Not Defined				
60	1	Class 0 Data	1 (read)	06 (no range, or all)		
60	2	Class 1 Data	1 (read)	06 (no range, or all) 07, 08 (limited qty)		
			20 (enbl. unsol.) 21 (dab. unsol.) 22 (assign class)	06 (no range, or all)		
60	3	Class 2 Data	1 (read)	06 (no range, or all) 07, 08 (limited qty)		
			20 (enbl. unsol.) 21 (dab. unsol.) 22 (assign class)	06 (no range, or all)		
60	4	Class 3 Data	1 (read)	06 (no range, or all) 07, 08 (limited qty)		
			20 (enbl. unsol.) 21 (dab. unsol.) 22 (assign class)	06 (no range, or all)		
80	1	Internal Indications	1 (read)	00, 01 (start-stop)	129 (response)	00, 01 (start-stop)
			2 (write)(see note 3)	00 (start-stop) index=7		
		No Object (function code only)	13 (cold restart)			
		No Object (function code only)	14 (warm restart)			
		No Object (function code only)	23 (delay meas.)			
		No Object (function code only)	24 (record current time)			

Note 1: A Default variation refers to the variation responded when variation 0 is requested and/or in class 0, 1, 2, or 3 scans. Default variations are configurable; however, default settings for the configuration parameters are indicated in the table above.

Note 2: For static (non-change-event) objects, qualifiers 17 or 28 are only responded when a request is sent with qualifiers 17 or 28, respectively. Otherwise, static object requests sent with qualifiers 00, 01, 06, 07, or 08, will be responded with qualifiers 00 or 01. (For change-event objects, qualifiers 17 or 28 are always responded.)

Note 3: Writes of Internal Indications are only supported for index 7 (Restart IIN1-7).

© 2019 Siemens Protection Devices Limited

5.3 Point List

The tables below identify all the default data points provided by the implementation of the Triangle MicroWorks, Inc. DNP 3.0 Slave Source Code Library.

This protocol can be set to use any or all of the relays hardware interfaces (USB, Fibre Optic, RS232 and RS485) where fitted. The relay can communicate simultaneously on all ports regardless of protocol used.

The Station Address of the port being used must be set to a suitable address within the range 0 - 65534 to enable communication. This can be set by the **Communications Menu : COM *n-xxxxx* Station Address** setting.

Communication via DNP3 over Ethernet requires external devices. Please refer to the documents ***TCPIP Catalogue Sheet*** and ***TCPIP Interface Technical Guidance Notes*** for more information.

The information shown below is the default configuration. This can be modified using the Communications Configuration Editor tool, refer section 9 for details.

5.3.1 Binary Input Points

The default binary input event buffer size is set to allow 100 events.

Binary inputs are by default returned in a class zero interrogation.

Note, not all points listed here apply to all builds of devices.

Binary Input Points
Static (Steady-State) Object Number: **1 (Packed Format)**
Change Event Object Number: **1 (w/o Time)**
Static Variation reported when variation 0 requested: **1 (Binary Input w/o status)**
or **2 (Binary Input with status)**
Change Event Variation reported when variation 0 requested: **1 (Binary Input Change w/o Time)**
or **2 (Binary Input Change with Absolute Time)**
or **3 (Binary Input Change with Relative Time)**

Point Index	Description	Default Change Event Assigned Class (1, 2, 3 or none)	Default Variation Static Object 1	Default Variation Event Object 2
1	Binary Input 1	0,2	2	2
2	Binary Input 2	0,2	2	2
3	Binary Input 3	0,2	2	2
4	Binary Input 4	0,2	2	2
5	Binary Input 5	0,2	2	2
6	Binary Input 6	0,2	2	2
35	Remote Mode	0,2	2	2
36	Out Of Service Mode	0,2	2	2
37	Local Mode	0,2	2	2
38	Local & Remote	0,2	2	2
40	General Trip	0,2	2	2
41	Trip Circuit Fail	0,2	2	2
42	Start/Pick-up L1	0,2	2	2
43	Start/Pick-up L2	0,2	2	2
44	Start/Pick-up L3	0,2	2	2
45	General Start/Pick-up	0,2	2	2
49	Start/Pick-up N	0,2	2	2
52	51-1	0,2	2	2
53	50-1	0,2	2	2
54	51N-1	0,2	2	2

 © 2019 Siemens Protection Devices Limited

Binary Input Points
Static (Steady-State) Object Number: **1 (Packed Format)**
Change Event Object Number: **1 (w/o Time)**
Static Variation reported when variation 0 requested: **1 (Binary Input w/o status)**
or **2 (Binary Input with status)**
Change Event Variation reported when variation 0 requested: **1 (Binary Input Change w/o Time)**
or **2 (Binary Input Change with Absolute Time)**
or **3 (Binary Input Change with Relative Time)**

Point Index	Description	Default Change Event Assigned Class (1, 2, 3 or none)	Default Variation Static Object 1	Default Variation Event Object 2
55	50N-1	0,2	2	2
56	51G-1	0,2	2	2
57	50G-1	0,2	2	2
58	51-2	0,2	2	2
59	50-2	0,2	2	2
60	51N-2	0,2	2	2
61	50N-2	0,2	2	2
62	51G-2	0,2	2	2
63	50G-2	0,2	2	2
65	46IT	0,2	2	2
66	46DT	0,2	2	2
69	46BC	0,2	2	2
80	Auto-reclose active	0,2	2	2
81	CB on by auto reclose	0,2	2	2
82	Reclaim	0,2	2	2
83	Lockout	0,2	2	2
98	Cold Load Active	0,2	2	2
99	E/F Out	0,2	2	2
100	P/F Inst Protection Inhibited	0,2	2	2
101	E/F Inst Protection Inhibited	0,2	2	2
102	SEF Inst Protection Inhibited	0,2	2	2
103	Ext Inst Protection Inhibited	0,2	2	2
117	51SEF-1	0,2	2	2
118	50SEF-1	0,2	2	2
119	51SEF-2	0,2	2	2
120	50SEF-2	0,2	2	2
125	SEF Out	0,2	2	2
126	Trip Circuit Fail 1	0,2	2	2
127	Trip Circuit Fail 2	0,2	2	2
128	Trip Circuit Fail 3	0,2	2	2
129	CB Total Trip Count	0,2	2	2
130	CB Delta Trip Count	0,2	2	2
131	CB Count To AR Block	0,2	2	2
132	CB Frequent Ops Count	0,2	2	2
133	I^2t CB Wear	0,2	2	2
207	Close Circuit Fail 1	0,2	2	2
208	Close Circuit Fail 2	0,2	2	2
209	Close Circuit Fail 3	0,2	2	2
210	Close Circuit Fail	0,2	2	2
211	50BF Stage 1	0,2	2	2
212	50BF Stage 2	0,2	2	2

© 2019 Siemens Protection Devices Limited

Binary Input Points
Static (Steady-State) Object Number: **1 (Packed Format)**
Change Event Object Number: **1 (w/o Time)**
Static Variation reported when variation 0 requested: **1 (Binary Input w/o status)**
or **2 (Binary Input with status)**
Change Event Variation reported when variation 0 requested: **1 (Binary Input Change w/o Time)**
or **2 (Binary Input Change with Absolute Time)**
or **3 (Binary Input Change with Relative Time)**

Point Index	Description	Default Change Event Assigned Class (1, 2, 3 or none)	Default Variation Static Object 1	Default Variation Event Object 2
213	49-Alarm	0,2	2	2
214	49-Trip	0,2	2	2
215	64H	0,2	2	2
217	37-1	0,2	2	2
218	37-2	0,2	2	2
219	CB Alarm	0,2	2	2
225	General Alarm 1	0,2	2	2
226	General Alarm 2	0,2	2	2
227	General Alarm 3	0,2	2	2
228	General Alarm 4	0,2	2	2
229	General Alarm 5	0,2	2	2
230	General Alarm 6	0,2	2	2
237	Quick Logic E1	0,2	2	2
238	Quick Logic E2	0,2	2	2
239	Quick Logic E3	0,2	2	2
240	Quick Logic E4	0,2	2	2
269	60 CTS-I	0,2	2	2
270	81HBL2	0,2	2	2
271	37G-1	0,2	2	2
272	37G-2	0,2	2	2
274	37-PhA	0,2	2	2
275	37-PhB	0,2	2	2
276	37-PhC	0,2	2	2
277	50 LC-1	0,2	2	2
278	50 LC-2	0,2	2	2
279	50G LC-1	0,2	2	2
280	50G LC-2	0,2	2	2
283	50BF-PhA	0,2	2	2
284	50BF-PhB	0,2	2	2
285	50BF-PhC	0,2	2	2
286	50BF-EF	0,2	2	2
287	79 Last Trip Lockout	0,2	2	2
288	60 CTS-I-PhA	0,2	2	2
289	60 CTS-I-PhB	0,2	2	2
290	60 CTS-I-PhC	0,2	2	2
291	Trip PhA	0,2	2	2
292	Trip PhB	0,2	2	2
293	Trip PhC	0,2	2	2
373	37SEF-1	0,2	2	2
374	37SEF-2	0,2	2	2
411	Setting G1 selected	0,2	2	2
412	Setting G2 selected	0,2	2	2

© 2019 Siemens Protection Devices Limited

Binary Input Points
Static (Steady-State) Object Number: **1 (Packed Format)**
Change Event Object Number: **1 (w/o Time)**
Static Variation reported when variation 0 requested: **1 (Binary Input w/o status)**
or **2 (Binary Input with status)**
Change Event Variation reported when variation 0 requested: **1 (Binary Input Change w/o Time)**
or **2 (Binary Input Change with Absolute Time)**
or **3 (Binary Input Change with Relative Time)**

Point Index	Description	Default Change Event Assigned Class (1, 2, 3 or none)	Default Variation Static Object 1	Default Variation Event Object 2
413	Setting G3 selected	0,2	2	2
414	Setting G4 selected	0,2	2	2
420	79 AR In progress	0,2	2	2
422	HotLine Working	0,2	2	2
425	Inst Protection Out	0,2	2	2
427	CB 1	0,2	2	2
501	Virtual Input 1	0,2	2	2
502	Virtual Input 2	0,2	2	2
503	Virtual Input 3	0,2	2	2
504	Virtual Input 4	0,2	2	2
505	Virtual Input 5	0,2	2	2
506	Virtual Input 6	0,2	2	2
507	Virtual Input 7	0,2	2	2
508	Virtual Input 8	0,2	2	2
601	LED 1	0,2	2	2
602	LED 2	0,2	2	2
603	LED 3	0,2	2	2
604	LED 4	0,2	2	2
605	LED 5	0,2	2	2
606	LED 6	0,2	2	2
607	LED 7	0,2	2	2
608	LED 8	0,2	2	2
609	LED 9	0,2	2	2
701	LED PU 1	0,2	2	2
702	LED PU 2	0,2	2	2
703	LED PU 3	0,2	2	2
704	LED PU 4	0,2	2	2
705	LED PU 5	0,2	2	2
706	LED PU 6	0,2	2	2
707	LED PU 7	0,2	2	2
708	LED PU 8	0,2	2	2
709	LED PU 9	0,2	2	2
801	Binary Output 1	0,2	2	2
802	Binary Output 2	0,2	2	2
803	Binary Output 3	0,2	2	2
804	Binary Output 4	0,2	2	2
805	Binary Output 5	0,2	2	2
806	Binary Output 6	0,2	2	2
807	Binary Output 7	0,2	2	2
808	Binary Output 8	0,2	2	2
871	Cold Start	0,2	2	2

© 2019 Siemens Protection Devices Limited

Binary Input Points
Static (Steady-State) Object Number: **1 (Packed Format)**
Change Event Object Number: **1 (w/o Time)**
Static Variation reported when variation 0 requested: **1 (Binary Input w/o status)**
or **2 (Binary Input with status)**
Change Event Variation reported when variation 0 requested: **1 (Binary Input Change w/o Time)**
or **2 (Binary Input Change with Absolute Time)**
or **3 (Binary Input Change with Relative Time)**

Point Index	Description	Default Change Event Assigned Class (1, 2, 3 or none)	Default Variation Static Object 1	Default Variation Event Object 2
872	Warm Start	0,2	2	2
873	Re-Start	0,2	2	2
874	Power On	0,2	2	2
875	Expected Restart	0,2	2	2
876	Unexpected Restart	0,2	2	2
877	Reset Start Count	0,2	2	2
890	CB 1 Opened	0,2	2	2
891	CB 1 Closed	0,2	2	2
900	User SP Command 1	0,2	2	2
901	User SP Command 2	0,2	2	2
902	User SP Command 3	0,2	2	2
903	User SP Command 4	0,2	2	2
904	User SP Command 5	0,2	2	2
905	User SP Command 6	0,2	2	2
906	User SP Command 7	0,2	2	2
907	User SP Command 8	0,2	2	2
1063	CB DBI	0,2	2	2
1064	CB Travelling	0,2	2	2
1065	Close CB Failed	0,2	2	2
1066	Open CB Failed	0,2	2	2
1067	Start Count Alarm	0,2	2	2
1068	50AFD PhA	0,2	2	2
1069	50AFD PhB	0,2	2	2
1070	50AFD PhC	0,2	2	2
1071	50AFD	0,2	2	2
1072	AFD Zone 1 Flash	0,2	2	2
1073	AFD Zone 1	0,2	2	2
1074	AFD Zone 2 Flash	0,2	2	2
1075	AFD Zone 2	0,2	2	2
1076	AFD Zone 3 Flash	0,2	2	2
1077	AFD Zone 3	0,2	2	2
1078	AFD Zone 4 Flash	0,2	2	2
1079	AFD Zone 4	0,2	2	2
1080	AFD Zone 5 Flash	0,2	2	2
1081	AFD Zone 5	0,2	2	2
1082	AFD Zone 6 Flash	0,2	2	2
1083	AFD Zone 6	0,2	2	2

5.3.2 Double Bit Input Points

The default double bit input event buffer size is set to allow 100 events.

 © 2019 Siemens Protection Devices Limited

Double bit inputs are by default returned in a class zero interrogation.

Note, not all points listed here apply to all builds of devices.

Double Bit Input Points
Static (Steady-State) Object Number: **3**
Change Event Object Number: **4**
Static Variation reported when variation 0 requested: **1 (Double Bit Input w/o status)**
or **2 (Double Bit Input with status)**
Change Event Variation reported when variation 0 requested: **1 (Double Bit Input Change w/o Time)**
or **2 (Double Bit Input Change with Absolute Time)**
or **3 (Double Bit Input Change with Relative Time)**

Point Index	Description	Default Change Event Assigned Class (1, 2, 3 or none)	Default Variation Static Object 3	Default Variation Event Object 4
0	CB 1	0,2	1	3
10	User DP Command 1	0,2	1	3
11	User DP Command 2	0,2	1	3
12	User DP Command 3	0,2	1	3
13	User DP Command 4	0,2	1	3
14	User DP Command 5	0,2	1	3
15	User DP Command 6	0,2	1	3
16	User DP Command 7	0,2	1	3
17	User DP Command 8	0,2	1	3

5.3.3 Binary Output Status Points and Control Relay Output Blocks

The following table lists both the Binary Output Status Points (Object 10) and the Control Relay Output Blocks (Object 12).

While Binary Output Status Points are included here for completeness, they are not often polled by DNP 3.0 Masters. Binary Output Status points are not recommended to be included in class 0 polls.

As an alternative, it is recommended that “actual” status values of Control Relay Output Block points be looped around and mapped as Binary Inputs. (The “actual” status value, as opposed to the “commanded” status value, is the value of the actuated control. For example, a DNP control command may be blocked through hardware or software mechanisms; in this case, the actual status value would indicate the control failed because of the blocking. Looping Control Relay Output Block actual status values as Binary Inputs has several advantages:

- it allows actual statuses to be included in class 0 polls,
- it allows change event reporting of the actual statuses, which is a more efficient and time-accurate method of communicating control values,
- and it allows reporting of time-based information associated with controls, including any delays before controls are actuated, and any durations if the controls are pulsed.

The default select/control buffer size is large enough to hold 10 of the largest select requests possible.

Binary outputs are by default **NOT** returned in a class zero interrogation.

Note, not all points listed here apply to all builds of devices.

Binary Output Status Points
Static (Steady-State) Object Number: **10**
Change Event Object Number: **11**
Control Relay Output Blocks (CROB) Object Number: **12**
Binary Output Command Event Object Number: **13**
Static Variation reported when variation 0 requested: **1 (Binary Output w/o status)**
or **2 (Binary Output with status)**
Change Event Variation reported when variation 0 requested: **1 (Binary Output Event w/o Time)**
or **2 (Binary Output Event with Time)**
Command Event Variation reported when variation 0 requested: **1 (Command Status w/o Time)**
or **2 (Command Status with Time)**

Point Index	Description	Default Change Event Assigned Class (1, 2, 3 or none)	Default Variation Static Object 10	Default Variation Event Object 11	Default Command Event Object 13 Assigned Class (1, 2, 3 or none)	Default Variation Command Event Object 13	CROB Supported Operations	Default CROB Operations
1	RL 1	0	2	2	0	1	Pulse On Latch On Close	Pulse On
2	RL 2	0	2	2	0	1	Pulse On Latch On Close	Pulse On
3	RL 3	0	2	2	0	1	Pulse On Latch On Close	Pulse On
4	RL 4	0	2	2	0	1	Pulse On Latch On Close	Pulse On
5	RL 5	0	2	2	0	1	Pulse On Latch On Close	Pulse On
6	RL 6	0	2	2	0	1	Pulse On Latch On Close	Pulse On
7	RL 7	0	2	2	0	1	Pulse On Latch On Close	Pulse On
8	RL 8	0	2	2	0	1	Pulse On Latch On Close	Pulse On
33	LED reset, write only location.	0	2	2	0	1	Pulse On Latch On Close	Pulse On
34	Settings Group 1	0	2	2	0	1	Pulse On Latch On Close	Latch On
35	Settings Group 2	0	2	2	0	1	Pulse On Latch On Close	Latch On
36	Settings Group 3	0	2	2	0	1	Pulse On Latch On Close	Latch On
37	Settings Group 4	0	2	2	0	1	Pulse On Latch On Close	Latch On
42	Auto-reclose on/off	0	2	2	0	1	Pulse On Pulse Off Latch On Latch Off Close Trip	Pulse On Pulse Off Latch On Latch Off

© 2019 Siemens Protection Devices Limited

Binary Output Status Points
Static (Steady-State) Object Number: **10**
Change Event Object Number: **11**
Control Relay Output Blocks (CROB) Object Number: **12**
Binary Output Command Event Object Number: **13**
Static Variation reported when variation 0 requested: **1 (Binary Output w/o status)**
or **2 (Binary Output with status)**
Change Event Variation reported when variation 0 requested: **1 (Binary Output Event w/o Time)**
or **2 (Binary Output Event with Time)**
Command Event Variation reported when variation 0 requested: **1 (Command Status w/o Time)**
or **2 (Command Status with Time)**

Point Index	Description	Default Change Event Assigned Class (1, 2, 3 or none)	Default Variation Static Object 10	Default Variation Event Object 11	Default Command Event Object 13 Assigned Class (1, 2, 3 or none)	Default Variation Command Event Object 13	CROB Supported Operations	Default CROB Operations
43	Hot Line Working on/off	0	2	2	0	1	Pulse On Pulse Off Latch On Latch Off Close Trip	Pulse On Pulse Off Latch On Latch Off
44	E/F off/on	0	2	2	0	1	Pulse On Pulse Off Latch On Latch Off Close Trip	Pulse On Pulse Off Latch On Latch Off
45	SEF off/on	0	2	2	0	1	Pulse On Pulse Off Latch On Latch Off Close Trip	Pulse On Pulse Off Latch On Latch Off
46	Inst Protection off/on	0	2	2	0	1	Pulse On Pulse Off Latch On Latch Off Close Trip	Pulse On Pulse Off Latch On Latch Off
48	Reset CB Total Trip Count, write only location.	0	2	2	0	1	Pulse On Latch On Close	Pulse On
49	Reset CB Delta Trip Count, write only location.	0	2	2	0	1	Pulse On Latch On Close	Pulse On
50	Reset CB Count To AR Block, write only location.	0	2	2	0	1	Pulse On Latch On Close	Pulse On
51	Reset CB Frequent Ops Count, write only location.	0	2	2	0	1	Pulse On Latch On Close	Pulse On
53	Reset I^2t CB Wear	0	2	2	0	1	Pulse On Latch On Close	Pulse On
54	CB 1	0	2	2	0	1	Pulse On Pulse Off Latch On Latch Off Close Trip	Pulse On Pulse Off Latch On Latch Off
55	CB 1 Trip & Reclose, write only location.	0	2	2	0	1	Pulse On Latch On	Pulse On

© 2019 Siemens Protection Devices Limited

Binary Output Status Points
Static (Steady-State) Object Number: **10**
Change Event Object Number: **11**
Control Relay Output Blocks (CROB) Object Number: **12**
Binary Output Command Event Object Number: **13**
Static Variation reported when variation 0 requested: **1 (Binary Output w/o status)**
or **2 (Binary Output with status)**
Change Event Variation reported when variation 0 requested: **1 (Binary Output Event w/o Time)**
or **2 (Binary Output Event with Time)**
Command Event Variation reported when variation 0 requested: **1 (Command Status w/o Time)**
or **2 (Command Status with Time)**

Point Index	Description	Default Change Event Assigned Class (1, 2, 3 or none)	Default Variation Static Object 10	Default Variation Event Object 11	Default Command Event Object 13 Assigned Class (1, 2, 3 or none)	Default Variation Command Event Object 13	CROB Supported Operations	Default CROB Operations
							Close	
56	CB 1 Trip & Lockout, write only location.	0	2	2	0	1	Pulse On Latch On Close	Pulse On
59	Demand metering reset, write only location.	0	2	2	0	1	Pulse On Latch On Close	Pulse On
88	Remote mode	0	2	2	0	1	Pulse On Latch On Close	Pulse On
89	Service mode	0	2	2	0	1	Pulse On Latch On Close	Pulse On
90	Local mode	0	2	2	0	1	Pulse On Latch On Close	Pulse On
91	Local & Remote	0	2	2	0	1	Pulse On Latch On Close	Pulse On
98	Reset Start Count (Action)	0	2	2	0	1	Pulse On Latch On Close	Pulse On Latch On
99	User SP Command 1.	0	2	2	0	1	Pulse On Latch On Close	Pulse On
100	User SP Command 2.	0	2	2	0	1	Pulse On Latch On Close	Pulse On
101	User SP Command 3.	0	2	2	0	1	Pulse On Latch On Close	Pulse On
102	User SP Command 4.	0	2	2	0	1	Pulse On Latch On Close	Pulse On
103	User SP Command 5.	0	2	2	0	1	Pulse On Latch On Close	Pulse On
104	User SP Command 6.	0	2	2	0	1	Pulse On Latch On Close	Pulse On
105	User SP Command 7.	0	2	2	0	1	Pulse On Latch On Close	Pulse On
106	User SP Command 8.	0	2	2	0	1	Pulse On Latch On Close	Pulse On

© 2019 Siemens Protection Devices Limited

Binary Output Status Points
Static (Steady-State) Object Number: **10**
Change Event Object Number: **11**
Control Relay Output Blocks (CROB) Object Number: **12**
Binary Output Command Event Object Number: **13**
Static Variation reported when variation 0 requested: **1 (Binary Output w/o status)**
or **2 (Binary Output with status)**
Change Event Variation reported when variation 0 requested: **1 (Binary Output Event w/o Time)**
or **2 (Binary Output Event with Time)**
Command Event Variation reported when variation 0 requested: **1 (Command Status w/o Time)**
or **2 (Command Status with Time)**

Point Index	Description	Default Change Event Assigned Class (1, 2, 3 or none)	Default Variation Static Object 10	Default Variation Event Object 11	Default Command Event Object 13 Assigned Class (1, 2, 3 or none)	Default Variation Command Event Object 13	CROB Supported Operations	Default CROB Operations
107	User DP Command 1.	0	2	2	0	1	Pulse On Pulse Off Latch On Latch Off Close Trip	Pulse On Pulse Off
108	User DP Command 2.	0	2	2	0	1	Pulse On Pulse Off Latch On Latch Off Close Trip	Pulse On Pulse Off
109	User DP Command 3.	0	2	2	0	1	Pulse On Pulse Off Latch On Latch Off Close Trip	Pulse On Pulse Off
110	User DP Command 4.	0	2	2	0	1	Pulse On Pulse Off Latch On Latch Off Close Trip	Pulse On Pulse Off
111	User DP Command 5.	0	2	2	0	1	Pulse On Pulse Off Latch On Latch Off Close Trip	Pulse On Pulse Off
112	User DP Command 6.	0	2	2	0	1	Pulse On Pulse Off Latch On Latch Off Close Trip	Pulse On Pulse Off
113	User DP Command 7.	0	2	2	0	1	Pulse On Pulse Off Latch On Latch Off Close Trip	Pulse On Pulse Off
114	User DP Command 8.	0	2	2	0	1	Pulse On Pulse Off Latch On Latch Off Close Trip	Pulse On Pulse Off

© 2019 Siemens Protection Devices Limited

Binary Output Status Points
Static (Steady-State) Object Number: **10**
Change Event Object Number: **11**
Control Relay Output Blocks (CROB) Object Number: **12**
Binary Output Command Event Object Number: **13**
Static Variation reported when variation 0 requested: **1 (Binary Output w/o status)**
or **2 (Binary Output with status)**
Change Event Variation reported when variation 0 requested: **1 (Binary Output Event w/o Time)**
or **2 (Binary Output Event with Time)**
Command Event Variation reported when variation 0 requested: **1 (Command Status w/o Time)**
or **2 (Command Status with Time)**

Point Index	Description	Default Change Event Assigned Class (1, 2, 3 or none)	Default Variation Static Object 10	Default Variation Event Object 11	Default Command Event Object 13 Assigned Class (1, 2, 3 or none)	Default Variation Command Event Object 13	CROB Supported Operations	Default CROB Operations
115	CB-1 Open	0	2	2	0	1	Pulse On Latch On Close	Pulse On Latch On
116	CB-1 Close	0	2	2	0	1	Pulse On Latch On Close	Pulse On Latch On

5.3.4 Counters

The following table lists both Binary Counters (Object 20) and Frozen Counters (Object 21). When a freeze function is performed on a Binary Counter point, the frozen value is available in the corresponding Frozen Counter point. The default Binary Counter and Frozen Counter event buffer sizes are set to 30.

The “Default Deadband,” and the “Default Change Event Assigned Class” columns are used to represent the absolute amount by which the point must change before a Counter change event will be generated, and once generated in which class poll (1, 2, 3, or none) will the change event be reported.

The default counter event buffer size is set 30. The counter event mode is set to Most Recent, only most recent event for each point is stored.

Counters are by default returned in a class zero interrogation.

Note, not all points listed here apply to all builds of devices.

 © 2019 Siemens Protection Devices Limited

Counters
Static (Steady-State) Object Number: **20**
Change Event Object Number: **22**
Static Variation reported when variation 0 requested: **1 (32-Bit Counter with Flag)**
or **2 (16-Bit Counter with Flag)**
or **5 (32-Bit Counter w/o Flag)**
or **6 (16-Bit Counter w/o Flag)**
Change Event Variation reported when variation 0 requested: **1 (32-Bit Counter Event with Flag)**
or **2 (16-Bit Counter Event with Flag)**
or **5 (32-Bit Counter Event with Flag and Time)**
or **6 (16-Bit Counter Event with Flag and Time)**

Frozen Counters
Static (Steady-State) Object Number: **21**
Change Event Object Number: **23**
Static Variation reported when variation 0 requested: **1 (32-Bit Frozen Counter with Flag)**
or **2 (16-Bit Frozen Counter with Flag)**
or **5 (32-Bit Frozen Counter with Flag and Time)**
or **6 (16-Bit Frozen Counter with Flag and Time)**
or **9 (32-Bit Frozen Counter w/o Flag)**
or **10 (16-Bit Frozen Counter w/o Flag)**
Change Event Variation reported when variation 0 requested: **1 (32-Bit Frozen Counter Event with Flag)**
or **2 (16-Bit Frozen Counter Event with Flag)**
or **5 (32-Bit Frozen Counter Event with Flag and Time)**
or **6 (16-Bit Frozen Counter Event with Flag and Time)**

		Counter						Frozen Counter		
Point Index	**Description**	**Default Change Event Assigned Class (1, 2, 3 or none)**	**Default Variation Static Object 20**	**Default Variation Event Object 22**	**Deadband**	**Is Resettable**	**IsFreezable**	**Default Change Event Assigned Class (1, 2, 3 or none)**	**Default Variation Static Object 21**	**Default Variation Event Object 23**
0	Waveform Records	0,3	5	1	1		✔	0,2	9	1
1	Fault Records	0,3	5	1	1		✔	0,2	9	1
2	Event Records	0,3	5	1	1		✔	0,2	9	1
3	Data Log Records	0,3	5	1	1		✔	0,2	9	1
5	StartCount	0,3	5	1	1	✔	✔	0,2	9	1
6	Start Count Target	0,3	5	1	1		✔	0,2	9	1
7	Active Setting Group	0,3	5	1	1		✔	0,2	9	1
11	CB Total Trip Count	0,3	5	1	1	✔	✔	0,2	9	1
16	CB Delta Trip Count	0,3	5	1	1	✔	✔	0,2	9	1
17	CB Count To AR Block	0,3	5	1	1	✔	✔	0,2	9	1
18	CB Frequent Ops Count	0,3	5	1	1	✔	✔	0,2	9	1
21	E1 Counter	0,3	5	1	1		✔	0,2	9	1
22	E2 Counter	0,3	5	1	1		✔	0,2	9	1
23	E3 Counter	0,3	5	1	1		✔	0,2	9	1
24	E4 Counter	0,3	5	1	1		✔	0,2	9	1

5.3.5 Analog Inputs

The following table lists Analog Inputs (Object 30). It is important to note that 16-bit and 32-bit variations of Analog Inputs, Analog Output Control Blocks, and Analog Output Statuses are transmitted through DNP as signed numbers.

The “Default Deadband,” and the “Default Change Event Assigned Class” columns are used to represent the absolute amount by which the point must change before an Analog change event will be generated, and once generated in which class poll (1, 2, 3, or none) will the change event be reported.

© 2019 Siemens Protection Devices Limited

The default analog input event buffer size is set 30. The analog input event mode is set to Most Recent, only most recent event for each point is stored.

Analog inputs are by default returned in a class zero interrogation.

Note, not all points listed here apply to all builds of devices.

Analog Inputs
Static (Steady-State) Object Number: **30**
Change Event Object Number: **32**
Analog Input Deadband: **34**
Static Variation reported when variation 0 requested: **1 (32-Bit Analog Input with Flag)**
or **2 (16-Bit Analog Input with Flag)**
or **3 (32-Bit Analog Input w/o Flag)**
or **4 (16-Bit Analog Input w/o Flag)**
or **5 (Single Precision, floating point Analog Input with Flag)**
Change Event Variation reported when variation 0 requested: **1 (32-Bit Analog Change Event w/o Time)**
or **2 (16-Bit Analog Input w/o Time)**
or **3 (32-Bit Analog Input with Time)**
or **4 (16-Bit Analog Input with Time)**
or **5 (Single Precision, floating point Analog Input w/o Time)**
or **7 (Single Precision, floating point Analog Input with Time)**
Analog Input Reporting Deadband Variation reported when variation 0 requested: **1 (16-Bit)**
or **2 (32-Bit)**
or **3 (Single Precision, floating point)**

Point Index	Description	Default Change Event Assigned Class (1, 2, 3 or none)	Default Variation Static Object 30	Default Variation Event Object 32	Default Multiplier	Default Deadband
0	Frequency	0,3	2	4	100.000	1.000
31	Ia Primary	0,3	2	4	1.000	100.000
32	Ib Primary	0,3	2	4	1.000	100.000
33	Ic Primary	0,3	2	4	1.000	100.000
34	Ia Secondary	0,3	2	4	100.000	0.100
35	Ib Secondary	0,3	2	4	100.000	0.100
36	Ic Secondary	0,3	2	4	100.000	0.100
37	Ia Nominal	0,3	2	4	100.000	0.100
38	Ib Nominal	0,3	2	4	100.000	0.100
39	Ic Nominal	0,3	2	4	100.000	0.100
43	In Primary	0,3	2	4	1.000	100.000
44	In Secondary	0,3	2	4	100.000	0.100
45	In Nominal	0,3	2	4	100.000	0.100
46	Ig Primary	0,3	2	4	1.000	100.000
47	Ig Secondary	0,3	2	4	1000.000	0.100
48	Ig Nominal	0,3	2	4	1000.000	0.100
51	Izps Nominal	0,3	2	4	100.000	0.100
52	Ipps Nominal	0,3	2	4	100.000	0.100
53	Inps Nominal	0,3	2	4	100.000	0.100
81	Thermal Status Ph A	0,1	4	4	100.000	1.000
82	Thermal Status Ph B	0,1	4	4	100.000	1.000
83	Thermal Status Ph C	0,1	4	4	100.000	1.000
95	Active Setting Group	0,3	2	4	1.000	1.000
108	I Phase A Max	0,3	2	4	1.000	100.000
109	I Phase B Max	0,3	2	4	1.000	100.000
110	I Phase C Max	0,3	2	4	1.000	100.000
115	Isef Primary	0,3	2	4	1.000	10.000

© 2019 Siemens Protection Devices Limited

Analog Inputs
Static (Steady-State) Object Number: **30**
Change Event Object Number: **32**
Analog Input Deadband: **34**
Static Variation reported when variation 0 requested: **1 (32-Bit Analog Input with Flag)**
or **2 (16-Bit Analog Input with Flag)**
or **3 (32-Bit Analog Input w/o Flag)**
or **4 (16-Bit Analog Input w/o Flag)**
or **5 (Single Precision, floating point Analog Input with Flag)**
Change Event Variation reported when variation 0 requested: **1 (32-Bit Analog Change Event w/o Time)**
or **2 (16-Bit Analog Input w/o Time)**
or **3 (32-Bit Analog Input with Time)**
or **4 (16-Bit Analog Input with Time)**
or **5 (Single Precision, floating point Analog Input w/o Time)**
or **7 (Single Precision, floating point Analog Input with Time)**
Analog Input Reporting Deadband Variation reported when variation 0 requested: **1 (16-Bit)**
or **2 (32-Bit)**
or **3 (Single Precision, floating point)**

Point Index	Description	Default Change Event Assigned Class (1, 2, 3 or none)	Default Variation Static Object 30	Default Variation Event Object 32	Default Multiplier	Default Deadband
116	Isef Secondary	0,3	2	4	1000.000	0.050
117	Isef Nominal	0,3	2	4	1000.000	0.050
135	CB Total Trip Count	0,3	1	3	1.000	1.000
136	CB Delta Trip Count	0,3	1	3	1.000	1.000
137	CB Count To AR Block	0,3	1	3	1.000	1.000
138	CB Frequent Ops Count	0,3	1	3	1.000	1.000
165	Ia Last Trip	0,3	1	3	1.000	Disabled
166	Ib Last Trip	0,3	1	3	1.000	Disabled
167	Ic Last Trip	0,3	1	3	1.000	Disabled
171	In Last Trip	0,3	1	3	1.000	Disabled
172	Ig Last Trip	0,3	1	3	1.000	Disabled
184	CB Wear A	0,3	1	3	0.000	1000000.000
185	CB Wear B	0,3	1	3	0.000	1000000.000
186	CB Wear C	0,3	1	3	0.000	1000000.000
187	CB Wear A Remaining	0,3	1	3	1.000	1.000
188	CB Wear B Remaining	0,3	1	3	1.000	1.000
189	CB Wear C Remaining	0,3	1	3	1.000	1.000
190	CB Wear Minimum	0,3	1	3	1.000	1.000
196	Frequency Max	0,3	2	4	100.000	1.000
330	CB Trip Time Meter	0,3	2	4	1000.000	0.010

5.4 Additional Settings

The following relay settings are provided for configuration of the DNP 3.0 implementation when available and are common to all ports using this protocol.

Setting Name	Range/Options	Default	Setting	Notes
Unsolicited Mode	DISABLED, ENABLED	DISABLED	As Required	Setting is only visible when any port Protocol is set to DNP3.
Destination Address	0 - 65534	0	As Required	Setting is only visible when DNP3 Unsolicited Events set to Enabled.

© 2019 Siemens Protection Devices Limited

Setting Name	Range/Options	Default	Setting	Notes
DNP3 Application Timeout	5, 6 ... 299, 300	10s	As Required	Setting is only visible when any port Protocol is set to DNP3.

© 2019 Siemens Protection Devices Limited

6. Not Applicable

This section intentionally left blank.

© 2019 Siemens Protection Devices Limited

© 2019 Siemens Protection Devices Limited

7. IEC61850 Protocol Support

7.1 Introduction

The relay can optionally be provided with IEC61850 comms.

For further details refer to the following publications:

- Model Implementation Conformance Statement (MICS)
- Protocol Implementation Conformance Statement (PICS)
- Protocol Implementation Extra Information for Testing (PIXIT)

© 2019 Siemens Protection Devices Limited

© 2019 Siemens Protection Devices Limited

8. Serial Modems

8.1 Introduction

The communications interface has been designed to allow data transfer via modems. A suitable Modem can be connected directly to the Relay's serial interface, for example RS232, RS485 or fibre-optic port where fitted.

8.2 Connecting a Modem to the Relay(s)

RS232C defines devices as being either Data Terminal Equipment (DTE) e.g. computers, or data Communications Equipment (DCE), e.g. modems, where one is designed to be connected to the other.

The optional RS232 port of the Relay is wired as a DTE device and can therefore be connected directly to a Modem.

The 7XV5652 RS232 fibre-optic converter is wired as a DCE device, the same as a Modem. Where two DCE devices e.g. the modem and the fibre-optic converter are being connected together a null terminal connector is required which switches various control lines. The fibre-optic converter is then connected to the relay Network Tx to Relay Rx and Network Rx to Relay Tx.

8.3 Setting the Remote Modem

The exact settings of the modem are dependent on the type of modem. Although most modems support the basic Hayes “AT” command format, different manufacturers use different commands for the same functions. In addition, some modems use DIP switches to set parameters, others are entirely software configured.

Before applying settings, the modem's factory default settings should be applied, to ensure it is in a known state.

Several factors must be considered to allow remote dialling to the relays. The first is that the modem at the remote end must be configured as auto answer. This will allow it to initiate communications with the relays. Next, the user should set the data configuration at the local port, i.e. baud rate and parity, so that communication will be at the same rate and format as that set on the relay and the error correction is disabled.

Auto-answer usually requires two parameters to be set. The auto-answer setting should be switched on and the number of rings after which it will answer. The Data Terminal Ready (DTR) settings should be forced on. This tells the modem that the device connected to it is ready to receive data.

The parameters of the modem's RS232C port are set to match those set on the relay, set baud rate and parity to be the same as the settings on the relay and number of data bits to be 8 and stop bits 1. Note, although the device may be able to communicate with the modem at, for example, 19200 bps, the modem may only be able to transmit over the telephone lines at 14400 bps. Therefore, a baud rate setting on which the modem can transmit should be chosen. In the above example, a baud rate of 9600 should be chosen.

As the modems are required to be transparent, simply passing on the data sent from the controller to the device and vice versa, error correction and buffering is turned off.

Finally, the settings selected for configuration should be stored in the modem's memory for power on defaults.

8.4 Connecting to the Remote Modem

Once the remote modem has been configured correctly, it should be possible to make connection to the relay.

Where a “dial-up” modem system is installed the settings on the remote modem are fixed so the local modem should negotiate with it on connection, choosing suitable matching settings. Where this is not possible the local modem should be set with settings equivalent to those of the remote modem as described above.

© 2019 Siemens Protection Devices Limited

© 2019 Siemens Protection Devices Limited

9. Configuration

The data points and control features which are possible within the relay is fixed and can be transmitted over the communication channel(s) protocols in the default format described earlier in this document. The default data transmitted is not always directly compatible with the needs of the substation control system and will require some tailoring; this can be done by the user with the Reydisp software Communications Editor tool.

The Communications Editor is provided to allow its users to configure the Communication Protocol's Files in Reyrolle brand Relays manufactured by Siemens Protection Devices Limited (SPDL).

The editor supports configuring DNP3, IEC60870-5-103, IEC60870-5-101 and MODBUS protocols.

The editor allows configuration files to be retrieved from the relay, edited, and then uploaded back to the relay. Files may also be saved to and loaded from disc to work offline. The protocols will be stored in a Reyrolle Protection Device Comms file (RPDC), which will be stored locally, so that the editor can be used when the relay is not connected.

DNP3

The tool will allow:

- Data Points to be enabled or disabled.
- Changing the point numbers for the Binary Inputs, Double Bit Inputs, Binary Outputs, Counters and Analogue Inputs.
- Changing their assigned class and static and event variants.
- Specifying inclusion in a Class 0 poll.
- Setting Binary points to be inverted before transmission.
- Setting the Control Relay Output Block (CROB) commands that can be used with a Binary Output (Object 12).
- Specifying a dead-band outside which Analogue Events will be generated.
- Specifying a multiplier that will be applied to an analogue value before transmission.
- Configuring a Counter's respective Frozen Counter.

IEC60870-5-103

The tool will allow:

- Data Points to be enabled or disabled.
- Changing the point numbers Function Type (FUN) and Information (INF), returned by each point.
- Changing the text returned to Reydisp for display in its event viewer.

MODBUS

Note, as MODBUS points are polled they do not need to be enabled or disabled.

The tool will allow:

© 2019 Siemens Protection Devices Limited

- Changing the Addresses for the Coils, Inputs and Registers.
- Changing the format of the instrument returned in a register, e.g. 16 or 32 bit.
- Specifying a multiplier that will be applied to an analogue value before transmission.

The user can check if the relay contains user configured communication files via a meter in the relay menus. Pressing the Enter and down arrow buttons on the fascia, then scrolling down, the number of files stored in the relay is displayed. The file name can also be viewed by pressing the Cancel and Test/Reset buttons together when in the relay Instruments menu. The user must ensure when naming the file, they use a unique file name including the version number.

Please refer to the Communications Editor User Guide for further guidance.

 © 2019 Siemens Protection Devices Limited

10. Glossary

Baud Rate
Data transmission speed.

Bit
The smallest measure of computer data.

Bits Per Second (bps)
Measurement of data transmission speed.

Data Bits
A number of bits containing the data. Sent after the start bit.

Data Echo
When connecting relays in an optical ring architecture, the data must be passed from one relay to the next, therefore when connecting in this method all relays must have the Data Echo ON.

EN100
Siemens' Ethernet communications module supporting IEC61850, available in optical and electrical versions.

Ethernet
A computer networking technology.

Full-Duplex Asynchronous Communications
Communications in two directions simultaneously.

Half-Duplex Asynchronous Communications
Communications in two directions, but only one at a time.

Hayes “AT”
Modem command set developed by Hayes Microcomputer products, Inc.

LAN
Local Area Network. A computer network covering a small geographic area.

LC
Fibre optic connector type designed by Lucent Technologies, Inc.

Line Idle
Determines when the device is not communicating if the idle state transmits light.

Modem
MOdulator / DEModulator device for connecting computer equipment to a telephone line.

Parity
Method of error checking by counting the value of the bits in a sequence, and adding a parity bit to make the outcome, for example, even.

Parity Bit
Bit used for implementing parity checking. Sent after the data bits.

RS232C
Serial Communications Standard. Electronic Industries Association Recommended Standard Number 232, Revision C.

RS485
Serial Communications Standard. Electronic Industries Association Recommended Standard Number 485.

© 2019 Siemens Protection Devices Limited

Start Bit
Bit (logical 0) sent to signify the start of a byte during data transmission.

Stop Bit
Bit (logical 1) sent to signify the end.

USB
Universal Serial Bus standard for the transfer of data.

WAN
Wide Area Network. A computer network covering a large geographic area.

© 2019 Siemens Protection Devices Limited

Appendix 1

The operating mode of the device is set via the setting, or through a command sent to a communications port. There are four options; **Local**, **Remote**, **Local or Remote** and **Service**.

The following table illustrates whether a function is Enabled (✔) or Disabled (✘) in each mode.

Function	Operation Mode		
	Local	**Remote**	**Out of Service**
Control			
Com1	✔ when Com1-Mode = Local	✔ when Com1-Mode = Remote	✘
Com2 (USB)	✔ when Com2-Mode = Local	✔ when Com2-Mode = Remote	✘
Fascia (Control Mode)	✔	✘	✘
Function Key (n)	✔	✔ when F Key(n) Mode = Remote	✘
Binary Input (n)	✔ when BI (n) Mode = Local	✔ when BI (n) Mode = Remote	✘
Binary Outputs	✔	✔	✘
Reporting			
Spontaneous			
IEC	✔	✔	✘
DNP3	✔	✔	✘
General Interrogation			
IEC	✔	✔	✘
DNP3	✔	✔	✔
MODBUS	✔	✔	✔
Change Settings			
Com1	✔ when Com1-Mode = Local	✔ when Com1-Mode = Remote	✔
Com2 (USB)	✔ when Com2-Mode = Local	✔ when Com2-Mode = Remote	✔
Fascia	✔	✔	✔
Historical Information			
Waveform Records	✔	✔	✔
Event Records	✔	✔	✔
Fault Information	✔	✔	✔
Setting Information	✔	✔	✔

Fig. A1 Operating Mode Table

© 2019 Siemens Protection Devices Limited

Siemens Protection Devices Ltd. (SPDL)
P.O. Box 8
Hebburn
Tyne and Wear
NE31 1TZ
United Kingdom

For enquiries please contact our Customer Support Centre
Tel.: +49 180/524 8437 (24hrs)
Fax.: +49 180/524 2471
E-Mail:support.ic@siemens.com
www.siemens.com/reyrolle

Template Revision 17.

© 2019 Siemens Protection Devices Limited

7SR120

7SR120x-xxxxx-xxA0

Document Release History

This document is issue **2019/04**. The list of revisions up to and including this issue is:

Date	Description
2019/04	R4k-3d : No changes from R4h-3d

The copyright and other intellectual property rights in this document, and in any model or article produced from it (and including any registered or unregistered design rights) are the property of Siemens Protection Devices Limited. No part of this document shall be reproduced or modified or stored in another form, in any data retrieval system, without the permission of Siemens Protection Devices Limited, nor shall any model or article be reproduced from this document unless Siemens Protection Devices Limited consent.

While the information and guidance given in this document is believed to be correct, no liability shall be accepted for any loss or damage caused by any error or omission, whether such error or omission is the result of negligence or any other cause. Any and all such liability is disclaimed.

© 2019 Siemens Protection Devices Limited

Contents

1. Introduction.....5

2. Physical Connection.....7

2.1 Introduction.....7

2.2 USB Interface (COM2).....8

2.3 RS485 Interface (COM1).....8

3. IEC 60870-5-103 Definitions.....11

3.1 Introduction.....11

3.2 Cause of Transmission.....12

3.3 Application Service Data Unit (ASDU) Type.....13

3.4 Point List.....14

3.4.1 Event Function (FUN) & Information (INF) Numbers.....14

3.4.2 Measurands.....27

3.4.3 Disturbance Recorder Actual Channel (ACC) Numbers.....27

4. MODBUS Definitions.....29

4.1 Introduction.....29

4.2 MODBUS Register Data Types.....30

4.2.1 FLOAT_IEEE_754.....30

4.2.2 FP_32BITS_3DP.....31

4.2.3 UINT32.....31

4.2.4 UINT16.....31

4.2.5 EVENT.....32

4.2.6 EVENTCOUNT.....33

4.2.7 TIME_METER.....33

4.2.8 STR32 & STR64.....33

4.2.9 BITSTRING.....33

4.3 Point List.....35

4.3.1 Coils (Read Write Binary values).....35

4.3.2 Inputs (Read Only Binary values).....36

4.3.3 Input Registers (Read Only Registers).....40

4.3.4 Holding Registers (Read Write Registers).....43

5. DNP3 Definitions.....47

5.1 Device Profile.....47

5.2 Implementation Table.....50

5.3 Point List.....56

5.3.1 Binary Input Points.....56

5.3.2 Double Bit Input Points.....61

5.3.3 Binary Output Status Points and Control Relay Output Blocks.....62

5.3.4 Counters.....67

5.3.5 Analog Inputs.....68

5.4 Additional Settings.....72

6. Not Applicable.....73

7. IEC61850 Protocol Support.....75

7.1 Introduction.....75

8. Serial Modems.....77

8.1 Introduction....77
8.2 Connecting a Modem to the Relay(s).... 77
8.3 Setting the Remote Modem....77
8.4 Connecting to the Remote Modem.... 77
9. Configuration.... 79
10. Glossary....81
Appendix 1....83

List of Figures

Fig. 2-1 Communication to Front USB Port....8
Fig. 2-2 Communication to Multiple Devices using RS485 (Standard Port).... 10
Fig. A1 Operating Mode Table.... 83

 © 2019 Siemens Protection Devices Limited

1. Introduction

This section describes how to use the Communication Interface with a control system or interrogating computer.

The interface is compatible with control and automation systems using industry standard communications protocols ***DNP3*** , ***IEC 60870-5-103*** , ***IEC 61850*** and ***MODBUS-RTU***. Note, not all protocols are available on all devices.

Reydisp Evolution or Reydisp Manager Software is available, for computers running Microsoft Windows™, to connect to devices to provide operational information, post-fault analysis, setting interrogation and editing facilities etc. Configuration software can be downloaded from our website http://www.siemens.com/energy.

This section specifies connection details and lists the information available through the individual protocols.

© 2019 Siemens Protection Devices Limited

© 2019 Siemens Protection Devices Limited

2. Physical Connection

2.1 Introduction

The relay provides one “Front” USB communication interface (Com2) located on the fascia and one RS485 (Com1) located on the “Rear” as standard.

A detailed description of the ports is given below.

COM1-RS485: This port can be used for IEC60870-5-103, MODBUS-RTU or DNP3 communications to a substation SCADA or integrated control system or for engineer remote access. This port can also be used for connection to Reydisp software.

COM2-USB: This port is used for IEC60870-5-103 (default setting) communication with the Reydisp software.

An ASCII protocol is also available through this port, the main use of this protocol is to allow the Relay firmware to be updated via the front connection.

MODBUS-RTU or the optional DNP3 protocols are also available.

COM3-LAN: When the Ethernet module is fitted, in addition to IEC61850 a LAN connection is provided to allow the Reydisp software to connect to the Relay via the network. This port only supports the IEC60870-5-103 protocol.

Any or all serial ports can be mapped to the IEC60870-5-103, DNP3 or MODBUS-RTU protocol at any one time, protocols available will depend upon relay model. The optional ethernet port uses IEC 61850 protocol and can also provide an IEC 60870-5-103 protocol connection to Reydisp. Any port not required can be disabled by setting its protocol to OFF.

When connecting to Reydisp Evolution software the protocol for the relevant port should be set to IEC60870-5-103.

© 2019 Siemens Protection Devices Limited

2.2 USB Interface (COM2)

The USB communication port is connected using a standard USB cable with a type B connection to the relay and type A to the PC.

The PC will require a suitable USB driver to be installed; this will be carried out automatically when the Reydisp software is installed. When the Reydisp software is running with the USB cable connected to a device an additional connection is shown. Connections to these devices are not shown when they are not connected.

The USB communication interface on the relay is labelled Com 2 and its associated settings are located in the Data communications menu. When connecting to Reydisp using this connection the default settings can be used without the need to first change any settings.

Access to the communication settings for the USB port is only available from the relay front fascia via the key pad setting menu COMMUNICATIONS MENU.

Setting Name	Range/Options	Default	Setting	Notes
COM2-USB Protocol	OFF IEC60870-5-103 MODBUS-RTU ASCII DNP3	IEC60870-5-103		Reydisp software requires IEC60870-5-103.
COM2-USB Station Address	0 - 254 for IEC60870-5-103 1 - 247 for Modbus RTU 0 - 65534 for DNP3.0	0		An address within the range of the relevant protocol must be given to identify the relay. Each relay in a network must have a unique address.
COM2-USB Mode	Local Local or Remote Remote	Local		Refer to Appendix 1, page 83, for further explanation

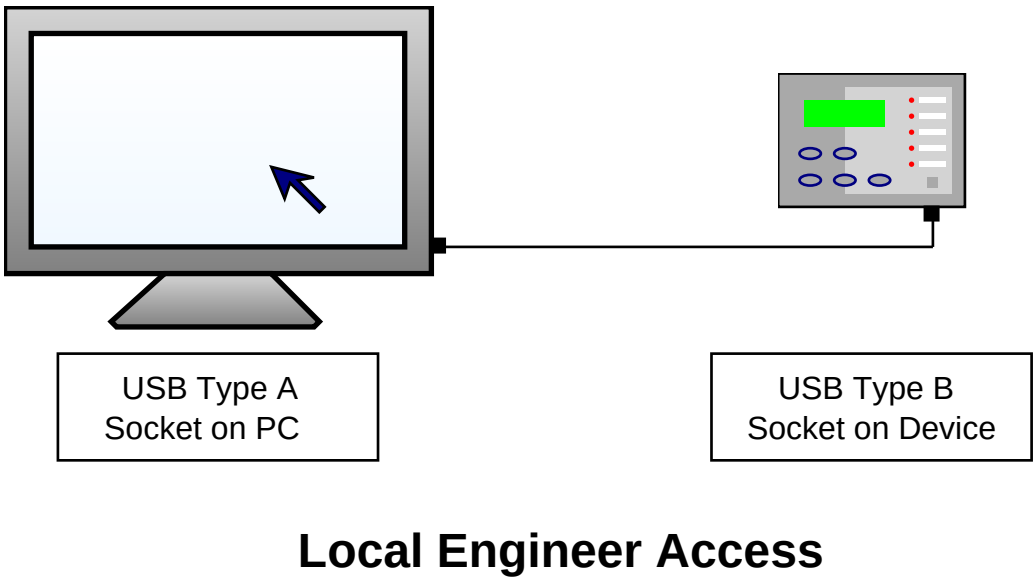

Fig. 2-1 Communication to Front USB Port

2.3 RS485 Interface (COM1)

The 2-wire RS485 communication port is located on the rear of the relay and can be connected using a suitable RS485 120 Ohm screened twisted pair cable.

© 2019 Siemens Protection Devices Limited

The RS485 electrical connection can be used in a single or multi-drop configuration. The RS485 master must support and use the Auto Device Enable (ADE) feature. The last device in the connection must be terminated correctly in accordance with the master device driving the connection. This can be done via the internal 120 ohm terminating resistor, which can be connected between 14 (A) and 18 (B) by fitting an external wire loop between terminals 18 and 20 on the power supply module.

The polarity of the signal terminals is marked as A and B in line with the RS485 standard. The polarity is that when the bus is in the quiescent state and no communication is taking place, the B terminal is more positive than A. This can be used to identify the polarity of any equipment to be connected, typically measured at each terminal in turn to ground. Connection of the device to a termination network at the end of the bus will also be to suit the quiescent state as shown in the diagram below.

The polarity marking is often found to be reversed or marked as +/- on other equipment so care is required. If the devices are connected in reverse, communication to all devices will be disturbed but no damage will occur. If problems are experienced during commissioning, the connections should be tried in reverse.

The maximum number of relays that can be connected to the bus is 64.

The RS485 data comms link will be broken for that particular relay element if it is withdrawn from the case but the chain of communication to the other relays is maintained.

The following settings, on the COMMUNICATIONS MENU, must be configured when using the RS485 interface.

Setting Name	Range/Options	Default	Setting	Notes
COM1-RS485 Protocol	OFF IEC60870-5-103 MODBUS-RTU DNP3	IEC60870-5-103		The protocol used to communicate on the standard RS485 connection.
COM1-RS485 Station Address	0 - 254 for IEC60870-5-103 1 - 247 for Modbus RTU 0 - 65534 for DNP3.0	0		An address within the range of the relevant protocol must be given to identify the relay. Each relay in a network must have a unique address.
COM1-RS485 Baud Rate	75 110 150 300 600 1200 2400 4800 9600 19200 38400	19200		The baud rate set on all of the relays connected to the control system must be the same as the one set on the master device.
COM1-RS485 Parity	NONE ODD EVEN	EVEN		The parity set on all of the relays connected to the control system must be the same and in accordance with the master device.
COM1-RS485 Mode	Local Local or Remote Remote	Remote		Refer to Appendix 1, page 83, for further explanation

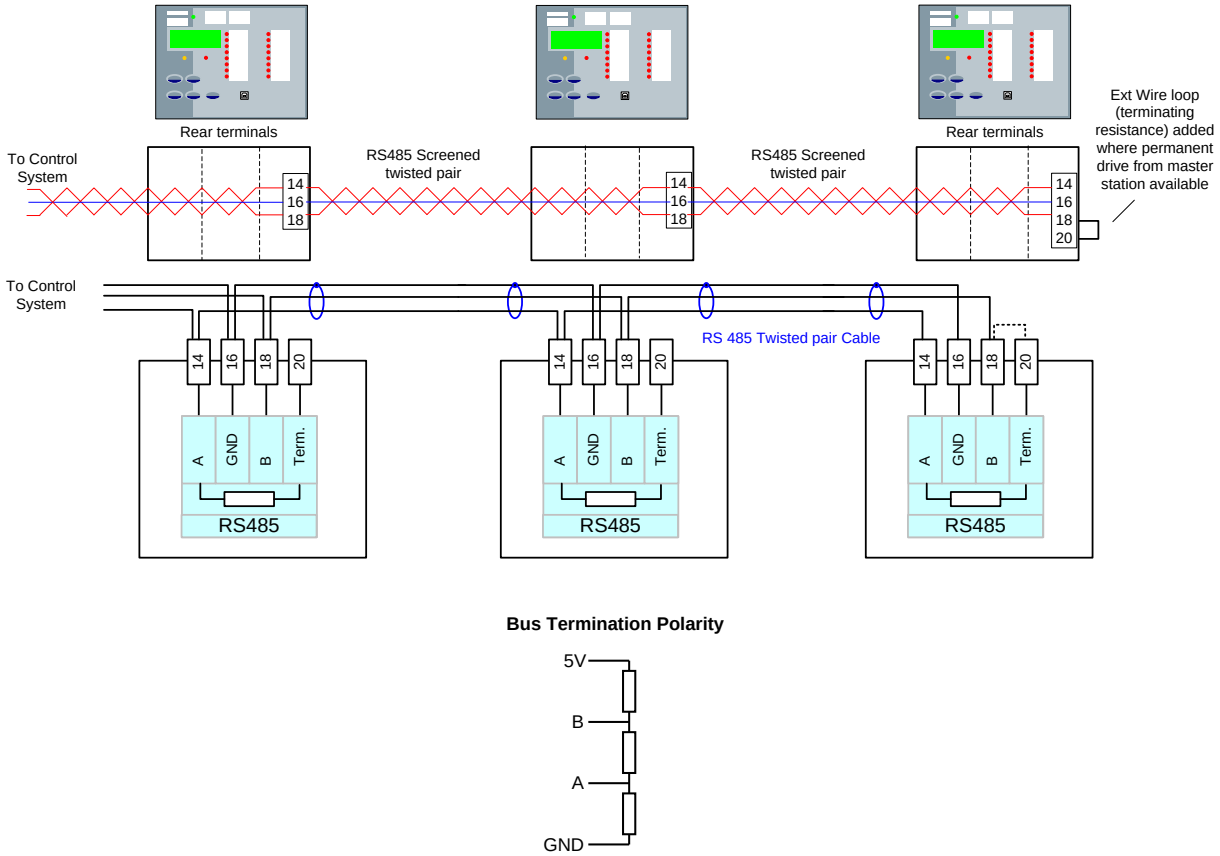

Bus Termination Polarity

Fig. 2-2 Communication to Multiple Devices using RS485 (Standard Port)

© 2019 Siemens Protection Devices Limited

3. IEC 60870-5-103 Definitions

3.1 Introduction

This section describes the IEC 60870-5-103 protocol implementation in the relays. This protocol is used for the communication with Reydisp software and can also be used for communication with a suitable control system. The control system or local PC acts as the master in the system with the relay operating as a slave responding to the master's commands. The implementation provides event information, time synchronising, commands and measurands and also supports the transfer of disturbance records.

This protocol can be set to use any or all of the relays hardware interfaces (USB, Fibre Optic, RS232, RS485 and Ethernet) where fitted and is the standard protocol used by the USB port. The relay can communicate simultaneously on all ports regardless of protocol used.

The Station Address of the port being used must be set to a suitable address within the range 0 - 254 to enable communication. This can be set by the **Communications Menu : COM *n-xxxxx* Station Address** setting.

© 2019 Siemens Protection Devices Limited

3.2 Cause of Transmission

The cause of transmission (COT) column of the "Information Number and Function" table lists possible causes of transmission for these frames. The following abbreviations are used:

Abbreviation	Description
SE	spontaneous event
T	test mode
GI	general interrogation
Loc	local operation
Rem	remote operation
Ack	command acknowledge
Nak	Negative command acknowledge

Note: Events listing a GI cause of transmission can be raised and cleared; other events are raised only.

© 2019 Siemens Protection Devices Limited

3.3 Application Service Data Unit (ASDU) Type

The Application Service Data Unit (ASDU) column of the "Information Number and Function" table lists the possible ASDUs returned for a point.

ASDU #	Description
1	Time tagged message (monitor direction)
2	Time tagged message (relative time) (monitor direction)
3.1	Measurands I
4	Time-tagged measurands with relative time
5	Identification message
6	Time synchronisation
7	General Interrogation Initialization
9	Measurands II
20	General command

© 2019 Siemens Protection Devices Limited

3.4 Point List

The following sub-sections contain tables listing the data points available via the IEC60870-5-103 protocol.

The information shown below is the default configuration. This can be modified using the Communications Configuration Editor tool, refer section 9 for details.

The information shown below is the default configuration. This can be modified using the Communications Configuration Editor tool, refer section 9 for details.

3.4.1 Event Function (FUN) & Information (INF) Numbers

The following Event EVT and INF numbers apply to this device.

FUN	INF	Description	ASDU	COT
60	4	Remote Mode	1	SE, GI
			20	Ack, Nak
60	5	Out Of Service Mode	1	SE, GI
			20	Ack, Nak
60	6	Local Mode	1	SE, GI
			20	Ack, Nak
60	7	Local & Remote	1	SE, GI
			20	Ack, Nak
60	12	Control Received	1	SE
60	13	Command Received	1	SE
60	128	Cold Start	1	SE
60	129	Warm Start	1	SE
60	130	Re-Start	1	SE
60	131	Expected Restart	1	SE, GI
60	132	Unexpected Restart	1	SE, GI
60	133	Reset Start Count	1	SE
			20	Ack, Nak
60	135	Trigger Storage	1	SE
60	136	Clear Waveform Records	1	SE
60	137	Clear Fault Records	1	SE
60	138	Clear Event Records	1	SE
60	140	Demand metering reset	1	SE
			20	Ack, Nak
60	170	General Alarm 1	1	SE, GI
60	171	General Alarm 2	1	SE, GI
60	172	General Alarm 3	1	SE, GI
60	173	General Alarm 4	1	SE, GI
60	174	General Alarm 5	1	SE, GI
60	175	General Alarm 6	1	SE, GI
60	182	Quick Logic E1	1	SE, GI
60	183	Quick Logic E2	1	SE, GI
60	184	Quick Logic E3	1	SE, GI
60	185	Quick Logic E4	1	SE, GI
70	5	Binary Input 5	1	SE, GI
70	6	Binary Input 6	1	SE, GI
75	1	Virtual Input 1	1	SE, GI

 © 2019 Siemens Protection Devices Limited

FUN	INF	Description	ASDU	COT
75	2	Virtual Input 2	1	SE, GI
75	3	Virtual Input 3	1	SE, GI
75	4	Virtual Input 4	1	SE, GI
75	5	Virtual Input 5	1	SE, GI
75	6	Virtual Input 6	1	SE, GI
75	7	Virtual Input 7	1	SE, GI
75	8	Virtual Input 8	1	SE, GI
80	1	Binary Output 1	1	SE, GI
			20	Ack, Nak
80	2	Binary Output 2	1	SE, GI
			20	Ack, Nak
80	3	Binary Output 3	1	SE, GI
			20	Ack, Nak
80	4	Binary Output 4	1	SE, GI
			20	Ack, Nak
80	5	Binary Output 5	1	SE, GI
			20	Ack, Nak
80	6	Binary Output 6	1	SE, GI
			20	Ack, Nak
80	7	Binary Output 7	1	SE, GI
			20	Ack, Nak
80	8	Binary Output 8	1	SE, GI
			20	Ack, Nak
90	1	LED 1	1	SE, GI
90	2	LED 2	1	SE, GI
90	3	LED 3	1	SE, GI
90	4	LED 4	1	SE, GI
90	5	LED 5	1	SE, GI
90	6	LED 6	1	SE, GI
90	7	LED 7	1	SE, GI
90	8	LED 8	1	SE, GI
90	9	LED 9	1	SE, GI
91	1	LED PU 1	1	SE, GI
91	2	LED PU 2	1	SE, GI
91	3	LED PU 3	1	SE, GI
91	4	LED PU 4	1	SE, GI
91	5	LED PU 5	1	SE, GI
91	6	LED PU 6	1	SE, GI
91	7	LED PU 7	1	SE, GI
91	8	LED PU 8	1	SE, GI
91	9	LED PU 9	1	SE, GI
160	2	Reset FCB	5	SE
160	3	Reset CU	5	SE
160	4	Start/Restart	5	SE
160	5	Power On	1	SE, GI
160	16	Auto-reclose active	1	SE, GI
			20	Ack, Nak
160	19	LED Reset	1	SE

© 2019 Siemens Protection Devices Limited

FUN	INF	Description	ASDU	COT
			20	Ack, Nak
160	22	Settings changed	1	SE
160	23	Setting G1 selected	1	SE, GI
			20	Ack, Nak
160	24	Setting G2 selected	1	SE, GI
			20	Ack, Nak
160	25	Setting G3 selected	1	SE, GI
			20	Ack, Nak
160	26	Setting G4 selected	1	SE, GI
			20	Ack, Nak
160	27	Binary Input 1	1	SE, GI
160	28	Binary Input 2	1	SE, GI
160	29	Binary Input 3	1	SE, GI
160	30	Binary Input 4	1	SE, GI
160	36	Trip Circuit Fail	1	SE, GI
160	38	VT Fuse Failure	1	SE, GI
160	51	Earth Fault Forward/Line	2	SE, GI
160	52	Earth Fault Reverse/Busbar	2	SE, GI
160	64	Start/Pick-up L1	2	SE, GI
160	65	Start/Pick-up L2	2	SE, GI
160	66	Start/Pick-up L3	2	SE, GI
160	67	Start/Pick-up N	2	SE, GI
160	68	General Trip	2	SE
160	69	Trip L1	2	SE
160	70	Trip L2	2	SE
160	71	Trip L3	2	SE
160	74	Fault Forward/Line	2	SE, GI
160	75	Fault Reverse/Busbar	2	SE, GI
160	84	General Start/Pick-up	2	SE, GI
160	85	Breaker Failure	2	SE
160	90	Trip I>	2	SE
160	91	Trip I>>	2	SE
160	92	Trip In>	2	SE
160	93	Trip In>>	2	SE
160	128	CB on by auto reclose	1	SE
183	10	51-1	2	SE, GI
183	11	50-1	2	SE, GI
183	12	51N-1	2	SE, GI
183	13	50N-1	2	SE, GI
183	14	51G-1	2	SE, GI
183	15	50G-1	2	SE, GI
183	16	51-2	2	SE, GI
183	17	50-2	2	SE, GI
183	18	51N-2	2	SE, GI
183	19	50N-2	2	SE, GI
183	20	51G-2	2	SE, GI
183	21	50G-2	2	SE, GI
183	22	51-3	2	SE, GI
183	23	50-3	2	SE, GI

 © 2019 Siemens Protection Devices Limited

FUN	INF	Description	ASDU	COT
183	24	51N-3	2	SE, GI
183	25	50N-3	2	SE, GI
183	26	51G-3	2	SE, GI
183	27	50G-3	2	SE, GI
183	28	51-4	2	SE, GI
183	29	50-4	2	SE, GI
183	30	51N-4	2	SE, GI
183	31	50N-4	2	SE, GI
183	32	51G-4	2	SE, GI
183	33	50G-4	2	SE, GI
183	34	50BF Stage 2	2	SE, GI
183	35	49-Alarm	2	SE, GI
183	36	49-Trip	2	SE, GI
183	40	60 CTS	2	SE, GI
183	50	46IT	2	SE, GI
183	51	46DT	2	SE, GI
183	52	64H	2	SE, GI
183	53	E/F Out	2	SE, GI
			20	Ack, Nak
183	56	50BF Stage 1	2	SE, GI
183	60	47-1	2	SE, GI
183	61	47-2	2	SE, GI
183	62	37-1	2	SE, GI
183	63	37-2	2	SE, GI
183	64	37G-1	2	SE, GI
183	65	37G-2	2	SE, GI
183	70	46BC	2	SE, GI
183	81	27/59-1	2	SE, GI
183	82	27/59-2	2	SE, GI
183	83	27/59-3	2	SE, GI
183	84	27/59-4	2	SE, GI
183	85	59NIT	2	SE, GI
183	86	59NDT	2	SE, GI
183	90	81-1	2	SE, GI
183	91	81-2	2	SE, GI
183	92	81-3	2	SE, GI
183	93	81-4	2	SE, GI
183	96	81HBL2	1	SE, GI
183	100	CB Alarm	1	SE, GI
183	101	Trip Circuit Fail 1	2	SE, GI
183	102	Trip Circuit Fail 2	2	SE, GI
183	103	Trip Circuit Fail 3	2	SE, GI
183	114	Close CB Failed	1	SE, GI
183	115	Open CB Failed	1	SE, GI
183	116	Reclaim	1	SE, GI
183	117	Lockout	1	SE, GI
183	119	Successful DAR Close	1	SE
183	120	Successful Man Close	1	SE

© 2019 Siemens Protection Devices Limited

FUN	INF	Description	ASDU	COT
183	121	HotLine Working	1	SE, GI
			20	Ack, Nak
183	122	Inst Protection Out	1	SE, GI
			20	Ack, Nak
183	123	CB Total Trip Count	1	SE, GI
183	124	CB Delta Trip Count	1	SE, GI
183	125	CB Count To AR Block	1	SE, GI
183	126	Reset CB Total Trip Count	1	SE
			20	Ack, Nak
183	127	Reset CB Delta Trip Count	1	SE
			20	Ack, Nak
183	128	Reset CB Count To AR Block	1	SE
			20	Ack, Nak
183	129	I^2t CB Wear	1	SE, GI
183	130	Reset I^2t CB Wear	1	SE
			20	Ack, Nak
183	131	79 AR In progress	1	SE, GI
183	132	CB Frequent Ops Count	1	SE, GI
183	133	Reset CB Frequent Ops Count	1	SE
			20	Ack, Nak
183	137	CB on by auto reclose	1	SE, GI
183	140	Cold Load Active	1	SE, GI
183	141	P/F Inst Protection Inhibited	1	SE, GI
183	142	E/F Inst Protection Inhibited	1	SE, GI
183	144	Ext Inst Protection Inhibited	1	SE, GI
183	163	Trip Time Alarm	1	SE
183	164	Close Circuit Fail 1	2	SE, GI
183	165	Close Circuit Fail 2	2	SE, GI
183	166	Close Circuit Fail 3	2	SE, GI
183	167	Close Circuit Fail	2	SE, GI
183	171	60 CTS-I	2	SE, GI
183	172	Act Energy Exp	4	SE
183	173	Act Energy Imp	4	SE
183	174	React Energy Exp	4	SE
183	175	React Energy Imp	4	SE
183	176	Reset Energy Meters	1	SE
			20	Ack, Nak
183	177	Active Exp Meter Reset	1	SE
183	178	Active Imp Meter Reset	1	SE
183	179	Reactive Exp Meter Reset	1	SE
183	180	Reactive Imp Meter Reset	1	SE
183	181	CB Total Trip Count	4	SE
183	182	CB Delta Trip Count	4	SE
183	183	CB Count To AR Block	4	SE
183	184	CB Freq Ops Count	4	SE
183	222	37-PhA	2	SE, GI
183	223	37-PhB	2	SE, GI
183	224	37-PhC	2	SE, GI
183	231	50BF-PhA	2	SE, GI

© 2019 Siemens Protection Devices Limited

FUN	INF	Description	ASDU	COT
183	232	50BF-PhB	2	SE, GI
183	233	50BF-PhC	2	SE, GI
183	234	50BF-EF	2	SE, GI
183	235	79 Last Trip Lockout	2	SE, GI
183	237	CB DBI	1	SE, GI
183	238	CB Travelling	1	SE, GI
183	239	In Fault Current	4	SE
183	240	Ia Fault Current	4	SE
183	241	Ib Fault Current	4	SE
183	242	Ic Fault Current	4	SE
183	243	Ig Fault Current	4	SE
183	245	Va Fault Voltage	4	SE
183	246	Vb Fault Voltage	4	SE
183	247	Vc Fault Voltage	4	SE
183	249	60 CTS-I-PhA	2	SE, GI
183	250	60 CTS-I-PhB	2	SE, GI
183	251	60 CTS-I-PhC	2	SE, GI
183	252	Trip PhA	2	SE, GI
183	253	Trip PhB	2	SE, GI
183	254	Trip PhC	2	SE, GI
185	37	27/59 PhA	2	SE, GI
185	38	27/59 PhB	2	SE, GI
185	39	27/59 PhC	2	SE, GI
185	43	General Trip	2	SE, GI
185	44	32-1	1	SE, GI
185	45	32-2	1	SE, GI
185	48	55-1	1	SE, GI
185	49	55-2	1	SE, GI
185	110	CB Wear CB A	4	SE
185	111	CB Wear CB B	4	SE
185	112	CB Wear CB C	4	SE
185	113	CB Wear CB A Remaining	4	SE
185	114	CB Wear CB B Remaining	4	SE
185	115	CB Wear CB C Remaining	4	SE
185	241	Start Count Alarm	1	SE, GI
186	1	50AFD PhA	1	SE, GI
186	2	50AFD PhB	1	SE, GI
186	3	50AFD PhC	1	SE, GI
186	4	50AFD	1	SE, GI
186	5	AFD Zone 1 Flash	1	SE, GI
186	6	AFD Zone 1	1	SE, GI
186	7	AFD Zone 2 Flash	1	SE, GI
186	8	AFD Zone 2	1	SE, GI
186	9	AFD Zone 3 Flash	1	SE, GI
186	10	AFD Zone 3	1	SE, GI
186	11	AFD Zone 4 Flash	1	SE, GI
186	12	AFD Zone 4	1	SE, GI
186	13	AFD Zone 5 Flash	1	SE, GI

© 2019 Siemens Protection Devices Limited

FUN	INF	Description	ASDU	COT
186	14	AFD Zone 5	1	SE, GI
186	15	AFD Zone 6 Flash	1	SE, GI
186	16	AFD Zone 6	1	SE, GI
186	17	AFD Zone1 Count	4	SE
186	18	AFD Zone2 Count	4	SE
186	19	AFD Zone3 Count	4	SE
186	20	AFD Zone4 Count	4	SE
186	21	AFD Zone5 Count	4	SE
186	22	AFD Zone6 Count	4	SE
200	1	CB 1	1	SE
			20	Ack, Nak
200	6	CB 1 Opened	1	SE, GI
200	7	CB 1 Closed	1	SE, GI
200	150	User SP Command 1	1	SE, GI
			20	Ack, Nak
200	151	User SP Command 2	1	SE, GI
			20	Ack, Nak
200	152	User SP Command 3	1	SE, GI
			20	Ack, Nak
200	153	User SP Command 4	1	SE, GI
			20	Ack, Nak
200	154	User SP Command 5	1	SE, GI
			20	Ack, Nak
200	155	User SP Command 6	1	SE, GI
			20	Ack, Nak
200	156	User SP Command 7	1	SE, GI
			20	Ack, Nak
200	157	User SP Command 8	1	SE, GI
			20	Ack, Nak
200	158	User DP Command 1	1	SE
			20	Ack, Nak
200	159	User DP Command 2	1	SE
			20	Ack, Nak
200	160	User DP Command 3	1	SE
			20	Ack, Nak
200	161	User DP Command 4	1	SE
			20	Ack, Nak
200	162	User DP Command 5	1	SE
			20	Ack, Nak
200	163	User DP Command 6	1	SE
			20	Ack, Nak
200	164	User DP Command 7	1	SE
			20	Ack, Nak
200	165	User DP Command 8	1	SE
			20	Ack, Nak
200	200	CB 1 Trip & Reclose	1	SE
			20	Ack, Nak
200	201	CB 1 Trip & Lockout	1	SE
			20	Ack, Nak

© 2019 Siemens Protection Devices Limited

FUN	INF	Description	ASDU	COT
200	255	Blocked By Interlocking	1	SE, GI
60	4	Remote Mode	0	SE, GI
60	5	Out Of Service Mode	0	SE, GI
60	6	Local Mode	0	SE, GI
60	7	Local & Remote	0	SE, GI
60	12	Control Received	0	SE
60	13	Command Received	0	SE
60	128	Cold Start	0	SE
60	129	Warm Start	0	SE
60	130	Re-Start	0	SE
60	131	Expected Restart	0	SE, GI
60	132	Unexpected Restart	0	SE, GI
60	133	Reset Start Count	0	SE
60	135	Trigger Storage	0	SE
60	136	Clear Waveform Records	0	SE
60	137	Clear Fault Records	0	SE
60	138	Clear Event Records	0	SE
60	140	Demand metering reset	0	SE
60	170	General Alarm 1	0	SE, GI
60	171	General Alarm 2	0	SE, GI
60	172	General Alarm 3	0	SE, GI
60	173	General Alarm 4	0	SE, GI
60	174	General Alarm 5	0	SE, GI
60	175	General Alarm 6	0	SE, GI
60	182	Quick Logic E1	0	SE, GI
60	183	Quick Logic E2	0	SE, GI
60	184	Quick Logic E3	0	SE, GI
60	185	Quick Logic E4	0	SE, GI
70	5	Binary Input 5	0	SE, GI
70	6	Binary Input 6	0	SE, GI
75	1	Virtual Input 1	0	SE, GI
75	2	Virtual Input 2	0	SE, GI
75	3	Virtual Input 3	0	SE, GI
75	4	Virtual Input 4	0	SE, GI
75	5	Virtual Input 5	0	SE, GI
75	6	Virtual Input 6	0	SE, GI
75	7	Virtual Input 7	0	SE, GI
75	8	Virtual Input 8	0	SE, GI
80	1	Binary Output 1	0	SE, GI
80	2	Binary Output 2	0	SE, GI
80	3	Binary Output 3	0	SE, GI
80	4	Binary Output 4	0	SE, GI
80	5	Binary Output 5	0	SE, GI
80	6	Binary Output 6	0	SE, GI
80	7	Binary Output 7	0	SE, GI
80	8	Binary Output 8	0	SE, GI
90	1	LED 1	0	SE, GI
90	2	LED 2	0	SE, GI

© 2019 Siemens Protection Devices Limited

FUN	INF	Description	ASDU	COT
90	3	LED 3	0	SE, GI
90	4	LED 4	0	SE, GI
90	5	LED 5	0	SE, GI
90	6	LED 6	0	SE, GI
90	7	LED 7	0	SE, GI
90	8	LED 8	0	SE, GI
90	9	LED 9	0	SE, GI
91	1	LED PU 1	0	SE, GI
91	2	LED PU 2	0	SE, GI
91	3	LED PU 3	0	SE, GI
91	4	LED PU 4	0	SE, GI
91	5	LED PU 5	0	SE, GI
91	6	LED PU 6	0	SE, GI
91	7	LED PU 7	0	SE, GI
91	8	LED PU 8	0	SE, GI
91	9	LED PU 9	0	SE, GI
160	2	Reset FCB	0	SE
160	3	Reset CU	0	SE
160	4	Start/Restart	0	SE
160	5	Power On	0	SE, GI
160	16	Auto-reclose active	0	SE, GI
160	19	LED Reset	0	SE
160	22	Settings changed	0	SE
160	23	Setting G1 selected	0	SE, GI
160	24	Setting G2 selected	0	SE, GI
160	25	Setting G3 selected	0	SE, GI
160	26	Setting G4 selected	0	SE, GI
160	27	Binary Input 1	0	SE, GI
160	28	Binary Input 2	0	SE, GI
160	29	Binary Input 3	0	SE, GI
160	30	Binary Input 4	0	SE, GI
160	36	Trip Circuit Fail	0	SE, GI
160	38	VT Fuse Failure	0	SE, GI
160	51	Earth Fault Forward/Line	0	SE, GI
160	52	Earth Fault Reverse/Busbar	0	SE, GI
160	64	Start/Pick-up L1	0	SE, GI
160	65	Start/Pick-up L2	0	SE, GI
160	66	Start/Pick-up L3	0	SE, GI
160	67	Start/Pick-up N	0	SE, GI
160	68	General Trip	0	SE
160	69	Trip L1	0	SE
160	70	Trip L2	0	SE
160	71	Trip L3	0	SE
160	74	Fault Forward/Line	0	SE, GI
160	75	Fault Reverse/Busbar	0	SE, GI
160	84	General Start/Pick-up	0	SE, GI
160	85	Breaker Failure	0	SE
160	90	Trip I>	0	SE
160	91	Trip I>>	0	SE

© 2019 Siemens Protection Devices Limited

FUN	INF	Description	ASDU	COT
160	92	Trip In>	0	SE
160	93	Trip In>>	0	SE
160	128	CB on by auto reclose	0	SE
183	10	51-1	0	SE, GI
183	11	50-1	0	SE, GI
183	12	51N-1	0	SE, GI
183	13	50N-1	0	SE, GI
183	16	51-2	0	SE, GI
183	17	50-2	0	SE, GI
183	18	51N-2	0	SE, GI
183	19	50N-2	0	SE, GI
183	22	51-3	0	SE, GI
183	23	50-3	0	SE, GI
183	24	51N-3	0	SE, GI
183	25	50N-3	0	SE, GI
183	28	51-4	0	SE, GI
183	29	50-4	0	SE, GI
183	30	51N-4	0	SE, GI
183	31	50N-4	0	SE, GI
183	34	50BF Stage 2	0	SE, GI
183	35	49-Alarm	0	SE, GI
183	36	49-Trip	0	SE, GI
183	40	60 CTS	0	SE, GI
183	41	51SEF-1	2	SE, GI
183	42	50SEF-1	2	SE, GI
183	43	51SEF-2	2	SE, GI
183	44	50SEF-2	2	SE, GI
183	45	51SEF-3	2	SE, GI
183	46	50SEF-3	2	SE, GI
183	47	51SEF-4	2	SE, GI
183	48	50SEF-4	2	SE, GI
183	49	SEF Out	2	SE, GI
			20	Ack, Nak
183	50	46IT	0	SE, GI
183	51	46DT	0	SE, GI
183	52	64H	0	SE, GI
183	53	E/F Out	0	SE, GI
183	54	SEF Forward/Line	2	SE, GI
183	55	SEF Reverse/Busbar	2	SE, GI
183	56	50BF Stage 1	0	SE, GI
183	60	47-1	0	SE, GI
183	61	47-2	0	SE, GI
183	62	37-1	0	SE, GI
183	63	37-2	0	SE, GI
183	66	37SEF-1	2	SE, GI
183	67	37SEF-2	2	SE, GI
183	70	46BC	0	SE, GI
183	81	27/59-1	0	SE, GI

© 2019 Siemens Protection Devices Limited

FUN	INF	Description	ASDU	COT
183	82	27/59-2	0	SE, GI
183	83	27/59-3	0	SE, GI
183	84	27/59-4	0	SE, GI
183	85	59NIT	0	SE, GI
183	86	59NDT	0	SE, GI
183	90	81-1	0	SE, GI
183	91	81-2	0	SE, GI
183	92	81-3	0	SE, GI
183	93	81-4	0	SE, GI
183	96	81HBL2	0	SE, GI
183	100	CB Alarm	0	SE, GI
183	101	Trip Circuit Fail 1	0	SE, GI
183	102	Trip Circuit Fail 2	0	SE, GI
183	103	Trip Circuit Fail 3	0	SE, GI
183	114	Close CB Failed	0	SE, GI
183	115	Open CB Failed	0	SE, GI
183	116	Reclaim	0	SE, GI
183	117	Lockout	0	SE, GI
183	119	Successful DAR Close	0	SE
183	120	Successful Man Close	0	SE
183	121	HotLine Working	0	SE, GI
183	122	Inst Protection Out	0	SE, GI
183	123	CB Total Trip Count	0	SE, GI
183	124	CB Delta Trip Count	0	SE, GI
183	125	CB Count To AR Block	0	SE, GI
183	126	Reset CB Total Trip Count	0	SE
183	127	Reset CB Delta Trip Count	0	SE
183	128	Reset CB Count To AR Block	0	SE
183	129	I^2t CB Wear	0	SE, GI
183	130	Reset I^2t CB Wear	0	SE
183	131	79 AR In progress	0	SE, GI
183	132	CB Frequent Ops Count	0	SE, GI
183	133	Reset CB Frequent Ops Count	0	SE
183	137	CB on by auto reclose	0	SE, GI
183	140	Cold Load Active	0	SE, GI
183	141	P/F Inst Protection Inhibited	0	SE, GI
183	142	E/F Inst Protection Inhibited	0	SE, GI
183	143	SEF Inst Protection Inhibited	1	SE, GI
183	144	Ext Inst Protection Inhibited	0	SE, GI
183	163	Trip Time Alarm	0	SE
183	164	Close Circuit Fail 1	0	SE, GI
183	165	Close Circuit Fail 2	0	SE, GI
183	166	Close Circuit Fail 3	0	SE, GI
183	167	Close Circuit Fail	0	SE, GI
183	171	60 CTS-I	0	SE, GI
183	172	Act Energy Exp	0	SE
183	173	Act Energy Imp	0	SE
183	174	React Energy Exp	0	SE
183	175	React Energy Imp	0	SE

© 2019 Siemens Protection Devices Limited

FUN	INF	Description	ASDU	COT
183	176	Reset Energy Meters	0	SE
183	177	Active Exp Meter Reset	0	SE
183	178	Active Imp Meter Reset	0	SE
183	179	Reactive Exp Meter Reset	0	SE
183	180	Reactive Imp Meter Reset	0	SE
183	181	CB Total Trip Count	0	SE
183	182	CB Delta Trip Count	0	SE
183	183	CB Count To AR Block	0	SE
183	184	CB Freq Ops Count	0	SE
183	221	Wattmetric Po>	1	SE, GI
183	222	37-PhA	0	SE, GI
183	223	37-PhB	0	SE, GI
183	224	37-PhC	0	SE, GI
183	231	50BF-PhA	0	SE, GI
183	232	50BF-PhB	0	SE, GI
183	233	50BF-PhC	0	SE, GI
183	234	50BF-EF	0	SE, GI
183	235	79 Last Trip Lockout	0	SE, GI
183	237	CB DBI	0	SE, GI
183	238	CB Travelling	0	SE, GI
183	239	In Fault Current	0	SE
183	240	Ia Fault Current	0	SE
183	241	Ib Fault Current	0	SE
183	242	Ic Fault Current	0	SE
183	244	Isef Fault Current	4	SE
183	245	Va Fault Voltage	0	SE
183	246	Vb Fault Voltage	0	SE
183	247	Vc Fault Voltage	0	SE
183	249	60 CTS-I-PhA	0	SE, GI
183	250	60 CTS-I-PhB	0	SE, GI
183	251	60 CTS-I-PhC	0	SE, GI
183	252	Trip PhA	0	SE, GI
183	253	Trip PhB	0	SE, GI
183	254	Trip PhC	0	SE, GI
185	37	27/59 PhA	0	SE, GI
185	38	27/59 PhB	0	SE, GI
185	39	27/59 PhC	0	SE, GI
185	43	General Trip	0	SE, GI
185	44	32-1	0	SE, GI
185	45	32-2	0	SE, GI
185	46	32S-1	1	SE, GI
185	47	32S-2	1	SE, GI
185	48	55-1	0	SE, GI
185	49	55-2	0	SE, GI
185	110	CB Wear CB A	0	SE
185	111	CB Wear CB B	0	SE
185	112	CB Wear CB C	0	SE
185	113	CB Wear CB A Remaining	0	SE

© 2019 Siemens Protection Devices Limited

FUN	INF	Description	ASDU	COT
185	114	CB Wear CB B Remaining	0	SE
185	115	CB Wear CB C Remaining	0	SE
185	241	Start Count Alarm	0	SE, GI
186	1	50AFD PhA	0	SE, GI
186	2	50AFD PhB	0	SE, GI
186	3	50AFD PhC	0	SE, GI
186	4	50AFD	0	SE, GI
186	5	AFD Zone 1 Flash	0	SE, GI
186	6	AFD Zone 1	0	SE, GI
186	7	AFD Zone 2 Flash	0	SE, GI
186	8	AFD Zone 2	0	SE, GI
186	9	AFD Zone 3 Flash	0	SE, GI
186	10	AFD Zone 3	0	SE, GI
186	11	AFD Zone 4 Flash	0	SE, GI
186	12	AFD Zone 4	0	SE, GI
186	13	AFD Zone 5 Flash	0	SE, GI
186	14	AFD Zone 5	0	SE, GI
186	15	AFD Zone 6 Flash	0	SE, GI
186	16	AFD Zone 6	0	SE, GI
186	17	AFD Zone1 Count	0	SE
186	18	AFD Zone2 Count	0	SE
186	19	AFD Zone3 Count	0	SE
186	20	AFD Zone4 Count	0	SE
186	21	AFD Zone5 Count	0	SE
186	22	AFD Zone6 Count	0	SE
200	1	CB 1	0	SE
200	6	CB 1 Opened	0	SE, GI
200	7	CB 1 Closed	0	SE, GI
200	150	User SP Command 1	0	SE, GI
200	151	User SP Command 2	0	SE, GI
200	152	User SP Command 3	0	SE, GI
200	153	User SP Command 4	0	SE, GI
200	154	User SP Command 5	0	SE, GI
200	155	User SP Command 6	0	SE, GI
200	156	User SP Command 7	0	SE, GI
200	157	User SP Command 8	0	SE, GI
200	158	User DP Command 1	0	SE
200	159	User DP Command 2	0	SE
200	160	User DP Command 3	0	SE
200	161	User DP Command 4	0	SE
200	162	User DP Command 5	0	SE
200	163	User DP Command 6	0	SE
200	164	User DP Command 7	0	SE
200	165	User DP Command 8	0	SE
200	200	CB 1 Trip & Reclose	0	SE
200	201	CB 1 Trip & Lockout	0	SE
200	255	Blocked By Interlocking	0	SE, GI
255	0	General Interrogation (GI) Initiation	7	Init. GI
255	0	General Interrogation (GI) End	8	End of GI

© 2019 Siemens Protection Devices Limited

FUN	INF	Description	ASDU	COT
255	0	Time Synchronisation	6	Time Synch.

3.4.2 Measurands

The following Measurand EVT and INF numbers apply to this device.

FUN	INF	Description	ASDU	COT
183	148	Measurand $I_{L1,2,3,}$ $V_{L1,2,3,}$ P, Q, F, $V_{L1-2,L2-3,L3-1}$ --- I_{L1} (2.4x) (Window 1%) I_{L2} (2.4x) (Window 1%) I_{L3} (2.4x) (Window 1%) V_{L1} (1.2x) (Window 1%) V_{L2} (1.2x) (Window 1%) V_{L3} (1.2x) (Window 1%) P (2.4x) (Window 1%) Q (2.4x) (Window 1%) F (1.2x) (Window 0.1%) V_{L1-2} (1.2x) (Window 1%) V_{L2-3} (1.2x) (Window 1%) V_{L3-1} (1.2x) (Window 1%)	9	Cyclic - Refresh rate 5 seconds or value change greater than Window x %.
183	236	Measurand Max $I_{a,b,c,}$ $V_{an,bn,cn,}$ P, Q, $V_{ab,bc,ca}$ --- Ia Max (2.4x) (Window 1%) Ib Max (2.4x) (Window 1%) Ic Max (2.4x) (Window 1%) Van Max_1 (1.2x) (Window 1%) Vbn Max_2 (1.2x) (Window 1%) Vcn Max_3 (1.2x) (Window 1%) P Max (2.4x) (Window 1%) Q Max (2.4x) (Window 1%) Vab Max (1.2x) (Window 1%) Vbc Max (1.2x) (Window 1%) Vca Max (1.2x) (Window 1%)	9	Cyclic - Refresh rate 5 seconds or value change greater than Window x %.

3.4.3 Disturbance Recorder Actual Channel (ACC) Numbers

The following Disturbance Recorder channel numbers apply to this device.

FUN	ACC	Description
182	1	V1
182	2	V2
182	3	V3
182	5	Ia
182	6	Ib
182	7	Ic
182	8	Ig1

© 2019 Siemens Protection Devices Limited

© 2019 Siemens Protection Devices Limited

4. MODBUS Definitions

4.1 Introduction

This section describes the MODBUS-RTU protocol implementation in the relays. This protocol is used for communication with a suitable control system.

This protocol can be set to use any or all of the relays hardware interfaces (USB, Fibre Optic, RS232 and RS485) where fitted. The relay can communicate simultaneously on all ports regardless of protocol used.

The Station Address of the port being used must be set to a suitable address within the range 1 - 247 to enable communication. This can be set by the **Communications Menu : COM *n-xxxxx* Station Address** setting.

Communication via MODBUS over Ethernet requires external devices. Please refer to the documents ***TCPIP Catalogue Sheet*** and ***TCPIP Interface Technical Guidance Notes*** for more information.

Definitions with shaded area are not available on all relay models.

© 2019 Siemens Protection Devices Limited

4.2 MODBUS Register Data Types

4.2.1 FLOAT_IEEE_754

The float data type conforms to the IEEE 754 floating point definition. This specifies that 32 bits of data will be formatted as a sign bit in the most significant bit (MSB) followed by an 8 bit exponent then a 23 bit mantissa, down to the least significant bit (LSB).

MSB																																LSB
Sign	Exponent								Mantissa																							

FLOAT_IEEE_754 IN DETAIL

The exponent is an 8 bit unsigned integer. To allow for negative exponents, it is offset by 127. Therefore the actual exponent is e - 127. The following table shows a detailed layout of the exponent.

2^7	2^6	2^5	2^4	2^3	2^2	2^1	2^0
128	64	32	16	8	4	2	1

The mantissa contains the fractional part of a number normalized to the form 1.xyz i.e. in this instance xyz. The mantissa represents the binary fraction of a number; therefore the MSB represents 2^{-1} (or $1/2^1$) and its LSB 2^{-23} (or $1/2^{23}$). The following table shows a detailed layout of the mantissa.

$\frac{1}{2^1}$	$\frac{1}{2^2}$	$\frac{1}{2^3}$	$\frac{1}{2^4}$																	$\frac{1}{2^{21}}$	$\frac{1}{2^{22}}$	$\frac{1}{2^{23}}$
0.5	0.25	0.125	0.0625																	4.768e-7	2.384e-7	1.192e-7

As an example 1,000,000 would be represented as follows (hex 49742400).

4				9				7				4				2				4				0				0			
0	1	0	0	1	0	0	1	0	1	1	1	0	1	0	0	0	0	1	0	0	1	0	0	0	0	0	0	0	0	0	0

This calculates out as:

Sign = +1

Exponent = 10010010_2 = 128 + 16 + 2 = 146, subtract 127 = 19.

$$\text{Mantissa} = 1 + \frac{1}{2^1} + \frac{1}{2^2} + \frac{1}{2^3} + \frac{1}{2^5} + \frac{1}{2^{10}} + \frac{1}{2^{13}}$$

$$= 1 + \frac{4096 + 2048 + 1024 + 256 + 8 + 1}{2^{13}} = 1 + \frac{7433}{2^{13}} = 1.907348632$$

Therefore $Sign * 2^{Exponent} * Mantissa = 1 * 2^{19} * 1.907348632 = 1000000$

FLOAT_IEEE_754 & MODBUS

In this MODBUS implementation the 32 bit float is stored in 2 16 registers in Big-Endian format. As an example, if we take the hex representation of 1,000,000 as a float (from above) we have 49742400h. Assume this is stored in the registers 30001 and 30002, it would look as follows.

Address	Value
30001	4974

© 2019 Siemens Protection Devices Limited

Address	Value
30002	2400

On reception these two registers should be interpreted in the correct order as IEEE754 floating point representation.

4.2.2 FP_32BITS_3DP

The FP_32BITS_3DP is a 32 bit integer fixed point value, containing 3 decimal places of information. It is used to send a real value to 3 decimal places as an integer. For example, if the value in a device is 123.456 it will be sent as 123456. As it is an integer, negative numbers are sent as 2's complement.

FP_32BITS_3DP & MODBUS

In this MODBUS implementation the 32 bit value is stored in 2 16 registers in Big-Endian format. As an example, if we take the hex representation of 123456, we have 1E240h. Assume this is stored in the registers 30001 and 30002, it would look as follows:

Address	Value
30001	1
30002	E240

On reception these two registers should be interpreted in the correct order as a 32 bit integer.

4.2.3 UINT32

The UINT32 is a signed 32 bit integer. As it is an integer, negative numbers are sent as 2's complement.

UINT32 & MODBUS

In this MODBUS implementation the 32 bit value is stored in 2 16 bit registers in Big-Endian format. As an example, if we take the hex representation of -123456, in 2's complement, we have FFFE1DC0h. Assume this is stored in the registers 30001 and 30002, it would look as follows:

Address	Value
30001	FFFE
30002	1DC0

On reception these two registers should be interpreted in the correct order as a 32 bit integer.

4.2.4 UINT16

The UINT16 is a signed 16 bit integer. As it is an integer, negative numbers are sent as 2's complement.

UINT16 & MODBUS

In this MODBUS implementation the 16 bit value is stored in a 16 bit register in Big-Endian format. As an example, if we take the hex representation of 5678 we have 162Eh. Assume this is stored in the register 30001, it would look as follows:

Address	Value
30001	162E

On reception this register should be interpreted as a 16 bit integer.

© 2019 Siemens Protection Devices Limited

Truncation

Calculations are performed as 32 bit. The 16 bit value is the lowest 16 bits of the 32 bit value. Therefore, when values overflow the returned value is the lowest 16 bits of the calculated value. For Example, if the value is 85400 = 14D98h, the value returned would be the lowest 16 bits = 4D98h which equals 19864.

4.2.5 EVENT

MODBUS does not define a method for extracting events; therefore a private method has been defined based on that defined by IEC60870-5-103.

The EVENT register contains the earliest event record available. The event record is 8 registers (16 bytes) of information, whose format is described below. When this record has been read it will be replaced by the next available record. Event records must be read completely; therefore the quantity value must be set to 8 before reading. Failing to do this will result in an exception code 2. If no event record is present the exception code 2 will be returned. The EVENT register should be polled regularly by the master for events.

The EVENTCOUNT register can be checked periodically to determine how many events are stored.

The format of the event record is defined by the zero byte. It signifies the type of record which is used to decode the event information. The zero byte can be one of the following.

Format

The format of the event record is defined by the zero byte. It signifies the type of record which is used to decode the event information. The zero byte can be one of the following.

Type	Description
1	Event
2	Event with Relative Time
4	Measurand Event with Relative Time

The following table describes the fields in the event record.

Key	Description
FUN	Function Type, as defined for IEC870-5-103.
INF	Information Number, as defined for IEC870-5-103.
DPI	Measurand Event with Relative Time, values 1 = OFF, 2 = ON.
ms L	Time Stamp Milliseconds low byte.
ms H	Time Stamp Milliseconds high byte.
Mi	Time Stamp Minutes (MSB = invalid, time not set > 23 hours).
Ho	Time Stamp Hours (MSB = Summer time flag).
RT L	Relative Time low byte.
RT H	Relative Time high byte.
F# L	Fault Number low byte.
F# H	Fault Number high byte.
Meas	Measurand format R32.23, sent least significant byte first.

The following tables show the fields in the different event records as they are returned.

Byte	0	1	2	3	4	5	6	7	8	9	10	11	12	13	14	15
Content	1	0	FUN	INF	DPI	0	0	0	0	0	0	0	ms L	ms H	Mi	Ho

Event Type 1 Format.

 © 2019 Siemens Protection Devices Limited

Byte	0	1	2	3	4	5	6	7	8	9	10	11	12	13	14	15
Content	2	0	FUN	INF	DPI	RT L	RT H	F# L	F# H	0	0	0	ms L	ms H	Mi	Ho

Event Type 2 Format.

Byte	0	1	2	3	4	5	6	7	8	9	10	11	12	13	14	15
Content	4	0	FUN	INF	Meas				0	0	0	0	ms L	ms H	Mi	Ho

Event Type 4 Format.

4.2.6 EVENTCOUNT

The EVENTCOUNT register contains the current number of events in the relay's event buffer.

On reception this register should be interpreted as a 16 bit integer.

4.2.7 TIME_METER

The TIME_METER register contains the device's time. The time must be read or written in one step; therefore the quantity should be 4 registers. Failing to do this will result in an exception code 2. The time format is 8 bytes as follows.

The following table describes the fields in the time.

Key	Description
ms L	Time Stamp Milliseconds low byte.
ms H	Time Stamp Milliseconds high byte.
Mi	Time Stamp Minutes (MSB = invalid, time not set > 23 hours).
Ho	Time Stamp Hours (MSB = Summer time flag).
Da	Time Stamp Days.
Mo	Time Stamp Months.
Ye L	Time Stamp Years low byte.
Ye H	Time Stamp Years high byte (Not Used).

The following table shows the fields in the time as they are returned.

Byte	0	1	2	3	4	5	6	7
Content	ms L	ms H	Mi	Ho	Da	Mo	Ye L	Ye H

Time Format.

4.2.8 STR32 & STR64

4.2.9 BITSTRING

A Bit-String (or Bit-Array) is a method of compactly storing a number of bits of data. In this instance we store up to 16 bit values, for example the states of binary inputs, in a single 16 bit register. The first bit value is stored in the Least Significant Bit (LSB) of the register. The 16th value would be in the Most Significant Bit (MSB). Bit values can only be zero or one. Any unused bits will be set to zero.

BITSTRING & MODBUS

In this MODBUS implementation the 16 bit value is stored in a 16 bit register in Big-Endian format. As an example, assume bits 1, 3, 9 and 12 are set. The binary representation of this would be 0000100100000101_2 giving a hex representation of 0905h. Assume this is stored in the register 30001, it would look as follows:

Address	Value
30001	0905

On reception this register should be interpreted as a 16 bit integer.

© 2019 Siemens Protection Devices Limited

4.3 Point List

The information shown below is the default configuration. This can be modified using the Communications Configuration Editor tool, refer section 9 for details.

4.3.1 Coils (Read Write Binary values)

Address	Description
00001	Binary Output 1
00002	Binary Output 2
00003	Binary Output 3
00004	Binary Output 4
00005	Binary Output 5
00006	Binary Output 6
00007	Binary Output 7
00008	Binary Output 8
00101	Setting G1 selected
00102	Setting G2 selected
00103	Setting G3 selected
00104	Setting G4 selected
00109	CB 1
00112	Auto-reclose active
00113	HotLine Working
00114	E/F Out
00115	SEF Out
00116	Inst Protection Out
00155	Remote Mode
00156	Out Of Service Mode
00157	Local Mode
00158	Local & Remote
00165	Reset Start Count
00180	CB 1 Opened
00181	CB 1 Closed
00200	User SP Command 1
00201	User SP Command 2
00202	User SP Command 3
00203	User SP Command 4
00204	User SP Command 5
00205	User SP Command 6
00206	User SP Command 7
00207	User SP Command 8
00208	User DP Command 1
00209	User DP Command 2
00210	User DP Command 3
00211	User DP Command 4
00212	User DP Command 5
00213	User DP Command 6
00214	User DP Command 7

© 2019 Siemens Protection Devices Limited

Address	Description
00215	User DP Command 8

4.3.2 Inputs (Read Only Binary values)

Address	Description
10001	Binary Input 1
10002	Binary Input 2
10003	Binary Input 3
10004	Binary Input 4
10005	Binary Input 5
10006	Binary Input 6
10102	Remote Mode
10103	Out Of Service Mode
10104	Local Mode
10105	Local & Remote
10110	General Trip
10111	Trip Circuit Fail
10112	Start/Pick-up L1
10113	Start/Pick-up L2
10114	Start/Pick-up L3
10115	General Start/Pick-up
10116	VT Fuse Failure
10117	Earth Fault Forward/Line
10118	Earth Fault Reverse/Busbar
10119	Start/Pick-up N
10120	Fault Forward/Line
10121	Fault Reverse/Busbar
10122	51-1
10123	50-1
10124	51N-1
10125	50N-1
10126	51G-1
10127	50G-1
10128	51-2
10129	50-2
10130	51N-2
10131	50N-2
10132	51G-2
10133	50G-2
10134	51-3
10135	50-3
10136	51N-3
10137	50N-3
10138	51G-3
10139	50G-3
10140	51-4
10141	50-4
10142	51N-4

 © 2019 Siemens Protection Devices Limited

Address	Description
10143	50N-4
10144	51G-4
10145	50G-4
10146	50BF Stage 2
10147	49-Alarm
10148	49-Trip
10149	60 CTS
10150	46IT
10151	46DT
10152	47-1
10153	47-2
10154	46BC
10155	27/59-1
10156	27/59-2
10157	27/59-3
10158	27/59-4
10159	59NIT
10160	59NDT
10161	81-1
10162	81-2
10163	81-3
10164	81-4
10167	64H
10168	37-1
10169	37-2
10171	Auto-reclose active
10172	CB on by auto reclose
10173	Reclaim
10174	Lockout
10175	HotLine Working
10176	Inst Protection Out
10177	CB Total Trip Count
10178	CB Delta Trip Count
10179	CB Count To AR Block
10180	I^2t CB Wear
10181	79 AR In progress
10182	Cold Load Active
10183	E/F Out
10184	P/F Inst Protection Inhibited
10185	E/F Inst Protection Inhibited
10186	SEF Inst Protection Inhibited
10187	Ext Inst Protection Inhibited
10202	51SEF-1
10203	50SEF-1
10204	51SEF-2
10205	50SEF-2
10206	51SEF-3
10207	50SEF-3

© 2019 Siemens Protection Devices Limited

Address	Description
10208	51SEF-4
10209	50SEF-4
10210	SEF Out
10211	Trip Circuit Fail 1
10212	Trip Circuit Fail 2
10213	Trip Circuit Fail 3
10214	CB Total Trip Count
10215	CB Delta Trip Count
10216	CB Count To AR Block
10217	CB Frequent Ops Count
10218	I^2t CB Wear
10219	CB 1 Opened
10220	CB 1 Closed
10283	Close Circuit Fail 1
10284	Close Circuit Fail 2
10285	Close Circuit Fail 3
10286	Close Circuit Fail
10288	SEF Forward/Line
10289	SEF Reverse/Busbar
10290	General Alarm 1
10291	General Alarm 2
10292	General Alarm 3
10293	General Alarm 4
10294	General Alarm 5
10295	General Alarm 6
10302	Quick Logic E1
10303	Quick Logic E2
10304	Quick Logic E3
10305	Quick Logic E4
10334	60 CTS-I
10335	81HBL2
10336	37G-1
10337	37G-2
10338	37SEF-1
10339	37SEF-2
10367	50BF Stage 1
10368	Wattmetric Po>
10369	37-PhA
10370	37-PhB
10371	37-PhC
10378	50BF-PhA
10379	50BF-PhB
10380	50BF-PhC
10381	50BF-EF
10383	60 CTS-I-PhA
10384	60 CTS-I-PhB
10385	60 CTS-I-PhC
10390	Trip PhA
10391	Trip PhB

© 2019 Siemens Protection Devices Limited

Address	Description
10392	Trip PhC
10401	27/59 PhA
10402	27/59 PhB
10403	27/59 PhC
10410	CB Alarm
10501	Virtual Input 1
10502	Virtual Input 2
10503	Virtual Input 3
10504	Virtual Input 4
10505	Virtual Input 5
10506	Virtual Input 6
10507	Virtual Input 7
10508	Virtual Input 8
10601	LED 1
10602	LED 2
10603	LED 3
10604	LED 4
10605	LED 5
10606	LED 6
10607	LED 7
10608	LED 8
10609	LED 9
10701	LED PU 1
10702	LED PU 2
10703	LED PU 3
10704	LED PU 4
10705	LED PU 5
10706	LED PU 6
10707	LED PU 7
10708	LED PU 8
10709	LED PU 9
10800	Cold Start
10801	Warm Start
10802	Re-Start
10803	Power On
10804	Expected Restart
10805	Unexpected Restart
10806	Reset Start Count
10900	User SP Command 1
10901	User SP Command 2
10902	User SP Command 3
10903	User SP Command 4
10904	User SP Command 5
10905	User SP Command 6
10906	User SP Command 7
10907	User SP Command 8
10908	User DP Command 1
10909	User DP Command 2

© 2019 Siemens Protection Devices Limited

Address	Description
10910	User DP Command 3
10911	User DP Command 4
10912	User DP Command 5
10913	User DP Command 6
10914	User DP Command 7
10915	User DP Command 8
10916	32-1
10917	32-2
10918	32S-1
10919	32S-2
10920	55-1
10921	55-2
11073	CB DBI
11074	CB Travelling
11075	Close CB Failed
11076	Open CB Failed
11077	Start Count Alarm
11078	50AFD PhA
11079	50AFD PhB
11080	50AFD PhC
11081	50AFD
11082	AFD Zone 1 Flash
11083	AFD Zone 1
11084	AFD Zone 2 Flash
11085	AFD Zone 2
11086	AFD Zone 3 Flash
11087	AFD Zone 3
11088	AFD Zone 4 Flash
11089	AFD Zone 4
11090	AFD Zone 5 Flash
11091	AFD Zone 5
11092	AFD Zone 6 Flash
11093	AFD Zone 6

4.3.3 Input Registers (Read Only Registers)

Address	Description	Format	Mult	Description
30001	Event Count	EVENTCOUNT	0.000000	Events Counter
30002	Event	EVENT	0.000000	8 Registers
30010	Vab Primary	FP_32BITS_3DP	1.000000	Vab V
30012	Vbc Primary	FP_32BITS_3DP	1.000000	Vbc V
30014	Vca Primary	FP_32BITS_3DP	1.000000	Vca V
30016	Va Primary	FP_32BITS_3DP	1.000000	Va V
30018	Vb Primary	FP_32BITS_3DP	1.000000	Vb V
30020	Vc Primary	FP_32BITS_3DP	1.000000	Vc V
30022	Va Secondary	FP_32BITS_3DP	1.000000	Va V
30024	Vb Secondary	FP_32BITS_3DP	1.000000	Vb V
30026	Vc Secondary	FP_32BITS_3DP	1.000000	Vc V

© 2019 Siemens Protection Devices Limited

Address	Description	Format	Mult	Description
30034	Vab Nominal	FP_32BITS_3DP	1.000000	Vab Degrees
30036	Vbc Nominal	FP_32BITS_3DP	1.000000	Vbc Degrees
30038	Vca Nominal	FP_32BITS_3DP	1.000000	Vca Degrees
30040	Va Nominal	FP_32BITS_3DP	1.000000	Va Degrees
30042	Vb Nominal	FP_32BITS_3DP	1.000000	Vb Degrees
30044	Vc Nominal	FP_32BITS_3DP	1.000000	Vc Degrees
30048	Vzps	FP_32BITS_3DP	1.000000	Vzps V
30050	Vpps	FP_32BITS_3DP	1.000000	Vpps V
30052	Vnps	FP_32BITS_3DP	1.000000	Vnps V
30054	Vzps	FP_32BITS_3DP	1.000000	Vzps Degrees
30056	Vpps	FP_32BITS_3DP	1.000000	Vpps Degrees
30058	Vnps	FP_32BITS_3DP	1.000000	Vnps Degrees
30060	Frequency	FP_32BITS_3DP	1.000000	Frequency Hz
30064	Ia Primary	FP_32BITS_3DP	1.000000	Ia A
30066	Ib Primary	FP_32BITS_3DP	1.000000	Ib A
30068	Ic Primary	FP_32BITS_3DP	1.000000	Ic A
30070	Ia Secondary	FP_32BITS_3DP	1.000000	Ia A
30072	Ib Secondary	FP_32BITS_3DP	1.000000	Ib A
30074	Ic Secondary	FP_32BITS_3DP	1.000000	Ic A
30076	Ia Nominal	FP_32BITS_3DP	1.000000	Ia xIn
30078	Ib Nominal	FP_32BITS_3DP	1.000000	Ib xIn
30080	Ic Nominal	FP_32BITS_3DP	1.000000	Ic xIn
30082	Ia Nominal	FP_32BITS_3DP	1.000000	Ia Degrees
30084	Ib Nominal	FP_32BITS_3DP	1.000000	Ib Degrees
30086	Ic Nominal	FP_32BITS_3DP	1.000000	Ic Degrees
30088	In Primary	FP_32BITS_3DP	1.000000	In A
30090	In Secondary	FP_32BITS_3DP	1.000000	In A
30092	In Nominal	FP_32BITS_3DP	1.000000	In xInom
30094	Ig Primary	FP_32BITS_3DP	1.000000	Ig A
30096	Ig Secondary	FP_32BITS_3DP	1.000000	Ig A
30098	Ig Nominal	FP_32BITS_3DP	1.000000	Ig xInom
30100	Izps Nominal	FP_32BITS_3DP	1.000000	Izps xIn
30102	Ipps Nominal	FP_32BITS_3DP	1.000000	Ipps xIn
30104	Inps Nominal	FP_32BITS_3DP	1.000000	Inps xIn
30106	Izps Nominal	FP_32BITS_3DP	1.000000	Izps Degrees
30108	Ipps Nominal	FP_32BITS_3DP	1.000000	Ipps Degrees
30110	Inps Nominal	FP_32BITS_3DP	1.000000	Inps Degrees
30112	Active Power A	FP_32BITS_3DP	0.000001	A Phase W
30114	Active Power B	FP_32BITS_3DP	0.000001	B Phase W
30116	Active Power C	FP_32BITS_3DP	0.000001	C Phase W
30118	P (3P)	FP_32BITS_3DP	0.000001	3 Phase W
30120	Reactive Power A	FP_32BITS_3DP	0.000001	Phase A VAr
30122	Reactive Power B	FP_32BITS_3DP	0.000001	Phase B VAr
30124	Reactive Power C	FP_32BITS_3DP	0.000001	Phase C VAr
30126	Q (3P)	FP_32BITS_3DP	0.000001	3 Phase VAr
30128	Apparent Power A	FP_32BITS_3DP	0.000001	Phase A VA
30130	Apparent Power B	FP_32BITS_3DP	0.000001	Phase B VA
30132	Apparent Power C	FP_32BITS_3DP	0.000001	Phase C VA

© 2019 Siemens Protection Devices Limited

Address	Description	Format	Mult	Description
30134	S (3P)	FP_32BITS_3DP	0.000001	3 Phase VA
30136	Power Factor A	FP_32BITS_3DP	1.000000	Phase A
30138	Power Factor B	FP_32BITS_3DP	1.000000	Phase B
30140	Power Factor C	FP_32BITS_3DP	1.000000	Phase C
30142	Power Factor(3P)	FP_32BITS_3DP	1.000000	3 Phase
30144	Act Energy Exp	UINT32	1.000000	Act Energy Exp
30146	Act Energy Imp	UINT32	1.000000	Act Energy Imp
30148	React Energy Exp	UINT32	1.000000	React Energy Exp
30150	React Energy Imp	UINT32	1.000000	React Energy Imp
30152	Thermal Status Ph A	UINT16	1.000000	Thermal Status Ph A %
30153	Thermal Status Ph B	UINT16	1.000000	Thermal Status Ph B %
30154	Thermal Status Ph C	UINT16	1.000000	Thermal Status Ph C %
30167	Fault Records	UINT16	1.000000	Fault Records
30168	Event Records	UINT16	1.000000	Event Records
30169	Waveform Records	UINT16	1.000000	Waveform Records
30170	Vab Secondary	FP_32BITS_3DP	1.000000	Vab V
30172	Vbc Secondary	FP_32BITS_3DP	1.000000	Vbc V
30174	Vca Secondary	FP_32BITS_3DP	1.000000	Vca V
30176	Vn Primary	FP_32BITS_3DP	1.000000	Vn V
30178	Vn Secondary	FP_32BITS_3DP	1.000000	Vn V
30180	Vn Secondary	FP_32BITS_3DP	1.000000	Vn Degrees
30193	I Phase A Max	FP_32BITS_3DP	1.000000	Ia Max Demand
30195	I Phase B Max	FP_32BITS_3DP	1.000000	Ib Max Demand
30197	I Phase C Max	FP_32BITS_3DP	1.000000	Ic Max Demand
30199	P 3P Max	FP_32BITS_3DP	0.000001	Power Max Demand
30201	Q 3P Max	FP_32BITS_3DP	0.000001	VARs Max Demand
30207	Isef Primary	FP_32BITS_3DP	1.000000	Isef A
30209	Isef Secondary	FP_32BITS_3DP	1.000000	Isef A
30211	Isef Nominal	FP_32BITS_3DP	1.000000	Isef xInom
30241	CB Total Trip Count	UINT32	1.000000	CB Total Trip Count
30243	CB Delta Trip Count	UINT32	1.000000	CB Delta Trip Count
30245	CB Count To AR Block	UINT32	1.000000	CB Count to AR Block
30247	CB Frequent Ops Count	UINT32	1.000000	CB Frequent Ops Count
30301	Ia Last Trip	FP_32BITS_3DP	1.000000	Ia Fault
30303	Ib Last Trip	FP_32BITS_3DP	1.000000	Ib Fault
30305	Ic Last Trip	FP_32BITS_3DP	1.000000	Ic Fault
30307	Va Last Trip	FP_32BITS_3DP	1.000000	Va Fault
30309	Vb Last Trip	FP_32BITS_3DP	1.000000	Vb Fault
30311	Vc Last Trip	FP_32BITS_3DP	1.000000	Vc Fault
30313	In Last Trip	FP_32BITS_3DP	1.000000	In Fault
30315	Ig Last Trip	FP_32BITS_3DP	1.000000	Ig Fault
30317	Isef Last Trip	FP_32BITS_3DP	1.000000	Isef Fault
30319	V Phase A Max	FP_32BITS_3DP	1.000000	Va Max Demand
30321	V Phase B Max	FP_32BITS_3DP	1.000000	Vb Max Demand
30323	V Phase C Max	FP_32BITS_3DP	1.000000	Vc Max Demand
30325	V Phase AB Max	FP_32BITS_3DP	1.000000	Vab Max Demand
30327	V Phase BC Max	FP_32BITS_3DP	1.000000	Vbc Max Demand
30329	V Phase CA Max	FP_32BITS_3DP	1.000000	Vca Max Demand
30341	LED1-n	BITSTRING	0.000000	Led 1-16 status

© 2019 Siemens Protection Devices Limited

Address	Description	Format	Mult	Description
30342	LED1-n	BITSTRING	0.000000	Led 17-32 status
30343	INP1-n	BITSTRING	0.000000	Input 1-16 status
30344	INP1-n	BITSTRING	0.000000	Input 17-32 status
30345	OUT1-n	BITSTRING	0.000000	Output 1-16 status
30346	OUT1-n	BITSTRING	0.000000	Output 17-32 status
30347	VRT1-n	BITSTRING	0.000000	Virtual 1-16 status
30348	VRT1-n	BITSTRING	0.000000	Virtual 17-32 status
30349	EQN1-n	BITSTRING	0.000000	Equation 1-16 status
30350	EQN1-n	BITSTRING	0.000000	Equation 17-32 status
30354	CB Wear A	FP_32BITS_3DP	0.000001	CB Wear A
30356	CB Wear B	FP_32BITS_3DP	0.000001	CB Wear B
30358	CB Wear C	FP_32BITS_3DP	0.000001	CB Wear C
30360	CB Wear A Remaining	FP_32BITS_3DP	1.000000	CB Wear A Remaining
30362	CB Wear B Remaining	FP_32BITS_3DP	1.000000	CB Wear B Remaining
30364	CB Wear C Remaining	FP_32BITS_3DP	1.000000	CB Wear C Remaining
30366	CB Wear Minimum	FP_32BITS_3DP	1.000000	CB Wear Minimum
30380	StartCount	FP_32BITS_3DP	1.000000	Start Count
30382	Start Count Target	FP_32BITS_3DP	1.000000	Start Count Target
30390	Freq Last Trip	FP_32BITS_3DP	1.000000	Freq Last Trip
30392	Active Setting Group	UINT16	1.000000	Active Setting Group
30400	Frequency Max	FP_32BITS_3DP	1.000000	Frequency Max
30402	S 3P Max	FP_32BITS_3DP	0.000010	S 3P Max
30468	CB Trip Time Meter	FP_32BITS_3DP	1.000000	CB Trip Time

4.3.4 Holding Registers (Read Write Registers)

Address	Description	Format	Mult	Description
40001	Time	TIME_METER	0.000000	Time
40010	Vab Primary	FP_32BITS_3DP	1.000000	Vab V
40012	Vbc Primary	FP_32BITS_3DP	1.000000	Vbc V
40014	Vca Primary	FP_32BITS_3DP	1.000000	Vca V
40016	Va Primary	FP_32BITS_3DP	1.000000	Va V
40018	Vb Primary	FP_32BITS_3DP	1.000000	Vb V
40020	Vc Primary	FP_32BITS_3DP	1.000000	Vc V
40022	Va Secondary	FP_32BITS_3DP	1.000000	Va V
40024	Vb Secondary	FP_32BITS_3DP	1.000000	Vb V
40026	Vc Secondary	FP_32BITS_3DP	1.000000	Vc V
40034	Vab Nominal	FP_32BITS_3DP	1.000000	Vab Degrees
40036	Vbc Nominal	FP_32BITS_3DP	1.000000	Vbc Degrees
40038	Vca Nominal	FP_32BITS_3DP	1.000000	Vca Degrees
40040	Va Nominal	FP_32BITS_3DP	1.000000	Va Degrees
40042	Vb Nominal	FP_32BITS_3DP	1.000000	Vb Degrees
40044	Vc Nominal	FP_32BITS_3DP	1.000000	Vc Degrees
40048	Vzps	FP_32BITS_3DP	1.000000	Vzps V
40050	Vpps	FP_32BITS_3DP	1.000000	Vpps V
40052	Vnps	FP_32BITS_3DP	1.000000	Vnps V
40054	Vzps	FP_32BITS_3DP	1.000000	Vzps Degrees

© 2019 Siemens Protection Devices Limited

Address	Description	Format	Mult	Description
40056	Vpps	FP_32BITS_3DP	1.000000	Vpps Degrees
40058	Vnps	FP_32BITS_3DP	1.000000	Vnps Degrees
40060	Frequency	FP_32BITS_3DP	1.000000	Frequency Hz
40064	Ia Primary	FP_32BITS_3DP	1.000000	Ia A
40066	Ib Primary	FP_32BITS_3DP	1.000000	Ib A
40068	Ic Primary	FP_32BITS_3DP	1.000000	Ic A
40070	Ia Secondary	FP_32BITS_3DP	1.000000	Ia A
40072	Ib Secondary	FP_32BITS_3DP	1.000000	Ib A
40074	Ic Secondary	FP_32BITS_3DP	1.000000	Ic A
40076	Ia Nominal	FP_32BITS_3DP	1.000000	Ia xIn
40078	Ib Nominal	FP_32BITS_3DP	1.000000	Ib xIn
40080	Ic Nominal	FP_32BITS_3DP	1.000000	Ic xIn
40082	Ia Nominal	FP_32BITS_3DP	1.000000	Ia Degrees
40084	Ib Nominal	FP_32BITS_3DP	1.000000	Ib Degrees
40086	Ic Nominal	FP_32BITS_3DP	1.000000	Ic Degrees
40088	In Primary	FP_32BITS_3DP	1.000000	In A
40090	In Secondary	FP_32BITS_3DP	1.000000	In A
40092	In Nominal	FP_32BITS_3DP	1.000000	In xInom
40094	Ig Primary	FP_32BITS_3DP	1.000000	Ig A
40096	Ig Secondary	FP_32BITS_3DP	1.000000	Ig A
40098	Ig Nominal	FP_32BITS_3DP	1.000000	Ig xInom
40100	Izps Nominal	FP_32BITS_3DP	1.000000	Izps xIn
40102	Ipps Nominal	FP_32BITS_3DP	1.000000	Ipps xIn
40104	Inps Nominal	FP_32BITS_3DP	1.000000	Inps xIn
40106	Izps Nominal	FP_32BITS_3DP	1.000000	Izps Degrees
40108	Ipps Nominal	FP_32BITS_3DP	1.000000	Ipps Degrees
40110	Inps Nominal	FP_32BITS_3DP	1.000000	Inps Degrees
40112	Active Power A	FP_32BITS_3DP	0.000001	A Phase W
40114	Active Power B	FP_32BITS_3DP	0.000001	B Phase W
40116	Active Power C	FP_32BITS_3DP	0.000001	C Phase W
40118	P (3P)	FP_32BITS_3DP	0.000001	3 Phase W
40120	Reactive Power A	FP_32BITS_3DP	0.000001	Phase A VAr
40122	Reactive Power B	FP_32BITS_3DP	0.000001	Phase B VAr
40124	Reactive Power C	FP_32BITS_3DP	0.000001	Phase C VAr
40126	Q (3P)	FP_32BITS_3DP	0.000001	3 Phase VAr
40128	Apparent Power A	FP_32BITS_3DP	0.000001	Phase A VA
40130	Apparent Power B	FP_32BITS_3DP	0.000001	Phase B VA
40132	Apparent Power C	FP_32BITS_3DP	0.000001	Phase C VA
40134	S (3P)	FP_32BITS_3DP	0.000001	3 Phase VA
40136	Power Factor A	FP_32BITS_3DP	1.000000	Phase A
40138	Power Factor B	FP_32BITS_3DP	1.000000	Phase B
40140	Power Factor C	FP_32BITS_3DP	1.000000	Phase C
40142	Power Factor(3P)	FP_32BITS_3DP	1.000000	3 Phase
40144	Act Energy Exp	UINT32	1.000000	Act Energy Exp
40146	Act Energy Imp	UINT32	1.000000	Act Energy Imp
40148	React Energy Exp	UINT32	1.000000	React Energy Exp
40150	React Energy Imp	UINT32	1.000000	React Energy Imp
40152	Thermal Status Ph A	UINT16	1.000000	Thermal Status Ph A %
40153	Thermal Status Ph B	UINT16	1.000000	Thermal Status Ph B %

© 2019 Siemens Protection Devices Limited

Address	Description	Format	Mult	Description
40154	Thermal Status Ph C	UINT16	1.000000	Thermal Status Ph C %
40167	Fault Records	UINT16	1.000000	Fault Records
40168	Event Records	UINT16	1.000000	Event Records
40169	Waveform Records	UINT16	1.000000	Waveform Records
40170	Vab Secondary	FP_32BITS_3DP	1.000000	Vab V
40172	Vbc Secondary	FP_32BITS_3DP	1.000000	Vbc V
40174	Vca Secondary	FP_32BITS_3DP	1.000000	Vca V
40176	Vn Primary	FP_32BITS_3DP	1.000000	Vn V
40178	Vn Secondary	FP_32BITS_3DP	1.000000	Vn V
40180	Vn Secondary	FP_32BITS_3DP	1.000000	Vn Degrees
40193	I Phase A Max	FP_32BITS_3DP	1.000000	Ia Max Demand
40195	I Phase B Max	FP_32BITS_3DP	1.000000	Ib Max Demand
40197	I Phase C Max	FP_32BITS_3DP	1.000000	Ic Max Demand
40199	P 3P Max	FP_32BITS_3DP	0.000001	Power Max Demand
40201	Q 3P Max	FP_32BITS_3DP	0.000001	VARs Max Demand
40207	Isef Primary	FP_32BITS_3DP	1.000000	Isef A
40209	Isef Secondary	FP_32BITS_3DP	1.000000	Isef A
40211	Isef Nominal	FP_32BITS_3DP	1.000000	Isef xInom
40241	CB Total Trip Count	UINT32	1.000000	CB Total Trip Count
40243	CB Delta Trip Count	UINT32	1.000000	CB Delta Trip Count
40245	CB Count To AR Block	UINT32	1.000000	CB Count to AR Block
40247	CB Frequent Ops Count	UINT32	1.000000	CB Frequent Ops Count
40301	Ia Last Trip	FP_32BITS_3DP	1.000000	Ia Fault
40303	Ib Last Trip	FP_32BITS_3DP	1.000000	Ib Fault
40305	Ic Last Trip	FP_32BITS_3DP	1.000000	Ic Fault
40307	Va Last Trip	FP_32BITS_3DP	1.000000	Va Fault
40309	Vb Last Trip	FP_32BITS_3DP	1.000000	Vb Fault
40311	Vc Last Trip	FP_32BITS_3DP	1.000000	Vc Fault
40313	In Last Trip	FP_32BITS_3DP	1.000000	In Fault
40315	Ig Last Trip	FP_32BITS_3DP	1.000000	Ig Fault
40317	Isef Last Trip	FP_32BITS_3DP	1.000000	Isef Fault
40319	V Phase A Max	FP_32BITS_3DP	1.000000	Va Max Demand
40321	V Phase B Max	FP_32BITS_3DP	1.000000	Vb Max Demand
40323	V Phase C Max	FP_32BITS_3DP	1.000000	Vc Max Demand
40341	LED1-n	BITSTRING	0.000000	Led 1-16 status
40342	LED1-n	BITSTRING	0.000000	Led 17-32 status
40343	INP1-n	BITSTRING	0.000000	Input 1-16 status
40344	INP1-n	BITSTRING	0.000000	Input 17-32 status
40345	OUT1-n	BITSTRING	0.000000	Output 1-16 status
40346	OUT1-n	BITSTRING	0.000000	Output 17-32 status
40347	VRT1-n	BITSTRING	0.000000	Virtual 1-16 status
40348	VRT1-n	BITSTRING	0.000000	Virtual 17-32 status
40349	EQN1-n	BITSTRING	0.000000	Equation 1-16 status
40350	EQN1-n	BITSTRING	0.000000	Equation 17-32 status
40354	CB Wear A	FP_32BITS_3DP	0.000001	CB Wear A
40356	CB Wear B	FP_32BITS_3DP	0.000001	CB Wear B
40358	CB Wear C	FP_32BITS_3DP	0.000001	CB Wear C
40360	CB Wear A Remaining	FP_32BITS_3DP	1.000000	CB Wear A Remaining

© 2019 Siemens Protection Devices Limited

Address	Description	Format	Mult	Description
40362	CB Wear B Remaining	FP_32BITS_3DP	1.000000	CB Wear B Remaining
40364	CB Wear C Remaining	FP_32BITS_3DP	1.000000	CB Wear C Remaining
40366	CB Wear Minimum	FP_32BITS_3DP	1.000000	CB Wear Minimum
40368	Active Setting Group	UINT16	1.000000	Active Setting Group
40394	Ia 2nd Harmonic Nominal	FP_32BITS_3DP	1.000000	81HBL2 PhA xIn
40396	Ib 2nd Harmonic Nominal	FP_32BITS_3DP	1.000000	81HBL2 PhB xIn
40398	Ic 2nd Harmonic Nominal	FP_32BITS_3DP	1.000000	81HBL2 PhC xIn
40401	Event Count	EVENTCOUNT	0.000000	Events Counter
40402	Event	EVENT	0.000000	8 Registers
40404	Frequency Max	FP_32BITS_3DP	1.000000	Frequency Max
40406	S 3P Max	FP_32BITS_3DP	0.000010	S 3P Max
40472	CB Trip Time Meter	FP_32BITS_3DP	1.000000	CB Trip Time

© 2019 Siemens Protection Devices Limited

5. DNP3 Definitions

5.1 Device Profile

The following table provides a “Device Profile Document” in the standard format defined in the DNP 3.0 Subset Definitions Document. While it is referred to in the DNP 3.0 Subset Definitions as a “Document,” it is in fact a table, and only a component of a total interoperability guide. The table, in combination with the Implementation Table provided in Section 5.2 (beginning on page 50), and the Point List Tables provided in Section 5.3 (beginning on page 56), should provide a complete configuration/interoperability guide for communicating with a device implementing the Triangle MicroWorks, Inc. DNP 3.0 Slave Source Code Library.

DNP V3.0 DEVICE PROFILE DOCUMENT (Also see the DNP 3.0 Implementation Table in Section 5.2, beginning on page 50).	
Vendor Name: **Siemens Protection Devices Ltd.**	
Device Name: **7SR120, using the Triangle MicroWorks, Inc. DNP3 Slave Source Code Library, Version 3.**	
Highest DNP Level Supported: For Requests: **Level 3** For Responses: **Level 3**	Device Function: ☐ Master ☒ **Slave**
Notable objects, functions, and/or qualifiers supported in addition to the Highest DNP Levels Supported (the complete list is described in the attached table): For static (non-change-event) object requests, request qualifier codes 07 and 08 (limited quantity), and 17 and 28 (index) are supported. Static object requests sent with qualifiers 07, or 08, will be responded with qualifiers 00 or 01. **Output Event Object 11 is supported.**	
Maximum Data Link Frame Size (octets): Transmitted: **256** Received: **256**	Maximum Application Fragment Size (octets): Transmitted: **2048** Received: **2048**
Maximum Data Link Re-tries: ☐ None ☐ Fixed (3) ☒ **Configurable from 0 to 65535 (Default 3)**	Maximum Application Layer Re-tries: ☒ **None** ☐ Configurable
Requires Data Link Layer Confirmation: ☐ Never ☐ Always ☐ Sometimes ☒ **Configurable as: Never, Only for multi-frame messages, or Always**	
Requires Application Layer Confirmation: ☐ Never ☐ Always ☒ **When reporting Event Data (Slave devices only)** ☒ **When sending multi-fragment responses (Slave devices only)** ☐ Sometimes ☐ Configurable as: “Only when reporting event data”, or “When reporting event data or multi-fragment messages.”	

Timeouts while waiting for:

Data Link Confirm:	☐ None	☐ Fixed at ____	☐ Variable	☒ **Configurable (2sec)**
Complete Appl. Fragment:	☒ **None**	☐ Fixed at ____	☐ Variable	☐ Configurable
Application Confirm:	☐ None	☐ Fixed at ____	☐ Variable	☒ **Configurable (10sec)**
Complete Appl. Response:	☒ **None**	☐ Fixed at ____	☐ Variable	☐ Configurable

Others:

Transmission Delay, (Configurable, default 0 sec)

Select/Operate Arm Timeout, (Configurable, default 5 sec)

Need Time Interval, (Configurable, default 30 minutes)

DNP V3.0
DEVICE PROFILE DOCUMENT
(Also see the DNP 3.0 Implementation Table in Section 5.2, beginning on page 50).

Unsolicited Notification Delay, (Configurable, default 5 seconds)
Unsolicited Response Retry Delay, (Configurable (between 3 - 9), default 5 seconds)
Unsolicited Offline Interval, (Configurable, default 30 seconds)
Binary Change Event Scan Period, (Polled, Not Applicable)
Double Bit Change Event Scan Period, (Polled - Not Applicable)
Analog Change Event Scan Period, (Polled - Not Applicable)
Counter Change Event Scan Period, (Polled - Not Applicable)
Frozen Counter Change Event Scan Period, (Polled - Not Applicable)
String Change Event Scan Period, (Unsupported - Not Applicable)
Virtual Terminal Event Scan Period, (Unsupported - Not Applicable)

Sends/Executes Control Operations:

WRITE Binary Outputs	☒ **Never**	☐ Always	☐ Sometimes	☐ Configurable
SELECT/OPERATE	☐ Never	☒ **Always**	☐ Sometimes	☐ Configurable
DIRECT OPERATE	☐ Never	☒ **Always**	☐ Sometimes	☐ Configurable
DIRECT OPERATE - NO ACK	☐ Never	☒ **Always**	☐ Sometimes	☐ Configurable
Count > 1	☒ **Never**	☐ Always	☐ Sometimes	☐ Configurable
Pulse On	☐ Never	☐ Always	☒ **Sometimes**	☐ Configurable
Pulse Off	☐ Never	☐ Always	☒ **Sometimes**	☐ Configurable
Latch On	☐ Never	☐ Always	☒ **Sometimes**	☐ Configurable
Latch Off	☐ Never	☐ Always	☒ **Sometimes**	☐ Configurable
Queue	☒ **Never**	☐ Always	☐ Sometimes	☐ Configurable
Clear Queue	☒ **Never**	☐ Always	☐ Sometimes	☐ Configurable

Attach explanation if “Sometimes” or “Configurable” was checked for any operation.

Reports Binary Input Change Events when no specific variation requested:
- ☐ Never
- ☐ Only time-tagged
- ☐ Only non-time-tagged
- ☒ **Configurable to send one or the other**

Reports time-tagged Binary Input Change Events when no specific variation requested:
- ☐ Never
- ☐ Binary Input Change With Time
- ☐ Binary Input Change With Relative Time
- ☒ **Configurable**

Sends Unsolicited Responses:
- ☐ Never
- ☒ **Configurable**
- ☐ Only certain objects
- ☐ Sometimes (attach explanation)
- ☒ **ENABLE/DISABLE UNSOLICITED Function codes supported**

Sends Static Data in Unsolicited Responses:
- ☒ **Never**
- ☐ When Device Restarts
- ☐ When Status Flags Change

No other options are permitted.

Default Counter Object/Variation:
- ☐ No Counters Reported
- ☒ **Configurable**
- ☐ Default Object
  Default Variation: _____
- ☒ **Point-by-point list attached**

Counters Roll Over at:
- ☐ No Counters Reported
- ☐ Configurable (attach explanation)
- ☐ 16 Bits
- ☒ **32 Bits**
- ☐ Other Value: _____
- ☒ **Point-by-point list attached**

Sends Multi-Fragment Responses:
- ☒ **Yes**
- ☐ No
- ☐ Configurable

Sequential File Transfer Support:

© 2019 Siemens Protection Devices Limited

DNP V3.0 DEVICE PROFILE DOCUMENT (Also see the DNP 3.0 Implementation Table in Section 5.2, beginning on page 50).		
File Transfer Support	☐ Yes	☒ **No**
Append File Mode	☐ Yes	☒ **No**
Custom Status Code Strings	☐ Yes	☒ **No**
Permissions Field	☐ Yes	☒ **No**
File Events Assigned to Class	☐ Yes	☒ **No**
File Events Send Immediately	☐ Yes	☒ **No**
Multiple Blocks in a Fragment	☐ Yes	☒ **No**
Max Number of Files Open	**0**	

© 2019 Siemens Protection Devices Limited

5.2 Implementation Table

The following table identifies which object variations, function codes, and qualifiers the Triangle MicroWorks, Inc. DNP 3.0 Slave Source Code Library supports in both request messages and in response messages. For static (non-change-event) objects, requests sent with qualifiers 00, 01, 06, 07, or 08, will be responded with qualifiers 00 or 01. Requests sent with qualifiers 17 or 28 will be responded with qualifiers 17 or 28. For change-event objects, qualifiers 17 or 28 are always responded.

In the table below, text shaded as 00, 01 (start stop) indicates Subset Level 3 functionality (beyond Subset Level 2).

In the table below, text shaded as 07, 08 (limited qty) indicates functionality beyond Subset Level 3.

OBJECT			REQUEST (Library will parse)		RESPONSE (Library will respond with)	
Object Number	**Variation**	**Description**	**Function Codes (dec)**	**Qualifier Codes (hex)**	**Function Codes (dec)**	**Qualifier Codes (hex)**
1	0	Binary Input - Any Variation	1 (read) 22 (assign class)	00, 01 (start-stop) 06 (no range, or all) 07, 08 (limited qty) 17, 27, 28 (index)		
1	1	Binary Input	1 (read)	00, 01 (start-stop) 06 (no range, or all) 07, 08 (limited qty) 17, 27, 28 (index)	129 (response)	00, 01 (start-stop) 17, 28 (index - see note 2)
1	2 (default - see note 1)	Binary Input with Status	1 (read)	00, 01 (start-stop) 06 (no range, or all) 07, 08 (limited qty) 17, 27, 28 (index)	129 (response)	00, 01 (start-stop) 17, 28 (index - see note 2)
2	0	Binary Input Change - Any Variation	1 (read)	06 (no range, or all) 07, 08 (limited qty)		
2	1	Binary Input Change without Time	1 (read)	06 (no range, or all) 07, 08 (limited qty)	129 (response) 130 (unsol. resp)	17, 28 (index)
2	2 (default - see note 1)	Binary Input Change with Time	1 (read)	06 (no range, or all) 07, 08 (limited qty)	129 (response) 130 (unsol. resp)	17, 28 (index)
2	3	Binary Input Change with Relative Time	1 (read)	06 (no range, or all) 07, 08 (limited qty)	129 (response) 130 (unsol. resp)	17, 28 (index)
3	0	Double Bit Input - Any Variation	1 (read) 22 (assign class)	00, 01 (start-stop) 06 (no range, or all) 07, 08 (limited qty) 17, 27, 28 (index)		
3	1 (default - see note 1)	Double Bit Input	1 (read)	00, 01 (start-stop) 06 (no range, or all) 07, 08 (limited qty) 17, 27, 28 (index)	129 (response)	00, 01 (start-stop) 17, 28 (index - see note 1)
3	2	Double Bit Input with Status	1 (read)	00, 01 (start-stop) 06 (no range, or all) 07, 08 (limited qty) 17, 27, 28 (index)	129 (response)	00, 01 (start-stop) 17, 28 (index - see note 1)
4	0	Double Bit Input Change - Any Variation	1 (read)	06 (no range, or all) 07, 08 (limited qty)		
4	1	Double Bit Input Change without Time	1 (read)	06 (no range, or all) 07, 08 (limited qty)	129 (response) 130 (unsol. resp)	17, 28 (index)
4	2	Double Bit Input Change with Time	1 (read)	06 (no range, or all) 07, 08 (limited qty)	129 (response) 130 (unsol. resp)	17, 28 (index)
4	3 (default - see note 1)	Double Bit Input Change with Relative Time	1 (read)	06 (no range, or all) 07, 08 (limited qty)	129 (response) 130 (unsol. resp)	17, 28 (index)
10	0	Binary Output - Any Variation	1 (read) 22 (assign class)	00, 01 (start-stop) 06 (no range, or all) 07, 08 (limited qty) 17, 27, 28 (index)		

© 2019 Siemens Protection Devices Limited

OBJECT			REQUEST (Library will parse)		RESPONSE (Library will respond with)	
Object Number	**Variation**	**Description**	**Function Codes (dec)**	**Qualifier Codes (hex)**	**Function Codes (dec)**	**Qualifier Codes (hex)**
10	1	Binary Output	1 (read)	00, 01 (start-stop) 06 (no range, or all) 07, 08 (limited qty) 17, 27, 28 (index)	129 (response)	00, 01 (start-stop) 17, 28 (index - see note 2)
			2 (write)	00, 01 (start-stop)		
10	2 (default - see note 1)	Binary Output Status	1 (read)	00, 01 (start-stop) 06 (no range, or all) 07, 08 (limited qty) 17, 27, 28 (index)	129 (response)	00, 01 (start-stop) 17, 28 (index - see note 2)
11	0	Binary Output Change - Any Variation	1 (read)	06 (no range, or all) 07, 08 (limited qty)		
11	1	Binary Output Change without Time	1 (read)	06 (no range, or all) 07, 08 (limited qty)	129 (response) 130 (unsol. resp)	17, 28 (index)
11	2 (default - see note 1)	Binary Output Change with Time	1 (read)	06 (no range, or all) 07, 08 (limited qty)	129 (response) 130 (unsol. resp)	17, 28 (index)
12	0	Control Relay Output Block	22 (assign class)	00, 01 (start-stop) 06 (no range, or all) 07, 08 (limited qty) 17, 27, 28 (index)		
12	1	Control Relay Output Block	3 (select) 4 (operate) 5 (direct op) 6 (dir. op, noack)	17, 28 (index)	129 (response)	echo of request
12	2	Pattern Control Block	3 (select) 4 (operate) 5 (direct op) 6 (dir. op, noack)	7 (limited quantity)	129 (response)	echo of request
12	3	Pattern Mask	3 (select) 4 (operate) 5 (direct op) 6 (dir. op, noack)	00, 01 (start-stop)	129 (response)	echo of request
13	0	Binary Output Command Event - Any Variation	1 (read)	06 (no range, or all) 07, 08 (limited qty)		
13	1 (default - see note 1)	Binary Output Command Event without Time	1 (read)	06 (no range, or all) 07, 08 (limited qty)	129 (response) 130 (unsol. resp)	17, 28 (index)
13	2	Binary Output Command Event with Time	1 (read)	06 (no range, or all) 07, 08 (limited qty)	129 (response) 130 (unsol. resp)	17, 28 (index)
20	0	Binary Counter - Any Variation	1 (read) 22 (assign class)	00, 01 (start-stop) 06 (no range, or all) 07, 08 (limited qty) 17, 27, 28 (index)		
			7 (freeze) 8 (freeze noack) 9 (freeze clear) 10 (frz. cl. noack)	00, 01 (start-stop) 06 (no range, or all) 07, 08 (limited qty)		
20	1	32-Bit Binary Counter (with Flag)	1 (read)	00, 01 (start-stop) 06 (no range, or all) 07, 08 (limited qty) 17, 27, 28 (index)	129 (response)	00, 01 (start-stop) 17, 28 (index - see note 2)
20	2	16-Bit Binary Counter (with Flag)	1 (read)	00, 01 (start-stop) 06 (no range, or all) 07, 08 (limited qty) 17, 27, 28 (index)	129 (response)	00, 01 (start-stop) 17, 28 (index - see note 2)
20	3	32-Bit Delta Counter (with Flag)				
20	4	16-Bit Delta Counter (with Flag)				
20	5 (default see note 1)	32-Bit Binary Counter (without Flag)	1 (read)	00, 01 (start-stop) 06 (no range, or all) 07, 08 (limited qty) 17, 27, 28 (index)	129 (response)	00, 01 (start-stop) 17, 28 (index - see note 2)

© 2019 Siemens Protection Devices Limited

OBJECT			REQUEST (Library will parse)		RESPONSE (Library will respond with)	
Object Number	**Variation**	**Description**	**Function Codes (dec)**	**Qualifier Codes (hex)**	**Function Codes (dec)**	**Qualifier Codes (hex)**
20	6	16-Bit Binary Counter (without Flag)	1 (read)	00, 01 (start-stop) 06 (no range, or all) 07, 08 (limited qty) 17, 27, 28 (index)	129 (response)	00, 01 (start-stop) 17, 28 (index - see note 2)
20	7	32-Bit Delta Counter (without Flag)				
20	8	16-Bit Delta Counter (without Flag)				
21	0	Frozen Counter - Any Variation	1 (read) 22 (assign class)	00, 01 (start-stop) 06 (no range, or all) 07, 08 (limited qty) 17, 27, 28 (index)		
21	1	32-Bit Frozen Counter (with Flag)	1 (read)	00, 01 (start-stop) 06 (no range, or all) 07, 08 (limited qty) 17, 27, 28 (index)	129 (response)	00, 01 (start-stop) 17, 28 (index - see note 2)
21	2	16-Bit Frozen Counter (with Flag)	1 (read)	00, 01 (start-stop) 06 (no range, or all) 07, 08 (limited qty) 17, 27, 28 (index)	129 (response)	00, 01 (start-stop) 17, 28 (index - see note 2)
21	3	32-Bit Frozen Delta Counter (with Flag)				
21	4	16-Bit Frozen Delta Counter (with Flag)				
21	5	32-Bit Frozen Counter (without Time Of Freeze)	1 (read)	00, 01 (start-stop) 06 (no range, or all) 07, 08 (limited qty) 17, 27, 28 (index)	129 (response)	00, 01 (start-stop) 17, 28 (index - see note 2)
21	6	16-Bit Frozen Counter (without Time Of Freeze)	1 (read)	00, 01 (start-stop) 06 (no range, or all) 07, 08 (limited qty) 17, 27, 28 (index)	129 (response)	00, 01 (start-stop) 17, 28 (index - see note 2)
21	7	32-Bit Frozen Delta Counter (with Time Of Freeze)				
21	8	16-Bit Frozen Delta Counter (with Time Of Freeze)				
21	9 (default - see note 1)	32-Bit Frozen Counter (without Flag)	1 (read)	00, 01 (start-stop) 06 (no range, or all) 07, 08 (limited qty) 17, 27, 28 (index)	129 (response)	00, 01 (start-stop) 17, 28 (index - see note 2)
21	10	16-Bit Frozen Counter (without Flag)	1 (read)	00, 01 (start-stop) 06 (no range, or all) 07, 08 (limited qty) 17, 27, 28 (index)	129 (response)	00, 01 (start-stop) 17, 28 (index - see note 2)
21	11	32-Bit Frozen Delta Counter (without Flag)				
21	12	16-Bit Frozen Delta Counter (without Flag)				
22	0	Counter Change Event - Any Variation	1 (read)	06 (no range, or all) 07, 08 (limited qty)		
22	1 (default - see note 1)	32-Bit Counter Change Event (without Time)	1 (read)	06 (no range, or all) 07, 08 (limited qty)	129 (response) 130 (unsol. resp)	17, 28 (index)
22	2	16-Bit Counter Change Event (without Time)	1 (read)	06 (no range, or all) 07, 08 (limited qty)	129 (response) 130 (unsol. resp)	17, 28 (index)
22	3	32-Bit Delta Counter Change Event (without Time)				
22	4	16-Bit Delta Counter Change Event (without Time)				
22	5	32-Bit Counter Change Event (with Time)	1 (read)	06 (no range, or all) 07, 08 (limited qty)	129 (response) 130 (unsol. resp)	17, 28 (index)
22	6	16-Bit Counter Change Event (with Time)	1 (read)	06 (no range, or all) 07, 08 (limited qty)	129 (response) 130	17, 28 (index)

© 2019 Siemens Protection Devices Limited

OBJECT			REQUEST (Library will parse)		RESPONSE (Library will respond with)	
Object Number	**Variation**	**Description**	**Function Codes (dec)**	**Qualifier Codes (hex)**	**Function Codes (dec)**	**Qualifier Codes (hex)**
					(unsol. resp)	
22	7	32-Bit Delta Counter Change Event (with Time)				
22	8	16-Bit Delta Counter Change Event (with Time)				
23	0	Frozen Counter Event (Variation 0 is used to request default variation)	1 (read)	06 (no range, or all) 07, 08 (limited qty)		
23	1 (default - see note 1)	32-Bit Frozen Counter Event	1 (read)	06 (no range, or all) 07, 08 (limited qty)	129 (response)	17, 28 (index)
23	2	16-Bit Frozen Counter Event	1 (read)	06 (no range, or all) 07, 08 (limited qty)	129 (response)	17, 28 (index)
23	3	32-Bit Frozen Delta Counter Event				
23	4	16-Bit Frozen Delta Counter Event				
23	5	32-Bit Frozen Counter Event (with Time)	1 (read)	06 (no range, or all) 07, 08 (limited qty)	129 (response) 130 (unsol. resp)	17, 28 (index)
23	6	32-Bit Frozen Counter Event (with Time)	1 (read)	06 (no range, or all) 07, 08 (limited qty)	129 (response) 130 (unsol. resp)	17, 28 (index)
23	7	32-Bit Frozen Delta Counter Event (with Time)				
23	8	16-Bit Frozen Delta Counter Event (with Time)				
30	0	Analog Input - Any Variation	1 (read) 22 (assign class)	00, 01 (start-stop) 06 (no range, or all) 07, 08 (limited qty) 17, 27, 28 (index)		
30	1	32-Bit Analog Input	1 (read)	00, 01 (start-stop) 06 (no range, or all) 07, 08 (limited qty) 17, 27, 28 (index)	129 (response)	00, 01 (start-stop) 17, 28 (index - see note 2)
30	2 (default - see note 1)	16-Bit Analog Input	1 (read)	00, 01 (start-stop) 06 (no range, or all) 07, 08 (limited qty) 17, 27, 28 (index)	129 (response)	00, 01 (start-stop) 17, 28 (index - see note 2)
30	3	32-Bit Analog Input (without Flag)	1 (read)	00, 01 (start-stop) 06 (no range, or all) 07, 08 (limited qty) 17, 27, 28 (index)	129 (response)	00, 01 (start-stop) 17, 28 (index - see note 2)
30	4	16-Bit Analog Input (without Flag)	1 (read)	00, 01 (start-stop) 06 (no range, or all) 07, 08 (limited qty) 17, 27, 28 (index)	129 (response)	00, 01 (start-stop) 17, 28 (index - see note 2)
30	5	short floating point	1 (read)	00, 01 (start-stop) 06 (no range, or all) 07, 08 (limited qty) 17, 27, 28 (index)	129 (response)	00, 01 (start-stop) 17, 28 (index - see note 2)
30	6	long floating point	1 (read)	00, 01 (start-stop) 06 (no range, or all) 07, 08 (limited qty) 17, 27, 28 (index)	129 (response)	00, 01 (start-stop) 17, 28 (index - see note 2)
31	0	Frozen Analog Input - Any Variation				
31	1	32-Bit Frozen Analog Input				
31	2	16-Bit Frozen Analog Input				
31	3	32-Bit Frozen Analog Input (with Time of freeze)				
31	4	16-Bit Frozen Analog Input (with Time of freeze)				
31	5	32-Bit Frozen Analog Input (without Flag)				
31	6	16-Bit Frozen Analog Input (without Flag)				

© 2019 Siemens Protection Devices Limited

OBJECT			REQUEST (Library will parse)		RESPONSE (Library will respond with)	
Object Number	**Variation**	**Description**	**Function Codes (dec)**	**Qualifier Codes (hex)**	**Function Codes (dec)**	**Qualifier Codes (hex)**
32	0	Analog Change Event - Any Variation)	1 (read)	06 (no range, or all) 07, 08 (limited qty)		
32	1	32Bit-Analog Change Event (without Time)	1 (read)	06 (no range, or all) 07, 08 (limited qty)	129 (response) 130 (unsol. resp)	17, 28 (index)
32	2	16Bit-Analog Change Event (without Time)	1 (read)	06 (no range, or all) 07, 08 (limited qty)	129 (response) 130 (unsol. resp)	17, 28 (index)
32	3	32Bit-Analog Change Event (with Time)	1 (read)	06 (no range, or all) 07, 08 (limited qty)	129 (response) 130 (unsol. resp)	17, 28 (index)
32	4 (default - see note 1)	16Bit-Analog Change Event (with Time)	1 (read)	06 (no range, or all) 07, 08 (limited qty)	129 (response) 130 (unsol. resp)	17, 28 (index)
32	5	short floating point Analog Change Event (without Time)	1 (read)	06 (no range, or all) 07, 08 (limited qty)	129 (response) 130 (unsol. resp)	17, 28 (index)
32	6	long floating point Analog Change Event (without Time)	1 (read)	06 (no range, or all) 07, 08 (limited qty)	129 (response) 130 (unsol. resp)	17, 28 (index)
32	7	short floating point Analog Change Event (with Time)	1 (read)	06 (no range, or all) 07, 08 (limited qty)	129 (response) 130 (unsol. resp)	17, 28 (index)
32	8	long floating point Analog Change Event (with Time)	1 (read)	06 (no range, or all) 07, 08 (limited qty)	129 (response) 130 (unsol. resp)	17, 28 (index)
33	0	Frozen Analog Event - Any Variation				
33	1	32-Bit Frozen Analog Event (without Time)				
33	2	16-Bit Frozen Analog Event (without Time)				
33	3	32-Bit Frozen Analog Event (with Time)				
33	4	16-Bit Frozen Analog Event (with Time)				
33	5	Short Floating Point Frozen Analog Event				
33	6	Long Floating Point Frozen Analog Event				
33	7	Extended Floating Point Frozen Analog Event				
34	0	Analog Input Deadband (Variation 0 is used to request default variation)	1 (read)	00, 01 (start-stop) 06 (no range, or all) 07, 08 (limited qty) 17, 27, 28 (index)		
34	1	16 bit Analog Input Deadband	1 (read)	00, 01 (start-stop) 06 (no range, or all) 07, 08 (limited qty) 17, 27, 28 (index)	129 (response)	00, 01 (start-stop) 17, 28 (index - see note 2)
			2 (write)	00, 01 (start-stop) 07, 08 (limited qty) 17, 27, 28 (index)		
34	2 (default - see note 1)	32 bit Analog Input Deadband	1 (read)	00, 01 (start-stop) 06 (no range, or all) 07, 08 (limited qty) 17, 27, 28 (index)	129 (response)	00, 01 (start-stop) 17, 28 (index - see note 2)
			2 (write)	00, 01 (start-stop) 07, 08 (limited qty) 17, 27, 28 (index)		
34	3	Short Floating Point Analog Input Deadband	1 (read)	00, 01 (start-stop) 06 (no range, or all) 07, 08 (limited qty)	129 (response)	00, 01 (start-stop) 17, 28 (index - see note 2)

© 2019 Siemens Protection Devices Limited

OBJECT			REQUEST (Library will parse)		RESPONSE (Library will respond with)	
Object Number	**Variation**	**Description**	**Function Codes (dec)**	**Qualifier Codes (hex)**	**Function Codes (dec)**	**Qualifier Codes (hex)**
				17, 27, 28 (index)		
			2 (write)	00, 01 (start-stop) 07, 08 (limited qty) 17, 27, 28 (index)		
50	0	Time and Date				
50	1 (default - see note 1)	Time and Date	1 (read)	07, 08 (limited qty)	129 (response)	07 (limited qty = 1)
			2 (write)	00, 01 (start-stop) 07, 08 (limited qty) 17, 27, 28 (index)		
50	3	Time and Date Last Recorded Time	2 (write)	07 (limited qty)		
51	1	Time and Date CTO			129 (response) 130 (unsol. resp)	(limited qty = 1)
51	2	Unsynchronized Time and Date CTO			129 (response) 130 (unsol. resp)	(limited qty = 1)
52	1	Time Delay Coarse			129 (response)	(limited qty = 1)
52	2	Time Delay Fine			129 (response)	(limited qty = 1)
60	0	Not Defined				
60	1	Class 0 Data	1 (read)	06 (no range, or all)		
60	2	Class 1 Data	1 (read)	06 (no range, or all) 07, 08 (limited qty)		
			20 (enbl. unsol.) 21 (dab. unsol.) 22 (assign class)	06 (no range, or all)		
60	3	Class 2 Data	1 (read)	06 (no range, or all) 07, 08 (limited qty)		
			20 (enbl. unsol.) 21 (dab. unsol.) 22 (assign class)	06 (no range, or all)		
60	4	Class 3 Data	1 (read)	06 (no range, or all) 07, 08 (limited qty)		
			20 (enbl. unsol.) 21 (dab. unsol.) 22 (assign class)	06 (no range, or all)		
80	1	Internal Indications	1 (read)	00, 01 (start-stop)	129 (response)	00, 01 (start-stop)
			2 (write)(see note 3)	00 (start-stop) index=7		
		No Object (function code only)	13 (cold restart)			
		No Object (function code only)	14 (warm restart)			
		No Object (function code only)	23 (delay meas.)			
		No Object (function code only)	24 (record current time)			

Note 1: A Default variation refers to the variation responded when variation 0 is requested and/or in class 0, 1, 2, or 3 scans. Default variations are configurable; however, default settings for the configuration parameters are indicated in the table above.

Note 2: For static (non-change-event) objects, qualifiers 17 or 28 are only responded when a request is sent with qualifiers 17 or 28, respectively. Otherwise, static object requests sent with qualifiers 00, 01, 06, 07, or 08, will be responded with qualifiers 00 or 01. (For change-event objects, qualifiers 17 or 28 are always responded.)

Note 3: Writes of Internal Indications are only supported for index 7 (Restart IIN1-7).

© 2019 Siemens Protection Devices Limited

5.3 Point List

The tables below identify all the default data points provided by the implementation of the Triangle MicroWorks, Inc. DNP 3.0 Slave Source Code Library.

This protocol can be set to use any or all of the relays hardware interfaces (USB, Fibre Optic, RS232 and RS485) where fitted. The relay can communicate simultaneously on all ports regardless of protocol used.

The Station Address of the port being used must be set to a suitable address within the range 0 - 65534 to enable communication. This can be set by the **Communications Menu : COM *n-xxxxx* Station Address** setting.

Communication via DNP3 over Ethernet requires external devices. Please refer to the documents ***TCPIP Catalogue Sheet*** and ***TCPIP Interface Technical Guidance Notes*** for more information.

The information shown below is the default configuration. This can be modified using the Communications Configuration Editor tool, refer section 9 for details.

5.3.1 Binary Input Points

The default binary input event buffer size is set to allow 100 events.

Binary inputs are by default returned in a class zero interrogation.

Note, not all points listed here apply to all builds of devices.

Binary Input Points
Static (Steady-State) Object Number: **1 (Packed Format)**
Change Event Object Number: **1 (w/o Time)**
Static Variation reported when variation 0 requested: **1 (Binary Input w/o status)**
or **2 (Binary Input with status)**
Change Event Variation reported when variation 0 requested: **1 (Binary Input Change w/o Time)**
or **2 (Binary Input Change with Absolute Time)**
or **3 (Binary Input Change with Relative Time)**

Point Index	Description	Default Change Event Assigned Class (1, 2, 3 or none)	Default Variation Static Object 1	Default Variation Event Object 2
1	Binary Input 1	0,2	2	2
2	Binary Input 2	0,2	2	2
3	Binary Input 3	0,2	2	2
4	Binary Input 4	0,2	2	2
5	Binary Input 5	0,2	2	2
6	Binary Input 6	0,2	2	2
35	Remote Mode	0,2	2	2
36	Out Of Service Mode	0,2	2	2
37	Local Mode	0,2	2	2
38	Local & Remote	0,2	2	2
40	General Trip	0,2	2	2
41	Trip Circuit Fail	0,2	2	2
42	Start/Pick-up L1	0,2	2	2
43	Start/Pick-up L2	0,2	2	2
44	Start/Pick-up L3	0,2	2	2
45	General Start/Pick-up	0,2	2	2
46	VT Fuse Failure	0,2	2	2
47	Earth Fault Forward/Line	0,2	2	2
48	Earth Fault Reverse/Busbar	0,2	2	2
49	Start/Pick-up N	0,2	2	2

 © 2019 Siemens Protection Devices Limited

Binary Input Points
Static (Steady-State) Object Number: **1 (Packed Format)**
Change Event Object Number: **1 (w/o Time)**
Static Variation reported when variation 0 requested: **1 (Binary Input w/o status)**
or **2 (Binary Input with status)**
Change Event Variation reported when variation 0 requested: **1 (Binary Input Change w/o Time)**
or **2 (Binary Input Change with Absolute Time)**
or **3 (Binary Input Change with Relative Time)**

Point Index	Description	Default Change Event Assigned Class (1, 2, 3 or none)	Default Variation Static Object 1	Default Variation Event Object 2
50	Fault Forward/Line	0,2	2	2
51	Fault Reverse/Busbar	0,2	2	2
52	51-1	0,2	2	2
53	50-1	0,2	2	2
54	51N-1	0,2	2	2
55	50N-1	0,2	2	2
56	51G-1	0,2	2	2
57	50G-1	0,2	2	2
58	51-2	0,2	2	2
59	50-2	0,2	2	2
60	51N-2	0,2	2	2
61	50N-2	0,2	2	2
62	51G-2	0,2	2	2
63	50G-2	0,2	2	2
64	60 CTS	0,2	2	2
65	46IT	0,2	2	2
66	46DT	0,2	2	2
67	47-1	0,2	2	2
68	47-2	0,2	2	2
69	46BC	0,2	2	2
70	27/59-1	0,2	2	2
71	27/59-2	0,2	2	2
72	27/59-3	0,2	2	2
73	27/59-4	0,2	2	2
74	59NIT	0,2	2	2
75	59NDT	0,2	2	2
76	81-1	0,2	2	2
77	81-2	0,2	2	2
78	81-3	0,2	2	2
79	81-4	0,2	2	2
80	Auto-reclose active	0,2	2	2
81	CB on by auto reclose	0,2	2	2
82	Reclaim	0,2	2	2
83	Lockout	0,2	2	2
86	51-3	0,2	2	2
87	50-3	0,2	2	2
88	51N-3	0,2	2	2
89	50N-3	0,2	2	2
90	51G-3	0,2	2	2
91	50G-3	0,2	2	2
92	51-4	0,2	2	2

© 2019 Siemens Protection Devices Limited

Binary Input Points
Static (Steady-State) Object Number: **1 (Packed Format)**
Change Event Object Number: **1 (w/o Time)**
Static Variation reported when variation 0 requested: **1 (Binary Input w/o status)**
or **2 (Binary Input with status)**
Change Event Variation reported when variation 0 requested: **1 (Binary Input Change w/o Time)**
or **2 (Binary Input Change with Absolute Time)**
or **3 (Binary Input Change with Relative Time)**

Point Index	Description	Default Change Event Assigned Class (1, 2, 3 or none)	Default Variation Static Object 1	Default Variation Event Object 2
93	50-4	0,2	2	2
94	51N-4	0,2	2	2
95	50N-4	0,2	2	2
96	51G-4	0,2	2	2
97	50G-4	0,2	2	2
98	Cold Load Active	0,2	2	2
99	E/F Out	0,2	2	2
100	P/F Inst Protection Inhibited	0,2	2	2
101	E/F Inst Protection Inhibited	0,2	2	2
102	SEF Inst Protection Inhibited	0,2	2	2
103	Ext Inst Protection Inhibited	0,2	2	2
117	51SEF-1	0,2	2	2
118	50SEF-1	0,2	2	2
119	51SEF-2	0,2	2	2
120	50SEF-2	0,2	2	2
121	51SEF-3	0,2	2	2
122	50SEF-3	0,2	2	2
123	51SEF-4	0,2	2	2
124	50SEF-4	0,2	2	2
125	SEF Out	0,2	2	2
126	Trip Circuit Fail 1	0,2	2	2
127	Trip Circuit Fail 2	0,2	2	2
128	Trip Circuit Fail 3	0,2	2	2
129	CB Total Trip Count	0,2	2	2
130	CB Delta Trip Count	0,2	2	2
131	CB Count To AR Block	0,2	2	2
132	CB Frequent Ops Count	0,2	2	2
133	I^2t CB Wear	0,2	2	2
207	Close Circuit Fail 1	0,2	2	2
208	Close Circuit Fail 2	0,2	2	2
209	Close Circuit Fail 3	0,2	2	2
210	Close Circuit Fail	0,2	2	2
211	50BF Stage 1	0,2	2	2
212	50BF Stage 2	0,2	2	2
213	49-Alarm	0,2	2	2
214	49-Trip	0,2	2	2
215	64H	0,2	2	2
217	37-1	0,2	2	2
218	37-2	0,2	2	2
219	CB Alarm	0,2	2	2
223	SEF Forward/Line	0,2	2	2
224	SEF Reverse/Busbar	0,2	2	2

© 2019 Siemens Protection Devices Limited

Binary Input Points
Static (Steady-State) Object Number: **1 (Packed Format)**
Change Event Object Number: **1 (w/o Time)**
Static Variation reported when variation 0 requested: **1 (Binary Input w/o status)**
or **2 (Binary Input with status)**
Change Event Variation reported when variation 0 requested: **1 (Binary Input Change w/o Time)**
or **2 (Binary Input Change with Absolute Time)**
or **3 (Binary Input Change with Relative Time)**

Point Index	Description	Default Change Event Assigned Class (1, 2, 3 or none)	Default Variation Static Object 1	Default Variation Event Object 2
225	General Alarm 1	0,2	2	2
226	General Alarm 2	0,2	2	2
227	General Alarm 3	0,2	2	2
228	General Alarm 4	0,2	2	2
229	General Alarm 5	0,2	2	2
230	General Alarm 6	0,2	2	2
237	Quick Logic E1	0,2	2	2
238	Quick Logic E2	0,2	2	2
239	Quick Logic E3	0,2	2	2
240	Quick Logic E4	0,2	2	2
269	60 CTS-I	0,2	2	2
270	81HBL2	0,2	2	2
271	37G-1	0,2	2	2
272	37G-2	0,2	2	2
273	Wattmetric Po>	0,2	2	2
274	37-PhA	0,2	2	2
275	37-PhB	0,2	2	2
276	37-PhC	0,2	2	2
283	50BF-PhA	0,2	2	2
284	50BF-PhB	0,2	2	2
285	50BF-PhC	0,2	2	2
286	50BF-EF	0,2	2	2
287	79 Last Trip Lockout	0,2	2	2
288	60 CTS-I-PhA	0,2	2	2
289	60 CTS-I-PhB	0,2	2	2
290	60 CTS-I-PhC	0,2	2	2
291	Trip PhA	0,2	2	2
292	Trip PhB	0,2	2	2
293	Trip PhC	0,2	2	2
302	27/59 PhA	0,2	2	2
303	27/59 PhB	0,2	2	2
304	27/59 PhC	0,2	2	2
330	32-1	0,2	2	2
331	32-2	0,2	2	2
332	32S-1	0,2	2	2
333	32S-2	0,2	2	2
334	55-1	0,2	2	2
335	55-2	0,2	2	2
373	37SEF-1	0,2	2	2
374	37SEF-2	0,2	2	2
411	Setting G1 selected	0,2	2	2

© 2019 Siemens Protection Devices Limited

Binary Input Points
Static (Steady-State) Object Number: **1 (Packed Format)**
Change Event Object Number: **1 (w/o Time)**
Static Variation reported when variation 0 requested: **1 (Binary Input w/o status)**
or **2 (Binary Input with status)**
Change Event Variation reported when variation 0 requested: **1 (Binary Input Change w/o Time)**
or **2 (Binary Input Change with Absolute Time)**
or **3 (Binary Input Change with Relative Time)**

Point Index	Description	Default Change Event Assigned Class (1, 2, 3 or none)	Default Variation Static Object 1	Default Variation Event Object 2
412	Setting G2 selected	0,2	2	2
413	Setting G3 selected	0,2	2	2
414	Setting G4 selected	0,2	2	2
420	79 AR In progress	0,2	2	2
422	HotLine Working	0,2	2	2
425	Inst Protection Out	0,2	2	2
427	CB 1	0,2	2	2
501	Virtual Input 1	0,2	2	2
502	Virtual Input 2	0,2	2	2
503	Virtual Input 3	0,2	2	2
504	Virtual Input 4	0,2	2	2
505	Virtual Input 5	0,2	2	2
506	Virtual Input 6	0,2	2	2
507	Virtual Input 7	0,2	2	2
508	Virtual Input 8	0,2	2	2
601	LED 1	0,2	2	2
602	LED 2	0,2	2	2
603	LED 3	0,2	2	2
604	LED 4	0,2	2	2
605	LED 5	0,2	2	2
606	LED 6	0,2	2	2
607	LED 7	0,2	2	2
608	LED 8	0,2	2	2
609	LED 9	0,2	2	2
701	LED PU 1	0,2	2	2
702	LED PU 2	0,2	2	2
703	LED PU 3	0,2	2	2
704	LED PU 4	0,2	2	2
705	LED PU 5	0,2	2	2
706	LED PU 6	0,2	2	2
707	LED PU 7	0,2	2	2
708	LED PU 8	0,2	2	2
709	LED PU 9	0,2	2	2
801	Binary Output 1	0,2	2	2
802	Binary Output 2	0,2	2	2
803	Binary Output 3	0,2	2	2
804	Binary Output 4	0,2	2	2
805	Binary Output 5	0,2	2	2
806	Binary Output 6	0,2	2	2
807	Binary Output 7	0,2	2	2
808	Binary Output 8	0,2	2	2
871	Cold Start	0,2	2	2

© 2019 Siemens Protection Devices Limited

Binary Input Points
Static (Steady-State) Object Number: **1 (Packed Format)**
Change Event Object Number: **1 (w/o Time)**
Static Variation reported when variation 0 requested: **1 (Binary Input w/o status)**
or **2 (Binary Input with status)**
Change Event Variation reported when variation 0 requested: **1 (Binary Input Change w/o Time)**
or **2 (Binary Input Change with Absolute Time)**
or **3 (Binary Input Change with Relative Time)**

Point Index	Description	Default Change Event Assigned Class (1, 2, 3 or none)	Default Variation Static Object 1	Default Variation Event Object 2
872	Warm Start	0,2	2	2
873	Re-Start	0,2	2	2
874	Power On	0,2	2	2
875	Expected Restart	0,2	2	2
876	Unexpected Restart	0,2	2	2
877	Reset Start Count	0,2	2	2
890	CB 1 Opened	0,2	2	2
891	CB 1 Closed	0,2	2	2
900	User SP Command 1	0,2	2	2
901	User SP Command 2	0,2	2	2
902	User SP Command 3	0,2	2	2
903	User SP Command 4	0,2	2	2
904	User SP Command 5	0,2	2	2
905	User SP Command 6	0,2	2	2
906	User SP Command 7	0,2	2	2
907	User SP Command 8	0,2	2	2
1063	CB DBI	0,2	2	2
1064	CB Travelling	0,2	2	2
1065	Close CB Failed	0,2	2	2
1066	Open CB Failed	0,2	2	2
1067	Start Count Alarm	0,2	2	2
1068	50AFD PhA	0,2	2	2
1069	50AFD PhB	0,2	2	2
1070	50AFD PhC	0,2	2	2
1071	50AFD	0,2	2	2
1072	AFD Zone 1 Flash	0,2	2	2
1073	AFD Zone 1	0,2	2	2
1074	AFD Zone 2 Flash	0,2	2	2
1075	AFD Zone 2	0,2	2	2
1076	AFD Zone 3 Flash	0,2	2	2
1077	AFD Zone 3	0,2	2	2
1078	AFD Zone 4 Flash	0,2	2	2
1079	AFD Zone 4	0,2	2	2
1080	AFD Zone 5 Flash	0,2	2	2
1081	AFD Zone 5	0,2	2	2
1082	AFD Zone 6 Flash	0,2	2	2
1083	AFD Zone 6	0,2	2	2

5.3.2 Double Bit Input Points

© 2019 Siemens Protection Devices Limited

The default double bit input event buffer size is set to allow 100 events.

Double bit inputs are by default returned in a class zero interrogation.

Note, not all points listed here apply to all builds of devices.

Double Bit Input Points
Static (Steady-State) Object Number: **3**
Change Event Object Number: **4**
Static Variation reported when variation 0 requested: **1 (Double Bit Input w/o status)**
or **2 (Double Bit Input with status)**
Change Event Variation reported when variation 0 requested: **1 (Double Bit Input Change w/o Time)**
or **2 (Double Bit Input Change with Absolute Time)**
or **3 (Double Bit Input Change with Relative Time)**

Point Index	Description	Default Change Event Assigned Class (1, 2, 3 or none)	Default Variation Static Object 3	Default Variation Event Object 4
0	CB 1	0,2	1	3
10	User DP Command 1	0,2	1	3
11	User DP Command 2	0,2	1	3
12	User DP Command 3	0,2	1	3
13	User DP Command 4	0,2	1	3
14	User DP Command 5	0,2	1	3
15	User DP Command 6	0,2	1	3
16	User DP Command 7	0,2	1	3
17	User DP Command 8	0,2	1	3

5.3.3 Binary Output Status Points and Control Relay Output Blocks

The following table lists both the Binary Output Status Points (Object 10) and the Control Relay Output Blocks (Object 12).

While Binary Output Status Points are included here for completeness, they are not often polled by DNP 3.0 Masters. Binary Output Status points are not recommended to be included in class 0 polls.

As an alternative, it is recommended that “actual” status values of Control Relay Output Block points be looped around and mapped as Binary Inputs. (The “actual” status value, as opposed to the “commanded” status value, is the value of the actuated control. For example, a DNP control command may be blocked through hardware or software mechanisms; in this case, the actual status value would indicate the control failed because of the blocking. Looping Control Relay Output Block actual status values as Binary Inputs has several advantages:

- it allows actual statuses to be included in class 0 polls,
- it allows change event reporting of the actual statuses, which is a more efficient and time-accurate method of communicating control values,
- and it allows reporting of time-based information associated with controls, including any delays before controls are actuated, and any durations if the controls are pulsed.

The default select/control buffer size is large enough to hold 10 of the largest select requests possible.

Binary outputs are by default **NOT** returned in a class zero interrogation.

Note, not all points listed here apply to all builds of devices.

 © 2019 Siemens Protection Devices Limited

Binary Output Status Points
Static (Steady-State) Object Number: **10**
Change Event Object Number: **11**
Control Relay Output Blocks (CROB) Object Number: **12**
Binary Output Command Event Object Number: **13**
Static Variation reported when variation 0 requested: **1 (Binary Output w/o status)**
or **2 (Binary Output with status)**
Change Event Variation reported when variation 0 requested: **1 (Binary Output Event w/o Time)**
or **2 (Binary Output Event with Time)**
Command Event Variation reported when variation 0 requested: **1 (Command Status w/o Time)**
or **2 (Command Status with Time)**

Point Index	Description	Default Change Event Assigned Class (1, 2, 3 or none)	Default Variation Static Object 10	Default Variation Event Object 11	Default Command Event Object 13 Assigned Class (1, 2, 3 or none)	Default Variation Command Event Object 13	CROB Supported Operations	Default CROB Operations
1	RL 1	0	2	2	0	1	Pulse On Latch On Close	Pulse On
2	RL 2	0	2	2	0	1	Pulse On Latch On Close	Pulse On
3	RL 3	0	2	2	0	1	Pulse On Latch On Close	Pulse On
4	RL 4	0	2	2	0	1	Pulse On Latch On Close	Pulse On
5	RL 5	0	2	2	0	1	Pulse On Latch On Close	Pulse On
6	RL 6	0	2	2	0	1	Pulse On Latch On Close	Pulse On
7	RL 7	0	2	2	0	1	Pulse On Latch On Close	Pulse On
8	RL 8	0	2	2	0	1	Pulse On Latch On Close	Pulse On
33	LED reset, write only location.	0	2	2	0	1	Pulse On Latch On Close	Pulse On
34	Settings Group 1	0	2	2	0	1	Pulse On Latch On Close	Latch On
35	Settings Group 2	0	2	2	0	1	Pulse On Latch On Close	Latch On
36	Settings Group 3	0	2	2	0	1	Pulse On Latch On Close	Latch On
37	Settings Group 4	0	2	2	0	1	Pulse On Latch On Close	Latch On
42	Auto-reclose on/off	0	2	2	0	1	Pulse On Pulse Off Latch On Latch Off Close	Pulse On Pulse Off Latch On Latch Off

© 2019 Siemens Protection Devices Limited

Binary Output Status Points
Static (Steady-State) Object Number: **10**
Change Event Object Number: **11**
Control Relay Output Blocks (CROB) Object Number: **12**
Binary Output Command Event Object Number: **13**
Static Variation reported when variation 0 requested: **1 (Binary Output w/o status)**
or **2 (Binary Output with status)**
Change Event Variation reported when variation 0 requested: **1 (Binary Output Event w/o Time)**
or **2 (Binary Output Event with Time)**
Command Event Variation reported when variation 0 requested: **1 (Command Status w/o Time)**
or **2 (Command Status with Time)**

Point Index	Description	Default Change Event Assigned Class (1, 2, 3 or none)	Default Variation Static Object 10	Default Variation Event Object 11	Default Command Event Object 13 Assigned Class (1, 2, 3 or none)	Default Variation Command Event Object 13	CROB Supported Operations	Default CROB Operations
							Trip	
43	Hot Line Working on/off	0	2	2	0	1	Pulse On Pulse Off Latch On Latch Off Close Trip	Pulse On Pulse Off Latch On Latch Off
44	E/F off/on	0	2	2	0	1	Pulse On Pulse Off Latch On Latch Off Close Trip	Pulse On Pulse Off Latch On Latch Off
45	SEF off/on	0	2	2	0	1	Pulse On Pulse Off Latch On Latch Off Close Trip	Pulse On Pulse Off Latch On Latch Off
46	Inst Protection off/on	0	2	2	0	1	Pulse On Pulse Off Latch On Latch Off Close Trip	Pulse On Pulse Off Latch On Latch Off
48	Reset CB Total Trip Count, write only location.	0	2	2	0	1	Pulse On Latch On Close	Pulse On
49	Reset CB Delta Trip Count, write only location.	0	2	2	0	1	Pulse On Latch On Close	Pulse On
50	Reset CB Count To AR Block, write only location.	0	2	2	0	1	Pulse On Latch On Close	Pulse On
51	Reset CB Frequent Ops Count, write only location.	0	2	2	0	1	Pulse On Latch On Close	Pulse On
53	Reset I^2t CB Wear	0	2	2	0	1	Pulse On Latch On Close	Pulse On
54	CB 1	0	2	2	0	1	Pulse On Pulse Off Latch On Latch Off Close Trip	Pulse On Pulse Off Latch On Latch Off
55	CB 1 Trip & Reclose, write only location.	0	2	2	0	1	Pulse On Latch On	Pulse On

© 2019 Siemens Protection Devices Limited

Binary Output Status Points
Static (Steady-State) Object Number: **10**
Change Event Object Number: **11**
Control Relay Output Blocks (CROB) Object Number: **12**
Binary Output Command Event Object Number: **13**
Static Variation reported when variation 0 requested: **1 (Binary Output w/o status)**
or **2 (Binary Output with status)**
Change Event Variation reported when variation 0 requested: **1 (Binary Output Event w/o Time)**
or **2 (Binary Output Event with Time)**
Command Event Variation reported when variation 0 requested: **1 (Command Status w/o Time)**
or **2 (Command Status with Time)**

Point Index	Description	Default Change Event Assigned Class (1, 2, 3 or none)	Default Variation Static Object 10	Default Variation Event Object 11	Default Command Event Object 13 Assigned Class (1, 2, 3 or none)	Default Variation Command Event Object 13	CROB Supported Operations	Default CROB Operations
							Close	
56	CB 1 Trip & Lockout, write only location.	0	2	2	0	1	Pulse On Latch On Close	Pulse On
59	Demand metering reset, write only location.	0	2	2	0	1	Pulse On Latch On Close	Pulse On
87	Reset Energy Meters	0	2	2	0	1	Pulse On Latch On Close	Pulse On
88	Remote mode	0	2	2	0	1	Pulse On Latch On Close	Pulse On
89	Service mode	0	2	2	0	1	Pulse On Latch On Close	Pulse On
90	Local mode	0	2	2	0	1	Pulse On Latch On Close	Pulse On
91	Local & Remote	0	2	2	0	1	Pulse On Latch On Close	Pulse On
98	Reset Start Count (Action)	0	2	2	0	1	Pulse On Latch On Close	Pulse On Latch On
99	User SP Command 1.	0	2	2	0	1	Pulse On Latch On Close	Pulse On
100	User SP Command 2.	0	2	2	0	1	Pulse On Latch On Close	Pulse On
101	User SP Command 3.	0	2	2	0	1	Pulse On Latch On Close	Pulse On
102	User SP Command 4.	0	2	2	0	1	Pulse On Latch On Close	Pulse On
103	User SP Command 5.	0	2	2	0	1	Pulse On Latch On Close	Pulse On
104	User SP Command 6.	0	2	2	0	1	Pulse On Latch On Close	Pulse On
105	User SP Command 7.	0	2	2	0	1	Pulse On Latch On	Pulse On

© 2019 Siemens Protection Devices Limited

Binary Output Status Points
Static (Steady-State) Object Number: **10**
Change Event Object Number: **11**
Control Relay Output Blocks (CROB) Object Number: **12**
Binary Output Command Event Object Number: **13**
Static Variation reported when variation 0 requested: **1 (Binary Output w/o status)**
or **2 (Binary Output with status)**
Change Event Variation reported when variation 0 requested: **1 (Binary Output Event w/o Time)**
or **2 (Binary Output Event with Time)**
Command Event Variation reported when variation 0 requested: **1 (Command Status w/o Time)**
or **2 (Command Status with Time)**

Point Index	Description	Default Change Event Assigned Class (1, 2, 3 or none)	Default Variation Static Object 10	Default Variation Event Object 11	Default Command Event Object 13 Assigned Class (1, 2, 3 or none)	Default Variation Command Event Object 13	CROB Supported Operations	Default CROB Operations
							Close	
106	User SP Command 8.	0	2	2	0	1	Pulse On Latch On Close	Pulse On
107	User DP Command 1.	0	2	2	0	1	Pulse On Pulse Off Latch On Latch Off Close Trip	Pulse On Pulse Off
108	User DP Command 2.	0	2	2	0	1	Pulse On Pulse Off Latch On Latch Off Close Trip	Pulse On Pulse Off
109	User DP Command 3.	0	2	2	0	1	Pulse On Pulse Off Latch On Latch Off Close Trip	Pulse On Pulse Off
110	User DP Command 4.	0	2	2	0	1	Pulse On Pulse Off Latch On Latch Off Close Trip	Pulse On Pulse Off
111	User DP Command 5.	0	2	2	0	1	Pulse On Pulse Off Latch On Latch Off Close Trip	Pulse On Pulse Off
112	User DP Command 6.	0	2	2	0	1	Pulse On Pulse Off Latch On Latch Off Close Trip	Pulse On Pulse Off
113	User DP Command 7.	0	2	2	0	1	Pulse On Pulse Off Latch On Latch Off Close Trip	Pulse On Pulse Off
114	User DP Command 8.	0	2	2	0	1	Pulse On Pulse Off Latch On	Pulse On Pulse Off

© 2019 Siemens Protection Devices Limited

Binary Output Status Points
Static (Steady-State) Object Number: **10**
Change Event Object Number: **11**
Control Relay Output Blocks (CROB) Object Number: **12**
Binary Output Command Event Object Number: **13**
Static Variation reported when variation 0 requested: **1 (Binary Output w/o status)**
or **2 (Binary Output with status)**
Change Event Variation reported when variation 0 requested: **1 (Binary Output Event w/o Time)**
or **2 (Binary Output Event with Time)**
Command Event Variation reported when variation 0 requested: **1 (Command Status w/o Time)**
or **2 (Command Status with Time)**

Point Index	Description	Default Change Event Assigned Class (1, 2, 3 or none)	Default Variation Static Object 10	Default Variation Event Object 11	Default Command Event Object 13 Assigned Class (1, 2, 3 or none)	Default Variation Command Event Object 13	CROB Supported Operations	Default CROB Operations
							Latch Off Close Trip	
115	CB-1 Open	0	2	2	0	1	Pulse On Latch On Close	Pulse On Latch On
116	CB-1 Close	0	2	2	0	1	Pulse On Latch On Close	Pulse On Latch On

5.3.4 Counters

The following table lists both Binary Counters (Object 20) and Frozen Counters (Object 21). When a freeze function is performed on a Binary Counter point, the frozen value is available in the corresponding Frozen Counter point. The default Binary Counter and Frozen Counter event buffer sizes are set to 30.

The “Default Deadband,” and the “Default Change Event Assigned Class” columns are used to represent the absolute amount by which the point must change before a Counter change event will be generated, and once generated in which class poll (1, 2, 3, or none) will the change event be reported.

The default counter event buffer size is set 30. The counter event mode is set to Most Recent, only most recent event for each point is stored.

Counters are by default returned in a class zero interrogation.

Note, not all points listed here apply to all builds of devices.

© 2019 Siemens Protection Devices Limited

Counters
Static (Steady-State) Object Number: **20**
Change Event Object Number: **22**
Static Variation reported when variation 0 requested: **1 (32-Bit Counter with Flag)**
or **2 (16-Bit Counter with Flag)**
or **5 (32-Bit Counter w/o Flag)**
or **6 (16-Bit Counter w/o Flag)**
Change Event Variation reported when variation 0 requested: **1 (32-Bit Counter Event with Flag)**
or **2 (16-Bit Counter Event with Flag)**
or **5 (32-Bit Counter Event with Flag and Time)**
or **6 (16-Bit Counter Event with Flag and Time)**
Frozen Counters
Static (Steady-State) Object Number: **21**
Change Event Object Number: **23**
Static Variation reported when variation 0 requested: **1 (32-Bit Frozen Counter with Flag)**
or **2 (16-Bit Frozen Counter with Flag)**
or **5 (32-Bit Frozen Counter with Flag and Time)**
or **6 (16-Bit Frozen Counter with Flag and Time)**
or **9 (32-Bit Frozen Counter w/o Flag)**
or **10 (16-Bit Frozen Counter w/o Flag)**
Change Event Variation reported when variation 0 requested: **1 (32-Bit Frozen Counter Event with Flag)**
or **2 (16-Bit Frozen Counter Event with Flag)**
or **5 (32-Bit Frozen Counter Event with Flag and Time)**
or **6 (16-Bit Frozen Counter Event with Flag and Time)**

		Counter						Frozen Counter		
Point Index	Description	Default Change Event Assigned Class (1, 2, 3 or none)	Default Variation Static Object 20	Default Variation Event Object 22	Deadband	Is Resettable	IsFreezable	Default Change Event Assigned Class (1, 2, 3 or none)	Default Variation Static Object 21	Default Variation Event Object 23
0	Waveform Records	0,3	5	1	1		✔	0,2	9	1
1	Fault Records	0,3	5	1	1		✔	0,2	9	1
2	Event Records	0,3	5	1	1		✔	0,2	9	1
3	Data Log Records	0,3	5	1	1		✔	0,2	9	1
5	StartCount	0,3	5	1	1	✔	✔	0,2	9	1
6	Start Count Target	0,3	5	1	1		✔	0,2	9	1
7	Active Setting Group	0,3	5	1	1		✔	0,2	9	1
11	CB Total Trip Count	0,3	5	1	1	✔	✔	0,2	9	1
16	CB Delta Trip Count	0,3	5	1	1	✔	✔	0,2	9	1
17	CB Count To AR Block	0,3	5	1	1	✔	✔	0,2	9	1
18	CB Frequent Ops Count	0,3	5	1	1	✔	✔	0,2	9	1
21	E1 Counter	0,3	5	1	1		✔	0,2	9	1
22	E2 Counter	0,3	5	1	1		✔	0,2	9	1
23	E3 Counter	0,3	5	1	1		✔	0,2	9	1
24	E4 Counter	0,3	5	1	1		✔	0,2	9	1

5.3.5 Analog Inputs

The following table lists Analog Inputs (Object 30). It is important to note that 16-bit and 32-bit variations of Analog Inputs, Analog Output Control Blocks, and Analog Output Statuses are transmitted through DNP as signed numbers.

The “Default Deadband,” and the “Default Change Event Assigned Class” columns are used to represent the absolute amount by which the point must change before an Analog change event will be generated, and once generated in which class poll (1, 2, 3, or none) will the change event be reported.

The default analog input event buffer size is set 30. The analog input event mode is set to Most Recent, only most recent event for each point is stored.

 © 2019 Siemens Protection Devices Limited

Analog inputs are by default returned in a class zero interrogation.

Note, not all points listed here apply to all builds of devices.

Analog Inputs
Static (Steady-State) Object Number: **30**
Change Event Object Number: **32**
Analog Input Deadband: **34**
Static Variation reported when variation 0 requested: **1 (32-Bit Analog Input with Flag)**
or **2 (16-Bit Analog Input with Flag)**
or **3 (32-Bit Analog Input w/o Flag)**
or **4 (16-Bit Analog Input w/o Flag)**
or **5 (Single Precision, floating point Analog Input with Flag)**
Change Event Variation reported when variation 0 requested: **1 (32-Bit Analog Change Event w/o Time)**
or **2 (16-Bit Analog Input w/o Time)**
or **3 (32-Bit Analog Input with Time)**
or **4 (16-Bit Analog Input with Time)**
or **5 (Single Precision, floating point Analog Input w/o Time)**
or **7 (Single Precision, floating point Analog Input with Time)**
Analog Input Reporting Deadband Variation reported when variation 0 requested: **1 (16-Bit)**
or **2 (32-Bit)**
or **3 (Single Precision, floating point)**

Point Index	Description	Default Change Event Assigned Class (1, 2, 3 or none)	Default Variation Static Object 30	Default Variation Event Object 32	Default Multiplier	Default Deadband
0	Frequency	0,3	2	4	100.000	1.000
1	Vab Primary	0,3	2	4	0.010	100.000
2	Vbc Primary	0,3	2	4	0.010	100.000
3	Vca Primary	0,3	2	4	0.010	100.000
4	Va Primary	0,3	2	4	0.010	100.000
5	Vb Primary	0,3	2	4	0.010	100.000
6	Vc Primary	0,3	2	4	0.010	100.000
7	Va Secondary	0,3	2	4	10.000	1.000
8	Vb Secondary	0,3	2	4	10.000	1.000
9	Vc Secondary	0,3	2	4	10.000	1.000
21	Vzps	0,3	2	4	10.000	1.000
22	Vpps	0,3	2	4	10.000	1.000
23	Vnps	0,3	2	4	10.000	1.000
31	Ia Primary	0,3	2	4	1.000	100.000
32	Ib Primary	0,3	2	4	1.000	100.000
33	Ic Primary	0,3	2	4	1.000	100.000
34	Ia Secondary	0,3	2	4	100.000	0.100
35	Ib Secondary	0,3	2	4	100.000	0.100
36	Ic Secondary	0,3	2	4	100.000	0.100
37	Ia Nominal	0,3	2	4	100.000	0.100
38	Ib Nominal	0,3	2	4	100.000	0.100
39	Ic Nominal	0,3	2	4	100.000	0.100
43	In Primary	0,3	2	4	1.000	100.000
44	In Secondary	0,3	2	4	100.000	0.100
45	In Nominal	0,3	2	4	100.000	0.100
46	Ig Primary	0,3	2	4	1.000	100.000
47	Ig Secondary	0,3	2	4	1000.000	0.100
48	Ig Nominal	0,3	2	4	1000.000	0.100
51	Izps Nominal	0,3	2	4	100.000	0.100

© 2019 Siemens Protection Devices Limited

Analog Inputs
Static (Steady-State) Object Number: **30**
Change Event Object Number: **32**
Analog Input Deadband: **34**
Static Variation reported when variation 0 requested: **1 (32-Bit Analog Input with Flag)**
or **2 (16-Bit Analog Input with Flag)**
or **3 (32-Bit Analog Input w/o Flag)**
or **4 (16-Bit Analog Input w/o Flag)**
or **5 (Single Precision, floating point Analog Input with Flag)**
Change Event Variation reported when variation 0 requested: **1 (32-Bit Analog Change Event w/o Time)**
or **2 (16-Bit Analog Input w/o Time)**
or **3 (32-Bit Analog Input with Time)**
or **4 (16-Bit Analog Input with Time)**
or **5 (Single Precision, floating point Analog Input w/o Time)**
or **7 (Single Precision, floating point Analog Input with Time)**
Analog Input Reporting Deadband Variation reported when variation 0 requested: **1 (16-Bit)**
or **2 (32-Bit)**
or **3 (Single Precision, floating point)**

Point Index	Description	Default Change Event Assigned Class (1, 2, 3 or none)	Default Variation Static Object 30	Default Variation Event Object 32	Default Multiplier	Default Deadband
52	Ipps Nominal	0,3	2	4	100.000	0.100
53	Inps Nominal	0,3	2	4	100.000	0.100
57	Active Power A	0,3	2	4	0.000	1000000.000
58	Active Power B	0,3	2	4	0.000	1000000.000
59	Active Power C	0,3	2	4	0.000	1000000.000
60	P (3P)	0,3	2	4	0.000	1000000.000
61	Reactive Power A	0,3	2	4	0.000	1000000.000
62	Reactive Power B	0,3	2	4	0.000	1000000.000
63	Reactive Power C	0,3	2	4	0.000	1000000.000
64	Q (3P)	0,3	2	4	0.000	1000000.000
65	Apparent Power A	0,3	2	4	0.000	1000000.000
66	Apparent Power B	0,3	2	4	0.000	1000000.000
67	Apparent Power C	0,3	2	4	0.000	1000000.000
68	S (3P)	0,3	2	4	0.000	1000000.000
71	Power Factor A	0,3	2	4	1000.000	0.100
72	Power Factor B	0,3	2	4	1000.000	0.100
73	Power Factor C	0,3	2	4	1000.000	0.100
74	Power Factor(3P)	0,3	2	4	1000.000	0.100
75	Act Energy Exp	0,3	1	3	1.000	Disabled
76	Act Energy Imp	0,3	1	3	1.000	Disabled
77	React Energy Exp	0,3	1	3	1.000	Disabled
78	React Energy Imp	0,3	1	3	1.000	Disabled
81	Thermal Status Ph A	0,1	4	4	100.000	1.000
82	Thermal Status Ph B	0,1	4	4	100.000	1.000
83	Thermal Status Ph C	0,1	4	4	100.000	1.000
95	Active Setting Group	0,3	2	4	1.000	1.000
99	Vab Secondary	0,3	2	4	10.000	1.000
100	Vbc Secondary	0,3	2	4	10.000	1.000
101	Vca Secondary	0,3	2	4	10.000	1.000
102	Vn Primary	0,3	2	4	0.010	100.000
103	Vn Secondary	0,3	2	4	10.000	1.000
108	I Phase A Max	0,3	2	4	1.000	100.000
109	I Phase B Max	0,3	2	4	1.000	100.000
110	I Phase C Max	0,3	2	4	1.000	100.000

© 2019 Siemens Protection Devices Limited

Analog Inputs
Static (Steady-State) Object Number: **30**
Change Event Object Number: **32**
Analog Input Deadband: **34**
Static Variation reported when variation 0 requested: **1 (32-Bit Analog Input with Flag)**
or **2 (16-Bit Analog Input with Flag)**
or **3 (32-Bit Analog Input w/o Flag)**
or **4 (16-Bit Analog Input w/o Flag)**
or **5 (Single Precision, floating point Analog Input with Flag)**
Change Event Variation reported when variation 0 requested: **1 (32-Bit Analog Change Event w/o Time)**
or **2 (16-Bit Analog Input w/o Time)**
or **3 (32-Bit Analog Input with Time)**
or **4 (16-Bit Analog Input with Time)**
or **5 (Single Precision, floating point Analog Input w/o Time)**
or **7 (Single Precision, floating point Analog Input with Time)**
Analog Input Reporting Deadband Variation reported when variation 0 requested: **1 (16-Bit)**
or **2 (32-Bit)**
or **3 (Single Precision, floating point)**

Point Index	Description	Default Change Event Assigned Class (1, 2, 3 or none)	Default Variation Static Object 30	Default Variation Event Object 32	Default Multiplier	Default Deadband
111	P 3P Max	0,3	2	4	0.000	1000000.000
112	Q 3P Max	0,3	2	4	0.000	1000000.000
115	Isef Primary	0,3	2	4	1.000	10.000
116	Isef Secondary	0,3	2	4	1000.000	0.050
117	Isef Nominal	0,3	2	4	1000.000	0.050
135	CB Total Trip Count	0,3	1	3	1.000	1.000
136	CB Delta Trip Count	0,3	1	3	1.000	1.000
137	CB Count To AR Block	0,3	1	3	1.000	1.000
138	CB Frequent Ops Count	0,3	1	3	1.000	1.000
165	Ia Last Trip	0,3	1	3	1.000	Disabled
166	Ib Last Trip	0,3	1	3	1.000	Disabled
167	Ic Last Trip	0,3	1	3	1.000	Disabled
168	Va Last Trip	0,3	1	3	1.000	Disabled
169	Vb Last Trip	0,3	1	3	1.000	Disabled
170	Vc Last Trip	0,3	1	3	1.000	Disabled
171	In Last Trip	0,3	1	3	1.000	Disabled
172	Ig Last Trip	0,3	1	3	1.000	Disabled
173	Isef Last Trip	0,3	1	3	1.000	Disabled
174	V Phase A Max	0,3	2	4	0.010	100.000
175	V Phase B Max	0,3	2	4	0.010	100.000
176	V Phase C Max	0,3	2	4	0.010	100.000
177	V Phase AB Max	0,3	2	4	0.010	100.000
178	V Phase BC Max	0,3	2	4	0.010	100.000
179	V Phase CA Max	0,3	2	4	0.010	100.000
184	CB Wear A	0,3	1	3	0.000	1000000.000
185	CB Wear B	0,3	1	3	0.000	1000000.000
186	CB Wear C	0,3	1	3	0.000	1000000.000
187	CB Wear A Remaining	0,3	1	3	1.000	1.000
188	CB Wear B Remaining	0,3	1	3	1.000	1.000
189	CB Wear C Remaining	0,3	1	3	1.000	1.000
190	CB Wear Minimum	0,3	1	3	1.000	1.000
192	Freq Last Trip	0,3	5	7	1.000	1.000
196	Frequency Max	0,3	2	4	100.000	1.000

© 2019 Siemens Protection Devices Limited

Analog Inputs
Static (Steady-State) Object Number: **30**
Change Event Object Number: **32**
Analog Input Deadband: **34**
Static Variation reported when variation 0 requested: **1 (32-Bit Analog Input with Flag)**
or **2 (16-Bit Analog Input with Flag)**
or **3 (32-Bit Analog Input w/o Flag)**
or **4 (16-Bit Analog Input w/o Flag)**
or **5 (Single Precision, floating point Analog Input with Flag)**
Change Event Variation reported when variation 0 requested: **1 (32-Bit Analog Change Event w/o Time)**
or **2 (16-Bit Analog Input w/o Time)**
or **3 (32-Bit Analog Input with Time)**
or **4 (16-Bit Analog Input with Time)**
or **5 (Single Precision, floating point Analog Input w/o Time)**
or **7 (Single Precision, floating point Analog Input with Time)**
Analog Input Reporting Deadband Variation reported when variation 0 requested: **1 (16-Bit)**
or **2 (32-Bit)**
or **3 (Single Precision, floating point)**

Point Index	Description	Default Change Event Assigned Class (1, 2, 3 or none)	Default Variation Static Object 30	Default Variation Event Object 32	Default Multiplier	Default Deadband
197	S 3P Max	0,3	2	4	0.000	1000000.000
330	CB Trip Time Meter	0,3	2	4	1000.000	0.010

5.4 Additional Settings

The following relay settings are provided for configuration of the DNP 3.0 implementation when available and are common to all ports using this protocol.

Setting Name	Range/Options	Default	Setting	Notes
Unsolicited Mode	DISABLED, ENABLED	DISABLED	As Required	Setting is only visible when any port Protocol is set to DNP3.
Destination Address	0 - 65534	0	As Required	Setting is only visible when DNP3 Unsolicited Events set to Enabled.
DNP3 Application Timeout	5, 6 ... 299, 300	10s	As Required	Setting is only visible when any port Protocol is set to DNP3.

© 2019 Siemens Protection Devices Limited

6. Not Applicable

This section intentionally left blank.

© 2019 Siemens Protection Devices Limited

© 2019 Siemens Protection Devices Limited

7. IEC61850 Protocol Support

7.1 Introduction

The relay can optionally be provided with IEC61850 comms.

For further details refer to the following publications:

- Model Implementation Conformance Statement (MICS)
- Protocol Implementation Conformance Statement (PICS)
- Protocol Implementation Extra Information for Testing (PIXIT)

© 2019 Siemens Protection Devices Limited

© 2019 Siemens Protection Devices Limited

8. Serial Modems

8.1 Introduction

The communications interface has been designed to allow data transfer via modems. A suitable Modem can be connected directly to the Relay's serial interface, for example RS232, RS485 or fibre-optic port where fitted.

8.2 Connecting a Modem to the Relay(s)

RS232C defines devices as being either Data Terminal Equipment (DTE) e.g. computers, or data Communications Equipment (DCE), e.g. modems, where one is designed to be connected to the other.

The optional RS232 port of the Relay is wired as a DTE device and can therefore be connected directly to a Modem.

The 7XV5652 RS232 fibre-optic converter is wired as a DCE device, the same as a Modem. Where two DCE devices e.g. the modem and the fibre-optic converter are being connected together a null terminal connector is required which switches various control lines. The fibre-optic converter is then connected to the relay Network Tx to Relay Rx and Network Rx to Relay Tx.

8.3 Setting the Remote Modem

The exact settings of the modem are dependent on the type of modem. Although most modems support the basic Hayes “AT” command format, different manufacturers use different commands for the same functions. In addition, some modems use DIP switches to set parameters, others are entirely software configured.

Before applying settings, the modem's factory default settings should be applied, to ensure it is in a known state.

Several factors must be considered to allow remote dialling to the relays. The first is that the modem at the remote end must be configured as auto answer. This will allow it to initiate communications with the relays. Next, the user should set the data configuration at the local port, i.e. baud rate and parity, so that communication will be at the same rate and format as that set on the relay and the error correction is disabled.

Auto-answer usually requires two parameters to be set. The auto-answer setting should be switched on and the number of rings after which it will answer. The Data Terminal Ready (DTR) settings should be forced on. This tells the modem that the device connected to it is ready to receive data.

The parameters of the modem's RS232C port are set to match those set on the relay, set baud rate and parity to be the same as the settings on the relay and number of data bits to be 8 and stop bits 1. Note, although the device may be able to communicate with the modem at, for example, 19200 bps, the modem may only be able to transmit over the telephone lines at 14400 bps. Therefore, a baud rate setting on which the modem can transmit should be chosen. In the above example, a baud rate of 9600 should be chosen.

As the modems are required to be transparent, simply passing on the data sent from the controller to the device and vice versa, error correction and buffering is turned off.

Finally, the settings selected for configuration should be stored in the modem's memory for power on defaults.

8.4 Connecting to the Remote Modem

Once the remote modem has been configured correctly, it should be possible to make connection to the relay.

Where a “dial-up” modem system is installed the settings on the remote modem are fixed so the local modem should negotiate with it on connection, choosing suitable matching settings. Where this is not possible the local modem should be set with settings equivalent to those of the remote modem as described above.

© 2019 Siemens Protection Devices Limited

© 2019 Siemens Protection Devices Limited

9. Configuration

The data points and control features which are possible within the relay is fixed and can be transmitted over the communication channel(s) protocols in the default format described earlier in this document. The default data transmitted is not always directly compatible with the needs of the substation control system and will require some tailoring; this can be done by the user with the Reydisp software Communications Editor tool.

The Communications Editor is provided to allow its users to configure the Communication Protocol's Files in Reyrolle brand Relays manufactured by Siemens Protection Devices Limited (SPDL).

The editor supports configuring DNP3, IEC60870-5-103, IEC60870-5-101 and MODBUS protocols.

The editor allows configuration files to be retrieved from the relay, edited, and then uploaded back to the relay. Files may also be saved to and loaded from disc to work offline. The protocols will be stored in a Reyrolle Protection Device Comms file (RPDC), which will be stored locally, so that the editor can be used when the relay is not connected.

DNP3

The tool will allow:

- Data Points to be enabled or disabled.
- Changing the point numbers for the Binary Inputs, Double Bit Inputs, Binary Outputs, Counters and Analogue Inputs.
- Changing their assigned class and static and event variants.
- Specifying inclusion in a Class 0 poll.
- Setting Binary points to be inverted before transmission.
- Setting the Control Relay Output Block (CROB) commands that can be used with a Binary Output (Object 12).
- Specifying a dead-band outside which Analogue Events will be generated.
- Specifying a multiplier that will be applied to an analogue value before transmission.
- Configuring a Counter's respective Frozen Counter.

IEC60870-5-103

The tool will allow:

- Data Points to be enabled or disabled.
- Changing the point numbers Function Type (FUN) and Information (INF), returned by each point.
- Changing the text returned to Reydisp for display in its event viewer.

MODBUS

Note, as MODBUS points are polled they do not need to be enabled or disabled.

The tool will allow:

- Changing the Addresses for the Coils, Inputs and Registers.
- Changing the format of the instrument returned in a register, e.g. 16 or 32 bit.
- Specifying a multiplier that will be applied to an analogue value before transmission.

The user can check if the relay contains user configured communication files via a meter in the relay menus. Pressing the Enter and down arrow buttons on the fascia, then scrolling down, the number of files stored in the relay is displayed. The file name can also be viewed by pressing the Cancel and Test/Reset buttons together when in the relay Instruments menu. The user must ensure when naming the file, they use a unique file name including the version number.

Please refer to the Communications Editor User Guide for further guidance.

© 2019 Siemens Protection Devices Limited

10. Glossary

Baud Rate
Data transmission speed.

Bit
The smallest measure of computer data.

Bits Per Second (bps)
Measurement of data transmission speed.

Data Bits
A number of bits containing the data. Sent after the start bit.

Data Echo
When connecting relays in an optical ring architecture, the data must be passed from one relay to the next, therefore when connecting in this method all relays must have the Data Echo ON.

EN100
Siemens' Ethernet communications module supporting IEC61850, available in optical and electrical versions.

Ethernet
A computer networking technology.

Full-Duplex Asynchronous Communications
Communications in two directions simultaneously.

Half-Duplex Asynchronous Communications
Communications in two directions, but only one at a time.

Hayes “AT”
Modem command set developed by Hayes Microcomputer products, Inc.

LAN
Local Area Network. A computer network covering a small geographic area.

LC
Fibre optic connector type designed by Lucent Technologies, Inc.

Line Idle
Determines when the device is not communicating if the idle state transmits light.

Modem
MOdulator / DEModulator device for connecting computer equipment to a telephone line.

Parity
Method of error checking by counting the value of the bits in a sequence, and adding a parity bit to make the outcome, for example, even.

Parity Bit
Bit used for implementing parity checking. Sent after the data bits.

RS232C
Serial Communications Standard. Electronic Industries Association Recommended Standard Number 232, Revision C.

RS485
Serial Communications Standard. Electronic Industries Association Recommended Standard Number 485.

© 2019 Siemens Protection Devices Limited

Start Bit
Bit (logical 0) sent to signify the start of a byte during data transmission.

Stop Bit
Bit (logical 1) sent to signify the end.

USB
Universal Serial Bus standard for the transfer of data.

WAN
Wide Area Network. A computer network covering a large geographic area.

© 2019 Siemens Protection Devices Limited

Appendix 1

The operating mode of the device is set via the setting, or through a command sent to a communications port. There are four options; **Local**, **Remote**, **Local or Remote** and **Service**.

The following table illustrates whether a function is Enabled (✔) or Disabled (✘) in each mode.

Function	Operation Mode		
	Local	**Remote**	**Out of Service**
Control			
Com1	✔ when Com1-Mode = Local	✔ when Com1-Mode = Remote	✘
Com2 (USB)	✔ when Com2-Mode = Local	✔ when Com2-Mode = Remote	✘
Fascia (Control Mode)	✔	✘	✘
Function Key (n)	✔	✔ when F Key(n) Mode = Remote	✘
Binary Input (n)	✔ when BI (n) Mode = Local	✔ when BI (n) Mode = Remote	✘
Binary Outputs	✔	✔	✘
Reporting			
Spontaneous			
IEC	✔	✔	✘
DNP3	✔	✔	✘
General Interrogation			
IEC	✔	✔	✘
DNP3	✔	✔	✔
MODBUS	✔	✔	✔
Change Settings			
Com1	✔ when Com1-Mode = Local	✔ when Com1-Mode = Remote	✔
Com2 (USB)	✔ when Com2-Mode = Local	✔ when Com2-Mode = Remote	✔
Fascia	✔	✔	✔
Historical Information			
Waveform Records	✔	✔	✔
Event Records	✔	✔	✔
Fault Information	✔	✔	✔
Setting Information	✔	✔	✔

Fig. A1 Operating Mode Table

© 2019 Siemens Protection Devices Limited

Siemens Protection Devices Ltd. (SPDL)
P.O. Box 8
Hebburn
Tyne and Wear
NE31 1TZ
United Kingdom

For enquiries please contact our Customer Support Centre
Tel.: +49 180/524 8437 (24hrs)
Fax.: +49 180/524 2471
E-Mail:support.ic@siemens.com
www.siemens.com/reyrolle

Template Revision 17.

© 2019 Siemens Protection Devices Limited

7SR11 and 7SR12

Installation Guide

Document Release History

This document is issue 2019/04**.** The list of revisions up to and including this issue is:

2019/04	SBEF CT Earth connection added to diagram & handling instructions added.
2018/07	Addition of Disposal information
2017/05	Addition clauses added to suit IEC 60255-27
2016/11	Ethernet Redundancy added to Electrical interface variants
2016/03	Two CT arrangement for isolated or compensated networks added
2016/01	Phase-phase VT earth primary earth connection removed on diagram
2015/08	Additional software features added.
2015/06	Software Maintenance
2014/10	Addition of optional IEC 61850 communication protocol.
2014/10	Correction to 3V0 polarity on Voltage Transformer Configurations diagram
2013/09	Software Maintenance
2013/01	Software Maintenance
2012/01	Software Maintenance
2011/06	Software Maintenance
2011/06	Added CT and VT connection information
2010/04	Amendments following PLM review
2010/02	Document reformat due to rebrand
2009/09	Revised format
2009/04	First issue

The copyright and other intellectual property rights in this document, and in any model or article produced from it (and including any registered or unregistered design rights) are the property of Siemens Protection Devices Limited. No part of this document shall be reproduced or modified or stored in another form, in any data retrieval system, without the permission of Siemens Protection Devices Limited, nor shall any model or article be reproduced from this document unless Siemens Protection Devices Limited consent.

While the information and guidance given in this document is believed to be correct, no liability shall be accepted for any loss or damage caused by any error or omission, whether such error or omission is the result of negligence or any other cause. Any and all such liability is disclaimed.

©2019 Siemens Protection Devices Limited

Contents

Section 1: Installation 5
1.1 Packaging 5
1.2 Unpacking, Storage and Handling 5
1.3 Recommended Mounting Position 5
1.4 Wiring 5
1.5 Earthing 6
1.6 Ancillary Equipment 6
1.7 Disposal 6
1.7.1 Environmental Protection Hints 6
Section 2: Equipment Operating Conditions 8
2.1 Current Transformer Circuits 8
2.2 External Resistors 8
2.3 Front Cover 8
Section 3: Dimensions and Panel Fixings 9
3.1 Relay Dimensions and Weight 9
3.2 Fixings 11
3.2.1 Crimps 11
3.2.2 Panel Fixings 11
Section 4: Rear Terminal Drawings 12
4.1 Case 12
Section 5: Connection/Wiring/Diagrams 14
5.1 Wiring Diagram: 7SR1101 EF Relay with 3BI & 5BO 14
5.2 Wiring Diagram: 7SR1102 OC/EF Relay with 3BI & 5BO 15
5.3 Wiring Diagram: 7SR1103 OC/EF Relay with 6 BI & 8BO 16
5.4 Wiring Diagram: 7SR1107 OC/EF Relay with 4 BI & 8BO 17
5.5 Wiring Diagram: 7SR1204 Directional EF Relay with 3BI & 5BO 18
5.6 Wiring Diagram: 7SR1205 Directional OC/EF Relay with 3BI & 5BO 19
5.7 Wiring Diagram: 7SR1206 Directional OC/EF Relay with 6BI & 8BO 20
5.8 Wiring Diagram: 7SR1208 Directional OC/EF Relay with 4BI & 8BO 21
5.9 Current Transformer Configurations 22
5.10 Voltage Transformer Configurations 28
Section 6: Data Comms Connections 29
6.1 RS485 Connection 29
6.2 Additional (Optional) Ethernet Connection for IEC 61850 30
6.3 Ethernet Network Redundancy IEC 61850 31
6.3.1 RSTP – Rapid Spanning Tree Protocol 31
6.3.2 PRP – Parallel Redundancy Protocol 32
6.3.3 HSR – High Availability Seamless Redundancy Protocol 33

©2019 Siemens Protection Devices Limited

List of Figures

Figure: 3.1-1 Overall Dimensions and Panel Drilling for Size E4 Epsilon Case....9
Figure: 3.1-2 Overall Dimensions (mm) and panel Drilling for Size E6 Epsilon case....10
Figure: 4.1-1 E4 Case viewed from rear....12
Figure: 4.1-2 E6 Case viewed from rear....12
Figure: 4.1-3 E4 Case Terminal Arrangement viewed from rear....13
Figure: 5.1-1 7SR1101 Connection Diagram....14
Figure: 5.2-1 7SR1102 Connection Diagram....15
Figure: 5.3-1 7SR1103 Connection Diagram....16
Figure: 5.4-1 7SR1107 Connection Diagram....17
Figure: 5.5-1 7SR1204 Connection Diagram....18
Figure: 5.6-1 7SR1205 Connection Diagram....19
Figure: 5.7-1 7SR1206 Connection Diagram....20
Figure: 5.8-1 7SR1208 Connection Diagram....21
Figure: 6.1-1 RS485 Data Comms Connections Between Relays....29
Figure: 6.2-1 Ethernet connection for IEC 61850 (star connection)....30
Figure: 6.2-2 Ethernet connection for IEC 61850 (ring connection)....30
Figure: 6.3-1 RSTP Ethernet Network Ring Configuration....31
Figure: 6.3-2 PRP Ethernet Network Configuration....32
Figure: 6.3-3 HSR Ethernet Network Ring Configuration....33

List of Tables

Table 1: Relay Weight in kg....10
Table 2: EN100 Redundancy availability....31

 ©2019 Siemens Protection Devices Limited

Section 1: Installation

1.1 Packaging

Relays are supplied in packaging designed to mechanically protect them while in both transit and storage.

This packaging should be recycled, where systems exist, or disposed of in a manner which does not provide a threat to health or the environment. All laws and regulations specific to the country of disposal should be adhered to.

1.2 Unpacking, Storage and Handling

On receipt remove the relay from the container in which it was received and inspect it for obvious damage. It is recommended that the relay not be removed from its case.

If damage has been sustained a claim should be immediately be made against the carrier, also inform Siemens Protection Devices Limited, and the nearest Siemens agent.

When not required for immediate use, Relays should be stored in their original packaging. The place of storage should be dry and free from dust. It should also not exceed the storage temperature and humidity limits of the Relay; given in the Performance Specification of this manual.

The relay contains static sensitive devices, which are susceptible to damage due to static discharge. The relay's electronic circuits are protected from damage by static discharge when the relay is housed in its case.

If the relay element is withdrawn from its case it should be treated as an electronic device and should not be handled roughly or exposed to contamination and should be protected from damage. The relay element should be re-inserted into the case with care and without the use of excessive force. If the relay element is not to be immediately replaced the cover should be refitted to the case to prevent contamination.

To withdraw the relay element, remove the plastic front cover by rotating the two securing pins and withdraw using the plastic handles. The relay should not be carried using these handles. The relay should only be held by the top and bottom plates and the user should not touch the exposed PCB's.

The device should be isolated from the auxiliary power supply and the circuit breaker tripping and other control circuits before the relay element is withdrawn or reinserted into the relay case.

There can be no requirement to disassemble any relay, since there are no user serviceable parts in the relay. If any modules have been tampered with, then the guarantee will be invalidated. Siemens Protection Devices Limited reserves the right to charge for any subsequent repairs.

1.3 Recommended Mounting Position

The relay uses a liquid crystal display (LCD) for programming and operation. The LCD has a vertical viewing angle of ± 30˚ and is back–lit. However, the best viewing position is at eye level, and this is particularly important given its control features.

The relay should be mounted on the circuit breaker (or protection panel) to allow the operator the best access to the relay functions

1.4 Wiring

The product should be wired according to the scheme requirements, with reference to the appropriate wiring diagram.

Wire specification and size should be selected to suit the application.

The device does not contain any internal fuse or other user serviceable protection components. Typically the PSU is connected to the auxiliary supply via an external HRC fuse rated at 6A (BS88/IEC60269 or suitably rated miniature circuit breaker may be installed. Isolation links may also be installed in accordance with user requirements.

The equipment shall be isolated or disconnected from hazardous live voltage before access to potentially hazardous live parts is affected.

©2019 Siemens Protection Devices Limited

Note that when the Relay is powered-up for the first time, it is good practice to do so with the trip and control links removed. This limits potential damage caused by incorrect scheme wiring.

1.5 Earthing

Terminal 28 of the PSU (Power Supply Unit) should be solidly earthed by a direct connection to the panel earth. The Relay case earth stud connection should be connected to terminal 28 of the PSU. A minimum wire size of 2.5mm sq. is recommended. Before any subsequent maintenance or other interaction with the device, the integrity of this protective conductor connection shall be checked before carrying out any other actions

It is normal practice to additionally 'daisy chain' together the case (safety) earths of all the Relays installed in a panel to prevent earth current loops posing a risk to personnel.

1.6 Ancillary Equipment

The relay can be interrogated locally or remotely. For local interrogation a portable PC with suitable version of MS Windows (2000 SP4, XP SP2, W7) and Reydisp Evolution™ (Latest Version available 32 bit) or Reydisp Manager™ s/w using USB port situated on front of the relay.

1.7 Disposal

The Relay should be disposed of in a manner which does not provide a threat to health or the environment. All laws and regulations specific to the country of disposal should be adhered to.

1.7.1 Environmental Protection Hints

Disposal of Old Equipment and Batteries (Applicable only for European Union and Countries with a Recycling System)

The disposal of our products and possible recycling of their components after decommissioning has to be carried out by an accredited recycling company, or the products/components must be taken to applicable collection points. Such disposal activities must comply with all local laws, guidelines and environmental specifications of the country in which the disposal is done. For the European Union the sustainable disposal of electronic scrap is defined in the respective regulation for "waste electrical and electronic equipment" (WEEE).

The crossed-out wheelie bin on the products, packaging and/or accompanying documents means that used electrical and electronic products and batteries must not be mixed with normal household waste.
According to national legislation, penalties may be charged for incorrect disposal of such waste.

By disposing of these products correctly you will help to save valuable resources and prevent any potential negative effects on human health and the environment.

NOTE: Our products and batteries must not be disposed of as household waste. For disposing batteries it is necessary to observe the local national/international directives.

Disposal of Mobile Storage Devices (e.g. USB Sticks and Memory Cards)

When disposing of/transferring mobile storage devices, using the **format** or **delete** functions only changes the file management information and does not completely delete the data from your mobile

 ©2019 Siemens Protection Devices Limited

storage device. When disposing of or transferring a mobile storage device, Siemens strongly recommends physically destroying it or completely deleting data from the mobile storage device by using a commercially available computer data erasing software.

REACH/RoHS Declaration

You can find our current **REACH/RoHS** declarations at:

https://www.siemens.com/global/en/home/products/energy/ecotransparency/ecotransparency-downloads.html

NOTE: You can find more information about activities and programs to protect the climate at the EcoTransparency website:

https://www.siemens.com/global/en/home/products/energy/ecotransparency.html

Section 2: Equipment Operating Conditions

2.1 Current Transformer Circuits

The secondary circuit of a live CT must not be open circuited. Non-observance of this precaution can result in injury to personnel or damage to equipment.

2.2 External Resistors

Where external resistors are connected to the relay circuitry, these may present a danger of electric shock or burns, if touched.

2.3 Front Cover

The front cover provides additional securing of the relay element within the case. The relay cover should be in place during normal operating conditions.

©2019 Siemens Protection Devices Limited

Section 3: Dimensions and Panel Fixings

3.1 Relay Dimensions and Weight

Relays are supplied in the modular size E4 or E6 cases

The following drawings which are also available from the website give panel cut-out and mounting details.

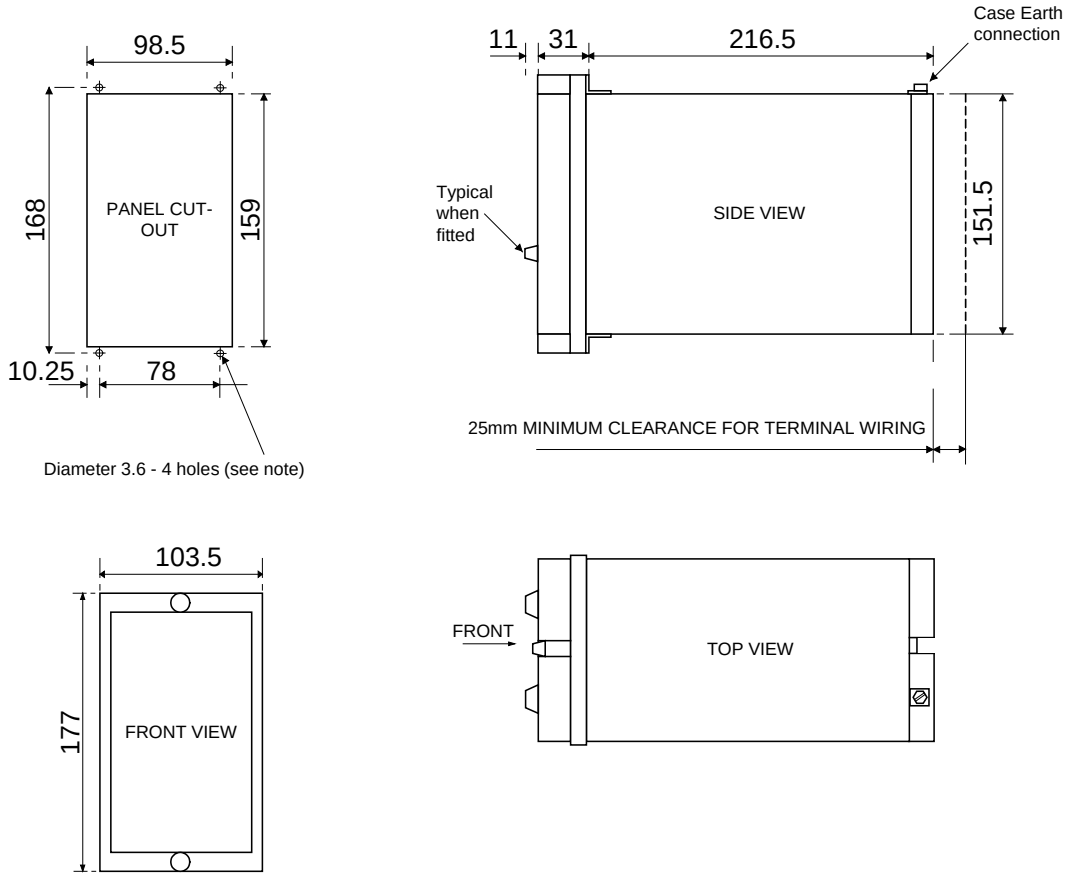

NOTE:
THE 3.6 HOLES ARE FOR M4 THREAD FORMING (TRILOBULAR) SCREWS. THESE ARE SUPPLIED AS STANDARD AND ARE SUITABLE FOR USE IN FERROUS / ALUMINIUM PANELS 1.6mm THICK AND ABOVE. FOR OTHER PANELS, HOLES TO BE M4 CLEARANCE (TYPICALLY 4.5 DIAMETER) AND RELAYS MOUNTED USING M4 MACHINE SCREWS, NUTS AND LOCKWASHERS (SUPPLIED IN PANEL FIXING KIT).

Figure: 3.1-1 Overall Dimensions (mm) and panel Drilling for Size E4 Epsilon case

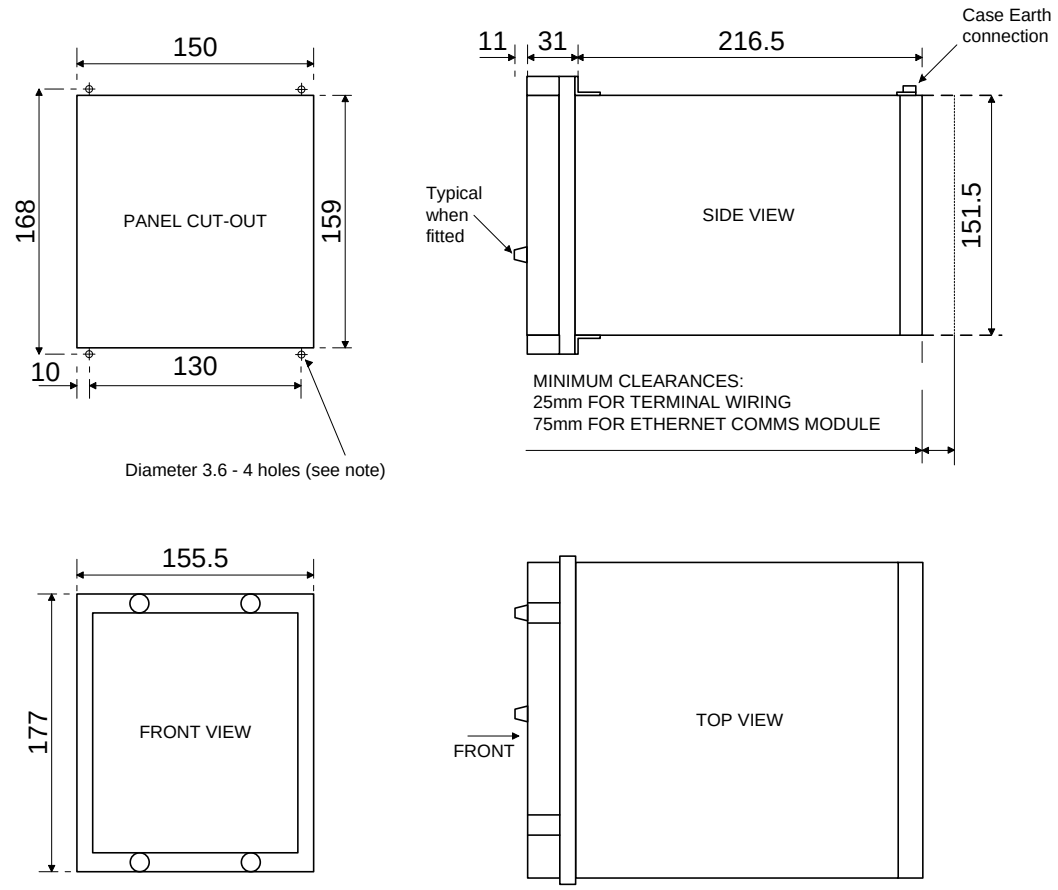

NOTE:
THE 3.6 HOLES ARE FOR M4 THREAD FORMING (TRILOBULAR) SCREWS. THESE ARE SUPPLIED AS STANDARD AND ARE SUITABLE FOR USE IN FERROUS / ALUMINIUM PANELS 1.6mm THICK AND ABOVE. FOR OTHER PANELS, HOLES TO BE M4 CLEARANCE (TYPICALLY 4.5 DIAMETER) AND RELAYS MOUNTED USING M4 MACHINE SCREWS, NUTS AND LOCKWASHERS (SUPPLIED IN PANEL FIXING KIT).

Figure: 3.1-3 Overall Dimensions (mm) and panel Drilling for Size E6 Epsilon case

Hardware Model	Net Weight kg
7SR1101	2.7
7SR1102	3.2
7SR1103	3.2
7SR1107	3.2
7SR1204	2.7
7SR1205	3.2
7SR1206	3.2
7SR1208	3.2
7SR1102 with IEC61850	4.15
7SR1103 with IEC61850	4.15
7SR1107 with IEC61850	4.15
7SR1205 with IEC61850	4.15
7SR1206 with IEC61850	4.15
7SR1208 with IEC61850	4.15

Additional Transport packaging: add 0.4kg

Table 1: Relay Weight in kg

 ©2019 Siemens Protection Devices Limited

3.2 Fixings

3.2.1 Crimps

Ring tongued crimps with 90˚ bend are recommended.

3.2.2 Panel Fixings

Typical mounting screw kit per Relay

Consists of 4 off M4x10mm Screws

4 off M4 Nuts

4 off M4 Lock Washer

Typical rear terminal block fixing kit (1kit per terminal block fitted to relay) Consists of:

28 off M4, 8mm Screws

28 off M4 Lock Washer

Section 4: Rear Terminal Drawings

4.1 Case

Figure: 4.1-1 E4 Case viewed from rear

Figure: 4.1-2 E6 Case viewed from rear

Notes

1) Recommended terminations are pre-insulated and must be crimped using approved tooling.

2) RS485 (Block ”B” Terms 14, 16, 18, 20) connection to this communication facility is by screened, twisted pair cable. On site when wiring other facilities ensure that these terminals are not obscured by other wiring runs. Cable should be RS485 compliant.

 ©2019 Siemens Protection Devices Limited

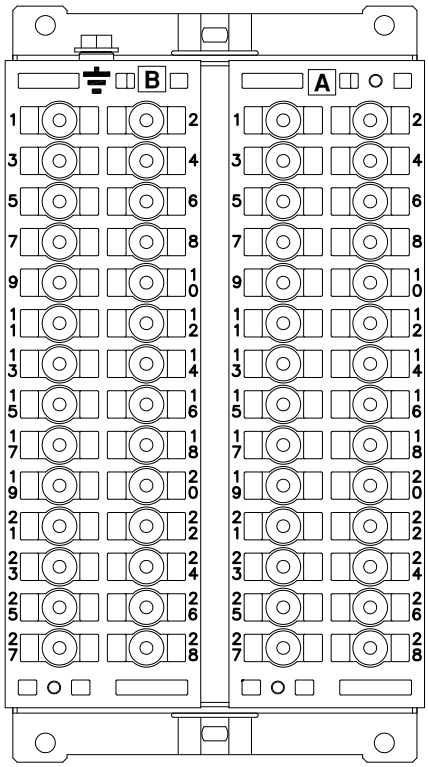

Figure: 4.1-3 E4 Case Terminal Arrangement viewed from rear

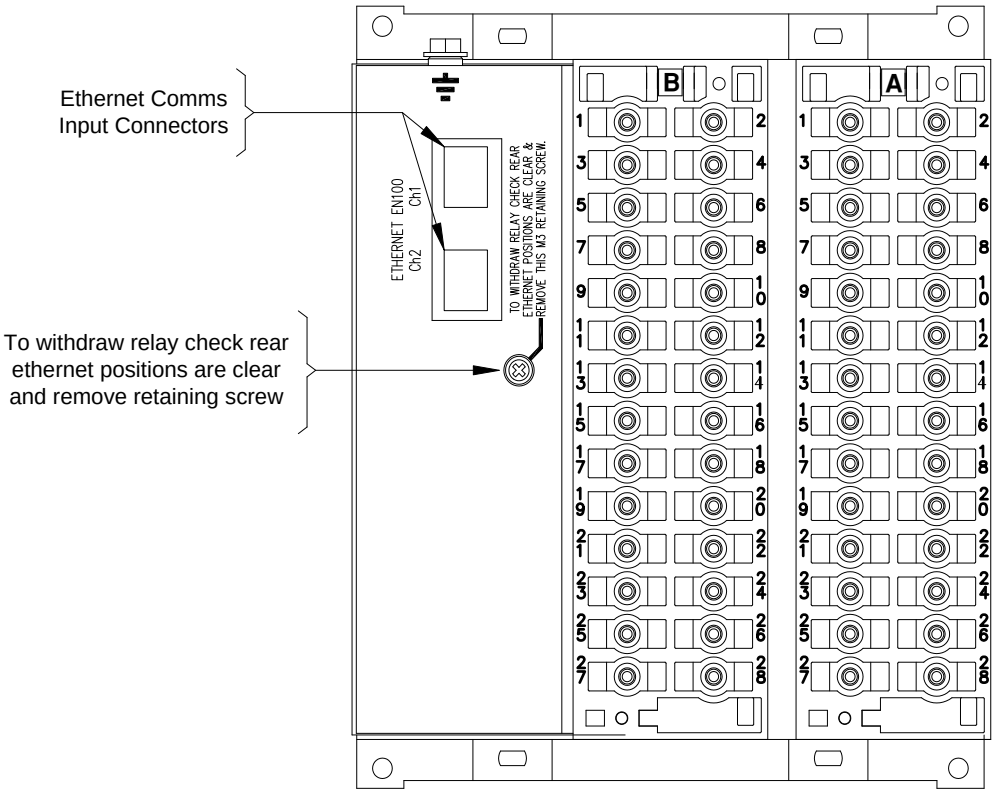

Figure 4.1-4 E6 Case Terminal Arrangement viewed from rear

Section 5: Connection/Wiring/Diagrams

5.1 Wiring Diagram: 7SR1101 EF Relay with 3BI & 5BO

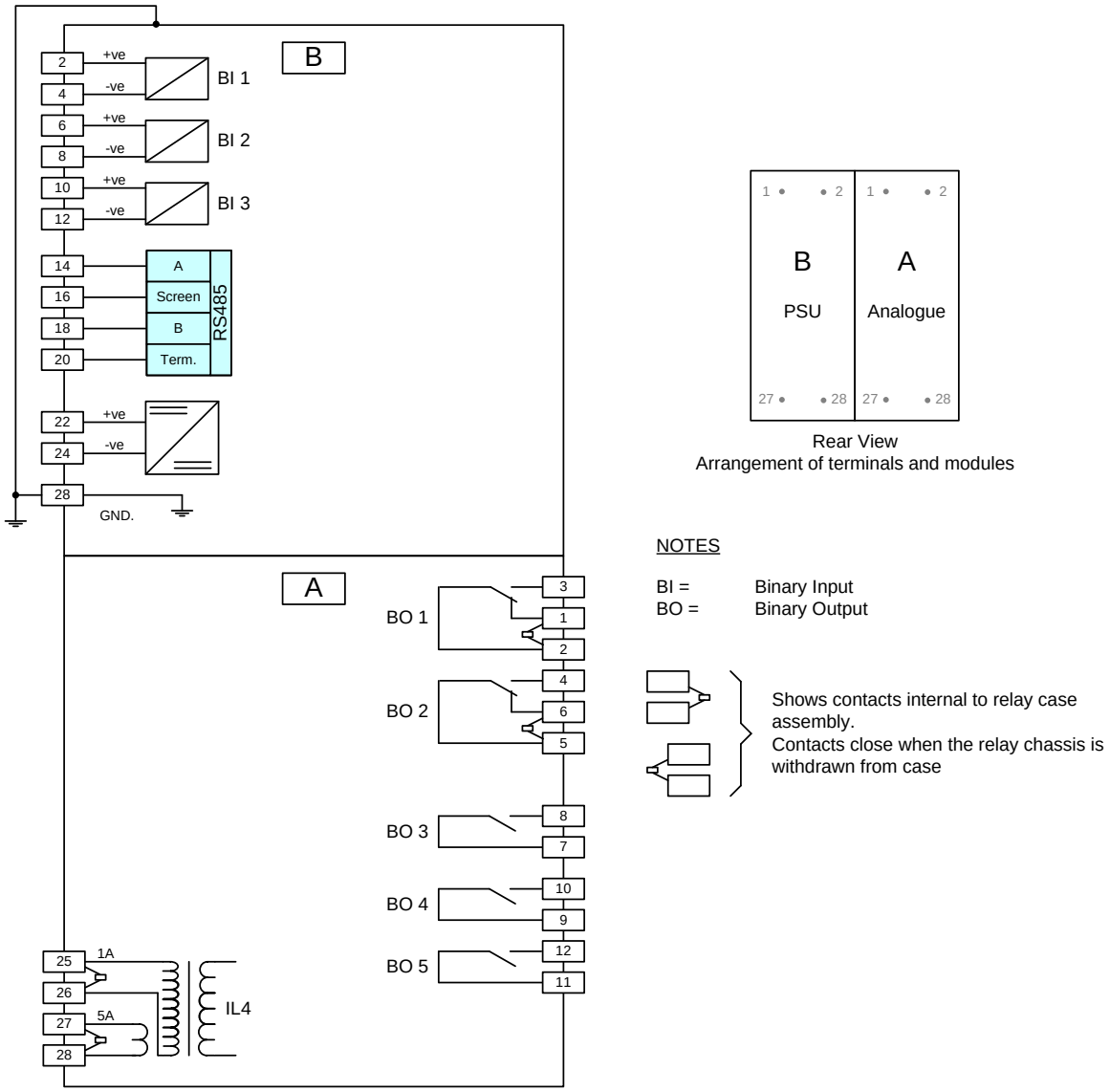

Figure: 5.1-1 7SR1101 Connection Diagram

©2019 Siemens Protection Devices Limited

5.2 Wiring Diagram: 7SR1102 OC/EF Relay with 3BI & 5BO

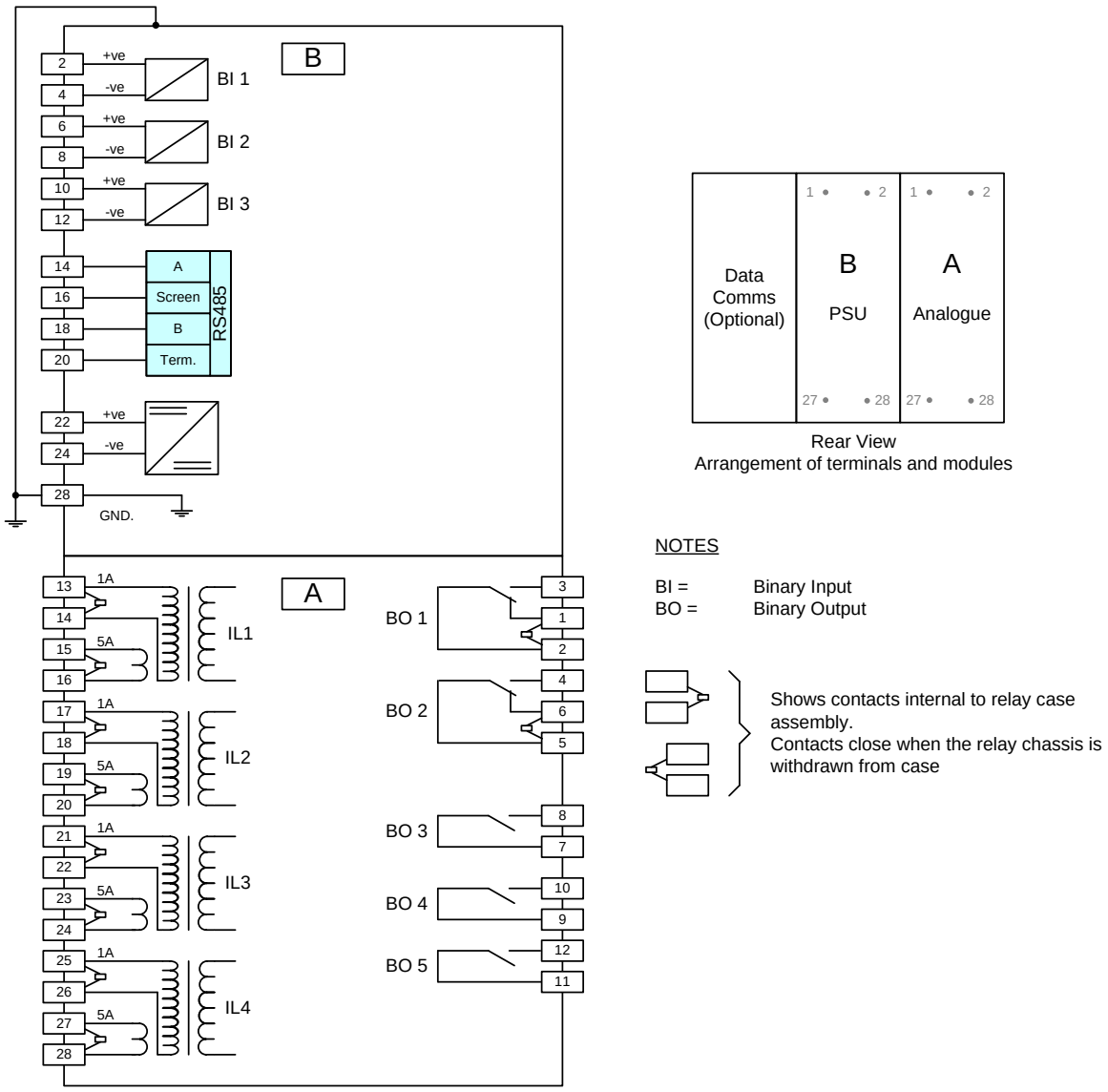

Figure: 5.2-1 7SR1102 Connection Diagram

5.3 Wiring Diagram: 7SR1103 OC/EF Relay with 6 BI & 8BO

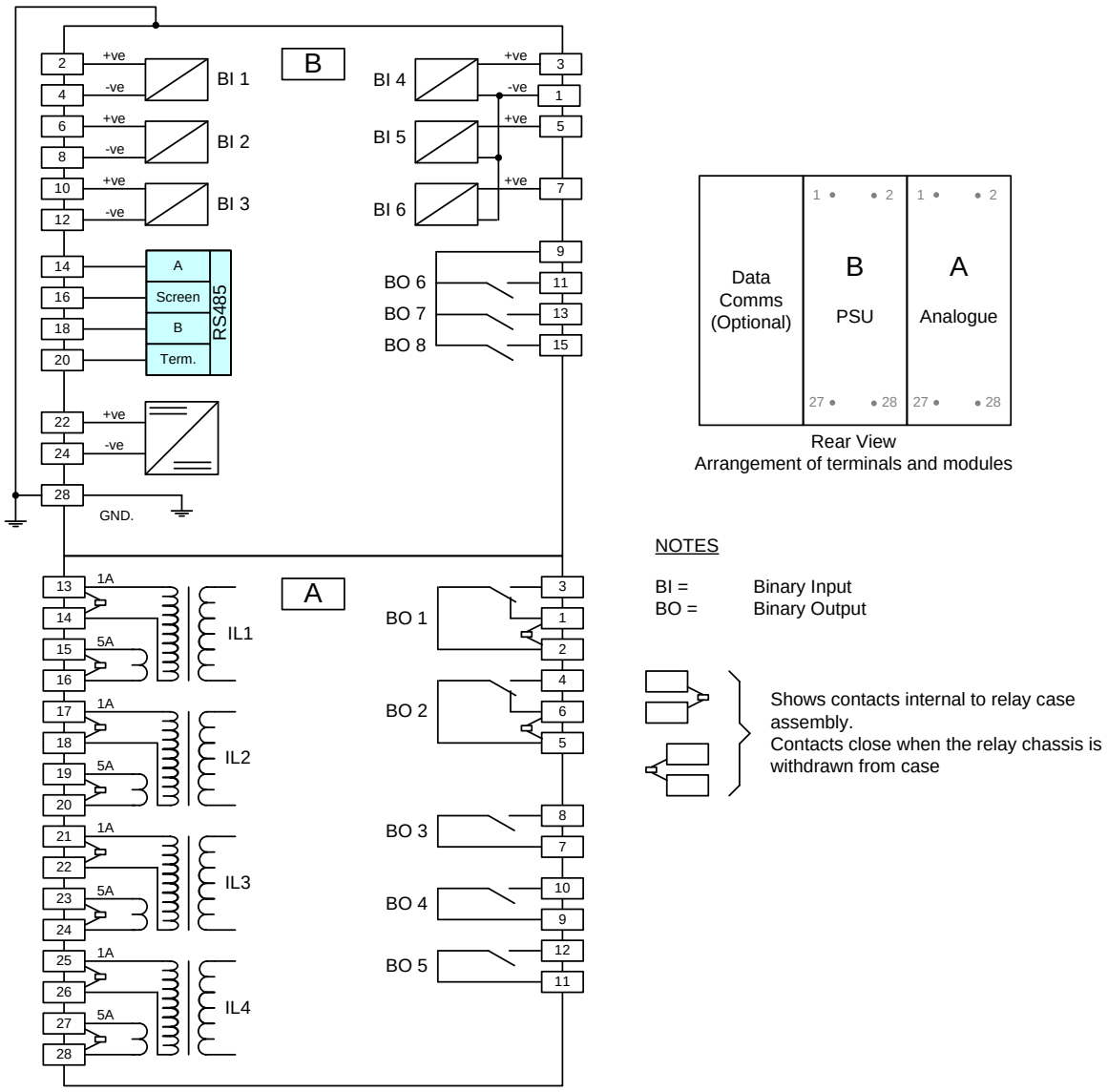

Figure: 5.3-1 7SR1103 Connection Diagram

©2019 Siemens Protection Devices Limited

5.4 Wiring Diagram: 7SR1107 OC/EF Relay with 4 BI & 8BO

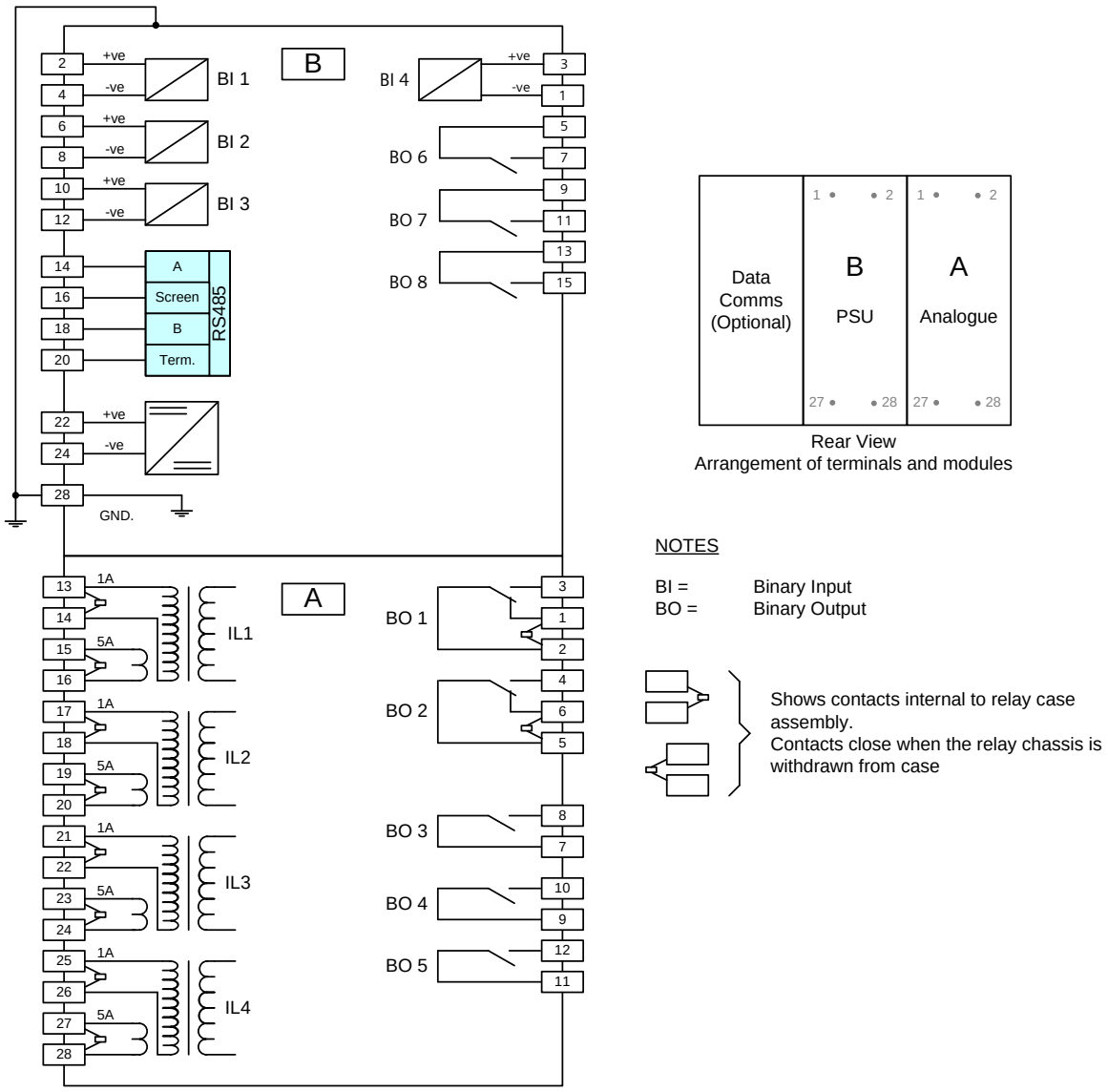

Figure: 5.4-1 7SR1107 Connection Diagram

5.5 Wiring Diagram: 7SR1204 Directional EF Relay with 3BI & 5BO

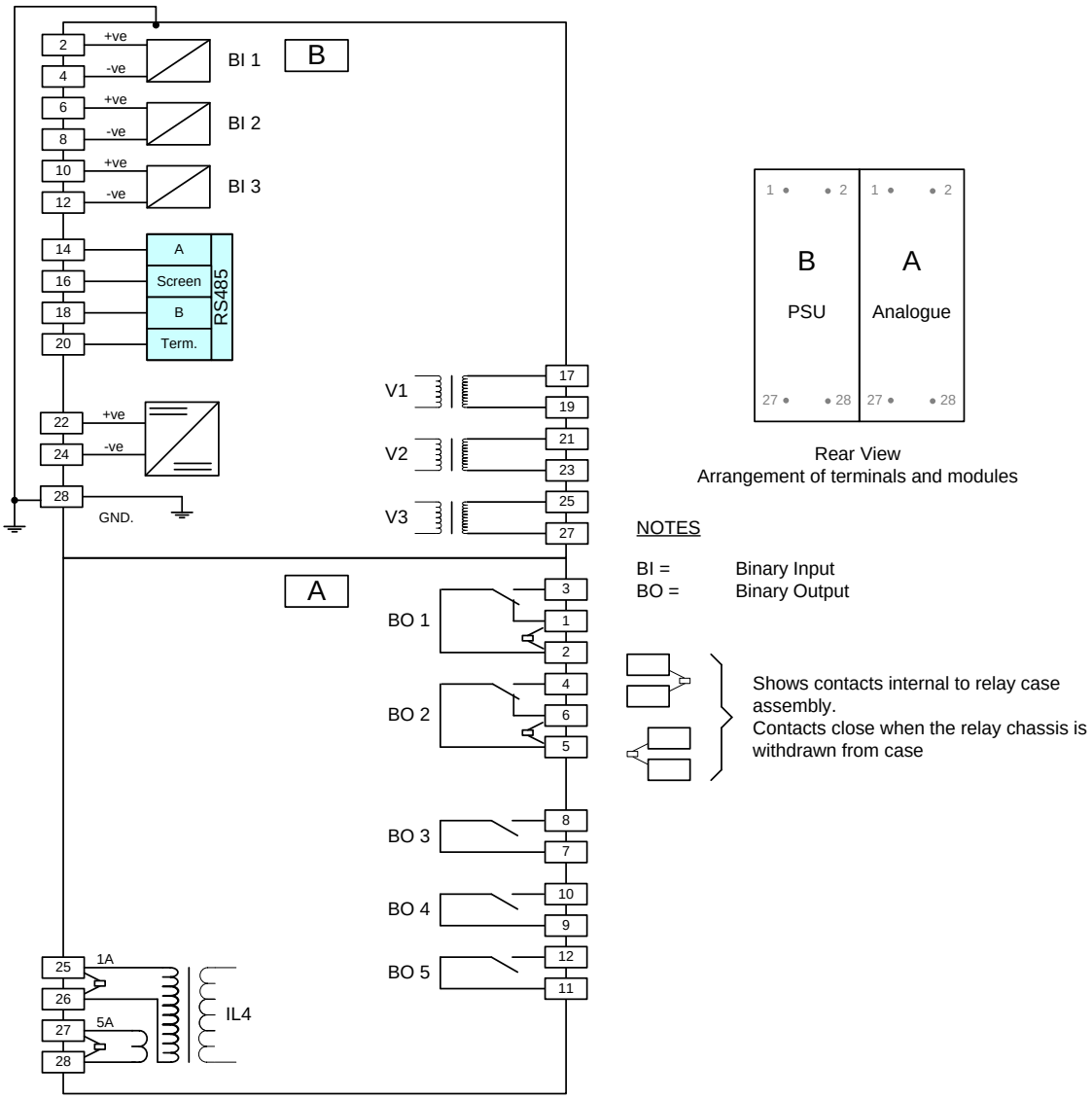

Figure: 5.5-1 7SR1204 Connection Diagram

©2019 Siemens Protection Devices Limited

5.6 Wiring Diagram: 7SR1205 Directional OC/EF Relay with 3BI & 5BO

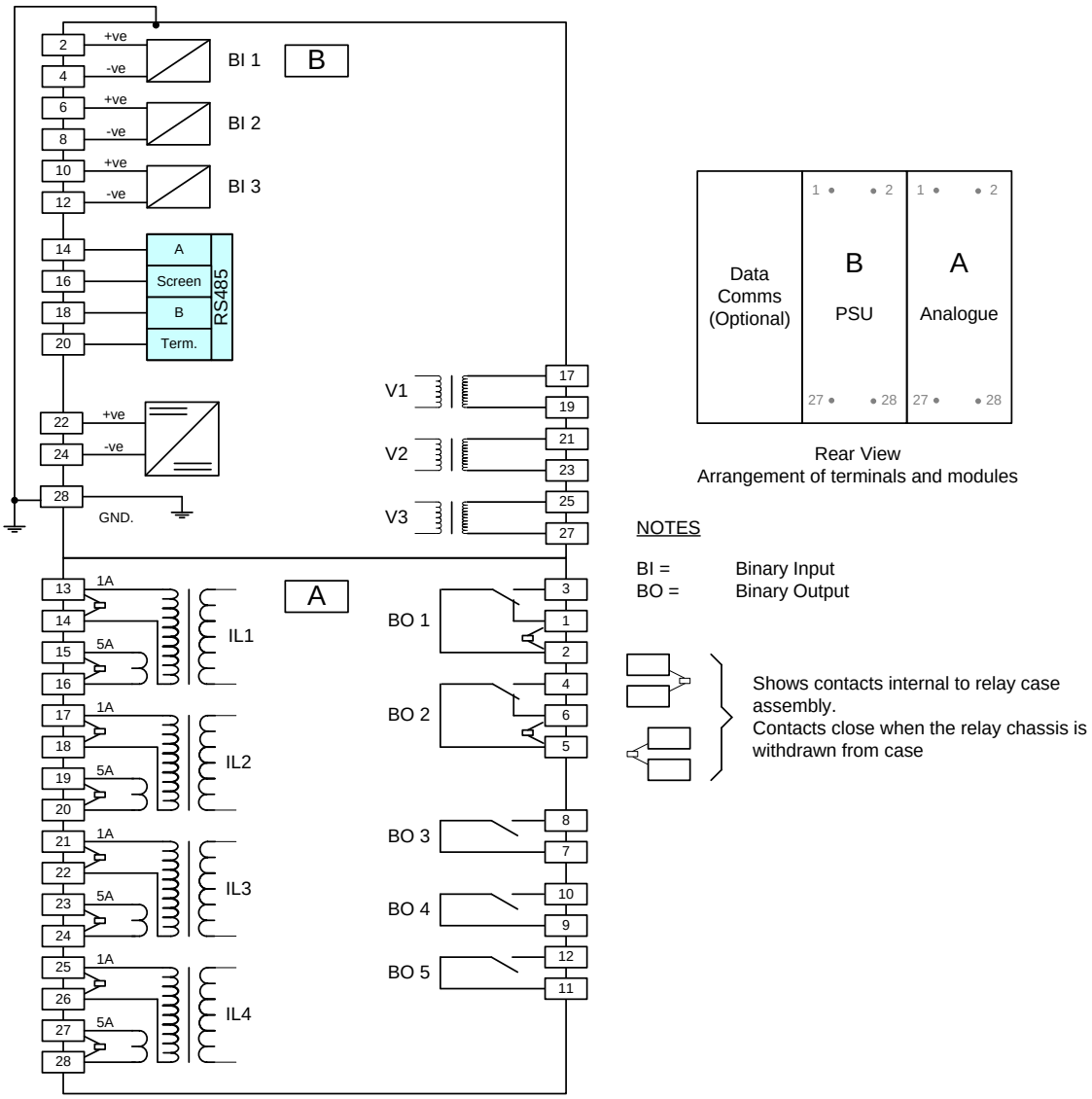

Figure: 5.6-1 7SR1205 Connection Diagram

5.7 Wiring Diagram: 7SR1206 Directional OC/EF Relay with 6BI & 8BO

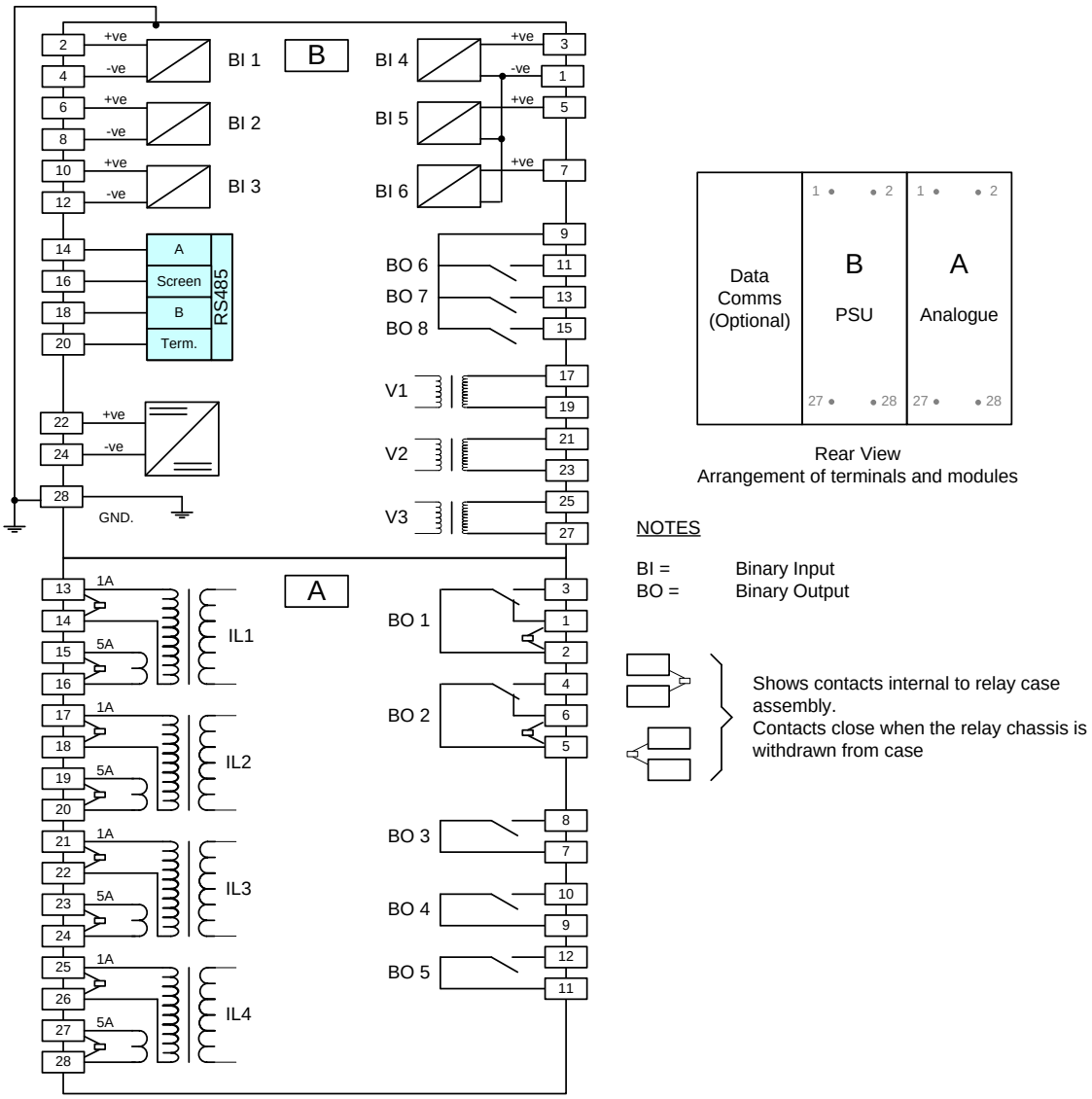

Figure: 5.7-1 7SR1206 Connection Diagram

©2019 Siemens Protection Devices Limited

5.8 Wiring Diagram: 7SR1208 Directional OC/EF Relay with 4BI & 8BO

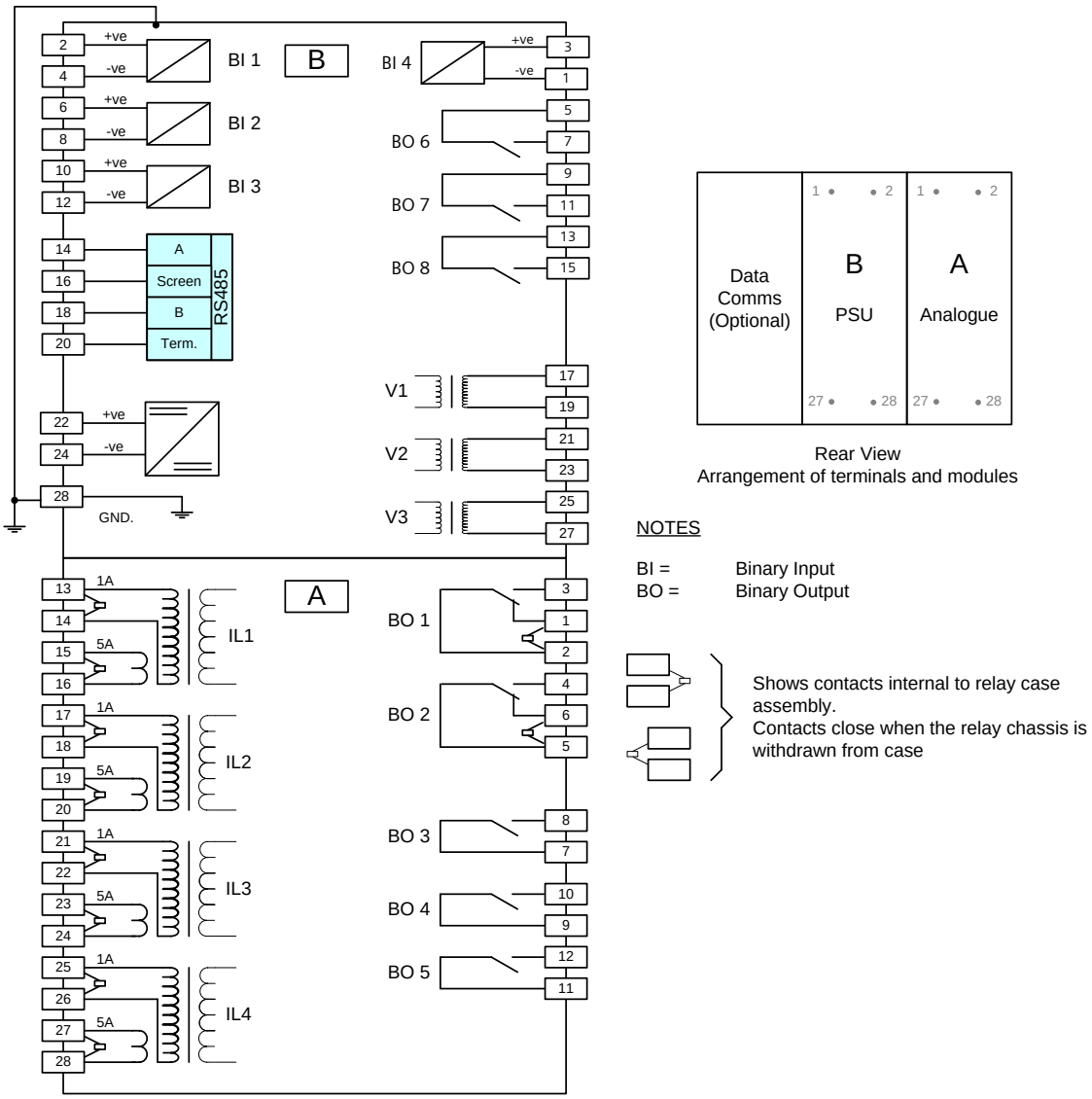

Figure: 5.8-1 7SR1208 Connection Diagram

5.9 Current Transformer Configurations

Relay Current Configuration Setting	Description	Connection
In	50G/51G - Measured E/F	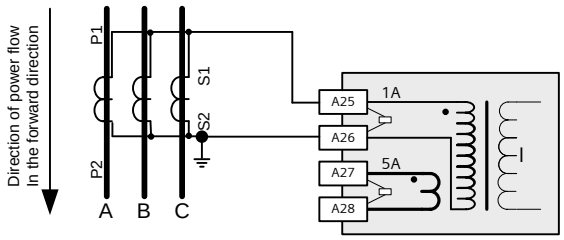
ISEF	50SEF/51SEF - Measured Sensitive E/F	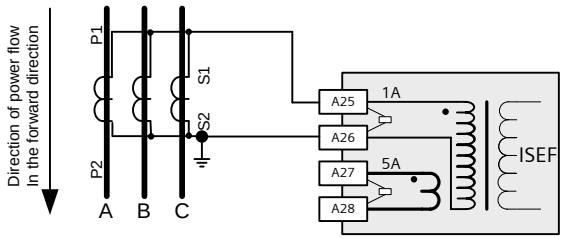 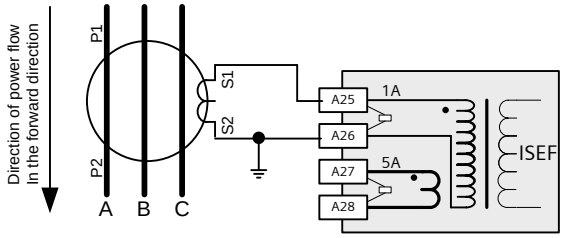
IREF	64H – Measured Restricted E/F	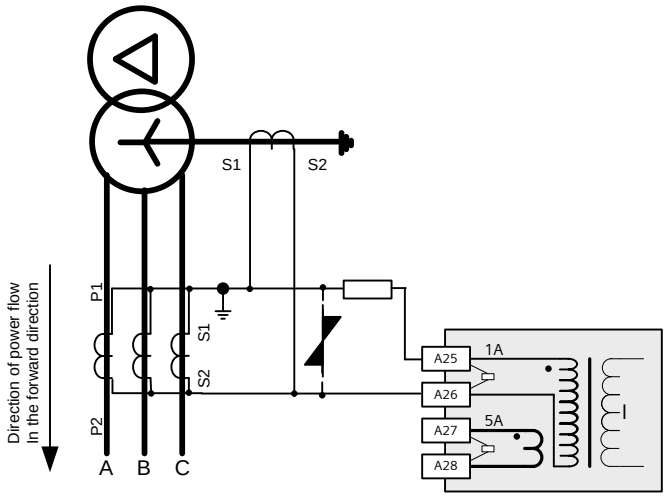

 ©2019 Siemens Protection Devices Limited

Ia, Ib, Ic In CT/VT CONFIG: Phase Current Input Phase CT Ratio	50/51 - Phase Overcurrent 50N/51N - Derived E/F Selects 1 or 5A CT ratio for primary meters	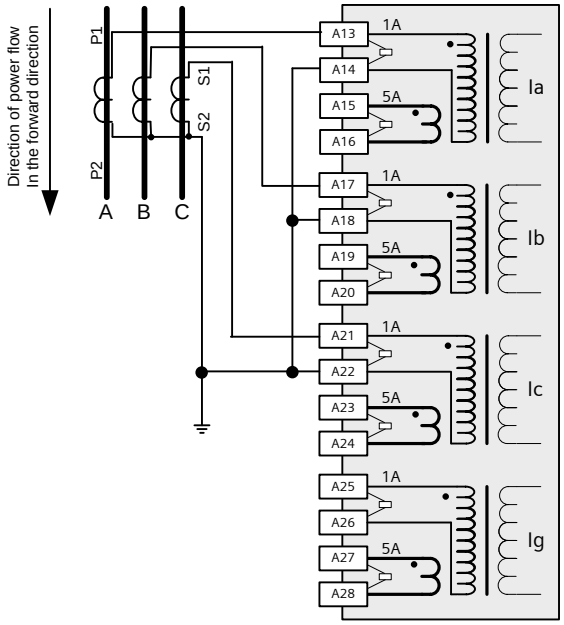

Ia, Ib, Ic In Ig CT/VT CONFIG: Phase Current Input Phase CT Ratio Earth Current Input Earth CT Ratio	50/51 - Phase Overcurrent 50N/51N - Derived E/F 50G/51G - Measured E/F Selects 1 or 5A CT ratio for primary meters	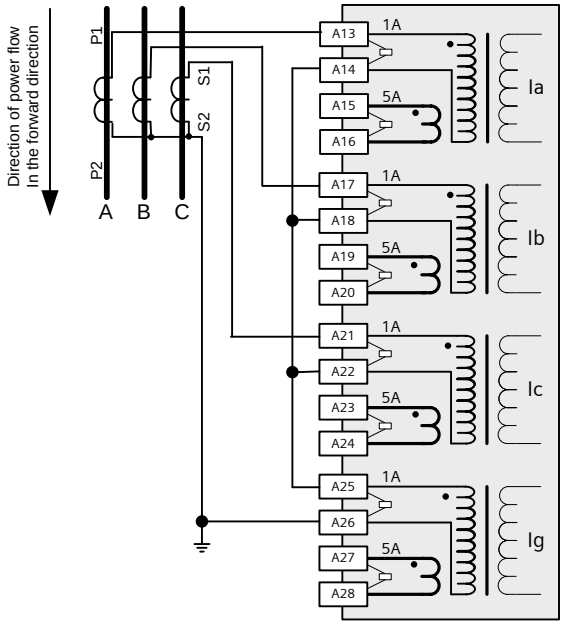 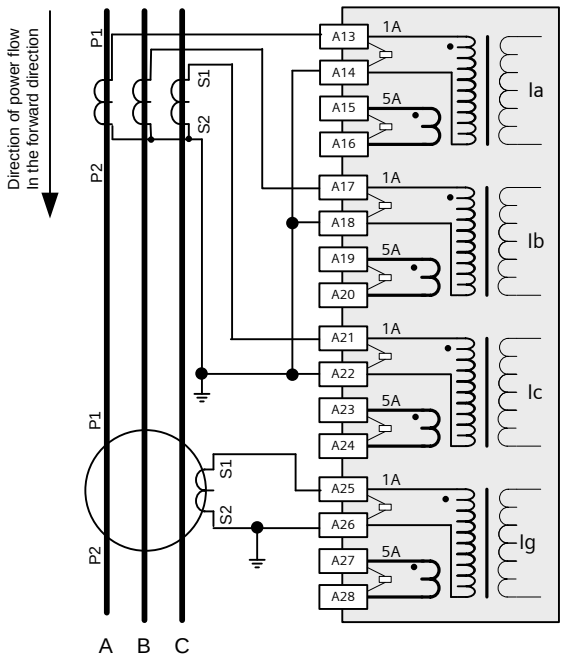

©2019 Siemens Protection Devices Limited

Ia, Ib, Ic In Ig CT/VT CONFIG: Phase Current Input Phase CT Ratio Earth Current Input Earth CT Ratio	50/51 - Phase Overcurrent 50N/51N - Derived E/F 50G/51G - Measured E/F Selects 1 or 5A CT ratio for primary meters	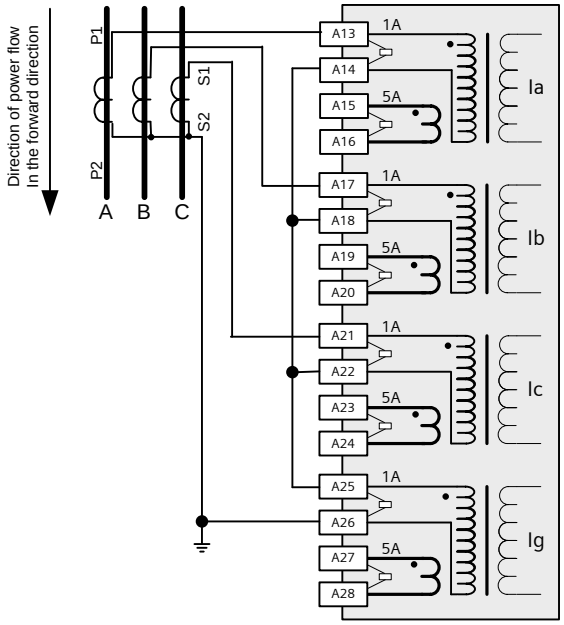 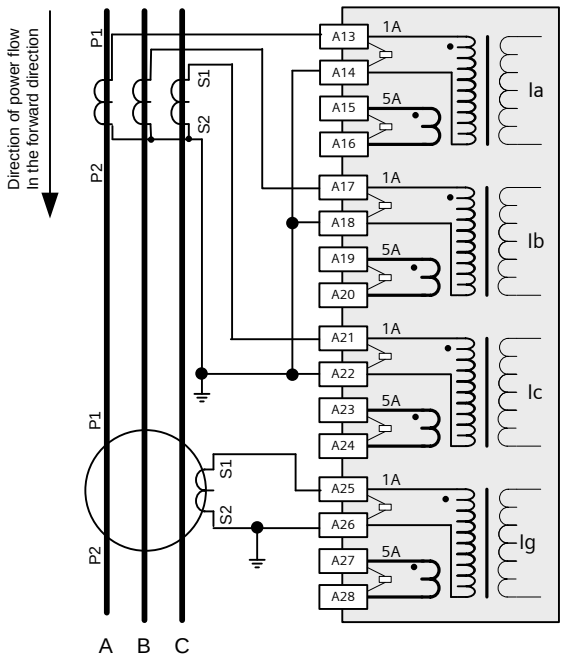

Ia, Ib, Ic ISEF CT/VT CONFIG: Phase Current Input Phase CT Ratio	2 Phase CT only. For application on isolated or compensated networks. Phase Overcurrent Measured SEF Selects 1 or 5A CT ratio for primary meters	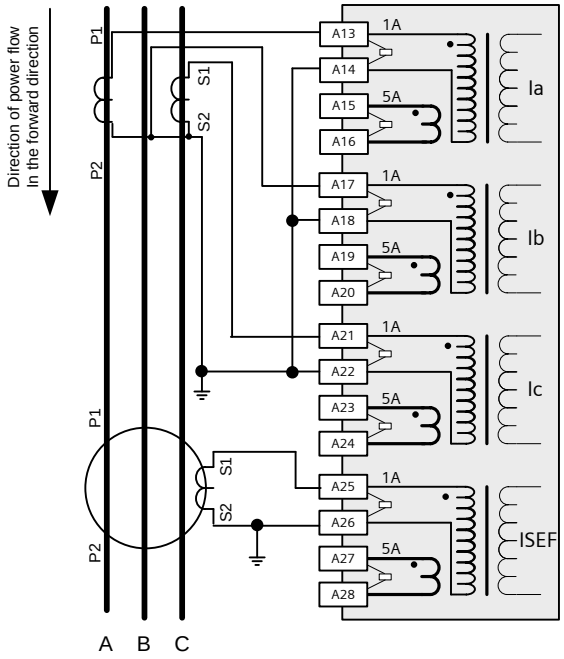
Ia, Ib, Ic In Ig CT/VT CONFIG: Phase Current Input Phase CT Ratio	Phase Overcurrent Derived E/F Measured Standby E/F Selects 1 or 5A CT ratio for primary meters	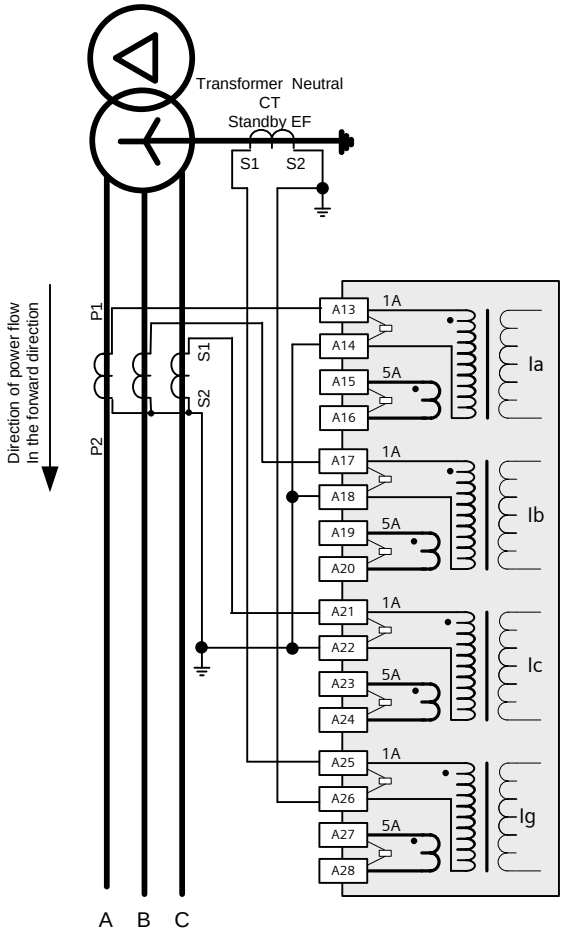

 ©2019 Siemens Protection Devices Limited

Current Input(s): Ia, Ib, Ic Isef	Phase Overcurrent, Derived E/F & ‘B’ Phase Sensitive Power	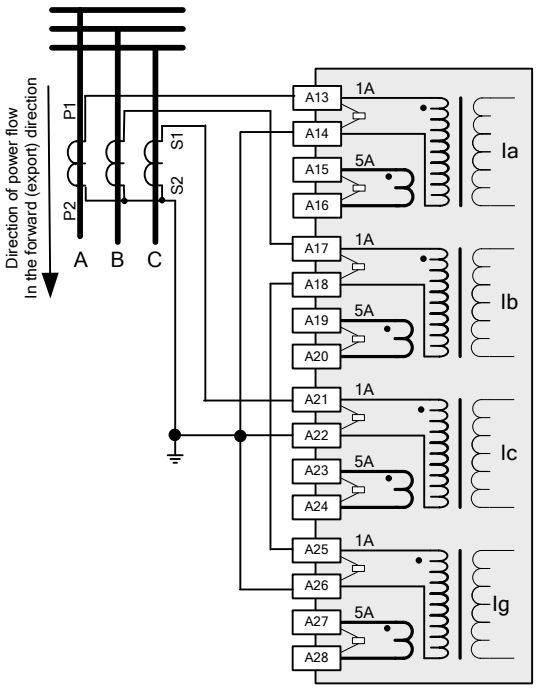
CT/VT CONFIG: Phase Current Input	Selects 1 or 5A	
CT/VT CONFIG: Phase CT Ratio	CT ratio for primary meters	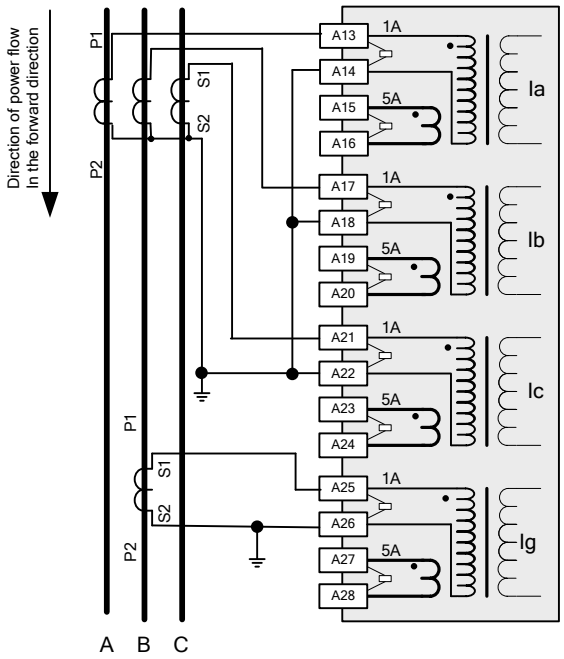
CT/VT CONFIG: Earth Current Input	Selects 1 or 5A for Sensitive Power input	
CT/VT CONFIG: Earth CT Ratio	CT ratio for primary meters for Sensitive Power input	

5.10 Voltage Transformer Configurations

Relay Voltage Configuration Setting	Description	Connection
Van, Vbn, Vcn	67 & 67N & 67G 47, 59N, 27/59 & 81 Phase – Neutral Phase – Phase Calculated NPS ZPS	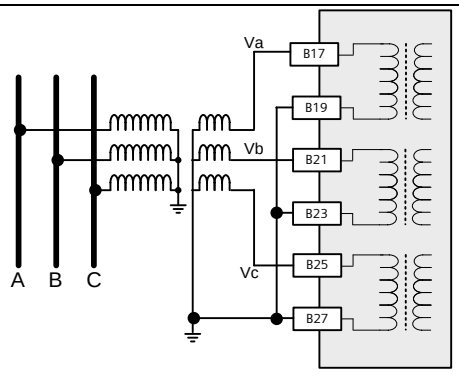
Va, Vb, Vc	67 & 67N & 67G 47,27/59 & 81 Phase – Neutral Phase – Phase Calculated NPS No ZPS available	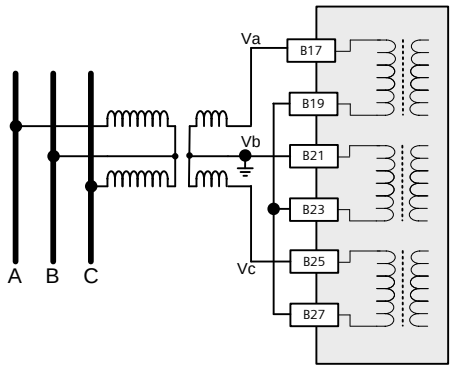
Vab, Vbc, 3Vo	67 & 67N & 67G 47, 59N, 27/59 & 81 Phase – Neutral Calculated Phase – Phase Phase Vca Calculated NPS ZPS	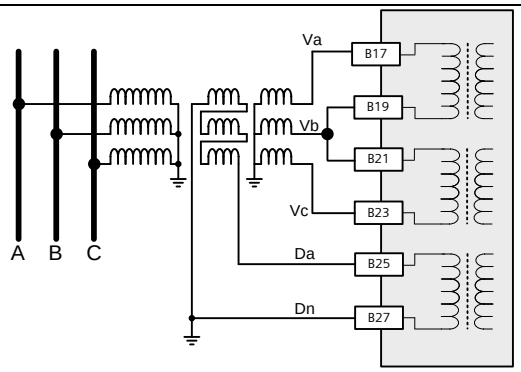

 ©2019 Siemens Protection Devices Limited

Section 6: Data Comms Connections

6.1 RS485 Connection

The RS485 communication port is located on the rear of the relay and can be connected using a suitable RS485 120Ω screened twisted pair cable.

The RS485 electrical connection can be used in a single or multi-drop configuration. The RS485 master must support and use the Auto Device Enable (ADE) feature.

The last device in the connection must be terminated correctly in accordance with the master driving the connection. A terminating resistor is fitted in each relay, when required this is connected in circuit using an external wire loop between terminals 18 and 20 of the power supply module.

The polarity of the signal terminals is marked as A and B in line with the RS485 standard. The polarity is that when the bus is in the quiescent state and no communication is taking place, the B terminal is more positive than A. This can be used to identify the polarity of any equipment to be connected, typically measured at each terminal in turn to ground. Connection of the device to a termination network at the end of the bus will also be to suit the quiescent state as shown below.

The polarity marking is often found to be reversed or marked as +/- on other equipment so care is required. If the devices are connected in reverse, communication to all devices will be disturbed but no damage will occur. If problems are experienced during commissioning, the connections should be tried in reverse.

Up to 64 relays can be connected to the RS485 bus.

The RS485 data communications link with a particular relay will be broken if the relay element is withdrawn from the case, all other relays will still communicate.

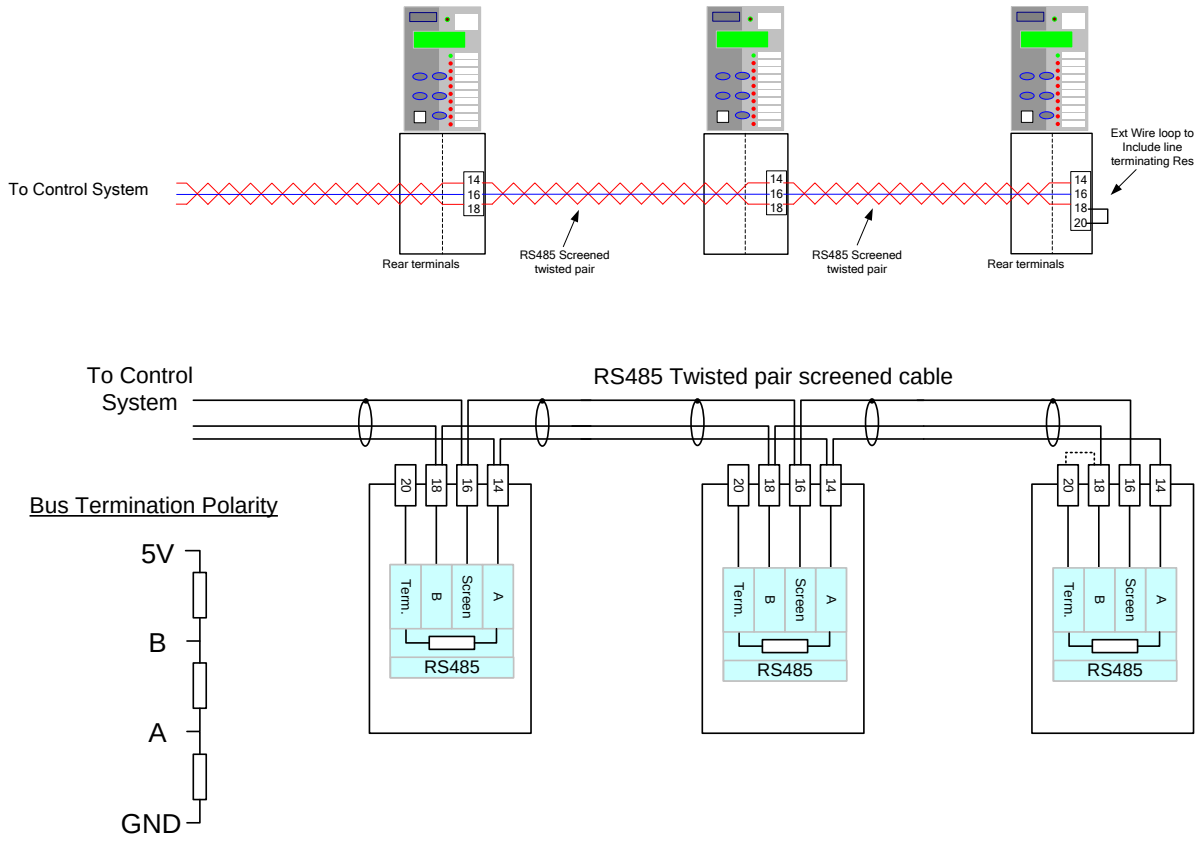

Figure: 6.1-1 RS485 Data Comms Connections Between Relays

6.2 Additional (Optional) Ethernet Connection for IEC 61850

Rear Ethernet Comms port Ch 1 and Ch 2 comprises Duplex LC 100BaseF in acc. With IEEE802.3 Fibre–Optic or RJ45 100BaseT in acc. With IEEE802.3 electrical connectors.

When installing fibre, ensure that the fibres' bend radii comply with the recommended minimum for the fibre used-typically 50 mm is acceptable, 62.5/125 µm glass fibre with Duplex-LC connector recommended for all distances.

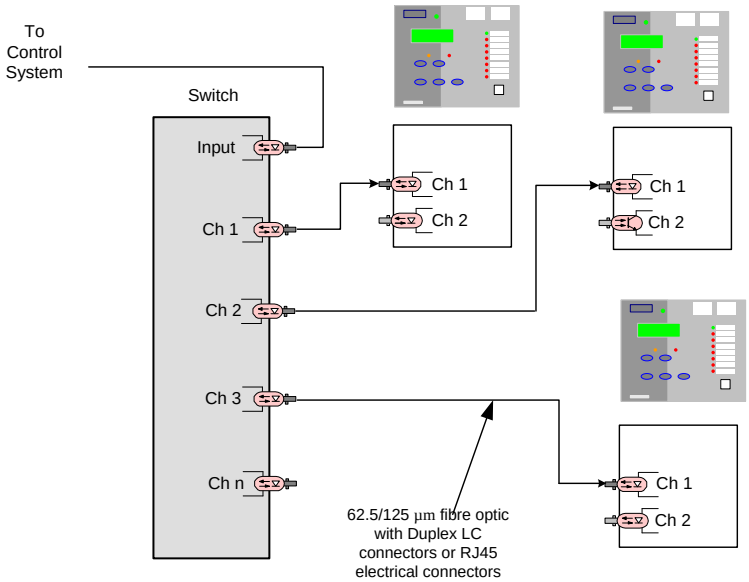

Figure: 6.2-1 Ethernet connection for IEC 61850 (star connection)

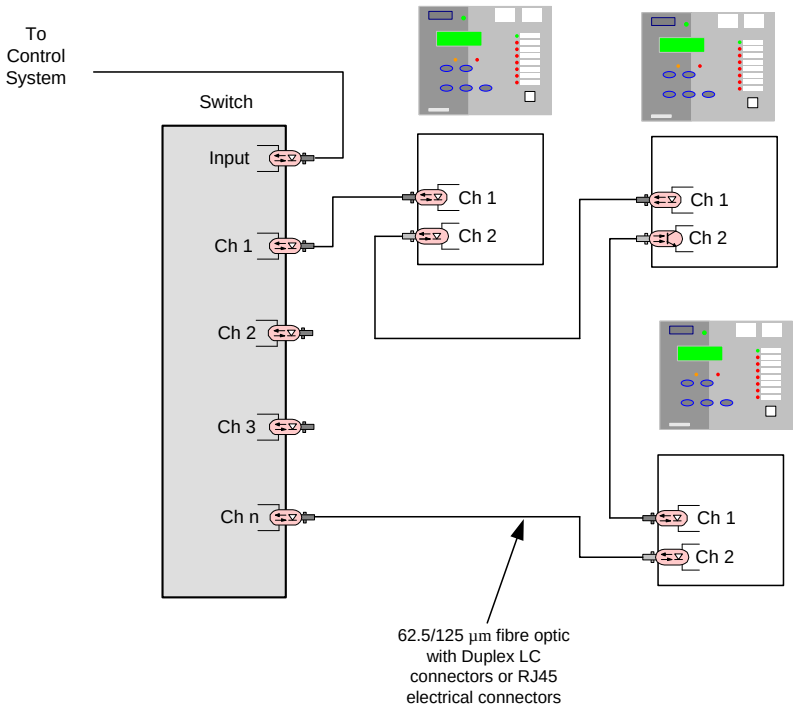

Figure: 6.2-2 Ethernet connection for IEC 61850 (ring connection)

©2019 Siemens Protection Devices Limited

6.3 Ethernet Network Redundancy IEC 61850

The EN100 module is used on Reyrolle devices to provide Ethernet/IEC61850 functionality. The EN100 supports RSTP, PRP & HSR redundancy protocols.

All 7SR11 and 7SR12 IEC61850 variants are delivered with the EN100+ (Plus) module and firmware 4.21 or later. The earlier EN100 (standard) modules are not used in the 7SR11 and 7SR12.

The EN100 module firmware can be updated by connecting to the relay via the rear Ethernet port. For more information on connecting to the relay via the Ethernet port, please see the Reydisp Manager User guide. Depending on the EN100 module type and Firmware version, the following protocol options are available:

Interface Type	EN100 Firmware	Line Mode	Switch Mode			
			RSTP	OSM	PRP	HSR
Electrical RJ45 EN100+	4.08 or earlier	✓	✓	✓	×	×
Electrical RJ45 EN100+	4.21and later	✓	✓	✓	✓	✓
Optical EN100+	4.08 or earlier	✓	✓	✓	×	×
Optical EN100+	4.21and later	✓	✓	✓	✓	✓

Table 2: EN100 Redundancy availability

6.3.1 RSTP – Rapid Spanning Tree Protocol

RSTP is a redundancy protocol with a minimal response time that has been standardized in IEEE-802.1D (2004). The reconfiguration time depend on the topology and start at 50ms.

RSTP need to be enabled on the device within Reydisp Manager (See Reydisp Manager user guide). Network rings with up to 30 devices is possible.

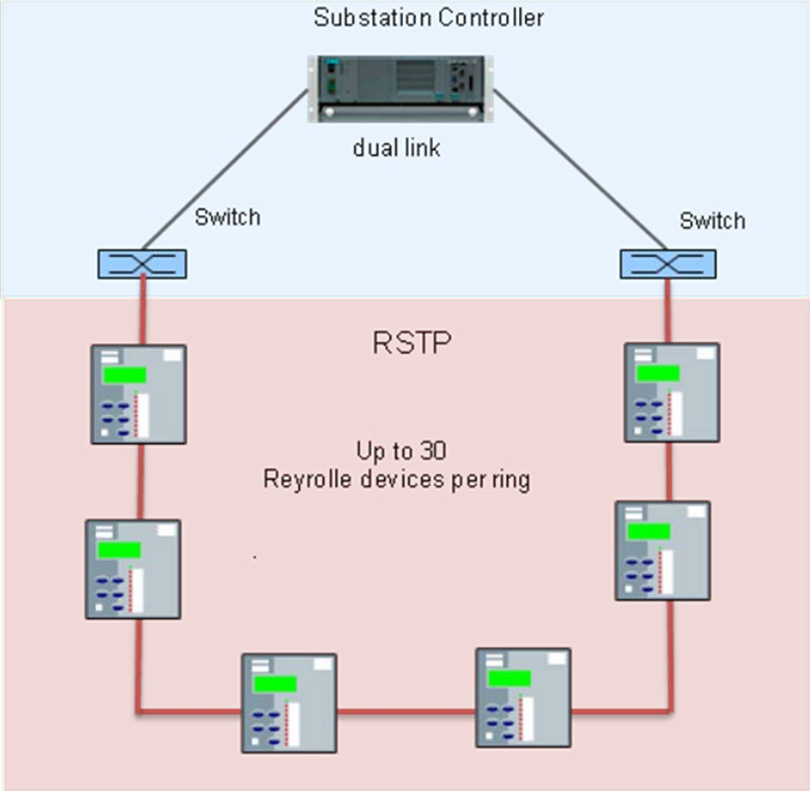

Figure: 6.3-1 RSTP Ethernet Network Ring Configuration

6.3.2 PRP – Parallel Redundancy Protocol

The HSR redundancy protocol according to the IEC 62439-3 standard is based on double transmission of message frames over ring-topology networks in both directions. In the case of an error, the message frame will be transmitted without any delay. No reconfiguration time is necessary for the network, as is the case for RSTP.

PRP need to be enabled on the device within Reydisp Manager (See Reydisp Manager user guide).

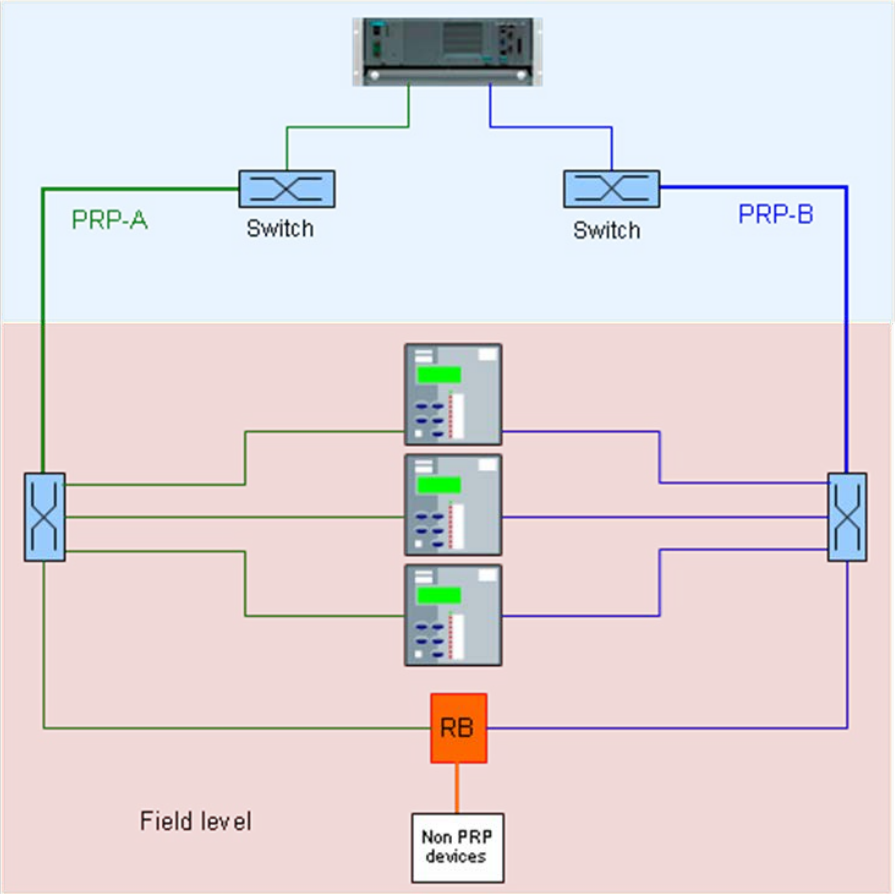

Figure: 6.3-2 PRP Ethernet Network Configuration

©2019 Siemens Protection Devices Limited

6.3.3 HSR – High Availability Seamless Redundancy Protocol

The HSR redundancy protocol according to the IEC 62439-3 standard is based on double transmission of message frames over ring-topology networks in both directions. In the case of an error, the message frame will be transmitted without any delay. No reconfiguration time is necessary for the network.

HSR needs to be enabled on the device within Reydisp Manager (See Reydisp Manager user guide). Network rings with up to 50 devices is possible.

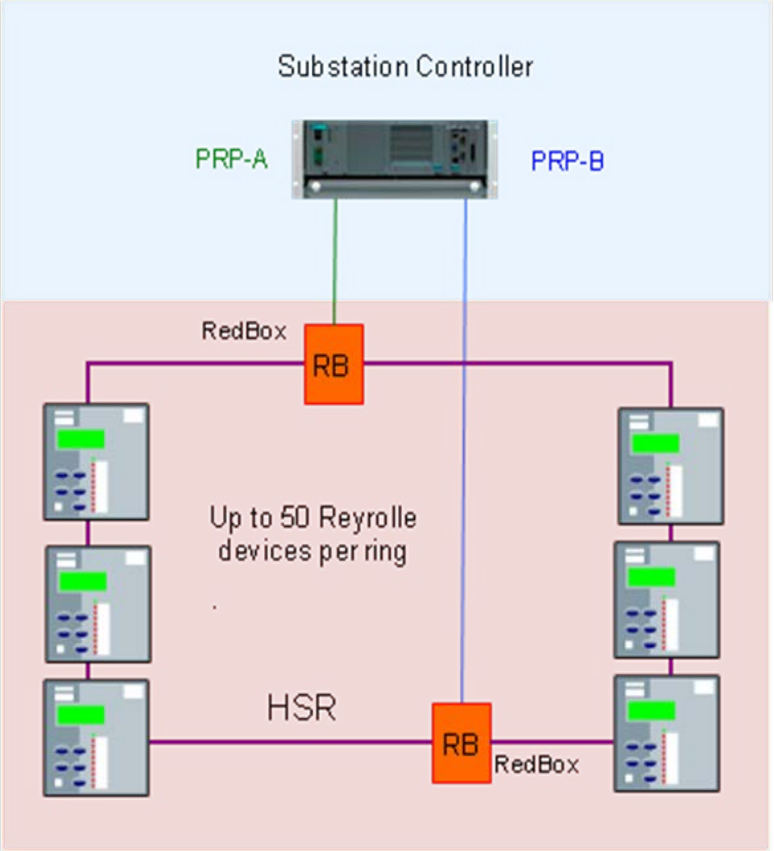

Figure: 6.3-3 HSR Ethernet Network Ring Configuration

©2019 Siemens Protection Devices Limited

7SR11 and 7SR12

Commissioning and Maintenance Guide

Document Release History

This document is issue 2019/05. The list of revisions up to and including this issue is:

2019/05	AC binary input application removed
2017/05	Minor error in ANSI/IEC Reset description. Addition clauses to suit IEC 60255-27
2015/08	Additional software features added.
2015/06	Software Maintenance
2014/10	Addition of optional IEC 61850 communication protocol.
2013/09	Software Maintenance
2013/01	Software Maintenance
2012/02	AC auxiliary power supply added
2012/01	Software Maintenance
2011/06	Software Maintenance
2010/04	Amendments following PLM review
2010/02	Document reformat due to rebrand
2009/09	Revised format
2009/04	First Issue

The copyright and other intellectual property rights in this document, and in any model or article produced from it (and including any registered or unregistered design rights) are the property of Siemens Protection Devices Limited. No part of this document shall be reproduced or modified or stored in another form, in any data retrieval system, without the permission of Siemens Protection Devices Limited, nor shall any model or article be reproduced from this document unless Siemens Protection Devices Limited consent.

While the information and guidance given in this document is believed to be correct, no liability shall be accepted for any loss or damage caused by any error or omission, whether such error or omission is the result of negligence or any other cause. Any and all such liability is disclaimed.

Contents

Section 1: Common Functions 6
1.1 Overview 6
1.2 Before Testing 6
1.2.1 Safety 6
1.2.2 Sequence of Tests 6
1.2.3 Test Equipment 7
1.2.4 Use of PC to facilitate testing 7
1.2.5 Precautions 7
1.2.6 Applying Settings 7
1.3 Tests 8
1.3.1 Inspection 8
1.3.2 Secondary Injection Tests 8
1.3.3 Primary Injection Tests 8
1.3.4 Putting into Service 8
1.4 AC Analogue Energising Quantities 9
1.5 Binary Inputs 9
1.6 Binary Outputs 10
1.7 Relay Case Shorting Contacts 10
Section 2: Protection Functions 11
2.1 Phase Directional Polarity Check 12
2.1.1 2 out of 3 logic 13
2.2 Phase Overcurrent (67/50,67/51) 14
2.2.1 Definite Time Overcurrent (50) 14
2.2.2 Inverse Time Overcurrent (51) 15
2.3 Voltage Controlled Overcurrent (51V) 17
2.4 Cold Load (51C) 19
2.4.1 Inverse Time Overcurrent (51C) 20
2.5 Arc Flash Detection (50AFD) 23
2.6 Directional Earth Fault Polarity Check (67N) 24
2.7 Derived Earth Fault (67/50N, 67/51N) 25
2.7.1 Directional Polarity 26
2.7.2 Definite Time Overcurrent (50N) 26
2.7.3 Inverse Time Overcurrent (51N) 26
2.8 Measured Earth fault (67/50G,67/51G) 29
2.8.1 Directional Polarity 30
2.8.2 Definite Time Overcurrent (67/50G) 30
2.8.3 Inverse Time Overcurrent (67/51G) 30
2.9 Sensitive Earth fault (67/50S,67/51S) 33
2.9.1 Directional Polarity 33
2.9.2 Definite Time Overcurrent (50SEF) 34
2.9.3 Wattmetric Protection 34
2.9.4 Inverse Time Overcurrent (51SEF) 35
2.10 Restricted Earth fault (64H) 37
2.11 Negative Phase Sequence Overcurrent (46NPS) 39
2.11.1 Definite Time NPS Overcurrent (46DT) 40
2.11.2 Inverse Time NPS Overcurrent (46IT) 40
2.12 Undercurrent (37) 42
2.13 Thermal Overload (49) 44
2.14 Over/Under Voltage 46
2.14.1 Phase Under/Over Voltage (27/59) 46
2.14.2 Undervoltage Guard (27/59UVG) 48
2.14.3 NPS Overvoltage (47) 48
2.14.4 Undervoltage Guard (47 U/V Guard) 49
2.14.5 Neutral Overvoltage (59N) 50
2.14.6 Definite Time (59NDT) 50
2.14.7 Inverse Time (59NIT) 50
2.15 Under/Over Frequency (81) 52
2.16 Power (32) 54

©2019 Siemens Protection Devices Limited

2.17 Sensitive Power (32S) 56
2.18 Power Factor (55) 58
Section 3: Supervision Functions 60
3.1 CB Fail (50BF) 60
3.1.1 Element Blocking 61
3.2 Voltage Transformer Supervision (60VTS) 62
3.2.1 1 or 2 Phase VT fail 62
3.2.2 3 Phase VT fail 63
3.3 Current Transformer Supervision (60CTS) 64
3.3.1 7SR11 64
3.3.2 7SR12 65
3.4 Broken Conductor (46BC) 66
3.5 Trip/Close Circuit Supervision (74T/CCS) 68
3.6 Magnetising Inrush Detector (81HBL) 69
Section 4: Control & Logic Functions 70
4.1 Autoreclose (79) 70
4.2 Quick Logic 70
Section 5: Testing and Maintenance 71
5.1 Periodic Tests 71
5.2 Maintenance 71
5.3 Troubleshooting 72

List of Figures

Figure 2-1 Directional Phase Fault Boundary System Angles 13
Figure 2-2 Phase Overcurrent 14
Figure 2-3 Voltage Controlled Overcurrent 17
Figure 2-4 Cold Load 19
Figure 2-5 Cold Load Logic diagram 20
Figure 2-6 Arc Flash Detection 23
Figure 2-7 Directional Earth Fault Boundary System Angles 24
Figure 2-8 Derived Earth Fault 25
Figure 2-9 Measured Earth Fault 29
Figure 2-10 Sensitive Earth Fault 33
Figure 2-11 Restricted Earth Fault 37
Figure 2-12 Negative Phase Sequence Overcurrent 39
Figure 2-13 Undercurrent 42
Figure 2-14 Thermal Overload 44
Figure 2-15 Phase Under/Over Voltage 46
Figure 2-16 NPS Overvoltage 48
Figure 2-17 Neutral Overvoltage 50
Figure 2-18 Under/Over Frequency 52
Figure 2-19 Power 54
Figure 2-20 Sensitive Power 56
Figure 2-21 Power Factor 58
Figure 2-22 CB Fail 60
Figure 2-23 Voltage Transformer Supervision 62
Figure 2-24 Current Transformer Supervision 7SR11 64
Figure 2-25 Current Transformer Supervision 7SR12 65
Figure 2-26 Broken Conductor 66
Figure 2-27 Trip Circuit Supervision 68
Figure 2-28 Magnetising Inrush Detector 69

List of Tables

Table 2-1 Troubleshooting Guide 72

Section 1: Common Functions

1.1 Overview

Commissioning tests are carried out to prove:

a) Equipment has not been damaged in transit.

b) Equipment has been correctly connected and installed.

c) Characteristics of the protection and settings which are based on calculations.

d) Confirm that settings have been correctly applied.

e) To obtain a set of test results for future reference.

1.2 Before Testing

1.2.1 Safety

The commissioning and maintenance of this equipment should only be carried out by skilled personnel trained in protective relay maintenance and capable of observing all the safety precautions and regulations appropriate to this type of equipment and also the associated primary plant.

The integrity of any protective conductor connection shall be checked before carrying out any other actions.

The equipment ratings, operating instructions and installation instructions shall be checked before commissioning or maintenance.

Ensure that all test equipment and leads have been correctly maintained and are in good condition. It is recommended that all power supplies to test equipment be connected via a Residual Current Device (RCD), which should be located as close to the supply source as possible.

The choice of test instrument and test leads must be appropriate to the application. Fused instrument leads should be used when measurements of power sources are involved, since the selection of an inappropriate range on a multi-range instrument could lead to a dangerous flashover. Fused test leads should not be used where the measurement of a current transformer (C.T.) secondary current is involved, the failure or blowing of an instrument fuse or the operation of an instrument cut-out could cause the secondary winding of the C.T. to become an open circuit.

Open circuit secondary windings on energised current transformers are a hazard that can produce high voltages dangerous to personnel and damaging to equipment, test procedures must be devised so as to eliminate this risk.

1.2.2 Sequence of Tests

If other equipment is to be tested at the same time, then such testing must be co-ordinated to avoid danger to personnel and equipment.

When cabling and wiring is complete, a comprehensive check of all terminations for tightness and compliance with the approved diagrams must be carried out. This can then be followed by the insulation resistance tests, which if satisfactory allows the wiring to be energised by either the appropriate supply or test supplies.

When primary injection tests are completed satisfactorily, all remaining systems can be functionally tested before the primary circuit is energised. Some circuits may require further tests before being put on load.

Protection relay testing will require access to the protection system wiring diagrams, relay configuration information and protection settings. The following sequence of tests is loosely based on the arrangement of the relay menu structure. A test log based on the actual tests completed should be recorded for each relay tested.

The ‘Description of Operation’ section of this manual provides detailed information regarding the operation of each function of the relay. All functions are not available in all devices, please refer the ‘Description of Operation’ section to establish your function set.

©2019 Siemens Protection Devices Limited

1.2.3 Test Equipment

Required test equipment is:

1. Secondary injection equipment with integral time interval meter
2. Primary injection equipment
3. A power source with nominal voltage within the working range of the relay's auxiliary supply rating.
4. A power source with nominal voltage within the working range of the relay's binary input rating.
5. Other equipment as appropriate to the protection being commissioned – this will be specified in the product specific documentation.

The secondary injection equipment should be appropriate to the protection functions to be tested. Additional equipment for general tests and for testing the communications channel is:

6. Portable PC with appropriate interface equipment.
7. Printer to operate from the above PC (Optional).

1.2.4 Use of PC to facilitate testing

The functions of Reydisp Evolution (see Section 2: Settings and Instruments) can be used during the commissioning tests to assist with test procedures or to provide documentation recording the test and test parameters. One method is to clear both the waveform and event records before each test is started, then, after the test upload from the relay the settings, events and waveform files generated as a result of application of the test. These can then be saved off to retain a comprehensive record of that test.

Relay settings files can be prepared on the PC (offline) or on the relay before testing commences. These settings should be saved for reference and compared with the settings at the end of testing to check that errors have not been introduced during testing and that any temporary changes to settings to suit the test process are returned to the required service state.

A copy of the Relay Settings as a Rich Text Format (.rtf) file suitable for printing or for record purposes can be produced from Reydisp as follows. From the *File* menu select *Save As,* change the file type to *Export Default/Actual Setting (.RTF)* and input a suitable filename.

When testing is completed the event and waveform records should be cleared and the settings file checked to ensure that the required in-service settings are being applied.

1.2.5 Precautions

Before electrical testing commences the equipment should be isolated from the current and voltage transformers. The current transformers should be short-circuited in line with the local site procedure. The tripping and alarm circuits should also be isolated where practical. The provision and use of secondary injection test sockets on the panel simplifies the isolation and test procedure.

Ensure that the correct auxiliary supply voltage and polarity is applied. See the relevant scheme diagrams for the relay connections.

Check that the nominal secondary current rating of the current and voltage transformers has been correctly set in the System Config. menu of the relay.

1.2.6 Applying Settings

The relay settings for the particular application should be applied before any secondary testing occurs. If they are not available then the relay has default settings that can be used for pre-commissioning tests. See the Relay Settings section of this manual for the default settings.

Note that the tripping and alarm contacts for any function must be programmed correctly before any scheme tests are carried out.

Relays feature multiple settings groups, only one of which is active at a time. In applications where more than one settings group is to be used it may be necessary to test the relay in more than one configuration.

Note. One group may be used as a 'Test' group to hold test-only settings that can be used for regular maintenance testing, eliminating the need for the Test Engineer to interfere with the actual in-service settings in the normally active group. This Test group may also be used for functional testing where it is necessary to disable or change settings to facilitate testing.

When using settings groups it is important to remember that the relay need not necessarily be operating according to the settings that are currently being displayed. There is an 'active settings group' on which the relay operates and an 'edit/view settings group' which is visible on the display and which can be altered. This allows the settings in one group to be altered from the relay fascia while the protection continues to operate on a different unaffected group. The 'Active Settings Group' and the 'Edit Settings Group' are selected in the 'System Configuration Menu'.

©2019 Siemens Protection Devices Limited

The currently Active Group and the group currently Viewed are shown at the top of the display in the Settings display screen. If the View Group is not shown at the top of the display, this indicates that the setting is common to all groups. CT/VT ratio, I/O mapping and other settings which are directly related to hardware are common to all groups.

If the relay is allowed to trip during testing then the instruments display will be interrupted and replaced by the 'Trip Alert' screen which displays fault data information. If this normal operation interferes with testing then this function can be temporarily disabled for the duration of testing by use of the Trip Alert Enabled/Disabled setting in the System Config Menu.

After applying a settings change to the relay, which may involve a change to the indication and output contacts, the **TEST/RESET** key should be pressed to ensure any existing indication and output is correctly cleared.

1.3 Tests

1.3.1 Inspection

Ensure that all connections are tight and correct to the relay wiring diagram and the scheme diagram. Record any deviations. Check that the relay is correctly programmed and that it is fully inserted into the case. Refer to 'Section 2: Settings and Instruments' for information on programming the relay.

1.3.2 Secondary Injection Tests

Select the required relay configuration and settings for the application.

Isolate the auxiliary D.C. supplies for alarm and tripping from the relay and remove the trip and intertrip links.

Carry out injection tests for each relay function, as described in this document

For all high current tests it must be ensured that the test equipment has the required rating and stability and that the relay is not stressed beyond its thermal limit.

1.3.3 Primary Injection Tests

Primary injection tests are essential to check the ratio and polarity of the transformers as well as the secondary wiring.

Note. If the current transformers associated with the protection are located in power transformer bushings it may not be possible to apply test connections between the current transformer and the power transformer windings. Primary injection is needed, however, to verify the polarity of the CTs. In these circumstances primary current must be injected through the associated power transformer winding. It may be necessary to short circuit another winding in order to allow current to flow. During these primary injection tests the injected current is likely to be small due to the impedance of the transformer.

1.3.4 Putting into Service

After tests have been performed satisfactorily the relay should be put back into service as follows:-

Remove all test connections.

Replace all secondary circuit fuses and links, or close m.c.b.

Ensure the Protection Healthy LED is on, steady, and that all LED indications are correct. If necessary press **CANCEL** until the Relay Identifier screen is displayed, then press **TEST/RESET** to reset the indication LEDs.

The relay meters should be checked in Instruments Mode with the relay on load.

The relay settings should be downloaded to a computer and a printout of the settings produced. The installed settings should then be compared against the required settings supplied before testing began. Automated setting comparison can be carried out by Reydisp using the *Compare Settings Groups* function in the *Edit* menu. Any modified settings will be clearly highlighted.

©2019 Siemens Protection Devices Limited

1.4 AC Analogue Energising Quantities

Voltage and current measurement for each input channel is displayed in the Instrumentation Mode sub-menus, each input should be checked for correct connection and measurement accuracy by single phase secondary injection at nominal levels. Ensure that the correct instrument displays the applied signal within limits of the Performance Specification.

	Applied Current……					**Applied Voltage……**			
	I_A	**I_B**	**I_C**	**$I_{G/SEF}$**	**Tol**	**V_A/V_{AB}**	**V_B/V_{BC}**	**V_C/V_{CB}**	**Tolerance**
Secondary									
Primary									

Apply 3 phase balanced Current and Voltage at nominal levels and ensure that the measured Zero Phase Sequence and Negative Phase Sequence quantities are approximately zero.

	ZPS	**NPS**
Voltage		
Current		

If ***Phase Rotation ACB*** is selected in the ***CT/VT Config*** menu, this corresponds to negative phase sequence and the NPS and PPS will be exchanged.

1.5 Binary Inputs

The operation of the binary input(s) can be monitored on the 'Binary Input Meters' display shown in 'Instruments Mode'. Apply the required supply voltage onto each binary input in turn and check for correct operation. Depending on the application, each binary input may be programmed to perform a specific function; each binary should be checked to prove that its mapping and functionality is as set as part of the Scheme Operation tests.

Where the pick-up timers associated with a binary input are set for DC operation these delays should be checked either as part of the scheme logic or individually. To check a binary pick-up time delay, temporarily map the binary input to an output relay that has a normally open contact. This can be achieved in the Output Matrix sub-menu by utilising the *BI n Operated* settings. Use an external timer to measure the interval between binary input energisation and closure of the output contacts. Similarly, to measure the drop-off delay, map the binary input to an output relay that has a normally closed contact, time the interval between binary input de-energisation and closure of the output contacts.

Note. The time measured will include an additional delay, typically less than 20ms, due to the response time of the binary input hardware, software processing time and the operate time of the output relay.

BI	**Tested**	**DO Delay**	**Measured**	**PU Delay**	**Measured**	**Notes (method of initiation)**
1						
2						
3						
4						
5						
6						

1.6 Binary Outputs

A minimum of five output relays are provided. Two of these have change over contacts, BO1 & BO2 and the remainder have normally open contacts.

Care should be observed with regard to connected devices when forcing contacts to operate for test purposes. Short duration energisation can cause contact failure due to exceeding the break capacity when connected to inductive load such as electrically reset trip relays.

Close each output relay in turn from the Reydisp Evolution PC programme, Relay – Control - Close output relay. This function will energise the output for its minimum operate time. This time is specified in the Output Config - Binary Output Config menu for each output relay and may be too short to measure with a continuity tester.

An alternative method of energising an output permanently so that wiring can be checked is to temporarily map the relay being tested to the 'Protection Healthy' signal in the Output Matrix, as this signal is permanently energised the mapped relay will be held energised, normally open contacts will be closed and vice versa.

BO	**Checked**	**Notes (method of test)**
1NO		
1NC		
2NO		
2NC		
3		
4		
5		
6		
7		
8		

1.7 Relay Case Shorting Contacts

CT input terminals and the terminals of normally closed contacts of Binary outputs 1 & 2 are fitted with case mounted shorting contacts which provide a closed contact when the relay is withdrawn from the case. The operation of these contacts should be checked.

CT Shorting contacts checked	
Binary Output 1 terminals 1 & 2 Alarm Checked	
Binary Output 2 terminals 5 & 6 Alarm Checked	

Section 2: Protection Functions

This section details the procedures for testing each protection function of the 7SR11 & 7SR12 relays. These tests are carried out to verify the accuracy of the protection pick-ups and time delays at setting and to confirm correct operation of any associated input and output functionality.

The exact model type must be checked to confirm the functions available in each type.

Guidance for calculating test input quantities is given in the relevant test description where required. In many cases it may be necessary to disable some functions during the testing of other functions, this prevents any ambiguity caused by the operation of multiple functions from one set of input quantities. The 'Function Config' Menu provides a convenient high level point at which all elements of a particular function can be Enabled/Disabled to suit testing. The 'Config' tab in 'Reydisp Evolution' can be used to 'Enable/Disable' individual elements. Note that this screen disables functions by applying setting changes to the relay and that any changes must be sent to the relay to take effect and settings must be returned to their correct value after testing.

The table below indicates functions where function conflicts may occur during testing, consideration should be given to disabling functions to avoid interference.

Function Under Test	Phase Overcurrent	Voltage Cont O/C	Cold Load	Derived E/F	Measured E/F	Sensitive E/F	Restricted E/F	NPS Overcurrent	Undercurrent	Thermal	Phase U/O voltage	NPS Overvoltage	CB Fail	VT Supervision	CT supervision	Broken Conductor	Trip cct Supervision	Inrush Detector
Phase		O	O					O	O	O			O			O		
Voltage Cont O/C	O		O					O	O	O			O			O		
Cold Load	O	O						O	O	O			O			O		
Derived E/F					O			O	O	O			O		O	O		
Measured E/F				O				O	O	O								
Sensitive E/F							O											
Restricted E/F						O												
NPS Overcurrent	O	O	O						O	O			O		O			
Undercurrent				O	O			O										
Thermal	O	O	O										O					
Phase U/O voltage												O	O	O				
NPS Overvoltage											O		O	O				
CB Fail	O	O	O	O	O	O		O		O								
VT Supervision											O	O						
CT supervision				O												O		
Broken Conductor				O				O	O						O			
Trip cct																		
Inrush Detector																		

Any LED can be assigned to be a General Pickup LED in the Output Matrix menu and used to assess operation of functions during testing if other functions are disabled or if the setting allocating General Pickup is temporarily modified.

Voltage inputs may not be required for testing of non-directional Overcurrent elements but it may be advantageous to apply balanced 3 phase nominal rated voltage to the VT inputs during testing to avoid inadvertent operation of other functions. Particular care should be taken when testing overcurrent functions that the thermal rating of the current inputs is not exceeded.

©2019 Siemens Protection Devices Limited

It should be considered that where several overlapping elements are used simultaneously, the overall protection operate time may be dependent on the operation of different individual elements at the various levels of applied current or voltage. The resulting composite characteristic may be tested by enabling all of the relevant applicable elements or the element operations can be separated or disabled and tested individually.

All relay settings should be checked before testing begins. It is recommended that the relay settings are extracted from the relay using Reydisp Evolution software and a copy of these settings is stored for reference during and after testing. It may be necessary to disable some protection functions during the testing of other functions to allow unambiguous results to be obtained.

Care must be taken to reset or re-enable any settings that have been temporarily altered during the testing before the relay can be put into service. At the end of testing the relay settings should be compared to the file extracted at the start to ensure that errors have not been introduced.

2.1 Phase Directional Polarity Check

If the relay has Directional Overcurrent elements, the common direction polarising can be checked independently from the individual overcurrent elements and their settings. If ***Phase Rotation ACB*** is selected in the ***CT/VT Config*** menu, this corresponds to negative phase sequence and the Forward and Reverse will be automatically exchanged by internal relay configuration. The tests below describe normal ABC rotation and the forward/reverse diection reversal will be experienced for ACB settings unless single phase voltages are inverted. Directions for 3 phase testing will also be reversed unless the three phase supply rotation is reversed. This can be achieved by swapping any two phase wires, for both current and voltage with a standard ABC test supply. Direction Earth Fault direction is not affected by the ***Phase Rotation*** direction.

In the INSTRUMENTS MODE display, indication is provided in the DIRECTIONAL METERS menu which displays current direction under *P/F Dir* as forward or reverse based on the output states of the directional elements, i.e. whether they see forward current, reverse current or neither for each pole with respect to the *67 Char Angle* setting in the *Phase Overcurrent* menu. This display and the equivalent Measured and Calculated Earth Fault direction meters can be used as an aid to commissioning testing.

1. Check the direction of each pole in turn by connecting to the appropriate terminals. The table below shows the polarising quantity for each pole.

Connections for Directional Polarity

Overcurrent pole	Polarising voltage
Phase A	V_{BC}
Phase B	V_{CA}
Phase C	V_{AB}

2. Inject single phase rated current and apply single phase-phase rated voltage at the Char Angle (MTA) phase angle setting, to each phase in turn. For each pole, monitor the directional display in the instrument menu and check that indication of forward current (FWD) is displayed. To achieve the required forward Characteristic Angle, the phase angle of the current should be greater than that of the polarising voltage by the angle setting.

3. Repeat all of the above with the current connections reversed. Indication should now be given of reverse (REV) current flow.

Phase	**A**	**B**	**C**
Forward	FWD	FWD	FWD
Reverse	REV	REV	REV

4. Apply balanced 3 phase rated voltage and current with Vbc voltage as a 0deg reference and Ia at the characteristic angle. Increase current phase angle until the ‘Fwd’ indication is extinguished. Record this angle in the table below (Forward lead DO). Continue to increase/decrease the angle until the instrument reads ‘Rev’. Record the angle (Reverse lead PU). Reduce the current angle until the ’Rev’ extinguishes (Reverse lead DO). and the ‘Fwd’ subsequently returns (Forward lead PU), recording the angles. Repeat the above tests, starting from the Characteristic Angle, but reducing the current phase angle to record the directional boundaries in the opposite (lag) direction. The recorded angle should be the angle at which the phase current leads the phase-phase polarising voltage. This measurement is greatly simplified if the

polarising reference voltage is set to 0deg and the current phase angle is measured with respect to this reference.

Alternatively, the instrument can be checked at the 4 points marked a,b,c & d on Figure 2-1 only.

	Forward				Reverse			
	Lag (point C)		Lead (point A)		Lead(point B)		Lag (point D)	
	Pick-up	Drop-off	Pick-up	Drop-off	Pick-up	Drop-off	Pick-up	Drop-off
MTA	**MTA-85**		**MTA+85**		**MTA-85**		**MTA-85**	
Phase A								
Phase B								
Phase C								

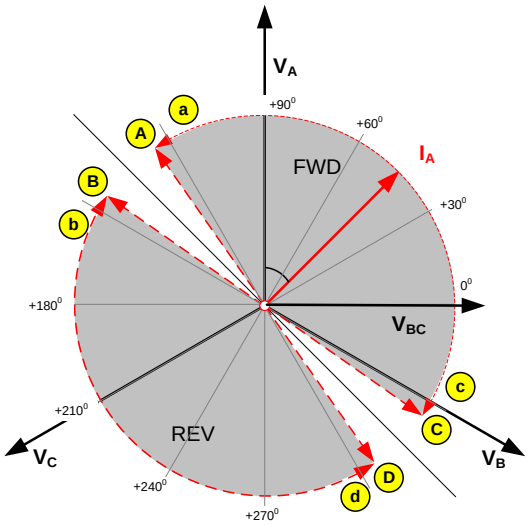

With balanced 3-phase system quantities:

Adjust the phase angle of the currents relative to the voltages:

Verify directional pick-up and drop off at points A, B, C and D

Alternatively,

Verify correct directional indication at points a, b, c and d (C.A +75^0, +95^0, -75^0, -95^0)

Figure 2-1 Directional Phase Fault Boundary System Angles

5. With the instrument reading ‘Fwd’ or ‘Rev’, reduce the voltage until the element resets. Record the minimum phase-phase operate voltage.

Minimum Voltage Setting	**Measured**

2.1.1 2 out of 3 logic

Ensure that at least 1 Phase Overcurrent element is set to Directional. Apply balanced nominal voltage. Apply current at a level above the 50/51 setting on phase A only at the characteristic angle for forward operation, normally 45º lagging. Ensure no Directional Phase Overcurrent element operation occurs. Note that non-directional Phase Overcurrent and Non-direction Earth Fault elements may operate unless disabled.
Repeat the test with Phase A current as above but also with equal current in the B phase at 180º to that in the A phase.

1 phase current		**2 phase current**	
No 50/51-n Operation		**50/51-n operation**	

2.2 Phase Overcurrent (67/50,67/51)

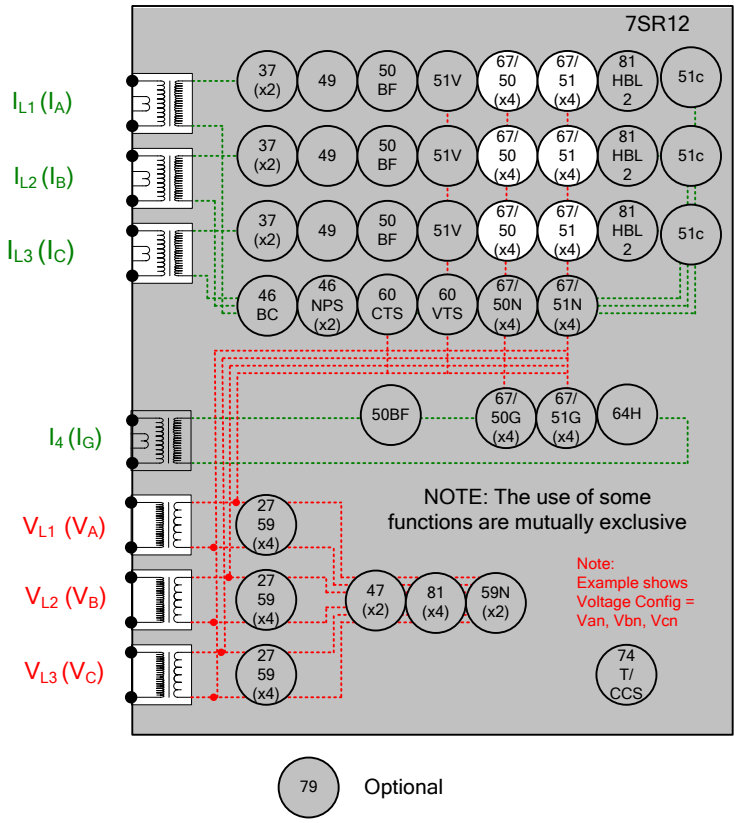

Figure 2-2 Phase Overcurrent

Voltage Inputs:	V_{L1} (V_A), V_{L2} (V_B), V_{L3} (V_C) for directional elements.
Current Inputs:	I_{L1} (I_A), I_{L2} (I_B), I_{L3} (I_C),
Disable:	51V, 51C, 46, 49, 50CBF, 79
Map Pickup LED:	51-n/50-n - Self Reset

Other protection functions may overlap with these functions during testing, it may be useful to disable some functions to avoid ambiguity. It should be particularly noted that if the function is enabled, the 51C Cold Load settings may modify the normal 50-n and 51-n settings if the CB is open during testing.

Voltage inputs may not be required for this function if the Phase Overcurrent functions are not directional but it may be advantageous to apply balanced 3 phase nominal rated voltage to the VT inputs during testing to avoid inadvertent operation of other functions. Particular care should be taken when testing overcurrent functions that the thermal rating of the current inputs is not exceeded.

2.2.1 Definite Time Overcurrent (50)

If DTL setting is small, gradually increase current until element operates.

If DTL is large apply 0.9x setting, check for no operation, apply 1.1x setting, check operation

Apply 2x setting current if possible and record operating time

Phase	Dir.	Is (Amps)	DTL (sec)	P.U. Current Amps	Tol	Operate Time 2 x Is	Tol
I_{L1}(I_A)							
I_{L2}(I_B)							
I_{L3}(I_C)							

Check correct indication, trip output, alarm contacts, waveform record.

2.2.2 Inverse Time Overcurrent (51)

It will be advantageous to map the function being tested to temporarily drive the relevant Pickup output in the *Pickup Config* sub-menu in the *Output Config* menu as this will allow the Pick-up led to operate for the function.

Gradually increase current until Pickup LED operates.

Apply 2x setting current and record operating time,

Apply 5x setting current and record operating time.

Compare to calculated values for operating times.

Gradually reduce current until the element drops off and record the level.

P.U. D.O. & TIMING TESTS	Ph.	Dir	Char. Curve	Is (A)	TM	Operate Current			Operate Time		
						P.U. (Amps)	D.O. (Amps)	Tol	2 x Is (sec)	5 x Is (sec)	Tol
	$I_{L1}(I_A)$										
	$I_{L2}(I_B)$										
	$I_{L3}(I_C)$										

Calculated Timing values in seconds for TM =1.0

Curve	2 xIs	5 xIs
IEC-NI	10.03	4.28
IEC-VI	13.50	3.38
IEC-EI	26.67	3.33
IEC-LTI	120.00	30.00
ANSI-MI	3.80	1.69
ANSI-VI	7.03	1.31
ANSI-EI	9.52	1.30

Note that the operate time may be subject to the ***Minimum op time*** setting for the element and/or may have a ***Follower DTL*** applied.

2.2.2.1 Element Blocking

The Phase Overcurrent elements can be blocked by Binary Input Inhibit, VT Supervision and Inrush Detector operation, as well as 79 Autoreclose settings for Inst/Delayed. The Characteristic can be modified by Cold Load (51-n only) and Voltage Controlled Overcurrent and can be made non-directional by VT Supervision. This functionality should be checked.

Element	BI Inhibits	VTS action	Inrush Detector	79 Autoreclose
51-1				
51-2				
51-3				
51-4				
50-1				
50-2				
50-3				
50-4				

2.2.2.2 ANSI Reset

If the element is configured as an ANSI characteristic, it may have an ANSI decaying reset delay applied..

ANSI reset times from operated condition to fully reset are as follows for zero applied current and Time multiplier (TM) = 1.0. The reset curve characteristic type and TM is defined by the operating characteristic.

Curve	Fully operated to reset with Zero current applied & TM=1 (secs)
ANSI-MI	4.85
ANSI-VI	21.6
ANSI-EI	29.1

Apply current in the following sequence, a) 2x setting for a time to ensure element operation, b) Zero current for the reset time above (xTM), c) 2x setting for a time to ensure element operation. Check that the second operation (c) is similar to the first (a) and in line with the expected operate time for the element at this current level.

Repeat the test with the reset time (b) reduced to 50% of the previous value. Ensure that the second operate time (c) is 50% of the first (a) operate time.

Operate time (expected)	Reset time (calculated)	Operate time (measured)	50% Reset Time (calculated)	50% operate time (calculated)	50% operate time (measured)
		First test (c)			Second Test (c)

Check correct indication, trip output, alarm contacts, waveform record.

2.2.2.3 IEC RESET

If the element is configured as an IEC characteristic, it may have an IEC decaying reset delay applied.

IEC reset times from operated condition to fully reset are as follows for zero applied current and Time multiplier (TM) = 1.0. The reset curve characteristic type and TM is defined by the operating characteristic.

Curve	Fully operated to reset with Zero current applied & TM=1 (secs)
IEC-NI	9.7
IEC-VI	43.2
IEC-EI	58.2
IEC-LTI	80

Apply current in the following sequence, a) 2x setting for a time to ensure element operation, b) Zero current for the reset time above (xTM), c) 2x setting for a time to ensure element operation. Check that the second operation (c) is similar to the first (a) and in line with the expected operate time for the element at this current level.

Repeat the test with the reset time (b) reduced to 50% of the previous value. Ensure that the second operate time (c) is 50% of the first (a) operate time.

Check correct indication, trip output, alarm contacts, waveform record.

2.3 Voltage Controlled Overcurrent (51V)

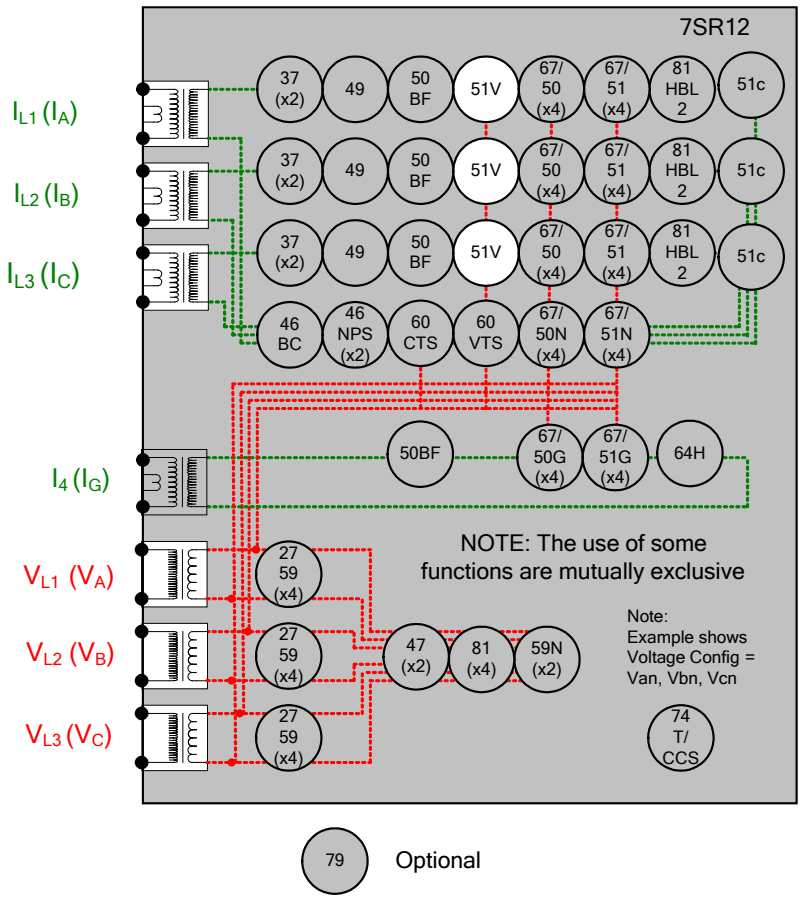

Figure 2-3 Voltage Controlled Overcurrent

OC Phase	Control Voltage
$I_{L1}(I_A)$	$V_{12}(V_{AB})$
$I_{L2}(I_B)$	$V_{23}(V_{BC})$
$I_{L3}(I_C)$	$V_{31}(V_{CA})$

Voltage Inputs:	V_{L1} (V_A), V_{L2} (V_B), V_{L3} (V_C)
Current Inputs:	I_{L1} (I_A), I_{L2} (I_B), I_{L3} (I_C),
Disable:	51C, 46, 37, 49, 50CBF, 79
Map Pickup LED:	51-n/50-n - Self Reset

Shaped Phase Overcurrent elements 51-n should be tested for pick-up and timing before this function is tested. The General Pickup LED can be used to assess operation of this function if other functions are disabled or if the setting allocating General Pickup is temporarily modified.

Apply nominal 3 phase balanced voltage. Apply 3 phase balanced current at a level below the normal 51-n setting but above the effective 51V-n setting. Ensure that the thermal rating of the relay is not exceeded. Gradually reduce the voltage until the a-b voltage is less than the Voltage setting. Pickup LED operation can be used to confirm the Voltage setting. If the 51V-n current setting is above the continuous rating of the relay an alternative procedure should be used, apply test current in short duration shots with applied voltage being gradually reduced for each subsequent shot

Apply nominal 3 phase balanced voltage. Increase the voltage such that the a-b voltage is 110% of the Voltage setting

Gradually increase the a-b phase current or balanced 3P current until Pickup LED operates. Confirm result of Phase O/C test above.

Reduce the applied voltage to a level such that V_{12}(V_{AB}) phase-phase voltage is less than 90% of the setting.

Gradually increase the I_{12}(I_{AB}) phase-phase current until Pickup LED operates.

Note that these elements may be set as directional. If this is the case, the phase angle of the current must be set with respect to the voltage to produce operation of the elements.

Voltage Setting (V, p-p)	**Measured (V, p-p)**

	I Setting	**Multiplier**	**Calculated PU**	**Measured**	**Tolerance**
51-1 Pickup					
51-2 Pickup					
51-3 Pickup					
51-4 Pickup					

2.3.1.1 Element Blocking

The Voltage Controlled Overcurrent function can be set to Inhibit for VT Supervision operation. This functionality should be checked. Apply balanced voltage and current. Reduce a-phase voltage to cause a VTS condition. Increase 3P current until the element operates at its full setting, i.e. 51V settings are not used.

Element	**VTS action**
51-1	
51-2	
51-3	
51-4	

Check correct indication, trip output, alarm contacts.

2.4 Cold Load (51C)

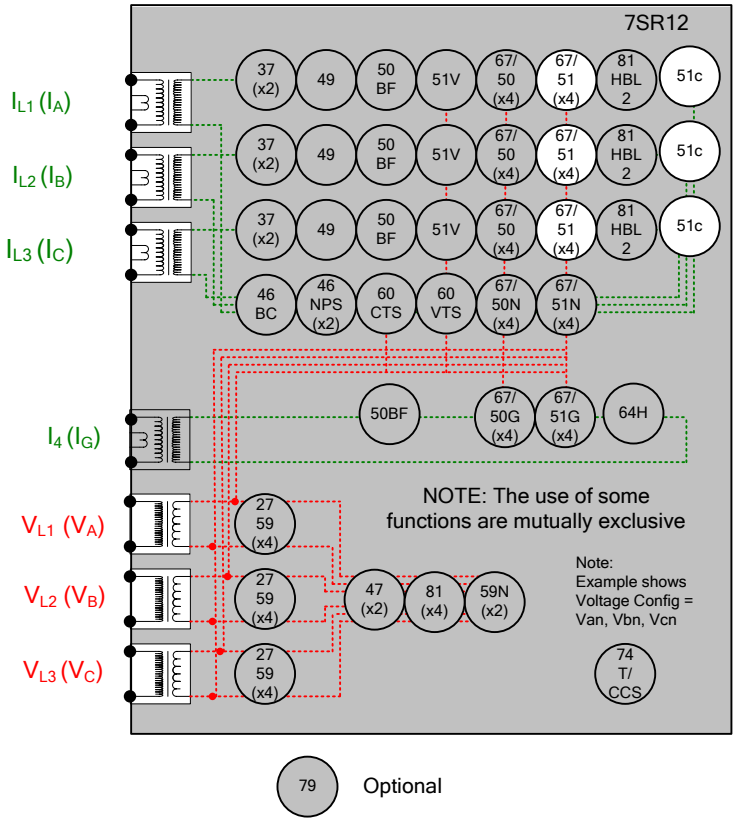

Figure 2-4 Cold Load

Voltage Inputs:	V_{L1} (V_A), V_{L2} (V_B), V_{L3} (V_C) for directional elements
Current Inputs:	I_{L1} (I_A), I_{L2} (I_B), I_{L3} (I_C),
Disable:	51V, 46, 49, 50CBF, 79
Map Pickup LED:	51-n - Self Reset

The CB must be open for more than the Cold Load *Pick-up Time* to allow testing of this function. It may be convenient to reduce this setting to suit the test procedure. If the CB is open throughout the tests, the Cold Load protection settings can be tested provided that the current is not allowed to fall below the level of the *Reduced Current Level* for more than the *Reduced Current Time* during testing. It may be convenient to set the *Reduced Current* setting to Disabled for the duration of the test. The Cold Load Active output is provided and can be used as an indication during testing.

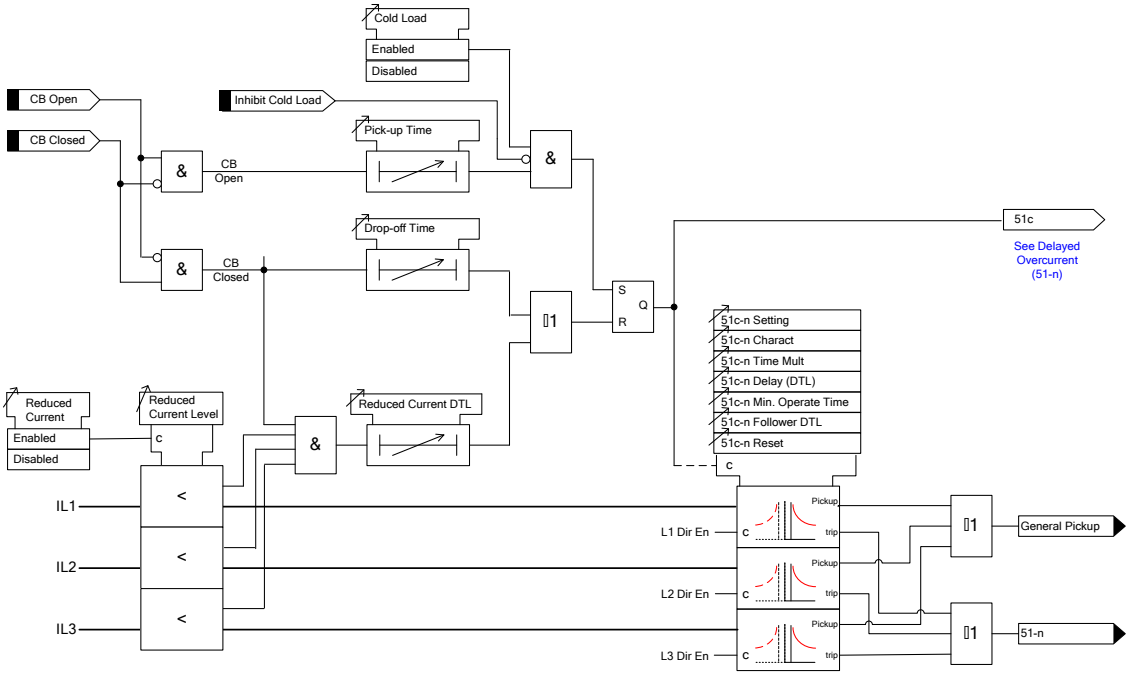

Figure 2-5 Cold Load Logic diagram

Ensure that the *Cold load active* is not raised. This can be reset by CB closed for more than the Cold Load *Drop-off Time* or current less than the *Reduced Current Level* for greater than the *Reduced Current Time*. Check the Cold Load Pick-up Delay by applying or simulating CB Open. Measure the time delay before *Cold Load Active* is raised. Apply current above the *Reduced Current Level* if this functionality is Enabled before applying CB Closed. Measure the time for *Cold Load Active* to reset.

2.4.1 Inverse Time Overcurrent (51C)

It will be advantageous to map the function being tested to temporarily drive the relevant Pickup output in the *Pickup Config* sub-menu in the *Output Config* menu as this will allow the Pick-up led to operate for the function.

Gradually increase current until Pickup LED operates.

Apply 2x setting current and record operating time,

Apply 5x setting current and record operating time.

Compare to calculated values for operating times

	Ph.	Dir	Char. (NI EI VI LTI, DTL)	Is (A)	TM	Operate Current			Operate Time		
						P.U. (Amps)	D.O. (Amps)	Tol	2 x Is (sec)	5 x Is (sec)	Tol
P.U. D.O. & TIMING TESTS	$I_{L1}(I_A)$										
	$I_{L2}(I_B)$										
	$I_{L3}(I_C)$										

Calculated Timing values in seconds for TM =1.0

Curve	2 xIs	5 xIs
IEC-NI	10.03	4.28
IEC-VI	13.50	3.38
IEC-EI	26.67	3.33
IEC-LTI	120.00	30.00
ANSI-MI	3.80	1.69
ANSI-VI	7.03	1.31
ANSI-EI	9.52	1.30

Note that the operate time may be subject to the *Minimum op time* setting for the element and/or may have a *Follower DTL* applied.

2.4.1.1 ANSI Reset

If the element is configured as an ANSI characteristic, it may have an ANSI reset delay applied.

ANSI reset times from operated condition to fully reset are as follows for zero applied current and TM = 1.0. The reset curve characteristic type and TM is defined by the operating characteristic.

Curve	Fully operated to reset with Zero current applied & TM=1 (secs)
ANSI-MI	4.85
ANSI-VI	21.6
ANSI-EI	29.1

Apply current in the following sequence, a) 2x setting for a time to ensure element operation, b) Zero current for the reset time above (xTM), c) 2x setting for a time to ensure element operation. Check that the second operation (c) is similar to the first (a) and in line with the expected operate time for the element at this current level.

Repeat the test with the reset time (b) reduced to 50% of the previous value. Ensure that the second operate time (c) is 50% of the first (a) operate time.

Operate time (expected)	Reset time (calculated)	Operate time (measured)	50% Reset Time (calculated)	50% operate time (calculated)	50% operate time (measured)
		First test (c)			Second Test (c)

Check correct indication, trip output, alarm contacts, waveform record.

2.4.1.2 IEC Reset

If the element is configured as an IEC characteristic, it may have an IEC (decaying) reset delay applied.

IEC reset times from operated condition to fully reset are as follows for zero applied current and Time multiplier (TM) = 1.0. The reset curve characteristic type and TM is defined by the operating characteristic.

Curve	Fully operated to reset with Zero current applied & TM=1 (secs)
IEC-NI	9.7
IEC-VI	43.2
IEC-EI	58.2
IEC-LTI	80

Apply current in the following sequence, a) 2x setting for a time to ensure element operation, b) Zero current for the reset time above (xTM), c) 2x setting for a time to ensure element operation. Check that the second operation (c) is similar to the first (a) and in line with the expected operate time for the element at this current level.

Repeat the test with the reset time (b) reduced to 50% of the previous value. Ensure that the second operate time (c) is 50% of the first (a) operate time.

©2019 Siemens Protection Devices Limited

Operate time (expected)	Reset time (calculated)	Operate time (measured)	50% Reset Time (calculated)	50% operate time (calculated)	50% operate time (measured)
		First test (c)			Second Test (c)

2.4.1.3 Element Blocking

The 51c Overcurrent elements can be blocked by Binary Input Inhibit. This functionality should be checked.

Element	BI Inhibits
51c	

2.5 Arc Flash Detection (50AFD)

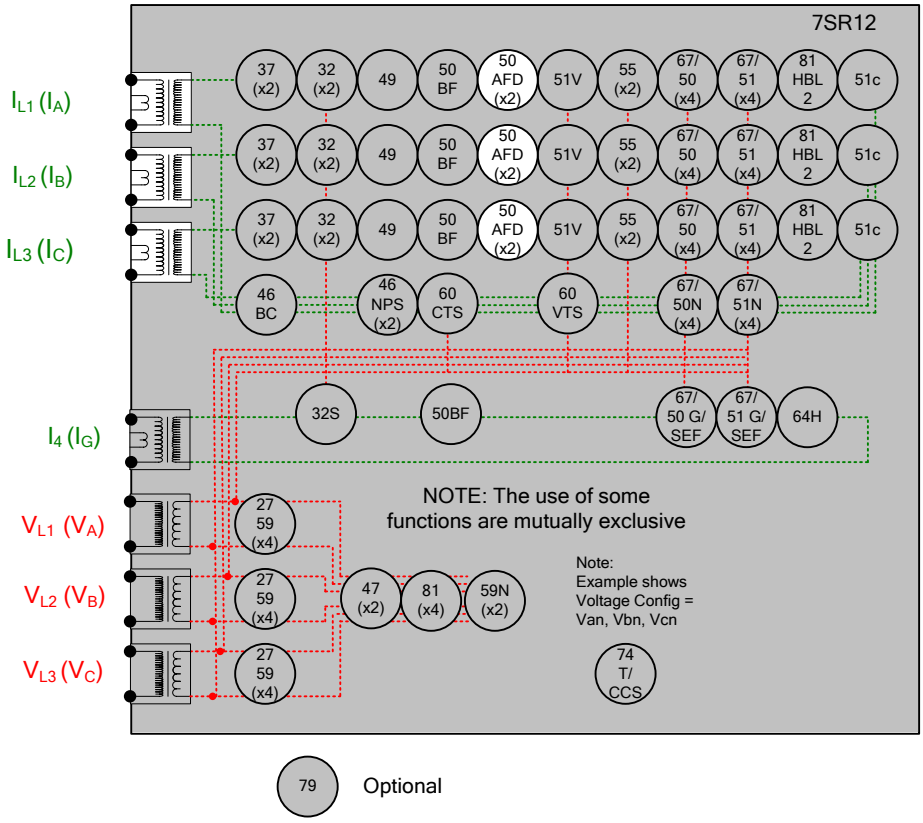

Figure 2-6 Arc Flash Detection

Voltage Inputs:	N/A
Current Inputs:	I_{L1} (I_A), I_{L2} (I_B), I_{L3} (I_C),
Disable:	49, 50, 51
Map Pickup LED:	50AFD Zone-n Flash - Hand Reset, 50AFD Zone-n – Hand/self Reset

The overcurrent level can be tested without an arc flash by separately energising or inverting the arc detector binary input continuously for the duration of the test for the zone being tested.

If the current setting is low, gradually increase current until element operates.

If the current level required is greater than the thermal limit of the relay, apply 0.9x setting, check for no operation, apply 1.1x setting, check operation.

Optical sensors such as 7XG31 can be tested by application of a suitable light source. Relay instrumentation can be used to indicate binary input pickup or by the 50AFD Zone-n Flash outputs.
The 7XG31 devices will typically require 10000 lx light level for 1.25ms to trigger. A high powered photographic flash is the most convenient means of initiating positive sensor operation.
Note that mobile phone or small compact camera flashes may not have sufficient power to cause sensor operation but may be suitable if held directly against the sensor.

Check correct indication, trip output, alarm contacts, waveform record.

2.6 Directional Earth Fault Polarity Check (67N)

Derived Earth Fault, Measured Earth Fault and Sensitive Earth Fault elements can be set as directional. These are polarised from residual voltage, calculated from the 3 phase voltage inputs or the 3Vo input depending on the ***Phase Voltage Config*** setting in the ***CT/VT Config*** menu.

The relay Char Angle setting is the Characteristic Phase angle of the fault impedance i.e. the phase angle of the fault current with respect to the voltage driving the current. The earth fault functions are polarised from the residual voltage which is in anti-phase with the fault voltage for a single-phase to earth fault. Care is required when testing by secondary injection with regard to current and voltage polarity.

To simulate an earth fault on a relay with 3 phase-phase or 3 phase-neutral connected voltage inputs, defined by the ***Phase Voltage Config*** setting of ***Van,Vbn,Vcn*** or ***Va,Vb,Vc***, proceed as follows. Balanced 3P voltage should first be applied, then the phase-neutral voltage magnitude on the faulted phase should be reduced in magnitude with no change in phase angle to produce Vres and simulate the fault. The fault current, on the faulted phase only, should be set at the MTA with respect to the phase-neutral voltage on the faulted phase, e.g. for a relay setting of -15º, set the phase current to lag the ph-n voltage by 15º.

Alternatively, a single phase voltage source can be used in the above test. The polarity of this voltage, applied to the faulted phase-neutral alone, must be reversed to produce the same residual voltage (Vres) phase direction as that produced by the 3P voltage simulation described above.

For the ***Phase Voltage Config*** of ***Vab, Vbc, Vo,*** the single phase voltage applied to the Vo input is used as the polarising quantity**.** The inversion is once again required since this input is designed to measure the residual voltage directly, as produced by an 'open delta VT' arrangement. The current must be set at the MTA with respect to the inversion of this voltage. e.g. for a relay setting of -15º, the phase current must lag the (Vo+180º) voltage by 15º, i.e. if Vo is set at 180º, set Iph at -15º.

If the Pickup of one directional Earth Fault element is mapped to an LED, this can be used to check directional boundaries for pickup and drop-off as the current phase angle is increased and decreased. Note that the Derived Earth Fault, Measured Earth Fault and Sensitive Earth Fault have separate directional settings and must be tested individually.

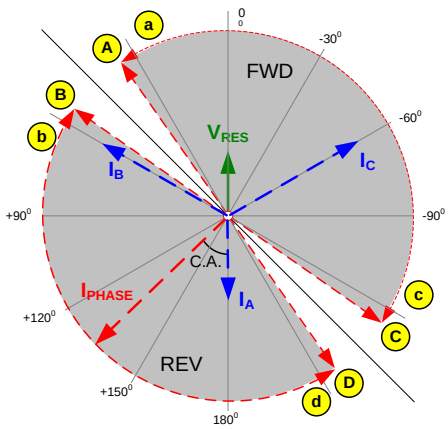

The diagram opposite shows a Phase A – Earth fault.

Apply residual voltage either directly to input or by reducing voltage of faulted phase.

Adjust the phase angle of the phase current relative to the voltage:

Verify directional pick-up and drop off at points A, B, C and D

Alternatively,

Verify correct directional indication at points a, b, c and d (C.A +75^0, +95^0, -75^0, -95^0)

Figure 2-7 Directional Earth Fault Boundary System Angles

2.7 Derived Earth Fault (67/50N, 67/51N)

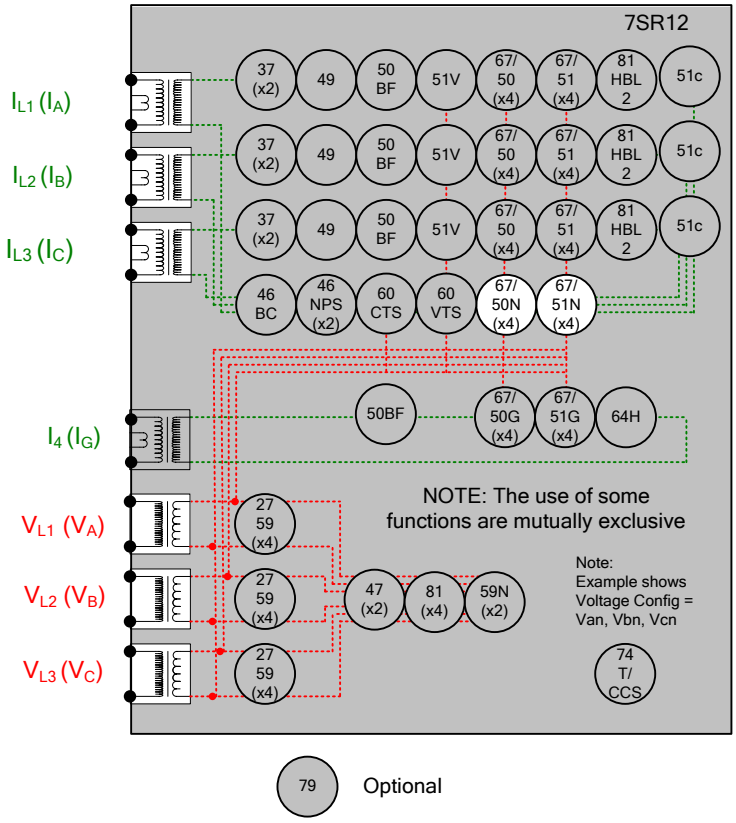

Figure 2-8 Derived Earth Fault

Voltage Inputs:	V_{L1} (V_A), V_{L2} (V_B), V_{L3} (V_C)
Current Inputs:	I_{L1} (I_A), I_{L2} (I_B), I_{L3} (I_C)
Disable:	37, 46, 49, 60CTS, 50CBF, 60CTS, 46BC, 79
Map Pickup LED:	51N-n/50N-n - Self Reset

Other protection functions may overlap with these functions during testing, it may be useful to disable some functions to avoid ambiguity. Derived EF, Measured EF Sensitive EF & Restricted EF protections can be Enabled/Disabled individually or as groups in the 'Function Config' menu.

Derived EF elements can be separated from Measured/Sensitive EF by arrangement of the secondary injection circuit by shorting/disconnecting I_4 Input.

If any of these elements are defined as directional the correct voltage phase direction will be required to produce an operation of those elements.

2.7.1 Directional Polarity

See section Directional Earth Fault Polarity Check above for testing details.

MTA	Forward				Reverse			
	Lag (point C)		Lead (point A)		Lead(point B)		Lag (point D)	
	Pick-up	Drop-off	Pick-up	Drop-off	Pick-up	Drop-off	Pick-up	Drop-off
……	MTA-85 ……..		MTA+85 ……..		MTA-85 ……..		MTA-85 ……..	
Derived EF								

2.7.2 Definite Time Overcurrent (50N)

If DTL setting is small, gradually increase current until element operates.

If DTL is large apply 0.9x setting, check for no operation, apply 1.1x setting, check operation

Apply 2x setting current if possible and record operating time

Check correct indication, trip output, alarm contacts, waveform record.

Note that these elements can be set to directional.

Phase	Dir	Is (Amps)	DTL (sec)	P.U. Current Amps	Operate Time 2 x Is	NOTES
E						

If VTS action is set to BLOCK, this option should be tested. Apply balanced voltage and current. Reduce a-phase voltage to cause a VTS condition. Increase 3P current and check that the element does not operate.

If VTS action is set to Non-Directional, this option should be tested. Apply balanced voltage and current. Reduce a-phase voltage to cause a VTS condition. Increase a-phase current and check that the element operates at its normal setting. Reverse the voltage phase direction whilst checking that the element does not reset.

2.7.3 Inverse Time Overcurrent (51N)

It will be advantageous to map the function being tested to temporarily drive the relevant Pickup output in the *Pickup Config* sub-menu in the *Output Config* menu as this will allow the Pick-up led to operate for the function.

Gradually increase current until Pickup LED operates.

Apply 2x setting current and record operating time,

Apply 5x setting current and record operating time.

Compare to calculated values for operating times.

P.U. D.O. & TIMING TESTS	Ph.	Dir	Char. (NI EI VI LTI, DTL)	Is (A)	TM	Operate Current			Operate Time		
						P.U. (Amps)	D.O. (Amps)	Tol	2 x Is (sec)	5 x Is (sec)	Tol
	E										

Calculated Timing values in seconds for TM =1.0

Curve	2 xIs	5 xIs
IEC-NI	10.03	4.28
IEC-VI	13.50	3.38
IEC-EI	26.67	3.33
IEC-LTI	120.00	30.00
ANSI-MI	3.80	1.69
ANSI-VI	7.03	1.31
ANSI-EI	9.52	1.30

Note that the operate time may be subject to the *Minimum op time* setting for the element and/or may have a *Follower DTL* applied.

2.7.3.1 Element Blocking

The Derived Earth Fault elements can be blocked by Binary Input Inhibit, VT Supervision and Inrush Detector operation. The Characteristic can be made non-directional by VT Supervision. This functionality should be checked.

Element	BI Inhibits	VTS action	Inrush Detector
51N-1			
51N-2			
51N-3			
51N-4			
50N-1			
50N-2			
50N-3			
50N-4			

©2019 Siemens Protection Devices Limited

2.7.3.2 ANSI Reset

If the element is configured as an ANSI characteristic, it may have an ANSI decaying reset delay applied.

ANSI reset times from operated condition to fully reset are as follows for zero applied current and TM = 1.0. The reset curve characteristic type and TM is defined by the operating characteristic.

Curve	Fully operated to reset with Zero current applied & TM=1 (secs)
ANSI-MI	4.85
ANSI-VI	21.6
ANSI-EI	29.1

Apply current in the following sequence, a) 2x setting for a time to ensure element operation, b) Zero current for the reset time above (xTM), c) 2x setting for a time to ensure element operation. Check that the second operation (c) is similar to the first (a) and in line with the expected operate time for the element at this current level.

Repeat the test with the reset time (b) reduced to 50% of the previous value. Ensure that the second operate time (c) is 50% of the first (a) operate time.

Operate time (expected)	Reset time (calculated)	Operate time (measured)	50% Reset Time (calculated)	50% operate time (calculated)	50% operate time (measured)
		First test (c)			Second Test (c)

Check correct indication, trip output, alarm contacts, waveform record.

2.7.3.3 IEC Reset

If the element is configured as an IEC characteristic, it may have an IEC (decaying) reset delay applied.

IEC reset times from operated condition to fully reset are as follows for zero applied current and Time multiplier (TM) = 1.0. The reset curve characteristic type and TM is defined by the operating characteristic.

Curve	Fully operated to reset with Zero current applied & TM=1 (secs)
IEC-NI	9.7
IEC-VI	43.2
IEC-EI	58.2
IEC-LTI	80

Apply current in the following sequence, a) 2x setting for a time to ensure element operation, b) Zero current for the reset time above (xTM), c) 2x setting for a time to ensure element operation. Check that the second operation (c) is similar to the first (a) and in line with the expected operate time for the element at this current level.

Repeat the test with the reset time (b) reduced to 50% of the previous value. Ensure that the second operate time (c) is 50% of the first (a) operate time.

Operate time (expected)	Reset time (calculated)	Operate time (measured)	50% Reset Time (calculated)	50% operate time (calculated)	50% operate time (measured)
		First test (c)			Second Test (c)

2.8 Measured Earth fault (67/50G,67/51G)

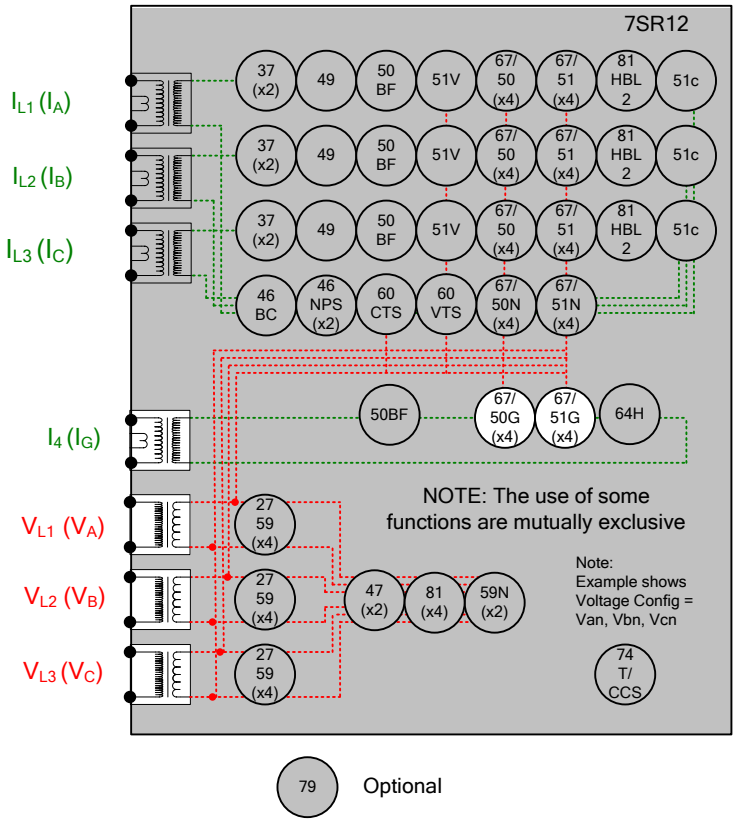

Figure 2-9 Measured Earth Fault

Voltage Inputs:	V_{L1} (V_A), V_{L2} (V_B), V_{L3} (V_C) for directional elements
Current Inputs:	I_4 (I_G)
Disable:	50CBF, 79
Map Pickup LED:	51G-n/50G-n - Self Reset

Other protection functions may overlap with these functions during testing, it may be useful to disable some functions to avoid ambiguity. Derived EF, Measured EF, Sensitive EF & Restricted EF protections can be Enabled/Disabled individually or as groups in the 'Function Config' menu.

Measured EF elements can be separated from Derived EF and Sensitive EF by secondary injection of current through the I_4 input circuit only.

If any of these elements are defined as directional the correct voltage phase direction will be required to produce an operation of those elements.

2.8.1 Directional Polarity

See section Directional Earth Fault Polarity Check above for testing details.

MTA	Forward				Reverse			
	Lag (point C)		Lead (point A)		Lead(point B)		Lag (point D)	
	Pick-up	Drop-off	Pick-up	Drop-off	Pick-up	Drop-off	Pick-up	Drop-off
……	MTA-85 ……..		MTA+85 ……..		MTA-85 ……..		MTA-85 ……..	
Measured EF								

2.8.2 Definite Time Overcurrent (67/50G)

If DTL setting is small, gradually increase current until element operates.

If DTL is large apply 0.9x setting, check for no operation, apply 1.1x setting, check operation

Apply 2x setting current if possible and record operating time

Phase	Dir.	Is (Amps)	DTL (sec)	P.U. Current Amps	Operate Time 2 x Is	NOTES
I_4						

Check correct indication, trip output, alarm contacts, waveform record.

Note that these elements can be set to directional.

If VTS action is set to BLOCK, this option should be tested. Apply balanced voltage and current. Reduce a-phase voltage to cause a VTS condition. Increase a-phase current and check that the element does not operate.

If VTS action is set to Non-Directional, this option should be tested. Apply balanced voltage and current. Reduce a-phase voltage to cause a VTS condition. Increase a-phase current and check that the element operates at its normal setting. Reverse the voltage phase direction whilst checking that the element does not reset.

2.8.3 Inverse Time Overcurrent (67/51G)

It will be advantageous to map the function being tested to temporarily drive the relevant Pickup output in the *Pickup Config* sub-menu in the *Output Config* menu as this will allow the Pick-up led to operate for the function.

Gradually increase current until Pickup LED operates.

Apply 2x setting current and record operating time,

Apply 5x setting current and record operating time.

Compare to calculated values for operating times

P.U. D.O. & TIMING TESTS	Ph.	Dir	Char. (NI EI VI LTI, DTL)	Is (A)	TM	Operate Current			Operate Time		
						P.U. (Amps)	D.O. (Amps)	Tol	2 x Is (sec)	5 x Is (sec)	Tol
	I_4										

Calculated Timing values in seconds for TM =1.0

Curve	2 xIs	5 xIs
IEC-NI	10.03	4.28
IEC-VI	13.50	3.38
IEC-EI	26.67	3.33
IEC-LTI	120.00	30.00
ANSI-MI	3.80	1.69
ANSI-VI	7.03	1.31
ANSI-EI	9.52	1.30

Note that the operate time may be subject to the *Minimum op time* setting for the element and/or may have a *Follower DTL* applied.

If VTS action is set to BLOCK, this option should be tested. Apply balanced voltage and current. Reduce a-phase voltage to cause a VTS condition. Increase a-phase current and check that the element does not operate.

If VTS action is set to Non-Directional, this option should be tested. Apply balanced voltage and current. Reduce a-phase voltage to cause a VTS condition. Increase a-phase current and check that the element operates at its normal setting. Reverse the voltage phase direction whilst checking that the element does not reset.

2.8.3.1 Element Blocking

The Measured Earth Fault elements can be blocked by Binary Input Inhibit, VT Supervision and Inrush Detector operation. The Characteristic can be made non-directional by VT Supervision. This functionality should be checked.

Element	BI Inhibits	VTS action	Inrush Detector
51G-1			
51G-2			
51G-3			
51G-4			
50G-1			
50G-2			
50G-3			
50G-4			

2.8.3.2 ANSI Reset

If the element is configured as an ANSI characteristic, it may have an ANSI decaying reset delay applied.

ANSI reset times from operated condition to fully reset are as follows for zero applied current and TM = 1.0. The reset curve characteristic type and TM is defined by the operating characteristic.

Curve	Fully operated to reset with Zero current applied & TM=1 (secs)
ANSI-MI	4.85
ANSI-VI	21.6
ANSI-EI	29.1

Apply current in the following sequence, a) 2x setting for a time to ensure element operation, b) Zero current for the reset time above (xTM), c) 2x setting for a time to ensure element operation. Check that the second operation (c) is similar to the first (a) and in line with the expected operate time for the element at this current level.

Repeat the test with the reset time (b) reduced to 50% of the previous value. Ensure that the second operate time (c) is 50% of the first (a) operate time.

Operate time (expected)	Reset time (calculated)	Operate time (measured)	50% Reset Time (calculated)	50% operate time (calculated)	50% operate time (measured)
		First test (c)			Second Test (c)

Check correct indication, trip output, alarm contacts, waveform record.

2.8.3.3 IEC Reset

If the element is configured as an IEC characteristic, it may have an IEC (decaying) reset delay applied.

IEC reset times from operated condition to fully reset are as follows for zero applied current and Time multiplier (TM) = 1.0. The reset curve characteristic type and TM is defined by the operating characteristic.

Curve	Fully operated to reset with Zero current applied & TM=1 (secs)
IEC-NI	9.7
IEC-VI	43.2
IEC-EI	58.2
IEC-LTI	80

Apply current in the following sequence, a) 2x setting for a time to ensure element operation, b) Zero current for the reset time above (xTM), c) 2x setting for a time to ensure element operation. Check that the second operation (c) is similar to the first (a) and in line with the expected operate time for the element at this current level.

Repeat the test with the reset time (b) reduced to 50% of the previous value. Ensure that the second operate time (c) is 50% of the first (a) operate time.

Operate time (expected)	Reset time (calculated)	Operate time (measured)	50% Reset Time (calculated)	50% operate time (calculated)	50% operate time (measured)
		First test (c)			Second Test (c)

2.9 Sensitive Earth fault (67/50S,67/51S)

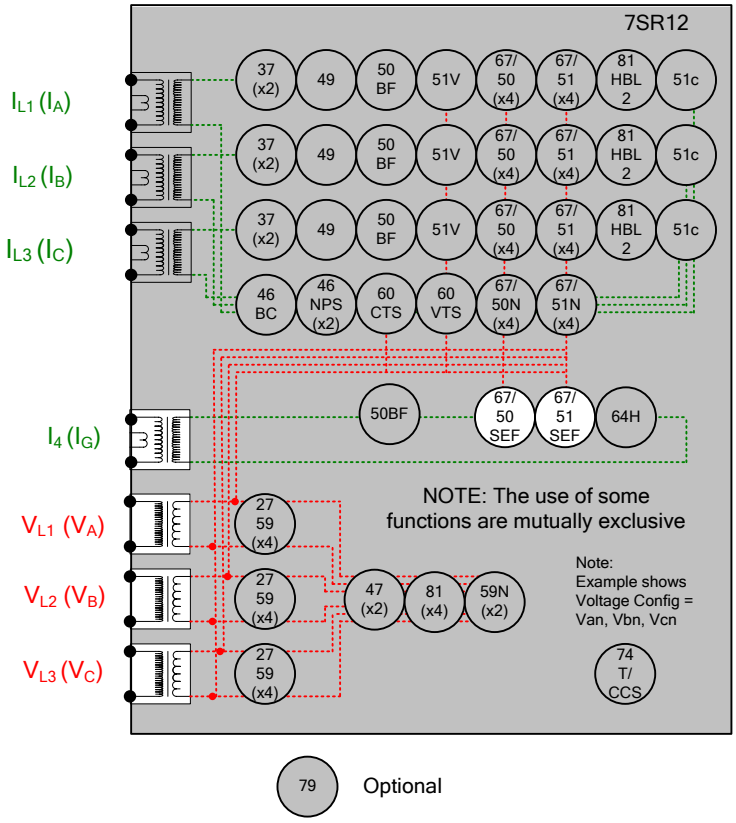

Figure 2-10 Sensitive Earth Fault

Voltage Inputs:	V_{L1} (V_A), V_{L2} (V_B), V_{L3} (V_C) for directional elements
Current Inputs:	I_4 (I_{SEF})
Disable:	64H, 50CBF, 79
Map Pickup LED:	51SEF-n/50SEF-n - Self Reset

Other protection functions may overlap with these functions during testing, it may be useful to disable some functions to avoid ambiguity. Derived EF, Sensitive EF & Restricted EF protections can be Enabled/Disabled individually or as groups in the 'Function Config' menu.

Sensitive EF elements can be separated from Derived EF by secondary injection of current through the I_4 input circuit only.

If any of these elements are defined as directional the correct voltage phase direction will be required to produce an operation of those elements.

The 67SEF elements will normally operate on the residual current through the I_4 input but can be set to operate on only the real (wattmetric) component of this current by setting *67SEF Ires Select* to *Ires Real*. If this option is selected, the residual current and voltage should be set in anti-phase during testing to so that the applied current is purely real and can be measured directly.

If *67SEF Wattmetric* is set to *Enabled*, the residual real power must also exceed the *67SEF Wattmetric Power* setting to permit SEF operation

2.9.1 Directional Polarity

See section Directional Earth Fault Polarity Check above for testing details.

If *67SEF Wattmetric* is set to *Enabled*, the residual real power must also exceed the *67SEF Wattmetric Power* setting to permit SEF operation. As the directional boundary is approached, the Wattmetric current, will by

definition reduce towards zero. It is therefore necessary to increase the residual current or to temporarily disable the Wattmetric function to allow the directional boundary to be tested.

If the 67SEF Compensated Network setting is set to Enabled, the directional boundaries will be extended to MTA+87º and MTA-87º.

MTA	Forward				Reverse			
	Lag (point C)		Lead (point A)		Lead(point B)		Lag (point D)	
	Pick-up	Drop-off	Pick-up	Drop-off	Pick-up	Drop-off	Pick-up	Drop-off
……	MTA-85 ……..		MTA+85 …… …		MTA-85 ……		MTA-85 ……..	
SEF								

2.9.2 Definite Time Overcurrent (50SEF)

If DTL setting is small, gradually increase current until element operates.

If DTL is large apply 0.9x setting, check for no operation, apply 1.1x setting, check operation

Apply 2x setting current if possible and record operating time

P.U. D.O. & TIMING TESTS	Ph.	Dir	Char. (NI EI VI LTI, DTL)	Is (A)	TM	Operate Current			Operate Time		
						P.U. (Amps)	D.O. (Amps)	Tol	2 x Is (sec)	5 x Is (sec)	Tol
	I_4										

Check correct indication, trip output, alarm contacts, waveform record.

Note that these elements can be set to directional.

If VTS action is set to BLOCK, this option should be tested. Apply balanced voltage and current. Reduce a-phase voltage to cause a VTS condition. Increase a-phase current and check that the element does not operate.

If VTS action is set to Non-Directional, this option should be tested. Apply balanced voltage and current. Reduce a-phase voltage to cause a VTS condition. Increase a-phase current and check that the element operates at its normal setting. Reverse the voltage phase direction whilst checking that the element does not reset.

2.9.3 Wattmetric Protection

The Wattmetric Earth Fault protection requires that the SEF current setting is exceeded, the residual power setting is exceeded and the directional element operated, simultaneously.

During testing of the ***67SEF Wattmetric power*** setting it is essential that the current setting is also exceeded. This can usually be achieved by applying current which is above setting to the SEF input whilst applying single phase voltage, in anti-phase with the current, to any 1 phase to neutral voltage input. In this way, the wattmetric power is equal to the product of the applied current and applied voltage and can be adjusted by adjustment of the voltage magnitude.

Wattmetric Power Setting	Current Applied Io	Dir	Operate Voltage Vo	Calculated Po Io x Vo

During testing of the ***67SEF Ires select*** residual current setting it is essential that the wattmetric power setting is also exceeded. This can usually be achieved by applying the test current to the SEF input whilst applying a nominal single phase voltage, in anti-phase with the current, to all 3 phase to neutral voltage inputs. In this way, the wattmetric power is equal to the product of 3 times the applied voltage and the applied current and this should always be greater than the Wattmetric power setting.

2.9.4 Inverse Time Overcurrent (51SEF)

It will be advantageous to map the function being tested to temporarily drive the relevant Pickup output in the *Pickup Config* sub-menu in the *Output Config* menu as this will allow the Pick-up led to operate for the function.

Gradually increase current until Pickup LED operates.

Apply 2x setting current and record operating time,

Apply 5x setting current and record operating time.

Compare to calculated values for operating times

P.U. D.O. & TIMING TESTS	Ph.	Dir	Char. (NI EI VI LTI, DTL)	Is (A)	TM	Operate Current			Operate Time		
						P.U. (Amps)	D.O. (Amps)	Tol	2 x Is (sec)	5 x Is (sec)	Tol
	I_4										

Calculated Timing values in seconds for TM =1.0

Curve	2 xIs	5 xIs
IEC-NI	10.03	4.28
IEC-VI	13.50	3.38
IEC-EI	26.67	3.33
IEC-LTI	120.00	30.00
ANSI-MI	3.80	1.69
ANSI-VI	7.03	1.31
ANSI-EI	9.52	1.30

Note that the operate time may be subject to the *Minimum op time* setting for the element and/or may have a *Follower DTL* applied.

If VTS action is set to BLOCK, this option should be tested. Apply balanced voltage and current. Reduce a-phase voltage to cause a VTS condition. Increase a-phase current and check that the element does not operate.

If VTS action is set to Non-Directional, this option should be tested. Apply balanced voltage and current. Reduce a-phase voltage to cause a VTS condition. Increase a-phase current and check that the element operates at its normal setting. Reverse the voltage phase direction whilst checking that the element does not reset.

2.9.4.1 Element Blocking

The Sensitive Earth Fault elements can be blocked by Binary Input Inhibit, VT Supervision and Wattmetric protection. The Characteristic can be made non-directional by VT Supervision. This functionality should be checked.

Element	**BI Inhibits**	**VTS action**
51SEF-1		
51SEF-2		
51SEF-3		
51SEF-4		
50SEF-1		
50SEF-2		

50SEF-3		
50SEF-4		

2.9.4.2 ANSI Reset

If the element is configured as an ANSI characteristic, it may have an ANSI decaying reset delay applied.

ANSI reset times from operated condition to fully reset are as follows for zero applied current and TM = 1.0. The reset curve characteristic type and TM is defined by the operating characteristic.

Curve	Fully operated to reset with Zero current applied & TM=1 (secs)
ANSI-MI	4.85
ANSI-VI	21.6
ANSI-EI	29.1

Apply current in the following sequence, a) 2x setting for a time to ensure element operation, b) Zero current for the reset time above (xTM), c) 2x setting for a time to ensure element operation. Check that the second operation (c) is similar to the first (a) and in line with the expected operate time for the element at this current level.

Repeat the test with the reset time (b) reduced to 50% of the previous value. Ensure that the second operate time (c) is 50% of the first (a) operate time.

Operate time (expected)	Reset time (calculated)	Operate time (measured)	50% Reset Time (calculated)	50% operate time (calculated)	50% operate time (measured)
		First test (c)			Second Test (c)

Check correct indication, trip output, alarm contacts, waveform record.

2.9.4.3 IEC Reset

If the element is configured as an IEC characteristic, it may have an IEC (decaying) reset delay applied.

IEC reset times from operated condition to fully reset are as follows for zero applied current and Time multiplier (TM) = 1.0. The reset curve characteristic type and TM is defined by the operating characteristic.

Curve	Fully operated to reset with Zero current applied & TM=1 (secs)
IEC-NI	9.7
IEC-VI	43.2
IEC-EI	58.2
IEC-LTI	80

Apply current in the following sequence, a) 2x setting for a time to ensure element operation, b) Zero current for the reset time above (xTM), c) 2x setting for a time to ensure element operation. Check that the second operation (c) is similar to the first (a) and in line with the expected operate time for the element at this current level.

Repeat the test with the reset time (b) reduced to 50% of the previous value. Ensure that the second operate time (c) is 50% of the first (a) operate time.

Operate time (expected)	Reset time (calculated)	Operate time (measured)	50% Reset Time (calculated)	50% operate time (calculated)	50% operate time (measured)
		First test (c)			Second Test (c)

2.10 Restricted Earth fault (64H)

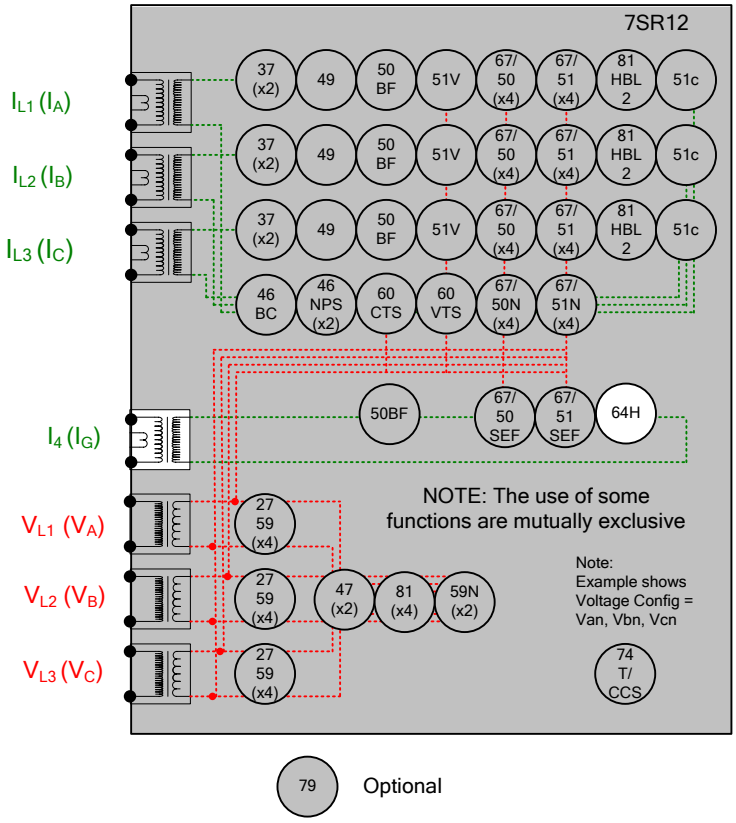

Figure 2-11 Restricted Earth Fault

Voltage Inputs:	n/a
Current Inputs:	I_4 (I_{REF})
Disable:	51SEF, 50SEF, 79
Map Pickup LED:	64H - Self Reset

The setting resistance should be measured and the value compared to that specified in the settings data. Both values should be recorded.

Settings Data Resistor Value	**Measured**

The high value of setting resistance R will often interfere with secondary current injection when using a digital test set. It is normal practice in these cases to short out the series resistor to allow testing, the shorting link should be removed after testing.

Since the DTL setting is generally small the pick-up setting can be tested by gradually increasing current until element operates. The relay should be disconnected from the current transformers for this test.

Apply 2x setting current if possible and record operating time

Phase	**Is (Amps)**	**DTL (sec)**	**P.U. Current Amps**	**Tolerance**	**Operate Time 2 x Is**	**Tolerance**
REF						

It is also desirable to check the operating voltage achieved with the setting resistor and all parallel CTs connected but de-energised. A higher capacity test set will be required for this test. Adequate current must be supplied to provide the magnetising current of all connected CTs. Precautions should be taken to ensure that no personnel are at risk of contact with any of the energised secondary wiring during the test.

Settings Data Voltage Setting	**Measured**

To complete testing of the REF requires primary injection through the phase and residual (REF) CT in series to simulate an out of zone fault and ensure stability of the relay. The test can then be repeated with the REF CT secondary connections reversed to prove operation.

2.10.1.1 Element Blocking

The Restricted Earth Fault element can be blocked by Binary Input Inhibit. This functionality should be checked.

Element	**BI Inhibits**
64H	

Check correct indication, trip output, alarm contacts, waveform record.

Check that any shorting links are removed after testing.

2.11 Negative Phase Sequence Overcurrent (46NPS)

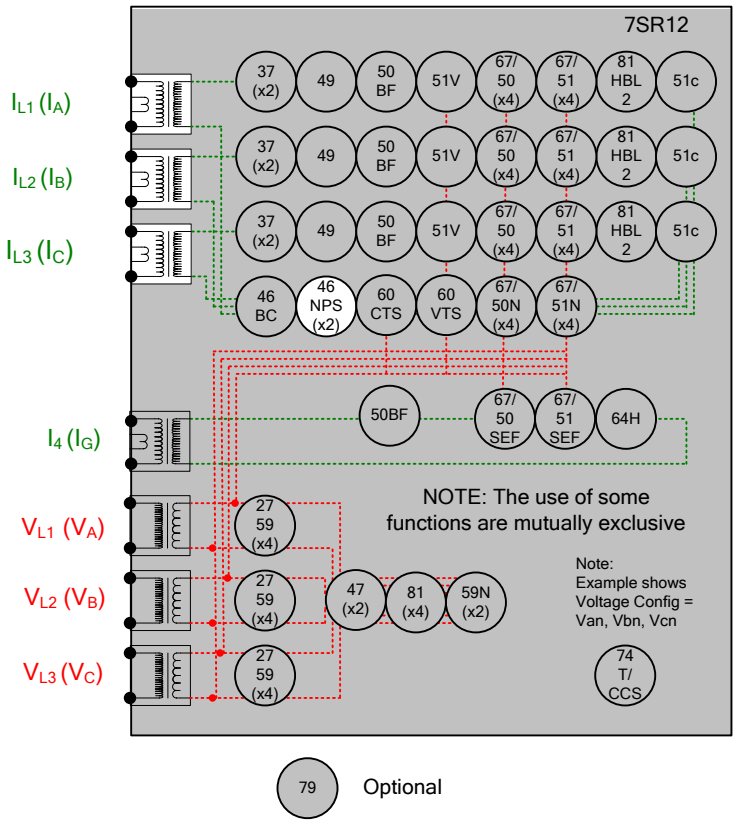

Figure 2-12 Negative Phase Sequence Overcurrent

Voltage Inputs:	n/a
Current Inputs:	I_{L1} (I_A), I_{L2} (I_B), I_{L3} (I_C),
Disable:	51, 51V, 51C, 37, 49, 50CBF, 60CTS, 46BC
Map Pickup LED:	46IT/46DT - Self Reset

Where two NPS elements are being used with different settings, it is convenient to test the elements with the highest settings first. The elements with lower settings can then be tested without disabling the lower settings. The Thermal withstand limitations of the current inputs, stated in the Performance Specification should always be observed throughout testing.

NPS Overcurrent can be tested using a normal 3P balanced source. Two phase current connections should be reversed so that the applied balanced 3P current is Negative Phase Sequence.

If ***Phase Rotation ACB*** is selected in the ***CT/VT Config*** menu, the expected PPS and NPD are exchanged and the output from a standard positive sequence test set will be considered as NPS.

2.11.1 Definite Time NPS Overcurrent (46DT)

If DTL setting is small, gradually increase current until element operates.

If DTL is large apply 0.9x setting, check for no operation, apply 1.1x setting, check operation

Apply 2x setting current if possible and record operating time

Phase	Is (Amps)	DTL (sec)	P.U. Current Amps	Tolerance	Operate Time 2 x Is	Tolerance
NPS						

Check correct indication, trip output, alarm contacts, waveform record.

2.11.2 Inverse Time NPS Overcurrent (46IT)

It will be advantageous to map the function being tested to temporarily drive the relevant Pickup output in the *Pickup Config* sub-menu in the *Output Config* menu as this will allow the Pick-up led to operate for the function.

Gradually increase current until Pickup LED operates.

Apply 2x setting current and record operating time,

Apply 5x setting current and record operating time.

Compare to calculated values for operating times

P.U. D.O. & TIMING TESTS	Ph.	Dir	Char. (NI EI VI LTI, DTL)	Is (A)	TM	Operate Current			Operate Time		
						P.U. (Amps)	D.O. (Amps)	Tol	2 x Is (sec)	5 x Is (sec)	Tol
	NPS										

Calculated Timing values in seconds for TM =1.0

Curve	2 xIs	5 xIs
IEC-NI	10.03	4.28
IEC-VI	13.50	3.38
IEC-EI	26.67	3.33
IEC-LTI	120.00	30.00
ANSI-MI	3.80	1.69
ANSI-VI	7.03	1.31
ANSI-EI	9.52	1.30

Note that the operate time may be subject to the *Minimum op time* setting for the element and/or may have a *Follower DTL* applied.

2.11.2.1 ANSI Reset

If the element is configured as an ANSI characteristic, it may have an ANSI decaying reset delay applied.

ANSI reset times from operated condition to fully reset are as follows for zero applied current and TM = 1.0. The reset curve characteristic type and TM is defined by the operating characteristic.

Curve	Fully operated to reset with Zero current applied & TM=1 (secs)
ANSI-MI	4.85
ANSI-VI	21.6
ANSI-EI	29.1

Apply current in the following sequence, a) 2x setting for a time to ensure element operation, b) Zero current for the reset time above (xTM), c) 2x setting for a time to ensure element operation. Check that the second operation (c) is similar to the first (a) and in line with the expected operate time for the element at this current level.

Repeat the test with the reset time (b) reduced to 50% of the previous value. Ensure that the second operate time (c) is 50% of the first (a) operate time.

Operate time (expected)	Reset time (calculated)	Operate time (measured)	50% Reset Time (calculated)	50% operate time (calculated)	50% operate time (measured)
		First test (c)			Second Test (c)

2.11.2.2 Element Blocking

The NPS Overcurrent elements can be blocked by Binary Input Inhibit. This functionality should be checked.

Element	BI Inhibits
46IT	
46DT	

Check correct indication, trip output, alarm contacts, waveform record.

When testing is complete reinstate any of the disabled functions.

2.12 Undercurrent (37)

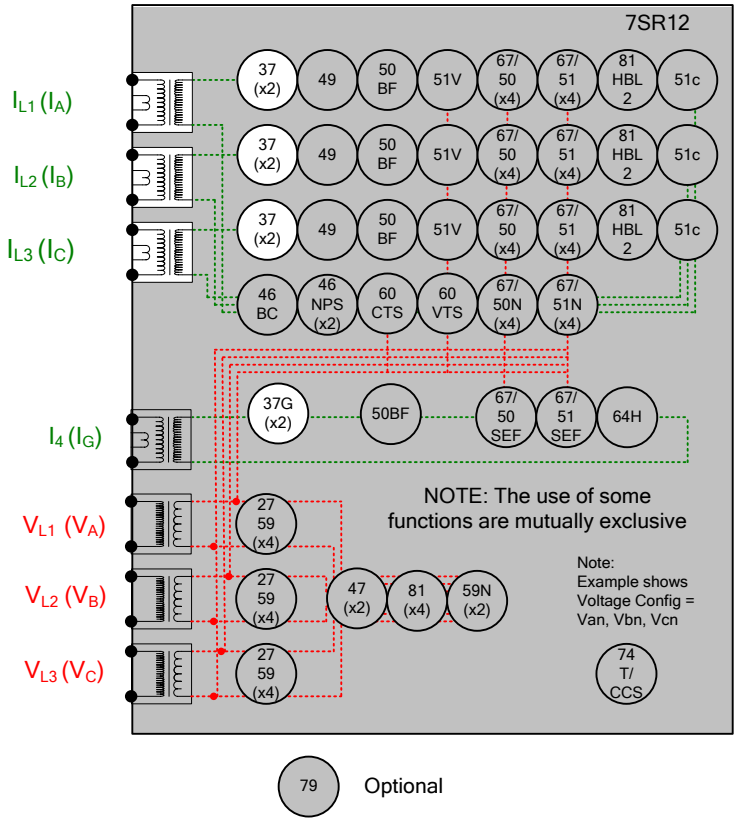

Figure 2-13 Undercurrent

Voltage Inputs:	n/a
Current Inputs:	I_{L1} (I_A), I_{L2} (I_B), I_{L3} (I_C),I4
Disable:	51N, 51G, 46, 60CTS, 46BC
Map Pickup LED:	37-n - Self Reset
Undercurrent Guard:	As required
Undercurrent start:	Any or ALL

If two Undercurrent 37 elements are used with different settings, it is convenient to test the element with the lowest setting first. The higher setting element can then be tested without interference from the other element.

Apply 3Phase balanced current or single phase current on the single pole relay models and earth fault function 37G/37SEF, at a level above the Undercurrent 37-n setting until the element resets. Check operation with start option set to ANY phase and repeat with it set to operate for ALL phases.

If DTL setting is small, gradually reduce any phase current in turn until element operates.

If DTL is large apply 1.1x setting, check for no operation, apply 0.9x setting, check operation

Testing of this element phase by phase may cause inadvertent operation of the 46 NPS Overcurrent elements.

Apply 0.5x setting current and record operating time

Phase	Is (Amps)	DTL (sec)	P.U. Current Amps	Tolerance	Operate Time 0.5 x Is	Tolerance
$I_{L1}(I_A)$						
$I_{L2}(I_B)$						
$I_{L3}(I_C)$						
$I4(I_G)$						

2.12.1.1 Element Blocking

The Undercurrent elements can be blocked by Binary Input Inhibit. This functionality should be checked.

Element	BI Inhibits
37-1	
37-2	
37G-1 or 37SEF-1	
37G-2 or 37SEF-2	

2.12.1.2 Element Blocking from current guard

The elements can be blocked by undercurrent guard function. This functionality should be checked.

Element	Guard Setting	Blocked
37-1		
37-2		

Check correct phase indication, trip output, alarm contacts, waveform record.

2.13 Thermal Overload (49)

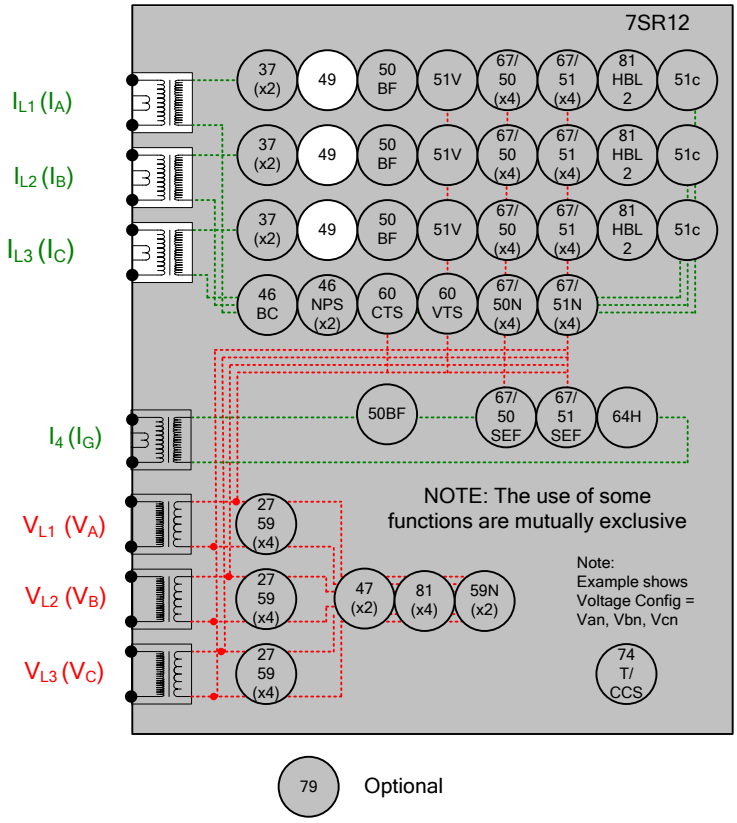

Figure 2-14 Thermal Overload

Voltage Inputs:	n/a
Current Inputs:	I_{L1} (I_A), I_{L2} (I_B), I_{L3} (I_C),
Disable:	51, 50, 37, 50CBF
Map Pickup LED:	49Alarm

The current can be applied from a 3P balanced supply or phase by phase from a 1P supply. Alternatively the 3 phase current inputs can be connected in series and injected simultaneously from a single 1P source.

The Thermal Overload Setting and Time Constant Setting can be considered together to calculate the operating time for a particular applied current.

The following table lists operate times for a range of Time Constant Settings for an applied current of 2x the Thermal Overload setting. Ensure that the thermal rating of the relay is not exceeded during this test.

Time Constant (mins)	Operate Time (sec)
1	17.3
2	34.5
3	51.8
4	69
5	86.3
10	173
15	259
20	345
25	432
30	51.8
50	863
100	1726

The Thermal State must be in the fully reset condition in order to measure the operate time correctly. This can be achieved by setting change in the Thermal protection settings menu or by pressing the Test/Reset button when the Thermal Meter is shown in the Instruments Mode.
Reset the thermal State then apply 2x the Overload Setting current.

Calculated Operate Time (s)	Measured Operate Time (s)

If the Thermal Overload Capacity Alarm is used, this can be tested by monitoring the Thermal Capacity in the instruments menu. If the Thermal time constant is longer than a few minutes, this can be assessed during the timing test above. If the Time Constant is less than a few minutes, a lower multiple of current will be required such that the rate of capacity increase is slowed to allow monitoring of the instrument to be accurate.

Capacity Alarm Setting	Measured

2.13.1.1 Element Blocking

The Thermal element can be blocked by Binary Input Inhibit. This functionality should be checked.

Element	BI Inhibits
49	

2.14 Over/Under Voltage

2.14.1 Phase Under/Over Voltage (27/59)

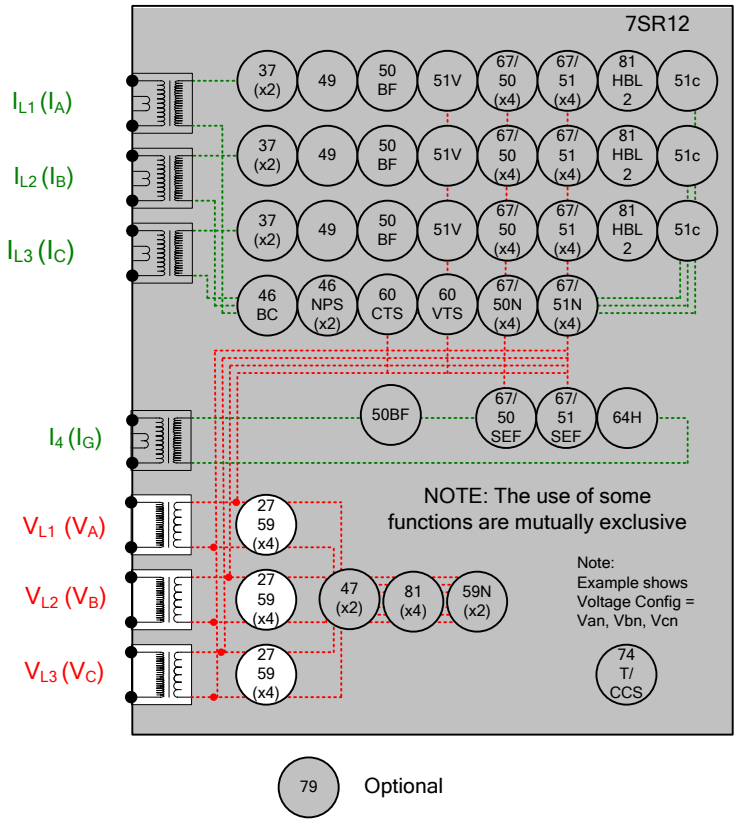

Figure 2-15 Phase Under/Over Voltage

Voltage Inputs:	V_{L1} (V_A), V_{L2} (V_B), V_{L3} (V_C)
Current Inputs:	n/a apply zero current to stabilize other functions
Disable:	47, 59N, 60VTS
Map Pickup LED:	27/59-n - Self Reset

Where more than one Undervoltage (27) elements are being used with different settings, it is convenient to test the elements with the lowest settings first. The elements with higher settings can then be tested without disabling the lower settings.

Note that if the voltage is reduced below the 27UVG setting, the function may be blocked. VTS operation may also block the 27 Undervoltage function. Current inputs are not normally required to stabilise the relay during voltage element testing.

If the 'O/P Phases' is set to 'All', the voltage on all phases must be reduced simultaneously. Otherwise the 3 phases should be tested individually. If the DTL is short, starting from nominal voltage, slowly decrease the applied 3P or VL1 test voltage until the Pickup LED (temporarily mapped) is lit. Record the operate voltage. The LED should light at setting Volts +/-5%. Slowly increase the input voltage until the LED extinguishes. Record the reset voltage to check the 'Hysteresis' setting. If the DTL is long, the operate level level should be checked by applying a voltage of 90% of setting voltage. Check Hysteresis by resetting element to the operate level setting plus the hysteresis setting.

Connect the relevant output contact(s) to stop the test set. Step the applied voltage to a level below the setting. The test set should be stopped at the operate time setting +/-5%

Test inputs VL2 and VL3 by repeating the above if necessary.

When testing is complete reinstate any of the disabled functions.

Where more than one overvoltage (59) elements are being used with different settings, it is convenient to test the elements with the highest settings first. The elements with lower settings can then be tested without disabling the higher settings.

If the 'O/P Phases' is set to 'All', the voltage on all phases must be increased simultaneously. Otherwise the 3 phases should be tested individually. If the DTL setting is short, starting from nominal voltage, slowly increase the applied 3P or VL1 test voltage until the Pickup LED (temporarily mapped) is lit. The LED should light at setting Volts +/-5% Decrease the input voltage to nominal Volts and the LED will extinguish. Record the reset voltage to check the 'Hysteresis' setting. If the DTL setting is long, the operate level can be checked by applying 100% of setting to cause operation followed by setting minus the Hysteresis setting to cause reset.

Connect the relevant output contact(s) to stop the test set. Step the applied voltage to a level above the setting. The test set should be stopped at the operate time setting +/-5%

Test inputs VL2 and VL3 by repeating the above if necessary.

Phase	Setting (Volts)	U/O	DTL (sec)	Hyst.	D.O. (calculated)	P.U. Volts	D.O Volts	Op. Time @ 2x Vs (OV) @ 0.5x Vs (UV)	UV Guard	Tolerance
$V_1(V_A)$										
$V_2(V_B)$										
$V_3(V_C)$										

2.14.1.1 Element Blocking

The Under/Over Voltage elements can be blocked by Binary Input Inhibit and VT Supervision. This functionality should be checked.

Element	BI Inhibits	VT Supervision
27/59-1		
27/59-2		
27/59-3		
27/59-4		

When testing is complete reinstate any of the disabled functions.

2.14.2 Undervoltage Guard (27/59UVG)

If any 27 Undervoltage element is set to be inhibited by the 27 Undervoltage Guard element, this function should be tested.

Connect the test voltage inputs to suit the installation wiring diagram utilising any test socket facilities available. It may be useful to temporarily map an LED as 'General Pickup' to assist during testing. 27UVG operation will reset the General Pickup if no other element is operated. This LED should not be set as 'Hand Reset' in the Output matrix.

Starting from nominal voltage, apply a step decrease to the applied voltage to a level below the 27 Undervoltage setting but above the 27UVG setting such that an Undervoltage element operation occurs. Slowly reduce the applied voltage until the 27 Undervoltage element resets, this can be detected by the General Pickup LED reset if no other element is operated (this includes any Undervoltage element which is not UV Guarded).

Phase	Setting (Volts)	Tolerance	V element Used for test	Blocked Volts	NOTES
UVG					

2.14.3 NPS Overvoltage (47)

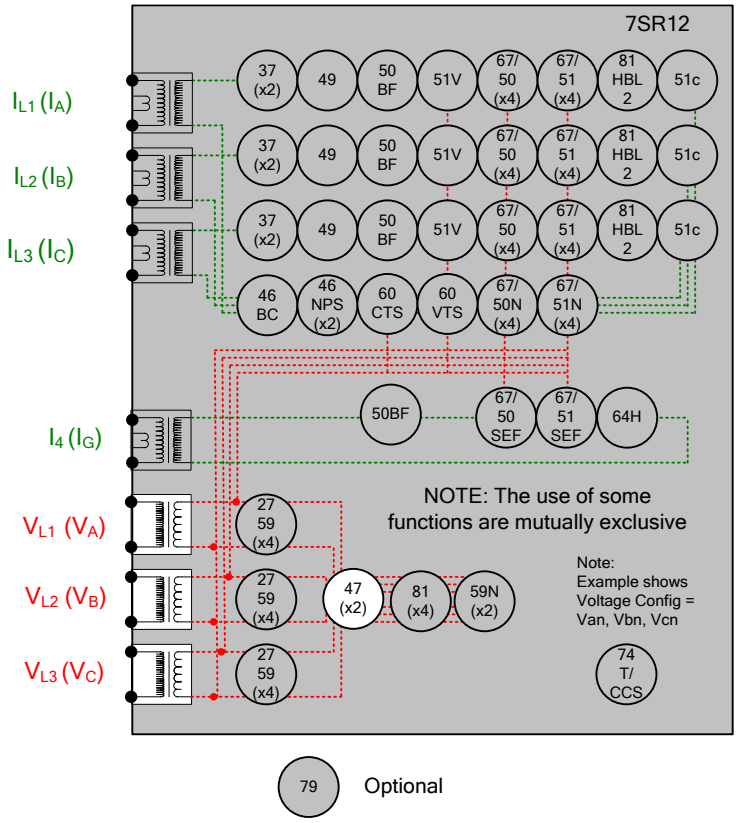

Figure 2-16 NPS Overvoltage

Voltage Inputs:	V_{L1} (V_A), V_{L2} (V_B), V_{L3} (V_C)
Current Inputs:	n/a apply zero current to stabilize other functions
Disable:	27/59, 59N, 60VTS
Map Pickup LED:	47-n - Self Reset

Where two NPS elements are being used with different settings, it is convenient to test the elements with the highest settings first. The elements with lower settings can then be tested without disabling the lower settings.

NPS Overvoltage can be tested using a normal 3P balanced source. Two phase voltage connections should be reversed so that the applied balanced 3P voltage is Negative Phase Sequence.

If the 47-n delay is small, gradually increased the applied balanced 3P voltage until element operates.

If DTL is large apply 0.9x setting, check for no operation, apply 1.1x setting, check operation

Apply 2x setting current if possible and record operating time

	Setting (Volts)	Delay (sec)	Hyst.	P.U. (Volts)	D.O (Volts)	Op. Time @ 2x Vs	U/V Guard	Tolerance
NPS								

2.14.3.1 Element Blocking

The NPS Overvoltage element can be blocked by Binary Input Inhibit. This functionality should be checked.

Element	BI Inhibits
47-1	
47-2	

Check correct indication, trip output, alarm contacts, waveform record.

2.14.4 Undervoltage Guard (47 U/V Guard)

If any 47 NPS overvoltage element is set to be inhibited by the 47 Undervoltage Guard element, this function should be tested.

Connect the test voltage inputs to suit the installation wiring diagram utilising any test socket facilities available. It may be useful to temporarily map an LED as ‘General Pickup’ to assist during testing. 47UVG operation will reset the General Pickup if no other element is operated. This LED should not be set as ‘Hand Reset’ in the Output matrix.

Starting from nominal voltage, apply a step decrease to the applied voltage to a level below the 47 NPS voltage setting but above the 47UVG setting such that an NPS Overvoltage element operation occurs. Slowly reduce the applied voltage until the 47 NPS voltage element resets, this can be detected by the General Pickup LED reset if no other element is operated (this includes any Undervoltage element which is not UV Guarded).

Phase	Setting (Volts)	Tolerance	V element Used for test	Blocked Volts	NOTES
UVG					

2.14.5 Neutral Overvoltage (59N)

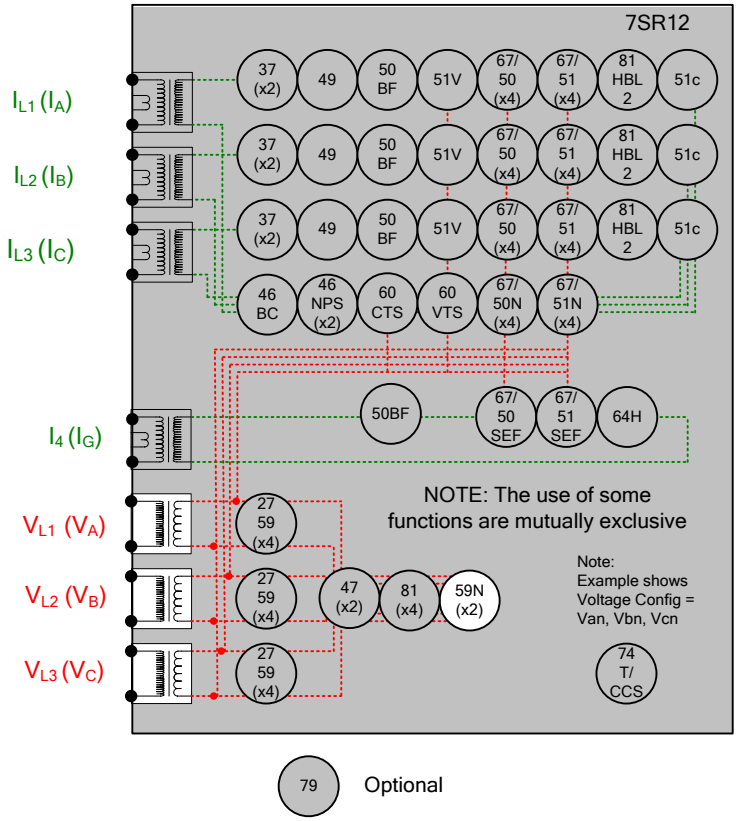

Figure 2-17 Neutral Overvoltage

Voltage Inputs:	V_{L1} (V_A), V_{L2} (V_B), V_{L3} (V_C)
Current Inputs:	n/a apply zero current to stabilize other functions
Disable:	27/59, 47, 60VTS
Map Pickup LED:	59N-n - Self Reset

The voltage source for the Neutral Overvoltage 59N function is Vn, calculated from the applied 3 phase voltage inputs. To test, apply test voltage to one phase input.

2.14.6 Definite Time (59NDT)

If DTL setting is small, gradually increase single phase voltage until element operates.

If DTL is large apply 0.9x setting, check for no operation, apply 1.1x setting, check operation

Apply 2x setting voltage if possible and record operating time

Phase	Setting (Volts)	Delay (sec)	P.U. Current (Volts)	Operate Time @ 2 x Vs	Tolerance
E					

Check correct indication, trip output, alarm contacts, waveform record.

2.14.7 Inverse Time (59NIT)

It will be advantageous to map the function being tested to temporarily drive the relevant Pickup output in the *Pickup Config* sub-menu in the *Output Config* menu as this will allow the Pick-up led to operate for the function.

Gradually increase voltage until Pickup LED operates.

Apply 2x setting voltage and record operating time,

Apply a higher multiple of setting voltage and record operating time.

Compare to calculated values for operating times from:

$$t_{op}(\sec) = M\left[\frac{1}{\left[\frac{Vn}{Vs}\right]-1}\right]$$

Where M = Time multiplier and Vn/Vs = multiple of setting.

Phase	Setting (Volts)	TM	Operate Voltage			Operate Time		
			P.U. (Volts)	D.O. (Volts)	Tolerance	@ 2 x Vs (sec)	@ - x Vs (sec)	Tolerance
E								

2.14.7.1 Element Blocking

The Neutral Overvoltage elements can be blocked by Binary Input Inhibit. This functionality should be checked.

Element	BI Inhibits
59NIT	
59NDT	

Check correct indication, trip output, alarm contacts, waveform record.

When testing is complete reinstate any of the disabled functions.

2.15 Under/Over Frequency (81)

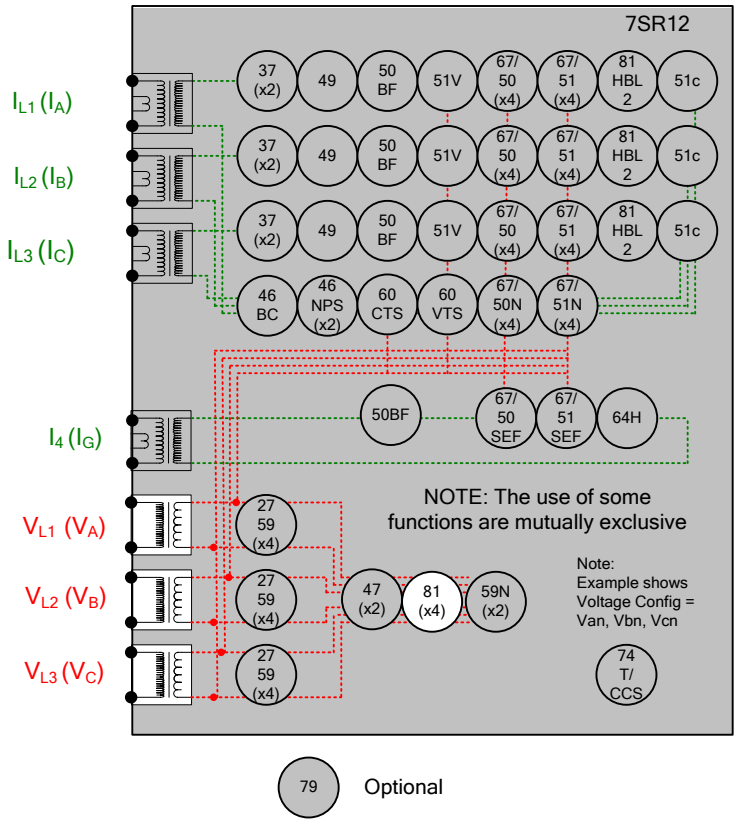

Figure 2-18 Under/Over Frequency

Voltage Inputs:	V_{L1} (V_A), V_{L2} (V_B), V_{L3} (V_C)
Current Inputs:	n/a apply zero current to stabilize other functions
Disable:	
Map Pickup LED:	81-n - Self Reset

This function can be tested by application of 1P or 3P voltage. For Over-frequency, the elements with the highest setting should be tested first and for Under-frequency the elements with the lowest settings should be tested first. The elements with other settings can then be tested without need to disable the elements already tested. Note that the relay is designed to track the gradual changes in power system frequency and that sudden step changes in frequency during testing do not reflect normal system operation. Normal 'instantaneous' operation of the frequency element is 140-175ms in line with the Performance Specification. Application of sudden step changes to frequency can add additional delay which can produce misleading test results.

Gradually increase/decrease applied voltage frequency until 81-n operation occurs. Elements set for more extreme frequency fluctuation should be tested first with lesser elements disabled.

If the 81-n Delay setting is long it will be advantageous to map the function to temporarily drive the relevant Pickup output in the *Pickup Config* sub-menu in the *Output Config* menu as this will allow the Pick-up led to operate for the function. If the delay setting is short the operation of the element can be easily checked directly.

The frequency should then be gradually decreased/increased until the element resets. The reset frequency can be used to check the Hysteresis setting.

If the element is set as ***81-n U/V Guarded***, The applied voltage must be above the ***81 UV Guard* Setting** in the ***U/O Frequency*** menu.

Apply setting frequency +0.5Hz for Over-frequency or -0.5Hz for Under-frequency and record operating time.

Starting with the element in the operated condition, gradually increase or decrease the applied voltage until the element resets. Measure the reset voltage level to check the ***81 Hysteresis*** setting.

Freq (Hertz)	U/O	Delay (sec)	Hyst.	D.O. (calc.)	P.U. Freq (Hertz)	D.O. Freq. (Hertz)	Operate Time @ +/- 0.5Hz	UV Guard	NOTES

If the element is set as ***81-nU/V Guarded*****,** this setting can be tested by applying the test voltage at a level below the ***81 U/V Guard Setting*** at a frequency in the operate range. Increase the voltage until the relay operates.

UVG Setting (Volts)	Freq element Used for test	Blocked Volts (D.O.)	Unblocked Volts (P.U.)	NOTES

2.15.1.1 Element Blocking

The U/O Frequency elements can be blocked by Binary Input Inhibit. This functionality should be checked.

Element	BI Inhibits
81-1	
81-2	
81-3	
81-4	
81-5	
81-6	

Check correct indication, trip output, alarm contacts, waveform record.

When testing is complete reinstate any of the disabled functions.

2.16 Power (32)

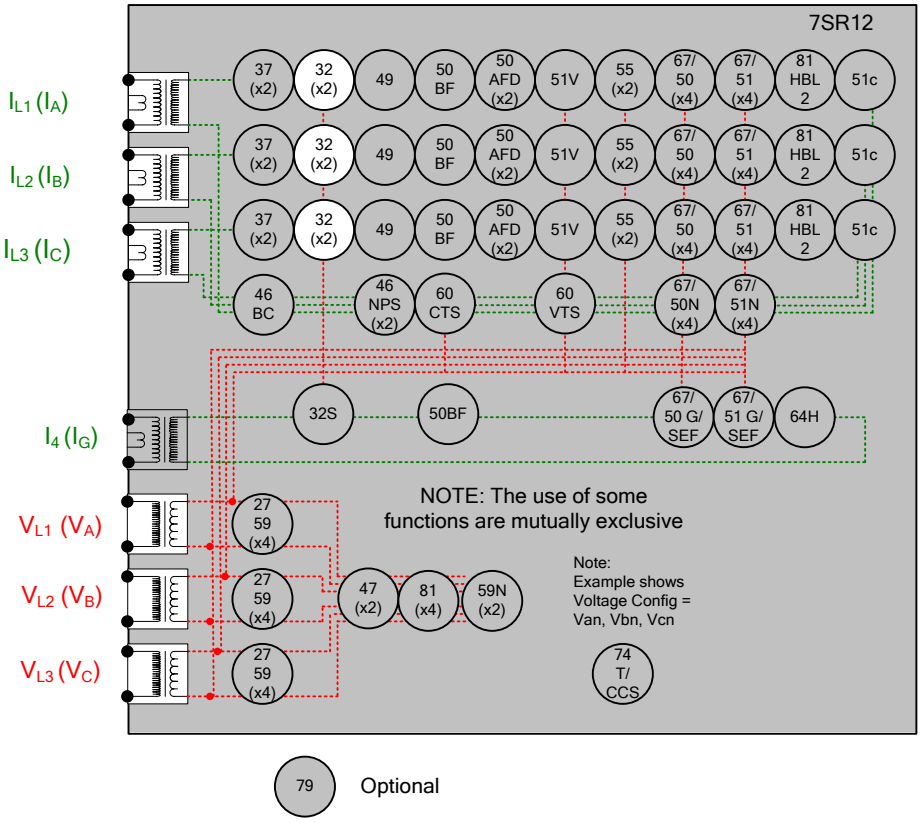

Figure 2-19 Power

Voltage Inputs:	V_{L1} (V_A), V_{L2} (V_B), V_{L3} (V_C)
Current Inputs:	I_{L1} (I_A), I_{L2} (I_B), I_{L3} (I_C),
Disable:	50, 51,27
Map Pickup LED:	32-n - Self Reset

This function can be tested by application 3P current and voltage. For Over-power, the elements with the highest setting should be tested first and for Under-power the elements with the lowest settings should be tested first. The elements with other settings can then be tested without need to disable the elements already tested.

From the nominal power setting Sn gradually increase/decrease applied voltage or current until 32-n operation occurs.

If the 32-n Delay setting is long it will be advantageous to map the function to temporarily drive the relevant Pickup output in the *Pickup Config* sub-menu in the *Output Config* menu as this will allow the Pick-up led to operate for the function. If the delay setting is short the operation of the element can be easily checked directly.

The current or voltage should then be decreased/increased until the element resets.

If the element is set as *32-**n U/C Guarded***, The applied current must be above the 32 ***U/C Guard*** **Setting**.

Apply setting power +10% for Over-power or -10% for Under-power and record operating time.

	Power (xSn)	U/O	DTL (sec)	P.U. Power (xSn)	D.O. Power (xSn)	Operate Time +/- 0.5Hz	UC Guard	NOTES
32-1								
32-2								

If the element is set as 32***-n U/C Guarded*****,** the setting can be tested by applying the test current at a level below the ***32-n U/C Guard Setting*** at a power in the operate range. Increase the current until the relay operates.

UCG	UCG Setting (xIn)	Power element Used for test	Blocked Current (D.O.)	Unblocked Current (P.U.)	NOTES
U/O Power					

2.16.1.1 Element Blocking

The U/O Power elements can be blocked by Binary Input Inhibit. This functionality should be checked.

Element	BI Inhibits
32-1	
32-2	

Check correct indication, trip output, alarm contacts, waveform record.

When testing is complete reinstate any of the disabled functions.

2.17 Sensitive Power (32S)

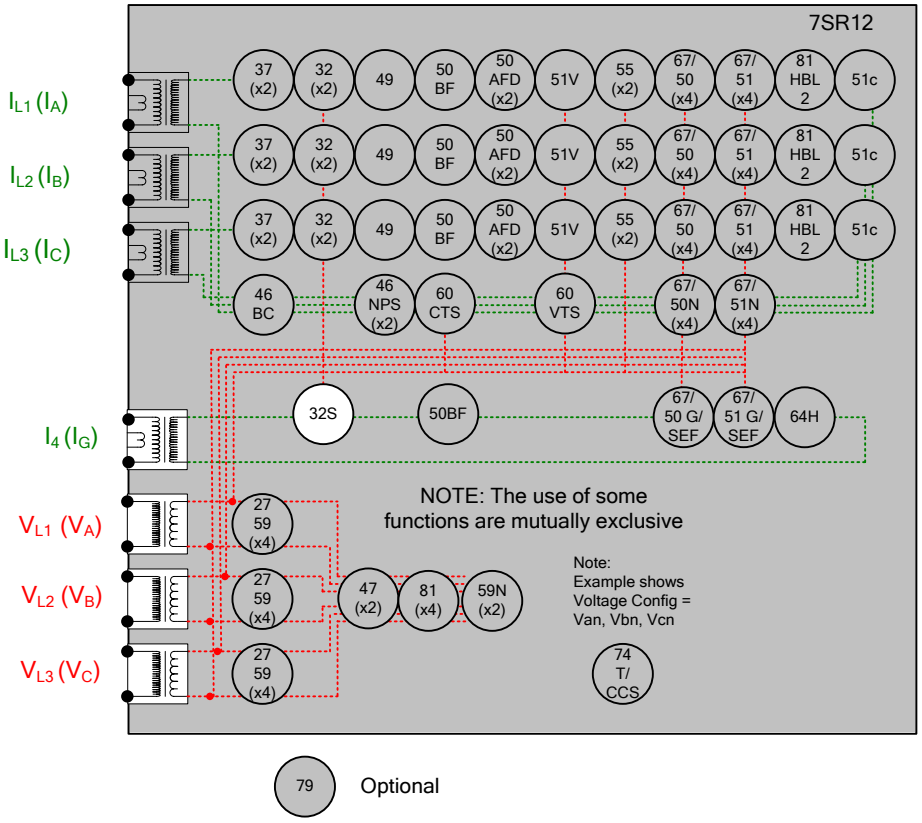

Figure 2-20 Sensitive Power

Voltage Inputs:	V_{L1} (V_A), V_{L2} (V_B), V_{L3} (V_C)
Current Inputs:	I_4 (I_{SEF})
Disable:	27
Map Pickup LED:	32S-n - Self Reset

This function can be tested by application 1P current and 3P voltage. For Over-power, the elements with the highest setting should be tested first and for Under-power the elements with the lowest settings should be tested first. The elements with other settings can then be tested without need to disable the elements already tested.

From the nominal power setting Sn gradually increase/decrease applied voltage or current until 32S-n operation occurs.

If the 32S-n Delay setting is long it will be advantageous to map the function to temporarily drive the relevant Pickup output in the *Output Config* > *Pickup Config* menu. This will allow the Pick-up led to operate for the function. If the delay setting is short the operation of the element can be easily checked directly.

The current or voltage should then be decreased/increased until the element resets.

If the element is set as *32S**-n U/C Guarded***, The applied current must be above the *32S **U/C Guard*** **Setting**.

Apply setting power +10% for Over-power or -10% for Under-power and record operating time.

	Power (xSn)	U/O	DTL (sec)	P.U. Power (xSn)	D.O. Power (xSn)	Operate Time +/- 0.5Hz	UC Guard	NOTES
32S-1								
32S-2								

If the element is set as 32S***-n U/C Guarded*****,** the setting can be tested by applying the test current at a level below the ***32S-n U/C Guard Setting*** at a power in the operate range. Increase the current until the relay operates.

UCG	UCG Setting (xIn)	Power element Used for test	Blocked Current (D.O.)	Unblocked Current (P.U.)	NOTES
U/O Power					

2.17.1.1 Element Blocking

The U/O Power elements can be blocked by Binary Input Inhibit. This functionality should be checked.

Element	BI Inhibits
32S-1	
32S-2	

Check correct indication, trip output, alarm contacts, waveform record.

When testing is complete reinstate the disabled functions.

2.18 Power Factor (55)

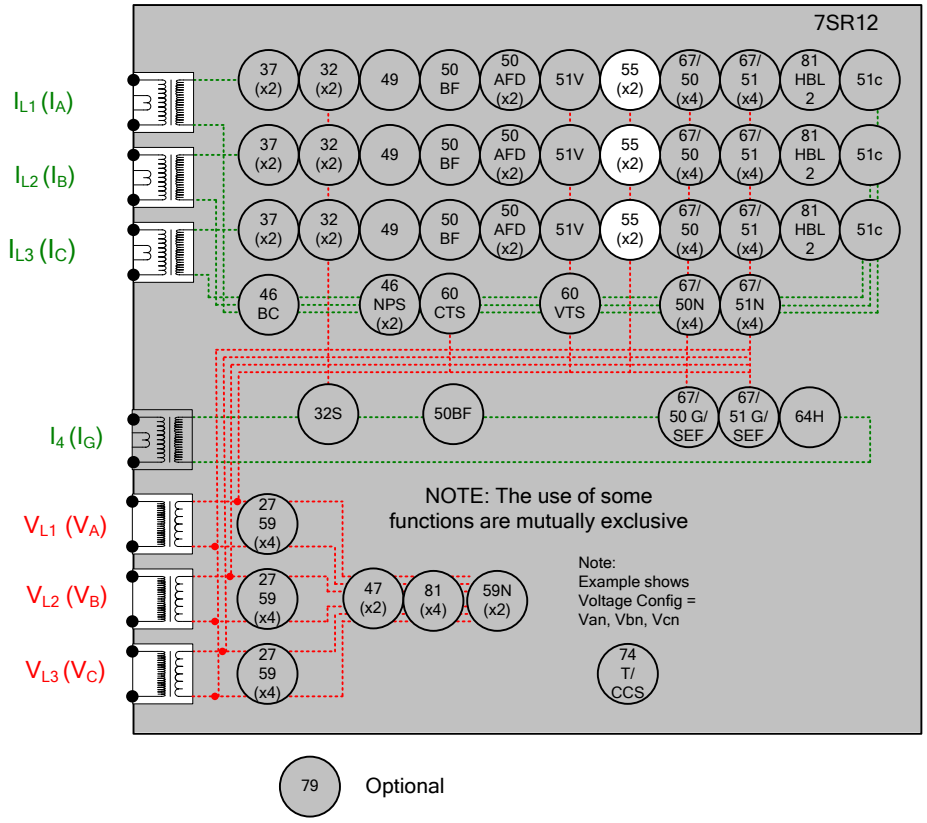

Figure 2-21 Power Factor

Voltage Inputs:	V_{L1} (V_A), V_{L2} (V_B), V_{L3} (V_C)
Current Inputs:	I_{L1} (I_A), I_{L2} (I_B), I_{L3} (I_C),
Disable:	49
Map Pickup LED:	55-n - Self Reset

Apply balanced 3 phase rated voltage and current. Increase current phase angle until the LED assigned to '55-n' is lit. Record this angle in the table below. Decrease the angle until the LED resets. Record the angle.

	55 Setting	Angle	Pick-Up	Drop-Off
55-1				
55-2				

If the element is set as 55-***n U/C Guarded***, the setting can be tested by applying the test current at a level below the 55-***n U/C Guard Setting*** at a power in the operate range. Increase the current until the relay operates.

UCG	UCG Setting (xIn)	Power element Used for test	Blocked Current (D.O.)	Unblocked Current (P.U.)	NOTES
Power Factor					

2.18.1.1 Element Blocking

The Power Factor elements can be blocked by Binary Input Inhibit. This functionality should be checked.

Element	BI Inhibits
55-1	
55-2	

Check correct indication, trip output, alarm contacts, waveform record.

When testing is complete reinstate any of the disabled functions.

©2019 Siemens Protection Devices Limited

Section 3: Supervision Functions

3.1 CB Fail (50BF)

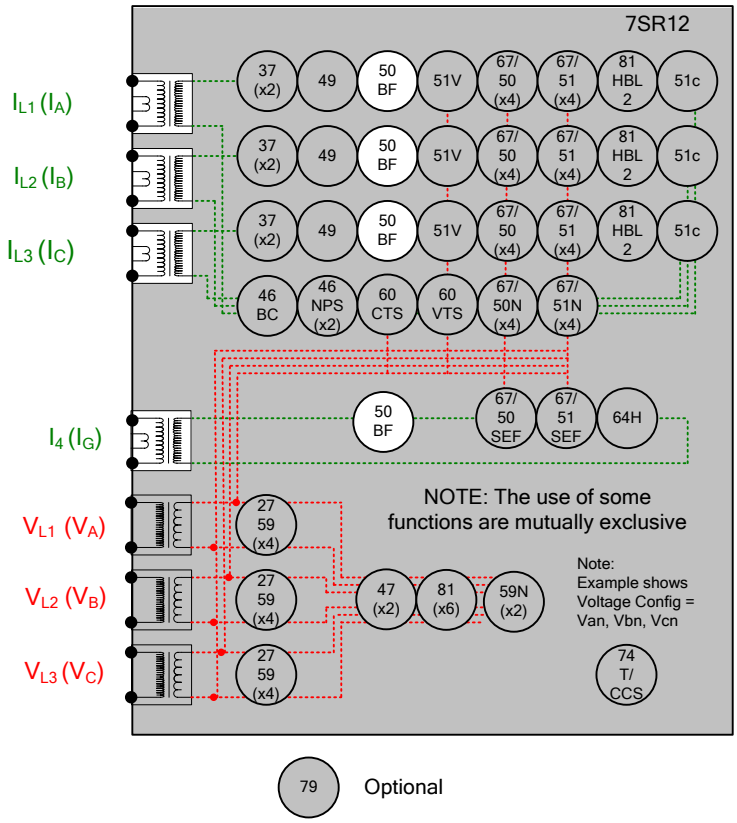

Figure 2-22 CB Fail

Voltage Inputs:	n/a
Current Inputs:	I_{L1} (I_A), I_{L2} (I_B), I_{L3} (I_C), I_{L4}
Disable:	
Map Pickup LED:	50BF-n - Self Reset

The circuit breaker fail protection time delays are initiated either from:

A binary output mapped as **Trip Contact** in the OUTPUT CONFIG>BINARY OUTPUT CONFIG menu,

or

A binary input mapped as **50BF Ext Trip** in the INPUT CONFIG>INPUT MATRIX menu.

Or

A binary input mapped as **50BF Mech Trip** in the INPUT CONFIG>INPUT MATRIX menu.

Apply a trip condition by injection of current to cause operation of a suitable protection element. Allow current to continue after the trip at a level of 110% of the *50BF Setting* current level on any phase. Measure the time for operation of *50BF-1 Delay* and *50BF-2 Delay.* Repeat the sequence with the 50BF CB Faulty input energised and ensure the 50BF-1 and 50BF-2 outputs operate without delay, by-passing the timer delay settings.

Repeat the sequence with current at 90% of the *50BF Setting* current level after the element trip and check for no CB Fail operation.

Repeat the sequence by injecting the current to I4 and using the *50BF-I4 Setting.*

50BF Setting (xIn)	**Test Current**	50BF-1 Delay……	50BF-2 Delay……
	(110%)……		
	(90%)……..	No Operation □	No Operation □
	50BF CB Faulty	Operation No Delay □	Operation No Delay □
50BF-I4 Setting (xIn)	**Test Current**	50BF-1 Delay……	50BF-2 Delay……
	(110%)……		
	(90%)……..	No Operation □	No Operation □
	50BF CB Faulty	Operation No Delay □	Operation No Delay □

If the circuit breaker can also receive a trip signal from a protection function where there is no increase in current, this trip input should be mapped to **50BF Mech Trip** in the INPUT CONFIG>INPUT MATRIX menu.

Initiate this binary input and simulate the circuit breaker remaining closed by ensuring the CB Closed binary Input is energised and ensure operation of the 50BF-1 and 50BF-2 outputs after their programmed delays.

50BF Mech Trip		50BF-1 Delay……	50BF-2 Delay……
	CB Closed		
	CB Open	No Operation □	No Operation □

3.1.1 Element Blocking

The CB Fail function can be blocked by Binary Input Inhibit. This functionality should be checked.

Element	BI Inhibits
50BF	

3.2 Voltage Transformer Supervision (60VTS)

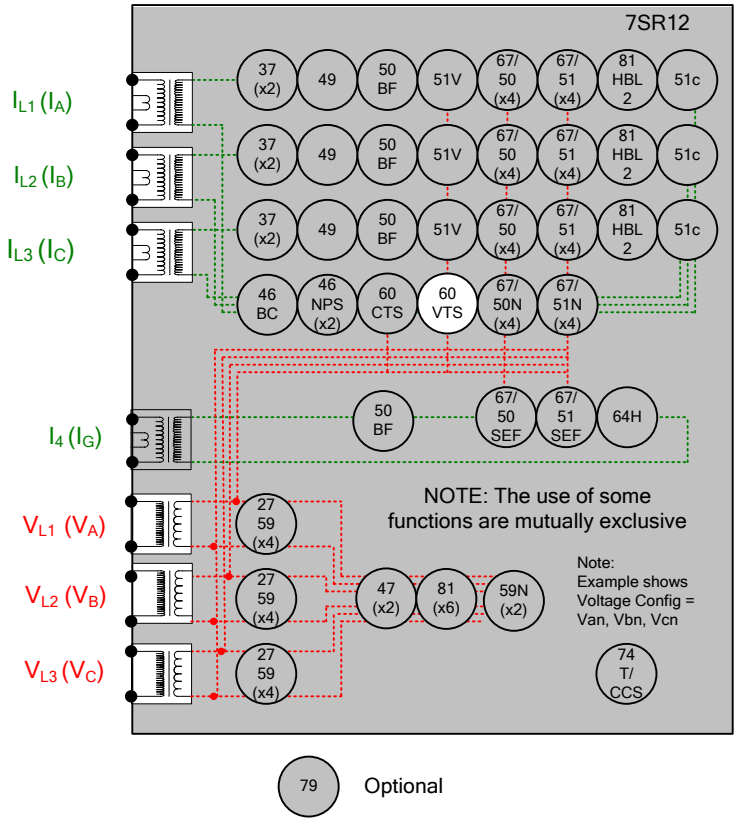

Figure 2-23 Voltage Transformer Supervision

Voltage Inputs:	V_{L1} (V_A), V_{L2} (V_B), V_{L3} (V_C)
Current Inputs:	I_{L1} (I_A), I_{L2} (I_B), I_{L3} (I_C),
Disable:	27, 47, 59N
Map Pickup LED:	60VTS - Self Reset

3.2.1 1 or 2 Phase VT fail

Apply 3P balanced nominal current and voltage. Reduce 1 phase voltage until VTS operates, record voltage reduction level.

60VTS V Setting	Setting x 3	Measured Voltage Reduction

Increase the voltage until VTS resets. Increase current on 1 phase by 110% of 3x the *60VTS I* setting. Reduce voltage as above and check for no operation. Return voltage to nominal. Increase current on 1 phase by 90% of 3x the *60VTS I* setting. Reduce voltage as above and check for VTS operation

60VTS I Setting	Setting x 3	110% of Setting x 3	90% of Setting x 3
		No VTS ☐	VTS operation ☐

3.2.2 3 Phase VT fail

Apply 3P balanced nominal voltage and 3P balanced current at a level between the *60VTS Ipps Load* setting and the *60VTS Ipps Fault* setting. Reduce the balanced Voltage on all 3 phases until the VTS operates at the *60VTS Vpps* setting. Return the voltage to nominal and ensure that VTS resets.

Reduce the 3P balanced current to a level below the *60VTS Ipps Load* setting. Reduce the 3P balanced voltage to a level below the operate level above. Gradually increase the 3P balanced current until the VTS operates.

Check that the thermal rating of the relay current inputs is not exceeded during the following test. Increase the 3P balanced current to a level above the *60VTS Ipps Fault* setting. Reduce the 3P balanced voltage to a level below the operate level above. Gradually reduce the 3P balanced current until the VTS operates.

	Setting	**Measured**
60VTS Vpps		
60VTS Ipps Load		
60VTS Ipps Fault		

If the VTS can be started from a status input fed from an external source, this functionality should be tested.

Ext_Trig 60VTS Operation □ Not Applicable □

3.2.2.1 Element Blocking

The VT Supervision can be blocked by Binary Input Inhibit. This functionality should be checked.

Element	**BI Inhibits**
60VTS	

3.3 Current Transformer Supervision (60CTS)

3.3.1 7SR11

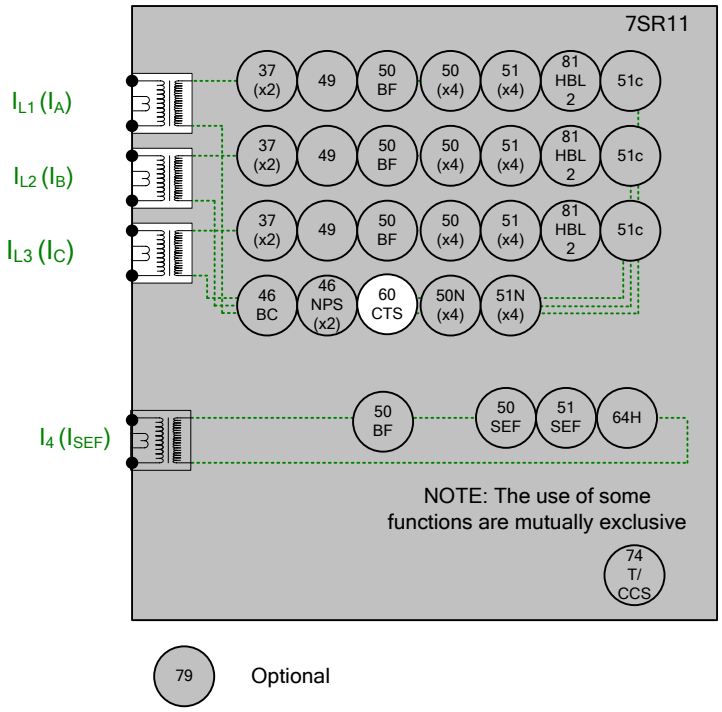

Figure 2-24 Current Transformer Supervision 7SR11

Current Inputs:	I_{L1} (I_A), I_{L2} (I_B), I_{L3} (I_C)
Disable:	51N, 46IT, 46DT, 46BC
Map Pickup LED:	60CTS - Self Reset

Apply 3Phase balanced current to the relay, reduce the current in any one or two phases to a level below *60CTS I* setting. Measure the delay to operation.

Gradually reduce the 3Phase current until the element resets.

Setting	Measured
60CTS Delay	
60CTS Inps	
60CTS Vnps	

3.3.2 7SR12

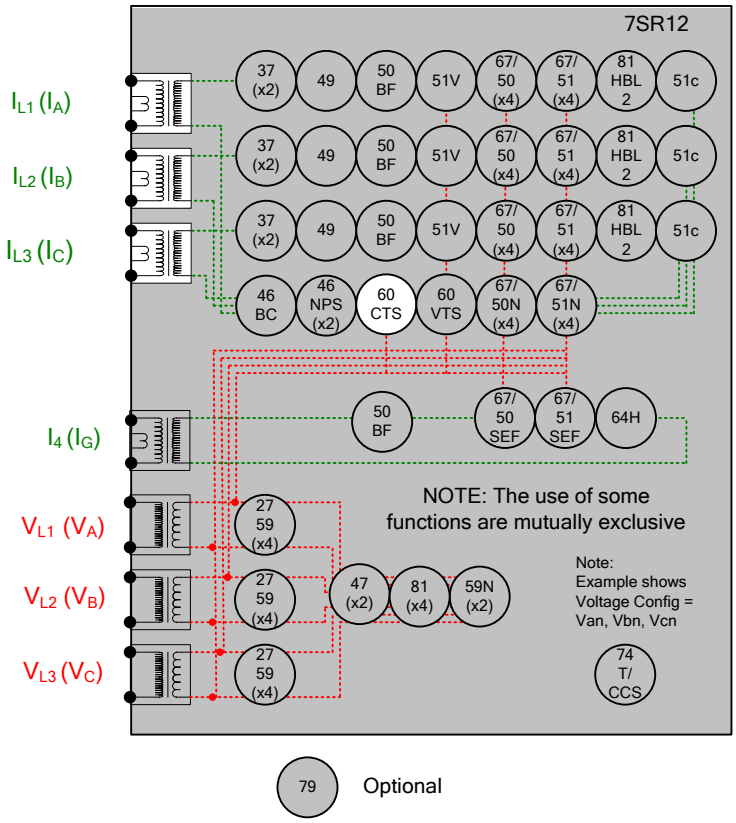

Figure 2-25 Current Transformer Supervision 7SR12

Voltage Inputs:	V_{L1} (V_A), V_{L2} (V_B), V_{L3} (V_C)
Current Inputs:	I_{L1} (I_A), I_{L2} (I_B), I_{L3} (I_C)
Disable:	51N, 46IT, 46DT, 46BC
Map Pickup LED:	60CTS - Self Reset

The presence of NPS current without NPS voltage is used to indicate a current transformer failure.

Apply normal 3P balanced current with a crossover of any two phases at a level above *60CTS Inps* setting. Measure the delay to operation.

Apply 3P balanced voltage with a similar phase crossover to the current. Increase the applied 3P voltage until the CTS element resets.

Reduce the 3P voltage to cause CTS operation again. Gradually reduce the 3P current until the element resets.

Setting	Measured
60CTS Delay	
60CTS Inps	
60CTS Vnps	

3.3.2.1 Element Blocking

The CT Supervision function can be blocked by Binary Input Inhibit. This functionality should be checked.

Element	BI Inhibits
60CTS	

3.4 Broken Conductor (46BC)

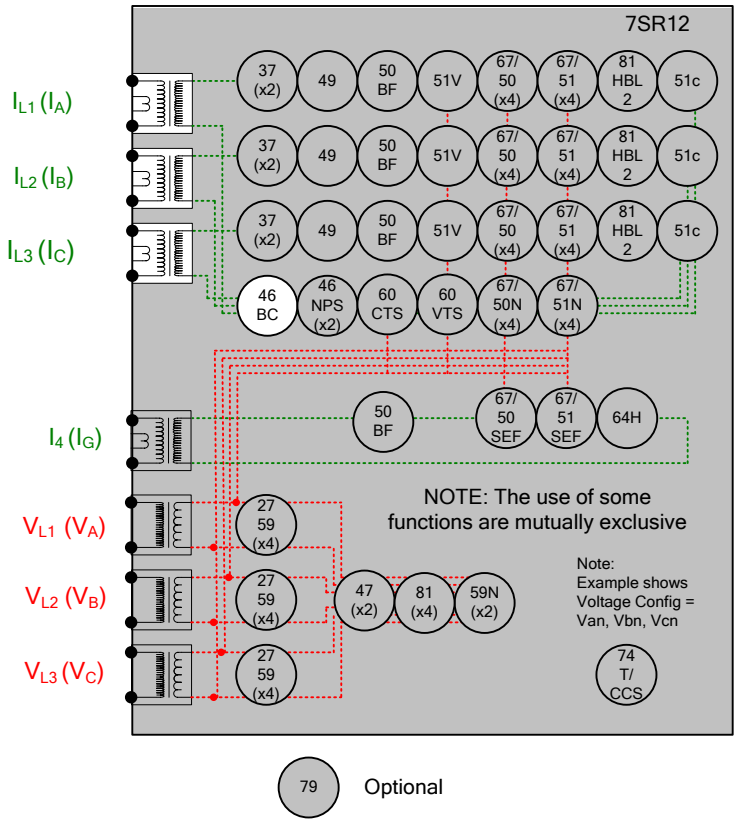

Figure 2-26 Broken Conductor

Voltage Inputs:	n/a
Current Inputs:	I_{L1} (I_A), I_{L2} (I_B), I_{L3} (I_C)
Disable:	51N, 46IT, 46DT
Map Pickup LED:	46BC - Self Reset

Broken Conductor uses the ratio of NPS current to PPS current to detect an open circuit conductor . These quantities can be produced directly from many advanced test sets but with limited equipment the following approach can be applied.

Apply 3P balanced current with normal phase rotation direction. This current will consist of PPS alone, no NPS or ZPS.

Increase 1 phase current magnitude in isolation to produce NPS. The single phase unbalance current will contain equal quantities of ZPS, NPS and PPS. The NPS component will be 1/3 of the unbalance current and the total PPS component will be value of the original balanced 3P current plus 1/3 of the additional unbalance current. i.e. as the single phase unbalance current increases, the ratio of NPS to PPS will also increase. The levels of each sequence component current can be monitored in the ***Current Meters*** in ***Instruments Mode***.

Inject 1A of balanced current. Gradually increase imbalance current, operating level should be as follows:

46BC Setting	1P unbalance current (% of 3P current)
20%	75%
25%	100%
30%	129%
35%	161%
40%	200%

46BC Setting	3P balanced current (A)	1P unbalance current (A)	Measured Unbalance current

Apply 1A 1P unbalance current without 3P balanced current. Measure 46BC operating time.

46BC Delay setting	Measured

3.4.1.1 Element Blocking

The Broken Conductor element can be blocked by Binary Input Inhibit. This functionality should be checked.

Element	BI Inhibits
46BC	

3.5 Trip/Close Circuit Supervision (74T/CCS)

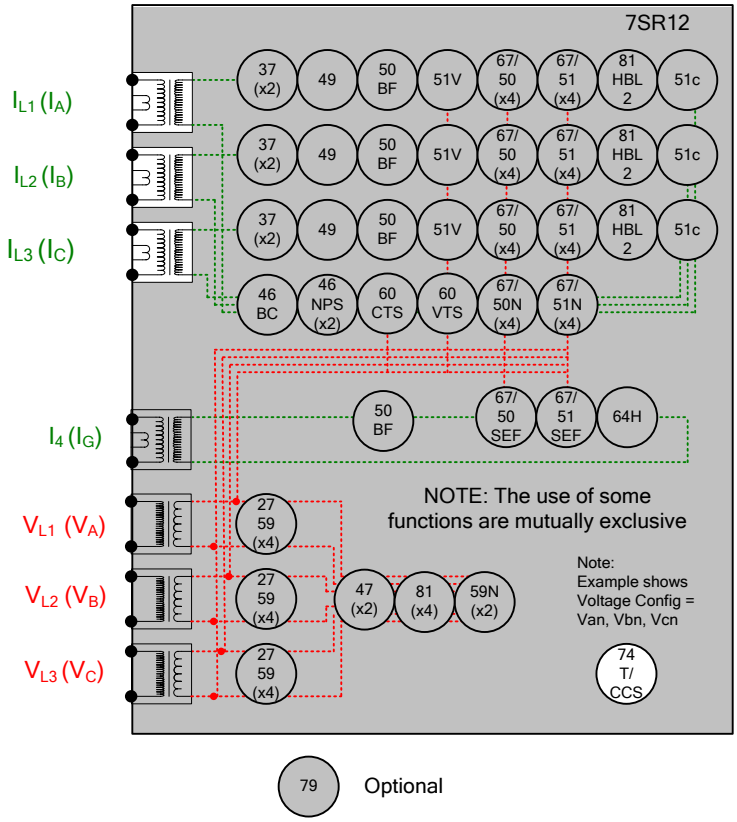

Figure 2-27 Trip Circuit Supervision

Voltage Inputs:	n/a
Current Inputs:	n/a
Disable:	
Map Pickup LED:	74TCS-n - Self Reset

The T/CCS-n Delay can be initiated by applying an inversion to the relevant status input and measured by monitoring of the alarm output.

TCS-n Delay setting	**Measured**
CCS-n Delay setting	**Measured**

3.6 Magnetising Inrush Detector (81HBL)

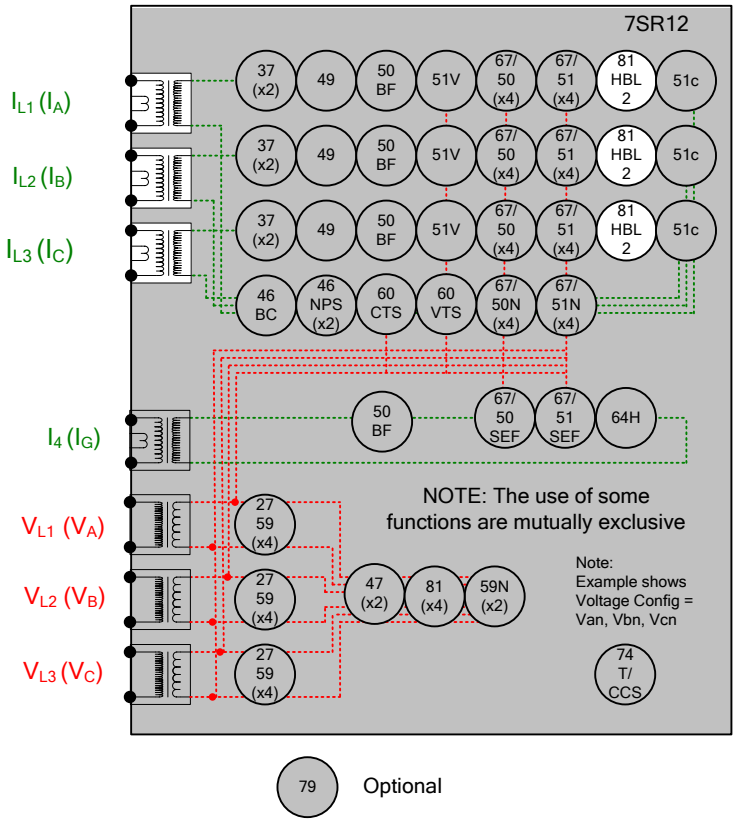

Figure 2-28 Magnetising Inrush Detector

Voltage Inputs:	n/a
Current Inputs:	I_{L1} (I_A), I_{L2} (I_B), I_{L3} (I_C),
Disable:	
Map Pickup LED:	

Logical operation of the harmonic blocking can be tested by current injection at 100Hz to cause operation of the blocking signals.

Section 4: Control & Logic Functions

4.1 Autoreclose (79)

Autoreclose sequences can be specified differently for Phase. Earth, Externally Initiated and SEF faults. Sequences should be simulated for each applicable different fault type with the actual relay settings required for service installed in the relay.

The relay requires that the correct indications are received at the CB auxiliary contact inputs and that the injected current and voltage used to generate protection operations are timed to the autoreclose sequence to provide a realistic simulation of the actual system conditions.

The Instruments Menu contains Autoreclose Meters for the Autoreclose State and the Shot No. which are useful during sequence testing.

The time stamped Events listing can be downloaded from the relay to a pc to allow diagnosis of the sequence including measurements of sequence Dead Times and other timing without the use of external measuring equipment or complex connections.

4.2 Quick Logic

If this functionality is used, the logic equations may interfere with testing of other protection functions in the relay. The function of the Quick Logic equations should be tested conjunctively with connected plant or by simulation to assess suitability and check for correct operation on an individual basis with tests specifically devised to suit the particular application.

©2019 Siemens Protection Devices Limited

Section 5: Testing and Maintenance

The relays are maintenance free, with no user serviceable parts.

5.1 Periodic Tests

During the life of the relay, it should be checked for operation during the normal maintenance period for the site on which the product is installed. It is recommended the following tests are carried out:-

Visual inspection of the metering display

1. Operation of output contacts
2. Secondary injection of each element

5.2 Maintenance

Relay failure will be indicated by the 'Protection Healthy' LED being off or flashing. A message may also be displayed on the LCD. In the event of failure Siemens Protection Devices Ltd. (or one of its agents) should be contacted – see defect report sheet in section 5.3.

The relay should be returned as a complete unit. No attempt should be made to disassemble the unit to isolate and return only the damaged sub-assembly. It may however be convenient to fit the withdrawable relay to the outer case from a spare relay, to avoid the disturbance of relay panel wiring, for return to Siemens Protection Devices Ltd. The withdrawn relay should never be transported without the protection of the outer case.

©2019 Siemens Protection Devices Limited

5.3 Troubleshooting

Observation	Action
Relay does not power up.	Check that the correct auxiliary AC or DC voltage is applied and that the polarity is correct.
Relay won't accept the password.	The Password being entered is wrong. Enter correct password. If correct password has been forgotten, note down the Numeric Code which is displayed at the Change Password screen e.g. Change password = 1234567 To retrieve the password, communicate this code to a Siemens Protection Devices Ltd. representative.
Protection Healthy LED flashes	General failure. Contact a Siemens Protection Devices Ltd. representative.
LCD screen flashes continuously.	The LCD has many possible error messages which when displayed will flash continuously. These indicate various processor card faults. General failure. Contact a Siemens Protection Devices Ltd. representative.
Backlight is on but no text can be seen.	Adjust the contrast.
Scrolling text messages are unreadable.	Adjust the contrast.
Relay displays one instrument after another with no user intervention.	This is normal operation, default instruments are enabled. Remove all instruments from the default list and only add those that are required. (See Section 2: Settings and Instruments).
Cannot communicate with the relay.	Check that all of the communications settings match those used by Reydisp Evolution. Check that all cables, modems and fibre-optic cables work correctly. Ensure that IEC 60870-5-103 is specified for the connected port (COM1 or COM2).
Relays will not communicate in a ring network.	Check that all relays are powered up. Check that all relays have unique addresses.
Status inputs do not work.	Check that the correct DC voltage is applied and that the polarity is correct. Check that the status input settings such as the pick-up and drop-off timers and the status inversion function are correctly set.
Relay instrument displays show small currents or voltages even though the system is dead.	This is normal. The relay is displaying calculation noise. This will not affect any accuracy claims for the relay.

Table 2-1 Troubleshooting Guide

If the above checklist does not help in correcting the problem please contact the local Siemens office or contact PTD 24hr Customer Support, Tel: +49 180 524 8437, Fax: +49 180 524 2471,

e-mail: support.energy@siemens.com.

7SR11 and 7SR12

Applications Guide

Document Release History

This document is issue 2019/05. The list of revisions up to and including this issue is:

2019/05	AC binary input application description removed
2017/07	ARC applications added & Minor changes to AC BI description
2017/02	Minor changes to binary input descriptions.
2015/12	NPS polarizing is 50/51N only
2015/08	Additional software features added.
2015/06	Software Maintenance
2014/10	Addition of optional IEC 61850 communication protocol.
2013/09	Software Maintenance
2013/01	Software Maintenance
2012/02	AC auxiliary power supply added
2012/01	Software Maintenance
2011/06	Software Maintenance
2010/04	Amendments following PLM review
2010/02	Document reformat due to rebrand
2009/09	Revised Format and relay fascia.
2009/04	First Issue

Unrestricted The copyright and other intellectual property rights in this document, and in any model or article produced from it (and including any registered or unregistered design rights) are the property of Siemens Protection Devices Limited. No part of this document shall be reproduced or modified or stored in another form, in any data retrieval system, without the permission of Siemens Protection Devices Limited, nor shall any model or article be reproduced from this document unless Siemens Protection Devices Limited consent.

While the information and guidance given in this document is believed to be correct, no liability shall be accepted for any loss or damage caused by any error or omission, whether such error or omission is the result of negligence or any other cause. Any and all such liability is disclaimed.

©2019 Siemens Protection Devices Limited

Contents

Section 1: Common Functions 5
1.1 Multiple Settings Groups 5
1.2 Binary Inputs 6
1.2.1 Alarm and Tripping Inputs 6
1.2.2 AC Rejection 6
1.2.3 Use of Binary Inputs in control and tripping circuits 7
1.2.4 Capacitance Discharge Current in Centre Tapped Battery Installations 7
1.3 Binary Outputs 9
1.4 LEDs 9
Section 2: Protection Functions 10
2.1 Time delayed overcurrent (51/51G/51N) 10
2.1.1 Selection of Overcurrent Characteristics 11
2.1.2 Reset Delay 12
2.2 Voltage dependent overcurrent (51V) 13
2.3 Cold Load Settings (51c) 13
2.4 Arc Flash Detection (50AFD) 14
2.5 Instantaneous Overcurrent (50/50G/50N) 15
2.5.1 Blocked Overcurrent Protection Schemes 15
2.6 Sensitive Earth-fault Protection (50SEF) 17
2.7 Directional Protection (67) 18
2.7.1 2 Out of 3 Logic 20
2.8 Directional Earth-Fault (50/51G, 50/51N, 50/51SEF) 21
2.8.1 Compensated Coil Earthing Networks 22
2.8.2 Isolated Networks 24
2.8.3 Minimum Polarising Voltage 24
2.9 High Impedance Restricted Earth Fault Protection (64H) 25
2.10 Negative Phase Sequence Overcurrent (46NPS) 27
2.11 Undercurrent (37) 27
2.12 Thermal Overload (49) 27
2.13 Under/Over Voltage Protection (27/59) 28
2.14 Neutral Overvoltage (59N) 29
2.14.1 Application with Capacitor Cone Units 30
2.14.2 Derived NVD Voltage 30
2.15 Negative Phase Sequence Overvoltage (47) 30
2.16 Under/Over Frequency (81) 31
2.17 Power (32) 32
2.18 Sensitive Power (32S) 32
2.19 Power Factor (55) 32
Section 3: CT Requirements 33
3.1 CT Requirements for Overcurrent and Earth Fault Protection 33
3.1.1 Overcurrent Protection CTs 33
3.1.2 Earth Fault Protection CTs 33
3.2 CT Requirements for High Impedance Restricted Earth Fault Protection 33
Section 4: Control Functions 34
4.1 Auto-reclose Applications 34
4.1.1 Auto-Reclose Example 1, typical advanced distribution network sequence 35
4.1.2 Auto-Reclose Example 2, simpler multishot sequence 36
4.1.3 Auto-Reclose Example 3, simple single shot sequence 37
4.1.4 Auto-Reclose Example 4 (Use of Quicklogic with AR) 38
4.2 Quick Logic Applications 39
4.2.1 Auto-Changeover Scheme Example 39
Section 5: Supervision Functions 40
5.1 Circuit-Breaker Fail (50BF) 40
5.1.1 Settings Guidelines 40
5.2 Current Transformer Supervision 42
5.3 Voltage Transformer Supervision (60VTS) 43
5.4 Trip/Close Circuit Supervision (74T/CCS) 44
5.4.1 Trip Circuit Supervision Connections 44
5.4.2 Close Circuit Supervision Connections 46
5.5 Inrush Detector (81HBL2) 47
5.6 Broken Conductor / Load Imbalance (46BC) 48
5.6.1 Broken Conductor example 48
5.7 Circuit-Breaker Maintenance 48

©2019 Siemens Protection Devices Limited

List of Figures

Figure 1.5-1 Example Use of Alternative Settings Groups 5
Figure 1.2-2 Example of Transformer Alarm and Trip Wiring 6
Figure 1.2-3 Binary Input Configurations Providing Trip Relay Levels of ENA TS 48-4....8
Figure 1.4-1 LED configuration via the LED Matrix tab....9
Figure 1.4-2 LED configuration via the Settings \ OUTPUT CONFIG \ LED CONFIG menu 9
Figure 2.1-1 IEC NI Curve with Time Multiplier and Follower DTL Applied 10
Figure 2.1-2 IEC NI Curve with Minimum Operate Time Setting Applied 11
Figure 2.1-3 Reset Delay....12
Figure 2.4-1 Arc Flash Detection 14
Figure 2.5-1 General Form of DTL Operate Characteristic....15
Figure 2.5-2 Blocking Scheme Using Instantaneous Overcurrent Elements 16
Figure 2.6-1 Sensitive Earth Fault Protection Application....17
Figure 2.7-1 Directional Characteristics....18
Figure 2.7-2 Phase Fault Angles 19
Figure 2.7-3 Application of Directional Overcurrent Protection....19
Figure 2.7-4 Feeder Fault on Interconnected Network 20
Figure 2.8-1 Earth Fault Angles....21
Figure 2.8-2 Earth fault current distribution in Compensated network 22
Figure 2.8-3 Earth fault current direction in compensated network....22
Figure 2.8-4 Adjustment of Characteristic Angle 22
Figure 2.8-5 Cosine component of current 23
Figure 2.8-6 Earth fault current in isolated network 24
Figure 2.9-1 Balanced and Restricted Earth-fault protection of Transformers....25
Figure 2.9-2 Composite Overcurrent and Restricted Earth-fault Protection....26
Figure 2.12-1 Thermal Overload Heating and Cooling Characteristic 27
Figure 2.14-1 NVD Application 29
Figure 2.14-2 NVD Protection Connections....29
Figure 2.16-1 Load Shedding Scheme Using Under-Frequency Elements 31
Figure 4.1-1 Sequence Co-ordination 35
Figure 4.1-2 Example of Logic Application 38
Figure 4.2-1 Example Use of Quick Logic 39
Figure 5.1-1 Circuit Breaker Fail....40
Figure 5.1-2 Single Stage Circuit Breaker Fail Timing....41
Figure 5.1-3 Two Stage Circuit Breaker Fail Timing....41
Figure 5.4-1 Trip Circuit Supervision Scheme 1 (H5) 44
Figure 5.4-2 Trip Circuit Supervision Scheme 2 (H6) 45
Figure 5.4-3 Trip Circuit Supervision Scheme 3 (H7) 45
Figure 5.4-4 Close Circuit Supervision Scheme 46

List of Tables

Table 2-1 Application of IDMTL Characteristics 12
Table 5-1 Determination of VT Failure (1 or 2 Phases)....42
Table 5-2 Determination of VT Failure (1 or 2 Phases)....43
Table 5-3 Determination of VT Failure (3 Phases) 43
Table 5-4 Magnetic Inrush Bias....47

 ©2019 Siemens Protection Devices Limited

Section 1: Common Functions

1.1 Multiple Settings Groups

Alternate settings groups can be used to reconfigure the relay during significant changes to system conditions e.g.

Primary plant switching in/out.

Summer/winter or day/night settings.

Switchable earthing connections.

Loss of Grid connection (see below)

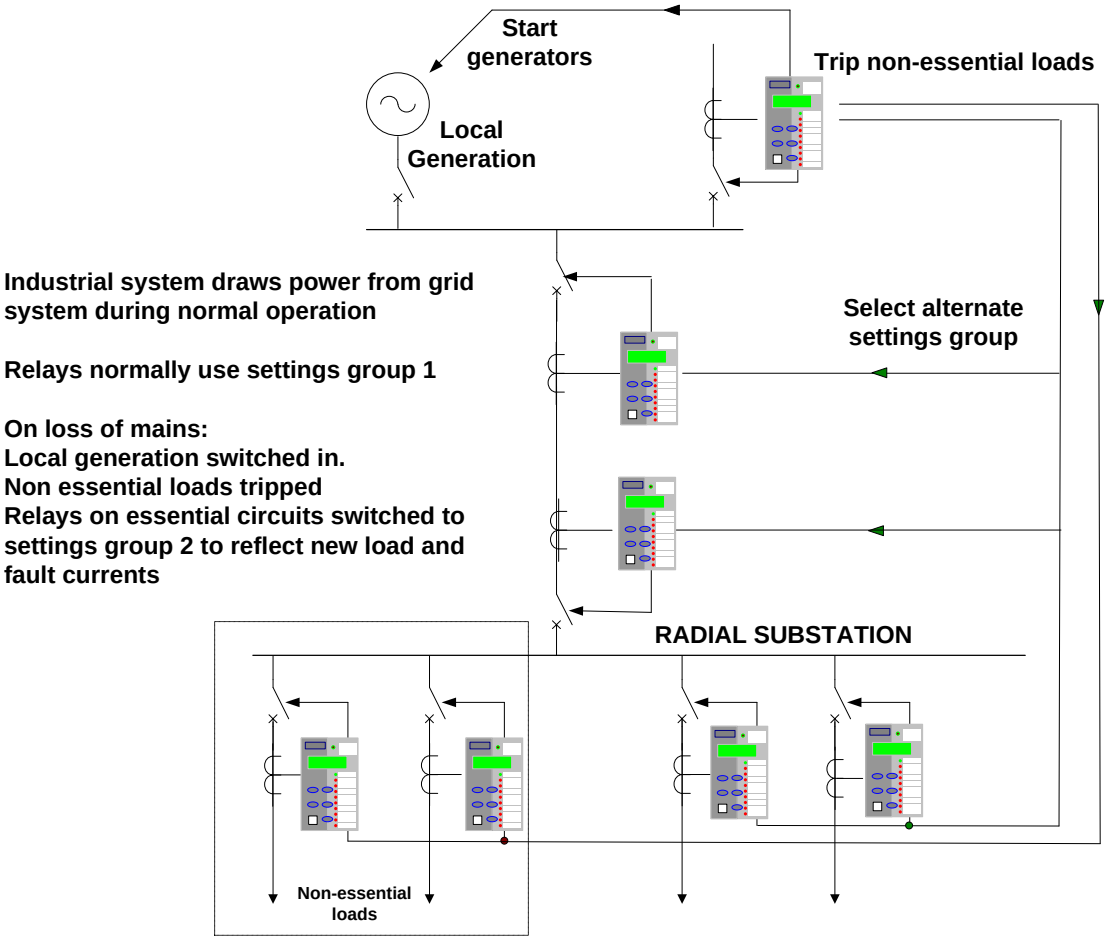

Figure 1.5-1 Example Use of Alternative Settings Groups

1.2 Binary Inputs

Each Binary Input (BI) can be programmed to operate one or more of the relay functions, LEDs or output relays. These could be used to bring such digital signals as Inhibits for protection elements, the trip circuit supervision status, autoreclose control signals etc. into the Relay.

1.2.1 Alarm and Tripping Inputs

A common use of binary inputs is to provide indication of alarm or fault conditions e.g. transformer Buchholz Gas or Buchholz Surge conditions. The Binary Inputs are mapped to LED(s), waveform storage trigger and binary outputs. Note that transformer outputs which require high speed tripping, such as a Buchholz Surge, should be wired to a binary input to provide LED indication and also have a parallel connection wired to directly trip the circuit via a blocking diode, see figure. 1.2-1:

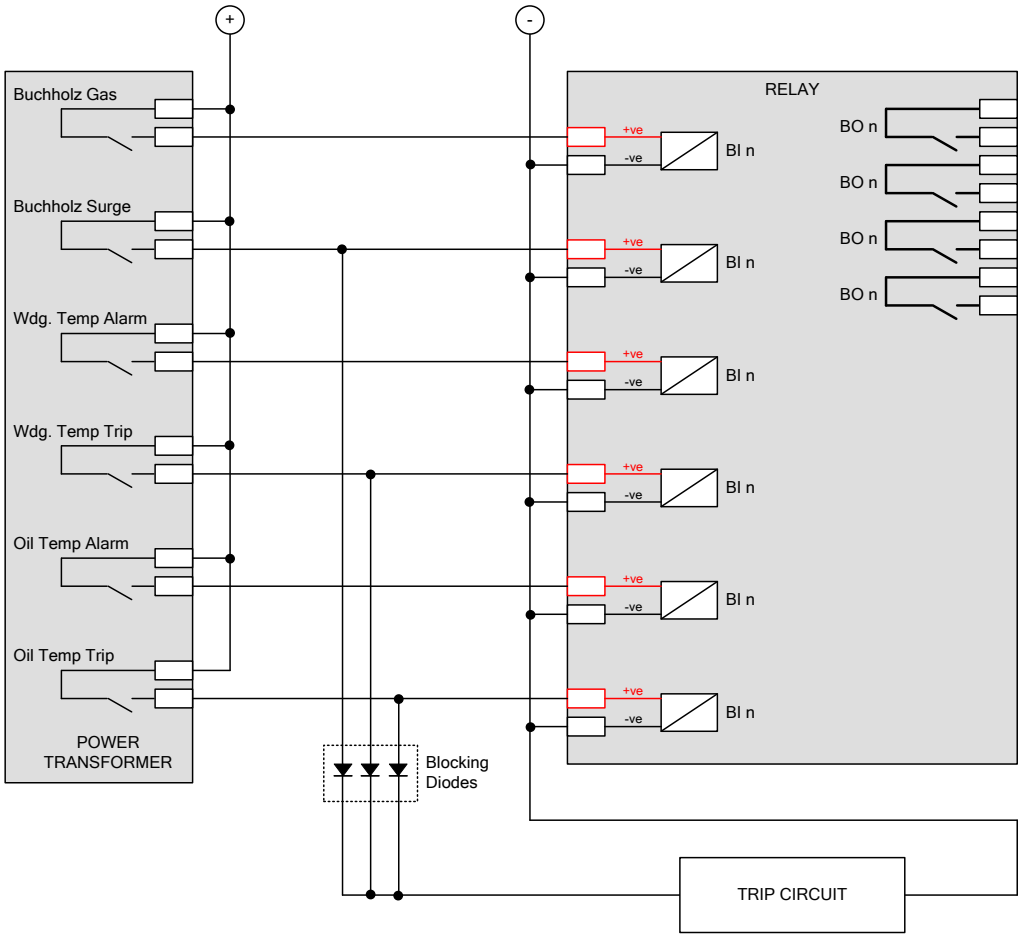

Figure 1.2-2 Example of Transformer Alarm and Trip Wiring

1.2.2 AC Rejection

The default pick-up time delay of 20ms provides immunity to ac current for dc applications e.g. induced from cross site wiring.

If additional pickup or drop-off time delays are required by the scheme logic, this functionality can be achieved by programmable logic within the device.

 ©2019 Siemens Protection Devices Limited

1.2.3 Use of Binary Inputs in control and tripping circuits

Where a binary input is used to as part of a dc control function, for example tripping or closing a circuit breaker and the wiring connection consists of direct connection of long cross-site cable runs, it may be desirable to provide an enhanced level of immunity to prevent maloperation due to induced voltages.

Where the battery voltage allows its use, the 88V binary input will give an added measure of immunity, compared to the 19V binary input, due to its higher minimum pickup voltage.

One method of enhancing the immunity of the binary input is to switch both positive and negative connections however this is often not possible or desirable.

As a guide to suitable degrees of enhanced immunity, we have adopted the parameters laid down in U.K. standard ENA TS 48-4 which is applied to separate dedicated Trip relays. This standard identifies two levels of immunity:

Low Burden: may be adopted for connections in high noise environments with double pole switching.

High Burden: should be used for connections with significant wiring runs outside the relay enclosure in very high noise environments. This category also gives immunity to capacitive discharge currents, see 1.2.4.

The Figure 1.2-3 show the external resistors which should be fitted to allow the binary input to comply with either of the above categories.

Fitting these components will raise the current required to operate the binary input, and hence makes it less susceptible to maloperation.

Where required, the minimum pickup delay for the binary input is stated on the diagram.

1.2.4 Capacitance Discharge Current in Centre Tapped Battery Installations

The binary inputs have a low minimum operate current and can be set for instantaneous operation. Consideration should be given to the likelihood of mal-operation due to capacitance current if very fast operation is required. If an earth fault occurs between the wiring on the switched pole of the binary input and earth, charge developed between the other pole and earth will be discharged through the binary input causing operation.

The binary inputs will be less likely to mal-operate if they:

1. Have both the positive and negative switched (double-pole switched).
2. Do not have extensive external wiring associated with them e.g. if the wiring is confined to the protection panel or relay room.

Where a binary input is both used to influence a control function (e.g. provide a tripping function) and it is considered to be susceptible to mal-operation the external circuitry can be modified to provide immunity to such disturbances, see Figure 1.2-3

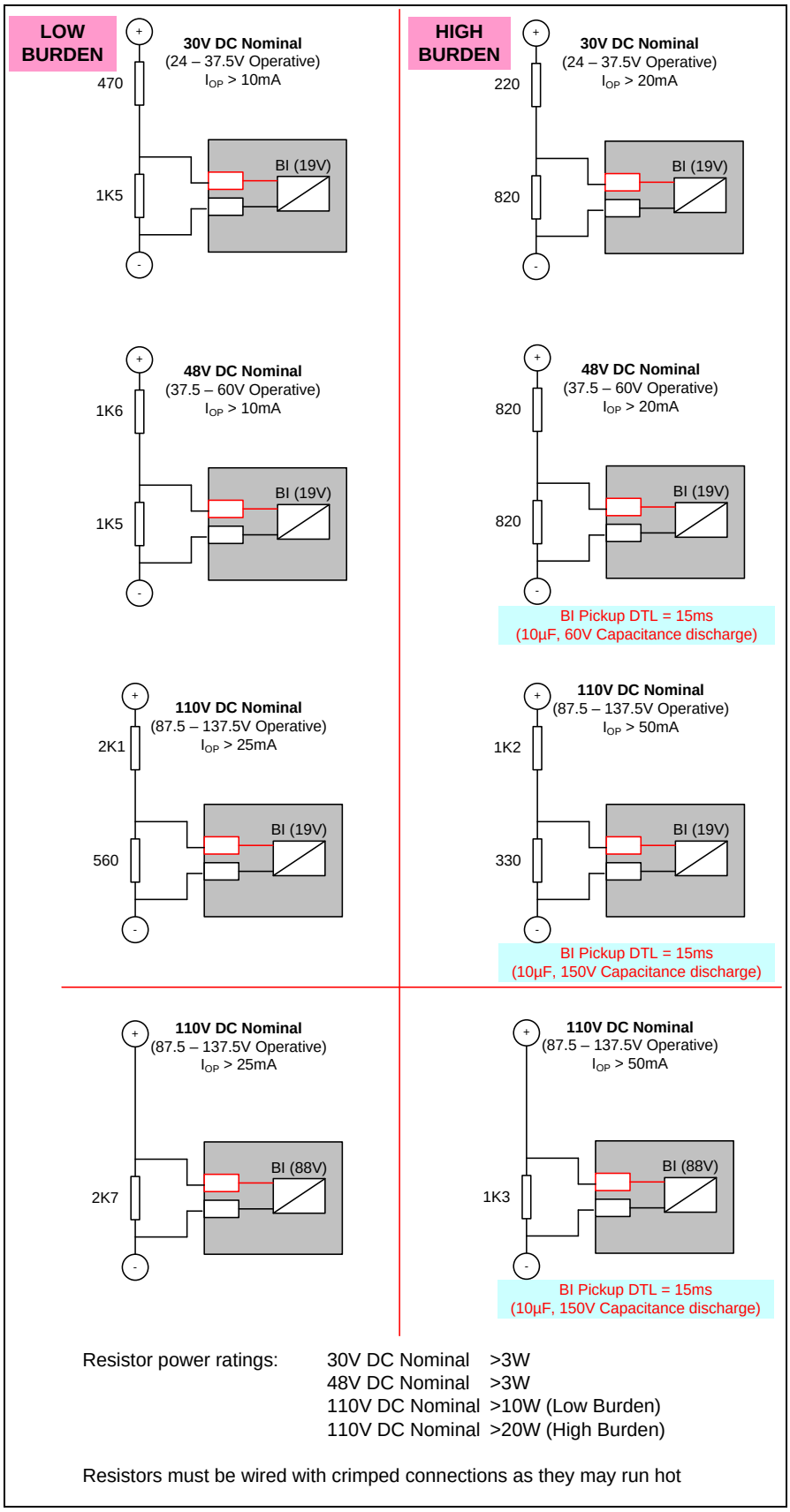

Figure 1.2-3 Binary Input Configurations Providing Trip Relay Levels of ENA TS 48-4

©2019 Siemens Protection Devices Limited

1.3 Binary Outputs

Binary Outputs are mapped to output functions by means of settings. These could be used to bring out such digital signals as trips, a general pick-up, plant control signals etc.

All Binary Outputs are Trip rated

Each can be defined as Self or Hand Reset. Self-reset contacts are applicable to most protection applications. Hand-reset contacts are used where the output must remain active until the user expressly clears it e.g. in a control scheme where the output must remain active until some external feature has correctly processed it.

Notes on Self Reset Outputs

With a failed breaker condition the relay may remain operated until current flow in the primary system is interrupted by an upstream device. The relay will then reset and attempt to interrupt trip coil current flowing through an output contact. Where this level is above the break rating of the output contact an auxiliary relay with heavy-duty contacts should be utilised.

1.4 LEDs

In the Output Configuration menu LEDs can be mapped to output functions by means of settings. These could be used to display such digital signals as trips, a general pick-up, plant control signals etc.

Each LED can be defined as Self or Hand Reset. Hand reset LEDs are used where the user is required to expressly acknowledge the change in status e.g. critical operations such as trips or system failures. Self-reset LEDs are used to display features which routinely change state, such as Circuit-Breaker open or close.

The status of hand reset LEDs is retained in capacitor-backed memory in the event of supply loss.

Each LED can be assigned as red, yellow or green in colour. There are two methods for doing this: -

1) In the LED Matrix tab, to assign the LED as a red colour select a box on the red row. To assign the LED as a green colour select a box on the green row. To assign the LED as a yellow colour, select boxes on both the red and green rows.

   NB: If there are no boxes selected the LED will not illuminate.

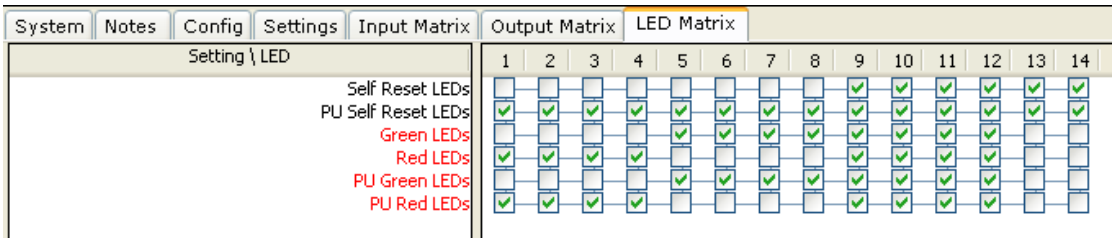

Figure 1.4-1 LED configuration via the LED Matrix tab

2) In the OUTPUT CONFIG\LED CONFIG menu in the Settings tab, to assign the required LED as a particular colour, either red or green, type the LED number in the appropriate row. To assign the required LED as a yellow colour, type the LED number in both red and green rows.

   NB: If a LED number is not assigned that particular LED will not illuminate.

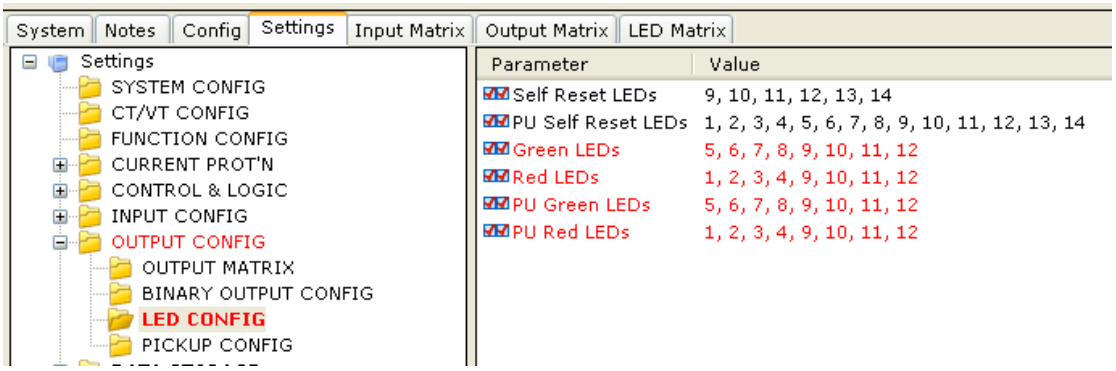

Figure 1.4-2 LED configuration via the Settings \ OUTPUT CONFIG \ LED CONFIG menu

Section 2: Protection Functions

2.1 Time delayed overcurrent (51/51G/51N)

The 51-n characteristic element provides a number of time/current operate characteristics. The element can be defined as either an Inverse Definite Minimum Time Lag (IDMTL) or Definite Time Lag (DTL) characteristic. If an IDMTL characteristic is required, then IEC, ANSI/IEEE and a number of manufacturer specific curves are supported.

IDMTL characteristics are defined as “Inverse” because their tripping times are inversely proportional to the Fault Current being measured. This makes them particularly suitable to grading studies where it is important that only the Relay(s) closest to the fault operate. Discrimination can be achieved with minimised operating times.

To optimise the grading capability of the relay additional time multiplier, ‘Follower DTL’ (Fig. 2.1-1) or ‘Minimum Operate Time’ (Fig. 2.1-2) settings can be applied.

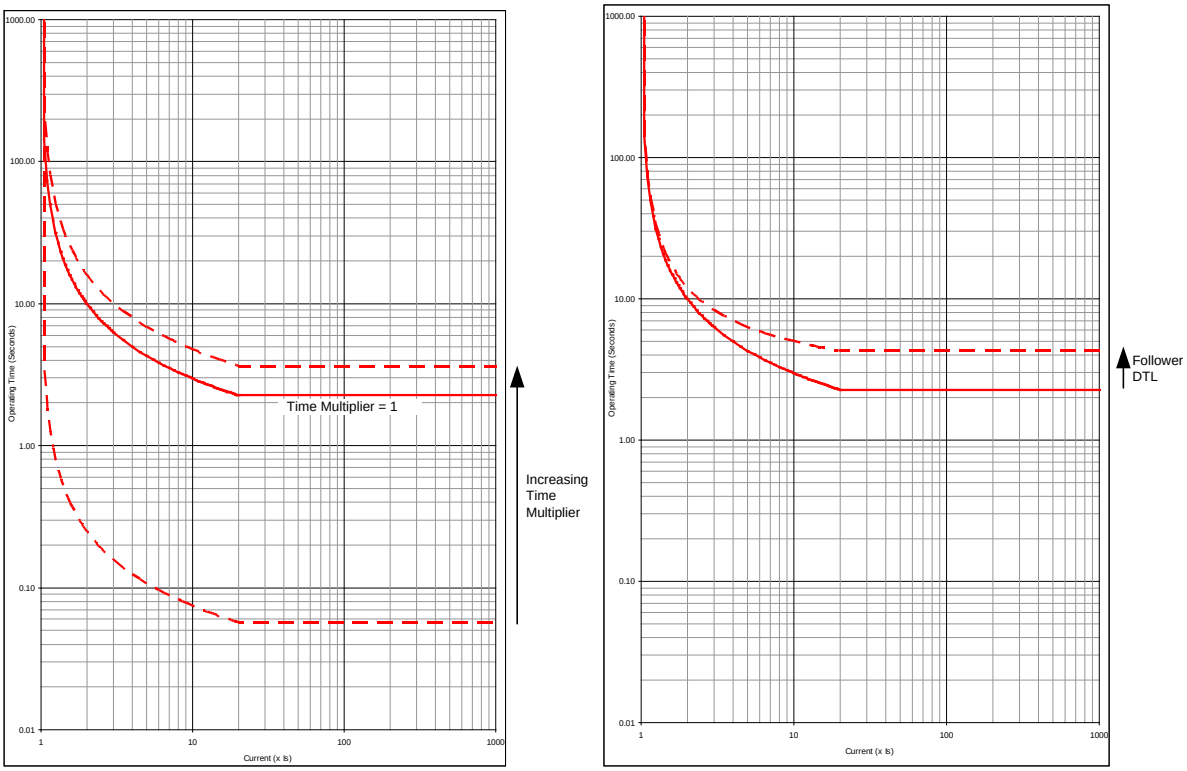

Figure 2.1-1 IEC NI Curve with Time Multiplier and Follower DTL Applied

©2019 Siemens Protection Devices Limited

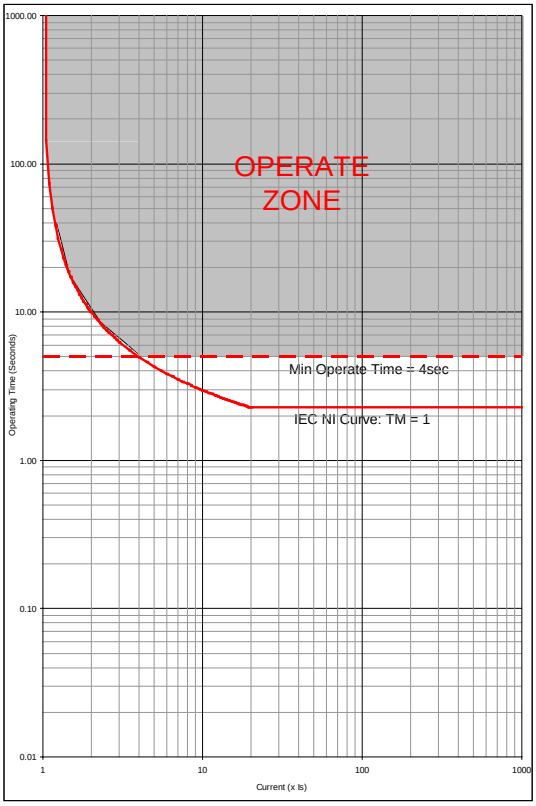

Figure 2.1-2 IEC NI Curve with Minimum Operate Time Setting Applied

To increase sensitivity, dedicated Earth fault elements are used. There should be little or no current flowing to earth in a healthy system so such relays can be given far lower pick-up levels than relays which detect excess current (> load current) in each phase conductor. Such dedicated earth fault relays are important where the fault path to earth is a high-resistance one (such as in highly arid areas) or where the system uses high values of earthing resistor / reactance and the fault current detected in the phase conductors will be limited.

2.1.1 Selection of Overcurrent Characteristics

Each pole has two independent over-current characteristics. Where required the two curves can be used:

To produce a composite curve

To provide a two stage tripping scheme

Where one curve is to be directionalised in the forward direction the other in the reverse direction.

The characteristic curve shape is selected to be the same type as the other relays on the same circuit or to grade with items of plant e.g. fuses or earthing resistors.

The application of IDMTL characteristic is summarised in the following table:

OC/EF Curve Characteristic	Application
IEC Normal Inverse (NI) ANSI Moderately Inverse (MI)	Generally applied
IEC Very Inverse (VI) ANSI Very Inverse (VI)	Used with high impedance paths where there is a significant difference between fault levels at protection points
IEC Extreme Inversely (EI) ANSI Extremely Inverse (EI)	Grading with Fuses
IEC Long Time Inverse (LTI)	Used to protect transformer earthing resistors having long withstand times

Table 2-1 Application of IDMTL Characteristics

2.1.2 Reset Delay

The increasing use of plastic insulated cables, both conventionally buried and aerial bundled conductors, have given rise to the number of flashing intermittent faults on distribution systems. At the fault position, the plastic melts and temporarily reseals the faulty cable for a short time after which the insulation fails again. The same phenomenon has occurred in compound-filled joint boxes or on 'clashing' overhead line conductors. The repeating occurrence of the fault can cause electromechanical disc relays to "ratchet" up and eventually trip the faulty circuit if the reset time of the relay is longer than the time between successive faults.

To mimic an electromechanical relay the relay can be user programmed for an IEC/ANSI DECAYING characteristic when an ANSI operate characteristic is applied. Alternatively a DTL reset (0 to 60 seconds) can be used with other operate characteristics.

For protection of cable feeders, it is recommended that a 60 second DTL reset be used.

On overhead line networks, particularly where reclosers are incorporated in the protected system, instantaneous resetting is desirable to ensure that, on multiple shot reclosing schemes, correct grading between the source relays and the relays associated with the reclosers is maintained.

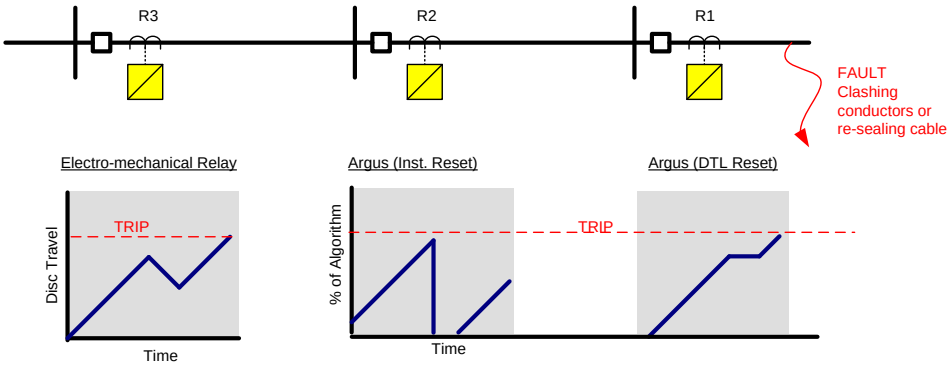

Figure 2.1-3 Reset Delay

©2019 Siemens Protection Devices Limited

2.2 Voltage dependent overcurrent (51V)

Reduced voltage can indicate a fault on the system, it can be used to make the 51 elements more sensitive.

Typically Voltage Dependent Over-current (VDO) is applied to:

Transformer Incomers: Where the impedance of the transformer limits fault current the measured voltage level can be used to discriminate between load and fault current.

Long lines: Where the impedance of the line limits fault current the measured voltage level can be used to discriminate between load and fault current.

Generator circuits: When a Generator is subjected to a short circuit close to its terminals the short-circuit current follows a complex profile. After the initial "sub-transient" value, generally in the order of 7 to 10 times full load current, it falls rapidly (around 10 to 20ms) to the "transient" value. This is still about 5 to 7 times full load and would be sufficient to operate the protection's over-current elements. However the effect on armature reactance of the highly inductive short-circuit current is to increase significantly the internal impedance to the synchronous reactance value. If the Automatic Voltage Regulation (AVR) system does not respond to increase the excitation, the fault current will decay over the next few seconds to a value below the full load current. This is termed the steady state fault current, determined by the Generator's synchronous reactance (and pre-fault excitation). It will be insufficient to operate the protection's over-current elements and the fault will not be detected. Even if AVR is active, problems may still be encountered. The AVR will have a declared minimum sustained fault current and this must be above the protection over-current settings. Close-in short circuit faults may also cause the AVR to reach its safety limits for supplying maximum excitation boost, in the order of several seconds, and this will result in AVR internal protection devices such as diode fuses to start operating. The generator excitation will then collapse, and the situation will be the same as when no AVR was present. The fault may again not be detected.

Current grading remains important since a significant voltage reduction may be seen for faults on other parts of the system. An inverse time operating characteristic must therefore be used.

The VDO Level - the voltage setting below which the more sensitive operating curve applies - must be set low enough to discriminate between short-circuits and temporary voltage dips due to overloads. However, it must also be high enough to cover a range of voltage drops for different circuit configurations, from around 0.6Vn to almost zero. Typically it will be set in the range 0.6 to 0.8Vn.

2.3 Cold Load Settings (51c)

Once a Circuit-Breaker has been open for a period of time, higher than normal levels of load current may flow following CB re-closure e.g. heating or refrigeration plant. The size and duration of this current is dependent upon the type of load and the time that the CB is open.

The feature allows the relay to use alternative Shaped Overcurrent (51c) settings when a Cold Load condition is identified. The cold load current and time multiplier settings will normally be set higher than those of the normal overcurrent settings.

The relay will revert to its usual settings (51-n) after elapse of the cold load period. This is determined either by a user set delay, or by the current in all 3-phases falling below a set level (usually related to normal load levels) for a user set period.

©2019 Siemens Protection Devices Limited

2.4 Arc Flash Detection (50AFD)

The overcurrent setting should be set above maximum load current and below the minimum expected arc fault current.

Optical sensor location should be arranged to provide full coverage of the protected chambers. See 7XG31 technical documentation.

Sensor inputs are configured in Zones to provide the required tripping. i.e. the line circuit breaker alone should be tripped for arc faults in the cable termination and CT compartment. The whole busbar must be cleared for arc faults which cannot be identified as being on the line side of the circuit breaker.

Overcurrent supervision can only be applied if the arrangement ensures that current will be measured for all arc faults. In Figure 2.4-1, Zone 2 can only be supervised by current if the feeders are radial and cannot supply fault current with CB A open. Arc sensor pickup can be transferred between relays using IEC 61850 GOOSE allowing Zone2 50AFD to be duplicated in all relays.

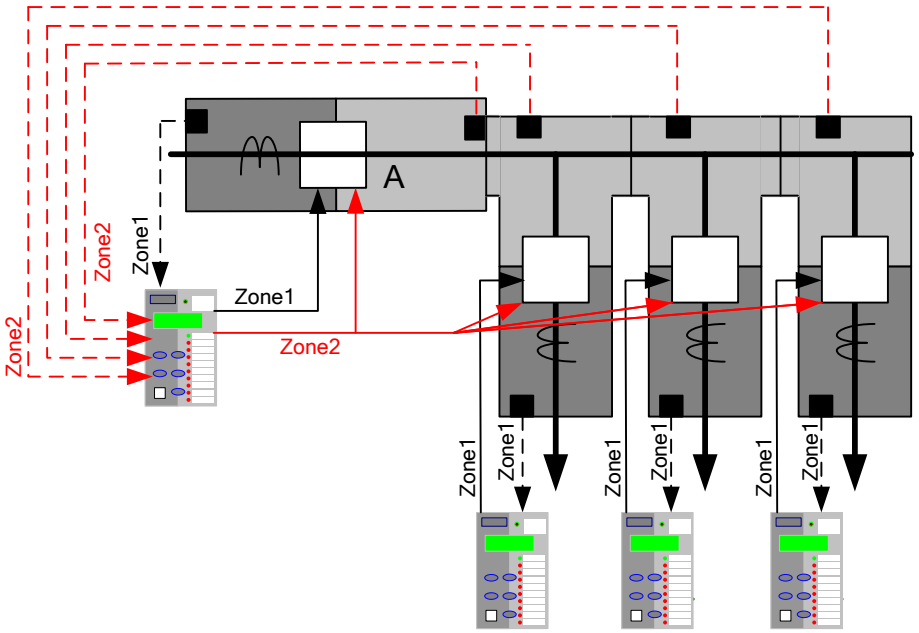

Figure 2.4-1 Arc Flash Detection

©2019 Siemens Protection Devices Limited

2.5 Instantaneous Overcurrent (50/50G/50N)

Each instantaneous element has an independent setting for pick-up current and a follower definite time lag (DTL) which can be used to provide time grading margins, sequence co-ordination grading or scheme logic. The "instantaneous" description relates to the pick-up of the element rather than its operation.

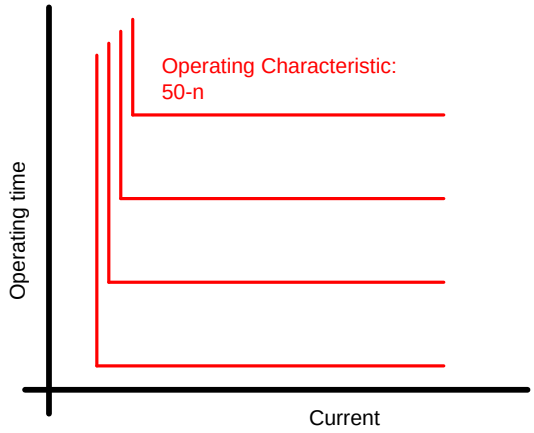

Figure 2.5-1 General Form of DTL Operate Characteristic

Instantaneous elements can be used in current graded schemes where there is a significant difference between the fault current levels at different relay point. The Instantaneous element is set to pick up at a current level above the maximum Fault Current level at the next downstream relay location, and below its own minimum fault current level. The protection is set to operate instantaneously and is often termed 'Highset Overcurrent'. A typical application is the protection of transformer HV connections – the impedance of the transformer ensuring that the LV side has a much lower level of fault current.

The 50-n elements have a very low transient overreach i.e. their accuracy is not appreciably affected by the initial dc offset transient associated with fault inception.

2.5.1 Blocked Overcurrent Protection Schemes

A combination of instantaneous and DTL elements can be used in blocked overcurrent protection schemes. These protection schemes are applied to protect substation busbars or interconnectors etc. Blocked overcurrent protection provides improved fault clearance times when compared against normally graded overcurrent relays.

The blocked overcurrent scheme of busbar protection shown in Figure 2.4-2 illustrates that circuit overcurrent and earth fault protection relays can additionally be configured with busbar protection logic.

The diagram shows a substation. The relay on the incomer is to trip for busbar faults (F1) but remain inoperative for circuit faults (F2).

In this example the overcurrent and earth fault settings for the incomer 50-1 element are set to below the relevant busbar fault levels. 50-1 time delay is set longer than it would take to acknowledge receipt of a blocking signal from an outgoing circuit.

Close up faults on the outgoing circuits will have a similar fault level to busbar faults. As the incomer 50-1 elements would operate for these faults it is necessary to provide a blocking output from the circuit protections. The 50-1 elements of the output relays are given lower current settings than the incomer 50-1 settings, the time delay is set to 0ms. The output is mapped to a contact. The outgoing relay blocking contacts of all circuits are wired in parallel and this wiring is also connected to a BI on the incomer relay. The BI on the incomer relay is mapped to block its 50-1 element.

©2019 Siemens Protection Devices Limited

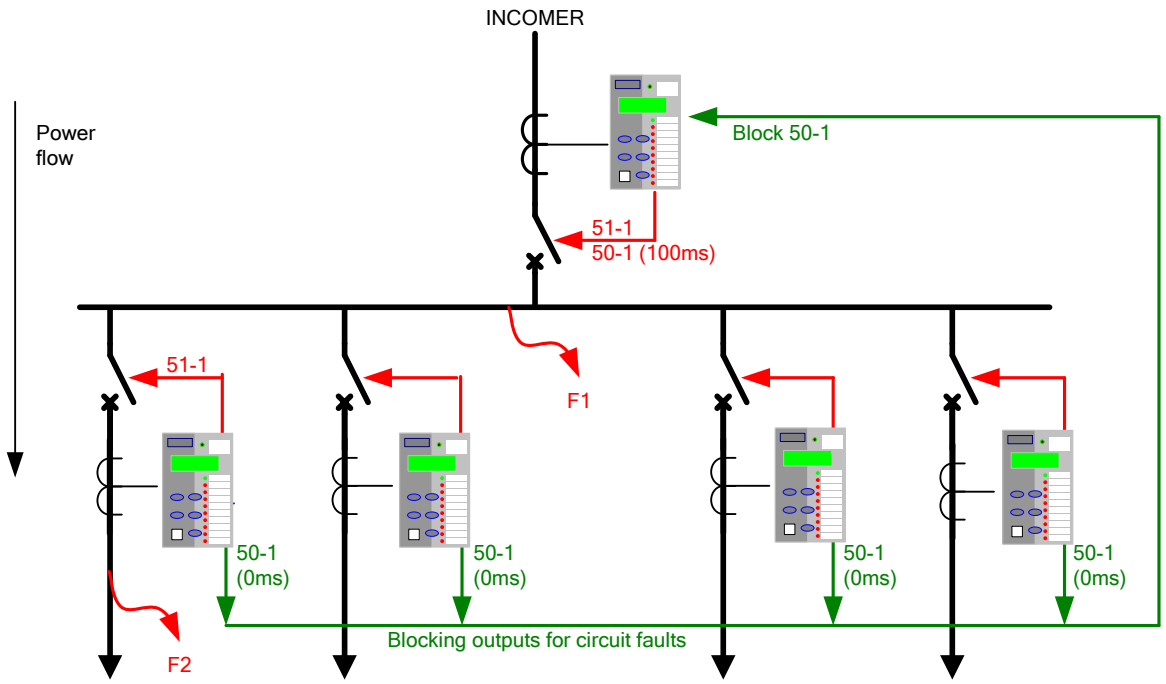

Figure 2.5-2 Blocking Scheme Using Instantaneous Overcurrent Elements

Typically a time delay as low as 50ms on the incomer 50-1 element will ensure that the incomer is not tripped for outgoing circuit faults. However, to include for both equipment tolerances and a safety margin a minimum time delay of 100ms is recommended.

This type of scheme is very cost effective and provides a compromise between back-up overcurrent busbar protection and dedicated schemes of busbar protection.

Instantaneous elements are also commonly applied to autoreclose schemes to grade with downstream circuit reclosers and maximise the probability of a successful auto-reclose sequence – see section 4.

 ©2019 Siemens Protection Devices Limited

2.6 Sensitive Earth-fault Protection (50SEF)

Earth fault protection is based on the assumption that fault current levels will be limited only by the earth fault impedance of the line and associated plant. However, it may be difficult to make an effective short circuit to earth due to the nature of the terrain e.g. dry earth, desert or mountains. The resulting earth fault current may therefore be limited to very low levels.

Sensitive earth fault (SEF) protection is used to detect such faults. The relays have a low burden, so avoiding unacceptable loading of the CTs at low current settings. Only the fundamental component is used to avoid pick up from harmonics.

SEF provides a backup to the main protection. A DTL characteristic with a time delay of several seconds is typically applied ensuring no interference with other discriminative protections. A relatively long time delay can be tolerated since fault current is low and it is impractical to grade SEF protection with other earth fault protections. Although not suitable for grading with other forms of protection SEF relays may be graded with each other.

Where very sensitive current settings are required then it is preferable to use a core balance CT rather than wire into the residual connection of the line CTs. The turns ratio of a core balance CT can be much smaller than that of phase conductors as they are not related to the rated current of the protected circuit. Since only one core is used, the CT magnetising current losses are also reduced by a factor of 3.

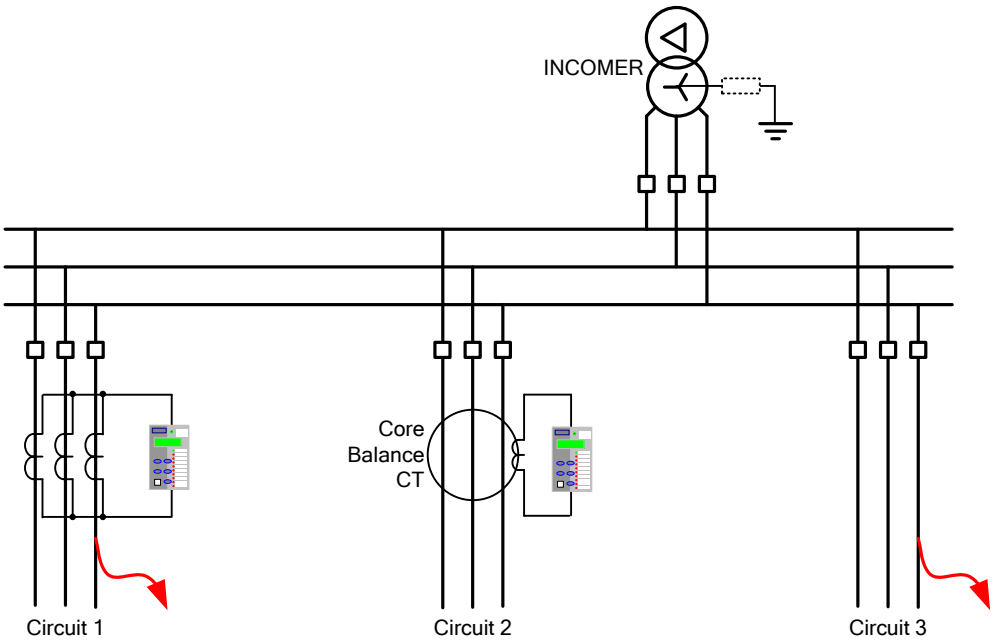

Figure 2.6-1 Sensitive Earth Fault Protection Application

There are limits to how sensitive an SEF relay may be set since the setting must be above any line charging current levels that can be detected by the relay. On occurrence of an out of zone earth fault e.g. on circuit 3 the elevation of sound phase voltage to earth in a non-effectively earthed system can result in a zero sequence current of up 3 times phase charging current flowing through the relay location.

The step change from balanced 3-phase charging currents to this level of zero sequence current includes transients. It is recommended to allow for a transient factor of 2 to 3 when determining the limit of charging current. Based on the above considerations the minimum setting of a relay in a resistance earthed power system is 6 to 9 times the charging current per phase.

©2019 Siemens Protection Devices Limited

2.7 Directional Protection (67)

Each overcurrent stage can operate for faults in either forward or reverse direction. Convention dictates that forward direction refers to power flow away from the busbar, while reverse direction refers to power flowing towards the busbar.

The directional phase fault elements, 67/50 and 67/51, work with a Quadrature Connection to prevent loss of polarising quantity for close-in phase faults. That is, each of the current elements is directionalised by a voltage derived from the other two phases.

This connection introduces a 90° Phase Shift (Current leading Voltage) between reference and operate quantities which must be allowed for in the Characteristic Angle setting. This is the expected fault angle, sometimes termed the Maximum Torque Angle (MTA) as an analogy to older Electro-mechanical type relays

Example: Expected fault angle is -30º (Current lagging Voltage) so set Directional Angle to: +90° -30° = +60°.

A fault is determined to be in the selected direction if its phase relationship lies within a quadrant +/- 85° either side of the Characteristic Angle setting.

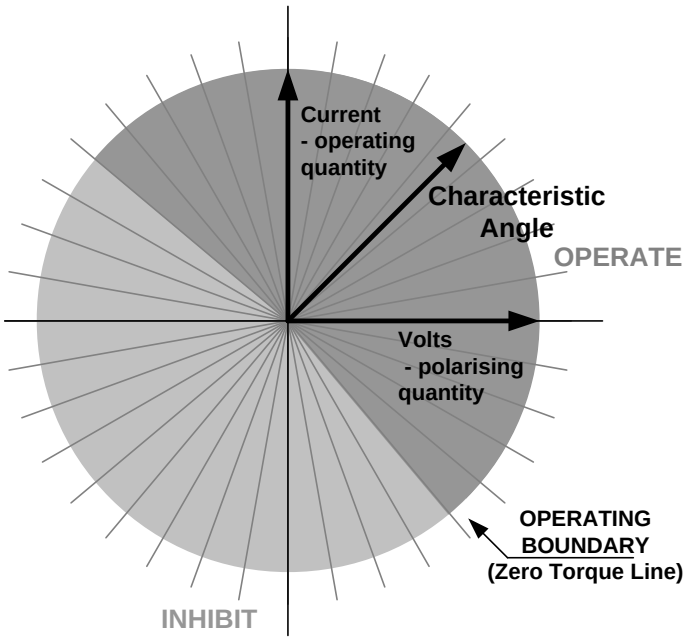

Figure 2.7-1 Directional Characteristics

A number of studies have been made to determine the optimum MTA settings e.g. W.K Sonnemann's paper "A Study of Directional Element Connections for Phase Relays". Figure 2.6-1 shows the most likely fault angle for phase faults on Overhead Line and Cable circuits.

 ©2019 Siemens Protection Devices Limited

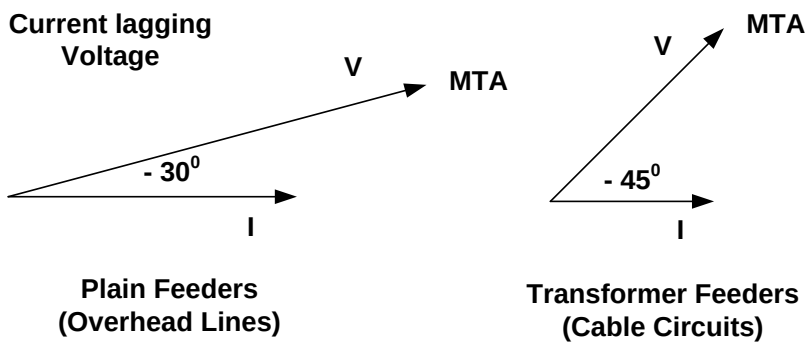

Figure 2.7-2 Phase Fault Angles

Directional overcurrent elements allow greater fault selectivity than non-directional elements for interconnected systems where fault current can flow in both directions through the relaying point. Consider the network shown in fig. 2.6-3.

The Circuit breakers at A, B, E and G have directional overcurrent relays fitted since fault current can flow in both directions at these points. The forward direction is defined as being away from the busbar and against the direction of normal load current flow. These forward looking IDMTL elements can have sensitive settings applied i.e. low current and time multiplier settings. Note that 7SR12 relays may be programmed with forward, reverse and non-directional elements simultaneously when required by the protection scheme.

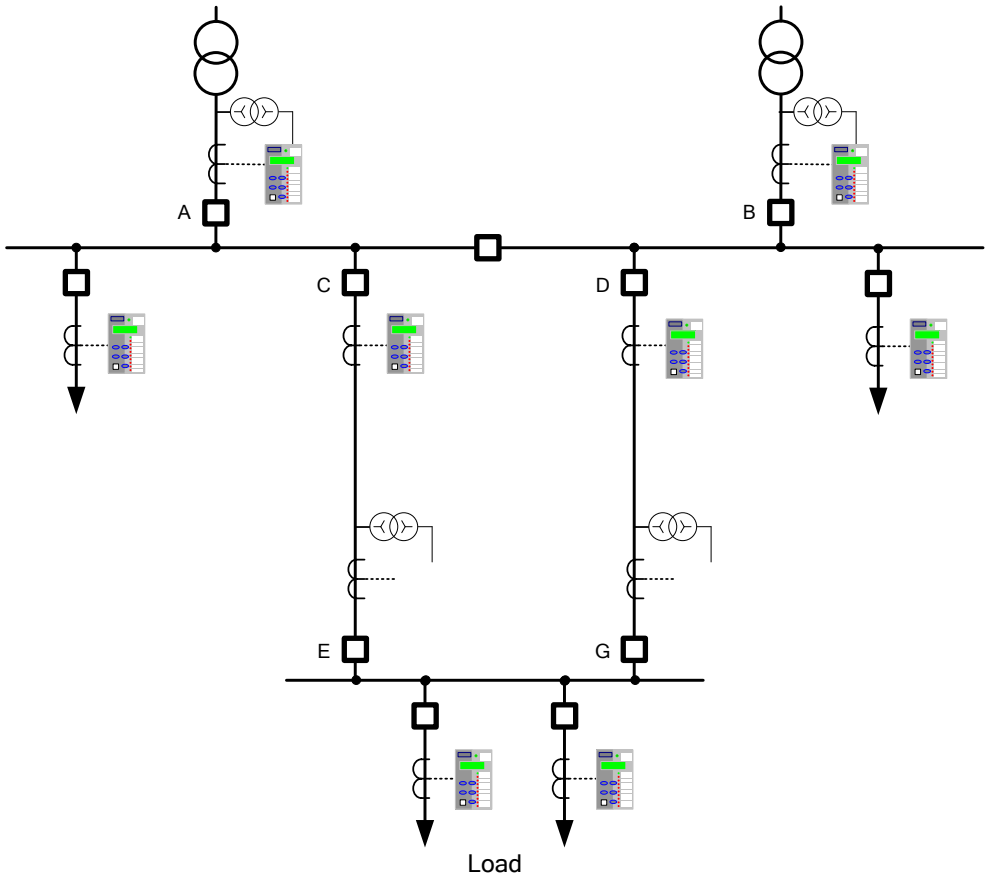

Figure 2.7-3 Application of Directional Overcurrent Protection

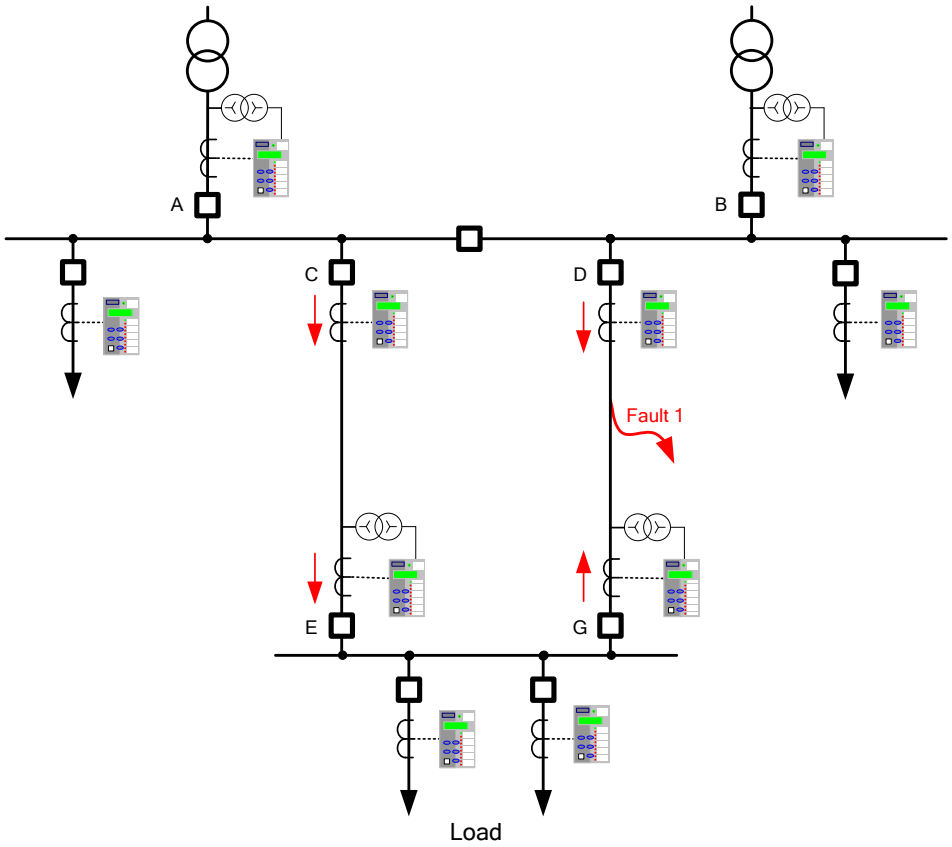

Figure 2.7-4 Feeder Fault on Interconnected Network

Considering the D-G feeder fault shown in fig. 2.6-4: the current magnitude through breakers C and D will be similar and their associated relays will have similar prospective operate times. To ensure that only the faulted feeder is isolated G FWD must be set to be faster than C. Relay G will thus Trip first on FWD settings, leaving D to operate to clear the fault. The un-faulted Feeder C-E maintains power to the load.

Relays on circuits C and D at the main substation need not be directional to provide the above protection scheme. However additional directional elements could be mapped to facilitate a blocked overcurrent scheme of busbar protection.

At A and B, forward looking directional elements enable sensitive settings to be applied to detect transformer faults whilst reverse elements can be used to provide back-up protection for the relays at C and D.

By using different settings for forward and reverse directions, closed ring circuits can be set to grade correctly whether fault current flows in a clockwise or counter clockwise direction i.e. it may be practical to use only one relay to provide dual directional protection.

2.7.1 2 Out of 3 Logic

Sensitive settings can be used with directional overcurrent relays since they are directionalised in a way which opposes the flow of normal load current i.e. on the substation incomers as shown on fig. 2.6-4. However on occurrence of transformer HV or feeder incomer phase-phase faults an unbalanced load current may still flow as an unbalanced driving voltage is present. This unbalanced load current during a fault may be significant where sensitive overcurrent settings are applied - the load current in one phase may be in the operate direction and above the relay setting.

Where this current distribution may occur then the relay is set to CURRENT PROTECTION>PHASE OVERCURRENT> ***67 2-out-of-3 Logic* = ENABLED**

Enabling 2-out-of-3 logic will prevent operation of the directional phase fault protection for a single phase to earth fault. Dedicated earth-fault protection should therefore be used if required.

 ©2019 Siemens Protection Devices Limited

2.8 Directional Earth-Fault (50/51G, 50/51N, 50/51SEF)

The directional earth-fault elements, either measured directly or derived from the three line currents the zero sequence current (operate quantity) and compare this against the derived zero phase sequence voltage (polarising quantity). Chapter 1 of the Technical Manual 'Description of Operation' details the method of measurement. The required setting is entered directly as dictated by the system impedances.

Example: Expected fault angle is -45° (i.e. residual current lagging residual voltage) therefore ***67G Char Angle*** = **-45°**

Derived directional earth elements, 50N and 51N, can be selectable to use either ZPS or NPS Polarising. This is to allow for the situation where ZPS voltage is not available; perhaps because a 3-limb VT is being used. NPS polarising uses the phase of the NPS voltage and NPS current for directional polarising but the ZPS derived earth fault current is still the operating quantity. Care must be taken as the Characteristic Angle may require adjustment if NPS Polarising is used.

Once again the fault angle is completely predictable, though this is a little more complicated as the method of earthing must be considered.

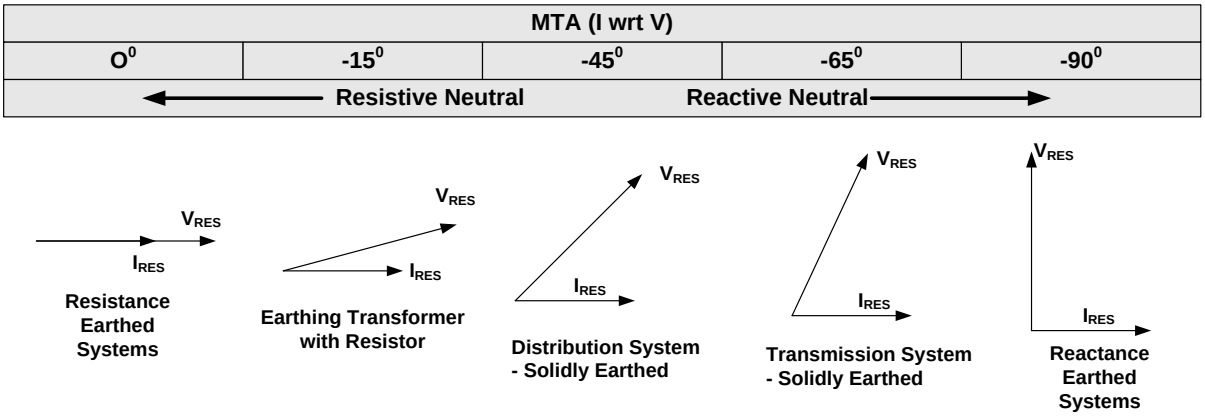

Figure 2.8-1 Earth Fault Angles

2.8.1 Compensated Coil Earthing Networks

In compensated networks the Resonant Coil (Petersen coil) is tuned to match the capacitive charging currents such that when an earth fault occurs, negligible fault current will flow. However, resistive losses in the primary conductors and also in the earthing coil will lead to resistive (wattmetric) components which can be measured by the 50/51SEF elements and used to indicate fault position. Core balance CTs are recommended for this application to achieve the necessary accuracy of residual current measurement.

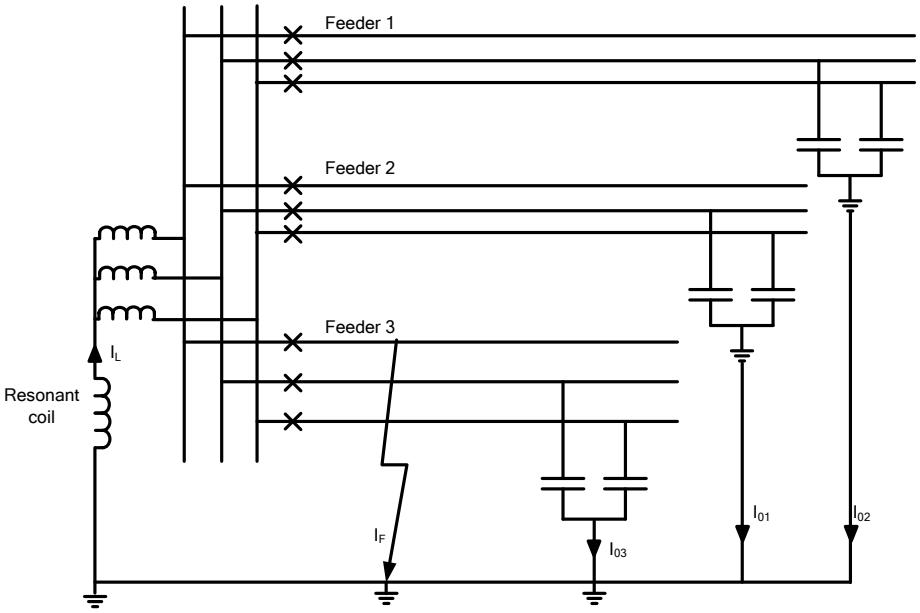

Figure 2.8-2 Earth fault current distribution in Compensated network

Three methods are commonly employed to detect the wattmetric current. The 7SR12 relay has customer settings that can be configured to provide each of these methods.

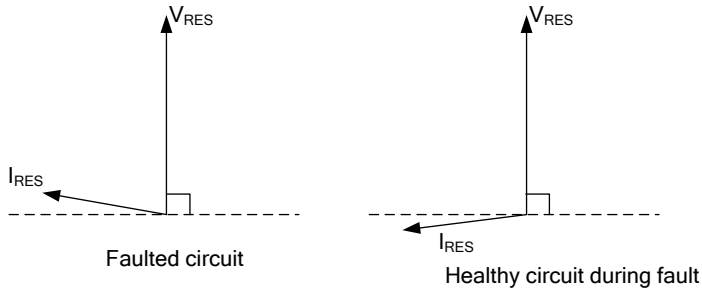

Figure 2.8-3 Earth fault current direction in compensated network

(i) The directional boundary can be used to discriminate between healthy and faulted feeders. The characteristic angle is set to approximately 0º and the boundary at +90º used to detect the direction of the resistive component within the residual current. Setting of the boundary is critical to discriminate between faulted and unfaulted circuits. Setting '67SEF Compensated Network' to 'Enabled' will set the directional boundaries to ±87º around the characteristic angle, fine adjustment of the boundary may be necessary using the characteristic angle setting.

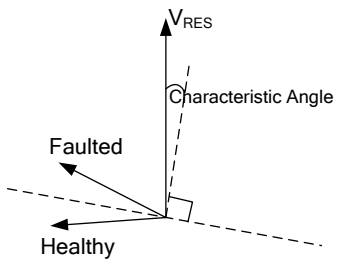

Figure 2.8-4 Adjustment of Characteristic Angle

©2019 Siemens Protection Devices Limited

(ii) The element measuring circuit can be subjected to only the cosine component of residual current i.e. to directly measure the real (wattmetric) current due to losses. The current $I_{RES}Cos(\theta-Ø)$ is calculated where θ is the measured phase angle between residual current and voltage and Ø is the characteristic angle. This option is selected by setting 'Ires Select' to 'Ires Real'. The characteristic angle should be set to 0º.

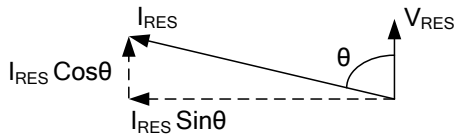

Figure 2.8-5 Cosine component of current

(iii) Application of a Wattmetric power characteristic. The directional 50/51 SEF element operation is subject to an additional sensitive residual power element which operates only on the real (wattmetric) component of residual power.

2.8.2 Isolated Networks

During earth faults on isolated distribution networks there is no fault current path to the source and subsequently no fault current will flow. However, the phase-neutral capacitive charging currents on the three phases will become unbalanced and the healthy phase currents will create an unbalance current which flows to earth. Unbalanced charging current for the whole connected network will return to the source through the fault path. This will produce a current at the relay which can be used to detect the presence of the fault. On each healthy circuit the unbalanced capacitive currents appear as a residual current which LAGS the residual voltage by 90º. On the faulted circuit the charging current creates no residual but the return of the charging current on the other circuits appears as a residual current which LEADS the residual voltage by 90º. The characteristic angle should be set to +90º.

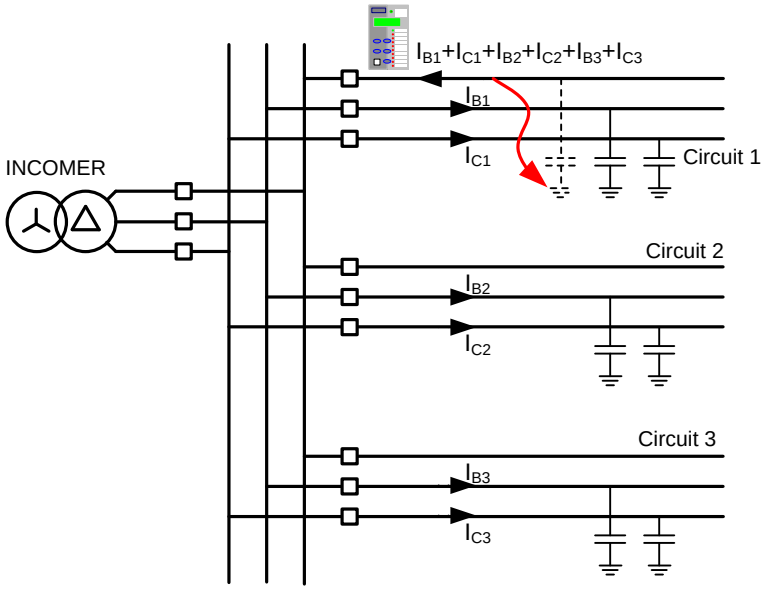

Figure 2.8-6 Earth fault current in isolated network

Some customers prefer to use only the sine (reactive) component of the residual current which can be easily achieved by setting 'Ires Select' to 'Ires Real' to select the operating current to $I_{RES}Cos(\theta-Ø)$ and setting the characteristic angle Ø to +90º.

2.8.3 Minimum Polarising Voltage

The correct residual voltage direction must be measured to allow a forward/reverse decision to be made. Minimum polarising voltage setting can be used to prevent tripping when fault conditions are such that significant residual voltage is not generated and the directional decision would be unreliable. The setting must allow for error in voltage measurement due to VT inaccuracy and connection. It can be used to improve stability under non-fault conditions during unbalanced load, when earth fault elements with very sensitive current settings are applied. This is ensured by selecting a setting which is near to the minimum expected residual voltage during fault conditions.

High impedance earthing methods, including compensated and isolated systems, will result in high levels of residual voltage, up to 3 times normal phase to neutral voltage, during earth faults. The minimum polarising voltage can therefore be increased to allow very low residual current settings to be applied without risk of operation during unbalanced load conditions.

 ©2019 Siemens Protection Devices Limited

2.9 High Impedance Restricted Earth Fault Protection (64H)

Restricted Earth Fault (REF) protection is applied to Transformers to detect low level earth faults in the transformer windings. Current transformers are located on all connections to the transformer. During normal operation or external fault conditions no current will flow in the relay element. When an internal earth fault occurs, the currents in the CTs will not balance and the resulting unbalance flows through the relay.

The current transformers may saturate when carrying high levels of fault current. The high impedance name is derived from the fact that a resistor is added to the relay leg to prevent relay operation due to CT saturation under through fault conditions.

The REF Trip output is configured to provide an instantaneous trip output from the relay to minimise damage from developing winding faults.

The application of the element to a delta-star transformer is shown in Figure 2.8-1. Although the connection on the relay winding is more correctly termed a Balanced Earth-Fault element, it is still usually referred to as Restricted Earth Fault because of the presence of the transformer.

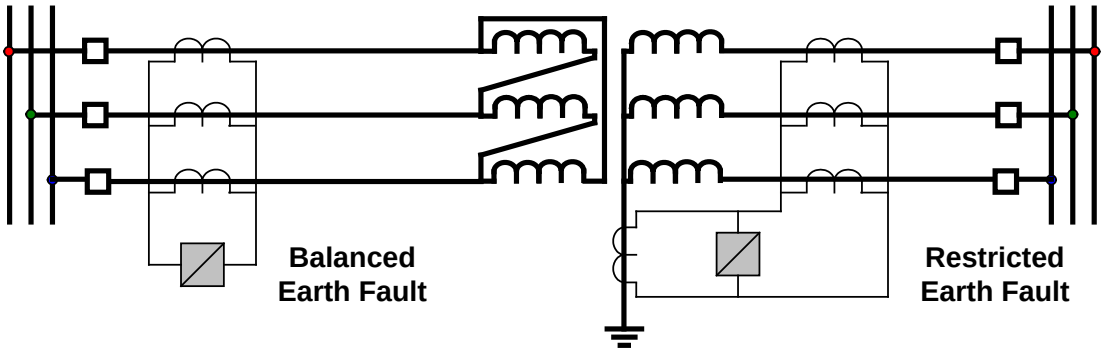

Figure 2.9-1 Balanced and Restricted Earth-fault protection of Transformers

The calculation of the value of the Stability Resistor is based on the worst case where one CT fully saturates and the other balancing CT does not saturate at all. A separate Siemens Protection Devices Limited Publication is available covering the calculation procedure for REF protection. To summarise this:

The relay Stability (operating) Vs voltage is calculated using worst case lead burden to avoid relay operation for through-fault conditions where one of the CTs may be fully saturated. The required fault setting (primary operate current) of the protection is chosen; typically, this is between 10 % and 25 % of the protected winding rated current. The relay setting current is calculated based on the secondary value of the operate current, note, however, that the summated CT magnetising current @ Vs must be subtracted to obtain the required relay operate current setting.

Since the relay operate current setting and stability/operating voltage are now known, a value for the series resistance can now be calculated.

A check is made as to whether a Non-Linear Resistor is required to limit scheme voltage during internal fault conditions – typically where the calculated voltage is in excess of 2kV.

The required thermal ratings for external circuit components are calculated.

©2019 Siemens Protection Devices Limited

Composite overcurrent and REF protection can be provided using a multi-element relay as shown below.

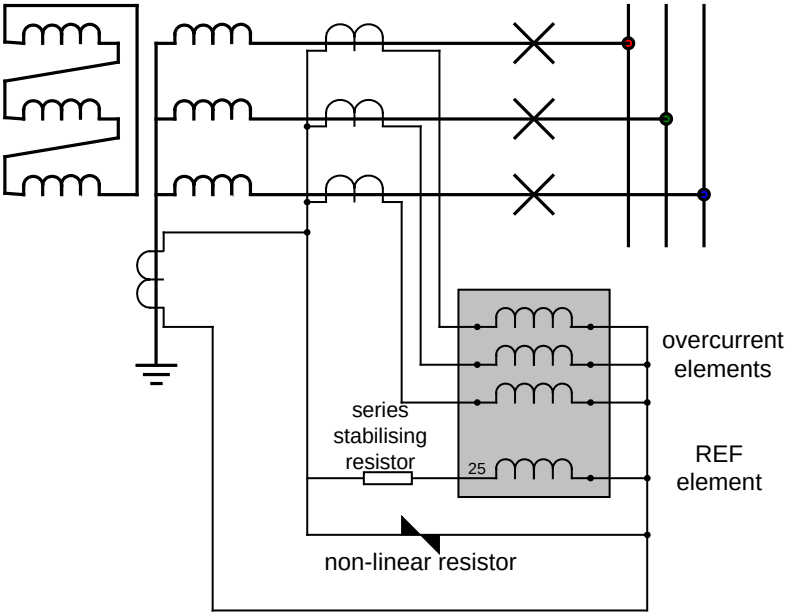

Figure 2.9-2 Composite Overcurrent and Restricted Earth-fault Protection

Although core-balance CTs are traditionally used with elements requiring sensitive pickup settings, cost and size usually precludes this on REF schemes. Instead single-Phase CTs are used and their secondary's connected in parallel.

Where sensitive settings are required, the setting must be above any line charging current levels that can be detected by the relay.

On occurrence of an out of zone earth fault the elevation of sound phase voltage to earth in a non-effectively earthed system can result in a zero sequence current of up 3 times phase charging current flowing through the relay location.

The step change from balanced 3-phase charging currents to this level of zero sequence current includes transients. It is recommended to allow for a transient factor of 2 to 3 when determining the limit of charging current. Based on the above considerations the minimum setting of a relay in a resistance earthed power system is 6 to 9 times the charging current per phase.

High impedance differential protection is suitable for application to auto transformers as line currents are in phase and the secondary current through the relay is balanced to zero by the use of CTs ratios at all three terminals. High impedance protection of this type is very sensitive and fast operating for internal faults.

 ©2019 Siemens Protection Devices Limited

2.10 Negative Phase Sequence Overcurrent (46NPS)

The presence of Negative Phase Sequence (NPS) current indicates an unbalance in the phase currents, either due to a fault or unbalanced load.

NPS current presents a major problem for 3-phase rotating plant. It produces a reaction magnetic field which rotates in the opposite direction, and at twice the frequency, to the main field created by the DC excitation system. This induces double-frequency currents into the rotor which cause very large eddy currents in the rotor body. The resulting heating of the rotor can be severe and is proportional to $(I_2)^2$ t.

Generators and Motors are designed, manufactured and tested to be capable of withstanding unbalanced current for specified limits. Their withstand is specified in two parts; continuous capability based on a figure of I_2, and short time capability based on a constant, K, where K = $(I_2)^2$ t. NPS overcurrent protection is therefore configured to match these two plant characteristics.

2.11 Undercurrent (37)

Undercurrent elements are used in control logic schemes such as Auto-Changeover Schemes, Auto-Switching Interlock and Loss of Load. They are used to indicate that current has ceased to flow or that a low load situation exists. For this reason simple Definite Time Lag (DTL) elements may be used.

For example, once it has been determined that fault current has been broken – the CB is open and no current flows – an auto-isolation sequence may safely be initiated.

2.12 Thermal Overload (49)

The element uses measured 3-phase current to estimate the real-time Thermal State, θ, of cables or transformers. The Thermal State is based on both past and present current levels.

θ = 0% for unheated equipment, and θ = 100% for maximum thermal withstand of equipment or the Trip threshold.

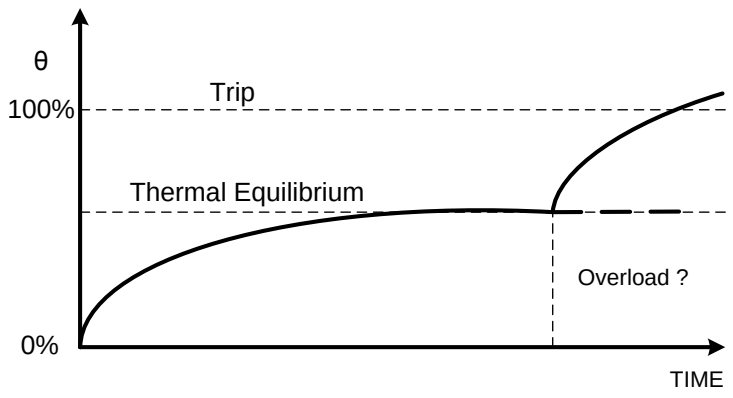

Figure 2.12-1 Thermal Overload Heating and Cooling Characteristic

For given current level, the Thermal State will ramp up over time until Thermal Equilibrium is reached when Heating Effects of Current = Thermal Losses.

The heating / cooling curve is primarily dependant upon the Thermal Time Constant. This must be matched against that quoted for the item of plant being protected. Similarly the current tripping threshold, I_θ, is related to the thermal withstand of the plant.

Thermal Overload is a slow acting protection, detecting faults or system conditions too small to pick-up fast acting protections such as Phase Overcurrent. An Alarm is provided for θ at or above a set % of capacity to indicate that a potential trip condition exists and that the system should be scrutinised for abnormalities.

2.13 Under/Over Voltage Protection (27/59)

Power system under-voltages on may occur due to:

System faults.

An increase in system loading,

Non-energized power system e.g. loss of an incoming transformer

During normal system operating conditions regulating equipment such as transformer On Load Tap Changers (OLTC) and generator Automatic Voltage Regulators (AVR) ensure that the system runs within acceptable voltage limits.

Undervoltage/DTL elements can be used to detect abnormal undervoltage conditions due to system overloads. Binary outputs can be used to trip non-essential loads - returning the system back to its normal operating levels. This 'load shedding' should be initiated via time delay elements so avoiding operation during transient disturbances. An undervoltage scheme (or a combined under frequency/under voltage scheme) can provide faster tripping of non-essential loads than under-frequency load shedding so minimising the possibility of system instability.

Where a transformer is supplying 3-phase motors a significant voltage drop e.g. to below 80% may cause the motors to stall. An undervoltage element can be set to trip motor circuits when the voltage falls below a preset value so that on restoration of supply an overload is not caused by the simultaneous starting of all the motors. A time delay is required to ensure voltage dips due to remote system faults do not result in an unnecessary disconnection of motors.

To confirm presence/loss of supply, the voltage elements should be set to values safely above/below that where a normal system voltage excursion can be expected. The switchgear/plant design should be considered. The 'Dead' level may be very near to the 'live' level or may be significantly below it. The variable hysteresis setting allows the relay to be used with all types of switchgear.

System over-voltages can damage component insulation. Excessive voltage may occur for:

Sudden loss of load

A tap changer run-away condition occurs in the high voltage direction,

Generator AVR equipment malfunctions or

Reactive compensation control malfunctions.

System regulating equipment such as transformer tap changers and generator AVRs may correct the overvoltage – unless this equipment mal-functions. The overvoltage/DTL elements can be used to protect against damage caused by system overvoltages.

If the overvoltage condition is small a relatively long DTL time delay can be used. If the overvoltage is more severe then another element, set at a higher pickup level and with a shorter DTL can be used to isolate the circuit more quickly. Alternatively, elements can be set to provide alarm and tripping stages, with the alarm levels set lower than the tripping stages.

The use of DTL settings allows a grading system to be applied to co-ordinate the network design, the regulating plant design, system plant insulation withstand and with other overvoltage relays elsewhere on the system. The DTL also prevents operation during transient disturbances.

The use of IDMTL protection is not recommended because of the difficulty of choosing settings to ensure correct co-ordination and security of supply.

 ©2019 Siemens Protection Devices Limited

2.14 Neutral Overvoltage (59N)

Neutral Voltage Displacement (NVD) protection is used to detect an earth fault where little or no earth current flows.

This can occur where a feeder has been tripped at its HV side for an earth fault, but the circuit is still energised from the LV side via an unearthed transformer winding. Insufficient earth current would be present to cause a trip, but residual voltage would increase significantly; reaching up to 3-times the normal phase-earth voltage level.

If Neutral Overvoltage protection is used, it must be suitably time graded with other protections in order to prevent unwanted tripping for external system earth faults.

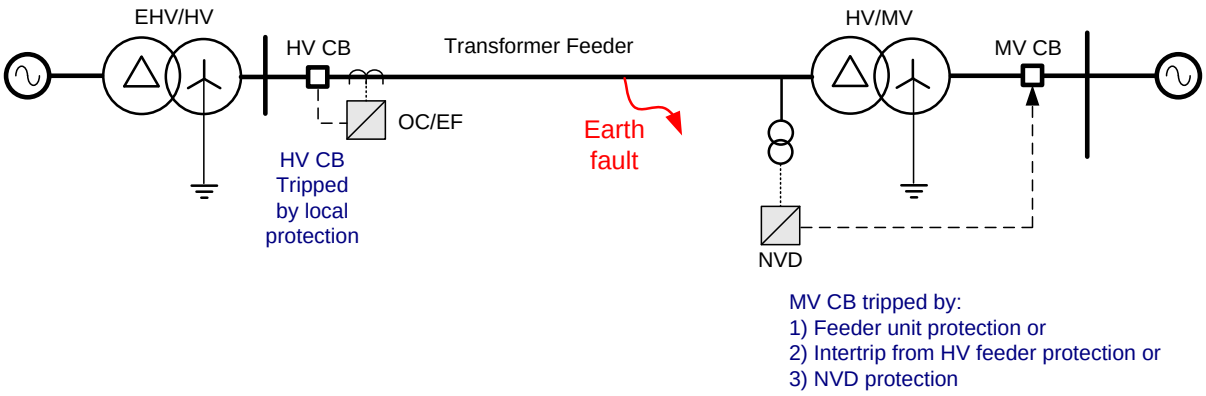

Figure 2.14-1 NVD Application

Typically NVD protection measures the residual voltage ($3V_0$) directly from an open delta VT or from capacitor cones – see fig. 2.13-2 below.

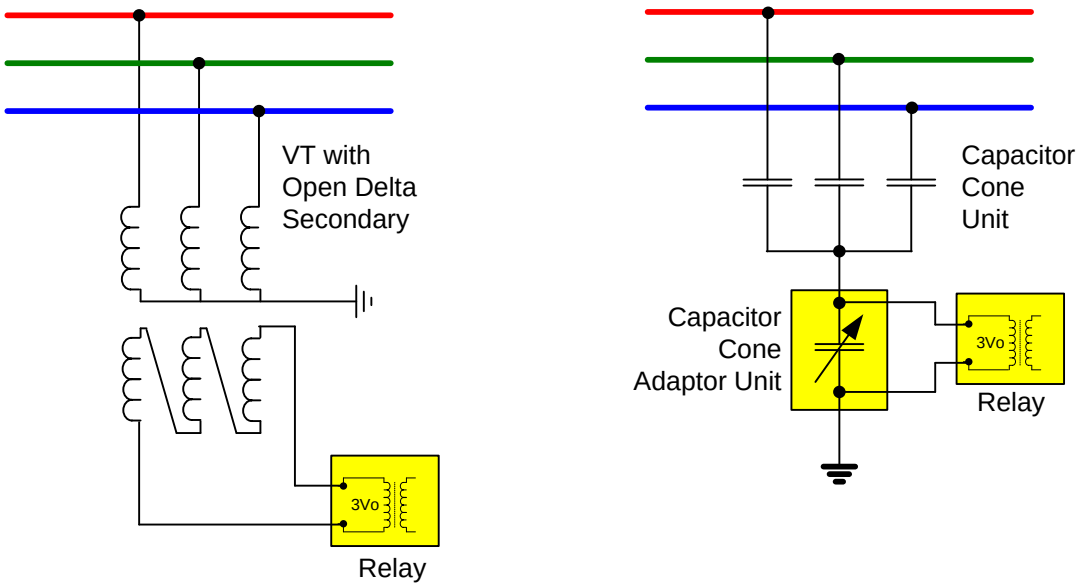

Figure 2.14-2 NVD Protection Connections

2.14.1 Application with Capacitor Cone Units

Capacitor cones provide a cost effective method of deriving residual voltage. The wide range of capacitor cone component values used by different manufacturers means that the relay cannot be connected directly to the cones.

The external adaptor unit contains parallel switched capacitors that enable a wide range of values to be selected using a DIL switch and hence the Capacitor Cone output can be scaled to the standard relay input range.

2.14.2 Derived NVD Voltage

Alternatively NVD voltage can be derived from the three phase to neutral voltages, this setting is available within the relay. Note with this method the NVD protection may mal-operate during a VT Fail condition.

2.15 Negative Phase Sequence Overvoltage (47)

Negative Phase Sequence (NPS) protection detects phase unbalances and is widely used in protecting rotating plant such as motors and generators. However such protection is almost universally based on detecting NPS Current rather than Voltage. This is because the NPS impedance of motors etc. is much less than the Positive Phase Sequence (PPS) impedance and therefore the ratio of NPS to PPS Current is much higher than the equivalent ratio of NPS to PPS Voltage.

NPS Voltage is instead used for monitoring busbar supply quality rather than detecting system faults. The presence of NPS Voltage is due to unbalanced load on a system. Any system voltage abnormality is important since it will affect every motor connected to the source of supply and can result in mass failures in an industrial plant.

The two NPS Voltage DTL elements should therefore be used as Alarms to indicate that the level of NPS has reached abnormal levels. Remedial action can then be taken, such as introducing a Balancer network of capacitors and inductors. Very high levels of NPS Voltage indicate incorrect phase sequence due to an incorrect connection.

 ©2019 Siemens Protection Devices Limited

2.16 Under/Over Frequency (81)

During normal system operation the frequency will continuously vary over a relatively small range due to the changing generation/load balance. Excessive frequency variation may occur for:

Loss of generating capacity, or loss of mains supply (underfrequency): If the governors and other regulating equipment cannot respond to correct the balance, a sustained underfrequency condition may lead to a system collapse.

Loss of load – excess generation (overfrequency): The generator speeds will increase causing a proportional frequency rise. This may be unacceptable to industrial loads, for example, where the running speeds of synchronous motors will be affected.

In the situation where the system frequency is falling rapidly it is common practise to disconnect non-essential loads until the generation-load balance can be restored. Usually, automatic load shedding, based on underfrequency is implemented. Underfrequency relays are usually installed on the transformer incomers of distribution or industrial substations as this provides a convenient position from which to monitor the busbar frequency. Loads are disconnected from the busbar (shed) in stages until the frequency stabilises and returns to an acceptable level.

The relay has four under/over frequency elements.

An example scheme may have the first load shedding stage set just below the nominal frequency, e.g. between 49.0 - 49.5Hz. A time delay element would be associated with this to allow for transient dips in frequency and to provide a time for the system regulating equipment to respond. If the first load shedding stage disconnects sufficient plant the frequency will stabilise and perhaps return to nominal. If, however, this is not sufficient then a second load shedding stage, set at a lower frequency, will shed further loads until the overload is relieved. This process will continue until all stages have operated. In the event of the load shedding being unsuccessful, a final stage of underfrequency protection should be provided to totally isolate all loads before plant is damaged, e.g. due to overfluxing.

An alternative type of load shedding scheme would be to set all underfrequency stages to about the same frequency setting but to have different length time delays set on each stage. If after the first stage is shed the frequency doesn't recover then subsequent stages will shed after longer time delays have elapsed.

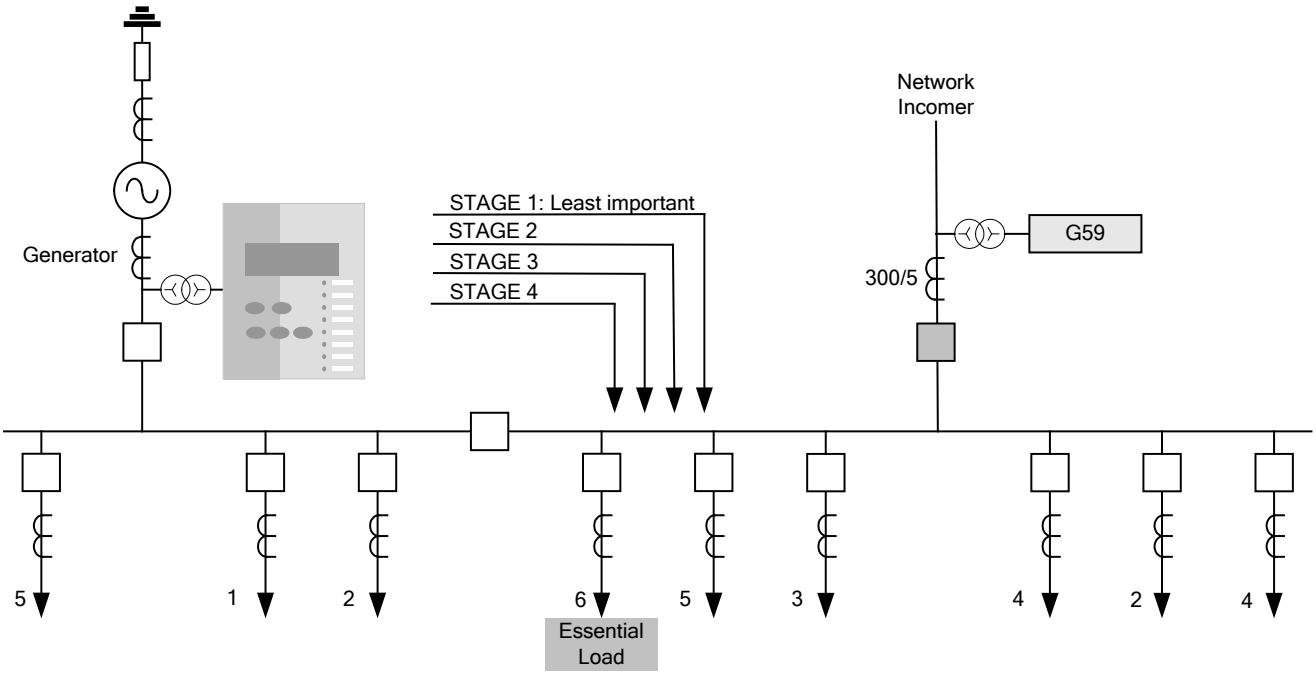

Figure 2.16-1 Load Shedding Scheme Using Under-Frequency Elements

2.17 Power (32)

Directional power protection is often applied to motor or embedded generator applications to detect loss of load or loss of generation. For these applications, Real power may be a more appropriate operating quantity.
Power direction can also be used to recognise and record particular network operation arrangements such as back feeds or embedded generation conditions.

2.18 Sensitive Power (32S)

The CT accuracy should be considered when setting this function for the application.

2.19 Power Factor (55)

Power factor limits can be set to provide alarms or even tripping for abnormal power factor load.
Power factor can also be used to switch in and out additional plant such as capacitors

©2019 Siemens Protection Devices Limited

Section 3: CT Requirements

3.1 CT Requirements for Overcurrent and Earth Fault Protection

3.1.1 Overcurrent Protection CTs

a) For industrial systems with relatively low fault current and no onerous grading requirements - a class 10P10 with VA rating to match the load.

b) For utility distribution networks with relatively high fault current and several grading stages - a class 5P20, with VA rating to match the load.

Note: if an accuracy limit factor is chosen which is much lower than the maximum fault current it will be necessary to consider any effect on the protection system performance and accuracy e.g. grading margins.

For idmtl applications, because the operating time at high fault current is a definite minimum value, partial saturation of the CT at values beyond the overcurrent factor has only a minimal effect. However, this must be taken into account in establishing the appropriate setting to ensure proper grading.

c) For dtl applications utilities as for (b) above - a class 5P10 (or 20), with rated burden to suit the load.

Note: Overcurrent factors do not need to be high for definite time protection because once the setting is exceeded magnitude accuracy is not important. Often, however, there is also the need to consider instantaneous HighSet overcurrent protection as part of the same protection system and the settings would normally be of the order of 10x the CT rating or higher. Where higher settings are to be used then the overcurrent factor must be raised accordingly, e.g. to P20.

3.1.2 Earth Fault Protection CTs

Considerations and requirements for earth fault protection are the same as for Phase fault. Usually the relay employs the same CT's e.g. three phase CTs star connected to derive the residual earth fault current.

The accuracy class and overcurrent accuracy limit factors are therefore already determined and for both these factors the earth fault protection requirements are normally less onerous than for overcurrent.

3.2 CT Requirements for High Impedance Restricted Earth Fault Protection

For high impedance REF it is recommended that:

Low reactance CTs to IEC Class PX are used, this allows a sensitive current setting to be applied.

All CT's should, if possible have identical turns ratios.

The knee point voltage of the CTs must be greater than 2 x 64H setting voltage Vs.

Where the REF function is used then this dictates that the other protection functions are also used with class PX CTs.

A full explanation of how to specify CTs for use with REF protection, and set REF relays is available on our website: www.siemens.com/energy.

©2019 Siemens Protection Devices Limited

Section 4: Control Functions

4.1 Auto-reclose Applications

- Automatic circuit reclosing is extensively applied to overhead line circuits where a high percentage of faults that occur are of a transient nature. By automatically reclosing the circuit-breaker the feature attempts to minimise the loss of supply to the customer and reduce the need for manual intervention.

The function supports up to 4 autoreclose (ARC) sequences. That is, 4 x Trip / Recloses followed by a Trip & Lockout. A lockout condition prevents any further automatic attempts to close the circuit-breaker. The number of sequences selected depends upon the type of faults expected. If there are a sufficient percentage of semi-permanent faults which could be burnt away, e.g. fallen branches, a multi shot scheme would be appropriate. Alternatively, if there is a high likelihood of permanent faults, a single shot scheme would minimise the chances of causing damage by reclosing onto a fault. In general, 80% of faults will be cleared by a single Trip and Reclose sequence. A further 10% will be cleared by a second Trip and Reclose. Different sequences can be selected for different fault types (Phase/Earth/Sensitive Earth faults).

The Deadtime is the interval between the trip and the CB close pulse being issued. This is to allow for the line to go ‘dead’ after the fault is cleared. The delay chosen is a compromise between the need to return the line to service as soon as possible and prevented unnecessary trips through re-closing too soon. The Reclaim Time is the delay following a re-closure before the line can be considered back in service. This should be set long enough to allow for protection operation for the same fault, but not so long that two separate faults could occur in the same Autoreclose (ARC) sequence and cause unnecessary lockouts.

Since large fault currents could potentially damage the system during a prolonged ARC sequence, there are also settings to identify which protection elements are High-sets and these can cause an early termination of the sequence.

Where a relay is to operate as part of an ARC scheme involving a number of other relays, which may or may not provide the ARC function, the 7SR device can be configured to clear any transient faults quickly without regard to normal fault current grading because ARC will quickly restore the network back into service. This is achieved by defining each protection element to be one of two types, Delayed or Instantaneous (Inst). The ARC shots of the sequence are then each defined to be either Delayed or Inst. During a type Inst shot the Inst protection elements will clear the fault quickly without grading and then initiate reclose of the circuit breaker but during type Delayed shots the Inst protection elements will be automatically inhibited so that type Delayed elements will clear the fault with grading applied. Instantaneous Trips are typically set to operate at just above maximum load current with small delays while Delayed Trips are set to suit current grading based on actual fault levels with suitable delays. This should not be confused with the 50 and 51 element DTL and IDMTL functionality which use similar instantaneous and delayed terminology.

If this complex autoreclose sequence is not required, all protection elements that are required to initiate autoreclose should be set to type Delayed, not to type Inst so that no element is ever inhibited by this available flexibility because setting configuration could result in the desired protection elements being inhibited and even a situation where there are no protection elements in service at all.

Any element which is not mapped as either an Inst or Delayed element can still trip but will not initiate ARC. Such an element can also be mapped to drive Lockout if it is desirable to prevent ARC initiation from an element which may operate simultaneously or to provide the Lockout alarm..

A typical sequence would be 2 Inst Trips followed by a Delayed Trip & Lockout:

- When any fault occurs, the relay will trip using the Inst protection elements and then reclose and increment to Shot 2.
- If the fault was transient and no longer present the relay will time out the Reclaim timer then return to shot 1. If the fault is still present, the relay will operate Inst protection and then reclose again and move to shot 3.
- If the fault is cleared this time the relay will time out Reclaim then return to shot 1. If the system fault is still present as it is a permanent fault the protection Trip will be by a Delayed element as Inst protections are inhibited and so suitable for grading with the rest of the network will be applied. This will allow downstream protection time to operate first.
- If the fault is not cleared by a downstream circuit breaker, the local trip will Lockout the ARC sequence and prevent further recloses.

 ©2019 Siemens Protection Devices Limited

It is important that all the relays in an ARC scheme shadow this process – advancing through their own ARC sequences when a fault is detected by an element pickup even though they are not actually causing a trip or reclose. This is termed Sequence Co-ordination and prevents an excessive number of recloses as each successive relay attempts to clear the fault in isolation. For this reason each relay in an ARC scheme must be set with identical Instantaneous and Delayed sequence of trips.

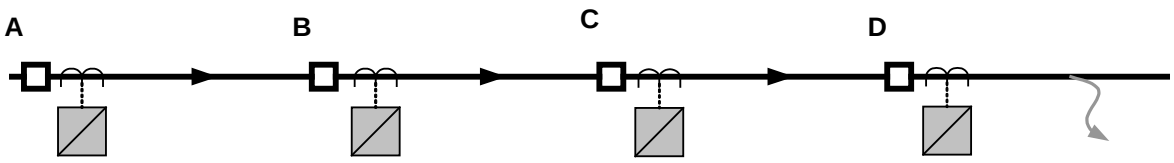

Figure 4.1-1 Sequence Co-ordination

The relay closest to the fault (D) would step through its Instantaneous Trips in an attempt to clear the fault. If unsuccessful, the relay would move to a Delayed Trip sequence.

The other relays in the network (A, B and C) would recognise the sequence of Pick-up followed by current switch-off as ARC sequences. They would therefore also step to their Delayed Trip to retain co-ordination with the respective downstream devices.

The next Trip would be subject to current grading and Lockout the ARC sequence such that the fault is cleared by the correct CB.

4.1.1 Auto-Reclose Example 1, typical advanced distribution network sequence

Requirement: Settings shall provide four phase fault recloses – two instantaneous and two delayed - and only two delayed recloses for faults detected by the SEF protection.

Proposed settings include:

CONTROL & LOGIC > AUTORECLOSE PROT'N:

***79 P/F Inst Trips*: 50-1**

***79 P/F Delayed Trips*: 51-1**

***79 SEF Delayed Trips*: 51SEF-1**

CONTROL & LOGIC > AUTORECLOSE CONFIG

***79 Num Shots*: 4**

CONTROL & LOGIC > AUTORECLOSE CONFIG > P/F SHOTS

***79 P/F Prot'n Trip 1* : Inst**

***79 P/F Prot'n Trip 2* : Inst**

***79 P/F Prot'n Trip 3* : Delayed**

***79 P/F Prot'n Trip 4* : Delayed**

***79 P/F Delayed Trips to Lockout* : 3**

CONTROL & LOGIC > AUTORECLOSE CONFIG > SEF SHOTS

***79 SEF Prot'n Trip 1* : Delayed**

***79 SEF Prot'n Trip 2* : Delayed**

***79 SEF Delayed Trips to Lockout* : 3**

Note that Instantaneous' trips are inhibited if the shot is defined as 'Delayed'

4.1.2 Auto-Reclose Example 2, simpler multishot sequence

Requirement: Settings shall provide one phase fault reclose for IDMTL overcurrent protection but should lockout for DTL highset- and two recloses for earth fault protection but only 1 for the EF DTL highest.

Proposed settings include:

CONTROL & LOGIC > AUTORECLOSE PROT'N:

***79 P/F Inst Trips*: none**

***79 E/F Inst Trips*: none**

***79 P/F Delayed Trips*: 51-1** (50-1 is used for Hiset but does not start ARC)

***79 E/F Delayed Trips*: 51N-1, 50N-1**

***79 P/F HS Trips*: none**

***79 E/F HS Trips*: 50N-1**

CONTROL & LOGIC > AUTORECLOSE CONFIG

***79 Num Shots*: 2** (required for E/F)

CONTROL & LOGIC > AUTORECLOSE CONFIG > P/F SHOTS

***79 P/F Prot'n Trip 1* : Inst** (not important as there are no Inst elements set)

***79 P/F Prot'n Trip 2* : Delayed** (not important as there are no Inst elements set)

***79 P/F Prot'n Trip 3* : Delayed** (not used as only 1 P/F reclose is executed)

***79 P/F HS Trips to Lockout* : 5** (not used)

***79 P/F Delayed Trips to Lockout* : 2** (prevents a 2nd P/F reclose)

CONTROL & LOGIC > AUTORECLOSE CONFIG > E/F SHOTS

***79 E/F Prot'n Trip 1* : Delayed** (not important as there are no Inst elements set)

***79 E/F Prot'n Trip 2* : Delayed** (not important as there are no Inst elements set)

***79 E/F Prot'n Trip 3* : Delayed** (not important as there are no Inst elements set)

***79 E/F Prot'n Trip 4* : Delayed** (not used as only 2 E/F reclose are ever executed)

***79 E/F HS Trips to Lockout* : 2** (must be >1 but not used due to Numshots =2)

***79 E/F Delayed Trips to Lockout* : 5** (must be >2 but not used due to Numshots =2)

 ©2019 Siemens Protection Devices Limited

4.1.3 Auto-Reclose Example 3, simple single shot sequence

Requirement: Settings shall provide one phase fault reclose for IDMTL or DTL highset- and one reclose for earth fault IDMTL or DTL highest.

Proposed settings include:

CONTROL & LOGIC > AUTORECLOSE PROT'N:

***79 P/F Inst Trips*: none**

***79 E/F Inst Trips*: none**

***79 P/F Delayed Trips*: 51-1, 50-1**

***79 E/F Delayed Trips*: 51N-1, 50N-1**

***79 P/F HS Trips*: none**

***79 E/F HS Trips*: none**

CONTROL & LOGIC > AUTORECLOSE CONFIG

***79 Num Shots*: 1**

CONTROL & LOGIC > AUTORECLOSE CONFIG > P/F SHOTS

***79 P/F Prot'n Trip 1* : Inst** (not important as there are no Inst elements set)

***79 P/F Prot'n Trip 2* : Delayed** (not important as there are no Inst elements set)

***79 P/F HS Trips to Lockout* : 5** (not used)

***79 P/F Delayed Trips to Lockout* : 5** (not used)

CONTROL & LOGIC > AUTORECLOSE CONFIG > E/F SHOTS

***79 E/F Prot'n Trip 1* : Delayed** (not important as there are no Inst elements set)

***79 SEF Prot'n Trip 2* : Delayed** (not important as there are no Inst elements set)

***79 E/F HS Trips to Lockout* : 5** (not used)

***79 E/F Delayed Trips to Lockout* : 5** (not used)

©2019 Siemens Protection Devices Limited

4.1.4 Auto-Reclose Example 4 (Use of Quicklogic with AR)

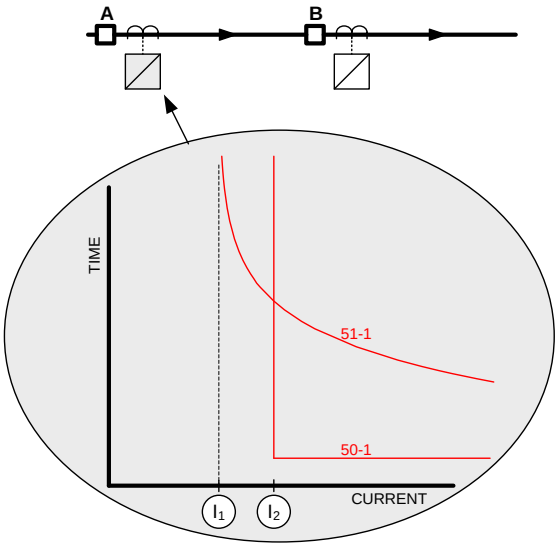

Figure 4.1-2 Example of Logic Application

Requirement: The relay at location 'A' is required to provide a reclose sequence of 2 Instantaneous followed by 2 delayed recloses. Where the fault current level is between the values 'I1' and 'I2' and the first trip is initiated from the 51-1 (IDMT) element, the IDMT characteristic should trip the CB and lockout the auto-reclose.

Typical settings are:

CONTROL & LOGIC > AUTORECLOSE PROT'N:

***79 P/F Inst Trips*: 50-1**

***79 P/F Delayed Trips*: 51-1**

CONTROL & LOGIC > AUTORECLOSE CONFIG > P/F SHOTS

***79 P/F Prot'n Trip 1* : Inst**

***79 P/F Prot'n Trip 2* : Inst**

***79 P/F Prot'n Trip 3* : Delayed**

***79 P/F Prot'n Trip 4* : Delayed**

The above settings are suitable at values of fault current above 'I2' however were a fault to occur with a current value between 'I1' and 'I2' this would be detected by the 51-1 element only. As ***Prot'n Trip 1*** = **Inst** then the relay would trip and reclose whereas it is required to lockout for this occurrence.

To provide a lockout for the above faults an additional element 50-2 with identical settings to 50-1 is assigned as a Delayed Trip and is used in conjunction with the Quick Logic feature i.e.

OUTPUT CONFIG>OUTPUT MATRIX: ***51-1*** = **V1**

OUTPUT CONFIG>OUTPUT MATRIX: ***50-2*** = **V2**

OUTPUT CONFIG>OUTPUT MATRIX: ***E1*** = **V3**

CONTROL & LOGIC>QUICK LOGIC: ***E1*** = **V1.!V2**

INPUT CONFIG>INPUT MATRIX: ***79 Lockout*** = **V3**

 ©2019 Siemens Protection Devices Limited

4.2 Quick Logic Applications

4.2.1 Auto-Changeover Scheme Example

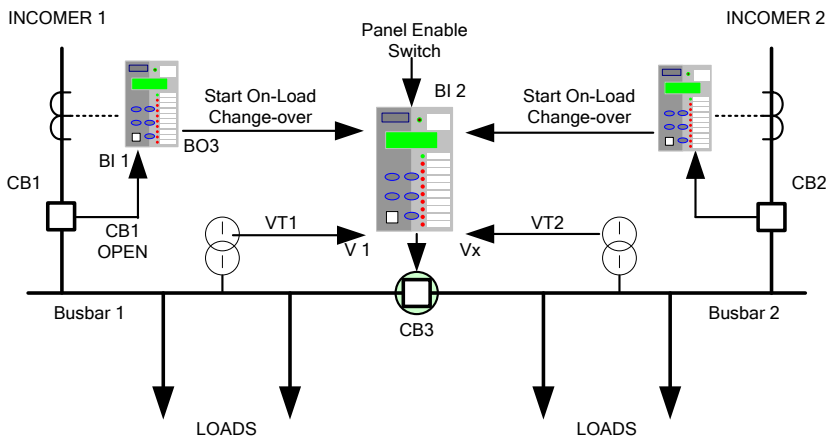

Figure 4.2-1 Example Use of Quick Logic

The MV installation illustrated above is fed from two incomers. To limit the substation fault level the busbar is run with CB3 open. When a fault occurs on one of the incomers it is isolated by the circuit protection. To re-supply the disconnected loads from the remaining incomer CB3 is closed.

If the line fault occurs on incomer 1 it must be confirmed that CB 1 has opened before CB3 can be closed. The relay on incomer 1 confirms that a trip has been issued to CB1 (e.g. Binary Output 2), that CB 1 has opened (e.g. Binary Input 1) and that no current flows in the circuit (e.g. 37-1 = Virtual 1):

<u>Incomer 1 Relay is Configured:</u>

CB1 Open auxiliary switch wired to BI 1

Trip output to CB1 = BO 2

OUTPUT CONFIG>OUTPUT MATRIX: ***37-1*** = **V1**

OUTPUT CONFIG>OUTPUT MATRIX: ***E1*** = **BO3**

CONTROL & LOGIC>QUICK LOGIC: ***E1*** = **O2.I1.V1**

The output from Incomer 1 (Binary Output 3) relay is input to the relay on CB 3 (Binary Input 1). A panel switch may be used to enable the On-Load Change-over scheme (Binary Input 2). Before Closing CB3 a check may be made that there is no voltage on busbar 1 (27/59-1 = Virtual 1). CB 3 is closed from Binary Output 3.

<u>CB3 Relay is Configured:</u>

Panel switch (ON-Load Change-over Enabled) wired to BI2

OUTPUT CONFIG>OUTPUT MATRIX: ***27/59-1*** = **V1**

OUTPUT CONFIG>OUTPUT MATRIX: ***E1*** = **BO3**

CONTROL & LOGIC>QUICK LOGIC: ***E1*** = **I1.I2.V1**

If required a time delay can be added to the output using the CONTROL & LOGIC > QUICK LOGIC: ***E1 Pickup Delay*** setting.

Section 5: Supervision Functions

5.1 Circuit-Breaker Fail (50BF)

Where a circuit breaker fails to operate to clear fault current the power system will remain in a hazardous state until the fault is cleared by remote or back-up protections. To minimise any delay, CB Failure protection provides a signal to either re-trip the local CB or back-trip 'adjacent' CBs.

The function is initiated by the operation of user selectable protection functions or from a binary input. Current flow is monitored after a tripping signal has been issued if any of the 50BF current check elements have not reset before the timers have expired an output is given. For CB trips where the fault is not current related an additional input is provided (50BF Mech Trip) which monitors the CB closed input and provides an output if the circuit breaker has not opened before the timers expire.

The relay incorporates a two-stage circuit breaker fail feature. For some systems, only the first will be used and the CB Failure output will be used to back-trip the adjacent CB(s). On other systems, however, this output will be used to re-trip the local CB to minimise potential disruption to the system; if possible via a secondary trip coil and wiring. The second CB Failure stage will then be used to back-trip the adjacent CB(s).

If the CB is faulty and unable to open, a faulty contact can be wired to the CB faulty input of the relay and if a trip occurs while this input is raised the CB fail delay timers may be by-passed to allow back tripping to occur without delay.

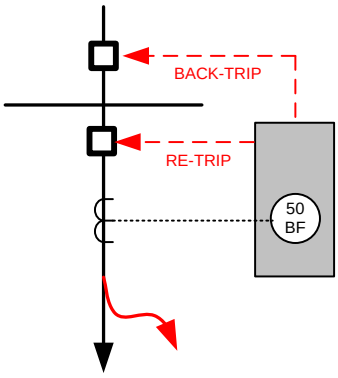

Figure 5.1-1 Circuit Breaker Fail

5.1.1 Settings Guidelines

<u>50BF Setting</u>

The phase current setting must be set below the minimum protection setting current.

<u>50BF Setting-I4</u>

The EF or SEF current setting must be set below the minimum protection setting current.

<u>50BF Ext Trig</u>

Any binary input can be mapped to this input to trigger the circuit breaker fail function. Note current must be above setting for the function to operate.

<u>50BF Mech Trip</u>

Any binary input can be mapped to this input to trigger the circuit breaker fail function. Note for the function to operate the circuit breaker closed input is used to detect a failure, not the current.

<u>50BF CB Faulty</u>

Any binary input can be mapped to this input, if it is energised when a trip initiation is received an output will be given immediately (the timers are by passed).

 ©2019 Siemens Protection Devices Limited

50BF DTL1/50BF DTL2

The time delays run concurrently within the relay. The time delay applied to the CB Fail protection must be in excess of the longest CB operate time + relay reset time + a safety margin.

First Stage (Retrip)	
Trip Relay operate time	10ms
Reset Time	20ms
CB Tripping time	50ms
Safety Margin	40ms
Overall First Stage CBF Time Delay	**120ms**

Second Stage (Back Trip)	
First CBF Time Delay	120ms
Trip Relay operate time	10ms
CB Tripping time	50ms
Reset Time of measuring element	20ms
Margin	60ms
Overall Second Stage CBF Time Delay	**260ms**

The safety margin is extended by 1 cycle for the second CBF stage as this will usually involve a back-trip of a Busbar tripping scheme.

The timing sequence for each stage of the circuit breaker fail function is as below.

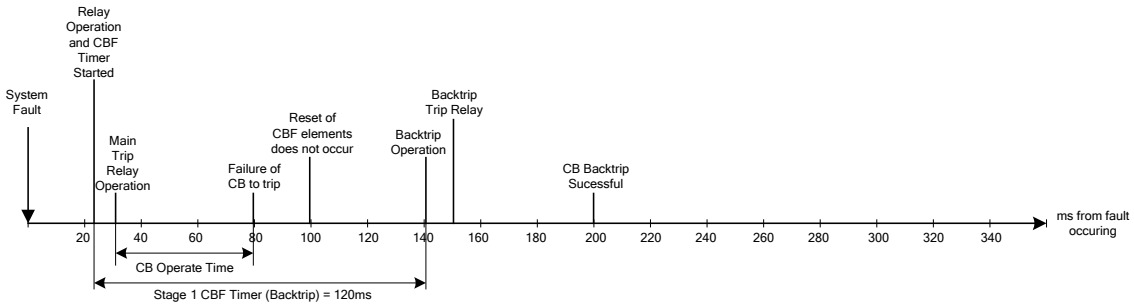

Figure 5.1-2 Single Stage Circuit Breaker Fail Timing

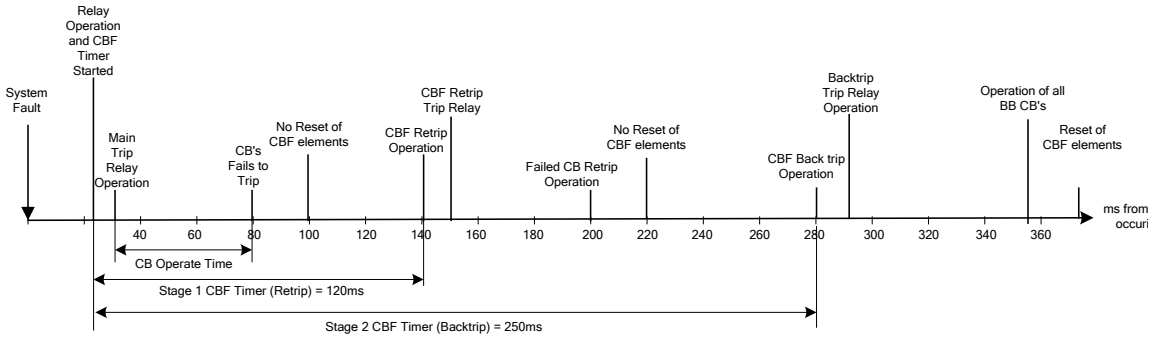

Figure 5.1-3 Two Stage Circuit Breaker Fail Timing

5.2 Current Transformer Supervision

When a CT fails, the current levels seen by the protection become unbalanced, however this condition would also occur during a system fault. Depending upon the relay model different methods are used to determine the condition, depending upon the measured quantities available.

Current Transformer Supervision (60CTS – 7SR11)

Following a CT Failure, if one or two of the three phases falls below the CT supervision setting the element will operate

Operation is subject to a time delay to prevent operation for transitory effects.

A 3-phase CT failure is considered so unlikely (these being independent units) that this condition is not tested for.

Current Transformer Supervision (60CTS – 7SR12)

When a CT fails, the current levels seen by the protection become unbalanced. A large level of NPS current is therefore detected - around 0.3 x In for one or two CT failures. However this condition would also occur for a system fault. To differentiate between the two conditions, the element uses NPS voltage to restrain the CTS algorithm as shown in the accompanying table.

NPS Current	NPS Voltage	Decision
> Setting	> Setting	System Fault
> Setting	< Setting	CT Failure

Table 5-1 Determination of VT Failure (1 or 2 Phases)

Following a CT Failure, there should be little or no NPS voltage. Perhaps 0.1 x Vn as a maximum.

Operation is subject to a time delay to prevent operation for transitory effects.

A 3-phase CT failure is considered so unlikely (these being independent units) that this condition is not tested for.

 ©2019 Siemens Protection Devices Limited

5.3 Voltage Transformer Supervision (60VTS)

Although VTs rarely fail themselves, VT Supervision presents a common application because of the failure of protective Fuses connected in series with the VTs.

When a VT failure occurs on one or two phases, the voltage levels seen by the protection become unbalanced. A large level of NPS voltage is therefore detected - around 0.3 x Vn for one or two VT failures. However this condition would also occur for a system fault. To differentiate between the two conditions, the element uses NPS current to restrain the VTS algorithm as show in the accompanying table.

NPS Voltage	NPS Current	Decision
> Setting	> Setting	System Fault
> Setting	< Setting	VT Failure

Table 5-2 Determination of VT Failure (1 or 2 Phases)

Following a VT Failure, the level of NPS current would be dependent solely upon load imbalance - perhaps 0.1 x In as a maximum.

Operation is subject to a time delay to prevent operation for transitory effects.

NPS voltage and current quantities are used rather than ZPS since the latter makes it difficult to differentiate between a VT failure and a Phase-Phase fault. Both conditions would generate little or no ZPS current. However the element provides an option to use ZPS quantities to meet some older specifications.

There are possible problems with using NPS quantities due to load imbalances. These would also generate significant levels of NPS current and so possibly cause a VT failure to be missed. This problem can be overcome by careful selection of settings, however, setting the NPS current threshold above the level expected for imbalance conditions.

If a failure occurs in all 3 Phases of a Voltage Transformer, then there will be no NPS or ZPS voltage to work with. However the PPS Voltage will fall below expected minimum measurement levels.

This could also be due to a ‘close in’ fault and so PPS Current must remain above minimum load level BUT below minimum fault level.

PPS Voltage	PPS Current	Decision
< Setting	> Minimum Fault Level	System Fault
< Setting	Minimum Load Level < AND < Minimum Fault Level	VT Failure

Table 5-3 Determination of VT Failure (3 Phases)

Operation is again subject to a time delay to prevent operation for transitory effects.

Alternatively a 3 Phase VT failure can be signalled to the relay via a Binary Input taken from the Trip output of an external MCB. This can also be reset by a Binary Input signal.

VTS would not normally be used for tripping - it is an alarm rather than fault condition. However the loss of a VT would cause problems for protection elements that have voltage dependant functionality. For this reason, the relay allows these protection elements - under-voltage, directional over-current, etc. - to be inhibited if a VT failure occurs.

©2019 Siemens Protection Devices Limited

5.4 Trip/Close Circuit Supervision (74T/CCS)

Binary Inputs may be used to monitor the integrity of the CB trip and close circuit wiring. A small current flows through the B.I. and the circuit. This current operates the B.I. confirming the integrity of the auxiliary supply, CB coil, auxiliary switch, C.B. secondary isolating contacts and associated wiring. If monitoring current flow ceases, the B.I. drops off and if it is user programmed to operate one of the output relays, this can provide a remote alarm. In addition, an LED on the relay can be programmed to operate. A user text label can be used to define the operated LED e.g. "Trip CCT Fail".

The relevant Binary Input is mapped to 74TCS-n or 74CCS in the INPUT CONFIG>INPUT MATRIX menu. To avoid giving spurious alarm messages while the circuit breaker is operating the input is given a 0.4s Drop-off Delay in the INPUT CONFIG>BINARY INPUT CONFIG menu.

To provide an alarm output a normally open binary output is mapped to 74TCS-n or 74CCS-n.

5.4.1 Trip Circuit Supervision Connections

The following circuits are derived from UK ENA S15 standard schemes H5, H6 and H7.

For compliance with this standard:

> Where more than one device is used to trip the CB then connections should be looped between the tripping contacts. To ensure that all wiring is monitored the binary input must be at the end of the looped wiring.
>
> Resistors must be continuously rated and where possible should be of wire-wound construction.

Scheme 1 (Basic)

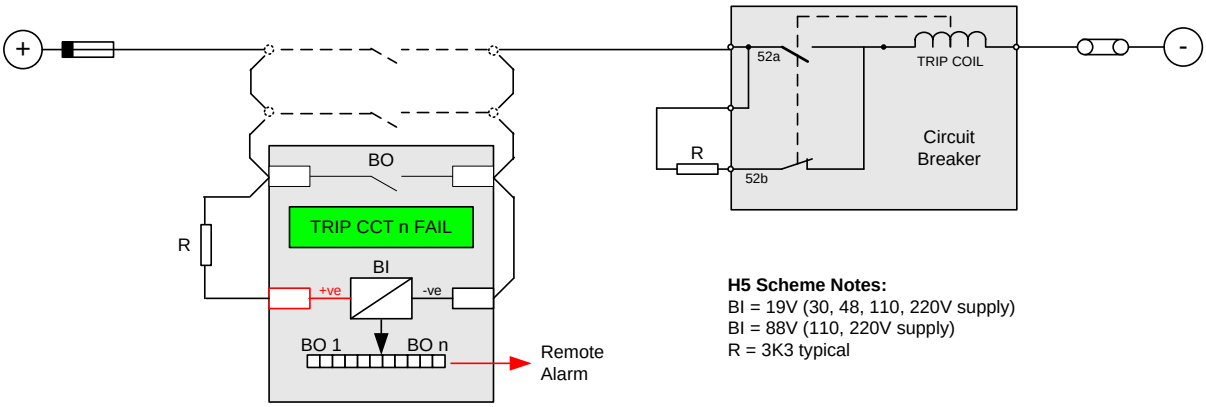

Figure 5.4-1 Trip Circuit Supervision Scheme 1 (H5)

Scheme 1 provides full Trip supervision with the circuit breaker Open or Closed.

Where a 'Hand Reset' Trip contact is used measures must be taken to inhibit alarm indications after a CB trip.

 ©2019 Siemens Protection Devices Limited

Scheme 2 (Intermediate)

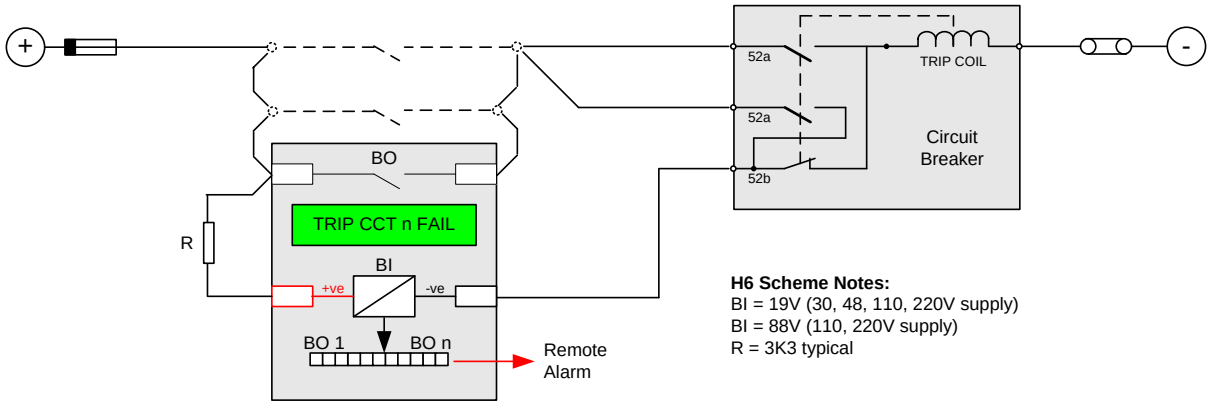

Figure 5.4-2 Trip Circuit Supervision Scheme 2 (H6)

Scheme 2 provides continuous Trip Circuit Supervision of trip coil with the circuit breaker Open or Closed. It does not provide pre-closing supervision of the connections and links between the tripping contacts and the circuit breaker and may not therefore be suitable for some circuits which include an isolating link.

Scheme 3 (Comprehensive)

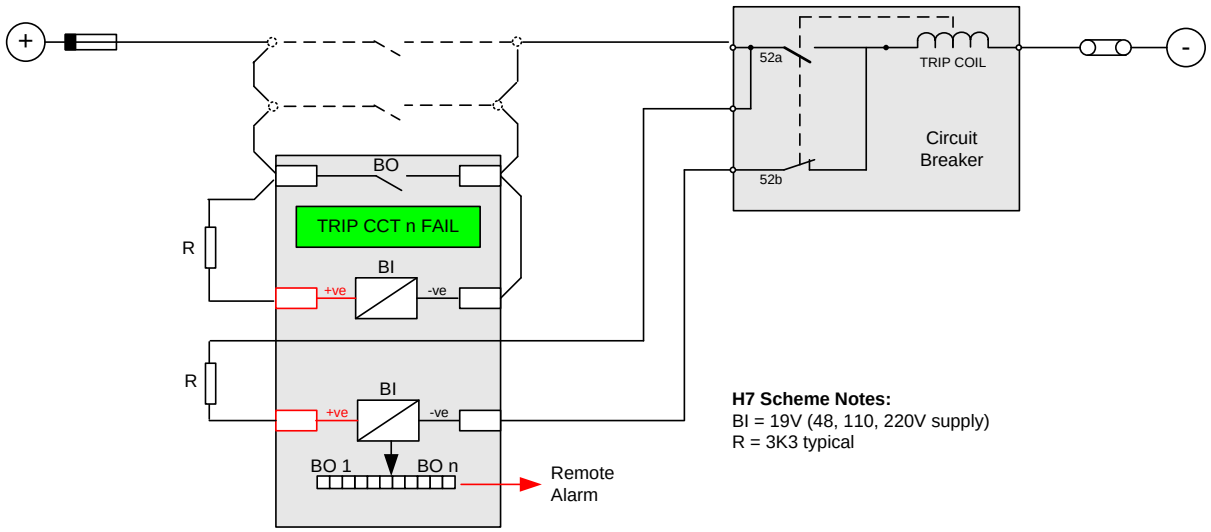

Figure 5.4-3 Trip Circuit Supervision Scheme 3 (H7)

Scheme 3 provides full Trip supervision with the circuit breaker Open or Closed.

5.4.2 Close Circuit Supervision Connections

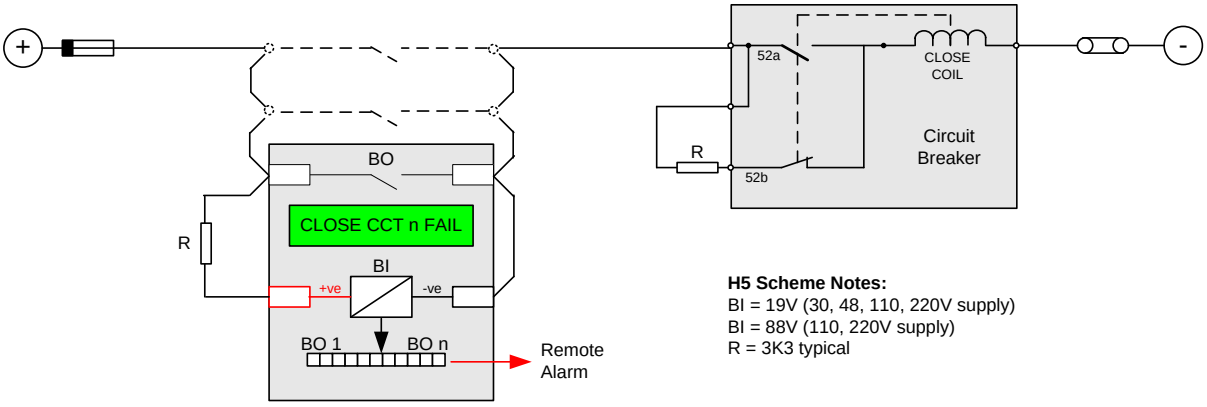

Figure 5.4-4 Close Circuit Supervision Scheme

Close circuit supervision with the circuit breaker Open or Closed.

©2019 Siemens Protection Devices Limited

5.5 Inrush Detector (81HBL2)

This element detects the presence of high levels of 2nd Harmonic current which is indicative of transformer Inrush current at switch-on. These currents may be above the operate level of the overcurrent elements for a short duration and it is important that the relay does not issue an incorrect trip command for this transient network condition.

If a magnetic inrush condition is detected operation of the overcurrent elements can be blocked.

Calculation of the magnetising inrush current level is complex. However a ratio of 20% 2nd Harmonic to Fundamental current will meet most applications without compromising the integrity of the Overcurrent protection.

There are 3 methods of detection and blocking during the passage of magnetising inrush current.

Phase	Blocking only occurs in those phases where Inrush is detected. Large, Single Phase Transformers – Auto-transformers.
Cross	All 3-phases are blocked if Inrush is detected in any phase. Traditional application for most Transformers but can give delayed operation for Switch-on to Earth Fault conditions.
Sum	Composite 2nd Harmonic content derived for all 3-phases and then compared to Fundamental current for each individual phase. Provides good compromise between Inrush stability and fast fault detection.

Table 5-4 Magnetic Inrush Bias

5.6 Broken Conductor / Load Imbalance (46BC)

Used to detect an open circuit condition when a conductor breaks or a mal-operation occurs in phase segregated switchgear.

There will be little or no fault current and so overcurrent elements will not detect the condition. However the condition can be detected because there will be a high content of NPS (unbalance) current present.

However if the line is on light load, the negative phase sequence current may be very close to, to less than the full load steady state unbalance arising from CT errors, load unbalance etc. This means a simple negative phase sequence element would not operate.

With such faults a measurable amount of zero sequence current will be produced, but even this will not be sensitive enough.

To detect such a fault it is necessary to evaluate the ratio of negative phase current (NPS) to positive phase current (PPS), since the ratio is approximately constant with variations in load current and allows a more sensitive setting to be achieved.

In the case of a single point earthed system, there will be little ZPS current and the ratio of NPS/PPS in the protected circuit will approach 100%

In the case of a multiple earthed system (assuming equal impedances in each sequence network) an NPS / PPS ratio of 50% will result from a Broken Conductor condition. This ratio may vary depending upon the location of the fault and it is therefore recommended to apply a setting as sensitive as possible.

In practice, this minimum setting is governed by the levels of standing NPS current present on the system. This can be determined from a system study or measured during commissioning making sure it is measured during maximum system load conditions to ensure all single phase loads are included.

Operation is subject to a time delay to prevent operation for transitory effects, a minimum delay of 50sec may be recommended.

5.6.1 Broken Conductor example

Information recorded during commissioning:

I full load = 500A

I NPS = 50A

Therefore the ratio is given by 50/500 = 0.1

To allow for tolerances and load variation a setting of 200% of this value is recommended and therefore the ratio for ***46BC setting*** should be set at 20%.

To allow for adequate time for short circuit fault clearance by time delayed protection the ***46BC delay*** should be set to 50seconds.

To ensure the broken conductor protection does not operate incorrectly during low load conditions, where the three phases are less than 10% of normal load, the element should be inhibited by setting the ***46BC U/C Guarded*** to Yes and selecting a ***46BC U/C Guard Setting*** to 0.1 x In

5.7 Circuit-Breaker Maintenance

The Relay provides Total, Delta and Frequent CB Operation Counters along with an I^2t Counter to estimate the amount of wear and tear experienced by a Circuit-Breaker. Alarm can be provided once set levels have been exceeded.

Typically estimates obtained from previous circuit-breaker maintenance schedules or manufacturers data sheets are used for setting these alarm levels. The relay instrumentation provides the current values of these counters.

 ©2019 Siemens Protection Devices Limited

Siemens Protection Devices Limited
P.O. Box 8, North Farm Road
Hebburn, Tyne & Wear
NE31 1TZ
United Kingdom
Phone: +44 (0)191 401 7901
Fax: +44 (0)191 401 5575
E-mail: marketing.spdl.gb@siemens.com

For enquires please contact our Customer Support Center
Phone: +49 180/524 8437 (24hrs)
Fax: +49 180/524 2471
E-mail: support.energy@siemens.com

EMEA-T10048-00-76GB

February 20