# SS 400/110 kV Ernestinovo

# Protection and Control System Rehabilitation with Process Bus Implementation

KONČAR
Inspired by challenge

# 1

# SS 400/110 kV Ernestinovo

KONČAR
Inspired by challenge

# SS 400/110 kV Ernestinovo

- The most important substation in Croatian East
- After significant damage caused by war between 1991 and 1997 – rebuild in 2003
- 2 x 300 MVA power transformers 400/110 kV
- Connected by 400 kV overhead lines with Hungary, Bosnia and Herzegovina, Serbia and Middle of Croatia
- 2 busbar systems (W1+W2) + 1 one auxiliary

KONČAR
Inspired by challenge

# SS 400/110 kV Ernestinovo - SLD

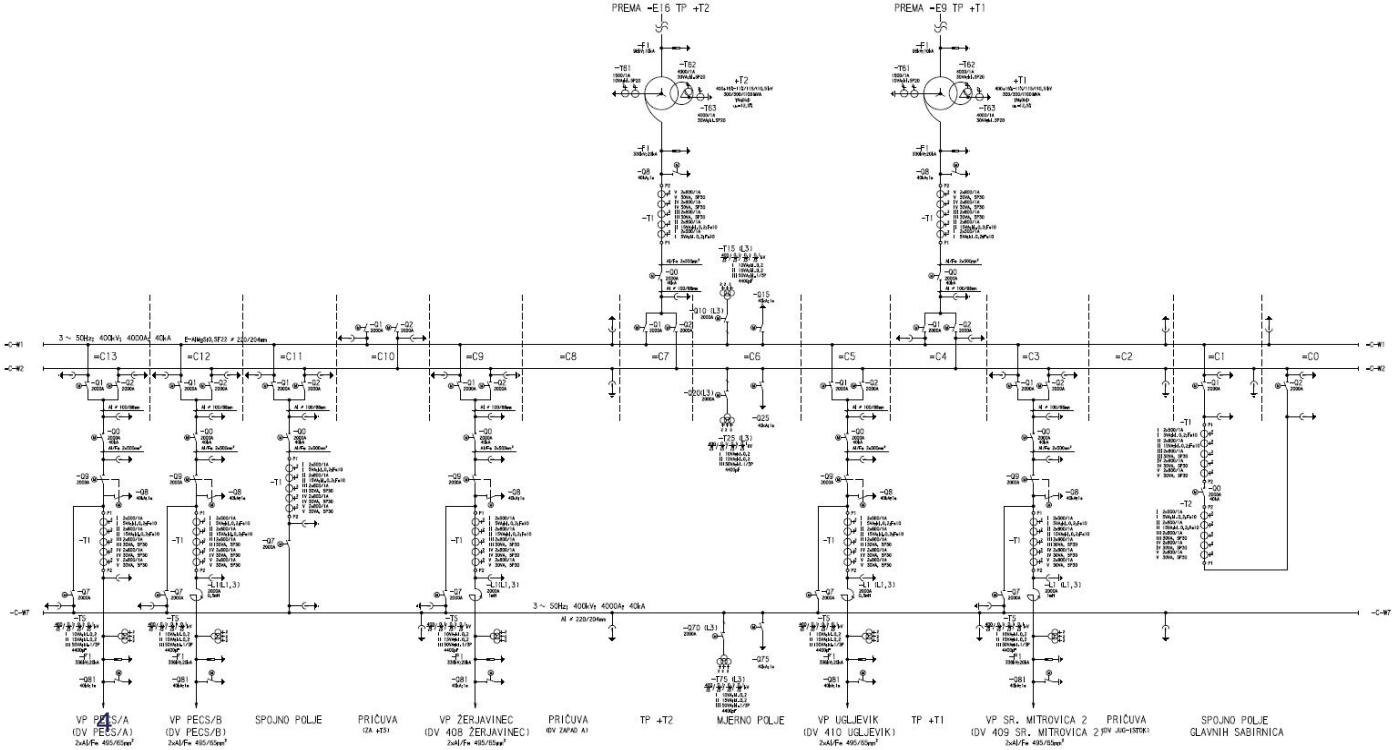


KONČAR
Inspired by challenge

2

# P&C System Rehabilitation

KONČAR
Inspired by challenge

# Scope of Project

- Project design
  - Protection and Control system for 400 kV, 110 kV, 35 kV
  - SCADA system
- Project management
  - HSE plan
  - QA/QC plan
- Electromechanical works
- Testing and Commissioning
  - IAT
  - FAT
  - SAT

KONČAR
Inspired by challenge

3

# Protection System Rehabilitation

KONČAR
Inspired by challenge

# Protection system

- Existing busbar protection system
  - Distributed busbar protection system 7SS52 for 400 kV and 110 kV busbar systems
- New protection system
  - Distributed busbar protection system 7SS85 for 400 kV and 110 kV busbar systems
- In transient period
  - between decommissioning of the old system and commissioning of the new system
    - ABB REB500 was used for busbar protection

KONČAR
Inspired by challenge

# Protection system

- During installation
  - 7SS85 was still in development stage
  - worked one period of time with bypassed tripping outputs
  - After a few faults out of protection zone and correct operation of 7SS85 - tripping contacts were leaved without bypasses
- Final stage of project
  - ABB REB 500 protection system leaved as the redundant protection system
  - SIEMENS 7SS85 leaved as main protection system without bypasses on the tripping circuit

KONČAR
Inspired by challenge

# Protection system

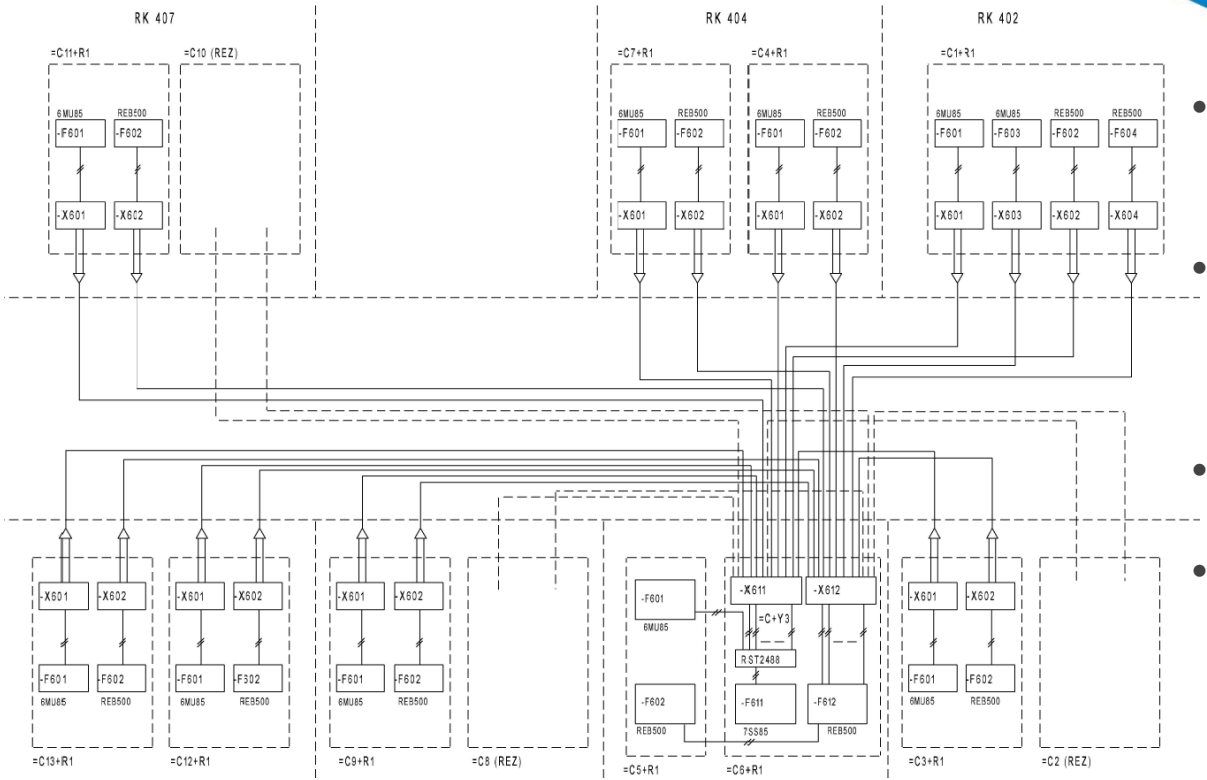


- 7SS85 communicate with bay units 6MU85 using IEC 61850-9-2 protocol
- Optimization of protection functions:
  - Bay units – 50, 51 & 50BF
  - Central unit – 87B & 50BF
- 400 kV BB protection
  - 3 zones, 9 bays
- 110 kV BB protection
  - 6 zones !, 15 bays

KONČAR
Inspired by challenge

# Protection system



KONČAR
Inspired by challenge

# 4

# Control System Rehabilitation

KONČAR
Inspired by challenge

# Control system

- Existing control system
  - LSA Substation Control 6MB5515 (central unit) and 6MB524 (bay units)
- New control system
  - Bay control units 6MD85 and Končar ProzaNET SCADA system
- In transient period
  - Some bays has old LSA based BCUs and some has new IEC61850/GOOSE BCUs 6MD85
  - To secure uninterrupted and secured procedures for substation control
    - Communication gateway that secure ILSA/GOOSE conversion was used




KONČAR
Inspired by challenge

# Control system

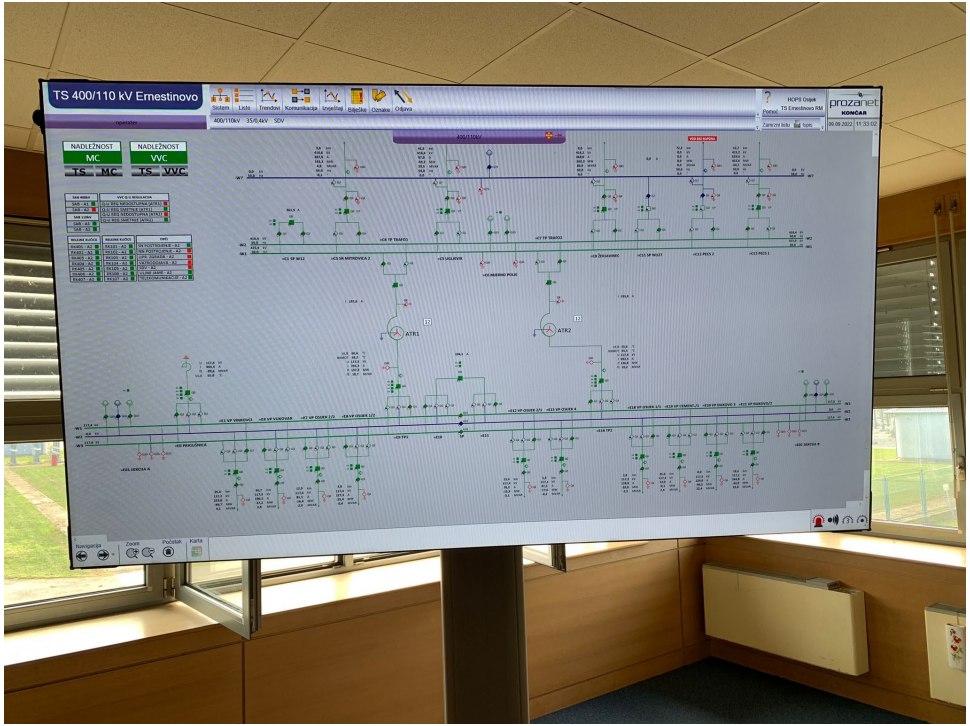


KONČAR
Inspired by challenge

# Control system

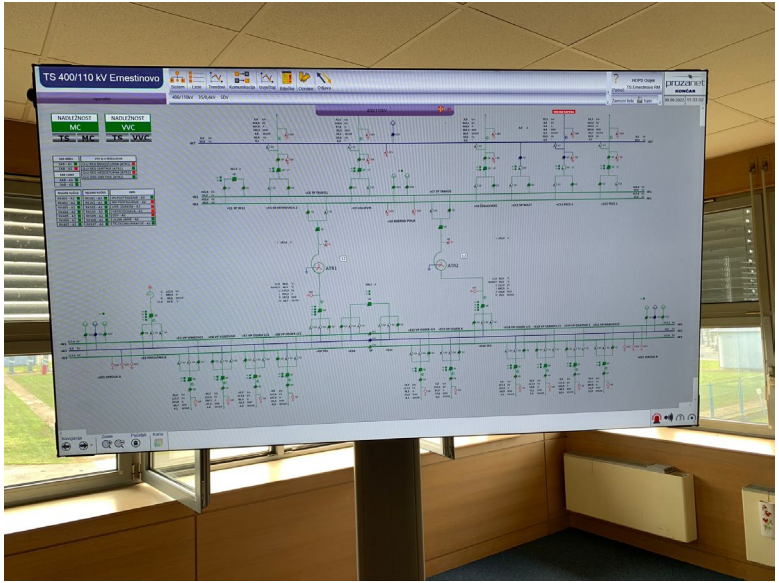


KONČAR
Inspired by challenge

# 5

# Questions?

KONČAR
Inspired by challenge