SIEMENS

Ingenuity for life

EMMS-T40013-01-4A00

SIERS

Siemens integrated electrical racking system instruction manual

usa.siemens.com/mvswitchgear

⚠ DANGER

Hazardous voltages and high-speed moving parts.

Will cause death, serious injury, or property damage.

Always de-energize and ground the equipment before maintenance. Read and understand this instruction manual before using equipment. Maintenance should be performed only by qualified personnel. The use of unauthorized parts in the repair of the equipment or tampering by unqualified personnel will result in dangerous conditions which will cause death, severe injury, or equipment damage. Follow all safety instructions contained herein.

Important

The information contained herein is general in nature and not intended for specific application purposes. It does not relieve the user of responsibility to use sound practices in application, installation, operation, and maintenance of the equipment purchased. Siemens reserves the right to make changes in the specifications shown herein or to make improvements at any time without notice or obligation. Should a conflict arise between the general information contained in this publication and the contents of drawings or supplementary material or both, the latter shall take precedence.

Qualified person

For the purpose of this instruction manual a **qualified person** is one who has demonstrated skills and knowledge related to the construction and operation of electrical equipment and installations and has received hazard safety training to identify the hazards and reduce the associated risk. In addition, this person has the following qualifications:

- **Is trained and authorized** to de-energize, clear, ground and tag circuits and equipment in accordance with established safety procedures.
- **Is trained** in the proper care and use of protective equipment, such as: rubber gloves, hard hat, safety glasses or face shields, flash clothing, etc. in accordance with established safety practices.
- **Is trained** in rendering first aid.
- **Is trained** in the methods of safe release of victims from contact with energized electrical conductors or circuit parts.

Further, a qualified person shall also be familiar with the proper use of special precautionary techniques, personal protective equipment, insulation and shielding materials, and insulated tools and test equipment. Such persons are permitted to work within limited approach boundary, and shall, at a minimum, be additionally trained in all of the following:

- The skills and techniques necessary to distinguish exposed energized parts from other parts of electric equipment.
- The skills and techniques necessary to determine the nominal voltage of exposed live parts.
- The approach distances specified in NFPA 70E® and the corresponding voltages to which the qualified person will be exposed.
- The decision-making process necessary to perform the job safety planning, identify the electrical hazards, assess the associated risks, and select the appropriate risk control methods including personal protective equipment

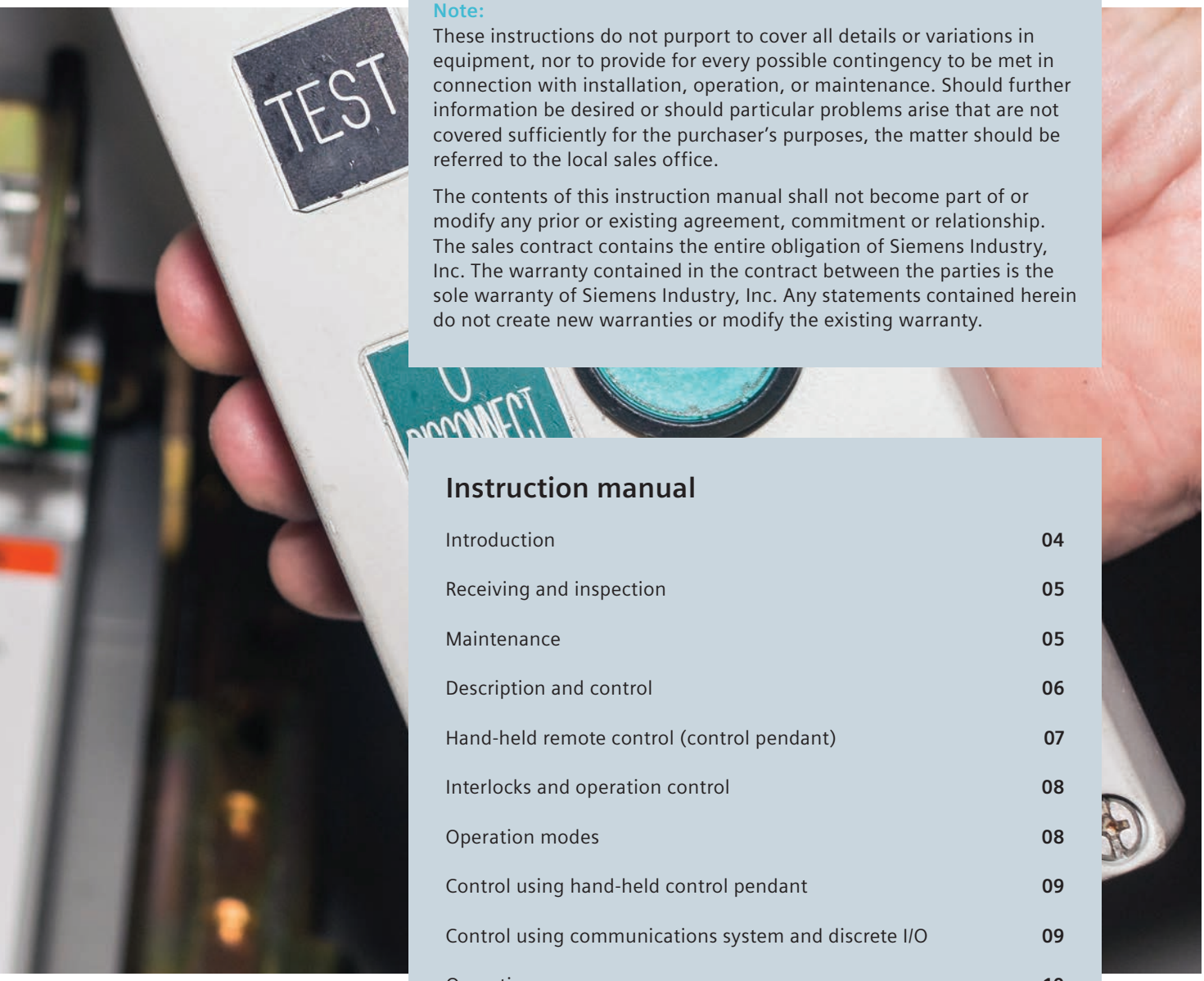

Note:
These instructions do not purport to cover all details or variations in equipment, nor to provide for every possible contingency to be met in connection with installation, operation, or maintenance. Should further information be desired or should particular problems arise that are not covered sufficiently for the purchaser's purposes, the matter should be referred to the local sales office.

The contents of this instruction manual shall not become part of or modify any prior or existing agreement, commitment or relationship. The sales contract contains the entire obligation of Siemens Industry, Inc. The warranty contained in the contract between the parties is the sole warranty of Siemens Industry, Inc. Any statements contained herein do not create new warranties or modify the existing warranty.

Instruction manual

Introduction	04
Receiving and inspection	05
Maintenance	05
Description and control	06
Hand-held remote control (control pendant)	07
Interlocks and operation control	08
Operation modes	08
Control using hand-held control pendant	09
Control using communications system and discrete I/O	09
Operation sequence	10
Alarms and troubleshooting	12
Manual racking	13

Introduction

⚠ DANGER

Hazardous voltages and high-speed moving parts.

Will cause death, serious injury, or property damage.

Always de-energize and ground the equipment before maintenance. Read and understand this instruction manual before using equipment. Maintenance should be performed only by qualified personnel. The use of unauthorized parts in the repair of the equipment or tampering by unqualified personnel will result in dangerous conditions which will cause death, severe injury, or equipment damage. Follow all safety instructions contained herein.

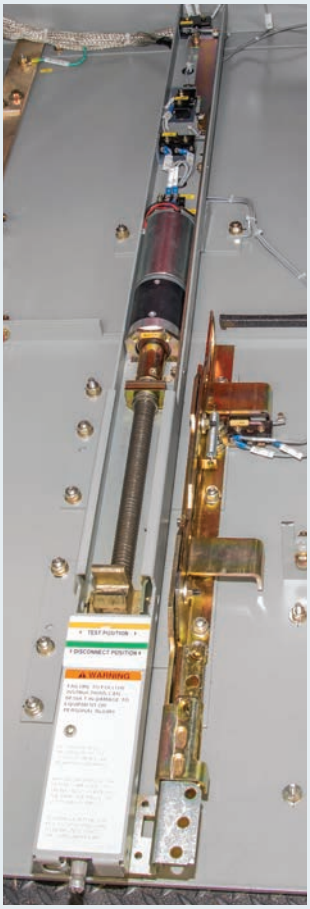

Figure 1: SIERS Siemens integrated electrical racking mechanism

Introduction

This instruction manual supplements the instruction manual for the type GM-SG, GM-SG-AR, or GM38 switchgear families, and describes the supplemental features of the Siemens integrated electrical racking system (SIERS).

Refer to the instruction manuals for specific switchgear:

- GM-SG non-arc-resistant switchgear (E50001-F710-A230-XX-XXXX)
- GM-SG-AR arc-resistant switchgear (E50001-F710-A254-XX-XXXX)
- GM38 non-arc-resistant switchgear (E50001-F710-A236-XX-XXXX).

Read, understand, and follow all of the safety advisories, instructions, and procedures contained in the reference manuals. For convenience, these instruction manuals will hereafter be referred to as the basic equipment manuals.

The SIERS electrical racking mechanism option allows the operator to rack the type GMSG or 38-3AH circuit breaker or ground and test device (hereafter referred to collectively as removable elements) or voltage transformers (VTs), control power transformer (CPT), or fuses for a CPT mounted on a withdrawable rollout tray (hereafter referred to collectively as auxiliary trays) inside the type GM-SG, GM-SG-AR or GM38 switchgear compartment, while standing at a location remote from the switchgear compartment.

The normal method of operation employs a hand-held control pendant on a 30 ft (9.1 m) cord for remote control. Optionally, the racking system can be controlled over a communications channel, such as used with protective relays or HMI.

The SIERS electrical racking system consists of the racking mechanism itself (shown in Figure 1: SIERS Siemens integrated electrical racking mechanism) with integrated gear motor and limit switches to sense the positions (DISCONNECT, TEST, and CONNECT) of the removable element inside the switchgear, plus appropriate power supply and control relays.

The system is designed for operation on a 125 Vdc control power supply, or optionally, from a 120 Vac control power supply from the switchgear. As a further option, the system can be supplied with provisions for external 120 Vac supply for maintenance purposes.

The SIERS Siemens integrated electrical racking system is available for all type GM-SG, GM-SG-AR, and GM38 switchgear assemblies. The system allows remote control of the racking process to any of the three positions inside the circuit breaker compartment, including the DISCONNECT, TEST, and CONNECT positions.

For auxiliary trays, the system allows remote control of the racking process to either of the two positions inside the auxiliary compartment including the DISCONNECT and CONNECT positions.

The removable element can be racked from DISCONNECT to TEST, DISCONNECT to CONNECT, TEST to DISCONNECT, TEST to CONNECT, CONNECT to TEST, OR CONNECT to DISCONNECT positions, depending of the needs of the operator.

The auxiliary tray can be racked from DISCONNECT to CONNECT or CONNECT to DISCONNECT positions, depending upon the needs of the operator.

The SIERS electrical racking system is also available in a kit form for retrofit to existing types GM-SG, GM-SG-AR or GM38 switchgear installations.

Signal words

The signal words “danger,” “warning”, and “caution” used in this instruction manual indicate the degree of hazard that may be encountered by the user. These words are defined as:

Danger - Indicates an imminently hazardous situation that, if not avoided, **will** result in death or serious injury.

Warning - Indicates a potentially hazardous situation that, if not avoided, **could** result in death or serious injury.

Caution - Indicates a potentially hazardous situation that, if not avoided, **may** result in minor or moderate injury.

Notice - Indicates a potentially hazardous situation that, if not avoided, **may** result in property damage.

Field service operation and warranty issues

Siemens can provide competent, well-trained field service representatives to provide technical guidance and advisory assistance for the installation, overhaul, repair, and maintenance of Siemens equipment, processes and systems. Contact regional service centers, sales offices or the factory for details, or telephone Siemens field service at +1 (800) 333-7421 or +1 (423) 262-5700 outside the U.S.

For medium-voltage customer service issues, contact Siemens at +1 (800) 333-7421 or +1 (423) 262-5700 outside the U.S.

Receiving and inspection

Receiving and inspection

When the equipment is received, follow the instructions for receiving, handling, inspection, and storage contained in the basic equipment instruction manuals. The racking system should be inspected for damage, including damage to the motor, racking screw, limit switches, control wiring, and control devices.

Maintenance

Maintenance

The SIERS electrical racking system should be maintained in the same manner as the standard racking system as outlined in maintenance section of the basic equipment manuals. Maintenance and lubrication is recommended at five-year intervals when the equipment is operated under ANSI/IEEE “usual service conditions”, as discussed in ANSI/IEEE C37.20.2, clauses 4 and 8.1. During maintenance, old grease should be cleaned off, and the racking screw lubricated with Siemens lubricant 15-172-879-201.

Description and control

Figure 2: Flanged inlet type 5-15P (on right) for connection to external 120 Vac power source extension cord receptacle type 5-15R (on left) (optional)

Description and control

The SIERS electrical racking system is powered by 125 Vdc or (optionally) by 120 Vac power from the switchgear. Typically, ac power is obtained from a control power transformer (CPT) in the switchgear, or from the user's external source. However, power from the switchgear CPT is not available when the equipment is de-energized. For this reason, it is preferred that a dc source (125 Vdc) be used to power the SIERS electrical racking system, as this power will normally be available even when the equipment itself is de-energized. Control power requirements are detailed in Table 1.

In the event a dc source is not available and ac power is not available, the removable element can be racked manually, following the normal procedures given in the relevant switchgear instruction manual.

If control power is provided from a switchgear CPT, the wiring to the power supply for the racking system will be installed in the switchgear at the factory.

Option: external ac supply for maintenance

If 120 Vac control power is obtained from a remote source, such as a wall outlet in the vicinity of the switchgear or from a portable generator, the control power connection should be made to the control power socket installed in the switchgear as shown in Figure 2: Flanged inlet type 5-15P (on right) for connection to external 120 Vac power source extension cord receptacle type 5-15R (on left).

Table 1: Control power requirements

Switchgear type	Voltage	I (nominal) A	I (maximum) A	Racking time s
GM-SG	125 Vdc	0.9	2.3	< 25
GM-SG	120 Vac	0.9	1.6	< 25
GM38	125 Vdc	0.9	1.2	< 40
GM38	120 Vac	0.9	1.0	< 40

The receptacle (socket with male pins) is a NEMA standard type 5-15P recessed socket (referred to as a flanged inlet in NEMA standard WD6) for use with a NEMA standard 5-15R female receptacle, three wire with ground.

The SIERS electrical racking system controls are located in a self-contained enclosure on the top of each switchgear section (Figure 4: Control devices for SIERS racking system).

The SIERS electrical racking system circuit includes miniature circuit breaker protection for both the 125 Vdc and 120 Vac supplies (if applicable), and fuse protection for the motor (FU2) supply circuit and the 24 Vdc power supply circuit (FU1), as well as for the 24 Vdc supply (FU3) to the current switch, logic module, and digital module.

The fuse in the motor circuit has time-delay characteristics to avoid fuse operation on motor inrush current.

The SIERS system is controlled using a Siemens LOGO! programmable logic module (LM) with digital expansion module (DM) with auxiliary relays for motor control. The LM receives input from limit switches on the racking mechanism that signal the removable element position (DISCONNECT, TEST, or CONNECT) or auxiliary tray position (DISCONNECT or CONNECT). The limit switches also illuminate the light-emitting diode (LED) pushbuttons on the control pendant, which indicate the removable element or auxilary tray position. A solid green LED indicates DISCONNECT position, solid white indicates TEST position (removable element only), and solid red LED indicates CONNECT position.

A blinking LED indicates the position towards which the racking system is moving the removable element or auxiliary tray.

The LM responds to commands from the pushbuttons on the control pendant to rack the removable element or auxiliary tray between positions.

The system includes current sensing to respond to excessive current in the motor circuit. Excessive current indicates a motor overload, whether due to a jam or otherwise. When the overcurrent is detected, the LM initiates alarm indication on the amber LED on the hand-held control pendant, and stops the racking process. After a time period of five seconds, the LM restarts the racking process to move the removable element to the DISCONNECT position.

If this is unsuccessful, a second attempt to rack to the DISCONNECT position is initiated after a time period of five seconds. If the second attempt is also unsuccessful, the LM disables electrical racking, and the user must use the manual racking crank to rack the removable element or auxiliary tray to the DISCONNECT position.

Then, the removable element or auxiliary tray can be taken out of the compartment and the cause of the problem investigated and remedied.

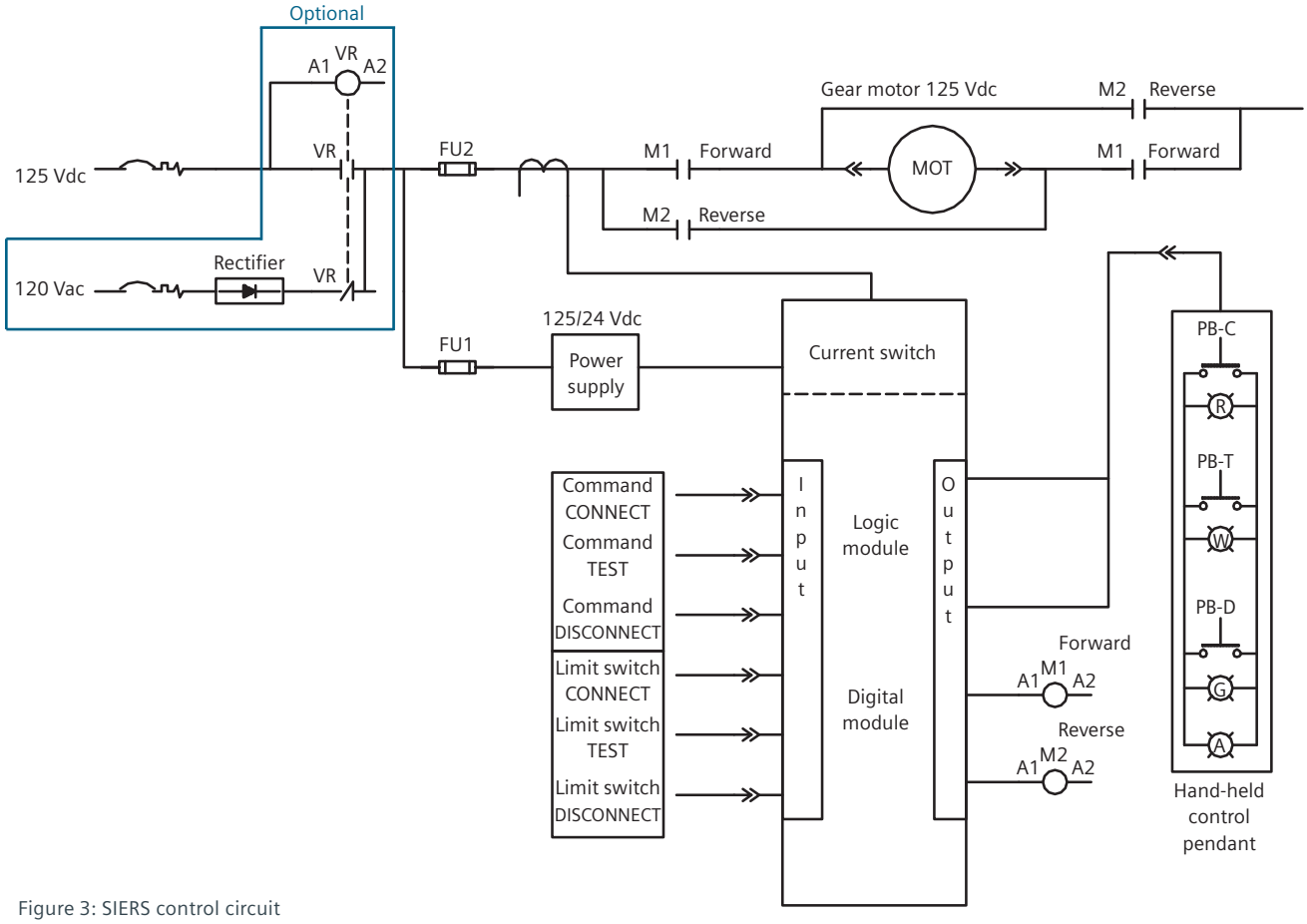

Figure 3: SIERS control circuit

Hand-held remote control (control pendant)

Hand-held remote control (control pendant)

The hand-held control pendant includes three illuminated LED pushbuttons, red (CONNECT), green (DISCONNECT), and white (TEST), plus an amber LED used for alarm purposes.

The amber alarm LED illuminates to indicate an alarm condition, such as a fault alarm (obstruction, overcurrent or excessive time elapsed when moving from one position in the compartment to another).

Note: The TEST pushbutton and LED are disabled when the pendant is used with SIERS in an auxiliary tray.

The standard hand-held control pendant includes an extension cable 30 ft (9.1 m) long that connects to a receptacle in the low-voltage compartment of the switchgear using a 9-pin connector.

Interlocks and operation control

Item	Description
1	Power supply 125 Vdc to 24 Vdc (PS)
2	PLC logic module (LM)
3	PLC digital expansion module (DM)
4	Auxiliary relays (M1 and M2)
5	Miniature circuit breaker (MCB)
6	Voltage relay (VR)
7	Current sensor (CS)
8	Rectifier
9	Fuse blocks

Interlocks and operation control - removable elements

There are three interlock permissive circuits wired for every circuit breaker cell that is equipped with SIERS integrated electrical racking.

1. Normally open circuit breaker auxiliary switch contact (52a switch on circuit breaker or electrically operated ground and test device) wired into the controller circuit. Note this requires a circuit breaker or ground and test device auxiliary switch for operation – a mechanism-operated cell (MOC) switch is not suitable as ground and test devices do not have a MOC operator.

   If the removable element is closed (this can occur only in the TEST and CONNECT positions), the auxiliary switch circuit will close and the motor will receive no power.

2. Normally open contact installed on the compartment to sense door position.

   If the circuit breaker compartment door is open, the LM blocks power to the racking motor. The compartment door must be closed to enable electrical racking.

3. Normally open contact on the racking assembly to disable electrical racking when the manual racking crank is inserted.

   This permissive switch is actuated when the manual racking crank is inserted, and disables electrical racking. This feature prevents electrical racking from any location if a person is manually racking the removable element.

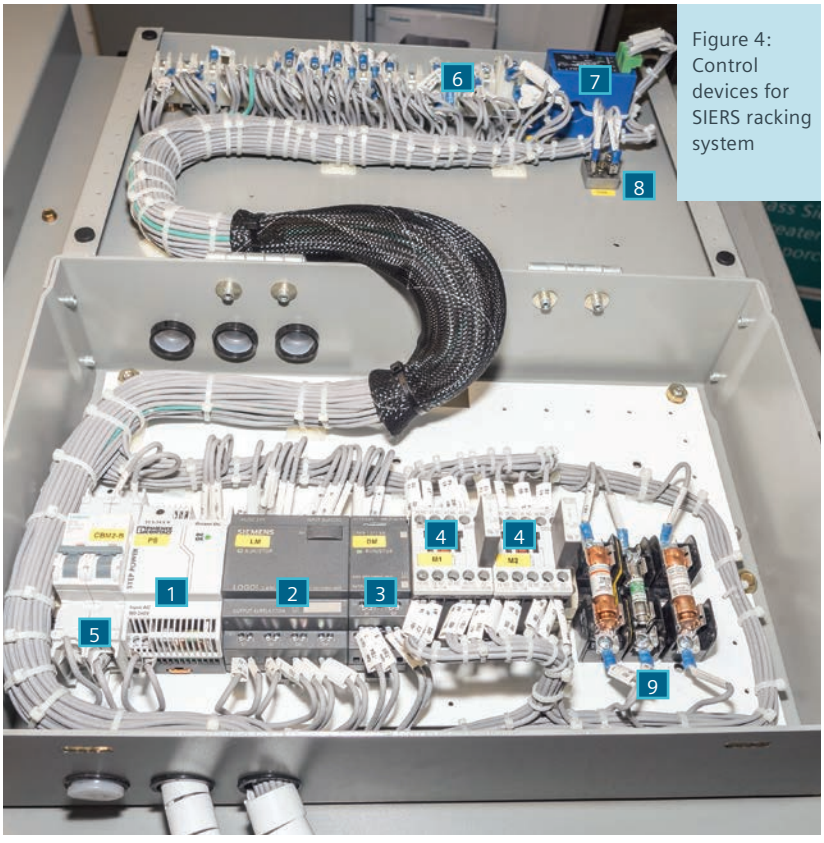

Figure 4: Control devices for SIERS racking system

Interlocks and operation control - auxiliary trays

In order to rack a CPT rollout tray or a CPT fuse rollout tray, it is necessary to open the secondary molded case circuit breaker and block its closure using the kirk key interlock. Refer to the applicable GM-SG, GM-SG-AR, or GM38 switchgear instruction manual for detailed instructions.

Operation modes

Operation modes

There are two modes of control of operation of the SIERS system: manual and remote electrical control.

Remote electrical control may be by means of the hand-held control pendant discussed earlier, or optionally by means of a communications channel operating in conjunction with a communication system installed in the switchgear.

Control using hand-held control pendant

Control using hand-held control pendant

The hand-held control pendant can be used to operate the SIERS racking system from a distance of up to 30 ft (9.1 m) from the equipment through 9C/18 AWG cable using a 24 Vdc signal connected through a 9-pin socket located in the low-voltage compartment. The removable element can be racked to CONNECT, TEST, or DISCONNECT position by pressing the desired button on the pendant. The pendant also includes an amber light for error or malfunction indication.

For auxiliary trays, the tray can be racked to CONNECT or DISCONNECT position by pressing the desired button on the pendant. The TEST position button is disabled and if it is pushed, no action will occur.

Figure 5: Hand-held control pendant

Control using communications system and discrete I/O

Control using communications system and discrete I/O

Discrete I/O control (optional) allows the user to operate the SIERS racking system via a PLC or protection relay input/output signals. These systems can be wired to a central control room or to a remote panel located away from the switchgear equipment.

It can be wired to have the signal indicating the current position of the removable element or auxiliary tray and an error light, thus providing the same indications as the hand-held control pendant.

Figure 6: Connector for control pendant cable connection

Operation sequence

Operation sequence - removable element

The operation sequence that follows describes the control using the hand-held control pendant. Operation over a communication channel is the same except for manual cable connection steps.

1. Connect the hand-held control pendant cable plug to the receptacle for the appropriate switchgear circuit breaker compartment.
2. Insert the removable element into the DISCONNECT position in the circuit breaker compartment. Follow the instructions in the relevant GM-SG, GM-SG-AR or GM38 switchgear instruction manual.
   a. The removable element is now in the DISCONNECT position.
   b. The solid green LED (for DISCONNECT) on the control pendant will be illuminated. Close and securely latch the compartment door.
3. Press the pushbutton for the TEST position. It is not necessary to hold the button down. The removable element will move to the TEST position.
4. When the removable element begins to move, the green LED (for DISCONNECT) will turn off and the white LED (for TEST) will blink until the removable element reaches the TEST position.
5. When the removable element reaches the TEST position, the white LED (for TEST) will be illuminated.
   a. The secondary disconnects will mate, and the removable element will now have control power.
   b. At this time, the circuit breaker or ground and test device open and close operations can be electrically tested.
   c. To proceed farther, and rack the removable element to the CONNECT position, the removable element must be open.
6. Press the pushbutton to continue racking towards the CONNECT position. It is not necessary to hold the button down. The removable element will move towards the CONNECT position.
7. When the removable element begins to move, the white LED (for TEST) will turn off and the red LED (for CONNECT) will blink until the removable element reaches the CONNECT position.
8. When the removable element reaches the CONNECT position, the red LED (for CONNECT) will illuminate.
   a. The removable element is now in the CONNECT position and can be operated.
9. To rack the removable element from CONNECT to TEST or DISCONNECT, the circuit breaker or ground and test device must be open.

   If the removable element is not open, racking will be disabled. The operator should then open the circuit breaker or ground and test device. After the removable element is open, the disconnect button can be pressed and the racking of the removable element will begin.
10. Once the circuit breaker or ground and test device is open, the operator can rack the removable element to the TEST or DISCONNECT position. It is not necessary to hold the desired button down. The removable element will move towards the TEST or DISCONNECT position, depending on which pushbutton was pressed.
11. The red LED (for CONNECT) will turn off and the selected position LED (TEST or DISCONNECT, as selected) will blink as the removable element is in motion.
12. Once the removable element reaches the TEST or DISCONNECT position, the white LED (for TEST) or green LED (for DISCONNECT) will illuminate.
    a. If the removable element is in the TEST position, control power is connected, and electrical operation is possible.
    b. If the removable element is in the DISCONNECT position, the secondary disconnects will be disconnected, and electrical operation is not possible.

Operation sequence - auxiliary trays

The operation sequence that follows describes the control using the hand-held control pendant. Operation over a communication channel is the same except for manual cable connection steps.

1. Connect the hand-held control pendant cable plug to the receptacle for the appropriate switchgear auxiliary tray.
2. Insert the auxiliary tray into the DISCONNECT position in the auxiliary compartment. Follow the instructions in the relevant GM-SG, GM-SG-AR or GM38 switchgear instruction manual.
   a. The auxiliary tray is now in the DISCONNECT position.
   b. The solid green LED (for DISCONNECT) on the control pendant will be illuminated. Close and securely latch the compartment door.
3. Press the pushbutton for the CONNECT position. It is not necessary to hold the button down. The auxiliary tray will move to the CONNECT position.
4. When the auxiliary tray begins to move, the green LED (for DISCONNECT) will turn off and the red LED (for CONNECT) will blink until the auxiliary tray reaches the CONNECT position.
5. When the auxiliary tray reaches the CONNECT position, the red LED (for CONNECT) will illuminate.
   a. The auxiliary tray is now in the CONNECT position and the molded-case secondary circuit breaker can be turned ON. (CPT rollout tray or CPT fuse rollout tray only). Follow the instructions in the relevant GM-SG, GM-SG-AR, or GM38 instruction manual.
6. To rack the auxiliary tray from CONNECT to DISCONNECT, the molded-case secondary circuit breaker must be opened and interlocked with the kirk key features (CPT rollout tray or CPT fuse rollout tray only).
7. Once the molded-case secondary circuit breaker is open and interlocked (CPT rollout tray or CPT fuse rollout tray only), the operator can rack the auxiliary tray to the DISCONNECT position. It is not necessary to hold the DISCONNECT pushbutton down. The auxiliary tray will move towards the DISCONNECT position.
8. The red LED (for CONNECT) will turn off and the DISCONNECT position LED will blink as the auxiliary tray is in motion.
9. Once the auxiliary tray reaches the DISCONNECT position, the green LED (for DISCONNECT) will illuminate.

Alarms and troubleshooting

Note: If none of these troubleshooting actions resolves the issue, contact Siemens for assistance.

Alarms and troubleshooting

The SIERS electrical racking system includes alarm functions to indicate unusual conditions as indicated by an amber LED on the hand-held control pendant. If control of the SIERS system is through the user's communication system, an alarm indication is provided through the communications channel.
The alarm is actuated for any of the following conditions:

- Motor overcurrent
  When the overcurrent is detected, the LM initiates alarm indication on the amber LED on the control pendant, and stops the racking process. After a time period of five seconds, the LM restarts the racking process to move the removable element or auxiliary tray to the DISCONNECT position. If this is unsuccessful, a second attempt to rack to the DISCONNECT position is initiated after a time period of five seconds. If the second attempt is also unsuccessful, the LM disables electrical racking, and the user must use the manual racking crank to rack the removable element to the DISCONNECT position or manually remove the auxiliary tray.

  If the amber alarm LED is illuminated, use the manual racking crank to manually rack the removable element to the DISCONNECT position in the circuit breaker compartment or manually remove the auxiliary tray following the instructions in the GM-SG, GM-SG-AR, or GM38 instruction manual.

  Verify that the removable element or auxiliary tray is in the DISCONNECT position. Unlatch and open the compartment door. Remove the circuit breaker, ground and test device, or auxiliary tray from the compartment, and inspect the removable element or auxiliary tray and the racking system, alignment rails, and control system in the compartment to determine the source of the problem.

  Once the issue is found and corrected, reinsert the circuit breaker, ground and test device or auxiliary tray, close and securely latch the compartment door, reset the alarm (by pressing the DISCONNECT and TEST pushbuttons simultaneously) and try the racking process again.

- Motor timeout
  If the racking process takes more time that the system allows, SIERS stops the racking process.

  Once the issue is found and corrected, reinsert the circuit breaker, ground and test device, or auxiliary tray, close and securely latch the compartment door, reset the alarm (by pressing the DISCONNECT and TEST pushbuttons simultaneously) and try the racking process again.

- Open permissive switch
  This error is caused by an open contact in one of the protection permissive switches. One permissive switch is for insertion of the manual racking crank. The second permissive switch is for an open compartment door. The third permissive switch is for sensing circuit breaker (or ground and test device) condition, which must be open to allow racking.

  Check that all three permissive switches are in the correct positions, that the circuit breaker or ground and test device is open, that the compartment door is closed, and the manual racking crank is not inserted. Then try the racking process again.

- Removable element or auxiliary tray position "unknown"
  If none of the indicating lights on the hand-held control pendant are illuminated, and there is control power available, it means that the removable element or auxiliary tray is not in a defined position.

Unlatch and open the compartment door, and remove the circuit breaker, ground and test device or auxiliary tray. Inspect the racking system, alignment rails, and control system in the compartment to determine the source of the problem. Once the issue is found and corrected, insert the removable element or auxiliary tray to the DISCONNECT position, and close and securely latch the compartment door. Then, use the manual operation method to rack the removable element or auxiliary tray to the desired position.

Manual racking

Manual racking

When the manual racking process is necessary follow these steps:

1. Open the MCB (refer to Figure 3: SIERS control circuit on page 7 and Figure 4: Control devices for the SIERS racking system on page 8) to disconnect control power from the SIERS racking system.
2. For removable elements, following the normal procedures contained in the applicable GM-SG, GM-SG-AR, or GM38 switchgear instruction manual, use the manual racking crank to rack the removable element in the compartment in the normal manner. Since manual racking will operate all of the mechanisms of the normal (non-electrically operated) racking system, there will be slightly higher racking effort required.

   For auxiliary trays, follow the normal procedures contained in the applicable GM-SG, GM-SG-AR, or GM38 switchgear instruction manual for disconnecting and removing auxiliary trays.

Published by Siemens Industry, Inc. 2018.

Siemens Industry, Inc.
7000 Siemens Road
Wendell, NC 27591

For more information, including service or parts, please contact our 24/7 Customer Support Center:
Phone: +1 (800) 333-7421

To request a service or parts quote online, visit:
www.usa.siemens.com/techsupport or e-mail
callcenter.industry@siemens.com

Article No. EMMS-T40013-01-4A00
© 2018 Siemens Industry, Inc.

www.usa.siemens.com/mvswitchgear

The technical data presented in this document is based on an actual case or on as-designed parameters, and therefore should not be relied upon for any specific application and does not constitute a performance guarantee for any projects. Actual results are dependent on variable conditions. Accordingly, Siemens does not make representations, warranties, or assurances as to the accuracy, currency or completeness of the content contained herein. If requested, we will provide specific technical data or specifications with respect to any customer's particular applications. Our company is constantly involved in engineering and development. For that reason, we reserve the right to modify, at any time, the technology and product specifications contained herein.