SIEMENS

Dimension Prints for Above NEMA Motors

Type NCGII – Custom Horizontal – Weather Protected Type II
Sleeve Bearing – Direct Connected
Frames 509 & 5011 – Rotatable Main Conduit Box

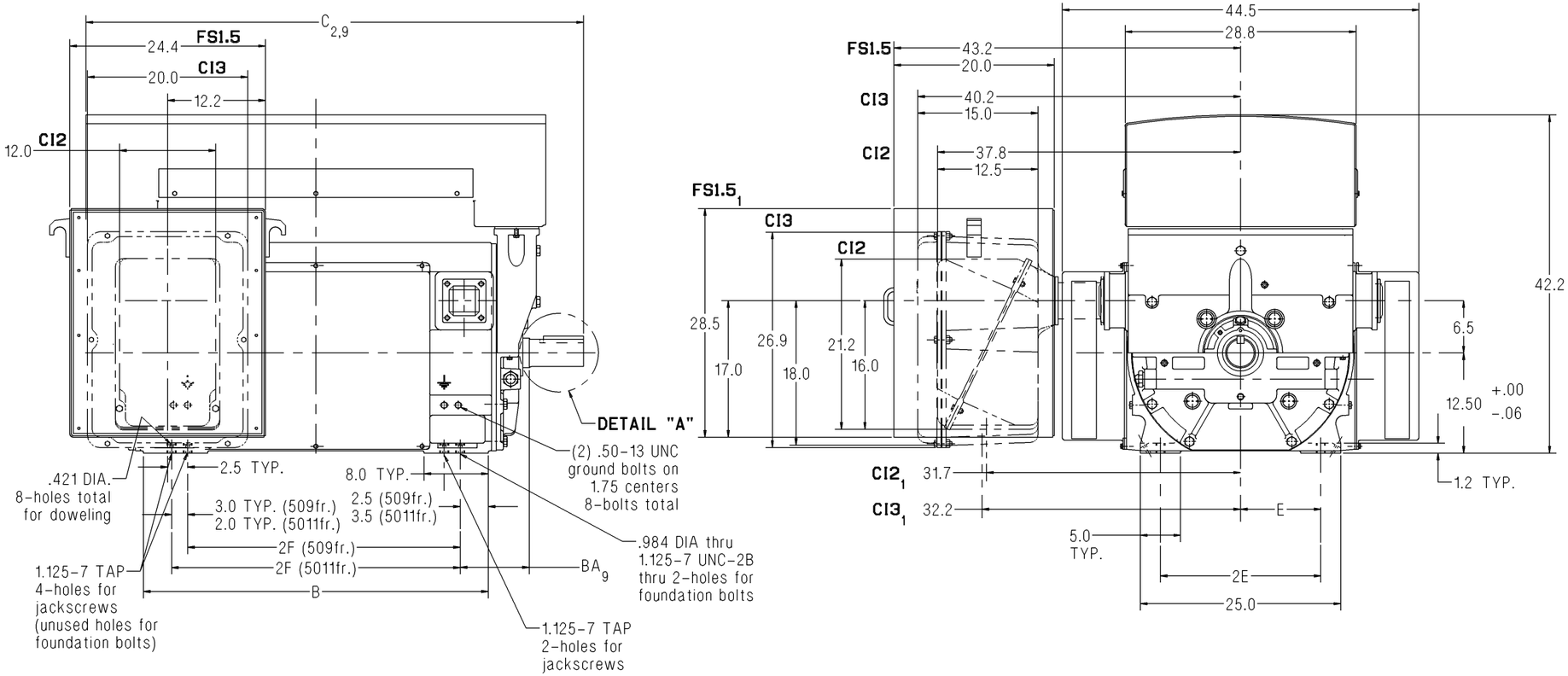

Lubrication Per Bearing	
2 Pole	4 Pole & Slower
140-160 SUS @ 100°F	290-350 SUS @ 100°F
1.4 qt. capacity	1.4 qt. capacity

Notes:

1. Main conduit box may be rotated in steps of 90°.
   A removable bottom plate is supplied on the FS1.5 conduit box.
   A 5.0 N.P.T. is supplied on the CI2 and CI3 conduit boxes.
   A 6.0" spacer is supplied on both frames for all rotatable conduit boxes.
2. C = Length of motor from drive end of shaft to end of non-drive end of motor.
3. V = (N-W)-0.25" = length of shaft available for coupling.
4. 2 Pole machines may rotate in one direction only.
5. Shims may be necessary under motor feet for direct connection.
6. Rotor end float = 0.5"
7. End float of LEF coupling = 0.19"
8. Adding a rotating labyrinth seal to the drive end does not change any dimensions.
9. When adding a ground brush, consult the factory. (BA and C will increase.)
10. For motors equipped with provisions for proximity probes use this print for our standard internal mounting.

Standard Dimensions in Inches

Shaft	Frame	Speed	B	BA_9	$C_{2,9}$	E	2F	N	(N-W)	R	S	U	V_3	ES	Approx. Ship Wt. (Lbs)
Short	509S	2 Pole	36.0	8.50	54.4	10.00	28.0	6.95	5.25	2.275	.625	2.625	5.00	3.5	4200
Short	5011S	2 Pole	43.0	8.50	60.4	10.00	36.0	5.95	5.25	2.275	.625	2.625	5.00	3.5	5150
Short	509S	4 Pole & Slower	36.0	8.50	55.9	10.00	28.0	8.45	6.75	2.880	.875	3.375	6.50	5.0	4500
Short	5011S	4 Pole & Slower	43.0	8.50	61.9	10.00	36.0	7.45	6.75	2.880	.875	3.375	6.50	5.0	5350

Certification: Customer _____ P.O. _____ S.O. _____ Item _____

HP _____ RPM _____ Frame _____ PH/HZ/Volts 3/_____/_____ Terminal Box Size CI2 ☐ CI3 ☐ FS1.5 ☐

By _____ Date _____

Comments _____

Not for construction, installation or application purposes unless certified.

NCGII_509and5011_2plusPL_SLV_ROT
Revision 01
01/28/09