INSTRUCTION MANUAL

GM-SG-AR

Arc-resistant, metal-clad, medium-voltage switchgear
usa.siemens.com/mvswitchgear

SIEMENS

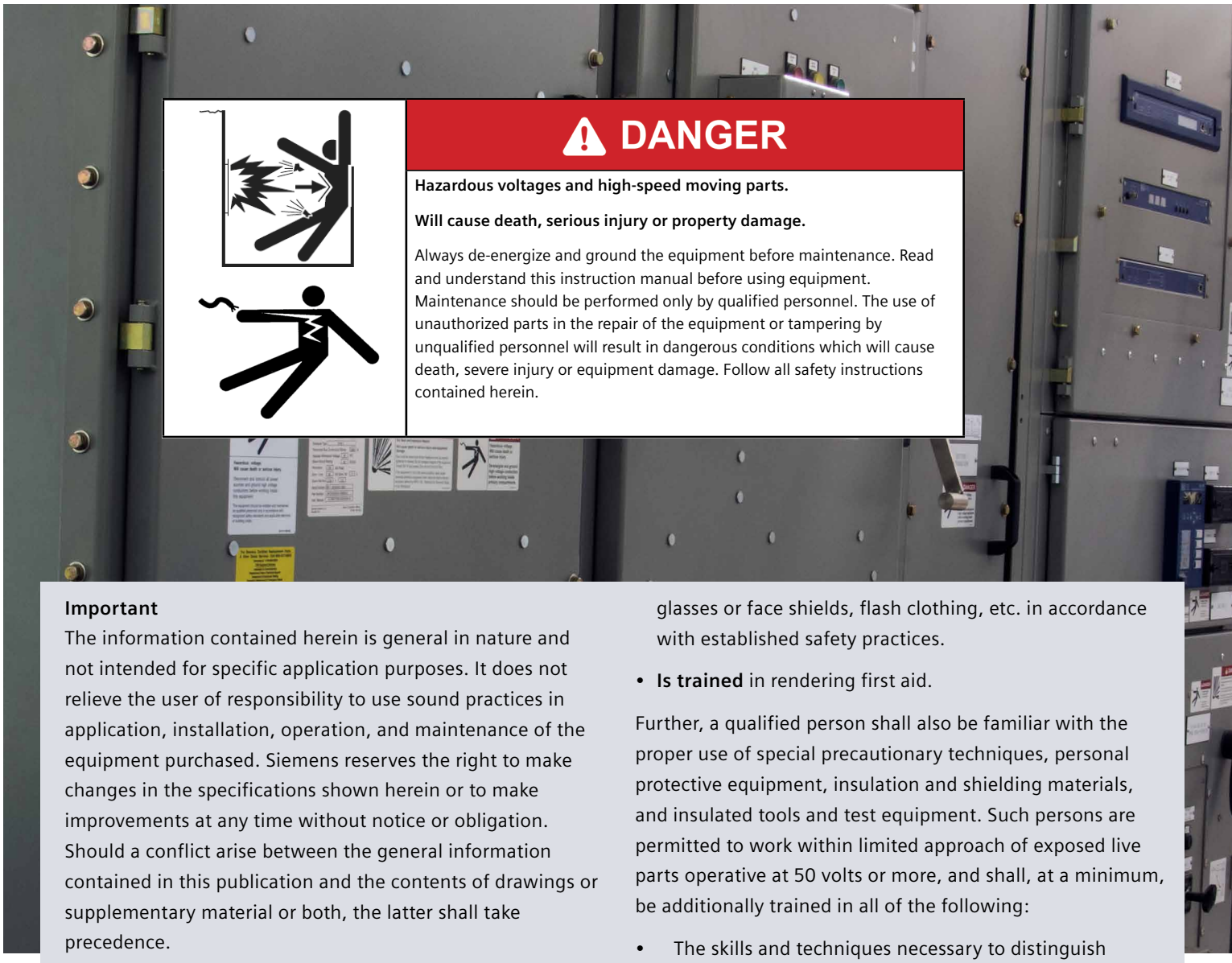

Important

The information contained herein is general in nature and not intended for specific application purposes. It does not relieve the user of responsibility to use sound practices in application, installation, operation, and maintenance of the equipment purchased. Siemens reserves the right to make changes in the specifications shown herein or to make improvements at any time without notice or obligation. Should a conflict arise between the general information contained in this publication and the contents of drawings or supplementary material or both, the latter shall take precedence.

Qualified person

For the purpose of this instruction manual a **qualified person** is one who has demonstrated skills and knowledge related to the installation, construction, and operation of the equipment and the hazards involved. In addition, this person has the following qualifications:

- **Is trained and authorized** to de-energize, clear, ground and tag circuits and equipment in accordance with established safety procedures.
- **Is trained** in the proper care and use of protective equipment, such as: rubber gloves, hard hat, safety glasses or face shields, flash clothing, etc. in accordance with established safety practices.
- **Is trained** in rendering first aid.

Further, a qualified person shall also be familiar with the proper use of special precautionary techniques, personal protective equipment, insulation and shielding materials, and insulated tools and test equipment. Such persons are permitted to work within limited approach of exposed live parts operative at 50 volts or more, and shall, at a minimum, be additionally trained in all of the following:

- The skills and techniques necessary to distinguish exposed energized parts from other parts of electric equipment.
- The skills and techniques necessary to determine the nominal voltage of exposed live parts.
- The approach distances specified in NFPA 70E® and the corresponding voltages to which the qualified person will be exposed.
- The decision-making process necessary to determine the degree and extent of the hazard and the personal protective equipment and job planning necessary to perform the task safely.

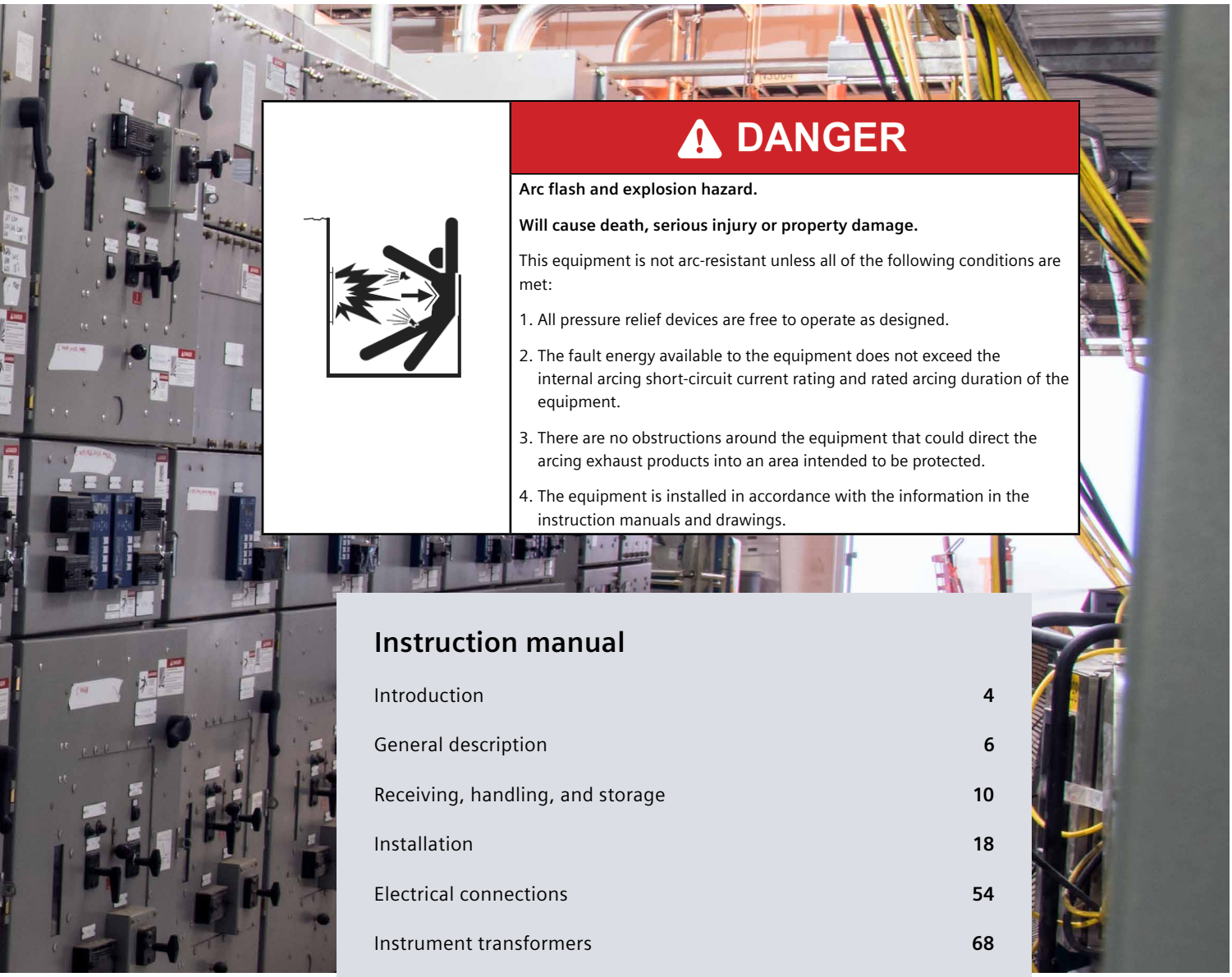

DANGER

Arc flash and explosion hazard.

Will cause death, serious injury or property damage.

This equipment is not arc-resistant unless all of the following conditions are met:

1. All pressure relief devices are free to operate as designed.
2. The fault energy available to the equipment does not exceed the internal arcing short-circuit current rating and rated arcing duration of the equipment.
3. There are no obstructions around the equipment that could direct the arcing exhaust products into an area intended to be protected.
4. The equipment is installed in accordance with the information in the instruction manuals and drawings.

Instruction manual

Introduction	**4**
General description	**6**
Receiving, handling, and storage	**10**
Installation	**18**
Electrical connections	**54**
Instrument transformers	**68**
Circuit breaker positions	**80**
Inspection and testing	**92**
Maintenance	**95**
Disposal	**100**
Accessories	**101**
Annex A - Electrical racking device	**105**
Annex B - Optional switch	**108**

Introduction

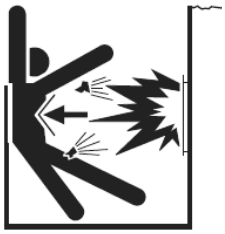

⚠ DANGER

Arc flash and explosion hazard.

Will cause death, serious injury or property damage.

This equipment is not arc-resistant unless all of the following conditions are met:

1. All pressure relief devices are free to operate as designed.
2. The fault energy available to the equipment does not exceed the internal arcing short-circuit current rating and rated arcing duration of the equipment.
3. There are no obstructions around the equipment that could direct the arcing exhaust products into an area intended to be protected.
4. The equipment is installed in accordance with the information in the instruction manuals and drawings.

Introduction

The type GM-SG-AR family of 5 kV - 27 kV metal-clad, arc-resistant switchgear is designed to meet all applicable NEMA and IEEE standards. This equipment is classified as arc-resistant switchgear and has been tested for resistance to internal arcing in accordance with IEEE C37.20.7. Successful application and operation of this equipment depends as much upon proper installation and maintenance by the user as it does upon the proper design and fabrication by Siemens.

The purpose of this instruction manual is to assist the user in developing safe and efficient procedures for the installation, maintenance and use of the equipment.

Note: *This instruction manual includes description of the process of racking a circuit breaker (or ground and test device) within the circuit breaker compartment using the manual racking crank (see text starting on page 72), and in the Annex (starting on page 94), using the portable electrical-racking accessory. The switchgear is also available with built-in electric racking in the circuit breaker compartment, using the Siemens integrated electrical-racking system (SIERS), and instruction manual EMMS-T40013-XX-XXXX should be consulted.*

This instruction manual does not apply to medium-voltage (NEMA class E2) controllers, which may be provided in the same overall assembly. If the equipment includes controllers, consult the instruction manual applicable to the controllers.

This instruction manual applies to the switchgear structures. Refer to instruction manual E50001-F710-A231-X-XXXX for instructions applicable to the type GMSG circuit breakers.

Contact the nearest Siemens representative if any additional information is desired.

Signal words

The signal words "danger," "warning," and "caution" used in this instruction manual indicate the degree of hazard that may be encountered by the user. These words are defined as:

Danger - Indicates an imminently hazardous situation which, if not avoided, **will** result in death or serious injury.

Warning - Indicates a potentially hazardous situation which, if not avoided, **could** result in death or serious injury.

Caution - Indicates a potentially hazardous situation which, if not avoided, **may** result in minor or moderate injury.

Notice (without safety alert symbol) - Indicates a potentially hazardous situation which, if not avoided, **may** result in property damage.

Field service operation and warranty issues

SSiemens can provide competent, well trained field service representatives to provide technical guidance and advisory assistance for the installation, overhaul, repair and maintenance of Siemens equipment, processes and systems.

Contact regional service centers, sales offices or the factory for details, or telephone Siemens field service at +1 (800) 333-7421 or +1 (423) 262-5700 outside the U.S.

For medium-voltage customer service issues, contact Siemens at +1 (800) 333-7421 or +1 (423) 262-5700 outside the U.S.

General description

Introduction

The successful performance and application of metal-clad switchgear depends as much on proper installation and maintenance as it does on good design, proper manufacture and correct application.

Siemens type GM-SG-AR metal-clad, arc-resistant switchgear is precision built equipment designed to function efficiently under normal operating conditions. It is designed and manufactured to operate within the parameters established in IEEE C37 standards for metal-clad switchgear. Performance requirements of these standards have been met or exceeded by these designs.

To provide additional personal protection in the event of an internal arcing fault, this equipment is also classified as arc-resistant switchgear and has been qualified to carry a type 2B accessibility rating per IEEE C37.20.7, when installed with at least 6" (152 mm) clearance between the sides and the rear of the enclosure and any adjacent walls, enclosures or equipment.

Note: *Enclosures used to couple type GM-SG-AR to other equipment (for instance, transition sections, transformer throats, bus ducts, etc.) as well as specialized vertical sections within a lineup of type GM-SG-AR equipment (for example, utility revenue metering sections) that have not been qualified for resistance to internal arcing, are not considered to be arc-resistant.*

The instructions included in this instruction manual are provided to aid you in obtaining longer and more economical service from your Siemens switchgear. For proper installation and operation, this information should be distributed to your operators and engineers.

By carefully following these instructions, difficulties should be avoided. However, these instructions are not intended to cover all details of variations that may be encountered in connection with the installation, operation and maintenance of this equipment.

Should additional information be desired, including replacement instruction manuals, contact your Siemens representative.

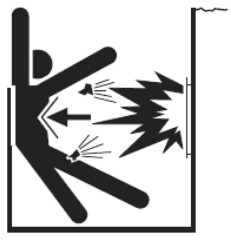

⚠ DANGER

Arc flash and explosion hazard.

Will cause death, serious injury or property damage.

This equipment is not arc-resistant unless all of the following conditions are met:

1. All pressure relief devices are free to operate as designed.
2. The fault energy available to the equipment does not exceed the internal arcing short-circuit current rating and rated arcing duration of the equipment.
3. There are no obstructions around the equipment that could direct the arcing exhaust products into an area intended to be protected.
4. The equipment is installed in accordance with the information in the instruction manuals and drawings.

Scope

These instructions cover the installation, operation and maintenance of Siemens type GM-SG-AR metal-clad, arc-resistant switchgear assemblies using horizontal drawout type GMSG vacuum circuit breakers. The equipment designs described in this instruction manual include indoor, Shelter-Clad, and Shelter-Clad+ walk-in aisle outdoor configurations for applications up to 27 kV. A typical indoor switchgear assembly is shown in Figure 1: Typical indoor type GM-SG-AR metal-clad, arc-resistant switchgear. All diagrams, descriptions and instructions apply to all of the above classes and designs unless noted otherwise.

Standard construction details of the switchgear, auxiliary equipment and necessary accessories are given in the appropriate sections. Special mechanical and electrical devices, furnished in accordance with purchase order requirements, are covered by supplementary instructions submitted with this instruction manual.

The equipment furnished has been designed to operate in a system having the circuit capacity specified by the purchaser. If for any reason the equipment is used in a different system or if the short circuit capacity of the system is increased, the ratings of the equipment, including the momentary rating of the switchgear, the interrupting capacity of the circuit breakers and the bus capacity must be checked. Failure on the part of the user to receive approval of intended changes from Siemens may cause the warranty to
be void.

Note: *This instruction manual does not apply to medium-voltage (NEMA class E2) controllers, which may be provided in the same overall assembly. If the equipment includes controllers, consult the instruction manual applicable to the controllers.*

This instruction manual applies to the switchgear structures. Refer to instruction manual E50001-F710-A231-X-XXXX for instructions applicable to the type GMSG circuit breakers.

Figure 1:Typical indoor type GM-SG-AR metal-clad, arc-resistant switchgear

General description

The switchgear described in this instruction manual is of the metal-clad type, as defined in IEEE C37.20.2. All parts are completely enclosed within grounded barriers, the secondary control devices and primary circuits are isolated from each other by shutters or barriers, and the primary bus joints are completely encased with insulation materials to suit the voltage class of the equipment.

Additionally, this equipment is classified as arc-resistant switchgear, as defined in IEEE C37.20.7, and has been qualified to carry a type 2B accessibility rating. The arc-resistant features are intended to provide an additional degree of protection to personnel in close proximity to the equipment in the event of an internal arcing fault while the equipment is operating under normal conditions.

Normal conditions include the "usual service conditions" defined in IEEE C37.20.2, clauses 4 and 8.1, as well as the following conditions intended to maintain the integrity of the equipment during an internal arcing fault event:

1. All doors and panels providing access to primary compartments must be closed and properly secured (All bolts installed and tightened. All latches in latched position.)
2. All pressure relief devices must be free to operate as designed.
3. The top mounted pressure relief channel (PRC) and exhaust plenum assemblies must be properly installed.

Important: *Exhaust plenum must be routed outside the switchgear room and to an area where personnel will not be present when the equipment is energized.*

4. The fault energy available to the equipment must not exceed the internal arcing short-circuit current rating and rated arcing duration of the equipment.
5. There must be no obstructions around the equipment that could direct the arcing exhaust products into an area intended to be protected.
6. The equipment must be properly grounded.
7. All equipment must be properly installed in accordance with information in instruction manuals and drawings.
8. All primary and secondary cables entrance covers supplied with the switchgear are properly re-installed after drilling to allow for cable entry.

Typical indoor switchgear is shown in Figure 1: Typical indoor type GM-SG-AR metal-clad, arc-resistant switchgear on page 7.

Table 1:Switchgear designation

Design	Type
Indoor	GM-SG-AR
Shelter-Clad, single-aisle outdoor	SGM-SG-AR
Shelter-Clad+, single-aisle outdoor	S+ GM-SG-AR

The type GM-SG-AR arc-resistant switchgear has been qualified to carry a type 2B accessibility rating, as defined in IEEE C37.20.7, when installed with at least 6" (152 mm) clearance between the sides and rear of the switchgear and any adjacent walls, enclosures or equipment.

Note: *Enclosures used to couple type GM-SG-AR to other equipment (for example, transition sections, transformer throats, bus ducts, etc.) as well as specialized vertical sections within a lineup of type GM-SG-AR equipment (for instance, utility revenue metering sections) that have not been qualified for resistance to internal arcing are not considered to be arc-resistant.*

Siemens switchgear carries a type designation or class, as shown in Table 1: Switchgear designation. These designations may appear on drawings and familiarity with them will simplify communications with the factory.

Indoor equipment is arranged with upper and lower primary compartments and a center secondary compartment in the front of the equipment. Primary compartments contain either a drawout circuit breaker or interior auxiliary equipment, such as voltage or control power transformers, located behind a front panel, and can optionally be used for secondary control equipment. The front panel of the secondary compartment can be used for protective

relays, instruments and similar devices and may be opened to provide access to secondary control equipment. Generally, when the primary compartment does not contain primary circuit elements (circuit breakers or interior auxiliary equipment) but instead contains only secondary control equipment, those front panels may also be used for these items and may also be opened to access secondary control equipment.

Shelter-Clad outdoor equipment consists of indoor equipment enclosed in a weather-resistant housing complete with an illuminated, walk-in aisle and an exhaust system to direct the arc fault products outside of the enclosure in the event of an internal arcing fault. Circuit breakers can be moved inside the aisle and control devices checked without exposure to the outside elements.

Shelter-Clad+ outdoor equipment consists of indoor equipment enclosed in a weather-resistant housing complete with a walk-in aisle, an exhaust system to direct the arc-fault products outside of the enclosure in the event of an internal arcing fault, a common base, and many optional features typically only available in power equipment centers (PECs) such as HVAC systems, indoor and outdoor lighting, insulation, work spaces, and alarm systems. Shelter-Clad+ switchgear assemblies are built in partnership with Siemens-qualified vendors, who provide detailed drawings of each custom assembly which include lifting, handling, support, and installation instructions. Please be sure to carefully review and follow all instructions provided in the order-specific Shelter-Clad+ drawing package.

Receiving, handling, and storage

Receiving

Each group of type GM-SG-AR metal-clad, arc-resistant switchgear is securely blocked and braced for shipment. It is crated, boxed or covered as required by shipping conditions. If special handling is required, it is so indicated. Relatively delicate instruments, relays and other devices are included, and the switchgear assembly must be handled carefully when unloading.

Normally, the switchgear is shipped with the associated type GMSG vacuum circuit breaker(s) installed in their respective unit(s), in the CONNECT position. Refer to instruction manual E50001-F710-A231-X-XXXX for information concerning the type GMSG vacuum circuit breakers.

Identification

When the shipment includes more than one shipping group or equipment for more than one substation, marking tags are attached to each crate or package for identification. The drawing number on the tag is also on the shipping list. The shipping list identifies the contents with the unit numbers included in the shipping group. Refer to the general arrangement drawing for the location of each unit within the group lineup. Use this information to simplify the assembly operation and save unnecessary handling.

Inspection and unpacking

Inspect the equipment as soon as possible after receipt for any damage that may have occurred in transit. Before unpacking, examine the package itself, as a damaged package may indicate damage to the contents of the package. Be careful when unpacking equipment.

The use of sledge hammers and crowbars may damage the finish, or the equipment itself. Use nail pullers. After unpacking, examine equipment for any possible damage. Check the shipping manifest to be certain that all items have been received. If there is a shortage, make certain it is noted on the freight bill and contact the carrier immediately. Notify Siemens medium-voltage customer service at +1 (800) 333-7421 (+1 (423) 262-5700 outside the U.S.) of any shortage or damage.

Shipping damage claims

Important: *The manner in which visible shipping damage is identified by consignee prior to signing the delivery receipt can determine the outcome of any damage claim to be filed.*

Notification to carrier within 15 days for concealed damage is essential if loss resulting from unsettled claims is to be eliminated or minimized.

1. When shipment arrives, note whether equipment is properly protected from the elements. Note trailer number on which the equipment arrived. Note blocking of equipment. During unloading, make sure to count the actual to verify it agrees with the delivery receipt.
2. Make immediate inspection for visible damage upon arrival and prior to disturbing or removing packaging or wrapping material. This should be done prior to unloading when possible. When total inspection cannot be made on vehicle prior to unloading, close inspection during unloading must be performed and visible damage noted on the delivery receipt. Take pictures if possible.Be sure equipment is properly protected from any further damage by covering it properly after unloading.

3. Any visible damage must be noted on the delivery receipt and acknowledged with the driver's signature. The damage should be detailed as much as possible. It is essential that a notation "possible internal damage, subject to inspection" be included on delivery receipt. If the driver will not sign the delivery receipt with damage noted, the shipment should not be signed for by the consignee or their agent.
4. Notify Siemens immediately of any damage, at +1 (800) 333-7421 or +1 (423) 262-5700 outside the U.S.
5. Arrange for a carrier inspection of damage immediately.

Important: *Do not move equipment from the place it was set when unloading. Also, do not remove or disturb packaging or wrapping material prior to carrier damage inspection. Equipment must be inspected by carrier prior to handling after receipt. This eliminates loss due to claims by carrier that equipment was damaged or further damaged on site after unloading.*

6. Be sure equipment is properly protected from any further damage by covering it properly after unloading.
7. If practical, make further inspection for possible concealed damage while the carrier's inspector is on site. If inspection for concealed damage is not practical at the time the carrier's inspector is present, it must be done within 15 days of receipt of equipment. If concealed damage is found, the carrier must again be notified and inspection made prior to taking any corrective action to repair. Also notify Siemens immediately at +1 (800) 333-7421 or +1 (423) 262-5700 outside the U.S.
8. Obtain the original of the carrier inspection report and forward it along with a copy of the noted delivery receipt to Siemens at +1 (800) 333-7421 or +1 (423) 262-5700 outside the U.S. Approval must be obtained by Siemens from the carrier before any repair work can be performed. Before approval can be obtained, Siemens must have the above referenced documents. The carrier inspection report and/or driver's signature on the delivery receipt does not constitute approval to repair.

Note: *Shipments are not released from the factory without a clear bill of lading. Approved methods are employed for preparation, loading, blocking and tarping of the equipment before it leaves the Siemens factory. Any determination as to whether the equipment was properly loaded or properly prepared by shipper for over-the-road travel cannot be made at the destination. If the equipment is received in a damaged condition, this damage to the equipment must have occurred while en route due to conditions beyond Siemens' control. If the procedure outlined above is not followed by the consignee, purchaser or their agent, Siemens is not held liable for repairs. Siemens is not held liable for repairs in any case where repair work was performed prior to authorization from Siemens.*

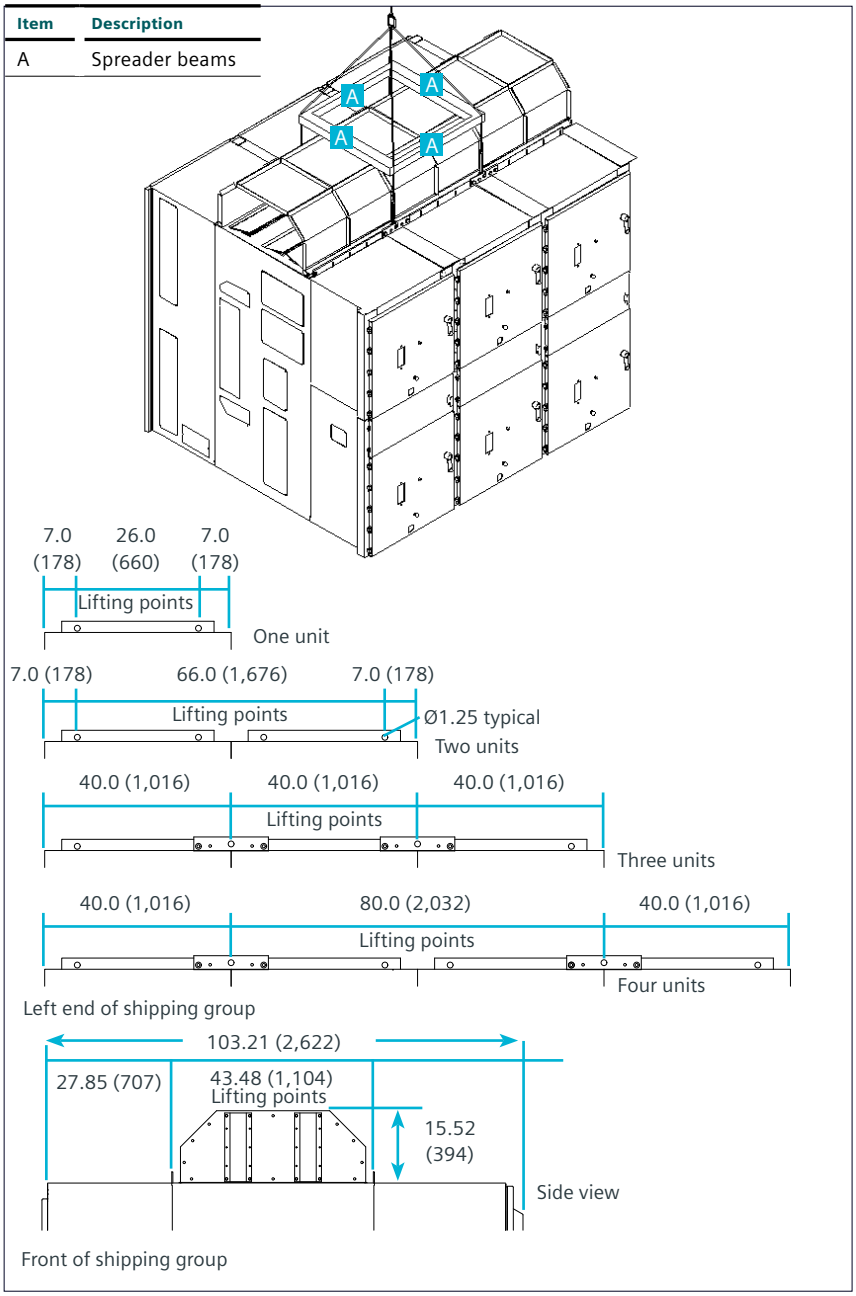

Figure 2a: Front of shipping group rated up to 17.5kV

Lifting and moving

There are a number of methods that can be used in handling the switchgear that, when properly employed, will not damage the switchgear sections. The handling method used will be determined by conditions and available equipment at the installation site. Lifting with a crane is the preferred method of handling; however, overhead obstructions or low ceilings often dictate that other methods must be used. Rollers, jacks or forklift trucks may be used prior to removal of wooden skids.

Each group of switchgear has provisions for attaching lifting equipment. Though the lift points vary in location on indoor and Shelter-Clad outdoor designs, all are designed for use with a crane of adequate height and capacity. To estimate the maximum required crane capacity, multiply the number of sections to be lifted by 7,000 lbs (3,175 kg). A drawing pocket (or holder) is provided on each lineup of switchgear. This drawing pocket includes a general arrangement drawing of the switchgear lineup, plus a drawing with installation and handling instructions for the equipment. The drawing pocket is normally located at the left end of the lineup. Review this information carefully before moving the equipment.

For Shelter-Clad+ switchgear, please refer to the general arrangement drawing and drawing with installation and handling instructions for the equipment as the equipment weights vary depending upon the specific design of the outdoor enclosure and the options included in the specific order.

⚠ WARNING

Heavy weight.

Can result in death, serious injury or property damage.

Observe all handling instructions in this instruction manual to prevent tipping or dropping of equipment.

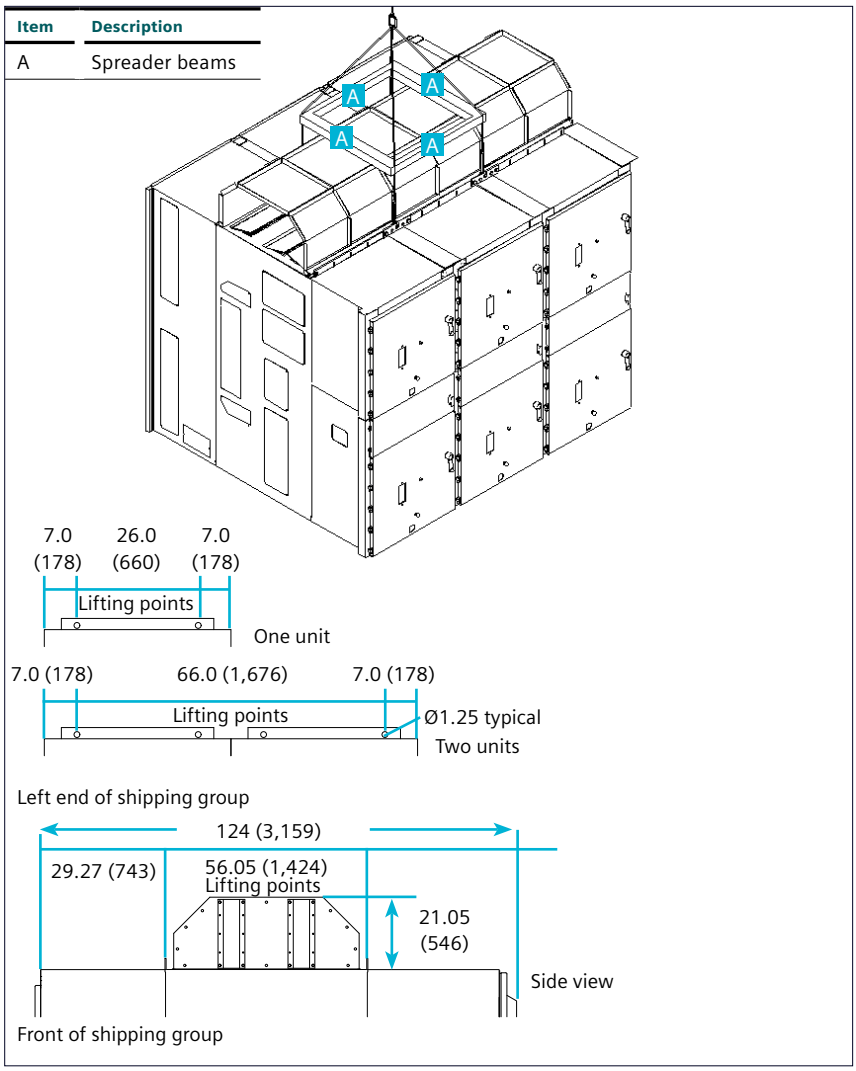

Figure 2b: Front of shipping group rated 27kV

Indoor switchgear

Before removing the protective packing materials, indoor equipment may be moved by crane with lift cables attached through the packaging to the lifting bars on the top of the switchgear. If crane facilities are unavailable, or if tight spaces prevent use of a crane, rollers under the skids may be used.

Lifting indoor switchgear with crane

Recommended lifting of indoor switchgear is by means of lifting cables connected to an overhead crane. The lifting cables should be connected to the eyes in the top lifting bars using properly rated shackles. One set of lifting bars is located near the front of the switchgear, while another set of lift bars is located closer to the middle of the switchgear, as illustrated in Figure 2: Lifting indoor switchgear with crane on page 11.

A crane with sufficient height should be used so the load angle (from horizontal) on the lifting cables will be at least 45 degrees when viewed from the front or the rear. A lesser angle could cause the equipment to be damaged. The lifting cables must have spreaders from front-to-rear and side-to-side to prevent twisting the lift bars and to prevent damage to the top-mounted pressure relief channel.

Moving switchgear in obstructed areas without a crane

Within buildings and obstructed areas, where a crane cannot be used, move switchgear with rollers, cribbing, jacks and other such equipment as may be required to meet the situation. Forklift trucks should be used with discretion as improper lift points could cause extreme damage to equipment. For this reason, **use of a forklift truck to handle or move switchgear is not recommended**.

Jacks may be used to lift switchgear that is properly supported by sturdy timbers.

To prevent distortion of the cubicles, rollers and cribbing of equal height must be used in sufficient number to evenly distribute the load.

Figure 3: Moving indoor switchgear with jacks and rollers shows a method of using jacks on indoor switchgear to facilitate the use of rollers under the shipping skid. Care must be used to prevent damage to instruments, relays and devices, and to maintain the stability of the timbers.

Remove rollers and lower the switchgear carefully. Leave wooden skids (when provided) in place during moving operation until final location is reached.

Figure 4: Moving indoor switchgear in obstructed areas without crane - final positioning shows a method of moving the switchgear into the final position after it has been moved near to the final position using another method.

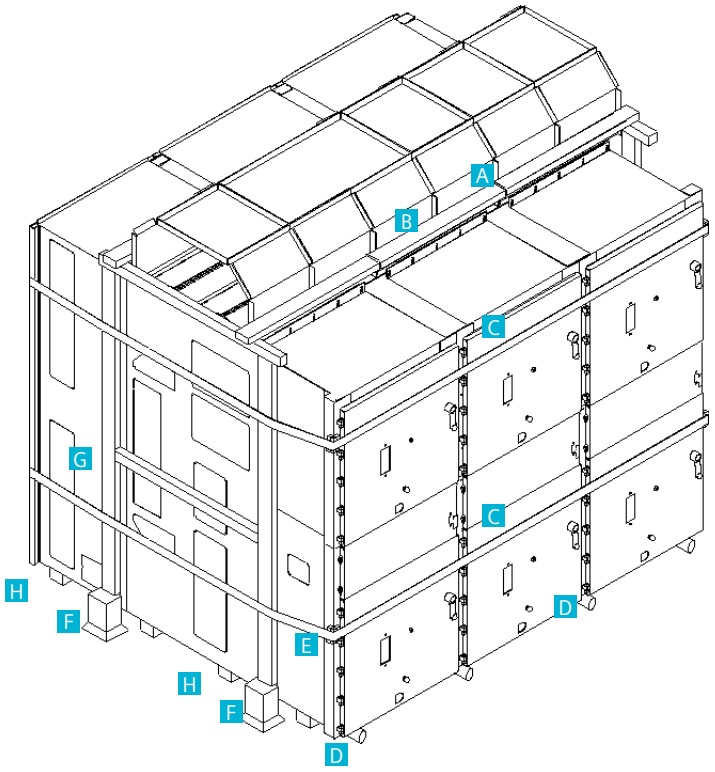

Item	Description
A	Secure lift beams to eyes in lift bars
B	Lift beams
C	Banding
D	Rollers (under support timber)
E	Provide suitable protection for all corners
F	Jack
G	Jack beam
H	Support timber (between switchgear and rollers)

Figure 3: Moving indoor switchgear with jacks and rollers

Lifting outdoor switchgear with crane

TThe method of lifting Shelter-Clad outdoor equipment is shown in Figure 5: Lifting outdoor Shelter-Clad switchgear with crane on page 14 for switchgear structures, while Figure 6: Moving the aisle portion of outdoor Shelter-Clad switchgear on page 15 shows the method of lifting the aisle portion. The load angles (from horizontal) on the lifting cables, as viewed from the front or rear, must be at least 45 degrees. A lesser angle could damage the equipment. The lifting cables must have spreaders front-to-back and side-to-side to protect the equipment.

The recommended lifting pipe size (Ref.ASTM A-53) is type XXS 2-1/2" nominal (2.875" (73 mm) OD, 1.771" (45 mm) ID). The lifting pipe should be at least 24" (610 mm) longer than the depth of the switchgear and should include adequate means to prevent the lifting cables from slipping off of the lifting pipe during use. Lifting of 27 kV switchgear must be limited to two sections at one time.

For Shelter-Clad + switchgear, please refer to the general arrangement drawing and drawing with installation and handling instructions for the equipment as the equipment sizes and weights vary depending upon the specific design of the outdoor enclosure and the options included in the specific order. For Shelter-Clad +, the aisle and switchgear are shipped attached to each other on a common base.

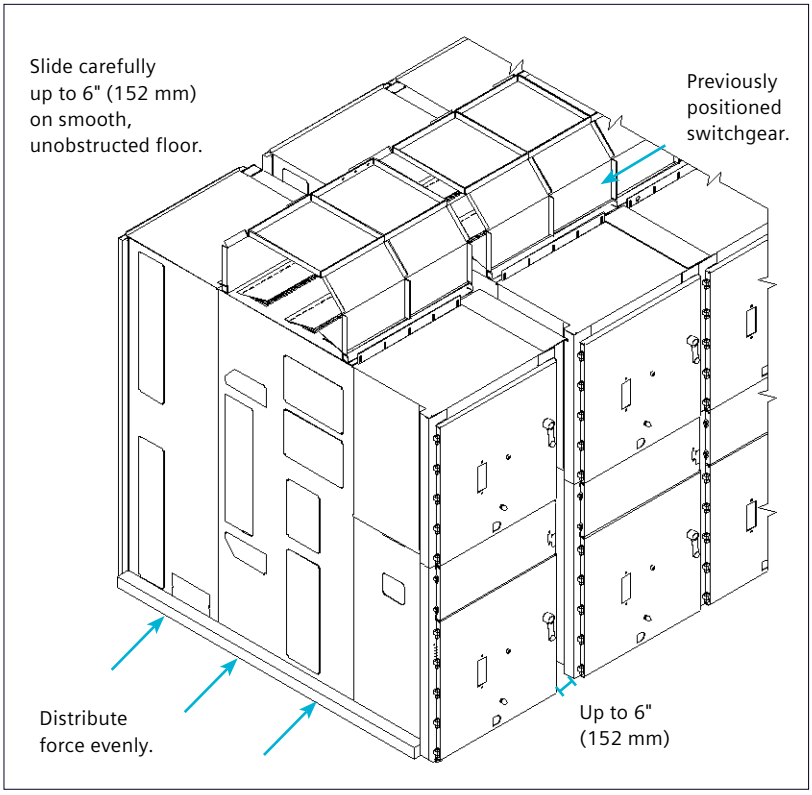

Figure 4: Moving indoor switchgear in obstructed areas without crane - final positioning

Final movement of assembly

Proper final movement and connection of the assembly requires that several items be completed:

Proper final movement and connection of the assembly requires that several items be completed:

1. Preplan sequence of installation movements and connections.
2. Where equipment must be slid into final location, start with the left end shipping group and continue in sequence. Secondary conduits which stub-up above floor level may block sliding.
3. Protect equipment and external items (for example, instruments, relays, etc.) from damage during movement. Be sure to have smooth, unobstructed surfaces where the equipment is to be slid. Keep access openings clear.
4. Prepare for the connections across shipping splits before the equipment is moved into final position. Interunit bus supports and bus joint boots should be removed using side, rear and front access options as required.
   Note the mounting position and orientation and save hardware for use in reinstallation.
5. Thread coiled wires across shipping splits into interunit wire trough prior to moving equipment into its final position.
6. Shipping pallets and other packaging materials may be removed before the last move into the final position.

7. The equipment may be slid sideways up to 6" (152 mm) to join the shipping split. Any sliding force must be carefully applied across the bottom 4" (100 mm) of the switchgear side with proper cribbing to fully distribute the force across the full depth of side (refer to Figure 4: Moving indoor switchgear in obstructed areas without crane - final positioning on page 13) for illustration of this technique.
8. Refer to "Installation" section for additional important information.

Storage: indoor switchgear

When switchgear is not to be installed immediately, it should be unpacked, inspected within 15 days of receipt and stored in a clean dry location. Indoor switchgear is neither weather resistant nor drip resistant. Therefore, it should be stored indoors. If it is to be kept in a humid or unheated area, provide an adequate covering and place a heat source of approximately 500 watts output within each vertical section to prevent condensation. Space heaters are not standard equipment on indoor switchgear. Lubricate any moving parts, such as hinges, shutters, etc., if stored for an extended period of time. When batteries are supplied, connect them to a charger.

Storage: Shelter-Clad and Shelter-Clad+ outdoor switchgear

When it is necessary to store Shelter-Clad or Shelter-Clad+ outdoor equipment in a location exposing it to the weather or in a humid location, energize the space heaters provided within the sections and make certain that louvers and vents are uncovered to allow air to circulate. If at all possible, install the switchgear along with the aisle portion of the enclosure at the permanent location even though it may be some time before the equipment is used. If the equipment cannot be erected at the permanent location immediately, cover shipping splits to protect from the elements.

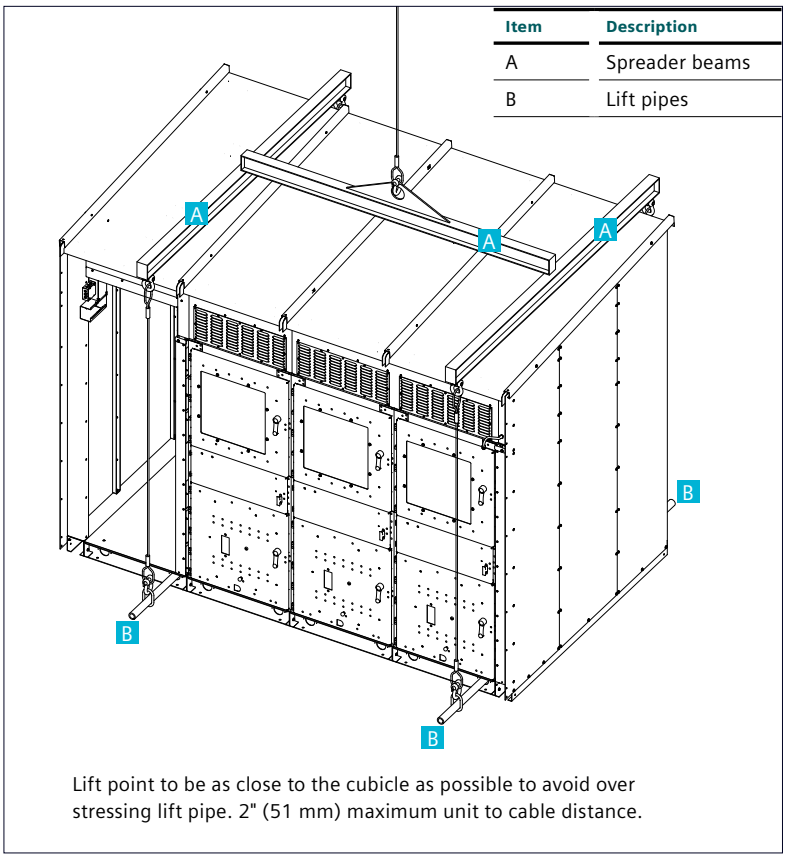

Item	Description
A	Spreader beams
B	Lift pipes

Lift point to be as close to the cubicle as possible to avoid over stressing lift pipe. 2" (51 mm) maximum unit to cable distance.

Figure 5: Lifting outdoor Shelter-Clad switchgear with crane

Regardless of which method of storage is used, energize the space heaters. Refer to wiring diagram drawing for space heater circuit connections. Cover all equipment for protection from the weather. Connect batteries (if provided) to a charger. Lubricate hinges, shutters and other moving parts.

Storage: type GMSG vacuum circuit breakers, ground and test devices and lift truck

Vacuum circuit breakers and ground and test devices, if not installed in their respective switchgear compartments, must be stored indoors. Outdoor storage of circuit breakers or ground and test devices (other than inside their respective switchgear compartments) is NOT RECOMMENDED.

Refer to type GMSG instruction manual E50001-F710-A231-X-4A00 for information on storage of circuit breakers or ground and test devices.

If furnished, the lift truck for handling circuit breakers or ground and test devices should be stored indoors. The lifting mechanism may be damaged by extended outdoor storage. For short-term (30 days or less) storage, the lift truck may be stored outdoors, provided that it is adequately covered to protect it from the weather. Lubricate lifting mechanism sliding or rolling elements.

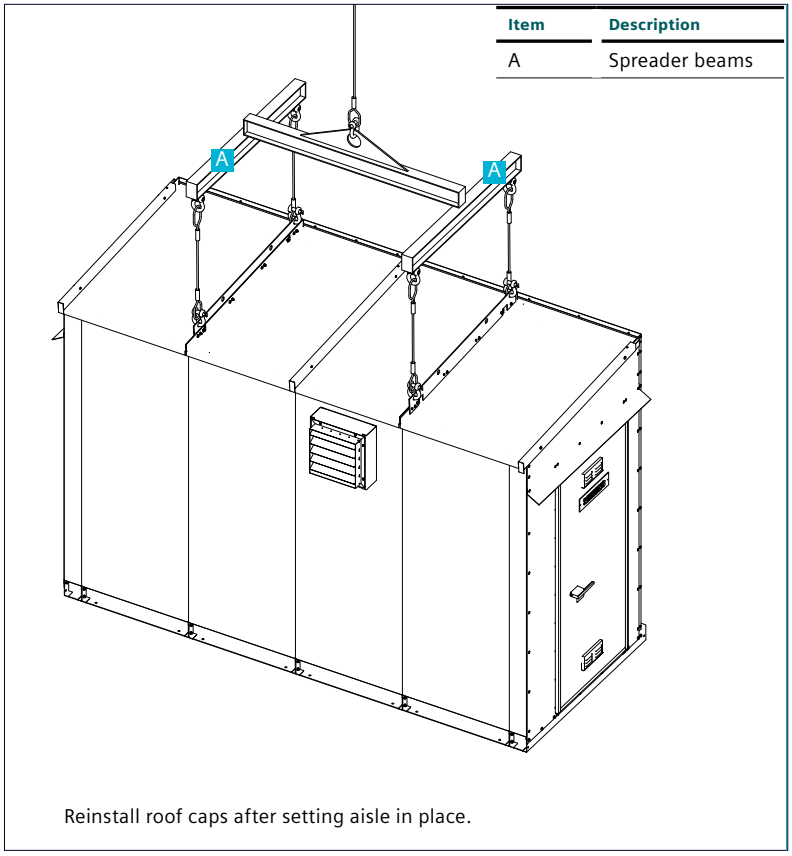

Item	Description
A	Spreader beams

Reinstall roof caps after setting aisle in place.

Figure 6: Moving the aisle portion of outdoor Shelter-Clad switchgear

Installation

Preparation for installation

Prior to installation of switchgear, study this instruction manual and the switchgear drawings, such as general arrangement, three-line diagram, schematic diagrams, wiring diagrams, installation instruction drawing, panel arrangement and panel arrangement bill of material, nameplate engraving list and accessories drawing. Special attention should be given to the foundation information contained in this instruction manual as well as the information provided on the equipment drawings. Be sure that the foundation conforms to the requirements described in this instruction manual and the general arrangement drawing.

Clearance required from arc-resistant indoor switchgear to walls or overhead obstructions

Vertical clearance above indoor arc-resistant switchgear must be at least 10" (25 cm) above the highest portion of the switchgear. When the switchgear is energized, maintenance or operating personnel must not be in the areas above the switchgear or adjacent to the top of the switchgear, and must not walk on or stand on the top of the switchgear.

Horizontal clearance from the indoor arc-resistant switchgear to any wall or any equipment or obstructions behind the switchgear must be provided as follows:

- If the switchgear is installed with working space to the rear of the equipment that could be occupied by maintenance or operating or other personnel, there must be at least 37" (94 cm) clearance provided from the rearmost extension of the ventilation openings on the switchgear. **Note:** NFPA 70 (NEC® may require greater clear working space.
- If the switchgear is installed in a power equipment center (or powerhouse), or similar outer enclosure, in which access to the rear of the equipment is provided by means of doors or removable panels on the outer enclosure, there must be at least 6" (15 cm) clearance between the rearmost extension of the ventilation openings on the switchgear and the enclosure or other obstructions.

Horizontal clearance from the indoor arc-resistant switchgear to any wall or equipment or other obstruction adjacent to the switchgear must be provided as follows:

- If the switchgear is installed with access working space beside the switchgear that could be occupied by maintenance or operating or other personnel, there must be at least 24" (61 cm) clearance provided from the side of the switchgear to the nearest wall, equipment or other obstruction. ***Note:*** *NFPA 70 (NEC® may require greater clear working space.*
- If the switchgear is installed with space beside the equipment and this space is designated and blocked so that maintenance or operating or other personnel are excluded from the space, there must be at least 6" (15 cm) clearance from the side of the switchgear to the nearest wall, equipment or other obstruction.

Foundation general requirements

Prior to installation of the switchgear, careful design, planning and construction of the foundation or base on which the switchgear will rest must be made. A thorough analysis and careful construction may alleviate many problems at the time of installation and during operation. It is important that a true and level surface be provided that is capable of supporting the weight of the switchgear and other related equipment.

If the switchgear cannot be lowered over conduits because of headroom or other restrictions, conduit couplings may be grouted in flush with the foundation, and conduit nipples added after the switchgear is in place.

Conduits should be capped during construction to prevent entry of dirt, moisture and vermin.

All sill channels, bed plates, shims and anchoring hardware are furnished by purchaser unless covered by contract.

If environmental conditions at the installation site require special anchoring provisions (for example, severe seismic requirements), those details will be shown on the drawings of the equipment and are not detailed in this instruction manual.

Indoor foundations

As it is difficult to obtain a true and level floor on a concrete slab, it is highly recommended that a minimum of 4" (102 mm) sill channels be grouted into the floor as shown in Figure 7: Anchoring indoor type GM-SG-AR switchgear on page 19. The surface of the sills should be slightly above floor level.

All primary and secondary cable entrance covers supplied with the switchgear that are removed during installation to be drilled to allow for conduit entry must be reinstalled to maintain the arc-resistant characteristics of the switchgear.

The surfaces of the sills must be level and in the same horizontal plane within 1/16" (1.6 mm). There should be no projection above this plane within the area covered by the switchgear. If the floor or sills do not meet this requirement, it will be necessary to use shims when installing the switchgear on the mounting surface.

Figure 7: Anchoring indoor type GM-SG-AR switchgear on page 19 illustrates the location for sill channels for anchoring indoor switchgear. Cubicles may be anchored to sills by use of 1/2" (or 12 mm) diameter anchor bolts or welded in position.

It is important that all openings between the switchgear and the support foundation be filled with grout to prevent escape of arcing byproducts in the event of an arcing fault. Recommended grout materials to prevent escape of arcing byproducts:

- Geocel 2000 construction caulking sealant, elastic co-polymer (gray), www.geocelusa.com
- GE Silicone II aluminum and metal (metallic gray), type GE 5050.

Outdoor foundations

Whichever type of foundation is used (for instance, concrete slab, sill channels, piers or pilings), it must have smooth and level surfaces. Surfaces supporting the switchgear must be in the same horizontal plane within 1/16" (1.6 mm). If these conditions are not met, it will be necessary to use shims when installing the switchgear.

For outdoor switchgear, support shall be provided at each end and at the side of every second cubicle and at shipping splits, so that the span between supports does not exceed 80" (2,032 mm).

Refer to Figure 8: Anchoring outdoor type SGM-SG-AR Shelter-Clad (single-aisle) switchgear on pages 21-24 and the switchgear general arrangement drawing for locations of support and anchoring points.

If pilings are used, the diameter is to be determined by purchaser; however, they should not be less than 12" (305 mm) diameter for sufficient contact, room for anchor bolts and grouting in of bed plates (if used). All shipping splits must be properly supported.

Any conduits that are installed in concrete must be perpendicular to the switchgear mounting surface. Conduits should extend a minimum of 6.75" (171 mm) to a maximum of 7.5" (190 mm) above the mounting surface. This will allow the conduit to enter the cubicle and exclude entry of water and rodents. Exception: If switchgear will be throat connected to a power transformer, refer to "Installing switchgear with throat connection to power transformer" for restrictions on height of conduits for both primary and secondary conduits.

All primary and secondary cable entrance covers supplied with the switchgear that are removed during installation to be drilled to allow for conduit entry must be reinstalled to maintain the arc-resistant characteristics of the switchgear.

Figure 8: Anchoring outdoor type SGM-SG-AR Shelter-Clad (single-aisle) switchgear on pages 21-24 shows the method of anchoring outdoor Shelter-Clad (walk-in) switchgear.

Important: *In the switchgear primary entrance area, steel reinforcing rods or mesh in concrete must not pass through the space shown on the general arrangement drawing, even though cored or bored holes in concrete may miss rods or mesh. A single phase of a system should not be encircled by ferrous metals.*

For Shelter-Clad+ switchgear, please refer to the general arrangement drawing and drawing with installation and handling instructions for the equipment as the equipment sizes and weights vary depending upon the specific design of the outdoor enclosure and the options included in the specific order.

For Shelter-Clad+ switchgear, the aisle and switchgear are shipped attached to each other on a common base. For Shelter-Clad+ switchgear, refer to the order-specific drawings for lifting, handling, support, and installation instructions.

Installing shipping sections

The proper method of installation depends on whether the switchgear has been shipped as one complete group or in two or more shipping sections. The general arrangement drawings will indicate the shipping sections, cubicle numbers and their location within the switchgear lineup. Sections are assembled and wired in accordance with the arrangement as in the final installation.

Before setting and erecting the cubicles, determine the correct location of each shipping group on the general arrangement drawing. Sweep the mounting surface to remove all dirt and debris.

Item	Description
A	The switchgear equipment represented was accurately aligned at the factory. This care ensures proper operation and fit of mating parts.
B	Support surfaces for the switchgear at each mounting bolt location must be level and in the same plane within 1/16 (1.52). There must not be any projection above this plane within the area covered by the switchgear cubicles. If concrete, grouted sill channels, columns, pier supports, etc., do not meet this requirement, it will be necessary to shim in the following manner. The six anchor bolt locations in each cubicle must freely rest in firm contact with the mounting support surfaces. There must not be any projection or obstruction in other areas which may distort cubicle. Do not force cubicle into firm contact by drawing down mounting bolts, as such drastic means will distort cubicles. Add 4 (102) square shims adjacent to anchor bolts until firm contact is achieved. Check each bolt location, six per cubicle, and tighten bolts.
C	After switchgear is leveled and permanently welded or bolted in place, apply asphalt or epoxy grout between the foundation and the cubicle floor. Slope the grout so the circuit breaker can easily be wheeled into and out of the cubicle.
D	When sill channels are used, user's floor must not project above mounting surface of channels at any point within the floor area covered by the switchgear cubicles.
E	Dimensions in inches (mm).
F	End sections only.

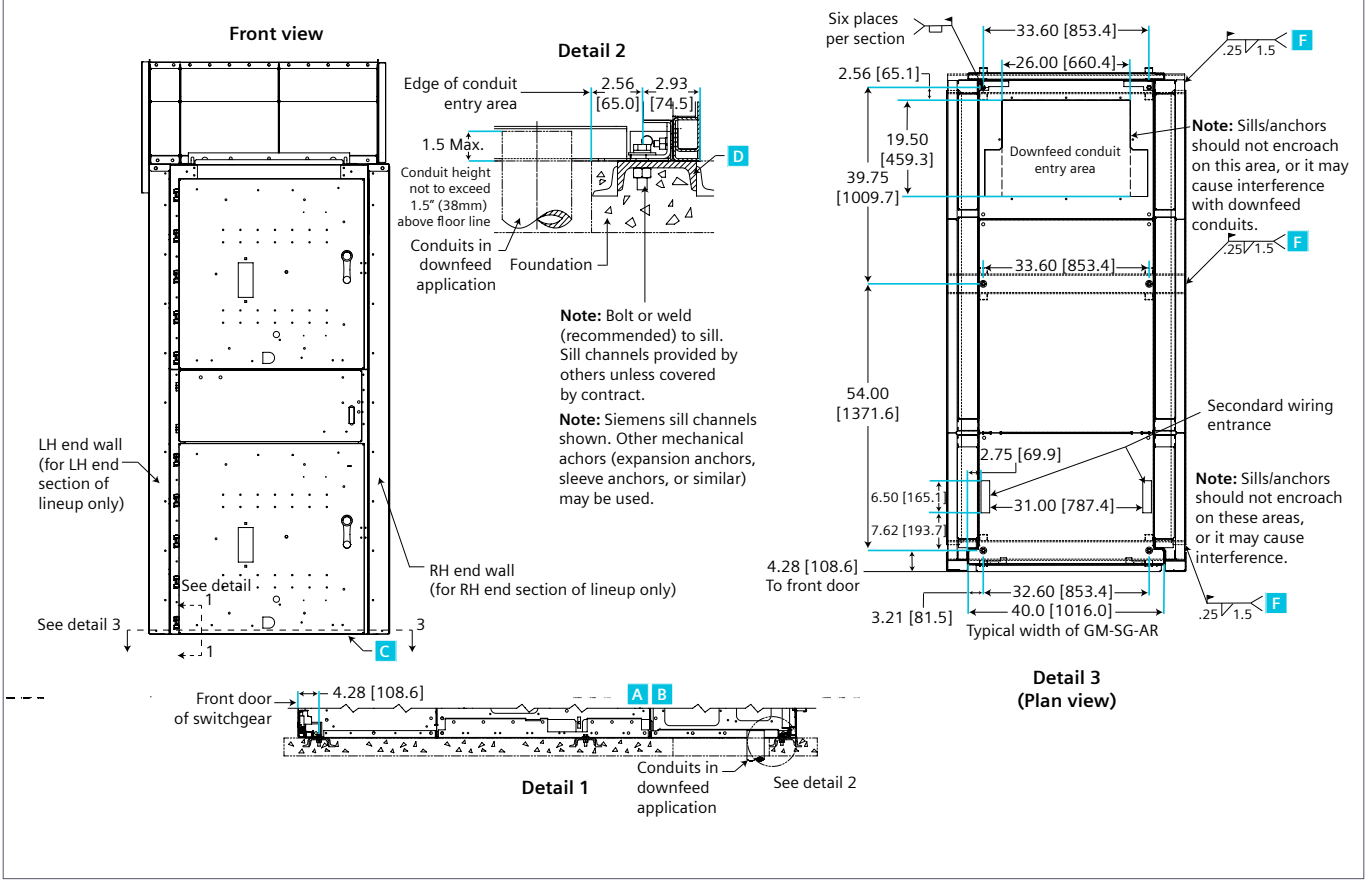

Figure 7a: Anchoring indoor type GM-SG-AR switchgear rated up to 17.5kV

Item	Description
A	Conduit height not to exceed 1.5 (38) above floor line.
B	Maximum cable areas: **Area A** - 20.75 x 8.06 (527 x 205) for cables from either bottom circuit breaker out top (when top circuit breaker also exits from top) or from top circuit breaker out bottom (when bottom circuit breaker also exits bottom). **Area B** - 20.75 x 10.81 (527 x 275) for cables from either top circuit breaker out top (when bottom circuit breaker also exits from top) or from bottom circuit breaker out bottom (when top circuit breaker also exits bottom). A**rea C** - 26.0 x 19.5 (660 x 495) for cables from either nearest circuit breaker out top (when only this circuit breaker exits from top) or from nearest circuit breaker out bottom (when only this circuit breaker exits bottom).
C	Rear access area 37.0 (940) recommended or greater by code or regulation.
D	Allow 30.0 (762) clearance for door swing on left-hand end.
E	Allow 72.0 (1,829) for circuit breaker withdrawal. Minimum drawout space for circuit breaker at floor level is 55.0 (1,397). Floor level must be level 48.0 (1,219) in front of switchgear to allow proper operation of circuit breaker lift truck.
F	Preferred location for secondary leads: bottom 2.12 (54); top 3.75 (95)
G	Preferred location for secondary leads: bottom 31.0 (787); top 27.75 (705) (left-hand side optional).

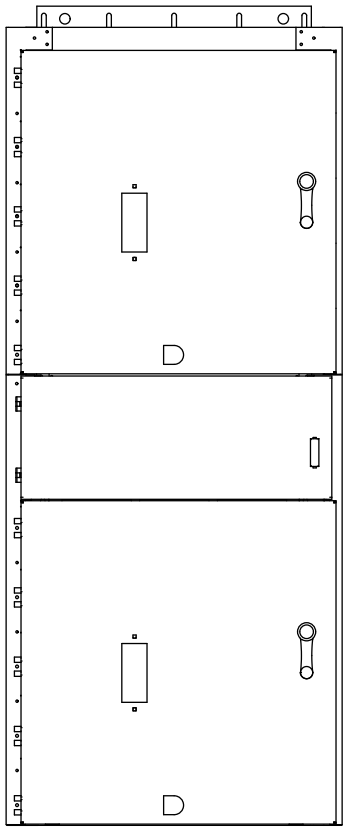

Front view

All primary and secondary cable entrance covers supplied with the switchgear that are removed during installation to be drilled to allow for conduit entry must be reinstalled to maintain the arc-resistant characteristics of the switchgear.

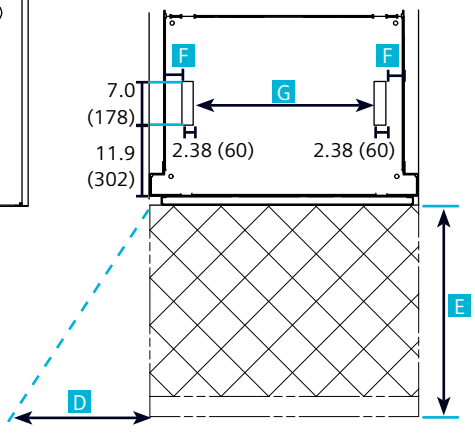

Circuit breaker withdrawal area
Plan view

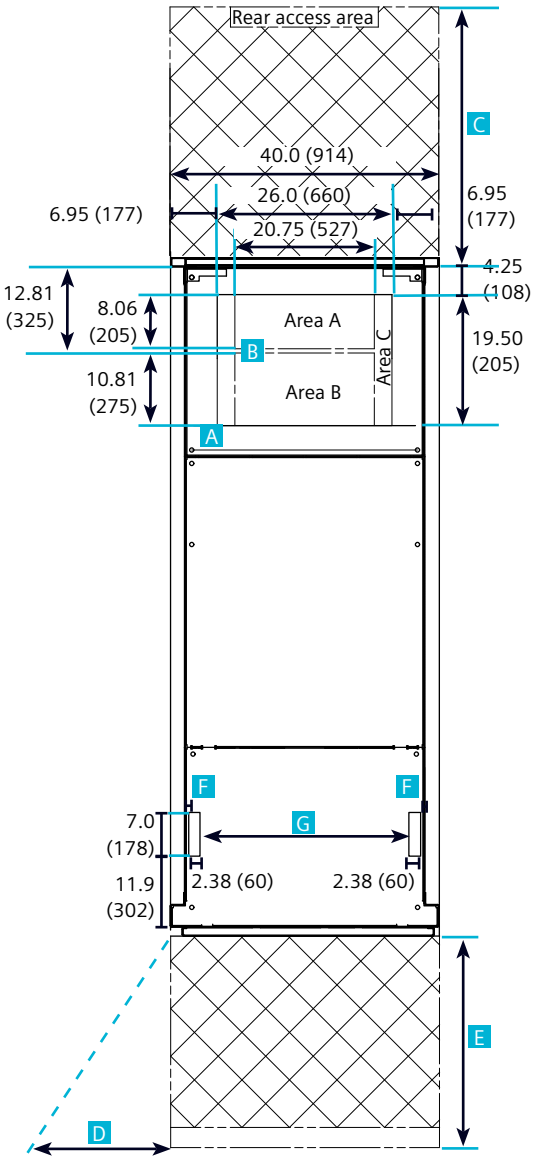

Circuit breaker withdrawal area
Plan view

Figure 7a: Anchoring indoor type GM-SG-AR switchgear rated up to 17.5kV (continued)

Item	Description
A	The switchgear equipment represented was accurately aligned at the factory. This care ensures proper operation and fit of mating parts.
B	Support surfaces for the switchgear at each mounting bolt location must be level and in the same plane within 1/16 (1.52). There must not be any projection above this plane within the area covered by the switchgear cubicles. If concrete, grouted sill channels, columns, pier supports, etc., do not meet this requirement, it will be necessary to shim in the following manner. The six anchor bolt locations in each cubicle must freely rest in firm contact with the mounting support surfaces. There must not be any projection or obstruction in other areas which may distort cubicle. Do not force cubicle into firm contact by drawing down mounting bolts, as such drastic means will distort cubicles. Add 4 (102) square shims adjacent to anchor bolts until firm contact is achieved. Check each bolt location, six per cubicle, and tighten bolts.
C	After switchgear is leveled and permanently welded or bolted in place, apply asphalt or epoxy grout between the foundation and the cubicle floor. Slope the grout so the circuit breaker can easily be wheeled into and out of the cubicle.
D	When sill channels are used, user's floor must not project above mounting surface of channels at any point within the floor area covered by the switchgear cubicles.
E	Dimensions in inches (mm).
F	End sections only.

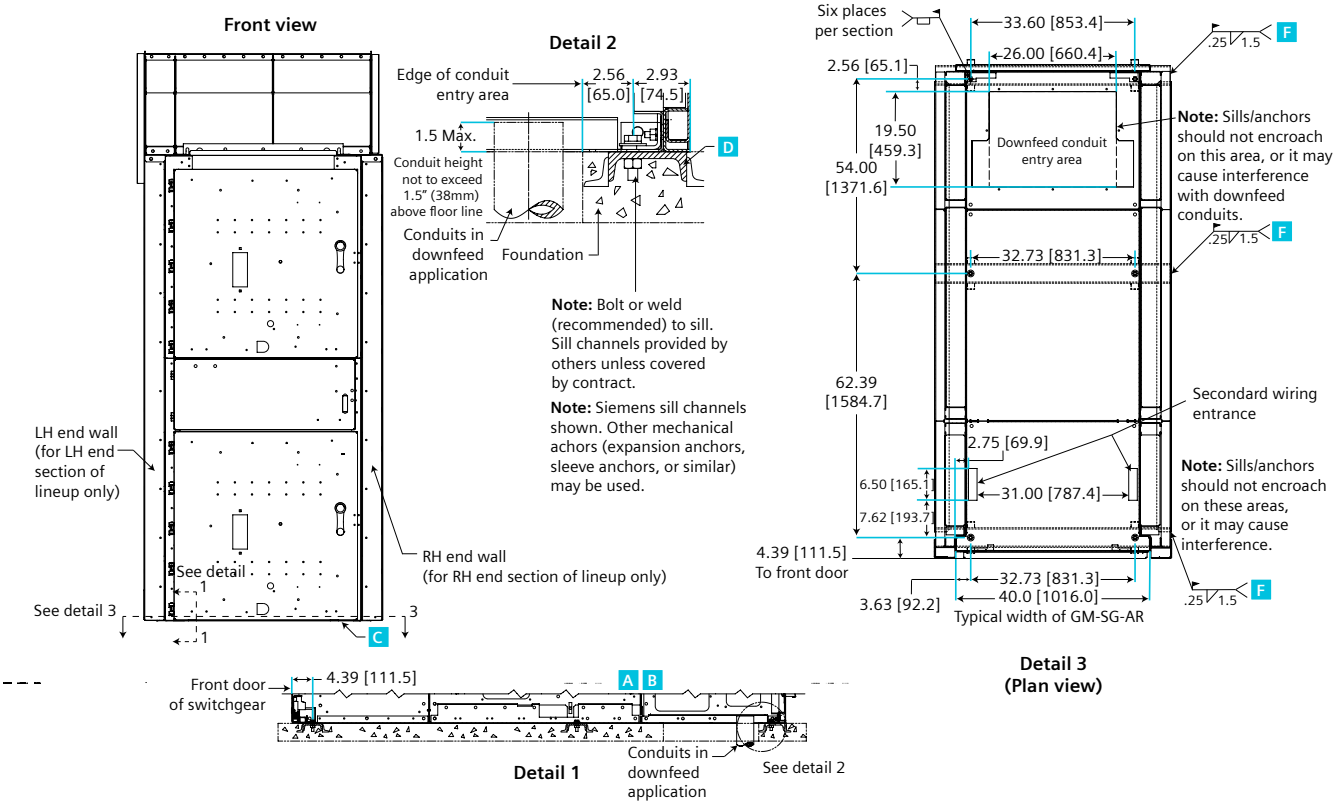

Figure 7b: Anchoring indoor type GM-SG-AR switchgear rated up to 27kV

Item	Description
A	Conduit height not to exceed 1.5 (38) above floor line.
B	Maximum cable areas: **Area A** - 20.75 x 8.06 (527 x 205) for cables from either bottom circuit breaker out top (when top circuit breaker also exits from top) or from top circuit breaker out bottom (when bottom circuit breaker also exits bottom). **Area B** - 20.75 x 10.81 (527 x 275) for cables from either top circuit breaker out top (when bottom circuit breaker also exits from top) or from bottom circuit breaker out bottom (when top circuit breaker also exits bottom). **Area C** - 26.0 x 19.5 (660 x 495) for cables from either nearest circuit breaker out top (when only this circuit breaker exits from top) or from nearest circuit breaker out bottom (when only this circuit breaker exits bottom).
C	Rear access area 37.0 (940) recommended or greater by code or regulation.
D	Allow 30.0 (762) clearance for door swing on left-hand end.
E	Allow 72.0 (1,829) for circuit breaker withdrawal. Minimum drawout space for circuit breaker at floor level is 55.0 (1,397). Floor level must be level 48.0 (1,219) in front of switchgear to allow proper operation of circuit breaker lift truck.
F	Preferred location for secondary leads: bottom 2.75 (69.9); top 2.25 (57.2)
G	Preferred location for secondary leads: bottom 31.0 (787); top 27.75 (705) (left-hand side optional).

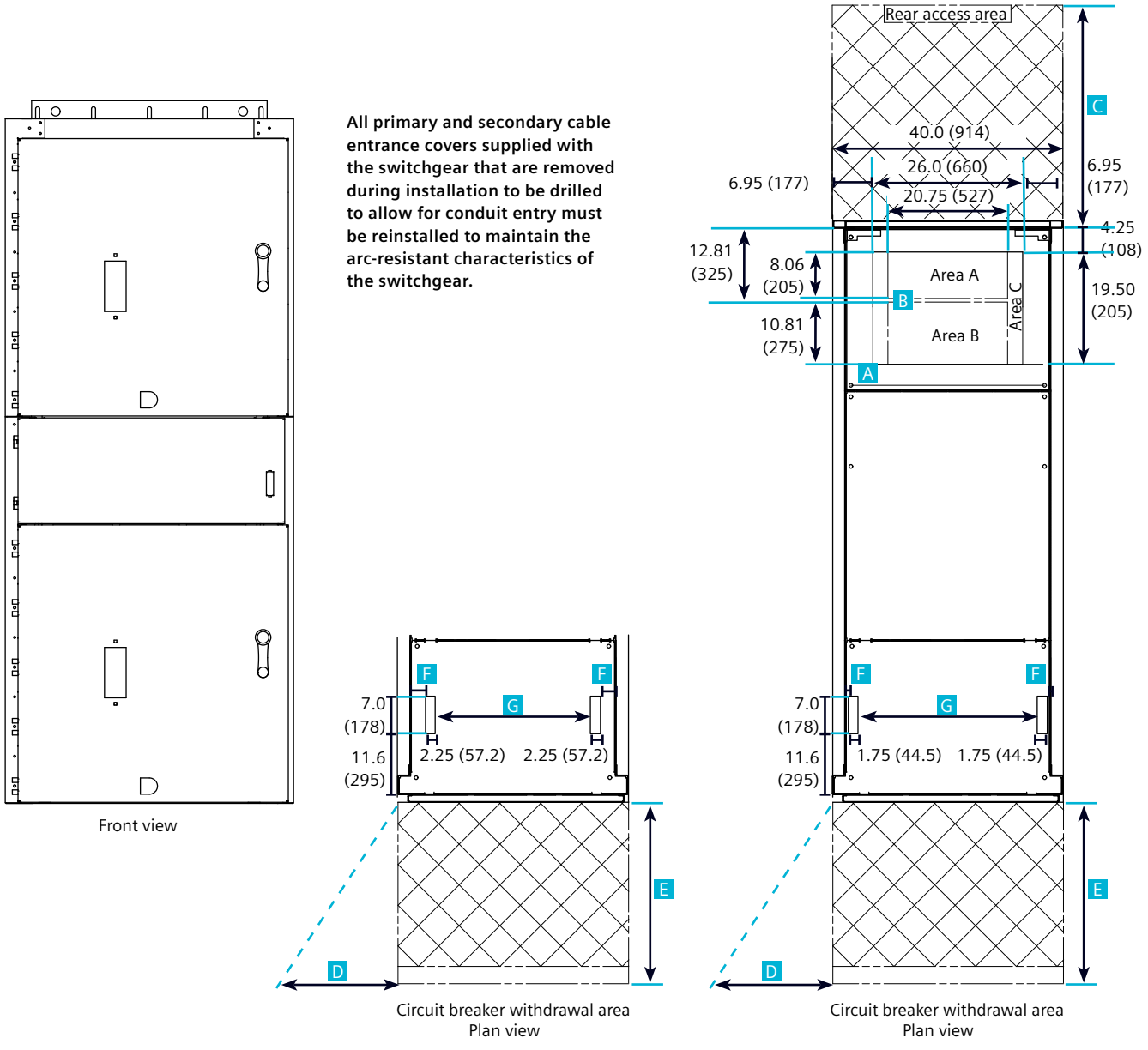

Figure 7b: Anchoring indoor type GM-SG-AR switchgear rated up to 27kV (continued)

Item	Description
A	The switchgear equipment represented was accurately aligned at the factory. This care ensures proper operation and fit of mating parts.
B	Support surfaces for the switchgear must be level and in the same plane within 1/16 (1.52). If concrete, grouted sill channels, columns, pier supports, etc., do not meet this requirement or if there are any projections higher than the support points and in line with the support members, shims must be installed in the following manner to provide equivalent true surface for switchgear support.
C	The switchgear must be supported at each end, at the shipping splits, and along the length of its base at points not to exceeding a span of 80" (2032 mm). If columns are used, the diameter of these columns is to be determined by the customer for proper loading. However, they must not be less than 12 (305) in diameter for sufficient contact with base (refer to Figures 7 and 8 on pages 18, 21, and 23).
D	Allowing for space for shipping split and space for grouting in of bed plate if used. All shipping splits must be supported and taken into consideration when foundation is constructed.
E	If shims are required, use 4 (102) square strips placed between the base and the foundation in the anchor bolt area where they will be clamped in place.
F	Should location of 2.5 (64) XXS strong lift pipe (furnished by others) interfere with user's primary conduit, it is suggested that a conduit coupling be installed in this location. The coupling should not project more than 1.0 (25) above the surface of foundation. After switchgear has been positioned, a conduit nipple may be threaded into coupling.
G	Dimensions in inches (mm).

Seismic

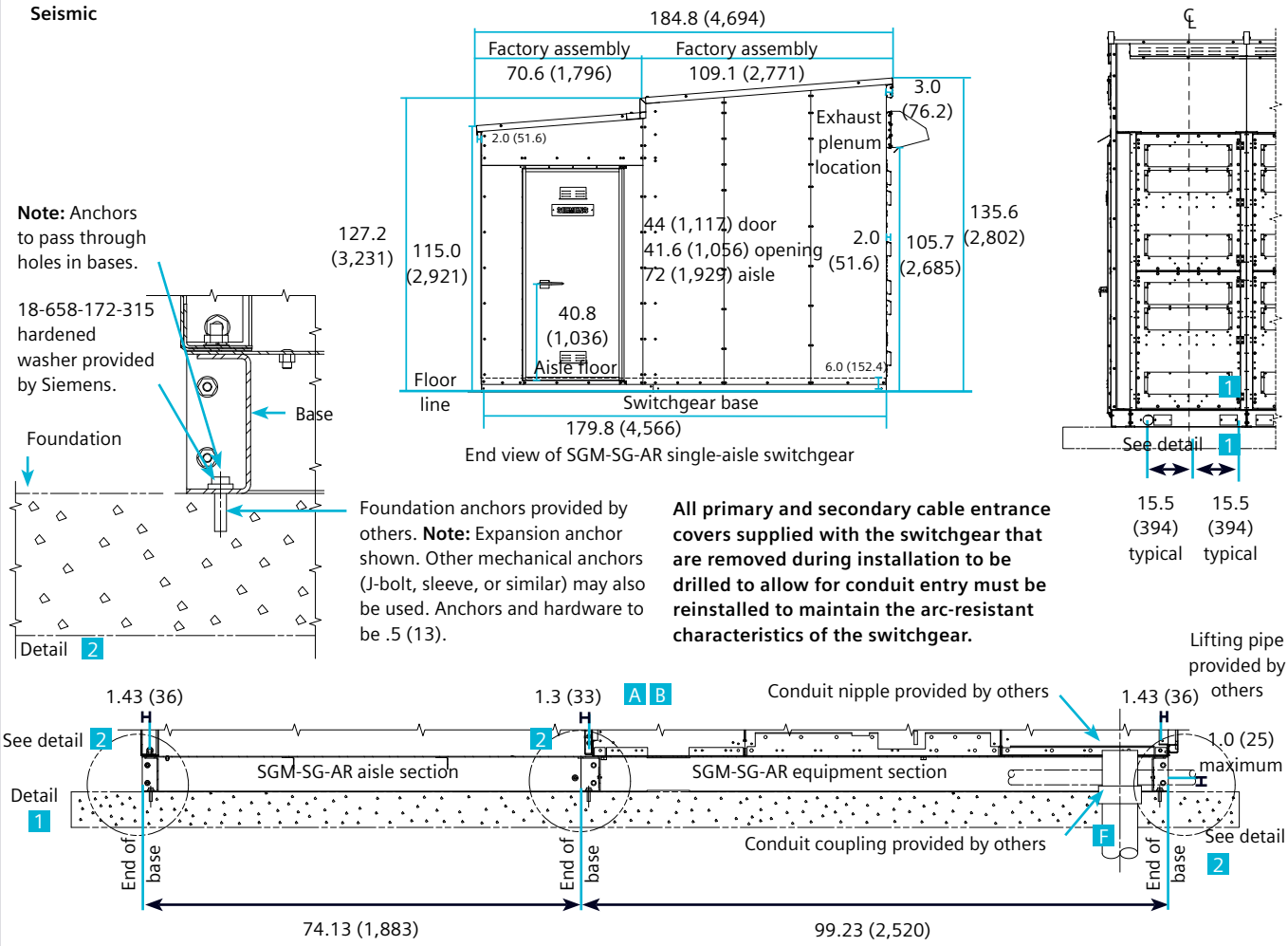

Figure 8a: Anchoring outdoor type SGM-SG-AR Shelter-Clad single-aisle switchgear rated up to 17.5kV

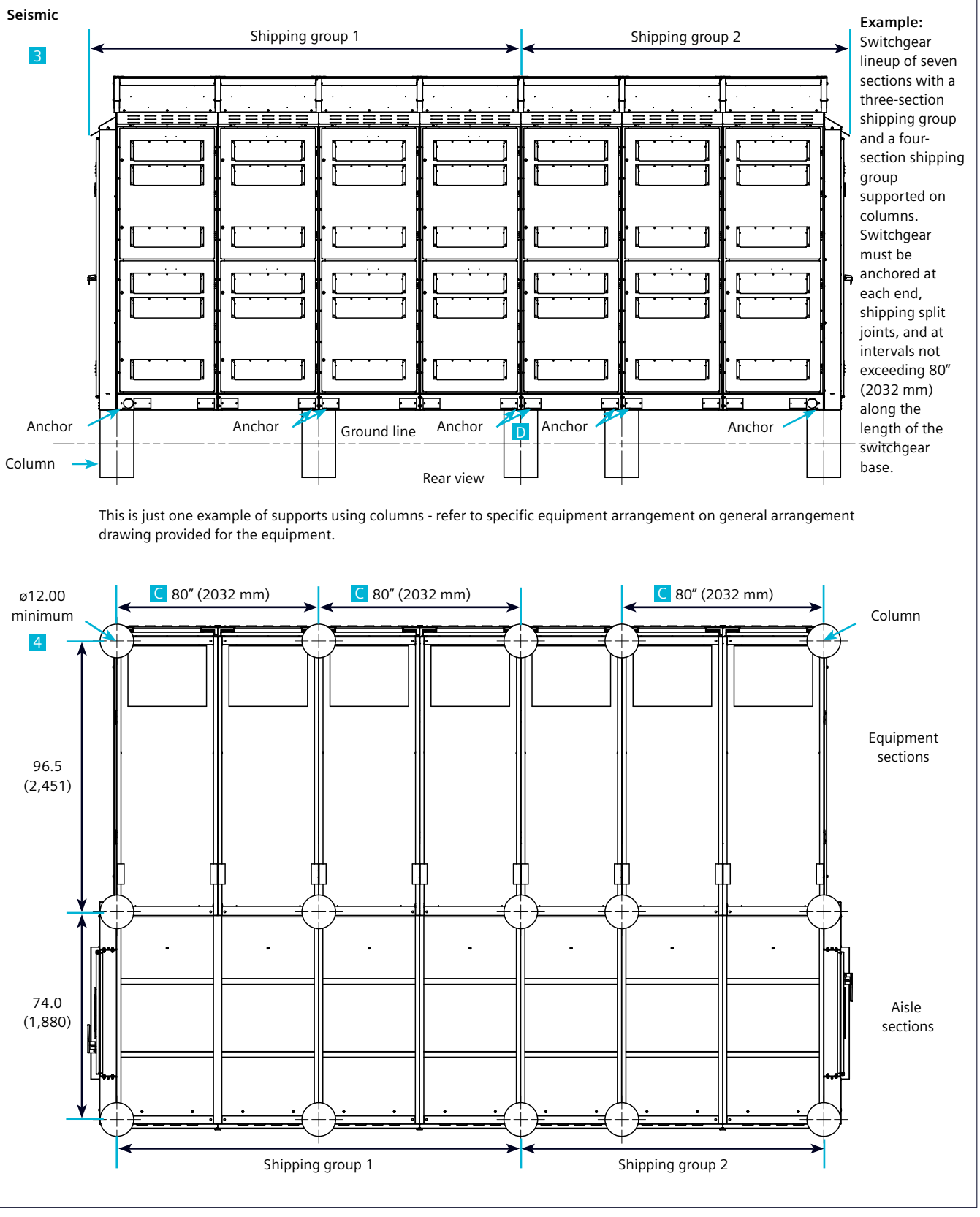

Figure 8a: Anchoring outdoor type SGM-SG-AR Shelter-Clad single-aisle switchgear rated up to 17.5kV (continued)

Item	Description
A	The switchgear equipment represented was accurately aligned at the factory. This care ensures proper operation and fit of mating parts.
B	Support surfaces for the switchgear must be level and in the same plane within 1/16 (1.52). If concrete, grouted sill channels, columns, pier supports, etc., do not meet this requirement or if there are any projections higher than the support points and in line with the support members, shims must be installed in the following manner to provide equivalent true surface for switchgear support.
C	The switchgear must be supported at each end, at the shipping splits, and along the length of its base at points not to exceeding a span of 80" (2032 mm). If columns are used, the diameter of these columns is to be determined by the customer for proper loading. However, they must not be less than 12 (305) in diameter for sufficient contact with base (refer to Figures 7 and 8 on pages 18, 21, and 23).
D	Allowing for space for shipping split and space for grouting in of bed plate if used. All shipping splits must be supported and taken into consideration when foundation is constructed.
E	If shims are required, use 4 (102) square strips placed between the base and the foundation in the anchor bolt area where they will be clamped in place.
F	Should location of 2.5 (64) XXS strong lift pipe (furnished by others) interfere with user's primary conduit, it is suggested that a conduit coupling be installed in this location. The coupling should not project more than 1.0 (25) above the surface of foundation. After switchgear has been positioned, a conduit nipple may be threaded into coupling.
G	Dimensions in inches (mm).

Non-seismic

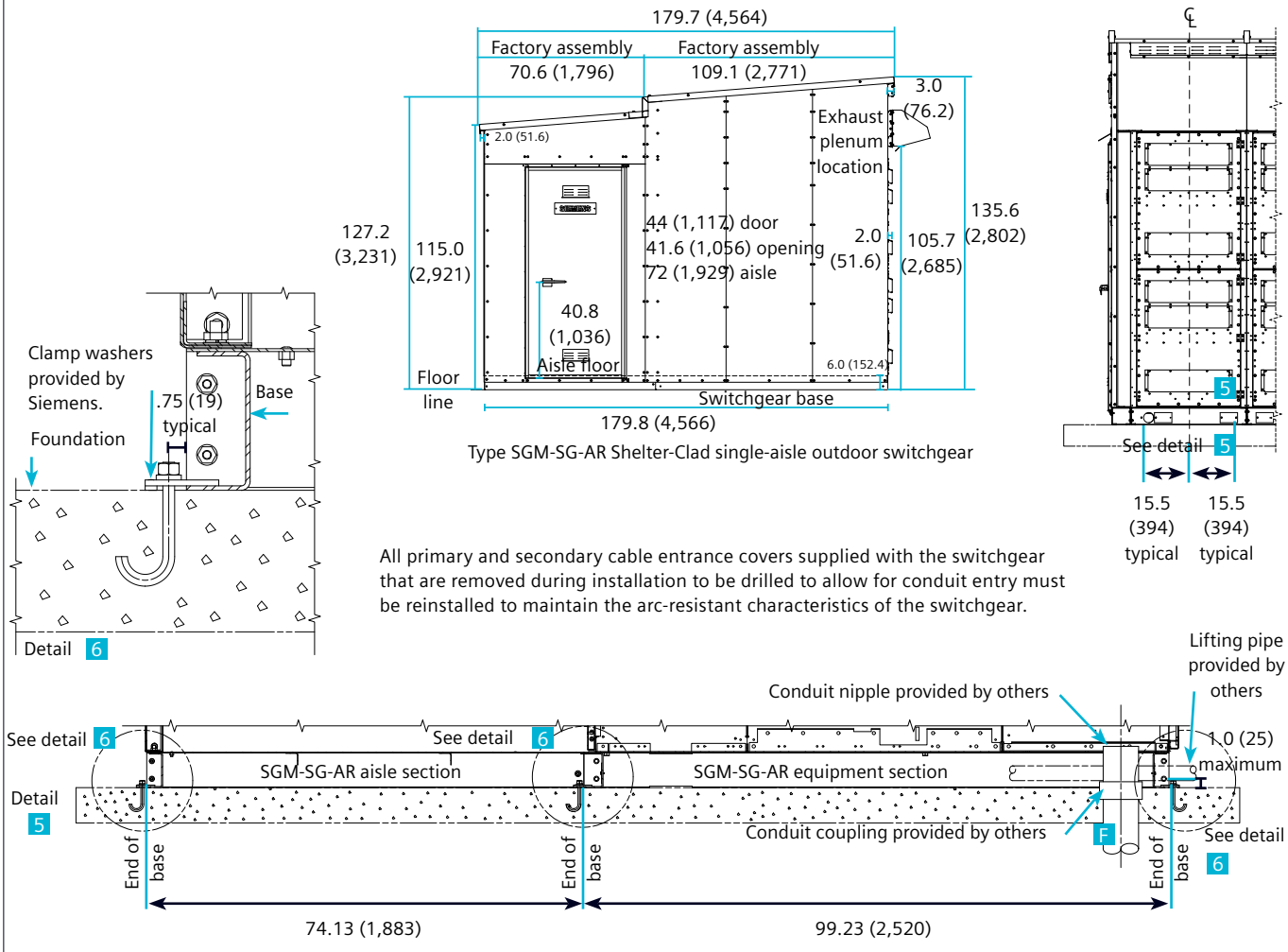

Figure 8a: Anchoring outdoor type SGM-SG-AR Shelter-Clad single-aisle switchgear rated up to 17.5kV (continued)

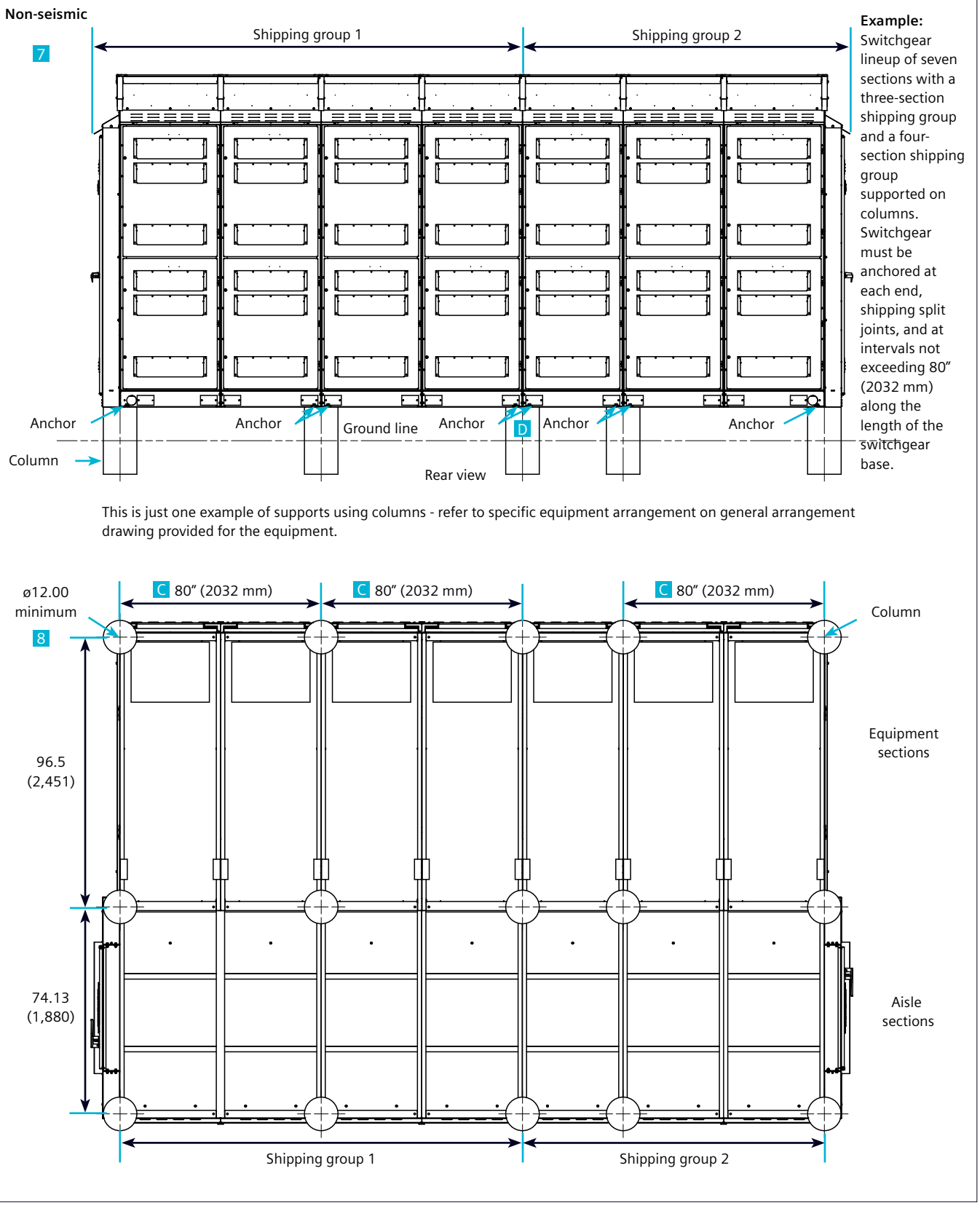

Figure 8a: Anchoring outdoor type SGM-SG-AR Shelter-Clad single-aisle switchgear rated up to 17.5kV (continued)

Item	Description
A	The switchgear equipment represented was accurately aligned at the factory. This care ensures proper operation and fit of mating parts.
B	Support surfaces for the switchgear must be level and in the same plane within 1/16 (1.52). If concrete, grouted sill channels, columns, pier supports, etc., do not meet this requirement or if there are any projections higher than the support points and in line with the support members, shims must be installed in the following manner to provide equivalent true surface for switchgear support.
C	The switchgear must be supported at each end, at the shipping splits, and along the length of its base at points not to exceeding a span of 80" (2032 mm). If columns are used, the diameter of these columns is to be determined by the customer for proper loading. However, they must not be less than 12 (305) in diameter for sufficient contact with base (refer to Figures 7 and 8 on pages 18, 21, and 23).
D	Allowing for space for shipping split and space for grouting in of bed plate if used. All shipping splits must be supported and taken into consideration when foundation is constructed.
E	If shims are required, use 4 (102) square strips placed between the base and the foundation in the anchor bolt area where they will be clamped in place.
F	Should location of 2.5 (64) XXS strong lift pipe (furnished by others) interfere with user's primary conduit, it is suggested that a conduit coupling be installed in this location. The coupling should not project more than 1.0 (25) above the surface of foundation. After switchgear has been positioned, a conduit nipple may be threaded into coupling.
G	Dimensions in inches (mm).

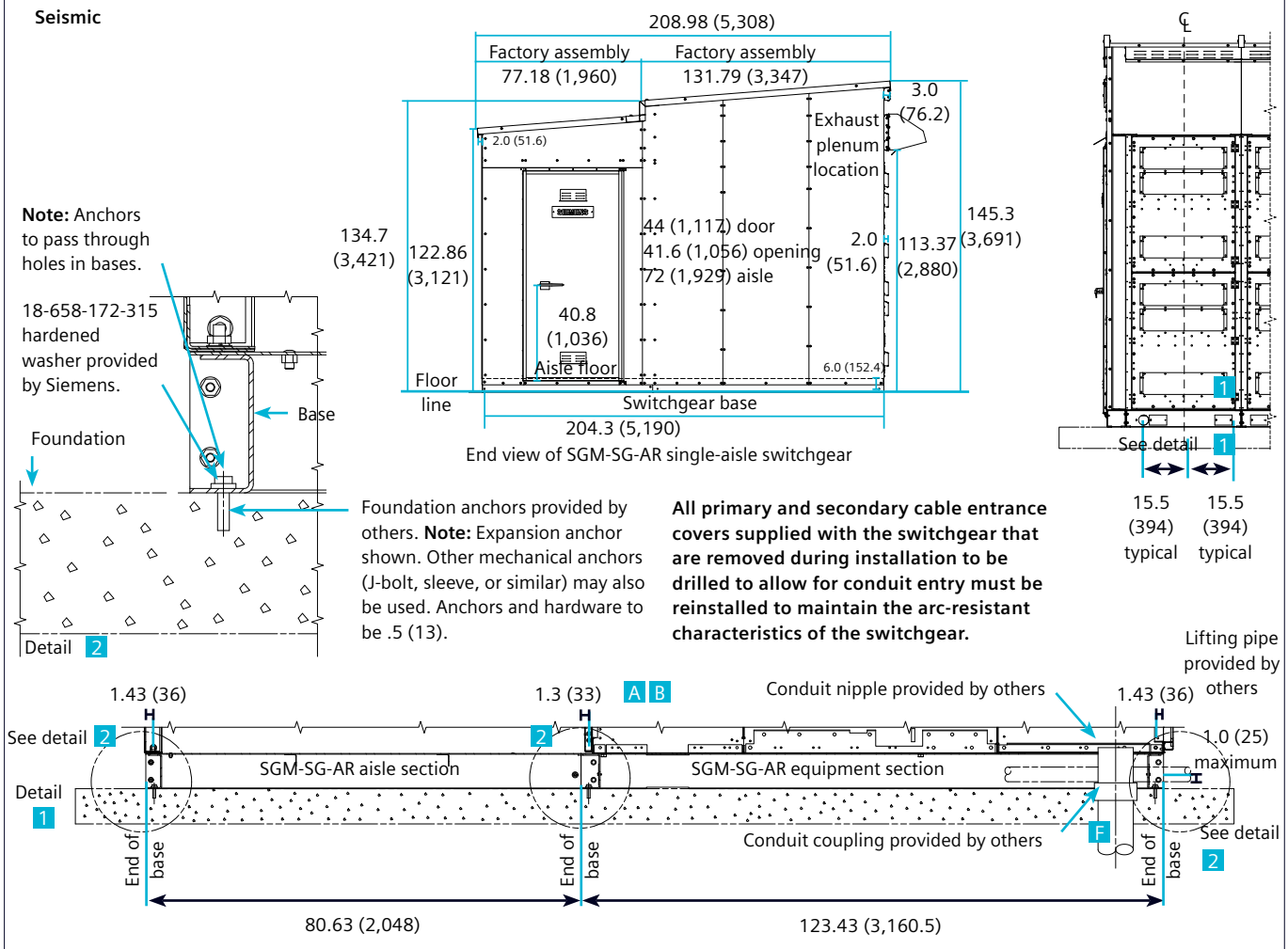

Figure 8b: Anchoring outdoor type SGM-SG-AR Shelter-Clad single-aisle switchgear rated 27kV

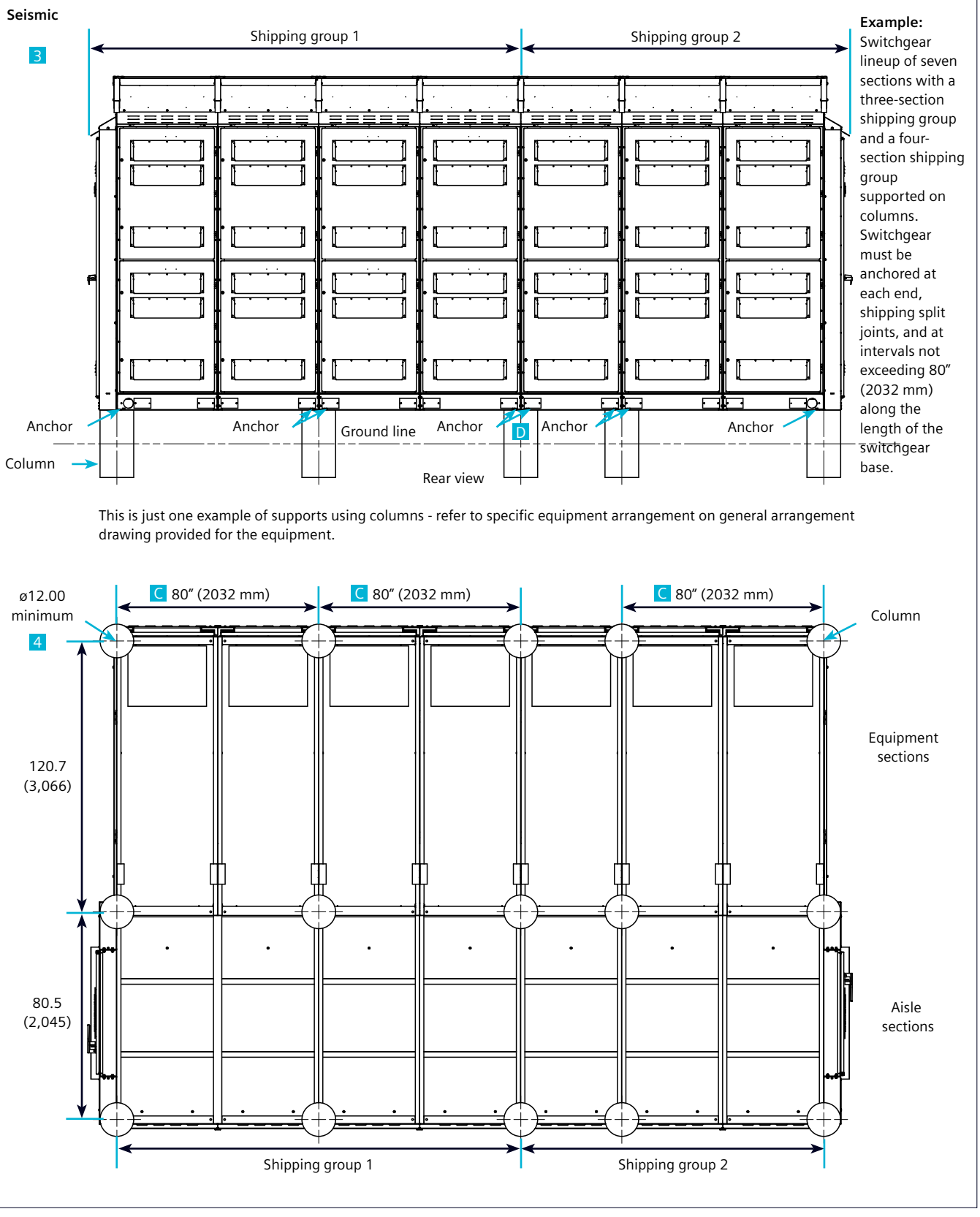

Figure 8b: Anchoring outdoor type SGM-SG-AR Shelter-Clad single-aisle switchgear rated 27kV (continued)

Item	Description
A	The switchgear equipment represented was accurately aligned at the factory. This care ensures proper operation and fit of mating parts.
B	Support surfaces for the switchgear must be level and in the same plane within 1/16 (1.52). If concrete, grouted sill channels, columns, pier supports, etc., do not meet this requirement or if there are any projections higher than the support points and in line with the support members, shims must be installed in the following manner to provide equivalent true surface for switchgear support.
C	The switchgear must be supported at each end, at the shipping splits, and along the length of its base at points not to exceeding a span of 80" (2032 mm). If columns are used, the diameter of these columns is to be determined by the customer for proper loading. However, they must not be less than 12 (305) in diameter for sufficient contact with base (refer to Figures 7 and 8 on pages 18, 21, and 23).
D	Allowing for space for shipping split and space for grouting in of bed plate if used. All shipping splits must be supported and taken into consideration when foundation is constructed.
E	If shims are required, use 4 (102) square strips placed between the base and the foundation in the anchor bolt area where they will be clamped in place.
F	Should location of 2.5 (64) XXS strong lift pipe (furnished by others) interfere with user's primary conduit, it is suggested that a conduit coupling be installed in this location. The coupling should not project more than 1.0 (25) above the surface of foundation. After switchgear has been positioned, a conduit nipple may be threaded into coupling.
G	Dimensions in inches (mm).

Non-seismic

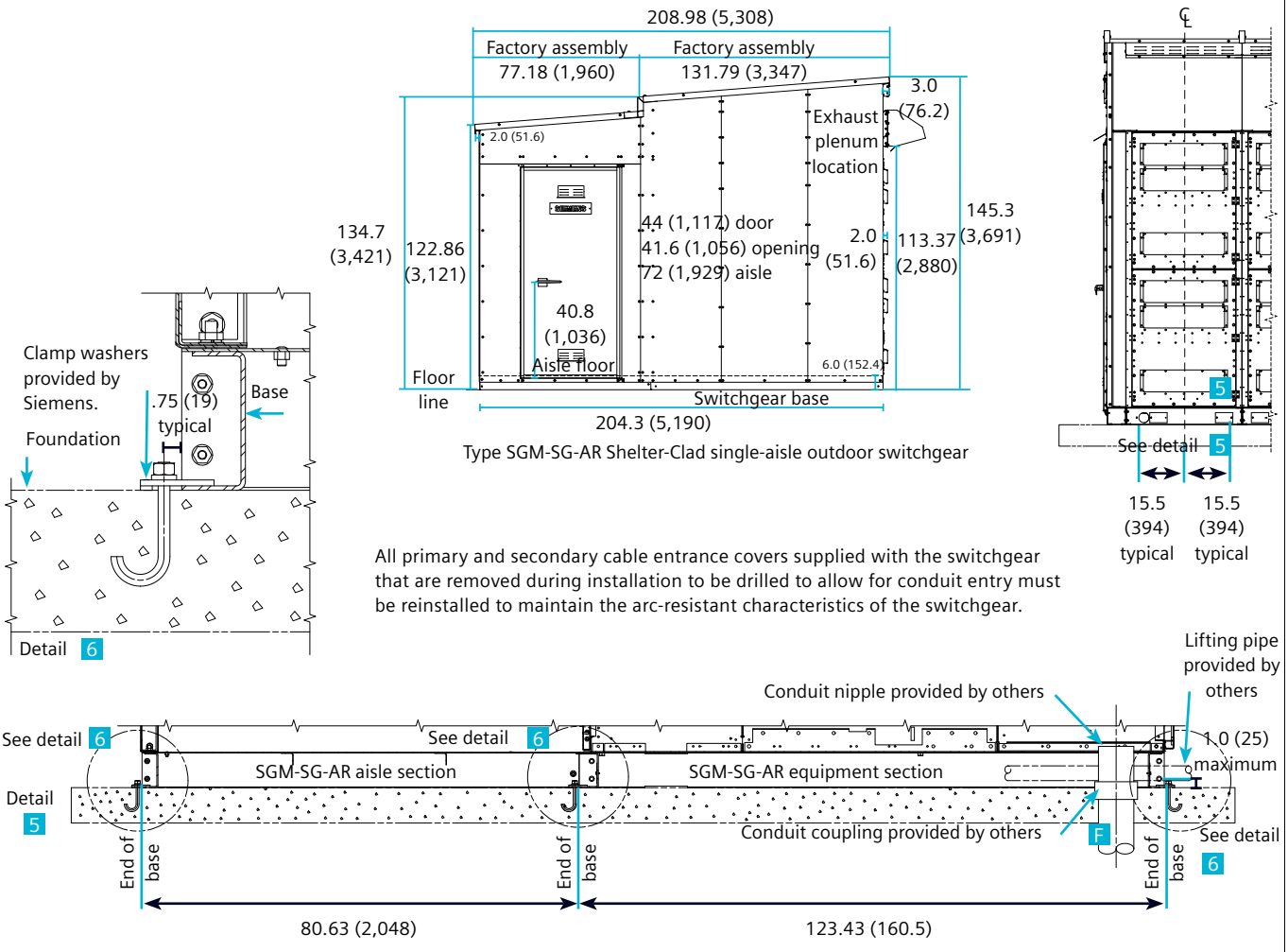

Figure 8b: Anchoring outdoor type SGM-SG-AR Shelter-Clad single-aisle switchgear rated 27kV (continued)

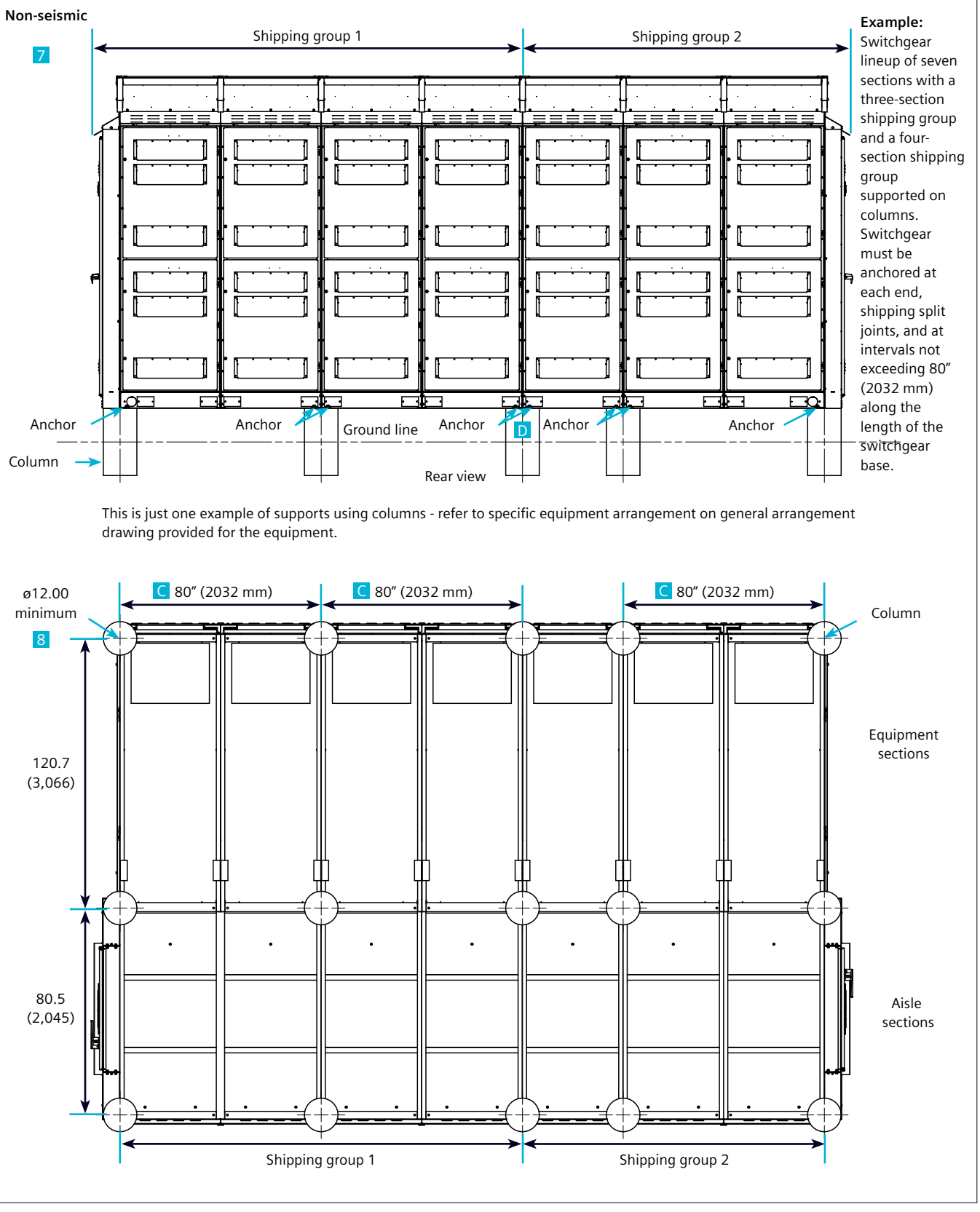

Figure 8b: Anchoring outdoor type SGM-SG-AR Shelter-Clad single-aisle switchgear rated 27kV (continued)

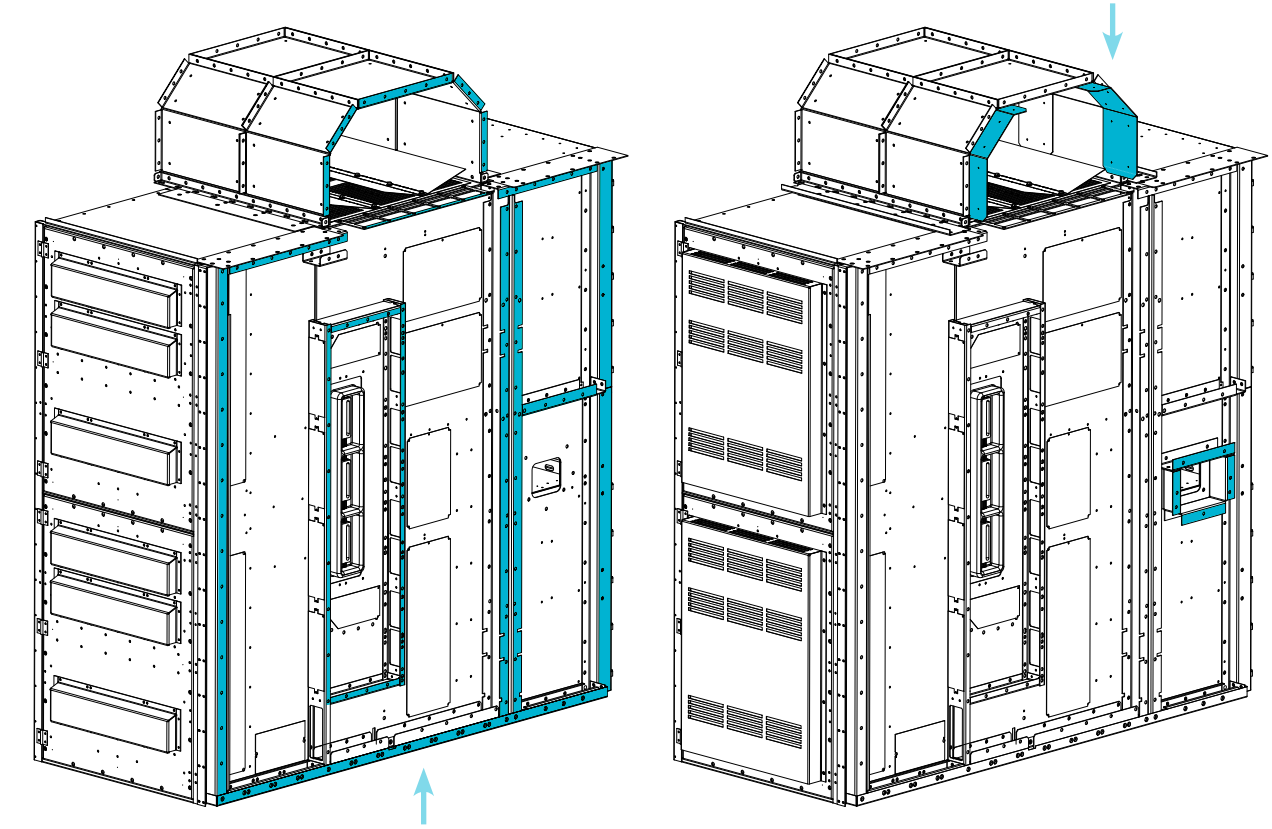

NOTE: *connection bolts are used in highlighted locations*

Actual quantity and location of connection bolts varies depending on specific equipment included in each cubicle.

Figure 9: Interunit bolting locations

Installing switchgear with throat connection to power transformer

When a transformer is connected to switchgear using a throat connection, the switchgear should be positioned next to the transformer as shown in Figure 10: Throat connection on page 26. It is very desirable that the switchgear be placed in position before positioning the transformer.

Note: *Transformer throat connections that have not been qualified for resistance to internal arcing are not considered to be arc-resistant.*

If the transformer must be positioned first, conduit couplings should be provided in the switchgear foundation so that the conduits do not extend more than 2" (51 mm) above the switchgear mounting surface.

The switchgear should be positioned near the transformer and just high enough to clear the secondary conduits but low enough so that the throat on the switchgear will clear the opening in the transformer terminal chamber (throat). When the switchgear is properly positioned so that the switchgear throat will fit into the transformer throat, move the switchgear toward the transformer until the switchgear throat extends into the transformer throat and the switchgear anchor bolts and conduits are correctly aligned. With all points now in alignment, conduit caps and floor plate conduit covers removed, carefully lower the switchgear into its permanent position.

After all leveling and anchoring operations for the switchgear are complete, draw the sliding throat collar of the switchgear throat into place against the transformer throat. Tighten the throat hardware only enough to compress the gasket.

Anchoring, leveling and assembling indoor switchgear

Indoor switchgear shipping groups are held in true alignment by bolts holding the vertical sections to each other. Figure 9: Interunit bolting locations on page 25 shows the location of the interunit fasteners used to attach sections together.

The entire shipping group is to be anchored and leveled as a single element without loosening any hardware until entire shipping group is leveled and anchored.

1. The switchgear equipment was accurately aligned at the factory. This alignment ensures proper operation and fit of mating parts. Supporting surfaces for the switchgear at each anchoring bolt location must be level and in the same plane within 0.06" (1.6 mm). There must not be any projection above this plane within the area covered by the switchgear cubicles.

   If the floor or grouted sill channels do not meet this requirement, it will be necessary to shim in the following manner. The six anchor bolt locations (refer to Figure 7: Anchoring indoor type GM-SG-AR switchgear on page 19) in each cubicle must freely rest in firm contact with the mounting support surfaces. There must not be any projection or obstruction in other areas that may distort the cubicle.

   Do not force cubicles in firm contact by drawing down anchoring bolts because such drastic means will distort the cubicles. Add 4" (102 mm) square shims adjacent to anchor bolts until firm contact is achieved. Check each anchor bolt location, six per cubicle. Refer to Figure 7: Anchoring indoor type GM-SG-AR switchgear on page 19.

2. Tighten anchor bolts or weld the switchgear to sills.

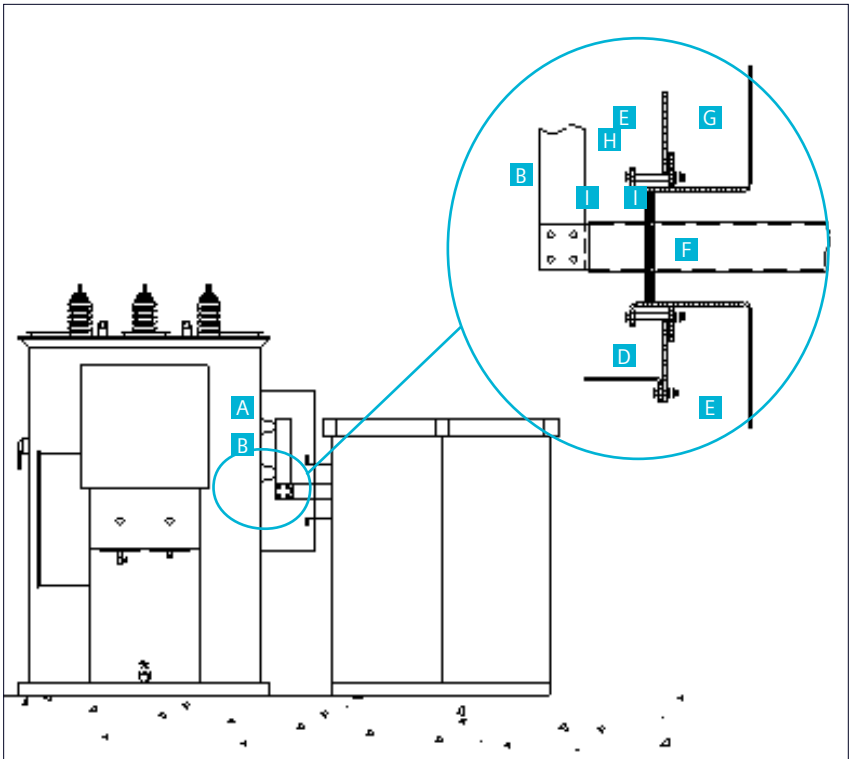

Item	Description	Item	Description
A	Transformer terminal chamber	F	Bus extension
B	Riser	G	Switchgear throat
C	Access cover	H	Terminal chamber wall
D	Gasket	I	Tighten hardware to draw sliding collar into final position
E	Sliding collar		

Figure 10: Throat connection

3. If the lineup consists of multiple groups, remove the interunit hardware that was supplied installed and move the next group into position with the front of units in line and tight against the adjacent group. Do not bolt groups together at this time. Check that the cubicles are in firm contact with the foundation at each corner and anchor point and that bolt holes are in alignment. Refer to Figure 9: Interunit bolting locations on page 25. Add 4" (102 mm) square shims as necessary. Tighten the anchor bolts.

4. Bolt the groups together by starting at the inner most interunit bolt locations (refer to Figure 9: Interunit bolting locations on page 25) and working outward towards the front and the rear of the equipment.

Make sure that all of the interunit bolts are started in the captive nuts before tightening 3/8-16 SAE Grade 5 cap screws to 25-40 lb-ft (34-54 Nm). If the captive nuts are not aligned with the clearance hole for the bolt, loosen the hardware in the adjacent section to allow the structural member between the sections to move to achieve alignment.

Important: *Do not attempt to force alignment of the interunit bolt location by prying on the captive nut as it may become dislodged.*

5. After all groups have been bolted together and permanently welded or bolted in place, apply asphalt or epoxy grout in front of the switchgear and apply grout between the foundation and the cubicle floor around the entire perimeter of the equipment. This will provide a seal between the equipment and the foundation to prevent any arcing exhaust products from being directed into an area intended to be protected. Recommended grout materials to prevent escape of arcing byproducts:

- Geocel 2000 construction caulking sealant, elastic co-polymer (gray), www.geocelusa.com
- GE Silicone II aluminum and metal (metallic gray), type GE 5050.
  Slope the grout in front of the equipment so the circuit breakers can be easily wheeled in and out of the cubicle as shown in Figure 7: Anchoring indoor type GM-SG-AR switchgear on page 19.

6. After installation is complete, the lifting bar between units must be removed and the lift plates must be either pushed down inside the units or removed from the units.

Note: *That bolts inside the units that clamp the lift plates in place must be loosened to allow movement of the lift plates (or removed for removal of the plates) and must be re-installed and retightened after the plates have been lowered or removed. Refer to Figure 11: Lift plate cover installation. Torque the 1/2-13 SAE Grade 5 hardware to 50-75 lb-ft (68-102 Nm).*

7. Install the lift plate covers as shown on Figure 11: Lift plate cover installation. The covers are shipped in a separate package and will be listed on the "Accessories" drawing. (This drawing is listed on the "Reference drawing list".) Torque the 3/8-16 SAE Grade 5 cap screws to 25-40 lb-ft (34-54 Nm).

Important: *The lift plate covers must be installed to maintain the integrity of the equipment during an internal arcing event.*

For up to 50 kA

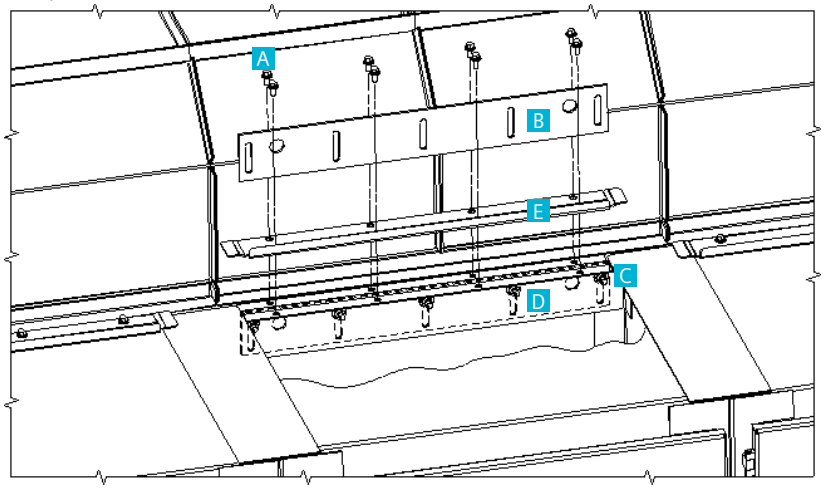

For 63 kA

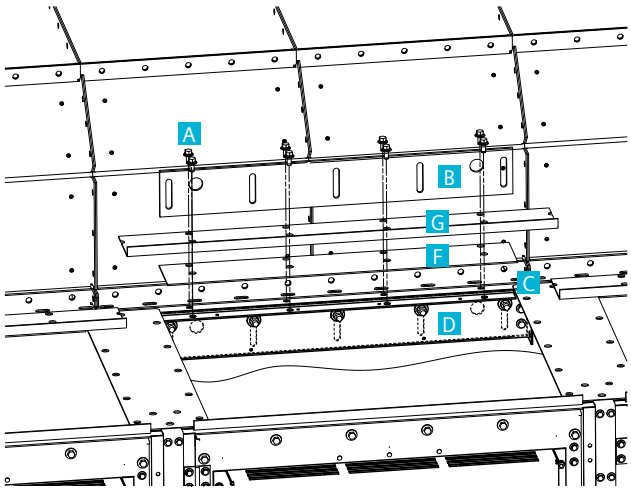

Item	Description
A	3/8 - 16 hardware
B	Lift plate removed
C	1/2 - 13 hardware
D	Lift plate lowered
E	Lift plate cover
F	Lift plate inner cover
G	Lift plate outer cover

Figure 11: Lift plate cover installation

⚠ WARNING

Heavy weight.

Can result in death, serious injury or property damage.

Observe all handling instructions in this instruction manual to prevent tipping or dropping of equipment.

Assembling and installing the exhaust plenum

Depending on the site requirements and the number of cubicles, several exhaust plenums may have to be installed to exhaust arcing gases out of the switchgear room. Consult the "General arrangement drawing" to determine quantity and location of plenums required. The exhaust plenum is modular in construction with sections up to 36" (914 mm) long weighing up to 160 lbs (72.5 kg) each. Each section has provisions for lifting with a crane and the required assembly hardware is pre-installed. Each section is shipped in a separate package and will be listed on the "Accessories" drawing (this drawing is listed on the "Reference drawing list").

Temporary supports are required during the installation process and they should not be removed until the entire exhaust plenum is assembled and the final supports are installed.

Important: *Exhaust plenum must be routed outside the switchgear room and to an area where personnel will not be present when the equipment is energized.*

Connecting the exhaust plenum to the Pressure Relief Channel (PRC)

Refer to Figure 12: Connection of exhaust plenum to PRC on page 29.

1. Remove the row of 3/8-16 hardware furthest from the PRC on the interface flange.
2. Loosen the row of hardware closest to the PRC on the interface flange but do not remove the hardware.
3. Insert the plenum section into the PRC interface flange making sure the inner plates of the interface flange are inside the plenum section and the other end of the plenum section is adequately supported.
4. Reinstall the row of hardware removed in step 1 passing it through the plenum section and torque both rows of hardware to 25-40 lb-ft (34-54 Nm).

Joining exhaust plenum sections

Refer to Figure 13: Exhaust plenum installation on page 30.

1. Remove the outer row of 3/8-16 hardware from the interface flange of the first plenum section that has been attached to the PRC.
2. Loosen the inner row of hardware on the interface flange of the first plenum section but do not remove the hardware.

3. Insert the second plenum section into the interface flange of the first plenum section making sure the inner plates of the interface flange are inside the second plenum section and the other end of the next plenum section is adequately supported.
4. Reinstall the row of hardware removed in step 1 passing it through the second plenum section and torque both rows of hardware to 25-40 lb-ft (34-54 Nm).
5. Repeat steps 1 through 4 making sure to adequately support the entire length of the plenum (at two-section intervals maximum and at the end of the plenum furthest from the PRC) during the process.

Note: *The last plenum section before the exhaust exit section passes through the wall must have a minimum clearance of 0.38" (10 mm) to the inner surface of the wall. Refer to Figure 14: Installation of exhaust plenum exit on page 31.*

Installing exhaust plenum exit

Refer to Figure 14: Installation of exhaust plenum exit on page 31.

1. Remove the outer row of 3/8-16 hardware from the interface flange of the final plenum section of the run.
2. Loosen the inner row of hardware on the interface flange of the final plenum section of the run but do not remove the hardware.
3. From outside of the building exterior wall, pass the plenum exit section through the wall and insert it into the interface flange of the final plenum section of the run making sure the inner plates of the interface flange are inside the plenum exit section and the hinge side of the exhaust flap is on top.
4. Reinstall the row of hardware removed in step 1 passing it through the plenum exit section and torque both rows of hardware to 25-40 lb-ft (34-54 Nm).

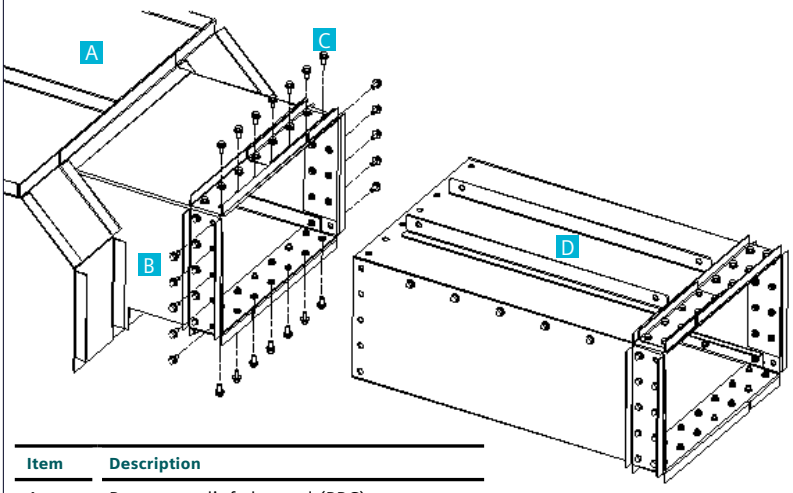

Item	Description
A	Pressure relief channel (PRC)
B	PRC interfacer
C	24 3/8-16 hardware (Refer to step 1)
D	Exhaust plenum section

Figure 12: Connection of exhaust plenum to PRC

⚠ WARNING

Heavy weight.

Can result in death, serious injury or property damage.

Observe all handling instructions in this instruction manual to prevent tipping or dropping of equipment.

5. Ensure that there are no obstructions around the exhaust flap of the plenum exit that would prevent proper operation of the flap.
6. Apply weather sealant (caulk) around the perimeter of the plenum exit section as shown in Figure 14: Installation of exhaust plenum exit on page 31 to provide a weather tight seal.

Important: *Exhaust plenum must be routed outside the switchgear room and to an area where personnel will not be present when the equipment is energized.*

Supporting the exhaust plenum run

The exhaust plenum run is not self- supporting and must have no more than two joints between supports (in other words, no more than 72" (1,827 mm) between supports). There should only be one plenum joint between a support and the PRC interface and there should only be one plenum joint between a support and the location where the plenum passes through an exterior building wall as shown in Figure 14: Installation of exhaust plenum exit on page 31. The plenum supports are not supplied by Siemens and must be supplied by the purchaser or the installing contractor.

Supports for the plenum may be either from the floor or from above. Each plenum section is furnished with angles that have 5/8" (16 mm) diameter holes in four locations on the top and bottom that can be used for attaching to the plenum section. The types of supports that are commonly used for metal-enclosed bus ducts or cable trays (with adequate capacity to support the weight of the plenum sections) can be used.

Note: *For installations where conditions exist that could promote condensation formation inside the plenum, slightly slope the plenum away from the equipment during installation.*

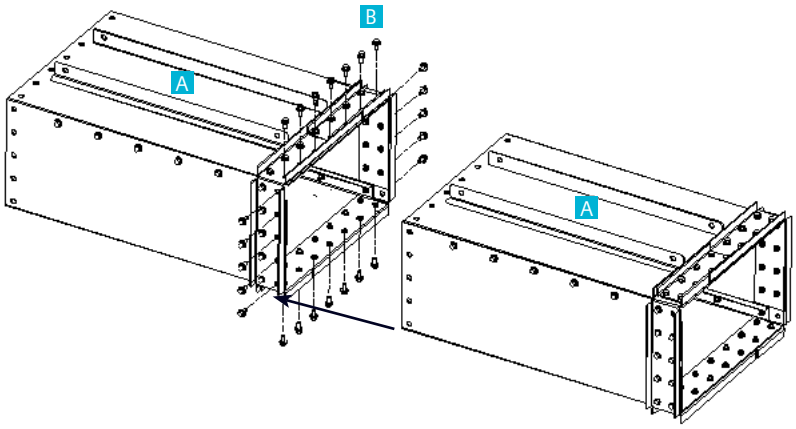

Item	Description
A	Exhaust plenum section
B	24 3/8-16 hardware (Refer to step 1)

Figure 13: Exhaust plenum installation

⚠ WARNING

Heavy weight.

Can result in death, serious injury or property damage.

Observe all handling instructions in this instruction manual to prevent tipping or dropping of equipment.

The temporary supports used during the plenum installation process should not be removed until the entire exhaust plenum is assembled and the final supports are installed.

Item	Description
A	Exhaust plenum section
B	24 3/8-16 hardware
C	Exhaust exit section
D	Exhaust flap
E	Screw may be removed if inside a wall
F	Exhaust flap open
G	Wall
H	Field caulk all around
I	Fenced (or otherwise protected) area with restricted access
J	Exterior (building)
K	Exhaust plenum exit

The detail below shows the minimum recommended clearance from the exhaust plenum exit. When the equipment is operating, this area should be kept clear of personnel and/or combustible or flammable materials.

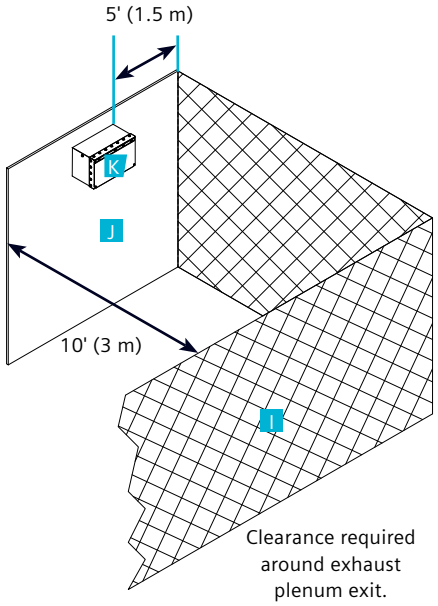

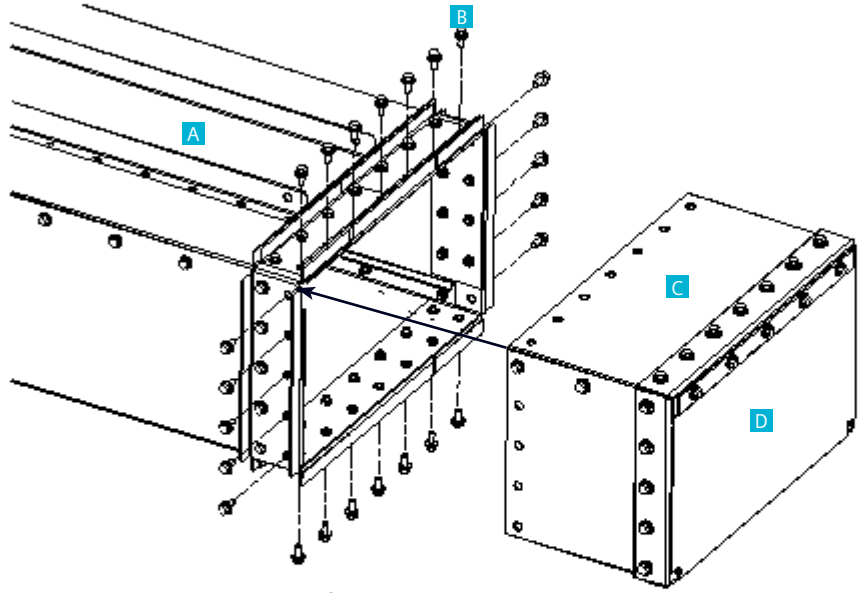

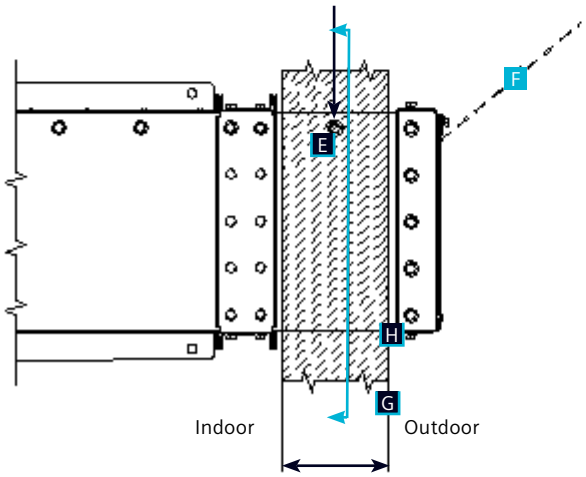

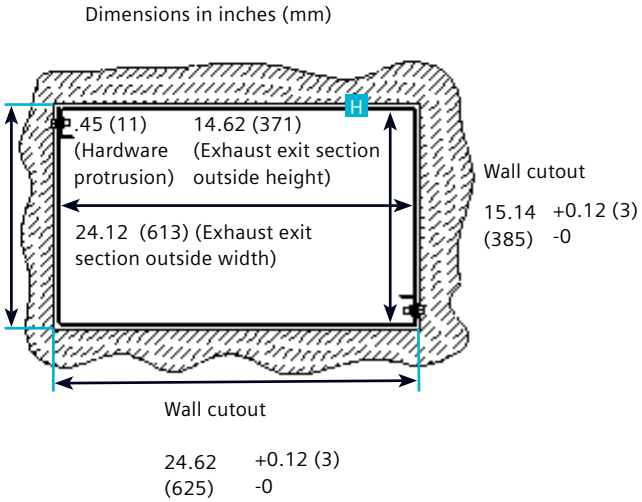

Figure 14: Installation of exhaust plenum exit

Anchoring, leveling and assembling outdoor Shelter-Clad switchgear

In Shelter-Clad arrangements, the switchgear (as shipped) is true and in correct position relative to its support base. The formed floor sections are a permanent part of the switchgear structures and the aisle groups, and are not to be loosened or moved from position.

Verify the anchor bolt locations in the concrete and all points shown in the general arrangement plan view. Sweep the foundation to make certain it is free of pebbles and other debris. Check the general arrangement drawing for positioning of the switchgear and sequence of installation if arrangement consists of more than one shipping group.

Single-aisle, Shelter-Clad cubicles are shipped in several sections, depending on the size of the overall installation. The switchgear structures are shipped in one or more shipping groups, and the factory-assembled aisle is similarly shipped in one or more shipping groups (refer to Figures 1 and 2 of Figure 15: Instructions for factory-assembled-aisle type SGM-SG-AR on pages 36-40).

The equipment should be installed by placing the switchgear structures (refer to Figure 2 of Figure 15: Instructions for factory-assembled-aisle type SGM-SG-AR on pages 36-40) in position first, and making the connections between them, and placing the aisle groups (refer to Figures 1 and 2 of Figure 15: Instructions for factory-assembled-aisle type SGM-SG-AR on pages 36-40) in position after the switchgear structures are completed.

Determine the correct location of each shipping group as shown on the general arrangement drawing. Ordinarily, the switchgear structures section on the right-hand end of the lineup should be installed first, followed by the other switchgear structures proceeding to the left end of the complete lineup. Make connections between shipping groups before placing subsequent shipping groups in place.

The aisle sections should not be placed in position until all of the switchgear structures sections have been placed and the interconnections made.

Follow all instructions as given for foundations and support of the switchgear.

Installation procedure:

1. Installing the right-side equipment shipping section (refer to Figure 3 of Figure 15: Instructions for factory-assembled-aisle type SGM-SG-AR on pages 36-40).

   1a. Prepare foundation: remove nuts from all anchor bolts, remove caps from all secondary and primary conduit stubs, and clean away any debris. Prepare switchgear: remove covers from secondary conduit openings, and remove covers from primary conduit openings. Retain covers for later use.

   1b. Move the switchgear structures shipping group for the right-hand end of the lineup into position.

   1c. Anchor and level the section, shimming as needed to obtain proper support of the equipment. Anchoring (and shimming) locations are shown in Figure 8: Anchoring outdoor type SGM-SG-AR Shelter-Clad (single-aisle) switchgear on pages 21-24. Also refer to Figure 4 of Figure 15: Instructions for factory-assembled-aisle type SGM-SG-AR on pages 36-40) and the general arrangement drawing provided with the equipment.

   1d. Supporting surfaces for the switchgear's 6" (152 mm) base must be level and in the same plane within 0.06" (1.6 mm). If concrete, grouted channels, pier supports, etc., do not meet this requirement or if there is any projection higher than the support points in line with the base, shims must be installed in the following manner to provide an equivalent true surface for switchgear support.

Outdoor switchgear groups that have been assembled on a 6" (162 mm) base must be supported along this base with a span between support points not exceeding 72" (1,829 mm). Support must be provided at each end, at the side of every second cubicle, and at shipping splits. If shims are required, use 4" (100 mm) square strips placed between the bottom of the base and the foundation in the anchor bolt area where they will be clamped firmly in place. Do not force cubicle in firm contact by drawing down anchoring bolts as such drastic means will distort cubicles.

1e. Add clamp washers and nuts to anchor bolts and tighten securely. For equipment required to withstand seismic disturbances, clamp washers are not used. Instead, install anchoring hardware through the holes in the base channel as shown in Figure 4 of Figure 15: Instructions for factory-assembled-aisle type SGM-SG-AR on pages 36-40.

1f. Temporarily remove the roof panel above the left-end panel of the first shipping group (refer to Figure 3 of Figure 15: Instructions for factory-assembled-aisle type SGM-SG-AR on pages 36-40) to allow access to the hardware to secure interconnections to the first unit of the next shipping group.

2. Installing the next equipment shipping section (refer to Figure 5 of Figure 15: Instructions for factory-assembled-aisle type SGM-SG-AR on pages 36-40).

2a. Remove the interunit hardware that was supplied installed and move the next switchgear structures shipping section into place.

The front edge of the cubicle base should be in line with those of the previously installed group. This will ensure a good fit with the aisle-floor plates. Make certain that the end of the group being installed is tightly against the previously installed group.

Check that the cubicles are in firm contact with the supports and anchor points and that bolt holes for interconnections (refer to Figure 9: Interunit bolting locations on page 25) are in alignment. Repeat steps 1.d to 1.f and install all interconnection hardware.

2b. Install interconnections hardware (refer to Figure 9: Interunit bolting locations on page 25 and Figures 6 and 7 of Figure 15: Instructions for factory-assembled-aisle type SGM-SG-AR on pages 36-40). Access to the hardware on the top of the switchgear through the roof panel removed in step 1.f of the left-end unit of the first shipping group, and through the vent panel above the upper door of the right-hand end unit of the second shipping group (refer to Figure 7 of Figure 15: Instructions for factory-assembled-aisle type SGM-SG-AR on pages 36-40).

Start at the innermost interunit bolt locations and work outward towards the front and the rear of the equipment. Make sure that all of the interunit bolts are started in the captive nuts before tightening 3/8-16 SAE Grade 5 cap screws to 25-40 lb-ft (34-54 NM). If the captive nuts are not aligned with the clearance hole for the bolt, loosen the hardware in the adjacent section to allow the structural member between the sections to move to achieve alignment.

Important: *Do not attempt to force alignment of the interunit bolt location by prying on the captive nut as it may become dislodged.*

2c. After all interconnecting hardware is installed, replace the roof panel removed in step 1.f, and replace the vent panel above the upper door of the right-hand end section adjacent to the shipping split.

2d. Join the roof panels and install roof cap (refer to Figure 8 of Figure 15: Instructions for factory-assembled-aisle type SGM-SG-AR on pages 36-40). Verify that the sealant strip is in place prior to joining the roof panels (refer to Figure 7 of Figure 15: Instructions for factory-assembled-aisle type SGM-SG-AR on pages 36-40).

2e. Caulk all joints with the metal filler provided.

2f. If additional shipping groups are required to install the complete lineup of switchgear structures, repeat the steps in section 2 until all sections have been installed.

3. Installing the right-side aisle shipping section.

3a. Refer to Figure 11 of Figure 15: Instructions for factory-assembled-aisle type SGM-SG-AR on pages 36-40). Move the right-side aisle shipping section into position. Use great care in properly aligning all of the joining surfaces.

3b. Anchor, level, and shim the aisle shipping group as in step 1.d.

3c. Join the right-side, end-trim panel from the equipment shipping section to the center support channel on the right-side aisle shipping section (refer to Figure 12 of Figure 15: Instructions for factory-assembled-aisle type SGM-SG-AR on pages 36-40). Verify sealant strip is in place prior to joining panels.

3d. Remove lifting plates on roof of aisle section, and install roof caps and eave plates (refer to Figures 8, 9, 10, 11 and 12 of Figure 15: Instructions for factory-assembled-aisle type SGM-SG-AR on pages 36-40). Verify that all sealant strips are in place.

3e. Caulk all joints with the metal filler provided.

4. Installing the left-side aisle shipping section.

4a. Refer to Figure 13 of Figure 15: Instructions for factory-assembled-aisle type SGM-SG-AR on pages 36-40. Move the left-side aisle shipping section into position. Use great care in properly aligning all of the joining surfaces.

4b. Anchor, level and shim the aisle shipping group as in step 1.d.

4c. Join the left-side end-trim panel from the equipment shipping section to the center support channel on the left-side aisle shipping section (refer to Figure 12 of Figure 15: Instructions for factory-assembled-aisle type SGM-SG-AR on pages 36-40). Ensure sealant strip is in place prior to joining panels.

4d. Remove lifting plates on roof of aisle section, and install roof caps and eave plates (refer to Figures 8, 9, 10, 11 and 12 of Figure 15: Instructions for factory-assembled-aisle type SGM-SG-AR on pages 36-40). Verify that all sealant strips are in place.

4e. Caulk all joints with the metal filler provided.

4f. If additional shipping groups are required to install the complete aisle section of the lineup, repeat the steps in section 3 until all sections have been installed.

4g. After all aisle sections have been installed, remove temporary shipping bracing from the aisle sections.

5. After all groups have been bolted together and permanently anchored in place, apply asphalt or epoxy grout between the foundation and the cubicle base around the entire perimeter of the equipment. This will provide a seal between the equipment and the foundation to prevent any arcing exhaust products from being directed into an area intended to be protected.
6. Drill cable entrance covers to suit conduit installation. Bolt the covers in place. All primary and secondary cable entrance covers supplied with the switchgear that are removed during installation to be drilled to allow for conduit entry must be reinstalled to maintain the arc-resistant characteristics of the switchgear.
7. All conduits should be sealed to prevent arcing byproducts from entering conduit system. The use of a flame-resistant electric cable or duct-sealing system is recommended.
8. Install arc exhaust deflector. Refer to item 35 of Figure 15: Instructions for factory-assembled-aisle type SGM-SG-AR on pages 36-40. Arc exhaust deflector must be installed so as to deflect exhaust products upward.

Anchoring, leveling and assembling outdoor Shelter-Clad switchgear

For Shelter-Clad+ switchgear, refer to the order-specific drawings for lifting, handling, support, and installation instructions.

Figure 1: Assembled type SGM-SG-AR

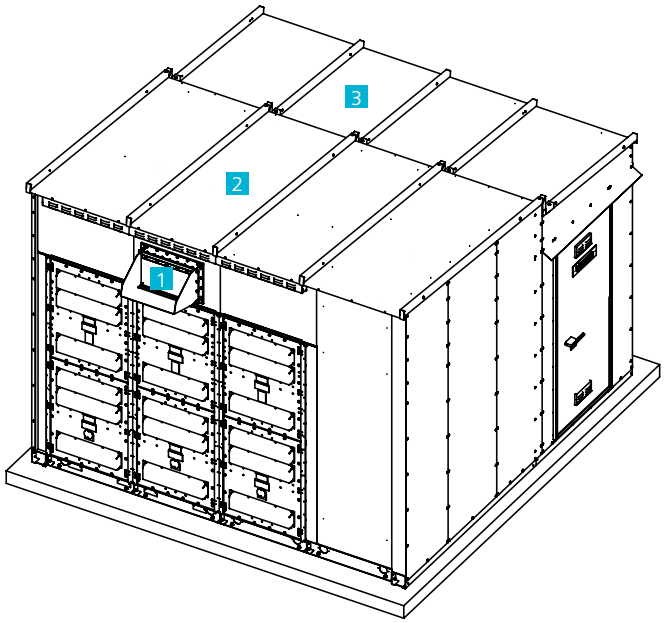

Figure 3: Right-side equipment shipping section installation

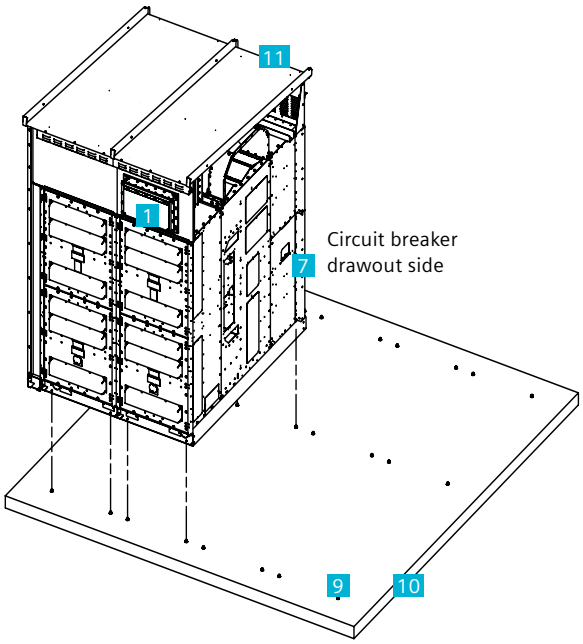

Figure 2: Four shipping sections shown

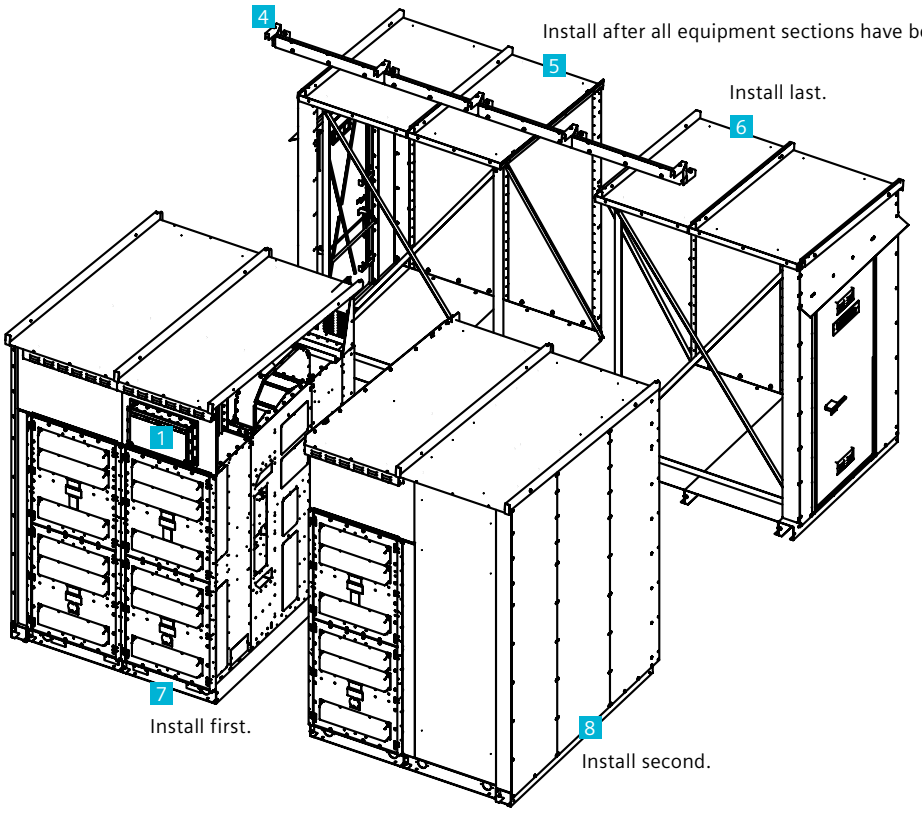

Item	Description
1	Refer to Figure 15 of Figure 15
2	Switchgear structure sections
3	Aisle sections
4	Accessories shipping section (refer to Figures 9 and 10)
5	Right-side aisle shipping section
6	Left-side aisle shipping section
7	Right-side equipment section
8	Left-side equipment section
9	Anchor bolts
10	Foundation
11	Temporary remove this roof panel after placement to allow access to hardware for joining units

Figure 15: Instructions for factory-assembled-aisle type SGM-SG-AR

Figure 4: Anchoring at rear of equipment

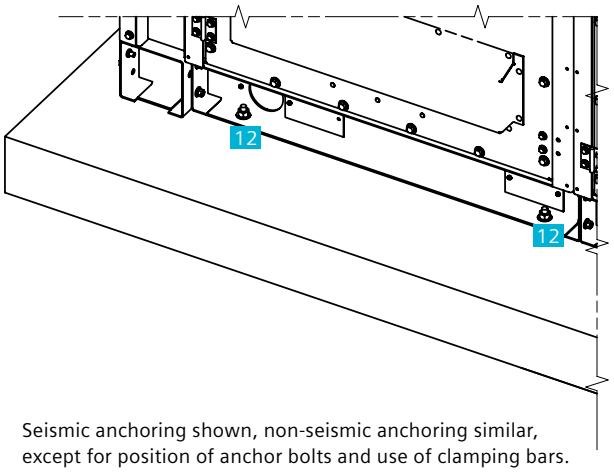

Seismic anchoring shown, non-seismic anchoring similar, except for position of anchor bolts and use of clamping bars. Refer to order general arrangement for specific anchoring arrangement.

Figure 6: Anchoring at circuit breaker drawout side (front)

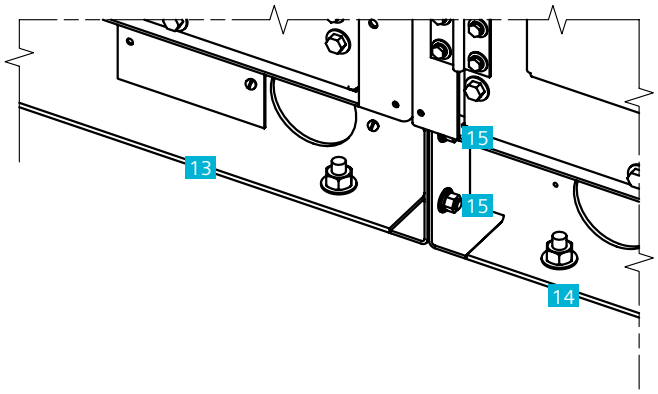

Item	Description
1	Refer to Figure 15 of Figure 15
8	Left-side equipment section
9	Anchor bolts
10	Foundation
11	Temporary remove this roof panel after placement to allow access to hardware for joining units
12	Customer to secure base with hardened washers (18-658-172-315) provided by Siemens. Hardware must meet SAE grade 5 specifications. Typical six places per switchgear section.
13	Equipment base
14	Workspace base
15	Two 3/8-16 hardware

Figure 5: Left-side equipment shipping section installation

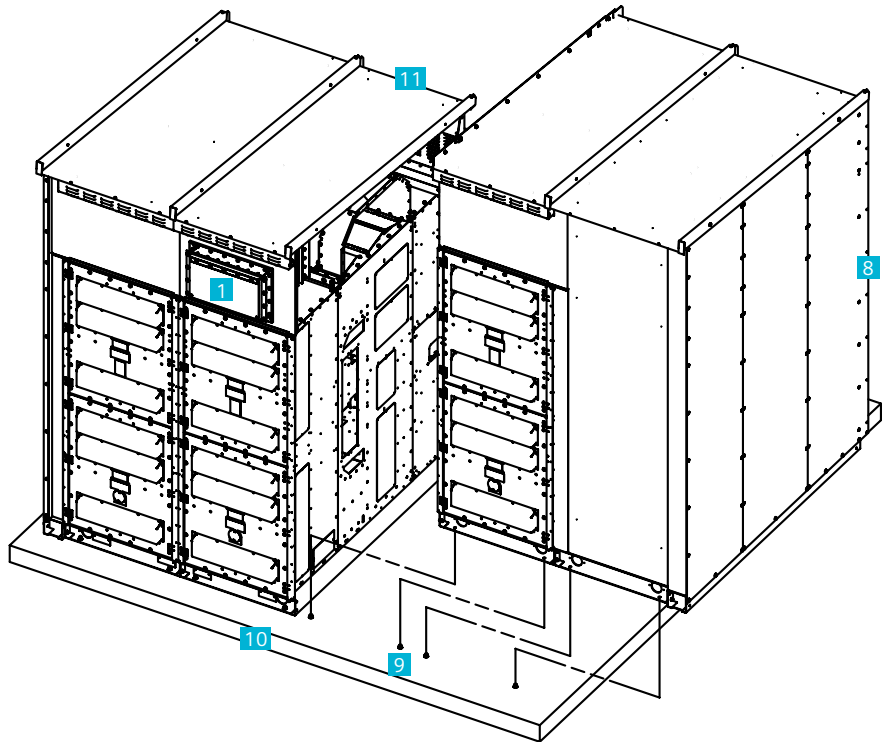

Figure 15: Instructions for factory-assembled-aisle type SGM-SG-AR (continued)

Figure 7: Left-side equipment shipping section installation

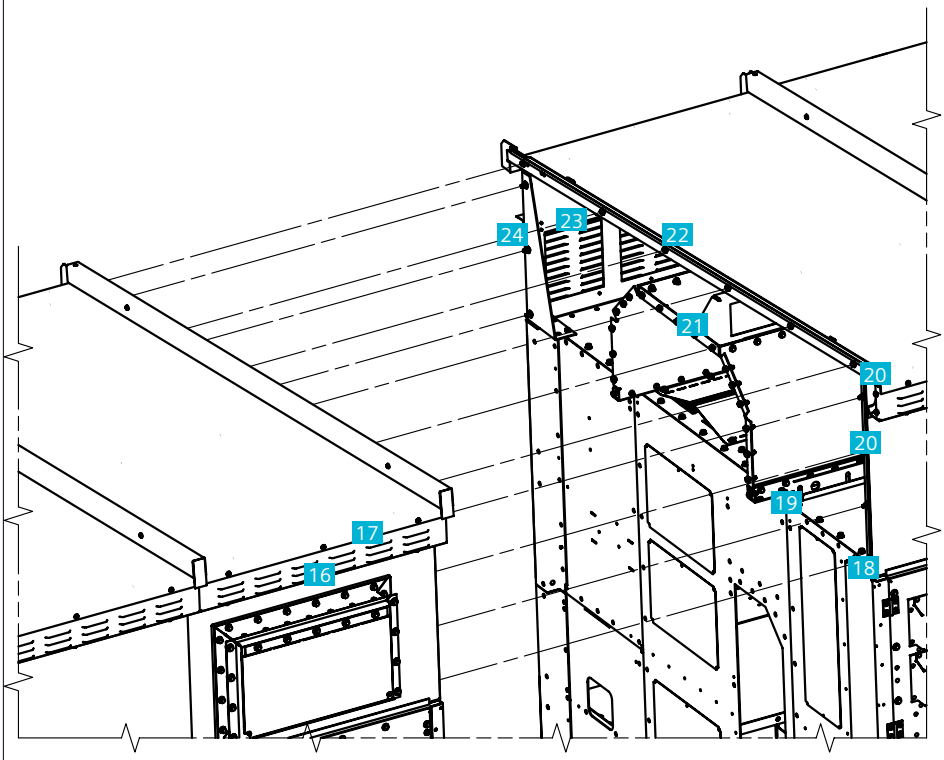

Item	Description
15	Two 3/8-16 hardware
16	Temporarily remove cover to access roof-panel hardware
17	Reinstall roof panel after interunit assembly
18	Rear roof-supports joint/four 3/8-16 hardware
19	Refer to interunit bolting procedure to join switchgear units
20	Sealant strip
21	Exhaust plenum joints
22	Roof-panel joint/ six 3/8-16 hardware
23	Temporarily remove vent to access roof-panel hardware
24	Front roof-supports joint/ three 3/8-16 hardware
25	Roof cap
26	Equipment roof
27	Aisle-roof panel
28	Four 1/4-20 hardware

Figure 8: Roof cap arrangement

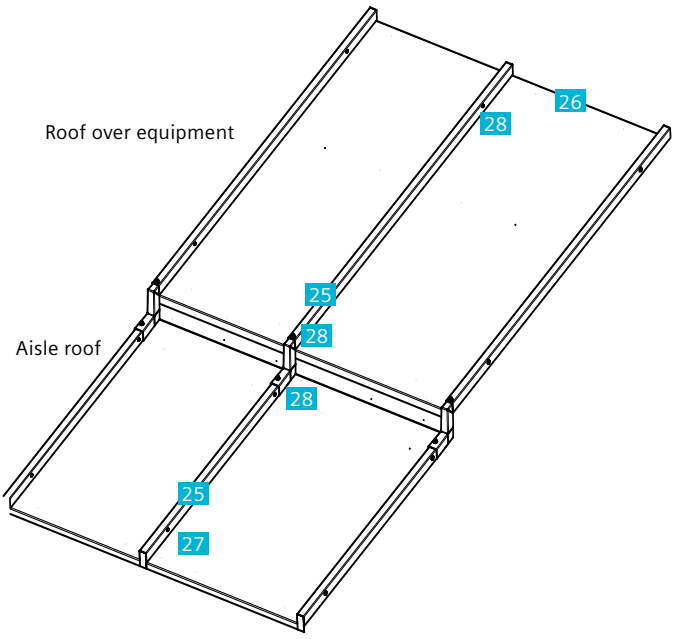

Figure 9: Roof cap installation of roof eave between equipment and aisle

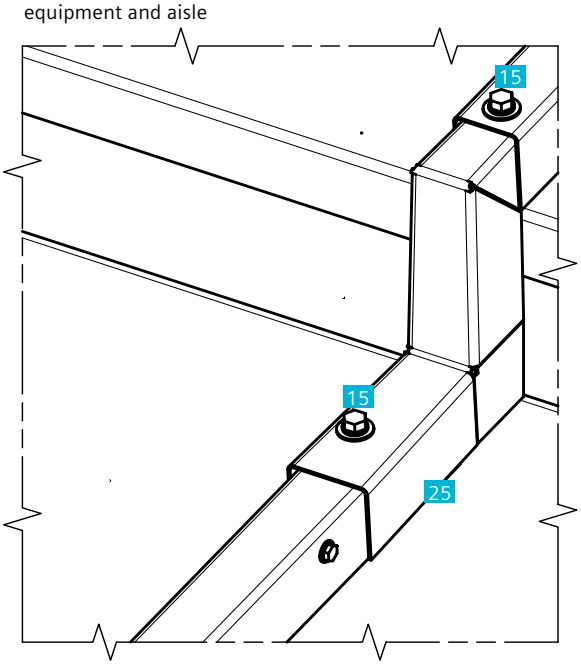

Figure 15: Instructions for factory-assembled-aisle type SGM-SG-AR (continued)

Figure 10: Roof eave installation

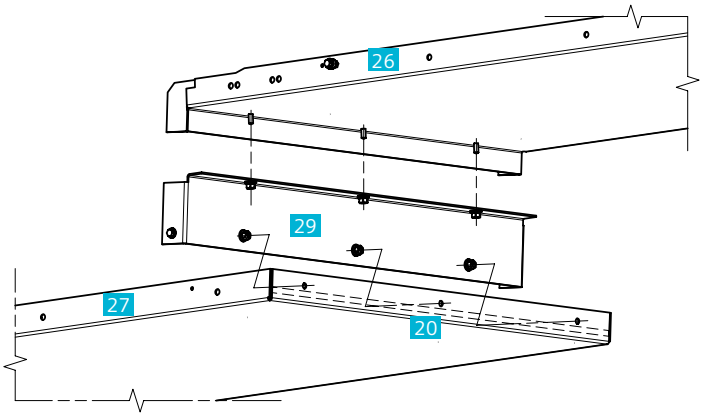

Figure 11: Right-hand aisle shipping section installation

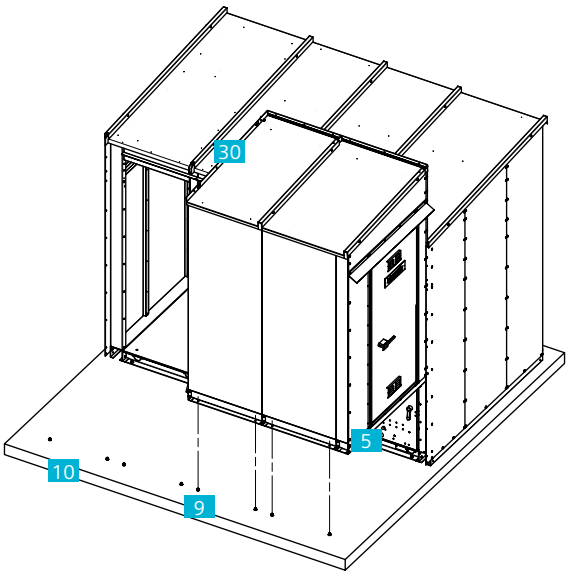

Figure 12: Right-hand side shown/left-hand side same

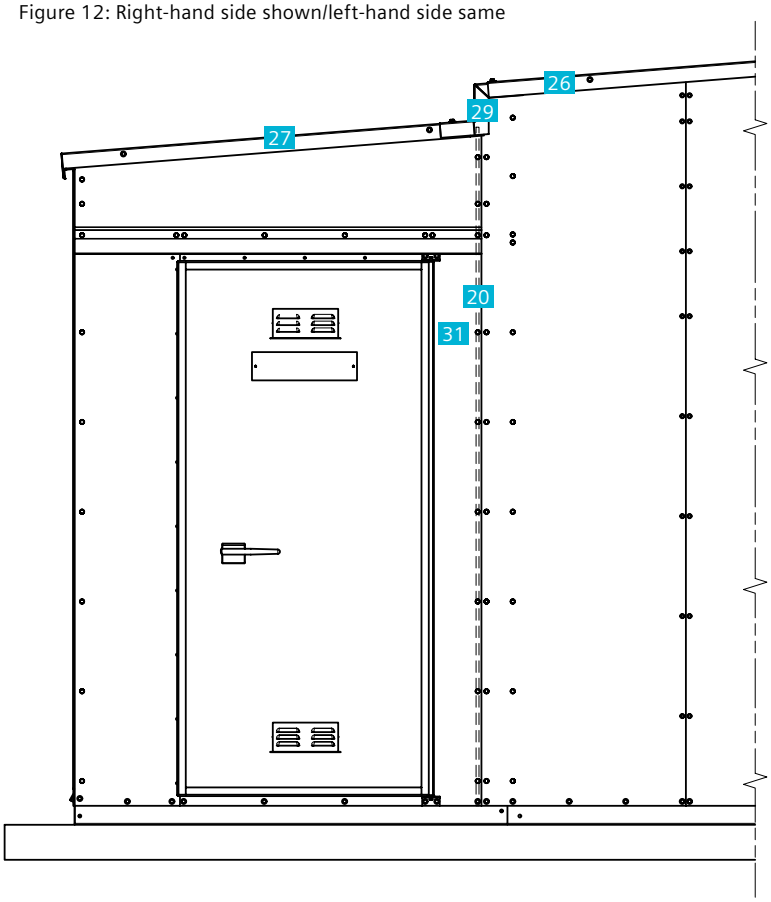

Item	Description
5	Right-side aisle shipping section
9	Anchor bolts
10	Foundation
20	Sealant strip
26	Equipment roof
27	Aisle roof panel
29	Roof eave
30	Remove and discard lifting plates (not shown) after installation of aisle to switchgear. Install roof cap.
31	Nine 5/16-18 hardware

Figure 15: Instructions for factory-assembled-aisle type SGM-SG-AR (continued)

Figure 13: Left-hand aisle shipping section installation

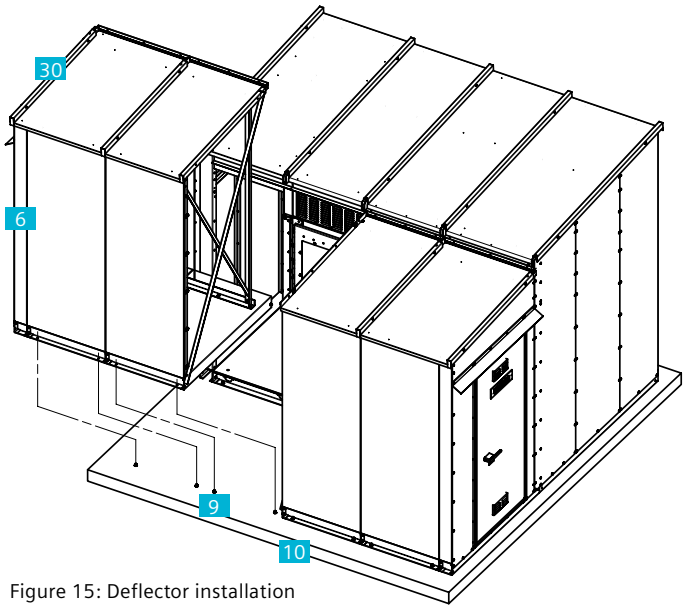

Figure 14: Joining aisle sections

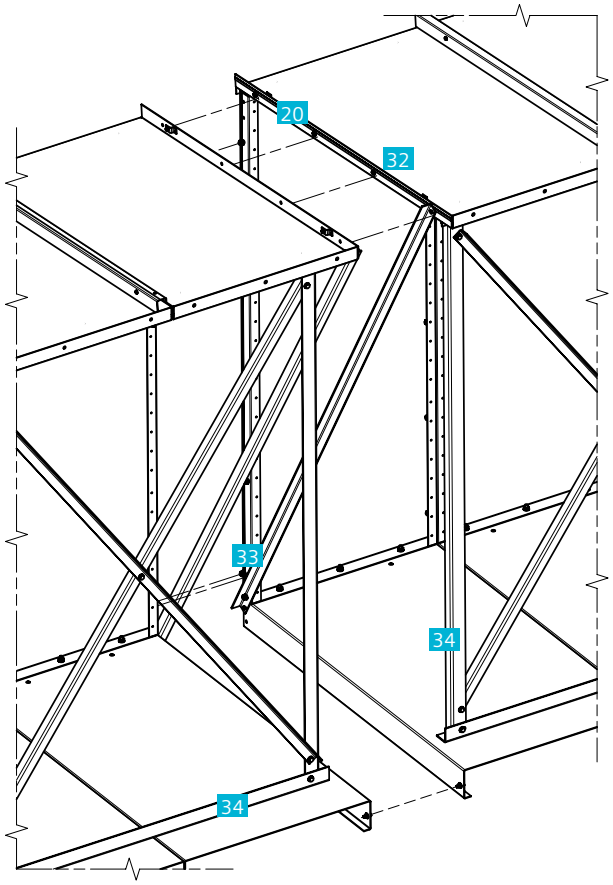

Figure 15: Deflector installation

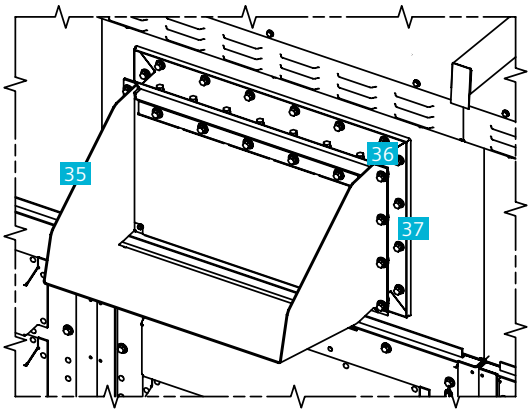

Figure 16 shows the minimum recommended clearance from the exhaust plenum exit. When the equipment is operating, this area should be kept clear of personnel and/or combustible or flammable materials.

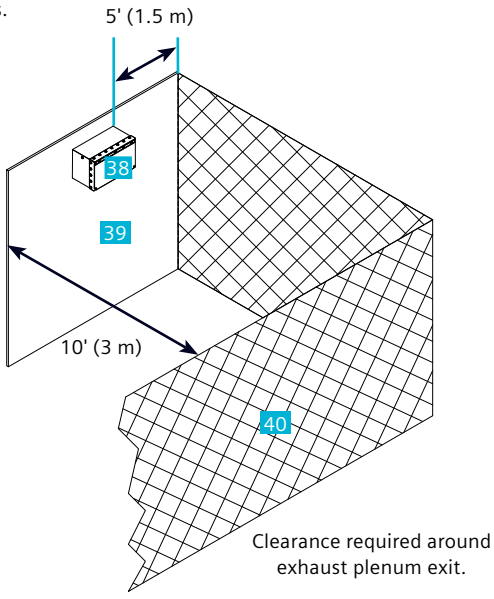

Item	Description
6	Left-side aisle shipping section
9	Anchor bolts
10	Foundation
20	Sealant strip
30	Remove and discard lifting plates (not shown) after installation of aisle to switchgear. Install roof cap.
32	Roof panel joint/four 3/18-16 hardware
33	Aisle wall panel joint/ eleven 3/18-16 hardware

Item	Description
34	Remove and scrap all bracing after assembly. Plug floor mounting holes with button head screws after brace removal.
35	Deflector
36	Eight 3/8-16 hardware
37	Exhaust plenum
38	Exhaust plenum exit
39	Exterior (building)
40	Fenced (or otherwise protected) area with restricted access

Figure 15: Instructions for factory-assembled-aisle type SGM-SG-AR (continued)

⚠ DANGER

Hazardous voltage.

Will cause death, serious injury and property damage.

Do not contact energized conductors.

De-energize and ground high-voltage conductors before working on or near them.

Expanding length of existing Shelter-Clad switchgear by addition of units

The factory assembled single-aisle, Shelter-Clad switchgear can be expanded on the workspace and/or equipment side of the current switchgear arrangement. This instruction shows the equipment-side expansion. Consult with factory for workspace expansion. Refer to the general arrangement drawing for specific information.

Follow all guidelines as stated in the installation section of the arc-resistant, metal-clad switchgear instruction manual when positioning shipping units.

Follow all guidelines as stated in the installation section of the arc-resistant, metal-clad switchgear instruction manual when anchoring, leveling and installing each shipping section.

Certain items will be removed from the existing installation as described in the following instructions. Remove these items carefully and store them for remounting in the expanded setup.

When reinstalling removed parts, remove all factory installed caulk and recaulk joints after installation. Also, verify sealant strip is in place prior to rejoining all roof and wall panels.

Equipment-side expansion procedure

9. Equipment section deconstruction (refer to Figures 1 and 2 of Figure 16: Type SGM-SG-AR expansion on pages 44-45).

   9a. Temporarily remove front-cover panel, rear-header panel, vent panel, vent-header cover and filter. Removal of these panels will allow access to the equipment-roof panels.

⚠ WARNING

Heavy weight.

Can result in death, serious injury or property damage.

Observe all handling instructions in this instruction manual to prevent tipping or dropping of equipment.

9b. Temporarily remove roof caps, aisle-end roof panel (46.5" (1,181 mm) width) and roof eave (46.5" (1,181 mm) width).

9c. Temporarily remove equipment-end roof panel (46.5" (1,181 mm) width).

9d. Temporarily remove equipment end-trim panels and equipment end-floor panel.

9e. Temporarily remove rear roof support (46.5" (1,181 mm) width), pressure relief channel end wall, end-trim support brackets (5), end-trim floor panel and right-hand door assembly.

10. Installing the new equipment (refer to Figure 3 of Figure 16: Type SGM-SG-AR expansion on pages 44-45).

10a. Move the new equipment shipping section into place. Follow steps 1 and 2 of the installation instructions when placing and connecting the new equipment section to the existing equipment section.

10b. Temporarily remove the roof cap, equipment roof panel (40.0" (1,016 mm) width) and rear roof-support panel (40.0" (1,016 mm) width).

10c. Reinstall the end-trim floor panel.

10d. Reinstall pressure relief channel end wall, end-trim support brackets (5), and rear-roof support (46.5" (1,181 mm) width).

10e. Caulk all joints with the metal filler provided.

11. Reinstalling the equipment section end trim and roof panels (refer to Figure 4 of Figure 16: Type SGM-SG-AR expansion on pages 44-45).

11a. Reinstall the end-trim panels.

11b. Reinstall rear roof-support panel (40.0" (1,016 mm) width) and equipment roof panel (40.0" (1,016 mm) width) in their new positions as shown.

11c. Reinstall the equipment-end roof panel (46.5" (1,181 mm) width) in its new position as shown.

11d. Reinstall the rear-header panel, vent panel, vent-header cover and filter.

11e. Reinstall the roof caps.

11f. Reinstall front-cover panels.

11g. Caulk all joints with the metal filler provided.

12. Installing the new aisle shipping section (refer to Figures 5 and 6 of Figure 16: Type SGM-SG-AR expansion on pages 44-45).

    12a. Move the new aisle shipping section into place. Follow step 4 of the installation instructions when placing and connecting the new aisle section to the existing aisle section.

    12b. Remove the roof cap and aisle-roof panel (40.0" (1,016 mm) width).

    12c. Reinstall the right-hand door assembly.

    12d. Reinstall the roof eave (40.0" (1,016 mm) width) and aisle-roof panel (40.0" (1,016 mm) width) into its new position as shown.

    12e. Reinstall the roof eave (46.5" (1,181 mm) width) and aisle-end roof panel (46.5" (1,181 mm) width) into its new position as shown.

    12f. Reinstall the roof caps.

    12g. Remove the temporary shipping bracing from the new aisle shipping section.

    12h. Caulk all joints with the metal filler provided.

13. After all groups have been bolted together and permanently anchored in place, apply asphalt or epoxy grout between the foundation and the cubicle base around the entire perimeter of the equipment. This will provide a seal between the equipment and the foundation to prevent any arcing exhaust products from being directed into an area intended to be protected.

14. Drill cable entrance covers to suit conduit installation. Bolt the covers in place. All primary and secondary cable entrance covers supplied with the switchgear that are removed during installation to be drilled to allow for conduit entry must be reinstalled to maintain the arc-resistant characteristics of the switchgear.

15. All conduits should be sealed to prevent arcing byproducts from entering conduit system. The use of a flame-resistant electric cable or duct-sealing system is recommended.

16. If an arc exhaust outlet is provided on the new equipment, install arc exhaust deflector. Refer to item 35 of Figure 15: Instructions for factory-assembled-aisle type SGM-SG-AR on pages 36-40. Arc exhaust deflector must be installed so as to deflect exhaust products upward.

Figure 1: Removal of existing end-unit panels

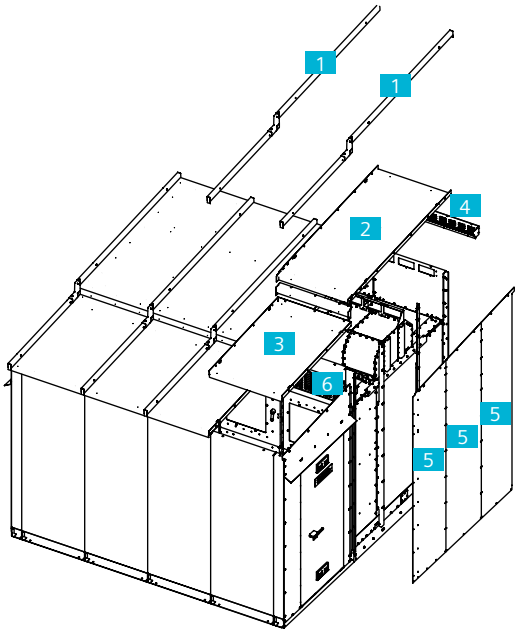

Figure 2: Removal of existing end-unit panels

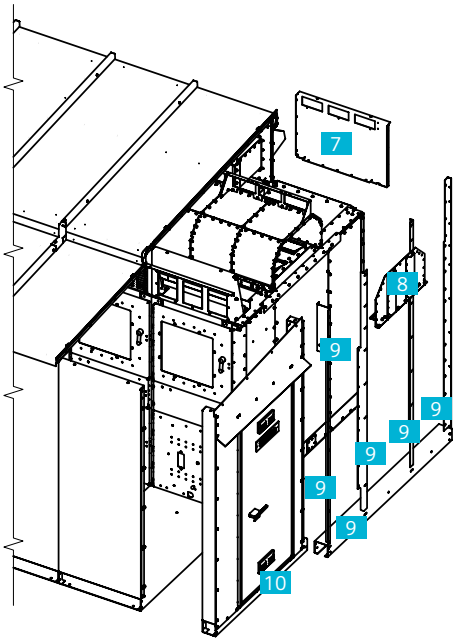

Figure 3: Installation of new (added) equipment units

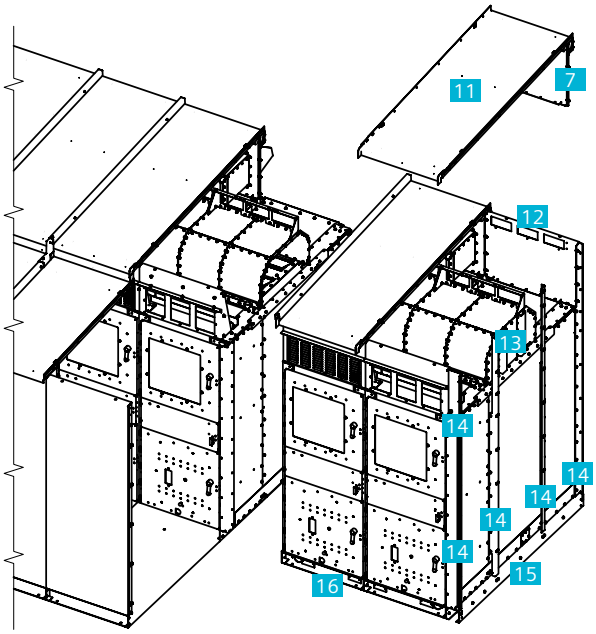

Item	Description
1	Remove roof caps
2	Remove equipment end-roof panel (46.5" (1,181 mm) width)
3	Remove aisle-end roof panel (46.5" (1,181 mm) width) and roof eave (46.5" (1,181 mm) width)
4	Remove rear-header panel, vent panel, vent-header cover and filter
5	Remove equipment end-trim panels
6	Remove front-cover panel
7	Remove rear-roof support (46.5" (1,181 mm) width)
8	Remove pressure relief channel end wall
9	Remove equipment end-trim support brackets (5) and equipment end-floor panel
10	Remove right-side door assembly
11	Remove roof cap and equipment-roof panel (40.0" (1,016 mm) width)
12	Reinstall rear-roof support (46.5" (1,181 mm) width)
13	Reinstall pressure relief channel end wall
14	Reinstall equipment end-trim support brackets (5)
15	Reinstall equipment end-floor panel
16	New equipment shipping section

Figure 16: Type SGM-SG-AR expansion

Figure 4: Installing equipment section end-trim and roof panels

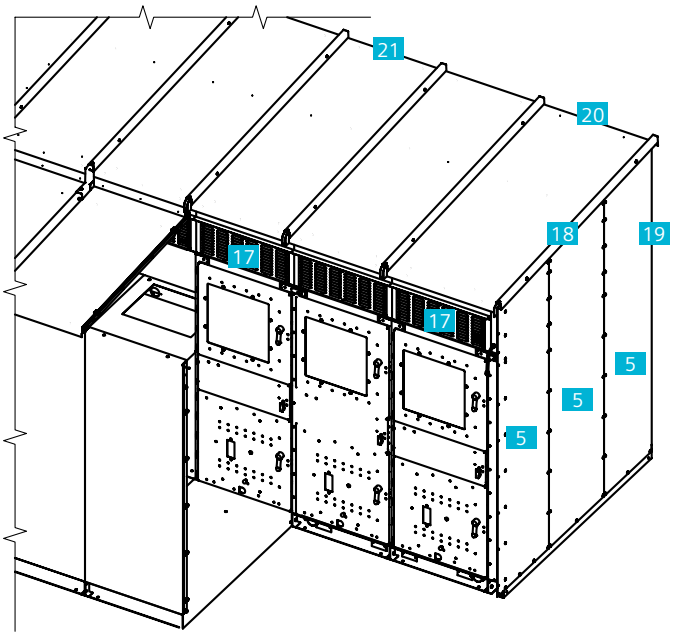

Figure 5: Installing new (added) aisle sections

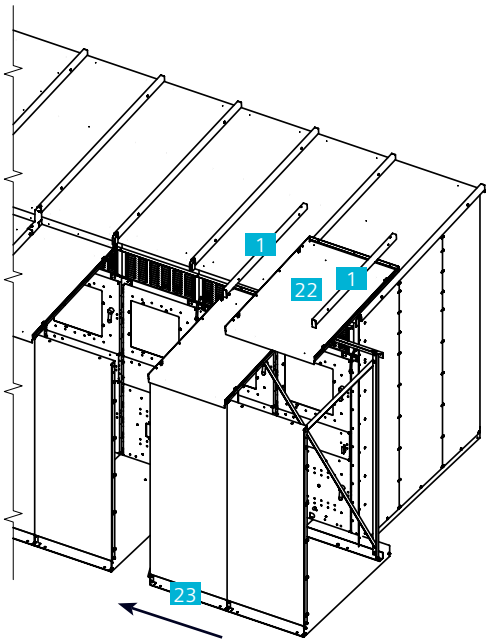

Item	Description
1	Remove roof caps
5	Remove equipment end-trim panels
17	Reinstall front-cover panels
18	Reinstall roof caps
19	Reinstall rear-header panel, vent panel, vent-header cover and filter
20	Reinstall roof cap, equipment end-roof panel (46.5" (1,181 mm) width)
21	Reinstall roof cap, rear-roof support (40.0" (1,016 mm) width) and equipment-roof panel (40.0" (1,016 mm) width)
22	Remove aisle-roof panel (40.0" (1,016 mm) width)
23	New aisle-shipping section
24	Reinstall roof eave (40.0" (1,016 mm) width)
25	Reinstall roof eave (46.5" (1,181 mm) width)
26	Reinstall right-side door assembly
27	Reinstall aisle-roof panel (40.0" (1,016 mm) width)
28	Reinstall aisle-roof panel (46.5" (1,181 mm) width)

Figure 6: Installing new (added) aisle sections

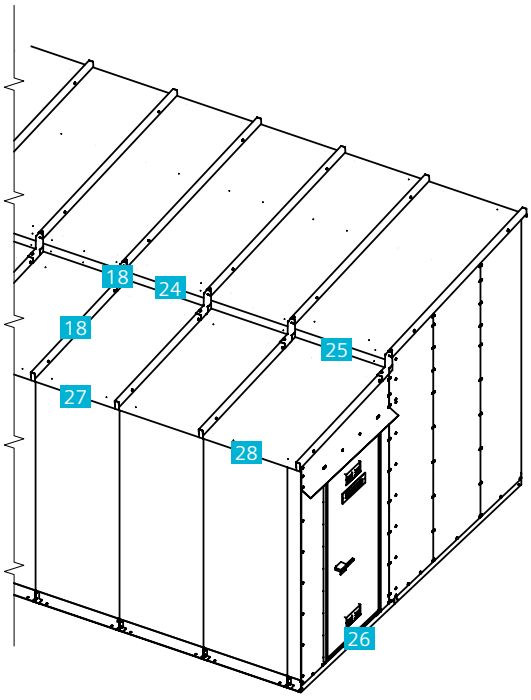

Figure 16: Type SGM-SG-AR expansion (continued)

Electrical connections

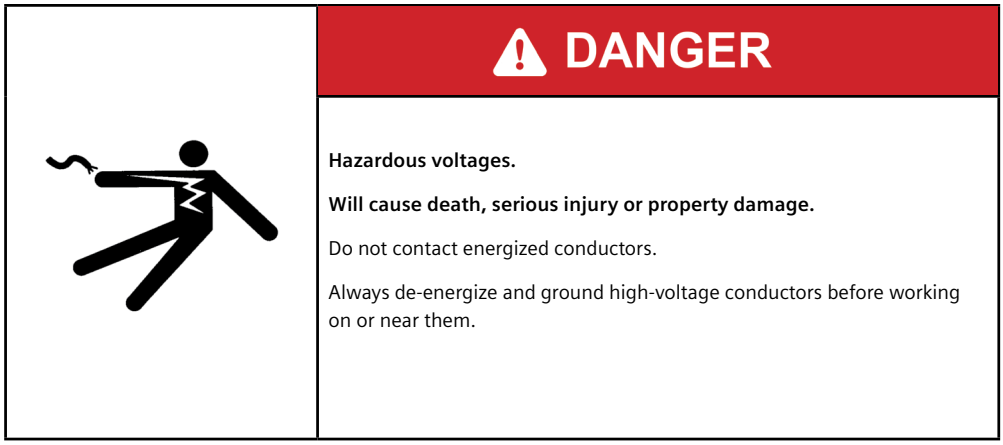

Bus bar

Bus bar is furnished for connection between many of the high-voltage items within the switchgear enclosure, such as main bus, circuit breakers and pads for cable terminations. Cables are provided for connection to primary disconnect assemblies for voltage and control power transformers, and for connection to surge arresters or surge limiters.

Standard bus bar material is copper with silver-plated joints for electrical connections. Copper bus, with tin-plated joint surfaces, is also available. Bus bars are insulated with an epoxy insulation applied by a fluidized bed method. Bus bar joints are insulated with molded insulation boots (where a boot is available) or are taped.

Additional insulation is provided by clearance through air and bus supports. In some locations, standoff insulators are used. Porcelain- or epoxy-insulator rings mounted in glass-polyester supports, porcelain- or epoxy- standoff insulators and/or porcelain primary-disconnect bushings may be furnished as options.

Bus joints

When a switchgear lineup is split for shipping purposes, the primary bus and ground bus connections must be made when installing the switchgear. These bolted connections are relatively simple to make. Refer to Figure 16: Main bus joints-circuit breaker section, Figure 17: Main bus joints-auxiliary section, Figure 18: Main bus joints connection configuration and these instructions.

The bus bars and connection hardware for joining the groups together are normally shipped mounted on a bracket in one of the units involved in the connection. When this is not possible, the connection bars and hardware will be shipped in a separate package, and will be listed on the accessories drawing. This drawing is listed on the reference drawing list.

Access to the main bus from the cable termination area is achieved by removing the main bus compartment barrier that separates the main bus from the cable area (refer to Figure 28: Typical cable termination configurations).

If acccess to the main bus is impeded by installed equipment, access to the main bus can usually be achieved by removal of barrier F (refer to Figure 28: Typical cable termination configurations). Barrier F is located in the upper portion of the lower primary compartment and is readily accessible from the front of the section.

For some arrangements it may be necessary to remove items between the main bus barriers and the rear of the unit in order to gain full access. After completion of the bus assembly and insulation, these items should be reassembled in reverse sequence.

1. Molded plastic insulation boots for bus bar joints are normally shipped factory installed at shipping splits. Note their location and orientation, so they may be properly reinstalled after the joint is bolted together. Carefully remove and save the nylon hardware and the boot.
2. All surfaces must be free of dust, dirt or other foreign material. Do not use any abrasive cleaner on plated contact surfaces. Cleaning is normally not necessary and should not be done unless parts are badly tarnished. If cleaning is necessary, use a mild cleaner and thoroughly rinse the parts to remove all residue. Keep cleaning agent off insulation.
3. Before assembling any bus bar joint, check that the bus bar is inserted through bus supports (when required) and interunit bus supports, including neoprene grommets and insulator rings (inserts) when the option is furnished. Grommets (refer to Figure 20: Typical installation of insulating boot) are used to support the bus bars in the insulator rings (inserts). Observe the factory positioning of these grommets when connecting at shipping splits to ensure that bus bars will line up properly. Normally, the bus bar is oriented in the insert toward the front. Neoprene grommets are to be installed centered in the insert.
4. Observe the relationship of the bus bar to the circuit breaker riser (for example, whether bus bar is in front of, or behind, the circuit breaker riser). Maintain this relationship when connecting bus bars. Spacers are required in some bus joint connections.
5. Assemble all joints with the parts dry. Do not use any grease or "no-oxide" product.

Note: *All main bus hardware furnished is plated high strength steel. Cap screws are 1/2"-13 SAE grade 5. Do not substitute with smaller or lower grade hardware than supplied.*

6. Use proper hardware. Heavy flat washers are used on both sides of the bus bar joint under the cap screw head and as well as under the nut and lockwasher. These washers ensure an evenly distributed force around each bolt, producing a low-resistance joint. Proper torque value produces a joint of adequate pressure without cold flow (refer to Figure 18: Bus bar joint assembly).
7. Assemble all joints shown in Figures 15 through 18. Install all hardware the same way that factory bus connections were installed. Hardware must be aligned properly or molded insulators

    7a. Place a flat washer on the cap screw (bolt) and insert the cap screw through the bus joint towards rear of unit.

    7b. Place a flat washer against the bus bar with a lock washer between the flat washer and the nut. Alternatively, place a Belleville washer with the conical side facing outwards.

    7c. Spacers are required at certain bus joints to insure the cross sectional area of the joint. The conditions where these spacers are required vary with the type of bus joint (refer to Figure 18: Main bus joints connection configurations).

8. Torque the 1/2"-13 SAE Grade No. 5 cap screws to 50-75 lb-ft (68-102 Nm) torque. (If special hardware is required by an order, other torque values will be supplied with field assembly drawings.)
9. Install insulation boots or tape joints where required per instructions in following sections.
10. Connect ground bus (refer to Figure 30: Ground bus connection). Insert bar in side wall opening to overlap the ground bus in adjacent cubicles.
11. Torque the 3/8-16 SAE Grade 5 cap screw used in the ground bus to 25-40 lb-ft (34-54 Nm).

Bus insulation

Bus and connections are insulated in metal-clad switchgear as part of a coordinated insulation system. Air or creep distance plus bus insulation combines to provide the needed insulation level. **BUS INSULATION IS NOT DESIGNED TO PREVENT SHOCK.**

Epoxy insulation applied in a fluidized bed process is normally furnished on the bus bars. Bus joints are normally insulated with boots. Taping is also used for bus-joint insulation.

The IEEE requirements for bus insulation in metal-clad switchgear are contained in IEEE C37.20.2 clause 7.9, which reads as follows:

"This insulating covering is a requirement of metal-clad switchgear and is provided to minimize the possibility of communicating faults and to prevent the development of bus faults that would result if foreign objects momentarily contacted bare bus. This insulating covering is usually only a part of the primary insulation system, and in such cases the outer surface of this insulating covering will not be at ground potential. It should not be assumed, therefore, that personnel can contact this insulating covering with complete safety."

Bus joint-insulation boots

Standard and repetitive bus bar joints are normally provided with insulation boots installed at the factory (refer to Figure 20: Typical installation of insulating boot). After shipping split connections are completed in the field, bus bar joints at shipping splits must be insulated as part of the total insulation system. Normally boots are provided for field completed shipping split joints and are shipped in the location where they will finally be installed (refer to Figure 22: Connection of bus at shipping splits).

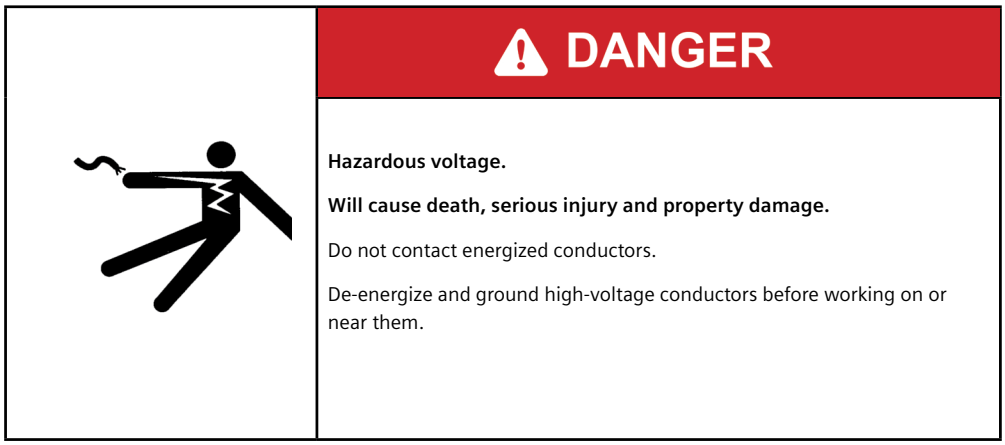

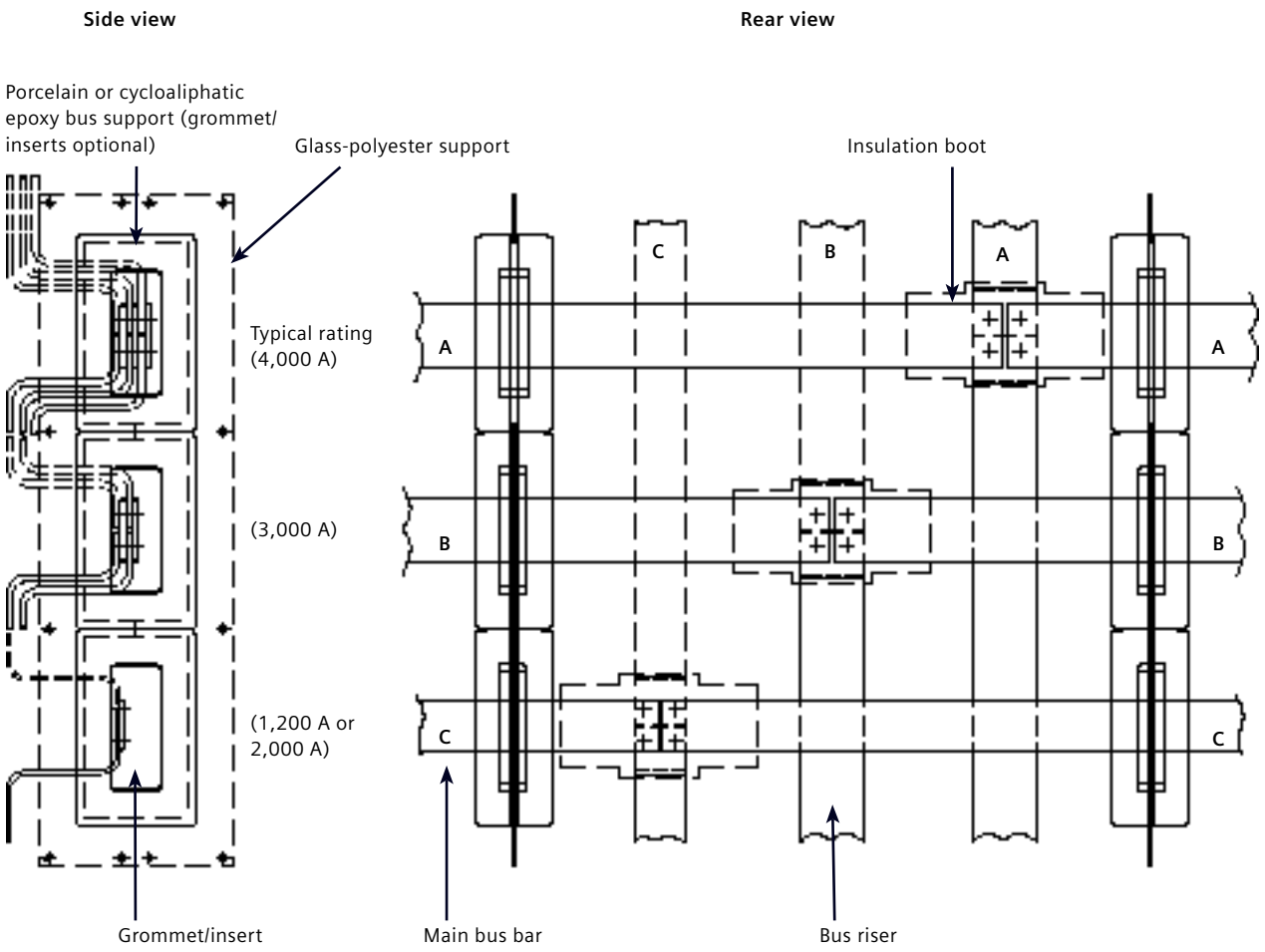

Note: For illustration only shown with three bars in phase A and two in phase B and one in phase C for connection to breaker cells in lower and upper compartments. Connection to top compartment shown dashed. Illustration depicts arrangement with optional porcelain or cycloaliphatic epoxy bus support inserts.

Figure 16: Main bus joints-circuit breaker

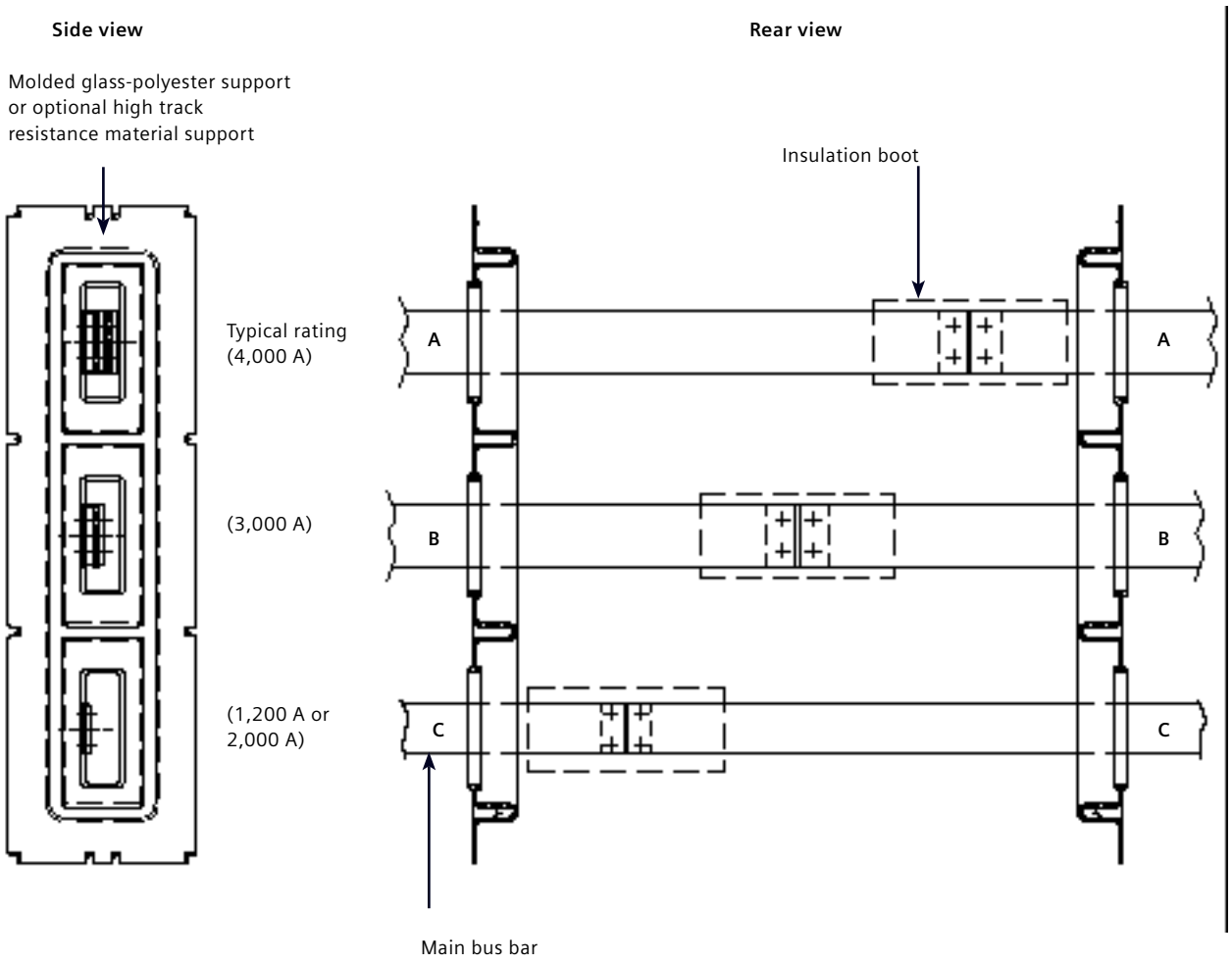

Note: For illustration only shown with three bars in phase A and two in phase B and one in phase C. Illustration depicts arrangement with standard molded glass-polyester bus support or optional high track-resistance molded bus support, or optional high track-resistance material support.

Figure 17: Main bus joints-auxiliary section

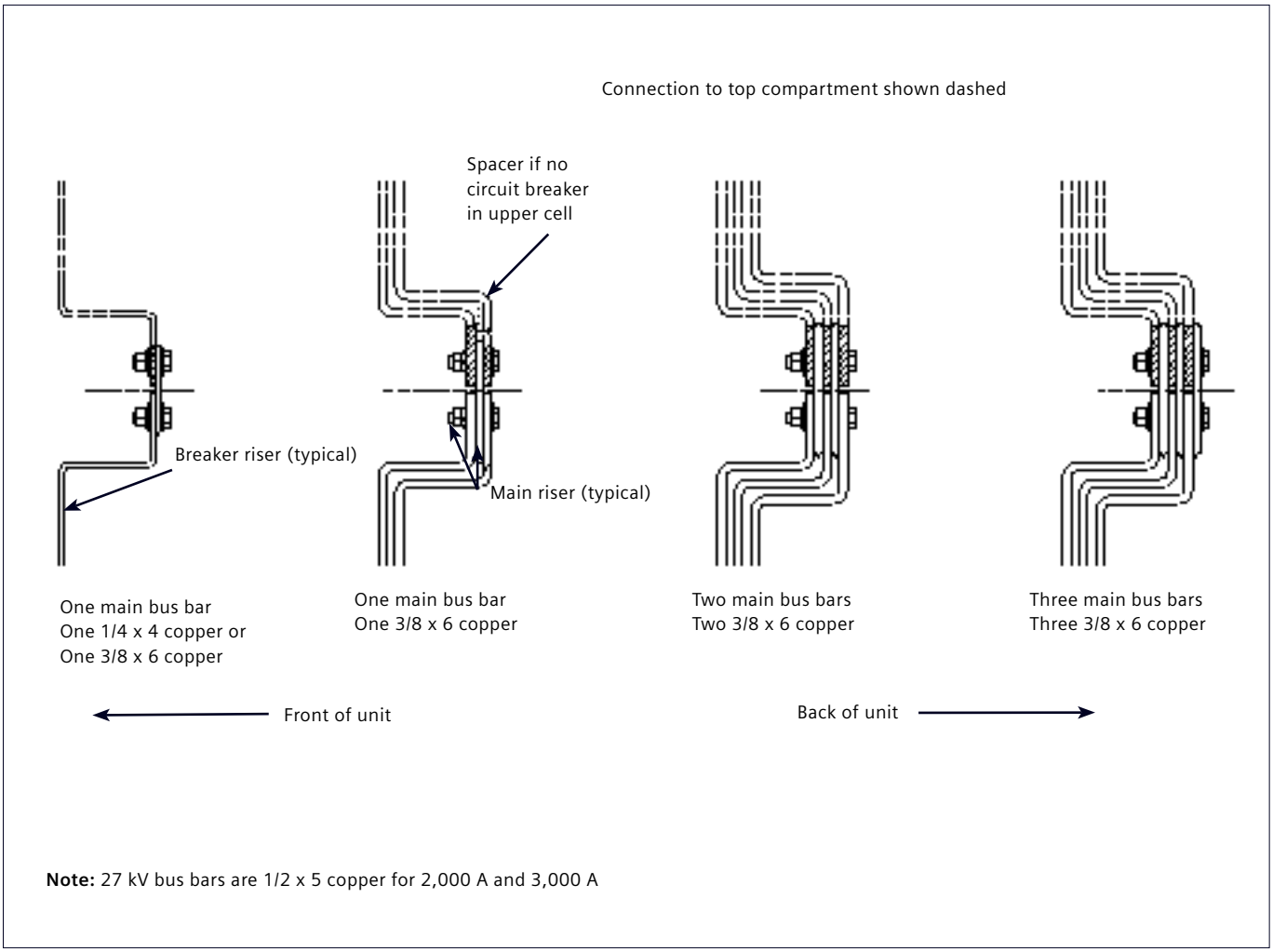

Figure 18: Main bus joints connection configuration

Grommets are provided for use with the boot when the bus bar is smaller than the opening in the bus bar boot. When required, these grommets are normally mounted along with the bus boot in the final assembly location.

Before removal of the boots to complete the joint, observe the location and orientation of the boots and hardware. This should make reinstallation easier.

Nylon nuts and bolts are used to hold the boot closed after it is installed. Carefully remove the insulation boots and save all hardware.

After the bus bar joint has been properly assembled, reinstall the insulation boot. Secure the boot closed with the nylon nuts and bolts. Completed boot installation should be flush with the bus bar installation and overlap it by at least 1-1/2" (38 mm). In those cases where the boot does not close flush with the bus bar installation or the overlap is less than 1-1/2" (38 mm), apply one layer of tape (part number 15-171-987-001) half-lapped, overlapping the bus bar insulation and boot by 1-1/2" (38 mm).

Bus joint-insulation taping

Insulation boots are normally provided for repetitive or standard bus joint conditions, and, optionally for cable terminations.

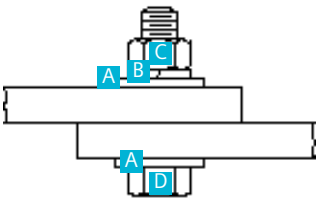

Silver-plated copper to silver-plated copper bus bars

Item	Description
A	Flat washer
B	Lock washer
C	Nut
D	Cap screw

Figure 19: Main bar joint assembly

Figure 20: Main bus with insulating boots installed (bus compartment covers removed)

Where boots are not provided, the bus joints and/or cable terminations must be carefully taped to the required insulation level as described below. Figure 23: Taped joint-insulation switchgear bus to transformer throat depicts taped joints associated with connections to the throat of a power transformer, and Figure 24: Primary cable termination and insulation depicts taped joints associated with a cable lug mounting arrangement for multiple cables .

Note: *When the cables associated with Figure 26: Typical cable terminal mounting and insulation have been installed, the cable terminations and exposed bus must also be insulated.*

1. Inspect bolted joints to verify they are correctly assembled, bolt heads in proper direction and hardware has been torqued to proper value. All surfaces must be free of dust, dirt or other foreign material.
2. Apply a mastic pad over nuts and a second pad over the bolt heads. Use either small (15-171-988-001: 3.25" x 4.50" (83 mm x 114 mm)) or large (15-171- 988-002: 4.50" x 6.50" (114 mm x 164 mm)) size pad most suitable for joint involved.

   Remove the backing covering the adhesive, and press adhesive side up (away from conductor) and mold in place covering all sharp projections. Cover hardware and sharp edges of bus bar if any will be against the tape.
3. Apply half-lapped layers of 2" (51 mm) wide tape (15-171-987-004) or 1" (25 mm) wide tape (15-171- 987-001) over the joint. Each layer should overlap the bus bar insulation by at least 1-1/2" (38 mm). Stretching of tape 10 to 15 percent in problem areas may help in eliminating voids and wrinkles.

   For 4.76 kV class equipment, use two half-lapped layers of tape over mastic pads. For 8.25 kV and 15 kV class equipment, use three half-lapped layers of tape over the mastic pads. For 27 kV class equipment, use eight half-lapped layers of tape over the mastic pads.

   Avoid excessive pressure on the completed bus-joint insulation. If bus joints are on standoff insulators, apply tape per the above procedures except the half-lapped tape should overlap the insulator by at least 2" (51 mm).

Transformer bus-joints insulation

The typical transformer to switchgear bus joint shown in Figure 23: Taped joint-insulation switchgear bus to a power transformer throat is different from other bus joints in the switchgear main bus. In the transformer bus joints, there is a transition from the fully insulated switchgear system to the transformer, where the spacing between conductors is usually large enough so that the conductors need not be insulated. The use of flexible connectors in this area ensures correct alignment of the switchgear conductors to the transformer conductors. If the installed clearance (phase-to-phase or phase-to-ground) is less than 6" (152 mm) for 8.25 kV and 15 kV switchgear, 3.5" (89 mm) for 4.76 kV switchgear, and 9" (229 mm) for 27 kV switchgear, the joint must be insulated. Refer to Figure 23: Taped joint-insulation switchgear bus to a power transformer throat and insulate bus joint connections as outlined in "Bus joint-insulation taping".

Item	Description
A	Connection bolts minimum four 1/2" diameter
B	Grommet
C	Bolting cavity allows for full overlap of tap or splice plate and for any number of connection bolts used
D	Bus
E	Tap
F	Boot closing flaps secured with nylon hardware

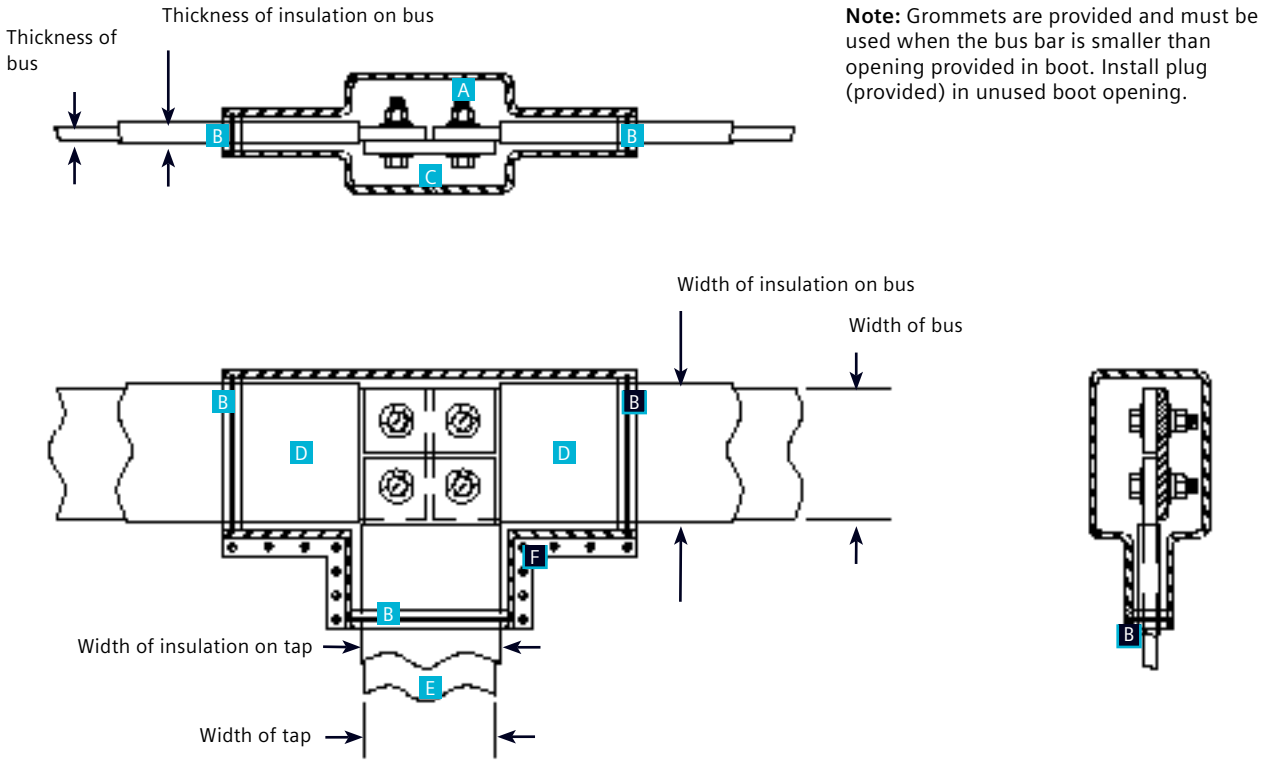

Note: Grommets are provided and must be used when the bus bar is smaller than opening provided in boot. Install plug (provided) in unused boot opening.

Figure 21: Typical installation of insulating boots

A. Shipping split, as shipped. Insulation boots are factory installed in correct location. Bus bars and hardware are mounted on a temporary shipping bracket in one of the units to be connected. (Bus bars and hardware may be packed separately in unusual situations.)

B. Shipping split assembly in progress. Insulation boots have been removed and bus bars have been installed. Connection bolts have been correctly torqued. Unit is ready for reinstallation of insulation boots.

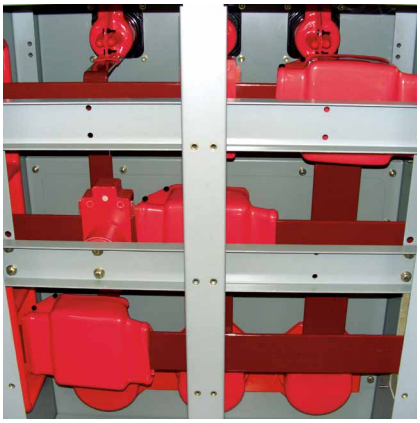

C. Insulation boots have been reinstalled. Unit is ready for reinstallation of main bus compartment barrier (designated R in Figure 28: Typical cable termination configurations).

Figure 22: Connection of bus at shipping split

The IEEE requirements for bus insulation in metal-clad switchgear are contained in IEEE C37.20.2 clause 7.9, which reads as follows:

"This insulating covering is a requirement of metal-clad switchgear and is provided to minimize the possibility of communicating faults and to prevent the development of bus faults that would result if foreign objects momentarily contacted bare bus. This insulating covering is usually only a part of the primary insulation system, and in such cases the outer surface of this insulating covering will not be at ground potential. It should not be assumed, therefore, that personnel can contact this insulating covering with complete safety."

Primary cable connections

All cable connections to metal-clad switchgear must be fully insulated to comply with the IEEE C37.20.2 definition of metal-clad switchgear. Insulation of terminations reduces the likelihood of occurrence of arcing faults. In addition, insulation of terminations is required to maintain the dielectric withstand capability of the installed equipment. Recommendations of the cable supplier should be followed for the installation. Typical termination configurations are shown in Figure 24: Primary cable termination and insulation, Figure 25: Typical cable terminal mounting and insulation and Figure 26: Typical cable termination compartment (bus compartment covers removed).

Because of considerable variations in installation requirements and available cables, Siemens furnishes a double-bolt, double-clamp, terminal lug as standard.

For cable terminations, bus drilling is configured to accommodate cable terminals with hole patterns in accordance with NEMA CC-1 standards. All insulating and terminating materials other than terminal lugs and cable supports are to be furnished by the purchaser.

Secondary control wiring

Secondary control wiring is installed and tested at the factory. Inter-group wiring at shipping splits can be readily connected by referring to wire markings. These wires are not terminated and are of sufficient length to be routed to their termination point after cubicles are bolted together. Terminals for these leads are furnished by the purchaser to suit the available crimping tools. Terminal block hardware is furnished with the switchgear. All wiring diagrams needed for installation are furnished in advance.

Wires can be easily traced on wiring diagrams furnished for the switchgear. Each device is illustrated and identified with a letter. Each terminal on each device is identified by an alphanumeric code. The wire list adjacent to each device on the diagram indicates the device and terminal number to which each wire is connected at the next connection point.

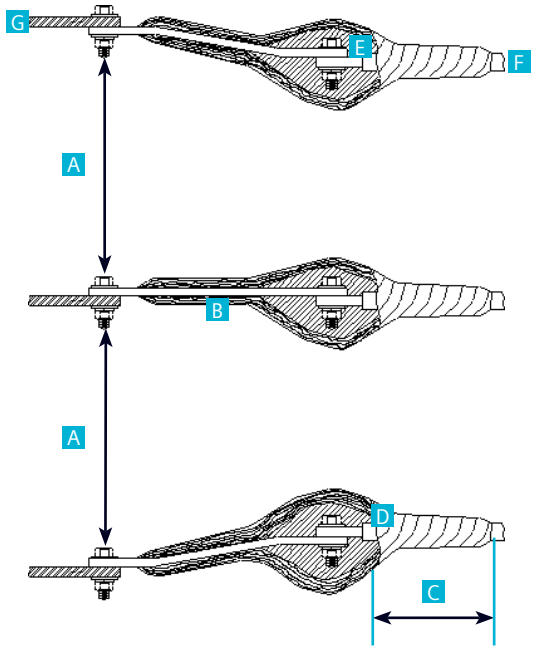

Item	Description		
Voltage	4.76 kV	8.25 kV and 15 kV	27 kV
A	3.5" (89 mm) minimum	6.0" (152 mm) min.	9" (229 mm) min.
B	1" or 2" tape (half-lapped) / 8.25 kV and 15 kV three layers / 4.76 kV two layers / 27 kV six layers		
C	1.5" (38 mm) minimum overlap for 4.76 kV/ 6.0" (152 mm) minimum overlap for 8.25 kV, 15 kV, and 27 kV		
D	Bus insulation		
E	Mastic pad		
F	Insulated switchgear bus		
G	Uninsulated transformer connection		

Figure 23: Taped joint-insulation switchgear bus to transformer throat

All secondary control wiring installed by the factory is neatly bundled and attached to the cubicle device mounting plates. Make all field connections in a similar manner. Check that the circuit breaker, its components and the hinged front panel clear any additional wiring installed. Figure 27: Secondary control cable connections shows a typical secondary control cable installation. All purchaser wiring is to be routed behind the cable retainer, which is removable for installation purposes. Use plastic or nylon ties to secure all field installed wires to the cubicle structure.

Note: Dimensions are for reference only and are in inches (mm). Size and location of stress cone as recommended by cable manufacturer.

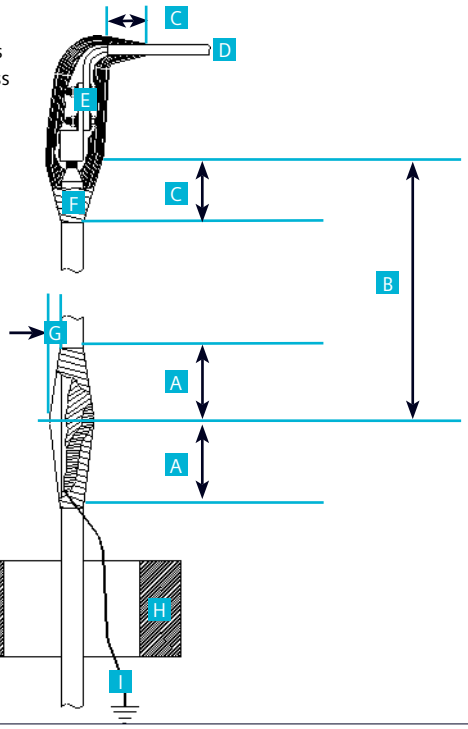

Item	Description		
Voltage	4.76 kV	8.25 kV and 15 kV	27 kV
A	2" (51 mm)	4" (102 mm)	6" (152 mm)
B	7" (178 mm)	18" (457 mm)	Size and location of stress cone as recommended by stress cone manufacturer
C	1.5" (38 mm) minimum overlap		4.25" (108 mm) min. overlap
D	Bus insulation		
E	Mastic pad		
F	1" or 2" tape (half-lapped) / 8.25 kV and 15 kV three layers / 4.76 kV two layers / 27 kV six layers		
G	Build up equal to insulation thickness		
H	Ground sensing current transformer		
I	Ground lead to shielding at stress cone must pass through current transformer as shown for proper relay operation		

Figure 24: Primary cable termination and insulation

Ground connections

A common ground bus is incorporated in all units for properly grounding the equipment after installation.

The ground bus extending through the switchgear is accessible in the primary cable area of each unit. The interunit connector has provisions for two bolts at each end. For ease of assembly, install bottom bolts first. Verify that the ground bar to the circuit breaker cell is also bolted to interunit bar, as shown in Figure 29: Ground bus connection.

Provision for connecting the ground bus must be made in such a manner that a reliable ground connection is obtained. Consult latest National Electrical Code® (NFPA 70®) for ground connection standards.

Temporary ground connections

It is strongly recommended that no work be done on current carrying parts until these parts have been disconnected from the system and solidly grounded. One method of solidly grounding the high-voltage circuit is by use of a grounding device. This device is placed in a cubicle in the same manner as a circuit breaker and provides a path to ground. It is furnished only when specified in the contract.

DANGER

Hazardous voltage.

Will cause death, serious injury and property damage.

Do not contact energized conductors.

De-energize and ground high voltage conductors before working on or near them.

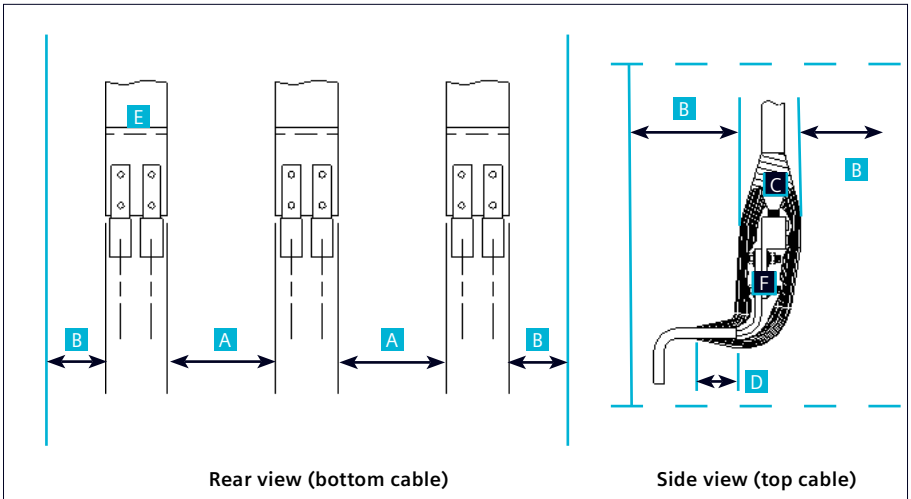

Rear view (bottom cable) Side view (top cable)

Item	Description		
Voltage	**4.76 kV**	**8.25 kV and 15 kV**	**27 kV**
A	Phase-to-phase 1.75" (44 mm) minimum	Phase-to-phase 3.25" (83 mm) min.	Phase-to-phase 5.75" (146 mm) min.
B	Phase-to-ground 1.75" (44 mm) minimum	Phase-to-ground 3.25" (83 mm) min.	Phase-to-ground 4.25" (108 mm) min.
C	1" or 2" tape (half-lapped) / 8.25 kV and 15 kV three layers / 4.76 kV two layers / 27 kV eight layers		
D	1.5" (38 mm) minimum overlap		
E	Insulated phase ends		
F	Mastic pad		

Figure 25: Typical cable terminal mounting and insulation

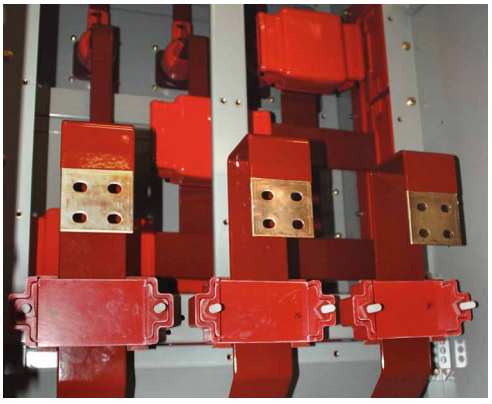

Figure 26: Typical cable termination compartment (bus compartment covers removed)

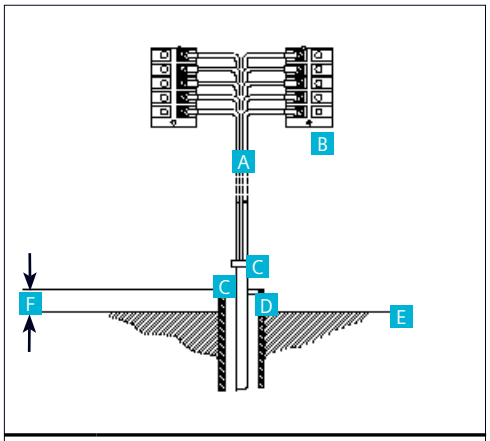

Item	Description
A	Control cable
B	Terminal block
C	Seal
D	Conduit
E	Floor line
F	1.0" (25 mm) maximum

Figure 27: Secondary control cable connections

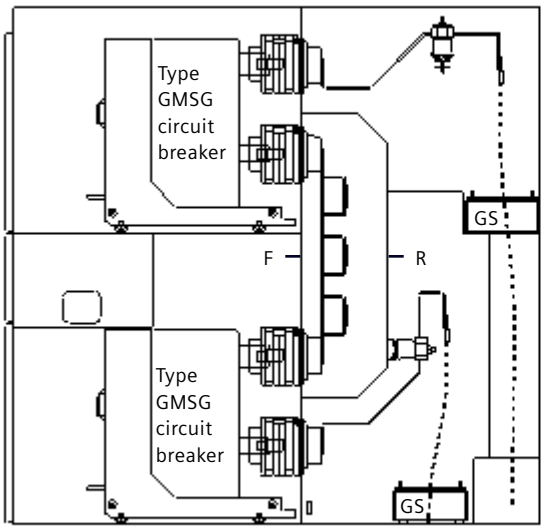

A. Two feeder circuit breakers. Cables bottom exit.

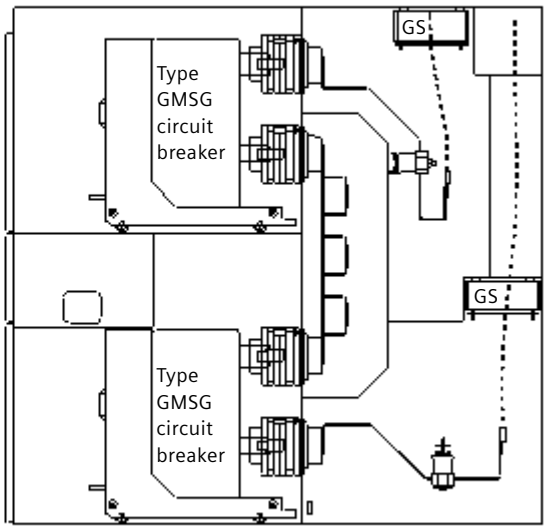

B. Two feeder circuit breakers. Cables top exit.

C. Two circuit breakers. Upper cables top exit. Lower cables bottom exit.

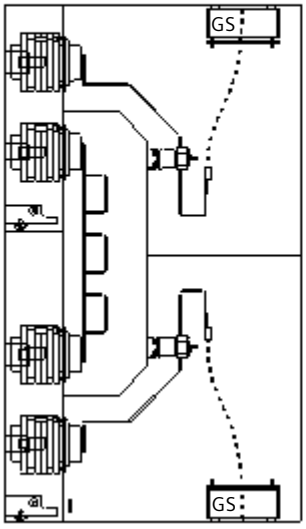

D. Circuit breaker below auxiliary. Cables bottom exit.

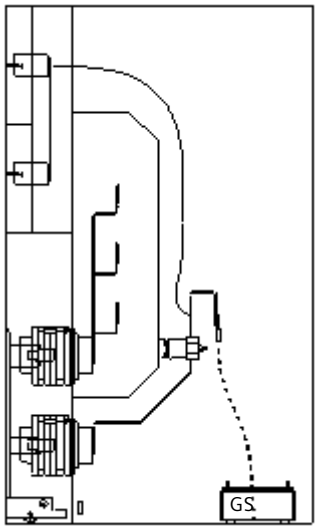

E. Circuit breaker below auxiliary with full cell rollout. Cables bottom exit.

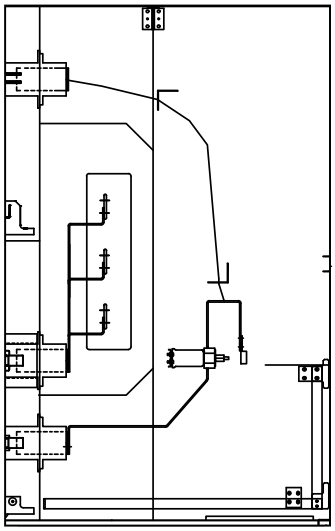

Figure 28: Typical cable termination configurations

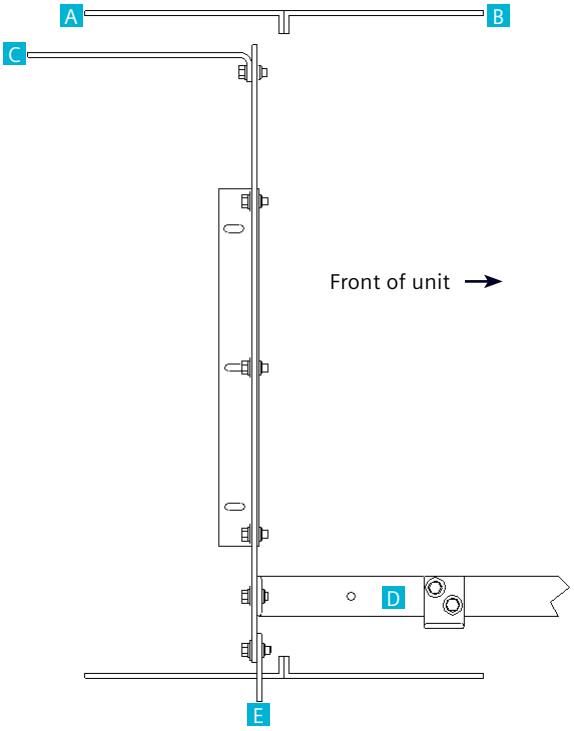

Item	Description
A	Right rear side sheet
B	Right mid side sheet
C	Ground bar to cable area
D	Connector to circuit breaker cell
E	Interunit ground bar

Figure 29: Ground bus connections

Instrument transformers

⚠ DANGER

Hazardous voltage.

Will cause death, serious injury and property damage.

Do not touch shutter or barrier if equipment is energized.

De-energize and ground high-voltage conductors before working on or near them.

Control power and voltage transformers general information

When required, voltage transformers (VTs), or a control power transformer (CPT) or fuses for a CPT can be mounted on a withdrawable rollout tray. Each auxiliary cell (A = upper or B = lower) may contain up to two rollout tray cell locations. Refer to Table 2: Typical VT, CPT and CPT fuse rollout configuration for various rollout tray cell locations. Rollout trays are designed with metal extensions on each end of the primary fuses. These extensions wipe across a flexible copper strap mounted on the cubicle as the rollout tray is withdrawn. This action will ground each side of the primary fuses to remove any residual charge from the fuses or transformers.

As the rollout tray is withdrawn, insulating shutters move to cover the cubicle primary disconnect stabs.

Note: *The insulating shutter is only a part of the primary insulation system, and the outer surface of the insulating shutter will not be at ground potential. It should not be assumed, therefore, that personnel can contact the insulating shutter with complete safety. 27 kV auxilary shutters are grounded metal.*

VTs

One, two or three VTs with primary fuses may be mounted on the rollout tray located in cell locations C, D, E and/or F. Refer to the "Operating sequence" section for disconnecting, connecting or withdrawal instructions.

Typical rollout tray and transformer cell locations are shown in the side views in Figure 30: Typical VT, CPT and CPT fuse rollout configuration.

CPTs

One CPT, up to 15 kVA single phase, with the associated primary fuses, may be mounted on a rollout tray in cell locations D and F. CPTs larger than 15 kVA single phase and all three-phase CPTs are stationary mounted, either in the rear of the switchgear section, in the lower front cell or remote. If the CPT is located in the rear of the section or remote, the primary fuses are normally mounted on a rollout fuse tray which may be located in cell location D or F. If the CPT is located in the lower front cell, the primary fuses are mounted on a rollout fuse tray in cell location D.

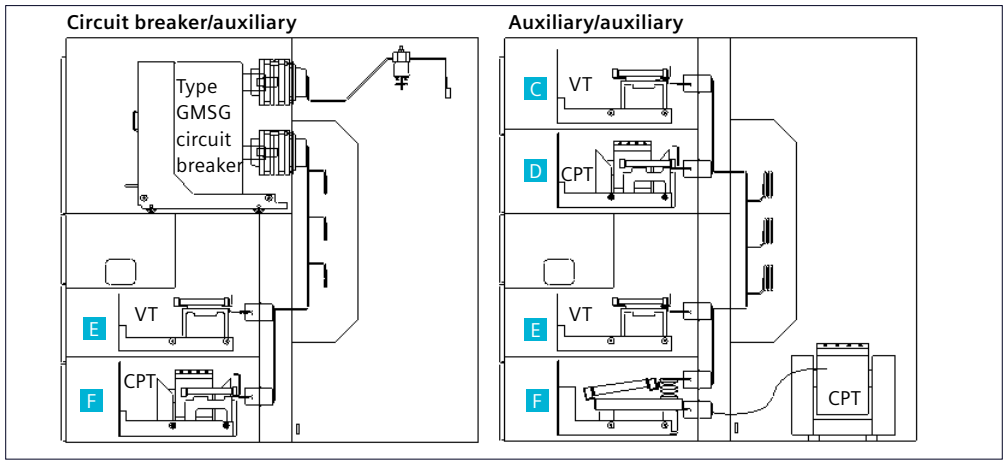

Figure 30a: Typical VT, CPT and CPT fuse rollout configuration

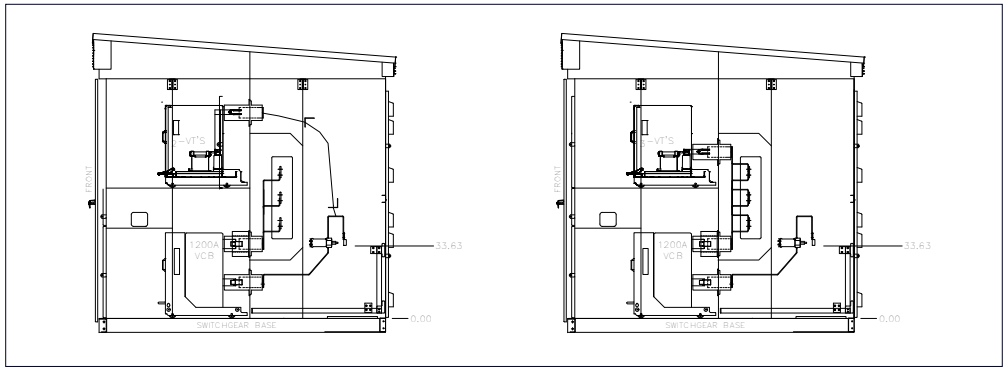

Figure 30b: 27 kV and AUX with SIERS

Table 2a: Typical VT, CPT and CPT fuse rollout configuration

Cell	Cell location	Rollout tray may be used for:
A (upper)	C	VT
	D	VT
		CPT up to 15 kVA single phase
		Fuses on a withdrawable tray for CPT installed in cell locations E and F (over 15 kVA single phase, or any three phase)
B (lower)	E	VT
	F	VT
		CPT up to 15 kVA single phase
		Fuses on a withdrawable tray for CPT installed in rear of section (over 15 kVA single phase, or any three phase), or remote

Table 2b: Typical VT, CPT and CPT fuse rollout configuration

Cell	Cell location	Rollout tray may be used for:
A (upper)	C	VT
	D	VT
		CPT up to 15 kVA single phase
		Fuses on a withdrawable tray for CPT installed in cell locations E and F (over 15 kVA single phase, or any three phase)
B (lower)	E	VT
	F	VT
		CPT up to 15 kVA single phase
		Fuses on a withdrawable tray for CPT installed in rear of section (over 15 kVA single phase, or any three phase), or remote

The secondary molded-case circuit breaker is normally mounted on the front panel of the CPT rollout tray and is interlocked so that the circuit breaker must be open before the tray can be moved between the inserted (CONNECTED) and withdrawn (DISCONNECTED) positions. For large units (over 15 kVA single phase and any three phase) the secondary molded-case circuit breaker is mounted separately and is key interlocked with the rollout fuse tray so that the secondary circuit breaker must be locked open before the rollout fuse tray can be moved between the inserted (CONNECTED) and withdrawn (DISCONNECTED) positions. All 27 kV applications use “large” CPTs.

⚠ DANGER

Hazardous voltage.

Will cause death, serious injury and property damage.

Do not place hands or objects into rollout trays until the rollout tray is fully withdrawn from the cell.

When inserting or withdrawing a rollout tray, always complete the action in one continuous motion.

⚠ WARNING

Heavy weight.

Can result in death, serious injury or property damage.

Always use extension rails to inspect primary fuses or to remove or install rollout trays.

Operating sequence

Disconnecting VT rollout tray (refer to Figure 32: Voltage transformer operating sequence.

To provide an additional degree of protection to personnel in the event of an internal arcing fault, disconnecting a VT from the primary circuit is performed with the rollout compartment door closed and securely latched.

1. Rotate the left knob on the cell door to open the left-hand racking access opening.
2. Insert a rollout racking tool into the opening and thread it completely (35 clockwise turns) into the guided bushing on the rollout tray.
3. Repeat steps 1 and 2 for the right-hand racking access opening.
4. Verify that the rollout latch is disengaged by looking through the viewing window at the latch indicator on the lower right side of the rollout tray front cover.
5. The rollout tray is now free to move. Using the rollout racking tools as handles, pull the tray in a smooth motion from the fully inserted (CONNECTED) postion to the fully withdrawn (DISCONNECTED) position. Verification that the rollout tray is in the fully withdrawn (DISCONNECTED) position is indicated by a letter "D" in the indicator window on the cell door.

6. Completely unscrew the rollout racking tool from the right-hand access opening and remove the tool.
7. Completely unscrew the rollout racking tool from the left-hand access opening and remove the tool. The rollout tray is now securely latched in the withdrawn (DISCONNECTED) position.
8. Rotate the access knobs to close the racking access openings.

Removing a half-cell VT rollout tray from a cell

If a VT rollout tray is to be completely removed from a cell (for maintenance or inspection), first disconnect the VT rollout following the steps above. This will disengage the interlock and permit opening of the compartment door.

1. Unlatch the door by loosening the captive 3/8-16 bolts or by turning the latch handle clockwise (optional feature) and open the door.
2. Insert the two extension rails provided in the accessories cabinet into the fixed rails of the cell ensuring that they are properly secured (refer to Figure 33: Extension rail insertion on page 65).
3. Roll the VT rollout tray from the cell onto the extension rails using the handle located on the front cover of the rollout tray.
4. The VT rollout tray may now be removed from the extension rails by using the approved Siemens rollout tray lifting device (refer to Figure 34: Lift truck with rollout tray on page 65) or a mechanic's web sling rated for a minimum of 380 lbs (172 kg) (refer to Figure 35: Web sling in use to handle rollout tray on page 66) and a suitable crane.

Connecting a half-cell VT rollout tray

To provide an additional degree of protection to personnel in the event of an internal arcing fault, connecting a VT rollout tray is performed with the rollout compartment door closed and securely latched. Connecting (inserting) a VT rollout tray is essentially the reverse of the disconnecting (withdrawal) operation.

Shown with rollout racking tools installed.

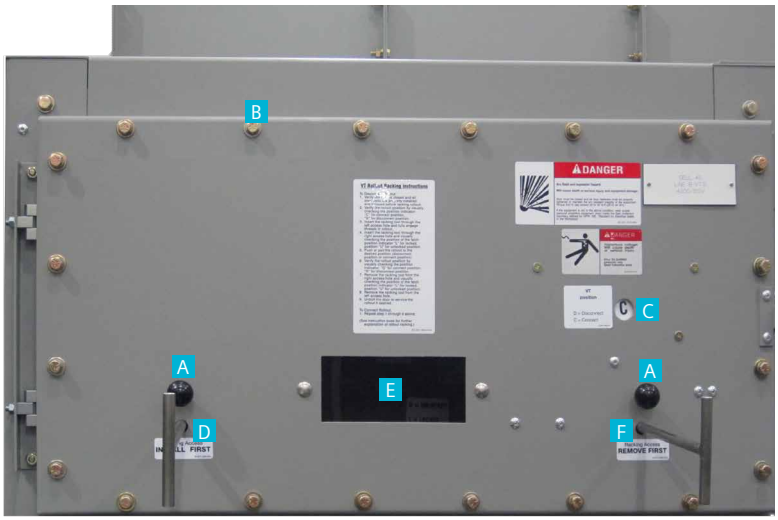

Item	Description
A	Access knob
B	3/8-16 hardware
C	Rollout position indicator
D	Left-hand racking access opening
E	Viewing window
F	Right-hand racking access opening

Figure 32: Voltage transformer operating sequence (up to 50 kA)

1. Verify that the cell door is closed and securely latched.
2. Verify that the rollout tray is in the withdrawn (DISCONNECTED) position by checking that a letter "D" is shown in the indicator window on the cell door.
3. Rotate the left knob on the cell door to open the left-hand racking access opening.
4. Insert a rollout racking tool into the opening and thread it completely (35 clockwise turns) into the guided bushing on the rollout tray.

5. Repeat steps 3 and 4 for the right-hand racking access opening.
6. Verify that the rollout latch is disengaged by looking through the viewing window at the latch indicator on the lower right side of the rollout tray front cover.
7. The rollout tray is now free to move. Using the rollout racking tools as handles, push the tray in a smooth motion from the fully withdrawn (DISCONNECTED) position to the fully inserted (CONNECTED) postion. Verification that the rollout tray is in the fully inserted (CONNECTED) position is indicated by a letter "C" in the indicator window on the cell door.
8. Completely unscrew the rollout racking tool from the right-hand access opening and remove the tool.
9. Completely unscrew the rollout racking tool from the left-hand access opening and remove the tool.
10. Rotate the access knobs to close the racking access openings.

The rollout tray is now securely latched in the inserted (CONNECTED) position.

Disconnecting a half-cell CPT rollout tray or a CPT fuse rollout tray

Refer to Figure 37: CPT or fuse rollout operating sequence on page 71.

To provide an additional degree of protection to personnel in the event of an internal arcing fault, disconnecting a CPT rollout tray or CPT fuses from the primary circuit is performed with the rollout compartment door closed and securely latched.

1. Open the secondary molded-case circuit breaker to open the racking access opening.
2. Insert a rollout racking tool into the left-hand opening and thread it completely (35 clockwise turns) into the guided bushing on the rollout tray.
3. Repeat step 2 for the right-hand racking access opening after activating the key interlock if present.
4. Verify that the rollout latch is disengaged by looking through the viewing window at the latch indicator on the lower right side of the rollout tray front cover.
5. The rollout tray is now free to move. Using the rollout racking tools as handles, pull the tray in a smooth motion from the fully inserted (CONNECTED) postion to the fully withdrawn (DISCONNECTED) position. Verification that the rollout tray is in the fully withdrawn (DISCONNECTED) position is indicated by a letter "D" in the indicator window on the cell door.
6. Completely unscrew the rollout racking tool from the right-hand access opening and remove the tool.
7. Completely unscrew the rollout racking tool from the left-hand access opening and remove the tool.
8. Rotate the access knobs to close the racking access openings.

The rollout tray is now securely latched in the withdrawn (DISCONNECTED) position.

Removing a half-cell CPT rollout tray or a CPT fuse rollout tray from a cell

If a CPT rollout tray or CPT fuse rollout tray are to be completely removed from a cell (for maintenance or inspection), first disconnect the rollout following the steps above. This will disengage the interlock that prevents opening of the compartment door.

1. Unlatch the door by loosening the captive 3/8-16 bolts or by turning the handle latch clockwise (optional feature).
2. Insert the two extension rails provided in the accessories cabinet into the fixed rails of the cell ensuring that they are properly secured. Refer to Figure 33: Extension rail insertion.
3. Roll the rollout tray from the cell onto the extension rails using the handle located on the front cover of the rollout tray.

Figure 33: Extension rail insertion

4. The half-cell rollout tray may now be removed from the extension rails by using the approved Siemens rollout tray lifting device (refer to Figure 34: Lift truck with rollout tray (on page 65), or a mechanic's web sling rated for a minimum of 380 lbs (172 kg) (refer to Figure 35: Web sling in use to handle rollout tray) and a suitable crane.

Procedure to connect a half-cell CPT rollout tray or a CPT fuse rollout tray

To provide an additional degree of protection to personnel in the event of an internal arcing fault, connection of a CPT rollout tray or CPT fuses is performed with the rollout compartment door closed and securely latched. Connecting (inserting) a CPT rollout tray or CPT fuse rollout tray is essentially the reverse of the disconnecting (withdrawal) operation.

1. Verify that the cell door is closed and securely latched.
2. Verify that the rollout tray is in the withdrawn (DISCONNECTED) position by checking that a letter "D" is shown in the indicator window on the cell door.
3. Open the secondary molded-case circuit breaker to open the racking access openings.
4. Insert a rollout racking tool into the left-hand opening and thread it completely (35 clockwise turns) into the guided bushing on the rollout tray.
5. Repeat step 4 for the right-hand racking access opening after activating the key interlock if present.
6. Verify that the rollout latch is disengaged by looking through the viewing window at the latch indicator on the lower right side of the rollout tray front cover.
7. The rollout tray is now free to move. Using the rollout racking tools as handles, push the tray in a smooth motion from the fully withdrawn (DISCONNECTED) position to the fully inserted (CONNECTED) postion. Verification that the rollout tray is in the fully inserted (CONNECTED) position is indicated by a letter "C" in the indicator window on the cell door.
8. Completely unscrew the rollout racking tool from the right-hand access opening and remove the tool.
9. Completely unscrew the rollout racking tool from the left-hand access opening and remove the tool.
10. Slide the knob on the cell door to the right to close the secondary molded-case circuit breaker and close the racking access openings. The rollout tray is now securely latched in the inserted (CONNECTED) position.

Figure 34: Lift truck with rollout tray (up to 50 kA)

Figure 35: Web sling in use to handle a half-cell rollout tray

Disconnecting a full-cell VT rollout tray

To provide an additional degree of protection to personnel in the event of an internal arc fault, disconnecting a VT from the primary circuit is performed with the compartment door closed and securely latched.

1. Access the racking mechanism by turning the knob on the auxiliary compartment front door clockwise to open the racking access opening, insert the racking crank through the round opening at the bottom of the door onto the racking screw, and push in (refer to Racking crank engagement procedure on page 77). This action operates the racking interlock latch. If your equipment has the optional electrical racking device accessory, refer to Annex A for instructions for this device, which supplement the instructions in this section. The electrical racking device is only suitable for use with auxiliary cells equipped with the necessary mounting brackets.
2. Rotate the racking crank counterclockwise until the auxiliary rollout tray is in the DISCONNECT position.
3. Remove the racking crank.

Connecting a full-cell VT rollout

To provide an additional degree of protection to personnel in the event of an internal arcing fault, connecting a VT rollout tray is performed with the compartment door closed and securely latched. Connecting (inserting) a VT rollout tray is essentially the reverse of the disconnecting (withdrawal) operation.

When inserting an auxiliary rollout tray into a cell, be sure that the racking mechanism is in the DISCONNECT position. In this position, the racking indicator should show the letter "D" for DISCONNECT position (refer to Figure 47: Racking mechanism shown in DISCONNECT position on page 79).

Important: *Failure to follow instructions may result in damage to equipment. Return racking mechanism to the DISCONNECT position before inserting auxiliary rollout. The auxiliary rollout tray racking method has been designed to be used only with the compartment door closed and securely latched during racking.*

1. Check that the racking position indicator shows "D" for DISCONNECT position.
2. Check that the auxiliary rollout tray is fully pushed into the cell to the DISCONNECT position.
3. Close and securely latch the compartment door.
4. Interlocks will prevent engagement of the racking crank if the compartment door is not securely latched.
5. Access the racking mechanism by turning the knob on the compartment door clockwise to open the racking access opening, and insert the racking crank through the round opening at the bottom of the door onto the racking screw (refer to Racking crank engagement procedure on page 77). If your equipment has the optional electrical racking device accessory, refer to Annex A for instructions for this device, which supplement the instructions in this section. The electrical racking device is only suitable for use with cells equipped with the necessary mounting brackets.
6. Push the racking crank forward to move the racking interlock slide back, which will allow the socket to engage the square head on the racking screw. Do not force the slide, as it is interlocked to prevent sliding back when the compartment door is not closed and securely latched.
7. Rotate the racking crank clockwise about 54 turns until a positive stop is felt and the position indicator shows "C" for the CONNECT position. Secondary disconnects will automatically connect as the auxiliary rollout moves towards the CONNECT position.

Disconnecting a full-cell CPT rollout tray or a CPT fuse rollout tray

To provide an additional degree of protection to personnel in the event of an internal arcing fault, disconnecting a CPT rollout tray or a CPT fuse rollout tray from the primary circuit is performed with the rollout compartment door closed and securely latched.

1. Open secondary molded-case circuit breaker.
2. Rotate key interlock clockwise, extending interlock to block closing of secondary molded-case circuit breaker. Remove key.
3. Insert key into the key interlock mounted on the compartment door. Rotate the key counterclockwise, withdrawing the interlock bolt.
4. Access the racking mechanism by turning the knob on the auxiliary compartment front door clockwise to open the racking access opening, insert the racking crank through the round opening at the bottom of the door onto the racking screw, and push in (refer to Racking crank engagement procedure on page 77). This action operates the racking interlock latch. If your equipment has the optional electrical racking device accessory, refer to Annex A for instructions for this device, which supplement the instructions in this section.
5. Rotate the racking crank counterclockwise until the auxiliary rollout tray is in the DISCONNECT position. Verification that the rollout tray is in the disconnected position is indicated by a letter “D” in the indicator window on the cell door.
6. Remove the racking crank. Operate the compartment door latch and open the compartment door.
7. Operate the release latch and pull the auxiliary rollout tray out from the DISCONNECT position. The auxiliary rollout may now be removed from cubicle.
8. After the auxiliary rollout tray is out of the cell, close the auxiliary compartment door and turn latch handle counterclockwise to securely latch the door.

Connecting a full-cell CPT rollout tray or a CPT fuse rollout tray

To provide an additional degree of protection to personnel in the event of an internal arcing fault, connection of a CPT rollout tray or a CPT fuse rollout tray is performed with the compartment door closed and securely latched. Connecting (inserting) a CPT rollout tray or a CPT fuse rollout tray is essentially the reverse of the disconnecting (withdrawal) operation.

When inserting an auxiliary rollout tray into a cell, be sure that the racking mechanism is in the DISCONNECT position. In this position, the racking indicator should show the letter "D" for DISCONNECT position (refer to Figure 47: Racking mechanism shown in DISCONNECT position on page 79). Refer to Figure 38 for details of full-cell auxiliary rollout positions and removal.

Important: *Failure to follow instructions may result in damage to equipment. Return racking mechanism to the DISCONNECT position before inserting auxiliary rollout. The auxiliary rollout tray racking method has been designed to be used only with the compartment door closed and securely latched during racking.*

1. Open secondary molded-case circuit breaker.
2. Rotate key interlock, extending interlock to block closing of secondary circuit breaker. Remove key.
3. Insert key into the key interlock mounted on the compartment door. Rotate the key counter-clockwise, withdrawing the interlock bolt.
4. Access the racking mechanism by turning the knob on the auxiliary compartment front door clockwise to open the racking access opening, insert the racking crank through the round opening at the bottom of the door and onto the racking screw, and push in (refer to Racking crank engagement procedure on page 77). This action operates the racking interlock latch. If your equipment has the optional electrical racking device accessory, refer to Annex A for instructions for this device, which supplement the instructions in this section.
5. Rotate the racking crank clockwise until the auxiliary rollout tray is in the CONNECT position. Verification that the rollout tray is in the connected position is indicated by a letter "C" in the indicator window on the cell door.
6. Remove the racking crank.
7. Close the racking access opening by turning the knob on the auxiliary compartment front door counterclockwise. Turn key clockwise to extend the key interlock. The racking access is now blocked in the closed position.
8. Remove key and insert it into the key interlock of the molded-case circuit breaker.
9. Rotate the key to retract the key interlock. The secondary molded-case circuit breaker can now be closed.

Removing a full-cell auxiliary rollout tray from lower cell if not installed on raised pad

1. Verify that auxiliary rollout tray is in disconnected position and the letter "D" shows in the indicator window on the cell door.
2. Operate the compartment door latch and open the compartment door.
3. Operate the release latch and pull the auxiliary rollout tray out from the DISCONNECT position. The auxiliary rollout may now be removed from compartment.
4. The auxiliary rollout tray is now free to be rolled out on the floor, using the handles on the front panel. The wheels of the auxiliary rollout tray are virtually at floor level, and one person can easily handle the rollout tray.
5. After the auxiliary rollout tray is out of the cell, close the auxiliary compartment door and turn the door latch handle counterclockwise to securely latch the door.

Removing a full-cell auxiliary rollout tray from upper cell or if installed on raised pad

1. Verify that auxiliary rollout tray is in disconnected position and the letter “D” shows in the indicator window on the cell door.
2. Operate the compartment door latch and open the compartment door.
3. Insert the two extension rails into the fixed rails. Be sure the extension rails are properly secured in place.
4. Operate the release latch and pull the auxiliary rollout tray out from the DISCONNECT position. The auxiliary rollout tray may now be removed from compartment and rolled out onto the two extension rails.

The full-cell auxiliary rollout trays for type GM-SG-AR switchgear weigh up to 495 lbs (225 kg) depending upon their configurations. The auxiliary rollout tray may be moved using a properly rated crane and lift sling. Refer to Figure 45: Lift sling in use to handle circuit breaker on page 78. The same lifting sling and method are used to handle the full-cell rollout trays. A lift sling may be attached to the auxiliary rollout tray, and then used to hoist the auxiliary rollout tray vertically, clear of the extension rails. When clear, lower the rollout tray to the floor and remove the extension rails.

The rollout tray can also be lifted using the lift truck used to handle circuit breakers. Refer to Figure 48: Lift truck with circuit breaker or rollout tray, on page 76.

Current transformers (CTs)

The toroidal CTs shown installed in a unit in Figure 36: Type MD current transformers installed on lower disconnects (barrier removed for photo) are the most commonly used type in metal-clad switchgear equipment. The circuit breaker primary studs pass through the transformers when in the CONNECT position. Types MD or MDD CTs are of the toroidal type mounted in the circuit breaker compartment behind the shutter barrier. Up to two standard or one high accuracy CTs may be mounted around each primary insulator tube.

A zero sequence toroidal CT can be furnished for ground sensing circuits. This transformer is mounted in the primary cable area at a convenient height for receiving purchaser’s cables. Zero sequence CTs may require that conduits for multiple bottom entrance cables be recessed (refer to Figure 24: Primary cable termination and insulation on page 56).

Figure 36: Type MD current transformers installed on lower disconnects (barrier removed for photo)

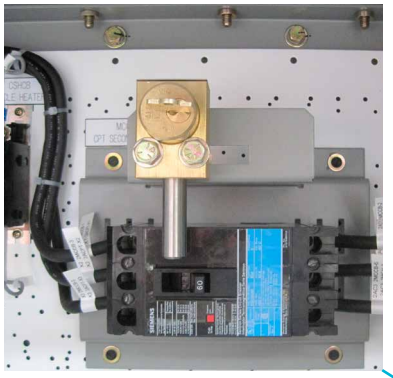

A. Step 1: Secondary circuit breaker is closed. Open secondary circuit breaker.

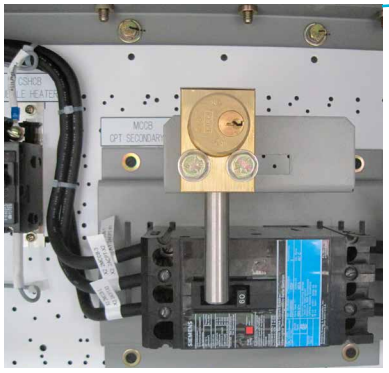

B. Step 2: Secondary circuit breaker is open. Rotate key interlock, extending interlock to block closing of secondary circuit breaker. Remove key.

C. Step 3: Key interlock on rollout tray is extended, preventing operation of handle/interlock bars. Insert key, rotate key interlock, withdrawing interlock bolt.

D. Step 4: Key interlock bolt withdrawn. Follow procedure in "Disconnecting a CPT rollout tray or CPT fuse tray" on page 65 to withdraw rollout tray.

Figure 37: CPT or fuse rollout operating sequence (up to 15kV, 50kA)

A. VT rollout tray in CONNECTED position. Handle/interlock bar fully extended to secure VT rollout tray in cell.

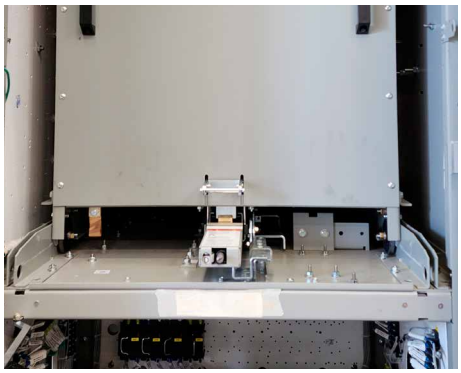

B. Handle/interlock bar retracted to allow rollout tray to be withdrawn.

C. Extension rail being inserted.

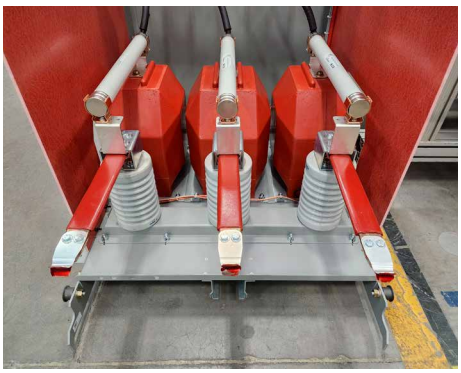

D. VT rollout tray uninstalled to show fuses.

Figure 38: Full-cell auxiliary rollout for 27kV applications and auxiliary rollout for SIERS applications

Circuit breaker positions

Circuit breaker cell preparation

The circuit breaker cell contains the positioning, interlocking and operating devices described below and shown in Figure 38: Circuit breaker compartment on page 73 and Figure 39: Interlocks on bottom of circuit breaker on page 74. These devices must be checked for placement and freedom of operation.

Circuit breaker racking mechanism

The circuit breaker racking mechanism is centered below the circuit breaker. It functions in conjunction with the trip-free interlock on the circuit breaker to hold the circuit breaker trip-free between positions. Three positions are provided: disconnect, test and connect. The circuit breaker racking mechanism also functions in conjunction with the circuit breaker compartment door and the circuit breaker by preventing racking of the circuit breaker unless the compartment door is closed and latched. Additionally, the racking mechanism prevents the compartment door from being opened unless the circuit breaker is in either the TEST or DISCONNECT position.

Interference blocking plate (rating interlock)

This plate is mounted vertically on the bottom of the cell to allow only the properly rated circuit breaker into the designated cell. For example, a 1,200 A circuit breaker can enter a 1,200 A cell and a 2,000 A circuit breaker can enter a 2,000 A cell, depending on the voltage, interrupting and close and latch ratings.

Normally the cubicle and circuit breaker rating plate combinations will be identical.

The interlock will allow a 2,000 A or 3,000 A circuit breaker (rated 50 kA or less) to enter a 1,200 A cell (rated 50 kA or less), provided the voltage, interrupting and continuous current ratings equal or exceed the ratings of the cell.

Type GMSG circuit breakers rated 63 kA short-circuit current cannot be used in cells designed for 50 kA or less.

Type GMSG-GCB generator circuit breakers are interlocked to prevent their use in cells designed for non-generator circuit breakers, and generator circuit breaker cells will not accept non-generator circuit breakers

The coordinating interference plate on the circuit breaker is shown in Figure 35: Interlocks on bottom of circuit breaker.

27 kV circuit breaker cannot be used in a 17.5 kV cell.

⚠ DANGER

Hazardous voltage.

Will cause death, serious injury and property damage.

Do not insert a circuit breaker into a cell intended for a circuit breaker with ratings above those of the circuit breaker being inserted.

Verify that the circuit breakers and cubicles have appropriate ratings and properly located interference blocking plates and angles before attempting to insert a circuit breaker.

Secondary disconnect

The secondary disconnect contains all the electrical control circuit connections for the circuit breaker.

It mates with the secondary disconnect block on the circuit breaker. The circuit breaker contacts slide against the cell contact strips. The secondary contacts are automatically mated in the TEST and CONNECT positions.

Mechanism-operated cell (MOC) switch

This switch is operated by a roller on the circuit breaker. The circuit breaker engages the MOC auxiliary switch only in the connect (operating) position unless an optional TEST position pickup is specified in the contract. If a TEST position pickup is included, the circuit breaker will engage the auxiliary switch in both positions. The MOC switch and operating linkage is illustrated in Figure 40: MOC and TOC switches (MOC/TOC switch cover removed for photo) on page 74. Up to 24 stages may be provided.

Truck-operated cell (TOC) switch

This switch is operated by an extension of the top plate at the right top corner of the circuit breaker. This switch is operated only as the circuit breaker is moved to or from the CONNECT position. The TOC switch is shown in the upper portion of Figure 40: MOC and TOC switches (MOC/TOC switch cover removed for photo) on page 74. Up to 12 stages may be provided.

Circuit breaker ground connection

A sliding contact multiple finger assembly for grounding the circuit breaker frame is mounted underneath the circuit breaker truck frame, as shown in Figure 39: Interlocks on bottom of circuit breaker on page 74. This assembly engages the ground bar mounted in the cell and maintains a solid ground contact with a continuous wipe through all positions. The contact is broken (or disconnected) when the circuit breaker passes the DISCONNECT position while being removed from the cell.

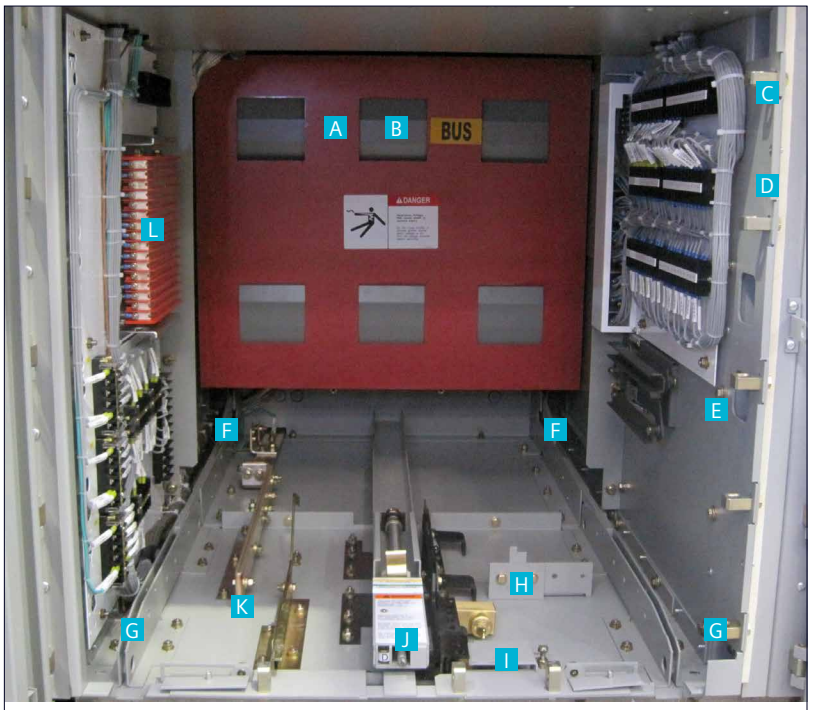

Item	Description
A	CT barrier
B	Shutter (behind barrier)
C	TOC switch terminals
D	MOC switch terminals
E	MOC switch operator
F	Shutter operating linkage
G	Guide rails
H	Interface blocking plate (rating interlock)
I	Trip-free and racking interlock padlock provisions
J	Racking mechanism
K	Ground bar
L	Secondary disconnect

Figure 38: Circuit breaker compartment

Shutter operation

Two shutter operating levers, one on each side of the circuit breaker cell, are driven down by the engagement of the wheels on the circuit breaker frame. This opens the shutters as the circuit breaker is moved into the CONNECT position and allows the shutters to close when the circuit breaker is withdrawn. The shutters are fully closed with the circuit breaker in the TEST position.

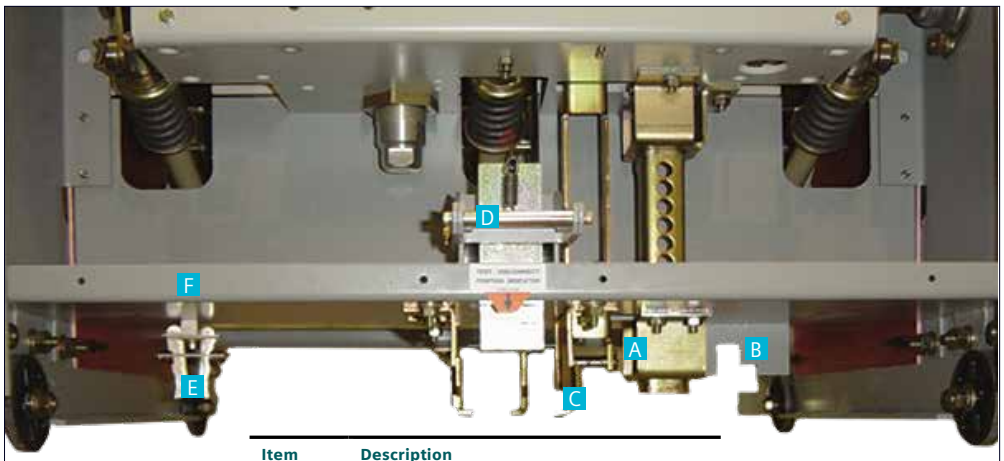

Item	Description
A	Closed circuit breaker interlock
B	Rating interlock
C	Trip-free interlock
D	Racking mechanism release handle
E	Ground disconnect
F	Circuit breaker frame

Figure 39: Interlocks on bottom of circuit breaker

Figure 40: MOC and TOC switches (MOC/TOC switch cover removed for photo)

Installation and removal

Type GMSG vacuum circuit breakers are normally shipped installed in the switchgear cells. They are normally shipped with their primary contacts open and the closing springs discharged. Before racking of a circuit breaker or performing any inspection or maintenance, verify that the circuit breaker is open with closing springs discharged. Refer to instruction manual E50001-F710-A231-X-XXXX for information on installation, maintenance and handling of these circuit breakers.

Manual trip operation

Manual tripping of the circuit breaker is always possible with the compartment door closed. This is accomplished by inserting the manual trip rod accessory through the opening on the compartment door (refer to Figure 41: Manual tripping of circuit breaker) and pushing the manual trip button on the circuit breaker. The circuit breaker will open and the status indicator on the circuit breaker can be observed to change from CLOSED to OPEN by looking through the viewing window.

Item	Description
A	Circuit breaker status viewing window
B	Manual tripping opening

Figure 41: Manual tripping of circuit breaker

De-energizing control power to circuit breaker

Locate the control power disconnect device associated with the circuit breaker. This disconnect (typically, a pullout type fuse holder) is normally located on the secondary device panel inside the secondary compartment. Removal of the fuse holder de-energizes control power to the circuit breaker in the respective switchgear cell. In some switchgear assemblies, a molded-case circuit breaker is used in lieu of the pullout type fuse holder. Opening this circuit breaker accomplishes the same result: control power is disconnected.

Spring discharge check

Perform the spring discharge check before inserting or removing the circuit breaker from the switchgear (refer to Figure 42: Front panel of type GMSG circuit breaker).

The spring discharge check consists of simply performing the following tasks in the order given. This check assures that both the tripping and closing springs are fully discharged.

1. Assure that circuit breaker is not in CONNECT position in cell.
2. Open control power disconnect (pull fuseholder or open molded-case circuit breaker).
3. Press red trip pushbutton.
4. Press black close pushbutton.
5. Again press red trip pushbutton.

Item	Description
A	Manual spring charging access port
B	CHARGED/DISCHARGED indicator
C	OPEN/CLOSED indicator
D	Operations counter
E	Push-to-close pushbutton
F	Push-to-open pushbutton
G	Circuit breaker racking release handle

Figure 42: Front panel of type GMSG circuit breaker

6. Verify spring condition indicator shows discharged.
7. Verify main contact status indicator shows open.

DANGER

Hazardous voltage.

Will cause death, serious injury and property damage.

Read instruction manuals, observe safety instructions and use qualified personnel.

⚠ WARNING

Heavy weight.

Can result in death, serious injury or property damage.

Always use extension rails to remove or install circuit breaker in cells not installed at floor level.

Figure 43: Lift truck with circuit breaker or 63 kA rollout tray

Removal from cell in indoor (if not on raised pad), Shelter-Clad, and Shelter-Clad+ outdoor switchgear

After performing the spring discharge check (with control power de-energized), remove the circuit breaker from its switchgear cubicle.

1. Access the racking mechanism by turning the knob on the circuit breaker compartment front door clockwise to open the racking access opening and insert the racking crank through the round opening at the bottom of the door and onto the racking screw and push in (refer to "Racking crank engagement procedure" on page 77). This action operates the racking interlock latch.

   If your equipment has the optional electrical racking device accessory, refer to Annex A for instructions for this device, which supplement the instructions in this section. The electrical racking device is only suitable for use with circuit breaker cells (or full-cell rollout compartments) equipped with the necessary mounting brackets.

2. Rotate the racking crank counterclockwise until the circuit breaker is in the DISCONNECT position.

3. Remove the racking crank. Operate the compartment latch and open the compartment door.

4. Release the circuit breaker release latch and pull the circuit breaker out from the DISCONNECT position. The circuit breaker may now be removed from cubicle.

5. The circuit breaker is now free to be rolled out on the floor using the handles on the front panel as shown in Figure 42: Front panel of type GMSG circuit breaker on page 75.

   The wheels of the circuit breaker are virtually at floor level (unless the switchgear is installed on a raised pad) and one person can easily handle the unit.

6. After the circuit breaker is out of the cell, close the circuit breaker compartment door and turn handle counterclockwise to securely latch the door.

Removal from cell for indoor switchgear installed on a raised pad

Removal of the circuit breaker from switchgear installed on a raised pad is similar to removal of a circuit breaker at floor level with several additional steps.

Figure 33: Extension rail insertion on page 65 shows one of the two extension rails being inserted into the fixed rails within the cell. The rails engage locking pins in the fixed rails to secure them in position.

⚠ WARNING

Heavy weight.

Can result in death, serious injury or property damage.

Do not transport a circuit breaker on a lift truck or other lifting device with the circuit breaker in the raised position.

Item	Description
A	Indicator pin

Figure 44: Lift truck engaged - note position of indicator pin

1. Close the circuit breaker compartment door and turn latch handle counterclockwise to securely latch the door.
2. Access the racking mechanism by turning the knob on the circuit breaker compartment front door clockwise to open the racking access opening and insert the racking crank through the round opening at the bottom of the door and onto the racking screw and push in (refer to "Racking crank engagement procedure" on page 77).

   If your equipment has the optional portable electrical racking device accessory, refer to Annex A for instructions for this device, which supplement the instructions in this section.

Siemens integrated electrical-racking system (SIERS) (optional)

An electrical racking system integrated into the racking mechanism of a circuit breaker (or full-cell rollout tray) compartment is optionally available. The SIERS system allows an operator to control the racking of a circuit breaker (or full-cell rollout tray) from a remote location (outside the arc-flash boundary) without the need to install a portable racking accessory. This reduces the need for personal protective equipment required by NFPA-70E®.

The SIERS system is available in three configurations:

A. Basic: Each circuit breaker cell is equipped with an integrated electrical-racking system, which includes a fixed-mounted, high-torque gear motor and logic-control module. A control pendant is provided, and a compartment mounted connector for supplying control power from the switchgear, or from an external supply (either 120 Vac or 125 Vdc). Typically, one control pendant is supplied per lineup.

B. Local HMI: Basic type as in configuration 1 plus local HMI panel personal computer (PC) interface for use with the user's PC.

C. SCADA: Basic type as in configuration 1 plus custom interface with SCADA or other control system.

For further information, refer to instruction manual EMMS-T40013-XX-XXXX.

3. Rotate the racking crank counterclockwise until the circuit breaker is in the DISCONNECT position.
4. Remove the racking crank. Operate the compartment latch and open the circuit breaker compartment door. Insert the two extension rails into the fixed rails. Be sure the extension rails are properly secured in place.

5. Depress and hold down the circuit breaker racking latch release handle (refer to Figure 42: Front panel of type GMSG circuit breaker on page 75) and pull the circuit breaker out from the DISCONNECT position. The circuit breaker may now be removed from the cubicle and rolled out onto the two extension rails.
6. Remove the circuit breaker from the two extension rails using the approved Siemens circuit breaker lifting device (refer to Figure 43: Lift truck with circuit breaker or full-cell rollout tray on page 76) or a lifting sling (refer to Figure 45: Lift sling in use to handle circuit breaker on page 78) and a suitable crane.
7. Lift the two extension rails and withdraw them from the switchgear.
8. Close the circuit breaker compartment door and turn latch handle counter-clockwise to securely latch the door.

Type GMSG circuit breakers weigh 430-930 lbs (195-421 kg) depending upon their ratings. The circuit breaker may be moved using a properly rated crane and lift sling. A lift sling may be attached to the circuit breaker, and then used to hoist the circuit breaker vertically clear of the extension rails. When clear, remove the rails and lower the circuit breaker to the floor.

Racking crank engagement procedure

A crank for racking the drawout circuit breaker is provided as a standard accessory. Racking of a circuit breaker can only be accomplished through a small opening (or window) in the front door with the circuit breaker compartment front door closed and latched.

The racking crank consists of an offset handle with a custom socket assembly welded to the opposite end.

The socket end of the crank is designed to engage the square shoulder of the racking mechanism shaft and remain engaged during racking by means of two spring plungers located 180 degrees from each other.

The spring plungers operate in a manner similar to the retainers on an ordinary mechanic's socket wrench.

Figure 45: Lift sling in use to handle circuit breaker

The portion of the racking mechanism shaft that is visible is cylindrical and the square shoulder of the racking mechanism shaft is hidden by a shroud until the engagement procedure starts.

The square socket end of the crank will only engage the square portion of the shaft if it is aligned properly.

If your equipment has the optional portable electrical racking device accessory, refer to Annex A for instructions for this device, which supplement the instructions in this section. The electrical racking device is only suitable for use with circuit breaker cells or rollout tray cells equipped with the necessary mounting brackets.

Siemens integrated electrical-racking system (SIERS) (optional)

An electrical racking system integrated into the racking mechanism of a circuit breaker (or full-cell rollout tray) compartment is optionally available. The SIERS system allows an operator to control the racking of a circuit breaker or rollout tray from a remote location (outside the arc-flash boundary) without the need to install a portable racking accessory. This reduces the need for personal protective equipment required by NFPA-70E®.

The SIERS system is available in three configurations:

1. Basic: Each circuit breaker cell is equipped with an integrated electrical-racking system, which includes a fixed-mounted, high-torque gear motor and logic-control module. A control pendant is provided, and a compartment mounted connector for supplying control power from the switchgear, or from an external supply (either 120 Vac or 125 Vdc). Typically, one control pendant is supplied per lineup.
2. Local HMI: Basic type as in configuration 1 plus local HMI panel personal computer (PC) interface for use with the user's PC.
3. SCADA: Basic type as in configuration 1 plus custom interface with SCADA or other control system.

For further information, refer to instruction manual EMMS-T40013-XX-XXXX.

The suggested procedure to engage the racking mechanism is as follows:

1. The circuit breaker must be open. (The racking shroud cannot be moved if the circuit breaker is closed.)
2. Hold the socket end of the crank in one hand and the crank handle in the other hand (refer to Figure 46: Racking crank engagement procedure on page 79).
3. Access the racking mechanism by turning the knob on the circuit breaker compartment front door clockwise to open the racking access opening.
4. Insert the socket assembly of the racking crank through the opening in the door and place the socket over the end of the racking mechanism shaft. Align the spring plunger of the socket with the shoulder on the racking mechanism shaft.

Note: *If the socket is not aligned, the socket will not be able to engage. The socket (square) must be aligned with the square shoulder of the racking mechanism shaft.*

5. Once alignment is achieved, firmly push the crank and socket assembly toward the racking mechanism.
6. When properly engaged, the crank should remain connected to the racking mechanism due to the spring plungers. If the crank does not remain in position, adjust the spring plungers clockwise one-half turn. This will increase the contact pressure of the spring plunger.
7. To remove the crank, simply pull the assembly off of the racking mechanism shaft while holding the access opening cover open.

Note: *If the effort to rack the circuit breaker increases considerably during racking or if turning of the racking crank requires excessive force, stop racking immediately. Do not try to "force" the racking crank to rotate or parts of the circuit breaker or racking mechanism could be damaged. Determine the source of the problem and correct it before continuing with racking.*

Circuit breaker racking

When inserting a circuit breaker or rollout tray into a cell, be sure that the racking mechanism is in the DISCONNECT position. In this position, the racking indicator should show the letter "D" for DISCONNECT position (refer to Figure 47: Racking mechanism shown in DISCONNECT position on page 79).

Important: Failure to follow instructions may result in damage to equipment. Return racking mechanism to the DISCONNECT position before inserting circuit breaker.

The circuit breaker racking method has been designed to be used only with the circuit breaker compartment door closed and securely latched during racking.

Moving the circuit breaker or rollout tray between the CONNECT and TEST or DISCONNECT positions with the door closed provides additional protection to the operator.

Racking from DISCONNECT to CONNECT position

1. Check that the racking position indicator shows "D" for DISCONNECT position.
2. Check that the circuit breaker or rollout tray is fully pushed into the cell to the DISCONNECT position.
3. Check that the circuit breaker is open.
4. Secondary disconnects will automatically connect as the circuit breaker moves to the TEST position.
5. Close and latch the circuit breaker compartment door. Interlocks will prevent engagement of the racking crank if the compartment door is not securely latched.
6. Access the racking mechanism by turning the knob on the circuit breaker compartment front door clockwise to open the racking access opening and insert the racking crank through the round opening at the bottom of the door and onto the racking screw (refer to "Racking crank engagement procedure" on page 77).

   If your equipment has the optional electrical racking device accessory, refer to Annex A for instructions for this device, which supplement the instructions in this section. The electrical racking device is only suitable for use with circuit breaker cells or rollout tray cells equipped with the necessary mounting brackets.
7. Push the racking crank forward to move the closed circuit breaker racking interlock slide back, which will allow the socket to engage the square head on the racking screw. Do not force the slide as it is interlocked to prevent sliding forward when the circuit breaker is closed and/or the compartment door is not closed and securely latched.
8. Rotate the racking crank clockwise about 54 turns until a positive stop is felt and the position indicated shows "C" for the CONNECT position. The indicator will show "T" when the circuit breaker is in TEST position.

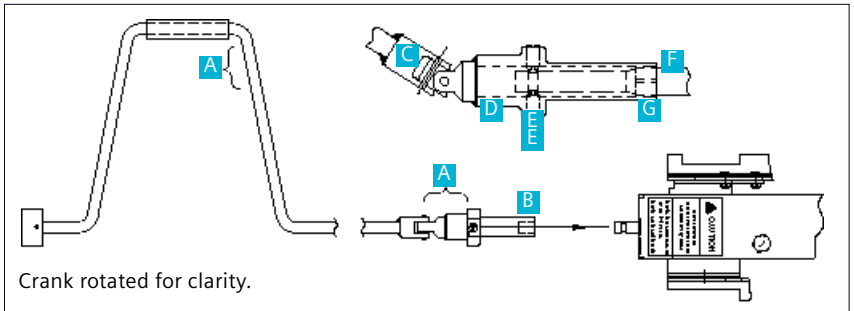

Crank rotated for clarity.

Item	Description	Item	Description
A	Hand position	E	Spring plunger
B	Socket assembly	F	Racking mechanism shaft
C	Articulated joint	G	Shoulder portion of shaft
D	Custom socket		

Figure 46: Racking crank engagement procedure

Racking from CONNECT to TEST or DISCONNECT position

1. This procedure is essentially the same as racking to connected position procedure except the rotation is counterclockwise.
2. Check that the circuit breaker is open.
3. Interlocks will prevent engagement of the racking crank if the compartment door is not securely latched.
4. Insert racking crank (refer to “Racking crank engagement procedure”) and rotate counterclockwise about 54 turns to a positive stop and the position indicator indicates “D” for DISCONNECT position. The intermediate TEST position is indicated by “T”.

Figure 47: Racking mechanism shown in DISCONNECT position

⚠ DANGER

Hazardous voltage.

Will cause death or serious injury.

De-energize and ground the equipment before checking contact penetration.

Contact penetration

Make certain all electrical connections to both the line/load and bus disconnects are de-energized and locked out. This can be verified by blocking the shutters open and using a hot stick potential device to double check that all disconnects are de-energized.

Rack the circuit breaker completely into the CONNECT position and then withdraw it from the cell. Check that the contact wipe is about 3/8" (10 mm) on the cell primary disconnects for all circuit breaker ratings.

Closed circuit breaker racking interlock

The closed circuit breaker racking interlock is designed to prevent a circuit breaker from being racked from test to connect and vice versa with the primary contacts closed. Only an open circuit breaker is to be moved between these positions (refer to Figure 48: Padlock and key interlock provisions[3]).

The trip-free interlock slide has angle-shaped members (refer to Figure 48: Padlock and key interlock provisions[3], item 60) that project from the right side of the racking mechanism and engage an interlock member from the circuit breaker. The circuit breaker interlock extends down to prevent movement of the trip-free interlock slide with the circuit breaker closed. When engaged, the racking screw is not accessible to the racking crank until the circuit breaker has been opened.

Note: *Racking handle must be removed allowing the interlock slides to return to their initial position. The circuit breaker may now be closed mechanically or electrically.*

Racking access interlock

The racking interlock slide (refer to Figure 48: Padlock and key interlock provisions[3], item 62) has provisions for three padlocks to prevent engagement of the racking crank to the racking screw. This allows locking of the circuit breaker in DISCONNECT, TEST or CONNECT positions. The padlocks for locking the racking mechanism can only be accessed when the circuit breaker or dummy element is in either the DISCONNECT or TEST position, due to cell door interlocks.

Trip-free interlock

The trip-free interlock slide prevents a circuit breaker from being closed between the TEST and CONNECT positions by maintaining a mechanical and electrical trip-free condition.

As the circuit breaker moves between the TEST and CONNECT positions, the spring dump/trip-free roller engages the spring dump/trip-free cam profile rail of the racking device. As the roller travels along the profile of rail between positions, the roller activates the trip linkage, which holds the circuit breaker in a mechanically trip-free condition (refer to Figure 49: Trip-free interlock arrangement).

In order to lock the circuit breaker trip-free in either the TEST or CONNECT positions, the circuit breaker must be opened and the trip-free interlock slide assembly pushed forward to lift the trip-free roller on the circuit breaker. This position permits the use of a key interlock (refer to Figure 48: Padlock and key interlock provisions[3] on page 80, item 61) or padlocks (up to three) to maintain the mechanism in trip-free position. The racking mechanism can only be accessed when the circuit breaker or dummy element is in either the DISCONNECT or TEST position due to cell door interlocks. The circuit breaker may be removed for servicing while interlocked in the trip-free position.

The interlock can be tested by racking the circuit breaker to a position between the TEST and CONNECT position with the closing springs charged. Activating the "close" function electrically (such as by using the control switch) should cause no operation. This is also true when the circuit breaker is in either the TEST or CONNECT positions and the trip-free interlock slide is pushed forward and key interlocked or padlocked. The circuit breaker will not operate when closing is attempted.

Without key interlocks

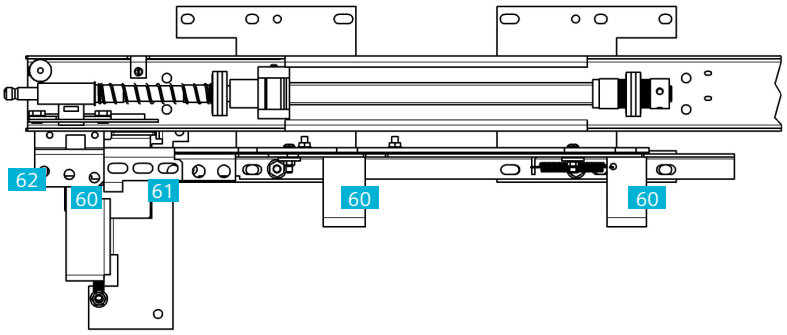

With key interlocks

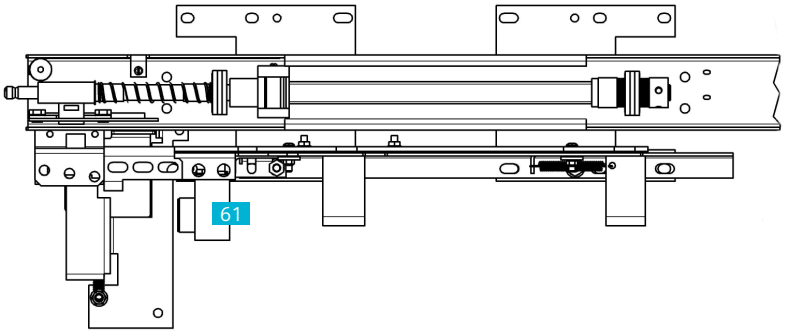

Item	Description
60	Racking padlock provisions[1]
61	Trip-free padlock provisions[2,4]
62	Racking interlock slide

Footnotes:

1. Racking padlock provisions - When padlocked, prevents racking of circuit breaker, test device or dummy breaker element. Suitable for up to three padlocks with up to 3/8" (10 mm) diameter shackle.
2. Trip-free padlock provisions - When padlocked, prevents closing of circuit breaker or test device. Suitable for up to three padlocks with up to 3/8" (10 mm) diameter shackle.
3. Cell door interlocks not shown.
4. Trip-free interlocks are applicable only to circuit breaker compartments, not to auxiliary rollout tray compartments

Figure 48: Padlock and key interlock provisions[3]

Spring discharge function

The closing spring discharge function prevents the insertion or removal of a circuit breaker with a charged mechanism. The closing spring discharge function is achieved as the spring-dump/trip-free roller of the circuit breaker follows the cam profile of the racking mechanism rail. As the spring-dump/trip-free roller of the circuit breaker rides the rail, the spring-dump/trip-free roller assembly of the circuit breaker is driven upward activating the spring-dump linkage located inside the circuit breaker enclosure and releasing the closing springs while the circuit breaker is held trip free. This discharges the closing springs without closing the circuit breaker primary contacts.

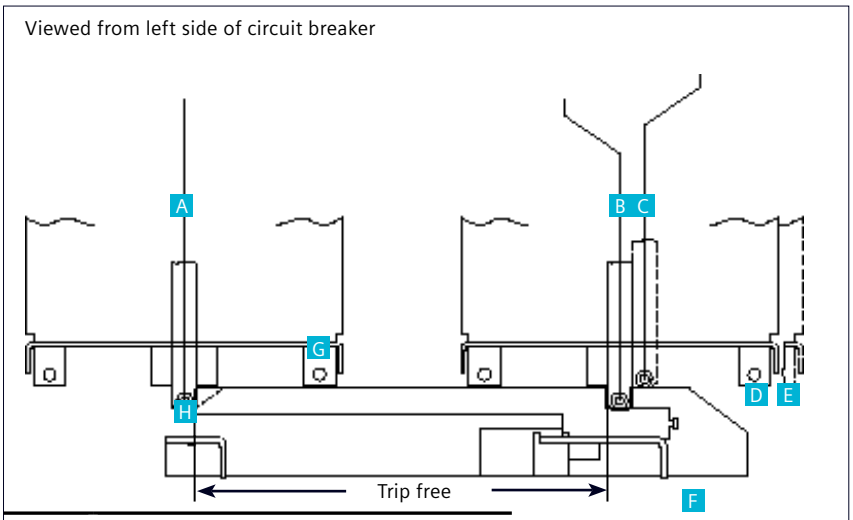

Item	Description
A	CONNECT position
B	TEST position
C	DISCONNECT position
D	Circuit breaker TEST position
E	Circuit breaker DISCONNECT position
F	Trip-free interlock slide
G	Circuit breaker CONNECT position
H	Trip-free roller assembly on circuit breaker

Figure 49: Trip-free interlock arrangement

Inspection and testing

Inspection and testing

Before the equipment is energized, it must be thoroughly inspected and tested. Correct any deviations before energization.

Inspection

Check the following points:

1. High-voltage connections properly insulated.
2. Electrical disconnecting contacts, machined parts, shutter, etc., checked for lubrication and operation.
3. Blocking, supports and other temporary ties removed from circuit breakers, instruments, relays, etc.
4. Proper fuses correctly placed.
5. Temporary wiring jumpers (used on the secondaries of current transformers wired to external devices, as shown on wiring diagrams) removed.
6. Grounding connections properly made.
7. Incoming primary and secondary connections properly made and checked for shorts or undesired grounds.
8. All equipment removed during assembly has been replaced.
9. Relays coordinated with other relays and protection devices on the system. Refer to relay instructions before making any adjustments. Consult the local utility before making any connections to the power supply.
10. Storage battery fully charged and provided with recharging facilities.
11. Interlocks performing properly.
12. Circuit breakers checked and prepared per instruction manuals.
13. All filters in vent areas are clean and free of shipping or construction material.
14. Check felt gaskets on latching doors and/or door frames are clean, free of packing or construction material, and are not split or cut or otherwise damaged.
15. All doors are closed and securely latched properly. Hardware for doors with 3/8-16 hardware is torqued to 25-40 lb-ft (34 to 54 Nm.)
16. The top mounted pressure relief channel (PRC) and exhaust plenum are installed properly and all hardware is installed and torqued properly.

Important: *Exhaust plenum must be routed outside the switchgear room and to an area where personnel will not be present when the equipment is energized.*

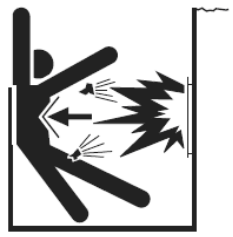

⚠ DANGER

Arc flash and explosion hazard.

Will cause death, serious injury or property damage.

This equipment is not arc-resistant unless all of the following conditions are met:

1. All pressure relief devices are free to operate as designed.
2. The fault energy available to the equipment does not exceed the internal arcing short-circuit current rating and rated arcing duration of the equipment.
3. There are no obstructions around the equipment that could direct the arcing exhaust products into an area intended to be protected.
4. The equipment is installed in accordance with the information in the instruction manuals and drawings.

17. All pressure relief devices are free to operate as designed.
18. Any obstructions around the equipment that could direct the arcing exhaust products into an area intended to be protected have been removed.

Testing

1. An insulation-resistance test is made on the high-voltage circuit to be sure that all connections made in the field are properly insulated. An insulation-resistance test is also advisable on the control circuit.
2. A dielectric test, if possible, should be made on the high-voltage circuit for one minute at the test voltage shown in Table 3: Field test voltages, corresponding to the rated voltage of the equipment.

Voltage transformers, control power transformers, surge arresters and surge capacitors must be disconnected during this test.

The dc test voltage is given as a reference only for those using dc tests to verify the integrity of connected cable installations without disconnecting the cables from the switchgear. It represents values believed to be appropriate and approximately equivalent to the corresponding power frequency withstand test values specified for each voltage rating of switchgear. The presence of this column in no way implies any requirement for a dc withstand test on ac equipment or that a dc withstand test represents an acceptable alternative to ac withstand tests. When making dc tests, the voltage should be raised to the test value in discrete steps and held for a period of one minute.

Table 3: Field test voltages

Rated maximum voltage	Power frequency withstand	Field test voltage	
kV (rms)	kV (rms)	kV (rms)	kV (dc)
4.76	19	14.25	20.2
8.25	36	27	38.2
15.0	36	27	38.2
27.0	60	45	63

In accordance with IEEE C37.20.2, Clause 6.5, field dielectric tests are also recommended when new units are added to an existing installation or after major field modifications. The equipment should be put in good condition prior to the field test. It is not expected that equipment be subjected to these tests after it has been stored for long periods of time or has accumulated a large amount of dust, moisture or other contaminants without being first restored to good condition.

A dielectric test on secondary and control circuits should be made for one minute at 1,125 Vac or 1,590 Vdc. The above voltages are in accordance with NEMA and IEEE standards. Certain control devices, such as motors and motor circuits, should be tested at 675 Vac. Electronic devices should be tested at the voltages specified in the instruction manual for the electronic device.

3. With circuit breaker in the TEST position, make the following tests on each unit:

   3a. Trip and close the circuit breaker with the control switch.

   3b. Trip the circuit breaker by passing sufficient current (or voltage if applicable) through the coils of protective relays.

   3c. Trip and close the circuit breaker from any remote control locations.

   3d. Operate auxiliary devices.

   3e. Test the phase sequence of polyphase high-voltage circuits, particularly those used for motor circuits.

⚠ CAUTION

Excessive test voltages.

May result in damage to equipment.

Do not perform dielectric tests at test voltages exceeding the ratings of the tested equipment.

Placing equipment into service

To place equipment in service for the first time proceed as follows:

1. Check that all circuit breakers are open and all control circuits energized.
2. Connect primary incoming power source to equipment.
3. Check all instruments, relays, meters, etc., during this time.
4. Connect as small a load as possible and observe instruments. Note: Allow several minutes before connecting additional load.
5. Gradually connect more load to the equipment while observing instruments until the full load is connected.
6. Check for signs of overheating of primary and secondary circuits and satisfactory operation of all instruments during the first week of operation.

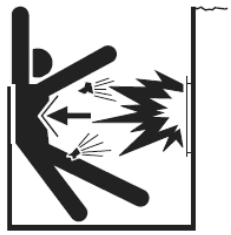

⚠ DANGER

Arc flash and explosion hazard.

Will cause death, serious injury or property damage.

This equipment is not arc-resistant unless all of the following conditions are met:

1. All pressure relief devices are free to operate as designed.
2. The fault energy available to the equipment does not exceed the internal arcing short-circuit current rating and rated arcing duration of the equipment.
3. There are no obstructions around the equipment that could direct the arcing exhaust products into an area intended to be protected.
4. The equipment is installed in accordance with the information in the instruction manuals and drawings.

Maintenance

Inspection and maintenance intervals

Periodic inspections and maintenance are essential to obtain safe and reliable operation of the switchgear. When type GM-SG-AR switchgear is operated under "Usual service conditions," maintenance and lubrication is recommended at five year intervals. "Usual" and "unusual" service conditions for medium-voltage metal-clad switchgear are defined in IEEE C37.20.2, clauses 4 and 8.1. Generally, "Usual service conditions" are defined as an environment in which the equipment is not exposed to excessive dust, acid fumes, damaging chemicals, salt air, rapid or frequent changes in temperature, vibration, high humidity and extreme temperatures.

The definition of "Usual service conditions" is subject to a variety of interpretations. Because of this, you are best served by adjusting maintenance and lubrication intervals based on your experience with the equipment in the actual service environment.

Regardless of the length of the maintenance and lubrication interval, Siemens recommends that circuit breakers should be inspected and exercised annually.

For the safety of maintenance personnel as well as others who might be exposed to hazards associated with maintenance activities, the safety related work practices of NFPA 70E should always be followed when working on electrical equipment. Maintenance personnel should be trained in the safety practices, procedures and requirements that pertain to their respective job assignments. This instruction manual should be reviewed and retained in a location readily accessible for reference during maintenance of this equipment.

The user must establish a periodic maintenance program to ensure trouble-free and safe operation. The frequency of inspection, periodic cleaning and preventive maintenance schedule will depend upon the operating conditions. NFPA Publication 70B, "Electrical Equipment Maintenance" may be used as a guide to establish such a program.

***Note**: A preventive maintenance program is not intended to cover reconditioning or major repair but should be designed to reveal, if possible, the need for such actions in time to prevent malfunctions during operation.*

⚠ DANGER

Hazardous voltage.

Will cause death, serious injury or property damage.

Do not work on energized equipment. Always de-energize and ground the equipment before working on the equipment.

Table 4: Maintenance tasks

Maintenance tasks
1. Before any maintenance work is performed within primary compartments, make certain that the equipment is completely de-energized, tested, grounded, tagged or locked out and released for work in an authorized manner.
2. Before starting work on the switchgear, the following should be completed on any equipment that will affect the area of the work:
2a. Disable remote control and automatic transfer schemes.
2b. De-energize all direct and backfeed power and control sources, test and ground.
2c. Disconnect all voltage and control power transformers.
2d. Open all disconnects.
3. Include the following items in your inspection procedure:
3a. Check general condition of switchgear installation.
3b. Inspect switchgear interior for accumulation of dust, dirt or any foreign matter.
3c. Clean air filters by washing in any mild household detergent.
3d. Examine indicating lamps and replace as required.
3e. Check terminal block contacts for loose connections.
3f. Check instrument and control switches and inspect their contacts.
3g. Check for proper condition of instrument transformers. Replace burned out fuses, if any. Check primary and secondary connections.
3h. Remove dust from all insulators and insulation.
3i. Inspect bus bars and connections for proper condition. If bus bars are overheating check for poor or loose connections or for overload.
3j. Examine automatic shutters for proper operation.
3k. Examine all safety interlocks.
3l. Check felt gaskets on latching doors and/or door frames. Felt must be clean, free of foreign matter, and must not be split or cut or otherwise damaged.
3m. Perform maintenance of circuit breakers as outlined in circuit breaker instruction manual.
3n. Check space heaters and thermostat (if equipped) for proper operation.
3o. Maintain other equipment in accordance with the respective instruction book requirements.
3p. Lubricate mechanisms, contacts and other moving components.
3q. Replace, reassemble, re-insulate and return all items to proper operating conditions and remove grounds prior to energization.

⚠ WARNING

Failure to maintain the equipment could result in death, serious injury or product failure and can prevent the successful functioning of connected apparatus.

The instructions contained herein should be carefully reviewed, understood and followed.

The maintenance tasks in Table 4: Maintenance tasks on page 86 must be performed regularly.

Switchgear assemblies are enclosed on all sides and top with sheet metal. Access into the enclosure is provided by doors or removable covers. Although the bus and connections are insulated in metal-clad switchgear assemblies, it is a coordinated insulation system; insulation plus air or creep distance equals a given insulation level.

Refer to IEEE C37.20.2, clause 7.9, which reads as follows:

"This insulating covering is a requirement of metal-clad switchgear and is provided to minimize the possibility of communicating faults and prevent the development of bus faults that would result if foreign objects momentarily contacted bare bus. This insulating covering is usually only a part of the primary insulation system, and in such cases the outer surface of this insulating covering will not be at ground potential. It should not be assumed, therefore, that personnel can contact this insulating covering with complete safety."

Recommended hand tools

Type GM-SG-AR switchgear and type GMSG circuit breakers use both standard imperial (U.S. customary) and metric fasteners. Imperial (U.S. customary) fasteners are used in most locations in the switchgear cubicles.

Recommended maintenance and lubrication

Periodic maintenance and lubrication should include all the tasks shown in Table 4: Maintenance tasks on page 86.

The list of tasks in Table 4: Maintenance tasks on page 86 does not represent an exhaustive survey of maintenance steps necessary to verify safe operation of the equipment. Particular applications may require further procedures. Should further information be desired or should particular problems arise not covered sufficiently for the Purchaser's purposes, the matter should be referred to Siemens at +1 (800) 333-7421 or +1 (423) 262-5700 outside the U.S.

⚠ DANGER

The use of unauthorized parts in the repair of the equipment or tampering by unqualified personnel will result in dangerous conditions that will cause death, serious injury or equipment damage.

Follow all safety instructions contained herein.

⚠ DANGER

Hazardous voltage.

Will cause death, serious injury and property damage.

Read instruction manuals, observe safety instructions and use qualified personnel.

Lubrication

It is essential that switchgear be lubricated carefully and properly to guard against corrosion and to ensure that all operating parts work freely.

Old grease should be removed and parts relubricated.

Lubricate shutter guide, bearings, rollout fuse truck moving parts, etc.

For all lubrication (except electrical moving or sliding surfaces), use one of the following:

- Klüber Isoflex Topas L32 (part 3AX11333H)
- Klüber Isoflex Topas L32N (spray) (part 15-172-879-201).

Source:

- Klüber Isoflex Topas L32 or L32N: Klüber Lubrication North America L.P. ***www.klueber.com***.

Note: *Use of lubricant not suitable for the application will make the mechanism very difficult to operate.*

Electrical contacts

Lubricate stationary silver-surfaced contacts with electrical contact lubricant part no. 15-172-791-233 prior to use, as follows:

1. Wipe contacts clean
2. Apply lubricant to contact surfaces
3. Wipe off excess lubricant, leaving a film. Avoid getting lubricant on insulation.

Cleaning insulation

Most of the plastics and synthetics used in insulation systems are attacked by solvents containing aromatics or halogenated hydrocarbons. The use of these may cause crazing and deformation of the material reducing the dielectric strength. Isopropyl alcohol is the only recommended solvent cleaner.

⚠ DANGER

The use of unauthorized parts in the repair of the equipment or tampering by unqualified personnel will result in dangerous conditions that will cause death, serious injury or equipment damage.

Follow all safety instructions contained herein.

Corrosive atmospheres

This switchgear is designed to give top performance when installed in normal indoor or outdoor locations. Where abnormal conditions, such as corrosive atmospheres, are encountered, special precautions must be taken to minimize their effect. Exposed metallic surfaces, non-insulated bus bars, disconnect switches, primary and secondary disconnecting contacts, wire ends, instrument terminals, etc., must all be protected.

At each maintenance inspection, all of the old grease should be wiped off of the contacts and new lubricant applied to all sliding surfaces. Apply the contact lubricant in a layer .03-.06" (1-2 mm) thick. Use only Siemens electrical contact lubricant, part no. 15-172-791-233, available in 8 oz. (.23 kg) cans. Other exposed components can be protected with a coat of glyptol or other corrosion-resistant coating. When old grease becomes dirty, wipe the part clean and apply new grease immediately.

Protective relays and instruments

To insure satisfactory operation of protective relays and instruments, do not leave device covers off longer than necessary. When a cover has been broken, cover the device temporarily and replace broken glass as soon as possible.

Equipment surfaces

Inspect the painted surfaces and touch up scratches as necessary. Touchup paint is available from Siemens. This paint matches the unit and is thinned and ready for use in one pint (473 ml^3) spray cans.

Disposal

Siemens equipment is environmentally friendly product predominantly consisting of recyclable materials. For disposal, some disassembly, separation, and professional services handling may be required.

Materials to be handled include but are not limited to:

- Metals: Should be transferred and recycled as mixed scrap metals.
- Plastics: Plastic containing a recycle symbol should be recycled. Plastic lacking the recycle symbol should be discarded as industrial waste.
- Small electronics, insulated cables, and motors: Should be recycled via electronics scrap disposal companies specialized in separating and sorting as described above.
- Batteries: Should be recycled via a recycling company.

Disposal regulations vary from locality to locality and may be modified over time. Specific regulations and guidelines should be verified at the time of waste processing to ensure that current requirements are being fulfilled. For specific assistance in understanding and applying regional regulations and policies or manufacturer's recommendations, refer to the local Siemens service representative for additional information.

⚠ WARNING

Stored energy.

Can cause death, serious injury, or property damage.

Mechanisms contain stored energy, which may be released during disassembly.

Wear suitable protection and take appropriate precautions when disconnecting and removing moving parts.

⚠ WARNING

Heavy objects.

Can cause death or serious injury.

Disassembly may cause an unbalanced load, and could result in falling objects.

Take appropriate precautions in a properly designated workspace to maximize support and stability.

Accessories

Rollout racking tool for half-cell rollout trays
The rollout racking tool (refer to Figure 50: Rollout racking tools and manual trip rod) is used to operate the latching system for rollout trays for VTs, CPTs, and CPT fuses, and to insert and withdraw the rollout trays with the compartment door closed. Refer to "Operating Sequence" on pages 63 to 66 for use of the rollout racking tool

Split plug jumper test device
When specified, a split plug jumper test device is supplied. This device allows a circuit breaker to be operated from the control switch on the instrument panel while the circuit breaker is outside of and adjacent to its cell.

The split plug jumper consists of a length of flexible cable with terminal plugs on each end. These terminals may be connected to the secondary disconnects on the circuit breaker and in the cell. When connected to the circuit breaker, they may be opened or closed electrically from the instrument panel control switch.

Test cabinet
When specified, a test cabinet is supplied. This device allows a circuit breaker to be operated from a control switch in a cabinet, which is wall mounted by the purchaser. A length of flexible cable is connected to the cabinet and has a terminal plug on the other end, which may be connected to the secondary disconnects on the circuit breaker. When connected, the circuit breaker may be opened or closed electrically from the control switch on the test cabinet, which is connected to a suitable power supply by purchaser.

Lift truck
When specified, a lift truck is supplied for handling the removable primary circuit elements of the switchgear (circuit breakers and with optional adapter, rollout auxiliary trays). For indoor installations, the lift truck accessory is useful whenever these elements are installed above floor level or the switchgear is installed on a raised surface (such as a house keeping pad). As supplied, the lift truck is set-up to safely handle all type GMSG circuit breakers (and full-cell rollout trays) without modification (refer to Figure 51: Lift truck forks). With the addition of an adapter, shown installed in Figure 52: Lift truck forks with auxiliary tray adapter, the lift truck can handle all type GM-SG-AR rollout auxiliary trays (half-cell). For Shelter-Clad installations, the lift truck is normally stored in the aisle area as it does not conveniently pass through the aisle doorway.

Figure 50: Rollout racking tools and manual trip rod

Figure 51: Lift truck forks

Figure 52: Lift truck forks with auxiliary tray adapter
(for up to 50 kA)

⚠ WARNING

Heavy weight.

Can result in death, serious injury or property damage.

Do not transport a circuit breaker on a lift truck or other lifting device with the circuit breaker in the raised position.

Handling of type GMSG circuit breakers and full-cell rollout trays with lift truck

Depending on the rating, type GMSG circuit breakers can weigh up to 930 lbs (421 kg).

Before the circuit breaker or rollout tray has been removed from the cubicle and onto the extension rails (refer to Instructions for removal from cell for indoor switchgear installed on a raised pad on page 76), the lift truck should be moved into position.

1. Position the lift truck between the extension rails.
2. Raise the forks of the lift truck (by turning the crank clockwise) until the forks are slightly higher than the extension rails.
3. Align the lift truck with the extension rails by adjusting the forks right or left and up or down until the arrows on the forks align with the arrows on the extension rails as shown in Figure 44: Lift truck engaged - note position of indicator pin on page 77 and the blade of the forks (where the arrow is located on the forks) is captured by the ears of the extension rails (where the arrow is located on the rails).
4. Pull the circuit breaker or rollout tray out of the cubicle and onto the extension rails while maintaining proper alignment between the center fork of the lift truck and the guide brackets on the bottom of the circuit breaker or rollout tray as shown in Figure 53: Alignment of lift truck with circuit breaker.
5. The circuit breaker or rollout tray will be fully engaged with the lift truck when the green indicator collars on the lift truck forks are fully extended as shown in Figure 44: Lift truck engaged - note position of indicator pin on page 77.
6. Verify the position of the forks under the circuit breaker or rollout tray to ensure that it is properly supported as shown in Figure 54: Front support locations and Figure 55: Rear support location. The circuit breaker or rollout tray is supported in three locations: under the right side of the operator housing, under the left side of the operator housing and under the left side of the rear cross member. The forks of the lift truck should not make contact with any other part of the circuit breaker or rollout tray. There should be a 1/4" gap between the center fork of the lift truck and the guide brackets under the breaker as shown in Figure 53: Alignment of lift truck with circuit breaker.
7. Raise the lift truck (by turning the crank clockwise) until the circuit breaker or rollout tray is slightly higher than ears of the extension rails and pull or rotate the truck until it is clear of the extension rails.
8. Lower the circuit breaker or rollout tray (by turning the crank counterclockwise) until the forks are slightly above the ground as shown in Figure 43: Lift truck with circuit breaker on page 76.
9. The circuit breaker or rollout tray is now at a convenient height to be serviced or safely moved to another location.

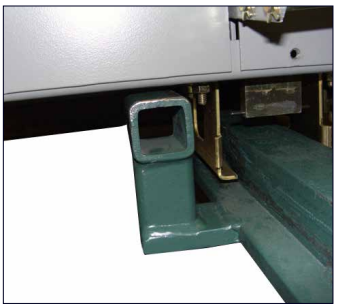

Figure 53: Alignment of lift truck with circuit breaker (or 63 kA rollout tray)

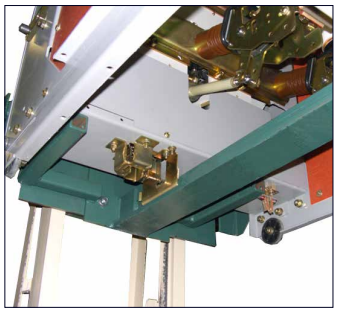

Figure 54: Front support locations

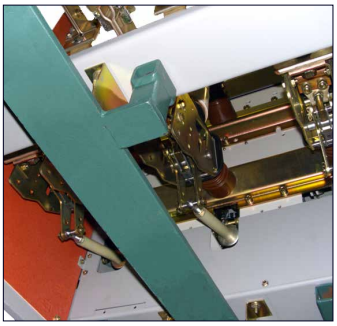

Figure 55: Rear support location

⚠ WARNING

Heavy weight.

Can result in death, serious injury or property damage.

Do not transport a circuit breaker on a lift truck or other lifting device with the circuit breaker in the raised position.

Handling of half-cell rollout auxiliary trays with lift truck

Depending on the rating, type GM-SG-AR half-cell rollout auxiliary trays can weigh up to 380 lbs (172 kg).

1. Pull the rollout auxiliary tray out of the cubicle and onto the extension rails (refer to instructions for "Removing a rollout auxiliary tray") until the front cover of the rollout auxiliary tray is in contact with the ears of the extension rails (where the arrow is located on the rails).
2. Remove the rollout auxiliary tray adapter (refer to Figure 56: Auxiliary tray adapter) from its storage location (refer to Figure 57: Auxiliary tray adapter storage on lift truck) and install it as shown in Figure 52: Lift truck forks with auxiliary tray adapter on page 90 with the pins provided.
3. Position the lift truck between the extension rails but not completely under the rails.
4. Raise the forks of the lift truck (by turning the crank clockwise) until the forks are slightly higher than the extension rails.
5. Align the lift truck with the extension rails by adjusting the forks right or left and up or down until the arrows on the forks are in-line with but slightly below the arrows on the extension rails.
6. Push the lift truck towards the cubicle until the blade of the forks (where the arrow is located on the forks) is captured by the ears of the extension rails (where the arrow is located on the rails). Correct alignment of the lift truck and the ears of the extension rails is shown in Figure 44: Lift truck engaged - note position of indicator pin on page 77 except that the indicator pins will not function when the auxiliary tray adapter is in use.
7. Raise the forks of the lift truck (by turning the crank clockwise) until the arrows on the forks are in-line with the arrows on the extension rails.
8. Verify the position of the rollout auxiliary tray adapter under the rollout auxiliary tray to ensure that it is properly supported. The top surface of the rollout auxiliary tray adapter should be in full contact with the bottom of the rollout auxiliary tray. The rollout auxiliary tray is fully engaged with the lift truck when the capture bracket fits around the rear of the rollout auxiliary tray as shown in Figure 58: Auxiliary tray support.
9. Raise the lift truck (by turning the crank clockwise) until the rollout auxiliary tray is slightly higher than ears of the extension rails and pull or rotate the truck until it is clear of the extension rails.
10. Lower the rollout auxiliary tray (by turning the crank counterclockwise) until the forks are slightly above the ground as shown in Figure 34: Lift truck with rollout tray (up to 50 kA) on page 65.
11. The rollout auxiliary tray is now at a convenient height to be serviced or safely moved to another location.

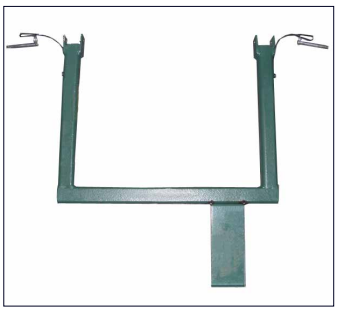

Figure 56: Auxiliary tray adapter

Figure 57: Auxiliary tray adapter storage on lift truck

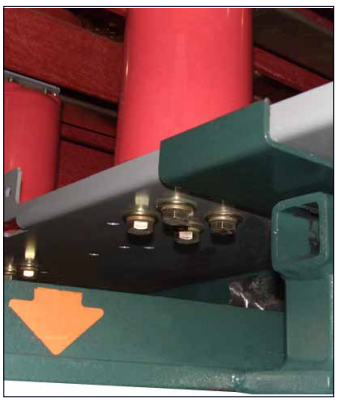

Figure 58: Auxiliary tray support

Lift sling

If a lift truck is not provided, a lift sling is supplied as standard when circuit breakers are installed above floor level. The lift sling is suitable for use with any crane that has an adequate capacity (1,000 lbs or 455 kg minimum). Figure 45: Lift sling in use to handle circuit breaker or full-cell rollout tray on page 78 shows a lift sling being used to lift a circuit breaker. Figure 35: Web sling in use to handle rollout tray on page 66 shows a web sling being used to lift a half-cell rollout auxiliary tray.

Portable electric racking accessory

An optional portable electric racking accessory is available. The unit includes a power cord that may be connected to a convenient power source in the vicinity of the switchgear. Instructions for mounting the racking accessory and for racking of circuit breakers (or 63 kA rollout trays) are provided on a label on the racking accessory, and in the Annex starting on page 94.

Siemens integrated electrical-racking system (SIERS) (optional)

An electrical racking system integrated into the racking mechanism of a circuit breaker (or 63 kA rollout tray in arc-resistant GM-SG-AR switchgear) compartment is optionally available. The SIERS system allows an operator to control the racking of a circuit breaker (or 63 kA rollout tray in arc-resistant GM-SG-AR switchgear) from a remote location (outside the arc-flash boundary) without the need to install a portable racking accessory. This reduces the need for personal protective equipment required by NFPA-70E®.

The SIERS system is available in three configurations:

1. Basic: Each circuit breaker cell is equipped with an integrated electrical-racking system, which includes a fixed-mounted, high-torque gear motor and logic-control module. A control pendant is provided, and a compartment mounted connector for supplying control power from the switchgear, or from an external supply (either 120 Vac or 125 Vdc). Typically, one control pendant is supplied per lineup.
2. Local HMI: Basic type as in configuration 1 plus local HMI panel personal computer (PC) interface for use with the user's PC.
3. SCADA: Basic type as in configuration 1 plus custom interface with SCADA or other control system.

For further information, refer to instruction manual EMMS-T40013-XX-XXXX.

Type 3EJ0 surge limiters

The type 3EJ0 surge limiter may be used with vacuum circuit breakers to prevent the development of excessive overvoltages due to multiple reignitions or virtual current chopping. This is primarily of concern during the starting of motors and the switching of reactive loads. Surge limiters are recommended in the applications shown in Table 5: Type 3EJ0 surge limiter application recommendations. If surge limiters are provided and an overvoltage does occur, the magnitude of the voltage will be limited to the values indicated in Table 6: Type 3EJ0 surge limiter data. Recommended service voltages for each limiter are also shown in this table.

Surge limiters are intended to be used in cable network systems to protect motors, transformers and reactors from the effects of voltage surges associated with vacuum circuit breaker operations. If lightning or switching surges may be present, the equipment must be properly protected by means of surge arresters.

The surge limiters must be disconnected from the equipment before any high potential testing is performed. The one-minute test period for the application of these test voltages to switchgear will damage the surge limiters.

Table 5: Type 3EJ0 surge limiter application recommendations

Protected (load equipment)		Surge limiters recommended
Liquid transformers		No
Dry transformer type	Standard BIL	Yes[1]
	5 kV 60 kV BIL	No
	7 kV or 15 kV 95 kV BIL	No
Motors	Locked rotor current < 600 A	Yes[1]
	Locked rotor current > 600 A	No
Reactors		Yes
Capacitors		No

Footnote:
1. Surge limiters are not necessary if surge capacitors or surge arresters are located at transformer or machine terminals.

Table 6: Type 3EJ0 surge limiter data

Rated voltage	kV	3.6	4.8	7.2	12	15
MCOV	kV	3.2	4.3	6.5	10.6	13.3
0.5 kA switching surge discharge voltage 30 x 60 wave	kV	8	10	15	25	31
1.0 kA switching surge discharge voltage 30 x 60 wave	kV	8.4	10.5	15.8	26.3	32.6
Grounded wye system applications	kV	2.4 4.16	6.9 7.2	8.32	12.0 12.47 13.2 13.8	----
Delta system applications	kV	2.4	4.16 4.8	4.8 6.9	6.9 7.2 8.32	12.0 12.47 13.2 13.8
High-resistance grounded wye system applications	kV	2.4	4.16	6.9	6.9 7.2 8.32	12.0 12.47 13.2 13.8

Annex A - Electrical racking device

⚠ DANGER

Hazardous voltage.

Will cause death, serious injury and property damage.

This equipment contains hazardous voltages and may be controlled remotely. Severe personal injury or property damage can result if safety instructions are not followed. Only qualified personnel should work on or around this equipment after becoming thoroughly familiar with all warnings, safety notices and maintenance procedures for this equipment. The successful and safe operation of this equipment is dependent upon proper handling, installation, operation and maintenance.

Qualified personnel

For the purpose of these instructions, qualified personnel are defined as people familiar with the installation, construction and operation of this equipment and the hazards involved. In addition, they have the following qualifications:

1. They are trained and authorized to energize, de-energize, clear, ground, and tag circuits and equipment in accordance with established safety practices.
2. They are trained in the proper care and use of personal protective equipment such as rubber gloves, hard hat, safety glasses or face shields, flash clothing, etc., in accordance with established safety practices.

Purpose

The purpose of this document is to provide instructions for racking a type GMSG vacuum circuit breaker or a type GMSG-EO or type GMSG-MO ground and test device (or 63 kA rollout tray) (GM-SG-AR or SGM-SG-AR) using the optional electrical racking device (ERD) accessory.

This instruction manual includes description of the process of racking a circuit breaker (or ground and test device) within the circuit breaker compartment using the manual racking crank (see text starting on page 72), and in this Annex, using the portable electrical-racking accessory. The switchgear is also available with built-in electrical racking in the circuit breaker compartment, using the Siemens integrated electrical- racking system (SIERS), and instruction manual EMMS-T40013-XX-XXXX should be consulted.

Description

The ERD can be supplied in a variety of configurations. The most basic is depicted in the photos and figures included in this document as the instructions (also present on labels on the device itself) are applicable to all configurations with only slight modifications.

The ERD consists of a motor drive assembly, which installs (without tools) on mounting brackets on the compartment front panel (door). The unit includes a power cord, which can be plugged into a duplex receptacle in the vicinity of the switchgear, plus a control cable, which allows the operator to control the racking operation from a distance.

Instructions

1. Review the appropriate Switchgear Operating and Instruction Manual for proper operation and safety procedures and make certain that the equipment is released for maintenance in an authorized manner.
2. Following the procedures outlined in this instruction manual, close and latch the circuit breaker compartment front panel.
3. Grasp the racking socket on the ERD by hand or with a 0.50 inch open-end wrench, and rotate the socket so that the alignment slot on the ERD (or the roll pin that attaches the racking socket to the motor drive) is aligned with the alignment slot on the tip of the drive screw of the compartment racking mechanism. This will align the flat surfaces of the racking socket with the flat surfaces on the racking screw.
4. Verify the position of the device to be racked "C" is for CONNECT. "D" is for DISCONNECT.
5. Hold the ERD by the handle between the two brackets on the compartment front panel and push the ERD onto the racking screw.
6. Rotate the ERD (as required) to align the two attachment pins with the holes in the brackets on the compartment front panel. An open-end wrench is a convenient means to rotate the ERD shaft to align with the cubicle racking shaft.

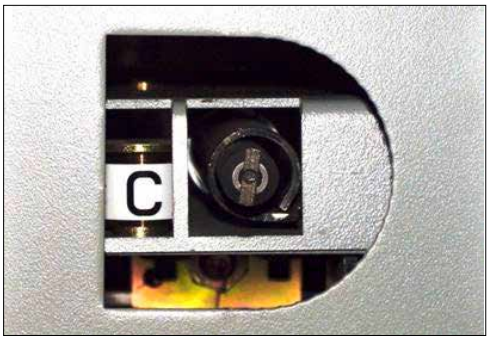

Figure 59: Compartment alignment slot

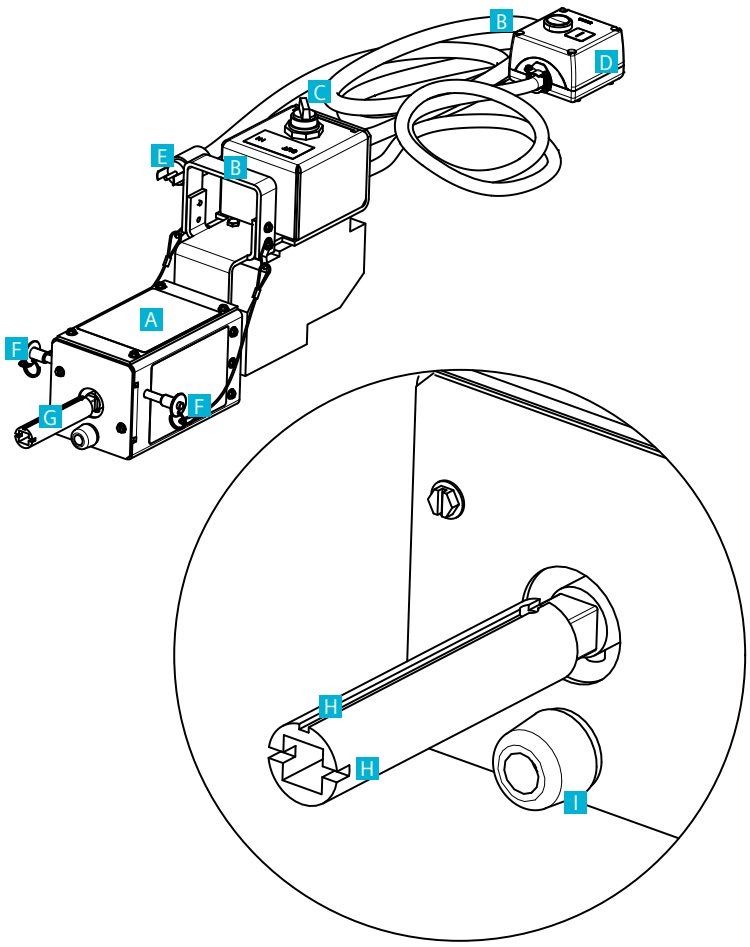

Item	Description
A	Motor drive
B	Handle
C	Selector switch
D	Control unit
E	Three-prong plug
F	Locking pins
G	Racking socket
H	Alignment slot
I	Bumper

Figure 60: Electrical racking device

7. Insert the locking pins into the ERD through the holes in the brackets to secure the ERD to the brackets on the compartment front panel. Note that the rubber bumper below the racking socket should be touching the compartment front panel.
8. Plug the power cord into a duplex receptacle in the vicinity of the switchgear.
9. Turn the selector switch to the desired position:

- "IN" to rack to the CONNECT position from the DISCONNECT position
- "OUT" to rack to the DISCONNECT position from the CONNECT position

10. Carry the hand-held control unit a safe distance away from the compartment with the device to be racked, but within hearing distance of the compartment.
11. Press and hold the activation button to activate the ERD and rack the device. If the button is released, the racking operation will cease. Failure to hold the button will deactivate the ERD.
12. When an audible clicking noise is heard, release the activation button to deactivate the ERD. The sound is produced by a torque limiter internal to the ERD that is set to disengage when the device is either fully racked in or out and to prevent damage to the compartment if an anomaly occurs during racking.
13. When racking a device out (to the DISCONNECT position from the CONNECT position), once the clutch disengages the motor and the activation button has been released, turn the selector switch to "IN" and bump the ERD to remove any tension on the racking screw the over-travel of the ERD may have caused due to the momentum of the device being racked.
14. Unplug the power cord from the duplex receptacle.
15. Remove the ERD from the compartment front panel.
16. Verify the position of the device that was racked by viewing the position indicator on the racking mechanism. "C" is for connect and "D" is for disconnect.

Figure 61: Electrical racking device

Annex B - Optional switch

General

GM-SG-AR switchgear can be equipped with an optional, fix-mounted, manually or electrically operated, single-throw, gang-operated, load-interrupter switch for application needs with loads rated 600 A or 1,200 A up to 15kV, 38kA. A quick-make, quick-break arcing blade combined with an arc chute provides positive, three-phase interruption of transformer magnetizing and load currents through a stored-energy operator. The switch differs from a circuit breaker in that it will interrupt its full-load current, but it will not interrupt overload or fault currents.

The load-interrupter switch is completely adjusted, tested, and inspected at the factory before shipment. No additional adjustment is necessary; however, check to be sure shipment and storage have not resulted in damage.

Note: *Any section of GM-SG-AR metal-clad switchgear equipped with a fix-mounted load interrupter switch does not comply with clause 7.22 of IEEE Std C37.20.2-2015 and therefore will be classified as metal-enclosed interrupter switchgear in accordance with IEEE Std C37.20.3. The construction of the section meets the intent of the metal-clad standard while retaining the arc-resistant performance defined in IEEE Std C37.20.7 but does not provide the withdrawable feature required by the standard.*

To provide a level of personnel safety, the load-interrupter switch has the following standard features:

- Optional key interlocks prevent closing the switch if a circuit breaker is supplied and the circuit breaker is in the CLOSED position.
- When the switch is in either the OPEN or CLOSED position, the springs are not charged.
- Operation of the switch requires two separate and distinct actions to prevent inadvertent operation of the switch.

The switch is operated by a spring-over-center, stored-energy operating mechanism through a chain drive and is equipped with an arc chute and quick-make blade. The quick-make closing and quick-break opening energy is supplied by 180 degree rotation of the operating handle. The opening and closing springs of the stored-energy mechanism provides for quick make (rated fault closing) and quick break (rated interruption). The resulting high-speed closing and opening assures safe operation and long life.

The switch mechanism shaft is driven by a chain and sprocket from the front operating handle. As the handle is rotated, it is directly connected to a sprocket which drives the opening spring to a CHARGE position. As the operator continues to rotate the handle, the charged spring is driven over-center by the chain and releases its energy into the rotating shaft to open. The switch blades will not move, in either a closing or opening direction, until the closing spring causes rotation in the operating shaft.

Note: *Once the springs are moved over-center, the operator has no further control of the opening or closing operation.*

Therefore, the fault-closing and load-break operations are independent of the operating speed of the handle.

Item	Description
A	Arc chute
B	Stationary arcing contact (not showing - inside item A arc chute)
C	Insulator
D	Stationary main contact
E	Quick-acting blade
F	Main switch blade
G	Hinge contact
H	Operating handle
I	Position indicators
J	Release knob

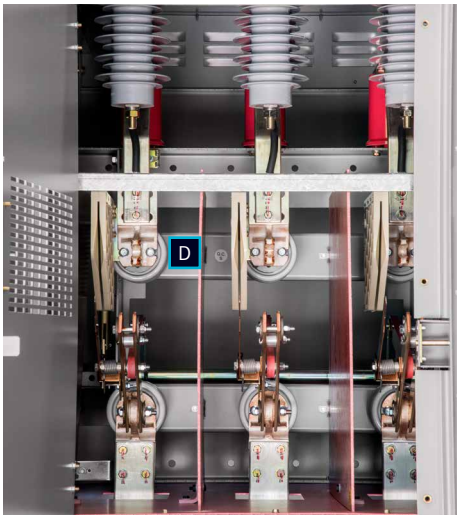

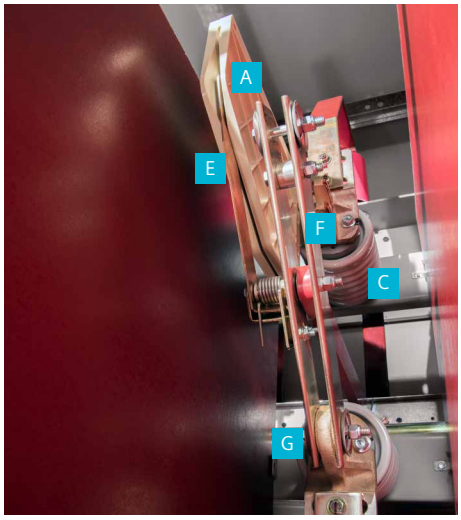

Figure 60: Load-interrupter switch components

Figure 61: Operation of the load-interrupter switch

Switch operation

To close the switch from the OPEN position, close and bolt the section door. Pull on the release knob located in the center of the operator casting to release the operating handle as shown in

Note: *Failure to pull the release knob before attempting to operate handle may cause equipment damage.*

While holding the release knob, rotate the operator handle about 15 degrees or until resistive force is felt in the handle to prevent the knob and locating pin from resetting (as shown in Figure 61. At that point it is no longer necessary to hold the release knob. Continue rotating the handle 180 degrees upward with a rapid, continuous motion, to the full CLOSED position.

Conversely, opening the switch is accomplished by the same procedure by downward rotation of the operating handle.

⚠ DANGER

Hazardous voltages.

Will cause death, serious injury, or property damage.

Never defeat the door interlock if the switch blades are in the CLOSED position (ON) unless all incoming power is disconnected, grounded, and locked out.

Interlocks

The load-interrupter switch is located in an isolated compartment behind a bolted section door. Special care should be taken when uninstalling the section door to access the compartment as power could be provided from an upstream source. Therefore, even with the switch in the OPEN position, voltage may be present in this compartment.

The load-interrupter switch handle can be locked in the OPEN (OFF) position with a padlock, or with a padlock multiplier, with up to three padlocks (see Figure 62: Padlock and key lock provisions).

Optional key interlocks can be supplied. Schemes are available for locking the switch in the OPEN position or the CLOSED position. Figure 62 shows the location of the key lock provisions for the load-interrupter switch.

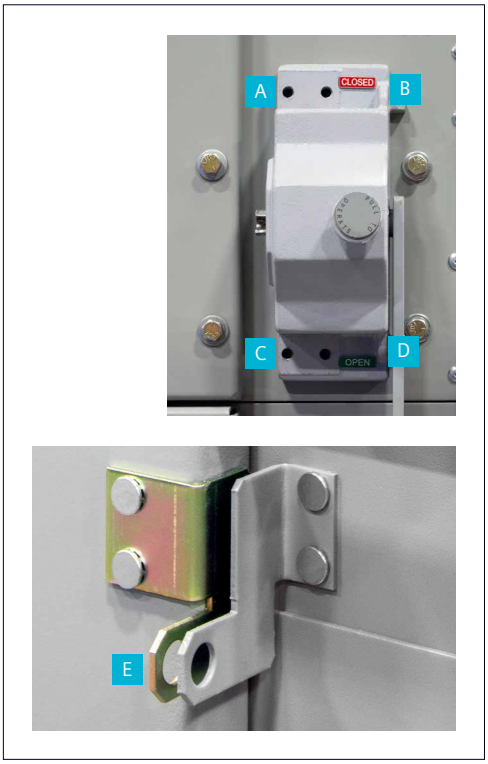

Figure 62: Padlock and key lock provisions

Item	Description
A	Provision for mounting closed key interlock
B	Provision for padlocking closed
C	Provision for mounting open key interlock
D	Provision for padlocking open
E	Main door padlock provisions

⚠ DANGER

Hazardous voltages and high-speed moving parts.

Will cause death, serious injury, or property damage.

Do not work on energized equipment. Always de-energize and ground the equipment before working on the equipment.

Load-interrupter switch maintenance

1. Perform a visual inspection of all surfaces including insulators, operating arms, mechanisms, pushrods, etc., for dust and dirt accumulation. Remove any dirt and dust by wiping surfaces with a clean cloth.
2. Inspect the bus bars and cable connections to see that they are in proper condition. If they show signs of having overheated, check for loose connections and re-tighten as required.
3. Check the condition of the main contacts, quick-break blades, and arc chutes. Replace any worn or damaged parts.
4. Check to determine that the blades make good contact. A contact-resistance measurement between jaw-spade terminal and hinge-spade terminals should be taken and should be between 35 to 100 micro-ohms. These contacts do not tarnish like copper, but they should be wiped clean occasionally, especially if the switch has not been operated for some time. This can be done by opening and closing the switch several times in succession.

Note: *Do not attempt to polish or clean the blades with powdered emery, scouring pads, or other abrasives. This will inevitably result in poor contact and overheating.*

5. Examine all insulation carefully for signs of tracking. Special attention must be given to areas where the conductor passes through an insulator or lays near a barrier. Examine the surface for cracks or streaked discoloration. When tracking is found, the insulation involved must be replaced.
6. Check that the front and rear latches of the operating mechanism, which are spring operated, rotate freely up and down by using finger pressure on the rollers.
7. Apply high-temperature lubricant (silicone or molybdenum based) to contact component surfaces subject to abrasion. Hydrocarbon-based grease may be applied very sparingly to bearings, linkages, sprockets, and drive chains not directly associated with the current-carrying components.

⚠ DANGER

Hazardous voltages and high-speed moving parts.

Will cause death, serious injury, or property damage.

Do not work on energized equipment. Always de-energize and ground the equipment before working on the equipment.

Load-interrupter switch main blade alignment and adjustment

1. Verify that all sources of primary power are disconnected, and using the operating handle, close the load-interrupter switch.
2. Disconnect the pushrods by removing the cotter pins and clevis pins that connect pushrods to the operating arms of each pole of the switch. See Figure 63.
3. Disengage the switch blades by pulling outward on the main switch blade until the main blades are separated from the jaw casting. Continue to pull outward until the arcing blade disengages from the arc chute. See Figure 64.

Note: *The quick-acting blade is under spring pressure and snaps open when clear of the stationary arcing contacts within the arc chute.*

4. If the main blades do not align with the jaw contacts, loosen the hinge casting-mounting bolts and move the pole assembly. Then re-tighten the bolts. See Figure 65.
5. Check that the jaw-casting contact surfaces align with the main blades. If necessary to adjust, loosen the jaw-casting mounting bolts, tap on the spade terminal to align, then re-tighten the bolts. See Figure 66.
6. Reconnect the pushrods by re-installing the clevis pins that connect pushrods to the operating arms of each pole of the switch. Install new cotter pins; do not reuse cotter pins.

Figure 63: Disconnect pushrods

Figure 64: Disengage switch blades

Figure 65: Loosen casting mounting bolts

Figure 66: Reconnect pushrods

DANGER

Hazardous voltages and high-speed moving parts.

Will cause death, serious injury, or property damage.

Do not work on energized equipment. Always de-energize and ground the equipment before working on the equipment.

Load-interrupter switch quick-acting blade alignment and adjustment

Disconnect the pushrods by removing the cotter pins and clevis pins that connect pushrods to the operating arms of each pole of the switch (refer to Figure 63 on page 102). Slowly move the blade in and out to check for proper alignment of the quick-acting blade with the opening in the arc chute. If necessary, adjust by loosening the jaw casting-mounting bolts and lightly tapping the arc-chute mounting bracket. Then, re-tighten bolts.

Note: *If any corrections to the quick-acting blade position are necessary (after all previous steps have been completed), they may be done by loosening the locknut on the arcing-blade adjusting screw (see Figure 68) and turning screw either in or out to obtain positioning of quick-acting blade. Re-tighten locknut.*

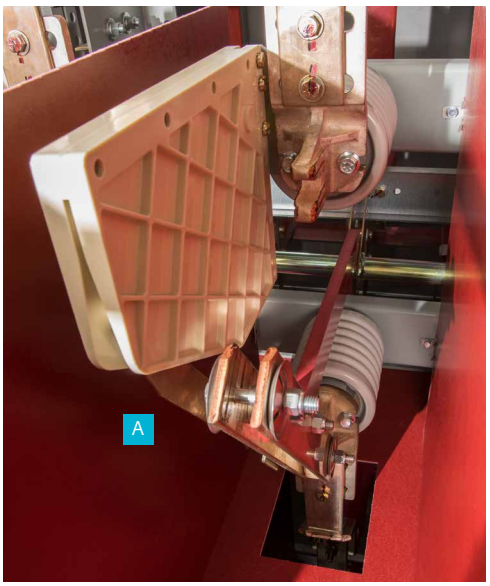

Figure 67: Checking proper alignment

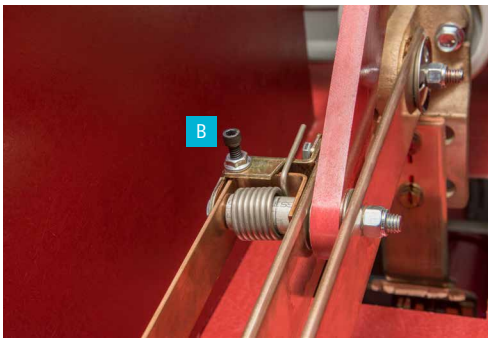

Figure 68: Arcing-blade adjusting screw

Item	Description
A	Quick-acting blade
B	Arcing-blade adjusting screw

⚠ DANGER

Hazardous voltages and high-speed moving parts.

Will cause death, serious injury, or property damage.

Do not work on energized equipment. Always de-energize and ground the equipment before working on the equipment.

Load-interrupter switch hinge-contact pressure adjustment

1. Disconnect the pushrods by removing the cotter pins and clevis pins that connect pushrods to the operating arms of each pole of the switch (refer to Figure 63 on page 102). Open the load-interrupter switch until the quick-acting blade just clears the arc chute and connect a spring scale to the main blades approximately 1-1/2" below the jaw contact as shown in Figure 69.

Note: *Some switches are equipped with an aluminum spacer bar just below the jaw. This provides a convenient point to connect the scale. On other switches, use a tee adapter allowing equal force on both blades.*

2. A force of two to four pounds should be necessary to move the blades. Loosen or tighten the hinge bolt as necessary to meet the two to four pound requirement.

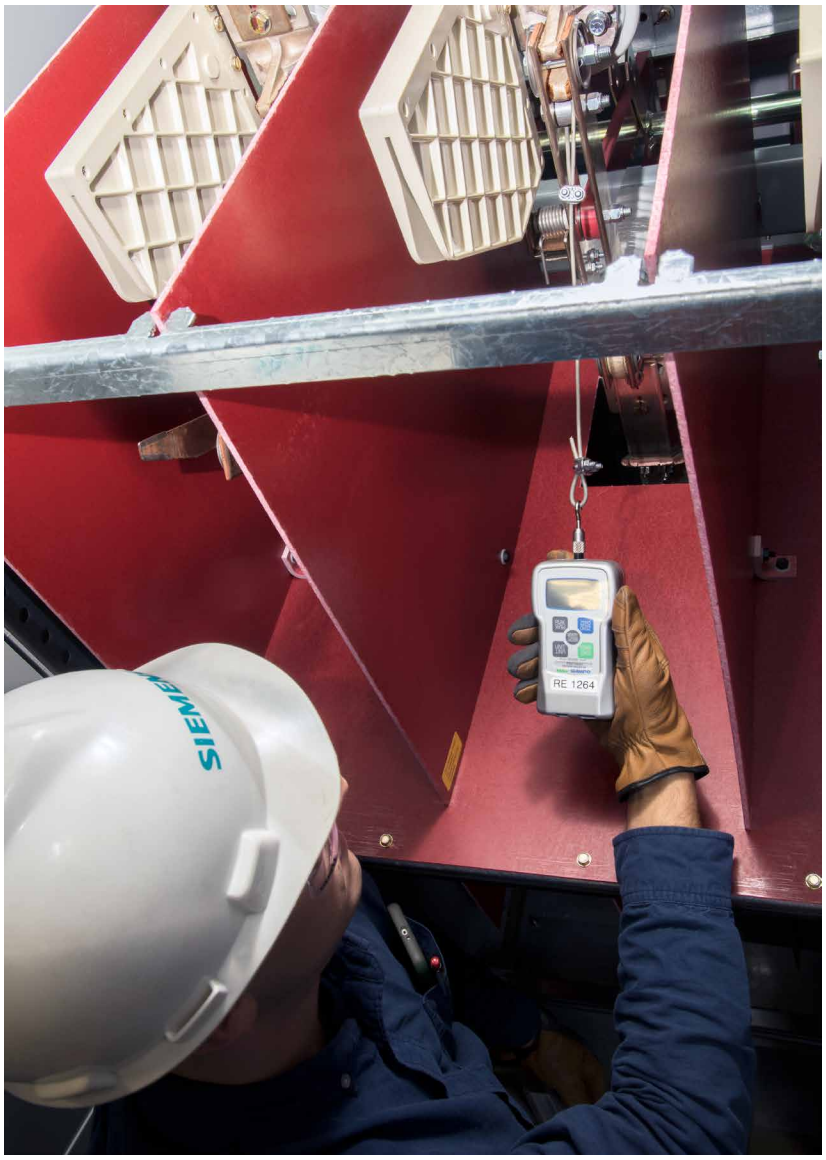

Figure 69: Use of spring scale for switch blade adjustment

DANGER

Hazardous voltages and high-speed moving parts.

Will cause death, serious injury, or property damage.

Do not work on energized equipment. Always de-energize and ground the equipment before working on the equipment.

Load-interrupter switch jaw-contact pressure adjustment

1. Verify that the load-interrupter switch is closed.
2. Connect a spring scale to the main blades approximately 1-1/2" below the jaw contact as shown in Figure 68: Use of spring scale for switch blade adjustment on page 103.

Note: *Some switches are equipped with an aluminum spacer bar just below the jaw. This provides a convenient point to connect the scale. On other switches, use a tee adapter allowing equal force on both blades.*

A force of 30-36 lbs (133-160 N) should be necessary to move the switch blades. Loosen or tighten the jaw contact bolts as necessary to meet the 30 to 36 pounds requirement.

Legal Manufacturer

Siemens Industry, Inc.
7000 Siemens Road
Wendell, North Carolina 27591
United States of America

Telephone: +1 (800) 333-7421
usa.siemens.com/mvswitchgear

Order No. SIEA-T40022-00-4AUS

This document contains a general description of available technical options only, and its effectiveness will be subject to specific variables including field conditions and project parameters. Siemens does not make representations, warranties, or assurances as to the accuracy or completeness of the content contained herein. Siemens reserves the right to modify the technology and product specifications in its sole discretion without advance notice.

© 2023 by Siemens Industry, Inc.