IF IN DOUBT ASK
DO NOT SCALE

NOTES

1) TERMINALS RECOMMENDED ARE PRE-INSULATED & MUST BE CRIMPED USING APPROVED TOOLING.
AMP PIDG OR PLASTI GRIP FUNNEL ENTRY (RING TONGUE) FOR M4 FIXING STUD.

SUPPLIER	PART NUMBER	CABLE SIZE
AMP	342103	0.25–1.6mm²
AMP	342143	1.0–2.6mm²

OR ANY OTHER MANUFACTURERS EQUIVALENT TERMINAL.

2) FOR OUTLINE & PANEL DRILLING, SEE 2995X10004 (A4).

3) CONNECTIONS TO THIS COMMUNICATIONS FACILITY IS BY SCREENED, TWISTED PAIR CABLE, ON SITE.
WHEN WIRING OTHER FACILITIES ENSURE THAT THESE TERMINALS ARE NOT OBSCURED BY OTHER WIRE RUNS.

4) CONTACTS SHOWN THUS
ARE INTERNAL RELAY CASE ASSEMBLY CONTACTS AND CLOSE WHEN THE RELAY CHASSIS IS WITHDRAWN FROM THE CASE.

5) FOR THE RELAY CASE ASSEMBLY SEE 2436G40002

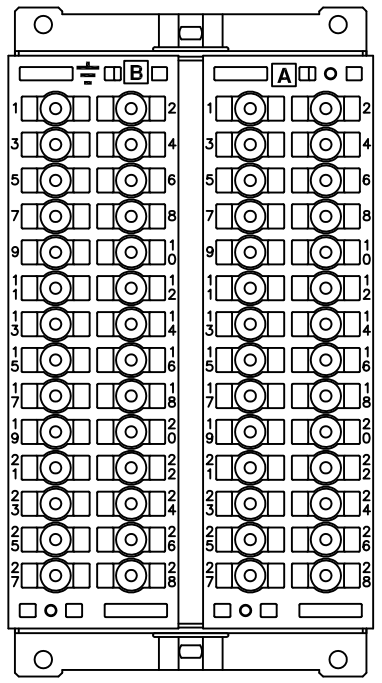

RELAY VIEWED FROM REAR

FOR INTERNAL USE ONLY
UNCONTROLLED COPY
NOT SUBJECT TO UPDATE

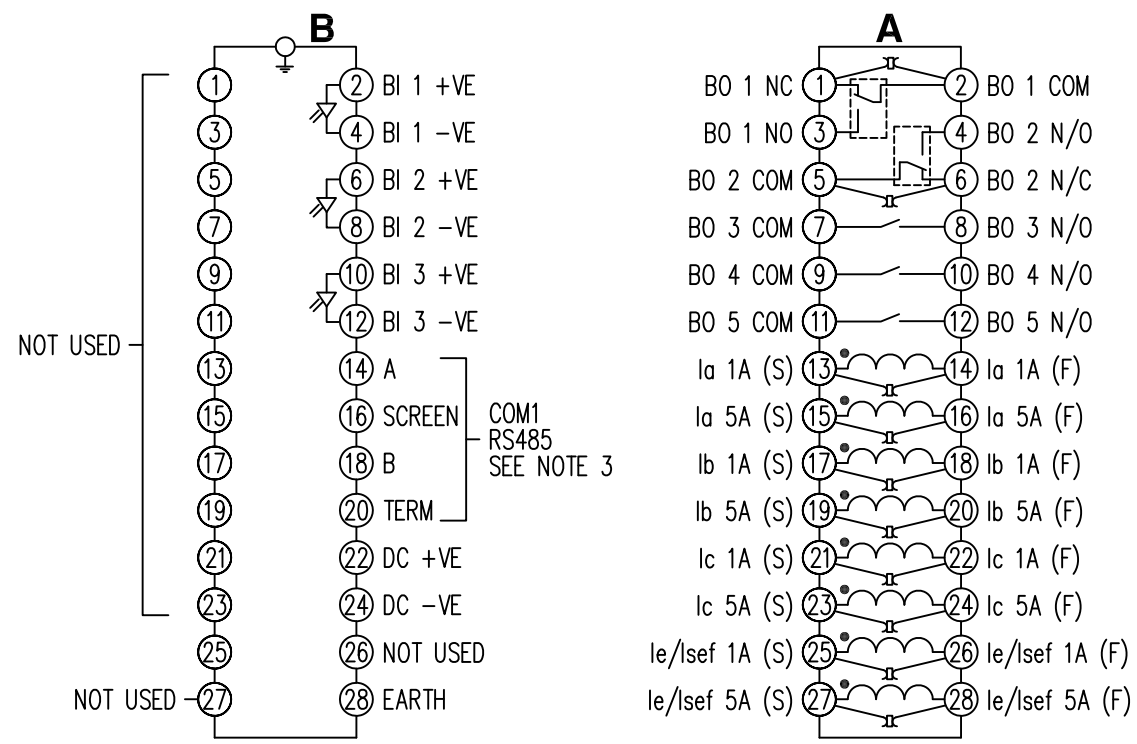

ABBREVIATIONS
I–CURRENT INPUTS
BI–BINARY INPUTS
BO–BINARY OUTPUTS
CO–CHANGE OVER BINARY OUTPUT CONTACTS
NO–NORMALLY OPEN BINARY OUTPUT CONTACTS
NC–NORMALLY CLOSED BINARY OUTPUT CONTACTS

COMMUNICATIONS IDENTIFICATION	
COM1	RS485 (ON BLOCK 'B' TERMINALS 14,16,18 & 20)
COM2	USB TYPE 'B' PORT (ON RELAY FRONT LABEL)

ISSUE	DATE	CHANGE NOTED
3 N.C	27.03.14	TITLE CHANGED TO SHOW 7SR1 INSTEAD OF 7SR11 MN436/3765,3Z0049 JS
2 RDW	12.12.08	TERM. A9 WAS BI 4 COM TERM. A11 WAS BI 5 COM MN436/3047 KB
1	05/09/08	

Copyright © 2008 Siemens Protection Devices Ltd. Hebburn

MATERIAL:

Dimensions in millimetres : Surface texture in micrometres.
Machine where marked ✓
For explanation of dimensions, tolerances, notes etc. see B.S.308.
Limit on untoleranced unmachined dimensions ± _____
Limits on untoleranced machined dimensions to B.S.4500;
i.e. up to 6±0.1; over 30 to 120±0.3; over 315±0.8;
over 6 to 30±0.2; over 120 to 315±0.5;
General unmachined angular tolerance ± _____

Finish:

Treatment:

Title:
TERMINAL ID & WIRING DIAGRAM FOR 7SR1 PLATFORM, 4CT+3BI+5BO(2CO+3NO)

SIEMENS PROTECTION DEVICES LTD.

Original Scale. NTS

First used on:
Similar Articles:
Supersedes:

Drg. No. 2436W40002

DRAWN K.BURDON	CHECKED K.BURDON	APPROVED RD.WATSON	DATE 05/09/08	IE	OPS	PCP	Purch.Spec.	TQ	EAC	CE	STD	A3