ID Switch

Heavy Duty Switch

Window Switch

Contents - Safety Switches

Air Conditioning Disconnects	3-2 – 3-3
Safety Switch Guide Form Specifications	3-4 – 3-5
Feature Comparison	3-6
Enclosure Types	3-7
Light Duty switches - Selection	3-8
ID Safety Switches	
ID Switches Catalogue Numbering System	3-9
ID Switches - Selection	3-10
Accessories - ID Switches	3-11
ID Switches Dimensions	3-12
VBII Catalogue Numbering System	
VBII Catalogue Numbering System	3-13
General Duty Safety Switches	
General Duty Switches—Features	3-14
240V Fusible and Non-Fusible—Selection	3-15
Heavy Duty Safety Switches	
Heavy Duty Switches—Features	3-16
240V Fusible—Selection	3-17
600V Fusible—Selection	3-18
600V Non-Fusible—Selection	3-19
Type 4/4X and 12 with Viewing Window—Selection	3-20
Special Applications Safety Switches	
4-Pole and 6-Pole—Selection	3-21
Interlocked Receptacle—Selection	3-22
Accessories—Heavy Duty Switches	3-23 – 3-25
VBII Safety Switch Replacement Parts	3-26
Dimensions and Weights	
Heavy Duty Switches	3-27 – 3-29
Type 1 and 3R Knockout Diagrams	3-30 – 3-32
4-Pole and 6-Pole Switch Dimensions	3-33
Double-Throw Switches	
Selection	3-34 – 3-35
Dimensions	3-36

Safety Switches

Non-Fused Air Conditioning Disconnects

Selection

240V Non-Fused Disconnect cUL listed, Type 3R enclosure

Catalogue Number	Ampere Rating	Maximum Horsepower	Disconnect Type	Std. Pkg.	Skid Qty.
WNC2060	60	10	Non-Fused Pullout	6	480

Features	Benefits
▪ Ample Wiring Space	▪ The larger enclosure allows for ample wiring space.
▪ Rugged Design	▪ Manufactured with powder coated G90 galvanized steel for fade, scratch and corrosion resistance
▪ Numerous Knockouts	▪ All (6) knockouts are easy to remove. The sidewall knockouts provide access from the sides of the device. Every knockout has 1/2", 3/4" and 1" provisions.
▪ Raised Mounting Embosses	▪ (4) Raised mounting embosses keep the unit away from the wall, preventing dirt build-up. The upper mounting hole is shaped to be used as a hanger.
▪ Copper Conductors	▪ Copper current carrying part allows for a cooler, longer lasting operation.
▪ Pullout Switch	▪ The pullout switch design allows you to safely and easily de-energize the load terminals.
▪ Removable Door	▪ The easily removable door makes it possible to wire the device with absolutely no interference.

Dimensions - Inches*

Non-Fused

Removable Door

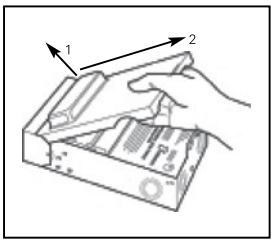

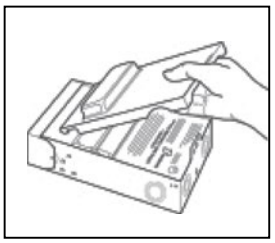

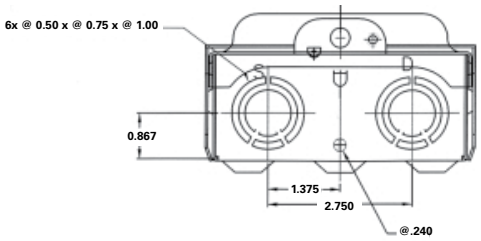

Wire Range Table				
Connector	Copper		Aluminum	
	Solid	Standard	Solid	Standard
Line	#14-8	#14-3	#12-8	#12-3
Load	#14-8	#14-3	#12-8	#12-3
Neutral	#12-8	#12-2	#12-8	#12-2
Equip Grnd.	#12-8	#12-2	#12-8	#12-2

Wiring Diagram

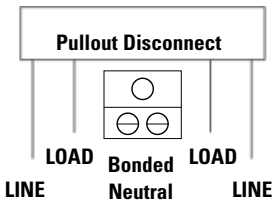

* For inches/millimeters conversion, multiply inches by 25.4.

Safety Switches

Fused Air Conditioning Disconnects

Selection

240V Fused Disconnect cUL listed, Type 3R enclosure

Catalogue Number	Ampere Rating	Maximum Horsepower	Fuse Class	Std. Pkg.	Skid Qty.
WFC2030	30	3	H	6	480
WFC2060	60	10	H	6	480

Features	Benefits
▪ Ample Wiring Space	▪ The larger enclosure allows for ample wiring space.
▪ Rugged Design	▪ Manufactured with powder coated G90 galvanized steel for fade, scratch and corrosion resistance
▪ Numerous Knockouts	▪ All (6) knockouts are easy to remove. The sidewall knockouts provide access from the sides of the device. Every knockout has 1/2", 3/4" and 1" provisions.
▪ Raised Mounting Embosses	▪ (4) Raised mounting embosses keep the unit away from the wall, preventing dirt build-up. The upper mounting hole is shaped to be used as a hanger.
▪ Copper Conductors	▪ Copper current carrying part allows for a cooler, longer lasting operation.
▪ Pullout Switch	▪ The pullout switch design allows you to safely and easily de-energize the load terminals.
▪ Removable Door	▪ The easily removable door makes it possible to wire the device with absolutely no interference.

Dimensions - Inches*

Fused

Removable Door

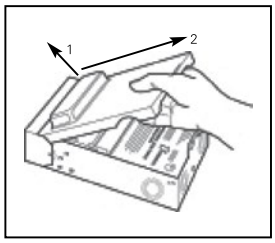

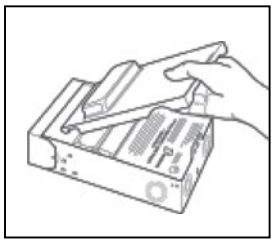

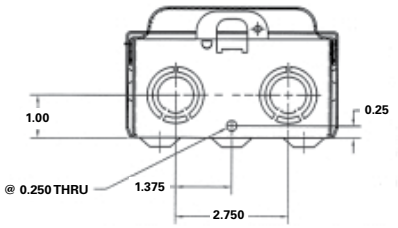

Wiring Diagram

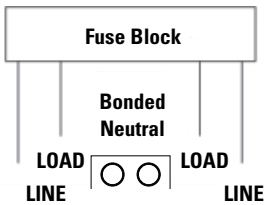

Wire Range Table

Connector	Copper		Aluminum	
	Solid	Standard	Solid	Standard
Line	#14-8	#14-3	#12-8	#12-3
Load	#14-8	#14-3	#12-8	#12-3
Neutral	#12-8	#12-2	#12-8	#12-2
Equip Grnd.	#12-8	#12-2	#12-8	#12-2

* For inches/millimeters conversion, multiply inches by 25.4.

	ID Switches
Application	ID Switches are intended for applications where reliable performance and continuity of service are needed, but where duty requirements are not severe and usual service conditions prevail. Not suitable for Direct Current (DC) system.
Short Circuit Withstand Ratings	Suitable for use on a circuit capable of delivering not more than: 200kA RMS symetrical at 600V AC maximum for 30-200A. 100kA RMS symetrical at 600V AC maximum for 400-600A.
Fuses	Fusible switches will accept the following CSA class fuses: H.R.C. Form I Class J*, R or H & H.R.C. Form II fuses if the accepted adaptor kits are provided. If switch is used to its maximum Horse Power Rating, Time delay type fuses may be required for starting purposes. *Not applicable for switch ID321, use switch ID361.
Cover Interlocks	Voidable cover interlocks prevents cover from being opened when switch is in the "ON" position and prevents switch from being turned "ON" when door is opened.
Specifications	CSA Certified under file #13076 as enclosed switches. Fusible switches are suitable for service entrance when neutral is installed. Meets CSA C22.2 No.4 Enclosed Switches.
Seismic Qualifications	No Seismic qualification
Groundable Neutral	All ID switches (both Fusible and Non-Fusible) are either supplied with factory installed neutrals or accept field addable neutrals.
Padlocks	Padlock cover latch. Off padlock provision on handle.
HP & Load Break Ratings	ID switches are both load break and horsepower rated.

Guide Form Specifications

	General Duty	Heavy Duty	Double Throw
Application	General Duty Switches are intended for applications where reliable performance and continuity of service are needed, but where duty requirements are not severe and usual service conditions prevail. (These switches are intended for use primarily with supply circuits rated 240V AC or less where the available fault current is less than 100,000A when used with Class R or T fuses or 10,000A max. when used with Class H fuses.)	Heavy Duty Switches are intended for use in applications where: 1. Rugged construction, reliable performance, continuity of service and ease of maintenance are emphasized, or 2. Available fault currents higher than 10,000A are likely to be encountered, such as in manufacturing plants, mass production industries, and commercial, institution-al and other large buildings served by network systems or transformers of higher capacities. 3. System voltage is 600V AC or DC Max. 4. A Type 12 or 4 / 4X enclosure is required.	Double throw switches are intended to transfer loads from one power source to another. All 2 & 3 pole double throw switches are suitable for use as service equipment. All are CSA Listed. Switches are rated for use on systems with an available fault current of up to 10,000 AIC when protected with Class H fuses or either 100,000 or 200,000 AIC when protected with Class R, J or Class T fuses.
Short Circuit Withstand Ratings	Suitable for use on systems capable of delivering not more than 100,000 RMS symmetrical amperes of fault current as follows: Sw. Rating / AIC Rating / Protective Device① 30-600A / 10,000 / Circuit Breaker 30-600A / 10,000 / Class H Fuse 30-600A / 100,000 / Class R Fuse 100-600A / 100,000 / Class J or T Fuse	Suitable for use on systems capable of delivering not more than 200,000 RMS symmetrical amperes of fault current as follows: Sw. Rating & Tpye / AIC Rating / Protective Device① All Heavy Duty & DT / 10,000 / Circuit Breaker 30-600A HD & DT / 10,000 / Class H Fuse 60A Compact HD / 100,000 / Class R, J or T Fuse GD & 4P DT / 100,000 / Class R, J or T Fuse 30-600A HD / 200,000 / Class R, J or T Fuse 30-600A DTF & DTNF DT② / 200,000 / Class R, J or T Fuse 800 & 1200A HD & DT② / 200,000 / Class L or T Fuse	
Fuses	Fusible switches will accept the following CSA class fuses: 30 "LF" - 30A max plug Fuses 30-600A "GF" Class H & K, Class R with kit 100-600A "GF" Class J-move base 100-200 "GF" Class T with kit 400-600A "GF" Class T-move bases	Fusible switches will accept the following CSA class fuses: 30-600A "HF" Class H & K, Class R with kit 30-400A, 600V "HF" Class J-move base 100-600A, 240V "HF" Class J-move base 100-200A "HF" Class T with kit 400-600A "HF" Class T-move bases 800-1200A "HF" Class L, Class T③	Fusible switches will accept the following CSA class fuses: 30-200A "DT" & "F" Class H & K, Class R with kit 30 & 60A 600V "DT" Class J-move base 100-200A "DT" Class J-move base, Class T with kit 400-600A "DT" Class J-standard, Class T-move bases 400A 240v "F" Class H-standard 400A, 600V & 600A "F" Class T-Standard
Cover Interlocks	Voidable – cover interlocks on switches prevent the switch door from being opened when in the "ON" position. No cover interlock on 30-60A GD or on plug fuse type switches.	Voidable dual cover interlocks standard on all heavy duty switches. Prevents cover from being opened when switch is in the "ON" position and prevents switch from being turned "ON" when door is opened.	Dual cover interlocks standard on all double throw switches. Prevents cover from being opened when switch is in the "ON" position and prevents switch from being turned "ON" when door is opened.
Specifications	CSA certified under file #24563 as enclosed switches. Fusible switches also suitable as service entrance when neutral bonded to the enclosure is installed. Meets CSA C22.2 No.4 Enclosed Switches.③	CSA certified under file #24563 as enclosed switches. Fusible switches also suitable as service entrance when neutral bonded to the enclosure is installed. Meets CSA C22.2 No.4 Enclosed Switches.③	CSA certified under file #24563 as enclosed switches. Meets CSA C22.2 No.4 Enclosed switches.
Seismic Qualifications	100-600A GD & all HD switches and "DT" type double throw switches have been tested and comply with the 2010 California Building Code (CBC) and with the 2009 International Building Code (IBC) - Compliance Level SDS = 1.85 g		
Groundable Neutral	Fusible switches have groundable neutral blocks factory installed. Non-fusible switches accept field addable neutrals.	All switches (both Fusible and Non-Fusible) are either supplied with factory installed neutrals or accept field addable neutrals.	All will accept field addable neutrals.
Padlocks	Padlockable cover latch. OFF padlock provisions on handle.	Padlockable cover latch and multiple OFF padlock provisions on handle.	Padlockable cover latch and multiple OFF padlock provisions on handle.
HP & Load Break Ratings	All General Duty, Heavy Duty and Double Throw Switches are both load break and horsepower rated.		

① The protective device can either be a fuse or circuit breaker protecting a non-fusible switch. The ampere rating of the protective device must not exceed the switch ampere rating.

② 800A switches do not require an adapter kit, bases can be relocated to accommodate class-T fuses. A class-T adapter kit is required available for 240V applications on 1200A switches.

③ Refer to page 3-29- 3-36 for the line side barrier kit requirement for service entrance..

Feature Comparison

Light Duty (Plug Fuse)	ID Switches	General Duty	VBII Heavy Duty	Double Throw	Features/Ratings
—	●	●④	●	●	30 thru 600 Amps
—	—	—	●	—	800 and 1200 Amps
●	●	●	●	●	240 Volt AC
—	●	—	●	●	600 Volt AC
—	—	●	●	●	250 Volt DC
—	—	—	●	—	600 Volt DC
—	—	●	●	●	Double-break visible blade design (30-200A)
●	●	●	●	●	Quick-make, quick-break switching action
●	●	●	●	●	Highly visible ON/OFF handle indication
—	—	—	●	—	Handle design for hook stick operation
●	●	●	●	●	Padlockable cover latch
●	●	●	●	●	Padlockable handle
—	●	●	●	●	Single voidable cover interlock
—	●	—	●	●	Dual voidable cover interlock
●	●	●	●	●	Type 1 enclosure
●	—	—	●	●	Type 3R enclosure
—	—	—	●	—	Type 12 enclosure
—	—	—	●	—	Type 4/4X enclosure
●	●	●	●	●	Generous wiring gutters that meet CSA and CEC wire-bending space requirements
●	●	●	●	●	Lugs suitable for copper or aluminum at 60˚ or 75˚C
●	●	●	●	●	CU/AL wire lugs that meet CSA C22.2 No.65-03 requirements
—	—	—	●	●	"Suitable for field-convertible — compression connectors"
—	●	●⑤	●	●	All plated copper current carrying parts (except lugs)
—	●	●	●	●	Spring reinforced Fuse Clips (except 30A general duty)
—	●	—	●	●	Clear line terminal shield available
—	●	●	●	●	Replacement parts
—	—	—	●	—	Field addable 200% neutral
—	●	●②	●①②	●①②	Provisions for CSA T, R and H Fuses
—	●		●	●①	Provisions for CSA Class J and L Fuses
—	—	—	●	●	Metal nameplate
—	●	—	●	●	Aux. switch kits
—	—		●③	—	Type 4X with Stainless steel interior parts
—	—	●⑥	●	—	Rolled flange enclosure design (30-200A)

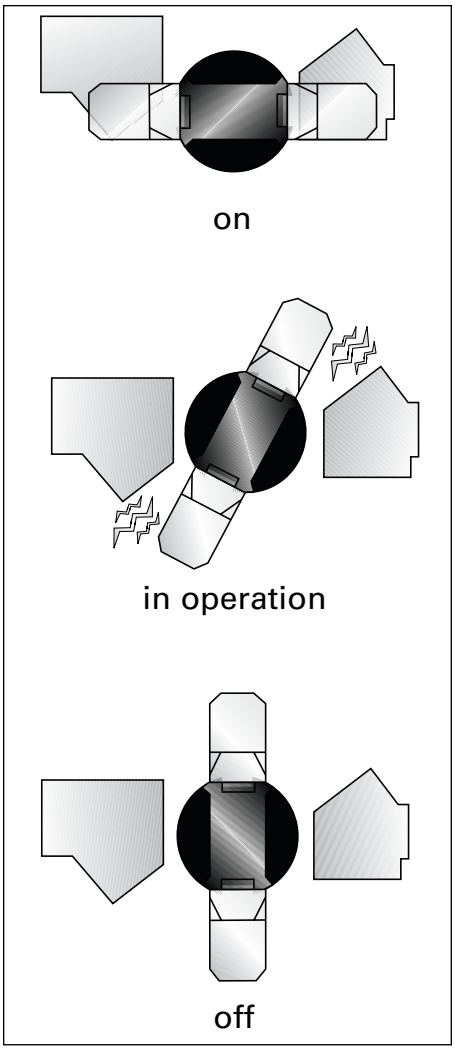

Double Break Switching Action

Like the time-proven Vacu-Break Design, the Siemens VBII double break switching action breaks the arc in two places in 30-200A ratings. This reduces heat generation and increases switching speed by doubling the breaking distance. The result is enhanced performance and increased longevity. We also provide the most visible blade design available today. Unlike conventional knife blade switches, the blades are self-aligning to ensure positive contact. In addition, they have no wear and friction point since the "electrical hinge" has been eliminated. The result is a very fast, positive and reliable switching action for even the most severe applications.

① Only 800 & 1200A HD switches will accept Class L fuses.
② 100-600A GD & DT and 100-1200A HD switches will accept Class T fuses.
③ 30-200A Type VBII in stainless steel enclosures..
④ GD switches are available in all ratings except 30 and 60A.
⑤ 200A general duty switches have aluminum neutral assemblies.
⑥ 100-200A.

Enclosure Types

A **Type 1** enclosures are intended for indoor use primarily to provide protection against contact with the enclosed equipment in locations where unusual service conditions do not exist.

B **Type 3R** enclosures are intended for outdoor use primarily to provide a degree of protection against falling rain and sleet and must remain undamaged by the formation of ice on the enclosure. They are not intended to provide protection against conditions such as dust, internal condensation, or internal icing.

C **Type 4, 4X** enclosures are intended for indoor or outdoor use primarily to provide a degree of protection against windblown dust, rain, splashing water and hose-directed water. They are not intended to provide protection against conditions such as internal condensation or internal icing. Also meets 4X definition by providing a high degree of protection against corrosion. Siemens 30-200A stainless steel 4X switches are supplied stainless interior parts and hardware as standard.

D **Type 4** enclosures are intended for indoor or outdoor use primarily to provide a degree of protection against windblown dust, rain, splashing water and hose-directed water. They are not intended to provide protection against conditions such as internal condensation or internal icing.

E **Type 12**① enclosures are intended for indoor use primarily to provide a degree of protection against dust, falling dirt and dripping water. They are not intended to provide protection against conditions such as internal condensation.

A

B

C D

E

Load Break Ratings

All Siemens safety switches are load break rated. The load break rating is assigned by UL/CSA after the switching unit has successfully performed the following tests:

Switch Ampere Rating	Number of ON/OFF Operations per Minute	Number of Operations		
		With Current	Without Current	Total
30–100	6	6000	4000	10000
200	5	6000	2000	8000
400	4	1000	5000	6000
600	3	1000	4000	5000
800	2	500	3000	3500
1200	1	500	2000	2500

Horsepower Ratings

ID and VBII safety switches, where appropriate, are horsepower rated. Ratings are approved by CSA after the switching unit has undergone testing to determine its acceptability which includes repeated interruption of the locked rotor current of the motor for which it is to be rated as follows:

Max HP Rating	Number of ON/OFF Operations per minute	Number of Cycles of Operation
100	6	50
500	1	10

① VBII Type 12 switches are also rated 3R & 3S for outdoor use. Type 3R is defined in B above. 3S rated enclosures provide a degree of protection against windblown dust and allow operation when the enclosure is ice laden.

Light Duty Enclosed Switches

Plug Fuse and 60A Special Application Type

Selection

Features

- CSA Certified under file #24563
- Compact size
- Horsepower rated
- Indoor and outdoor enclosures
- Quick make-quick break mechanism
- Visible "ON"-"OFF" indications
- Padlock-off handle feature
- Door padlock provision
- All fusible switches suitable for use as service entrance equipement
- Bondable neutral (where indicated)
- Lugs suitable for copper or aluminum wire
- Switches accept plug fuses only - fuses not included
- Hubs③ — see page 3-26
- Ground Bar Kit: **GSGK60**③
- Knockout diagrams — see page 3-31 and 3-32

Dimensions - in. (mm)

Enclosure Type	Height	Width	Depth
1	8¼ (210)	5½ (140)	3 (76)
3R	8¼ (210)	5⅜ (137)	3⅛ (79)

Wire Range Table

Switch Type	Wire Range
120/240 Volt Fusible 30 Amp	#14 AWG - #8 AWG Al/Cu④
120/240 Volt Non-Fusible 60 Amp	#14 AWG - #3 AWG Al/Cu

Ampere Rating	Indoor — Type 1		Outdoor — Type 3R		Horsepower Ratings① 1-Phase, 2-Wire	
	Catalogue Number	Ship. Wt. (lbs.)	Catalogue Number	Ship. Wt. (lbs.) Pkg. of 10	Standard	Maximum
120/240 Volt Fusible						
1-Pole and Solid Neutral② — **120 Volt — 1-Phase, 2-Wire**						
30	**LFC111N**	3.6	—	—	1/2	2
2-Pole and Solid Neutral② — **120/240 Volt — 2-Phase, 3-Wire**						
30	**LFC211N**	3.5	**LFC211NR**	35	1/2	2
240 Volt Non-Fused						
2-Pole Special Application Switch — **240 Volt — 1-Phase, 2-Wire**						
60	—	—	**LNFC222R③**	35	3	10

①Dual horsepower ratings:
Std. — applies when non-time delay plug fuses are installed.
Max — applies when time-delay plug fuses are installed.

②Has service entrance label. CSA certified as "Enclosed Switches" (suitable for use as service equipment where indicated).

③Bottom cable entry and exit only. No hub provision supplied. **GSGK60** is included and factory installed.

④Line lugs are CSA approved for #14 to #6 Cu/Al cable.

Catalogue Numbering System

Type ID Switches Catalogue Numbering System

Product Overview

	ID	3	6	4	NF

Enclosure Type

Omit = Type 1, Indoor

Switch Type

ID = ID switch

Number of Poles

2 = 2
3 = 3
4 = 3 + neutral

Voltage

2 = 240V
6 = 600V

Fused or Non-Fused

Omit = Fusible
NF = Non-Fused

Amperes

1 = 30A
2 = 60A
3 = 100A
4 = 200A
5 = 400A
6 = 600A

ID Switches

Features

- CSA Certified under file #13076
- General Duty switch designed for the canadian contruction market
- Compact size with integrated handle
- Horsepower rated
- Type 1 enclosure for indoor applications
- Quick make-quick break mechanism
- Visible "ON"-"OFF" indications
- Padlock-off handle feature
- Door padlock provision
- ID switches will accept the following CSA class fuses: Class H, Class K, Class R (Adapter kits are required) and Class T (Adapter kits are required)
- Fuse Puller included for 30-200A
- Manufactured in Canada for quick delivery and easy access to replacement parts
- Dimensions and knockout diagram — see page 3-14
- ***NEW!*** 240V, 2P & 3P, 30A-200A Service Entrance ID Switches

System	Ampere Rating	Indoor — Type 1 Catalogue Number	Indoor — Type 1 Unit Weight - lbs (kg)	Horsepower Ratings 240V AC 1-Phase	240V AC 3-Phase	480V AC 1-Phase	480V AC 3-Phase	600V AC 1-Phase	600V AC 3-Phase	250 Volt DC	Skid Qty.
240V Fusible											
2-Pole, 2-Fuse and Solid Neutral①											**240 Volt AC.**
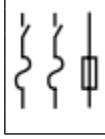	30	**ID221**	13 (5.90)	—	—	—	—	—	—	—	55
	60	**ID222**	13 (5.90)	—	—	—	—	—	—	—	55
	100	**ID223**	18 (8.17)	—	—	—	—	—	—	—	30
	200	**ID224**	32 (14.52)	—	—	—	—	—	—	—	20
	400	**ID225**	76 (34.47)	—	125	—	—	—	—	—	6
	600	**ID226**	88 (39.92)	—	200	—	—	—	—	—	6
3-Pole, 3-Fuse											**240 Volt AC.**
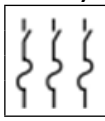	30	**ID321**	12.61 (5.72)	3	7.5	—	—	—	—	—	55
	60	**ID322**	12.61 (5.72)	10	15	—	—	—	—	—	55
	100	**ID323**	17.22 (7.81)	15	30	—	—	—	—	—	30
	200	**ID324**	31.52 (14.3)	15	60	—	—	—	—	—	20
3-Pole, 3-Fuse and Solid Neutral①											**240 Volt AC.**
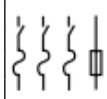	30	**ID421**	13 (5.90)	—	—	—	—	—	—	—	55
	60	**ID422**	13 (5.90)	—	—	—	—	—	—	—	55
	100	**ID423**	18 (8.17)	—	—	—	—	—	—	—	30
	200	**ID424**	32 (14.52)	—	—	—	—	—	—	—	20
	400	**ID425**	89 (40.36)	—	125	—	—	—	—	—	6
	600	**ID426**	102 (46.27)	—	200	—	—	—	—	—	6
600V Fusible											
3-Pole, 3-Fuse											**240 Volt AC / 480 Volt AC / 600 Volt AC.**
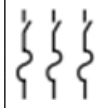	30	**ID361**	12.61 (5.72)	3	7.5	—	15	10	20	—	55
	60	**ID362**	12.61 (5.72)	10	15	—	30	25	50	—	55
	100	**ID363**	17.22 (7.81)	15	30	—	60	40	75	—	30
	200	**ID364**	31.52 (14.3)	15	60	—	125	50	150	—	20
	400	**ID365**	88 (39.62)	—	125	—	250	—	350	—	6
	600	**ID366**	101 (45.81)	—	200	—	400	—	600	—	6
600V Non-Fusible											
3-Pole, 3-Fuse											**240 Volt AC / 480 Volt AC / 600 Volt AC.**
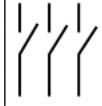	30	**ID361NF**	12.18 (5.52)	3	7.5	—	15	10	20	—	55
	60	**ID362NF**	12.18 (5.52)	10	15	—	30	25	50	—	55
	100	**ID363NF**	16.58 (7.52)	15	30	—	60	40	75	—	30
	200	**ID364NF**	29.64 (13.44)	15	60	—	125	50	150	—	20
	400	**ID365NF**	87 (39.46)	—	125	—	250	—	350	—	6
	600	**ID366NF**	97 (44)	—	200	—	400	—	600	—	6

① Suitable for use as service equipment when neutral is bonded to the enclosure.

Accessories

Neutral Kits

Standard Neutral Kits

Switch Ampere Rating	Neutral Kit Catalogue Number
30	**N60**
60	**N60**
100	**N100**
200	**N200**
400	**N400ID**
600	**N600ID**

Fuse Puller Kits

Fuse Puller are field replaceable in ID switches 30-200A (one kit required per 3-pole switch)

Switch Ampere Rating	Fuse Puller Kit Catalogue Number
30	**FP2**
60	**FP2**
100	**FP3**
200	**FP4**

Auxiliary Contacts

Switch Ampere Rating	Aux. Contact Catalogue Number

With 1 NO & 1 NC

30-100	**MSSAK116**
200	**MSSAK126**

With 2 NO & 2 NC

30-100	**MSSAK216**
200	**MSSAK226**

Replacement Line Shield

Line shield can be field replaced/added for ID.

Switch Ampere Rating	Line shield kit
30	**LSK1** (3 per kit)
60	**LSK1** (3 per kit)
100	**LSK3** (3 per kit)
200	**LSK4** (3 per kit)

Class R Fuse Adaptor Kits

30-600A ID switches accept Class R fuses using the appropriate adaptor kit (One kit per pole required)

Switch Ampere Rating	R Fuse Adaptor Kit Catalogue Number	
	240V	600V
30	**RFAK21**	**RFAK61**
60	**RFAK22**	**RFAK62**
100	**RFAK3**	
200	**RFAK4**	
400	**RFAK6**	
600	**RFAK6**	

Class T Fuse Adaptor Kits

100-600A ID switches accept Class T fuses using the appropriate adaptor kit (One kit per pole required)

Switch Ampere Rating	T Fuse Adaptor Kit Catalogue Number	
	240V	600V
100	**TFAK23**	**TFAK63**
200	**TFAK24**	**TFAK64**
400	**TFAK52**	**TFAK55**
600	**TFAK62**	**TFAK65**

Wire Ranges (Line, Load and Standard Neutral)

Switch Ampere Rating	Number of lugs per pole	Line, Load Lug Wire Range	Neutral Lug Wire Range
30	1	#14 - 2 AWG (Al/Cu)	#14 - 4 AWG (Al/Cu)
60	1	#14 - 2 AWG (Al/Cu)	#14 - 4 AWG (Al/Cu)
100	1	Line: # 6 - 120 AWG (Al/Cu) Load: #14 - 1/0 AWG (Al/Cu)	#14 - 2/0 AWG (Al/Cu)
200	1	#6 - 250 MCM (Al/Cu)	#6 - 300 MCM (Al/Cu)
400	1	(2) 250-1/0 or (1) 750-1/0 (Al/Cu)	(2) 250-1/0 or (1) 750-1/0 (Al/Cu)
600	2	(2) 250-1/0 or (1) 750-1/0 (Al/Cu)	(2) 250-1/0 or (1) 750-1/0 (Al/Cu)

Contact Ratings (Continuous duty 10 Amps)					
Volts (AC)	Inrush Amps	Break Amps	Volts (DC)	Inrush Amps	Break Amps
24-120	60	6	24-150	11	11
240	30	3	250	55	55
480	15	15	300	20	20
600	12	12	600	20	20

Replacement Parts

Catalogue Number	Description
CCSS1	Cover catch (20 per kit)

Switch Ampere Rating	Catalogue Number①	Description
400A	**CLOBK5**	Load Base (1 per kit)
600A	**CLOBK6**	Load Base (1 per kit)
400A	**CLIBK5**	Line Base (1 per kit)
600A	**CLIBK6**	Line Base (1 per kit)

① These kits are for replacement purpose only.

Replacement cover catch can be ordered using #CCSS1, which includes 20 cover catch per kit. (one kit required per 3-pole switch)

Dimensions

Catalogue Number	Dimensions - inches (mm)			Knock-out Diagram	Shipping weight - lbs (kg)
	Height	Width Including Handle	Depth Including Handle		
ID221	15 3/8 (391)	9 3/16 (233)	7 1/4 (184)	S1	12.78 (5.81)
ID222	15 3/8 (391)	9 3/16 (233)	7 1/4 (184)	S1	12.78 (5.81)
ID223	20 3/8 (518)	10 11/16 (271)	7 1/4 (184)	S2	17.45 (7.93)
ID224	30 7/8 (784)	13 3/16 (335)	8 1/4 (210)	S3	31.95 (14.52)
ID225	40 (1016)	18 1/2 (470)	12 1/16 (306)	No KO	76 (34.47)
ID226	48 (1219)	18 1/2 (470)	12 1/16 (306)	No KO	88 (39.92)
ID321	15 3/8 (391)	9 3/16 (233)	7 1/4 (184)	S1	12.61 (5.72)
ID322	15 3/8 (391)	9 3/16 (233)	7 1/4 (184)	S1	12.61 (5.72)
ID323	20 3/8 (518)	10 11/16 (271)	7 1/4 (184)	S2	17.22 (7.81)
ID324	30 7/8 (784)	13 3/16 (335)	8 1/4 (210)	S3	31.52 (14.3)
ID361	15 3/8 (391)	9 3/16 (233)	7 1/4 (184)	S1	12.61 (5.72)
ID361NF	15 3/8 (391)	9 3/16 (233)	7 1/4 (184)	S1	12.18 (5.52)
ID362	15 3/8 (391)	9 3/16 (233)	7 1/4 (184)	S1	12.61 (5.72)
ID362NF	15 3/8 (391)	9 3/16 (233)	7 1/4 (184)	S1	12.18 (5.52)
ID363	20 3/8 (518)	10 11/16 (271)	7 1/4 (184)	S2	17.22 (7.81)
ID363NF	20 3/8 (518)	10 11/16 (271)	7 1/4 (184)	S2	16.58 (7.52)
ID364	30 7/8 (784)	13 3/16 (335)	8 1/4 (210)	S3	31.52 (14.3)
ID364NF	30 7/8 (784)	13 3/16 (335)	8 1/4 (210)	S3	29.64 (13.44)
ID365	40 (1016)	21 1/2 (546)	12 1/16 (306)	No KO	88 (39.62)
ID365NF	40 (1016)	21 1/2 (546)	12 1/16 (306)	No KO	87 (38.46)
ID366	48 (1219)	21 1/2 (546)	12 1/16 (306)	No KO	101 (45.81)
ID366NF	48 (1219)	21 1/2 (546)	12 1/16 (306)	No KO	97 (44)
ID421	15 3/8 (391)	9 3/16 (233)	7 1/4 (184)	S1	12.78 (5.81)
ID422	15 3/8 (391)	9 3/16 (233)	7 1/4 (184)	S1	12.78 (5.81)
ID423	20 3/8 (518)	10 11/16 (271)	7 1/4 (184)	S2	17.45 (7.93)
ID424	30 7/8 (784)	13 3/16 (335)	8 1/4 (210)	S3	31.95 (14.52)
ID425	40 (1016)	21 1/2 (546)	12 1/16 (306)	No KO	89 (40.36)
ID426	48 (1219)	21 1/2 (546)	12 1/16 (306)	No KO	102 (46.27)

K.O. Data For EEMAC 1 Enclosure

100 Amp Enclosure Type ID

K.O.'s Trade Size
A = 1" - 1 1/4" - 1 1/2" - 2"
B = 1/2" - 3/4"
C = 3/4" - 1"
D = 1" - 1 1/4"

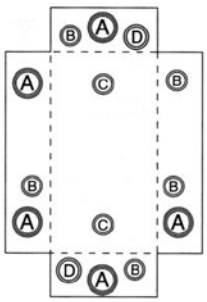

200 Amp Enclosure Type ID

K.O.'s Trade Size
A = 1 1/2" - 2" - 2 1/2" - 3"
B = 1" - 1 1/4"
C = 1/2" - 3/4"

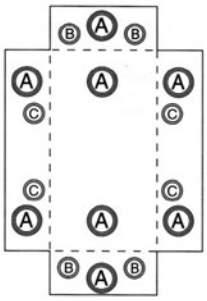

30-60 Amp Enclosure Type ID

K.O.'s Trade Size
A = 3/4" - 1" - 1 1/4" - 1 1/2"
B = 3/4" - 1"
C = 1/2" - 3/4"

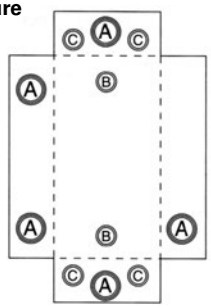

Catalogue Numbering System

Type VBII Safety Switch Catalogue Numbering System

Product Overview

H	F	C	3	6	4	N	J	W	A

Switch Type

L = General Duty 10k AIC Max. (Plug Fused & 60A Max Non-Fused)
G = Gen. Duty
H = Heavy Duty
DT = Double Throw

Fused or Non-Fused

F = Fused
NF = Non-Fused

C = CSA certified only

Number of Poles

1 = 1
2 = 2
3 = 3
4 = 4
6 = 6

Voltage

1 = 120V or 120/240V
2 = 240V
6 = 600V

Series Type

A = 400A, 600A
Omit = 30A - 200A, 800A - 1200A

Special Applications With:

CH = Crouse-Hinds Receptacle
W = Viewing Window

Enclosure Type

Omit = Type 1, Indoor
R = Type 3R, Outdoor
S = Type 4/4X, Stainless Steel
J = Type 12, Industrial

With or Without Neutral

Omit = Less Neutral
N = With Neutral - rated for service entrance

Amperes

1 = 30A	**5** = 400A
2 = 60A	**6** = 600A
3 = 100A	**7** = 800A
4 = 200A	**8** = 1200A

Type VBII Accessories Catalogue Numbering System

H	R	6	4	A

Switch Type

H = Heavy Duty
G = General Duty③

Accessory Type

A1	=	Auxiliary Switch 1/NO and 1/NC
A2	=	Auxiliary Switch 2/NO and 2/NC
A3	=	Auxiliary Switch Low Current
CL	=	Compression Lug Barrier / Mounting Kit
CU	=	Copper Lug③
G	=	Ground Lug Kit
G2	=	Insulated Ground Lug Kit
LC	=	Copper Lug Kit③
NC	=	Neutral
NC2	=	200% Neutral③
NCM	=	Field Replacement Lug Kit②
P	=	Fuse Puller Kit
R	=	Class R - Fuse Clip Kit
T	=	Class T - Fuse Kit

① For 400A, 600A use 600V max accessories except for T fuse kit.
② Only offered for 400A, 600A.
③ For 30A-200A, 800A-1200A.

Series Type

A = 400A, 600A
Omit = 30A - 200A, 800A - 1200A

Amperes

1	= 30A
2	= 60A
12	= 30/60A
3	= 100A
23	= 60/100A
123	= 30/60/100A
1234	= 30/60/100/200A
4	= 200A
5	= 400A
6	= 600A
56	= 400/600A
5678	= 400/600/800/1200A
78	= 800/1200A

Maximum Voltage

2 = 240V Max①
6 = 600V Max

General Duty Safety Switches

Features VBII (30-200A)

Product Overview

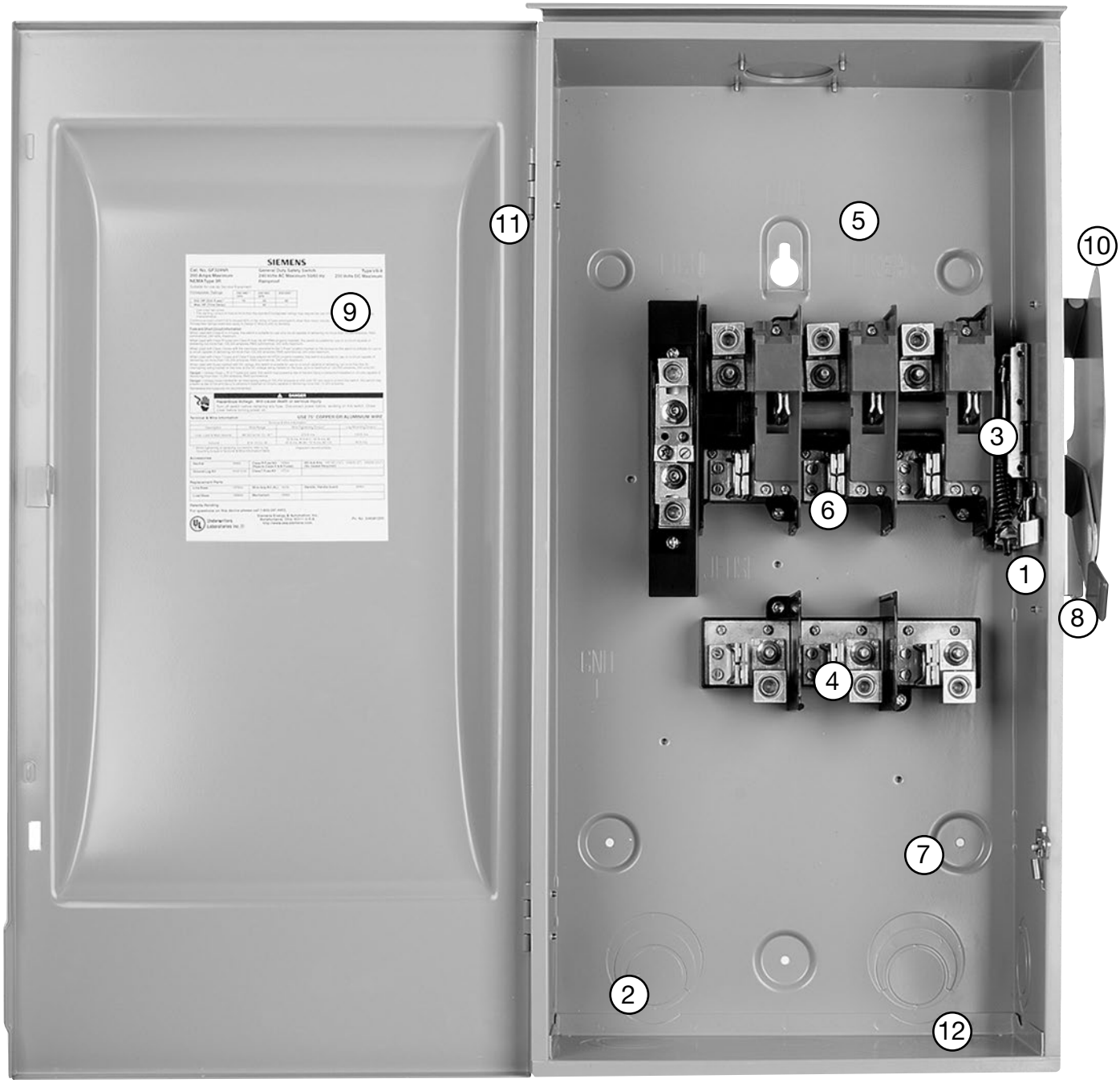

1. Cover interlock
2. Tangential knockouts through 200A for easy conduit lineup
3. Quick-make, quick-break operating mechanism that ensures positive operation
4. Provisions for T, R, J, H, and K class fuses (T & J 100-200A)
5. Generous wiring gutters that meet or exceed CEC wire-bending space requirements
6. Visible blade, double-break switch action
7. Positive 2 or 3 point mounting
8. Highly visible red handle grip
9. Informative door labeling which includes replacement parts list
10. Handle and cover padlocking provisions
11. Side-hinged door that opens 180 degrees for easier wiring
12. A unique enclosure design that adds rigidity and strength. Its rolled edge prevents cuts and scrapes to conductors and to installer's hands

System	Ampere Rating	Indoor - Type 1		Outdoor - Type 3R		Horsepower Ratings①						
						240V AC						250 Volt DC
		Catalogue Number	Ship. Wt. (lbs.) Std. Pkg.	Catalogue Number	Ship. Wt. (lbs.) Std. Pkg.	1-Phase, 2-Wire		2-Phase, 4-Wire		3-Phase, 3-Wire		
						Std.	Max.	Std.	Max.	Std.	Max.	Std.
240 Volt Fusible												
2-Pole, 2-Fuse, and Solid Neutral②③												**240 Volt AC/250 Volt DC**
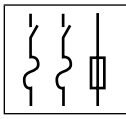	100	**GFC223N**	23	—	—	$7^{1/2}$	15	—	—	15	30	20
	200	**GFC224N**	47	—	—	15	—	—	—	25	60	40
	400	**GFC225NA**	91	—	—	—	—	—	—	50	125	50
	600	**GFC226NA**	92	—	—	—	—	—	—	75	200	50
3-Pole, 3-Fuse, and Solid Neutral②												**240 Volt AC/250 Volt DC**
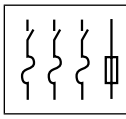	100	**GFC323N**	25	—	—	$7^{1/2}$	15	—	—	15	30	20
	200	**GFC324N**	49	—	—	15	—	—	—	25	60	40
	400	**GFC325NA**	94.6	—	15	—	—	—	—	50	125	50
	600	**GFC326NA**	95.6	—	15	—	—	—	—	75	200	—

System	Amp. Rating	Indoor - Type 1		Outdoor - Type 3R		Horsepower Ratings①															
						240V AC				480V AC				600V AC				250V DC		600V DC	
		Cat. No.	Ship. Wt. (lbs.) Std. Pkg.	Cat. No.	Ship. Wt. (lbs.) Std. Pkg.	1-Phase		3-Phase		1-Phase		3-Phase		1-Phase		3-Phase					
						Std.	Max.	Std.	Max.	Std.	Max.	Std.	Max.	Std.	Max.	Std.	Max.	Std.	Max.	Std.	Max.
600 Volt Fusible																					
3-Pole, 3-Fuse																					
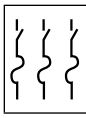	200	**GFC364**	44	—	—	15	—	25	60	25	50	50	125	30	50	60	150	40	—	50	—
600 Volt Non-Fusible																					
3-Pole, 3-Fuse																					
	200	**GNFC364**	43	—	—	—	15	—	60	—	50	—	125	—	50	—	150	—	40	—	50

① Dual horsepower ratings: Std.- applies when non-time delay fuses are installed. Max.- applies when time delay fuses are installed.
② Service entrance labeled.
③ Suitable for use on 3-phase motor loads.

Heavy Duty Safety Switches

Features

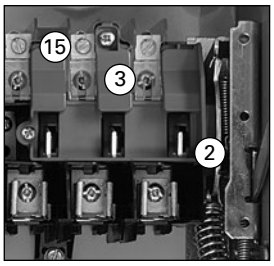

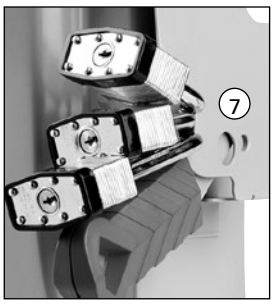

1. Quick-make, quick-break operating mechanism that ensures positive operation.
2. Visible blade, double-break switching action.
3. Arc chutes dissipate heat and prolong switch life.
4. Highly visible red handle grip. Designed for hook stick operation.
5. Defeatable dual cover interlock.
6. Center punch provided for field drilling to allow ON padlocking.
7. Handle can be padlocked in the OFF position with up to (3) padlocks with 5/16" hasps.
8. Generous top, bottom and side gutters that meet or exceed CEC wire-bending space requirements.
9. Informative door labeling which includes replacement parts list.
10. Tangential knockouts through 600A for easy conduit lineup.
11. Side-hinged door that opens past 180 degrees for easier wiring.
12. Unique enclosure design increases rigidity and prevents cuts and scrapes to conductors and installer's hands.
13. Spring reinforced fuse clips that assure reliable contact for cool operation.
14. Door latch securely holds door closed and allows cover padlocking.
15. Front removable mechanical lugs that are suitable for CU/Al 60 or 75° C conductors.
16. Lugs are field convertible to copper body and to a wide variety of compression connectors.
17. Hinged clear line terminal shield with probe holes for inspecting or testing line side terminals.
18. Embossed aluminum nameplate on Heavy Duty Switches.
19. Drawn cover for increased rigidity and resistance to abuse.
20. Top key hole and bottom mounting holes provide easy 2 or 3 point mounting.

Heavy Duty Safety Switches

Selection

System	Ampere Rating	Indoor — Type 1		Outdoor — Type 3R			Horsepower Ratings②				
							240V AC				250 Volt DC
							1-Phase, 2-Wire		3-Phase, 3-Wire		
		Catalogue Number	Ship. Wt. (lbs.) Std. Pkg.	Catalogue Number	Ship. Wt. (lbs.) Std. Pkg.	Hub Type④	Std.	Max.	Std.	Max.	

240 Volt Fusible①

2-Pole, 2-Fuse and Solid Neutral (Also used for 2-Pole, 2-Wire Applications) 240 Volt AC/250 Volt DC

	30	HFC221N	13	HFC221NR	14	ECHS	$1^{1/2}$	3	3	$7^{1/2}$	5
	60	HFC222N	18	HFC222NR	19		3	10	$7^{1/2}$	15	10
	100	HFC223N	23	HFC223NR	24		$7^{1/2}$	15	15	30	20
	200	HFC224N	47	HFC224NR	48		15	—	25	60	40
	400	HFC225NA	91.1	HFC225NRA	91.1	ECHV	15	—	50	125	50
	600	HFC226NA	95.6	HFC226NRA	95.6		15	—	75	200	50
	800	HFC227N	365	HFC227NR	365		—	—	100	250	50
	1200	HFC228N■	385	HFC228NR■	385		—	—	100	250	50

3-Pole, 3-Fuse and Solid Neutral (Also used for 3-Pole, 3-Wire Applications) 240 Volt AC/250 Volt DC

	30	HFC321N	13	HFC321NR	14	ECHS	$1^{1/2}$	3	3	7½	5
	60	HFC322N	18	HFC322NR	19		3	10	7½	15	10
	100	HFC323N	25	HFC323NR	26		$7^{1/2}$	15	15	30	20
	200	HFC324N	49	HFC324NR	50		15	—	25	60	40
	400	HFC325NA	94.6	HFC325NRA	94.6	ECHV	15	—	50	125	50
	600	HFC326NA	99.6	HFC326NRA	99.6		15	—	75	200	50
	800	HFC327N	375	HFC327NR	375		—	—	100	250	50
	1200	HFC328N	395	HFC328NR	388		—	—	100	250	50

240 Volt Fusible

2-Pole, 2-Fuse 240 Volt AC/250 Volt DC

		Type 4/4X Stainless⑤		Type 12 Industrial⑥		Hub Type③					
	100	HF223S	24	HF223J	24	SSH	$7^{1/2}$	15	15	30	20
	200	HF224S	48	HF224J	48		15	—	25	60	40

3-Pole, 3-Fuse (Also used for 2-Pole, 2-Wire Applications in 400–800A Ratings) 240 Volt AC/250 Volt DC

	30	HFC321S	14	HFC321J	14	SSH	$1^{1/2}$	3	3	$7^{1/2}$	5
	60	HFC322S	20	HFC322J	20		3	10	$7^{1/2}$	15	10
	100	HF323S	25	HF323J	25		$7^{1/2}$	15	15	30	20
	200	HF324S	49	HF324J	49		15	—	25	60	40
	400	HF325SA⑦	93	HF325JA⑦	93	*	15	—	50	125	50
	600	HF326SA⑦	98	HF326JA⑦	98		15	—	75	200	50
	800	HFC327S■	370	HFC327J■	365		—	—	100	250	50

■ Built to order.

① Suitable for use as service equipment when neutral is bonded to the enclosure. Refer to page 3-29 - 3-36 for the line side barrier kit requirement for service entrance.

② Dual horsepower ratings: Std.- applies when non-time delay fuses are installed. Max.- applies when time-delay fuses are installed.

③ Hub type SSH are suitable for type 4/4X and type 12 applications.

④ Hub catalogue numbers available p. 3-26

⑤ 304 grade stainless steel. For switches with enclosures constructed from 316 grade stainless steel, substitute "SS" in catalog number for "S".

⑥ Also rated for Type 3S/3R application. Factory provided drain plug must be removed from the bottom of the enclosure for type 3S/3R application.

⑦ For equipment suitable as service entry, order HFC325NSA, HFC326NSA, HFC325NJA or HFC326NJA based on the amperage and enclosure type required.

* Consult Siemens representative.

Heavy Duty Safety Switches

Selection

System	Ampere Rating	Indoor — Type 1		Outdoor — Type 3R			Horsepower Ratings④									
							480V AC				600V AC				250 Volt DC	600 Volt DC
		Catalogue Number	Ship. Wt. (lbs.) Std. Pkg.	Catalogue Number	Ship. Wt. (lbs.) Std. Pkg.	Hub Type⑥	1-Phase, 2-Wire		3-Phase, 3-Wire		1-Phase, 2-Wire		3-Phase, 3-Wire			
							Std.	Max.	Std.	Max.	Std.	Max.	Std.	Max.		
600 Volt Fusible																
2-Pole, 2-Fuse③															**480 Volt AC/600 Volt AC/600 Volt DC**	
	30	**HFC261**	13	**HFC261R**	14	**ECHS**	3	$7^{1/2}$	—	—	3	10	—	—	5	15
	60	**HFC262**	18	**HFC262R**	19		10	20	—	—	10	25	—	—	10	30
	100	**HF263**	26	**HF263R**	27		15	30	—	—	15	40	—	—	20	50
3-Pole, 3-Fuse															**480 Volt AC/600 Volt AC/250 Volt DC①**	
	30	**HFC361**	13	**HFC361R**	14	**ECHS**	3	$7^{1/2}$	5	15	3	10	$7^{1/2}$	20	5	—
	60	**HFC362**	18	**HFC362R**	19		5	20	15	30	10	25	15	50	10	30②
	100	**HF363**	24	**HF363R**	25		5	20	25	60	15	40	30	75	20	50②
	200	**HF364**	48	**HF364R**	49		25	50	50	125	30	50	60	150	40	50
	400	**HF365A①**	93	**HF365RA①**	93	**ECHV**	—	—	100	250	—	—	125	350	50	—
	600	**HF366A①**	98	**HF366RA①**	98		—	—	150	400	—	—	200	500	50	—
	800	**HFC367**	365	**HFC367R**	365		—	—	200	500	—	—	250	500	50	—
	1200	**HFC368**	383	**HFC368R**	385		—	—	200	500	—	—	250	500	50	—
3-Pole, 3-Fuse and Solid Neutral⑤															**480 Volt AC/600 Volt AC/250 Volt DC①**	
	30	**HFC361N**	13	**HFC361NR**	14	**ECHS**	3	$7^{1/2}$	5	15	3	10	$7^{1/2}$	20	5	—
	60	**HFC362N**	18	**HFC362NR**	19		5	20	15	30	10	25	15	50	10	30②
	100	**HFC363N**	25	**HFC363NR**	26		10	30	25	60	15	40	30	75	20	50②
	200	**HFC364N**	49	**HFC364NR**	50		25	50	50	125	30	50	60	150	40	50
	400	**HFC365NA**	94.6	**HFC365NRA**	94.6	**ECHV**	—	—	100	250	—	—	125	350	50	—
	600	**HFC366NA**	99.6	**HFC366NRA**	99.6		—	—	150	400	—	—	200	500	50	—
	800	**HFC367N**	375	**HFC367NR**	375		—	—	250	500	—	—	250	500	50	—
	1200	**HFC368N**	395	**HFC368NR**	388		—	—	250	500	—	—	250	500	50	—
600 Volt Fusible⑦ (For 2-Pole Applications use outside poles of 3-Pole Switches)																
2-Pole, 2-Fuse③															**480 Volt AC/600 Volt AC/600 Volt DC**	
		Type 4/4X Stainless⑨		**Type 12 Industrial⑦**		**Hub Type⑥⑩**										
	30	**HFC261S**	15	**HFC261J■**	15	**SSH**	3	$7^{1/2}$	—	—	3	10	—	—	5	15
	60	**HFC262S**	20	**HFC262J■**	20		5	20	—	—	10	25	—	—	10	30
	100	**HF263S■**	27	**HF263J■**	27		10	30	—	—	15	40	—	—	20	50
3-Pole, 3-Fuse															**480 Volt AC/600 Volt AC/250 Volt DC①**	
	30	**HFC361S**	13	**HFC361J**	14	**SSH**	—	—	5	15	—	—	$7^{1/2}$	20	5	—
	60	**HFC362S**	20	**HFC362J**	20		—	—	15	30	—	—	15	50	10	30②
	100	**HF363S**	25	**HF363J**	25		—	—	25	60	—	—	30	75	20	50②
	200	**HF364S**	49	**HF364J**	49		—	—	50	125	—	—	60	150	40	50
	400	**HF365SA①⑪**	93	**HF365JA⑪**	93	*	—	—	100	250	—	—	125	350	50	—
	600	**HF366SA①⑪**	98	**HF366JA⑪**	98		—	—	150	400	—	—	200	500	50	—
	800	**HFC367S**	370	**HFC367J■**	365		—	—	200	500	—	—	250	500	50	—
	1200	**HFC368S■**	388	**HFC368J■**	388		—	—	250	500	—	—	250	500	50	—

■ Built to order.
① 60-600A 3-Pole switches are also rated 600V DC.
② 600V DC & 600V DC horsepower rating shown requires (2) poles to be connected in series.
③ Use 3-Pole switch for 200A applications.
④ Dual horsepower ratings: Std.- applies when non-time delay fuses are installed. Max.- applies when time-delay fuses are installed.
⑤ Suitable for use as service equipment when neutral is bonded to the enclosure. Refer to page 3-29 - 3-36 for the line side barrier kit requirement for service entrance.
⑥ Hub catalogue number available p. 3-26
⑦ When a neutral is required use neutral kit displayed on p. 3-24
⑧ Also rated for Type 3S/3R application. Factory provided drain plug must be removed from the bottom of the enclosure for type 3S/3R application.
⑨ 304 grade stainless steel. For switches with enclosures constructed from 316 grade stainless steel, substitute "SS" in catalog number for "S."
⑩ Hub type SSH are suitable for type 4/4X and type 12 applications.
⑪ For equipment suitable as service entry, order HFC365NSA, HFC366NSA, HFC365NJA or HFC366NJA based on the amperage and enclosure type required.

* Consult Siemens representative

System	Ampere Rating	Indoor — Type 1		Outdoor — Type 3R			Horsepower Ratings							
		Catalogue Number	Ship. Wt. (lbs.)	Catalogue Number	Ship. Wt. (lbs.)	Hub④ Type	240 Volt		480 Volt		600 Volt		250V DC	600V DC
							1-Phase	3-Phase	1-Phase	3-Phase	1-Phase	3-Phase		
600 Volt Non-Fusible														
2-Pole③													**480 Volt AC / 600 Volt AC / 600 Volt DC**	
	30	**HNFC261**	11	**HNFC261R**	12	**ECHS**	—	—	$7^{1/2}$	—	10	—	5	15
	60	**HNFC262**	17	**HNFC262R**	18		—	—	20	—	25	—	10	30
	100	**HNF263**	24	**HNF263R**	25		—	—	30	—	40	—	20	50
3-Pole													**480 Volt AC / 600 Volt AC / 250 Volt DC**	
	30	**HNFC361**	11	**HNFC361R**	12	**ECHS**	5	10	$7^{1/2}$	20	10	30	5	—
	60	**HNFC362①**	17	**HNFC362R①**	18		10	20	20	50	25	60	10	30⑥
	100	**HNF363①**	23	**HNF363R①**	24		15	40	30	75	40	100	20	50⑥
	100	**HNF36L**	22.5	**HNF363RL**	22.5		15	40	30	75	40	100	20	50
	200	**HNF364①**	46	**HNF364R①**	47		15	60	50	125	50	150	40	50
	200	**HNF364L**	43.5	**HNF364RL**	43.5		15	60	50	125	50	150	40	50
	400	**HNF365A**	75	**HNF365RA**	75	**ECHV**	15	125	50	250	50	350	50	—
	600	**HNF366A**	77	**HNF366RA**	77		15	200	50	400	50	500	50	—
	800	**HNFC367**	295	**HNFC367R**	295		15	250	50	500	50	500	50	—
	1200	**HNFC368**	305	**HNFC368R**	307		15	250	50	500	50	500	50	—
600 Volt Non-Fusible②														
2-Pole③													**480 Volt AC / 600 Volt AC / 600 Volt DC**	
		Type 4/4X Stainless⑦		**Type 12 Industrial⑤**		**Hub Type④⑧**								
	30	**HNFC261S**	13	**HNFC261J**	13	**SSH**	—	—	$7^{1/2}$	—	10	—	5	15
	60	**HNFC262S**	20	**HNFC262J**	20		—	—	20	—	25	—	10	30
	100	**HNF263S■**	25	**HNF263J■**	25		—	—	30	—	40	—	20	50
3-Pole													**480 Volt AC / 600 Volt AC / 250 Volt DC**	
	30	**HNFC361S**	13	**HNFC361J**	13	**SSH**	5	10	$7^{1/2}$	20	10	30	5	—
	60	**HNFC362S①**	19	**HNFC362J①**	19		10	20	20	50	25	60	10	30⑥
	100	**HNF363S①**	24	**HNF363J①**	24		15	40	30	75	40	100	20	50⑥
	200	**HNF364S①**	47	**HNF364J①**	47		15	60	50	125	50	150	40	50
	400	**HNF365SA**	75	**HNF365JA**	75	*	15	125	50	250	50	350	50	—
	600	**HNF366SA**	77	**HNF366JA**	77		15	200	50	400	50	500	50	—
	800	**HNFC367S**	295	**HNFC367J■**	295		15	250	50	500	50	500	50	—
	1200	—	—	**HNFC368J■**	310		15	250	50	500	50	500	50	—

■ Built to order.

① Also rated 600V DC.
② When neutral is required, use neutral kit displayed on p. 3-24
③ Use 3-Pole switch for 200A application.
④ Hub catalogue numbers available p. 3-26
⑤ Also rated for Type 3S/3R application. Factory provided drain plug must be removed from the bottom of the enclosure for type 3S/3R application.
⑥ 600V DC horsepower rating shown requires (2) poles to be connected in series.
⑦ 304 grade stainless steel. For switches with enclosures constructed from 316 grade stainless steel, substitute "SS" in catalog number for "S."
⑧ Hub type SSH are suitable for type 4/4X and type 12 applications.
*Consult Siemens representative.

Heavy Duty Safety Switches

Type 4/4X & 12 with Viewing Window

Selection

Description

30–600A, 3-pole 600V max. in fusible and non-fusible versions in Type 4/4X stainless steel and Type 12 enclosures.

All allow viewing of visible blade position. 30–200A also allow viewing of indicating type fuses.

Features

- Rugged installer-friendly enclosure design features a gasket flange with continuously welded seams
- Tool-free cover latches
- Two, three and four point mounting
- Metal handle with large insulating grip features a positive stop in both ON and OFF position
- Ground lugs provided as standard
- Type 12 enclosures are fabricated from galvanized steel and are also rated for 3R/3S outdoor applications
- Type 4X stainless steel switches are 304 grade stainless steel and 30-200A are provided with stainless steel interior parts
- The widest range of accessories available including 200% neutrals, gold plated PLC auxiliary contacts and isolated ground kits
- Now available with limited time offering - 316 Safety Switches

System	Ampere Rating	Catalogue Number	Hub Type	Ship. Wt. (lbs.)	Maximum Horsepower Ratings② 240V AC 1-Phase, 2-Wire	240V AC 3-Phase, 3-Wire	480V AC 3-Phase, 3-Wire	600V AC 3-Phase, 3-Wire	250V DC	600V DC
3-Pole, 3-Wire Fusible, Type 12③ (For 2-Pole Applications use outside poles of 3-Pole Switches)										**600 Volt AC / 250 Volt DC①**
	30	**HF361JW**	SSH	17	3	7 1/2	15	20	5	—
	60	**HF362JW**	SSH	22	10	15	30	50	10	30⑤
	100	**HF363JW**	SSH	26	15	30	60	75	20	30⑤
	200	**HF364JW**	SSH	53	—	60	125	150	40	50
	400	**HF365JWA④**	*	93	—	125	250	350	50	—
	600	**HF366JWA④**	*	98	—	200	400	500	50	—
3-Pole, 3-Wire Non-Fusible, Type 12③										**600 Volt AC / 250 Volt DC①**
	30	**HNF361JW**	SSH	14	3	10	20	30	5	—
	60	**HNF362JW**	SSH	21	10	20	50	60	10	30⑤
	100	**HNF363JW**	SSH	25	15	40	75	100	20	50⑤
	200	**HNF364JW**	SSH	51	15	60	125	150	40	50
	400	**HNF365JWA**	*	75	15	125	250	350	50	—
3-Pole, 3-Wire Fusible, Type 4X Stainless⑥ (For 2-Pole Applications use outside poles of 3-Pole Switches)										**600 Volt AC / 250 Volt DC①**
	30	**HF361SW**	SSH	17	3	7½	15	20	5	—
	60	**HF362SW**	SSH	23	10	15	30	50	10	30⑤
	100	**HF363SW**	SSH	28	15	30	60	75	20	50⑤
	200	**HF364SW**	SSH	55	—	60	125	150	40	50
	400	**HF365SWA④**	*	75	15	125	250	350	50	—
	600	**HF366SWA**	*	98	—	200	400	500	50	—
3-Pole, 3-Wire Non-Fusible, Type 4X Stainless⑥										**600 Volt AC / 250 Volt DC①**
	30	**HNF361SW**	SSH	15	3	10	20	30	5	—
	60	**HNF362SW**	SSH	23	10	20	50	60	10	30⑤
	100	**HNF363SW**	SSH	27	15	40	75	100	20	50⑤
	200	**HNF364SW**	SSH	54	15	60	125	150	40	50
	400	**HNF365SWA**	*	75	15	125	250	350	50	—

Ampere Rating	Catalogue Number	Ship. Wt. (lbs.)	Maximum Horsepower Ratings 240V AC Std.	240V AC Max.	480V AC Std.	480V AC Max.	600V AC Std.	600V AC Max.	250V DC	600V DC
3-Pole, 3-Wire Fusible and Non-Fusible, Type 4X 316 Stainless Steel										**600 Volt AC / 250 Volt DC**
30	**HF361SSW**	17	3	7½	5	15	7½	20	5	—
60	**HF362SSW**	21	7½	15	10	30	15	50	10	30
30	**HNF361SSW**	15	—	10	—	20	—	30	5	—
60	**HNF362SSW**	21	—	20	—	50	—	60	10	30

① 200A switches are also rated 600V DC.
② Maximum HP ratings listed apply only when time delay fuses are used.
③ Also rated for Type 3S/3R application. Factory provided drain plug must be removed from the bottom of the enclosure for type 3S/3R application.
④ For equipment suitable as service entry, order HFC365NJWA, HFC366NJWA or HFC365NSWA based on the amperage and enclosure type required.
⑤ 600V DC horsepower rating shown requires (2) poles to be connected in series.
⑥ 304 grade stainless steel. For switches with enclosures constructed from 316 grade stainless steel, substitute "SS" in catalog number for "S.".
* Consult Siemens representative.

Heavy Duty Safety Switches

Type VBII 4 & 6-Pole Heavy Duty Safety Switches

Selection

Application

4 & 6-pole Switches are commonly used as a disconnecting means for two-speed, two-winding motors. Fused switches provide both over current and short circuit protection. Non-fusible switches normally provide a local disconnection means for two-speed motors which are remote from their motor controller. 4-pole switches are also used in 3-phase, 4-wire circuits when a switching neutral is required.

Description

4 & 6-pole switches are available in 30-200A ratings and in both fusible and non-fusible versions. 4-pole switches are supplied with either Type 1 or Type12/3R enclosures.
6-pole switches are available with either Type 12/3R or Type 4X stainless steel enclosures.

Standards

- cUL & UL listed under file #E4776
- Meets UL98 for enclosed switches
- Meets NEMA Standard KS-1 for enclosed switches
- Meets CEC wire bending space requirements

Features

- Visible blade, double break switching action
- Highly visible ON/OFF indication
- Defeatable dual cover interlock
- Padlock option in OFF position
- All copper current carrying parts①
- Tangenital knockouts (Type 1, 4-pole switches)

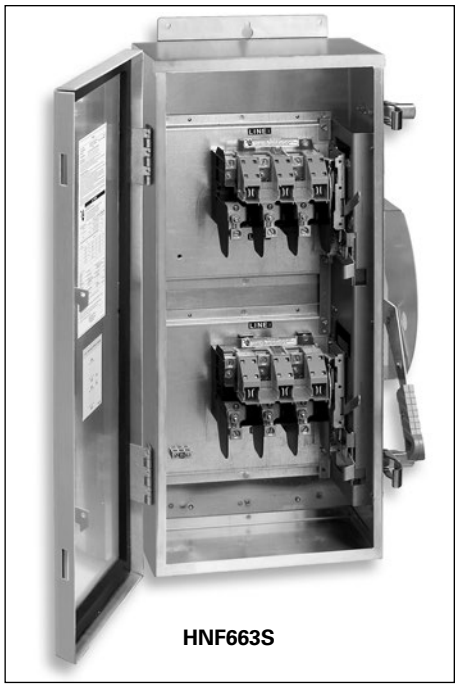

HNF663S

4-Pole Type VBII Switches①

System	Ampere Rating	Indoor Type 1 Catalogue Number	Indoor Type 1 Ship. Wt. (lbs.)	Type 12/3R Industrial④ Catalogue Number	Type 12/3R Industrial④ Ship. Wt. (lbs.)	Hub Type⑤	Horsepower Ratings② 240V, 2Ø, 4W Std.	240V, 2Ø, 4W Max.	240V 3Ø Std.	240V 3Ø Max.	480V, 3Ø Std.	480V, 3Ø Max.	600V, 3Ø Std.	600V, 3Ø Max.	250V DC
Fusible 600 Volt AC, 250 Volt DC — 4-Pole, 4 Fuse③															
	30	**HF461**	36	**HF461J**	36	**SSH**	3	10	3	7½	5	15	7½	20	5
	60	**HF462**	40	**HF462J**	40		7½	20	7½	15	15	30	15	50	10
	100	**HF463**	43	**HF463J**	43		15	30	15	30	25	60	30	75	20
	200	**HF464■**	88	**HF464J■**	88		25	50	25	60	50	125	60	150	40
Non-fusible 600 Volt AC, 250 Volt DC — 4-Pole															
	30	**HNF461**	32	**HNF461J**	32	**SSH**	—	10	—	10	—	20	—	30	5
	60	**HNF462**	34	**HNF462J**	34		—	20	—	20	—	50	—	60	10
	100	**HNF463■**	36	**HNF463J■**	36		—	30	—	40	—	75	—	100	20
	200	**HNF464■**	78	**HNF464J■**	78		—	50	—	60	—	125	—	150	4

6-Pole Type VBII Switches①④

System	Ampere Rating	Type 12 Industrial Catalogue Number	Type 12 Industrial Ship. Wt. (lbs.)	Type 4X Stainless Steel Catalogue Number	Type 4X Stainless Steel Ship. Wt. (lbs.)	Hub Type⑤⑥	Horsepower Ratings③ 240V 3Ø Std.	240V 3Ø Max.	480V, 3Ø Std.	480V, 3Ø Max.	600V, 3Ø Std.	600V, 3Ø Max.	250V DC
Fusible 600 Volt AC, 250 Volt DC — 6-Pole, 6 Fuse③													
	30	**HF661J**	37	**HF661S**	37	**SSH**	3	7½	5	15	7½	20	5
	60	**HF662J**	41	**HF662S**	41		7½	15	15	30	15	50	10
	100	**HF663J**	44	**HF663S**	44		15	30	25	60	30	75	20
	200	**HF664J**	90	**HF664S**	90		25	60	50	125	60	150	40
Non-fusible 600 Volt AC, 250 Volt DC — 6-Pole													
	30	**HNF661J**	33	**HNF661S**	33	**SSH**	—	10	—	20	—	30	5
	60	**HNF662J**	35	**HNF662S**	35		—	20	—	50	—	60	10
	100	**HNF663J**	37	**HNF663S**	37		—	40	—	75	—	100	20
	200	**HNF664J**	80	**HNF664S**	80		—	60	—	125	—	150	40

■ Built to order.
① Lugs are aluminum alloy as standard. Optional copper body lugs are available.
② Dual horsepower ratings: Std. – applies when non-time-delay fuses are installed. Max. – applies when time delay fuses are installed.
③Fusible switches accept Class H Fuses as the standard. Class R & J fuses can also be installed and increase the rating from 10,000 to 200,000 AIC. For Class J, the load base is moved upward. For Class R fuses, rejection kits are required.
④Supplied with factory installed ground lugs.
⑤Hub catalogue number available p. 3-26
⑥Hub type SSH are suitable for type 4/4X and type 12 applications.

Application

Receptacle Safety Switches provide cord connection protection of heavy-duty portable equipment (welders, infrared ovens, batch feeders, portable conveyors, assembly line fixtures and tools, refrigerator trucks, etc.) under load or fault conditions.

Standards

All receptacle switches with a viewing window are CSA certified under file #24563 and UL listed under file #E4776.

Description①②

Type 12 and 4/4X Receptacle Safety Switches are available with 3-phase, 4-wire grounded type Crouse-Hinds Arkite™, pre-wired and mounted with interlock linkage to the switch mechanism. Insertion or removal of the plug is prevented by the interlock linkage while the switch is in the "ON" position. Receptacle prevents operation of switch if incorrect plug is inserted.

Crouse-Hinds Interlocked Receptacle Switches

Ampere Rating③	Type 12② Catalogue Number	Type 4/4X③ Catalogue Number	Hub Type④	Shipping Wt. (lbs.) Std. Pkg.	Accepts Crouse-Hinds Arktite① Plug Catalogue Number
600V Fusible, 3-Pole, 3-Wire with Viewing Window					
30	**HF361JCHW**	**HF361SCHW**	**SSH**	24	APJ3485 & NPJ3485
60	**HF362JCHW**	**HF362SCHW**		30	APJ6485 & NPJ6485
100	**HF363JCHW**	**HF363SCHW**		36	APJ10487 & NPJ10487
600V Non-Fusible, 3-Pole, 3-Wire with Viewing Window					
30	**HNF361JCHW**	**HNF361SCHW**	**SSH**	22	APJ3485 & NPJ3485
60	**HNF362JCHW**	**HNF362SCHW**		29	APJ6485 & NPJ6485
100	**HNF363JCHW**	**HNF363SCHW**		35	APJ10487 & NPJ10487

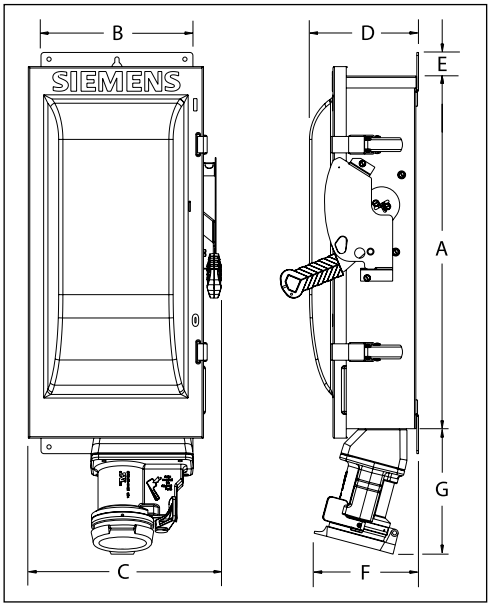

Receptacle switches dimensions

Ampere Rating	Dimensions - Inches (mm) A	B	C	D	E	F	G
Cr-H Type Fusible (240 & 600V)							
30	14.27 (363)	7.42 (188)	9.02 (229)	6.22 (158)	1.52 (39)	6.1(155)	6.0 (152)
60	16.27 (413)	9.17 (233)	11.47 291)	6.34 (161)	1.52 (39)	6.4 (163)	7.4 (188)
100	21.96 (558)	9.65 (245)	12.02 (305)	6.80 (172)	1.52 (39)	6.5 (165)	7.6 (193)
Cr-H Type Non-Fused (600V max.)							
30	14.27 (363)	7.42 (188)	9.02 (229)	6.22 (158)	1.52 (39)	6.1 (155)	6.0 (152)
60	16.27 (413)	9.17 (233)	11.47 (291)	6.34 (161)	1.52 (39)	6.4 (163)	7.4 (188)
100	21.96 (558)	9.65 (245)	12.02 (305)	6.80 (172)	1.52 (39)	6.5 (165)	7.6 (193)

① Arktite™ is a registered trademark of the Crouse-Hinds Company. Plugs are not sold or supplied by Siemens.
② Also rated Type 3R/3S.
③ Enclosure is constructed of Type 304 stainless steel.
④ Hub catalogue available p. 3-26

HR612

Class R Fuse Clip Kits

All Heavy Duty Switches are field convertible to accept Class R Fuse Clip Kits. The kits prevent the installation of Class H and K fuses
(one kit required per 3-pole switch).

Class R Fuse Clip Kits

Catalogue Number	Description
HR21	30A, 240V Kit (HD only)
HR612	30A, 600V Kit/ 60A, 240V Kit
HR62	60A, 600V Kit
HR63	100A Kit
HR64	200A Kit
HR65A	400A Kit③
HR656A	400A Kit③
HR66A	600A Kit③
HR656A	600A Kit③

Class J Fusing

All 30-600A, 600V and 100-600A,240V fusible Heavy Duty Switches are field convertible to accept Class J fuses by moving the load base to a pre-drilled J fuse position. 600A Heavy Duty switches require Class J fuse clip kit HJ66A to accept class J fuses. (one kit required per 3-pole switch).

Class J Fuse Kits

Catalogue Number	Description
HJ66A	600A, 240V/600V Kit

Internal Shield Kits (for fusible switches)

Kits provide a clear plastic inner door to prevent accidental contact with live parts. Test probe holes are provided and fuses can be replaced without removal of kit. Note: All HD and 400A, 600A GD come with line-side shielding from the factory.

NEW Internal Shield Kits②

Switch Ampere Rating	Kit Catalogue Number	Coverage
30A HD②	**HSK61SSW**	Full
60A HD②	**HSK62SSW**	Full
100A GD	**HSK23B**	Line side
200A GD	**HSK24B**	Line side
100A HD②	**HSK63SSW**	Full
200A HD②	**HSK64SSW**	Full

▲ Built to order. Allow 6–8 weeks for delivery.

① One kit per pole required.

HT63

Class T Fuse Adapter Kits

All 100-200Amp and 1200Amp Heavy Duty Switches are field convertible to accept Class T fuses.800A switches are field convertible to accept Class T fuses by moving the load base to a pre-drilled T fuse position.

Class T Fuse Adapter Kits①

Catalogue Number	Description
HT23	100A, 240V Kit
HT63	100A, 600V Kit
HT24	200A, 240V Kit
HT64	200A, 600V Kit
HT25A	400A, 240V Kit
HT65A	400A, 600V Kit
HT26A	600A, 240V Kit
HT66A	600A, 600V Kit
TFAK82	1200A, 240V Kit

HNC623

Neutral Kits

Standard Neutral Kits can be field installed in Heavy Duty Switches.

Neutral Kits

Switch Ampere Rating	Kit Catalogue Number
30 HD	**HNC612**
60, 100 HD	**HNC623**
200	**HNC64**
400 & 600	**HN656A**
800 & 1200	**HN678A**

② Not designed for use with Auxiliary Contacts.
③ To order the correct part number, check the switch label.

HN264

200% Neutral Kits

CSA certified 200% Neutrals are available on 100-600A Heavy Duty Switches. They are typically used with non-linear transformers or where increased neutral ampacity/lug capacity is required.

200% Neutral Kits

Switch Ampere Rating	Kit Catalogue Number	Wire Range Line & Load Lugs (Cu/Al)
100	**HNC263**	(2) #14-1/0 AWG
200	**HNC264**	(2) #6 AWG-300 Kcmil
400	**HN656A**	(2) 1/0 AWG-600 Kcmil (2) #6 AWG-300 Kcmil
600	**HN678A**	(2) 1/0 AWG-600 Kcmil (2) #6 AWG-300 Kcmil

HP61

Fuse Puller Kits

Fuse Puller Kits are field installable in 30-100A Type VBII Heavy Duty Switches (one kit required per 3-pole switch).

Fuse Puller Kits

Switch Ampere Rating	Fuse Puller Kit Catalogue Number
30	**HP61**
60	**HP62▲**
100	**HP63▲**

HA261234

HA261234

HLC612

HG261234

Auxiliary Contacts

Auxiliary Contacts are available only for Heavy Duty Switches. The auxiliary contacts are available in 1 normally open and 1 normally closed or 2 normally open and 2 normally closed configurations. Siemens offers a PLC Auxiliary Switch (30-600A) that has very low resistance for low voltage and current typical in PLC circuits. All auxiliary contacts make after and break before main switch contacts.

Auxiliary Contacts

Switch Ampere	Aux. Switch Catalogue Number	Kit Ampere Rating 125V AC Max.	Kit Ampere Rating 250V AC Max.	Kit Ampere Rating 28V DC Max.	Horsepower Rating 125V AC Max.	Horsepower Rating 250V AC Max.
With 1 NO & 1 NC Isolated Contacts						
30-600	**HA161234**	10	10	7	1/2	3/4
800-1200	**HA165678**	10	10	—	1/2	3/4
With 2 NO & 2 NC Isolated Contacts						
30-600	**HA261234**	10	10	7	1/2	3/4
800-1200	**HA265678**	10	10	7	1/2	3/4
Low Current PLC Type with 1 NO & 1 NC Gold Plated Contacts						
30-600	**HA361234**	10	10	7	1/2	3/4
800-1200	**HA365678**	10	10	—	1/2	3/4

Copper Lug Kits

Heavy duty switches are CSA certified to accept field installed copper lug kits.

Copper Lug Kits

Switch Ampere Rating	Copper Lug Catalogue Number	Description
30–60	**HLC612**	(9) Lugs/Kit #14-4 AWG Cu
100	**HLC63**	(9) Lugs/Kit #14-1/0 AWG Cu
200	**HLC64**	(9) Lugs/Kit #6 AWG-300 Kcmil Cu
400-600	**HCU656A**	(1) Lugs/Kit #1/0 AWG-600 Kcmil Cu
800–1200	**HLC65678**	(1) Lugs/Kit #1/0 AWG-600 Kcmil Cu

▲ Built to order. Allow 6–8 weeks for delivery.

■ Purchase field replacement kit along with lugs.

NEW Quick Connects

They provide two point control power take-off capability and are normally used on two poles on the line side when it is required to have control power available when the switch is in the OFF position. They provide a mounting provision for standard ¼" quick connect terminal. Installed in the line or load side. 30A VBII switches have lugs CSA certified to accept (2) wires per pole as standard so a 30A kit is not required.

Quick Connects

Catalogue Number	Description
HCQ62	60A 2 wire quick connect kit
HCQ63	100A 2 wire quick connect kit
HCQ64	200A 2 wire quick connect kit

Isolated Ground Kits

Isolated Ground Kits are available on 30-600A Heavy Duty Switches. They are normally used on circuits with a high content of computer or other electronic loading which require a ground which is isolated from the building ground and neutral circuits. The kit includes both isolated and grounded terminals as listed below.

Isolated Ground Kits

Switch Ampere Rating	Catalogue Number	Number of Terminals Isolated	Number of Terminals Grounded	Wire Range Per Terminal (Cu/Al)
30–200	**HG261234**	2	2	#14-4 AWG
400–600	**HG2656A**	4	4	2/0-14 AWG 2/0-6 AWG

Equipment Ground Kits

Equipment Ground Lug Kits are available for all Heavy Duty Switches. They are field installable in Type 1 and Type 3R Switches and are factory installed as standard in Type 4 / 4X and Type 12 and also in all VBII 4&6-pole Switches.

Equipment Ground Kits

Switch Ampere Rating	Catalogue Number	Number of Terminals	Wire Range Per Terminal (Cu/Al)
30–200 HD	**HG61234**	2	#14-4 AWG
400 & 600	**HG656A**	4	2/0-6 AWG
800–1200	**HG678**	8	#6 AWG-250 Kcmil

Hub and Lug Data

Interchangeable Hubs

Conduit hubs are available for Type 3R, 12 and 4 / 4X applications. 30-200A Type 3R Switches are provided with a conduit hub provision and a removable hub plate on their top rainshed.

Conduit Size (inches)	Catalogue Number	Used On
Type 3R①		
Cover	**ECHA000**	30A GD Only
3/4	**ECHA075**	
1	**ECHA100**	
1 1/4	**ECHA125**	
Cover	**ECHS000**	60–200A GD 30–200A HD
3/4	**ECHS075**	
1	**ECHS100**	
1 1/4	**ECHS125**	
1 1/2	**ECHS150**	
2	**ECHS200**	
2 1/2	**ECHS250**	
2 1/2	**ECHV250**	400–1200A
3	**ECHV300**	
3 1/2	**ECHV350**	
4	**ECHV400**	
Type 4/4X②		
3/4	**SSH075**	30–200A
1	**SSH100**	
1 1/4	**SSH125**	
1 1/2	**SSH150**	
2	**SSH200**	
2 1/2	**SSH250**	400–600A
3	**SSH300**	
3 1/2	**SSH350**	
4	**SSH400**	

Note: 30 thru 200A. Type 3R Switches have removable hub plates on rainshed. 400A and larger Type 3R Switches have no provisions for mounting hubs. Drill or punch hole in the field to accommodate hub size desired.

Field Replacement Kits and Neutral Barrier Kits

All Heavy Duty Switches are field convertible for (Crimp) type lugs. When compression lugs are required for 30-100A switches, a neutral barrier kit is required for 1-Phase, 3W or 3-Phase, 4W applications. When compression lugs are required on 400-1200A switches, lug mounting kits are required.

Field Replacement Kits and Neutral Barrier Kits

Switch Ampere Rating	Catalogue Number	Kit Description
30	**HCL612**	Neutral Barrier Kit
60 & 100	**HCL623**	Neutral Barrier Kit
400	**HCM65A**	240V/600V Fusible Kit
400	**HNCM65A**	240/600V Non-Fusible Kit
600	**HCM66A**	240V/600V Fusible Kit
600	**HNCM66A**	240V/600V Non-Fusible Kit
800 & 1200⑤	**HCL65678**	1 Pole, Compression Lug Mounting Kit

Lugs

30 & 60A Switches are suitable for use with 60° or 75°C wire. 100–1200A are suitable for use with 75°C rated wire.

Multiple Padlock Accessory

A tamper-proof device to provide for multiple padlocking to meet OSHA or plant requirements. Accepts up to 6 1/4" padlocks. Catalog number **SL0420**. Standard Carton-12.

SSH125

ECHV300

ECHS200

SL0420

Wire Ranges (Line, Load and Standard Neutral)

Switch Ampere Rating	Wire Range with Wire Bending Space Per NEC Requirements	Lug Wire Range
30GD	#14-8 AWG (Cu/Al)⑥	#14-6 AWG (Cu/Al)
30HD	#14-6 AWG (Cu/Al)	#14-2 AWG (Cu/Al)
60⑧⑩	#14-3 AWG (Cu/Al)	#14-2 AWG (Cu/Al)
100⑪	#14-1/0 AWG (Cu/Al)	#14-1/0 AWG (Cu/Al)
200⑨	#6 AWG-250 Kcmil (Cu/Al)	#6 AWG-300 Kcmil (Cu/Al)
400⑦	(1) 1/0 AWG-600 Kcmil (Cu/Al) (2) 1/0 AWG-500 Kcmil (Cu/Al)	(2) 1/0 AWG-600 Kcmil (Cu/Al)
600⑦	(1) 1/0 AWG-600 Kcmil (Cu/Al) (2) 1/0 AWG-500 Kcmil (Cu/Al)	(2) 1/0 AWG-600 Kcmil (Cu/Al)
800	(3) 1/0 AWG-750 Kcmil (Cu/Al) Line Load (4) 1/0 AWG-750 Kcmil (Cu/Al) neutral	(3) 1/0 AWG-750 Kcmil (Cu/Al) Line Load (4) 1/0 AWG-750 Kcmil (Cu/Al) neutral
1200	(4) 3/0 AWG-750 Kcmil (Cu/Al) Line Load (4) 1/0 AWG-750 Kcmil (Cu/Al) neutral	(4) 1/0 AWG-750 Kcmil (Cu/Al) Line Load (4) 1/0 AWG-750 Kcmil (Cu/Al) neutral

Built to order. Allow 3-4 weeks for delivery.

① Hubs suitable for 3R Switches.
② Also suitable for Type 12 applications.
③ Neutral Barrier kits are required on 30-100A switches only and only with 1-Phase / 3W or 3-Phase / 4W loads. Compression Lugs mounting kits are required on 400-1200A switches only.
④ Provides mounting for a single line or load lug.
⑤ Provides mounting for (2) compression lugs per phase on line or load.
⑥ Line base lugs (only) are CSA certified to accept #14-6 CU/Al cable.
⑦ Max. wire size for height reduced switches is 500 kcmil (Cu/Al).
⑧ All but 60A GD & Compact HD NF switches are also CSA certified for #2 Cu/Al conductors.
⑨ All 200A Heavy Duty Switches have a wire range & wire bending space for (1) #6-300 Kcmil (Cu/Al).
⑩ Also for 30A oversized heavy duty switches.
⑪ Also for 60A oversized heavy duty switches.

VBII Safety Switch Replacement Parts

Ampere Rating	Line Base Catalogue Number	Load Base Catalogue Number	Handle / Handle Guard: General Duty Catalogue Number	Handle / Handle Guard: Heavy Duty Catalogue Number
Fusible 2- and 3-Pole 100-600A General Duty & 30-1200A Heavy Duty⑤⑧				
30 HD 240V	**HFB21②**	**HBB21②**	—	**HH6123⑦**
60 HD 240V	**HFB22②**	**HBB22②**	—	**HH6123⑦**
30 600V	**HFB612②**	**HBB612②**	—	**HH6123⑦**
60 600V	**HFB62②**	**HBB62②**	—	**HH6123⑦**
100	**HFB63②**	**HBB63②**	**GH223**	**HH6123⑦**
200	**HFB64②**	**HBB64②**	**GH24**	**HH64⑦**
400 (Legacy)	**HFB65③⑥**	**HBB656③⑥**	**HH65678**	**HH65678⑦**
400 (Series-A)	**HFB65AB**	**HBB656AB**	**HH656A**	**HH656A**
600 (Legacy)	**HFB66③⑥**	**HBB656③⑥**	**HH65678**	**HH65678⑦**
600 (Series-A)	**HFB66AB**	**HBB656AB**	**HH656A**	**HH656A**
800	**HFB67A②⑥**	**HBB67A②⑥**	—	**HH65678⑦**
1200	**HFB68②⑥**	**HBB68②⑥**	—	**HH68⑦**
Non-Fusible 3-Pole 100-600A General Duty & 30-1200A Heavy Duty⑤⑧				
30 HD	**HNB612②**	—	—	**HH6123⑦**
60 HD	**HNB623②**	—	—	**HH6123⑦**
100	**HNB623②**	—	**GH223**	**HH6123⑦**
200	**HNB64②**	—	**GH24**	**HH64⑦**
400 (Legacy)	**HNB65③⑥**	—	**HH65678**	**HH65678⑦**
400 (Series-A)	**HNB656AB**	—	**HH656A**	**HH656A**
600 (Legacy)	**HNB66③⑥**	—	**HH65678**	**HH65678⑦**
600 (Series-A)	**HNB656AB**	—	**HH656A**	**HH656A**
800	**HNB67A②⑥**	—	—	**HH65678⑦**
1200	**HNB678⑥**	—	—	**HH68⑦**

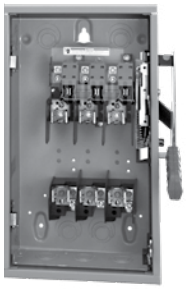

HF362 with HSK62SSW installed

VBFS361F with HSK61 Installed

Ampere Rating	Mechanism Assembly Catalogue Number	Line & Load Lugs Catalogue Number
Fusible 2- and 3-Pole 100-600A General Duty& 30-1200A Heavy Duty⑤⑧		
30 HD 240V	**HM6123⑦**	**HL612①**
60 GD	**HM6123**	**HL612①**
60 HD 240V	**HM6123⑦**	**HL612①**
30 600V	**HM6123⑦**	**HL612①**
60 600V	**HM6123⑦**	**HL612①**
100	**HM6123⑦**	**HL63①**
200	**HM64⑦**	**HL64①**
400 (Legacy)	**HM65**	**HL65678⑦**
400 (series-A)	**HM656A**	**HL656A⑩**
600 (Legacy)	**HM66**	**HL65678④**
600 (series-A)	**HM656A**	**HL66A⑩**
800	**HM67A**	⑨
1200	**HM678**	⑨
Non-Fusible 3-Pole 100-600A General Duty & 30-1200A Heavy Duty⑤⑧		
30 HD	**HM6123⑦**	**HL612①**
60 GD	**HM6123**	**HL612①**
60 HD	**HM6123⑦**	**HL612①**
100	**HM6123⑦**	**HL63①**
200	**HM64⑦**	**HL64①**
400 (Legacy)	**HM65**	**HL65678④**
400 (series-A)	**HM656A**	**HL56A⑩**
600 (Legacy)	**HM66**	**HL65678④**
600 (series-A)	**HM656A**	**HL56A⑩**
800	**HM67A**	⑨
1200	**HM678**	⑨

Internal Shield Kits

These kits provide an inner door on safety switches to prevent accidental contact with live parts. All kits are constructed from clear plastic, provide test probe holes and allow replacement of fuses without the removal of the kit.

Catalogue Number	Switch Ampere Rating	UPC Code 040892_ _ _ _ _
For use with Fusible Type 1, 3R, 12 and 4X Stainless Steel Enclosed Safety Switches⑩		
HSK61SSW	30	79020
HSK62SSW	60	79021
HSK63SSW	100	79002
HSK64SSW	200	79023
For use with Fusible Type VBII Disconnect Switches		
HSK61	30	79024
HSK623	60 & 100	79025
HSK64	200	79026

Line Side Barrier Kits⑪

The field installable line side barrier kits are required by CSA to meet service entrance applications. Barrier kits are meant to protect against inadvertent contact with the line side.

Amperes	Voltage	Catalogue Number
Line Side Barrier Kits for Heavy Duty Safety Switches		
30	240/600	**HSK61B**
60-100	240/600	**HSK623B**
200	240/600	**HSK64B**
400-600	240/600	**HSK656BA**
800	240/600	**HSK67B**
1200	240/600	**HSK68B**
Line Side Barrier Kits for General Duty Safety Switches		
100	240	**HSK23B**
200	240	**HSK24B**

① Three lugs included in kit.
② Includes lugs.
③ Lugs not included.
④ One lug per kit.
⑤ One per switch required unless otherwise noted.
⑥ One required per pole.
⑦ For type 4/4X stainless steel switches add "S" to end of catalog number.
⑧ For replacement door for heavy duty switches add "DOOR" to end of switch catalog number.
⑨ Lugs included with base only, not available separately.
⑩ Lug caps only—2 line side caps and 2 load side caps per kit.
⑪ For ratings from 30 to 600A, 1 kit is required per switch and for 800 & 1200A, 1 kit is required per phase.

Safety Switch Dimensions & Shipping Weights

Catalogue Number	Height - Inches (mm)			Width - Inches (mm)		Depth - Inches (mm)		Knockout Diagram①	Shipping Weight (lbs.)
	Box A	With Door B	With Rain Shed C	Box D	With Handle E	Box F	With Handle G		
HFC261J	14.27 (362)	17.33 (442)	—	6.65 (170)	9.02 (230)	5.32 (136)	10.46 (266)	—	13
HFC221N also **HFC261**	14.26 (362)	14.6 (371)	—	6.64 (170)	7.75 (197)	4.71 (120)	8.89 (226)	S6	13
HFC221NR also **HFC261R**	14.34 (364)	—	14.91 (379)	6.64 (170)	7.88 (200)	5.00 (127)	9.18 (233)	S8	13
HFC261S	14.27 (362)	17.33 (442)	—	6.65 (170)	9.02 (230)	5.32 (136)	10.46 (266)	—	13
HFC262J	16.22 (412)	19.31 (492)	—	9.17 (234)	11.47 (292)	5.33 (136)	10.46 (266)	—	19
HFC222N also **HFC262**	16.26 (414)	16.62 (422)	—	9.16 (234)	10.37 (263)	4.71 (120)	8.67 (220)	S16	18
HFC222NR also **HFC262R**	16.26 (414)	—	16.93 (430)	9.16 (234)	10.41 (264)	5.05 (130)	9.21 (234)	S17	19
HFC262S	16.22 (412)	19.31 (492)	—	9.17 (234)	11.47 (292)	5.33 (136)	10.46 (266)	—	19
HF223J also **HF263J**	21.96 (558)	23.16 (590)	—	9.65 (246)	12.02 (306)	5.34 (136)	10.46 (266)	—	24
HFC223N also **HF263**	21.95 (558)	23.15 (590)	—	9.64 (246)	12.01 (306)	5.05 (130)	10.17 (260)	S10	23
HFC223NR also **HF263R**	21.95 (558)	—	23.46 (596)	9.64 (246)	11.97 (306)	5.05 (130)	10.17 (260)	S11	24
HF223S also HF263S	21.96 (558)	23.16 (590)	—	9.65 (246)	12.02 (306)	5.34 (136)	10.46 (266)	—	24
GFC223N	21.95 (558)	23.15 (590)	—	9.65 (246)	11.7 (298)	5.05 (130)	8.63 (220)	S10	23
GFC224N	29.9 (760)	31.07 (790)	—	14.62 (372)	16.68 (424)	6.36 (162)	10.92 (278)	S12	47
GFC225NA	45.32 (1151)	45.81 (1164)	—	22.4 (569)	23.404 (594)	6.94 (176)	9.93 (252)	S18	91.1
GFC226NA	45.32 (1151)	45.81 (1164)	—	22.4 (569)	23.404 (594)	6.94 (176)	9.93 (252)	S18	95.6
GFC323N	21.95 (558)	23.15 (590)	—	9.65 (246)	11.7 (298)	5.05 (130)	8.63 (220)	S10	25
GFC324N	29.9 (760)	31.07 (790)	—	14.62 (372)	16.68 (424)	6.36 (162)	10.92 (278)	S12	49
GFC325NA	45.32 (1151)	45.81 (1164)	—	22.4 (569)	23.404 (594)	6.94 (176)	9.93 (252)	S18	94.6
GFC326NA	45.32 (1151)	45.81 (1164)	—	22.4 (569)	23.404 (594)	6.94 (176)	9.93 (252)	S18	99.6
GFC364	29.9 (760)	31.07 (790)	—	14.62 (372)	16.68 (424)	6.36 (162)	10.92 (278)	—	44
GNFC364	29.9 (760)	31.07 (790)	—	14.62 (372)	16.68 (424)	6.36 (162)	10.92 (278)	—	42.68

① Knocks not provided on Type 4 / 4X and 12 or on 800 & 1200A switches.

Safety Switch Dimensions & Shipping Weights

Catalogue Number	Height - Inches (mm)			Width - Inches (mm)		Depth - Inches (mm)		Knockout Diagram[1]	Shipping Weight (lbs.)
	Box A	With Door B	With Rain Shed C	Box D	With Handle E	Box F	With Handle G		
HF224J	29.96 (762)	31.07 (790)	—	14.62 (372)	16.95 (432)	6.63 (170)	12.58 (320)	—	48
HFC224N	29.9 (760)	31.07 (790)	—	14.62 (372)	16.98 (432)	6.36 (162)	12.33 (314)	S12	47
HFC224NR	29.9 (760)	—	31.42 (800)	14.61 (372)	16.99 (432)	6.36 (162)	12.33 (314)	S13	48
HF224S	29.96 (762)	31.07 (790)	—	14.62 (372)	16.95 (432)	6.63 (170)	12.58 (320)	—	48
HFC225NRA	45.32 (1152)	45.81 (1164)	—	22.4 (570)	23.404 (596)	6.94 (178)	9.93 (254)	S19	91.1
HFC225NA	45.32 (1152)	45.81 (1164)	—	22.4 (570)	23.404 (596)	6.94 (178)	9.93 (254)	S18	91.1
HFC226NA	45.32 (1152)	45.81 (1164)	—	22.4 (570)	23.404 (596)	6.94 (178)	9.93 (254)	S18	95.6
HFC226NRA	45.32 (1152)	45.81 (1164)	—	22.4 (570)	23.404 (596)	6.94 (178)	9.93 (254)	S19	95.6
HFC227N	66.67 (1694)	67.16 (1706)	—	38.4 (976)	39.96 (1016)	9.24 (236)	14.68 (374)	—	360
HFC227NR	66.67 (1694)	—	67.74 (1722)	38.4 (976)	39.96 (1016)	9.24 (236)	14.68 (374)	—	362
HFC228N	66.67 (1694)	67.16 (1706)	—	38.4 (976)	39.96 (1016)	9.24 (236)	14.68 (374)	—	362
HFC228NR	66.67 (1694)	—	67.74 (1722)	38.4 (976)	39.96 (1016)	9.24 (236)	14.68 (374)	—	364
HFC321J	14.27 (362)	17.33 (442)	—	6.65 (170)	9.02 (230)	5.32 (136)	10.46 (266)	—	14
HFC321N	14.26 (362)	14.6 (371)	—	6.64 (169)	7.75 (197)	4.71 (127)	8.89 (226)	S6	14
HFC321NR	14.34 (364)	—	14.91 (379)	6.64 (169)	7.88 (200)	5.00 (127)	9.18 (233)	S8	15
HFC321S	14.27 (362)	17.33 (442)	—	6.65 (170)	9.02 (230)	5.32 (136)	10.46 (266)	—	14
HFC322J	16.27 (414)	19.31 (492)	—	9.17 (234)	11.47 (292)	5.33 (136)	10.46 (266)	—	20
HFC322N	16.26 (414)	16.62 (422)	—	9.16 (233)	10.37 (263)	5.05 (130)	9.21 (234)	S16	19
HFC322NR	16.26 (414)	—	16.93 (430)	9.16 (234)	10.41 (264)	5.05 (130)	9.21 (234)	S17	20
HFC322S	16.27 (414)	19.31 (492)	—	9.17 (234)	11.47 (292)	5.33 (136)	10.46 (266)	—	20
HF323J	21.96 (558)	23.16 (590)	—	9.65 (246)	12.02 (306)	5.34 (136)	10.46 (266)	—	25
HFC323N	21.95 (558)	23.15 (590)	—	9.64 (246)	12.01 (306)	5.05 (130)	10.17 (260)	S10	25
HFC323NR	21.95 (558)	—	23.46 (596)	9.64 (246)	11.97 (306)	5.05 (130)	10.17 (260)	S11	26
HF323S	21.96 (558)	23.16 (590)	—	9.65 (246)	12.02 (306)	5.34 (136)	10.46 (266)	—	25
HF324J	29.96 (762)	31.07 (790)	—	14.62 (372)	16.95 (432)	6.63 (170)	12.58 (320)	—	49
HFC324N	29.9 (760)	31.07 (790)	—	14.62 (372)	16.98 (432)	6.36 (162)	12.33 (314)	S12	49
HFC324NR	29.9 (760)	—	31.42 (800)	14.61 (372)	16.99 (432)	6.36 (162)	12.33 (314)	S13	50
HF324S	21.96 (558)	31.07 (790)	—	14.62 (372)	16.95 (432)	6.63 (170)	12.58 (320)	—	49
HF325JA also HFC325NJA	45.32 (1152)	45.81 (1164)	—	22.4 (570)	23.404 (596)	6.97 (178)	10.05 (256)	—	93
HFC325NA	45.32 (1152)	45.81 (1164)	—	22.4 (570)	23.404 (596)	6.94 (178)	9.93 (254)	S18	94.6
HFC325NRA	45.32 (1152)	45.81 (1164)	—	22.4 (570)	23.404 (596)	6.94 (178)	9.93 (254)	S19	94.6
HF325SA also HFC325NSA	45.32 (1152)	45.81 (1164)	—	22.4 (570)	23.404 (596)	7.34 (188)	10.347 (264)	—	93
HF326JA also HFC326NJA	45.32 (1152)	45.81 (1164)	—	22.4 (570)	23.404 (596)	6.97 (178)	10.05 (256)	—	98
HFC326NA	45.32 (1152)	45.81 (1164)	—	22.4 (570)	23.404 (596)	6.94 (178)	9.93 (254)	S18	99.6
HFC326NRA	45.32 (1152)	45.81 (1164)	—	22.4 (570)	23.404 (596)	6.94 (178)	9.93 (254)	S19	99.6
HF326SA also HFC326NSA	45.32 (1152)	45.81 (1164)	—	22.4 (570)	23.404 (596)	7.34 (188)	10.347 (264)	—	98
HFC327J	66.67 (1694)	67.16 (1706)	—	38.4 (976)	39.96 (1016)	9.24 (236)	14.68 (374)	—	367
HFC327N	66.67 (1694)	67.16 (1706)	—	38.4 (976)	39.96 (1016)	9.24 (236)	14.68 (374)	—	380
HFC327NR	66.67 (1694)	—	67.74 (1722)	38.4 (976)	40.25 (1024)	9.24 (236)	14.68 (374)	—	383
HFC327S	66.67 (1694)	67.16 (1706)	—	38.4 (976)	39.96 (1016)	9.24 (236)	14.68 (374)	—	367
HFC328N	66.67 (1694)	67.16 (1706)	—	38.4 (976)	39.96 (1016)	9.24 (236)	14.68 (374)	—	382
HFC328NR	66.67 (1694)	—	67.74 (1722)	38.4 (976)	40.25 (1024)	9.24 (236)	14.68 (374)	—	385
HFC361, N	14.26 (362)	14.6 (371)	—	6.64 (170)	7.75 (197)	4.71 (120)	8.89 (226)	S6	13
HFC361J, HF361JW	14.27 (362)	17.33 (442)	—	6.65 (170)	9.02 (230)	5.32 (136)	10.46 (266)	—	14
HFC361R, NR	14.34 (364)	—	14.91 (379)	6.64 (170)	7.88 (200)	5.00 (127)	9.18 (230)	S8	14
HFC361S. HF361SW, SSW	14.27 (362)	17.33 (442)	—	6.65 (170)	9.02 (230)	5.32 (136)	10.46 (266)	—	15

[1] Knocks not provided on Type 4/4X and 12 or on 800 & 1200A switches.

Safety Switch Dimensions & Shipping Weights

Catalogue Number	Height - Inches (mm)			Width - Inches (mm)		Depth - Inches (mm)		Knockout Diagram①	Shipping Weight (lbs.)
	Box A	With Door B	With Rain Shed C	Box D	With Handle E	Box F	With Handle G		
HFC362, N	16.26 (414)	16.62 (422)	—	9.16 (234)	10.37 (263)	4.71 (120)	8.67 (220)	S16	18
HFC362J, HF362JW	16.27 (414)	19.31 (492)	—	9.17 (234)	11.47 (292)	5.33 (136)	10.46 (266)	—	20
HFC362R, NR	16.26 (414)	—	16.93 (430)	9.16 (234)	10.41 (264)	5.05 (130)	9.21 (234)	S17	19
HFC362S. HF362SW, SSW	16.27 (414)	19.31 (492)	—	9.17 (234)	11.47 (292)	5.33 (136)	10.46 (266)	—	20
HF363	21.95 (558)	23.15 (590)	—	9.64 (246)	12.01 (306)	5.05 (130)	10.17 (260)	S10	24
HF363J, JW	21.96 (558)	23.16 (590)	—	9.65 (246)	12.02 (306)	5.34 (136)	10.46 (266)	—	25
HFC363N	21.95 (558)	23.15 (590)	—	9.64 (246)	12.01 (306)	5.05 (130)	10.17 (260)	S10	25
HFC363NR	21.95 (558)	—	23.46 (596)	9.64 (246)	11.97 (306)	5.05 (130)	10.17 (260)	S11	26
HF363R	21.95 (558)	—	23.46 (596)	9.64 (246)	11.97 (306)	5.05 (130)	10.17 (260)	S11	25
HF363S, SW	21.96 (558)	23.16 (590)	—	9.65 (246)	12.02 (306)	5.34 (136)	10.46 (266)	—	25
HF364	29.9 (760)	31.07 (790)	—	14.62 (372)	16.98 (432)	6.36 (162)	12.33 (314)	S12	48
HF364J, JW	29.96 (762)	31.07 (790)	—	14.62 (372)	16.95 (432)	6.63 (170)	12.58 (320)	—	49
HFC364N	29.9 (760)	31.07 (790)	—	14.62 (372)	16.98 (432)	6.36 (162)	12.33 (314)	S12	49
HFC364NR	29.9 (760)	—	31.42 (800)	14.61 (372)	16.99 (432)	6.36 (162)	12.33 (314)	S13	48
HF364R	29.9 (760)	—	31.42 (800)	14.61 (372)	16.99 (432)	6.36 (162)	12.33 (314)	S13	49
HF364S, SW	29.96 (762)	31.07 (790)	—	14.62 (372)	16.95 (432)	6.63 (170)	12.58 (320)	—	49
HF365A	45.32 (1152)	45.81 (1164)	—	22.4 (570)	23.404 (596)	6.94 (178)	9.93 (254)	S18	93
HF365JA, HF365JWA	45.32 (1152)	45.81 (1164)	—	22.4 (570)	23.404 (596)	6.97 (178)	10.05 (256)	—	93
HFC365NJA, HFC365NJWA	45.32 (1152)	45.81 (1164)	—	22.4 (570)	23.404 (596)	6.97 (178)	10.05 (256)	—	94.6
HFC365NA	45.32 (1152)	45.81 (1164)	—	22.4 (570)	23.404 (596)	6.94 (178)	9.93 (254)	S18	94.6
HFC365NRA	45.32 (1152)	45.81 (1164)	—	22.4 (570)	23.404 (596)	6.94 (178)	9.93 (254)	S19	94.6
HF365RA	45.32 (1152)	45.81 (1164)	—	22.4 (570)	23.404 (596)	6.94 (178)	9.93 (254)	S19	93
HF365SA, HF365SWA	45.32 (1152)	45.81 (1164)	—	22.4 (570)	23.404 (596)	7.34 (188)	10.347 (264)	—	93
HFC365NSA, HFC365NSWA	45.32 (1152)	45.81 (1164)	—	22.4 (570)	23.404 (596)	7.34 (188)	10.347 (264)	—	94.6
HF366A	45.32 (1152)	45.81 (1164)	—	22.4 (570)	23.404 (596)	6.94 (178)	9.93 (254)	S18	98
HF366JA, HF366JWA	45.32 (1152)	45.81 (1164)	—	22.4 (570)	23.404 (596)	6.97 (178)	10.05 (256)	—	98
HFC366NJA, HFC366NJWA	45.32 (1152)	45.81 (1164)	—	22.4 (570)	23.404 (596)	6.97 (178)	10.05 (256)	—	99.6
HFC366NA	45.32 (1152)	45.81 (1164)	—	22.4 (570)	23.404 (596)	6.94 (178)	9.93 (254)	S18	99.6
HFC366NRA	45.32 (1152)	45.81 (1164)	—	22.4 (570)	23.404 (596)	6.94 (178)	9.93 (254)	S19	99.6
HF366RA	45.32 (1152)	45.81 (1164)	—	22.4 (570)	23.404 (596)	6.94 (178)	9.93 (254)	S19	98
HF366SA, HF366SWA	45.32 (1152)	45.81 (1164)	—	22.4 (570)	23.404 (596)	7.34 (188)	10.347 (264)	—	98
HFC366NSA	45.32 (1152)	45.81 (1164)	—	38.4 (976)	23.404 (596)	7.34 (188)	10.347 (264)	—	99.6
HFC367	66.67 (1694)	67.16 (1706)	—	38.4 (976)	39.96 (1016)	9.24 (236)	14.68 (374)	—	380
HFC367J	66.67 (1694)	67.16 (1706)	—	38.4 (976)	39.96 (1016)	9.24 (236)	14.68 (374)	—	380
HFC367N	66.67 (1694)	67.16 (1706)	—	38.4 (976)	39.96 (1016)	9.24 (236)	14.68 (374)	—	382
HFC367NR	66.67 (1694)	—	67.74 (1722)	38.4 (976)	40.25 (1024)	9.24 (236)	14.68 (374)	—	386
HFC367R	66.67 (1694)	—	67.74 (1722)	38.4 (976)	40.25 (1024)	9.24 (236)	14.68 (374)	—	382
HFC367S	66.67 (1694)	67.16 (1706)	—	38.4 (976)	39.96 (1016)	9.24 (236)	14.68 (374)	—	380
HFC368, J, S	66.67 (1694)	67.16 (1706)	—	38.4 (976)	39.96 (1016)	9.24 (236)	14.68 (374)	—	383
HFC368N	66.67 (1694)	67.16 (1706)	—	38.4 (976)	39.96 (1016)	9.24 (236)	14.68 (374)	—	385
HFC368NR	66.67 (1694)	—	67.74 (1722)	38.4 (976)	40.25 (1024)	9.24 (236)	14.68 (374)	—	388
HFC368R	66.67 (1694)	—	67.74 (1722)	38.4 (976)	40.25 (1024)	9.24 (236)	14.68 (374)	—	385
HNFC361 also HNFC261	11.11 (284)	11.45 (291)	—	6.64 (170)	7.72 (196)	4.70 (119)	9.15 (232)	S7	11
HNFC361J, HNF361JW also HNFC261J	11.12 (284)	14.14 (360)	—	6.65 (170)	9.02 (230)	5.56 (142)	10.46 (266)	—	13
HNFC361R also HNFC261R	11.09 (282)	—	11.76 (299)	6.64 (170)	7.88 (200)	5.00 (127)	8.91 (226)	S9	12
HNFC361S. HNF361SW, SSW also HNFC261S	11.12 (284)	14.14 (360)	—	6.65 (170)	9.02 (230)	5.56 (142)	10.46 (266)	—	13
HNFC362 also HNFC262	16.26 (414)	16.62 (422)	—	9.16 (234)	10.26 (261)	4.71 (120)	9.04 (230)	S16	17
HNFC362J, HNF362JW also HNFC262J	16.27 (414)	17.46 (444)	—	9.17 (234)	11.47 (292)	5.33 (136)	10.46 (266)	—	19
HNFC362R also HNFC262R	16.26 (414)	—	16.93 (430)	9.16 (234)	10.41 (264)	5.05 (130)	9.14 (232)	S17	18
HNFC362S. HNF362SW, SSW also HNFC262S	16.27 (414)	17.46 (444)	—	9.17 (234)	11.47 (292)	5.33 (136)	10.46 (266)	—	19
HNF363 also HNF263	21.95 (558)	23.15 (590)	—	9.64 (246)	12.01 (306)	5.05 (130)	10.17 (260)	S10	23
HNF363J, JW also HNF263J	21.96 (558)	23.16 (590)	—	9.65 (246)	12.02 (306)	5.34 (136)	10.46 (266)	—	24
HNF363L	21.95 (558)	23.15 (590)	—	9.64 (246)	12.01 (306)	5.05 (130)	10.17 (260)	S10	23
HNF363R also HNF263R	21.95 (558)	—	23.46 (596)	9.64 (246)	11.97 (306)	5.05 (130)	10.17 (260)	S11	24
HNF363RL	21.95 (558)	—	23.46 (596)	9.64 (246)	11.97 (306)	5.05 (130)	10.17 (260)	S11	24
HNF363S, SW also HNF263S	21.96 (558)	23.16 (590)	—	9.65 (246)	12.02 (306)	5.34 (136)	10.46 (266)	—	24
HNF364	29.9 (760)	31.07 (790)	—	14.62 (372)	16.98 (432)	6.36 (162)	12.33 (314)	S12	46
HNF364J, JW	31.07 (790)	—	14.62 (372)	16.95 (432)	6.63 (170)	12.58 (320)	—	47	—
HNF364L	29.9 (760)	31.07 (790)	—	14.62 (372)	16.98 (432)	6.36 (162)	12.33 (314)	S12	46
HNF364R	29.9 (760)	—	31.42 (800)	14.61 (372)	16.99 (432)	6.36 (162)	12.33 (314)	S13	47
HNF364RL	29.9 (760)	—	31.42 (800)	14.61 (372)	16.99 (432)	6.36 (162)	12.33 (314)	S13	47
HNF364S, SW	29.96 (762)	31.07 (790)	—	14.62 (372)	16.95 (432)	6.63 (170)	12.58 (320)	—	47

① Knocks not provided on Type 4 / 4X and 12 or on 800 & 1200A switches.

Safety Switch Dimensions & Shipping Weights

Catalogue Number	Height - Inches (mm)			Width - Inches (mm)		Depth - Inches (mm)		Knockout Diagram①	Shipping Weight (lbs.)
	Box A	With Door B	With Rain Shed C	Box D	With Handle E	Box F	With Handle G		
HNF365A, JA	45.32 (1152)	45.81 (1164)	—	22.4 (570)	23.404 (596)	6.97 (178)	10.05 (256)	—	75
HNF365JWA	45.32 (1152)	45.81 (1164)	—	22.4 (570)	23.404 (596)	6.97 (178)	10.05 (256)	—	75
HNF365RA	33.47 (852)	33.96 (864)	—	22.4 (570)	23.404 (596)	6.94 (178)	9.93 (254)	S19	75
HNF365SA, HNF365SWA	33.47 (852)	33.96 (864)	—	22.4 (570)	23.404 (596)	7.34 (188)	10.347 (264)	—	75
HNF366A, JA	33.47 (852)	33.96 (864)	—	22.4 (570)	23.404 (596)	6.97 (178)	10.05 (256)	—	77
HNF366RA	33.47 (852)	33.96 (864)	—	22.4 (570)	23.404 (596)	6.94 (178)	9.93 (254)	S19	77
HNF366SA	33.47 (852)	33.96 (864)	—	22.4 (570)	23.404 (596)	7.34 (188)	10.347 (264)	—	77
HNFC367, J	54.67 (1390)	55.16 (1402)	—	38.4 (976)	39.96 (1016)	9.24 (236)	14.68 (374)	—	302
HNFC367R	54.67 (1390)	—	55.7 (1416)	38.4 (976)	40.25 (1024)	9.24 (236)	14.68 (374)	—	304
HNFC367S	54.67 (1390)	55.16 (1402)	—	38.4 (976)	39.96 (1016)	9.24 (236)	14.68 (374)	—	302
HNFC368, J, S	54.67 (1390)	55.16 (1402)	—	38.4 (976)	39.96 (1016)	9.24 (236)	14.68 (374)	—	305
HNFC368R	54.67 (1390)	55.16 (1402)	—	38.4 (976)	40.25 (1024)	9.24 (236)	14.68 (374)	—	307
LFC111N	7.97 (204)	8.13 (208)	—	5.5 (140)	5.94 (152)	3 (78)	5.38 (138)	S2	35 (10)
LFC111NR	8.07 (206)	—	8.16 (208)	5.16 (132)	5.94 (152)	3.13 (80)	5.38 (138)	S3	35 (10)
LFC211N	7.97 (204)	8.13 (208)	—	5.5 (140)	5.94 (152)	3 (78)	5.38 (138)	S1	35 (10)
LFC211NR	8.07 (206)	—	8.16 (208)	5.16 (132)	5.94 (152)	3.13 (80)	5.38 (138)	S3	35 (10)
LNFC222R	8.07 (206)	—	8.16 (208)	5.16 (132)	5.94 (152)	3.13 (80)	5.38 (138)	S5	35 (10)

Type 1 or 3R
100-200A GD, 30-200A HD Type VBII

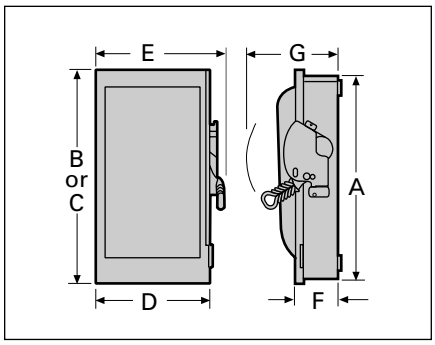

Type 1 or 3R
400-1200A Type VBII HD

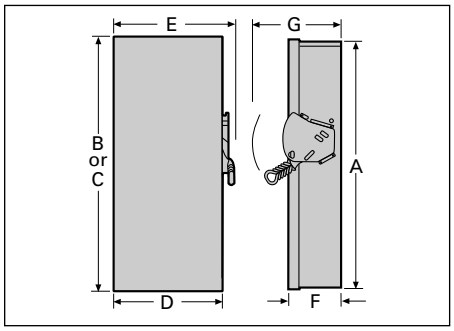

Type 4/4X or 12
30-200A HD Type VBII

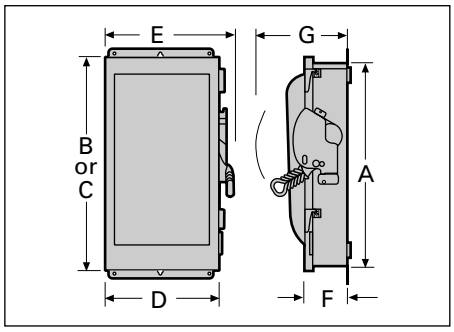

Type 4/4X or 12
400-1200A Type VBII HD

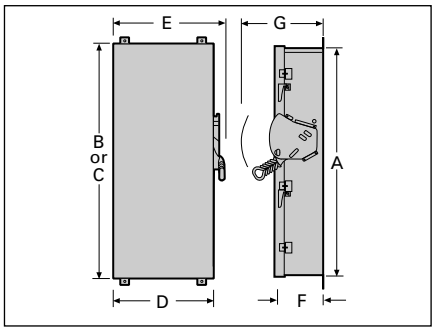

① Knocks not provided on Type 4 / 4X and 12 or on 800 & 1200A switches.

Knockout Diagrams

Type 1 & 3R Enclosures

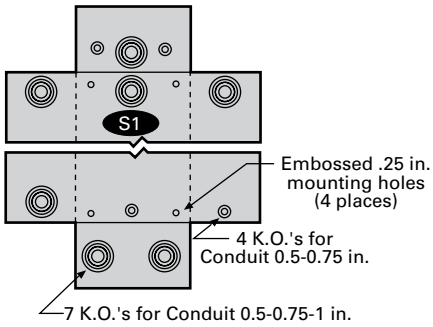

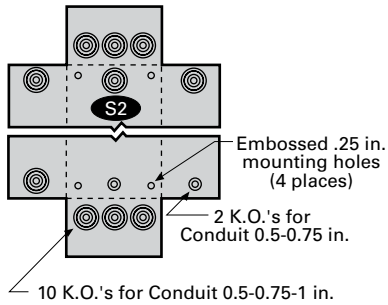

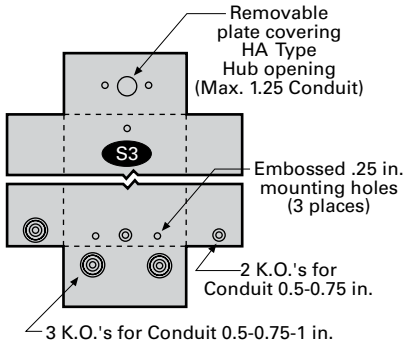

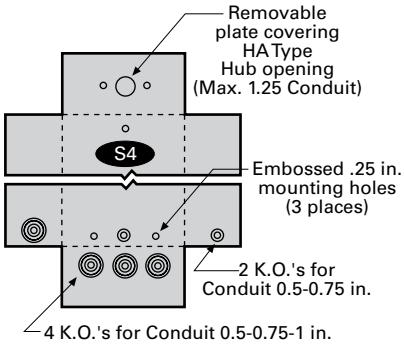

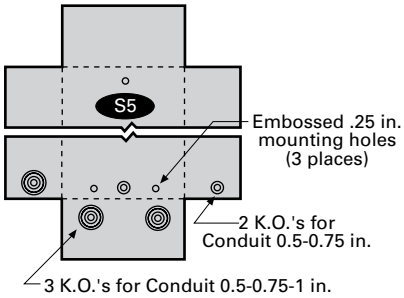

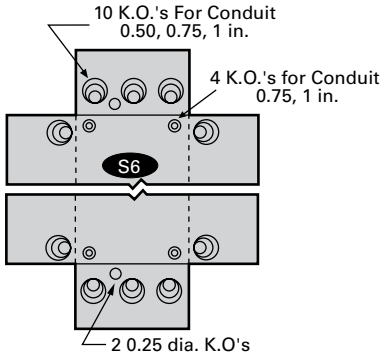

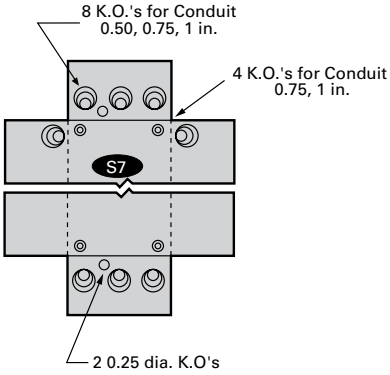

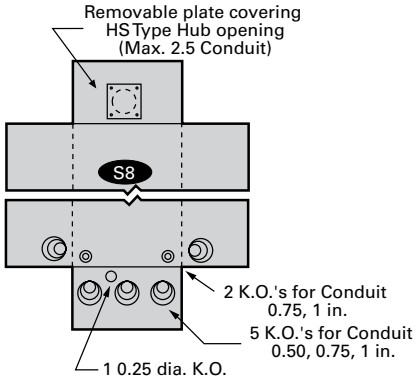

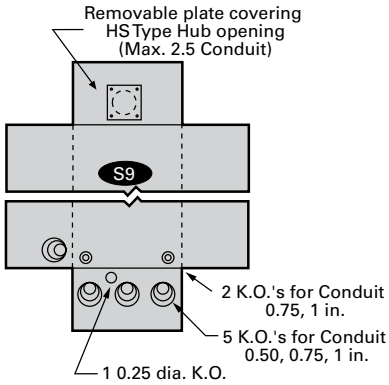

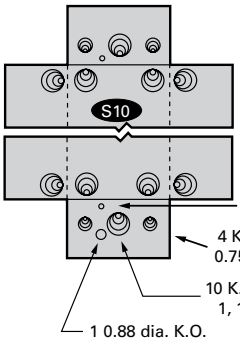

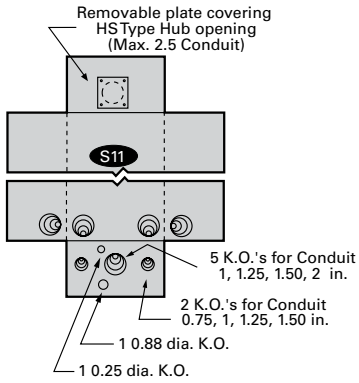

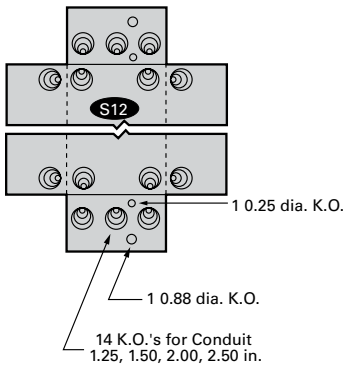

***For inches / millimeters conversion, multiply inches by 25.4.**

Type 1 & 3R Enclosures

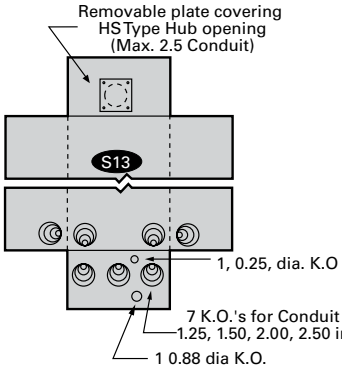

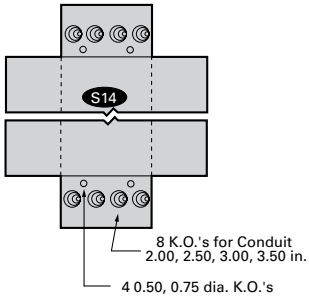

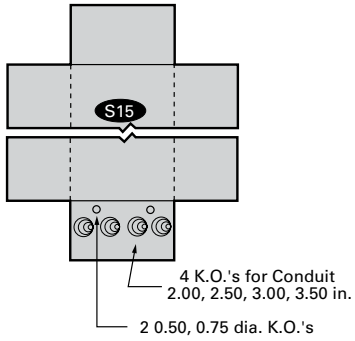

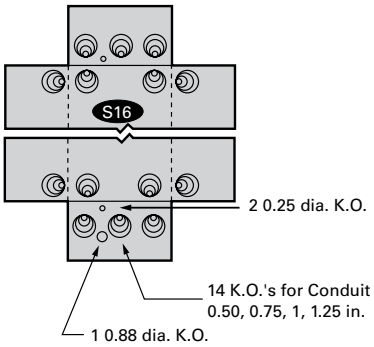

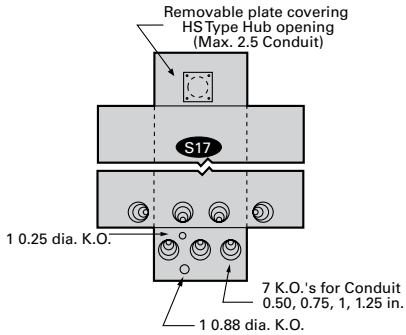

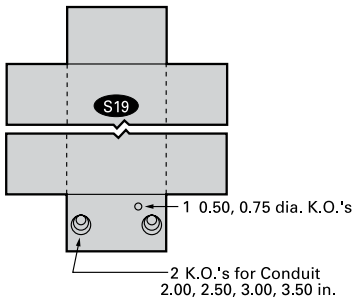

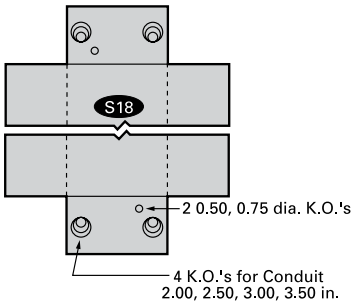

***For inches / millimeters conversion, multiply inches by 25.4.**

4 & 6-Pole Safety Switch Dimensions

Catalogue Number	**Enclosure** - Inches (mm)			**Mounting** - Inches (mm)		
	A	**B**	**C**	**D**	**E**	**F**
Figure 1, 4-Pole Fusible and Non-fusible, Type 1						
HNF461	24.50 (622)	9.53 (242)	6.09 (155)	19.00 (483)	6.75 (171)	0.268 (7)
HF461	29.12 (740)	9.53 (242)	6.09 (155)	23.50 (597)	6.75 (171)	0.268 (7)
HNF462	24.88 (632)	11.50 (292)	6.09 (155)	19.00 (483)	9.38 (238)	0.268 (7)
HF462	33.53 (852)	11.50 (292)	6.09 (155)	27.50 (699)	9.38 (238)	0.268 (7)
HNF463	27.62 (702)	12.18 (309)	6.09 (155)	19.36 (492)	8.00 (203)	0.268 (7)
HF463	36.44 (926)	12.18 (309)	6.09 (155)	28.11 (714)	8.00 (203)	0.268 (7)
HNF464	36.00 (914)	19.12 (486)	6.42 (163)	30.88 (784)	15.00 (381)	0.44 (11)
HF464	49.48 (1257)	19.12 (486)	6.42 (163)	45.50 (1130)	15.00 (381)	0.44 (11)
Figure 2, 4 & 6-Pole Fusible Type 12/3R and 4X						
HF461J, HF661J, HF661S	29.50 (622)	9.53 (242)	6.48 (165)	31.65 (804)	5.47 (139)	0.27 (7)
HF462J, HF662J, HF662S	33.53 (852)	11.50 (292)	6.48 (165)	35.69 (907)	8.00 (203)	0.27 (7)
HF463J, HF663J, HF663S	36.44 (926)	12.18 (309)	6.48 (165)	38.67 (982)	8.47 (215)	0.27 (7)
HF464J, HF664J, HF664S	49.48 (1257)	19.12 (486)	6.78 (172)	51.64 (1312)	13.44 (341)	0.33 (8)
Figure 2, 4 & 6-Pole Non-fusible Type 12/3R and 4X						
HNF461J, HNF661J, HNF661S	24.50 (622)	9.53 (242)	6.48 (165)	26.65 (667)	5.47 (139)	0.27 (7)
HNF462J, HNF662J, HNF662S	24.88 (632)	11.50 (292)	6.48 (165)	27.03 (687)	8.00 (203)	0.27 (7)
HNF463J, HNF663J, HNF663S	27.54 (700)	12.18 (309)	6.48 (165)	29.77 (756)	8.47 (215)	0.27 (7)
HNF464J, HNF664J, HNF664S	36.00 (914)	19.12 (486)	6.78 (172)	38.16 (969)	13.44 (341)	0.33 (8)

Figure 1: Type 1

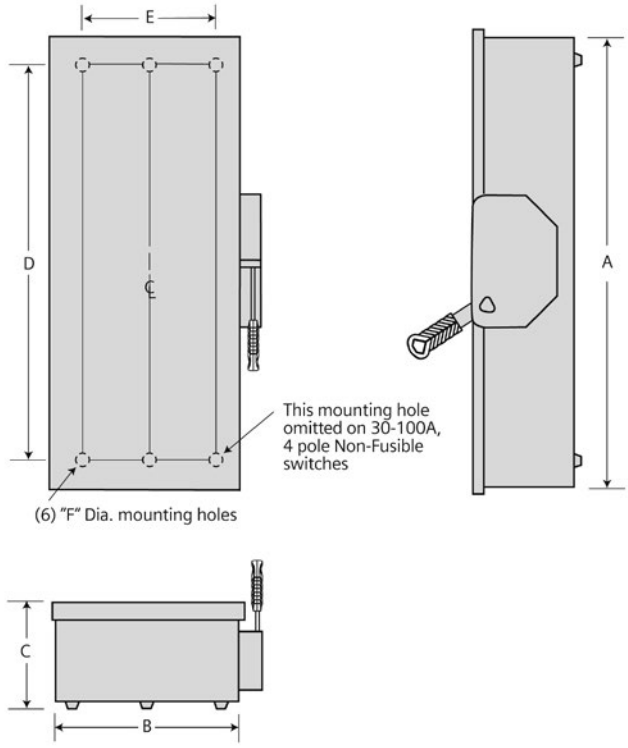

Figure 2 : Type 12/3R and 4X

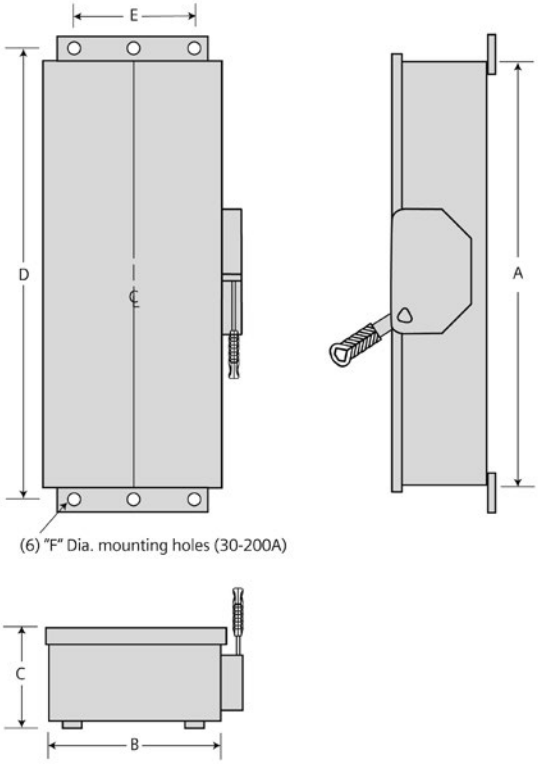

Double Throw

Description

Double throw switches are intended to transfer loads from one power source to another. All 2 & 3-pole double throw switches are CSA certified and both horsepower and load break rated. Switches are rated for use on systems up to 10,000A when protected with Class H fuses or 200,000A when protected with Class R or Class T fuses②. They can also be used to connect a single source of power to either of two loads. In this application it is necessary to field modify fusible switches so that the fuses are on the load side of the switching mechanism.

A cover interlock is provided on all ampere ratings. The operating handle may be padlocked in the off position.

Fuse Capabilities of Fusible DT Switches

Amp Rating	Fuse Type			
	H	R	T	J
30 & 60A, 240V	Std	Yes (kit)	No	No
30 & 60A, 600V	Std	Yes (kit)	No	Yes③
100 & 200A	Std	Yes (kit)	Yes (kit)	Yes③

Double Throw Switches

System	Voltage	Number of Poles	Amps	Type 1 — Indoor Catalogue Number
Heavy Duty Fusible (30-200A) with Class H fuse spacings — Less Neutral②				
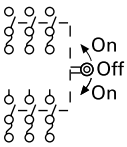	240 Volt AC or 250 Volt DC	3	30 60 100 200	**DTFC321** **DTFC322** **DTFC323** **DTFC324**
	600 Volt AC, 250 Volt DC	3	30 60 100 200	**DTFC361** **DTFC362** **DTFC363** **DTFC364**

System	Voltage	Number of Poles	Amps	Type 1 — Indoor Catalogue Number	Type 3R — Outdoor① Catalogue Number	Hub Type①
Heavy Duty Non-Fusible —Less Neutral②						
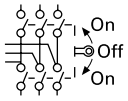	240 Volt AC or 250 Volt DC	2	30 60 100 200 400	**DTNFC221** **DTNFC222** **DTNFC323** **DTNFC224** **DTNFC225**	— — — — **DTNFC225R**	*
		3	30 60 100 200 400 600	**DTNFC321** **DTNFC322** **DTNFC323** **DTNFC324** **DTNFC325** **DTNFC326**	— — **DTNFC323R** **DTNFC324R** — —	**ECHS** *
	600 Volt AC, or 250 Volt DC	3	30 60 100 200 400 600	**DTNFC361** **DTNFC362** **DTNFC363** **DTNFC364** **DTNFC365** **DTNFC366**	**DTNFC361R** **DTNFC362R** **DTNFC363R** **DTNFC364R** **DTNFC365R** **DTNFC366R**	**ECHS** *

① Hub catalogue number available p. 3-36
② All Heavy Duty double throw switches with a catalogue number starting with "DT" are rated 200,000 AIC max. when protected by Class R, J or T fuses. Fuse ampere rating must not exceed switch ampere rating.
③ Move load base.
* Consult Siemens representative, 400A and larger Switches do not have hub provisions.

Accessories, Lug Data and Horsepower Ratings

Accessories – 2 and 3-Pole Switches Type "DT" Only①

Description		Catalogue Number
Neutral Kits	30 60 & 100A 200A 400 & 600A	**HNC612** **HNC263** **HNC264** **HNC678**
Equipment Ground Kit	30-200A (2) #14-4 AWG 400 & 600A (4) #14-2/0	**HG61234** **HG656**
Auxiliary Contacts (HD Only) (two required per switch)②	30-200A with (1) NO & (1) NC contact 30-200A with (2) NO & (2) NC contact 400-600A with (1) NO & (1) NC contact 400-600A with (2) NO & (2) NC contact	**HA161234** **HA261234** **HA165678** **HA265678**
Class R Fuse Clip Kits (two required per switch)	30A, 240V Kit 30A, 600V Kit and 60A, 240V Kit 60A, 600V Kit 100A Kit 200A Kit	**HR21** **HR612** **HR62** **HR63** **HR64**
Class T Fuse Adapter Kits (two required per pole)	100A, 240V Kit 100A, 600V Kit 200A, 240V Kit 200A, 600V Kit	**HT23** **HT63** **HT24** **HT64**
Type 3R Hubs (20-200A)	For 3/4" Conduit For 1" Conduit For 1 1/4" Conduit For 1 1/2" Conduit For 2" Conduit For 2 1/2" Conduit	**ECHS075** **ECHS100** **ECHS125** **ECHS150** **ECHS200** **ECHS250**

Wire Ranges (Line, Load and Neutral) per CEC Requirements

30-200A – 2 & 3-Pole Switches

Switch Ampere Rating	Wire Range (Cu/Al) DT VBII Design Line, Load and Neutral
30	(1) #14–6
60	(1) #14–2
100	(1) #14–1/0 AWG
200	(1) #6–250 kcmil

400-600A – 2 & 3-Pole Switches

Switch Ampere Rating	Wire Range (Cu/Al) DT VBII Design Line, Load and Neutral
400	(1) 1/0 AWG–750 kcmil or (2) 1/0 AWG–250 kcmil
600	(2) 1/0 AWG–500 kcmil

Maximum Horsepower Ratings

Fused

Ampere Rating	1-Phase AC 240V	3-Phase AC 240V	3-Phase AC 480V	3-Phase AC 600V	250V DC
30	3	$7^{1/2}$	15	20	5
60	10	15	30	50	10
100	15	30	60	75	20
200	15	60	125	150	40

Non-Fused

30	5	10	20	30	5
60	10	20	50	60	10
100	15	40	75	100	20
200	15	60	125	150	40
400-600	—	125	250	350	50

Replacement Parts – 2 and 3-Pole Switches Only①

Description		Catalogue Number
Type 1, 3R Replacement Handle	30-200A	**HHD61234**
Replacement Handle	400-600A	**HHD656**

① For "DT" VBII Type switches only.

② One aux. required for normal and one required for emergency switch line base.

VBII Design Double Throw Dimensions

Catalogue Number	Enclosure dimensions - Inches (mm)					
	A	B	C	D	E	F
Figure 1 (30-600A Type 1 & 3R)						
DTNFC221, DTNFC321, DTNFC361, DTNFC361R	24.50 (622)	9.53 (242)	6.09 (155)	19.00 (483)	6.75 (171)	0.268 (7)
DTFC321, DTFC321R, DTFC361	29.12 (740)	9.53 (242)	6.09 (155)	23.50 (597)	6.75 (171)	0.268 (7)
DTNFC222, DTNFC322, DTNFC362, DTNFC362R	24.88 (632)	11.50 (292)	6.09 (155)	19.00 (483)	9.38 (238)	0.268 (7)
DTFC322, DTFC362	33.45 (852)	11.50 (292)	6.09 (155)	27.50 (699)	9.38 (238)	0.268 (7)
DTNFC223, DTNFC323, DTNFC323R, DTNFC363, DTNFC363R	27.62 (702)	12.18 (309)	6.09 (155)	19.36 (492)	8.00 (203)	0.268 (7)
DTFC323, DTFC363	36.44 (926)	12.18 (309)	6.09 (155)	28.11 (714)	8.00 (203)	0.268 (7)
DTNFC224, DTNFC224R, DTNFC324, DTNFC324R, DTNFC364, DTNFC364R	36.00 (914)	19.12 (486)	6.42 (163)	31.00 (787)	15.00 (381)	0.44 (11)
DTFC324, DTFC364	49.44 (1256)	19.12 (486)	6.42 (163)	44.50 (1130)	15.00 (381)	0.44 (11)
DTNFC225, DTNFC225R, DTNFC325, DTNFC365, DTNFC365R	57.71 (1466)	28.22 (717)	9.44 (240)	49.75 (1264)	16.00 (406)	0.56 (14)
DTNFC326, DTNFC366, DTNFC366R	57.71 (1466)	28.22 (717)	9.44 (240)	49.75 (1264)	16.00 (406)	0.56 (14)

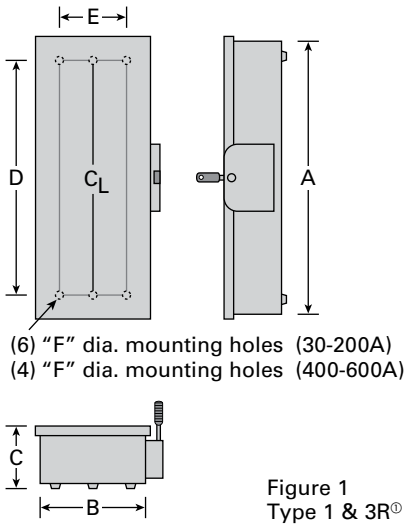

Figure 1
Type 1 & 3R①

① Drip hood not shown but provided on Type 3R enclosures.