© Siemens 2019

SIEMENS

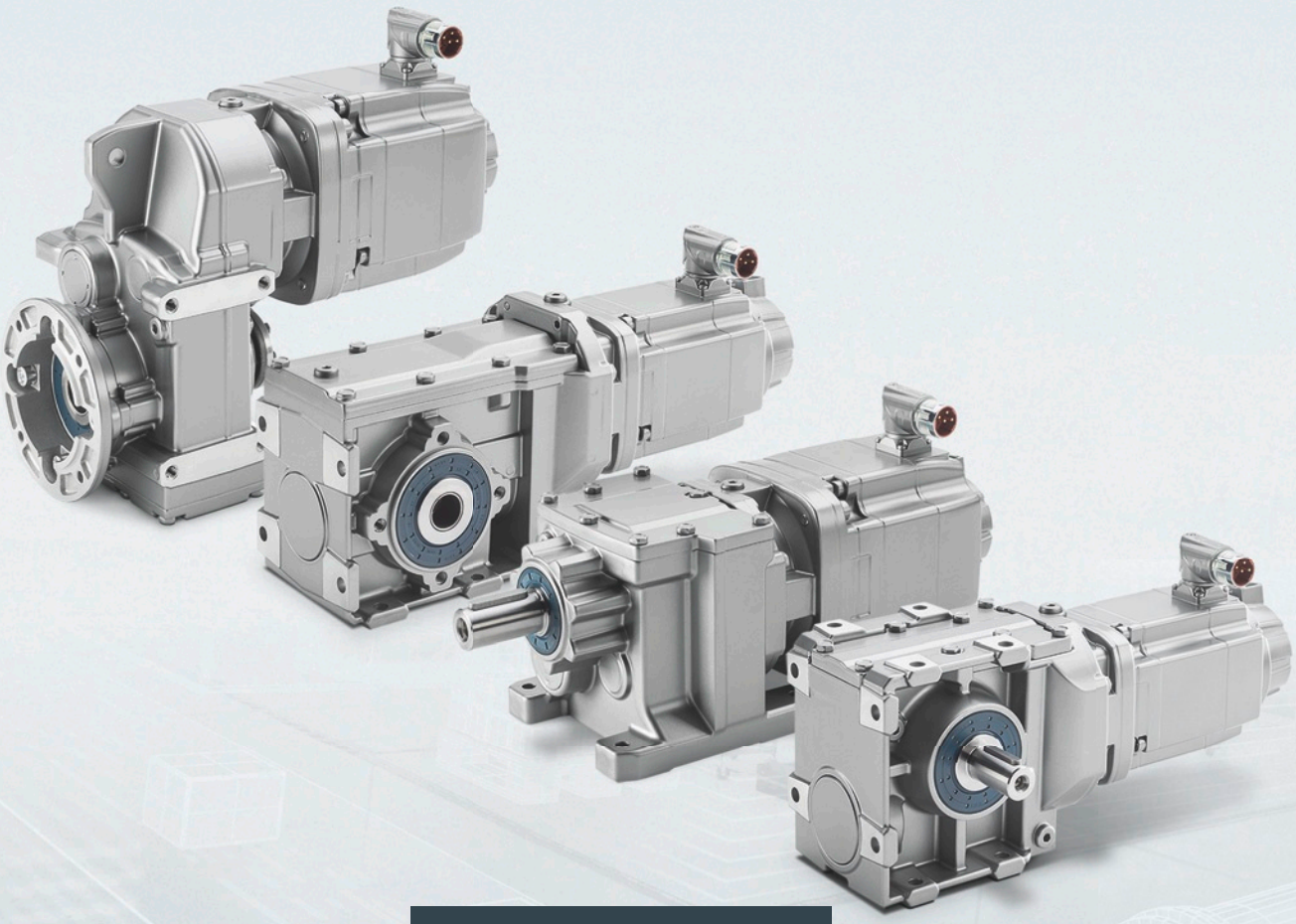

Motion Control Drives

SIMOTICS S-1FG1
Servo geared motors

Helical, Parallel shaft, Bevel and Helical worm geared motors

Catalog
D 41

Edition
May 2019

siemens.com/drives

© Siemens 2019

Related catalogs

Motion Control PM 21
SIMOTION
Equipment for Production Machines

E86060-K4921-A101-A4-7600



Motion Control Drives D 21.4
SINAMICS S120 and SIMOTICS

E86060-K5521-A141-A1-7600



Motion Control Drives D 31.1
SINAMICS Inverters for Single-Axis Drives
Built-In Units

E86060-K5531-A111-A1-7600



Motion Control Drives D 31.2
SINAMICS Inverters for Single-Axis Drives
Distributed Inverters

E86060-K5531-A121-A1-7600



SIMOGEAR MD 50.1
Geared Motors
Helical, parallel shaft, bevel, helical worm
and worm geared motors

E86060-K5250-A111-A5-7600



SIMOGEAR MD 50.11
Gearboxes with adapter

E86060-K5250-A211-A3-7600



SIMOTICS GP, SD, XP, DP D 81.1
Low-Voltage Motors
Type series 1FP1, 1LE1, 1LE5, 1MB1 and 1PC1
Frame sizes 71 to 355
Power range 0.09 to 500 kW
E86060-K5581-A111-B2-7600



FLENDER Couplings MD 10.1
Standard Couplings

E86060-K5710-A111-A5-7600



Products for Automation and Drives CA 01
Interactive Catalog
Download

www.siemens.com/automation/ca01



Industry Mall
Information and Ordering Platform
in the Internet:

www.siemens.com/industrymall



Further Information

Up-to-date information material, such as promotional literature, catalogs or brochures, is always available in the Internet at the following addresses

www.siemens.com/servo-geared-motors
www.siemens.com/sinamics
www.siemens.com/simotics
www.siemens.com/ids

under “Information material (Brochures, Catalogs)”.

The offered documentation can be ordered or downloaded in common file formats (PDF, ZIP).

Conversion tables for metric system into imperial and US customary measurement systems

https://mall.industry.siemens.com/mall/en/Catalog/Products/10314463

© Siemens 2019



SIEMENS

SIMOTICS S-1FG1
Servo geared motors

Helical, Parallel shaft, Bevel and Helical worm geared motors

Catalog D 41 · May 2019

Dear Customer,

We are happy to present you with the new edition of Catalog D 41 · May 2019.
This new edition supersedes Catalog D 41 · 2017.

SIMOTICS S-1FG1 is the new generation of Siemens servo geared motors that can be combined with the SINAMICS S120 drive system to create a powerful system with high functionality.
This catalog presents a comprehensive overview of the portfolio of SIMOTICS S-1FG1 servo geared motors.

In addition to several new options and technical adaptations, the new edition has mainly been supplemented by gearbox size 19.

The products listed in this catalog are also included in the Industry Mall.
Please contact your local Siemens office for additional information.

NEW: By clicking on the Article No. in the Web PDF you can jump directly to the Industry Mall where you can obtain additional information and order products online.

The Drive Technology Configurator is updated daily and available online at
www.siemens.com/dtconfigurator

Up-to-date information about servo geared motors is available online at
www.siemens.com/servo-geared-motors

You can access our Interactive Catalog and our Industry Mall on the Internet at:
www.siemens.com/industrymall

Your personal contact will be glad to receive your suggestions and recommendations for improvement.
You can find your representative in our contact person database at
www.siemens.com/automation-contact

We hope that you will often enjoy using Catalog D 41 · May 2019 as a selection and ordering reference document and wish you every success with our products and solutions.

With kind regards,

Achim Peltz
Vice President
General Motion Control
Siemens AG, Digital Industries, Motion Control

siemens.com/drives

© Siemens 2019

© Siemens 2019

SIMOTICS S-1FG1 Servo geared motors

Helical, Parallel shaft, Bevel and Helical worm geared motors

Motion Control

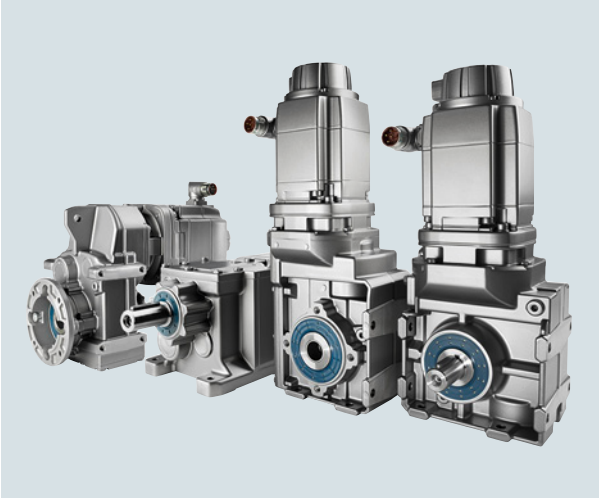

Catalog D 41 · May 2019

Supersedes: Catalog D 41 · 2017

Refer to the Industry Mall for current updates of this catalog:
www.siemens.com/industrymall

The products contained in this catalog can also be found in the Interactive Catalog CA 01.
The Catalog CA 01 can be downloaded at:
www.siemens.com/automation/ca01

Please contact your local Siemens branch.

NEW

Click on an Article No. in the catalog PDF to call it up in the Industry Mall and to obtain all the information.

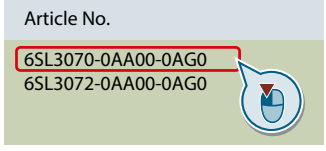

Or directly on the Internet, e.g.
www.siemens.com/product?6SL3070-0AA00-0AG0

The products and systems described in this catalog are manufactured/distributed under application of a certified quality management system in accordance with DIN EN ISO 9001 (Certified Registration No. 001258 QM). The certificate is recognized by all IQNet countries.

Introduction 1

Configuring guide 2

Servo helical geared motors SIMOTICS S-1FG1 3

Servo parallel shaft geared motors SIMOTICS S-1FG1 4

Servo bevel geared motors SIMOTICS S-1FG1 5

Servo helical worm geared motors SIMOTICS S-1FG1 6

Technical definitions for servomotors 7

Options 8

Engineering Tools 9

Appendix 10

© Siemens 2019

Digital Enterprise

The building blocks that ensure everything works together perfectly in the digital enterprise

Digitalization is already changing all areas of life and existing business models. It is placing greater pressure on industry while at the same time creating new business opportunities. Today, thanks to scalable solutions from Siemens, companies can already become a digital enterprise and ensure their competitiveness.



Industry faces tremendous challenges

Reduce time-to-market

Today manufacturers have to bring products to market at an ever-increasing pace despite the growing complexity of these products. In the past, a major manufacturer would push aside a small one, but now it is a fast manufacturer that overtakes a slow one.

Boost flexibility

Consumers want customized products, but at a price they would pay for a mass-produced item. That only works if production is more flexible than ever before.

Improve quality

To ensure a high level of quality while meeting legal requirements, companies have to establish closed quality loops and enable the traceability of products.

Boost efficiency

Today the product itself needs to be sustainable and environmentally friendly, while energy efficiency in production has become a competitive advantage.

Increase security

Increasing networking escalates the threat to production facilities of cyberattacks. Today more than ever, companies need suitable security measures.

© Siemens 2019

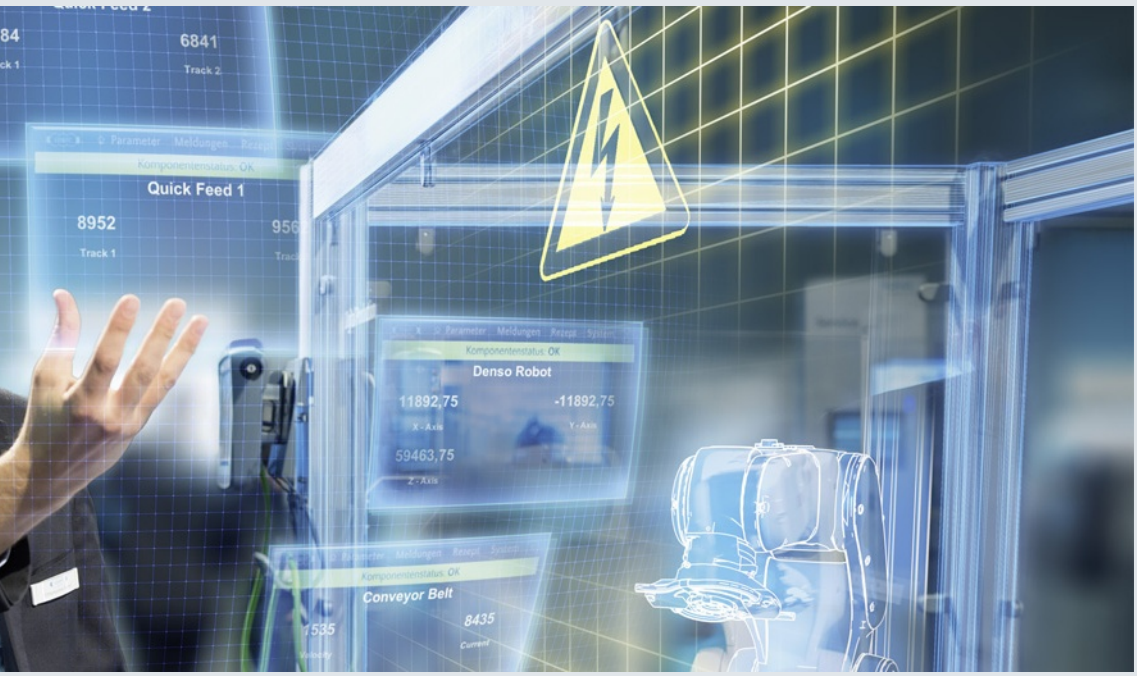

The digital enterprise has already become a reality

To fully benefit from all the advantages of digitalization, companies first have to achieve complete consistency of their data. Fully digitally integrated business processes, including those of suppliers, can help to create a digital representation of the entire value chain. This requires

- the integration of industrial software and automation,
- expansion of the communication networks,
- security in automation,
- and the use of business-specific industrial services.

MindSphere

The cloud-based open IoT operating system from Siemens

With MindSphere, Siemens offers a cost-effective and scalable cloud platform as a service (PaaS) for the development of applications. The platform, designed as an open operating system for the Internet of Things, makes it possible to improve the efficiency of plants by collecting and analyzing large volumes of production data.

Totally Integrated Automation (TIA)

Where digitalization becomes reality

Totally Integrated Automation (TIA) ensures the seamless transition from the virtual to the real world. It already encompasses all the necessary conditions for transforming the benefits of digitalization into true added value. The data that will form the digital twin for actual production is generated from a common base.

Digital Plant
Learn more about the digital enterprise for the process industry
www.siemens.com/digitalplant

Digital Enterprise Suite
Learn more about the digital enterprise for the discrete industry
www.siemens.com/digital-enterprise-suite

© Siemens 2019

Integrated Drive Systems

Faster on the market and in the black with Integrated Drive Systems

Integrated Drive Systems are Siemens' trendsetting answer to the high degree of complexity that characterizes drive and automation technology today. The world's only true one-stop solution for entire drive systems is characterized in particular by its threefold integration: Horizontal, vertical, and lifecycle integration ensure that every drive system component fits seamlessly into the whole system, into any automation environment, and even into the entire lifecycle of a plant.

The outcome is an optimal workflow – from engineering all the way to service that entails more productivity, increased efficiency, and better availability. That's how Integrated Drive Systems reduce time to market and time to profit.

Horizontal integration

Integrated drive portfolio: The core elements of a fully integrated drive portfolio are frequency converters, motors, couplings, and gear units. At Siemens, they're all available from a single source. Perfectly integrated, perfectly interacting. For all power and performance classes. As standard solutions or fully customized. No other player in the market can offer a comparable portfolio. Moreover, all Siemens drive components are perfectly matched, so they are optimally interacting.

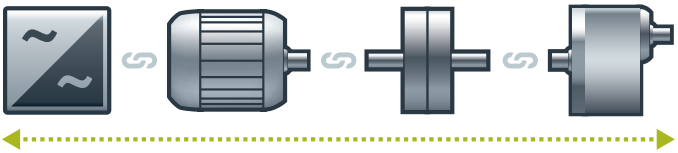

You can boost the availability of your application or plant to up to

99 %*

*e.g., conveyor application

Vertical integration

Thanks to **vertical integration**, the complete drive train is seamlessly integrated in the entire automation environment – an important prerequisite for production with maximum value added. Integrated Drive Systems are part of Totally Integrated Automation (TIA), which means that they are perfectly embedded into the system architecture of the entire industrial production process. This enables optimal processes through maximum communication and control.

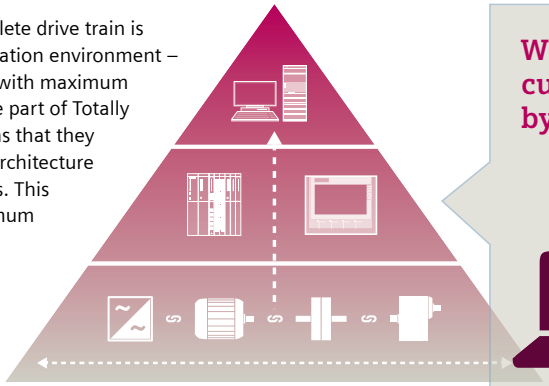

With TIA Portal you can cut your engineering time by up to

30 %

Lifecycle integration

Lifecycle integration adds the factor of time: Software and service are available for the entire lifecycle of an Integrated Drive System. That way, important optimization potential for maximum productivity, increased efficiency, and highest availability can be leveraged throughout the system's lifecycle – from planning, design, and engineering to operation, maintenance, and all the way even to modernization.

With Integrated Drive Systems, assets become important success factors. They ensure shorter time to market, maximum productivity and efficiency in operation, and shorter time to profit.

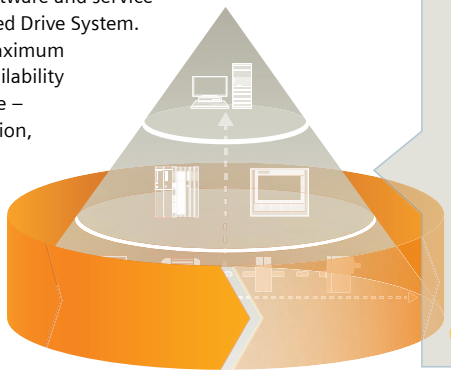

With Integrated Drive Systems you can reduce your maintenance costs by up to

15 %

www.siemens.com/ids

© Siemens 2019

Introduction

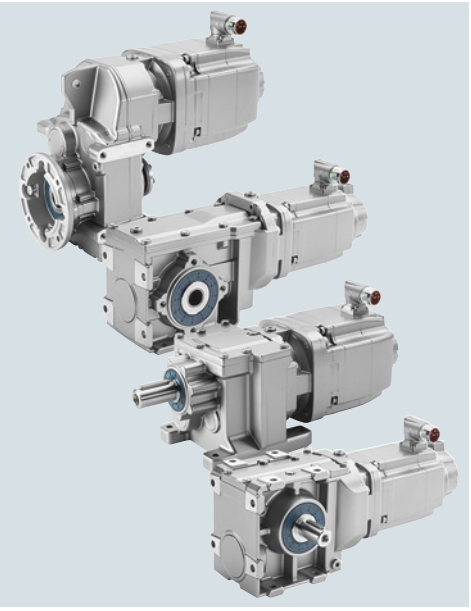

1/2 Orientation
1/2 Servo geared motors
1/2 Overview
1/5 Benefits
1/6 Design
1/6 • Servo helical geared motors
1/7 • Servo parallel shaft geared motors
1/8 • Servo bevel geared motors
1/10 • Servo helical worm geared motors
1/11 Integration
1/12 Configuration
1/12 Further information

1/13 Guidelines for selection and ordering
1/13 Article No. code
1/13 • Ordering data
1/13 • Structure of the Article No.
1/14 • Example of how to compile an Article No. correctly
1/14 – Selection and ordering example
1/15 Type designations
1/15 • Type designation of gearboxes
1/16 Notes on the tables in the chapters for selection of servo geared motors
1/16 • Structure of the technical specifications tables
1/17 • Structure of the selection and ordering data tables
1/18 Notes on dimensional drawings
1/18 • Motor shaft heights
1/18 • Shaft extensions
1/18 • Hollow shafts
1/18 • Flanges
1/18 • Vent valves

1/19 General technical specifications
1/19 Regulations, standards, specifications and degrees of protection for motors
1/19 • Regulations, standards and specifications
1/19 • Degrees of protection for AC motors

© Siemens 2019

Overview

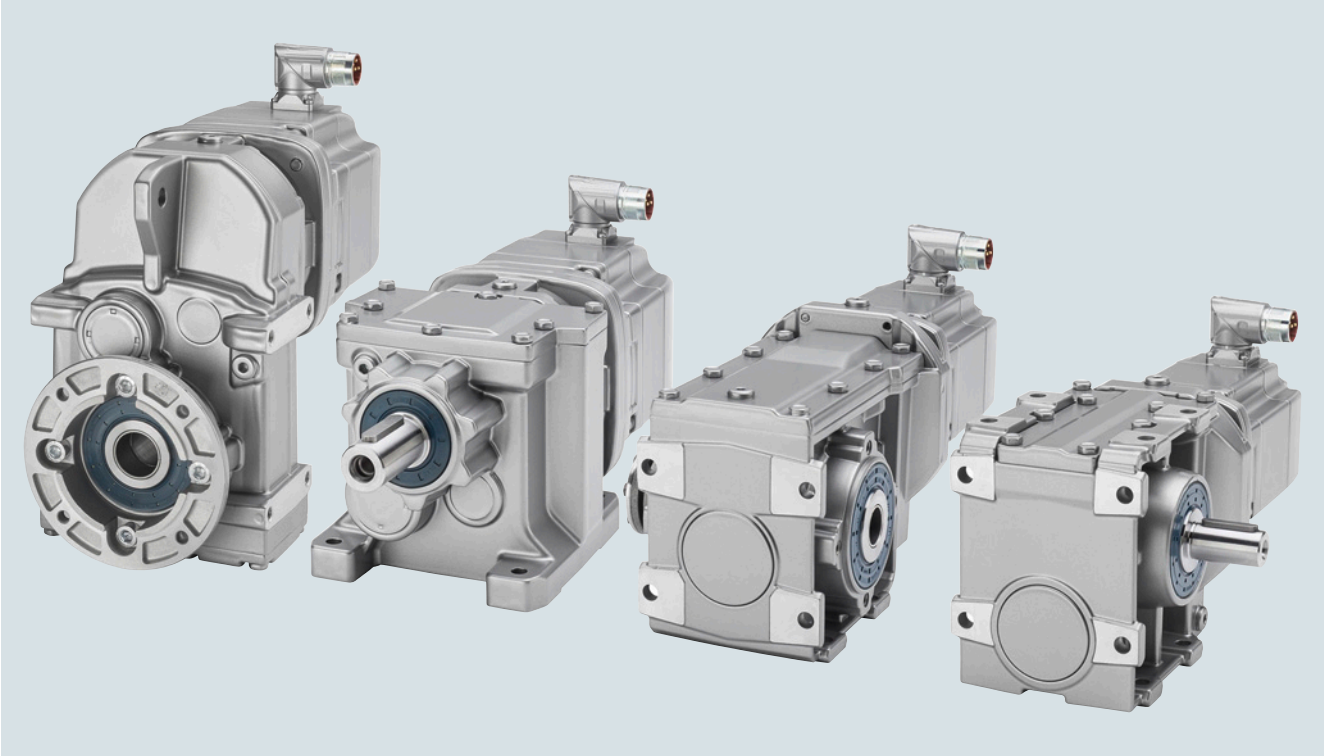

SIMOTICS S-1FG1 is the new generation of servo geared motors from Siemens.

They are available as servo helical, servo parallel shaft, servo bevel and servo helical worm geared motors and are delivered as a completely assembled unit and with oil-filled gearbox. A wide range of mechanical mounting methods can be implemented with the numerous options.

SIMOTICS S-1FG1 servo geared motors are designed for operation without external cooling and the heat is dissipated through the motor surface and the gearbox mounting surface.

SIMOTICS S-1FG1 servo geared motors can be combined with the SINAMICS S120 drive system to create a powerful system with high functionality.

This catalog presents a comprehensive overview of the portfolio of SIMOTICS S-1FG1 servo geared motors and is designed to help users make a preliminary selection of products to meet the requirements of a particular drive application.
The information in the catalog relating to specific motors and gearboxes is intended as a guide so that the correct servo geared motor can be identified on the basis of a known application.

We recommend use of the "SIZER for Siemens Drives" engineering tool so that SIMOTICS S-1FG1 servo geared motors can be accurately configured. This tool takes load duty cycles into account and performs a thermal and mechanical analysis of the gearbox.

© Siemens 2019

Overview (continued)

	Gearbox designation	Transmission ratios	Number of gearbox sizes	Maximum output torque M_{2max} Nm	Gear ratio i
Servo helical geared motors					
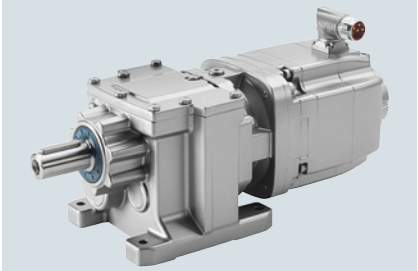	***Z19 ... Z129***	2-stage	10	14 … 5200	3.4 … 62.5
	D19 ... D129	3-stage	10	102 … 5000	35.8 … 373
Servo parallel shaft geared motors					
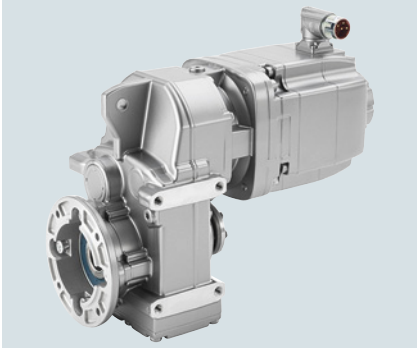	***FZ29 ... FZ129***	2-stage	8	17 … 5140	3.6 … 70.7
	FD29 ... FD129	3-stage	8	163 … 5010	46.4 … 413
Servo bevel geared motors					
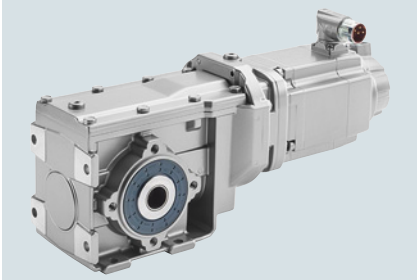	***B19 ... B49***	2-stage	4	15 … 465	3.5 … 59.3
	K39 ... K149	3-stage	8	24 … 8160	5.2 … 244.3
Servo helical worm geared motors					
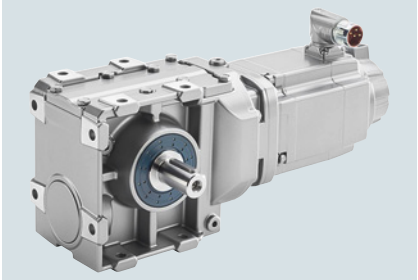	***C29 ... C89***	2-stage	5	46 … 1480	6.2 ... 102.5

© Siemens 2019

Overview (continued)

Torque classes

SIMOTICS S-1FG1 servo geared motors are classified according to fixed torque steps. Within a torque class, almost the same output torques are achieved for different gearbox types.

Servo helical geared motors 2-stage and 3-stage												
Gearbox types *Z*, *D*												
Gearbox size		***19***	***29***	***39***	***49***	***59***	***69***	***79***	***89***	***109***	***129***	–
Maximum output torque	Nm	114	161	215	360	480	680	1010	1930	3690	5200	–

Servo parallel shaft geared motors 2-stage and 3-stage												
Gearbox types *FZ*, *FD*												
Gearbox size		–	***29***	***39***	***49***	–	***69***	***79***	***89***	***109***	***129***	–
Maximum output torque	Nm	–	184	325	580	–	665	1100	2010	3530	5140	–

Servo bevel geared motors 2-stage												
Gearbox type *B*												
Gearbox size		***19***	***29***	***39***	***49***	–	–	–	–	–	–	–
Maximum output torque	Nm	51	114	250	465	–	–	–	–	–	–	–

Servo bevel geared motors 3-stage												
Gearbox type *K*												
Gearbox size		–	–	***39***	***49***	–	***69***	***79***	***89***	***109***	***129***	***149***
Maximum output torque	Nm	–	–	230	460	–	640	840	1610	3070	4700	8160

Servo helical worm geared motors 2-stage												
Gearbox type *C*												
Gearbox size		–	***29***	***39***	***49***	–	***69***	–	***89***	–	–	–
Maximum output torque	Nm	–	126	255	400	–	730	–	1480	–	–	–

© Siemens 2019

Benefits

High energy efficiency for a fast return on investment

When developing SIMOTICS S-1FG1 servo geared motors, great emphasis was placed on achieving the highest possible energy efficiency.

Using the plug-on pinion principle in the first gearbox stage of the servo geared motors, higher transmission ratios are achieved when compared to gearboxes with slip-on pinion.

This means that frequently instead of 3-stage gearboxes with an efficiency of approx. 94 %, 2-stage helical and parallel shaft gearboxes with an efficiency of ≥ 96 % can be used.

Extremely compact and low weight for easy handling in the machine or system in the smallest space

Since the gearbox is mounted directly on the servomotor, the unit is lighter and requires a smaller footprint in the customer's machine. In addition, interfaces and sealing joints are reduced as a result of the integrated end shield.

Harmoniously coordinated modular system to provide the optimum solution for your particular drive task

The SIMOTICS S-1FG1 portfolio of servo geared motors has been finely scaled in terms of gearbox sizes and transmission ratios so that it can offer the perfect drive with respect to motor size, output speed or output torque for any application.

When developing SIMOTICS S-1FG1 servo geared motors, particular emphasis was placed on achieving well-balanced gearbox properties such as:

- Maximum output torque
- Permissible radial force
- Output shaft diameter
- Bearing service life
- Housing stiffness
- Gearing reliability (fatigue endurable)
- Shaft strength (fatigue endurable)

Fine scaling of transmission ratios for the right output speed for any application

With their wide range of transmission ratios, from very low up to very high, SIMOTICS S-1FG1 servo geared motors provide the necessary flexibility for any kind of drive application.

Further, the gearboxes are quieter as a result of the lower circumferential velocity of the first gearbox stage.

Intelligent sealing concept for easy maintenance

Optimally coordinated output shaft sealing concepts are available for the various applications and ambient conditions in which SIMOTICS S-1FG1 servo geared motors are deployed.

Gearboxes in gearbox sizes *19* and *29* are lubricated for life.

All SIMOTICS S-1FG1 servo geared motors with venting are equipped as standard with a pressure breather valve.

© Siemens 2019

Design

Servo helical geared motors 2-stage – gearbox type Z, 3-stage – gearbox type D

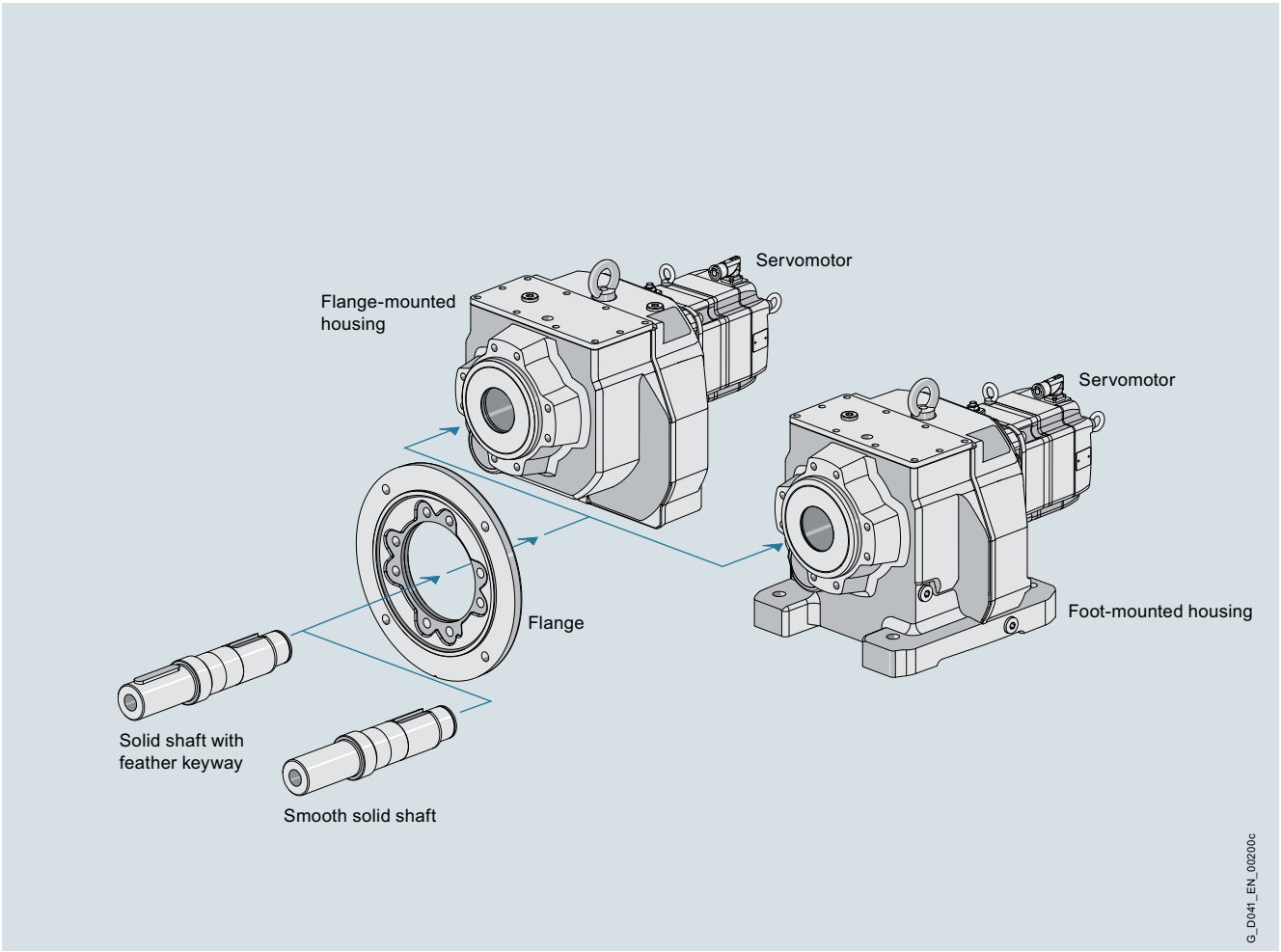

Modular system, servo helical geared motor

SIMOTICS S-1FG1 servo helical geared motors are available in the following versions for mounting in any position:

- 2 or 3 stages
- Foot-mounted design
- Flange-mounted design
- Combined foot/flange-mounted design (gearbox sizes 29 to 89)
- Design with integrated housing flange
- Solid shaft design with feather keyway or without feather keyway (smooth solid shaft)

© Siemens 2019

Design (continued)

Servo parallel shaft geared motors 2-stage – gearbox type FZ, 3-stage – gearbox type FD

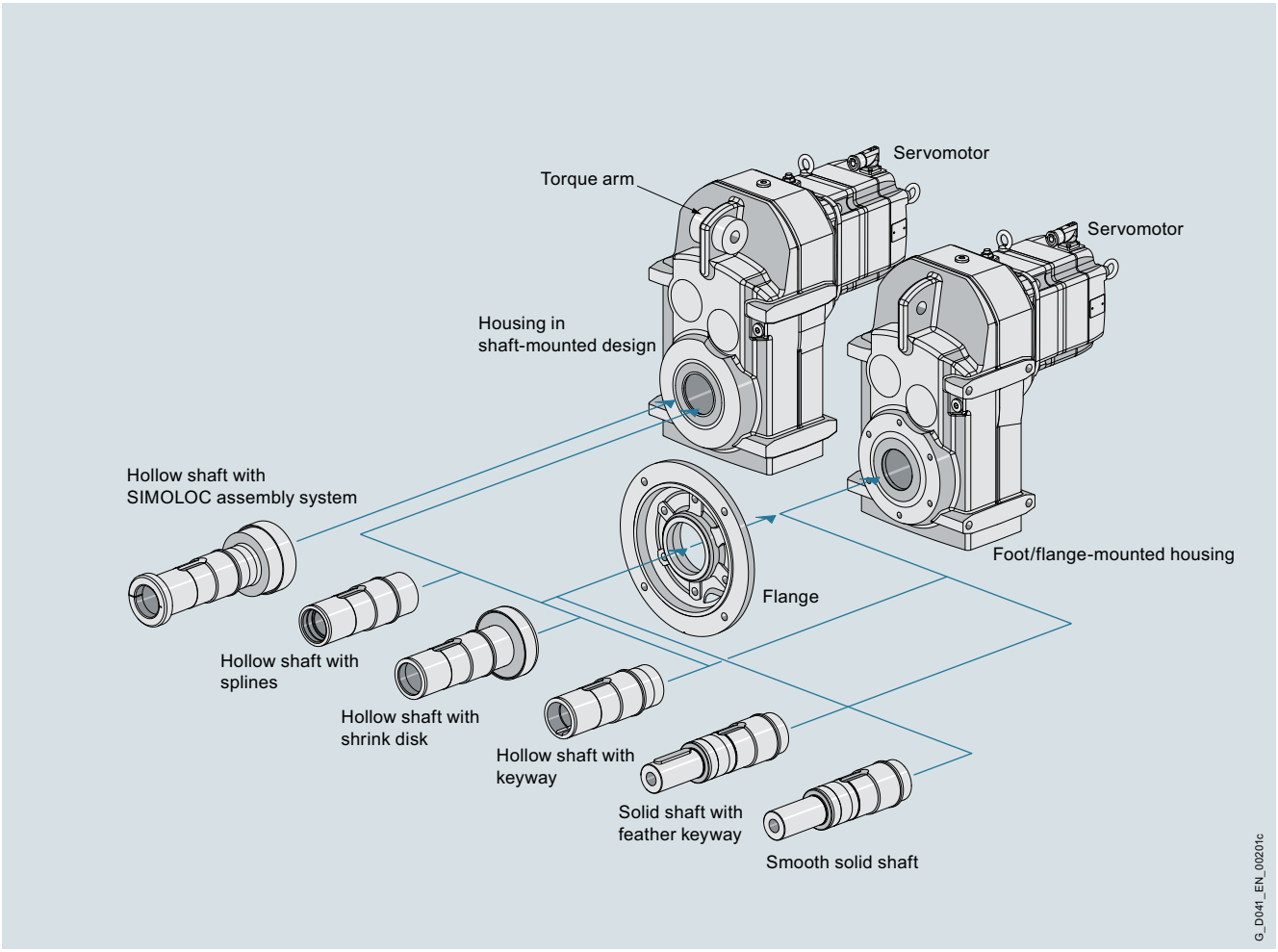

Modular system, servo parallel shaft geared motor

SIMOTICS S-1FG1 servo parallel shaft geared motors are available in the following versions for mounting in any position:

- 2 or 3 stages
- Foot-mounted design
- Flange-mounted design
- Design with integrated housing flange
- Shaft-mounted design (torque arm)
- Hollow-shaft design with feather keyway, splined shaft, shrink disk or SIMOLOC assembly system
- Solid shaft design with feather keyway or without feather keyway (smooth solid shaft)

© Siemens 2019

Design (continued)

Servo bevel geared motors 2-stage – gearbox type B

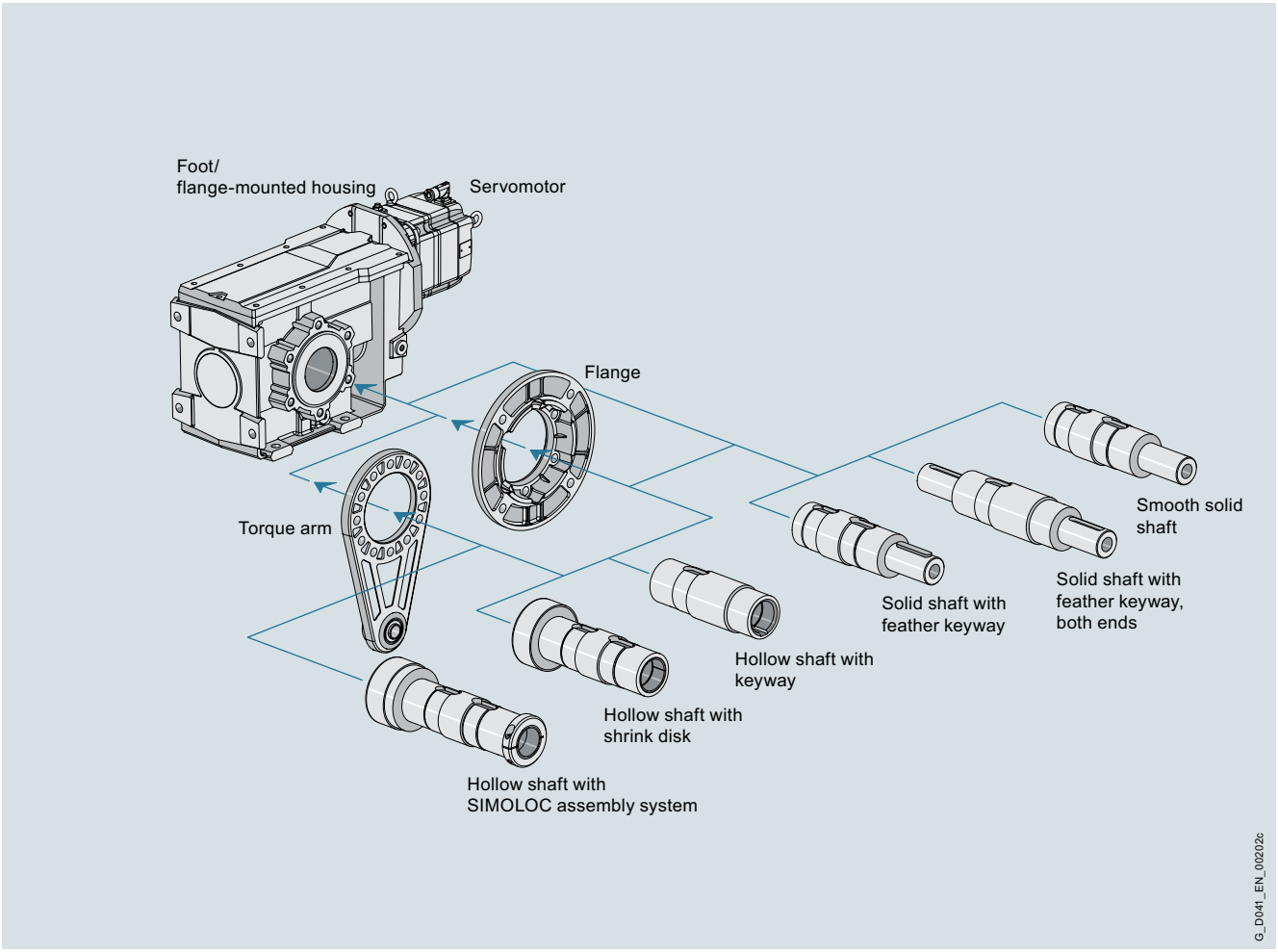

Modular system, servo bevel geared motor 2-stage – gearbox type *B*

SIMOTICS S-1FG1 servo bevel geared motors – gearbox type *B* are available in the following versions for mounting in any position:

- 2 stages
- Foot-mounted design
- Flange-mounted design
- Design with integrated housing flange
- Shaft-mounted design (torque arm)
- Hollow-shaft design with feather keyway, splined shaft, shrink disk or SIMOLOC assembly system
- Solid shaft design with feather keyway (at one end or both ends) or without feather keyway (smooth solid shaft)

For 2-stage bevel gearboxes *B*, the torque arm is supplied loose to enable it to be mounted as required on site.

© Siemens 2019

Design (continued)

Servo bevel geared motors 3-stage – gearbox type K

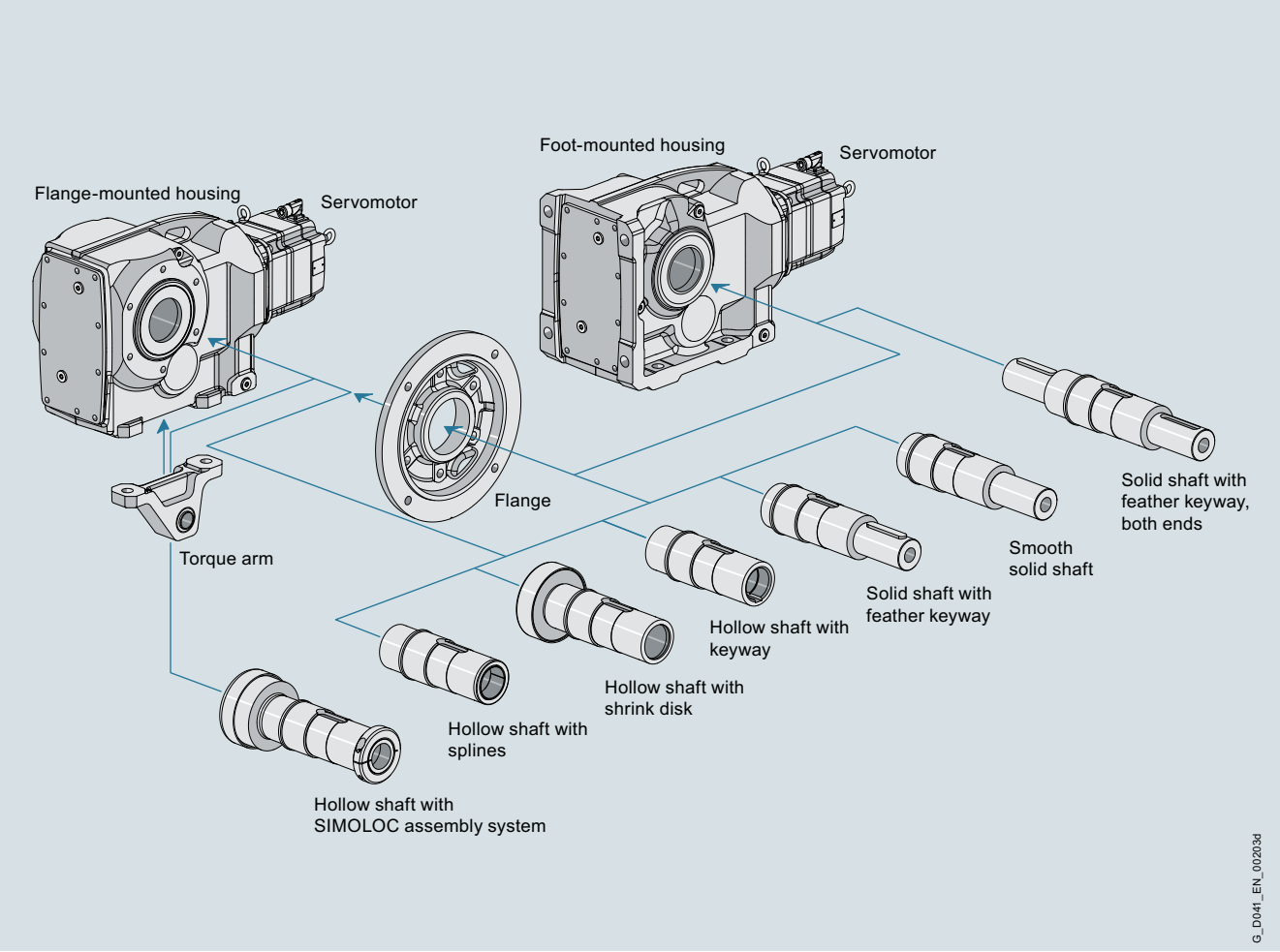

Modular system, servo bevel geared motor 3-stage – gearbox type *K*

SIMOTICS S-1FG1 servo bevel geared motors – gearbox type *K* are available in the following versions for mounting in any position:

- 3 stages
- Foot-mounted design
- Flange-mounted design
- Design with integrated housing flange
- Shaft-mounted design (torque arm)
- Hollow-shaft design with feather keyway, splined shaft, shrink disk or SIMOLOC assembly system
- Solid shaft design with feather keyway (at one end or both ends) or without feather keyway (smooth solid shaft)

© Siemens 2019

Design (continued)

Servo helical worm geared motors 2-stage – gearbox type C

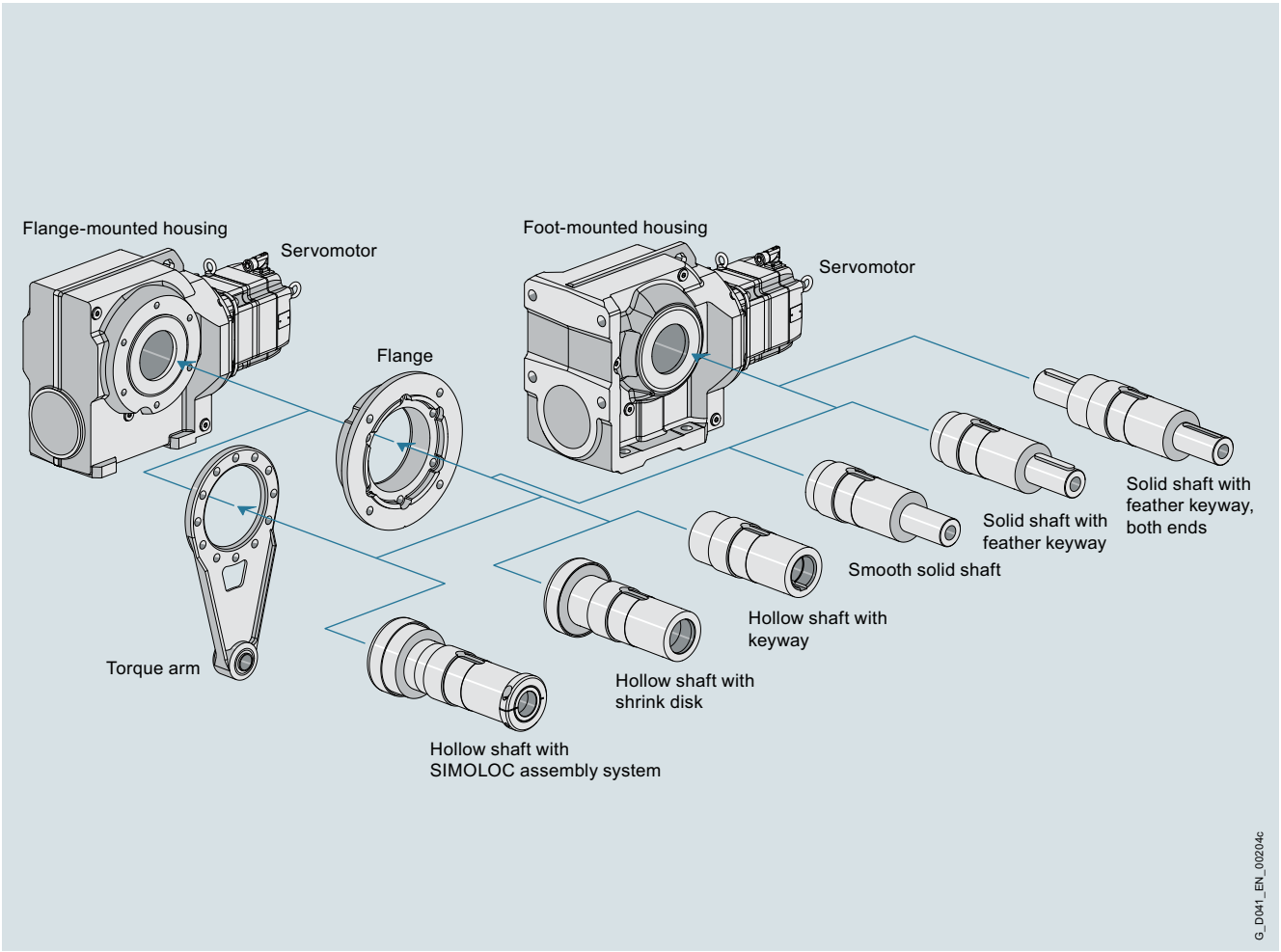

Modular system, servo helical worm geared motor

SIMOTICS S-1FG1 servo helical worm geared motors are available in the following versions for mounting in any position:

- 2 stages
- Foot-mounted design
- Flange-mounted design
- Design with integrated housing flange
- Shaft-mounted design (torque arm)
- Hollow-shaft design with feather keyway, shrink disk or SIMOLOC assembly system
- Solid shaft design with feather keyway (at one end or both ends) or without feather keyway (smooth solid shaft)

For helical worm gearboxes, the torque arm is supplied loose to enable it to be mounted as required on site.

© Siemens 2019

Integration

SIMOTICS S-1FG1 servo geared motors are part of the Siemens Integrated Drive System (IDS).

Siemens Integrated Drive System (IDS) stands for standardized, tailored and modular components, systems and services. It encompasses the world's most extensive portfolio – from geared motors through motor starters and inverters, identification systems and switchgear up to the automation.

The complete portfolio is exhaustively tested – also in the field – for maximum availability. The components are harmonized and coordinated with one another with standard interfaces and power bus systems.

Siemens Integrated Drive System (IDS) therefore allows users to reduce their installation and commissioning costs, while increasing flexibility and system availability at the same time.

Energy-efficient motors, motor starters, soft starters and inverters as well as the Power Management system based on SIMATIC PCS 7, SIMATIC WinCC and power monitoring devices ensure a high energy saving potential.

Optimum interaction

When developing SIMOTICS S-1FG1 servo geared motors, special emphasis was placed on making them completely compatible with the SINAMICS S110 and SINAMICS S120 drive systems. Motors, inverters and commissioning tools are all perfectly coordinated. The electronic rating plate and the ability to integrate the motors via the DRIVE-CLiQ system interface ensure quick commissioning. Prefabricated MOTION-CONNECT signal and power cables offer an easy, reliable method of connecting components.

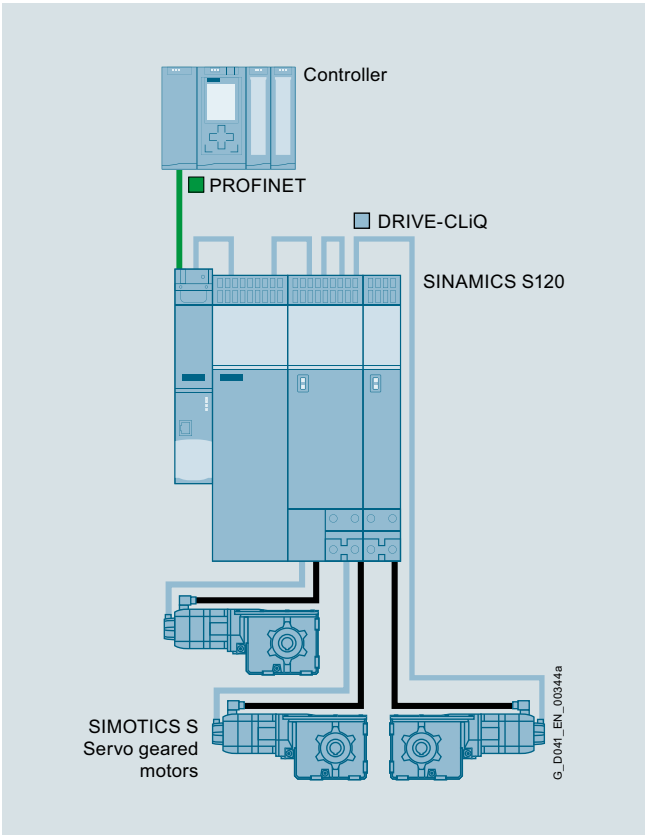

Integrated in Totally Integrated Automation

Together with SINAMICS converters/inverters, the SIMOTICS S-1FG1 servo geared motors are an integral part of Totally Integrated Automation.
This means: They can be seamlessly integrated into the drive and automation environment. The TIA Portal speeds up the engineering process and reduces costs and outlay – at the planning and commissioning stages, during operation and maintenance and when automation systems are expanded. This ensures security of investment and helps users to achieve a sustained improvement in their competitive position.

MOTION-CONNECT connection system

MOTION-CONNECT includes connection systems and components which are optimally tailored to individual areas of application. MOTION-CONNECT cables feature state-of-the-art connection systems to ensure fast, reliable connection of different components, and offer maximum quality as well as system-tested reliability.



MOTION-CONNECT power cable and signal cable

MOTION-CONNECT cables are available as fully-assembled power and signal cables or sold by the meter. The pre-assembled cables can be ordered in length units of 10 cm (3.94 in) and can be extended, if necessary.

Whatever your machine requirements, MOTION-CONNECT offers the solution.

- **Robust, high-performance and easy to use**
  thanks to pre-assembled cables with a rugged metal connector in degree of protection IP67 and reliable SPEED-CONNECT quick-release lock
- **Outstanding and proven quality**
  achieved by consistent quality management and system-tested cables

Cables are available in two different qualities – MOTION-CONNECT 500 and MOTION-CONNECT 800PLUS.

MOTION-CONNECT 500	MOTION-CONNECT 800PLUS
• Cost-effective solution for predominantly fixed installation • Tested for travel distances up to 5 m (16.4 ft)	• Meets requirements for use in cable carriers • Oil-resistant • Tested for travel distances of up to 50 m (164 ft)

More information

- Catalogs D 21.4, NC 62, NC 82, PM 21
- Interactive Catalog CA 01
- Internet:
  www.siemens.com/motion-connect
  www.siemens.com/industrymall

© Siemens 2019

Configuration

The following electronic configuring and engineering tools are available for SIMOTICS S-1FG1 servo geared motors and the SINAMICS family of inverters and converters:

SinaSave energy efficiency tool

The SinaSave energy efficiency tool determines energy saving potential and amortization times based on your individual conditions of use and therefore offers practical assistance in making decisions about investments in energy-efficient technologies.

Drive Technology Configurator (DT Configurator) within the Interactive Catalog CA 01

The Interactive Catalog CA 01 – the offline Industry Mall of Siemens – contains over 100 000 products with approximately 5 million possible drive system product variants. The Drive Technology Configurator (DT Configurator) has been developed to facilitate selection of the correct motor and/or inverter from the wide spectrum of drives. It is integrated as a selection tool in Interactive Catalog CA 01.

Online DT Configurator

In addition, the DT Configurator can be used on the Internet without requiring any installation. The DT Configurator can be found in the Siemens Industry Mall at the following address:
www.siemens.com/dt-configurator

SIZER for Siemens Drives engineering tool

The SIZER for Siemens Drives engineering tool makes it easy to engineer SIMOTICS low-voltage motors including servo geared motors. It provides support when selecting the hardware and firmware components necessary to implement a drive task. SIZER for Siemens Drives is designed to support configuring of the entire drive system.

Additional information on the SIZER for Siemens Drives engineering tool is provided in the chapter Engineering tools.

The SIZER for Siemens Drives engineering tool is available free on the Internet at:
www.siemens.com/sizer

STARTER commissioning tool

The STARTER commissioning tool allows menu-prompted commissioning, optimization and diagnostics. Apart from the SINAMICS drives, STARTER is also suitable for MICROMASTER 4 devices.

You can find further information about the STARTER commissioning tool in the chapter Engineering Tools.

Additional information about the STARTER commissioning tool is available on the Internet at:
www.siemens.com/starter

Drive ES engineering system

Drive ES is the engineering system that can be used to integrate the communication, configuration and data management functions of Siemens drive technology into the SIMATIC automation world easily, efficiently and cost-effectively. This system is based on the STEP 7 Manager user interface. Two software packages are available for SINAMICS – Drive ES Basic and Drive ES PCS.

You can find further information about the Drive ES engineering system in the chapter Engineering Tools.

Additional information about the Drive ES engineering system is available on the Internet at:
www.siemens.com/drive-es

More information

All the latest information such as promotional literature, catalogs or brochures can be found on the Internet at
www.siemens.com/servo-geared-motors

You can order or download the listed documentation in common file formats (PDF, ZIP) from this website.

© Siemens 2019

Overview

The Article No. comprises a combination of digits and letters. To obtain a better overview, the Article No. is split up into three, hyphenated blocks.

Example:

1FG1102-1RE03-2AK1-Z D01+K06

The first block (positions 1 to 7) identifies the gearbox type and size; the second (positions 8 to 12) codes the output shaft and the motor type; and additional design characteristics are coded in the third block (positions 13 to 16).

Ordering data

- Complete Article No., with a **-Z** suffix, and order code(s) or plain text.
- The following order codes must be appended to each Article No.:
  - **K06**, **K07**, **K08** or **K11** for the oil type
  - **D01** to **D06**, **D11** to **D16** or **D21** to **D26** for the mounting position

  For further information, see chapter "Options"
- If a quotation has been requested, please specify the quotation number in addition to the Article No.

Structure of the Article No.		Position:	1	2	3	4	5	6	7	-	8	9	10	11	12	-	13	14	15	16	-	Z
SIMOTICS S-1FG1 servo geared motors																						
1st to 5th positions:	**Servo helical geared motor**	• 2-stage – gearbox type *Z*	**1**	**F**	**G**	**1**	**1**	■	■	·	■	■	■	■	■	·	■	■	■	■		
Digit, letter, letter, digit, digit		• 3-stage – gearbox type *D*	**1**	**F**	**G**	**1**	**2**	■	■	·	■	■	■	■	■	·	■	■	■	■		
	Servo parallel shaft geared motor	• 2-stage – gearbox type *FZ*	**1**	**F**	**G**	**1**	**3**	■	■	·	■	■	■	■	■	·	■	■	■	■		
		• 3-stage – gearbox type *FD*	**1**	**F**	**G**	**1**	**4**	■	■	·	■	■	■	■	■	·	■	■	■	■		
	Servo bevel geared motor	• 2-/3-stage – gearbox type *B*/*K*	**1**	**F**	**G**	**1**	**5**	■	■	·	■	■	■	■	■	·	■	■	■	■		
	Servo helical worm geared motor	• 2-stage – gearbox type *C*	**1**	**F**	**G**	**1**	**6**	■	■	·	■	■	■	■	■	·	■	■	■	■		
6th and 7th position:	Gearbox size							■	■													
Digit, digit																						
8th position:	Solid shaft with feather keyway, design 1										**1**											
Digit	Solid shaft with feather keyway, design 2										**2**											
	Solid shaft with feather keyway, design 3										**3**											
	Hollow shaft with feather keyway, design 1										**5**											
	Hollow shaft with feather keyway, design 2										**6**											
	Hollow shaft with feather keyway, design 3										**7**											
	Hollow shaft, special shaft design – for further information, see chapter "Options"										**9**											
9th position:	R14DQ resolver with Drive-CLiQ											**P**										
Letter	AS20DQI encoder with Drive-CLiQ											**Q**										
	AM20DQI encoder with Drive-CLiQ											**R**										
	R15DQ resolver with Drive-CLiQ											**U**										
	AM20DQI encoder with Drive-CLiQ and plug M17 – order code **J4R** – see chapter "Options"											**Z**										
10th and 11th position:	Motor shaft height 36												**C**									
Letter, digit	Motor shaft height 48												**D**									
	Motor shaft height 63												**E**									
	Motor shaft height 80												**F**									
	Motor shaft height 100												**G**									
	Motor length 0													**0**								
	Motor length 1													**1**								
	Motor length 2													**2**								
	Motor length 3													**3**								
	Motor length 4													**4**								
	Motor length 5													**5**								
	Motor length 6													**6**								
12th position:	2000 rpm														**2**							
Digit	3000 rpm														**3**							
	4500 rpm														**4**							
	6000 rpm														**6**							
13th position:	Line voltage 200 ... 240 V 1 AC (DC link voltage 270 ... 330 V DC) in motor version CT (Compact)																**1**					
Digit	Line voltage 380 ... 480 V 3 AC (DC link voltage 510 ... 720 V DC) in motor version CT (Compact)																**2**					
	Line voltage 200 ... 240 V 1 AC (DC link voltage 270 ... 330 V DC) in motor version HD (High Dynamic)																**3**					
	Line voltage 380 ... 480 V 3 AC (DC link voltage 510 ... 720 V DC) in motor version HD (High Dynamic)																**4**					
14th position:	Foot-mounted design																	**A**				
Letter	Foot/flange-mounted design – for flange-mounted design, see chapter "Options"																	**B**				
	Shaft-mounted design (torque arm)	• only for Servo bevel geared motors, 3-stage																**C**				
		• for other servo geared motors																**D**				
		for torque arm design, see chapter "Options"																				
	Flange-mounted design – for flange-mounted design, see chapter "Options"																	**F**				
	Housing flange design																	**H**				
15th to 16th positions:	Gear ratio																					
Letter, digit																						
Special designs																						
Coded	Order code required – see chapter "Options"																				**-**	**Z**
Non-coded	Plain text required																					

© Siemens 2019

Overview (continued)

Example of how to compile an Article No. correctly

The SIZER for Siemens Drives engineering tool must always be used to design the drive system.
The main purpose of this example is to explain the structure of article numbers and to reference the relevant information in the catalog.

Selection and ordering example

Requirement:

- Two-stage servo helical geared motor in foot-mounted design – mounting position M1
- Solid shaft with feather keyway
- Motor with low rotor moment of inertia – motor version HD (High Dynamic)
- Rated motor speed n_{1rated} = 3000 rpm
- Maximum torque required by application M_{2maxA} = 180 Nm
- Maximum speed required by application n_{2maxA} = 150 rpm
- Multi-turn absolute encoder (20 bits/revolution, max. 4 096 distinguishable motor shaft revolutions)
- Operation on a SINAMICS S120 drive system with a DC link voltage of 600 V DC

How to determine the correct servo geared motor and article number:

In accordance with the requirements listed above, the servo geared motor must be selected from one of the selection and ordering data tables for line voltage 380 ... 480 V 3 AC (DC link voltage 510 to 720 V DC) in chapter "SIMOTICS S-1FG1 servo helical geared motors".

Derivation of the Article No.	Structure of the Article No.
• SIMOTICS S-1FG1 servo geared motor	**1FG1□□□ - □□□□□ - □□□□**
Preselection of the servomotor under "Overview of motors" in chapter "Technical definitions for servomotors":	
• Guide value for $i_{\sim} = n_{1rated}/n_{2maxA} \rightarrow$ 3000 rpm/150 rpm = 20 • Guide value for max. motor torque $M_{max} = M_{2maxA}/i_{\sim} \rightarrow$ 180 Nm/20 = 9 Nm With the requirements for n_{1rated} = 3000 rpm, n_{2maxA} = 150 rpm, M_{2maxA} = 180 Nm, the consequent need for $i_{\sim}$ = 20 and M_{max} = 9 Nm and the requirement for an HD version, the following HD version servomotor (the smallest possible for this application) with **n_{1rated} = 3000 rpm**, **M_{max} = 11.3 Nm** (next-higher max. torque) and **motor shaft height 48** is the right product for this application, and forms part of the Article No. for the servomotor:	1FG1□□□ - □□ **D 4 3** - **4** □□□
A suitable servo helical geared motor is included in the selection and ordering data table "For line voltage 380 ... 480 V 3 AC (DC link voltage 510 ... 720 V DC) **– gearbox type Z39" in chapter "SIMOTICS S-1FG1 servo helical geared motors" under "Gearbox size 39, 2-stage – 1FG1103":**	
i = 20.07 (according to table, next-higher transmission ratio of $i_{\sim}$ = 20), M_{2dyn} = 205 Nm ≥ M_{2maxA} = 180 Nm with	
• Helical gearbox, 2-stage	1FG1 **1 0**□ - □□ D 4 3 - 4 □□□
• Gearbox size 39	1FG1 1 0 **3** - □□ D 4 3 - 4 □□□
• Transmission ratio ***i* = 20.07**	1FG1 1 0 3 - □□ D 4 3 - 4 □ **P 1**
Article No. of the servo helical geared motor:	**1FG1 1 0 3 - □□ D 4 3 - 4 □ P 1**
To complete the Article No., see table "Shaft design, encoder system, mounting type and special designs" in the selection and ordering data in chapter "SIMOTICS S-1FG1 servo helical geared motors" under "Gearbox size 39, 2-stage – 1FG1103":	
• Solid shaft with feather keyway	1FG1 1 0 3 - **1** □ D 4 3 - 4 □ P 1
• AM20DQI multi-turn absolute encoder	1FG1 1 0 3 - 1 **R** D 4 3 - 4 □ P 1
• Foot-mounted design	1FG1 1 0 3 - 1 R D 4 3 - 4 **A** P 1
Article No. of the servo helical geared motor without essential options:	**1FG1 1 0 3 - 1 R D 4 3 - 4 A P 1**
To add essential options to the Article No., see table "Shaft design, encoder system, mounting type and special designs" in the selection and ordering data in chapter "SIMOTICS S-1FG1 servo helical geared motors" under "Gearbox size 39, 2-stage – 1FG1103", and refer to the selection and ordering data in chapter Options:	
• Oil type (standard, designation according to DIN 51502: CLP ISO VG 220)	1FG1 1 0 3 - 1 R D 4 3 - 4 A P 1 **- Z K06**
• Mounting position, M1, see chapter "Options" under "Mounting positions"	1FG1 1 0 3 - 1 R D 4 3 - 4 A P 1 - Z K06 + **D01**
Complete Article No. of the servo helical geared motor with Z options:	**1FG1 1 0 3 - 1 R D 4 3 - 4 A P 1 - Z K06 + D01**

© Siemens 2019

Overview

Type designation of gearboxes

Gearbox type	
Helical gearbox	–
Parallel shaft gearbox	***F***
Bevel gearbox, 2-stage	***B***
Bevel gearbox, 3-stage	***K***
Helical worm gearbox, 2-stage	***C***

Transmission ratio	
2-stage	***Z***
3-stage	***D***

Type	
Shaft	
Solid shaft	–
Hollow shaft	***A***
Mounting	
Foot-mounted design	–
Foot/flange-mounted design	***B***
Flange-mounted design (A type)	***F***
Housing flange (C type)	***Z***
Shaft-mounted design (torque arm)	***D***
Connection	
Parallel key	–
Shrink disk	***S***
Splining	***T***
SIMOLOC	***R***
Special features	
Reduced-backlash version	***W***

Example:

	F	***D***	***A***	***D***	***S***	***89***
Gearbox type: Parallel shaft gearbox						
Transmission ratio: 3-stage						
Shaft: Hollow shaft						
Mounting: Shaft-mounted design (torque arm)						
Connection: Shrink disk						
Gearbox size: 89						

© Siemens 2019

1

Notes on the tables in chapters for selection of servo geared motors

Overview

Structure of the technical specifications tables

Technical specifications tables

Gearbox type ...												
Servo geared motor Type	i	R_{ex}	M_{2rated} Nm	M_{2max} Nm	$M_{2Em.Off}$ Nm	n_{2max} rpm	n_{1max} rpm	φ '	F_{R2} N	F_{R2max} N	c_T Nm/ '	J_G 10^{-4} kgm^2
1FG1...-.....-....												

Legend:

- Gear ratio
- Ratio, number of teeth
- Output torque in S1 duty (continuous duty)
- Maximum output torque in short-time duty*)
- Emergency stop torque
- Maximum permissible speed for brief periods*) on output side
- Maximum permissible speed for brief periods*) on input side
- Circumferential backlash – data are for option reduced-backlash version – order code **G99** required
- Permissible radial force on output side in continuous duty
- Permissible radial force on output side in short-time duty*)
- Torsional stiffness
- Mass moment of inertia of gearbox

*) For brief periods:

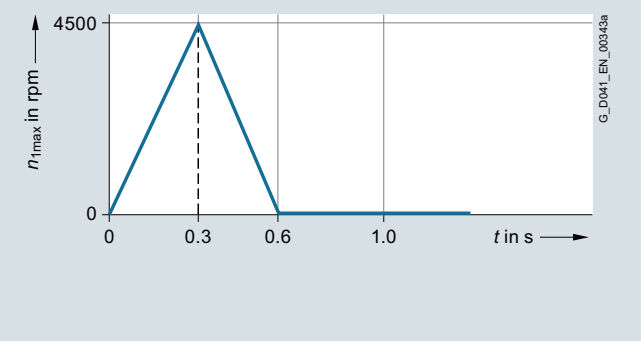

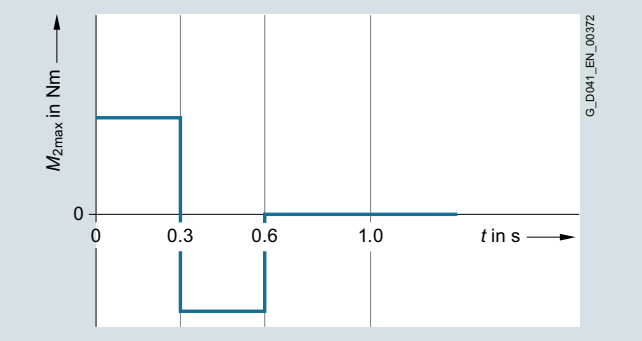

© Siemens 2019

Overview (continued)

Structure of the selection and ordering data tables

Table for selecting servo geared motors

All combinations of servo geared motors with the transmission ratios available in each case can be found in the selection tables contained in the chapters for selection of servo geared motors. The selection tables are sorted according to gearbox type and size.
The short-time maximum permissible output torques of the geared motor M_{2dyn} specified in the catalog refer to a speed of 1450 rpm, mounting position M1 and comparable types of construction, where the input stage does not run completely immersed in oil. Further, standard equipment and standard lubrication of the servo geared motors as well as normal ambient conditions are assumed.

Example:

For line voltage 380 ... 480 V 3 AC (DC link voltage 510 ... 720 V DC) **– gearbox type** *Z29*

Geared motor torque at 1450 rpm
Note: All values in **bold** print are maximum gearbox values.
M_{2dyn}
Nm

Servo helical geared motors
SIMOTICS S-1FG1
Article No.

Max. output speed n_{2max} = **109 rpm**, Transmission ratio i = **41.4**

146	146	146	146	146	146	–	–	–	–	–	–	–	–	–	–	–	–	–	–	1FG1102- . . ■ ■ 6 - ■ . A2 -Z

Motor shaft height:

36																			C	
			48																D	
							63												E	
											80								F	
																100			G	

Motor length/motor version (**CT** = Compact, **HD** = High Dynamic)**:**

			0/CT				0/CT				0/CT					0/CT			0	2
												1/CT					1/CT		1	2
								1/HD											1	4
2/CT				2/CT					2/CT										2	2
										3/CT			3/CT				3/CT		3	2
	3/HD				3/HD														3	4
		4/CT											4/CT						4	2
						4/HD				4/HD									4	4
																	5/CT		5	2
														5/HD					5	4
															6/HD				6	4

Selection of shaft design, encoder system, mounting type and special designs on page 3/3.

1FG1102- ■ ■ . . . - ■ . . -Z

For a description of formula symbols or abbreviations, refer to the glossary in the appendix.

© Siemens 2019

Overview

Motor shaft heights

DIN 747 motor shaft heights for machines

Motor shaft height	Tolerance
mm	mm
≤ 250	-0.5
> 250	-1

Note:

For foot-mounted gearboxes, the mounted motor can extend below the mounting surface of the gearbox.

Shaft extensions

DIN 748-1 cylindrical shaft extensions

Diameter tolerance:

Diameter	Tolerance
mm	mm
≤ 50	ISO k6
> 50	ISO m6

Centering holes according to DIN 332, form DR:

Diameter	Thread size
mm	–
> 16 … 21	M6
> 21 … 24	M8
> 24 … 30	M10
> 30 … 38	M12
> 38 … 50	M16
> 50 … 85	M20
> 85 … 130	M24
> 130	M30

Undercut acc. to DIN 509:

Diameter	Undercut acc. to DIN 509	Suggested construction, minimum hollow on mating piece
mm		mm
> 16 … 18	E1.0 × 0.2	0.9 × 45°
> 18 … 50	E1.2 × 0.2	1.1 × 45°
> 50 … 80	E1.6 × 0.3	1.4 × 45°
> 80 … 125	E2.5 × 0.4	2.2 × 45°

Hollow shafts

Diameter tolerance Ø: ISO H7 measured using a mandrel gauge

Feather key: acc. to DIN 6885 (high form)

Hollow shafts with shrink disk

Diameter tolerance Ø: ISO H7 with mandrel gauge, measured in the area of the shrink disk seat. Hub seat, output side equipped with journal bearing sleeve.

Minimum requirements for the material of the customer shaft:

- Yield strength $R_e \geq 360$ N/mm²
- Module of elasticity, approx. 206 kN/mm²

Hollow shafts with splines

Splines according to DIN 5480

Hollow shafts for the SIMOLOC assembly system

The diameters of the taper bushing and the bronze bushing are designed to hold a customer shaft with tolerance h11.

Minimum requirement for the design of the customer shaft:

- Bright steel drawn DIN EN10278 (tolerance Ø: ISO h11)
- Yield strength $R_e \geq 360$N/mm²
- Module of elasticity, approx. 206 kN/mm²
- Straightness less than 0.5 mm/m

Note:

Deviation from the specified straightness will cause radial runout of the customer's shaft. Customer shafts with minor radial runout ensure optimum operating conditions for geared motors. This has a positive impact on the service life of the drive train.

Flanges

Centering edge tolerance:

Outer flange diameter	Tolerance
mm	mm
≤ 230	ISO j6
> 230	ISO h6

Vent valves

The gearboxes are shown in the dimensional drawings with screw plugs.
If venting is required, then depending on the type of construction, an activated vent valve is installed.
The contour dimension can slightly change as a result.

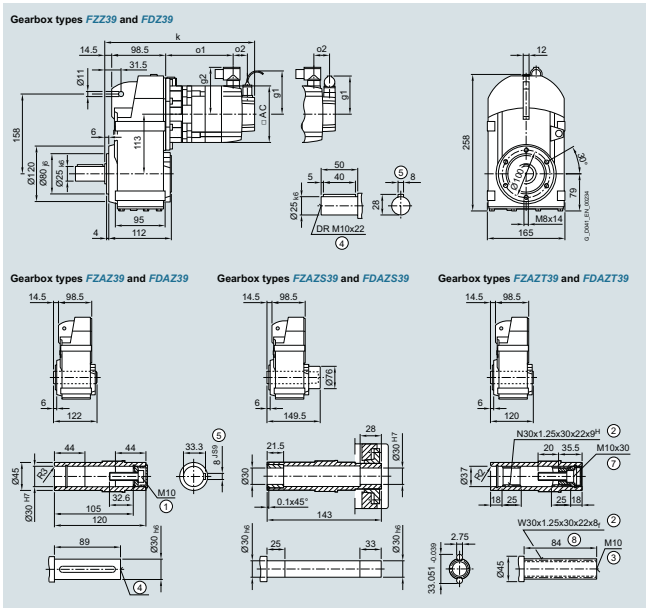

Example, dimensional drawings

© Siemens 2019

Overview

Regulations, standards and specifications

The motors comply with the appropriate standards and regulations, see table below.

As a result of the fact that in many countries the national regulations have been completely harmonized with the international IEC 60034-1 recommendation, there are no longer any differences with respect to coolant temperatures, temperature classes and temperature rise limits.

General specifications for rotating electrical machines	IEC 60034-1
Terminal designations and direction of rotation for electrical machines	IEC 60034-8
Types of construction of rotating electrical machines	IEC 60034-7
Cooling methods of rotating electrical machines	IEC 60034-6
Degrees of protection of rotating electrical machines	IEC 60034-5
Vibration severity of rotating electrical machines	IEC 60034-14
Noise limit values for rotating electrical machines	IEC 60034-9
Cylindrical shaft extensions for electrical machines	DIN 748-3/IEC 60072-1

The SIMOTICS S-1FG1 servo geared motors are UL-approved by Underwriters Laboratories Inc. and also comply with Canadian cUR standards.

Degrees of protection for AC motors

A suitable degree of protection must be selected depending on the operating and environmental conditions to protect the machine against:

- ingress of water, dust and solid foreign objects,
- contact with rotating parts inside a motor and
- contact with live parts.

Degrees of protection of electric motors are specified by a code. This comprises two letters, two digits and, if required, an additional letter.

IP (International Protection)
Code letter designating the degree of protection against coming into contact with and the ingress of foreign bodies and water

0 to **6**
1st digit designating the degree of touch protection and protection against ingress of solid foreign objects

0 to **8**
2nd digit designating the degree of protection against the ingress of water (no protection against the ingress of oil)

W, **S** and **M**
Additional code letters for special degrees of protection

Most motors are supplied with the following degrees of protection:

Motor	Degree of protection	1st digit, protection of persons against contact	Protection against foreign objects	2nd digit, protection against water
Internally cooled	IP23	Protection against finger contact	Protection against medium-sized, solid foreign objects above 12 mm Ø	Protection against spray water up to 60° from the vertical
Surface-cooled	IP54	Complete protection against accidental contact	Protection against harmful dust deposits	Splash water from any direction
	IP55			Water jets from any direction
	IP64	Complete protection against accidental contact	Protection against ingress of dust	Splash water from any direction
	IP65[1]			Water jets from any direction
	IP67[1]			Motor under specified pressure and time conditions under water

Note:
The degrees of protection relevant to SIMOTICS S-1FG1 servo geared motors is **IP65**, see also in chapter "Configuring guide".

Recommended degrees of protection for AC motors

When cooling lubricants are used, protection against water alone is inadequate. The IP rating should only be considered as a guideline in this case. The motors may have to be protected by a suitable cover. Attention must be paid to providing suitable sealing of the motor shaft for the selected degree of protection for the motor.

The table can serve as a decision aid for selecting the proper degree of protection for motors.

Liquids / Effect	General workshop environment	Water, general cooling lubricants (95 % water, 5 % oil)
Dry	IP64	–
Humid/moist environment	–	IP64
Mist	–	IP65
Spray	–	IP65
Jet	–	IP67
Splash/brief immersion/constant inundation	–	IP67

[1] DIN VDE 0530 Part 5 or EN 60034 Part 5 specifies that there are only 5 degrees of protection for the first digit code and 8 degrees of protection for the second digit code in relation to rotating electrical machinery. However, IP6 is included in DIN 40050 which generally applies to electrical equipment.

© Siemens 2019

© Siemens 2019



2/2 Determining the drive data
2/2 Configuring sequence
2/3 Checklist

2/4 Configuring with the SIZER for Siemens Drives engineering tool
2/4 Servo geared motors and converters
2/4 Motor operating range
2/4 Design
2/4 Installation altitude and ambient temperature

2/5 Gearbox
2/5 Gearbox as speed and torque converter
2/5 Standards
2/5 Gearbox efficiency
2/5 Helical, parallel shaft and bevel gearboxes
2/5 Helical worm gearboxes
2/5 Efficiency optimization
2/5 Losses that occur in gearboxes
2/6 Required torque
2/6 Speed at the gearbox input
2/6 Servo geared motor fastening
2/6 Recommended bolt grade for helical gearboxes
2/6 Recommended bolt grade for parallel shaft and bevel gearboxes
2/6 Shaft load and bearing service life
2/6 Existing radial force
2/6 Additional factor C for the transmission element type
2/7 Permissible radial force
2/7 Permissible axial force
2/7 Higher permissible radial and axial force
2/7 Definition of the point of application of radial and axial forces
2/8 Radial force conversion for out of center force application point
2/9 Permissible torque for SIMOLOC assembly system

2/10 General information
2/10 Rating plate data (type plate)
2/10 Ambient temperature and installation altitude
2/10 Cooling and ventilation
2/10 Encoders
2/11 Holding brake
2/13 Degrees of protection
2/13 Noise emission
2/13 Vibratory load
2/14 Servo geared motors with hollow shaft in shaft-mounted design (torque arm)
2/14 Servo parallel shaft geared motors 2-/3-stage
2/14 Servo bevel and servo helical worm geared motors 2-stage
2/14 Servo bevel geared motors 3-stage
2/15 SIMOLOC assembly system
2/15 Components of the SIMOLOC assembly system
2/15 Scope of supply
2/15 Benefits
2/16 Hollow shaft cover
2/16 Sealing cap
2/16 Protection cover
2/16 Lubrication
2/16 Oil quantities
2/16 Roller bearing greases for gearboxes and motors
2/16 Sealing
2/17 Pressure breather valve
2/18 Oil expansion tank
2/19 Oil drain
2/19 Magnetic oil drain screw
2/19 Oil sight glass
2/19 Reduced-backlash version
2/20 Increased chemical resistance

© Siemens 2019

Configuring sequence

Overview

General configuring notes for standard versions are provided in this chapter. The servo geared motor permits individual solutions to be created for a wide range of drive applications. In order to select the correct drive, initially specific data for the application must be known or determined.

The flow diagram schematically shows how to select and dimension a servo geared motor. Use of the SIZER for Siemens Drives engineering tool is recommended for configuring a drive application in detail.
It covers the full range of operations required to configure a complete drive system, from simple single drives to complex multi-axis applications.

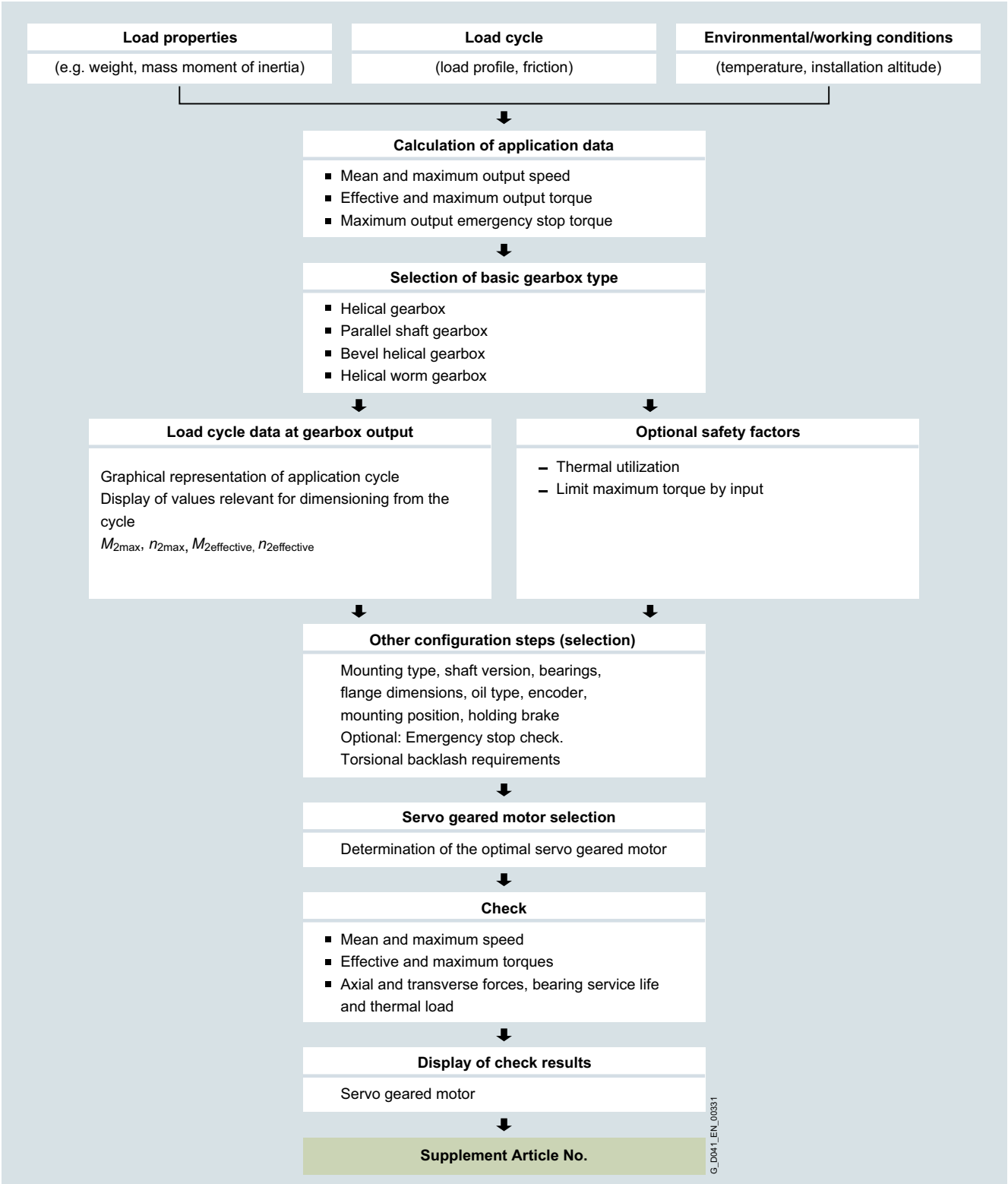

© Siemens 2019

Overview

Important questions pertaining to key aspects of the configuring process can be clarified by means of the checklist.

General

Basic version and load data

Gearbox type: ☐ Helical gearbox ☐ Parallel shaft gearbox ☐ Bevel gearbox ☐ Helical worm gearbox

Max. output speed: _____ rpm **Max. output torque:** _____ Nm

Effective output speed: _____ rpm **Effective output torque:** _____ Nm

Line voltage: _____ V **Cantilever force load:** _____ N

Environmental conditions

Installation altitude: _____ m ☐ Increased environmental stress

Temperature: from _____ to _____ °C Please specify in detail: _____

☐ Normal environmental stress

Brief description of the system: (e.g. sector, conveyor system, etc.)

_____

_____

_____

_____

Gearbox

Mounting and mounting position

Mounting position: ☐ M1 ☐ M2 ☐ M3 ☐ M4 ☐ M5 ☐ M6

Connector position: ☐ Top ☐ Bottom ☐ Left ☐ Right

Mounting type: ☐ Foot-mounted design ☐ Flange-mounted design ☐ Housing flange ☐ Shaft-mounted design

☐ Foot/flange-mounted design

Shafts

Design: ☐ Solid shaft with feather keyway ☐ Hollow shaft with feather keyway ☐ Hollow shaft with shrink disk

☐ Smooth solid shaft ☐ Hollow shaft with splines ☐ SIMOLOC assembly system

Shaft dimensions: (d × l) _____ × _____ mm (depending on gearbox version)

Shaft position: ☐ A ☐ B ☐ Both ends (with right-angle gearbox)

Other requirements: (e.g. axial/radial force)

_____

_____

_____

_____

Motor

Mounted components

Brake: ☐ Holding brake Required holding torque: _____

Encoder: Absolute encoder: ☐ Single-turn ☐ Multi-turn

☐ Resolver

Other requirements:

_____

_____

_____

_____

General options

Surface treatment

Surface protection: ☐ Standard paint finish

☐ Primed with top coat ☐ Primed without top coat ☐ RAL color: _____

Other options:

_____

_____

_____

_____

© Siemens 2019

Overview

The SIZER for Siemens Drives engineering tool (available free of charge) should be used to configure SIMOTICS S-1FG1 servo geared motors. SIZER guides the user through all the important steps of designing the whole drive system. On completion of the drive configuring process (which covers motors, converters and accessories such as cables and contactors), the tool generates project documentation and a bill of materials that can be exported to SAP. The article numbers generated by SIZER for servo geared motors allow the user to export CAD files, dimensional drawings and 3D views from the DT Configurator.

Servo geared motors and converters

All SIMOTICS S-1FG1 servo geared motors listed in the catalog with

- helical gearbox
- parallel shaft gearbox
- bevel gearbox
- helical worm gearbox

can be configured with the following converter systems in SIZER:

- SINAMICS S110
- SINAMICS S120 AC/AC
- SINAMICS S120 DC/AC

Refer to catalogs D 21.4 and D 31.1 for further information about converters.

Motor operating range

The permissible operating range is restricted by the maximum speed, the rated and maximum torques and the ambient temperature.

The motor temperature increases as a result of winding resistance, speed-dependent core losses and bearing friction. To ensure that the permissible heat loss limit is not exceeded, the permissible torque decreases with increasing speed, starting from static torque M_0.

Each motor has a speed/torque characteristic that takes into account the value of the DC link voltage. With an unregulated infeed, the DC link voltage is determined by the value of the line voltage. With a regulated infeed, the DC link voltage depends on the voltage setting (600 V DC in most cases).

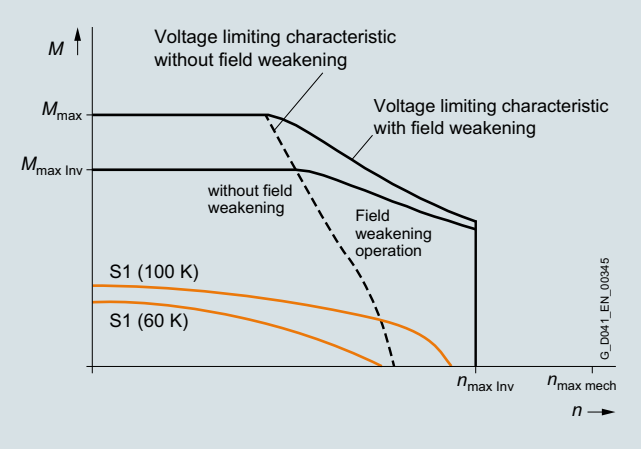

Fundamental curve of the speed/torque characteristic in S1 duty at a temperature rise of 100 K

Design

A load cycle is normally specified for servo applications. This is stated either

- in the form of a speed/torque curve, or a speed characteristic
- is provided with additional information about the moment of inertia and friction.

SIZER provides the same support for the scenarios described above as it does for drives designed for continuous operation. The submenu "Mechanical Systems" in SIZER assists with the design of servo geared motors and applications. The user is required to enter

- traversing curves and
- known data of applications such as hoisting gear or cross cutter.

After all the required data have been entered, SIZER calculates the optimum motor and then checks the properties of the servo geared motor including

- bearing service life,
- oil sump temperature and
- speed and torque limit values (maximum and RMS torque).

The result of this analysis is included in the project documentation.

Installation altitude and ambient temperature

The catalog data refer to an ambient temperature of 40 °C and to an installation altitude up to 1000 m above sea level. Values other than those stated above can be taken into account in the SIZER for Siemens Drives engineering tool.

Additional information on the SIZER for Siemens Drives engineering tool is provided in the chapter "Engineering tools".

The SIZER for Siemens Drives engineering tool is available free on the Internet at:

www.siemens.com/sizer

© Siemens 2019

Overview

Gearbox as speed and torque converter

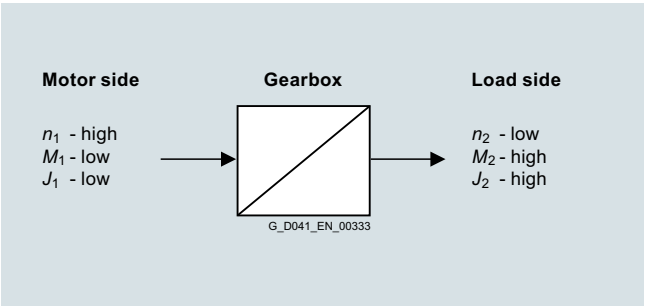

Gear ratio:

$$i = \frac{n_1}{n_2} = \frac{M_2}{M_1 \cdot \eta}$$

Moment of inertia:

$$J_1 = J_2 \left(\frac{n_2}{n_1}\right)^2 = \frac{J_2}{i^2}$$

Formula symbol	Description	Unit
i	Gear ratio	–
η	Gearbox efficiency	–
n_1	Gearbox input speed	rpm
n_2	Gearbox output speed	rpm
M_1	Gearbox input torque	Nm
M_2	Gearbox output torque	Nm
J_1	Moment of inertia of the load referred to the motor shaft	kgm^2
J_2	Moment of inertia of the load referred to the gearbox output	kgm^2
P_{Mot}	Motor output	kW

Standards

Standard	Table of contents
DIN 743	Output shafts
ISO 281, ISO 76	During storage
DIN 7190	Press-fit connection
DIN 6892	Parallel key connection
DIN 3990	Cylindrical gear toothing
DIN 3991	Bevel gear toothing
DIN 3996	Worm gear toothing

Gearbox efficiency

The efficiency of the gearbox is determined in part by the gear teeth, the rolling-contact bearing friction, and the shaft seal friction.

Helical, parallel shaft and bevel gearboxes

SIMOTICS S-1FG1 helical, parallel shaft, and bevel gearboxes have a very high efficiency. Generally, efficiencies of 96 % (2-stage) and 94 % (3-stage) can be assumed. These gearbox types can be operated with energy-efficient motors to create an excellent solution.

Helical worm gearbox

The first stage of the helical worm gearbox is implemented as a helical stage. With the optimally tuned transmission ratios of the worm stage, the best possible overall efficiency is achieved, which is considerably higher than that of worm gearboxes alone.

SIMOTICS S-1FG1 helical worm gearboxes exhibit efficiency levels of between 65 and 90 %.

The high degrees of efficiency ensure that the helical worm gearboxes are not self-locking.

- Running-in period

  The tooth flanks on new helical worm gearboxes will not yet be fully smoothed, meaning that the friction angle will be greater and efficiency lower during the running-in period. The higher the transmission ratio, the more pronounced the effect.

  The running-in process should take approximately 24 hours of operation at full load. In most cases, the catalog values will then be reached.

Efficiency optimization

As a result of the large range of transmission ratios, in many cases, instead of a 3-stage gearbox, a 2-stage gearbox can be used.

This means that the efficiency is improved by approximately 2 % when compared to conventional drives.

Further, the efficiency can be improved by optimizing the mounting position and the input speed.

Losses that occur in gearboxes

- Splashing losses

  Splashing losses depend on the type of oil used and therefore on the mounting position of the gearbox. As a general rule, gearboxes in a horizontal mounting position have the lowest splashing losses. The level of splashing losses depends in particular on the speed of the first gearbox stage.

- Losses through friction

  Friction losses occur at the tooth meshing, in the bearings and at the shaft seal rings.

© Siemens 2019

Overview (continued)

Required torque

Once the load situation (drive data) has been clarified, the required output torque can be determined.

$$M_2 = \frac{P_{mot} \cdot 9550}{\left(\frac{n_1}{i}\right) \cdot \eta} = \frac{P_{mot} \cdot 9550}{n_2} \cdot \eta$$

Speed at the gearbox input

The gearboxes cover a wide speed range thanks to the large range of transmission ratios.

The gearboxes operate at variable speeds when used in conjunction with SINAMICS frequency converters.

At higher motor speeds above 1500 rpm you will generally experience higher than average noise levels and a lower than average bearing service life. This depends to a large extent on the transmission ratio and gearbox size in question. Furthermore, higher speeds additionally influence the thermal properties and service intervals of the gearbox.

Servo geared motor fastening

Servo geared motors are secured by bolts of grade 8.8 to the customer's installation. When the largest possible motor shaft height is attached to the gearbox and with elevated levels of vibration, further measures need to be taken for flange-mounted servo geared motors.

We recommend that the following possibilities are assessed:

- Selection of a larger output flange
- Use of bolts of grade 10.9
- Use of an anaerobic adhesive to improve the friction lock between the gearbox and the mounting surface

Recommended bolt grade for helical gearboxes in housing flange or flange-mounted design

Helical gearboxes in housing flange design and in flange-mounted design (gearbox types *DZ*/*ZZ* and *DF*/*ZF*) with the smallest available output flanges must be bolted to the mounting surface with bolts of grade 10.9 (see table). Suitable washers must be inserted underneath the bolt head for gearbox sizes *19* to *39*.

Helical gearbox in		Flange	Strength class of bolt/nut
Housing flange design	Flange-mounted design		
DZ/*ZZ19*	*DF*/*ZF19*	A120	**10.9** [1]
DZ/*ZZ29*	*DF*/*ZF29*	A120	**10.9** [1]
DZ/*ZZ39*	*DF*/*ZF39*	A120	**10.9** [1]
DZ/*ZZ49*	*DF*/*ZF49*	A140	**10.9**
DZ/*ZZ59*	*DF*/*ZF59*	A160	**10.9**
DZ/*ZZ69*	*DF*/*ZF69*	A200	**10.9**
DZ/*ZZ79*	*DF*/*ZF79*	A250	**10.9**
DZ/*ZZ89*	*DF*/*ZF89*	A300	**10.9**
DZ/*ZZ109*	*DF*/*ZF109*	A350	**10.9**
DZ/*ZZ129*	*DF*/*ZF129*	A350	**10.9**

Recommended bolt grade for parallel shaft gearboxes and bevel gearboxes in flange-mounted design

Parallel shaft gearboxes (gearbox types *FF*/*FAF*) and bevel gearboxes (gearbox types *KF*/*KAF*) in combination with larger servomotors must be bolted to the mounting surface with bolts of grade 10.9 (see table).

Parallel shaft gearbox	Bevel gearbox	Flange	Motor shaft height				
			36	48	63	80	100
in flange-mounted design			Strength class of bolt/nut				
F.F/*F.AF39*	*K.F*/*KAF39*	A160	**8.8**	**8.8**	**10.9**	**10.9**	–
F.F/*F.AF49*	*K.F*/*KAF49*	A200	**8.8**	**8.8**	**8.8**	**8.8**	**10.9**
F.F/*F.AF69*	*K.F*/*KAF69*	A250	**8.8**	**8.8**	**8.8**	**8.8**	**8.8**
F.F/*F.AF79*	*K.F*/*KAF79*	A250	**8.8**	**8.8**	**8.8**	**8.8**	**8.8**
F.F/*F.AF189*	*K.F*/*KAF89*	A300	–	–	**8.8**	**8.8**	**8.8**
F.F/*F.AF109*	*K.F*/*KAF109*	A350	–	–	**8.8**	**8.8**	**8.8**
F.F/*F.AF129*	*K.F*/*KAF129*	A450	–	–	–	**8.8**	**8.8**
–	*K.F*/*KAF149*	A450	–	–	–	–	**8.8**

Shaft load and bearing service life

Existing radial force

The radial forces either come from the driven machine or they are caused by the transmission elements.

The existing radial force F_{Rexist} at the output shaft is obtained as follows:

- The required geared motor output torque M_2
- Average diameter of the mounted transmission element d_0
- Transmission element type, e.g. sprocket wheel

The transmission element type determines the additional factor C (see table).

$$F_{Rexist} = 2000 \cdot \frac{M_2}{d_0} \cdot C$$

Additional factor C for the transmission element type

Transmission element	Explanation	Additional factor C
Toothed wheel	> 17 teeth	**1.00**
	≤ 17 teeth	**1.15**
Sprocket wheel	≥ 20 teeth	**1.00**
	14 … 19 teeth	**1.25**
	≤ 13 teeth	**1.40**
Toothed belts	Preloading force	**1.50**
V-belts	Preloading force	**2.00**
Flat belts	Preloading force	**2.50**

[1] Use suitable washers underneath the bolt head.

© Siemens 2019

Overview (continued)

Permissible radial force

The permissible radial force F_{R2} is determined by the required bearing service life, among other things. The nominal service life L_{h10} is determined in accordance with ISO 281. Normally, calculating the nominal bearing service life is completely adequate.

The selection tables specify the permissible radial force F_{R2} for the output shafts of foot-mounted gearboxes with solid shaft. These table values refer to the force application point at the center of the shaft extension and are minimum values, which apply under the most unfavorable conditions (force application angle, mounting position, direction of rotation).

Note:
2-stage and 3-stage servo bevel geared motors (gearbox types *B* and *K*) in mounting position M1 with foot mounting on the face side:
A maximum of 50 % of the radial force F_{R2} specified in the tables is permissible.

2-stage and 3-stage servo helical geared motors (gearbox types *ZB* and *DB*) in foot/flange-mounted design:
For torque transmission via the flange surface, a maximum of 50 % of the radial force F_{R2} specified in the tables is permissible.

Permissible axial force

If no radial force is present, then max. 50 % of the permissible radial force can be applied as a permissible axial force F_{ax} (tension or compression).

Higher permissible radial and axial force

The permissible radial force load can be increased, taking the force application angle α and the direction of rotation into account.

The gearboxes can be supplied with the standard design or with reinforced output shaft bearings. The reinforced bearings allow higher radial and combined forces (radial and axial) to be absorbed.

If higher radial or axial forces or combined loads comprising radial and axial forces occur, then please consult Siemens.

Formula symbols and units for existing radial force, permissible radial and axial forces and bearing service life

Formula symbol	Description	Unit
C	Additional factor for radial force calculation	–
d_0	Average diameter of the mounted transmission element	mm
F_{ax}	Permissible axial force for foot-mounted gearbox	N
F_{Rexist}	Existing radial force from the mounted transmission element	N
F_{R2}	Permissible radial force at the center of shaft extension (I/2)	N
F_x	Permissible radial force from out of center force application point	N
M_2	Servo geared motor output torque	Nm
α	Force application angle	°
x	Distance from the shaft shoulder up to the point where force is applied	mm
L_{h10}	Nominal service life	h
L_{na}	Modified service life	h

Definition of the point of application of radial and axial forces

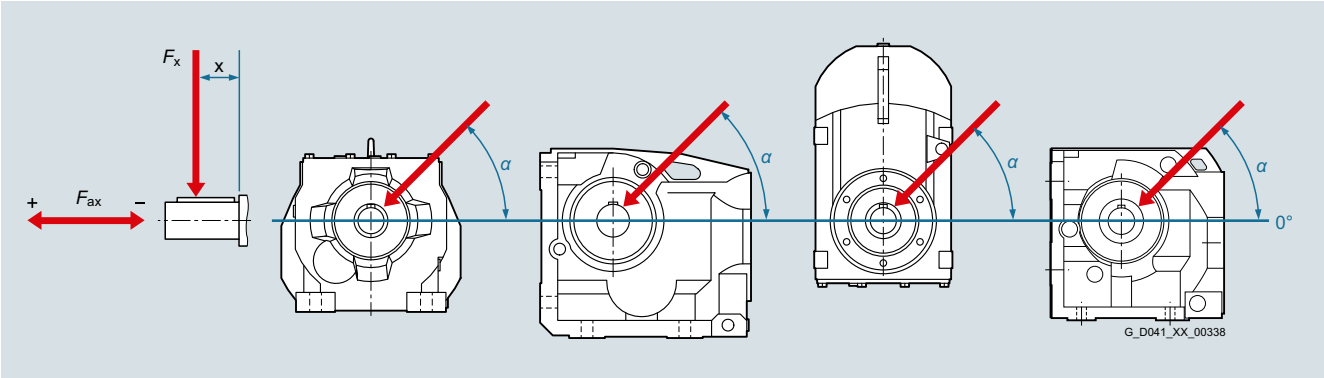

© Siemens 2019

Overview (continued)

Radial force conversion for out of center force application point

If the force is not applied at the center of the shaft extension, the permissible radial force must be converted using the following formula.

The lower value of F_{xperm1} (bearing service life) and F_{xperm2} (strength) is the permissible radial force. The calculation is applicable without axial force.

Permissible radial force according to the bearing service life: $F_{xperm1} = F_{R2} \cdot \frac{y}{(z + x)}$

Permissible radial force according to the shaft strength: $F_{xperm2} = \frac{a}{(b + x)}$

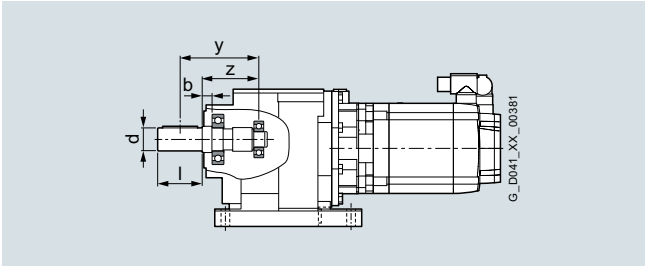

Gearbox constants for calculating the radial force:

Gearbox size	Constants					
	y	z	a	b	d	l
	mm	mm	kNmm	mm	mm	mm
Helical gearboxes Z and D						
19	91	71	52.8	12	20	40
29	104	79	137	12	25	50
39	116	91	109	0	25	50
49	138	108	260	15	30	60
59	143.5	108.5	414	19	35	70
69	169	134	385	0	35	70
79	172.5	132.5	536	0	40	80
89	212.5	162.5	929	0	50	100
109	250	190	1212	0	60	120
129	297	227	2051	0	70	140
Parallel shaft gearbox F						
29	108.5	83.5	159	0	25	50
39	123.5	98.5	146	0	25	50
49	154.5	124.5	239	0	30	60
69	175	140	378	0	35	70
79	191	151	544	0	40	80
89	226	176	884	0	50	100
109	256	196	1500	0	60	120
129	324	254	2625	0	70	140
Bevel gearbox B						
19	97.5	77.5	38	0	20	40
29	117	97	83	0	20	40
39	143.5	113.5	209	0	30	60
49	175	140	392	0	35	70
Bevel gearbox K						
39	123.5	98.5	152	0	25	50
49	154.5	124.5	235	0	30	60
69	175	140	378	0	35	70
79	191	151	556	0	40	80
89	226	176	916	0	50	100
109	256	196	1470	0	60	120
129	324	254	2800	0	70	140
149	385	300	5525	0	90	170

© Siemens 2019

Overview (continued)

Gearbox size	Constants					
	y	z	a	b	d	l
	mm	mm	kNmm	mm	mm	mm
Helical worm gearbox C						
29	117.5	97.5	84	0	20	40
39	123.5	98.5	157	0	25	50
49	154.5	124.5	236	0	30	60
69	171.5	136.5	410	0	35	70
89	220.0	175.0	736	0	45	90

Permissible torque for SIMOLOC assembly system

It is important to note that the maximum permissible torque is dependent on the selected machine shaft diameter.

Diameter of customer's shaft	Gearbox size					
	29	39	49	69	79	89
	Max. permissible torque M_2					
	Nm					
Metric shafts						
20	115					
25	150	205				
30		290	375			
35			480	460	840	
40			600	600	1000	1100
50						1750
Imperial shafts						
0.75"	100					
1"	150	205				
1.1875"		290	375			
1.25"		290	415			
1.375"			480	460	840	
1.4375"			480	500	915	
1.5"				545	1000	
1.625"			600	600	1000	1180
1.75"						1375
1.9375"						1680
2"						1750

© Siemens 2019

Overview

Rating plate data (type plate)

The rating plate (type plate) shows the technical specifications for the supplied motor. A second rating plate is supplied as a separate accessory with the servo geared motor, and can be used for documentation purposes.

Example of rating plate:

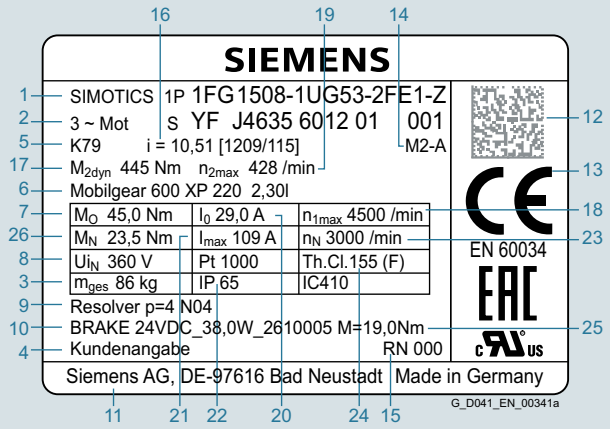

1 Product name, three-phase motor, Article No. (without order codes)
2 Factory number (Ident No., production number)
3 Total weight [kg]
4 Customer specifications for Y84
5 Gearbox type
6 Gearbox oil/gearbox oil quantity [l]
7 Permanent static torque [Nm]
8 Induced voltage [V]
9 Encoder type
10 Brake type
11 Manufacturer's address, country of origin
12 Barcode - serial number + Article No. (without order codes)
13 Certifications; EN 60034/UL/CE/EAC/CSA
14 Mounting position
15 Revision number
16 Gear ratio, number of teeth
17 Maximum output torque during short-time duty [Nm]
18 Max. permissible speed input side during short-time duty [rpm]
19 Max. permissible speed output side during short-time duty [rpm]
20 Stall current [A]
21 Maximum current [A]
22 Degree of protection
23 Rated speed of motor (irrespective of gearbox) [rpm]
24 Temperature class
25 Braking torque (only for spring-operated brake) [Nm]
26 Rated torque

Ambient temperature and installation altitude

Unrestricted operation: –15 °C to +40 °C, dependent on oil type.

All of the catalog data refer to an ambient temperature of 40 °C, mounted so that the motors are not thermally insulated and an installation altitude up to 1000 m above sea level.

Under conditions other than those specified above (ambient temperature > 40 °C or installation altitude > 1000 m above sea level), the permissible torque/power must be determined using the factors from the following table.

The S1 characteristic must be shifted in parallel depending on the result of the factors applied. When the servo geared motor is configured with the SIZER for Siemens Drives engineering tool, the appropriate factors are applied automatically.

This results in a maximum torque of the motor of:

$M_{perm} = M_{rated} \cdot k_{HT}$

Formula symbol	Description	Unit
P_{perm}	Permissible motor power	kW
P_{rated}	Rated motor power	kW
k_{HT}	Factor for non-standard ambient temperature and installation altitude	–
M_{perm}	Permissible motor torque	Nm
M_{rated}	Rated motor torque	Nm

Factors to reduce the torque/power (derating):

Installation altitude	Ambient temperature				
	< 30 °C	30 … 40 °C	45 °C	50 °C	55° C
	Factor for non-standard ambient temperature and installation altitude				
m	k_{HT}				
1000	1.07	1.00	0.96	0.92	0.87
1500	1.04	0.97	0.93	0.89	0.84
2000	1.00	0.94	0.90	0.86	0.82
2500	0.96	0.90	0.86	0.83	0.78
3000	0.92	0.86	0.82	0.79	0.75
3500	0.88	0.82	0.79	0.75	0.71
4000	0.82	0.77	0.74	0.71	0.67

Cooling and ventilation

For naturally-cooled motors, the heat loss is dissipated through thermal conduction, radiation and natural convection.
To ensure sufficient cooling, a minimum clearance of 100 mm to adjacent components must be observed on 3 sides.

Encoders

For motors with integrated DRIVE-CLiQ interface, the encoder signal is converted and transferred via DRIVE-CLiQ to the SINAMICS S converter. The DRIVE-CLiQ interface simplifies the commissioning and diagnostics through the electronic type plate that contains the encoder and motor data.

The encoder types absolute encoder and resolver are uniformly connected with a MOTION-CONNECT DRIVE-CLiQ cable.
For further information about encoders, please refer to chapter "Technical definitions for servomotors".

© Siemens 2019

Overview (continued)

Holding brakes

Many drives need a holding brake with an emergency stop function for safety reasons or to meet process requirements.

The permanent-magnet and spring-operated brakes used for SIMOTICS S-1FG1 servo geared motors function according to the quiescent current principle. The rated voltage of the holding brake is 24 V DC ± 10 % Voltages outside this tolerance range can cause faults. A manual brake release mechanism and an air gap check are optionally available for spring-operated brakes.

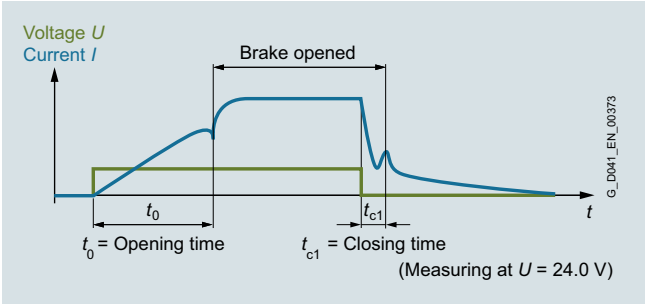

Opening and closing times for holding brakes

Permanent-magnet brakes

- Standard holding brake – order code **N23**
- Holding brake with increased braking torque – order code **N24**

The magnetic field produced by the permanent magnet of the brake exerts a tension on the brake anchor plate, i.e. in a condition of zero current, the brake is closed and the motor shaft thereby stopped.

When the rated voltage of 24 V DC ± 10 % is applied to the brake, current flows through the coil and produces a counter-field that cancels the pull of the permanent magnet, causing the brake to release.

In the event of emergency stops or power failures, approximately 2000 braking operations can be performed with the maximum operating energy without causing excessive wear on the holding brake.

Condition:
maximum external moment of inertia = moment of inertia of motor and n_{max} type-specific.

The holding brake is not a working brake for braking the rotating motor.

Motor Motor shaft height	Type	Holding torque M_{4Br}	Dynamic braking torque M_{1Br}	Direct current	Opening time with varistor t_0	Closing time with varistor t_{c1}	Maximum operating energy per brake operation
		Nm	Nm	A	ms	ms	J
Standard holding brake for SIMOTICS S-1FG1 servo geared motors (order code N23)							
36	1FG1..-..C..	1.9	1	0.3	50	30	40
48	1FG1..-..D..	4.0	3	0.5	70	30	150
63	1FG1..-..E..	13	8.5	0.8	100	50	380
80	1FG1..-..F..	22	11	0.9	200	60	1400
100	1FG1..-..G0.	23	11	1.0	300	70	3380
100	1FG1..-..G1. 1FG1..-..G3. 1FG1..-..G5.	43	25	1.0	300	70	3380
Holding brake with increased braking torque for SIMOTICS S-1FG1 servo geared motors (order code N24)							
36	1FG1..-..C..	3	1.5	0.3	60	25	30
48	1FG1..-..D..	8	5	0.6	90	30	270
63	1FG1..-..E..	18	11	0.8	150	50	880
80	1FG1..-..F..	48	25	1.0	220	65	1900
100	1FG1..-..G..	85	35	1.6	250	70	5300

© Siemens 2019

Overview (continued)

Spring-operated brake

These brakes are electromagnetic units. An electromagnetic field is used to release the brake which is applied using spring force. They operate in accordance with the quiescent current principle, i.e. when no current is flowing, the spring-operated brake brakes and holds the drive. When power is applied to the brake, it is released and the drive is free to rotate.

In the event of a power failure or an emergency stop, the drive is braked from its current speed down to standstill.

The holding brake is not a working brake for braking the rotating motor.

The use of a spring-operated brake increases the overall length of the motor relative to motor versions without a brake,
by 48 mm with motor shaft height 80 and
by 62 mm with motor shaft height 100.

Motor Motor shaft height	Type	Order code	Holding torque M_{4Br} Nm	Rated braking torque M_{2Br} Nm	Direct current A	Opening time with varistor t_0 ms	Closing time with varistor t_{c1} ms	Maximum operating energy per brake operation J	Total operating energy kJ
80	1FG1..-..F	**N30**	8	11	1.6	150 (55)	150 (130)	2800	5600
		N31	11	15		200 (60)	140 (100)		5600
		N32	15	22		250 (80)	120 (80)		5600
		N33	20	30		350 (100)	110 (75)		5600
		N34	30	40		500 (140)	80 (45)		4200
100	1FG1..-..G	**N30**	19	25	1.6	300 (115)	200 (130)	6500 (13000)[1]	13000
		N31	23	32		370 (130)	180 (110)		13000
		N32	34	50		500 (150)	130 (80)		13000
		N33	41	62		640 (190)	110 (65)		13000
		N34	50	80		700 (220)	100 (60)		10000

Total operating energy
When the brake operates above the total operating energy limit, it can suffer wear that will cause it to malfunction.

Switching times
The opening and closing times are calculated on the basis of the life cycle and total wear of the brake and should be taken into account when the system is configured.
The values stated in parentheses are the values for new brakes calculated according to DIN VDE 0580.

Manual brake release - order code **K82**

A manual brake release can be ordered as an option for servo geared motors with spring-operated holding brake. This release disengages the brake. When the manual brake release lever is pushed towards the NDE, the spring-operated brake is mechanically released and disengaged. The Manual brake release lever is detachable.

With the manual brake release option, the servo geared motor is automatically equipped with an opening for mechanical air gap check. During the air gap check, the air gap of the spring-operated brake can be checked and thus the wear state of the friction disk can be determined. To perform this check, the brake module must be opened electro-magnetically when the motor is at a standstill. The plug over the opening must be removed so that the gap between the armature and the friction disk can be measured by means of a feeler gauge. If the maximum air gap is reached, the brake is no longer operationally reliable and must be replaced. Wear adjustment is not possible.

If the manual brake release option (**K82**) is selected, the position of the manual brake release lever can be selected relative to the gearbox in addition:

- Without order code **standard** - position **2** - manual release lever at the top
- Order code **Q94** - position **1** - manual release lever on the right
- Order code **Q95** - position **4** - manual release lever at the bottom
- Order code **Q96** - position **3** - manual release lever on the left

The mechanical air gap check is always located on the same side as the manual brake release lever.

The position of the manual brake release lever to the right of the connector is generally not possible – in addition, the position on the left is not possible for motor shaft height 80 – see illustration and position combinations on the right.

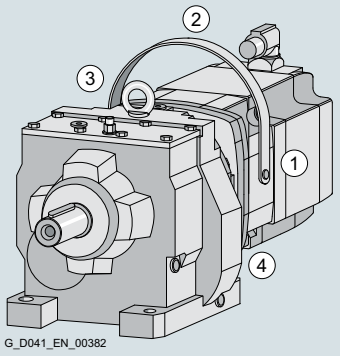

Position **1**
Manual brake release lever right - **Q94**
Connector right - **Q91**

Position **2**
Manual brake release lever top - **Standard**
Connector top - **Standard**

Position **3**
Manual brake release lever left - **Q96**
Connector left - **Q93**

Position **4**
Manual brake release lever bottom - **Q95**
Connector bottom - **Q92**

Possible position combinations of connectors and manual brake release lever:

			Position of the connector			
			Top	Right	Bottom	Left
		Order code	Standard	**Q91**	**Q92**	**Q93**
Position of the manual brake release lever	Top	Standard	✓	■	✓	–
	Right	**Q94**	–	✓	■	✓
	Bottom	**Q95**	✓	–	✓	■
	Left	**Q96**	■	✓	–	✓

✓ Motor shaft heights 80, 100 ■ Only for Motor shaft height 100

[1] Braking operations with maximum operating energy up to 13000 J are permissible. In order to protect the brake against excessive wear, however, only three consecutive braking operations and only 50 in total are permitted.

© Siemens 2019

Overview (continued)

Degrees of protection

Degrees of protection of electric motors are specified by a code comprising two numbers:

First code number	Brief description	Second code number	Brief description
6	The machine is dust-tight	**5**	The motor is protected against jets of water

The first code number of the degree of protection indicates the degree to which an enclosure provides protection against contact and the ingress of foreign bodies.

The second code number indicates the protection that an enclosure offers regarding the ingress of water. The degree of protection designation in accordance with EN 60034-5 and IEC 60034-5 is made using the letters "IP" and two digits.

IP = International Protection

The motors are supplied in IP65 to standard IEC 60034-5. They can be installed in dusty or humid environments.

The degree of protection only refers to the motor. When selecting higher degrees of protection, the equipment on the gearbox side should be taken into account (seals, vents). The shaft output at the gearbox must be protected against contamination/water jets.

Protection against water alone is not sufficient for fluids that contain oil or aggressive substances or for penetrative fluids. In these cases, the servo geared motors must be protected by suitable covers.

Noise emission

The noise emitted by SIMOTICS S-1FG1 servo geared motors in operation from 0 speed up to rated speed can reach the following enveloping surface sound pressure level *L*p(A):

Sound pressure level:

Motor type	Motor shaft height	Sound pressure level L_{pA} (1m) in accordance with EN ISO 1680, max. (tolerance +3) up to Rated motor speed n_{1rated}
1FG1 . . . - . . C 1FG1 . . . - . . D	36 48	65 dB(A)
1FG1 . . . - . . E	63	70 dB(A)
1FG1 . . . - . . F 1FG1 . . . - . . G	80 100	75 dB(A)

The servo geared motors are certified for a wide range of installation and operating conditions. These conditions, such as rigid or vibration-isolated foundation design, influence noise emission, sometimes significantly.

Vibratory load

For perfect function and to comply with the geared motor specification (particularly the bearing service life) the vibration values specified in the following table must not be exceeded.

Vibration values:

		Vibration value
Vibration velocity according to ISO 10816	V_{rms}	Max. 4.5 mm/s
Axial vibration acceleration	$a_{peak\ axial}$	25 m/s^2
Radial vibration acceleration	$a_{peak\ radial}$	50 m/s^2

The measurement points 1, 2 and 4 to 6 should be selected in accordance with ISO 10816-1 Paragraph 3.2. The vibration values must not exceed the specified limits at any measurement point.

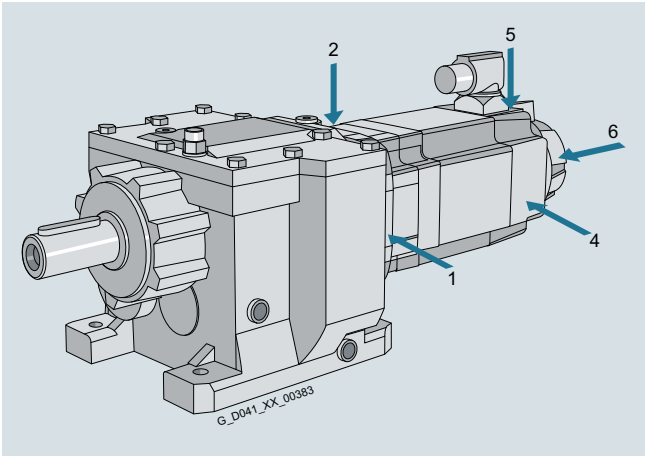

The vibration acceleration must be evaluated in a frequency band of 10 to 2000 Hz.
The maximum peak value in the time range is assessed.

To evaluate the vibration velocity, the measuring equipment must fulfill the requirements of ISO 2954.

© Siemens 2019

Overview (continued)

Servo geared motors with hollow shaft in shaft-mounted design (torque arm)

Servo parallel shaft geared motors 2-/3-stage

Gearbox type *F.AD*

The rubber buffers (supplied loose) are used to flexibly support the gearbox on the housing plate provided. When mounting, the rubber buffer must be pretensioned to the dimension specified in the dimensional drawing.

The elastomer used for support is manufactured out of natural rubber of grade 70° ± 5 Shore A.

The rubber buffers are suitable for all mounting positions and can withstand temperatures of between -40 °C and +80 °C.

The dimensions of the torque arm can be seen in the dimensional drawings.

Servo bevel and servo helical worm geared motors 2-stage

Gearbox types *BAD* and *CAD*

The torque arm can be screwed to the gearbox housing at various positions.

The elastomer used for support is manufactured out of natural rubber of grade 60° Shore A.

The flexible bushing is suitable for all mounting positions and can withstand temperatures of between -40 °C and +80 °C.

When ordered, the torque arm is supplied loose.

Servo bevel geared motors 3-stage

Gearbox type *KAD*

The torque arm of 3-stage bevel gearboxes is mounted on the underside of the housing. The flexible bushing is used to flexibly support the gearbox on the torque arm.

The elastomer used for support is manufactured out of natural rubber of grade 60° Shore A.

The flexible bushing is suitable for all mounting positions and can withstand temperatures of between -40 °C and +80 °C.

The dimensions of the torque arm can be seen in the dimensional drawings.

© Siemens 2019

Overview (continued)

SIMOLOC assembly system

The new SIMOLOC assembly system has been designed to provide a friction-locked connection between the motor shaft made of drawn shaft material of grade h11 or lower and the hollow shaft in the gearbox.

The SIMOLOC assembly system offers a low-cost, easy-to-fit alternative to conventional shaft connections such as hollow shaft with a feather key, hollow shaft with shrink disk or hollow shaft with spline.

It is compatible with the shaft-mounted designs of the parallel shaft, bevel and helical worm gearboxes.

Several diameters are available for each gearbox size.

Components of the SIMOLOC assembly system

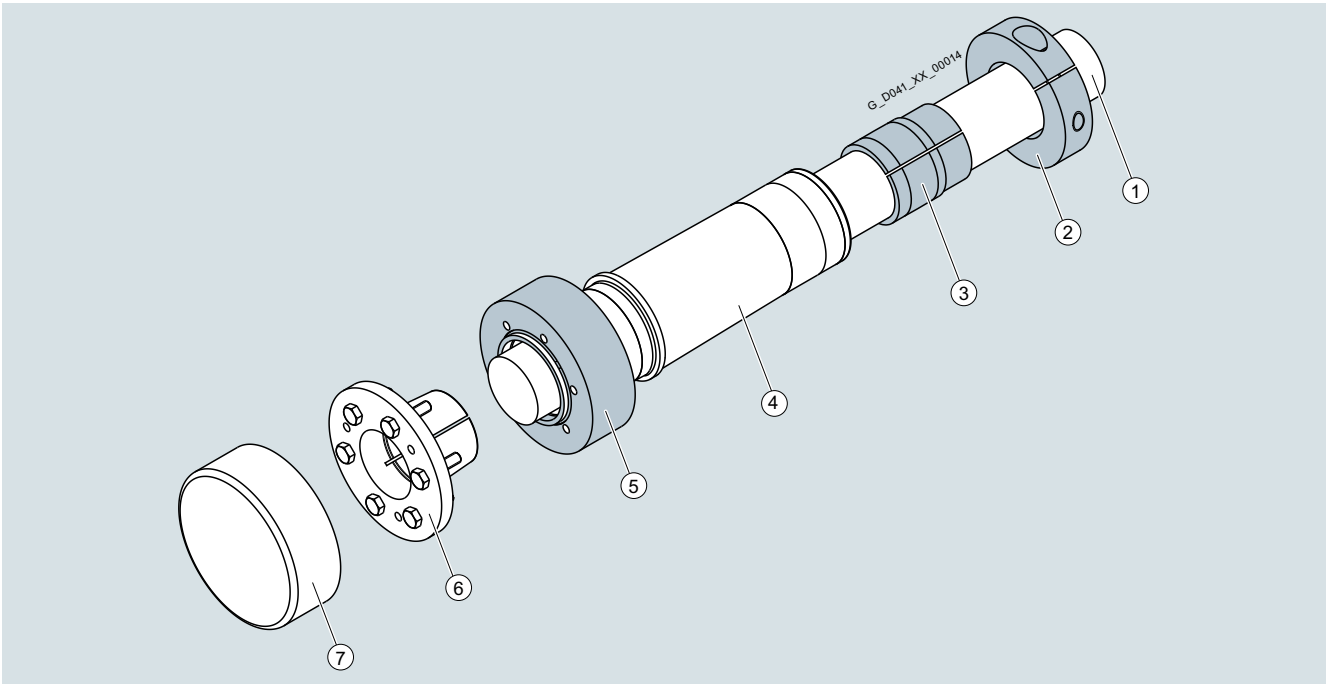

SIMOLOC assembly system

① Machine shaft
② Clamping ring
③ Bronze bushing
④ Hollow shaft of gearbox
⑤ V-ring
⑥ Taper bushing
⑦ Rotating protective cover

Scope of supply

The gearbox is shipped with a SIMOLOC hollow shaft. The diameter-specific components are supplied as a separate assembly kit. The unit is supplied with pre-assembled rotating protection cover. The non-rotating protection cover can be ordered as an option.

Benefits

Cost reduction

- The input shaft of the motor can be made of low-cost, drawn shaft material of grade h11 or lower.
- The shaft is cheaper to machine because there is no need to machine the shaft seat and a keyway is not required.

Quick and easy mounting

- Easy to mount and dismantle thanks to adequate clearance between the motor shaft and hollow shaft. The press fit is not made until the taper bushing is inserted.
- The press fit prevents the formation of fretting corrosion. The taper bushing can be removed easily in order to separate the press-fit connection.
- No tight fits need to be overcome when the gearbox is pushed onto the motor shaft.

Variability

- Quick adjustment of the gearbox to different motor shaft diameters is possible by replacement of the taper and bronze bushings.
- Easy conversion from metric to inch dimensions and vice versa.

Available diameters

The SIMOLOC assembly system can be supplied for shaft-mounted designs. 2 metric versions and 2 to 4 inch versions are available for all gearbox sizes.

© Siemens 2019

Overview (continued)

Hollow shaft cover

Sealing cap

The bore of the hollow shaft is sealed using a plastic sealing cap.

Gearboxes with hollow shaft and shrink disk have a rotating protective cover.

The dimensions of the rotating protective cover can be seen in the dimensional drawings provided in the chapters for selection of servo geared motors.

For safety reasons, stationary protection covers may be required.

Protection cover

For gearbox sizes *19* to *149*, a stationary protection cover for the hollow shaft and hollow shaft with shrink disk can be selected.

For servo bevel geared motors with bevel gearbox type ***K*** (3-stage) and for servo helical worm geared motors with helical worm gearbox type ***C*** (2-satge) in foot-mounted design and in hollow shaft design with shrink disk, a fixed protective cover is not possible.

The dimensions of the protection cover can be seen in the separate dimensional drawing provided in the chapters for selection of servo geared motors.

Lubrication

The gearboxes are filled in the factory with a high-quality lubricant.
Lubricants permitted for the various gearbox types and applications are listed in the lubricant table under heading "Sealing and lubrication" in the chapter Options.

Other oils from various lubricant manufacturers that have been approved by Siemens can be found on the Internet in the Service and Support pages in the List of approved and recommended gear lubricants T 7300:

https://support.industry.siemens.com/cs/ww/en/view/44231658

Note:
For ambient conditions with a high air humidity and salt-laden atmosphere, we recommend that only mineral or PAO oils are used.

Oil quantities

The lubricant quantity depends on the gearbox type, size and mounting position. The corresponding oil quantities are specified in the operating instructions and on the rating plate of the geared motor.

Roller bearing greases for gearboxes and motors

The roller bearings of gearboxes and motors are lubricated in the factory with a roller bearing grease that is coordinated with the selected application area. The quantity of grease between the rolling elements and the space in front of the bearing depends on the operating conditions and the gearbox mounting position. For operation in the selected application areas, it is not necessary to relubricate the roller bearings.

We recommend that the grease filling of the roller bearings is also changed when the oil or shaft sealing rings are replaced.

Other greases approved by Siemens supplied by different lubricant manufacturers are specified in the List of approved and recommended gearbox lubricants T 7300.

https://support.industry.siemens.com/cs/ww/en/view/44231658

Sealing

The standard models of gearbox are supplied with high-quality radial shaft sealing rings with dust protection lips. This sealing system is reliable for a wide range of applications.

Special application areas and environmental conditions require special radial shaft sealing rings and materials, which are coordinated with the particular gearbox oil and environment. This coordinated sealing system ensures that the plant is highly reliable and available.

When compared to standard sealing systems, the maintenance intervals can be extended. This therefore reduces maintenance costs.

The standard models of gearbox can be used in the range from -20 °C to +40 °C. Additional oils for lower or higher ambient temperatures are available for selection.

Please inquire regarding geared motors outside the temperature range from -20 °C to +40 °C, as the suitability of the components used for the respective application must be checked.

© Siemens 2019

Overview (continued)

Pressure breather valve

Gearboxes from size 39 are supplied with an installed pressure breather valve; this is suitable for both indoors and outdoors use.

Gearbox size 29 can be operated in mounting positions M1, M3, M5 and M6 without requiring a pressure breather valve. For mounting positions M2 and M4, they are equipped with a pressure breather valve.

Technical specifications for pressure breather valve

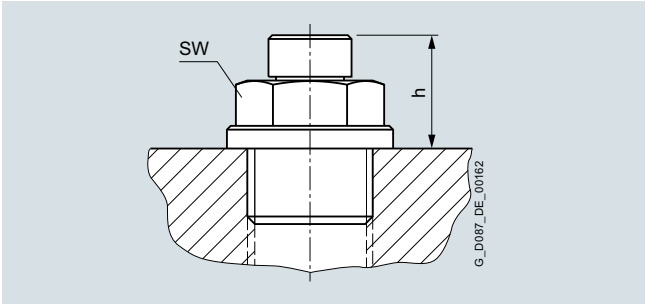

Pressure breather valve

Gearbox type	Gearbox size	Width across flats Width SW	Thread	Dimensions h mm
Helical gearboxes *Z* and *D*	19, 29, 39	12	G 1/8 A	15
	49, 59, 69, 79	13	G 1/4 A	15
	89, 109, 129	17	G 3/8 A	15
Parallel shaft gearbox *F*	29, 39	12	G 1/8 A	15
	49, 69, 79	13	G 1/4 A	15
	89, 109, 129	17	G 3/8 A	15
Bevel gearbox *B*	19, 29, 39	12	G 1/8 A	15
	49	13	G 1/4 A	15
Bevel gearbox *K*	39	12	G 1/8 A	15
	49, 69, 79, 89	13	G 1/4 A	15
	109, 129	17	G 3/8 A	15
	149	24	G 3/4 A	18
Helical worm gearbox *C*	29, 39	12	G 1/8 A	15
	49, 69, 89	13	G 1/4 A	15

© Siemens 2019

Overview (continued)

Oil expansion unit

The oil expansion unit increases the expansion space for the lubricant. For certain types of construction and at high operating temperatures, this avoids lubricant escapes.

The oil expansion unit is supplied as a mounting kit, and can be mounted onto the geared motor vertically or at an angle.

Technical specifications for oil expansion unit

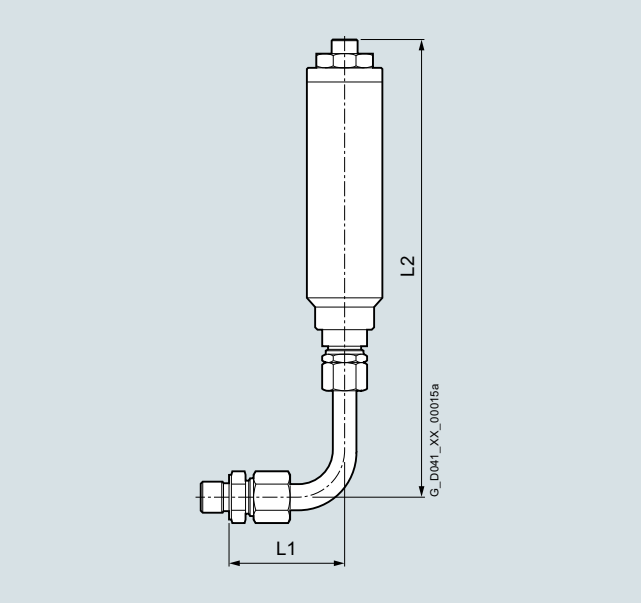

Oil expansion unit type 1

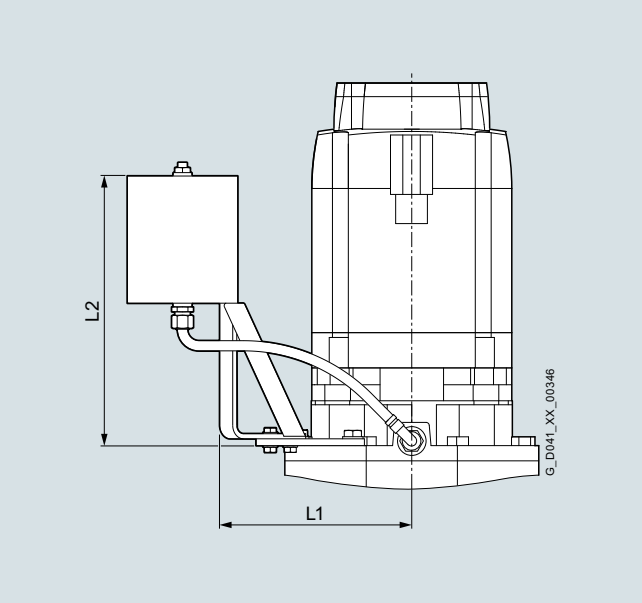

Oil expansion unit type 2

Gearbox type	Gearbox size	Motor shaft height	Oil expansion unit	Width across flats	Thread	Dimension L1	Dimension L2
			Type	SW		mm	mm
Parallel shaft gearbox *F*	*39*	36 ... 80	1	17/19	G1/8A	49	194
	49	63 ... 80	1	19/19	G1/4A	49	194
	69	80 ... 100	1	19/19	G1/4A	49	194
	79	100	1	19/19	G1/4A	49	194
	89	100	1	22/19	G3/8A	49	194
	129	100	2	–	G3/8A	442	334
Bevel gearbox *B*	*29*	36 ... 80	1	17/19	G1/8A	49	194
	39	36 ... 80	1	17/19	G1/8A	49	194
	49	63 ... 100	1	19/19	G1/4A	49	194
Bevel gearbox *K*	*39*	36 ... 80	1	17/19	G1/8A	49	194
	69	80 ... 100	1	19/19	G1/4A	49	194
	79	63 ... 100	1	19/19	G1/4A	49	194
	89	63 ... 100	1	19/19	G1/4A	49	194
	109	100	1	22/19	G3/8A	49	194
	129	80 ... 100	2	–	G3/8A	442	334
	149	100	2	–	G3/8A	465	334
Helical worm gearbox *C*	*69*	63 ... 100	1	19/19	G1/4A	49	194
	89	100	1	19/19	G1/4A	49	194

© Siemens 2019

Overview (continued)

Oil drain

Magnetic oil drain screw

For gearboxes from gearbox size 39, a magnetic oil drain screw is available that is inserted in the oil drain hole. This serves to collect any metal particles in the gearbox oil.

Oil sight glass

With gearboxes from gearbox size 49, the oil level is checked using the oil level checking screw.

The version with "Oil sight glass" is not possible for angled mounting positions.

The oil sight glass is fitted with a reflector for visual monitoring.

Technical specifications of oil sight glass

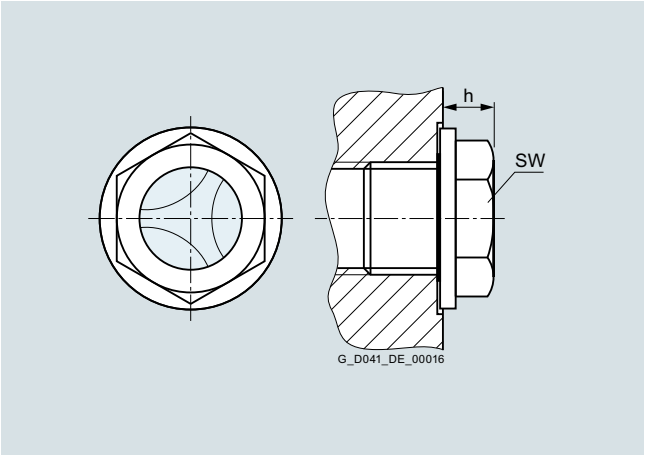

Oil sight glass

Gearbox type	Gearbox size	Width across flats SW	Thread	Dimension h
		mm		mm
Helical gearboxes *Z* and *D*	49 … 79	16	G 1/4 A	10
	89 … 129	19	G 3/8 A	9
Parallel shaft gearbox *F*	49 … 79	16	G 1/4 A	10
	89 … 129	19	G 3/8 A	9
Bevel gearbox *B*	49	16	G 1/4 A	10
Bevel gearbox *K*	49 … 89	16	G 1/4 A	10
	109, 129	19	G 3/8 A	9
	149	24	G 3/4 A	10
Helical worm gearbox *C*	49 … 89	16	G 1/4 A	10

Reduced-backlash version

Gearboxes with low torsional backlash are required for high-precision positioning tasks. A minimal torsional backlash also has a favorable effect on torque spikes during startup and on load switching in the drive train.

The torsional backlash of a geared motor depends on several factors. The total torsional backlash is primarily influenced by circumferential backlash, bearing clearance and shaft-hub connections.

SIMOTICS S-1FG1 servo geared motors with helical, parallel shaft and bevel gearboxes are also available in reduced-backlash version in addition to the standard version. Thanks to the overall concept and the plug-on pinion system, motors with lower torsional backlash values can be supplied.

To ensure that the entire driven machine can be designed with minimum possible backlash, it is advisable to use the output shaft with shrink disk connection or with smooth shafts (without feather key). In this case, only backlash-free power transmission elements should be used.

The specified torsional backlash in minutes of the angle [’] is based on the maximum rotation angle of the output shaft (no load, max. 1 % of rated output torque) with stationary input shaft.

For the exact values, refer to the torque tables. If no values are specified in the tables, this means that a reduced-backlash version is not available for the specific version.

The dimensions of the reduced-backlash gearboxes are identical to those of the standard versions.

© Siemens 2019

2

Overview (continued)

Increased chemical resistance

Order code **N16**

SIMOTICS S-1FG1 servo geared motors are available in a version with increased chemical resistance. The relevant order code is **N16** and corresponds to the paint classification C4-L.

Additional properties:

- Four-coat paint system
- Nickel-plated connectors
- Stainless steel pressure breather valve

The paint system of these servo geared motors is resistant to numerous common cleaners and disinfectants.

Note:

The resistance of the paint to the cleaners and disinfectants used has been verified by a material resistance test by ECOLAB Deutschland GmbH.

The certificate can be found on the Internet at https://support.industry.siemens.com/cs/ww/en/view/58657336.

Resistance of the connectors is achieved with a nickel-plated surface. Test the resistance of the entire system comprising the servo geared motor, connections and cables before use.

SIMOTICS S-1FG1 servo geared motors can be ordered with the AM20DQI encoder with Drive-CliQ and a nickel-plated connector M17.
For this purpose, fill in **Z** at the 9th position of the Article No. of the selected servo geared motor and add order code **J4R**.

1FG1 . . . - . **Z** . . . - . . . . - Z **J4R**

For further information, see chapter “Options”.

Connection system:

On motors with order code **N16**, the power/brake and signal connectors are nickel-plated.
Regarding the signal plug, motors with DRIVE-CLiQ interface differ from the standard motor version in the following respects:

- The motor is 5 mm longer and has the same overall length as a motor without DRIVE-CLiQ interface.
- The connector is a rotatable angle plug, see illustration
- The height of the interfering contour relative to the motor center is 82 mm, see illustration
- A non-standard signal cable is required
- Both the MOTION CONNECT cable with quick release and full thread can be connected to the angled connector, see below.

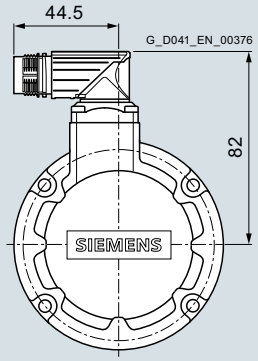

DRIVE-CLiQ signal cables with M17 motor-side rotary plug for SIMOTICS S-1FG1 servo geared motors with order code **N16**

	6FX ■ 002-2D ■ ■ ■ -....
MOTION CONNECT 500 – for predominantly fixed cable installation.	**5**
MOTION CONNECT 800PLUS – meets requirements for use in cable carriers	**8**
SPEED CONNECT – quick-release lock version	**C**
Full thread – conventional screw lock	**D**
Cable end:	
• DRIVE-CLiQ connector RJ45, IP20 – e.g. for the connection between motor and SINAMICS S120 converter	**4 0**
• DRIVE-CLiQ connector RJ45, IP67 – e.g. for the connection between motor and hub or between motor and cabinet lead-through	**4 8**
• DRIVE-CLiQ rotary plug M17, IP67 (contact pins) – extension between motor and above-stated signal cables	**4 4**

Limited validity for 1FG1 servo geared motors:

The order code **N16** can be ordered for the following versions:

- Encoder for SINAMICS S120 with DRIVE-CLiQ interface AM20DQI (1FG1…-.R…-….) – Absolute encoder 20 bit + 12 bit multi-turn with DRIVE-CLiQ interface
- Housing flange design and flange-mounted design (1FG1…-…..-.F.., 1FG1…-…..-.H..)

The following versions cannot be combined with the order code **N16**:

- Hollow shaft designs
- Torque arm
- Double-sided shaft – with **9** at the 8th position of the Article No. and order code **H5A**
- Paint options with order codes **K23** and **K24**
- Manual release with spring-operated brake - Order code **K82**
- Oil sight glass –order code **G34**
- Oil expansion unit – order code **G47**

© Siemens 2019

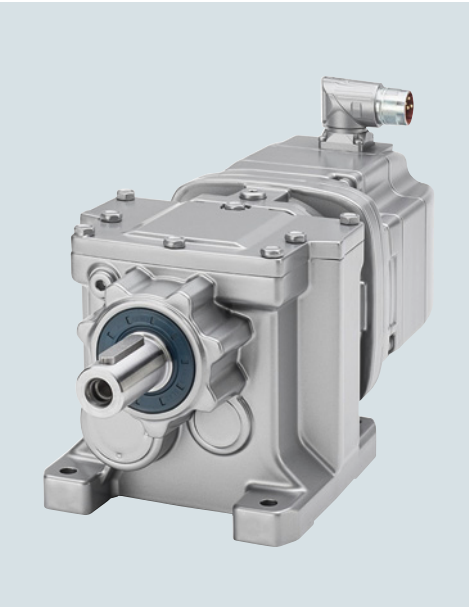

3/2 Orientation

3/3 Selecting servo geared motors
3/3 Gearbox size ***19***
3/3 • 2-stage – 1FG1101 – ***Z19***
3/8 • 3-stage – 1FG1201 – ***D19***
3/12 Gearbox size ***29***
3/12 • 2-stage – 1FG1102 – ***Z29***
3/17 • 3-stage – 1FG1202 – ***D29***
3/21 Gearbox size ***39***
3/21 • 2-stage – 1FG1103 – ***Z39***
3/26 • 3-stage – 1FG1203 – ***D39***
3/31 Gearbox size ***49***
3/31 • 2-stage – 1FG1104 – ***Z49***
3/37 • 3-stage – 1FG1204 – ***D49***
3/42 Gearbox size ***59***
3/42 • 2-stage – 1FG1105 – ***Z59***
3/47 • 3-stage – 1FG1205 – ***D59***
3/52 Gearbox size ***69***
3/52 • 2-stage – 1FG1106 – ***Z69***
3/57 • 3-stage – 1FG1206 – ***D69***
3/62 Gearbox size ***79***
3/62 • 2-stage – 1FG1107 – ***Z79***
3/66 • 3-stage – 1FG1207 – ***D79***
3/70 Gearbox size ***89***
3/70 • 2-stage – 1FG1108 – ***Z89***
3/74 • 3-stage – 1FG1208 – ***D89***
3/78 Gearbox size ***109***
3/78 • 2-stage – 1FG1110 – ***Z109***
3/82 • 3-stage – 1FG1210 – ***D109***
3/86 Gearbox size ***129***
3/86 • 2-stage – 1FG1111 – ***Z129***
3/90 • 3-stage – 1FG1211 – ***D129***

3/94 Dimensions
3/94 Gearbox size ***19***
3/94 Foot-mounted design 2-stage and 3-stage – ***Z19*** and ***D19***
3/96 Flange-mounted design 2-stage and 3-stage – ***ZF19*** and ***DF19***
3/98 Housing flange design 2-stage and 3-stage – ***ZZ19*** and ***DZ19***
3/100 Gearbox size ***29***
3/100 Foot-mounted design 2-stage and 3-stage – ***Z29*** and ***D29***
3/102 Foot/flange-mounted design 2-stage and 3-stage – ***ZB29*** and ***DB29***
3/104 Flange-mounted design 2-stage and 3-stage – ***ZF29*** and ***DF29***
3/106 Housing flange design 2-stage and 3-stage – ***ZZ29*** and ***DZ29***
3/108 Gearbox size ***39***
3/108 Foot-mounted design 2-stage and 3-stage – ***Z39*** and ***D39***
3/110 Foot/flange-mounted design 2-stage and 3-stage – ***ZB39*** and ***DB39***
3/112 Flange-mounted design 2-stage and 3-stage – ***ZF39*** and ***DF39***
3/114 Housing flange design 2-stage and 3-stage – ***ZZ39*** and ***DZ39***
3/116 Gearbox size ***49***
3/116 Foot and foot/flange-mounted design 2-stage and 3-stage – ***Z49***, ***D49***, ***ZB49*** and ***DB49***
3/118 Flange-mounted design 2-stage and 3-stage – ***ZF49*** and ***DF49***
3/120 Housing flange design 2-stage and 3-stage – ***ZZ49*** and ***DZ49***
3/122 Gearbox size ***59***
3/122 Foot and foot/flange-mounted design 2-stage and 3-stage – ***Z59***, ***D59***, ***ZB59*** and ***DB59***
3/124 Flange-mounted design 2-stage and 3-stage – ***ZF59*** and ***DF59***
3/126 Housing flange design 2-stage and 3-stage – ***ZZ59*** and ***DZ59***
3/128 Gearbox size ***69***
3/128 Foot and foot/flange-mounted design 2-stage and 3-stage – ***Z69***, ***D69***, ***ZB69*** and ***DB69***
3/130 Flange-mounted design 2-stage and 3-stage – ***ZF69*** and ***DF69***
3/132 Housing flange design 2-stage and 3-stage – ***ZZ69*** and ***DZ69***
3/134 Gearbox size ***79***
3/134 Foot and foot/flange-mounted design 2-stage and 3-stage – ***Z79***, ***D79***, ***ZB79*** and ***DB79***
3/136 Flange-mounted design 2-stage and 3-stage – ***ZF79*** and ***DF79***
3/138 Housing flange design 2-stage and 3-stage – ***ZZ79*** and ***DZ79***
3/140 Gearbox size ***89***
3/140 Foot and foot/flange-mounted design 2-stage and 3-stage – ***Z89***, ***D89***, ***ZB89*** and ***DB89***
3/142 Flange-mounted design 2-stage and 3-stage – ***ZF89*** and ***DF89***
3/144 Housing flange design 2-stage and 3-stage – ***ZZ89*** and ***DZ89***
3/146 Gearbox size ***109***
3/146 Foot-mounted design 2-stage and 3-stage – ***Z109*** and ***D109***
3/148 Flange-mounted design 2-stage and 3-stage – ***ZF109*** and ***DF109***
3/150 Housing flange design 2-stage and 3-stage – ***ZZ109*** and ***DZ109***
3/152 Gearbox size ***129***
3/152 Foot-mounted design 2-stage and 3-stage – ***Z129*** and ***D129***
3/154 Flange-mounted design 2-stage and 3-stage – ***ZF129*** and ***DF129***
3/156 Housing flange design 2-stage and 3-stage – ***ZZ129*** and ***DZ129***
3/158 Inner contour and dimensions of the flange-mounted design

© Siemens 2019

Overview

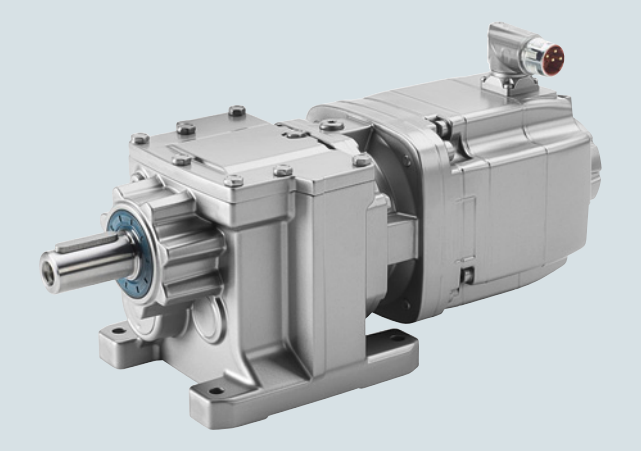

Servo helical geared motors SIMOTICS S-1FG1 are available in the following versions for mounting in any position:

- 2 or 3 stages *Z*/*D*
- Foot-mounted design *Z*/*D*
- Flange-mounted design *ZF*/*DF*
- Design with integrated housing flange *ZZ*/*DZ*
- Combined foot/flange-mounted design *ZB*/*DB*

© Siemens 2019

Technical specifications

Gearbox type *Z19*

Servo geared motor Type	i	R_{ex}	M_{2rated} Nm	M_{2max} Nm	$M_{2Em.Off}$ Nm	n_{2max} rpm	n_{1max} rpm	φ [1] '	F_{R2} N	F_{R2max} N	c_T Nm/ '	J_G 10^{-4} kgm^2
1FG1101-.....-..W1	34.97	1364/39	100	102	170	129	4500	12.6	1650	1610	4.1	0.02
1FG1101-.....-..V1	30.97	2013/65	100	102	170	145	4500	13.2	1650	1610	4.1	0.03
1FG1101-.....-..U1	26.91	1749/65	100	102	170	167	4500	13.3	1650	1610	4.1	0.04
1FG1101-.....-..T1	24.46	318/13	100	102	170	184	4500	13.3	1650	1610	4.1	0.05
1FG1101-.....-..S1	20.82	1353/65	100	102	170	216	4500	13.5	1650	1610	4.0	0.07
1FG1101-.....-..R1	18.92	246/13	100	102	170	238	4500	13.5	1650	1610	4.1	0.08
1FG1101-.....-..Q1	16.5	33/2	99	99	168	264	4350	13.7	1670	1670	4.0	0.09
1FG1101-.....-..P1	14.77	192/13	95	95	161	295	4350	13.8	1720	1720	4.0	0.12
1FG1101-.....-..N1	13.12	341/26	91	91	154	332	4350	13.9	1650	1650	4.0	0.15
1FG1101-.....-..M1	12.11	2046/169	88	88	149	359	4350	13.9	1610	1610	4.0	0.18
1FG1101-.....-..L1	10.52	957/91	83	83	141	413	4350	14.3	1540	1540	4.0	0.20
1FG1101-.....-..K1	9.14	594/65	78	78	132	476	4350	13.9	1480	1480	4.0	0.21
1FG1101-.....-..J1	8.25	33/4	75	75	125	527	4350	14.1	1430	1430	4.0	0.27
1FG1101-.....-..H1	7.76	132/17	73	73	124	561	4350	14.1	1410	1410	4.0	0.32
1FG1101-.....-..G1	6.77	88/13	68	68	115	643	4350	14.5	1360	1360	4.0	0.36
1FG1101-.....-..F1	6.25	1705/273	56	56	95	720	4500	20.3	1200	1200	3.1	0.19
1FG1101-.....-..E1	5.43	1595/294	53	53	90	801	4350	21	1140	1140	3.1	0.22
1FG1101-.....-..D1	4.71	33/7	49	49	83	924	4350	20.3	1110	1110	3.1	0.22
1FG1101-.....-..C1	4.26	715/168	47	47	79	1021	4350	20.7	1080	1080	3.0	0.29
1FG1101-.....-..B1	4.01	1430/357	46	46	78	1085	4350	20.7	1050	1050	3.0	0.34
1FG1101-.....-..A1	3.49	220/63	43	43	73	1246	4350	21.5	1030	1030	3.0	0.39

Selection and ordering data

Shaft design, encoder system, mounting type and special designs

Gearbox type *Z19*

			Servo helical geared motors SIMOTICS S-1FG1 Article No.				
			1FG1101- ■ ■ . . . - . ■ . .				**-Z**
Shaft design:	Solid shaft with feather keyway	– Design 1		**1**			
		– Design 2		**2**			
		– Design 3		**3**			
Order codes and Descriptions see chapter "Options"	Special shaft design			**9**			
Encoder system for motors with DRIVE-CLiQ interface:	AS20DQI encoder				**Q**		
	AM20DQI encoder				**R**		
	R14DQ resolver				**P**		
	R15DQ resolver				**U**		
Order codes and Descriptions see chapter "Options"	Special version encoder system				**Z**		
Mounting type:	Foot-mounted design					**A**	
	Flange-mounted design					**F**	
	Housing flange design					**H**	
Special designs (Options): Order codes and Descriptions see chapter "Options" The following order codes must be added to each article number: • Oil type – order codes **K06** or **K11** • Mounting position – order codes **D01** ... **D06**							**-Z**
Selection of 2-stages Servo helical geared motors with gearbox size 19 from next page.			**1FG1101-** . . ■ ■ ■ - ■ . ■ ■				**-Z**

[1] Data are for option reduced-backlash version – order code **G99** required.

© Siemens 2019

Gearbox size 19, 2-stage – 1FG1101

3

Selection and ordering data (continued)

For line voltage 380 ... 480 V 3 AC (DC link voltage 510 ... 720 V DC) **– gearbox type** ***Z19***

Geared motor torque at 1450 rpm
Note: All values in **bold** print are maximum gearbox values.
M_{2dyn}
Nm

Max. output speed n_{2max} = **129 rpm**, Transmission ratio i = **34.97**	Servo helical geared motors SIMOTICS S-1FG1 Article No.
102 102 102 102 102 102 – – – – – – – – – – – – – – – –	1FG1101- . . ■ ■ **6** - ■ . **W1 -Z**
– – – – – **102 102** – – – – – – – – – – – – – – – –	1FG1101- . . ■ ■ **4** - ■ . **W1 -Z**
– – – – **102** – **102** – – – – – – – – – – – – – – –	1FG1101- . . ■ ■ **3** - ■ . **W1 -Z**
– – – – **102** – – – – – – – – – – – – – – – – – – –	1FG1101- . . ■ ■ **2** - ■ . **W1 -Z**
Max. output speed n_{2max} = **145 rpm**, Transmission ratio i = **30.97**	
102 102 102 102 102 102 – – – – – – – – – – – – – – – –	1FG1101- . . ■ ■ **6** - ■ . **V1 -Z**
– – – – – **102 102** – – – – – – – – – – – – – – – –	1FG1101- . . ■ ■ **4** - ■ . **V1 -Z**
– – – – **102** – **102** – – – – – – – – – – – – – – –	1FG1101- . . ■ ■ **3** - ■ . **V1 -Z**
– – – – **102** – – – – – – – – – – – – – – – – – – –	1FG1101- . . ■ ■ **2** - ■ . **V1 -Z**
Max. output speed n_{2max} = **167 rpm**, Transmission ratio i = **26.91**	
102 102 102 102 102 102 – – – – – – – – – – – – – – – –	1FG1101- . . ■ ■ **6** - ■ . **U1 -Z**
– – – – – **102 102** – – – – – – – – – – – – – – – –	1FG1101- . . ■ ■ **4** - ■ . **U1 -Z**
– – – – **102** – **102** – – – – – – – – – – – – – – –	1FG1101- . . ■ ■ **3** - ■ . **U1 -Z**
– – – – **102** – – – – – – – – – – – – – – – – – – –	1FG1101- . . ■ ■ **2** - ■ . **U1 -Z**
Max. output speed n_{2max} = **184 rpm**, Transmission ratio i = **24.46**	
102 98 **102 102 102 102** – – – – – – – – – – – – – – –	1FG1101- . . ■ ■ **6** - ■ . **T1 -Z**
– – – – – **102 102** – – – – – – – – – – – – – – – –	1FG1101- . . ■ ■ **4** - ■ . **T1 -Z**
– – – – **102** – **102** – – – – – – – – – – – – – – –	1FG1101- . . ■ ■ **3** - ■ . **T1 -Z**
– – – – **102** – – – – – – – – – – – – – – – – – – –	1FG1101- . . ■ ■ **2** - ■ . **T1 -Z**
Max. output speed n_{2max} = **216 rpm**, Transmission ratio i = **20.82**	
87 83 **102** 98 **102 102** – – – – – – – – – – – – – – –	1FG1101- . . ■ ■ **6** - ■ . **S1 -Z**
– – – – – **102 102** – – – – – – – – – – – – – – – –	1FG1101- . . ■ ■ **4** - ■ . **S1 -Z**
– – – – **102** – **102** – – – – – – – – – – – – – – –	1FG1101- . . ■ ■ **3** - ■ . **S1 -Z**
– – – – **102** – – – – – – – – – – – – – – – – – – –	1FG1101- . . ■ ■ **2** - ■ . **S1 -Z**
Max. output speed n_{2max} = **238 rpm**, Transmission ratio i = **18.92**	
79 76 **102** 90 **102 102** – – – – – – – – – – – – – – –	1FG1101- . . ■ ■ **6** - ■ . **R1 -Z**
– – – – – **102 102** – – – – – – – – – – – – – – – –	1FG1101- . . ■ ■ **4** - ■ . **R1 -Z**
– – – – **102** – **102** – – – – – – – – – – – – – – –	1FG1101- . . ■ ■ **3** - ■ . **R1 -Z**
– – – – **102** – – – – – – – – – – – – – – – – – – –	1FG1101- . . ■ ■ **2** - ■ . **R1 -Z**
Max. output speed n_{2max} = **264 rpm**, Transmission ratio i = **16.5**	
69 66 **99** 79 **99 99** – – – – – – – – – – – – – – – –	1FG1101- . . ■ ■ **6** - ■ . **Q1 -Z**
– – – – – **99 99** – – – – – – – – – – – – – – – –	1FG1101- . . ■ ■ **4** - ■ . **Q1 -Z**
– – – – **99** – **99** – – – – – – – – – – – – – – –	1FG1101- . . ■ ■ **3** - ■ . **Q1 -Z**
– – – – **99** – – – – – – – – – – – – – – – – – – –	1FG1101- . . ■ ■ **2** - ■ . **Q1 -Z**

Motor shaft height:

36	**C**
48	**D**
63	**E**
80	**F**
100	**G**

Motor length/motor version (**CT** = Compact, **HD** = High Dynamic)**:**

0/CT	**0** **2**
1/CT	**1** **2**
1/HD	**1** **4**
2/CT	**2** **2**
3/CT	**3** **2**
3/HD	**3** **4**
4/CT	**4** **2**
4/HD	**4** **4**
5/CT	**5** **2**
5/HD	**5** **4**
6/HD	**6** **4**

Selection of shaft design, encoder system, mounting type and special designs on page 3/3. **1FG1101- ■ ■ . . . . - . ■ . . -Z**

© Siemens 2019

For line voltage 380 ... 480 V 3 AC (DC link voltage 510 ... 720 V DC) **– gearbox type** ***Z19***

Geared motor torque at 1450 rpm
Note: All values in **bold** print are maximum gearbox values.

M_{2dyn} Nm																						Article No.
Max. output speed n_{2max} = 295 rpm, Transmission ratio i = 14.77																						
62	59	90	70	**95**	**95**	–	–	–	–	–	–	–	–	–	–	–	–	–	–	–	–	1FG1101- . . ■ ■ 6 - ■ . P1 -Z
–	–	–	–	–	**95**	**95**	–	–	–	–	–	–	–	–	–	–	–	–	–	–	–	1FG1101- . . ■ ■ 4 - ■ . P1 -Z
–	–	–	–	**95**	–	**95**	–	–	–	–	–	–	–	–	–	–	–	–	–	–	–	1FG1101- . . ■ ■ 3 - ■ . P1 -Z
–	–	–	–	**95**	–	–	–	–	–	–	–	–	–	–	–	–	–	–	–	–	–	1FG1101- . . ■ ■ 2 - ■ . P1 -Z
Max. output speed n_{2max} = 332 rpm, Transmission ratio i = 13.12																						
55	52	79	62	**91**	**91**	–	–	–	–	–	–	–	–	–	–	–	–	–	–	–	–	1FG1101- . . ■ ■ 6 - ■ . N1 -Z
–	–	–	–	–	**91**	**91**	–	–	–	–	–	–	–	–	–	–	–	–	–	–	–	1FG1101- . . ■ ■ 4 - ■ . N1 -Z
–	–	–	–	**91**	–	**91**	–	–	–	–	–	–	–	–	–	–	–	–	–	–	–	1FG1101- . . ■ ■ 3 - ■ . N1 -Z
–	–	–	–	**91**	–	–	–	–	–	–	–	–	–	–	–	–	–	–	–	–	–	1FG1101- . . ■ ■ 2 - ■ . N1 -Z
Max. output speed n_{2max} = 359 rpm, Transmission ratio i = 12.11																						
51	49	74	58	**88**	**88**	–	–	–	–	–	–	–	–	–	–	–	–	–	–	–	–	1FG1101- . . ■ ■ 6 - ■ . M1 -Z
–	–	–	–	–	**88**	**88**	–	–	–	–	–	–	–	–	–	–	–	–	–	–	–	1FG1101- . . ■ ■ 4 - ■ . M1 -Z
–	–	–	–	**88**	–	**88**	–	–	–	–	–	–	–	–	–	–	–	–	–	–	–	1FG1101- . . ■ ■ 3 - ■ . M1 -Z
–	–	–	–	**88**	–	–	–	–	–	–	–	–	–	–	–	–	–	–	–	–	–	1FG1101- . . ■ ■ 2 - ■ . M1 -Z
Max. output speed n_{2max} = 413 rpm, Transmission ratio i = 10.52																						
44	42	64	50	**83**	**83**	–	–	–	–	–	–	–	–	–	–	–	–	–	–	–	–	1FG1101- . . ■ ■ 6 - ■ . L1 -Z
–	–	–	–	–	**83**	**83**	–	–	–	–	–	–	–	–	–	–	–	–	–	–	–	1FG1101- . . ■ ■ 4 - ■ . L1 -Z
–	–	–	–	**83**	–	**83**	–	–	–	–	–	–	–	–	–	–	–	–	–	–	–	1FG1101- . . ■ ■ 3 - ■ . L1 -Z
–	–	–	–	**83**	–	–	–	–	–	–	–	–	–	–	–	–	–	–	–	–	–	1FG1101- . . ■ ■ 2 - ■ . L1 -Z
Max. output speed n_{2max} = 476 rpm, Transmission ratio i = 9.14																						
39	37	56	44	**78**	**78**		–	–	–	–	–	–	–	–	–	–	–	–	–	–	–	1FG1101- . . ■ ■ 6 - ■ . K1 -Z
–	–	–	–	–	**78**	**78**	–	–	–	–	–	–	–	–	–	–	–	–	–	–	–	1FG1101- . . ■ ■ 4 - ■ . K1 -Z
–	–	–	–	**78**	–	**78**	–	–	–	–	–	–	–	–	–	–	–	–	–	–	–	1FG1101- . . ■ ■ 3 - ■ . K1 -Z
–	–	–	–	**78**	–	–	–	–	–	–	–	–	–	–	–	–	–	–	–	–	–	1FG1101- . . ■ ■ 2 - ■ . K1 -Z
Max. output speed n_{2max} = 527 rpm, Transmission ratio i = 8.25																						
35	33	50	39	**75**	**75**		–	–	–	–	–	–	–	–	–	–	–	–	–	–	–	1FG1101- . . ■ ■ 6 - ■ . J1 -Z
–	–	–	–	–	**75**	**75**	–	–	–	–	–	–	–	–	–	–	–	–	–	–	–	1FG1101- . . ■ ■ 4 - ■ . J1 -Z
–	–	–	–	**75**	–	**75**	–	–	–	–	–	–	–	–	–	–	–	–	–	–	–	1FG1101- . . ■ ■ 3 - ■ . J1 -Z
–	–	–	–	**75**	–	–	–	–	–	–	–	–	–	–	–	–	–	–	–	–	–	1FG1101- . . ■ ■ 2 - ■ . J1 -Z
Max. output speed n_{2max} = 561 rpm, Transmission ratio i = 7.76																						
33	31	47	37	**73**	**73**	–	–	–	–	–	–	–	–	–	–	–	–	–	–	–	–	1FG1101- . . ■ ■ 6 - ■ . H1 -Z
–	–	–	–	–	**73**	**73**	–	–	–	–	–	–	–	–	–	–	–	–	–	–	–	1FG1101- . . ■ ■ 4 - ■ . H1 -Z
–	–	–	–	**73**	–	**73**	–	–	–	–	–	–	–	–	–	–	–	–	–	–	–	1FG1101- . . ■ ■ 3 - ■ . H1 -Z
–	–	–	–	**73**	–	–	–	–	–	–	–	–	–	–	–	–	–	–	–	–	–	1FG1101- . . ■ ■ 2 - ■ . H1 -Z
Max. output speed n_{2max} = 643 rpm, Transmission ratio i = 6.77																						
29	27	41	32	67	64	–	–	–	–	–	–	–	–	–	–	–	–	–	–	–	–	1FG1101- . . ■ ■ 6 - ■ . G1 -Z
–	–	–	–	–	64	**68**	–	–	–	–	–	–	–	–	–	–	–	–	–	–	–	1FG1101- . . ■ ■ 4 - ■ . G1 -Z
–	–	–	–	67	–	**68**	–	–	–	–	–	–	–	–	–	–	–	–	–	–	–	1FG1101- . . ■ ■ 3 - ■ . G1 -Z
–	–	–	–	67	–	–	–	–	–	–	–	–	–	–	–	–	–	–	–	–	–	1FG1101- . . ■ ■ 2 - ■ . G1 -Z

Motor shaft height:

| | | | | | | | | | | | | | | | | | | |

© Siemens 2019

Gearbox size 19, 2-stage – 1FG1101

For line voltage 380 ... 480 V 3 AC (DC link voltage 510 ... 720 V DC) **– gearbox type** ***Z19***

Geared motor torque at 1450 rpm
Note: All values in **bold** print are maximum gearbox values.

M_{2dyn} Nm																						Servo helical geared motors SIMOTICS S-1FG1 Article No.
Max. output speed n_{2max} = **720 rpm**, Transmission ratio i = **6.25**																						
26	25	38	30	**56**	**56**	–	–	–	–	–	–	–	–	–	–	–	–	–	–	–	–	1FG1101- . . ■ ■ 6 - ■ . F1 -Z
–	–	–	–	–	**56**	**56**	–	–	–	–	–	–	–	–	–	–	–	–	–	–	–	1FG1101- . . ■ ■ 4 - ■ . F1 -Z
–	–	–	–	**56**	–	**56**	–	–	–	–	–	–	–	–	–	–	–	–	–	–	–	1FG1101- . . ■ ■ 3 - ■ . F1 -Z
–	–	–	–	**56**	–	–	–	–	–	–	–	–	–	–	–	–	–	–	–	–	–	1FG1101- . . ■ ■ 2 - ■ . F1 -Z
Max. output speed n_{2max} = **801 rpm**, Transmission ratio i = **5.43**																						
23	22	33	26	**53**	51	–	–	–	–	–	–	–	–	–	–	–	–	–	–	–	–	1FG1101- . . ■ ■ 6 - ■ . E1 -Z
–	–	–	–	–	51	**53**	–	–	–	–	–	–	–	–	–	–	–	–	–	–	–	1FG1101- . . ■ ■ 4 - ■ . E1 -Z
–	–	–	–	**53**	–	**53**	–	–	–	–	–	–	–	–	–	–	–	–	–	–	–	1FG1101- . . ■ ■ 3 - ■ . E1 -Z
–	–	–	–	**53**	–	–	–	–	–	–	–	–	–	–	–	–	–	–	–	–	–	1FG1101- . . ■ ■ 2 - ■ . E1 -Z
Max. output speed n_{2max} = **924 rpm**, Transmission ratio i = **4.71**																						
20	19	29	23	47	45	–	–	–	–	–	–	–	–	–	–	–	–	–	–	–	–	1FG1101- . . ■ ■ 6 - ■ . D1 -Z
–	–	–	–	–	45	**49**	–	–	–	–	–	–	–	–	–	–	–	–	–	–	–	1FG1101- . . ■ ■ 4 - ■ . D1 -Z
–	–	–	–	47	–	**49**	–	–	–	–	–	–	–	–	–	–	–	–	–	–	–	1FG1101- . . ■ ■ 3 - ■ . D1 -Z
–	–	–	–	47	–	–	–	–	–	–	–	–	–	–	–	–	–	–	–	–	–	1FG1101- . . ■ ■ 2 - ■ . D1 -Z
Max. output speed n_{2max} = **1021 rpm**, Transmission ratio i = **4.26**																						
18	17	26	20	42	40	–	–	–	–	–	–	–	–	–	–	–	–	–	–	–	–	1FG1101- . . ■ ■ 6 - ■ . C1 -Z
–	–	–	–	–	40	46	–	–	–	–	–	–	–	–	–	–	–	–	–	–	–	1FG1101- . . ■ ■ 4 - ■ . C1 -Z
–	–	–	–	42	–	46	–	–	–	–	–	–	–	–	–	–	–	–	–	–	–	1FG1101- . . ■ ■ 3 - ■ . C1 -Z
–	–	–	–	42	–	–	–	–	–	–	–	–	–	–	–	–	–	–	–	–	–	1FG1101- . . ■ ■ 2 - ■ . C1 -Z
Max. output speed n_{2max} = **1085 rpm**, Transmission ratio i = **4.01**																						
17	16	25	19	40	38	–	–	–	–	–	–	–	–	–	–	–	–	–	–	–	–	1FG1101- . . ■ ■ 6 - ■ . B1 -Z
–	–	–	–	–	38	43	–	–	–	–	–	–	–	–	–	–	–	–	–	–	–	1FG1101- . . ■ ■ 4 - ■ . B1 -Z
–	–	–	–	40	–	43	–	–	–	–	–	–	–	–	–	–	–	–	–	–	–	1FG1101- . . ■ ■ 3 - ■ . B1 -Z
–	–	–	–	40	–	–	–	–	–	–	–	–	–	–	–	–	–	–	–	–	–	1FG1101- . . ■ ■ 2 - ■ . B1 -Z
Max. output speed n_{2max} = **1246 rpm**, Transmission ratio i = **3.49**																						
15	14	21	17	35	33	–	–	–	–	–	–	–	–	–	–	–	–	–	–	–	–	1FG1101- . . ■ ■ 6 - ■ . A1 -Z
–	–	–	–	–	33	37	–	–	–	–	–	–	–	–	–	–	–	–	–	–	–	1FG1101- . . ■ ■ 4 - ■ . A1 -Z
–	–	–	–	35	–	37	–	–	–	–	–	–	–	–	–	–	–	–	–	–	–	1FG1101- . . ■ ■ 3 - ■ . A1 -Z
–	–	–	–	35	–	–	–	–	–	–	–	–	–	–	–	–	–	–	–	–	–	1FG1101- . . ■ ■ 2 - ■ . A1 -Z

Motor shaft height:

36																						C
			48																			D
							63															E
												80										F
																	100					G

Motor length/motor version (**CT** = Compact, **HD** = High Dynamic)**:**

			0/CT				**0/CT**					**0/CT**						**0/CT**					0	2
													1/CT						**1/CT**			1	2
								1/HD															1	4
2/CT				**2/CT**					**2/CT**														2	2
										3/CT					**3/CT**					**3/CT**			3	2
	3/HD				**3/HD**																		3	4
		4/CT													**4/CT**								4	2
						4/HD					**4/HD**												4	4
																				5/CT			5	2
																5/HD							5	4
																	6/HD						6	4

Selection of shaft design, encoder system, mounting type and special designs on page 3/3. **1FG1101- ■ ■ . . . - . ■ . . -Z**

© Siemens 2019

Selection and ordering data (continued)

For line voltage 200 ... 240 V 1 AC (DC link voltage 270 ... 330 V DC) **– gearbox type** ***Z19***

Max. output speed n_{2max} rpm	Transmission ratio i	Geared motor torque at 1450 rpm Note: All values in **bold** print are maximum gearbox values. M_{2dyn} Nm					**Servo helical geared motors SIMOTICS S-1FG1** Article No.
129	**34.97**	**102**	**102**	**102**	**102**	**102**	**1FG1101- . . ■ ■ 3 - ■ . W1 -Z**
145	**30.97**	**102**	**102**	**102**	**102**	**102**	**1FG1101- . . ■ ■ 3 - ■ . V1 -Z**
167	**26.91**	**102**	**102**	**102**	**102**	**102**	**1FG1101- . . ■ ■ 3 - ■ . U1 -Z**
184	**24.46**	**102**	98	**102**	**102**	**102**	**1FG1101- . . ■ ■ 3 - ■ . T1 -Z**
216	**20.82**	87	83	**102**	**102**	**102**	**1FG1101- . . ■ ■ 3 - ■ . S1 -Z**
238	**18.92**	79	76	**102**	**102**	**102**	**1FG1101- . . ■ ■ 3 - ■ . R1 -Z**
264	**16.5**	69	66	**99**	**99**	**99**	**1FG1101- . . ■ ■ 3 - ■ . Q1 -Z**
295	**14.77**	62	59	90	**95**	**95**	**1FG1101- . . ■ ■ 3 - ■ . P1 -Z**
332	**13.12**	55	52	79	**91**	**91**	**1FG1101- . . ■ ■ 3 - ■ . N1 -Z**
359	**12.11**	51	49	74	**88**	**88**	**1FG1101- . . ■ ■ 3 - ■ . M1 -Z**
413	**10.52**	44	42	64	**83**	**83**	**1FG1101- . . ■ ■ 3 - ■ . L1 -Z**
476	**9.14**	39	37	56	**78**	**78**	**1FG1101- . . ■ ■ 3 - ■ . K1 -Z**
527	**8.25**	35	33	50	**75**	**75**	**1FG1101- . . ■ ■ 3 - ■ . J1 -Z**
561	**7.76**	33	31	47	**73**	73	**1FG1101- . . ■ ■ 3 - ■ . H1 -Z**
643	**6.77**	29	27	41	67	64	**1FG1101- . . ■ ■ 3 - ■ . G1 -Z**
720	**6.25**	26	25	38	**56**	**56**	**1FG1101- . . ■ ■ 3 - ■ . F1 -Z**
801	**5.43**	23	22	33	**53**	51	**1FG1101- . . ■ ■ 3 - ■ . E1 -Z**
924	**4.71**	20	19	29	47	45	**1FG1101- . . ■ ■ 3 - ■ . D1 -Z**
1021	**4.26**	18	17	26	42	40	**1FG1101- . . ■ ■ 3 - ■ . C1 -Z**
1085	**4.01**	17	16	25	40	38	**1FG1101- . . ■ ■ 3 - ■ . B1 -Z**
1246	**3.49**	15	14	21	35	33	**1FG1101- . . ■ ■ 3 - ■ . A1 -Z**

Motor shaft height:										
		36						**C**		
					48			**D**		
Motor length/motor version (**CT** = Compact, **HD** = High Dynamic)**:**										
		2/CT			**2/CT**			**2**		**1**
			3/HD			**3/HD**		**3**		**3**
				4/CT				**4**		**1**

Selection of shaft design, encoder system, mounting type and special designs on page 3/3.

1FG1101- ■ ■ . . . - ■ . . -Z

© Siemens 2019

Gearbox size 19, 3-stage – 1FG1201

Technische Daten

Gearbox type *D19*

Servo geared motor Type	i	R_{ex}	M_{2rated} Nm	M_{2max} Nm	$M_{2Em.Off}$ Nm	n_{2max} rpm	n_{1max} rpm	φ [1] '	F_{R2} N	F_{R2max} N	c_T Nm/ '	J_G 10^{-4} kgm^2
1FG1201-.....-..Q1	184.86	50468/273	100	114	153	24	4500	13.1	1650	1370	4.2	0.02
1FG1201-.....-..P1	163.69	74481/455	100	114	153	27	4500	13.2	1650	1370	4.2	0.03
1FG1201-.....-..N1	142.23	64713/455	100	114	153	32	4500	13.2	1650	1370	4.2	0.04
1FG1201-.....-..M1	129.30	11766/91	100	114	153	35	4500	13.2	1650	1370	4.2	0.04
1FG1201-.....-..L1	110.02	50061/455	100	111	153	41	4500	13.2	1650	1430	4.2	0.06
1FG1201-.....-..K1	100.02	9102/91	100	110	153	45	4500	13.2	1650	1450	4.2	0.07
1FG1201-.....-..J1	87.21	1221/14	100	108	153	52	4500	13.3	1650	1490	4.2	0.08
1FG1201-.....-..H1	78.07	7104/91	100	106	153	58	4500	13.3	1650	1530	4.2	0.11
1FG1201-.....-..G1	69.32	12617/182	100	104	153	65	4500	13.3	1650	1570	4.2	0.13
1FG1201-.....-..F1	63.99	75702/1183	100	103	153	70	4500	13.3	1650	1590	4.2	0.16
1FG1201-.....-..E1	55.59	35409/637	100	102	153	81	4500	13.4	1650	1610	4.2	0.17
1FG1201-.....-..D1	48.3	21978/455	100	102	153	93	4500	13.3	1650	1610	4.2	0.18
1FG1201-.....-..C1	43.61	1221/28	100	102	153	103	4500	13.3	1650	1610	4.2	0.22
1FG1201-.....-..B1	41.04	4884/119	100	102	153	110	4500	13.3	1650	1610	4.2	0.26
1FG1201-.....-..A1	35.78	3256/91	100	102	153	126	4500	13.4	1650	1610	4.2	0.29

Selection and ordering data

Shaft design, encoder system, mounting type and special designs

Gearbox type *D19*

Servo helical geared motors SIMOTICS S-1FG1
Article No.

1FG1201- ■ ■ . . . . - . ■ . . **-Z**

Shaft design:	Solid shaft with feather keyway	– Design 1	**1**
		– Design 2	**2**
		– Design 3	**3**
Order codes and Descriptions see chapter "Options"	Special shaft design		**9**
Encoder system for motors with DRIVE-CLiQ interface:	AS20DQI encoder		**Q**
	AM20DQI encoder		**R**
	R14DQ resolver		**P**
	R15DQ resolver		**U**
Order codes and Descriptions see chapter "Options"	Special version encoder system		**Z**
Mounting type:	Foot-mounted design		**A**
	Flange-mounted design		**F**
	Housing flange design		**H**
Special designs (Options): Order codes and Descriptions see chapter "Options" The following order codes must be added to each article number: • Oil type – order codes **K06** or **K11** • Mounting position – order codes **D01** ... **D06**			**-Z**

Selection of 3-stages servo helical geared motors with gearbox size 19 from next page.

1FG1201- . . ■ ■ ■ - ■ . ■ ■ **-Z**

[1] Werte gelten für Option spielreduzierte Ausführung – Kurzangabe **G99** erforderlich.

© Siemens 2019

Auswahl- und Bestelldaten (Fortsetzung)

For line voltage 380 ... 480 V 3 AC (DC link voltage 510 ... 720 V DC) **– gearbox type** ***D19***

Geared motor torque at 1450 rpm Note: All values in **bold** print are maximum gearbox values. M_{2dyn} Nm																						Servo helical geared motors SIMOTICS S-1FG1 Article No.
Max. output speed n_{2max} = **24 rpm**, Transmission ratio i = **184.86**																						
114	**114**	**114**	**114**	**114**	**114**	–	–	–	–	–	–	–	–	–	–	–	–	–	–	–	–	1FG1201- . . ■ ■ 6 - ■ . Q1 -Z
–	–	–	–	–	**114**	**114**	–	–	–	–	–	–	–	–	–	–	–	–	–	–	–	1FG1201- . . ■ ■ 4 - ■ . Q1 -Z
–	–	–	–	**114**	–	**114**	–	–	–	–	–	–	–	–	–	–	–	–	–	–	–	1FG1201- . . ■ ■ 3 - ■ . Q1 -Z
–	–	–	–	**114**	–	–	–	–	–	–	–	–	–	–	–	–	–	–	–	–	–	1FG1201- . . ■ ■ 2 - ■ . Q1 -Z
Max. output speed n_{2max} = **27 rpm**, Transmission ratio i = **163.69**																						
114	**114**	**114**	**114**	**114**	**114**	–	–	–	–	–	–	–	–	–	–	–	–	–	–	–	–	1FG1201- . . ■ ■ 6 - ■ . P1 -Z
–	–	–	–	–	**114**	**114**	–	–	–	–	–	–	–	–	–	–	–	–	–	–	–	1FG1201- . . ■ ■ 4 - ■ . P1 -Z
–	–	–	–	**114**	–	**114**	–	–	–	–	–	–	–	–	–	–	–	–	–	–	–	1FG1201- . . ■ ■ 3 - ■ . P1 -Z
–	–	–	–	**114**	–	–	–	–	–	–	–	–	–	–	–	–	–	–	–	–	–	1FG1201- . . ■ ■ 2 - ■ . P1 -Z
Max. output speed n_{2max} = **32 rpm**, Transmission ratio i = **142.23**																						
114	**114**	**114**	**114**	**114**	**114**	–	–	–	–	–	–	–	–	–	–	–	–	–	–	–	–	1FG1201- . . ■ ■ 6 - ■ . N1 -Z
–	–	–	–	–	**114**	**114**	–	–	–	–	–	–	–	–	–	–	–	–	–	–	–	1FG1201- . . ■ ■ 4 - ■ . N1 -Z
–	–	–	–	**114**	–	**114**	–	–	–	–	–	–	–	–	–	–	–	–	–	–	–	1FG1201- . . ■ ■ 3 - ■ . N1 -Z
–	–	–	–	**114**	–	–	–	–	–	–	–	–	–	–	–	–	–	–	–	–	–	1FG1201- . . ■ ■ 2 - ■ . N1 -Z
Max. output speed n_{2max} = **35 rpm**, Transmission ratio i = **129.3**																						
114	**114**	**114**	**114**	**114**	**114**	–	–	–	–	–	–	–	–	–	–	–	–	–	–	–	–	1FG1201- . . ■ ■ 6 - ■ . M1 -Z
–	–	–	–	–	**114**	**114**	–	–	–	–	–	–	–	–	–	–	–	–	–	–	–	1FG1201- . . ■ ■ 4 - ■ . M1 -Z
–	–	–	–	**114**	–	**114**	–	–	–	–	–	–	–	–	–	–	–	–	–	–	–	1FG1201- . . ■ ■ 3 - ■ . M1 -Z
–	–	–	–	**114**	–	–	–	–	–	–	–	–	–	–	–	–	–	–	–	–	–	1FG1201- . . ■ ■ 2 - ■ . M1 -Z
Max. output speed n_{2max} = **41 rpm**, Transmission ratio i = **110.02**																						
111	**111**	**111**	**111**	**111**	**111**	–	–	–	–	–	–	–	–	–	–	–	–	–	–	–	–	1FG1201- . . ■ ■ 6 - ■ . L1 -Z
–	–	–	–	–	**111**	**111**	–	–	–	–	–	–	–	–	–	–	–	–	–	–	–	1FG1201- . . ■ ■ 4 - ■ . L1 -Z
–	–	–	–	**111**	–	**111**	–	–	–	–	–	–	–	–	–	–	–	–	–	–	–	1FG1201- . . ■ ■ 3 - ■ . L1 -Z
–	–	–	–	**111**	–	–	–	–	–	–	–	–	–	–	–	–	–	–	–	–	–	1FG1201- . . ■ ■ 2 - ■ . L1 -Z
Max. output speed n_{2max} = **45 rpm**, Transmission ratio i = **100.02**																						
110	**110**	**110**	**110**	**110**	**110**	–	–	–	–	–	–	–	–	–	–	–	–	–	–	–	–	1FG1201- . . ■ ■ 6 - ■ . K1 -Z
–	–	–	–	–	**110**	**110**	–	–	–	–	–	–	–	–	–	–	–	–	–	–	–	1FG1201- . . ■ ■ 4 - ■ . K1 -Z
–	–	–	–	**110**	–	**110**	–	–	–	–	–	–	–	–	–	–	–	–	–	–	–	1FG1201- . . ■ ■ 3 - ■ . K1 -Z
–	–	–	–	**110**	–	–	–	–	–	–	–	–	–	–	–	–	–	–	–	–	–	1FG1201- . . ■ ■ 2 - ■ . K1 -Z
Max. output speed n_{2max} = **52 rpm**, Transmission ratio i = **87.21**																						
108	**108**	**108**	**108**	**108**	**108**	–	–	–	–	–	–	–	–	–	–	–	–	–	–	–	–	1FG1201- . . ■ ■ 6 - ■ . J1 -Z
–	–	–	–	–	**108**	**108**	–	–	–	–	–	–	–	–	–	–	–	–	–	–	–	1FG1201- . . ■ ■ 4 - ■ . J1 -Z
–	–	–	–	**108**	–	**108**	–	–	–	–	–	–	–	–	–	–	–	–	–	–	–	1FG1201- . . ■ ■ 3 - ■ . J1 -Z
–	–	–	–	**108**	–	–	–	–	–	–	–	–	–	–	–	–	–	–	–	–	–	1FG1201- . . ■ ■ 2 - ■ . J1 -Z

Motor shaft height:

36																						**C**
			48																			**D**
							63															**E**
													80									**F**
																		100				**G**

Motor length/motor version (**CT** = Compact, **HD** = High Dynamic)**:**

			0/CT				**0/CT**					**0/CT**						**0/CT**					**0**	**2**
													1/CT						**1/CT**				**1**	**2**
								1/HD															**1**	**4**
2/CT				**2/CT**					**2/CT**														**2**	**2**
										3/CT				**3/CT**						**3/CT**			**3**	**2**
	3/HD				**3/HD**											**4/CT**							**3**	**4**
		4/CT																					**4**	**2**
						4/HD					**4/HD**												**4**	**4**
																				5/CT			**5**	**2**
															5/HD								**5**	**4**
																6/HD							**6**	**4**

Selection of shaft design, encoder system, mounting type and special designs on page 3/8.

1FG1202- ■ ■ . . . . - . ■ . . -Z

© Siemens 2019

Gearbox size 19, 3-stage – 1FG1201

For line voltage 380 ... 480 V 3 AC (DC link voltage 510 ... 720 V DC) **– gearbox type** ***D19***

Geared motor torque at 1450 rpm
Note: All values in **bold** print are maximum gearbox values.

M_{2dyn} Nm																						Servo helical geared motors SIMOTICS S-1FG1 Article No.
Max. output speed n_{2max} = **58 rpm**, Transmission ratio i = **78.07**																						
106	**106**	**106**	**106**	**106**	**106**	–	–	–	–	–	–	–	–	–	–	–	–	–	–	–	–	1FG1201- . . ■ ■ 6 - ■ . H1 -Z
–	–	–	–	–	**106**	**106**	–	–	–	–	–	–	–	–	–	–	–	–	–	–	–	1FG1201- . . ■ ■ 4 - ■ . H1 -Z
–	–	–	–	**106**	–	**106**	–	–	–	–	–	–	–	–	–	–	–	–	–	–	–	1FG1201- . . ■ ■ 3 - ■ . H1 -Z
–	–	–	–	**106**	–	–	–	–	–	–	–	–	–	–	–	–	–	–	–	–	–	1FG1201- . . ■ ■ 2 - ■ . H1 -Z
Max. output speed n_{2max} = **65 rpm**, Transmission ratio i = **69.32**																						
104	**104**	**104**	**104**	**104**	**104**	–	–	–	–	–	–	–	–	–	–	–	–	–	–	–	–	1FG1201- . . ■ ■ 6 - ■ . G1 -Z
–	–	–	–	–	**104**	**104**	–	–	–	–	–	–	–	–	–	–	–	–	–	–	–	1FG1201- . . ■ ■ 4 - ■ . G1 -Z
–	–	–	–	**104**	–	**104**	–	–	–	–	–	–	–	–	–	–	–	–	–	–	–	1FG1201- . . ■ ■ 3 - ■ . G1 -Z
–	–	–	–	**104**	–	–	–	–	–	–	–	–	–	–	–	–	–	–	–	–	–	1FG1201- . . ■ ■ 2 - ■ . G1 -Z
Max. output speed n_{2max} = **70 rpm**, Transmission ratio i = **63.99**																						
103	**103**	**103**	**103**	**103**	**103**	–	–	–	–	–	–	–	–	–	–	–	–	–	–	–	–	1FG1201- . . ■ ■ 6 - ■ . F1 -Z
–	–	–	–	–	**103**	**103**	–	–	–	–	–	–	–	–	–	–	–	–	–	–	–	1FG1201- . . ■ ■ 4 - ■ . F1 -Z
–	–	–	–	**103**	–	**103**	–	–	–	–	–	–	–	–	–	–	–	–	–	–	–	1FG1201- . . ■ ■ 3 - ■ . F1 -Z
–	–	–	–	**103**	–	–	–	–	–	–	–	–	–	–	–	–	–	–	–	–	–	1FG1201- . . ■ ■ 2 - ■ . F1 -Z
Max. output speed n_{2max} = **81 rpm**, Transmission ratio i = **55.59**																						
102	**102**	**102**	**102**	**102**	**102**	–	–	–	–	–	–	–	–	–	–	–	–	–	–	–	–	1FG1201- . . ■ ■ 6 - ■ . E1 -Z
–	–	–	–	–	**102**	**102**	–	–	–	–	–	–	–	–	–	–	–	–	–	–	–	1FG1201- . . ■ ■ 4 - ■ . E1 -Z
–	–	–	–	**102**	–	**102**	–	–	–	–	–	–	–	–	–	–	–	–	–	–	–	1FG1201- . . ■ ■ 3 - ■ . E1 -Z
–	–	–	–	**102**	–	–	–	–	–	–	–	–	–	–	–	–	–	–	–	–	–	1FG1201- . . ■ ■ 2 - ■ . E1 -Z
Max. output speed n_{2max} = **93 rpm**, Transmission ratio i = **48.3**																						
102	**102**	**102**	**102**	**102**	**102**	–	–	–	–	–	–	–	–	–	–	–	–	–	–	–	–	1FG1201- . . ■ ■ 6 - ■ . D1 -Z
–	–	–	–	–	**102**	**102**	–	–	–	–	–	–	–	–	–	–	–	–	–	–	–	1FG1201- . . ■ ■ 4 - ■ . D1 -Z
–	–	–	–	**102**	–	**102**	–	–	–	–	–	–	–	–	–	–	–	–	–	–	–	1FG1201- . . ■ ■ 3 - ■ . D1 -Z
–	–	–	–	**102**	–	–	–	–	–	–	–	–	–	–	–	–	–	–	–	–	–	1FG1201- . . ■ ■ 2 - ■ . D1 -Z
Max. output speed n_{2max} = **103 rpm**, Transmission ratio i = **43.61**																						
102	**102**	**102**	**102**	**102**	**102**	–	–	–	–	–	–	–	–	–	–	–	–	–	–	–	–	1FG1201- . . ■ ■ 6 - ■ . C1 -Z
–	–	–	–	–	**102**	**102**	–	–	–	–	–	–	–	–	–	–	–	–	–	–	–	1FG1201- . . ■ ■ 4 - ■ . C1 -Z
–	–	–	–	**102**	–	**102**	–	–	–	–	–	–	–	–	–	–	–	–	–	–	–	1FG1201- . . ■ ■ 3 - ■ . C1 -Z
–	–	–	–	**102**	–	–	–	–	–	–	–	–	–	–	–	–	–	–	–	–	–	1FG1201- . . ■ ■ 2 - ■ . C1 -Z
Max. output speed n_{2max} = **110 rpm**, Transmission ratio i = **41.04**																						
102	**102**	**102**	**102**	**102**	**102**	–	–	–	–	–	–	–	–	–	–	–	–	–	–	–	–	1FG1201- . . ■ ■ 6 - ■ . B1 -Z
–	–	–	–	–	**102**	**102**	–	–	–	–	–	–	–	–	–	–	–	–	–	–	–	1FG1201- . . ■ ■ 4 - ■ . B1 -Z
–	–	–	–	**102**	–	**102**	–	–	–	–	–	–	–	–	–	–	–	–	–	–	–	1FG1201- . . ■ ■ 3 - ■ . B1 -Z
–	–	–	–	**102**	–	–	–	–	–	–	–	–	–	–	–	–	–	–	–	–	–	1FG1201- . . ■ ■ 2 - ■ . B1 -Z
Max. output speed n_{2max} = **126 rpm**, Transmission ratio i = **35.78**																						
102	**102**	**102**	**102**	**102**	**102**	–	–	–	–	–	–	–	–	–	–	–	–	–	–	–	–	1FG1201- . . ■ ■ 6 - ■ . A1 -Z
–	–	–	–	–	**102**	**102**	–	–	–	–	–	–	–	–	–	–	–	–	–	–	–	1FG1201- . . ■ ■ 4 - ■ . A1 -Z
–	–	–	–	**102**	–	**102**	–	–	–	–	–	–	–	–	–	–	–	–	–	–	–	1FG1201- . . ■ ■ 3 - ■ . A1 -Z
–	–	–	–	**102**	–	–	–	–	–	–	–	–	–	–	–	–	–	–	–	–	–	1FG1201- . . ■ ■ 2 - ■ . A1 -Z

Motor shaft height:

36																						**C**
			48																			**D**
							63															**E**
													80									**F**
																		100				**G**

Motor length/motor version (**CT** = Compact, **HD** = High Dynamic)**:**

			0/CT				**0/CT**					**0/CT**						**0/CT**					**0**	**2**
											1/CT								**1/CT**				**1**	**2**
								1/HD															**1**	**4**
2/CT				**2/CT**					**2/CT**														**2**	**2**
										3/CT				**3/CT**						**3/CT**			**3**	**2**
	3/HD				**3/HD**																		**3**	**4**
		4/CT														**4/CT**							**4**	**2**
						4/HD						**4/HD**												**4**	**4**
																				5/CT			**5**	**2**
															5/HD								**5**	**4**
																6/HD							**6**	**4**

Selection of shaft design, encoder system, mounting type and special designs on page 3/8.

1FG1202- ■ ■ . . . - . ■ . . -Z

© Siemens 2019

Auswahl- und Bestelldaten (Fortsetzung)

For line voltage 200 ... 240 V 1 AC (DC link voltage 270 ... 330 V DC) **– gearbox type** ***D19***

Max. output speed n_{2max} rpm	Transmission ratio i	Geared motor torque at 1450 rpm Note: All values in **bold** print are maximum gearbox values. M_{2dyn} Nm					**Servo helical geared motors SIMOTICS S-1FG1** Article No.
24	**184.86**	**114**	**114**	**114**	**114**	**114**	**1FG1201- . . ■ ■ 3 - ■ . Q1 -Z**
27	**163.69**	**114**	**114**	**114**	**114**	**114**	**1FG1201- . . ■ ■ 3 - ■ . P1 -Z**
32	**142.23**	**114**	**114**	**114**	**114**	**114**	**1FG1201- . . ■ ■ 3 - ■ . N1 -Z**
35	**129.3**	**114**	**114**	**114**	**114**	**114**	**1FG1201- . . ■ ■ 3 - ■ . M1 -Z**
41	**110.02**	**111**	**111**	**111**	**111**	**111**	**1FG1201- . . ■ ■ 3 - ■ . L1 -Z**
45	**100.02**	**110**	**110**	**110**	**110**	**110**	**1FG1201- . . ■ ■ 3 - ■ . K1 -Z**
52	**87.21**	**108**	**108**	**108**	**108**	**108**	**1FG1201- . . ■ ■ 3 - ■ . J1 -Z**
58	**78.07**	**106**	**106**	**106**	**106**	**106**	**1FG1201- . . ■ ■ 3 - ■ . H1 -Z**
65	**69.32**	**104**	**104**	**104**	**104**	**104**	**1FG1201- . . ■ ■ 3 - ■ . G1 -Z**
70	**63.99**	**103**	**103**	**103**	**103**	**103**	**1FG1201- . . ■ ■ 3 - ■ . F1 -Z**
81	**55.59**	**102**	**102**	**102**	**102**	**102**	**1FG1201- . . ■ ■ 3 - ■ . E1 -Z**
93	**48.3**	**102**	**102**	**102**	**102**	**102**	**1FG1201- . . ■ ■ 3 - ■ . D1 -Z**
103	**43.61**	**102**	**102**	**102**	**102**	**102**	**1FG1201- . . ■ ■ 3 - ■ . C1 -Z**
110	**41.04**	**102**	**102**	**102**	**102**	**102**	**1FG1201- . . ■ ■ 3 - ■ . B1 -Z**
126	**35.78**	**102**	**102**	**102**	**102**	**102**	**1FG1201- . . ■ ■ 3 - ■ . A1 -Z**

Motor shaft height:

	36						**C**
				48			**D**

Motor length/motor version (**CT** = Compact, **HD** = High Dynamic)**:**

	2/CT			**2/CT**			**2**		**1**
		3/HD			**3/HD**		**3**		**3**
			4/CT				**4**		**1**

Selection of shaft design, encoder system, mounting type and special designs on page 3/8.

1FG1201- ■ ■ . . . - . ■ . . -Z

© Siemens 2019

Gearbox size 29, 2-stage – 1FG1102

Technical specifications

Gearbox type *Z29*

Servo geared motor Type	i	R_{ex}	M_{2rated} Nm	M_{2max} Nm	$M_{2Em.Off}$ Nm	n_{2max} rpm	n_{1max} rpm	φ [1] '	F_{R2} N	F_{R2max} N	c_T Nm/ '	J_G 10^{-4} kgm^2
1FG1102-.....-..A2	41.4	207/5	140	146	235	109	4500	10.80	3710	3550	9	0.04
1FG1102-.....-..X1	36.72	918/25	140	146	235	123	4500	10.81	3690	3530	9	0.05
1FG1102-.....-..W1	31.86	1593/50	140	146	235	141	4500	10.94	3350	3190	9	0.06
1FG1102-.....-..V1	28.96	1593/55	140	146	235	155	4500	10.94	3120	2970	9	0.07
1FG1102-.....-..U1	24.84	621/25	140	146	235	181	4500	11.03	2780	2620	9	0.09
1FG1102-.....-..T1	22.58	1242/55	140	146	235	199	4500	11.03	2580	2420	9	0.11
1FG1102-.....-..S1	19.8	99/5	140	145	235	227	4500	11.20	2310	2180	9	0.13
1FG1102-.....-..R1	17.67	972/55	140	145	235	255	4500	11.28	2090	1950	9	0.16
1FG1102-.....-..Q1	15.75	63/4	140	145	235	286	4500	11.39	1870	1730	9	0.19
1FG1102-.....-..P1	14.54	189/13	120	145	200	309	4500	11.39	1720	1590	8.9	0.23
1FG1102-.....-..N1	12.73	891/70	140	145	235	353	4500	11.64	1480	1350	9	0.26
1FG1102-.....-..M1	11.16	279/25	140	145	235	403	4500	11.92	1260	1130	9	0.27
1FG1102-.....-..L1	10.12	81/8	140	145	235	445	4500	12.08	1100	975	8.9	0.38
1FG1102-.....-..K1	9.53	162/17	140	145	235	470	4475	12.08	1010	875	8.9	0.44
1FG1102-.....-..J1	8.4	42/5	138	138	230	518	4350	11.74	870	870	8.9	0.5
1FG1102-.....-..H1	7.29	729/100	130	130	220	597	4350	11.90	870	870	8.9	0.67
1FG1102-.....-..G1	6.92	90/13	75	106	127	629	4350	17.40	950	950	6.4	0.29
1FG1102-.....-..F1	6.06	297/49	100	100	170	718	4350	17.95	955	955	6.4	0.36
1FG1102-.....-..E1	5.31	186/35	91	91	154	819	4350	18.56	1060	1060	6.3	0.37
1FG1102-.....-..D1	4.82	135/28	86	86	146	902	4350	18.90	1090	1090	6.3	0.5
1FG1102-.....-..C1	4.54	540/119	84	84	142	958	4350	18.89	1070	1070	6.3	0.58
1FG1102-.....-..B1	4	4/1	76	76	129	1088	4350	18.16	1170	1170	6.3	0.68
1FG1102-.....-..A1	3.47	243/70	70	70	119	1254	4350	18.51	1190	1190	6.2	0.91

Selection and ordering data

Shaft design, encoder system, mounting type and special designs

Gearbox type *Z29*

			Servo helical geared motors SIMOTICS S-1FG1 Article No. **1FG1102-** ■■.....-.■..-Z
Shaft design:	Solid shaft with feather keyway	– Design 1	**1** **9**
Order codes and Descriptions see chapter "Options"			
Encoder system for motors with DRIVE-CLiQ interface:	AS20DQI encoder		**Q**
	AM20DQI encoder		**R**
	R14DQ resolver		**P**
	R15DQ resolver		**U**
Order codes and Descriptions see chapter "Options"	Special version encoder system		**Z**
Mounting type:	Foot-mounted design		**A**
	Foot/flange-mounted design		**B**
	Flange-mounted design		**F**
	Housing flange design		**H**
Special designs (Options): Order codes and Descriptions see chapter "Options" The following order codes must be added to each article number: • Oil type – order codes **K06** or **K11** • Mounting position – order codes **D01** ... **D06**			**-Z**

Selection of 2-stages Servo helical geared motors with gearbox size 29 from next page. **1FG1102-** ..■■■-■.■■-Z

[1] Data are for option reduced-backlash version – order code **G99** required.

© Siemens 2019

Selection and ordering data (continued)

For line voltage 380 ... 480 V 3 AC (DC link voltage 510 ... 720 V DC) **– gearbox type** ***Z29***

Geared motor torque at 1450 rpm
Note: All values in **bold** print are maximum gearbox values.
M_{2dyn}
Nm

Servo helical geared motors SIMOTICS S-1FG1
Article No.

1	2	3	4	5	6	7	8	9	10	11	12	13	14	15	16	17	18	19	20	21	Article No.
Max. output speed n_{2max} = **109 rpm**, Transmission ratio i = **41.4**																					
146	**146**	**146**	**146**	**146**	**146**	–	–	–	–	–	–	–	–	–	–	–	–	–	–	–	1FG1102- . . ■ ■ 6 - ■ . A2 -Z
–	–	–	–	–	**146**	**146**	–	–	–	–	–	–	–	–	–	–	–	–	–	–	1FG1102- . . ■ ■ 4 - ■ . A2 -Z
–	–	–	–	**146**	–	**146**	–	–	–	–	–	–	–	–	–	–	–	–	–	–	1FG1102- . . ■ ■ 3 - ■ . A2 -Z
–	–	–	–	**146**	–	–	–	–	–	–	–	–	–	–	–	–	–	–	–	–	1FG1102- . . ■ ■ 2 - ■ . A2 -Z
Max. output speed n_{2max} = **123 rpm**, Transmission ratio i = **36.72**																					
146	146	**146**	**146**	**146**	**146**	–	–	–	–	–	–	–	–	–	–	–	–	–	–	–	1FG1102- . . ■ ■ 6 - ■ . X1 -Z
–	–	–	–	–	**146**	**146**	**146**	**146**	**146**	**146**	**146**	–	–	–	–	–	–	–	–	–	1FG1102- . . ■ ■ 4 - ■ . X1 -Z
–	–	–	–	**146**	–	**146**	**146**	**146**	**146**	**146**	**146**	–	–	–	–	–	–	–	–	–	1FG1102- . . ■ ■ 3 - ■ . X1 -Z
–	–	–	–	**146**	–	–	**146**	–	**146**	**146**	**146**	–	–	–	–	–	–	–	–	–	1FG1102- . . ■ ■ 2 - ■ . X1 -Z
Max. output speed n_{2max} = **141 rpm**, Transmission ratio i = **31.86**																					
133	127	**146**	**146**	**146**	**146**	–	–	–	–	–	–	–	–	–	–	–	–	–	–	–	1FG1102- . . ■ ■ 6 - ■ . W1 -Z
–	–	–	–	–	**146**	**146**	**146**	**146**	**146**	**146**	**146**	–	–	–	–	–	–	–	–	–	1FG1102- . . ■ ■ 4 - ■ . W1 -Z
–	–	–	–	**146**	–	**146**	**146**	**146**	**146**	**146**	**146**	–	–	–	–	–	–	–	–	–	1FG1102- . . ■ ■ 3 - ■ . W1 -Z
–	–	–	–	**146**	–	–	**146**	–	**146**	**146**	**146**	–	–	–	–	–	–	–	–	–	1FG1102- . . ■ ■ 2 - ■ . W1 -Z
Max. output speed n_{2max} = **155 rpm**, Transmission ratio i = **28.96**																					
121	116	**146**	138	**146**	**146**	–	–	–	–	–	–	–	–	–	–	–	–	–	–	–	1FG1102- . . ■ ■ 6 - ■ . V1 -Z
–	–	–	–	–	**146**	**146**	**146**	**146**	**146**	**146**	**146**	–	–	–	–	–	–	–	–	–	1FG1102- . . ■ ■ 4 - ■ . V1 -Z
–	–	–	–	**146**	–	**146**	**146**	**146**	**146**	**146**	**146**	–	–	–	–	–	–	–	–	–	1FG1102- . . ■ ■ 3 - ■ . V1 -Z
–	–	–	–	**146**	–	–	**146**	–	**146**	**146**	**146**	–	–	–	–	–	–	–	–	–	1FG1102- . . ■ ■ 2 - ■ . V1 -Z
Max. output speed n_{2max} = **181 rpm**, Transmission ratio i = **24.84**																					
103	99	**146**	117	**146**	**146**	–	–	–	–	–	–	–	–	–	–	–	–	–	–	–	1FG1102- . . ■ ■ 6 - ■ . U1 -Z
–	–	–	–	–	**146**	**146**	**146**	**146**	**146**	**146**	**146**	–	–	–	–	–	–	–	–	–	1FG1102- . . ■ ■ 4 - ■ . U1 -Z
–	–	–	–	**146**	–	**146**	**146**	**146**	**146**	**146**	**146**	–	–	–	–	–	–	–	–	–	1FG1102- . . ■ ■ 3 - ■ . U1 -Z
–	–	–	–	**146**	–	–	**146**	–	**146**	**146**	**146**	–	–	–	–	–	–	–	–	–	1FG1102- . . ■ ■ 2 - ■ . U1 -Z
Max. output speed n_{2max} = **199 rpm**, Transmission ratio i = **22.58**																					
95	90	137	107	**146**	**146**	–	–	–	–	–	–	–	–	–	–	–	–	–	–	–	1FG1102- . . ■ ■ 6 - ■ . T1 -Z
–	–	–	–	–	**146**	**146**	**146**	**146**	**146**	**146**	**146**	–	–	–	–	–	–	–	–	–	1FG1102- . . ■ ■ 4 - ■ . T1 -Z
–	–	–	–	**146**	–	**146**	**146**	**146**	**146**	**146**	**146**	–	–	–	–	–	–	–	–	–	1FG1102- . . ■ ■ 3 - ■ . T1 -Z
–	–	–	–	**146**	–	–	**146**	–	**146**	**146**	**146**	–	–	–	–	–	–	–	–	–	1FG1102- . . ■ ■ 2 - ■ . T1 -Z
Max. output speed n_{2max} = **227 rpm**, Transmission ratio i = **19.8**																					
83	79	120	94	**145**	**145**	–	–	–	–	–	–	–	–	–	–	–	–	–	–	–	1FG1102- . . ■ ■ 6 - ■ . S1 -Z
–	–	–	–	–	**145**	**145**	**145**	**145**	**145**	**145**	**145**	–	–	–	–	–	–	–	–	–	1FG1102- . . ■ ■ 4 - ■ . S1 -Z
–	–	–	–	**145**	–	**145**	**145**	**145**	**145**	**145**	**145**	–	–	–	–	–	–	–	–	–	1FG1102- . . ■ ■ 3 - ■ . S1 -Z
–	–	–	–	**145**	–	–	**145**	–	**145**	**145**	**145**	–	–	–	–	–	–	–	–	–	1FG1102- . . ■ ■ 2 - ■ . S1 -Z

Motor shaft height:

1	2	3	4	5	6	7	8	9	10	11	12	13	14	15	16	17	18	19	20	21	
36																					C
			48																		D
						63															E
												80									F
																	100				G

Motor length/motor version (**CT** = Compact, **HD** = High Dynamic)**:**

1	2	3	4	5	6	7	8	9	10	11	12	13	14	15	16	17	18	19	20	21	
			0/CT				**0/CT**					**0/CT**						**0/CT**				0	2
													1/CT						**1/CT**			1	2
								1/HD														1	4
2/CT				**2/CT**					**2/CT**													2	2
										3/CT				**3/CT**					**3/CT**			3	2
	3/HD				**3/HD**																	3	4
		4/CT													**4/CT**							4	2
						4/HD					**4/HD**											4	4
																			5/CT			5	2
																5/HD						5	4
																	6/HD					6	4

Selection of shaft design, encoder system, mounting type and special designs on page 3/12.

1FG1102- ■ ■ . . . . - . ■ . . -Z

© Siemens 2019

Gearbox size 29, 2-stage – 1FG1102

For line voltage 380 ... 480 V 3 AC (DC link voltage 510 ... 720 V DC) **– gearbox type** ***Z29***

Geared motor torque at 1450 rpm
Note: All values in **bold** print are maximum gearbox values.

M_{2dyn} Nm

																						Article No.
Max. output speed n_{2max} = 255 rpm, Transmission ratio i = 17.67																						
74	71	107	84	**145**	**145**	–	–	–	–	–	–	–	–	–	–	–	–	–	–	–	–	1FG1102- . . ■ ■ 6 - ■ . R1 -Z
–	–	–	–	–	**145**	**145**	**145**	**145**	**145**	**145**	**145**	–	–	–	–	–	–	–	–	–	–	1FG1102- . . ■ ■ 4 - ■ . R1 -Z
–	–	–	–	**145**	–	**145**	**145**	**145**	**145**	**145**	**145**	–	–	–	–	–	–	–	–	–	–	1FG1102- . . ■ ■ 3 - ■ . R1 -Z
–	–	–	–	**145**	–	–	**145**	–	**145**	**145**	**145**	–	–	–	–	–	–	–	–	–	–	1FG1102- . . ■ ■ 2 - ■ . R1 -Z
Max. output speed n_{2max} = 286 rpm, Transmission ratio i = 15.75																						
66	63	95	75	**145**	**145**	–	–	–	–	–	–	–	–	–	–	–	–	–	–	–	–	1FG1102- . . ■ ■ 6 - ■ . Q1 -Z
–	–	–	–	–	**145**	**145**	**145**	**145**	**145**	**145**	**145**	–	–	–	–	–	–	–	–	–	–	1FG1102- . . ■ ■ 4 - ■ . Q1 -Z
–	–	–	–	**145**	–	**145**	**145**	**145**	**145**	**145**	**145**	–	–	–	–	–	–	–	–	–	–	1FG1102- . . ■ ■ 3 - ■ . Q1 -Z
–	–	–	–	**145**	–	–	**145**	–	**145**	**145**	**145**	–	–	–	–	–	–	–	–	–	–	1FG1102- . . ■ ■ 2 - ■ . Q1 -Z
Max. output speed n_{2max} = 309 rpm, Transmission ratio i = 14.54																						
61	58	89	69	143	136	–	–	–	–	–	–	–	–	–	–	–	–	–	–	–	–	1FG1102- . . ■ ■ 6 - ■ . P1 -Z
–	–	–	–	–	136	**145**	**145**	**145**	**145**	**145**	**145**	–	–	–	–	–	–	–	–	–	–	1FG1102- . . ■ ■ 4 - ■ . P1 -Z
–	–	–	–	143	–	**145**	**145**	**145**	**145**	**145**	**145**	–	–	–	–	–	–	–	–	–	–	1FG1102- . . ■ ■ 3 - ■ . P1 -Z
–	–	–	–	143	–	–	**145**	–	**145**	**145**	**145**	–	–	–	–	–	–	–	–	–	–	1FG1102- . . ■ ■ 2 - ■ . P1 -Z
Max. output speed n_{2max} = 353 rpm, Transmission ratio i = 12.73																						
54	51	78	61	126	120	–	–	–	–	–	–	–	–	–	–	–	–	–	–	–	–	1FG1102- . . ■ ■ 6 - ■ . N1 -Z
–	–	–	–	–	120	135	**145**	**145**	**145**	**145**	**145**	–	–	–	–	–	–	–	–	–	–	1FG1102- . . ■ ■ 4 - ■ . N1 -Z
–	–	–	–	126	–	135	**145**	**145**	**145**	**145**	**145**	–	–	–	–	–	–	–	–	–	–	1FG1102- . . ■ ■ 3 - ■ . N1 -Z
–	–	–	–	126	–	–	**145**	–	**145**	**145**	**145**	–	–	–	–	–	–	–	–	–	–	1FG1102- . . ■ ■ 2 - ■ . N1 -Z
Max. output speed n_{2max} = 403 rpm, Transmission ratio i = 11.16																						
47	45	68	54	111	106	–	–	–	–	–	–	–	–	–	–	–	–	–	–	–	–	1FG1102- . . ■ ■ 6 - ■ . M1 -Z
–	–	–	–	–	106	119	**145**	**145**	**145**	**145**	**145**	–	–	–	–	–	–	–	–	–	–	1FG1102- . . ■ ■ 4 - ■ . M1 -Z
–	–	–	–	111	–	119	**145**	**145**	**145**	**145**	**145**	–	–	–	–	–	–	–	–	–	–	1FG1102- . . ■ ■ 3 - ■ . M1 -Z
–	–	–	–	111	–	–	**145**	–	**145**	**145**	**145**	–	–	–	–	–	–	–	–	–	–	1FG1102- . . ■ ■ 2 - ■ . M1 -Z
Max. output speed n_{2max} = 445 rpm, Transmission ratio i = 10.12																						
43	41	62	48	100	96	–	–	–	–	–	–	–	–	–	–	–	–	–	–	–	–	1FG1102- . . ■ ■ 6 - ■ . L1 -Z
–	–	–	–	–	96	108	**145**	**145**	**145**	**145**	**145**	–	–	–	–	–	–	–	–	–	–	1FG1102- . . ■ ■ 4 - ■ . L1 -Z
–	–	–	–	100	–	108	**145**	**145**	**145**	**145**	**145**	–	–	–	–	–	–	–	–	–	–	1FG1102- . . ■ ■ 3 - ■ . L1 -Z
–	–	–	–	100	–	–	**145**	–	**145**	**145**	**145**	–	–	–	–	–	–	–	–	–	–	1FG1102- . . ■ ■ 2 - ■ . L1 -Z
Max. output speed n_{2max} = 470 rpm, Transmission ratio i = 9.53																						
40	38	58	46	95	90	–	–	–	–	–	–	–	–	–	–	–	–	–	–	–	–	1FG1102- . . ■ ■ 6 - ■ . K1 -Z
–	–	–	–	–	90	102	**145**	**145**	**145**	**145**	**145**	–	–	–	–	–	–	–	–	–	–	1FG1102- . . ■ ■ 4 - ■ . K1 -Z
–	–	–	–	95	–	102	**145**	**145**	**145**	**145**	**145**	–	–	–	–	–	–	–	–	–	–	1FG1102- . . ■ ■ 3 - ■ . K1 -Z
–	–	–	–	95	–	–	**145**	–	**145**	**145**	**145**	–	–	–	–	–	–	–	–	–	–	1FG1102- . . ■ ■ 2 - ■ . K1 -Z
Max. output speed n_{2max} = 518 rpm, Transmission ratio i = 8.4																						
36	34	52	40	84	80	–	–	–	–	–	–	–	–	–	–	–	–	–	–	–	–	1FG1102- . . ■ ■ 6 - ■ . J1 -Z
–	–	–	–	–	80	90	**138**	138	**138**	**138**	**138**	–	–	–	–	–	–	–	–	–	–	1FG1102- . . ■ ■ 4 - ■ . J1 -Z
–	–	–	–	84	–	90	**138**	138	**138**	**138**	**138**	–	–	–	–	–	–	–	–	–	–	1FG1102- . . ■ ■ 3 - ■ . J1 -Z
–	–	–	–	84	–	–	**138**	–	**138**	**138**	**138**	–	–	–	–	–	–	–	–	–	–	1FG1102- . . ■ ■ 2 - ■ . J1 -Z

Motor shaft height:

36																							**C**
			48																				**D**
							63																**E**
												80											**F**
																		100					**G**

Motor length/motor version (**CT** = Compact, **HD** = High Dynamic)**:**

			0/CT				**0/CT**					**0/CT**						**0/CT**						**0**	**2**
													1/CT						**1/CT**					**1**	**2**
								1/HD																**1**	**4**
2/CT				**2/CT**					**2/CT**															**2**	**2**
										3/CT				**3/CT**						**3/CT**				**3**	**2**
	3/HD				**3/HD**																			**3**	**4**
		4/CT														**4/CT**								**4**	**2**
						4/HD					**4/HD**														**4**	**4**
																				5/CT				**5**	**2**
															5/HD									**5**	**4**
																6/HD								**6**	**4**

Selection of shaft design, encoder system, mounting type and special designs on page 3/12.

1FG1102- ■ ■ . . . - . ■ . . -Z

© Siemens 2019

For line voltage 380 ... 480 V 3 AC (DC link voltage 510 ... 720 V DC) **– gearbox type** ***Z29***

Geared motor torque at 1450 rpm
Note: All values in **bold** print are maximum gearbox values.

M_{2dyn} Nm																						Servo helical geared motors SIMOTICS S-1FG1 Article No.
Max. output speed n_{2max} = **597 rpm**, Transmission ratio i = **7.29**																						
31	29	45	35	72	69	–	–	–	–	–	–	–	–	–	–	–	–	–	–	–	–	1FG1102- . . ■ ■ 6 - ■ . H1 -Z
–	–	–	–	–	69	78	124	119	**130**	**130**	**130**	–	–	–	–	–	–	–	–	–	–	1FG1102- . . ■ ■ 4 - ■ . H1 -Z
–	–	–	–	72	–	78	124	119	**130**	**130**	**130**	–	–	–	–	–	–	–	–	–	–	1FG1102- . . ■ ■ 3 - ■ . H1 -Z
–	–	–	–	72	–	–	124	–	**130**	**130**	**130**	–	–	–	–	–	–	–	–	–	–	1FG1102- . . ■ ■ 2 - ■ . H1 -Z
Max. output speed n_{2max} = **629 rpm**, Transmission ratio i = **6.92**																						
29	28	42	33	69	65	–	–	–	–	–	–	–	–	–	–	–	–	–	–	–	–	1FG1102- . . ■ ■ 6 - ■ . G1 -Z
–	–	–	–	–	65	74	**106**	**106**	**106**	**106**	**106**	–	–	–	–	–	–	–	–	–	–	1FG1102- . . ■ ■ 4 - ■ . G1 -Z
–	–	–	–	69	–	74	**106**	**106**	**106**	**106**	**106**	–	–	–	–	–	–	–	–	–	–	1FG1102- . . ■ ■ 3 - ■ . G1 -Z
–	–	–	–	69	–	–	**106**	–	**106**	**106**	**106**	–	–	–	–	–	–	–	–	–	–	1FG1102- . . ■ ■ 2 - ■ . G1 -Z
Max. output speed n_{2max} = **718 rpm**, Transmission ratio i = **6.06**																						
26	24	37	29	60	57	–	–	–	–	–	–	–	–	–	–	–	–	–	–	–	–	1FG1102- . . ■ ■ 6 - ■ . F1 -Z
–	–	–	–	–	57	65	**100**	100	**100**	**100**	**100**	–	–	–	–	–	–	–	–	–	–	1FG1102- . . ■ ■ 4 - ■ . F1 -Z
–	–	–	–	60	–	65	**100**	100	**100**	**100**	**100**	–	–	–	–	–	–	–	–	–	–	1FG1102- . . ■ ■ 3 - ■ . F1 -Z
–	–	–	–	60	–	–	**100**	–	**100**	**100**	**100**	–	–	–	–	–	–	–	–	–	–	1FG1102- . . ■ ■ 2 - ■ . F1 -Z
Max. output speed n_{2max} = **819 rpm**, Transmission ratio i = **5.31**																						
22	21	33	25	53	50	–	–	–	–	–	–	–	–	–	–	–	–	–	–	–	–	1FG1102- . . ■ ■ 6 - ■ . E1 -Z
–	–	–	–	–	50	57	91	88	**91**	**91**	**91**	–	–	–	–	–	–	–	–	–	–	1FG1102- . . ■ ■ 4 - ■ . E1 -Z
–	–	–	–	53	–	57	91	88	**91**	**91**	**91**	–	–	–	–	–	–	–	–	–	–	1FG1102- . . ■ ■ 3 - ■ . E1 -Z
–	–	–	–	53	–	–	91	–	**91**	**91**	**91**	–	–	–	–	–	–	–	–	–	–	1FG1102- . . ■ ■ 2 - ■ . E1 -Z
Max. output speed n_{2max} = **902 rpm**, Transmission ratio i = **4.82**																						
20	19	30	23	48	46	–	–	–	–	–	–	–	–	–	–	–	–	–	–	–	–	1FG1102- . . ■ ■ 6 - ■ . D1 -Z
–	–	–	–	–	46	52	83	79	**86**	**86**	**86**	–	–	–	–	–	–	–	–	–	–	1FG1102- . . ■ ■ 4 - ■ . D1 -Z
–	–	–	–	48	–	52	83	79	**86**	**86**	**86**	–	–	–	–	–	–	–	–	–	–	1FG1102- . . ■ ■ 3 - ■ . D1 -Z
–	–	–	–	48	–	–	83	–	**86**	**86**	**86**	–	–	–	–	–	–	–	–	–	–	1FG1102- . . ■ ■ 2 - ■ . D1 -Z
Max. output speed n_{2max} = **958 rpm**, Transmission ratio i = **4.54**																						
19	18	28	22	45	43	–	–	–	–	–	–	–	–	–	–	–	–	–	–	–	–	1FG1102- . . ■ ■ 6 - ■ . C1 -Z
–	–	–	–	–	43	49	78	75	**84**	**84**	**84**	–	–	–	–	–	–	–	–	–	–	1FG1102- . . ■ ■ 4 - ■ . C1 -Z
–	–	–	–	45	–	49	78	75	**84**	**84**	**84**	–	–	–	–	–	–	–	–	–	–	1FG1102- . . ■ ■ 3 - ■ . C1 -Z
–	–	–	–	45	–	–	78	–	**84**	**84**	**84**	–	–	–	–	–	–	–	–	–	–	1FG1102- . . ■ ■ 2 - ■ . C1 -Z
Max. output speed n_{2max} = **1088 rpm**, Transmission ratio i = **4**																						
17	16	25	19	40	38	–	–	–	–	–	–	–	–	–	–	–	–	–	–	–	–	1FG1102- . . ■ ■ 6 - ■ . B1 -Z
–	–	–	–	–	38	43	69	66	**76**	**76**	**76**	–	–	–	–	–	–	–	–	–	–	1FG1102- . . ■ ■ 4 - ■ . B1 -Z
–	–	–	–	40	–	43	69	66	**76**	**76**	**76**	–	–	–	–	–	–	–	–	–	–	1FG1102- . . ■ ■ 3 - ■ . B1 -Z
–	–	–	–	40	–	–	69	–	**76**	**76**	**76**	–	–	–	–	–	–	–	–	–	–	1FG1102- . . ■ ■ 2 - ■ . B1 -Z
Max. output speed n_{2max} = **1254 rpm**, Transmission ratio i = **3.47**																						
14	14	21	16	34	33	–	–	–	–	–	–	–	–	–	–	–	–	–	–	–	–	1FG1102- . . ■ ■ 6 - ■ . A1 -Z
–	–	–	–	–	33	37	59	57	**70**	**70**	**70**	–	–	–	–	–	–	–	–	–	–	1FG1102- . . ■ ■ 4 - ■ . A1 -Z
–	–	–	–	34	–	37	59	57	**70**	**70**	**70**	–	–	–	–	–	–	–	–	–	–	1FG1102- . . ■ ■ 3 - ■ . A1 -Z
–	–	–	–	34	–	–	59	–	**70**	**70**	**70**	–	–	–	–	–	–	–	–	–	–	1FG1102- . . ■ ■ 6 - ■ . A1 -Z

Motor shaft height:

36																						**C**
			48																			**D**
							63															**E**
												80										**F**
																		100				**G**

Motor length/motor version (**CT** = Compact, **HD** = High Dynamic)**:**

			0/CT				**0/CT**					**0/CT**						**0/CT**					**0**	**2**
													1/CT						**1/CT**				**1**	**2**
								1/HD															**1**	**4**
2/CT				**2/CT**					**2/CT**														**2**	**2**
										3/CT				**3/CT**						**3/CT**			**3**	**2**
	3/HD				**3/HD**																		**3**	**4**
		4/CT														**4/CT**							**4**	**2**
						4/HD					**4/HD**													**4**	**4**
																				5/CT			**5**	**2**
															5/HD								**5**	**4**
																6/HD							**6**	**4**

Selection of shaft design, encoder system, mounting type and special designs on page 3/12.

1FG1102- ■ ■ . . . - . ■ . . **-Z**

© Siemens 2019

Gearbox size 29, 2-stage – 1FG1102

Selection and ordering data (continued)

For line voltage 200 ... 240 V 1 AC (DC link voltage 270 ... 330 V DC) **– gearbox type** ***Z29***

Max. output speed n_{2max} rpm	Transmission ratio i	Geared motor torque at 1450 rpm Note: All values in **bold** print are maximum gearbox values. M_{2dyn} Nm					**Servo helical geared motors SIMOTICS S-1FG1** Article No.
109	**41.4**	**146**	**146**	**146**	**146**	**146**	**1FG1102- . . ■ ■ 3 - ■ . A2 -Z**
123	**36.72**	**146**	146	**146**	**146**	**146**	**1FG1102- . . ■ ■ 3 - ■ . X1 -Z**
141	**31.86**	133	127	**146**	**146**	**146**	**1FG1102- . . ■ ■ 3 - ■ . W1 -Z**
155	**28.96**	121	116	**146**	**146**	**146**	**1FG1102- . . ■ ■ 3 - ■ . V1 -Z**
181	**24.84**	103	99	**146**	**146**	**146**	**1FG1102- . . ■ ■ 3 - ■ . U1 -Z**
199	**22.58**	95	90	137	**146**	**146**	**1FG1102- . . ■ ■ 3 - ■ . T1 -Z**
227	**19.8**	83	79	120	**145**	**145**	**1FG1102- . . ■ ■ 3 - ■ . S1 -Z**
255	**17.67**	74	71	107	**145**	**145**	**1FG1102- . . ■ ■ 3 - ■ . R1 -Z**
286	**15.75**	66	63	95	**145**	**145**	**1FG1102- . . ■ ■ 3 - ■ . Q1 -Z**
309	**14.54**	61	58	89	143	136	**1FG1102- . . ■ ■ 3 - ■ . P1 -Z**
353	**12.73**	54	51	78	126	120	**1FG1102- . . ■ ■ 3 - ■ . N1 -Z**
403	**11.16**	47	45	68	111	106	**1FG1102- . . ■ ■ 3 - ■ . M1 -Z**
445	**10.12**	43	41	62	100	96	**1FG1102- . . ■ ■ 3 - ■ . L1 -Z**
470	**9.53**	40	38	58	95	90	**1FG1102- . . ■ ■ 3 - ■ . K1 -Z**
518	**8.4**	36	34	52	84	80	**1FG1102- . . ■ ■ 3 - ■ . J1 -Z**
597	**7.29**	31	29	45	72	69	**1FG1102- . . ■ ■ 3 - ■ . H1 -Z**
629	**6.92**	29	28	42	69	65	**1FG1102- . . ■ ■ 3 - ■ . G1 -Z**
718	**6.06**	26	24	37	60	57	**1FG1102- . . ■ ■ 3 - ■ . F1 -Z**
819	**5.31**	22	21	33	53	50	**1FG1102- . . ■ ■ 3 - ■ . E1 -Z**
902	**4.82**	20	19	30	48	46	**1FG1102- . . ■ ■ 3 - ■ . D1 -Z**
958	**4.54**	19	18	28	45	43	**1FG1102- . . ■ ■ 3 - ■ . C1 -Z**
1088	**4**	17	16	25	40	38	**1FG1102- . . ■ ■ 3 - ■ . B1 -Z**
1254	**3.47**	14	14	21	34	33	**1FG1102- . . ■ ■ 3 - ■ . A1 -Z**

Motor shaft height:											
	36						**C**				
				48			**D**				
Motor length/motor version (**CT** = Compact, **HD** = High Dynamic)**:**											
	2/CT			**2/CT**			**2**		**1**		
		3/HD			**3/HD**		**3**		**3**		
			4/CT				**4**		**1**		

Selection of shaft design, encoder system, mounting type and special designs on page 3/12.

1FG1102- ■ ■ . . . - . ■ . . -Z

© Siemens 2019

Technical specifications

Gearbox type *D29*

Servo geared motor Type	i	R_{ex}	M_{2rated} Nm	M_{2max} Nm	$M_{2Em.Off}$ Nm	n_{2max} rpm	n_{1max} rpm	φ [1] '	F_{R2} N	F_{R2max} N	c_T Nm/ '	J_G 10^{-4} kgm^2
1FG1202-.....-..Q1	217.89	7626/35	140	161	235	21	4500	10.74	3710	3150	9.2	0.02
1FG1202-.....-..P1	192.93	67527/350	140	161	235	23	4500	10.82	3710	3150	9.2	0.03
1FG1202-.....-..N1	167.63	58671/350	140	161	235	27	4500	10.84	3710	3150	9.2	0.04
1FG1202-.....-..M1	152.39	58671/385	140	161	235	30	4500	10.84	3710	3150	9.2	0.04
1FG1202-.....-..L1	129.68	45387/350	140	160	235	35	4500	10.87	3710	3180	9.2	0.06
1FG1202-.....-..K1	117.89	45387/385	140	158	235	38	4500	10.87	3710	3230	9.2	0.08
1FG1202-.....-..J1	102.79	14391/140	140	156	235	44	4500	10.90	3710	3280	9.2	0.09
1FG1202-.....-..H1	92.01	35424/385	140	154	235	49	4500	10.91	3710	3340	9.2	0.11
1FG1202-.....-..G1	81.71	11439/140	140	151	235	55	4500	10.94	3710	3420	9.2	0.13
1FG1202-.....-..F1	75.42	34317/455	140	150	235	60	4500	10.94	3710	3440	9.2	0.16
1FG1202-.....-..E1	65.52	32103/490	140	148	235	69	4500	10.99	3710	3490	9.2	0.18
1FG1202-.....-..D1	56.93	9963/175	140	146	235	79	4500	10.94	3710	3550	9.2	0.19
1FG1202-.....-..C1	51.4	14391/280	140	146	235	88	4500	10.97	3710	3550	9.2	0.23
1FG1202-.....-..B1	48.37	28782/595	140	146	235	93	4500	10.97	3710	3550	9.2	0.27
1FG1202-.....-..A1	42.17	1476/35	140	146	235	107	4500	11.03	3710	3550	9.2	0.33

Selection and ordering data

Shaft design, encoder system, mounting type and special designs

Gearbox type *D29*

			Servo helical geared motors SIMOTICS S-1FG1 Article No.
			1FG1202- ■ ■ . . . - . ■ . . **-Z**
Shaft design:	Solid shaft with feather keyway	– Design 1	**1**
Order codes and Descriptions see chapter "Options"	Special shaft design		**9**
Encoder system for motors with DRIVE-CLiQ interface:	AS20DQI encoder		**Q**
	AM20DQI encoder		**R**
	R14DQ resolver		**P**
	R15DQ resolver		**U**
Order codes and Descriptions see chapter "Options"	Special version encoder system		**Z**
Mounting type:	Foot-mounted design		**A**
	Foot/flange-mounted design		**B**
	Flange-mounted design		**F**
	Housing flange design		**H**
Special designs (Options): Order codes and Descriptions see chapter "Options" The following order codes must be added to each article number: • Oil type – order codes **K06** or **K11** • Mounting position – order codes **D01** ... **D06**			**-Z**
Selection of 3-stages servo helical geared motors with gearbox size 29 from next page.			**1FG1202-** . . ■ ■ ■ - ■ . ■ ■ **-Z**

[1] Data are for option reduced-backlash version – order code **G99** required.

© Siemens 2019

Gearbox size 29, 3-stage – 1FG1202

3

Selection and ordering data (continued)

For line voltage 380 ... 480 V 3 AC (DC link voltage 510 ... 720 V DC) **– gearbox type** *D29*

Geared motor torque at 1450 rpm
Note: All values in **bold** print are maximum gearbox values.
M_{2dyn}
Nm

Servo helical geared motors SIMOTICS S-1FG1 Article No.
Max. output speed n_{2max} = **21 rpm**, Transmission ratio i = **217.89**
161 161 161 161 161 161 –
– – – – – **161 161** – – – – – – – – – – – – – – – – –
– – – – **161** – **161** – – – – – – – – – – – – – – – –
– – – – **161** –
Max. output speed n_{2max} = **23 rpm**, Transmission ratio i = **192.93**
161 161 161 161 161 161 –
– – – – – **161 161 161 161 161 161 161** – – – – – – – – – – – – –
– – – – **161** – **161 161 161 161 161 161** – – – – – – – – – – – – –
– – – – **161** – – **161** – **161 161 161** – – – – – – – – – – – – –
Max. output speed n_{2max} = **27 rpm**, Transmission ratio i = **167.63**
161 161 161 161 161 161 –
– – – – – **161 161 161 161 161 161 161** – – – – – – – – – – – – –
– – – – **161** – **161 161 161 161 161 161** – – – – – – – – – – – – –
– – – – **161** – – **161** – **161 161 161** – – – – – – – – – – – – –
Max. output speed n_{2max} = **30 rpm**, Transmission ratio i = **152.39**
161 161 161 161 161 161 –
– – – – – **161 161 161 161 161 161 161** – – – – – – – – – – – – –
– – – – **161** – **161 161 161 161 161 161** – – – – – – – – – – – – –
– – – – **161** – – **161** – **161 161 161** – – – – – – – – – – – – –
Max. output speed n_{2max} = **35 rpm**, Transmission ratio i = **129.68**
160 160 160 160 160 160 –
– – – – – **160 160 160 160 160 160 160** – – – – – – – – – – – – –
– – – – **160** – **160 160 160 160 160 160** – – – – – – – – – – – – –
– – – – **160** – – **160** – **160 160 160** – – – – – – – – – – – – –
Max. output speed n_{2max} = **38 rpm**, Transmission ratio i = **117.89**
158 158 158 158 158 158 –
– – – – – **158 158 158 158 158 158 158** – – – – – – – – – – – – –
– – – – **158** – **158 158 158 158 158 158** – – – – – – – – – – – – –
– – – – **158** – – **158** – **158 158 158** – – – – – – – – – – – – –
Max. output speed n_{2max} = **44 rpm**, Transmission ratio i = **102.79**
156 156 156 156 156 156 –
– – – – – **156 156 156 156 156 156 156 156 156 156** – – – – – – – – – –
– – – – **156** – **156 156 156 156 156 156 156 156 156 156 156 156** – – – –
– – – – **156** – – **156** – **156 156 156** – **156 156 156 156 156** – – – –

Article No.
1FG1202- . . ■ ■ **6** - ■ . **Q1** -Z
1FG1202- . . ■ ■ **4** - ■ . **Q1** -Z
1FG1202- . . ■ ■ **3** - ■ . **Q1** -Z
1FG1202- . . ■ ■ **2** - ■ . **Q1** -Z
1FG1202- . . ■ ■ **6** - ■ . **P1** -Z
1FG1202- . . ■ ■ **4** - ■ . **P1** -Z
1FG1202- . . ■ ■ **3** - ■ . **P1** -Z
1FG1202- . . ■ ■ **2** - ■ . **P1** -Z
1FG1202- . . ■ ■ **6** - ■ . **N1** -Z
1FG1202- . . ■ ■ **4** - ■ . **N1** -Z
1FG1202- . . ■ ■ **3** - ■ . **N1** -Z
1FG1202- . . ■ ■ **2** - ■ . **N1** -Z
1FG1202- . . ■ ■ **6** - ■ . **M1** -Z
1FG1202- . . ■ ■ **4** - ■ . **M1** -Z
1FG1202- . . ■ ■ **3** - ■ . **M1** -Z
1FG1202- . . ■ ■ **2** - ■ . **M1** -Z
1FG1202- . . ■ ■ **6** - ■ . **L1** -Z
1FG1202- . . ■ ■ **4** - ■ . **L1** -Z
1FG1202- . . ■ ■ **3** - ■ . **L1** -Z
1FG1202- . . ■ ■ **2** - ■ . **L1** -Z
1FG1202- . . ■ ■ **6** - ■ . **K1** -Z
1FG1202- . . ■ ■ **4** - ■ . **K1** -Z
1FG1202- . . ■ ■ **3** - ■ . **K1** -Z
1FG1202- . . ■ ■ **2** - ■ . **K1** -Z
1FG1202- . . ■ ■ **6** - ■ . **J1** -Z
1FG1202- . . ■ ■ **4** - ■ . **J1** -Z
1FG1202- . . ■ ■ **3** - ■ . **J1** -Z
1FG1202- . . ■ ■ **2** - ■ . **J1** -Z

Motor shaft height:

| | | |

© Siemens 2019

For line voltage 380 ... 480 V 3 AC (DC link voltage 510 ... 720 V DC) **– gearbox type** ***D29***

Geared motor torque at 1450 rpm
Note: All values in **bold** print are maximum gearbox values.
M_{2dyn}
Nm

																						Article No.
Max. output speed n_{2max} = **49 rpm**, Transmission ratio i = **92.01**																						
154	**154**	**154**	**154**	**154**	**154**	–	–	–	–	–	–	–	–	–	–	–	–	–	–	–	–	1FG1202- . . ■ ■ 6 - ■ . H1 -Z
–	–	–	–	–	**154**	**154**	**154**	**154**	**154**	**154**	**154**	**154**	**154**	**154**	–	–	–	–	–	–	–	1FG1202- . . ■ ■ 4 - ■ . H1 -Z
–	–	–	–	**154**	–	**154**	**154**	**154**	**154**	**154**	**154**	**154**	**154**	**154**	**154**	**154**	**154**	–	–	–	–	1FG1202- . . ■ ■ 3 - ■ . H1 -Z
–	–	–	–	**154**	–	–	**154**	–	**154**	**154**	**154**	–	**154**	**154**	**154**	**154**	**154**	–	–	–	–	1FG1202- . . ■ ■ 2 - ■ . H1 -Z
Max. output speed n_{2max} = **55 rpm**, Transmission ratio i = **81.71**																						
151	**151**	**151**	**151**	**151**	**151**	–	–	–	–	–	–	–	–	–	–	–	–	–	–	–	–	1FG1202- . . ■ ■ 6 - ■ . G1 -Z
–	–	–	–	–	**151**	**151**	**151**	**151**	**151**	**151**	**151**	**151**	**151**	**151**	–	–	–	–	–	–	–	1FG1202- . . ■ ■ 4 - ■ . G1 -Z
–	–	–	–	**151**	–	**151**	**151**	**151**	**151**	**151**	**151**	**151**	**151**	**151**	**151**	**151**	**151**	–	–	–	–	1FG1202- . . ■ ■ 3 - ■ . G1 -Z
–	–	–	–	**151**	–	–	**151**	–	**151**	**151**	**151**	–	**151**	**151**	**151**	**151**	**151**	–	–	–	–	1FG1202- . . ■ ■ 2 - ■ . G1 -Z
Max. output speed n_{2max} = **60 rpm**, Transmission ratio i = **75.42**																						
150	**150**	**150**	**150**	**150**	**150**	–	–	–	–	–	–	–	–	–	–	–	–	–	–	–	–	1FG1202- . . ■ ■ 6 - ■ . F1 -Z
–	–	–	–	–	**150**	**150**	**150**	**150**	**150**	**150**	**150**	**150**	**150**	**150**	–	–	–	–	–	–	–	1FG1202- . . ■ ■ 4 - ■ . F1 -Z
–	–	–	–	**150**	–	**150**	**150**	**150**	**150**	**150**	**150**	**150**	**150**	**150**	**150**	**150**	**150**	–	–	–	–	1FG1202- . . ■ ■ 3 - ■ . F1 -Z
–	–	–	–	**150**	–	–	**150**	–	**150**	**150**	**150**	–	**150**	**150**	**150**	**150**	**150**	–	–	–	–	1FG1202- . . ■ ■ 2 - ■ . F1 -Z
Max. output speed n_{2max} = **69 rpm**, Transmission ratio i = **65.52**																						
148	**148**	**148**	**148**	**148**	**148**	–	–	–	–	–	–	–	–	–	–	–	–	–	–	–	–	1FG1202- . . ■ ■ 6 - ■ . E1 -Z
–	–	–	–	–	**148**	**148**	**148**	**148**	**148**	**148**	**148**	**148**	**148**	**148**	–	–	–	–	–	–	–	1FG1202- . . ■ ■ 4 - ■ . E1 -Z
–	–	–	–	**148**	–	**148**	**148**	**148**	**148**	**148**	**148**	**148**	**148**	**148**	**148**	**148**	**148**	–	–	–	–	1FG1202- . . ■ ■ 3 - ■ . E1 -Z
–	–	–	–	**148**	–	–	**148**	–	**148**	**148**	**148**	–	**148**	**148**	**148**	**148**	**148**	–	–	–	–	1FG1202- . . ■ ■ 2 - ■ . E1 -Z
Max. output speed n_{2max} = **79 rpm**, Transmission ratio i = **56.93**																						
146	**146**	**146**	**146**	**146**	**146**	–	–	–	–	–	–	–	–	–	–	–	–	–	–	–	–	1FG1202- . . ■ ■ 6 - ■ . D1 -Z
–	–	–	–	–	**146**	**146**	**146**	**146**	**146**	**146**	**146**	**146**	**146**	**146**	–	–	–	–	–	–	–	1FG1202- . . ■ ■ 4 - ■ . D1 -Z
–	–	–	–	**146**	–	**146**	**146**	**146**	**146**	**146**	**146**	**146**	**146**	**146**	**146**	**146**	**146**	–	–	–	–	1FG1202- . . ■ ■ 3 - ■ . D1 -Z
–	–	–	–	**146**	–	–	**146**	–	**146**	**146**	**146**	–	**146**	**146**	**146**	**146**	**146**	–	–	–	–	1FG1202- . . ■ ■ 2 - ■ . D1 -Z
Max. output speed n_{2max} = **88 rpm**, Transmission ratio i = **51.4**																						
146	**146**	**146**	**146**	**146**	**146**	–	–	–	–	–	–	–	–	–	–	–	–	–	–	–	–	1FG1202- . . ■ ■ 6 - ■ . C1 -Z
–	–	–	–	–	**146**	**146**	**146**	**146**	**146**	**146**	**146**	**146**	**146**	**146**	–	–	–	–	–	–	–	1FG1202- . . ■ ■ 4 - ■ . C1 -Z
–	–	–	–	**146**	–	**146**	**146**	**146**	**146**	**146**	**146**	**146**	**146**	**146**	**146**	**146**	**146**	–	–	–	–	1FG1202- . . ■ ■ 3 - ■ . C1 -Z
–	–	–	–	**146**	–	–	**146**	–	**146**	**146**	**146**	–	**146**	**146**	**146**	**146**	**146**	–	–	–	–	1FG1202- . . ■ ■ 2 - ■ . C1 -Z
Max. output speed n_{2max} = **93 rpm**, Transmission ratio i = **48.37**																						
146	**146**	**146**	**146**	**146**	**146**	–	–	–	–	–	–	–	–	–	–	–	–	–	–	–	–	1FG1202- . . ■ ■ 6 - ■ . B1 -Z
–	–	–	–	–	**146**	**146**	**146**	**146**	**146**	**146**	**146**	**146**	**146**	**146**	–	–	–	–	–	–	–	1FG1202- . . ■ ■ 4 - ■ . B1 -Z
–	–	–	–	**146**	–	**146**	**146**	**146**	**146**	**146**	**146**	**146**	**146**	**146**	**146**	**146**	**146**	–	–	–	–	1FG1202- . . ■ ■ 3 - ■ . B1 -Z
–	–	–	–	**146**	–	–	**146**	–	**146**	**146**	**146**	–	**146**	**146**	**146**	**146**	**146**	–	–	–	–	1FG1202- . . ■ ■ 2 - ■ . B1 -Z
Max. output speed n_{2max} = **107 rpm**, Transmission ratio i = **42.17**																						
146	**146**	**146**	**146**	**146**	**146**	–	–	–	–	–	–	–	–	–	–	–	–	–	–	–	–	1FG1202- . . ■ ■ 6 - ■ . A1 -Z
–	–	–	–	–	**146**	**146**	**146**	**146**	**146**	**146**	**146**	**146**	**146**	**146**	–	–	–	–	–	–	–	1FG1202- . . ■ ■ 4 - ■ . A1 -Z
–	–	–	–	**146**	–	**146**	**146**	**146**	**146**	**146**	**146**	**146**	**146**	**146**	**146**	**146**	**146**	–	–	–	–	1FG1202- . . ■ ■ 3 - ■ . A1 -Z
–	–	–	–	**146**	–	–	**146**	–	**146**	**146**	**146**	–	**146**	**146**	**146**	**146**	**146**	–	–	–	–	1FG1202- . . ■ ■ 2 - ■ . A1 -Z

Motor shaft height:

36																						**C**
			48																			**D**
							63															**E**
												80										**F**
																	100					**G**

Motor length/motor version (**CT** = Compact, **HD** = High Dynamic)**:**

			0/CT				**0/CT**					**0/CT**						**0/CT**					**0**	**2**
													1/CT						**1/CT**				**1**	**2**
								1/HD															**1**	**4**
2/CT				**2/CT**					**2/CT**														**2**	**2**
										3/CT					**3/CT**					**3/CT**			**3**	**2**
	3/HD				**3/HD**																		**3**	**4**
		4/CT														**4/CT**							**4**	**2**
						4/HD					**4/HD**													**4**	**4**
																				5/CT			**5**	**2**
																	5/HD						**5**	**4**
																		6/HD					**6**	**4**

Selection of shaft design, encoder system, mounting type and special designs on page 3/17.

1FG1202- ■ ■ . . . - . ■ . . -Z

Servo helical geared motors SIMOTICS S-1FG1

Article No.

© Siemens 2019

3

Selection and ordering data (continued)

For line voltage 200 ... 240 V 1 AC (DC link voltage 270 ... 330 V DC) **– gearbox type** ***D29***

Max. output speed n_{2max} rpm	Transmission ratio i	Geared motor torque at 1450 rpm Note: All values in **bold** print are maximum gearbox values. M_{2dyn} Nm					**Servo helical geared motors SIMOTICS S-1FG1** Article No.
21	**217.89**	**161**	**161**	**161**	**161**	**161**	**1FG1202- . . ■ ■ 3 - ■ . Q1 -Z**
23	**192.93**	**161**	**161**	**161**	**161**	**161**	**1FG1202- . . ■ ■ 3 - ■ . P1 -Z**
27	**167.63**	**161**	**161**	**161**	**161**	**161**	**1FG1202- . . ■ ■ 3 - ■ . N1 -Z**
30	**152.39**	**161**	**161**	**161**	**161**	**161**	**1FG1202- . . ■ ■ 3 - ■ . M1 -Z**
35	**129.68**	**160**	**160**	**160**	**160**	**160**	**1FG1202- . . ■ ■ 3 - ■ . L1 -Z**
38	**117.89**	**158**	**158**	**158**	**158**	**158**	**1FG1202- . . ■ ■ 3 - ■ . K1 -Z**
44	**102.79**	**156**	**156**	**156**	**156**	**156**	**1FG1202- . . ■ ■ 3 - ■ . J1 -Z**
49	**92.01**	**154**	**154**	**154**	**154**	**154**	**1FG1202- . . ■ ■ 3 - ■ . H1 -Z**
55	**81.71**	**151**	**151**	**151**	**151**	**151**	**1FG1202- . . ■ ■ 3 - ■ . G1 -Z**
60	**75.42**	**150**	**150**	**150**	**150**	**150**	**1FG1202- . . ■ ■ 3 - ■ . F1 -Z**
69	**65.52**	**148**	**148**	**148**	**148**	**148**	**1FG1202- . . ■ ■ 3 - ■ . E1 -Z**
79	**56.93**	**146**	**146**	**146**	**146**	**146**	**1FG1202- . . ■ ■ 3 - ■ . D1 -Z**
88	**51.4**	**146**	**146**	**146**	**146**	**146**	**1FG1202- . . ■ ■ 3 - ■ . C1 -Z**
93	**48.37**	**146**	**146**	**146**	**146**	**146**	**1FG1202- . . ■ ■ 3 - ■ . B1 -Z**
107	**42.17**	**146**	**146**	**146**	**146**	**146**	**1FG1202- . . ■ ■ 3 - ■ . A1 -Z**
Motor shaft height:							
		36					**C**
					48		**D**
Motor length/motor version (**CT** = Compact, **HD** = High Dynamic)**:**							
		2/CT			**2/CT**		**2** **1**
			3/HD			**3/HD**	**3** **3**
				4/CT			**4** **1**

Selection of shaft design, encoder system, mounting type and special designs on page 3/17.

1FG1202- ■ ■ . . . - . ■ . . -Z

© Siemens 2019

Technical specifications

Gearbox type *Z39*

Servo geared motor Type	i	R_{ex}	M_{2rated} Nm	M_{2max} Nm	$M_{2Em.Off}$ Nm	n_{2max} rpm	n_{1max} rpm	φ [1] '	F_{R2} N	F_{R2max} N	c_T Nm/ '	J_G 10^{-4} kgm^2
1FG1103-.....-..A2	55.95	7553/135	200	205	340	80	4500	7.70	4370	4240	12.3	0.06
1FG1103-.....-..X1	49.75	3731/75	200	205	340	90	4500	7.73	4370	4240	12.3	0.07
1FG1103-.....-..W1	43.68	1092/25	200	205	340	103	4500	7.80	4100	3970	12.3	0.08
1FG1103-.....-..V1	39.71	2184/55	200	205	340	113	4500	7.80	3810	3690	12.3	0.1
1FG1103-.....-..U1	33.97	2548/75	200	205	340	132	4500	7.87	3360	3240	12.3	0.12
1FG1103-.....-..T1	30.88	5096/165	200	205	340	146	4500	7.87	3100	2980	12.3	0.14
1FG1103-.....-..S1	27.3	273/10	200	205	340	165	4500	7.98	2780	2650	12.3	0.16
1FG1103-.....-..R1	24.82	273/11	200	205	340	181	4500	7.98	2530	2410	12.3	0.22
1FG1103-.....-..Q1	21.74	3913/180	200	205	340	207	4500	8.11	2210	2080	12.3	0.25
1FG1103-.....-..P1	20.07	301/15	200	205	340	224	4500	8.11	2020	1890	12.3	0.3
1FG1103-.....-..N1	17.77	533/30	200	200	340	245	4350	8.26	1740	1740	12.3	0.33
1FG1103-.....-..M1	14.79	1183/80	193	193	325	294	4350	8.42	1610	1610	12.2	0.47
1FG1103-.....-..L1	13.92	1183/85	189	189	320	313	4350	8.42	1590	1590	12.3	0.55
1FG1103-.....-..K1	12.47	3367/270	180	180	305	349	4350	8.60	1560	1560	12.2	0.6
1FG1103-.....-..J1	10.62	637/60	169	169	285	410	4350	8.80	1550	1550	12.2	0.78
1FG1103-.....-..H1	9.1	91/10	158	158	265	478	4350	9.02	1520	1520	12.2	1
1FG1103-.....-..G1	7.84	2821/360	148	148	250	555	4350	9.28	1500	1500	12.2	1.3
1FG1103-.....-..F1	6.46	2379/368	146	146	245	697	4500	13.40	300	300	9.4	0.57
1FG1103-.....-..E1	6.08	2379/391	147	147	245	737	4481	13.40	200	200	9.4	0.66
1FG1103-.....-..D1	5.45	2257/414	140	140	235	798	4350	13.82	220	220	9.4	0.74
1FG1103-.....-..C1	4.64	427/92	130	130	220	938	4350	14.30	325	325	9.3	0.97
1FG1103-.....-..B1	3.98	183/46	121	121	205	1093	4350	14.83	395	395	9.3	1.3
1FG1103-.....-..A1	3.43	1891/552	112	112	190	1268	4350	15.44	475	475	9.2	1.7

Selection and ordering data

Shaft design, encoder system, mounting type and special designs

Gearbox type *Z39*

			Servo helical geared motors SIMOTICS S-1FG1 Article No. **1FG1103-** ■■.....-.■..-Z
Shaft design:	Solid shaft with feather keyway	– Design 1	**1**
		– Design 3	**3**
Order codes and Descriptions see chapter "Options"	Special shaft design		**9**
Encoder system for motors with DRIVE-CLiQ interface:	AS20DQI encoder		**Q**
	AM20DQI encoder		**R**
	R14DQ resolver		**P**
	R15DQ resolver		**U**
Order codes and Descriptions see chapter "Options"	Special version encoder system		**Z**
Mounting type:	Foot-mounted design		**A**
	Foot/flange-mounted design		**B**
	Flange-mounted design		**F**
	Housing flange design		**H**
Special designs (Options): Order codes and Descriptions see chapter "Options" The following order codes must be added to each article number: • Oil type – order codes **K06** or **K11** • Mounting position – order codes **D01** ... **D06**			**-Z**
Selection of 2-stages servo helical geared motors with gearbox size 39 from next page			**1FG1103-** ..■■■-■.■■-Z

[1] Data are for option reduced-backlash version – order code **G99** required.

© Siemens 2019

Gearbox size 39, 2-stage – 1FG1103

3

Selection and ordering data (continued)

For line voltage 380 ... 480 V 3 AC (DC link voltage 510 ... 720 V DC) **– gearbox type** ***Z39***

Geared motor torque at 1450 rpm
Note: All values in **bold** print are maximum gearbox values.
M_{2dyn}
Nm

Servo helical geared motors SIMOTICS S-1FG1 Article No.
Max. output speed n_{2max} = **80 rpm**, Transmission ratio i = **55.95**
205 205 205 205 205 205 – **1FG1103- . . ■ ■ 6 - ■ . A2 -Z**
– – – – – **205 205** – **1FG1103- . . ■ ■ 4 - ■ . A2 -Z**
– – – – **205** – **205** – **1FG1103- . . ■ ■ 3 - ■ . A2 -Z**
– – – – **205** – **1FG1103- . . ■ ■ 2 - ■ . A2 -Z**
Max. output speed n_{2max} = **90 rpm**, Transmission ratio i = **49.75**
205 198 **205 205 205 205** – **1FG1103- . . ■ ■ 6 - ■ . X1 -Z**
– – – – – **205 205 205 205 205 205 205** – – – – – – – – – – – – – – **1FG1103- . . ■ ■ 4 - ■ . X1 -Z**
– – – – **205** – **205 205 205 205 205 205** – – – – – – – – – – – – – **1FG1103- . . ■ ■ 3 - ■ . X1 -Z**
– – – – **205** – – **205** – **205 205 205** – – – – – – – – – – – – – **1FG1103- . . ■ ■ 2 - ■ . X1 -Z**
Max. output speed n_{2max} = **103 rpm**, Transmission ratio i = **43.68**
182 174 **205** 205 **205 205** – **1FG1103- . . ■ ■ 6 - ■ . W1 -Z**
– – – – – **205 205 205 205 205 205 205** – – – – – – – – – – – – – – **1FG1103- . . ■ ■ 4 - ■ . W1 -Z**
– – – – **205** – **205 205 205 205 205 205** – – – – – – – – – – – – – **1FG1103- . . ■ ■ 3 - ■ . W1 -Z**
– – – – **205** – – **205** – **205 205 205** – – – – – – – – – – – – – **1FG1103- . . ■ ■ 2 - ■ . W1 -Z**
Max. output speed n_{2max} = **113 rpm**, Transmission ratio i = **39.71**
167 159 **205** 189 **205 205** – **1FG1103- . . ■ ■ 6 - ■ . V1 -Z**
– – – – – **205 205 205 205 205 205 205** – – – – – – – – – – – – – – **1FG1103- . . ■ ■ 4 - ■ . V1 -Z**
– – – – **205** – **205 205 205 205 205 205** – – – – – – – – – – – – – **1FG1103- . . ■ ■ 3 - ■ . V1 -Z**
– – – – **205** – – **205** – **205 205 205** – – – – – – – – – – – – – **1FG1103- . . ■ ■ 2 - ■ . V1 -Z**
Max. output speed n_{2max} = **132 rpm**, Transmission ratio i = **33.97**
142 136 205 161 **205 205** – **1FG1103- . . ■ ■ 6 - ■ . U1 -Z**
– – – – – **205 205 205 205 205 205 205** – – – – – – – – – – – – – – **1FG1103- . . ■ ■ 4 - ■ . U1 -Z**
– – – – **205** – **205 205 205 205 205 205** – – – – – – – – – – – – – **1FG1103- . . ■ ■ 3 - ■ . U1 -Z**
– – – – **205** – – **205** – **205 205 205** – – – – – – – – – – – – – **1FG1103- . . ■ ■ 2 - ■ . U1 -Z**
Max. output speed n_{2max} = **146 rpm**, Transmission ratio i = **30.88**
130 124 188 147 **205 205** – **1FG1103- . . ■ ■ 6 - ■ . T1 -Z**
– – – – – **205 205 205 205 205 205 205** – – – – – – – – – – – – – – **1FG1103- . . ■ ■ 4 - ■ . T1 -Z**
– – – – **205** – **205 205 205 205 205 205** – – – – – – – – – – – – – **1FG1103- . . ■ ■ 3 - ■ . T1 -Z**
– – – – **205** – – **205** – **205 205 205** – – – – – – – – – – – – – **1FG1103- . . ■ ■ 2 - ■ . T1 -Z**
Max. output speed n_{2max} = **165 rpm**, Transmission ratio i = **27.3**
115 110 166 130 **205 205** – **1FG1103- . . ■ ■ 6 - ■ . S1 -Z**
– – – – – **205 205 205 205 205 205 205 205 205 205** – – – – – – – **1FG1103- . . ■ ■ 4 - ■ . S1 -Z**
– – – – **205** – **205 205 205 205 205 205 205 205 205 205 205 205** – – – – **1FG1103- . . ■ ■ 3 - ■ . S1 -Z**
– – – – **205** – – **205** – **205 205 205** – **205 205 205 205 205 205** – – – – **1FG1103- . . ■ ■ 2 - ■ . S1 -Z**

Motor shaft height:

| | | |

© Siemens 2019

Gearbox size 39, 2-stage – 1FG1103

For line voltage 380 ... 480 V 3 AC (DC link voltage 510 ... 720 V DC) **– gearbox type** *Z39*

Geared motor torque at 1450 rpm
Note: All values in **bold** print are maximum gearbox values.
M_{2dyn}
Nm

1	2	3	4	5	6	7	8	9	10	11	12	13	14	15	16	17	18	19	20	Servo helical geared motors SIMOTICS S-1FG1 Article No.
Max. output speed n_{2max} = 181 rpm, Transmission ratio i = 24.82																				
104	100	151	118	**205**	**205**	–	–	–	–	–	–	–	–	–	–	–	–	–	–	1FG1103- . . ■ ■ 6 - ■ . R1 -Z
–	–	–	–	–	**205**	**205**	**205**	**205**	**205**	**205**	**205**	**205**	**205**	**205**	–	–	–	–	–	–	–	1FG1103- . . ■ ■ 4 - ■ . R1 -Z
–	–	–	–	**205**	–	**205**	**205**	**205**	**205**	**205**	**205**	**205**	**205**	**205**	**205**	**205**	**205**	–	–	–	–	1FG1103- . . ■ ■ 3 - ■ . R1 -Z
–	–	–	–	**205**	–	–	**205**	–	**205**	**205**	**205**	–	**205**	**205**	**205**	**205**	**205**	–	–	–	–	1FG1103- . . ■ ■ 2 - ■ . R1 -Z
Max. output speed n_{2max} = 207 rpm, Transmission ratio i = 21.74																				
92	88	133	104	**205**	200	–	–	–	–	–	–	–	–	–	–	–	–	–	–	–	–	1FG1103- . . ■ ■ 6 - ■ . Q1 -Z
–	–	–	–	–	200	**205**	**205**	**205**	**205**	**205**	**205**	**205**	**205**	**205**	–	–	–	–	–	–	–	1FG1103- . . ■ ■ 4 - ■ . Q1 -Z
–	–	–	–	**205**	–	**205**	**205**	**205**	**205**	**205**	**205**	**205**	**205**	**205**	**205**	**205**	**205**	–	–	–	–	1FG1103- . . ■ ■ 3 - ■ . Q1 -Z
–	–	–	–	**205**	–	–	**205**	–	**205**	**205**	**205**	–	**205**	**205**	**205**	**205**	**205**	–	–	–	–	1FG1103- . . ■ ■ 2 - ■ . Q1 -Z
Max. output speed n_{2max} = 224 rpm, Transmission ratio i = 20.07																				
85	81	123	96	199	189	–	–	–	–	–	–	–	–	–	–	–	–	–	–	–	–	1FG1103- . . ■ ■ 6 - ■ . P1 -Z
–	–	–	–	–	189	**205**	**205**	**205**	**205**	**205**	**205**	**205**	**205**	**205**	–	–	–	–	–	–	–	1FG1103- . . ■ ■ 4 - ■ . P1 -Z
–	–	–	–	199	–	**205**	**205**	**205**	**205**	**205**	**205**	**205**	**205**	**205**	**205**	**205**	**205**	–	–	–	–	1FG1103- . . ■ ■ 3 - ■ . P1 -Z
–	–	–	–	199	–	–	**205**	–	**205**	**205**	**205**	–	**205**	**205**	**205**	**205**	**205**	–	–	–	–	1FG1103- . . ■ ■ 2 - ■ . P1 -Z
Max. output speed n_{2max} = 245 rpm, Transmission ratio i = 17.77																				
75	72	109	86	177	168	–	–	–	–	–	–	–	–	–	–	–	–	–	–	–	–	1FG1103- . . ■ ■ 6 - ■ . N1 -Z
–	–	–	–	–	168	190	**200**	**200**	**200**	**200**	**200**	**200**	**200**	**200**	–	–	–	–	–	–	–	1FG1103- . . ■ ■ 4 - ■ . N1 -Z
–	–	–	–	177	–	190	**200**	**200**	**200**	**200**	**200**	**200**	**200**	**200**	**200**	**200**	**200**	–	–	–	–	1FG1103- . . ■ ■ 3 - ■ . N1 -Z
–	–	–	–	177	–	–	**200**	–	**200**	**200**	**200**	–	**200**	**200**	**200**	**200**	**200**	–	–	–	–	1FG1103- . . ■ ■ 2 - ■ . N1 -Z
Max. output speed n_{2max} = 294 rpm, Transmission ratio i = 14.79																				
63	60	91	71	147	140	–	–	–	–	–	–	–	–	–	–	–	–	–	–	–	–	1FG1103- . . ■ ■ 6 - ■ . M1 -Z
–	–	–	–	–	140	158	**193**	**193**	**193**	**193**	**193**	**193**	**193**	**193**	–	–	–	–	–	–	–	1FG1103- . . ■ ■ 4 - ■ . M1 -Z
–	–	–	–	147	–	158	**193**	**193**	**193**	**193**	**193**	**193**	**193**	**193**	**193**	**193**	**193**	–	–	–	–	1FG1103- . . ■ ■ 3 - ■ . M1 -Z
–	–	–	–	147	–	–	**193**	–	**193**	**193**	**193**	–	**193**	**193**	**193**	**193**	**193**	–	–	–	–	1FG1103- . . ■ ■ 2 - ■ . M1 -Z
Max. output speed n_{2max} = 313 rpm, Transmission ratio i = 13.92																				
59	56	86	67	139	132	–	–	–	–	–	–	–	–	–	–	–	–	–	–	–	–	1FG1103- . . ■ ■ 6 - ■ . L1 -Z
–	–	–	–	–	132	149	**189**	**189**	**189**	**189**	**189**	**189**	**189**	**189**	–	–	–	–	–	–	–	1FG1103- . . ■ ■ 4 - ■ . L1 -Z
–	–	–	–	139	–	149	**189**	**189**	**189**	**189**	**189**	**189**	**189**	**189**	**189**	**189**	**189**	–	–	–	–	1FG1103- . . ■ ■ 3 - ■ . L1 -Z
–	–	–	–	139	–	–	**189**	–	**189**	**189**	**189**	–	**189**	**189**	**189**	**189**	**189**	–	–	–	–	1FG1103- . . ■ ■ 2 - ■ . L1 -Z
Max. output speed n_{2max} = 349 rpm, Transmission ratio i = 12.47																				
53	51	77	60	124	118	–	–	–	–	–	–	–	–	–	–	–	–	–	–	–	–	1FG1103- . . ■ ■ 6 - ■ . K1 -Z
–	–	–	–	–	118	134	**180**	**180**	**180**	**180**	**180**	**180**	**180**	**180**	–	–	–	–	–	–	–	1FG1103- . . ■ ■ 4 - ■ . K1 -Z
–	–	–	–	124	–	134	**180**	**180**	**180**	**180**	**180**	**180**	**180**	**180**	**180**	**180**	**180**	–	–	–	–	1FG1103- . . ■ ■ 3 - ■ . K1 -Z
–	–	–	–	124	–	–	**180**	–	**180**	**180**	**180**	–	**180**	**180**	**180**	**180**	**180**	–	–	–	–	1FG1103- . . ■ ■ 2 - ■ . K1 -Z
Max. output speed n_{2max} = 410 rpm, Transmission ratio i = 10.62																				
45	43	65	51	106	101	–	–	–	–	–	–	–	–	–	–	–	–	–	–	–	–	1FG1103- . . ■ ■ 6 - ■ . J1 -Z
–	–	–	–	–	101	114	**169**	**169**	**169**	**169**	**169**	**169**	**169**	**169**	–	–	–	–	–	–	–	1FG1103- . . ■ ■ 4 - ■ . J1 -Z
–	–	–	–	106	–	114	**169**	**169**	**169**	**169**	**169**	**169**	**169**	**169**	**169**	**169**	**169**	–	–	–	–	1FG1103- . . ■ ■ 3 - ■ . J1 -Z
–	–	–	–	106	–	–	**169**	–	**169**	**169**	**169**	–	**169**	**169**	**169**	**169**	**169**	–	–	–	–	1FG1103- . . ■ ■ 2 - ■ . J1 -Z

Motor shaft height:

1	2	3	4	5	6	7	8	9	10	11	12	13	14	15	16	17	18	19	20		
36																				C	
			48																	D	
							63													E	
												80								F	
																	100			G	

Motor length/motor version (**CT** = Compact, **HD** = High Dynamic)**:**

1	2	3	4	5	6	7	8	9	10	11	12	13	14	15	16	17	18	19	20		
			0/CT				**0/CT**					**0/CT**						**0/CT**				0	2
													1/CT						**1/CT**			1	2
								1/HD														1	4
2/CT				**2/CT**					**2/CT**													2	2
										3/CT				**3/CT**					**3/CT**			3	2
	3/HD				**3/HD**																	3	4
		4/CT													**4/CT**							4	2
						4/HD					**4/HD**											4	4
																			5/CT			5	2
																5/HD						5	4
																	6/HD					6	4

Selection of shaft design, encoder system, mounting type and special designs on page 3/21.

1FG1103- ■ ■ . . . - . ■ . . -Z

© Siemens 2019

Gearbox size 39, 2-stage – 1FG1103

For line voltage 380 ... 480 V 3 AC (DC link voltage 510 ... 720 V DC) **– gearbox type** *Z39*

Geared motor torque at 1450 rpm
Note: All values in **bold** print are maximum gearbox values.
M_{2dyn} Nm

1	2	3	4	5	6	7	8	9	10	11	12	13	14	15	16	17	18	19	20	21	22	Servo helical geared motors SIMOTICS S-1FG1 Article No.
Max. output speed n_{2max} = **478 rpm**, Transmission ratio i = **9.1**																						
–	–	–	–	–	–	–	–	–	–	–	–	–	–	–	–	–	–	–	–	–	–	1FG1103- . . ■ ■ 6 - ■ . H1 -Z
–	–	–	–	–	–	–	156	150	**158**	**158**	**158**	**158**	**158**	**158**	–	–	–	–	–	–	–	1FG1103- . . ■ ■ 4 - ■ . H1 -Z
–	–	–	–	–	–	–	156	150	**158**	**158**	**158**	**158**	**158**	**158**	**158**	**158**	**158**	–	–	–	–	1FG1103- . . ■ ■ 3 - ■ . H1 -Z
–	–	–	–	–	–	–	156	–	**158**	**158**	**158**	–	**158**	**158**	**158**	**158**	**158**	–	–	–	–	1FG1103- . . ■ ■ 2 - ■ . H1 -Z
Max. output speed n_{2max} = **555 rpm**, Transmission ratio i = **7.84**																						
–	–	–	–	–	–	–	–	–	–	–	–	–	–	–	–	–	–	–	–	–	–	1FG1103- . . ■ ■ 6 - ■ . G1 -Z
–	–	–	–	–	–	–	135	129	**148**	**148**	**148**	**148**	**148**	**148**	–	–	–	–	–	–	–	1FG1103- . . ■ ■ 4 - ■ . G1 -Z
–	–	–	–	–	–	–	135	129	**148**	**148**	**148**	**148**	**148**	**148**	**148**	**148**	**148**	–	–	–	–	1FG1103- . . ■ ■ 3 - ■ . G1 -Z
–	–	–	–	–	–	–	135	–	**148**	**148**	**148**	–	**148**	**148**	**148**	**148**	**148**	–	–	–	–	1FG1103- . . ■ ■ 2 - ■ . G1 -Z
Max. output speed n_{2max} = **697 rpm**, Transmission ratio i = **6.46**																						
27	26	40	31	65	62	–	–	–	–	–	–	–	–	–	–	–	–	–	–	–	–	1FG1103- . . ■ ■ 6 - ■ . F1 -Z
–	–	–	–	–	62	70	111	107	**146**	**146**	**146**	**146**	**146**	**146**	–	–	–	–	–	–	–	1FG1103- . . ■ ■ 4 - ■ . F1 -Z
–	–	–	–	65	–	70	111	107	**146**	**146**	**146**	**146**	**146**	**146**	**146**	**146**	**146**	–	–	–	–	1FG1103- . . ■ ■ 3 - ■ . F1 -Z
–	–	–	–	65	–	–	111	–	**146**	**146**	**146**	–	**146**	**146**	**146**	**146**	**146**	–	–	–	–	1FG1103- . . ■ ■ 2 - ■ . F1 -Z
Max. output speed n_{2max} = **737 rpm**, Transmission ratio i = **6.08**																						
26	25	38	29	61	58	–	–	–	–	–	–	–	–	–	–	–	–	–	–	–	–	1FG1103- . . ■ ■ 6 - ■ . E1 -Z
–	–	–	–	–	58	66	105	101	**147**	**147**	**147**	146	**147**	**147**	–	–	–	–	–	–	–	1FG1103- . . ■ ■ 4 - ■ . E1 -Z
–	–	–	–	61	–	66	105	101	**147**	**147**	**147**	146	**147**	**147**	**147**	**147**	**147**	–	–	–	–	1FG1103- . . ■ ■ 3 - ■ . E1 -Z
–	–	–	–	61	–	–	105	–	**147**	**147**	**147**	–	**147**	**147**	**147**	**147**	**147**	–	–	–	–	1FG1103- . . ■ ■ 2 - ■ . E1 -Z
Max. output speed n_{2max} = **798 rpm**, Transmission ratio i = **5.45**																						
23	22	34	26	55	52	–	–	–	–	–	–	–	–	–	–	–	–	–	–	–	–	1FG1103- . . ■ ■ 6 - ■ . D1 -Z
–	–	–	–	–	52	59	94	91	137	**140**	**140**	131	**140**	**140**	–	–	–	–	–	–	–	1FG1103- . . ■ ■ 4 - ■ . D1 -Z
–	–	–	–	55	–	59	94	91	137	**140**	**140**	131	**140**	**140**	**140**	**140**	**140**	–	–	–	–	1FG1103- . . ■ ■ 3 - ■ . D1 -Z
–	–	–	–	55	–	–	94	–	137	**140**	**140**	–	**140**	**140**	**140**	**140**	**140**	–	–	–	–	1FG1103- . . ■ ■ 2 - ■ . D1 -Z
Max. output speed n_{2max} = **938 rpm**, Transmission ratio i = **4.64**																						
20	19	29	22	47	44	–	–	–	–	–	–	–	–	–	–	–	–	–	–	–	–	1FG1103- . . ■ ■ 6 - ■ . C1 -Z
–	–	–	–	–	44	50	80	77	116	**130**	**130**	112	**130**	**130**	–	–	–	–	–	–	–	1FG1103- . . ■ ■ 4 - ■ . C1 -Z
–	–	–	–	47	–	50	80	77	116	**130**	**130**	112	**130**	**130**	**130**	**130**	**130**	–	–	–	–	1FG1103- . . ■ ■ 3 - ■ . C1 -Z
–	–	–	–	47	–	–	80	–	116	**130**	**130**	–	**130**	**130**	**130**	**130**	**130**	–	–	–	–	1FG1103- . . ■ ■ 2 - ■ . C1 -Z
Max. output speed n_{2max} = **1093 rpm**, Transmission ratio i = **3.98**																						
–	–	–	–	–	–	–	–	–	–	–	–	–	–	–	–	–	–	–	–	–	–	1FG1103- . . ■ ■ 6 - ■ . B1 -Z
–	–	–	–	–	–	–	69	66	100	**121**	**121**	96	**121**	**121**	–	–	–	–	–	–	–	1FG1103- . . ■ ■ 4 - ■ . B1 -Z
–	–	–	–	–	–	–	69	66	100	**121**	**121**	96	**121**	**121**	**121**	**121**	**121**	–	–	–	–	1FG1103- . . ■ ■ 3 - ■ . B1 -Z
–	–	–	–	–	–	–	69	–	100	**121**	**121**	–	**121**	**121**	**121**	**121**	**121**	–	–	–	–	1FG1103- . . ■ ■ 2 - ■ . B1 -Z
Max. output speed n_{2max} = **1268 rpm**, Transmission ratio i = **3.43**																						
–	–	–	–	–	–	–	–	–	–	–	–	–	–	–	–	–	–	–	–	–	–	1FG1103- . . ■ ■ 6 - ■ . A1 -Z
–	–	–	–	–	–	–	59	57	86	**112**	106	83	**112**	**112**	–	–	–	–	–	–	–	1FG1103- . . ■ ■ 4 - ■ . A1 -Z
–	–	–	–	–	–	–	59	57	86	**112**	106	83	**112**	**112**	**112**	**112**	**112**	–	–	–	–	1FG1103- . . ■ ■ 3 - ■ . A1 -Z
–	–	–	–	–	–	–	59	–	86	**112**	106	–	**112**	**112**	**112**	**112**	**112**	–	–	–	–	1FG1103- . . ■ ■ 2 - ■ . A1 -Z

Motor shaft height:

1	2	3	4	5	6	7	8	9	10	11	12	13	14	15	16	17	18	19	20	21	22	
36																						C
			48																			D
							63															E
												80										F
																		100				G

Motor length/motor version (**CT** = Compact, **HD** = High Dynamic)**:**

1	2	3	4	5	6	7	8	9	10	11	12	13	14	15	16	17	18	19	20	21	22		
			0/CT				**0/CT**					**0/CT**						**0/CT**				0	2
													1/CT						**1/CT**			1	2
								1/HD														1	4
2/CT				**2/CT**					**2/CT**													2	2
										3/CT				**3/CT**					**3/CT**			3	2
	3/HD				**3/HD**																	3	4
		4/CT													**4/CT**							4	2
						4/HD					**4/HD**											4	4
																				5/CT		5	2
																5/HD						5	4
																	6/HD					6	4

Selection of shaft design, encoder system, mounting type and special designs on page 3/21.

1FG1103- ■ ■ . . . - . ■ . . -Z

© Siemens 2019

Selection and ordering data (continued)

For line voltage 200 ... 240 V 1 AC (DC link voltage 270 ... 330 V DC) **– gearbox type** ***Z39***

Max. output speed n_{2max} rpm	Transmission ratio i	Geared motor torque at 1450 rpm Note: All values in **bold** print are maximum gearbox values. M_{2dyn} Nm					**Servo helical geared motors SIMOTICS S-1FG1** Article No.
80	**55.95**	**205**	**205**	**205**	**205**	**205**	**1FG1103- . . ■ ■ 3 - ■ . A2 -Z**
90	**49.75**	205	198	**205**	**205**	**205**	**1FG1103- . . ■ ■ 3 - ■ . X1 -Z**
103	**43.68**	182	174	**205**	**205**	**205**	**1FG1103- . . ■ ■ 3 - ■ . W1 -Z**
113	**39.71**	167	159	**205**	**205**	**205**	**1FG1103- . . ■ ■ 3 - ■ . V1 -Z**
132	**33.97**	142	136	205	**205**	**205**	**1FG1103- . . ■ ■ 3 - ■ . U1 -Z**
146	**30.88**	130	124	188	**205**	**205**	**1FG1103- . . ■ ■ 3 - ■ . T1 -Z**
165	**27.3**	115	110	166	**205**	**205**	**1FG1103- . . ■ ■ 3 - ■ . S1 -Z**
181	**24.82**	104	100	151	**205**	**205**	**1FG1103- . . ■ ■ 3 - ■ . R1 -Z**
207	**21.74**	92	88	133	**205**	200	**1FG1103- . . ■ ■ 3 - ■ . Q1 -Z**
224	**20.07**	85	81	123	199	189	**1FG1103- . . ■ ■ 3 - ■ . P1 -Z**
245	**17.77**	75	72	109	177	168	**1FG1103- . . ■ ■ 3 - ■ . N1 -Z**
294	**14.79**	63	60	91	147	140	**1FG1103- . . ■ ■ 3 - ■ . M1 -Z**
313	**13.92**	59	56	86	139	132	**1FG1103- . . ■ ■ 3 - ■ . L1 -Z**
349	**12.47**	53	51	77	124	118	**1FG1103- . . ■ ■ 3 - ■ . K1 -Z**
410	**10.62**	45	43	65	106	101	**1FG1103- . . ■ ■ 3 - ■ . J1 -Z**
697	**6.46**	27	26	40	65	62	**1FG1103- . . ■ ■ 3 - ■ . F1 -Z**
737	**6.08**	26	25	38	61	58	**1FG1103- . . ■ ■ 3 - ■ . E1 -Z**
798	**5.45**	23	22	34	55	52	**1FG1103- . . ■ ■ 3 - ■ . D1 -Z**
938	**4.64**	20	19	29	47	44	**1FG1103- . . ■ ■ 3 - ■ . C1 -Z**

Motor shaft height:										
	36						**C**			
				48			**D**			
Motor length/motor version (**CT** = Compact, **HD** = High Dynamic)**:**										
	2/CT			**2/CT**			**2**		**1**	
		3/HD			**3/HD**		**3**		**3**	
			4/CT				**4**		**1**	

Selection of shaft design, encoder system, mounting type and special designs on page 3/21.

1FG1103- ■ ■ . . . - ■ . . -Z

© Siemens 2019

3

Technical specifications

Gearbox type *D39*

Servo geared motor Type	i	R_{ex}	M_{2rated} Nm	M_{2max} Nm	$M_{2Em.Off}$ Nm	n_{2max} rpm	n_{1max} rpm	φ [1] '	F_{R2} N	F_{R2max} N	c_T Nm/ '	J_G 10^{-4} kgm^2
1FG1203-.....-..R1	235.29	179998/765	200	215	340	19	4500	8.10	4370	3990	12.5	0.03
1FG1203-.....-..Q1	208.69	15652/75	200	215	340	22	4500	8.18	4370	3990	12.5	0.05
1FG1203-.....-..P1	181.07	230867/1275	200	215	340	25	4500	8.20	4370	3990	12.5	0.05
1FG1203-.....-..N1	164.61	461734/2805	200	215	340	27	4500	8.20	4370	3990	12.5	0.07
1FG1203-.....-..M1	141.17	179998/1275	200	215	340	32	4500	8.22	4370	3990	12.5	0.08
1FG1203-.....-..L1	128.34	359996/2805	200	215	340	35	4500	8.22	4370	3990	12.5	0.1
1FG1203-.....-..K1	112.53	86086/765	200	215	340	40	4500	8.25	4370	3990	12.5	0.12
1FG1203-.....-..J1	100.44	93912/935	200	215	340	45	4500	8.26	4370	3990	12.5	0.14
1FG1203-.....-..H1	89.51	27391/306	200	215	340	50	4500	8.28	4370	3990	12.5	0.16
1FG1203-.....-..G1	82.63	4214/51	200	215	340	54	4500	8.28	4370	3990	12.5	0.2
1FG1203-.....-..F1	72.34	6149/85	200	210	340	62	4500	8.32	4370	4120	12.5	0.22
1FG1203-.....-..E1	63.43	242606/3825	200	205	340	71	4500	8.37	4370	4240	12.5	0.23
1FG1203-.....-..D1	57.54	3913/68	200	205	340	78	4500	8.40	4370	4240	12.5	0.29
1FG1203-.....-..C1	54.16	15652/289	200	205	340	83	4500	8.40	4370	4240	12.5	0.34
1FG1203-.....-..B1	47.74	109564/2295	200	205	340	94	4500	8.34	4370	4240	12.5	0.38
1FG1203-.....-..A1	41.43	35217/850	200	205	340	109	4500	8.37	3940	3810	12.5	0.51

Selection and ordering data

Shaft design, encoder system, mounting type and special designs

Gearbox type *D39*

			Servo helical geared motors SIMOTICS S-1FG1 Article No.
			1FG1203- ■ ■ . . . - . ■ . . -Z
Shaft design:	Solid shaft with feather keyway	– Design 1	**1**
		– Design 3	**3**
Order codes and Descriptions see chapter "Options"	Special shaft design		**9**
Encoder system for motors with DRIVE-CLiQ interface:	AS20DQI encoder		**Q**
	AM20DQI encoder		**R**
	R14DQ resolver		**P**
	R15DQ resolver		**U**
Order codes and Descriptions see chapter "Options"	Special version encoder system		**Z**
Mounting type:	Foot-mounted design		**A**
	Foot/flange-mounted design		**B**
	Flange-mounted design		**F**
	Housing flange design		**H**
Special designs (Options): Order codes and Descriptions see chapter "Options" The following order codes must be added to each article number: • Oil type – order codes **K06** or **K11** • Mounting position – order codes **D01** ... **D06**			**-Z**
Selection of 3-stages servo helical geared motors with gearbox size 39 from next page.			**1FG1203- . . ■ ■ ■ - ■ . ■ ■ -Z**

[1] Data are for option reduced-backlash version – order code **G99** required.

© Siemens 2019

Selection and ordering data (continued)

For line voltage 380 ... 480 V 3 AC (DC link voltage 510 ... 720 V DC) **– gearbox type** ***D39***

Geared motor torque at 1450 rpm
Note: All values in **bold** print are maximum gearbox values.
M_{2dyn}
Nm

215	215	215	215	215	215	–	–	–	–	–	–	–	–	–	–	–	–	–	–	–	–	Servo helical geared motors SIMOTICS S-1FG1 Article No.
Max. output speed n_{2max} = 19 rpm, Transmission ratio i = 235.29																						
215	**215**	**215**	**215**	**215**	**215**	–	–	–	–	–	–	–	–	–	–	–	–	–	–	–	–	1FG1203- . . ■ ■ 6 - ■ . R1 -Z
–	–	–	–	–	**215**	**215**	–	–	–	–	–	–	–	–	–	–	–	–	–	–	–	1FG1203- . . ■ ■ 4 - ■ . R1 -Z
–	–	–	–	**215**	–	**215**	–	–	–	–	–	–	–	–	–	–	–	–	–	–	–	1FG1203- . . ■ ■ 3 - ■ . R1 -Z
–	–	–	–	**215**	–	–	–	–	–	–	–	–	–	–	–	–	–	–	–	–	–	1FG1203- . . ■ ■ 2 - ■ . R1 -Z
Max. output speed n_{2max} = 22 rpm, Transmission ratio i = 208.69																						
215	**215**	**215**	**215**	**215**	**215**	–	–	–	–	–	–	–	–	–	–	–	–	–	–	–	–	1FG1203- . . ■ ■ 6 - ■ . Q1 -Z
–	–	–	–	–	**215**	**215**	**215**	**215**	**215**	**215**	**215**	–	–	–	–	–	–	–	–	–	–	1FG1203- . . ■ ■ 4 - ■ . Q1 -Z
–	–	–	–	**215**	–	**215**	**215**	**215**	**215**	**215**	**215**	–	–	–	–	–	–	–	–	–	–	1FG1203- . . ■ ■ 3 - ■ . Q1 -Z
–	–	–	–	**215**	–	–	**215**	–	**215**	**215**	**215**	–	–	–	–	–	–	–	–	–	–	1FG1203- . . ■ ■ 2 - ■ . Q1 -Z
Max. output speed n_{2max} = 25 rpm, Transmission ratio i = 181.07																						
215	**215**	**215**	**215**	**215**	**215**	–	–	–	–	–	–	–	–	–	–	–	–	–	–	–	–	1FG1203- . . ■ ■ 6 - ■ . P1 -Z
–	–	–	–	–	**215**	**215**	**215**	**215**	**215**	**215**	**215**	–	–	–	–	–	–	–	–	–	–	1FG1203- . . ■ ■ 4 - ■ . P1 -Z
–	–	–	–	**215**	–	**215**	**215**	**215**	**215**	**215**	**215**	–	–	–	–	–	–	–	–	–	–	1FG1203- . . ■ ■ 3 - ■ . P1 -Z
–	–	–	–	**215**	–	–	**215**	–	**215**	**215**	**215**	–	–	–	–	–	–	–	–	–	–	1FG1203- . . ■ ■ 2 - ■ . P1 -Z
Max. output speed n_{2max} = 27 rpm, Transmission ratio i = 164.61																						
215	**215**	**215**	**215**	**215**	**215**	–	–	–	–	–	–	–	–	–	–	–	–	–	–	–	–	1FG1203- . . ■ ■ 6 - ■ . N1 -Z
–	–	–	–	–	**215**	**215**	**215**	**215**	**215**	**215**	**215**	–	–	–	–	–	–	–	–	–	–	1FG1203- . . ■ ■ 4 - ■ . N1 -Z
–	–	–	–	**215**	–	**215**	**215**	**215**	**215**	**215**	**215**	–	–	–	–	–	–	–	–	–	–	1FG1203- . . ■ ■ 3 - ■ . N1 -Z
–	–	–	–	**215**	–	–	**215**	–	**215**	**215**	**215**	–	–	–	–	–	–	–	–	–	–	1FG1203- . . ■ ■ 2 - ■ . N1 -Z
Max. output speed n_{2max} = 32 rpm, Transmission ratio i = 141.17																						
215	**215**	**215**	**215**	**215**	**215**	–	–	–	–	–	–	–	–	–	–	–	–	–	–	–	–	1FG1203- . . ■ ■ 6 - ■ . M1 -Z
–	–	–	–	–	**215**	**215**	**215**	**215**	**215**	**215**	**215**	–	–	–	–	–	–	–	–	–	–	1FG1203- . . ■ ■ 4 - ■ . M1 -Z
–	–	–	–	**215**	–	**215**	**215**	**215**	**215**	**215**	**215**	–	–	–	–	–	–	–	–	–	–	1FG1203- . . ■ ■ 3 - ■ . M1 -Z
–	–	–	–	**215**	–	–	**215**	–	**215**	**215**	**215**	–	–	–	–	–	–	–	–	–	–	1FG1203- . . ■ ■ 2 - ■ . M1 -Z
Max. output speed n_{2max} = 35 rpm, Transmission ratio i = 128.34																						
215	**215**	**215**	**215**	**215**	**215**	–	–	–	–	–	–	–	–	–	–	–	–	–	–	–	–	1FG1203- . . ■ ■ 6 - ■ . L1 -Z
–	–	–	–	–	**215**	**215**	**215**	**215**	**215**	**215**	**215**	–	–	–	–	–	–	–	–	–	–	1FG1203- . . ■ ■ 4 - ■ . L1 -Z
–	–	–	–	**215**	–	**215**	**215**	**215**	**215**	**215**	**215**	–	–	–	–	–	–	–	–	–	–	1FG1203- . . ■ ■ 3 - ■ . L1 -Z
–	–	–	–	**215**	–	–	**215**	–	**215**	**215**	**215**	–	–	–	–	–	–	–	–	–	–	1FG1203- . . ■ ■ 2 - ■ . L1 -Z
Max. output speed n_{2max} = 40 rpm, Transmission ratio i = 112.53																						
215	**215**	**215**	**215**	**215**	**215**	–	–	–	–	–	–	–	–	–	–	–	–	–	–	–	–	1FG1203- . . ■ ■ 6 - ■ . K1 -Z
–	–	–	–	–	**215**	**215**	**215**	**215**	**215**	**215**	**215**	**215**	**215**	**215**	–	–	–	–	–	–	–	1FG1203- . . ■ ■ 4 - ■ . K1 -Z
–	–	–	–	**215**	–	**215**	**215**	**215**	**215**	**215**	**215**	**215**	**215**	**215**	**215**	**215**	**215**	–	–	–	–	1FG1203- . . ■ ■ 3 - ■ . K1 -Z
–	–	–	–	**215**	–	–	**215**	–	**215**	**215**	**215**	–	**215**	**215**	**215**	**215**	**215**	–	–	–	–	1FG1203- . . ■ ■ 2 - ■ . K1 -Z

Motor shaft height:

36																						**C**
			48																			**D**
							63															**E**
												80										**F**
																		100				**G**

Motor length/motor version (**CT** = Compact, **HD** = High Dynamic)**:**

			0/CT				**0/CT**					**0/CT**						**0/CT**					**0**	**2**
													1/CT						**1/CT**				**1**	**2**
								1/HD															**1**	**4**
2/CT				**2/CT**					**2/CT**														**2**	**2**
										3/CT				**3/CT**						**3/CT**			**3**	**2**
	3/HD				**3/HD**											**4/CT**							**3**	**4**
		4/CT																					**4**	**2**
						4/HD					**4/HD**												**4**	**4**
																				5/CT			**5**	**2**
															5/HD								**5**	**4**
																6/HD							**6**	**4**

Selection of shaft design, encoder system, mounting type and special designs on page 3/26.

1FG1203- ■ ■ . . . . - . ■ . . -Z

© Siemens 2019

Gearbox size 39, 3-stage – 1FG1203

For line voltage 380 ... 480 V 3 AC (DC link voltage 510 ... 720 V DC) **– gearbox type** *D39*

Geared motor torque at 1450 rpm
Note: All values in **bold** print are maximum gearbox values.
M_{2dyn}
Nm

Servo helical geared motors SIMOTICS S-1FG1
Article No.

1	2	3	4	5	6	7	8	9	10	11	12	13	14	15	16	17	18	19	20	21	22	Article No.
Max. output speed n_{2max} = **45 rpm**, Transmission ratio i = **100.44**																						
215	**215**	**215**	**215**	**215**	**215**	–	–	–	–	–	–	–	–	–	–	–	–	–	–	–	–	1FG1203- . . ■ ■ 6 - ■ . J1 -Z
–	–	–	–	–	**215**	**215**	**215**	**215**	**215**	**215**	**215**	**215**	**215**	**215**	–	–	–	–	–	–	–	1FG1203- . . ■ ■ 4 - ■ . J1 -Z
–	–	–	–	**215**	–	**215**	**215**	**215**	**215**	**215**	**215**	**215**	**215**	**215**	**215**	**215**	**215**	–	–	–	–	1FG1203- . . ■ ■ 3 - ■ . J1 -Z
–	–	–	–	**215**	–	–	**215**	–	**215**	**215**	**215**	–	**215**	**215**	**215**	**215**	**215**	–	–	–	–	1FG1203- . . ■ ■ 2 - ■ . J1 -Z
Max. output speed n_{2max} = **50 rpm**, Transmission ratio i = **89.51**																						
215	**215**	**215**	**215**	**215**	**215**	–	–	–	–	–	–	–	–	–	–	–	–	–	–	–	–	1FG1203- . . ■ ■ 6 - ■ . H1 -Z
–	–	–	–	–	**215**	**215**	**215**	**215**	**215**	**215**	**215**	**215**	**215**	**215**	–	–	–	–	–	–	–	1FG1203- . . ■ ■ 4 - ■ . H1 -Z
–	–	–	–	**215**	–	**215**	**215**	**215**	**215**	**215**	**215**	**215**	**215**	**215**	**215**	**215**	**215**	–	–	–	–	1FG1203- . . ■ ■ 3 - ■ . H1 -Z
–	–	–	–	**215**	–	–	**215**	–	**215**	**215**	**215**	–	**215**	**215**	**215**	**215**	**215**	–	–	–	–	1FG1203- . . ■ ■ 2 - ■ . H1 -Z
Max. output speed n_{2max} = **54 rpm**, Transmission ratio i = **82.63**																						
215	**215**	**215**	**215**	**215**	**215**	–	–	–	–	–	–	–	–	–	–	–	–	–	–	–	–	1FG1203- . . ■ ■ 6 - ■ . G1 -Z
–	–	–	–	–	**215**	**215**	**215**	**215**	**215**	**215**	**215**	**215**	**215**	**215**	–	–	–	–	–	–	–	1FG1203- . . ■ ■ 4 - ■ . G1 -Z
–	–	–	–	**215**	–	**215**	**215**	**215**	**215**	**215**	**215**	**215**	**215**	**215**	**215**	**215**	**215**	–	–	–	–	1FG1203- . . ■ ■ 3 - ■ . G1 -Z
–	–	–	–	**215**	–	–	**215**	–	**215**	**215**	**215**	–	**215**	**215**	**215**	**215**	**215**	–	–	–	–	1FG1203- . . ■ ■ 2 - ■ . G1 -Z
Max. output speed n_{2max} = **62 rpm**, Transmission ratio i = **72.34**																						
210	**210**	**210**	**210**	**210**	**210**	–	–	–	–	–	–	–	–	–	–	–	–	–	–	–	–	1FG1203- . . ■ ■ 6 - ■ . F1 -Z
–	–	–	–	–	**210**	**210**	**210**	**210**	**210**	**210**	**210**	**210**	**210**	**210**	–	–	–	–	–	–	–	1FG1203- . . ■ ■ 4 - ■ . F1 -Z
–	–	–	–	**210**	–	**210**	**210**	**210**	**210**	**210**	**210**	**210**	**210**	**210**	**210**	**210**	**210**	–	–	–	–	1FG1203- . . ■ ■ 3 - ■ . F1 -Z
–	–	–	–	**210**	–	–	**210**	–	**210**	**210**	**210**	–	**210**	**210**	**210**	**210**	**210**	–	–	–	–	1FG1203- . . ■ ■ 2 - ■ . F1 -Z
Max. output speed n_{2max} = **71 rpm**, Transmission ratio i = **63.43**																						
205	**205**	**205**	**205**	**205**	**205**	–	–	–	–	–	–	–	–	–	–	–	–	–	–	–	–	1FG1203- . . ■ ■ 6 - ■ . E1 -Z
–	–	–	–	–	**205**	**205**	**205**	**205**	**205**	**205**	**205**	**205**	**205**	**205**	–	–	–	–	–	–	–	1FG1203- . . ■ ■ 4 - ■ . E1 -Z
–	–	–	–	**205**	–	**205**	**205**	**205**	**205**	**205**	**205**	**205**	**205**	**205**	**205**	**205**	**205**	–	–	–	–	1FG1203- . . ■ ■ 3 - ■ . E1 -Z
–	–	–	–	**205**	–	–	**205**	–	**205**	**205**	**205**	–	**205**	**205**	**205**	**205**	**205**	–	–	–	–	1FG1203- . . ■ ■ 2 - ■ . E1 -Z
Max. output speed n_{2max} = **78 rpm**, Transmission ratio i = **57.54**																						
205	**205**	**205**	**205**	**205**	**205**	–	–	–	–	–	–	–	–	–	–	–	–	–	–	–	–	1FG1203- . . ■ ■ 6 - ■ . D1 -Z
–	–	–	–	–	**205**	**205**	**205**	**205**	**205**	**205**	**205**	**205**	**205**	**205**	–	–	–	–	–	–	–	1FG1203- . . ■ ■ 4 - ■ . D1 -Z
–	–	–	–	**205**	–	**205**	**205**	**205**	**205**	**205**	**205**	**205**	**205**	**205**	**205**	**205**	**205**	–	–	–	–	1FG1203- . . ■ ■ 3 - ■ . D1 -Z
–	–	–	–	**205**	–	–	**205**	–	**205**	**205**	**205**	–	**205**	**205**	**205**	**205**	**205**	–	–	–	–	1FG1203- . . ■ ■ 2 - ■ . D1 -Z
Max. output speed n_{2max} = **83 rpm**, Transmission ratio i = **54.16**																						
205	**205**	**205**	**205**	**205**	**205**	–	–	–	–	–	–	–	–	–	–	–	–	–	–	–	–	1FG1203- . . ■ ■ 6 - ■ . C1 -Z
–	–	–	–	–	**205**	**205**	**205**	**205**	**205**	**205**	**205**	**205**	**205**	**205**	–	–	–	–	–	–	–	1FG1203- . . ■ ■ 4 - ■ . C1 -Z
–	–	–	–	**205**	–	**205**	**205**	**205**	**205**	**205**	**205**	**205**	**205**	**205**	**205**	**205**	**205**	–	–	–	–	1FG1203- . . ■ ■ 3 - ■ . C1 -Z
–	–	–	–	**205**	–	–	**205**	–	**205**	**205**	**205**	–	**205**	**205**	**205**	**205**	**205**	–	–	–	–	1FG1203- . . ■ ■ 2 - ■ . C1 -Z

Motor shaft height:

1	2	3	4	5	6	7	8	9	10	11	12	13	14	15	16	17	18	19	20	21	22	
36																						C
			48																			D
							63															E
												80										F
																	100					G

Motor length/motor version (**CT** = Compact, **HD** = High Dynamic)**:**

1	2	3	4	5	6	7	8	9	10	11	12	13	14	15	16	17	18	19	20	21	22		
			0/CT				**0/CT**					**0/CT**						**0/CT**					0 2
													1/CT						**1/CT**				1 2
								1/HD															1 4
2/CT				**2/CT**					**2/CT**														2 2
										3/CT				**3/CT**					**3/CT**				3 2
	3/HD				**3/HD**																		3 4
		4/CT													**4/CT**								4 2
						4/HD					**4/HD**												4 4
																			5/CT				5 2
																5/HD							5 4
																	6/HD						6 4

Selection of shaft design, encoder system, mounting type and special designs on page 3/26.

1FG1203- ■ ■ . . . - . ■ . . -Z

© Siemens 2019

For line voltage 380 ... 480 V 3 AC (DC link voltage 510 ... 720 V DC) **– gearbox type** ***D39***

Geared motor torque at 1450 rpm
Note: All values in **bold** print are maximum gearbox values.
M_{2dyn}
Nm

Servo helical geared motors SIMOTICS S-1FG1
Article No.

Max. output speed n_{2max} = **94 rpm**, Transmission ratio i = **47.74**

195	187	**205**	**205**	**205**	**205**	–	–	–	–	–	–	–	–	–	–	–	–	–	–	–	1FG1203- . . ■ ■ 6 - ■ . B1 -Z
–	–	–	–	–	**205**	**205**	**205**	**205**	**205**	**205**	**205**	**205**	**205**	**205**	–	–	–	–	–	–	1FG1203- . . ■ ■ 4 - ■ . B1 -Z
–	–	–	–	**205**	–	**205**	**205**	**205**	**205**	**205**	**205**	**205**	**205**	**205**	**205**	**205**	**205**	–	–	–	1FG1203- . . ■ ■ 3 - ■ . B1 -Z
–	–	–	–	**205**	–	–	**205**	–	**205**	**205**	**205**	–	**205**	**205**	**205**	**205**	**205**	–	–	–	1FG1203- . . ■ ■ 2 - ■ . B1 -Z

Max. output speed n_{2max} = **109 rpm**, Transmission ratio i = **41.43**

169	162	**205**	192	**205**	**205**	–	–	–	–	–	–	–	–	–	–	–	–	–	–	–	1FG1203- . . ■ ■ 6 - ■ . A1 -Z
–	–	–	–	–	**205**	**205**	**205**	**205**	**205**	**205**	**205**	**205**	**205**	**205**	–	–	–	–	–	–	1FG1203- . . ■ ■ 4 - ■ . A1 -Z
–	–	–	–	**205**	–	**205**	**205**	**205**	**205**	**205**	**205**	**205**	**205**	**205**	**205**	**205**	**205**	–	–	–	1FG1203- . . ■ ■ 3 - ■ . A1 -Z
–	–	–	–	**205**	–	–	**205**	–	**205**	**205**	**205**	–	**205**	**205**	**205**	**205**	**205**	–	–	–	1FG1203- . . ■ ■ 2 - ■ . A1 -Z

Motor shaft height:

36																					**C**	
			48																		**D**	
							63														**E**	
												80									**F**	
																	100				**G**	

Motor length/motor version (**CT** = Compact, **HD** = High Dynamic)**:**

			0/CT				**0/CT**					**0/CT**						**0/CT**				**0**	**2**
													1/CT						**1/CT**			**1**	**2**
								1/HD														**1**	**4**
2/CT				**2/CT**					**2/CT**													**2**	**2**
										3/CT				**3/CT**						**3/CT**		**3**	**2**
	3/HD				**3/HD**																	**3**	**4**
		4/CT														**4/CT**						**4**	**2**
						4/HD					**4/HD**											**4**	**4**
																				5/CT		**5**	**2**
																5/HD						**5**	**4**
																	6/HD					**6**	**4**

Selection of shaft design, encoder system, mounting type and special designs on page 3/26.

1FG1203- ■ ■ . . . . - . ■ . . **-Z**

© Siemens 2019

Gearbox size 39, 3-stage – 1FG1203

Selection and ordering data (continued)

For line voltage 200 ... 240 V 1 AC (DC link voltage 270 ... 330 V DC) **– gearbox type** *D39*

Max. output speed n_{2max} rpm	Transmission ratio i	Geared motor torque at 1450 rpm Note: All values in **bold** print are maximum gearbox values. M_{2dyn} Nm					**Servo helical geared motors SIMOTICS S-1FG1** Article No.
19	**235.29**	**215**	**215**	**215**	**215**	**215**	**1FG1203- . . ■ ■ 3 - ■ . R1 -Z**
22	**208.69**	**215**	**215**	**215**	**215**	**215**	**1FG1203- . . ■ ■ 3 - ■ . Q1 -Z**
25	**181.07**	**215**	**215**	**215**	**215**	**215**	**1FG1203- . . ■ ■ 3 - ■ . P1 -Z**
27	**164.61**	**215**	**215**	**215**	**215**	**215**	**1FG1203- . . ■ ■ 3 - ■ . N1 -Z**
32	**141.17**	**215**	**215**	**215**	**215**	**215**	**1FG1203- . . ■ ■ 3 - ■ . M1 -Z**
35	**128.34**	**215**	**215**	**215**	**215**	**215**	**1FG1203- . . ■ ■ 3 - ■ . L1 -Z**
40	**112.53**	**215**	**215**	**215**	**215**	**215**	**1FG1203- . . ■ ■ 3 - ■ . K1 -Z**
45	**100.44**	**215**	**215**	**215**	**215**	**215**	**1FG1203- . . ■ ■ 3 - ■ . J1 -Z**
50	**89.51**	**215**	**215**	**215**	**215**	**215**	**1FG1203- . . ■ ■ 3 - ■ . H1 -Z**
54	**82.63**	**215**	**215**	**215**	**215**	**215**	**1FG1203- . . ■ ■ 3 - ■ . G1 -Z**
62	**72.34**	**210**	**210**	**210**	**210**	**210**	**1FG1203- . . ■ ■ 3 - ■ . F1 -Z**
71	**63.43**	**205**	**205**	**205**	**205**	**205**	**1FG1203- . . ■ ■ 3 - ■ . E1 -Z**
78	**57.54**	**205**	**205**	**205**	**205**	**205**	**1FG1203- . . ■ ■ 3 - ■ . D1 -Z**
83	**54.16**	**205**	**205**	**205**	**205**	**205**	**1FG1203- . . ■ ■ 3 - ■ . C1 -Z**
94	**47.74**	195	187	**205**	**205**	**205**	**1FG1203- . . ■ ■ 3 - ■ . B1 -Z**
109	**41.43**	169	162	**205**	**205**	**205**	**1FG1203- . . ■ ■ 3 - ■ . A1 -Z**
Motor shaft height:							
		36					**C**
					48		**D**
Motor length/motor version (**CT** = Compact, **HD** = High Dynamic)**:**							
		2/CT			**2/CT**		**2** **1**
			3/HD			**3/HD**	**3** **3**
				4/CT			**4** **1**

Selection of shaft design, encoder system, mounting type and special designs on page 3/26.

1FG1203- ■ ■ . . . - . ■ . . -Z

© Siemens 2019

Technical specifications

Gearbox type *Z49*

Servo geared motor Type	i	R_{ex}	M_{2rated} Nm	M_{2max} Nm	$M_{2Em.Off}$ Nm	n_{2max} rpm	n_{1max} rpm	φ [1] '	F_{R2} N	F_{R2max} N	c_T Nm/ '	J_G 10^{-4} kgm^2
1FG1104-.....-..B2	52.14	4171/80	320	340	540	86	4500	6.98	5900	5860	14.3	0.17
1FG1104-.....-..A2	47.4	4171/88	320	340	540	95	4500	6.98	5780	5860	14.3	0.21
1FG1104-.....-..X1	40.31	645/16	320	340	540	112	4500	7.05	5680	5860	14.3	0.25
1FG1104-.....-..W1	36.65	3225/88	320	340	540	123	4500	7.05	5250	5720	14.3	0.31
1FG1104-.....-..V1	32.7	3139/96	320	340	540	138	4500	7.12	5540	5460	14.3	0.35
1FG1104-.....-..U1	29.32	645/22	320	340	540	153	4500	7.15	5300	5220	14.3	0.42
1FG1104-.....-..T1	26.43	2537/96	320	340	540	170	4500	7.19	5070	4990	14.3	0.5
1FG1104-.....-..S1	24.39	2537/104	320	340	540	185	4500	7.19	4910	4830	14.3	0.59
1FG1104-.....-..R1	22.27	1247/56	320	340	540	202	4500	7.23	4720	4640	14.3	0.69
1FG1104-.....-..Q1	18.48	2365/128	320	340	540	244	4500	7.37	4360	4280	14.3	0.87
1FG1104-.....-..P1	17.39	2365/136	320	340	540	259	4500	7.37	4250	4170	14.3	1
1FG1104-.....-..N1	16.42	2365/144	320	340	540	274	4500	7.37	4140	4060	14.3	1.1
1FG1104-.....-..M1	13.98	559/40	320	340	540	322	4500	7.52	3860	3780	14.3	1.4
1FG1104-.....-..L1	11.97	2107/176	320	340	540	376	4500	7.52	3600	3520	14.2	1.7
1FG1104-.....-..K1	10.53	2021/192	320	340	540	427	4500	7.52	3400	3320	14.2	2.1
1FG1104-.....-..J1	8.88	817/92	320	340	540	507	4500	7.80	3140	3060	14.2	2.7
1FG1104-.....-..H1	7.74	387/50	320	340	540	581	4500	8.00	2940	2860	14.2	3.6
1FG1104-.....-..G1	7.64	649/85	295	295	500	569	4350	11.81	2920	2920	10.6	1.2
1FG1104-.....-..F1	7.21	649/90	290	290	490	603	4350	11.81	2860	2860	10.6	1.3
1FG1104-.....-..E1	6.14	767/125	265	265	450	708	4350	12.17	2750	2750	10.6	1.7
1FG1104-.....-..D1	5.26	2891/550	245	245	415	827	4350	12.17	2670	2670	10.6	2.1
1FG1104-.....-..C1	4.62	2773/600	225	225	380	942	4350	12.17	2570	2570	10.5	2.6
1FG1104-.....-..B1	3.9	2242/575	205	205	345	1115	4350	12.17	2460	2460	10.5	3.3
1FG1104-.....-..A1	3.4	2124/625	191	191	320	1279	4350	12.17	2370	2370	10.5	4.4

Selection and ordering data

Shaft design, encoder system, mounting type and special designs

Gearbox type *Z49*

			Servo helical geared motors SIMOTICS S-1FG1 Article No. **1FG1104-** ■■.....-.■..**-Z**
Shaft design:	Solid shaft with feather keyway	– Design 1	**1**
Order codes and Descriptions see chapter "Options"	Special shaft design		**9**
Encoder system for motors with DRIVE-CLiQ interface:	AS20DQI encoder		**Q**
	AM20DQI encoder		**R**
	R14DQ resolver		**P**
	R15DQ resolver		**U**
Order codes and Descriptions see chapter "Options"	Special version encoder system		**Z**
Mounting type:	Foot-mounted design		**A**
	Foot/flange-mounted design		**B**
	Flange-mounted design		**F**
	Housing flange design		**H**
Special designs (Options): Order codes and Descriptions see chapter "Options" The following order codes must be added to each article number: • Oil type – order codes **K06** or **K11** • Mounting position – order codes **D01** ... **D06**			**-Z**

Selection of 2-stages servo helical geared motors with gearbox size 49 from next page. **1FG1104-** ..■■■-■.■■**-Z**

[1] Data are for option reduced-backlash version – order code **G99** required.

© Siemens 2019

Gearbox size 49, 2-stage – 1FG1104

3

Selection and ordering data (continued)

For line voltage 380 ... 480 V 3 AC (DC link voltage 510 ... 720 V DC) **– gearbox type** ***Z49***

Geared motor torque at 1450 rpm
Note: All values in **bold** print are maximum gearbox values.
M_{2dyn}
Nm

Max. output speed n_{2max} = **86 rpm**, Transmission ratio i = **52.14**	Servo helical geared motors SIMOTICS S-1FG1 Article No.
215 205 310 245 **340** **340** – – – – – – – – – – – – – – – –	1FG1104- . . ■ ■ 6 - ■ . B2 -Z
– – – – – **340** **340** **340** **340** **340** **340** **340** – – – – – – – – – –	1FG1104- . . ■ ■ 4 - ■ . B2 -Z
– – – – **340** – **340** **340** **340** **340** **340** **340** – – – – – – – – – –	1FG1104- . . ■ ■ 3 - ■ . B2 -Z
– – – – **340** – – **340** – **340** **340** **340** – – – – – – – – – –	1FG1104- . . ■ ■ 2 - ■ . B2 -Z
Max. output speed n_{2max} = 95 rpm, Transmission ratio i = 47.4	
198 189 285 225 **340** **340** – – – – – – – – – – – – – – – –	1FG1104- . . ■ ■ 6 - ■ . A2 -Z
– – – – – **340** **340** **340** **340** **340** **340** **340** – – – – – – – – – –	1FG1104- . . ■ ■ 4 - ■ . A2 -Z
– – – – **340** – **340** **340** **340** **340** **340** **340** – – – – – – – – – –	1FG1104- . . ■ ■ 3 - ■ . A2 -Z
– – – – **340** – – **340** – **340** **340** **340** – – – – – – – – – –	1FG1104- . . ■ ■ 2 - ■ . A2 -Z
Max. output speed n_{2max} = 112 rpm, Transmission ratio i = 40.31	
169 161 240 191 **340** **340** – – – – – – – – – – – – – – – –	1FG1104- . . ■ ■ 6 - ■ . X1 -Z
– – – – – **340** **340** **340** **340** **340** **340** **340** – – – – – – – – – –	1FG1104- . . ■ ■ 4 - ■ . X1 -Z
– – – – **340** – **340** **340** **340** **340** **340** **340** – – – – – – – – – –	1FG1104- . . ■ ■ 3 - ■ . X1 -Z
– – – – **340** – – **340** – **340** **340** **340** – – – – – – – – – –	1FG1104- . . ■ ■ 2 - ■ . X1 -Z
Max. output speed n_{2max} = 123 rpm, Transmission ratio i = 36.65	
154 147 220 175 **340** 340 – – – – – – – – – – – – – – – –	1FG1104- . . ■ ■ 6 - ■ . W1 -Z
– – – – – 340 **340** **340** **340** **340** **340** **340** – – – – – – – – – –	1FG1104- . . ■ ■ 4 - ■ . W1 -Z
– – – – **340** – **340** **340** **340** **340** **340** **340** – – – – – – – – – –	1FG1104- . . ■ ■ 3 - ■ . W1 -Z
– – – – **340** – – **340** – **340** **340** **340** – – – – – – – – – –	1FG1104- . . ■ ■ 2 - ■ . W1 -Z
Max. output speed n_{2max} = 138 rpm, Transmission ratio i = 32.7	
138 132 199 156 320 305 – – – – – – – – – – – – – – – –	1FG1104- . . ■ ■ 6 - ■ . V1 -Z
– – – – – 305 **340** **340** **340** **340** **340** **340** **340** **340** **340** – – – – – – –	1FG1104- . . ■ ■ 4 - ■ . V1 -Z
– – – – 320 – **340** **340** **340** **340** **340** **340** **340** **340** **340** **340** **340** **340** – – – –	1FG1104- . . ■ ■ 3 - ■ . V1 -Z
– – – – 320 – – **340** – **340** **340** **340** – **340** **340** **340** **340** **340** – – – –	1FG1104- . . ■ ■ 2 - ■ . V1 -Z
Max. output speed n_{2max} = 153 rpm, Transmission ratio i = 29.32	
124 118 179 140 285 275 – – – – – – – – – – – – – – – –	1FG1104- . . ■ ■ 6 - ■ . U1 -Z
– – – – – 275 310 **340** **340** **340** **340** **340** **340** **340** **340** – – – – – – –	1FG1104- . . ■ ■ 4 - ■ . U1 -Z
– – – – 285 – 310 **340** **340** **340** **340** **340** **340** **340** **340** **340** **340** **340** – – – –	1FG1104- . . ■ ■ 3 - ■ . U1 -Z
– – – – 285 – – **340** – **340** **340** **340** – **340** **340** **340** **340** **340** – – – –	1FG1104- . . ■ ■ 2 - ■ . U1 -Z
Max. output speed n_{2max} = 170 rpm, Transmission ratio i = 26.43	
112 107 161 126 260 245 – – – – – – – – – – – – – – – –	1FG1104- . . ■ ■ 6 - ■ . T1 -Z
– – – – – 245 280 **340** **340** **340** **340** **340** **340** **340** **340** – – – – – – –	1FG1104- . . ■ ■ 4 - ■ . T1 -Z
– – – – 260 – 280 **340** **340** **340** **340** **340** **340** **340** **340** **340** **340** **340** – – – –	1FG1104- . . ■ ■ 3 - ■ . T1 -Z
– – – – 260 – – **340** – **340** **340** **340** – **340** **340** **340** **340** **340** – – – –	1FG1104- . . ■ ■ 2 - ■ . T1 -Z

Motor shaft height:

36	C
48	D
63	E
80	F
100	G

Motor length/motor version (**CT** = Compact, **HD** = High Dynamic)**:**

0/CT	0	2
1/CT	1	2
1/HD	1	4
2/CT	2	2
3/CT	3	2
3/HD	3	4
4/CT	4	2
4/HD	4	4
5/CT	5	2
5/HD	5	4
6/HD	6	4

Selection of shaft design, encoder system, mounting type and special designs on page 3/31.

1FG1104- ■ ■ . . . . - . ■ . . -Z

© Siemens 2019

For line voltage 380 ... 480 V 3 AC (DC link voltage 510 ... 720 V DC) **– gearbox type** ***Z49***

Geared motor torque at 1450 rpm
Note: All values in **bold** print are maximum gearbox values.

M_{2dyn} Nm

																					Article No.
Max. output speed n_{2max} = 185 rpm, Transmission ratio i = 24.39																					
103	99	149	117	240	230	–	–	–	–	–	–	–	–	–	–	–	–	–	–	–	1FG1104- . . ■ ■ 6 - ■ . S1 -Z
–	–	–	–	–	230	260	**340**	**340**	**340**	**340**	**340**	**340**	**340**	**340**	–	–	–	–	–	–	1FG1104- . . ■ ■ 4 - ■ . S1 -Z
–	–	–	–	240	–	260	**340**	**340**	**340**	**340**	**340**	**340**	**340**	**340**	**340**	**340**	**340**	–	–	–	1FG1104- . . ■ ■ 3 - ■ . S1 -Z
–	–	–	–	240	–	–	**340**	–	**340**	**340**	**340**	–	**340**	**340**	**340**	**340**	**340**	–	–	–	1FG1104- . . ■ ■ 2 - ■ . S1 -Z
Max. output speed n_{2max} = 202 rpm, Transmission ratio i = 22.27																					
94	90	137	107	220	210	–	–	–	–	–	–	–	–	–	–	–	–	–	–	–	1FG1104- . . ■ ■ 6 - ■ . R1 -Z
–	–	–	–	–	210	235	**340**	**340**	**340**	**340**	**340**	**340**	**340**	**340**	–	–	–	–	–	–	1FG1104- . . ■ ■ 4 - ■ . R1 -Z
–	–	–	–	220	–	235	**340**	**340**	**340**	**340**	**340**	**340**	**340**	**340**	**340**	**340**	**340**	**340**	**340**	**340**	1FG1104- . . ■ ■ 3 - ■ . R1 -Z
–	–	–	–	220	–	–	**340**	–	**340**	**340**	**340**	–	**340**	**340**	**340**	**340**	**340**	**340**	**340**	**340**	1FG1104- . . ■ ■ 2 - ■ . R1 -Z
Max. output speed n_{2max} = 244 rpm, Transmission ratio i = 18.48																					
79	75	114	89	184	175	–	–	–	–	–	–	–	–	–	–	–	–	–	–	–	1FG1104- . . ■ ■ 6 - ■ . Q1 -Z
–	–	–	–	–	175	197	315	300	**340**	**340**	**340**	**340**	**340**	**340**	–	–	–	–	–	–	1FG1104- . . ■ ■ 4 - ■ . Q1 -Z
–	–	–	–	184	–	197	315	300	**340**	**340**	**340**	**340**	**340**	**340**	**340**	**340**	**340**	**340**	**340**	**340**	1FG1104- . . ■ ■ 3 - ■ . Q1 -Z
–	–	–	–	184	–	–	315	–	**340**	**340**	**340**	–	**340**	**340**	**340**	**340**	**340**	**340**	**340**	**340**	1FG1104- . . ■ ■ 2 - ■ . Q1 -Z
Max. output speed n_{2max} = 259 rpm, Transmission ratio i = 17.39																					
74	71	107	84	174	165	–	–	–	–	–	–	–	–	–	–	–	–	–	–	–	1FG1104- . . ■ ■ 6 - ■ . P1 -Z
–	–	–	–	–	165	186	295	285	**340**	**340**	**340**	**340**	**340**	**340**	–	–	–	–	–	–	1FG1104- . . ■ ■ 4 - ■ . P1 -Z
–	–	–	–	174	–	186	295	285	**340**	**340**	**340**	**340**	**340**	**340**	**340**	**340**	**340**	**340**	**340**	**340**	1FG1104- . . ■ ■ 3 - ■ . P1 -Z
–	–	–	–	174	–	–	295	–	**340**	**340**	**340**	–	**340**	**340**	**340**	**340**	**340**	**340**	**340**	**340**	1FG1104- . . ■ ■ 2 - ■ . P1 -Z
Max. output speed n_{2max} = 274 rpm, Transmission ratio i = 16.42																					
70	67	101	79	164	156	–	–	–	–	–	–	–	–	–	–	–	–	–	–	–	1FG1104- . . ■ ■ 6 - ■ . N1 -Z
–	–	–	–	–	156	176	280	270	**340**	**340**	**340**	**340**	**340**	**340**	–	–	–	–	–	–	1FG1104- . . ■ ■ 4 - ■ . N1 -Z
–	–	–	–	164	–	176	280	270	**340**	**340**	**340**	**340**	**340**	**340**	**340**	**340**	**340**	**340**	**340**	**340**	1FG1104- . . ■ ■ 3 - ■ . N1 -Z
–	–	–	–	164	–	–	280	–	**340**	**340**	**340**	–	**340**	**340**	**340**	**340**	**340**	**340**	**340**	**340**	1FG1104- . . ■ ■ 2 - ■ . N1 -Z
Max. output speed n_{2max} = 322 rpm, Transmission ratio i = 13.98																					
60	57	86	68	140	133	–	–	–	–	–	–	–	–	–	–	–	–	–	–	–	1FG1104- . . ■ ■ 6 - ■ . M1 -Z
–	–	–	–	–	133	150	240	230	**340**	**340**	**340**	330	**340**	**340**	–	–	–	–	–	–	1FG1104- . . ■ ■ 4 - ■ . M1 -Z
–	–	–	–	140	–	150	240	230	**340**	**340**	**340**	330	**340**	**340**	**340**	**340**	**340**	**340**	**340**	**340**	1FG1104- . . ■ ■ 3 - ■ . M1 -Z
–	–	–	–	140	–	–	240	–	**340**	**340**	**340**	–	**340**	**340**	**340**	**340**	**340**	**340**	**340**	**340**	1FG1104- . . ■ ■ 2 - ■ . M1 -Z
Max. output speed n_{2max} = 376 rpm, Transmission ratio i = 11.97																					
–	–	–	–	–	–	–	–	–	–	–	–	–	–	–	–	–	–	–	–	–	1FG1104- . . ■ ■ 6 - ■ . L1 -Z
–	–	–	–	–	–	–	205	198	295	**340**	**340**	285	**340**	**340**	–	–	–	–	–	–	1FG1104- . . ■ ■ 4 - ■ . L1 -Z
–	–	–	–	–	–	–	205	198	295	**340**	**340**	285	**340**	**340**	**340**	**340**	**340**	**340**	**340**	**340**	1FG1104- . . ■ ■ 3 - ■ . L1 -Z
–	–	–	–	–	–	–	205	–	295	**340**	**340**	–	**340**	**340**	**340**	**340**	**340**	**340**	**340**	**340**	1FG1104- . . ■ ■ 2 - ■ . L1 -Z
Max. output speed n_{2max} = 427 rpm, Transmission ratio i = 10.53																					
–	–	–	–	–	–	–	–	–	–	–	–	–	–	–	–	–	–	–	–	–	1FG1104- . . ■ ■ 6 - ■ . K1 -Z
–	–	–	–	–	–	–	181	174	260	**340**	320	250	**340**	**340**	–	–	–	–	–	–	1FG1104- . . ■ ■ 4 - ■ . K1 -Z
–	–	–	–	–	–	–	181	174	260	**340**	320	250	**340**	**340**	**340**	**340**	**340**	**340**	**340**	**340**	1FG1104- . . ■ ■ 3 - ■ . K1 -Z
–	–	–	–	–	–	–	181	–	260	**340**	320	–	**340**	**340**	**340**	**340**	**340**	**340**	**340**	**340**	1FG1104- . . ■ ■ 2 - ■ . K1 -Z

Motor shaft height:

36																						**C**
			48																			**D**
							63															**E**
												80										**F**
																	100					**G**

Motor length/motor version (**CT** = Compact, **HD** = High Dynamic)**:**

			0/CT				**0/CT**					**0/CT**						**0/CT**					**0**	**2**
													1/CT						**1/CT**				**1**	**2**
								1/HD															**1**	**4**
2/CT				**2/CT**					**2/CT**														**2**	**2**
										3/CT				**3/CT**					**3/CT**				**3**	**2**
	3/HD				**3/HD**																		**3**	**4**
		4/CT														**4/CT**							**4**	**2**
						4/HD					**4/HD**													**4**	**4**
																				5/CT			**5**	**2**
															5/HD								**5**	**4**
																6/HD							**6**	**4**

Selection of shaft design, encoder system, mounting type and special designs on page 3/31.

1FG1104- ■ ■ . . . - . ■ . . -Z

Servo helical geared motors SIMOTICS S-1FG1
Article No.

© Siemens 2019

Gearbox size 49, 2-stage – 1FG1104

For line voltage 380 ... 480 V 3 AC (DC link voltage 510 ... 720 V DC) **– gearbox type** ***Z49***

Geared motor torque at 1450 rpm
Note: All values in **bold** print are maximum gearbox values.

M_{2dyn} Nm

																						Servo helical geared motors SIMOTICS S-1FG1 Article No.
Max. output speed n_{2max} = 507 rpm, Transmission ratio i = 8.88																						
–	–	–	–	–	–	–	–	–	–	–	–	–	–	–	–	–	–	–	–	–	–	1FG1104- . . ■ ■ 6 - ■ . J1 -Z
–	–	–	–	–	–	–	153	147	220	295	270	210	315	**340**	–	–	–	–	–	–	–	1FG1104- . . ■ ■ 4 - ■ . J1 -Z
–	–	–	–	–	–	–	153	147	220	295	270	210	315	**340**	**340**	**340**	**340**	**340**	**340**	**340**	**340**	1FG1104- . . ■ ■ 3 - ■ . J1 -Z
–	–	–	–	–	–	–	153	–	220	295	270	–	315	**340**	**340**	**340**	**340**	**340**	**340**	**340**	**340**	1FG1104- . . ■ ■ 2 - ■ . J1 -Z
Max. output speed n_{2max} = 569 rpm, Transmission ratio i = 7.64																						
33	31	47	37	77	73	–	–	–	–	–	–	–	–	–	–	–	–	–	–	–	–	1FG1104- . . ■ ■ 6 - ■ . G1 -Z
–	–	–	–	–	73	83	132	127	191	255	235	184	270	**295**	–	–	–	–	–	–	–	1FG1104- . . ■ ■ 4 - ■ . G1 -Z
–	–	–	–	77	–	83	132	127	191	255	235	184	270	**295**	**295**	**295**	**295**	**295**	**295**	**295**	**295**	1FG1104- . . ■ ■ 3 - ■ . G1 -Z
–	–	–	–	77	–	–	132	–	191	255	235	–	270	**295**	**295**	**295**	**295**	**295**	**295**	**295**	**295**	1FG1104- . . ■ ■ 2 - ■ . G1 -Z
Max. output speed n_{2max} = 581 rpm, Transmission ratio i = 7.74																						
–	–	–	–	–	–	–	–	–	–	–	–	–	–	–	–	–	–	–	–	–	–	1FG1104- . . ■ ■ 6 - ■ . H1 -Z
–	–	–	–	–	–	–	133	128	193	260	235	185	275	**340**	–	–	–	–	–	–	–	1FG1104- . . ■ ■ 4 - ■ . H1 -Z
–	–	–	–	–	–	–	133	128	193	260	235	185	275	**340**	**340**	**340**	**340**	**340**	**340**	**340**	**340**	1FG1104- . . ■ ■ 3 - ■ . H1 -Z
–	–	–	–	–	–	–	133	–	193	260	235	–	275	**340**	**340**	**340**	**340**	**340**	**340**	**340**	**340**	1FG1104- . . ■ ■ 2 - ■ . H1 -Z
Max. output speed n_{2max} = 603 rpm, Transmission ratio i = 7.21																						
31	29	45	35	72	69	–	–	–	–	–	–	–	–	–	–	–	–	–	–	–	–	1FG1104- . . ■ ■ 6 - ■ . F1 -Z
–	–	–	–	–	69	78	124	120	180	240	220	173	255	**290**	–	–	–	–	–	–	–	1FG1104- . . ■ ■ 4 - ■ . F1 -Z
–	–	–	–	72	–	78	124	120	180	240	220	173	255	**290**	**290**	**290**	**290**	**290**	**290**	**290**	**290**	1FG1104- . . ■ ■ 3 - ■ . F1 -Z
–	–	–	–	72	–	–	124	–	180	240	220	–	255	**290**	**290**	**290**	**290**	**290**	**290**	**290**	**290**	1FG1104- . . ■ ■ 2 - ■ . F1 -Z
Max. output speed n_{2max} = 708 rpm, Transmission ratio i = 6.14																						
26	25	38	30	62	59	–	–	–	–	–	–	–	–	–	–	–	–	–	–	–	–	1FG1104- . . ■ ■ 6 - ■ . E1 -Z
–	–	–	–	–	59	66	106	102	154	205	189	148	215	**265**	–	–	–	–	–	–	–	1FG1104- . . ■ ■ 4 - ■ . E1 -Z
–	–	–	–	62	–	66	106	102	154	205	189	148	215	**265**	**265**	**265**	**265**	**265**	**265**	**265**	**265**	1FG1104- . . ■ ■ 3 - ■ . E1 -Z
–	–	–	–	62	–	–	106	–	154	205	189	–	215	**265**	**265**	**265**	**265**	**265**	**265**	**265**	**265**	1FG1104- . . ■ ■ 2 - ■ . E1 -Z
Max. output speed n_{2max} = 827 rpm, Transmission ratio i = 5.26																						
–	–	–	–	–	–	–	–	–	–	–	–	–	–	–	–	–	–	–	–	–	–	1FG1104- . . ■ ■ 6 - ■ . D1 -Z
–	–	–	–	–	–	–	91	88	132	178	162	127	188	**245**	–	–	–	–	–	–	–	1FG1104- . . ■ ■ 4 - ■ . D1 -Z
–	–	–	–	–	–	–	91	88	132	178	162	127	188	**245**	**245**	**245**	**245**	**245**	**245**	**245**	**245**	1FG1104- . . ■ ■ 3 - ■ . D1 -Z
–	–	–	–	–	–	–	91	–	132	178	162	–	188	**245**	**245**	**245**	**245**	**245**	**245**	**245**	**245**	1FG1104- . . ■ ■ 2 - ■ . D1 -Z
Max. output speed n_{2max} = 942 rpm, Transmission ratio i = 4.62																						
–	–	–	–	–	–	–	–	–	–	–	–	–	–	–	–	–	–	–	–	–	–	1FG1104- . . ■ ■ 6 - ■ . C1 -Z
–	–	–	–	–	–	–	80	77	116	156	143	111	165	220	–	–	–	–	–	–	–	1FG1104- . . ■ ■ 4 - ■ . C1 -Z
–	–	–	–	–	–	–	80	77	116	156	143	111	165	220	**225**	**225**	**225**	**225**	**225**	**225**	**225**	1FG1104- . . ■ ■ 3 - ■ . C1 -Z
–	–	–	–	–	–	–	80	–	116	156	143	–	165	220	**225**	**225**	**225**	**225**	**225**	**225**	**225**	1FG1104- . . ■ ■ 2 - ■ . C1 -Z

Motor shaft height:

36																						**C**
			48																			**D**
							63															**E**
												80										**F**
																	100					**G**

Motor length/motor version (**CT** = Compact, **HD** = High Dynamic)**:**

			0/CT				**0/CT**					**0/CT**						**0/CT**					**0**	**2**
													1/CT						**1/CT**				**1**	**2**
								1/HD															**1**	**4**
2/CT				**2/CT**					**2/CT**														**2**	**2**
										3/CT				**3/CT**						**3/CT**			**3**	**2**
	3/HD					**3/HD**																	**3**	**4**
		4/CT														**4/CT**							**4**	**2**
					4/HD						**4/HD**													**4**	**4**
																				5/CT			**5**	**2**
															5/HD								**5**	**4**
																6/HD							**6**	**4**

Selection of shaft design, encoder system, mounting type and special designs on page 3/31.

1FG1104- ■ ■ . . . - ■ . . -Z

© Siemens 2019

For line voltage 380 ... 480 V 3 AC (DC link voltage 510 ... 720 V DC) **– gearbox type** ***Z49***

Geared motor torque at 1450 rpm
Note: All values in **bold** print are maximum gearbox values.
M_{2dyn}
Nm

Servo helical geared motors SIMOTICS S-1FG1
Article No.

Max. output speed n_{2max} = **1115 rpm**, Transmission ratio i = **3.9**																						
–	–	–	–	–	–	–	–	–	–	–	–	–	–	–	–	–	–	–	–	–	–	1FG1104- . . ■ ■ 6 - ■ . B1 -Z
–	–	–	–	–	–	–	67	65	98	132	120	94	139	188	–	–	–	–	–	–	–	1FG1104- . . ■ ■ 4 - ■ . B1 -Z
–	–	–	–	–	–	–	67	65	98	132	120	94	139	188	**205**	**205**	**205**	205	**205**	**205**	**205**	1FG1104- . . ■ ■ 3 - ■ . B1 -Z
–	–	–	–	–	–	–	67	–	98	132	120	–	139	188	**205**	**205**	**205**	205	**205**	**205**	**205**	1FG1104- . . ■ ■ 2 - ■ . B1 -Z
Max. output speed n_{2max} = **1279 rpm**, Transmission ratio i = **3.4**																						
–	–	–	–	–	–	–	–	–	–	–	–	–	–	–	–	–	–	–	–	–	–	1FG1104- . . ■ ■ 6 - ■ . A1 -Z
–	–	–	–	–	–	–	59	56	85	115	105	82	121	164	–	–	–	–	–	–	–	1FG1104- . . ■ ■ 4 - ■ . A1 -Z
–	–	–	–	–	–	–	59	56	85	115	105	82	121	164	**191**	**191**	**191**	181	**191**	**191**	**191**	1FG1104- . . ■ ■ 3 - ■ . A1 -Z
–	–	–	–	–	–	–	59	–	85	115	105	–	121	164	**191**	**191**	**191**	181	**191**	**191**	**191**	1FG1104- . . ■ ■ 2 - ■ . A1 -Z

Motor shaft height:

36																						**C**
			48																			**D**
							63															**E**
												80										**F**
																		100				**G**

Motor length/motor version (**CT** = Compact, **HD** = High Dynamic)**:**

			0/CT				**0/CT**					**0/CT**					**0/CT**						**0**		**2**
													1/CT					**1/CT**					**1**		**2**
								1/HD															**1**		**4**
2/CT				**2/CT**					**2/CT**														**2**		**2**
										3/CT				**3/CT**					**3/CT**				**3**		**2**
	3/HD				**3/HD**																		**3**		**4**
		4/CT														**4/CT**							**4**		**2**
						4/HD					**4/HD**													**4**		**4**
																				5/CT			**5**		**2**
																5/HD							**5**		**4**
																	6/HD						**6**		**4**

Selection of shaft design, encoder system, mounting type and special designs on page 3/31.

1FG1104- ■ ■ . . . . - . ■ . . **-Z**

© Siemens 2019

Gearbox size 49, 2-stage – 1FG1104

Selection and ordering data (continued)

For line voltage 200 ... 240 V 1 AC (DC link voltage 270 ... 330 V DC) **– gearbox type** ***Z49***

Max. output speed n_{2max} rpm	Transmission ratio i	Geared motor torque at 1450 rpm Note: All values in **bold** print are maximum gearbox values. M_{2dyn} Nm					**Servo helical geared motors SIMOTICS S-1FG1** Article No.
86	**52.14**	215	205	310	**340**	**340**	**1FG1104- . . ■ ■ 3 - ■ . B2 -Z**
95	**47.4**	198	189	285	**340**	**340**	**1FG1104- . . ■ ■ 3 - ■ . A2 -Z**
112	**40.31**	169	161	240	**340**	**340**	**1FG1104- . . ■ ■ 3 - ■ . X1 -Z**
123	**36.65**	154	147	220	**340**	340	**1FG1104- . . ■ ■ 3 - ■ . W1 -Z**
138	**32.7**	138	132	199	320	305	**1FG1104- . . ■ ■ 3 - ■ . V1 -Z**
153	**29.32**	124	118	179	285	275	**1FG1104- . . ■ ■ 3 - ■ . U1 -Z**
170	**26.43**	112	107	161	260	245	**1FG1104- . . ■ ■ 3 - ■ . T1 -Z**
185	**24.39**	103	99	149	240	230	**1FG1104- . . ■ ■ 3 - ■ . S1 -Z**
202	**22.27**	94	90	137	220	210	**1FG1104- . . ■ ■ 3 - ■ . R1 -Z**
244	**18.48**	79	75	114	184	175	**1FG1104- . . ■ ■ 3 - ■ . Q1 -Z**
259	**17.39**	74	71	107	174	165	**1FG1104- . . ■ ■ 3 - ■ . P1 -Z**
274	**16.42**	70	67	101	164	156	**1FG1104- . . ■ ■ 3 - ■ . N1 -Z**
322	**13.98**	60	57	86	140	133	**1FG1104- . . ■ ■ 3 - ■ . M1 -Z**
569	**7.64**	33	31	47	77	73	**1FG1104- . . ■ ■ 3 - ■ . G1 -Z**
603	**7.21**	31	29	45	72	69	**1FG1104- . . ■ ■ 3 - ■ . F1 -Z**
708	**6.14**	26	25	38	62	59	**1FG1104- . . ■ ■ 3 - ■ . E1 -Z**
Motor shaft height:							
		36					**C**
					48		**D**
Motor length/motor version (**CT** = Compact, **HD** = High Dynamic)**:**							
		2/CT			**2/CT**		**2** **1**
			3/HD			**3/HD**	**3** **3**
				4/CT			**4** **1**

Selection of shaft design, encoder system, mounting type and special designs on page 3/31.

1FG1104- ■ ■ . . . - . ■ . . -Z

© Siemens 2019

Technical specifications

Gearbox type *D49*

Servo geared motor Type	i	R_{ex}	M_{2rated} Nm	M_{2max} Nm	$M_{2Em.Off}$ Nm	n_{2max} rpm	n_{1max} rpm	φ [1] '	F_{R2} N	F_{R2max} N	c_T Nm/ '	J_G 10^{-4} kgm^2
1FG1204-.....-..S1	280.89	60673/216	320	360	540	16	4500	7.28	5780	4770	14.4	0.056
1FG1204-.....-..R1	249.76	29971/120	320	360	540	18	4500	7.34	5780	4770	14.4	0.069
1FG1204-.....-..Q1	219.3	2193/10	320	360	540	21	4500	7.35	5780	4770	14.4	0.082
1FG1204-.....-..P1	199.36	2193/11	320	360	540	23	4500	7.35	5780	4770	14.4	0.1
1FG1204-.....-..N1	170.57	5117/30	320	360	540	26	4500	7.37	5780	4770	14.4	0.11
1FG1204-.....-..M1	155.06	5117/33	320	360	540	29	4500	7.37	5780	4770	14.4	0.14
1FG1204-.....-..L1	137.06	2193/16	320	360	540	33	4500	7.39	5780	4770	14.4	0.16
1FG1204-.....-..K1	124.6	10965/88	320	360	540	36	4500	7.39	5780	4770	14.4	0.21
1FG1204-.....-..J1	109.14	31433/288	320	360	540	41	4500	7.41	5780	4770	14.4	0.25
1FG1204-.....-..H1	100.75	31433/312	320	360	540	45	4500	7.41	5780	4770	14.4	0.3
1FG1204-.....-..G1	89.2	29971/336	320	360	540	50	4500	7.44	5780	4770	14.4	0.33
1FG1204-.....-..F1	74.24	9503/128	320	350	540	61	4500	7.47	5780	5020	14.4	0.44
1FG1204-.....-..E1	69.88	559/8	320	350	540	64	4500	7.47	5780	5020	14.4	0.51
1FG1204-.....-..D1	62.61	27047/432	320	345	540	72	4500	7.51	5780	5150	14.4	0.56
1FG1204-.....-..C1	53.3	5117/96	320	340	540	84	4500	7.54	5780	5270	14.4	0.71
1FG1204-.....-..B1	45.69	731/16	320	340	540	98	4500	7.59	5780	5270	14.4	0.89
1FG1204-.....-..A1	39.34	22661/576	320	340	540	114	4500	7.64	5570	5060	14.4	1.1

Selection and ordering data

Shaft design, encoder system, mounting type and special designs

Gearbox type *D49*

			Servo helical geared motors SIMOTICS S-1FG1 Article No.
			1FG1204- ■ ■ . . . - . ■ . . **-Z**
Shaft design:	Solid shaft with feather keyway	– Design 1	**1**
Order codes and Descriptions see chapter "Options"	Special shaft design		**9**
Encoder system for motors with DRIVE-CLiQ interface:	AS20DQI encoder		**Q**
	AM20DQI encoder		**R**
	R14DQ resolver		**P**
	R15DQ resolver		**U**
Order codes and Descriptions see chapter "Options"	Special version encoder system		**Z**
Mounting type:	Foot-mounted design		**A**
	Foot/flange-mounted design		**B**
	Flange-mounted design		**F**
	Housing flange design		**H**
Special designs (Options): Order codes and Descriptions see chapter "Options" The following order codes must be added to each article number: • Oil type – order codes **K06** or **K11** • Mounting position – order codes **D01** ... **D06**			**-Z**
Selection of 3-stages servo helical geared motors with gearbox size 49 from next page.			**1FG1204-** . . ■ ■ ■ - ■ . ■ ■ **-Z**

[1] Data are for option reduced-backlash version – order code **G99** required.

© Siemens 2019

Gearbox size 49, 3-stage – 1FG1204

3

Selection and ordering data (continued)

For line voltage 380 ... 480 V 3 AC (DC link voltage 510 ... 720 V DC) **– gearbox type** *D49*

Geared motor torque at 1450 rpm
Note: All values in **bold** print are maximum gearbox values.
M_{2dyn}
Nm

36	48	63	80	100	Servo helical geared motors SIMOTICS S-1FG1 Article No.
Max. output speed n_{2max} = 16 rpm, Transmission ratio i = 280.89					
360 –	–	–	–	–	1FG1204- . . ■ ■ 6 - ■ . S1 -Z
–	**360** –	–	–	–	1FG1204- . . ■ ■ 4 - ■ . S1 -Z
–	**360** –	–	–	–	1FG1204- . . ■ ■ 3 - ■ . S1 -Z
–	**360** –	–	–	–	1FG1204- . . ■ ■ 2 - ■ . S1 -Z
Max. output speed n_{2max} = 18 rpm, Transmission ratio i = 249.76					
360 –	–	–	–	–	1FG1204- . . ■ ■ 6 - ■ . R1 -Z
–	**360** –	–	–	–	1FG1204- . . ■ ■ 4 - ■ . R1 -Z
–	**360** –	–	–	–	1FG1204- . . ■ ■ 3 - ■ . R1 -Z
–	**360** –	–	–	–	1FG1204- . . ■ ■ 2 - ■ . R1 -Z
Max. output speed n_{2max} = 21 rpm, Transmission ratio i = 219.3					
360 –	–	–	–	–	1FG1204- . . ■ ■ 6 - ■ . Q1 -Z
–	**360** –	–	–	–	1FG1204- . . ■ ■ 4 - ■ . Q1 -Z
–	**360** –	–	–	–	1FG1204- . . ■ ■ 3 - ■ . Q1 -Z
–	**360** –	–	–	–	1FG1204- . . ■ ■ 2 - ■ . Q1 -Z
Max. output speed n_{2max} = 23 rpm, Transmission ratio i = 199.36					
360 –	–	–	–	–	1FG1204- . . ■ ■ 6 - ■ . P1 -Z
–	**360** –	–	–	–	1FG1204- . . ■ ■ 4 - ■ . P1 -Z
–	**360** –	–	–	–	1FG1204- . . ■ ■ 3 - ■ . P1 -Z
–	**360** –	–	–	–	1FG1204- . . ■ ■ 2 - ■ . P1 -Z
Max. output speed n_{2max} = 26 rpm, Transmission ratio i = 170.57					
360 –	–	–	–	–	1FG1204- . . ■ ■ 6 - ■ . N1 -Z
–	**360** –	–	–	–	1FG1204- . . ■ ■ 4 - ■ . N1 -Z
–	**360** –	–	–	–	1FG1204- . . ■ ■ 3 - ■ . N1 -Z
–	**360** –	–	–	–	1FG1204- . . ■ ■ 2 - ■ . N1 -Z
Max. output speed n_{2max} = 29 rpm, Transmission ratio i = 155.06					
360 –	–	–	–	–	1FG1204- . . ■ ■ 6 - ■ . M1 -Z
–	**360** –	–	–	–	1FG1204- . . ■ ■ 4 - ■ . M1 -Z
–	**360** –	–	–	–	1FG1204- . . ■ ■ 3 - ■ . M1 -Z
–	**360** –	–	–	–	1FG1204- . . ■ ■ 2 - ■ . M1 -Z
Max. output speed n_{2max} = 33 rpm, Transmission ratio i = 137.06					
360 –	–	–	–	–	1FG1204- . . ■ ■ 6 - ■ . L1 -Z
–	**360** –	–	–	–	1FG1204- . . ■ ■ 4 - ■ . L1 -Z
–	**360** –	–	–	–	1FG1204- . . ■ ■ 3 - ■ . L1 -Z
–	**360** –	–	–	–	1FG1204- . . ■ ■ 2 - ■ . L1 -Z

Motor shaft height:

36	48	63	80	100	
					C
					D
					E
					F
					G

Motor length/motor version (**CT** = Compact, **HD** = High Dynamic)**:**

36	48	63	80	100		
	0/CT	0/CT	0/CT	0/CT	0	2
			1/CT	1/CT	1	2
		1/HD			1	4
2/CT		2/CT			2	2
		3/CT	3/CT	3/CT	3	2
	3/HD				3	4
			4/CT		4	2
		4/HD			4	4
				5/CT	5	2
			5/HD		5	4
			6/HD		6	4

Selection of shaft design, encoder system, mounting type and special designs on page 3/37.

1FG1204- ■ ■ . . . . - . ■ . . -Z

© Siemens 2019

Gearbox size 49, 3-stage – 1FG1204

For line voltage 380 ... 480 V 3 AC (DC link voltage 510 ... 720 V DC) **– gearbox type** *D49*

Geared motor torque at 1450 rpm
Note: All values in **bold** print are maximum gearbox values.
M_{2dyn} Nm

Servo helical geared motors SIMOTICS S-1FG1
Article No.

1	2	3	4	5	6	7	8	9	10	11	12	13	14	15	16	17	18	19	20	21	22	Article No.
Max. output speed n_{2max} = **36 rpm**, Transmission ratio i = **124.6**																						
360	**360**	**360**	**360**	**360**	**360**	–	–	–	–	–	–	–	–	–	–	–	–	–	–	–	–	1FG1204- . . ■ ■ **6** - ■ . **K1** -Z
–	–	–	–	–	**360**	**360**	**360**	**360**	**360**	**360**	**360**	**360**	**360**	**360**	–	–	–	–	–	–	–	1FG1204- . . ■ ■ **4** - ■ . **K1** -Z
–	–	–	–	**360**	–	**360**	**360**	**360**	**360**	**360**	**360**	**360**	**360**	**360**	**360**	**360**	**360**	–	–	–	–	1FG1204- . . ■ ■ **3** - ■ . **K1** -Z
–	–	–	–	**360**	–	–	**360**	–	**360**	**360**	**360**	–	**360**	**360**	**360**	**360**	**360**	–	–	–	–	1FG1204- . . ■ ■ **2** - ■ . **K1** -Z
Max. output speed n_{2max} = **41 rpm**, Transmission ratio i = **109.14**																						
360	**360**	**360**	**360**	**360**	**360**	–	–	–	–	–	–	–	–	–	–	–	–	–	–	–	–	1FG1204- . . ■ ■ **6** - ■ . **J1** -Z
–	–	–	–	–	**360**	**360**	**360**	**360**	**360**	**360**	**360**	**360**	**360**	**360**	–	–	–	–	–	–	–	1FG1204- . . ■ ■ **4** - ■ . **J1** -Z
–	–	–	–	**360**	–	**360**	**360**	**360**	**360**	**360**	**360**	**360**	**360**	**360**	**360**	**360**	**360**	–	–	–	–	1FG1204- . . ■ ■ **3** - ■ . **J1** -Z
–	–	–	–	**360**	–	–	**360**	–	**360**	**360**	**360**	–	**360**	**360**	**360**	**360**	**360**	–	–	–	–	1FG1204- . . ■ ■ **2** - ■ . **J1** -Z
Max. output speed n_{2max} = **45 rpm**, Transmission ratio i = **100.75**																						
360	**360**	**360**	**360**	**360**	**360**	–	–	–	–	–	–	–	–	–	–	–	–	–	–	–	–	1FG1204- . . ■ ■ **6** - ■ . **H1** -Z
–	–	–	–	–	**360**	**360**	**360**	**360**	**360**	**360**	**360**	**360**	**360**	**360**	–	–	–	–	–	–	–	1FG1204- . . ■ ■ **4** - ■ . **H1** -Z
–	–	–	–	**360**	–	**360**	**360**	**360**	**360**	**360**	**360**	**360**	**360**	**360**	**360**	**360**	**360**	–	–	–	–	1FG1204- . . ■ ■ **3** - ■ . **H1** -Z
–	–	–	–	**360**	–	–	**360**	–	**360**	**360**	**360**	–	**360**	**360**	**360**	**360**	**360**	–	–	–	–	1FG1204- . . ■ ■ **2** - ■ . **H1** -Z
Max. output speed n_{2max} = **50 rpm**, Transmission ratio i = **89.2**																						
360	350	**360**	**360**	**360**	**360**	–	–	–	–	–	–	–	–	–	–	–	–	–	–	–	–	1FG1204- . . ■ ■ **6** - ■ . **G1** -Z
–	–	–	–	–	**360**	**360**	**360**	**360**	**360**	**360**	**360**	**360**	**360**	**360**	–	–	–	–	–	–	–	1FG1204- . . ■ ■ **4** - ■ . **G1** -Z
–	–	–	–	**360**	–	**360**	**360**	**360**	**360**	**360**	**360**	**360**	**360**	**360**	**360**	**360**	**360**	**360**	**360**	**360**	**360**	1FG1204- . . ■ ■ **3** - ■ . **G1** -Z
–	–	–	–	**360**	–	–	**360**	–	**360**	**360**	**360**	–	**360**	**360**	**360**	**360**	**360**	**360**	**360**	**360**	**360**	1FG1204- . . ■ ■ **2** - ■ . **G1** -Z
Max. output speed n_{2max} = **61 rpm**, Transmission ratio i = **74.24**																						
305	290	**350**	345	**350**	**350**	–	–	–	–	–	–	–	–	–	–	–	–	–	–	–	–	1FG1204- . . ■ ■ **6** - ■ . **F1** -Z
–	–	–	–	–	**350**	**350**	**350**	**350**	**350**	**350**	**350**	**350**	**350**	**350**	–	–	–	–	–	–	–	1FG1204- . . ■ ■ **4** - ■ . **F1** -Z
–	–	–	–	**350**	–	**350**	**350**	**350**	**350**	**350**	**350**	**350**	**350**	**350**	**350**	**350**	**350**	**350**	**350**	**350**	**350**	1FG1204- . . ■ ■ **3** - ■ . **F1** -Z
–	–	–	–	**350**	–	–	**350**	–	**350**	**350**	**350**	–	**350**	**350**	**350**	**350**	**350**	**350**	**350**	**350**	**350**	1FG1204- . . ■ ■ **2** - ■ . **F1** -Z
Max. output speed n_{2max} = **64 rpm**, Transmission ratio i = **69.88**																						
285	275	**350**	325	**350**	**350**	–	–	–	–	–	–	–	–	–	–	–	–	–	–	–	–	1FG1204- . . ■ ■ **6** - ■ . **E1** -Z
–	–	–	–	–	**350**	**350**	**350**	**350**	**350**	**350**	**350**	**350**	**350**	**350**	–	–	–	–	–	–	–	1FG1204- . . ■ ■ **4** - ■ . **E1** -Z
–	–	–	–	**350**	–	**350**	**350**	**350**	**350**	**350**	**350**	**350**	**350**	**350**	**350**	**350**	**350**	**350**	**350**	**350**	**350**	1FG1204- . . ■ ■ **3** - ■ . **E1** -Z
–	–	–	–	**350**	–	–	**350**	–	**350**	**350**	**350**	–	**350**	**350**	**350**	**350**	**350**	**350**	**350**	**350**	**350**	1FG1204- . . ■ ■ **2** - ■ . **E1** -Z
Max. output speed n_{2max} = **72 rpm**, Transmission ratio i = **62.61**																						
260	245	**345**	295	**345**	**345**	–	–	–	–	–	–	–	–	–	–	–	–	–	–	–	–	1FG1204- . . ■ ■ **6** - ■ . **D1** -Z
–	–	–	–	–	**345**	**345**	**345**	**345**	**345**	**345**	**345**	**345**	**345**	**345**	–	–	–	–	–	–	–	1FG1204- . . ■ ■ **4** - ■ . **D1** -Z
–	–	–	–	**345**	–	**345**	**345**	**345**	**345**	**345**	**345**	**345**	**345**	**345**	**345**	**345**	**345**	**345**	**345**	**345**	**345**	1FG1204- . . ■ ■ **3** - ■ . **D1** -Z
–	–	–	–	**345**	–	–	**345**	–	**345**	**345**	**345**	–	**345**	**345**	**345**	**345**	**345**	**345**	**345**	**345**	**345**	1FG1204- . . ■ ■ **2** - ■ . **D1** -Z
Max. output speed n_{2max} = **84 rpm**, Transmission ratio i = **53.3**																						
220	210	320	250	**340**	**340**	–	–	–	–	–	–	–	–	–	–	–	–	–	–	–	–	1FG1204- . . ■ ■ **6** - ■ . **C1** -Z
–	–	–	–	–	**340**	**340**	**340**	**340**	**340**	**340**	**340**	**340**	**340**	**340**	–	–	–	–	–	–	–	1FG1204- . . ■ ■ **4** - ■ . **C1** -Z
–	–	–	–	**340**	–	**340**	**340**	**340**	**340**	**340**	**340**	**340**	**340**	**340**	**340**	**340**	**340**	**340**	**340**	**340**	**340**	1FG1204- . . ■ ■ **3** - ■ . **C1** -Z
–	–	–	–	**340**	–	–	**340**	–	**340**	**340**	**340**	–	**340**	**340**	**340**	**340**	**340**	**340**	**340**	**340**	**340**	1FG1204- . . ■ ■ **2** - ■ . **C1** -Z

Motor shaft height:

1	2	3	4	5	6	7	8	9	10	11	12	13	14	15	16	17	18	19	20	21	22	
36																						**C**
			48																			**D**
							63															**E**
												80										**F**
																	100					**G**

Motor length/motor version (**CT** = Compact, **HD** = High Dynamic)**:**

1	2	3	4	5	6	7	8	9	10	11	12	13	14	15	16	17	18	19	20	21	22		
			0/CT				**0/CT**					**0/CT**						**0/CT**					**0**	**2**
													1/CT						**1/CT**				**1**	**2**
								1/HD															**1**	**4**
2/CT				**2/CT**					**2/CT**														**2**	**2**
										3/CT				**3/CT**						**3/CT**			**3**	**2**
	3/HD				**3/HD**																		**3**	**4**
		4/CT													**4/CT**								**4**	**2**
						4/HD					**4/HD**												**4**	**4**
																				5/CT			**5**	**2**
																5/HD							**5**	**4**
																	6/HD						**6**	**4**

Selection of shaft design, encoder system, mounting type and special designs on page 3/37.

1FG1204- ■ ■ . . . - . ■ . . -Z

© Siemens 2019

Gearbox size 49, 3-stage – 1FG1204

For line voltage 380 ... 480 V 3 AC (DC link voltage 510 ... 720 V DC) **– gearbox type** *D49*

Geared motor torque at 1450 rpm
Note: All values in **bold** print are maximum gearbox values.
M_{2dyn}
Nm

Servo helical geared motors SIMOTICS S-1FG1
Article No.

Max. output speed n_{2max} = **98 rpm**, Transmission ratio i = **45.69**																						
–	–	–	–	–	–	–	–	–	–	–	–	–	–	–	–	–	–	–	–	–	–	1FG1204- . . ■ ■ 6 - ■ . B1 -Z
–	–	–	–	–	–	–	**340**	**340**	**340**	**340**	**340**	**340**	**340**	**340**	–	–	–	–	–	–	–	1FG1204- . . ■ ■ 4 - ■ . B1 -Z
–	–	–	–	–	–	–	**340**	**340**	**340**	**340**	**340**	**340**	**340**	**340**	**340**	**340**	**340**	**340**	**340**	**340**	**340**	1FG1204- . . ■ ■ 3 - ■ . B1 -Z
–	–	–	–	–	–	–	**340**	–	**340**	**340**	**340**	–	**340**	**340**	**340**	**340**	**340**	**340**	**340**	**340**	**340**	1FG1204- . . ■ ■ 2 - ■ . B1 -Z
Max. output speed n_{2max} = **114 rpm**, Transmission ratio i = **39.34**																						
–	–	–	–	–	–	–	–	–	–	–	–	–	–	–	–	–	–	–	–	–	–	1FG1204- . . ■ ■ 6 - ■ . A1 -Z
–	–	–	–	–	–	–	**340**	**340**	**340**	**340**	**340**	**340**	**340**	**340**	–	–	–	–	–	–	–	1FG1204- . . ■ ■ 4 - ■ . A1 -Z
–	–	–	–	–	–	–	**340**	**340**	**340**	**340**	**340**	**340**	**340**	**340**	**340**	**340**	**340**	**340**	**340**	**340**	**340**	1FG1204- . . ■ ■ 3 - ■ . A1 -Z
–	–	–	–	–	–	–	**340**	–	**340**	**340**	**340**	–	**340**	**340**	**340**	**340**	**340**	**340**	**340**	**340**	**340**	1FG1204- . . ■ ■ 2 - ■ . A1 -Z

Motor shaft height:																						
36																						**C**
			48																			**D**
							63															**E**
												80										**F**
																	100					**G**

Motor length/motor version (**CT** = Compact, **HD** = High Dynamic)**:**																						
			0/CT				**0/CT**					**0/CT**					**0/CT**						**0**		**2**
													1/CT					**1/CT**					**1**		**2**
								1/HD															**1**		**4**
2/CT				**2/CT**					**2/CT**														**2**		**2**
										3/CT				**3/CT**					**3/CT**				**3**		**2**
	3/HD				**3/HD**																		**3**		**4**
		4/CT														**4/CT**							**4**		**2**
						4/HD					**4/HD**													**4**		**4**
																				5/CT			**5**		**2**
																	5/HD						**5**		**4**
																		6/HD					**6**		**4**

Selection of shaft design, encoder system, mounting type and special designs on page 3/37.

1FG1204- ■ ■ . . . . - . ■ . . **-Z**

© Siemens 2019

Selection and ordering data (continued)

For line voltage 200 ... 240 V 1 AC (DC link voltage 270 ... 330 V DC) **– gearbox type** ***D49***

Max. output speed n_{2max} rpm	Transmission ratio i	Geared motor torque at 1450 rpm M_{2dyn} Nm					Servo helical geared motors SIMOTICS S-1FG1 Article No.
16	**280.89**	**360**	**360**	**360**	**360**	**360**	**1FG1204- . . ■ ■ 3 - ■ . S1 -Z**
18	**249.76**	**360**	**360**	**360**	**360**	**360**	**1FG1204- . . ■ ■ 3 - ■ . R1 -Z**
21	**219.3**	**360**	**360**	**360**	**360**	**360**	**1FG1204- . . ■ ■ 3 - ■ . Q1 -Z**
23	**199.36**	**360**	**360**	**360**	**360**	**360**	**1FG1204- . . ■ ■ 3 - ■ . P1 -Z**
26	**170.57**	**360**	**360**	**360**	**360**	**360**	**1FG1204- . . ■ ■ 3 - ■ . N1 -Z**
29	**155.06**	**360**	**360**	**360**	**360**	**360**	**1FG1204- . . ■ ■ 3 - ■ . M1 -Z**
33	**137.06**	**360**	**360**	**360**	**360**	**360**	**1FG1204- . . ■ ■ 3 - ■ . L1 -Z**
36	**124.6**	**360**	**360**	**360**	**360**	**360**	**1FG1204- . . ■ ■ 3 - ■ . K1 -Z**
41	**109.14**	**360**	**360**	**360**	**360**	**360**	**1FG1204- . . ■ ■ 3 - ■ . J1 -Z**
45	**100.75**	**360**	**360**	**360**	**360**	**360**	**1FG1204- . . ■ ■ 3 - ■ . H1 -Z**
50	**89.2**	**360**	350	**360**	**360**	**360**	**1FG1204- . . ■ ■ 3 - ■ . G1 -Z**
61	**74.24**	305	290	**350**	**350**	**350**	**1FG1204- . . ■ ■ 3 - ■ . F1 -Z**
64	**69.88**	285	275	**350**	**350**	**350**	**1FG1204- . . ■ ■ 3 - ■ . E1 -Z**
72	**62.61**	260	245	**345**	**345**	**345**	**1FG1204- . . ■ ■ 3 - ■ . D1 -Z**
84	**53.3**	220	210	320	**340**	**340**	**1FG1204- . . ■ ■ 3 - ■ . C1 -Z**

Motor shaft height:

	36					**C**
				48		**D**

Motor length/motor version (**CT** = Compact, **HD** = High Dynamic)**:**

	2/CT			**2/CT**			**2**	**1**
		3/HD			**3/HD**		**3**	**3**
			4/CT				**4**	**1**

Selection of shaft design, encoder system, mounting type and special designs on page 3/37.

1FG1204- ■ ■ . . . - . ■ . . -Z

© Siemens 2019

Gearbox size 59, 2-stage – 1FG1105

Technical specifications

Gearbox type *Z59*

Servo geared motor Type	i	R_{ex}	M_{2rated} Nm	M_{2max} Nm	$M_{2Em.Off}$ Nm	n_{2max} rpm	n_{1max} rpm	φ [1] '	F_{R2} N	F_{R2max} N	c_T Nm/ '	J_G 10^{-4} kgm^2
1FG1105-.....-..A2	56.99	4559/80	450	460	765	79	4500	6.50	7660	7650	24.5	0.18
1FG1105-.....-..X1	51.81	4559/88	450	460	765	87	4500	6.50	7660	7650	24.6	0.21
1FG1105-.....-..W1	44.06	705/16	450	460	765	102	4500	6.58	7330	7290	24.5	0.26
1FG1105-.....-..V1	40.06	3525/88	450	460	765	112	4500	6.58	7040	7000	24.5	0.32
1FG1105-.....-..U1	35.74	3431/96	450	460	765	126	4500	6.63	6710	6560	24.5	0.37
1FG1105-.....-..T1	32.05	705/22	450	460	765	140	4500	6.66	6210	6030	24.5	0.44
1FG1105-.....-..S1	28.89	2773/96	450	460	765	156	4500	6.70	5720	5550	24.5	0.52
1FG1105-.....-..R1	26.66	2773/104	450	460	765	169	4500	6.70	5360	5180	24.5	0.62
1FG1105-.....-..Q1	24.34	1363/56	450	460	765	185	4500	6.74	4960	5650	24.5	0.72
1FG1105-.....-..P1	20.2	2585/128	450	460	765	223	4500	6.87	5240	5200	24.5	0.91
1FG1105-.....-..N1	19.01	2585/136	450	460	765	237	4500	6.87	5100	5060	24.5	1
1FG1105-.....-..M1	17.95	2585/144	450	460	765	251	4500	6.86	4970	4930	24.5	1.2
1FG1105-.....-..L1	15.28	611/40	450	460	765	295	4500	7.01	4620	4580	24.5	1.5
1FG1105-.....-..K1	13.09	2303/176	450	460	765	344	4500	7.16	4300	4260	24.5	1.9
1FG1105-.....-..J1	11.51	2209/192	450	460	765	391	4500	7.28	4040	4000	24.5	2.3
1FG1105-.....-..H1	9.71	893/92	450	460	765	463	4500	7.45	3720	3680	24.4	2.9
1FG1105-.....-..G1	8.46	423/50	450	460	765	532	4500	8.05	3470	3430	24.4	3.9
1FG1105-.....-..F1	8.07	121/15	410	410	680	558	4500	10.64	3520	3520	16.8	1.4
1FG1105-.....-..E1	6.86	858/125	410	410	680	656	4500	10.97	3250	3250	16.7	1.8
1FG1105-.....-..D1	5.88	147/25	410	410	680	765	4500	11.33	3020	3020	16.7	2.3
1FG1105-.....-..C1	5.17	517/100	410	410	680	870	4500	11.60	2830	2830	16.7	2.8
1FG1105-.....-..B1	4.36	2508/575	405	405	680	1032	4500	12.00	2560	2560	16.6	3.6
1FG1105-.....-..A1	3.8	2376/625	405	405	680	1184	4500	13.36	2370	2370	16.5	4.9

Selection and ordering data

Shaft design, encoder system, mounting type and special designs

Gearbox type *Z59*

			Servo helical geared motors SIMOTICS S-1FG1 Article No. 1FG1105- ■■....-.■... -Z
Shaft design:	Solid shaft with feather keyway	– Design 1	**1**
		– Design 2	**2**
		– Design 3	**3**
Order codes and Descriptions see chapter "Options"	Special shaft design		**9**
Encoder system for motors with DRIVE-CLiQ interface:	AS20DQI encoder		**Q**
	AM20DQI encoder		**R**
	R14DQ resolver		**P**
	R15DQ resolver		**U**
Order codes and Descriptions see chapter "Options"	Special version encoder system		**Z**
Mounting type:	Foot-mounted design		**A**
	Foot/flange-mounted design		**B**
	Flange-mounted design		**F**
	Housing flange design		**H**
Special designs (Options): Order codes and Descriptions see chapter "Options" The following order codes must be added to each article number: • Oil type – order codes **K06** or **K11** • Mounting position – order codes **D01** ... **D06**			**-Z**

Selection of 2-stages servo helical geared motors with gearbox size 59 from next page. **1FG1105- ..■■■-■.■■-Z**

[1] Data are for option reduced-backlash version – order code **G99** required.

© Siemens 2019

Selection and ordering data (continued)

For line voltage 380 ... 480 V 3 AC (DC link voltage 510 ... 720 V DC) **– gearbox type** ***Z59***

Geared motor torque at 1450 rpm
Note: All values in **bold** print are maximum gearbox values.
M_{2dyn}
Nm

Servo helical geared motors SIMOTICS S-1FG1	Article No.

Max. output speed n_{2max} = **79 rpm**, Transmission ratio i = **56.99**																						
235	225	340	270	**460**	**460**	–	–	–	–	–	–	–	–	–	–	–	–	–	–	–	–	1FG1105- . . ■ ■ **6** - ■ . **A2** -Z
–	–	–	–	–	**460**	**460**	**460**	**460**	**460**	**460**	**460**	–	–	–	–	–	–	–	–	–	–	1FG1105- . . ■ ■ **4** - ■ . **A2** -Z
–	–	–	–	**460**	–	**460**	**460**	**460**	**460**	**460**	**460**	–	–	–	–	–	–	–	–	–	–	1FG1105- . . ■ ■ **3** - ■ . **A2** -Z
–	–	–	–	**460**	–	–	**460**	–	**460**	**460**	**460**	–	–	–	–	–	–	–	–	–	–	1FG1105- . . ■ ■ **2** - ■ . **A2** -Z
Max. output speed n_{2max} = **87 rpm**, Transmission ratio i = **51.81**																						
215	205	315	245	**460**	**460**	–	–	–	–	–	–	–	–	–	–	–	–	–	–	–	–	1FG1105- . . ■ ■ **6** - ■ . **X1** -Z
–	–	–	–	–	**460**	**460**	**460**	**460**	**460**	**460**	**460**	–	–	–	–	–	–	–	–	–	–	1FG1105- . . ■ ■ **4** - ■ . **X1** -Z
–	–	–	–	**460**	–	**460**	**460**	**460**	**460**	**460**	**460**	–	–	–	–	–	–	–	–	–	–	1FG1105- . . ■ ■ **3** - ■ . **X1** -Z
–	–	–	–	**460**	–	–	**460**	–	**460**	**460**	**460**	–	–	–	–	–	–	–	–	–	–	1FG1105- . . ■ ■ **2** - ■ . **X1** -Z
Max. output speed n_{2max} = **102 rpm**, Transmission ratio i = **44.06**																						
185	177	265	210	430	410	–	–	–	–	–	–	–	–	–	–	–	–	–	–	–	–	1FG1105- . . ■ ■ **6** - ■ . **W1** -Z
–	–	–	–	–	410	460	**460**	**460**	**460**	**460**	**460**	–	–	–	–	–	–	–	–	–	–	1FG1105- . . ■ ■ **4** - ■ . **W1** -Z
–	–	–	–	430	–	460	**460**	**460**	**460**	**460**	**460**	–	–	–	–	–	–	–	–	–	–	1FG1105- . . ■ ■ **3** - ■ . **W1** -Z
–	–	–	–	430	–	–	**460**	–	**460**	**460**	**460**	–	–	–	–	–	–	–	–	–	–	1FG1105- . . ■ ■ **2** - ■ . **W1** -Z
Max. output speed n_{2max} = **112 rpm**, Transmission ratio i = **40.06**																						
169	162	245	192	395	375	–	–	–	–	–	–	–	–	–	–	–	–	–	–	–	–	1FG1105- . . ■ ■ **6** - ■ . **V1** -Z
–	–	–	–	–	375	425	**460**	**460**	**460**	**460**	**460**	–	–	–	–	–	–	–	–	–	–	1FG1105- . . ■ ■ **4** - ■ . **V1** -Z
–	–	–	–	395	–	425	**460**	**460**	**460**	**460**	**460**	–	–	–	–	–	–	–	–	–	–	1FG1105- . . ■ ■ **3** - ■ . **V1** -Z
–	–	–	–	395	–	–	**460**	–	**460**	**460**	**460**	–	–	–	–	–	–	–	–	–	–	1FG1105- . . ■ ■ **2** - ■ . **V1** -Z
Max. output speed n_{2max} = **126 rpm**, Transmission ratio i = **35.74**																						
151	144	215	171	350	335	–	–	–	–	–	–	–	–	–	–	–	–	–	–	–	–	1FG1105- . . ■ ■ **6** - ■ . **U1** -Z
–	–	–	–	–	335	375	**460**	**460**	**460**	**460**	**460**	**460**	**460**	**460**	–	–	–	–	–	–	–	1FG1105- . . ■ ■ **4** - ■ . **U1** -Z
–	–	–	–	350	–	375	**460**	**460**	**460**	**460**	**460**	**460**	**460**	**460**	**460**	**460**	**460**	–	–	–	–	1FG1105- . . ■ ■ **3** - ■ . **U1** -Z
–	–	–	–	350	–	–	**460**	–	**460**	**460**	**460**	–	**460**	**460**	**460**	**460**	**460**	–	–	–	–	1FG1105- . . ■ ■ **2** - ■ . **U1** -Z
Max. output speed n_{2max} = **140 rpm**, Transmission ratio i = **32.05**																						
136	130	196	154	315	300	–	–	–	–	–	–	–	–	–	–	–	–	–	–	–	–	1FG1105- . . ■ ■ **6** - ■ . **T1** -Z
–	–	–	–	–	300	340	**460**	**460**	**460**	**460**	**460**	**460**	**460**	**460**	–	–	–	–	–	–	–	1FG1105- . . ■ ■ **4** - ■ . **T1** -Z
–	–	–	–	315	–	340	**460**	**460**	**460**	**460**	**460**	**460**	**460**	**460**	**460**	**460**	**460**	–	–	–	–	1FG1105- . . ■ ■ **3** - ■ . **T1** -Z
–	–	–	–	315	–	–	**460**	–	**460**	**460**	**460**	–	**460**	**460**	**460**	**460**	**460**	–	–	–	–	1FG1105- . . ■ ■ **2** - ■ . **T1** -Z
Max. output speed n_{2max} = **156 rpm**, Transmission ratio i = **28.89**																						
122	117	177	139	285	270	–	–	–	–	–	–	–	–	–	–	–	–	–	–	–	–	1FG1105- . . ■ ■ **6** - ■ . **S1** -Z
–	–	–	–	–	270	305	**460**	**460**	**460**	**460**	**460**	**460**	**460**	**460**	–	–	–	–	–	–	–	1FG1105- . . ■ ■ **4** - ■ . **S1** -Z
–	–	–	–	285	–	305	**460**	**460**	**460**	**460**	**460**	**460**	**460**	**460**	**460**	**460**	**460**	–	–	–	–	1FG1105- . . ■ ■ **3** - ■ . **S1** -Z
–	–	–	–	285	–	–	**460**	–	**460**	**460**	**460**	–	**460**	**460**	**460**	**460**	**460**	–	–	–	–	1FG1105- . . ■ ■ **2** - ■ . **S1** -Z

Motor shaft height:

36																					**C**	
			48																		**D**	
							63														**E**	
												80									**F**	
																		100			**G**	

Motor length/motor version (**CT** = Compact, **HD** = High Dynamic)**:**

			0/CT				**0/CT**					**0/CT**						**0/CT**				**0**	**2**
													1/CT						**1/CT**			**1**	**2**
								1/HD														**1**	**4**
2/CT				**2/CT**					**2/CT**													**2**	**2**
										3/CT				**3/CT**					**3/CT**			**3**	**2**
	3/HD				**3/HD**																	**3**	**4**
		4/CT														**4/CT**						**4**	**2**
						4/HD					**4/HD**											**4**	**4**
																				5/CT		**5**	**2**
																5/HD						**5**	**4**
																	6/HD					**6**	**4**

Selection of shaft design, encoder system, mounting type and special designs on page 3/42.

1FG1105- ■ ■ . . . . - . ■ . . -Z

© Siemens 2019

Gearbox size 59, 2-stage – 1FG1105

For line voltage 380 ... 480 V 3 AC (DC link voltage 510 ... 720 V DC) **– gearbox type** ***Z59***

Geared motor torque at 1450 rpm
Note: All values in **bold** print are maximum gearbox values.

M_{2dyn} Nm

1	2	3	4	5	6	7	8	9	10	11	12	13	14	15	16	17	18	19	20	Servo helical geared motors SIMOTICS S-1FG1 Article No.
Max. output speed n_{2max} = 169 rpm, Transmission ratio i = 26.66																				
113	108	164	128	265	250	–	–	–	–	–	–	–	–	–	–	–	–	–	–	1FG1105- . . ■ ■ 6 - ■ . R1 -Z
–	–	–	–	–	250	280	450	435	**460**	**460**	**460**	**460**	**460**	**460**	–	–	–	–	–	1FG1105- . . ■ ■ 4 - ■ . R1 -Z
–	–	–	–	265	–	280	450	435	**460**	**460**	**460**	**460**	**460**	**460**	**460**	**460**	**460**	–	–	1FG1105- . . ■ ■ 3 - ■ . R1 -Z
–	–	–	–	265	–	–	450	–	**460**	**460**	**460**	–	**460**	**460**	**460**	**460**	**460**	–	–	1FG1105- . . ■ ■ 2 - ■ . R1 -Z
Max. output speed n_{2max} = 185 rpm, Transmission ratio i = 24.34																				
103	99	149	117	240	230	–	–	–	–	–	–	–	–	–	–	–	–	–	–	1FG1105- . . ■ ■ 6 - ■ . Q1 -Z
–	–	–	–	–	230	255	410	395	**460**	**460**	**460**	**460**	**460**	**460**	–	–	–	–	–	1FG1105- . . ■ ■ 4 - ■ . Q1 -Z
–	–	–	–	240	–	255	410	395	**460**	**460**	**460**	**460**	**460**	**460**	**460**	**460**	**460**	**460**	**460**	1FG1105- . . ■ ■ 3 - ■ . Q1 -Z
–	–	–	–	240	–	–	410	–	**460**	**460**	**460**	–	**460**	**460**	**460**	**460**	**460**	**460**	**460**	1FG1105- . . ■ ■ 2 - ■ . Q1 -Z
Max. output speed n_{2max} = 223 rpm, Transmission ratio i = 20.2																				
86	82	124	97	200	191	–	–	–	–	–	–	–	–	–	–	–	–	–	–	1FG1105- . . ■ ■ 6 - ■ . P1 -Z
–	–	–	–	–	191	215	340	330	**460**	**460**	**460**	**460**	**460**	**460**	–	–	–	–	–	1FG1105- . . ■ ■ 4 - ■ . P1 -Z
–	–	–	–	200	–	215	340	330	**460**	**460**	**460**	**460**	**460**	**460**	**460**	**460**	**460**	**460**	**460**	1FG1105- . . ■ ■ 3 - ■ . P1 -Z
–	–	–	–	200	–	–	340	–	**460**	**460**	**460**	–	**460**	**460**	**460**	**460**	**460**	**460**	**460**	1FG1105- . . ■ ■ 2 - ■ . P1 -Z
Max. output speed n_{2max} = 237 rpm, Transmission ratio i = 19.01																				
81	77	117	92	189	180	–	–	–	–	–	–	–	–	–	–	–	–	–	–	1FG1105- . . ■ ■ 6 - ■ . N1 -Z
–	–	–	–	–	180	200	325	310	**460**	**460**	**460**	450	**460**	**460**	–	–	–	–	–	1FG1105- . . ■ ■ 4 - ■ . N1 -Z
–	–	–	–	189	–	200	325	310	**460**	**460**	**460**	450	**460**	**460**	**460**	**460**	**460**	**460**	**460**	1FG1105- . . ■ ■ 3 - ■ . N1 -Z
–	–	–	–	189	–	–	325	–	**460**	**460**	**460**	–	**460**	**460**	**460**	**460**	**460**	**460**	**460**	1FG1105- . . ■ ■ 2 - ■ . N1 -Z
Max. output speed n_{2max} = 251 rpm, Transmission ratio i = 17.95																				
76	73	110	86	179	170	–	–	–	–	–	–	–	–	–	–	–	–	–	–	1FG1105- . . ■ ■ 6 - ■ . M1 -Z
–	–	–	–	–	170	192	305	295	440	**460**	**460**	425	**460**	**460**	–	–	–	–	–	1FG1105- . . ■ ■ 4 - ■ . M1 -Z
–	–	–	–	179	–	192	305	295	440	**460**	**460**	425	**460**	**460**	**460**	**460**	**460**	**460**	**460**	1FG1105- . . ■ ■ 3 - ■ . M1 -Z
–	–	–	–	179	–	–	305	–	440	**460**	**460**	–	**460**	**460**	**460**	**460**	**460**	**460**	**460**	1FG1105- . . ■ ■ 2 - ■ . M1 -Z
Max. output speed n_{2max} = 295 rpm, Transmission ratio i = 15.28																				
65	62	94	74	152	145	–	–	–	–	–	–	–	–	–	–	–	–	–	–	1FG1105- . . ■ ■ 6 - ■ . L1 -Z
–	–	–	–	–	145	164	260	250	375	**460**	**460**	360	**460**	**460**	–	–	–	–	–	1FG1105- . . ■ ■ 4 - ■ . L1 -Z
–	–	–	–	152	–	164	260	250	375	**460**	**460**	360	**460**	**460**	**460**	**460**	**460**	**460**	**460**	1FG1105- . . ■ ■ 3 - ■ . L1 -Z
–	–	–	–	152	–	–	260	–	375	**460**	**460**	–	**460**	**460**	**460**	**460**	**460**	**460**	**460**	1FG1105- . . ■ ■ 2 - ■ . L1 -Z
Max. output speed n_{2max} = 344 rpm, Transmission ratio i = 13.09																				
–	–	–	–	–	–	–	–	–	–	–	–	–	–	–	–	–	–	–	–	1FG1105- . . ■ ■ 6 - ■ . K1 -Z
–	–	–	–	–	–	–	225	215	325	435	400	310	460	**460**	–	–	–	–	–	1FG1105- . . ■ ■ 4 - ■ . K1 -Z
–	–	–	–	–	–	–	225	215	325	435	400	310	460	**460**	**460**	**460**	**460**	**460**	**460**	1FG1105- . . ■ ■ 3 - ■ . K1 -Z
–	–	–	–	–	–	–	225	–	325	435	400	–	460	**460**	**460**	**460**	**460**	**460**	**460**	1FG1105- . . ■ ■ 2 - ■ . K1 -Z
Max. output speed n_{2max} = 391 rpm, Transmission ratio i = 11.51																				
–	–	–	–	–	–	–	–	–	–	–	–	–	–	–	–	–	–	–	–	1FG1105- . . ■ ■ 6 - ■ . J1 -Z
–	–	–	–	–	–	–	198	190	285	385	350	275	405	**460**	–	–	–	–	–	1FG1105- . . ■ ■ 4 - ■ . J1 -Z
–	–	–	–	–	–	–	198	190	285	385	350	275	405	**460**	**460**	**460**	**460**	**460**	**460**	1FG1105- . . ■ ■ 3 - ■ . J1 -Z
–	–	–	–	–	–	–	198	–	285	385	350	–	405	**460**	**460**	**460**	**460**	**460**	**460**	1FG1105- . . ■ ■ 2 - ■ . J1 -Z

Motor shaft height:

1	2	3	4	5	6	7	8	9	10	11	12	13	14	15	16	17	18	19	20	
36																				C
			48																	D
							63													E
												80								F
																	100			G

Motor length/motor version (**CT** = Compact, **HD** = High Dynamic)**:**

1	2	3	4	5	6	7	8	9	10	11	12	13	14	15	16	17	18	19	20		
			0/CT				**0/CT**					**0/CT**						**0/CT**			0	2
													1/CT						**1/CT**		1	2
								1/HD													1	4
2/CT				**2/CT**					**2/CT**												2	2
										3/CT				**3/CT**				**3/CT**			3	2
	3/HD				**3/HD**																3	4
		4/CT													**4/CT**						4	2
						4/HD					**4/HD**										4	4
																			5/CT		5	2
																5/HD					5	4
																	6/HD				6	4

Selection of shaft design, encoder system, mounting type and special designs on page 3/42.

1FG1105- ■ ■ . . . - . ■ . . -Z

© Siemens 2019

For line voltage 380 ... 480 V 3 AC (DC link voltage 510 ... 720 V DC) **– gearbox type** ***Z59***

Geared motor torque at 1450 rpm
Note: All values in **bold** print are maximum gearbox values.
M_{2dyn}
Nm

																						Article No.
Max. output speed n_{2max} = **463 rpm**, Transmission ratio i = **9.71**																						
–	–	–	–	–	–	–	–	–	–	–	–	–	–	–	–	–	–	–	–	–	–	1FG1105- . . ■ ■ 6 - ■ . H1 -Z
–	–	–	–	–	–	–	167	160	240	325	295	230	340	**460**	–	–	–	–	–	–	–	1FG1105- . . ■ ■ 4 - ■ . H1 -Z
–	–	–	–	–	–	–	167	160	240	325	295	230	340	**460**	**460**	**460**	**460**	**460**	**460**	**460**	**460**	1FG1105- . . ■ ■ 3 - ■ . H1 -Z
–	–	–	–	–	–	–	167	–	240	325	295	–	340	**460**	**460**	**460**	**460**	**460**	**460**	**460**	**460**	1FG1105- . . ■ ■ 2 - ■ . H1 -Z
Max. output speed n_{2max} = **532 rpm**, Transmission ratio i = **8.46**																						
–	–	–	–	–	–	–	–	–	–	–	–	–	–	–	–	–	–	–	–	–	–	1FG1105- . . ■ ■ 6 - ■ . G1 -Z
–	–	–	–	–	–	–	146	140	210	280	255	200	300	405	–	–	–	–	–	–	–	1FG1105- . . ■ ■ 4 - ■ . G1 -Z
–	–	–	–	–	–	–	146	140	210	280	255	200	300	405	**460**	**460**	**460**	445	**460**	**460**	**460**	1FG1105- . . ■ ■ 3 - ■ . G1 -Z
–	–	–	–	–	–	–	146	–	210	280	255	–	300	405	**460**	**460**	**460**	445	**460**	**460**	**460**	1FG1105- . . ■ ■ 2 - ■ . G1 -Z
Max. output speed n_{2max} = **558 rpm**, Transmission ratio i = **8.07**																						
34	33	50	39	81	77	–	–	–	–	–	–	–	–	–	–	–	–	–	–	–	–	1FG1105- . . ■ ■ 6 - ■ . F1 -Z
–	–	–	–	–	77	87	139	134	200	270	245	193	285	385	–	–	–	–	–	–	–	1FG1105- . . ■ ■ 4 - ■ . F1 -Z
–	–	–	–	81	–	87	139	134	200	270	245	193	285	385	**410**	**410**	**410**	**410**	**410**	**410**	**410**	1FG1105- . . ■ ■ 3 - ■ . F1 -Z
–	–	–	–	81	–	–	139	–	200	270	245	–	285	385	**410**	**410**	**410**	**410**	**410**	**410**	**410**	1FG1105- . . ■ ■ 2 - ■ . F1 -Z
Max. output speed n_{2max} = **656 rpm**, Transmission ratio i = **6.86**																						
29	28	42	33	69	66	–	–	–	–	–	–	–	–	–	–	–	–	–	–	–	–	1FG1105- . . ■ ■ 6 - ■ . E1 -Z
–	–	–	–	–	66	74	118	114	171	230	210	165	240	330	–	–	–	–	–	–	–	1FG1105- . . ■ ■ 4 - ■ . E1 -Z
–	–	–	–	69	–	74	118	114	171	230	210	165	240	330	400	**410**	**410**	360	**410**	**410**	**410**	1FG1105- . . ■ ■ 3 - ■ . E1 -Z
–	–	–	–	69	–	–	118	–	171	230	210	–	240	330	400	**410**	**410**	360	**410**	**410**	**410**	1FG1105- . . ■ ■ 2 - ■ . E1 -Z
Max. output speed n_{2max} = **765 rpm**, Transmission ratio i = **5.88**																						
–	–	–	–	–	–	–	–	–	–	–	–	–	–	–	–	–	–	–	–	–	–	1FG1105- . . ■ ■ 6 - ■ . D1 -Z
–	–	–	–	–	–	–	102	98	147	199	181	142	210	280	–	–	–	–	–	–	–	1FG1105- . . ■ ■ 4 - ■ . D1 -Z
–	–	–	–	–	–	–	102	98	147	199	181	142	210	280	345	365	**410**	310	**410**	**410**	**410**	1FG1105- . . ■ ■ 3 - ■ . D1 -Z
–	–	–	–	–	–	–	102	–	147	199	181	–	210	280	345	365	**410**	310	**410**	**410**	**410**	1FG1105- . . ■ ■ 2 - ■ . D1 -Z
Max. output speed n_{2max} = **870 rpm**, Transmission ratio i = **5.17**																						
–	–	–	–	–	–	–	–	–	–	–	–	–	–	–	–	–	–	–	–	–	–	1FG1105- . . ■ ■ 6 - ■ . C1 -Z
–	–	–	–	–	–	–	90	86	130	175	160	125	185	250	–	–	–	–	–	–	–	1FG1105- . . ■ ■ 4 - ■ . C1 -Z
–	–	–	–	–	–	–	90	86	130	175	160	125	185	250	305	325	**410**	275	400	**410**	**410**	1FG1105- . . ■ ■ 3 - ■ . C1 -Z
–	–	–	–	–	–	–	90	–	130	175	160	–	185	250	305	325	**410**	275	400	**410**	**410**	1FG1105- . . ■ ■ 2 - ■ . C1 -Z
Max. output speed n_{2max} = **1032 rpm**, Transmission ratio i = **4.36**																						
–	–	–	–	–	–	–	–	–	–	–	–	–	–	–	–	–	–	–	–	–	–	1FG1105- . . ■ ■ 6 - ■ . B1 -Z
–	–	–	–	–	–	–	75	73	109	147	135	105	156	210	–	–	–	–	–	–	–	1FG1105- . . ■ ■ 4 - ■ . B1 -Z
–	–	–	–	–	–	–	75	73	109	147	135	105	156	210	255	270	395	230	335	**405**	**405**	1FG1105- . . ■ ■ 3 - ■ . B1 -Z
–	–	–	–	–	–	–	75	–	109	147	135	–	156	210	255	270	395	230	335	**405**	**405**	1FG1105- . . ■ ■ 2 - ■ . B1 -Z
Max. output speed n_{2max} = **1184 rpm**, Transmission ratio i = **3.8**																						
–	–	–	–	–	–	–	–	–	–	–	–	–	–	–	–	–	–	–	–	–	–	1FG1105- . . ■ ■ 6 - ■ . A1 -Z
–	–	–	–	–	–	–	66	63	95	128	117	92	136	184	–	–	–	–	–	–	–	1FG1105- . . ■ ■ 4 - ■ . A1 -Z
–	–	–	–	–	–	–	66	63	95	128	117	92	136	184	220	235	345	200	290	395	**405**	1FG1105- . . ■ ■ 3 - ■ . A1 -Z
–	–	–	–	–	–	–	66	–	95	128	117	–	136	184	220	235	345	200	290	395	**405**	1FG1105- . . ■ ■ 2 - ■ . A1 -Z

Motor shaft height:

36																							**C**
			48																				**D**
							63																**E**
												80											**F**
																	100						**G**

Motor length/motor version (**CT** = Compact, **HD** = High Dynamic)**:**

			0/CT				**0/CT**					**0/CT**						**0/CT**					**0**		**2**
													1/CT						**1/CT**				**1**		**2**
								1/HD															**1**		**4**
2/CT				**2/CT**					**2/CT**														**2**		**2**
										3/CT					**3/CT**					**3/CT**			**3**		**2**
	3/HD				**3/HD**																		**3**		**4**
		4/CT														**4/CT**							**4**		**2**
						4/HD					**4/HD**													**4**		**4**
																				5/CT			**5**		**2**
															5/HD								**5**		**4**
																6/HD							**6**		**4**

Selection of shaft design, encoder system, mounting type and special designs on page 3/42.

1FG1105- ■ ■ . . . - . ■ . . **-Z**

© Siemens 2019

Gearbox size 59, 2-stage – 1FG1105

Selection and ordering data (continued)

For line voltage 200 ... 240 V 1 AC (DC link voltage 270 ... 330 V DC) **– gearbox type** ***Z59***

Max. output speed n_{2max} rpm	Transmission ratio i	Geared motor torque at 1450 rpm Note: All values in **bold** print are maximum gearbox values. M_{2dyn} Nm					**Servo helical geared motors SIMOTICS S-1FG1** Article No.
79	**56.99**	235	225	340	**460**	**460**	**1FG1105- . . ■ ■ 3 - ■ . A2 -Z**
87	**51.81**	215	205	315	**460**	**460**	**1FG1105- . . ■ ■ 3 - ■ . X1 -Z**
102	**44.06**	185	177	265	430	410	**1FG1105- . . ■ ■ 3 - ■ . W1 -Z**
112	**40.06**	169	162	245	395	375	**1FG1105- . . ■ ■ 3 - ■ . V1 -Z**
126	**35.74**	151	144	215	350	335	**1FG1105- . . ■ ■ 3 - ■ . U1 -Z**
140	**32.05**	136	130	196	315	300	**1FG1105- . . ■ ■ 3 - ■ . T1 -Z**
156	**28.89**	122	117	177	285	270	**1FG1105- . . ■ ■ 3 - ■ . S1 -Z**
169	**26.66**	113	108	164	265	250	**1FG1105- . . ■ ■ 3 - ■ . R1 -Z**
185	**24.34**	103	99	149	240	230	**1FG1105- . . ■ ■ 3 - ■ . Q1 -Z**
223	**20.2**	86	82	124	200	191	**1FG1105- . . ■ ■ 3 - ■ . P1 -Z**
237	**19.01**	81	77	117	189	180	**1FG1105- . . ■ ■ 3 - ■ . N1 -Z**
251	**17.95**	76	73	110	179	170	**1FG1105- . . ■ ■ 3 - ■ . M1 -Z**
295	**15.28**	65	62	94	152	145	**1FG1105- . . ■ ■ 3 - ■ . L1 -Z**
558	**8.07**	34	33	50	81	77	**1FG1105- . . ■ ■ 3 - ■ . F1 -Z**
656	**6.86**	29	28	42	69	66	**1FG1105- . . ■ ■ 3 - ■ . E1 -Z**
Motor shaft height:							
		36					**C**
					48		**D**
Motor length/motor version (**CT** = Compact, **HD** = High Dynamic)**:**							
		2/CT			**2/CT**		**2** **1**
			3/HD			**3/HD**	**3** **3**
				4/CT			**4** **1**

Selection of shaft design, encoder system, mounting type and special designs on page 3/42.

1FG1105- ■ ■ . . . - . ■ . . -Z

© Siemens 2019

Technical specifications

Gearbox type *D59*

Servo geared motor Type	i	R_{ex}	M_{2rated} Nm	M_{2max} Nm	$M_{2Em.Off}$ Nm	n_{2max} rpm	n_{1max} rpm	φ [1] '	F_{R2} N	F_{R2max} N	c_T Nm/ '	J_G 10^{-4} kgm^2
1FG1205-.....-..S1	307.02	66317/216	450	480	765	15	4500	6.78	7660	7560	25.3	0.057
1FG1205-.....-..R1	272.99	32759/120	450	480	765	16	4500	6.84	7660	7560	25.3	0.069
1FG1205-.....-..Q1	239.7	2397/10	450	480	765	19	4500	6.85	7660	7560	25.3	0.082
1FG1205-.....-..P1	217.91	2397/11	450	480	765	21	4500	6.85	7660	7560	25.3	0.1
1FG1205-.....-..N1	186.43	5593/30	450	480	765	24	4500	6.86	7660	7560	25.3	0.11
1FG1205-.....-..M1	169.48	5593/33	450	480	765	27	4500	6.86	7660	7560	25.3	0.14
1FG1205-.....-..L1	149.81	2397/16	450	480	765	30	4500	6.88	7660	7560	25.3	0.16
1FG1205-.....-..K1	136.19	11985/88	450	480	765	33	4500	6.88	7660	7560	25.3	0.22
1FG1205-.....-..J1	119.3	34357/288	450	480	765	38	4500	6.90	7660	7560	25.3	0.25
1FG1205-.....-..H1	110.12	34357/312	450	480	765	41	4500	6.90	7660	7560	25.3	0.3
1FG1205-.....-..G1	97.5	32759/336	450	480	765	46	4500	6.93	7660	7560	25.3	0.34
1FG1205-.....-..F1	81.15	10387/128	450	475	765	55	4500	6.96	7660	7620	25.3	0.44
1FG1205-.....-..E1	76.38	611/8	450	470	765	59	4500	6.96	7660	7630	25.3	0.51
1FG1205-.....-..D1	68.43	29563/432	450	470	765	66	4500	6.99	7660	7630	25.3	0.56
1FG1205-.....-..C1	58.26	5593/96	450	460	765	77	4500	7.02	7660	7650	25.3	0.71
1FG1205-.....-..B1	49.94	799/16	450	460	765	90	4500	7.06	7660	7650	25.3	0.9
1FG1205-.....-..A1	43	24769/576	450	460	765	105	4500	7.11	7250	7210	25.3	1.1

Selection and ordering data

Shaft design, encoder system, mounting type and special designs

Gearbox type *D59*

			Servo helical geared motors SIMOTICS S-1FG1 Article No.
			1FG1205- ■ ■ . . . - . ■ . . -Z
Shaft design:	Solid shaft with feather keyway	– Design 1	**1**
		– Design 2	**2**
		– Design 3	**3**
Order codes and Descriptions see chapter "Options"	Special shaft design		**9**
Encoder system for motors with DRIVE-CLiQ interface:	AS20DQI encoder		**Q**
	AM20DQI encoder		**R**
	R14DQ resolver		**P**
	R15DQ resolver		**U**
Order codes and Descriptions see chapter "Options"	Special version encoder system		**Z**
Mounting type:	Foot-mounted design		**A**
	Foot/flange-mounted design		**B**
	Flange-mounted design		**F**
	Housing flange design		**H**
Special designs (Options): Order codes and Descriptions see chapter "Options" The following order codes must be added to each article number: • Oil type – order codes **K06** or **K11** • Mounting position – order codes **D01** ... **D06**			**-Z**
Selection of 3-stages servo helical geared motors with gearbox size 59 from next page.			**1FG1205- . . ■ ■ ■ - ■ . ■ ■ -Z**

[1] Data are for option reduced-backlash version – order code **G99** required.

© Siemens 2019

Gearbox size 59, 3-stage – 1FG1205

3

Selection and ordering data (continued)

For line voltage 380 ... 480 V 3 AC (DC link voltage 510 ... 720 V DC) **– gearbox type** *D59*

Geared motor torque at 1450 rpm
Note: All values in **bold** print are maximum gearbox values.
M_{2dyn}
Nm

36	48	63	80	100	Servo helical geared motors SIMOTICS S-1FG1 Article No.
Max. output speed n_{2max} = 15 rpm, Transmission ratio i = 307.02					
480	–	–	–	–	1FG1205- . . ■ ■ 6 - ■ . S1 -Z
–	**480**	**480**	–	–	1FG1205- . . ■ ■ 4 - ■ . S1 -Z
–	**480**	–	**480**	–	1FG1205- . . ■ ■ 3 - ■ . S1 -Z
–	**480**	–	–	–	1FG1205- . . ■ ■ 2 - ■ . S1 -Z
Max. output speed n_{2max} = 16 rpm, Transmission ratio i = 272.99					
480	–	–	–	–	1FG1205- . . ■ ■ 6 - ■ . R1 -Z
–	**480**	**480**	**480**	–	1FG1205- . . ■ ■ 4 - ■ . R1 -Z
–	**480**	**480**	**480**	–	1FG1205- . . ■ ■ 3 - ■ . R1 -Z
–	**480**	–	**480**	–	1FG1205- . . ■ ■ 2 - ■ . R1 -Z
Max. output speed n_{2max} = 19 rpm, Transmission ratio i = 239.7					
480	–	–	–	–	1FG1205- . . ■ ■ 6 - ■ . Q1 -Z
–	**480**	**480**	**480**	–	1FG1205- . . ■ ■ 4 - ■ . Q1 -Z
–	**480**	**480**	**480**	–	1FG1205- . . ■ ■ 3 - ■ . Q1 -Z
–	**480**	–	**480**	–	1FG1205- . . ■ ■ 2 - ■ . Q1 -Z
Max. output speed n_{2max} = 21 rpm, Transmission ratio i = 217.91					
480	–	–	–	–	1FG1205- . . ■ ■ 6 - ■ . P1 -Z
–	**480**	**480**	**480**	–	1FG1205- . . ■ ■ 4 - ■ . P1 -Z
–	**480**	**480**	**480**	–	1FG1205- . . ■ ■ 3 - ■ . P1 -Z
–	**480**	–	**480**	–	1FG1205- . . ■ ■ 2 - ■ . P1 -Z
Max. output speed n_{2max} = 24 rpm, Transmission ratio i = 186.43					
480	–	–	–	–	1FG1205- . . ■ ■ 6 - ■ . N1 -Z
–	**480**	**480**	**480**	–	1FG1205- . . ■ ■ 4 - ■ . N1 -Z
–	**480**	**480**	**480**	–	1FG1205- . . ■ ■ 3 - ■ . N1 -Z
–	**480**	–	**480**	–	1FG1205- . . ■ ■ 2 - ■ . N1 -Z
Max. output speed n_{2max} = 27 rpm, Transmission ratio i = 169.48					
480	–	–	–	–	1FG1205- . . ■ ■ 6 - ■ . M1 -Z
–	**480**	**480**	**480**	–	1FG1205- . . ■ ■ 4 - ■ . M1 -Z
–	**480**	**480**	**480**	–	1FG1205- . . ■ ■ 3 - ■ . M1 -Z
–	**480**	–	**480**	–	1FG1205- . . ■ ■ 2 - ■ . M1 -Z
Max. output speed n_{2max} = 30 rpm, Transmission ratio i = 149.81					
480	–	–	–	–	1FG1205- . . ■ ■ 6 - ■ . L1 -Z
–	**480**	**480**	**480**	–	1FG1205- . . ■ ■ 4 - ■ . L1 -Z
–	**480**	**480**	**480**	–	1FG1205- . . ■ ■ 3 - ■ . L1 -Z
–	**480**	–	**480**	–	1FG1205- . . ■ ■ 2 - ■ . L1 -Z

Motor shaft height:						
36					**C**	
	48				**D**	
		63			**E**	
			80		**F**	
				100	**G**	
Motor length/motor version (**CT** = Compact, **HD** = High Dynamic)**:**						
	0/CT	**0/CT**	**0/CT**	**0/CT**	**0**	**2**
			1/CT	**1/CT**	**1**	**2**
		1/HD			**1**	**4**
2/CT	**2/CT**	**2/CT**			**2**	**2**
		3/CT	**3/CT**	**3/CT**	**3**	**2**
3/HD	**3/HD**				**3**	**4**
4/CT			**4/CT**		**4**	**2**
	4/HD	**4/HD**			**4**	**4**
				5/CT	**5**	**2**
			5/HD		**5**	**4**
			6/HD		**6**	**4**

Selection of shaft design, encoder system, mounting type and special designs on page 3/47.

1FG1205- ■ ■ . . . . - . ■ . . -Z

© Siemens 2019

Gearbox size 59, 3-stage – 1FG1205

For line voltage 380 ... 480 V 3 AC (DC link voltage 510 ... 720 V DC) **– gearbox type** *D59*

Geared motor torque at 1450 rpm
Note: All values in **bold** print are maximum gearbox values.
M_{2dyn}
Nm

Servo helical geared motors SIMOTICS S-1FG1
Article No.

Max. output speed n_{2max} = **33 rpm**, Transmission ratio i = **136.19**																						
480	**480**	**480**	**480**	**480**	**480**	–	–	–	–	–	–	–	–	–	–	–	–	–	–	–	–	1FG1205- . . ■ ■ 6 - ■ . K1 -Z
–	–	–	–	–	**480**	**480**	**480**	**480**	**480**	**480**	**480**	**480**	**480**	**480**	–	–	–	–	–	–	–	1FG1205- . . ■ ■ 4 - ■ . K1 -Z
–	–	–	–	**480**	–	**480**	**480**	**480**	**480**	**480**	**480**	**480**	**480**	**480**	**480**	**480**	**480**	–	–	–	–	1FG1205- . . ■ ■ 3 - ■ . K1 -Z
–	–	–	–	**480**	–	–	**480**	–	**480**	**480**	**480**	–	**480**	**480**	**480**	**480**	**480**	–	–	–	–	1FG1205- . . ■ ■ 2 - ■ . K1 -Z
Max. output speed n_{2max} = **38 rpm**, Transmission ratio i = **119.3**																						
480	465	**480**	**480**	**480**	**480**	–	–	–	–	–	–	–	–	–	–	–	–	–	–	–	–	1FG1205- . . ■ ■ 6 - ■ . J1 -Z
–	–	–	–	–	**480**	**480**	**480**	**480**	**480**	**480**	**480**	**480**	**480**	**480**	–	–	–	–	–	–	–	1FG1205- . . ■ ■ 4 - ■ . J1 -Z
–	–	–	–	**480**	–	**480**	**480**	**480**	**480**	**480**	**480**	**480**	**480**	**480**	**480**	**480**	**480**	–	–	–	–	1FG1205- . . ■ ■ 3 - ■ . J1 -Z
–	–	–	–	**480**	–	–	**480**	–	**480**	**480**	**480**	–	**480**	**480**	**480**	**480**	**480**	–	–	–	–	1FG1205- . . ■ ■ 2 - ■ . J1 -Z
Max. output speed n_{2max} = **41 rpm**, Transmission ratio i = **110.12**																						
450	430	**480**	**480**	**480**	**480**	–	–	–	–	–	–	–	–	–	–	–	–	–	–	–	–	1FG1205- . . ■ ■ 6 - ■ . H1 -Z
–	–	–	–	–	**480**	**480**	**480**	**480**	**480**	**480**	**480**	**480**	**480**	**480**	–	–	–	–	–	–	–	1FG1205- . . ■ ■ 4 - ■ . H1 -Z
–	–	–	–	**480**	–	**480**	**480**	**480**	**480**	**480**	**480**	**480**	**480**	**480**	**480**	**480**	**480**	–	–	–	–	1FG1205- . . ■ ■ 3 - ■ . H1 -Z
–	–	–	–	**480**	–	–	**480**	–	**480**	**480**	**480**	–	**480**	**480**	**480**	**480**	**480**	–	–	–	–	1FG1205- . . ■ ■ 2 - ■ . H1 -Z
Max. output speed n_{2max} = **46 rpm**, Transmission ratio i = **97.5**																						
400	380	**480**	450	**480**	**480**	–	–	–	–	–	–	–	–	–	–	–	–	–	–	–	–	1FG1205- . . ■ ■ 6 - ■ . G1 -Z
–	–	–	–	–	**480**	**480**	**480**	**480**	**480**	**480**	**480**	**480**	**480**	**480**	–	–	–	–	–	–	–	1FG1205- . . ■ ■ 4 - ■ . G1 -Z
–	–	–	–	**480**	–	**480**	**480**	**480**	**480**	**480**	**480**	**480**	**480**	**480**	**480**	**480**	**480**	**480**	**480**	**480**	**480**	1FG1205- . . ■ ■ 3 - ■ . G1 -Z
–	–	–	–	**480**	–	–	**480**	–	**480**	**480**	**480**	–	**480**	**480**	**480**	**480**	**480**	**480**	**480**	**480**	**480**	1FG1205- . . ■ ■ 2 - ■ . G1 -Z
Max. output speed n_{2max} = **55 rpm**, Transmission ratio i = **81.15**																						
330	315	**475**	375	**475**	**475**	–	–	–	–	–	–	–	–	–	–	–	–	–	–	–	–	1FG1205- . . ■ ■ 6 - ■ . F1 -Z
–	–	–	–	–	**475**	**475**	**475**	**475**	**475**	**475**	**475**	**475**	**475**	**475**	–	–	–	–	–	–	–	1FG1205- . . ■ ■ 4 - ■ . F1 -Z
–	–	–	–	**475**	–	**475**	**475**	**475**	**475**	**475**	**475**	**475**	**475**	**475**	**475**	**475**	**475**	**475**	**475**	**475**	**475**	1FG1205- . . ■ ■ 3 - ■ . F1 -Z
–	–	–	–	**475**	–	–	**475**	–	**475**	**475**	**475**	–	**475**	**475**	**475**	**475**	**475**	**475**	**475**	**475**	**475**	1FG1205- . . ■ ■ 2 - ■ . F1 -Z
Max. output speed n_{2max} = **59 rpm**, Transmission ratio i = **76.38**																						
315	300	455	355	**470**	**470**	–	–	–	–	–	–	–	–	–	–	–	–	–	–	–	–	1FG1205- . . ■ ■ 6 - ■ . E1 -Z
–	–	–	–	–	**470**	**470**	**470**	**470**	**470**	**470**	**470**	**470**	**470**	**470**	–	–	–	–	–	–	–	1FG1205- . . ■ ■ 4 - ■ . E1 -Z
–	–	–	–	**470**	–	**470**	**470**	**470**	**470**	**470**	**470**	**470**	**470**	**470**	**470**	**470**	**470**	**470**	**470**	**470**	**470**	1FG1205- . . ■ ■ 3 - ■ . E1 -Z
–	–	–	–	**470**	–	–	**470**	–	**470**	**470**	**470**	–	**470**	**470**	**470**	**470**	**470**	**470**	**470**	**470**	**470**	1FG1205- . . ■ ■ 2 - ■ . E1 -Z
Max. output speed n_{2max} = **66 rpm**, Transmission ratio i = **68.43**																						
280	270	410	320	**470**	**470**	–	–	–	–	–	–	–	–	–	–	–	–	–	–	–	–	1FG1205- . . ■ ■ 6 - ■ . D1 -Z
–	–	–	–	–	**470**	**470**	**470**	**470**	**470**	**470**	**470**	**470**	**470**	**470**	–	–	–	–	–	–	–	1FG1205- . . ■ ■ 4 - ■ . D1 -Z
–	–	–	–	**470**	–	**470**	**470**	**470**	**470**	**470**	**470**	**470**	**470**	**470**	**470**	**470**	**470**	**470**	**470**	**470**	**470**	1FG1205- . . ■ ■ 3 - ■ . D1 -Z
–	–	–	–	**470**	–	–	**470**	–	**470**	**470**	**470**	–	**470**	**470**	**470**	**470**	**470**	**470**	**470**	**470**	**470**	1FG1205- . . ■ ■ 2 - ■ . D1 -Z
Max. output speed n_{2max} = **77 rpm**, Transmission ratio i = **58.26**																						
240	230	345	270	**460**	**460**	–	–	–	–	–	–	–	–	–	–	–	–	–	–	–	–	1FG1205- . . ■ ■ 6 - ■ . C1 -Z
–	–	–	–	–	**460**	**460**	**460**	**460**	**460**	**460**	**460**	**460**	**460**	**460**	–	–	–	–	–	–	–	1FG1205- . . ■ ■ 4 - ■ . C1 -Z
–	–	–	–	**460**	–	**460**	**460**	**460**	**460**	**460**	**460**	**460**	**460**	**460**	**460**	**460**	**460**	**460**	**460**	**460**	**460**	1FG1205- . . ■ ■ 3 - ■ . C1 -Z
–	–	–	–	**460**	–	–	**460**	–	**460**	**460**	**460**	–	**460**	**460**	**460**	**460**	**460**	**460**	**460**	**460**	**460**	1FG1205- . . ■ ■ 2 - ■ . C1 -Z

Motor shaft height:

36																						**C**
			48																			**D**
							63															**E**
												80										**F**
																	100					**G**

Motor length/motor version (**CT** = Compact, **HD** = High Dynamic)**:**

			0/CT				**0/CT**					**0/CT**						**0/CT**					**0**	**2**
													1/CT						**1/CT**				**1**	**2**
								1/HD															**1**	**4**
2/CT				**2/CT**					**2/CT**														**2**	**2**
										3/CT				**3/CT**					**3/CT**				**3**	**2**
	3/HD				**3/HD**																		**3**	**4**
		4/CT														**4/CT**							**4**	**2**
						4/HD					**4/HD**													**4**	**4**
																				5/CT			**5**	**2**
															5/HD								**5**	**4**
																6/HD							**6**	**4**

Selection of shaft design, encoder system, mounting type and special designs on page 3/47.

1FG1205- ■ ■ . . . - . ■ . . -Z

© Siemens 2019

Gearbox size 59, 3-stage – 1FG1205

For line voltage 380 ... 480 V 3 AC (DC link voltage 510 ... 720 V DC) **– gearbox type** ***D59***

Geared motor torque at 1450 rpm
Note: All values in **bold** print are maximum gearbox values.
M_{2dyn}
Nm

Servo helical geared motors SIMOTICS S-1FG1
Article No.

Max. output speed n_{2max} = **90 rpm**, Transmission ratio i = **49.94**

–	–	–	–	–	–	–	–	–	–	–	–	–	–	–	–	–	–	–	–	–	1FG1205- . . ■ ■ 6 - ■ . B1 -Z
–	–	–	–	–	–	–	**460**	**460**	**460**	**460**	**460**	**460**	**460**	**460**	–	–	–	–	–	–	–	1FG1205- . . ■ ■ 4 - ■ . B1 -Z
–	–	–	–	–	–	–	**460**	**460**	**460**	**460**	**460**	**460**	**460**	**460**	**460**	**460**	**460**	**460**	**460**	**460**	**460**	1FG1205- . . ■ ■ 3 - ■ . B1 -Z
–	–	–	–	–	–	–	**460**	–	**460**	**460**	**460**	–	**460**	**460**	**460**	**460**	**460**	**460**	**460**	**460**	**460**	1FG1205- . . ■ ■ 2 - ■ . B1 -Z

Max. output speed n_{2max} = **105 rpm**, Transmission ratio i = **43**

–	–	–	–	–	–	–	–	–	–	–	–	–	–	–	–	–	–	–	–	–	1FG1205- . . ■ ■ 6 - ■ . A1 -Z
–	–	–	–	–	–	–	**460**	**460**	**460**	**460**	**460**	**460**	**460**	**460**	–	–	–	–	–	–	–	1FG1205- . . ■ ■ 4 - ■ . A1 -Z
–	–	–	–	–	–	–	**460**	**460**	**460**	**460**	**460**	**460**	**460**	**460**	**460**	**460**	**460**	**460**	**460**	**460**	**460**	1FG1205- . . ■ ■ 3 - ■ . A1 -Z
–	–	–	–	–	–	–	**460**	–	**460**	**460**	**460**	–	**460**	**460**	**460**	**460**	**460**	**460**	**460**	**460**	**460**	1FG1205- . . ■ ■ 2 - ■ . A1 -Z

Motor shaft height:

36																						**C**
			48																			**D**
							63															**E**
												80										**F**
																		100				**G**

Motor length/motor version (**CT** = Compact, **HD** = High Dynamic)**:**

			0/CT				**0/CT**					**0/CT**						**0/CT**					**0**	**2**
													1/CT						**1/CT**			**1**	**2**
								1/HD														**1**	**4**
2/CT				**2/CT**					**2/CT**													**2**	**2**
										3/CT				**3/CT**						**3/CT**		**3**	**2**
	3/HD				**3/HD**																	**3**	**4**
		4/CT														**4/CT**						**4**	**2**
						4/HD					**4/HD**											**4**	**4**
																				5/CT		**5**	**2**
																	5/HD					**5**	**4**
																		6/HD				**6**	**4**

Selection of shaft design, encoder system, mounting type and special designs on page 3/47.

1FG1205- ■ ■ . . . . - . ■ . . **-Z**

© Siemens 2019

Selection and ordering data (continued)

For line voltage 200 ... 240 V 1 AC (DC link voltage 270 ... 330 V DC) **– gearbox type** ***D59***

Max. output speed n_{2max} rpm	Transmission ratio i	Geared motor torque at 1450 rpm Note: All values in **bold** print are maximum gearbox values. M_{2dyn} Nm					**Servo helical geared motors SIMOTICS S-1FG1** Article No.
15	**307.02**	**480**	**480**	**480**	**480**	**480**	**1FG1205- . . ■ ■ 3 - ■ . S1 -Z**
16	**272.99**	**480**	**480**	**480**	**480**	**480**	**1FG1205- . . ■ ■ 3 - ■ . R1 -Z**
19	**239.7**	**480**	**480**	**480**	**480**	**480**	**1FG1205- . . ■ ■ 3 - ■ . Q1 -Z**
21	**217.91**	**480**	**480**	**480**	**480**	**480**	**1FG1205- . . ■ ■ 3 - ■ . P1 -Z**
24	**186.43**	**480**	**480**	**480**	**480**	**480**	**1FG1205- . . ■ ■ 3 - ■ . N1 -Z**
27	**169.48**	**480**	**480**	**480**	**480**	**480**	**1FG1205- . . ■ ■ 3 - ■ . M1 -Z**
30	**149.81**	**480**	**480**	**480**	**480**	**480**	**1FG1205- . . ■ ■ 3 - ■ . L1 -Z**
33	**136.19**	**480**	**480**	**480**	**480**	**480**	**1FG1205- . . ■ ■ 3 - ■ . K1 -Z**
38	**119.3**	**480**	465	**480**	**480**	**480**	**1FG1205- . . ■ ■ 3 - ■ . J1 -Z**
41	**110.12**	450	430	**480**	**480**	**480**	**1FG1205- . . ■ ■ 3 - ■ . H1 -Z**
46	**97.5**	400	380	**480**	**480**	**480**	**1FG1205- . . ■ ■ 3 - ■ . G1 -Z**
55	**81.15**	330	315	**475**	**475**	**475**	**1FG1205- . . ■ ■ 3 - ■ . F1 -Z**
59	**76.38**	315	300	455	**470**	**470**	**1FG1205- . . ■ ■ 3 - ■ . E1 -Z**
66	**68.43**	280	270	410	**470**	**470**	**1FG1205- . . ■ ■ 3 - ■ . D1 -Z**
77	**58.26**	240	230	345	**460**	**460**	**1FG1205- . . ■ ■ 3 - ■ . C1 -Z**

Motor shaft height:

	36					**C**
				48		**D**

Motor length/motor version (**CT** = Compact, **HD** = High Dynamic)**:**

2/CT			**2/CT**			**2**		**1**
	3/HD			**3/HD**		**3**		**3**
		4/CT				**4**		**1**

Selection of shaft design, encoder system, mounting type and special designs on page 3/47.

1FG1205- ■ ■ . . . - . ■ . . -Z

© Siemens 2019

Gearbox size 69, 2-stage – 1FG1106

Technical specifications

Gearbox type *Z69*

Servo geared motor Type	i	R_{ex}	M_{2rated} Nm	M_{2max} Nm	$M_{2Em.Off}$ Nm	n_{2max} rpm	n_{1max} rpm	φ [1] '	F_{R2} N	F_{R2max} N	c_T Nm/ '	J_G 10^{-4} kgm^2
1FG1106-.....-..A2	60.97	2134/35	600	600	995	74	4500	6.23	11000	11000	29.6	0.18
1FG1106-.....-..X1	55.43	388/7	600	635	1020	81	4500	6.23	11000	10900	29.6	0.22
1FG1106-.....-..W1	47.14	330/7	600	635	1020	95	4500	6.30	11000	10900	29.6	0.28
1FG1106-.....-..V1	42.86	300/7	600	635	1020	105	4500	6.30	11000	10900	29.6	0.34
1FG1106-.....-..U1	38.24	803/21	600	635	1020	118	4500	6.35	11000	10900	29.6	0.39
1FG1106-.....-..T1	34.29	240/7	600	635	1020	131	4500	6.38	11000	10500	29.6	0.47
1FG1106-.....-..S1	30.9	649/21	600	635	1020	146	4500	6.42	10500	9790	29.6	0.56
1FG1106-.....-..R1	28.53	2596/91	600	635	1020	158	4500	6.42	9910	9200	29.6	0.66
1FG1106-.....-..Q1	26.04	1276/49	600	635	1020	173	4500	6.45	9250	8540	29.6	0.77
1FG1106-.....-..P1	21.61	605/28	600	635	1020	208	4500	6.57	7960	7250	29.6	0.99
1FG1106-.....-..N1	20.34	2420/119	600	635	1020	221	4500	6.57	7550	10600	29.6	1.2
1FG1106-.....-..M1	19.21	1210/63	600	635	1020	234	4500	6.57	7180	10400	29.6	1.3
1FG1106-.....-..L1	16.34	572/35	600	635	1020	275	4500	6.70	9880	9770	29.6	1.6
1FG1106-.....-..K1	14	14/1	600	635	1020	318	4457	6.85	9290	9170	29.5	2
1FG1106-.....-..J1	12.31	517/42	600	620	1020	353	4350	6.96	8810	8750	29.5	2.5
1FG1106-.....-..H1	10.39	1672/161	600	600	1020	419	4350	7.12	8220	8220	29.5	3.2
1FG1106-.....-..G1	9.05	1584/175	590	591	1000	481	4350	7.67	7810	7810	29.4	4.3
1FG1106-.....-..F1	8.5	1760/207	445	515	715	529	4500	9.99	7940	7790	21.2	1.7
1FG1106-.....-..E1	7.23	832/115	445	490	720	622	4500	10.30	7440	7380	21.1	2.1
1FG1106-.....-..D1	6.2	1568/253	445	445	720	726	4500	10.65	7070	7070	21.1	2.7
1FG1106-.....-..C1	5.45	376/69	425	429	715	826	4500	10.91	6780	6780	21	3.4
1FG1106-.....-..B1	4.6	2432/529	445	480	715	978	4500	11.28	6180	6140	20.9	4.4
1FG1106-.....-..A1	4.01	2304/575	445	455	715	1113	4462	11.60	5880	5880	20.8	5.8

Selection and ordering data

Shaft design, encoder system, mounting type and special designs

Gearbox type *Z69*

			Servo helical geared motors SIMOTICS S-1FG1 Article No. **1FG1106-** ■■.....-.■..-Z
Shaft design:	Solid shaft with feather keyway	– Design 1	**1**
Order codes and Descriptions see chapter "Options"	Special shaft design		**9**
Encoder system for motors with DRIVE-CLiQ interface:	AS20DQI encoder		**Q**
	AM20DQI encoder		**R**
	R14DQ resolver		**P**
	R15DQ resolver		**U**
Order codes and Descriptions see chapter "Options"	Special version encoder system		**Z**
Mounting type:	Foot-mounted design		**A**
	Foot/flange-mounted design		**B**
	Flange-mounted design		**F**
	Housing flange design		**H**
Special designs (Options): Order codes and Descriptions see chapter "Options" The following order codes must be added to each article number: • Oil type – order codes **K06** or **K11** • Mounting position – order codes **D01** ... **D06**			**-Z**

Selection of 2-stages servo helical geared motors with gearbox size 69 from next page. **1FG1106-** ..■■■-■.■■-Z

[1] Data are for option reduced-backlash version – order code **G99** required.

© Siemens 2019

Selection and ordering data (continued)

For line voltage 380 ... 480 V 3 AC (DC link voltage 510 ... 720 V DC) **– gearbox type** ***Z69***

Geared motor torque at 1450 rpm
Note: All values in **bold** print are maximum gearbox values.
M_{2dyn}
Nm

Servo helical geared motors SIMOTICS S-1FG1	Article No.

Max. output speed n_{2max} = 74 rpm, Transmission ratio i = 60.97

250	240	365	285	590	565	–	–	–	–	–	–	–	–	–	–	–	–	–	–	–	1FG1106- . . ■ ■ 6 - ■ . A2 -Z
–	–	–	–	–	565	**600**	**600**	**600**	**600**	**600**	**600**	–	–	–	–	–	–	–	–	–	1FG1106- . . ■ ■ 4 - ■ . A2 -Z
–	–	–	–	590	–	**600**	**600**	**600**	**600**	**600**	**600**	–	–	–	–	–	–	–	–	–	1FG1106- . . ■ ■ 3 - ■ . A2 -Z
–	–	–	–	590	–	–	**600**	–	**600**	**600**	**600**	–	–	–	–	–	–	–	–	–	1FG1106- . . ■ ■ 2 - ■ . A2 -Z

Max. output speed n_{2max} = 81 rpm, Transmission ratio i = 55.43

230	220	335	260	545	515	–	–	–	–	–	–	–	–	–	–	–	–	–	–	–	1FG1106- . . ■ ■ 6 - ■ . X1 -Z
–	–	–	–	–	515	585	**635**	**635**	**635**	**635**	**635**	–	–	–	–	–	–	–	–	–	1FG1106- . . ■ ■ 4 - ■ . X1 -Z
–	–	–	–	545	–	585	**635**	**635**	**635**	**635**	**635**	–	–	–	–	–	–	–	–	–	1FG1106- . . ■ ■ 3 - ■ . X1 -Z
–	–	–	–	545	–	–	**635**	–	**635**	**635**	**635**	–	–	–	–	–	–	–	–	–	1FG1106- . . ■ ■ 2 - ■ . X1 -Z

Max. output speed n_{2max} = 95 rpm, Transmission ratio i = 47.14

198	189	285	220	460	440	–	–	–	–	–	–	–	–	–	–	–	–	–	–	–	1FG1106- . . ■ ■ 6 - ■ . W1 -Z
–	–	–	–	–	440	495	**635**	**635**	**635**	**635**	**635**	–	–	–	–	–	–	–	–	–	1FG1106- . . ■ ■ 4 - ■ . W1 -Z
–	–	–	–	460	–	495	**635**	**635**	**635**	**635**	**635**	–	–	–	–	–	–	–	–	–	1FG1106- . . ■ ■ 3 - ■ . W1 -Z
–	–	–	–	460	–	–	**635**	–	**635**	**635**	**635**	–	–	–	–	–	–	–	–	–	1FG1106- . . ■ ■ 2 - ■ . W1 -Z

Max. output speed n_{2max} = 105 rpm, Transmission ratio i = 42.86

181	173	260	205	420	400	–	–	–	–	–	–	–	–	–	–	–	–	–	–	–	1FG1106- . . ■ ■ 6 - ■ . V1 -Z
–	–	–	–	–	400	450	**635**	**635**	**635**	**635**	**635**	–	–	–	–	–	–	–	–	–	1FG1106- . . ■ ■ 4 - ■ . V1 -Z
–	–	–	–	420	–	450	**635**	**635**	**635**	**635**	**635**	–	–	–	–	–	–	–	–	–	1FG1106- . . ■ ■ 3 - ■ . V1 -Z
–	–	–	–	420	–	–	**635**	–	**635**	**635**	**635**	–	–	–	–	–	–	–	–	–	1FG1106- . . ■ ■ 2 - ■ . V1 -Z

Max. output speed n_{2max} = 118 rpm, Transmission ratio i = 38.24

162	154	230	183	375	360	–	–	–	–	–	–	–	–	–	–	–	–	–	–	–	1FG1106- . . ■ ■ 6 - ■ . U1 -Z
–	–	–	–	–	360	405	**635**	620	**635**	**635**	**635**	**635**	**635**	**635**	–	–	–	–	–	–	1FG1106- . . ■ ■ 4 - ■ . U1 -Z
–	–	–	–	375	–	405	**635**	620	**635**	**635**	**635**	**635**	**635**	**635**	**635**	**635**	**635**	–	–	–	1FG1106- . . ■ ■ 3 - ■ . U1 -Z
–	–	–	–	375	–	–	**635**	–	**635**	**635**	**635**	–	**635**	**635**	**635**	**635**	**635**	–	–	–	1FG1106- . . ■ ■ 2 - ■ . U1 -Z

Max. output speed n_{2max} = 131 rpm, Transmission ratio i = 34.29

145	139	210	164	335	320	–	–	–	–	–	–	–	–	–	–	–	–	–	–	–	1FG1106- . . ■ ■ 6 - ■ . T1 -Z
–	–	–	–	–	320	360	580	555	**635**	**635**	**635**	**635**	**635**	**635**	–	–	–	–	–	–	1FG1106- . . ■ ■ 4 - ■ . T1 -Z
–	–	–	–	335	–	360	580	555	**635**	**635**	**635**	**635**	**635**	**635**	**635**	**635**	**635**	–	–	–	1FG1106- . . ■ ■ 3 - ■ . T1 -Z
–	–	–	–	335	–	–	580	–	**635**	**635**	**635**	–	**635**	**635**	**635**	**635**	**635**	–	–	–	1FG1106- . . ■ ■ 2 - ■ . T1 -Z

Max. output speed n_{2max} = 146 rpm, Transmission ratio i = 30.9

131	125	189	148	305	290	–	–	–	–	–	–	–	–	–	–	–	–	–	–	–	1FG1106- . . ■ ■ 6 - ■ . S1 -Z
–	–	–	–	–	290	325	525	500	**635**	**635**	**635**	**635**	**635**	**635**	–	–	–	–	–	–	1FG1106- . . ■ ■ 4 - ■ . S1 -Z
–	–	–	–	305	–	325	525	500	**635**	**635**	**635**	**635**	**635**	**635**	**635**	**635**	**635**	–	–	–	1FG1106- . . ■ ■ 3 - ■ . S1 -Z
–	–	–	–	305	–	–	525	–	**635**	**635**	**635**	–	**635**	**635**	**635**	**635**	**635**	–	–	–	1FG1106- . . ■ ■ 2 - ■ . S1 -Z

Motor shaft height:

36																						**C**
			48																			**D**
							63															**E**
												80										**F**
																		100				**G**

Motor length/motor version (**CT** = Compact, **HD** = High Dynamic)**:**

			0/CT				**0/CT**					**0/CT**						**0/CT**				**0**	**2**
								1/CT											**1/CT**			**1**	**2**
								1/HD														**1**	**4**
2/CT				**2/CT**					**2/CT**													**2**	**2**
										3/CT				**3/CT**					**3/CT**			**3**	**2**
	3/HD				**3/HD**																	**3**	**4**
		4/CT													**4/CT**							**4**	**2**
						4/HD					**4/HD**											**4**	**4**
																				5/CT		**5**	**2**
																5/HD						**5**	**4**
																	6/HD					**6**	**4**

Selection of shaft design, encoder system, mounting type and special designs on page 3/52.

1FG1106- ■ ■ . . . . - . ■ . . -Z

© Siemens 2019

Gearbox size 69, 2-stage – 1FG1106

For line voltage 380 ... 480 V 3 AC (DC link voltage 510 ... 720 V DC) **– gearbox type** ***Z69***

Geared motor torque at 1450 rpm
Note: All values in **bold** print are maximum gearbox values.

M_{2dyn} Nm

																					Servo helical geared motors SIMOTICS S-1FG1 Article No.
Max. output speed n_{2max} = 158 rpm, Transmission ratio i = 28.53																					
121	116	175	137	280	270	–	–	–	–	–	–	–	–	–	–	–	–	–	–	–	1FG1106- . . ■ ■ 6 - ■ . R1 -Z
–	–	–	–	–	270	300	485	465	**635**	**635**	**635**	**635**	**635**	**635**	–	–	–	–	–	–	1FG1106- . . ■ ■ 4 - ■ . R1 -Z
–	–	–	–	280	–	300	485	465	**635**	**635**	**635**	**635**	**635**	**635**	**635**	**635**	**635**	–	–	–	1FG1106- . . ■ ■ 3 - ■ . R1 -Z
–	–	–	–	280	–	–	485	–	**635**	**635**	**635**	–	**635**	**635**	**635**	**635**	**635**	–	–	–	1FG1106- . . ■ ■ 2 - ■ . R1 -Z
Max. output speed n_{2max} = 173 rpm, Transmission ratio i = 26.04																					
111	106	160	126	255	245	–	–	–	–	–	–	–	–	–	–	–	–	–	–	–	1FG1106- . . ■ ■ 6 - ■ . Q1 -Z
–	–	–	–	–	245	275	440	425	**635**	**635**	**635**	615	**635**	**635**	–	–	–	–	–	–	1FG1106- . . ■ ■ 4 - ■ . Q1 -Z
–	–	–	–	255	–	275	440	425	**635**	**635**	**635**	615	**635**	**635**	**635**	**635**	**635**	**635**	**635**	**635**	1FG1106- . . ■ ■ 3 - ■ . Q1 -Z
–	–	–	–	255	–	–	440	–	**635**	**635**	**635**	–	**635**	**635**	**635**	**635**	**635**	**635**	**635**	**635**	1FG1106- . . ■ ■ 2 - ■ . Q1 -Z
Max. output speed n_{2max} = 208 rpm, Transmission ratio i = 21.61																					
92	88	133	104	215	205	–	–	–	–	–	–	–	–	–	–	–	–	–	–	–	1FG1106- . . ■ ■ 6 - ■ . P1 -Z
–	–	–	–	–	205	230	365	355	530	**635**	**635**	510	**635**	**635**	–	–	–	–	–	–	1FG1106- . . ■ ■ 4 - ■ . P1 -Z
–	–	–	–	215	–	230	365	355	530	**635**	**635**	510	**635**	**635**	**635**	**635**	**635**	**635**	**635**	**635**	1FG1106- . . ■ ■ 3 - ■ . P1 -Z
–	–	–	–	215	–	–	365	–	530	**635**	**635**	–	**635**	**635**	**635**	**635**	**635**	**635**	**635**	**635**	1FG1106- . . ■ ■ 2 - ■ . P1 -Z
Max. output speed n_{2max} = 221 rpm, Transmission ratio i = 20.34																					
86	83	125	98	200	193	–	–	–	–	–	–	–	–	–	–	–	–	–	–	–	1FG1106- . . ■ ■ 6 - ■ . N1 -Z
–	–	–	–	–	193	215	345	330	500	**635**	615	480	**635**	**635**	–	–	–	–	–	–	1FG1106- . . ■ ■ 4 - ■ . N1 -Z
–	–	–	–	200	–	215	345	330	500	**635**	615	480	**635**	**635**	**635**	**635**	**635**	**635**	**635**	**635**	1FG1106- . . ■ ■ 3 - ■ . N1 -Z
–	–	–	–	200	–	–	345	–	500	**635**	615	–	**635**	**635**	**635**	**635**	**635**	**635**	**635**	**635**	1FG1106- . . ■ ■ 2 - ■ . N1 -Z
Max. output speed n_{2max} = 234 rpm, Transmission ratio i = 19.21																					
82	78	118	92	191	182	–	–	–	–	–	–	–	–	–	–	–	–	–	–	–	1FG1106- . . ■ ■ 6 - ■ . M1 -Z
–	–	–	–	–	182	205	325	315	470	635	580	455	**635**	**635**	–	–	–	–	–	–	1FG1106- . . ■ ■ 4 - ■ . M1 -Z
–	–	–	–	191	–	205	325	315	470	635	580	455	**635**	**635**	**635**	**635**	**635**	**635**	**635**	**635**	1FG1106- . . ■ ■ 3 - ■ . M1 -Z
–	–	–	–	191	–	–	325	–	470	635	580	–	**635**	**635**	**635**	**635**	**635**	**635**	**635**	**635**	1FG1106- . . ■ ■ 2 - ■ . M1 -Z
Max. output speed n_{2max} = 275 rpm, Transmission ratio i = 16.34																					
69	66	101	79	163	155	–	–	–	–	–	–	–	–	–	–	–	–	–	–	–	1FG1106- . . ■ ■ 6 - ■ . L1 -Z
–	–	–	–	–	155	175	275	265	400	540	495	385	570	**635**	–	–	–	–	–	–	1FG1106- . . ■ ■ 4 - ■ . L1 -Z
–	–	–	–	163	–	175	275	265	400	540	495	385	570	**635**	**635**	**635**	**635**	**635**	**635**	**635**	1FG1106- . . ■ ■ 3 - ■ . L1 -Z
–	–	–	–	163	–	–	275	–	400	540	495	–	570	**635**	**635**	**635**	**635**	**635**	**635**	**635**	1FG1106- . . ■ ■ 2 - ■ . L1 -Z
Max. output speed n_{2max} = 318 rpm, Transmission ratio i = 14																					
–	–	–	–	–	–	–	–	–	–	–	–	–	–	–	–	–	–	–	–	–	1FG1106- . . ■ ■ 6 - ■ . K1 -Z
–	–	–	–	–	–	–	240	230	345	465	425	330	490	**635**	–	–	–	–	–	–	1FG1106- . . ■ ■ 4 - ■ . K1 -Z
–	–	–	–	–	–	–	240	230	345	465	425	330	490	**635**	**635**	**635**	**635**	**635**	**635**	**635**	1FG1106- . . ■ ■ 3 - ■ . K1 -Z
–	–	–	–	–	–	–	240	–	345	465	425	–	490	**635**	**635**	**635**	**635**	**635**	**635**	**635**	1FG1106- . . ■ ■ 2 - ■ . K1 -Z
Max. output speed n_{2max} = 353 rpm, Transmission ratio i = 12.31																					
–	–	–	–	–	–	–	–	–	–	–	–	–	–	–	–	–	–	–	–	–	1FG1106- . . ■ ■ 6 - ■ . J1 -Z
–	–	–	–	–	–	–	210	200	305	410	375	290	435	585	–	–	–	–	–	–	1FG1106- . . ■ ■ 4 - ■ . J1 -Z
–	–	–	–	–	–	–	210	200	305	410	375	290	435	585	**620**	**620**	**620**	**620**	**620**	**620**	1FG1106- . . ■ ■ 3 - ■ . J1 -Z
–	–	–	–	–	–	–	210	–	305	410	375	–	435	585	**620**	**620**	**620**	**620**	**620**	**620**	1FG1106- . . ■ ■ 2 - ■ . J1 -Z

Motor shaft height:

36																										**C**	
			48																							**D**	
							63																			**E**	
												80														**F**	
																		100								**G**	

Motor length/motor version (**CT** = Compact, **HD** = High Dynamic)**:**

			0/CT				**0/CT**					**0/CT**						**0/CT**									**0**	**2**
													1/CT						**1/CT**								**1**	**2**
								1/HD																			**1**	**4**
2/CT				**2/CT**					**2/CT**																		**2**	**2**
										3/CT					**3/CT**						**3/CT**						**3**	**2**
	3/HD				**3/HD**																						**3**	**4**
		4/CT															**4/CT**										**4**	**2**
						4/HD					**4/HD**																	**4**	**4**
																						5/CT					**5**	**2**
																5/HD											**5**	**4**
																	6/HD										**6**	**4**

Selection of shaft design, encoder system, mounting type and special designs on page 3/52.

1FG1106- ■ ■ . . . - . ■ . . -Z

© Siemens 2019

Gearbox size 69, 2-stage – 1FG1106

For line voltage 380 ... 480 V 3 AC (DC link voltage 510 ... 720 V DC) **– gearbox type** ***Z69***

Geared motor torque at 1450 rpm
Note: All values in **bold** print are maximum gearbox values.
M_{2dyn}
Nm

Servo helical geared motors SIMOTICS S-1FG1
Article No.

Max. output speed n_{2max} = **419 rpm**, Transmission ratio i = **10.39**																						
–	–	–	–	–	–	–	–	–	–	–	–	–	–	–	–	–	–	–	–	–	–	1FG1106- . . ■ ■ 6 - ■ . H1 -Z
–	–	–	–	–	–	–	178	172	255	345	315	245	365	495	–	–	–	–	–	–	–	1FG1106- . . ■ ■ 4 - ■ . H1 -Z
–	–	–	–	–	–	–	178	172	255	345	315	245	365	495	**600**	**600**	**600**	545	**600**	**600**	**600**	1FG1106- . . ■ ■ 3 - ■ . H1 -Z
–	–	–	–	–	–	–	178	–	255	345	315	–	365	495	**600**	**600**	**600**	545	**600**	**600**	**600**	1FG1106- . . ■ ■ 2 - ■ . H1 -Z
Max. output speed n_{2max} = **481 rpm**, Transmission ratio i = **9.05**																						
–	–	–	–	–	–	–	–	–	–	–	–	–	–	–	–	–	–	–	–	–	–	1FG1106- . . ■ ■ 6 - ■ . G1 -Z
–	–	–	–	–	–	–	156	149	225	300	275	215	320	430	–	–	–	–	–	–	–	1FG1106- . . ■ ■ 4 - ■ . G1 -Z
–	–	–	–	–	–	–	156	149	225	300	275	215	320	430	525	560	**591**	475	**591**	**591**	**591**	1FG1106- . . ■ ■ 3 - ■ . G1 -Z
–	–	–	–	–	–	–	156	–	225	300	275	–	320	430	525	560	**591**	475	**591**	**591**	**591**	1FG1106- . . ■ ■ 2 - ■ . G1 -Z
Max. output speed n_{2max} = **529 rpm**, Transmission ratio i = **8.5**																						
36	35	53	41	85	81	–	–	–	–	–	–	–	–	–	–	–	–	–	–	–	–	1FG1106- . . ■ ■ 6 - ■ . F1 -Z
–	–	–	–	–	81	91	146	141	210	285	260	200	300	405	–	–	–	–	–	–	–	1FG1106- . . ■ ■ 4 - ■ . F1 -Z
–	–	–	–	85	–	91	146	141	210	285	260	200	300	405	495	**515**	**515**	445	**515**	**515**	**515**	1FG1106- . . ■ ■ 3 - ■ . F1 -Z
–	–	–	–	85	–	–	146	–	210	285	260	–	300	405	495	**515**	**515**	445	**515**	**515**	**515**	1FG1106- . . ■ ■ 2 - ■ . F1 -Z
Max. output speed n_{2max} = **622 rpm**, Transmission ratio i = **7.23**																						
31	29	45	35	73	69	–	–	–	–	–	–	–	–	–	–	–	–	–	–	–	–	1FG1106- . . ■ ■ 6 - ■ . E1 -Z
–	–	–	–	–	69	78	125	120	180	240	220	173	255	345	–	–	–	–	–	–	–	1FG1106- . . ■ ■ 4 - ■ . E1 -Z
–	–	–	–	73	–	78	125	120	180	240	220	173	255	345	420	450	**490**	380	**490**	**490**	**490**	1FG1106- . . ■ ■ 3 - ■ . E1 -Z
–	–	–	–	73	–	–	125	–	180	240	220	–	255	345	420	450	**490**	380	**490**	**490**	**490**	1FG1106- . . ■ ■ 2 - ■ . E1 -Z
Max. output speed n_{2max} = **726 rpm**, Transmission ratio i = **6.2**																						
–	–	–	–	–	–	–	–	–	–	–	–	–	–	–	–	–	–	–	–	–	–	1FG1106- . . ■ ■ 6 - ■ . D1 -Z
–	–	–	–	–	–	–	107	103	155	205	191	149	220	295	–	–	–	–	–	–	–	1FG1106- . . ■ ■ 4 - ■ . D1 -Z
–	–	–	–	–	–	–	107	103	155	205	191	149	220	295	360	385	**445**	325	**445**	**445**	**445**	1FG1106- . . ■ ■ 3 - ■ . D1 -Z
–	–	–	–	–	–	–	107	–	155	205	191	–	220	295	360	385	**445**	325	**445**	**445**	**445**	1FG1106- . . ■ ■ 2 - ■ . D1 -Z
Max. output speed n_{2max} = **826 rpm**, Transmission ratio i = **5.45**																						
–	–	–	–	–	–	–	–	–	–	–	–	–	–	–	–	–	–	–	–	–	–	1FG1106- . . ■ ■ 6 - ■ . C1 -Z
–	–	–	–	–	–	–	94	91	137	184	168	131	194	260	–	–	–	–	–	–	–	1FG1106- . . ■ ■ 4 - ■ . C1 -Z
–	–	–	–	–	–	–	94	91	137	184	168	131	194	260	320	340	**429**	285	420	**429**	**429**	1FG1106- . . ■ ■ 3 - ■ . C1 -Z
–	–	–	–	–	–	–	94	–	137	184	168	–	194	260	320	340	**429**	285	420	**429**	**429**	1FG1106- . . ■ ■ 2 - ■ . C1 -Z
Max. output speed n_{2max} = **978 rpm**, Transmission ratio i = **4.6**																						
–	–	–	–	–	–	–	–	–	–	–	–	–	–	–	–	–	–	–	–	–	–	1FG1106- . . ■ ■ 6 - ■ . B1 -Z
–	–	–	–	–	–	–	80	76	115	155	142	111	164	220	–	–	–	–	–	–	–	1FG1106- . . ■ ■ 4 - ■ . B1 -Z
–	–	–	–	–	–	–	80	76	115	155	142	111	164	220	270	285	415	240	355	480	**480**	1FG1106- . . ■ ■ 3 - ■ . B1 -Z
–	–	–	–	–	–	–	80	–	115	155	142	–	164	220	270	285	415	240	355	480	**480**	1FG1106- . . ■ ■ 2 - ■ . B1 -Z
Max. output speed n_{2max} = **1113 rpm**, Transmission ratio i = **4.01**																						
–	–	–	–	–	–	–	–	–	–	–	–	–	–	–	–	–	–	–	–	–	–	1FG1106- . . ■ ■ 6 - ■ . A1 -Z
–	–	–	–	–	–	–	69	67	100	135	124	97	143	194	–	–	–	–	–	–	–	1FG1106- . . ■ ■ 4 - ■ . A1 -Z
–	–	–	–	–	–	–	69	67	100	135	124	97	143	194	235	250	365	210	310	415	**455**	1FG1106- . . ■ ■ 3 - ■ . A1 -Z
–	–	–	–	–	–	–	69	–	100	135	124	–	143	194	235	250	365	210	310	415	**455**	1FG1106- . . ■ ■ 2 - ■ . A1 -Z

Motor shaft height:

36																						**C**	
			48																			**D**	
							63															**E**	
												80										**F**	
																		100				**G**	

Motor length/motor version (**CT** = Compact, **HD** = High Dynamic)**:**

			0/CT				**0/CT**					**0/CT**						**0/CT**					**0**	**2**
													1/CT						**1/CT**				**1**	**2**
								1/HD															**1**	**4**
2/CT				**2/CT**					**2/CT**														**2**	**2**
										3/CT					**3/CT**					**3/CT**			**3**	**2**
	3/HD				**3/HD**																		**3**	**4**
		4/CT														**4/CT**							**4**	**2**
						4/HD					**4/HD**													**4**	**4**
																					5/CT		**5**	**2**
																5/HD							**5**	**4**
																	6/HD						**6**	**4**

Selection of shaft design, encoder system, mounting type and special designs on page 3/52.

1FG1106- ■ ■ . . . - . ■ . . -Z

© Siemens 2019

Gearbox size 69, 2-stage – 1FG1106

Selection and ordering data (continued)

For line voltage 200 ... 240 V 1 AC (DC link voltage 270 ... 330 V DC) **– gearbox type** ***Z69***

Max. output speed n_{2max} rpm	Transmission ratio i	Geared motor torque at 1450 rpm Note: All values in **bold** print are maximum gearbox values. M_{2dyn} Nm					**Servo helical geared motors SIMOTICS S-1FG1** Article No.
74	**60.97**	250	240	365	590	565	**1FG1106- . . ■ ■ 3 - ■ . A2 -Z**
81	**55.43**	230	220	335	545	515	**1FG1106- . . ■ ■ 3 - ■ . X1 -Z**
95	**47.14**	198	189	285	460	440	**1FG1106- . . ■ ■ 3 - ■ . W1 -Z**
105	**42.86**	181	173	260	420	400	**1FG1106- . . ■ ■ 3 - ■ . V1 -Z**
118	**38.24**	162	154	230	375	360	**1FG1106- . . ■ ■ 3 - ■ . U1 -Z**
131	**34.29**	145	139	210	335	320	**1FG1106- . . ■ ■ 3 - ■ . T1 -Z**
146	**30.9**	131	125	189	305	290	**1FG1106- . . ■ ■ 3 - ■ . S1 -Z**
158	**28.53**	121	116	175	280	270	**1FG1106- . . ■ ■ 3 - ■ . R1 -Z**
173	**26.04**	111	106	160	255	245	**1FG1106- . . ■ ■ 3 - ■ . Q1 -Z**
208	**21.61**	92	88	133	215	205	**1FG1106- . . ■ ■ 3 - ■ . P1 -Z**
221	**20.34**	86	83	125	200	193	**1FG1106- . . ■ ■ 3 - ■ . N1 -Z**
234	**19.21**	82	78	118	191	182	**1FG1106- . . ■ ■ 3 - ■ . M1 -Z**
275	**16.34**	69	66	101	163	155	**1FG1106- . . ■ ■ 3 - ■ . L1 -Z**
529	**8.5**	36	35	53	85	81	**1FG1106- . . ■ ■ 3 - ■ . F1 -Z**
622	**7.23**	31	29	45	73	69	**1FG1106- . . ■ ■ 3 - ■ . E1 -Z**
Motor shaft height:							
		36					**C**
					48		**D**
Motor length/motor version (**CT** = Compact, **HD** = High Dynamic)**:**							
		2/CT			**2/CT**		**2** **1**
			3/HD			**3/HD**	**3** **3**
				4/CT			**4** **1**

Selection of shaft design, encoder system, mounting type and special designs on page 3/52.

1FG1106- ■ ■ . . . - . ■ . . -Z

© Siemens 2019

Technical specifications

Gearbox type *D69*

Servo geared motor Type	i	R_{ex}	M_{2rated} Nm	M_{2max} Nm	$M_{2Em.Off}$ Nm	n_{2max} rpm	n_{1max} rpm	φ [1] '	F_{R2} N	F_{R2max} N	c_T Nm/ '	J_G 10^{-4} kgm^2
1FG1206-.....-..S1	328.49	62084/189	600	680	1020	14	4500	6.49	11000	10800	30.6	0.057
1FG1206-.....-..R1	292.08	30668/105	600	680	1020	15	4500	6.54	11000	10800	30.6	0.069
1FG1206-.....-..Q1	256.46	8976/35	600	680	1020	18	4500	6.55	11000	10800	30.6	0.083
1FG1206-.....-..P1	233.14	1632/7	600	680	1020	19	4500	6.55	11000	10800	30.6	0.1
1FG1206-.....-..N1	199.47	2992/15	600	680	1020	23	4500	6.57	11000	10800	30.6	0.12
1FG1206-.....-..M1	181.33	544/3	600	680	1020	25	4500	6.57	11000	10800	30.6	0.14
1FG1206-.....-..L1	160.29	1122/7	600	680	1020	28	4500	6.58	11000	10800	30.6	0.16
1FG1206-.....-..K1	145.71	1020/7	600	680	1020	31	4500	6.58	11000	10800	30.6	0.22
1FG1206-.....-..J1	127.63	8041/63	600	680	1020	35	4500	6.61	11000	10800	30.6	0.25
1FG1206-.....-..H1	117.82	32164/273	600	680	1020	38	4500	6.61	11000	10800	30.6	0.3
1FG1206-.....-..G1	104.31	15334/147	600	680	1020	43	4500	6.63	11000	10800	30.6	0.34
1FG1206-.....-..F1	86.82	2431/28	600	665	1020	52	4500	6.66	11000	10800	30.6	0.44
1FG1206-.....-..E1	81.71	572/7	600	660	1020	55	4500	6.66	11000	10800	30.6	0.51
1FG1206-.....-..D1	73.22	13838/189	600	655	1020	61	4500	6.69	11000	10900	30.6	0.57
1FG1206-.....-..C1	62.33	187/3	600	640	1020	72	4500	6.72	11000	10900	30.6	0.72
1FG1206-.....-..B1	53.43	374/7	600	635	1020	84	4500	6.72	11000	10900	30.6	0.91
1FG1206-.....-..A1	46.01	5797/126	600	635	1020	98	4500	6.72	11000	10900	30.6	1.3

Selection and ordering data

Shaft design, encoder system, mounting type and special designs

Gearbox type *D69*

			Servo helical geared motors SIMOTICS S-1FG1 Article No.
			1FG1206- ■ ■ . . . - . ■ . . **-Z**
Shaft design:	Solid shaft with feather keyway	– Design 1	**1**
Order codes and Descriptions see chapter "Options"	Special shaft design		**9**
Encoder system for motors with DRIVE-CLiQ interface:	AS20DQI encoder		**Q**
	AM20DQI encoder		**R**
	R14DQ resolver		**P**
	R15DQ resolver		**U**
Order codes and Descriptions see chapter "Options"	Special version encoder system		**Z**
Mounting type:	Foot-mounted design		**A**
	Foot/flange-mounted design		**B**
	Flange-mounted design		**F**
	Housing flange design		**H**
Special designs (Options): Order codes and Descriptions see chapter "Options" The following order codes must be added to each article number: • Oil type – order codes **K06** or **K11** • Mounting position – order codes **D01** ... **D06**			**-Z**
Selection of 3-stages servo helical geared motors with gearbox size 69 from next page.			**1FG1206-** . . ■ ■ ■ - ■ . ■ ■ **-Z**

[1] Data are for option reduced-backlash version – order code **G99** required.

© Siemens 2019

Gearbox size 69, 3-stage – 1FG1206

3

Selection and ordering data (continued)

For line voltage 380 ... 480 V 3 AC (DC link voltage 510 ... 720 V DC) **– gearbox type** *D69*

Geared motor torque at 1450 rpm
Note: All values in **bold** print are maximum gearbox values.
M_{2dyn}
Nm

Servo helical geared motors SIMOTICS S-1FG1
Article No.

Max. output speed n_{2max} = **14 rpm**, Transmission ratio i = **328.49**																						
680	**680**	**680**	**680**	**680**	**680**	–	–	–	–	–	–	–	–	–	–	–	–	–	–	–	–	1FG1206- . . ■ ■ 6 - ■ . S1 -Z
–	–	–	–	–	**680**	**680**	–	–	–	–	–	–	–	–	–	–	–	–	–	–	–	1FG1206- . . ■ ■ 4 - ■ . S1 -Z
–	–	–	–	**680**	–	**680**	–	–	–	–	–	–	–	–	–	–	–	–	–	–	–	1FG1206- . . ■ ■ 3 - ■ . S1 -Z
–	–	–	–	**680**	–	–	–	–	–	–	–	–	–	–	–	–	–	–	–	–	–	1FG1206- . . ■ ■ 2 - ■ . S1 -Z
Max. output speed n_{2max} = **15 rpm**, Transmission ratio i = **292.08**																						
680	**680**	**680**	**680**	**680**	**680**	–	–	–	–	–	–	–	–	–	–	–	–	–	–	–	–	1FG1206- . . ■ ■ 6 - ■ . R1 -Z
–	–	–	–	–	**680**	**680**	**680**	**680**	**680**	**680**	**680**	–	–	–	–	–	–	–	–	–	–	1FG1206- . . ■ ■ 4 - ■ . R1 -Z
–	–	–	–	**680**	–	**680**	**680**	**680**	**680**	**680**	**680**	–	–	–	–	–	–	–	–	–	–	1FG1206- . . ■ ■ 3 - ■ . R1 -Z
–	–	–	–	**680**	–	–	**680**	–	**680**	**680**	**680**	–	–	–	–	–	–	–	–	–	–	1FG1206- . . ■ ■ 2 - ■ . R1 -Z
Max. output speed n_{2max} = **18 rpm**, Transmission ratio i = **256.46**																						
680	**680**	**680**	**680**	**680**	**680**	–	–	–	–	–	–	–	–	–	–	–	–	–	–	–	–	1FG1206- . . ■ ■ 6 - ■ . Q1 -Z
–	–	–	–	–	**680**	**680**	**680**	**680**	**680**	**680**	**680**	–	–	–	–	–	–	–	–	–	–	1FG1206- . . ■ ■ 4 - ■ . Q1 -Z
–	–	–	–	**680**	–	**680**	**680**	**680**	**680**	**680**	**680**	–	–	–	–	–	–	–	–	–	–	1FG1206- . . ■ ■ 3 - ■ . Q1 -Z
–	–	–	–	**680**	–	–	**680**	–	**680**	**680**	**680**	–	–	–	–	–	–	–	–	–	–	1FG1206- . . ■ ■ 2 - ■ . Q1 -Z
Max. output speed n_{2max} = **19 rpm**, Transmission ratio i = **233.14**																						
680	**680**	**680**	**680**	**680**	**680**	–	–	–	–	–	–	–	–	–	–	–	–	–	–	–	–	1FG1206- . . ■ ■ 6 - ■ . P1 -Z
–	–	–	–	–	**680**	**680**	**680**	**680**	**680**	**680**	**680**	–	–	–	–	–	–	–	–	–	–	1FG1206- . . ■ ■ 4 - ■ . P1 -Z
–	–	–	–	**680**	–	**680**	**680**	**680**	**680**	**680**	**680**	–	–	–	–	–	–	–	–	–	–	1FG1206- . . ■ ■ 3 - ■ . P1 -Z
–	–	–	–	**680**	–	–	**680**	–	**680**	**680**	**680**	–	–	–	–	–	–	–	–	–	–	1FG1206- . . ■ ■ 2 - ■ . P1 -Z
Max. output speed n_{2max} = **23 rpm**, Transmission ratio i = **199.47**																						
680	**680**	**680**	**680**	**680**	**680**	–	–	–	–	–	–	–	–	–	–	–	–	–	–	–	–	1FG1206- . . ■ ■ 6 - ■ . N1 -Z
–	–	–	–	–	**680**	**680**	**680**	**680**	**680**	**680**	**680**	–	–	–	–	–	–	–	–	–	–	1FG1206- . . ■ ■ 4 - ■ . N1 -Z
–	–	–	–	**680**	–	**680**	**680**	**680**	**680**	**680**	**680**	–	–	–	–	–	–	–	–	–	–	1FG1206- . . ■ ■ 3 - ■ . N1 -Z
–	–	–	–	**680**	–	–	**680**	–	**680**	**680**	**680**	–	–	–	–	–	–	–	–	–	–	1FG1206- . . ■ ■ 2 - ■ . N1 -Z
Max. output speed n_{2max} = **25 rpm**, Transmission ratio i = **181.33**																						
680	**680**	**680**	**680**	**680**	**680**	–	–	–	–	–	–	–	–	–	–	–	–	–	–	–	–	1FG1206- . . ■ ■ 6 - ■ . M1 -Z
–	–	–	–	–	**680**	**680**	**680**	**680**	**680**	**680**	**680**	–	–	–	–	–	–	–	–	–	–	1FG1206- . . ■ ■ 4 - ■ . M1 -Z
–	–	–	–	**680**	–	**680**	**680**	**680**	**680**	**680**	**680**	–	–	–	–	–	–	–	–	–	–	1FG1206- . . ■ ■ 3 - ■ . M1 -Z
–	–	–	–	**680**	–	–	**680**	–	**680**	**680**	**680**	–	–	–	–	–	–	–	–	–	–	1FG1206- . . ■ ■ 2 - ■ . M1 -Z
Max. output speed n_{2max} = **28 rpm**, Transmission ratio i = **160.29**																						
650	620	**680**	**680**	**680**	**680**	–	–	–	–	–	–	–	–	–	–	–	–	–	–	–	–	1FG1206- . . ■ ■ 6 - ■ . L1 -Z
–	–	–	–	–	**680**	**680**	**680**	**680**	**680**	**680**	**680**	**680**	**680**	**680**	–	–	–	–	–	–	–	1FG1206- . . ■ ■ 4 - ■ . L1 -Z
–	–	–	–	**680**	–	**680**	**680**	**680**	**680**	**680**	**680**	**680**	**680**	**680**	**680**	**680**	**680**	–	–	–	–	1FG1206- . . ■ ■ 3 - ■ . L1 -Z
–	–	–	–	**680**	–	–	**680**	–	**680**	**680**	**680**	–	**680**	**680**	**680**	**680**	**680**	–	–	–	–	1FG1206- . . ■ ■ 2 - ■ . L1 -Z

Motor shaft height:

36																						**C**
			48																			**D**
							63															**E**
												80										**F**
																		100				**G**

Motor length/motor version (**CT** = Compact, **HD** = High Dynamic)**:**

			0/CT				**0/CT**					**0/CT**						**0/CT**					**0**	**2**
													1/CT						**1/CT**				**1**	**2**
								1/HD															**1**	**4**
2/CT				**2/CT**					**2/CT**														**2**	**2**
										3/CT				**3/CT**						**3/CT**			**3**	**2**
	3/HD				**3/HD**																		**3**	**4**
		4/CT														**4/CT**							**4**	**2**
						4/HD					**4/HD**													**4**	**4**
																				5/CT			**5**	**2**
															5/HD								**5**	**4**
																6/HD							**6**	**4**

Selection of shaft design, encoder system, mounting type and special designs on page 3/57.

1FG1206- ■ ■ . . . . - . ■ . . -Z

© Siemens 2019

For line voltage 380 ... 480 V 3 AC (DC link voltage 510 ... 720 V DC) **– gearbox type** ***D69***

Geared motor torque at 1450 rpm
Note: All values in **bold** print are maximum gearbox values.
M_{2dyn}
Nm

Servo helical geared motors SIMOTICS S-1FG1
Article No.

Max. output speed n_{2max} = **31 rpm**, Transmission ratio i = **145.71**																						
590	565	**680**	670	**680**	**680**	–	–	–	–	–	–	–	–	–	–	–	–	–	–	–	–	1FG1206- . . ■ ■ **6** - ■ . **K1** -Z
–	–	–	–	–	**680**	**680**	**680**	**680**	**680**	**680**	**680**	**680**	**680**	**680**	–	–	–	–	–	–	–	1FG1206- . . ■ ■ **4** - ■ . **K1** -Z
–	–	–	–	**680**	–	**680**	**680**	**680**	**680**	**680**	**680**	**680**	**680**	**680**	**680**	**680**	**680**	–	–	–	–	1FG1206- . . ■ ■ **3** - ■ . **K1** -Z
–	–	–	–	**680**	–	–	**680**	–	**680**	**680**	**680**	–	**680**	**680**	**680**	**680**	**680**	–	–	–	–	1FG1206- . . ■ ■ **2** - ■ . **K1** -Z
Max. output speed n_{2max} = **35 rpm**, Transmission ratio i = **127.63**																						
520	495	**680**	590	**680**	**680**	–	–	–	–	–	–	–	–	–	–	–	–	–	–	–	–	1FG1206- . . ■ ■ **6** - ■ . **J1** -Z
–	–	–	–	–	**680**	**680**	**680**	**680**	**680**	**680**	**680**	**680**	**680**	**680**	–	–	–	–	–	–	–	1FG1206- . . ■ ■ **4** - ■ . **J1** -Z
–	–	–	–	**680**	–	**680**	**680**	**680**	**680**	**680**	**680**	**680**	**680**	**680**	**680**	**680**	**680**	–	–	–	–	1FG1206- . . ■ ■ **3** - ■ . **J1** -Z
–	–	–	–	**680**	–	–	**680**	–	**680**	**680**	**680**	–	**680**	**680**	**680**	**680**	**680**	–	–	–	–	1FG1206- . . ■ ■ **2** - ■ . **J1** -Z
Max. output speed n_{2max} = **38 rpm**, Transmission ratio i = **117.82**																						
480	460	**680**	545	**680**	**680**	–	–	–	–	–	–	–	–	–	–	–	–	–	–	–	–	1FG1206- . . ■ ■ **6** - ■ . **H1** -Z
–	–	–	–	–	**680**	**680**	**680**	**680**	**680**	**680**	**680**	**680**	**680**	**680**	–	–	–	–	–	–	–	1FG1206- . . ■ ■ **4** - ■ . **H1** -Z
–	–	–	–	**680**	–	**680**	**680**	**680**	**680**	**680**	**680**	**680**	**680**	**680**	**680**	**680**	**680**	–	–	–	–	1FG1206- . . ■ ■ **3** - ■ . **H1** -Z
–	–	–	–	**680**	–	–	**680**	–	**680**	**680**	**680**	–	**680**	**680**	**680**	**680**	**680**	–	–	–	–	1FG1206- . . ■ ■ **2** - ■ . **H1** -Z
Max. output speed n_{2max} = **43 rpm**, Transmission ratio i = **104.31**																						
425	410	620	485	**680**	**680**	–	–	–	–	–	–	–	–	–	–	–	–	–	–	–	–	1FG1206- . . ■ ■ **6** - ■ . **G1** -Z
–	–	–	–	–	**680**	**680**	**680**	**680**	**680**	**680**	**680**	**680**	**680**	**680**	–	–	–	–	–	–	–	1FG1206- . . ■ ■ **4** - ■ . **G1** -Z
–	–	–	–	**680**	–	**680**	**680**	**680**	**680**	**680**	**680**	**680**	**680**	**680**	**680**	**680**	**680**	**680**	**680**	**680**	**680**	1FG1206- . . ■ ■ **3** - ■ . **G1** -Z
–	–	–	–	**680**	–	–	**680**	–	**680**	**680**	**680**	–	**680**	**680**	**680**	**680**	**680**	**680**	**680**	**680**	**680**	1FG1206- . . ■ ■ **2** - ■ . **G1** -Z
Max. output speed n_{2max} = **52 rpm**, Transmission ratio i = **86.82**																						
355	340	515	405	**665**	**665**	–	–	–	–	–	–	–	–	–	–	–	–	–	–	–	–	1FG1206- . . ■ ■ **6** - ■ . **F1** -Z
–	–	–	–	–	**665**	**665**	**665**	**665**	**665**	**665**	**665**	**665**	**665**	**665**	–	–	–	–	–	–	–	1FG1206- . . ■ ■ **4** - ■ . **F1** -Z
–	–	–	–	**665**	–	**665**	**665**	**665**	**665**	**665**	**665**	**665**	**665**	**665**	**665**	**665**	**665**	**665**	**665**	**665**	**665**	1FG1206- . . ■ ■ **3** - ■ . **F1** -Z
–	–	–	–	**665**	–	–	**665**	–	**665**	**665**	**665**	–	**665**	**665**	**665**	**665**	**665**	**665**	**665**	**665**	**665**	1FG1206- . . ■ ■ **2** - ■ . **F1** -Z
Max. output speed n_{2max} = **55 rpm**, Transmission ratio i = **81.71**																						
335	320	485	380	**660**	**660**	–	–	–	–	–	–	–	–	–	–	–	–	–	–	–	–	1FG1206- . . ■ ■ **6** - ■ . **E1** -Z
–	–	–	–	–	**660**	**660**	**660**	**660**	**660**	**660**	**660**	**660**	**660**	**660**	–	–	–	–	–	–	–	1FG1206- . . ■ ■ **4** - ■ . **E1** -Z
–	–	–	–	**660**	–	**660**	**660**	**660**	**660**	**660**	**660**	**660**	**660**	**660**	**660**	**660**	**660**	**660**	**660**	**660**	**660**	1FG1206- . . ■ ■ **3** - ■ . **E1** -Z
–	–	–	–	**660**	–	–	**660**	–	**660**	**660**	**660**	–	**660**	**660**	**660**	**660**	**660**	**660**	**660**	**660**	**660**	1FG1206- . . ■ ■ **2** - ■ . **E1** -Z
Max. output speed n_{2max} = **61 rpm**, Transmission ratio i = **73.22**																						
300	290	435	340	**655**	**655**	–	–	–	–	–	–	–	–	–	–	–	–	–	–	–	–	1FG1206- . . ■ ■ **6** - ■ . **D1** -Z
–	–	–	–	–	**655**	**655**	**655**	**655**	**655**	**655**	**655**	**655**	**655**	**655**	–	–	–	–	–	–	–	1FG1206- . . ■ ■ **4** - ■ . **D1** -Z
–	–	–	–	**655**	–	**655**	**655**	**655**	**655**	**655**	**655**	**655**	**655**	**655**	**655**	**655**	**655**	**655**	**655**	**655**	**655**	1FG1206- . . ■ ■ **3** - ■ . **D1** -Z
–	–	–	–	**655**	–	–	**655**	–	**655**	**655**	**655**	–	**655**	**655**	**655**	**655**	**655**	**655**	**655**	**655**	**655**	1FG1206- . . ■ ■ **2** - ■ . **D1** -Z
Max. output speed n_{2max} = **72 rpm**, Transmission ratio i = **62.33**																						
255	245	370	290	605	575	–	–	–	–	–	–	–	–	–	–	–	–	–	–	–	–	1FG1206- . . ■ ■ **6** - ■ . **C1** -Z
–	–	–	–	–	575	**640**	**640**	**640**	**640**	**640**	**640**	**640**	**640**	**640**	–	–	–	–	–	–	–	1FG1206- . . ■ ■ **4** - ■ . **C1** -Z
–	–	–	–	605	–	**640**	**640**	**640**	**640**	**640**	**640**	**640**	**640**	**640**	**640**	**640**	**640**	**640**	**640**	**640**	**640**	1FG1206- . . ■ ■ **3** - ■ . **C1** -Z
–	–	–	–	605	–	–	**640**	–	**640**	**640**	**640**	–	**640**	**640**	**640**	**640**	**640**	**640**	**640**	**640**	**640**	1FG1206- . . ■ ■ **2** - ■ . **C1** -Z

Motor shaft height:

36																									**C**	
			48																						**D**	
						63																			**E**	
												80													**F**	
																		100							**G**	

Motor length/motor version (**CT** = Compact, **HD** = High Dynamic)**:**

			0/CT			**0/CT**					**0/CT**						**0/CT**								**0**	**2**
												1/CT							**1/CT**						**1**	**2**
							1/HD																		**1**	**4**
2/CT				**2/CT**				**2/CT**																	**2**	**2**
									3/CT					**3/CT**						**3/CT**					**3**	**2**
	3/HD				**3/HD**																				**3**	**4**
		4/CT														**4/CT**									**4**	**2**
																									4	**4**
						4/HD					**4/HD**															
																						5/CT			**5**	**2**
																	5/HD								**5**	**4**
																		6/HD							**6**	**4**

Selection of shaft design, encoder system, mounting type and special designs on page 3/57.

1FG1206- ■ ■ . . . - . ■ . . **-Z**

© Siemens 2019

Gearbox size 69, 3-stage – 1FG1206

For line voltage 380 ... 480 V 3 AC (DC link voltage 510 ... 720 V DC) **– gearbox type** ***D69***

Geared motor torque at 1450 rpm
Note: All values in **bold** print are maximum gearbox values.
M_{2dyn}
Nm

Servo helical geared motors SIMOTICS S-1FG1
Article No.

Max. output speed n_{2max} = **84 rpm**, Transmission ratio i = **53.43**

–	–	–	–	–	–	–	–	–	–	–	–	–	–	–	–	–	–	–	–	–	1FG1206- . . ■ ■ 6 - ■ . B1 -Z
–	–	–	–	–	–	–	**635**	**635**	**635**	**635**	**635**	**635**	**635**	**635**	–	–	–	–	–	–	–	1FG1206- . . ■ ■ 4 - ■ . B1 -Z
–	–	–	–	–	–	–	**635**	**635**	**635**	**635**	**635**	**635**	**635**	**635**	**635**	**635**	**635**	**635**	**635**	**635**	1FG1206- . . ■ ■ 3 - ■ . B1 -Z
–	–	–	–	–	–	–	**635**	–	**635**	**635**	**635**	–	**635**	**635**	**635**	**635**	**635**	**635**	**635**	**635**	**635**	1FG1206- . . ■ ■ 2 - ■ . B1 -Z

Max. output speed n_{2max} = **98 rpm**, Transmission ratio i = **46.01**

–	–	–	–	–	–	–	–	–	–	–	–	–	–	–	–	–	–	–	–	–	1FG1206- . . ■ ■ 6 - ■ . A1 -Z
–	–	–	–	–	–	–	**635**	**635**	**635**	**635**	**635**	**635**	**635**	**635**	–	–	–	–	–	–	–	1FG1206- . . ■ ■ 4 - ■ . A1 -Z
–	–	–	–	–	–	–	**635**	**635**	**635**	**635**	**635**	**635**	**635**	**635**	**635**	**635**	**635**	**635**	**635**	**635**	1FG1206- . . ■ ■ 3 - ■ . A1 -Z
–	–	–	–	–	–	–	**635**	–	**635**	**635**	**635**	–	**635**	**635**	**635**	**635**	**635**	**635**	**635**	**635**	**635**	1FG1206- . . ■ ■ 2 - ■ . A1 -Z

Motor shaft height:

36																						**C**
			48																			**D**
							63															**E**
												80										**F**
																	100					**G**

Motor length/motor version (**CT** = Compact, **HD** = High Dynamic)**:**

			0/CT				**0/CT**					**0/CT**					**0/CT**					**0**	**2**
								1/CT										**1/CT**				**1**	**2**
									1/HD													**1**	**4**
2/CT				**2/CT**						**2/CT**												**2**	**2**
											3/CT			**3/CT**					**3/CT**			**3**	**2**
	3/HD				**3/HD**																	**3**	**4**
		4/CT													**4/CT**							**4**	**2**
						4/HD					**4/HD**											**4**	**4**
																				5/CT		**5**	**2**
																5/HD						**5**	**4**
																	6/HD					**6**	**4**

Selection of shaft design, encoder system, mounting type and special designs on page 3/57.

1FG1206- ■ ■ . . . . - . ■ . . **-Z**

© Siemens 2019

Selection and ordering data (continued)

For line voltage 200 ... 240 V 1 AC (DC link voltage 270 ... 330 V DC) **– gearbox type** ***D69***

Max. output speed n_{2max} rpm	Transmission ratio i	Geared motor torque at 1450 rpm Note: All values in **bold** print are maximum gearbox values. M_{2dyn} Nm					**Servo helical geared motors SIMOTICS S-1FG1** Article No.
14	**328.49**	**680**	**680**	**680**	**680**	**680**	**1FG1206- . . ■ ■ 3 - ■ . S1 -Z**
15	**292.08**	**680**	**680**	**680**	**680**	**680**	**1FG1206- . . ■ ■ 3 - ■ . R1 -Z**
18	**256.46**	**680**	**680**	**680**	**680**	**680**	**1FG1206- . . ■ ■ 3 - ■ . Q1 -Z**
19	**233.14**	**680**	**680**	**680**	**680**	**680**	**1FG1206- . . ■ ■ 3 - ■ . P1 -Z**
23	**199.47**	**680**	**680**	**680**	**680**	**680**	**1FG1206- . . ■ ■ 3 - ■ . N1 -Z**
25	**181.33**	**680**	**680**	**680**	**680**	**680**	**1FG1206- . . ■ ■ 3 - ■ . M1 -Z**
28	**160.29**	650	620	**680**	**680**	**680**	**1FG1206- . . ■ ■ 3 - ■ . L1 -Z**
31	**145.71**	590	565	**680**	**680**	**680**	**1FG1206- . . ■ ■ 3 - ■ . K1 -Z**
35	**127.63**	520	495	**680**	**680**	**680**	**1FG1206- . . ■ ■ 3 - ■ . J1 -Z**
38	**117.82**	480	460	**680**	**680**	**680**	**1FG1206- . . ■ ■ 3 - ■ . H1 -Z**
43	**104.31**	425	410	620	**680**	**680**	**1FG1206- . . ■ ■ 3 - ■ . G1 -Z**
52	**86.82**	355	340	515	**665**	**665**	**1FG1206- . . ■ ■ 3 - ■ . F1 -Z**
55	**81.71**	335	320	485	**660**	**660**	**1FG1206- . . ■ ■ 3 - ■ . E1 -Z**
61	**73.22**	300	290	435	**655**	**655**	**1FG1206- . . ■ ■ 3 - ■ . D1 -Z**
72	**62.33**	255	245	370	605	575	**1FG1206- . . ■ ■ 3 - ■ . C1 -Z**

Motor shaft height:

	36					**C**	
				48		**D**	

Motor length/motor version (**CT** = Compact, **HD** = High Dynamic)**:**

2/CT			**2/CT**		**2**		**1**
	3/HD			**3/HD**	**3**		**3**
		4/CT			**4**		**1**

Selection of shaft design, encoder system, mounting type and special designs on page 3/57.

1FG1206- ■ ■ . . . - . ■ . . -Z

© Siemens 2019

Technical specifications

Gearbox type *Z79*

Servo geared motor Type	i	R_{ex}	M_{2rated} Nm	M_{2max} Nm	$M_{2Em.Off}$ Nm	n_{2max} rpm	n_{1max} rpm	φ [1] '	F_{R2} N	F_{R2max} N	c_T Nm/ '	J_G 10^{-4} kgm^2
1FG1107-.....-..A2	54.47	3813/70	840	890	1420	83	4500	6.14	13400	12800	46.9	0.43
1FG1107-.....-..X1	49.52	3813/77	840	890	1420	91	4500	6.14	12700	11900	47	0.53
1FG1107-.....-..W1	44.42	533/12	840	890	1420	101	4500	6.19	11800	11000	47	0.73
1FG1107-.....-..V1	39.94	3075/77	840	890	1420	113	4500	6.21	10900	10200	47	0.83
1FG1107-.....-..U1	36.12	1517/42	840	890	1420	125	4500	6.24	10200	13300	47	0.92
1FG1107-.....-..T1	33.34	3034/91	840	890	1420	135	4500	6.24	13400	13300	47	1.1
1FG1107-.....-..S1	30.54	2993/98	840	890	1420	147	4500	6.27	13400	13300	47	1.4
1FG1107-.....-..R1	25.62	205/8	840	890	1420	176	4500	6.01	13400	13200	46.9	1.5
1FG1107-.....-..Q1	24.12	410/17	840	870	1420	187	4500	6.00	13100	13000	46.9	1.7
1FG1107-.....-..P1	22.13	1394/63	840	870	1420	203	4500	6.06	12600	12500	46.9	1.9
1FG1107-.....-..N1	19.33	1353/70	840	855	1420	233	4500	6.12	11900	11900	47	2.7
1FG1107-.....-..M1	17.31	2665/154	840	855	1420	260	4500	6.15	11400	11400	47	3.3
1FG1107-.....-..L1	15.13	1271/84	840	870	1420	297	4500	6.25	10800	10700	46.9	3.9
1FG1107-.....-..K1	12.99	2091/161	840	870	1420	335	4350	6.34	10100	10000	46.8	4.3
1FG1107-.....-..J1	11.48	287/25	840	845	1420	379	4350	6.74	9670	9660	46.8	5.5
1FG1107-.....-..H1	9.76	205/21	815	815	1380	446	4350	6.94	9100	9100	46.7	7
1FG1107-.....-..G1	8.37	410/49	790	795	1340	520	4350	7.13	8590	8590	46.7	9.3
1FG1107-.....-..F1	8.19	3965/484	715	850	1150	541	4433	9.16	8110	8030	36.4	4
1FG1107-.....-..E1	7.16	1891/264	730	780	1140	628	4500	9.38	7790	7790	36.4	4.8
1FG1107-.....-..D1	6.15	3111/506	715	725	1150	732	4500	9.58	7450	7450	36	5.4
1FG1107-.....-..C1	5.43	2989/550	685	695	1140	829	4500	10.45	7160	7160	35.9	6.9
1FG1107-.....-..B1	4.62	305/66	775	775	1140	942	4350	10.88	6380	6380	35.9	9.1
1FG1107-.....-..A1	3.96	305/77	775	775	1140	1098	4350	11.30	6020	6020	35.8	12.1

Selection and ordering data

Shaft design, encoder system, mounting type and special designs

Gearbox type *Z79*

			Servo helical geared motors SIMOTICS S-1FG1 Article No.
			1FG1107- ■ ■ . . . - . ■ . . -Z
Shaft design:	Solid shaft with feather keyway	– Design 1	**1**
		– Design 2	**2**
		– Design 3	**3**
Order codes and Descriptions see chapter "Options"	Special shaft design		**9**
Encoder system for motors with DRIVE-CLiQ interface:	AS20DQI encoder		**Q**
	AM20DQI encoder		**R**
	R14DQ resolver		**P**
	R15DQ resolver		**U**
Order codes and Descriptions see chapter "Options"	Special version encoder system		**Z**
Mounting type:	Foot-mounted design		**A**
	Foot/flange-mounted design		**B**
	Flange-mounted design		**F**
	Housing flange design		**H**
Special designs (Options): Order codes and Descriptions see chapter "Options" The following order codes must be added to each article number: • Oil type – order codes **K06** or **K11** • Mounting position – order codes **D01** ... **D06**			**-Z**

Selection of 2-stages servo helical geared motors with gearbox size 79 from next page. 1FG1107- . . ■ ■ ■ - ■ . ■ ■ -Z

[1] Data are for option reduced-backlash version – order code **G99** required.

© Siemens 2019

Selection and ordering data (continued)

For line voltage 380 ... 480 V 3 AC (DC link voltage 510 ... 720 V DC) **– gearbox type** ***Z79***

Geared motor torque at 1450 rpm
Note: All values in **bold** print are maximum gearbox values.
M_{2dyn}
Nm

Max. output speed n_{2max} = **83 rpm**, Transmission ratio i = **54.47**	Servo helical geared motors SIMOTICS S-1FG1 Article No.
– – – – – – – – – – – – – – – – – – – –	1FG1107- . . ■ ■ 6 - ■ . A2 -Z
– – – – – – – **890** 875 **890** **890** **890** – – – – – – – – – –	1FG1107- . . ■ ■ 4 - ■ . A2 -Z
– – – – – – – **890** 875 **890** **890** **890** – – – – – – – – – –	1FG1107- . . ■ ■ 3 - ■ . A2 -Z
– – – – – – – **890** – **890** **890** **890** – – – – – – – – – –	1FG1107- . . ■ ■ 2 - ■ . A2 -Z
Max. output speed n_{2max} = 91 rpm, Transmission ratio i = 49.52	
– – – – – – – – – – – – – – – – – – – –	1FG1107- . . ■ ■ 6 - ■ . X1 -Z
– – – – – – – 835 805 **890** **890** **890** – – – – – – – – – –	1FG1107- . . ■ ■ 4 - ■ . X1 -Z
– – – – – – – 835 805 **890** **890** **890** – – – – – – – – – –	1FG1107- . . ■ ■ 3 - ■ . X1 -Z
– – – – – – – 835 – **890** **890** **890** – – – – – – – – – –	1FG1107- . . ■ ■ 2 - ■ . X1 -Z
Max. output speed n_{2max} = 101 rpm, Transmission ratio i = 44.42	
– – – – – – – – – – – – – – – – – – – –	1FG1107- . . ■ ■ 6 - ■ . W1 -Z
– – – – – – – 750 720 **890** **890** **890** **890** **890** **890** – – – – – – –	1FG1107- . . ■ ■ 4 - ■ . W1 -Z
– – – – – – – 750 720 **890** **890** **890** **890** **890** **890** **890** **890** **890** – – – –	1FG1107- . . ■ ■ 3 - ■ . W1 -Z
– – – – – – – 750 – **890** **890** **890** – **890** **890** **890** **890** **890** – – – –	1FG1107- . . ■ ■ 2 - ■ . W1 -Z
Max. output speed n_{2max} = 113 rpm, Transmission ratio i = 39.94	
– – – – – – – – – – – – – – – – – – – –	1FG1107- . . ■ ■ 6 - ■ . V1 -Z
– – – – – – – 675 650 **890** **890** **890** **890** **890** **890** – – – – – – –	1FG1107- . . ■ ■ 4 - ■ . V1 -Z
– – – – – – – 675 650 **890** **890** **890** **890** **890** **890** **890** **890** **890** – – – –	1FG1107- . . ■ ■ 3 - ■ . V1 -Z
– – – – – – – 675 – **890** **890** **890** – **890** **890** **890** **890** **890** – – – –	1FG1107- . . ■ ■ 2 - ■ . V1 -Z
Max. output speed n_{2max} = 125 rpm, Transmission ratio i = 36.12	
– – – – – – – – – – – – – – – – – – – –	1FG1107- . . ■ ■ 6 - ■ . U1 -Z
– – – – – – – 610 585 880 **890** **890** 845 **890** **890** – – – – – – –	1FG1107- . . ■ ■ 4 - ■ . U1 -Z
– – – – – – – 610 585 880 **890** **890** 845 **890** **890** **890** **890** **890** – – – –	1FG1107- . . ■ ■ 3 - ■ . U1 -Z
– – – – – – – 610 – 880 **890** **890** – **890** **890** **890** **890** **890** – – – –	1FG1107- . . ■ ■ 2 - ■ . U1 -Z
Max. output speed n_{2max} = 135 rpm, Transmission ratio i = 33.34	
– – – – – – – – – – – – – – – – – – – –	1FG1107- . . ■ ■ 6 - ■ . T1 -Z
– – – – – – – 565 540 815 **890** **890** 785 **890** **890** – – – – – – –	1FG1107- . . ■ ■ 4 - ■ . T1 -Z
– – – – – – – 565 540 815 **890** **890** 785 **890** **890** **890** **890** **890** – – – –	1FG1107- . . ■ ■ 3 - ■ . T1 -Z
– – – – – – – 565 – 815 **890** **890** – **890** **890** **890** **890** **890** – – – –	1FG1107- . . ■ ■ 2 - ■ . T1 -Z
Max. output speed n_{2max} = 147 rpm, Transmission ratio i = 30.54	
– – – – – – – – – – – – – – – – – – – –	1FG1107- . . ■ ■ 6 - ■ . S1 -Z
– – – – – – – 515 495 750 **890** **890** 720 **890** **890** – – – – – – –	1FG1107- . . ■ ■ 4 - ■ . S1 -Z
– – – – – – – 515 495 750 **890** **890** 720 **890** **890** **890** **890** **890** **890** **890** **890** **890**	1FG1107- . . ■ ■ 3 - ■ . S1 -Z
– – – – – – – 515 – 750 **890** **890** – **890** **890** **890** **890** **890** **890** **890** **890** **890**	1FG1107- . . ■ ■ 2 - ■ . S1 -Z

Motor shaft height:

36	C
48	D
63	E
80	F
100	G

Motor length/motor version (**CT** = Compact, **HD** = High Dynamic)**:**

0/CT	0/CT	0/CT	0/CT	0	2
1/CT	1/CT	1	2
1/HD	1	4
2/CT	2/CT	2/CT	2	2
3/CT	3/CT	3/CT	3	2
3/HD	3/HD	3	4
4/CT	4/CT	4	2
4/HD	4/HD	4	4
5/CT	5	2
5/HD	5	4
6/HD	6	4

Selection of shaft design, encoder system, mounting type and special designs on page 3/62.

1FG1107- ■ ■ . . . . - ■ . . -Z

© Siemens 2019

Gearbox size 79, 2-stage – 1FG1107

For line voltage 380 ... 480 V 3 AC (DC link voltage 510 ... 720 V DC) **– gearbox type** ***Z79***

Geared motor torque at 1450 rpm
Note: All values in **bold** print are maximum gearbox values.
M_{2dyn}
Nm

Servo helical geared motors SIMOTICS S-1FG1 Article No.
Max. output speed n_{2max} = **176 rpm**, Transmission ratio i = **25.62**
– 1FG1107- . . ■ ■ 6 - ■ . R1 -Z
– – – – – – – 435 415 630 845 775 605 **890** **890** – – – – – – – 1FG1107- . . ■ ■ 4 - ■ . R1 -Z
– – – – – – – 435 415 630 845 775 605 **890** **890** **890** **890** **890** **890** **890** **890** 1FG1107- . . ■ ■ 3 - ■ . R1 -Z
– – – – – – – 435 – 630 845 775 – **890** **890** **890** **890** **890** **890** **890** **890** 1FG1107- . . ■ ■ 2 - ■ . R1 -Z
Max. output speed n_{2max} = **187 rpm**, Transmission ratio i = **24.12**
– 1FG1107- . . ■ ■ 6 - ■ . Q1 -Z
– – – – – – – 410 395 595 800 730 570 845 **870** – – – – – – – 1FG1107- . . ■ ■ 4 - ■ . Q1 -Z
– – – – – – – 410 395 595 800 730 570 845 **870** **870** **870** **870** **870** **870** **870** **870** 1FG1107- . . ■ ■ 3 - ■ . Q1 -Z
– – – – – – – 410 – 595 800 730 – 845 **870** **870** **870** **870** **870** **870** **870** **870** 1FG1107- . . ■ ■ 2 - ■ . Q1 -Z
Max. output speed n_{2max} = **203 rpm**, Transmission ratio i = **22.13**
– 1FG1107- . . ■ ■ 6 - ■ . P1 -Z
– – – – – – – 375 360 545 735 670 525 780 **870** – – – – – – – 1FG1107- . . ■ ■ 4 - ■ . P1 -Z
– – – – – – – 375 360 545 735 670 525 780 **870** **870** **870** **870** **870** **870** **870** **870** 1FG1107- . . ■ ■ 3 - ■ . P1 -Z
– – – – – – – 375 – 545 735 670 – 780 **870** **870** **870** **870** **870** **870** **870** **870** 1FG1107- . . ■ ■ 2 - ■ . P1 -Z
Max. output speed n_{2max} = **233 rpm**, Transmission ratio i = **19.33**
– 1FG1107- . . ■ ■ 6 - ■ . N1 -Z
– – – – – – – 330 315 475 645 590 460 680 **855** – – – – – – – 1FG1107- . . ■ ■ 4 - ■ . N1 -Z
– – – – – – – 330 315 475 645 590 460 680 **855** **855** **855** **855** **855** **855** **855** **855** 1FG1107- . . ■ ■ 3 - ■ . N1 -Z
– – – – – – – 330 – 475 645 590 – 680 **855** **855** **855** **855** **855** **855** **855** **855** 1FG1107- . . ■ ■ 2 - ■ . N1 -Z
Max. output speed n_{2max} = **260 rpm**, Transmission ratio i = **17.31**
– 1FG1107- . . ■ ■ 6 - ■ . M1 -Z
– – – – – – – 295 285 425 575 525 410 610 820 – – – – – – – 1FG1107- . . ■ ■ 4 - ■ . M1 -Z
– – – – – – – 295 285 425 575 525 410 610 820 **855** **855** **855** **855** **855** **855** **855** 1FG1107- . . ■ ■ 3 - ■ . M1 -Z
– – – – – – – 295 – 425 575 525 – 610 820 **855** **855** **855** **855** **855** **855** **855** 1FG1107- . . ■ ■ 2 - ■ . M1 -Z
Max. output speed n_{2max} = **297 rpm**, Transmission ratio i = **15.13**
– 1FG1107- . . ■ ■ 6 - ■ . L1 -Z
– – – – – – – 260 250 375 505 460 360 535 720 – – – – – – – 1FG1107- . . ■ ■ 4 - ■ . L1 -Z
– – – – – – – 260 250 375 505 460 360 535 720 **870** **870** **870** 795 **870** **870** **870** 1FG1107- . . ■ ■ 3 - ■ . L1 -Z
– – – – – – – 260 – 375 505 460 – 535 720 **870** **870** **870** 795 **870** **870** **870** 1FG1107- . . ■ ■ 2 - ■ . L1 -Z
Max. output speed n_{2max} = **335 rpm**, Transmission ratio i = **12.99**
– 1FG1107- . . ■ ■ 6 - ■ . K1 -Z
– – – – – – – 220 215 320 435 395 310 455 620 – – – – – – – 1FG1107- . . ■ ■ 4 - ■ . K1 -Z
– – – – – – – 220 215 320 435 395 310 455 620 755 805 **870** 680 **870** **870** **870** 1FG1107- . . ■ ■ 3 - ■ . K1 -Z
– – – – – – – 220 – 320 435 395 – 455 620 755 805 **870** 680 **870** **870** **870** 1FG1107- . . ■ ■ 2 - ■ . K1 -Z
Max. output speed n_{2max} = **379 rpm**, Transmission ratio i = **11.48**
– 1FG1107- . . ■ ■ 6 - ■ . J1 -Z
– – – – – – – 197 190 285 380 350 270 405 545 – – – – – – – 1FG1107- . . ■ ■ 4 - ■ . J1 -Z
– – – – – – – 197 190 285 380 350 270 405 545 670 710 **845** 600 **845** **845** **845** 1FG1107- . . ■ ■ 3 - ■ . J1 -Z
– – – – – – – 197 – 285 380 350 – 405 545 670 710 **845** 600 **845** **845** **845** 1FG1107- . . ■ ■ 2 - ■ . J1 -Z

Motor shaft height:

| | | |

© Siemens 2019

For line voltage 380 ... 480 V 3 AC (DC link voltage 510 ... 720 V DC) **– gearbox type** ***Z79***

Geared motor torque at 1450 rpm
Note: All values in **bold** print are maximum gearbox values.
M_{2dyn}
Nm

Servo helical geared motors SIMOTICS S-1FG1
Article No.

Max. output speed n_{2max} = **446 rpm**, Transmission ratio i = **9.76**																						
–	–	–	–	–	–	–	–	–	–	–	–	–	–	–	–	–	–	–	–	–	–	1FG1107- . . ■ ■ **6** - ■ . **H1** -Z
–	–	–	–	–	–	–	–	–	–	–	–	230	345	465	–	–	–	–	–	–	–	1FG1107- . . ■ ■ **4** - ■ . **H1** -Z
–	–	–	–	–	–	–	–	–	–	–	–	230	345	465	570	605	**815**	515	745	**815**	**815**	1FG1107- . . ■ ■ **3** - ■ . **H1** -Z
–	–	–	–	–	–	–	–	–	–	–	–	–	345	465	570	605	**815**	515	745	**815**	**815**	1FG1107- . . ■ ■ **2** - ■ . **H1** -Z
Max. output speed n_{2max} = **520 rpm**, Transmission ratio i = **8.37**																						
–	–	–	–	–	–	–	–	–	–	–	–	–	–	–	–	–	–	–	–	–	–	1FG1107- . . ■ ■ **6** - ■ . **G1** -Z
–	–	–	–	–	–	–	–	–	–	–	–	200	295	400	–	–	–	–	–	–	–	1FG1107- . . ■ ■ **4** - ■ . **G1** -Z
–	–	–	–	–	–	–	–	–	–	–	–	200	295	400	485	520	755	440	640	**795**	**795**	1FG1107- . . ■ ■ **3** - ■ . **G1** -Z
–	–	–	–	–	–	–	–	–	–	–	–	–	295	400	485	520	755	440	640	**795**	**795**	1FG1107- . . ■ ■ **2** - ■ . **G1** -Z
Max. output speed n_{2max} = **541 rpm**, Transmission ratio i = **8.19**																						
–	–	–	–	–	–	–	–	–	–	–	–	–	–	–	–	–	–	–	–	–	–	1FG1107- . . ■ ■ **6** - ■ . **F1** -Z
–	–	–	–	–	–	–	142	136	205	275	250	197	290	395	–	–	–	–	–	–	–	1FG1107- . . ■ ■ **4** - ■ . **F1** -Z
–	–	–	–	–	–	–	142	136	205	275	250	197	290	395	480	510	745	430	630	850	**850**	1FG1107- . . ■ ■ **3** - ■ . **F1** -Z
–	–	–	–	–	–	–	142	–	205	275	250	–	290	395	480	510	745	430	630	850	**850**	1FG1107- . . ■ ■ **2** - ■ . **F1** -Z
Max. output speed n_{2max} = **628 rpm**, Transmission ratio i = **7.16**																						
–	–	–	–	–	–	–	–	–	–	–	–	–	–	–	–	–	–	–	–	–	–	1FG1107- . . ■ ■ **6** - ■ . **E1** -Z
–	–	–	–	–	–	–	124	120	180	240	220	173	255	345	–	–	–	–	–	–	–	1FG1107- . . ■ ■ **4** - ■ . **E1** -Z
–	–	–	–	–	–	–	124	120	180	240	220	173	255	345	420	450	650	380	555	745	**780**	1FG1107- . . ■ ■ **3** - ■ . **E1** -Z
–	–	–	–	–	–	–	124	–	180	240	220	–	255	345	420	450	650	380	555	745	**780**	1FG1107- . . ■ ■ **2** - ■ . **E1** -Z
Max. output speed n_{2max} = **732 rpm**, Transmission ratio i = **6.15**																						
–	–	–	–	–	–	–	–	–	–	–	–	–	–	–	–	–	–	–	–	–	–	1FG1107- . . ■ ■ **6** - ■ . **D1** -Z
–	–	–	–	–	–	–	107	102	154	205	190	148	220	295	–	–	–	–	–	–	–	1FG1107- . . ■ ■ **4** - ■ . **D1** -Z
–	–	–	–	–	–	–	107	102	154	205	190	148	220	295	360	385	560	325	475	640	**725**	1FG1107- . . ■ ■ **3** - ■ . **D1** -Z
–	–	–	–	–	–	–	107	–	154	205	190	–	220	295	360	385	560	325	475	640	**725**	1FG1107- . . ■ ■ **2** - ■ . **D1** -Z
Max. output speed n_{2max} = **829 rpm**, Transmission ratio i = **5.43**																						
–	–	–	–	–	–	–	–	–	–	–	–	–	–	–	–	–	–	–	–	–	–	1FG1107- . . ■ ■ **6** - ■ . **C1** -Z
–	–	–	–	–	–	–	94	91	136	184	168	131	194	260	–	–	–	–	–	–	–	1FG1107- . . ■ ■ **4** - ■ . **C1** -Z
–	–	–	–	–	–	–	94	91	136	184	168	131	194	260	320	340	495	285	420	565	**695**	1FG1107- . . ■ ■ **3** - ■ . **C1** -Z
–	–	–	–	–	–	–	94	–	136	184	168	–	194	260	320	340	495	285	420	565	**695**	1FG1107- . . ■ ■ **2** - ■ . **C1** -Z
Max. output speed n_{2max} = **942 rpm**, Transmission ratio i = **4.62**																						
–	–	–	–	–	–	–	–	–	–	–	–	–	–	–	–	–	–	–	–	–	–	1FG1107- . . ■ ■ **6** - ■ . **B1** -Z
–	–	–	–	–	–	–	–	–	–	–	–	112	165	220	–	–	–	–	–	–	–	1FG1107- . . ■ ■ **4** - ■ . **B1** -Z
–	–	–	–	–	–	–	–	–	–	–	–	112	165	220	270	290	420	245	355	480	670	1FG1107- . . ■ ■ **3** - ■ . **B1** -Z
–	–	–	–	–	–	–	–	–	–	–	–	–	165	220	270	290	420	245	355	480	670	1FG1107- . . ■ ■ **2** - ■ . **B1** -Z
Max. output speed n_{2max} = **1098 rpm**, Transmission ratio i = **3.96**																						
–	–	–	–	–	–	–	–	–	–	–	–	–	–	–	–	–	–	–	–	–	–	1FG1107- . . ■ ■ **6** - ■ . **A1** -Z
–	–	–	–	–	–	–	–	–	–	–	–	96	142	192	–	–	–	–	–	–	–	1FG1107- . . ■ ■ **4** - ■ . **A1** -Z
–	–	–	–	–	–	–	–	–	–	–	–	96	142	192	230	245	360	210	305	410	575	1FG1107- . . ■ ■ **3** - ■ . **A1** -Z
–	–	–	–	–	–	–	–	–	–	–	–	–	142	192	230	245	360	210	305	410	575	1FG1107- . . ■ ■ **2** - ■ . **A1** -Z

Motor shaft height:

36																						**C**
			48																			**D**
							63															**E**
												80										**F**
																		100				**G**

Motor length/motor version (**CT** = Compact, **HD** = High Dynamic)**:**

			0/CT				**0/CT**					**0/CT**						**0/CT**					**0**	**2**
													1/CT						**1/CT**				**1**	**2**
								1/HD															**1**	**4**
2/CT				**2/CT**					**2/CT**														**2**	**2**
										3/CT				**3/CT**						**3/CT**			**3**	**2**
	3/HD				**3/HD**																		**3**	**4**
		4/CT														**4/CT**							**4**	**2**
						4/HD					**4/HD**													**4**	**4**
																				5/CT			**5**	**2**
															5/HD								**5**	**4**
																6/HD							**6**	**4**

Selection of shaft design, encoder system, mounting type and special designs on page 3/62.

1FG1107- ■ ■ . . . - . ■ . . -Z

© Siemens 2019

Gearbox size 79, 3-stage – 1FG1207

3

Technical specifications

Gearbox type *D79*

Servo geared motor Type	i	R_{ex}	M_{2rated} Nm	M_{2max} Nm	$M_{2Em.Off}$ Nm	n_{2max} rpm	n_{1max} rpm	φ [1] '	F_{R2} N	F_{R2max} N	c_T Nm/ '	J_G 10^{-4} kgm^2
1FG1207-.....-..S1	330.23	369861/1120	840	1010	1420	14	4500	6.14	13400	11300	48.2	0.17
1FG1207-.....-..R1	300.21	369861/1232	840	1010	1420	15	4500	6.14	13400	11300	48.2	0.2
1FG1207-.....-..Q1	255.33	57195/224	840	1010	1420	18	4500	6.15	13400	11300	48.2	0.25
1FG1207-.....-..P1	232.12	285975/1232	840	1010	1420	19	4500	6.15	13400	11300	48.2	0.3
1FG1207-.....-..N1	207.1	92783/448	840	1010	1420	22	4500	6.16	13400	11300	48.2	0.34
1FG1207-.....-..M1	185.7	57195/308	840	1010	1420	24	4500	6.17	13400	11300	48.2	0.41
1FG1207-.....-..L1	167.39	74989/448	840	1000	1420	27	4500	6.17	13400	11500	48.2	0.48
1FG1207-.....-..K1	154.51	224967/1456	840	995	1420	29	4500	6.17	13400	11600	48.2	0.57
1FG1207-.....-..J1	141.04	110577/784	840	985	1420	32	4500	6.18	13400	11700	48.2	0.65
1FG1207-.....-..H1	117.03	209715/1792	840	965	1420	38	4500	6.20	13400	12000	48.2	0.81
1FG1207-.....-..G1	110.14	209715/1904	840	960	1420	41	4500	6.20	13400	12100	48.2	0.92
1FG1207-.....-..F1	104.03	69905/672	840	955	1420	43	4500	6.20	13400	12200	48.2	1.1
1FG1207-.....-..E1	88.52	49569/560	840	935	1420	51	4500	6.22	13400	12500	48.2	1.2
1FG1207-.....-..D1	75.83	26691/352	840	920	1420	59	4500	6.22	13400	12700	48.2	1.5
1FG1207-.....-..C1	66.67	59737/896	840	910	1420	67	4500	6.22	13400	12800	48.2	1.7
1FG1207-.....-..B1	56.25	72447/1288	840	890	1420	80	4500	6.22	13400	13000	48.2	2.2
1FG1207-.....-..A1	49.02	34317/700	840	890	1420	92	4500	6.22	12600	11900	48.2	2.7

Selection and ordering data

Shaft design, encoder system, mounting type and special designs

Gearbox type *D79*

			Servo helical geared motors SIMOTICS S-1FG1 Article No.				
			1FG1207- ■ ■ . . . - . ■ . .				**-Z**
Shaft design:	Solid shaft with feather keyway	– Design 1		**1**			
		– Design 2		**2**			
		– Design 3		**3**			
Order codes and Descriptions see chapter "Options"	Special shaft design			**9**			
Encoder system for motors with DRIVE-CLiQ interface:	AS20DQI encoder				**Q**		
	AM20DQI encoder				**R**		
	R14DQ resolver				**P**		
	R15DQ resolver				**U**		
Order codes and Descriptions see chapter "Options"	Special version encoder system				**Z**		
Mounting type:	Foot-mounted design					**A**	
	Foot/flange-mounted design					**B**	
	Flange-mounted design					**F**	
	Housing flange design					**H**	
Special designs (Options): Order codes and Descriptions see chapter "Options" The following order codes must be added to each article number: • Oil type – order codes **K06** or **K11** • Mounting position – order codes **D01** ... **D06**							**-Z**

Selection of 3-stages servo helical geared motors with gearbox size 79 from next page.

1FG1207- . . ■ ■ ■ - ■ . ■ ■ **-Z**

[1] Data are for option reduced-backlash version – order code **G99** required.

© Siemens 2019

Selection and ordering data (continued)

For line voltage 380 ... 480 V 3 AC (DC link voltage 510 ... 720 V DC) **– gearbox type** ***D79***

Geared motor torque at 1450 rpm
Note: All values in **bold** print are maximum gearbox values.
M_{2dyn}
Nm

Servo helical geared motors SIMOTICS S-1FG1
Article No.

Max. output speed n_{2max} = **14 rpm**, Transmission ratio i = **330.23**																						
–	–	–	–	–	–	–	–	–	–	–	–	–	–	–	–	–	–	–	–	–	–	1FG1207- . . ■ ■ 6 - ■ . S1 -Z
–	–	–	–	–	–	–	**1010**	**1010**	**1010**	**1010**	**1010**	–	–	–	–	–	–	–	–	–	–	1FG1207- . . ■ ■ 4 - ■ . S1 -Z
–	–	–	–	–	–	–	**1010**	**1010**	**1010**	**1010**	**1010**	–	–	–	–	–	–	–	–	–	–	1FG1207- . . ■ ■ 3 - ■ . S1 -Z
–	–	–	–	–	–	–	**1010**	–	**1010**	**1010**	**1010**	–	–	–	–	–	–	–	–	–	–	1FG1207- . . ■ ■ 2 - ■ . S1 -Z
Max. output speed n_{2max} = **15 rpm**, Transmission ratio i = **300.21**																						
–	–	–	–	–	–	–	–	–	–	–	–	–	–	–	–	–	–	–	–	–	–	1FG1207- . . ■ ■ 6 - ■ . R1 -Z
–	–	–	–	–	–	–	**1010**	**1010**	**1010**	**1010**	**1010**	–	–	–	–	–	–	–	–	–	–	1FG1207- . . ■ ■ 4 - ■ . R1 -Z
–	–	–	–	–	–	–	**1010**	**1010**	**1010**	**1010**	**1010**	–	–	–	–	–	–	–	–	–	–	1FG1207- . . ■ ■ 3 - ■ . R1 -Z
–	–	–	–	–	–	–	**1010**	–	**1010**	**1010**	**1010**	–	–	–	–	–	–	–	–	–	–	1FG1207- . . ■ ■ 2 - ■ . R1 -Z
Max. output speed n_{2max} = **18 rpm**, Transmission ratio i = **255.33**																						
–	–	–	–	–	–	–	–	–	–	–	–	–	–	–	–	–	–	–	–	–	–	1FG1207- . . ■ ■ 6 - ■ . Q1 -Z
–	–	–	–	–	–	–	**1010**	**1010**	**1010**	**1010**	**1010**	–	–	–	–	–	–	–	–	–	–	1FG1207- . . ■ ■ 4 - ■ . Q1 -Z
–	–	–	–	–	–	–	**1010**	**1010**	**1010**	**1010**	**1010**	–	–	–	–	–	–	–	–	–	–	1FG1207- . . ■ ■ 3 - ■ . Q1 -Z
–	–	–	–	–	–	–	**1010**	–	**1010**	**1010**	**1010**	–	–	–	–	–	–	–	–	–	–	1FG1207- . . ■ ■ 2 - ■ . Q1 -Z
Max. output speed n_{2max} = **19 rpm**, Transmission ratio i = **232.12**																						
–	–	–	–	–	–	–	–	–	–	–	–	–	–	–	–	–	–	–	–	–	–	1FG1207- . . ■ ■ 6 - ■ . P1 -Z
–	–	–	–	–	–	–	**1010**	**1010**	**1010**	**1010**	**1010**	–	–	–	–	–	–	–	–	–	–	1FG1207- . . ■ ■ 4 - ■ . P1 -Z
–	–	–	–	–	–	–	**1010**	**1010**	**1010**	**1010**	**1010**	–	–	–	–	–	–	–	–	–	–	1FG1207- . . ■ ■ 3 - ■ . P1 -Z
–	–	–	–	–	–	–	**1010**	–	**1010**	**1010**	**1010**	–	–	–	–	–	–	–	–	–	–	1FG1207- . . ■ ■ 2 - ■ . P1 -Z
Max. output speed n_{2max} = **22 rpm**, Transmission ratio i = **207.1**																						
–	–	–	–	–	–	–	–	–	–	–	–	–	–	–	–	–	–	–	–	–	–	1FG1207- . . ■ ■ 6 - ■ . N1 -Z
–	–	–	–	–	–	–	**1010**	**1010**	**1010**	**1010**	**1010**	**1010**	**1010**	**1010**	–	–	–	–	–	–	–	1FG1207- . . ■ ■ 4 - ■ . N1 -Z
–	–	–	–	–	–	–	**1010**	**1010**	**1010**	**1010**	**1010**	**1010**	**1010**	**1010**	**1010**	**1010**	**1010**	–	–	–	–	1FG1207- . . ■ ■ 3 - ■ . N1 -Z
–	–	–	–	–	–	–	**1010**	–	**1010**	**1010**	**1010**	–	**1010**	**1010**	**1010**	**1010**	**1010**	–	–	–	–	1FG1207- . . ■ ■ 2 - ■ . N1 -Z
Max. output speed n_{2max} = **24 rpm**, Transmission ratio i = **185.7**																						
–	–	–	–	–	–	–	–	–	–	–	–	–	–	–	–	–	–	–	–	–	–	1FG1207- . . ■ ■ 6 - ■ . M1 -Z
–	–	–	–	–	–	–	**1010**	**1010**	**1010**	**1010**	**1010**	**1010**	**1010**	**1010**	–	–	–	–	–	–	–	1FG1207- . . ■ ■ 4 - ■ . M1 -Z
–	–	–	–	–	–	–	**1010**	**1010**	**1010**	**1010**	**1010**	**1010**	**1010**	**1010**	**1010**	**1010**	**1010**	–	–	–	–	1FG1207- . . ■ ■ 3 - ■ . M1 -Z
–	–	–	–	–	–	–	**1010**	–	**1010**	**1010**	**1010**	–	**1010**	**1010**	**1010**	**1010**	**1010**	–	–	–	–	1FG1207- . . ■ ■ 2 - ■ . M1 -Z
Max. output speed n_{2max} = **27 rpm**, Transmission ratio i = **167.39**																						
–	–	–	–	–	–	–	–	–	–	–	–	–	–	–	–	–	–	–	–	–	–	1FG1207- . . ■ ■ 6 - ■ . L1 -Z
–	–	–	–	–	–	–	**1000**	**1000**	**1000**	**1000**	**1000**	**1000**	**1000**	**1000**	–	–	–	–	–	–	–	1FG1207- . . ■ ■ 4 - ■ . L1 -Z
–	–	–	–	–	–	–	**1000**	**1000**	**1000**	**1000**	**1000**	**1000**	**1000**	**1000**	**1000**	**1000**	**1000**	–	–	–	–	1FG1207- . . ■ ■ 3 - ■ . L1 -Z
–	–	–	–	–	–	–	**1000**	–	**1000**	**1000**	**1000**	–	**1000**	**1000**	**1000**	**1000**	**1000**	–	–	–	–	1FG1207- . . ■ ■ 2 - ■ . L1 -Z

Motor shaft height:

36																						**C**
			48																			**D**
							63															**E**
												80										**F**
																		100				**G**

Motor length/motor version (**CT** = Compact, **HD** = High Dynamic)**:**

			0/CT				**0/CT**					**0/CT**						**0/CT**					**0**	**2**
													1/CT						**1/CT**				**1**	**2**
								1/HD															**1**	**4**
2/CT				**2/CT**					**2/CT**														**2**	**2**
										3/CT				**3/CT**						**3/CT**			**3**	**2**
	3/HD				**3/HD**											**4/CT**							**3**	**4**
		4/CT																					**4**	**2**
						4/HD					**4/HD**												**4**	**4**
																				5/CT			**5**	**2**
																	5/HD						**5**	**4**
																		6/HD					**6**	**4**

Selection of shaft design, encoder system, mounting type and special designs on page 3/66.

1FG1207- ■ ■ . . . . - . ■ . . **-Z**

© Siemens 2019

Gearbox size 79, 3-stage – 1FG1207

For line voltage 380 ... 480 V 3 AC (DC link voltage 510 ... 720 V DC) **– gearbox type** *D79*

Geared motor torque at 1450 rpm
Note: All values in **bold** print are maximum gearbox values.
M_{2dyn} Nm

36	48	63	80	100	Servo helical geared motors SIMOTICS S-1FG1 Article No.
Max. output speed n_{2max} = 29 rpm, Transmission ratio i = 154.51					
–	–	–	–	–	1FG1207- . . ■ ■ 6 - ■ . K1 -Z
–	995	995	995	–	1FG1207- . . ■ ■ 4 - ■ . K1 -Z
–	995	995	995	995	1FG1207- . . ■ ■ 3 - ■ . K1 -Z
–	995	995	995	995	1FG1207- . . ■ ■ 2 - ■ . K1 -Z
Max. output speed n_{2max} = 32 rpm, Transmission ratio i = 141.04					
–	–	–	–	–	1FG1207- . . ■ ■ 6 - ■ . J1 -Z
–	985	985	985	–	1FG1207- . . ■ ■ 4 - ■ . J1 -Z
–	985	985	985	985	1FG1207- . . ■ ■ 3 - ■ . J1 -Z
–	985	985	985	985	1FG1207- . . ■ ■ 2 - ■ . J1 -Z
Max. output speed n_{2max} = 38 rpm, Transmission ratio i = 117.03					
–	–	–	–	–	1FG1207- . . ■ ■ 6 - ■ . H1 -Z
–	965	965	965	–	1FG1207- . . ■ ■ 4 - ■ . H1 -Z
–	965	965	965	965	1FG1207- . . ■ ■ 3 - ■ . H1 -Z
–	965	965	965	965	1FG1207- . . ■ ■ 2 - ■ . H1 -Z
Max. output speed n_{2max} = 41 rpm, Transmission ratio i = 110.14					
–	–	–	–	–	1FG1207- . . ■ ■ 6 - ■ . G1 -Z
–	960	960	960	–	1FG1207- . . ■ ■ 4 - ■ . G1 -Z
–	960	960	960	960	1FG1207- . . ■ ■ 3 - ■ . G1 -Z
–	960	960	960	960	1FG1207- . . ■ ■ 2 - ■ . G1 -Z
Max. output speed n_{2max} = 43 rpm, Transmission ratio i = 104.03					
–	–	–	–	–	1FG1207- . . ■ ■ 6 - ■ . F1 -Z
–	955	955	955	–	1FG1207- . . ■ ■ 4 - ■ . F1 -Z
–	955	955	955	955	1FG1207- . . ■ ■ 3 - ■ . F1 -Z
–	955	955	955	955	1FG1207- . . ■ ■ 2 - ■ . F1 -Z
Max. output speed n_{2max} = 51 rpm, Transmission ratio i = 88.52					
–	–	–	–	–	1FG1207- . . ■ ■ 6 - ■ . E1 -Z
–	935	935	935	–	1FG1207- . . ■ ■ 4 - ■ . E1 -Z
–	935	935	935	935	1FG1207- . . ■ ■ 3 - ■ . E1 -Z
–	935	935	935	935	1FG1207- . . ■ ■ 2 - ■ . E1 -Z
Max. output speed n_{2max} = 59 rpm, Transmission ratio i = 75.83					
–	–	–	–	–	1FG1207- . . ■ ■ 6 - ■ . D1 -Z
–	920	920	920	–	1FG1207- . . ■ ■ 4 - ■ . D1 -Z
–	920	920	920	920	1FG1207- . . ■ ■ 3 - ■ . D1 -Z
–	920	920	920	920	1FG1207- . . ■ ■ 2 - ■ . D1 -Z
Max. output speed n_{2max} = 67 rpm, Transmission ratio i = 66.67					
–	–	–	–	–	1FG1207- . . ■ ■ 6 - ■ . C1 -Z
–	910	910	910	–	1FG1207- . . ■ ■ 4 - ■ . C1 -Z
–	910	910	910	910	1FG1207- . . ■ ■ 3 - ■ . C1 -Z
–	910	910	910	910	1FG1207- . . ■ ■ 2 - ■ . C1 -Z

Motor shaft height:

36	48	63	80	100	
					C
					D
					E
					F
					G

Motor length/motor version (**CT** = Compact, **HD** = High Dynamic)**:**

36	48	63	80	100		
	0/CT	0/CT	0/CT	0/CT	0	2
			1/CT	1/CT	1	2
		1/HD			1	4
2/CT	2/CT	2/CT			2	2
		3/CT	3/CT	3/CT	3	2
3/HD	3/HD				3	4
4/CT			4/CT		4	2
	4/HD	4/HD			4	4
				5/CT	5	2
			5/HD		5	4
			6/HD		6	4

Selection of shaft design, encoder system, mounting type and special designs on page 3/66.

1FG1207- ■ ■ . . . - . ■ . . -Z

© Siemens 2019

For line voltage 380 ... 480 V 3 AC (DC link voltage 510 ... 720 V DC) **– gearbox type** ***D79***

Geared motor torque at 1450 rpm
Note: All values in **bold** print are maximum gearbox values.
M_{2dyn}
Nm

Servo helical geared motors SIMOTICS S-1FG1
Article No.

Max. output speed n_{2max} = **80 rpm**, Transmission ratio i = **56.25**																						
–	–	–	–	–	–	–	–	–	–	–	–	–	–	–	–	–	–	–	–	–	–	1FG1207- . . ■ ■ 6 - ■ . B1 -Z
–	–	–	–	–	–	–	**890**	**890**	**890**	**890**	**890**	**890**	**890**	**890**	–	–	–	–	–	–	–	1FG1207- . . ■ ■ 4 - ■ . B1 -Z
–	–	–	–	–	–	–	**890**	**890**	**890**	**890**	**890**	**890**	**890**	**890**	**890**	**890**	**890**	**890**	**890**	**890**	**890**	1FG1207- . . ■ ■ 3 - ■ . B1 -Z
–	–	–	–	–	–	–	**890**	–	**890**	**890**	**890**	–	**890**	**890**	**890**	**890**	**890**	**890**	**890**	**890**	**890**	1FG1207- . . ■ ■ 2 - ■ . B1 -Z
Max. output speed n_{2max} = **92 rpm**, Transmission ratio i = **49.02**																						
–	–	–	–	–	–	–	–	–	–	–	–	–	–	–	–	–	–	–	–	–	–	1FG1207- . . ■ ■ 6 - ■ . A1 -Z
–	–	–	–	–	–	–	815	785	**890**	**890**	**890**	**890**	**890**	**890**	–	–	–	–	–	–	–	1FG1207- . . ■ ■ 4 - ■ . A1 -Z
–	–	–	–	–	–	–	815	785	**890**	**890**	**890**	**890**	**890**	**890**	**890**	**890**	**890**	**890**	**890**	**890**	**890**	1FG1207- . . ■ ■ 3 - ■ . A1 -Z
–	–	–	–	–	–	–	815	–	**890**	**890**	**890**	–	**890**	**890**	**890**	**890**	**890**	**890**	**890**	**890**	**890**	1FG1207- . . ■ ■ 2 - ■ . A1 -Z

Motor shaft height:

36																						**C**
			48																			**D**
							63															**E**
												80										**F**
																	100					**G**

Motor length/motor version (**CT** = Compact, **HD** = High Dynamic)**:**

			0/CT				**0/CT**					**0/CT**					**0/CT**					**0**	**2**
													1/CT					**1/CT**				**1**	**2**
								1/HD														**1**	**4**
2/CT				**2/CT**					**2/CT**													**2**	**2**
										3/CT				**3/CT**					**3/CT**			**3**	**2**
	3/HD				**3/HD**																	**3**	**4**
		4/CT														**4/CT**						**4**	**2**
						4/HD					**4/HD**											**4**	**4**
																				5/CT		**5**	**2**
																	5/HD					**5**	**4**
																		6/HD				**6**	**4**

Selection of shaft design, encoder system, mounting type and special designs on page 3/66.

1FG1207- ■ ■ . . . . - . ■ . . **-Z**

© Siemens 2019

3

Technical specifications

Gearbox type *Z89*

Servo geared motor Type	i	R_{ex}	M_{2rated} Nm	M_{2max} Nm	$M_{2Em.Off}$ Nm	n_{2max} rpm	n_{1max} rpm	φ [1] '	F_{R2} N	F_{R2max} N	c_T Nm/ '	J_G 10^{-4} kgm^2
1FG1108-.....-..A2	57.36	2581/45	1680	1890	2850	78	4500	5.39	18500	18500	89.1	1.3
1FG1108-.....-..X1	51.78	2848/55	1680	1890	2850	87	4500	5.40	18500	18500	89.1	1.5
1FG1108-.....-..W1	46.97	1691/36	1680	1890	2850	96	4500	5.42	18500	18500	89	1.7
1FG1108-.....-..V1	43.36	1691/39	1680	1890	2850	104	4500	5.42	18500	18500	89.1	2
1FG1108-.....-..U1	39.41	2759/70	1680	1890	2850	114	4500	5.46	18500	18500	89.1	2.3
1FG1108-.....-..T1	33.38	267/8	1680	1880	2850	135	4500	5.51	18500	18500	89	2.8
1FG1108-.....-..S1	31.41	534/17	1680	1880	2850	143	4500	5.51	18500	18500	88.9	2.8
1FG1108-.....-..R1	29.01	3916/135	1680	1880	2850	155	4500	5.55	18500	18200	89.2	4.3
1FG1108-.....-..Q1	25.81	2581/100	1680	1880	2850	174	4500	5.57	18500	16600	89.1	5.3
1FG1108-.....-..P1	22.92	1513/66	1680	1880	2850	196	4500	5.61	17500	15000	89.1	6.4
1FG1108-.....-..N1	20.52	7387/360	1680	1860	2850	212	4350	5.66	16100	13900	89	6.4
1FG1108-.....-..M1	17.54	6052/345	1680	1790	2850	248	4350	5.75	14200	12900	88.9	7.5
1FG1108-.....-..L1	15.66	1958/125	1680	1740	2850	278	4350	6.03	12900	12200	88.9	9.5
1FG1108-.....-..K1	13.84	623/45	1680	1680	2850	314	4350	6.10	11600	11600	88.7	10.9
1FG1108-.....-..J1	12.15	3827/315	1630	1630	2770	358	4350	5.86	10800	10800	88.8	15.1
1FG1108-.....-..H1	10.58	3649/345	1590	1590	2700	411	4350	5.96	10000	10000	88.7	18.6
1FG1108-.....-..G1	9.04	2848/315	1560	1560	2650	481	4350	6.11	9170	9170	88.7	24
1FG1108-.....-..F1	7.74	178/23	1530	1530	2600	562	4350	6.27	8360	8360	88.5	30
1FG1108-.....-..E1	6.89	62/9	1050	1170	1780	653	4500	8.60	7400	7400	66	12.4
1FG1108-.....-..D1	6.05	2666/441	1060	1300	1800	744	4500	8.82	5360	4260	66.3	17.1
1FG1108-.....-..C1	5.26	2542/483	1060	1300	1800	856	4500	9.03	4250	3150	66.1	21
1FG1108-.....-..B1	4.5	1984/441	1060	1220	1800	967	4350	9.34	3200	3200	66	28
1FG1108-.....-..A1	3.85	620/161	1060	1110	1800	1130	4350	9.66	3800	3800	65.7	35

Selection and ordering data

Shaft design, encoder system, mounting type and special designs

Gearbox type *Z89*

			Servo helical geared motors SIMOTICS S-1FG1 Article No. 1FG1108- ■■....-.■... -Z
Shaft design:	Solid shaft with feather keyway	– Design 1	**1**
		– Design 3	**3**
Order codes and Descriptions see chapter "Options"	Special shaft design		**9**
Encoder system for motors with DRIVE-CLiQ interface:	AS20DQI encoder		**Q**
	AM20DQI encoder		**R**
	R14DQ resolver		**P**
	R15DQ resolver		**U**
Order codes and Descriptions see chapter "Options"	Special version encoder system		**Z**
Mounting type:	Foot-mounted design		**A**
	Foot/flange-mounted design		**B**
	Flange-mounted design		**F**
	Housing flange design		**H**
Special designs (Options): Order codes and Descriptions see chapter "Options" The following order codes must be added to each article number: • Oil type – order codes **K06** or **K11** • Mounting position – order codes **D01** ... **D06**			**-Z**

Selection of 2-stages servo helical geared motors with gearbox size 89 from next page. **1FG1108- ..■■■-■.■■-Z**

[1] Data are for option reduced-backlash version – order code **G99** required.

© Siemens 2019

Selection and ordering data (continued)

For line voltage 380 ... 480 V 3 AC (DC link voltage 510 ... 720 V DC) **– gearbox type** ***Z89***

Geared motor torque at 1450 rpm
Note: All values in **bold** print are maximum gearbox values.
M_{2dyn}
Nm

| | | |

© Siemens 2019

Gearbox size 89, 2-stage – 1FG1108

For line voltage 380 ... 480 V 3 AC (DC link voltage 510 ... 720 V DC) **– gearbox type** ***Z89***

Geared motor torque at 1450 rpm
Note: All values in **bold** print are maximum gearbox values.
M_{2dyn} Nm

1	2	3	4	5	6	7	8	9	10	11	12	13	14	15	16	17	18	19	20	21	22	Servo helical geared motors SIMOTICS S-1FG1 Article No.
Max. output speed n_{2max} = 155 rpm, Transmission ratio i = 29.01																						
–	–	–	–	–	–	–	–	–	–	–	–	–	–	–	–	–	–	–	–	–	–	1FG1108- . . ■ ■ 6 - ■ . R1 -Z
–	–	–	–	–	–	–	495	475	720	970	885	690	1020	1380	–	–	–	–	–	–	–	1FG1108- . . ■ ■ 4 - ■ . R1 -Z
–	–	–	–	–	–	–	495	475	720	970	885	690	1020	1380	1690	1800	**1880**	1520	**1880**	**1880**	**1880**	1FG1108- . . ■ ■ 3 - ■ . R1 -Z
–	–	–	–	–	–	–	495	–	720	970	885	–	1020	1380	1690	1800	**1880**	1520	**1880**	**1880**	**1880**	1FG1108- . . ■ ■ 2 - ■ . R1 -Z
Max. output speed n_{2max} = 174 rpm, Transmission ratio i = 25.81																						
–	–	–	–	–	–	–	–	–	–	–	–	–	–	–	–	–	–	–	–	–	–	1FG1108- . . ■ ■ 6 - ■ . Q1 -Z
–	–	–	–	–	–	–	440	425	640	860	785	615	910	1230	–	–	–	–	–	–	–	1FG1108- . . ■ ■ 4 - ■ . Q1 -Z
–	–	–	–	–	–	–	440	425	640	860	785	615	910	1230	1500	1600	**1880**	1350	**1880**	**1880**	**1880**	1FG1108- . . ■ ■ 3 - ■ . Q1 -Z
–	–	–	–	–	–	–	440	–	640	860	785	–	910	1230	1500	1600	**1880**	1350	**1880**	**1880**	**1880**	1FG1108- . . ■ ■ 2 - ■ . Q1 -Z
Max. output speed n_{2max} = 196 rpm, Transmission ratio i = 22.92																						
–	–	–	–	–	–	–	–	–	–	–	–	–	–	–	–	–	–	–	–	–	–	1FG1108- . . ■ ■ 6 - ■ . P1 -Z
–	–	–	–	–	–	–	390	375	570	765	700	545	810	1090	–	–	–	–	–	–	–	1FG1108- . . ■ ■ 4 - ■ . P1 -Z
–	–	–	–	–	–	–	390	375	570	765	700	545	810	1090	1330	1420	**1880**	1200	1750	**1880**	**1880**	1FG1108- . . ■ ■ 3 - ■ . P1 -Z
–	–	–	–	–	–	–	390	–	570	765	700	–	810	1090	1330	1420	**1880**	1200	1750	**1880**	**1880**	1FG1108- . . ■ ■ 2 - ■ . P1 -Z
Max. output speed n_{2max} = 212 rpm, Transmission ratio i = 20.52																						
–	–	–	–	–	–	–	–	–	–	–	–	–	–	–	–	–	–	–	–	–	–	1FG1108- . . ■ ■ 6 - ■ . N1 -Z
–	–	–	–	–	–	–	350	340	510	685	625	490	725	980	–	–	–	–	–	–	–	1FG1108- . . ■ ■ 4 - ■ . N1 -Z
–	–	–	–	–	–	–	350	340	510	685	625	490	725	980	1200	1270	1850	1080	1570	**1860**	**1860**	1FG1108- . . ■ ■ 3 - ■ . N1 -Z
–	–	–	–	–	–	–	350	–	510	685	625	–	725	980	1200	1270	1850	1080	1570	**1860**	**1860**	1FG1108- . . ■ ■ 2 - ■ . N1 -Z
Max. output speed n_{2max} = 248 rpm, Transmission ratio i = 17.54																						
–	–	–	–	–	–	–	–	–	–	–	–	–	–	–	–	–	–	–	–	–	–	1FG1108- . . ■ ■ 6 - ■ . M1 -Z
–	–	–	–	–	–	–	300	290	435	585	535	420	620	840	–	–	–	–	–	–	–	1FG1108- . . ■ ■ 4 - ■ . M1 -Z
–	–	–	–	–	–	–	300	290	435	585	535	420	620	840	1020	1090	1580	925	1340	**1790**	**1790**	1FG1108- . . ■ ■ 3 - ■ . M1 -Z
–	–	–	–	–	–	–	300	–	435	585	535	–	620	840	1020	1090	1580	925	1340	**1790**	**1790**	1FG1108- . . ■ ■ 2 - ■ . M1 -Z
Max. output speed n_{2max} = 278 rpm, Transmission ratio i = 15.66																						
–	–	–	–	–	–	–	–	–	–	–	–	–	–	–	–	–	–	–	–	–	–	1FG1108- . . ■ ■ 6 - ■ . L1 -Z
–	–	–	–	–	–	–	270	260	390	525	480	375	555	750	–	–	–	–	–	–	–	1FG1108- . . ■ ■ 4 - ■ . L1 -Z
–	–	–	–	–	–	–	270	260	390	525	480	375	555	750	915	975	1410	825	1200	1620	**1740**	1FG1108- . . ■ ■ 3 - ■ . L1 -Z
–	–	–	–	–	–	–	270	–	390	525	480	–	555	750	915	975	1410	825	1200	1620	**1740**	1FG1108- . . ■ ■ 2 - ■ . L1 -Z
Max. output speed n_{2max} = 314 rpm, Transmission ratio i = 13.84																						
–	–	–	–	–	–	–	–	–	–	–	–	–	–	–	–	–	–	–	–	–	–	1FG1108- . . ■ ■ 6 - ■ . K1 -Z
–	–	–	–	–	–	–	–	–	–	–	–	330	490	665	–	–	–	–	–	–	–	1FG1108- . . ■ ■ 4 - ■ . K1 -Z
–	–	–	–	–	–	–	–	–	–	–	–	330	490	665	810	860	1250	730	1060	1430	**1680**	1FG1108- . . ■ ■ 3 - ■ . K1 -Z
–	–	–	–	–	–	–	–	–	–	–	–	–	490	665	810	860	1250	730	1060	1430	**1680**	1FG1108- . . ■ ■ 2 - ■ . K1 -Z
Max. output speed n_{2max} = 358 rpm, Transmission ratio i = 12.15																						
–	–	–	–	–	–	–	–	–	–	–	–	–	–	–	–	–	–	–	–	–	–	1FG1108- . . ■ ■ 6 - ■ . J1 -Z
–	–	–	–	–	–	–	–	–	–	–	–	290	430	580	–	–	–	–	–	–	–	1FG1108- . . ■ ■ 4 - ■ . J1 -Z
–	–	–	–	–	–	–	–	–	–	–	–	290	430	580	710	755	1090	640	930	1250	**1630**	1FG1108- . . ■ ■ 3 - ■ . J1 -Z
–	–	–	–	–	–	–	–	–	–	–	–	–	430	580	710	755	1090	640	930	1250	**1630**	1FG1108- . . ■ ■ 2 - ■ . J1 -Z

Motor shaft height:

1	2	3	4	5	6	7	8	9	10	11	12	13	14	15	16	17	18	19	20	21	22	
36																						C
			48																			D
							63															E
												80										F
																		100				G

Motor length/motor version (**CT** = Compact, **HD** = High Dynamic)**:**

1	2	3	4	5	6	7	8	9	10	11	12	13	14	15	16	17	18	19	20	21	22		
			0/CT				**0/CT**					**0/CT**						**0/CT**				0	2
													1/CT						**1/CT**			1	2
								1/HD														1	4
2/CT				**2/CT**					**2/CT**													2	2
										3/CT				**3/CT**					**3/CT**			3	2
	3/HD				**3/HD**																	3	4
		4/CT													**4/CT**							4	2
						4/HD					**4/HD**											4	4
																			5/CT			5	2
																5/HD						5	4
																	6/HD					6	4

Selection of shaft design, encoder system, mounting type and special designs on page 3/70.

1FG1108- ■ ■ . . . - . ■ . . -Z

© Siemens 2019

Gearbox size 89, 2-stage – 1FG1108

For line voltage 380 ... 480 V 3 AC (DC link voltage 510 ... 720 V DC) **– gearbox type** *Z89*

Geared motor torque at 1450 rpm
Note: All values in **bold** print are maximum gearbox values.
M_{2dyn}
Nm

																							Servo helical geared motors SIMOTICS S-1FG1 Article No.
Max. output speed n_{2max} = **411 rpm**, Transmission ratio i = **10.58**																							
–	–	–	–	–	–	–	–	–	–	–	–	–	–	–	–	–	–	–	–	–	–	–	1FG1108- . . ■ ■ 6 - ■ . H1 -Z
–	–	–	–	–	–	–	–	–	–	–	–	250	375	505	–	–	–	–	–	–	–	–	1FG1108- . . ■ ■ 4 - ■ . H1 -Z
–	–	–	–	–	–	–	–	–	–	–	–	250	375	505	620	660	955	555	810	1090	1520		1FG1108- . . ■ ■ 3 - ■ . H1 -Z
–	–	–	–	–	–	–	–	–	–	–	–	–	375	505	620	660	955	555	810	1090	1520		1FG1108- . . ■ ■ 2 - ■ . H1 -Z
Max. output speed n_{2max} = **481 rpm**, Transmission ratio i = **9.04**																							
–	–	–	–	–	–	–	–	–	–	–	–	–	–	–	–	–	–	–	–	–	–	–	1FG1108- . . ■ ■ 6 - ■ . G1 -Z
–	–	–	–	–	–	–	–	–	–	–	–	215	320	430	–	–	–	–	–	–	–	–	1FG1108- . . ■ ■ 4 - ■ . G1 -Z
–	–	–	–	–	–	–	–	–	–	–	–	215	320	430	525	560	815	475	690	935	1300		1FG1108- . . ■ ■ 3 - ■ . G1 -Z
–	–	–	–	–	–	–	–	–	–	–	–	–	320	430	525	560	815	475	690	935	1300		1FG1108- . . ■ ■ 2 - ■ . G1 -Z
Max. output speed n_{2max} = **562 rpm**, Transmission ratio i = **7.74**																							
–	–	–	–	–	–	–	–	–	–	–	–	–	–	–	–	–	–	–	–	–	–	–	1FG1108- . . ■ ■ 6 - ■ . F1 -Z
–	–	–	–	–	–	–	–	–	–	–	–	186	275	370	–	–	–	–	–	–	–	–	1FG1108- . . ■ ■ 4 - ■ . F1 -Z
–	–	–	–	–	–	–	–	–	–	–	–	186	275	370	450	480	700	405	595	800	1110		1FG1108- . . ■ ■ 3 - ■ . F1 -Z
–	–	–	–	–	–	–	–	–	–	–	–	–	275	370	450	480	700	405	595	800	1110		1FG1108- . . ■ ■ 2 - ■ . F1 -Z
Max. output speed n_{2max} = **653 rpm**, Transmission ratio i = **6.89**																							
–	–	–	–	–	–	–	–	–	–	–	–	–	–	–	–	–	–	–	–	–	–	–	1FG1108- . . ■ ■ 6 - ■ . E1 -Z
–	–	–	–	–	–	–	–	–	–	–	–	167	245	330	–	–	–	–	–	–	–	–	1FG1108- . . ■ ■ 4 - ■ . E1 -Z
–	–	–	–	–	–	–	–	–	–	–	–	167	245	330	405	435	630	365	535	720	1000		1FG1108- . . ■ ■ 3 - ■ . E1 -Z
–	–	–	–	–	–	–	–	–	–	–	–	–	245	330	405	435	630	365	535	720	1000		1FG1108- . . ■ ■ 2 - ■ . E1 -Z
Max. output speed n_{2max} = **744 rpm**, Transmission ratio i = **6.05**																							
–	–	–	–	–	–	–	–	–	–	–	–	–	–	–	–	–	–	–	–	–	–	–	1FG1108- . . ■ ■ 6 - ■ . D1 -Z
–	–	–	–	–	–	–	–	–	–	–	–	146	215	290	–	–	–	–	–	–	–	–	1FG1108- . . ■ ■ 4 - ■ . D1 -Z
–	–	–	–	–	–	–	–	–	–	–	–	146	215	290	355	380	550	320	465	630	880		1FG1108- . . ■ ■ 3 - ■ . D1 -Z
–	–	–	–	–	–	–	–	–	–	–	–	–	215	290	355	380	550	320	465	630	880		1FG1108- . . ■ ■ 2 - ■ . D1 -Z
Max. output speed n_{2max} = **856 rpm**, Transmission ratio i = **5.26**																							
–	–	–	–	–	–	–	–	–	–	–	–	–	–	–	–	–	–	–	–	–	–	–	1FG1108- . . ■ ■ 6 - ■ . C1 -Z
–	–	–	–	–	–	–	–	–	–	–	–	127	189	255	–	–	–	–	–	–	–	–	1FG1108- . . ■ ■ 4 - ■ . C1 -Z
–	–	–	–	–	–	–	–	–	–	–	–	127	189	255	310	330	480	280	405	550	765		1FG1108- . . ■ ■ 3 - ■ . C1 -Z
–	–	–	–	–	–	–	–	–	–	–	–	–	189	255	310	330	480	280	405	550	765		1FG1108- . . ■ ■ 2 - ■ . C1 -Z
Max. output speed n_{2max} = **967 rpm**, Transmission ratio i = **4.5**																							
–	–	–	–	–	–	–	–	–	–	–	–	–	–	–	–	–	–	–	–	–	–	–	1FG1108- . . ■ ■ 6 - ■ . B1 -Z
–	–	–	–	–	–	–	–	–	–	–	–	109	161	215	–	–	–	–	–	–	–	–	1FG1108- . . ■ ■ 4 - ■ . B1 -Z
–	–	–	–	–	–	–	–	–	–	–	–	109	161	215	265	280	410	240	345	470	655		1FG1108- . . ■ ■ 3 - ■ . B1 -Z
–	–	–	–	–	–	–	–	–	–	–	–	–	161	215	265	280	410	240	345	470	655		1FG1108- . . ■ ■ 2 - ■ . B1 -Z
Max. output speed n_{2max} = **1130 rpm**, Transmission ratio i = **3.85**																							
–	–	–	–	–	–	–	–	–	–	–	–	–	–	–	–	–	–	–	–	–	–	–	1FG1108- . . ■ ■ 6 - ■ . A1 -Z
–	–	–	–	–	–	–	–	–	–	–	–	93	138	187	–	–	–	–	–	–	–	–	1FG1108- . . ■ ■ 4 - ■ . A1 -Z
–	–	–	–	–	–	–	–	–	–	–	–	93	138	187	225	240	350	205	295	400	560		1FG1108- . . ■ ■ 3 - ■ . A1 -Z
–	–	–	–	–	–	–	–	–	–	–	–	–	138	187	225	240	350	205	295	400	560		1FG1108- . . ■ ■ 2 - ■ . A1 -Z

Motor shaft height:

36																							C
			48																				D
						63																	E
												80											F
																		100					G

Motor length/motor version (**CT** = Compact, **HD** = High Dynamic)**:**

			0/CT				0/CT					0/CT						0/CT					0		2
													1/CT						1/CT				1		2
								1/HD															1		4
2/CT				2/CT					2/CT														2		2
										3/CT				3/CT						3/CT			3		2
	3/HD				3/HD																		3		4
		4/CT													4/CT								4		2
						4/HD					4/HD												4		4
																				5/CT			5		2
																5/HD							5		4
																	6/HD						6		4

Selection of shaft design, encoder system, mounting type and special designs on page 3/70.

1FG1108- ■ ■ . . . - . ■ . . -Z

© Siemens 2019

3

Technical specifications

Gearbox type *D89*

Servo geared motor Type	i	R_{ex}	M_{2rated} Nm	M_{2max} Nm	$M_{2Em.Off}$ Nm	n_{2max} rpm	n_{1max} rpm	φ [1] '	F_{R2} N	F_{R2max} N	c_T Nm/ '	J_G 10^{-4} kgm^2
1FG1208-.....-..S1	311.6	132432/425	1680	1930	2850	14	4500	5.73	18500	18500	96.2	0.41
1FG1208-.....-..R1	283.28	264864/935	1680	1930	2850	16	4500	5.73	18500	18500	96.2	0.5
1FG1208-.....-..Q1	254.09	64792/255	1680	1930	2850	18	4500	5.73	18500	18500	96.2	0.7
1FG1208-.....-..P1	228.45	42720/187	1680	1930	2850	20	4500	5.74	18500	18500	96.2	0.79
1FG1208-.....-..N1	206.62	52688/255	1680	1930	2850	22	4500	5.74	18500	18500	96.2	0.87
1FG1208-.....-..M1	190.73	210752/1105	1680	1930	2850	24	4500	5.74	18500	18500	96.2	1
1FG1208-.....-..L1	174.71	103952/595	1680	1930	2850	26	4500	5.75	18500	18500	96.2	1.3
1FG1208-.....-..K1	146.59	2492/17	1680	1930	2850	31	4500	5.70	18500	18500	96.2	1.4
1FG1208-.....-..J1	137.97	39872/289	1680	1930	2850	33	4500	5.70	18500	18500	96.2	1.6
1FG1208-.....-..H1	126.58	5696/45	1680	1920	2850	36	4500	5.71	18500	18500	96.2	1.7
1FG1208-.....-..G1	110.57	46992/425	1680	1920	2850	41	4500	5.72	18500	18500	96.2	2.5
1FG1208-.....-..F1	98.99	18512/187	1680	1920	2850	45	4500	5.72	18500	18500	96.2	3
1FG1208-.....-..E1	86.56	22072/255	1680	1920	2850	52	4500	5.72	18500	18500	96.2	3.5
1FG1208-.....-..D1	74.3	8544/115	1680	1920	2850	61	4500	5.72	18500	18500	96.1	3.8
1FG1208-.....-..C1	65.67	139552/2125	1680	1920	2850	69	4500	5.72	18500	18500	96.1	4.6
1FG1208-.....-..B1	55.84	2848/51	1680	1890	2850	81	4500	5.72	18500	18500	96.1	6.4
1FG1208-.....-..A1	47.87	5696/119	1680	1890	2850	93	4444	5.72	18500	18500	96.1	8.5

Selection and ordering data

Shaft design, encoder system, mounting type and special designs

Gearbox type *D89*

			Servo helical geared motors SIMOTICS S-1FG1 Article No.
			1FG1208- ■ ■ . . . - . ■ . . -Z
Shaft design:	Solid shaft with feather keyway	– Design 1	**1**
		– Design 3	**3**
Order codes and Descriptions see chapter "Options"	Special shaft design		**9**
Encoder system for motors with DRIVE-CLiQ interface:	AS20DQI encoder		**Q**
	AM20DQI encoder		**R**
	R14DQ resolver		**P**
	R15DQ resolver		**U**
Order codes and Descriptions see chapter "Options"	Special version encoder system		**Z**
Mounting type:	Foot-mounted design		**A**
	Foot/flange-mounted design		**B**
	Flange-mounted design		**F**
	Housing flange design		**H**
Special designs (Options): Order codes and Descriptions see chapter "Options" The following order codes must be added to each article number: • Oil type – order codes **K06** or **K11** • Mounting position – order codes **D01** ... **D06**			**-Z**

Selection of 3-stages servo helical geared motors with gearbox size 89 from next page. 1FG1208- . . ■ ■ ■ - ■ . ■ ■ -Z

[1] Data are for option reduced-backlash version – order code **G99** required.

© Siemens 2019

Selection and ordering data (continued)

For line voltage 380 ... 480 V 3 AC (DC link voltage 510 ... 720 V DC) **– gearbox type** *D89*

Geared motor torque at 1450 rpm
Note: All values in **bold** print are maximum gearbox values.
M_{2dyn}
Nm

Servo helical geared motors SIMOTICS S-1FG1
Article No.

Max. output speed n_{2max} = **14 rpm**, Transmission ratio i = **311.6**																					
–	–	–	–	–	–	–	–	–	–	–	–	–	–	–	–	–	–	–	–	–	1FG1208- . . ■ ■ 6 - ■ . S1 -Z
–	–	–	–	–	–	–	**1930**	**1930**	**1930**	**1930**	**1930**	–	–	–	–	–	–	–	–	–	1FG1208- . . ■ ■ 4 - ■ . S1 -Z
–	–	–	–	–	–	–	**1930**	**1930**	**1930**	**1930**	**1930**	–	–	–	–	–	–	–	–	–	1FG1208- . . ■ ■ 3 - ■ . S1 -Z
–	–	–	–	–	–	–	**1930**	–	**1930**	**1930**	**1930**	–	–	–	–	–	–	–	–	–	1FG1208- . . ■ ■ 2 - ■ . S1 -Z
Max. output speed n_{2max} = **16 rpm**, Transmission ratio i = **283.28**																					
–	–	–	–	–	–	–	–	–	–	–	–	–	–	–	–	–	–	–	–	–	1FG1208- . . ■ ■ 6 - ■ . R1 -Z
–	–	–	–	–	–	–	**1930**	**1930**	**1930**	**1930**	**1930**	–	–	–	–	–	–	–	–	–	1FG1208- . . ■ ■ 4 - ■ . R1 -Z
–	–	–	–	–	–	–	**1930**	**1930**	**1930**	**1930**	**1930**	–	–	–	–	–	–	–	–	–	1FG1208- . . ■ ■ 3 - ■ . R1 -Z
–	–	–	–	–	–	–	**1930**	–	**1930**	**1930**	**1930**	–	–	–	–	–	–	–	–	–	1FG1208- . . ■ ■ 2 - ■ . R1 -Z
Max. output speed n_{2max} = **18 rpm**, Transmission ratio i = **254.09**																					
–	–	–	–	–	–	–	–	–	–	–	–	–	–	–	–	–	–	–	–	–	1FG1208- . . ■ ■ 6 - ■ . Q1 -Z
–	–	–	–	–	–	–	**1930**	**1930**	**1930**	**1930**	**1930**	**1930**	**1930**	**1930**	–	–	–	–	–	–	1FG1208- . . ■ ■ 4 - ■ . Q1 -Z
–	–	–	–	–	–	–	**1930**	**1930**	**1930**	**1930**	**1930**	**1930**	**1930**	**1930**	**1930**	**1930**	**1930**	–	–	–	1FG1208- . . ■ ■ 3 - ■ . Q1 -Z
–	–	–	–	–	–	–	**1930**	–	**1930**	**1930**	**1930**	–	**1930**	**1930**	**1930**	**1930**	**1930**	–	–	–	1FG1208- . . ■ ■ 2 - ■ . Q1 -Z
Max. output speed n_{2max} = **20 rpm**, Transmission ratio i = **228.45**																					
–	–	–	–	–	–	–	–	–	–	–	–	–	–	–	–	–	–	–	–	–	1FG1208- . . ■ ■ 6 - ■ . P1 -Z
–	–	–	–	–	–	–	**1930**	**1930**	**1930**	**1930**	**1930**	**1930**	**1930**	**1930**	–	–	–	–	–	–	1FG1208- . . ■ ■ 4 - ■ . P1 -Z
–	–	–	–	–	–	–	**1930**	**1930**	**1930**	**1930**	**1930**	**1930**	**1930**	**1930**	**1930**	**1930**	**1930**	–	–	–	1FG1208- . . ■ ■ 3 - ■ . P1 -Z
–	–	–	–	–	–	–	**1930**	–	**1930**	**1930**	**1930**	–	**1930**	**1930**	**1930**	**1930**	**1930**	–	–	–	1FG1208- . . ■ ■ 2 - ■ . P1 -Z
Max. output speed n_{2max} = **22 rpm**, Transmission ratio i = **206.62**																					
–	–	–	–	–	–	–	–	–	–	–	–	–	–	–	–	–	–	–	–	–	1FG1208- . . ■ ■ 6 - ■ . N1 -Z
–	–	–	–	–	–	–	**1930**	**1930**	**1930**	**1930**	**1930**	**1930**	**1930**	**1930**	–	–	–	–	–	–	1FG1208- . . ■ ■ 4 - ■ . N1 -Z
–	–	–	–	–	–	–	**1930**	**1930**	**1930**	**1930**	**1930**	**1930**	**1930**	**1930**	**1930**	**1930**	**1930**	–	–	–	1FG1208- . . ■ ■ 3 - ■ . N1 -Z
–	–	–	–	–	–	–	**1930**	–	**1930**	**1930**	**1930**	–	**1930**	**1930**	**1930**	**1930**	**1930**	–	–	–	1FG1208- . . ■ ■ 2 - ■ . N1 -Z
Max. output speed n_{2max} = **24 rpm**, Transmission ratio i = **190.73**																					
–	–	–	–	–	–	–	–	–	–	–	–	–	–	–	–	–	–	–	–	–	1FG1208- . . ■ ■ 6 - ■ . M1 -Z
–	–	–	–	–	–	–	**1930**	**1930**	**1930**	**1930**	**1930**	**1930**	**1930**	**1930**	–	–	–	–	–	–	1FG1208- . . ■ ■ 4 - ■ . M1 -Z
–	–	–	–	–	–	–	**1930**	**1930**	**1930**	**1930**	**1930**	**1930**	**1930**	**1930**	**1930**	**1930**	**1930**	–	–	–	1FG1208- . . ■ ■ 3 - ■ . M1 -Z
–	–	–	–	–	–	–	**1930**	–	**1930**	**1930**	**1930**	–	**1930**	**1930**	**1930**	**1930**	**1930**	–	–	–	1FG1208- . . ■ ■ 2 - ■ . M1 -Z
Max. output speed n_{2max} = **26 rpm**, Transmission ratio i = **174.71**																					
–	–	–	–	–	–	–	–	–	–	–	–	–	–	–	–	–	–	–	–	–	1FG1208- . . ■ ■ 6 - ■ . L1 -Z
–	–	–	–	–	–	–	**1930**	**1930**	**1930**	**1930**	**1930**	**1930**	**1930**	**1930**	–	–	–	–	–	–	1FG1208- . . ■ ■ 4 - ■ . L1 -Z
–	–	–	–	–	–	–	**1930**	**1930**	**1930**	**1930**	**1930**	**1930**	**1930**	**1930**	**1930**	**1930**	**1930**	**1930**	**1930**	**1930**	1FG1208- . . ■ ■ 3 - ■ . L1 -Z
–	–	–	–	–	–	–	**1930**	–	**1930**	**1930**	**1930**	–	**1930**	**1930**	**1930**	**1930**	**1930**	**1930**	**1930**	**1930**	1FG1208- . . ■ ■ 2 - ■ . L1 -Z

Motor shaft height:

| | | | | | | | | | | | | | | | | | | |

© Siemens 2019

Gearbox size 89, 3-stage – 1FG1208

For line voltage 380 ... 480 V 3 AC (DC link voltage 510 ... 720 V DC) **– gearbox type** *D89*

Geared motor torque at 1450 rpm
Note: All values in **bold** print are maximum gearbox values.

M_{2dyn} Nm

1	2	3	4	5	6	7	8	9	10	11	12	13	14	15	16	17	18	19	20	21	22	Servo helical geared motors SIMOTICS S-1FG1 Article No.
Max. output speed n_{2max} = 31 rpm, Transmission ratio i = 146.59																						
–	–	–	–	–	–	–	–	–	–	–	–	–	–	–	–	–	–	–	–	–	–	1FG1208- . . ■ ■ 6 - ■ . K1 -Z
–	–	–	–	–	–	–	**1930**	**1930**	**1930**	**1930**	**1930**	**1930**	**1930**	**1930**	–	–	–	–	–	–	–	1FG1208- . . ■ ■ 4 - ■ . K1 -Z
–	–	–	–	–	–	–	**1930**	**1930**	**1930**	**1930**	**1930**	**1930**	**1930**	**1930**	**1930**	**1930**	**1930**	**1930**	**1930**	**1930**	**1930**	1FG1208- . . ■ ■ 3 - ■ . K1 -Z
–	–	–	–	–	–	–	**1930**	–	**1930**	**1930**	**1930**	–	**1930**	**1930**	**1930**	**1930**	**1930**	**1930**	**1930**	**1930**	**1930**	1FG1208- . . ■ ■ 2 - ■ . K1 -Z
Max. output speed n_{2max} = 33 rpm, Transmission ratio i = 137.97																						
–	–	–	–	–	–	–	–	–	–	–	–	–	–	–	–	–	–	–	–	–	–	1FG1208- . . ■ ■ 6 - ■ . J1 -Z
–	–	–	–	–	–	–	**1930**	**1930**	**1930**	**1930**	**1930**	**1930**	**1930**	**1930**	–	–	–	–	–	–	–	1FG1208- . . ■ ■ 4 - ■ . J1 -Z
–	–	–	–	–	–	–	**1930**	**1930**	**1930**	**1930**	**1930**	**1930**	**1930**	**1930**	**1930**	**1930**	**1930**	**1930**	**1930**	**1930**	**1930**	1FG1208- . . ■ ■ 3 - ■ . J1 -Z
–	–	–	–	–	–	–	**1930**	–	**1930**	**1930**	**1930**	–	**1930**	**1930**	**1930**	**1930**	**1930**	**1930**	**1930**	**1930**	**1930**	1FG1208- . . ■ ■ 2 - ■ . J1 -Z
Max. output speed n_{2max} = 36 rpm, Transmission ratio i = 126.58																						
–	–	–	–	–	–	–	–	–	–	–	–	–	–	–	–	–	–	–	–	–	–	1FG1208- . . ■ ■ 6 - ■ . H1 -Z
–	–	–	–	–	–	–	**1920**	**1920**	**1920**	**1920**	**1920**	**1920**	**1920**	**1920**	–	–	–	–	–	–	–	1FG1208- . . ■ ■ 4 - ■ . H1 -Z
–	–	–	–	–	–	–	**1920**	**1920**	**1920**	**1920**	**1920**	**1920**	**1920**	**1920**	**1920**	**1920**	**1920**	**1920**	**1920**	**1920**	**1920**	1FG1208- . . ■ ■ 3 - ■ . H1 -Z
–	–	–	–	–	–	–	**1920**	–	**1920**	**1920**	**1920**	–	**1920**	**1920**	**1920**	**1920**	**1920**	**1920**	**1920**	**1920**	**1920**	1FG1208- . . ■ ■ 2 - ■ . H1 -Z
Max. output speed n_{2max} = 41 rpm, Transmission ratio i = 110.57																						
–	–	–	–	–	–	–	–	–	–	–	–	–	–	–	–	–	–	–	–	–	–	1FG1208- . . ■ ■ 6 - ■ . G1 -Z
–	–	–	–	–	–	–	**1830**	**1760**	**1920**	**1920**	**1920**	**1920**	**1920**	**1920**	–	–	–	–	–	–	–	1FG1208- . . ■ ■ 4 - ■ . G1 -Z
–	–	–	–	–	–	–	**1830**	**1760**	**1920**	**1920**	**1920**	**1920**	**1920**	**1920**	**1920**	**1920**	**1920**	**1920**	**1920**	**1920**	**1920**	1FG1208- . . ■ ■ 3 - ■ . G1 -Z
–	–	–	–	–	–	–	**1830**	–	**1920**	**1920**	**1920**	–	**1920**	**1920**	**1920**	**1920**	**1920**	**1920**	**1920**	**1920**	**1920**	1FG1208- . . ■ ■ 2 - ■ . G1 -Z
Max. output speed n_{2max} = 45 rpm, Transmission ratio i = 98.99																						
–	–	–	–	–	–	–	–	–	–	–	–	–	–	–	–	–	–	–	–	–	–	1FG1208- . . ■ ■ 6 - ■ . F1 -Z
–	–	–	–	–	–	–	**1640**	**1580**	**1920**	**1920**	**1920**	**1920**	**1920**	**1920**	–	–	–	–	–	–	–	1FG1208- . . ■ ■ 4 - ■ . F1 -Z
–	–	–	–	–	–	–	**1640**	**1580**	**1920**	**1920**	**1920**	**1920**	**1920**	**1920**	**1920**	**1920**	**1920**	**1920**	**1920**	**1920**	**1920**	1FG1208- . . ■ ■ 3 - ■ . F1 -Z
–	–	–	–	–	–	–	**1640**	–	**1920**	**1920**	**1920**	–	**1920**	**1920**	**1920**	**1920**	**1920**	**1920**	**1920**	**1920**	**1920**	1FG1208- . . ■ ■ 2 - ■ . F1 -Z
Max. output speed n_{2max} = 52 rpm, Transmission ratio i = 86.56																						
–	–	–	–	–	–	–	–	–	–	–	–	–	–	–	–	–	–	–	–	–	–	1FG1208- . . ■ ■ 6 - ■ . E1 -Z
–	–	–	–	–	–	–	**1440**	**1380**	**1920**	**1920**	**1920**	**1920**	**1920**	**1920**	–	–	–	–	–	–	–	1FG1208- . . ■ ■ 4 - ■ . E1 -Z
–	–	–	–	–	–	–	**1440**	**1380**	**1920**	**1920**	**1920**	**1920**	**1920**	**1920**	**1920**	**1920**	**1920**	**1920**	**1920**	**1920**	**1920**	1FG1208- . . ■ ■ 3 - ■ . E1 -Z
–	–	–	–	–	–	–	**1440**	–	**1920**	**1920**	**1920**	–	**1920**	**1920**	**1920**	**1920**	**1920**	**1920**	**1920**	**1920**	**1920**	1FG1208- . . ■ ■ 2 - ■ . E1 -Z
Max. output speed n_{2max} = 61 rpm, Transmission ratio i = 74.3																						
–	–	–	–	–	–	–	–	–	–	–	–	–	–	–	–	–	–	–	–	–	–	1FG1208- . . ■ ■ 6 - ■ . D1 -Z
–	–	–	–	–	–	–	**1240**	**1190**	**1790**	**1920**	**1920**	**1720**	**1920**	**1920**	–	–	–	–	–	–	–	1FG1208- . . ■ ■ 4 - ■ . D1 -Z
–	–	–	–	–	–	–	**1240**	**1190**	**1790**	**1920**	**1920**	**1720**	**1920**	**1920**	**1920**	**1920**	**1920**	**1920**	**1920**	**1920**	**1920**	1FG1208- . . ■ ■ 3 - ■ . D1 -Z
–	–	–	–	–	–	–	**1240**	–	**1790**	**1920**	**1920**	–	**1920**	**1920**	**1920**	**1920**	**1920**	**1920**	**1920**	**1920**	**1920**	1FG1208- . . ■ ■ 2 - ■ . D1 -Z
Max. output speed n_{2max} = 69 rpm, Transmission ratio i = 65.67																						
–	–	–	–	–	–	–	–	–	–	–	–	–	–	–	–	–	–	–	–	–	–	1FG1208- . . ■ ■ 6 - ■ . C1 -Z
–	–	–	–	–	–	–	**1100**	**1050**	**1580**	**1920**	**1920**	**1520**	**1920**	**1920**	–	–	–	–	–	–	–	1FG1208- . . ■ ■ 4 - ■ . C1 -Z
–	–	–	–	–	–	–	**1100**	**1050**	**1580**	**1920**	**1920**	**1520**	**1920**	**1920**	**1920**	**1920**	**1920**	**1920**	**1920**	**1920**	**1920**	1FG1208- . . ■ ■ 3 - ■ . C1 -Z
–	–	–	–	–	–	–	**1100**	–	**1580**	**1920**	**1920**	–	**1920**	**1920**	**1920**	**1920**	**1920**	**1920**	**1920**	**1920**	**1920**	1FG1208- . . ■ ■ 2 - ■ . C1 -Z

Motor shaft height:

1	2	3	4	5	6	7	8	9	10	11	12	13	14	15	16	17	18	19	20	21	22	
36																						**C**
			48																			**D**
							63															**E**
												80										**F**
																	100					**G**

Motor length/motor version (**CT** = Compact, **HD** = High Dynamic)**:**

1	2	3	4	5	6	7	8	9	10	11	12	13	14	15	16	17	18	19	20	21	22		
			0/CT				**0/CT**					**0/CT**						**0/CT**				**0**	**2**
													1/CT						**1/CT**			**1**	**2**
								1/HD														**1**	**4**
2/CT				**2/CT**					**2/CT**													**2**	**2**
										3/CT				**3/CT**					**3/CT**			**3**	**2**
	3/HD				**3/HD**																	**3**	**4**
		4/CT													**4/CT**							**4**	**2**
						4/HD					**4/HD**											**4**	**4**
																				5/CT		**5**	**2**
																5/HD						**5**	**4**
																	6/HD					**6**	**4**

Selection of shaft design, encoder system, mounting type and special designs on page 3/74.

1FG1208- ■ ■ . . . - . ■ . . -Z

© Siemens 2019

For line voltage 380 ... 480 V 3 AC (DC link voltage 510 ... 720 V DC) **– gearbox type** ***D89***

Geared motor torque at 1450 rpm
Note: All values in **bold** print are maximum gearbox values.
M_{2dyn}
Nm

Servo helical geared motors SIMOTICS S-1FG1
Article No.

Max. output speed n_{2max} = 81 rpm, Transmission ratio i = 55.84																						
–	–	–	–	–	–	–	–	–	–	–	–	–	–	–	–	–	–	–	–	–	–	**1FG1208- . . ■ ■ 6 - ■ . B1 -Z**
–	–	–	–	–	–	–	–	–	–	–	–	1300	**1890**	**1890**	–	–	–	–	–	–	–	**1FG1208- . . ■ ■ 4 - ■ . B1 -Z**
–	–	–	–	–	–	–	–	–	–	–	–	1300	**1890**	**1890**	**1890**	**1890**	**1890**	**1890**	**1890**	**1890**	**1890**	**1FG1208- . . ■ ■ 3 - ■ . B1 -Z**
–	–	–	–	–	–	–	–	–	–	–	–	–	**1890**	**1890**	**1890**	**1890**	**1890**	**1890**	**1890**	**1890**	**1890**	**1FG1208- . . ■ ■ 2 - ■ . B1 -Z**
Max. output speed n_{2max} = 93 rpm, Transmission ratio i = 47.87																						
–	–	–	–	–	–	–	–	–	–	–	–	–	–	–	–	–	–	–	–	–	–	**1FG1208- . . ■ ■ 6 - ■ . A1 -Z**
–	–	–	–	–	–	–	–	–	–	–	–	1110	1650	**1890**	–	–	–	–	–	–	–	**1FG1208- . . ■ ■ 4 - ■ . A1 -Z**
–	–	–	–	–	–	–	–	–	–	–	–	1110	1650	**1890**	**1890**	**1890**	**1890**	**1890**	**1890**	**1890**	**1890**	**1FG1208- . . ■ ■ 3 - ■ . A1 -Z**
–	–	–	–	–	–	–	–	–	–	–	–	–	1650	**1890**	**1890**	**1890**	**1890**	**1890**	**1890**	**1890**	**1890**	**1FG1208- . . ■ ■ 2 - ■ . A1 -Z**

Motor shaft height:

36																						**C**
			48																			**D**
							63															**E**
												80										**F**
																	100					**G**

Motor length/motor version (**CT** = Compact, **HD** = High Dynamic)**:**

			0/CT				**0/CT**				**0/CT**						**0/CT**					**0**		**2**
												1/CT						**1/CT**				**1**		**2**
								1/HD														**1**		**4**
2/CT				**2/CT**					**2/CT**													**2**		**2**
										3/CT			**3/CT**						**3/CT**			**3**		**2**
	3/HD				**3/HD**																	**3**		**4**
		4/CT													**4/CT**							**4**		**2**
						4/HD					**4/HD**											**4**		**4**
																				5/CT		**5**		**2**
																5/HD						**5**		**4**
																	6/HD					**6**		**4**

Selection of shaft design, encoder system, mounting type and special designs on page 3/74.

1FG1208- ■ ■ . . . . - . ■ . . -Z

© Siemens 2019

Gearbox size 109, 2-stage – 1FG1110

Technical specifications

Gearbox type *Z109*

Servo geared motor Type	i	R_{ex}	M_{2rated} Nm	M_{2max} Nm	$M_{2Em.Off}$ Nm	n_{2max} rpm	n_{1max} rpm	φ [1] '	F_{R2} N	F_{R2max} N	c_T Nm/ '	J_G 10^{-4} kgm^2
1FG1110-.....-..X1	51.17	5015/98	3100	3260	5270	88	4500	5.36	20200	20200	167.1	4.7
1FG1110-.....-..W1	43.64	9775/224	3100	3260	5270	103	4500	5.39	20200	20200	167.1	6
1FG1110-.....-..V1	41.07	575/14	3100	3260	5270	110	4500	5.39	20200	20200	167.1	6.8
1FG1110-.....-..U1	38.12	9605/252	3100	3260	5270	118	4500	5.41	20200	20200	167.1	7.4
1FG1110-.....-..T1	33.7	1887/56	3100	3240	5270	129	4350	5.44	20200	20200	167.1	9
1FG1110-.....-..S1	30.08	9265/308	3100	3140	5270	145	4350	5.46	20000	19900	167	10.7
1FG1110-.....-..R1	27.07	9095/336	3040	3050	5160	161	4350	5.49	19300	19300	167	12.6
1FG1110-.....-..Q1	23.49	7565/322	2920	2930	4960	185	4350	5.53	18500	18500	167	15.3
1FG1110-.....-..P1	21.13	1479/70	2830	2850	4810	206	4350	5.73	17900	17900	166.9	18.1
1FG1110-.....-..N1	18.47	6205/336	2720	2760	4620	236	4350	5.80	17100	17100	166.9	21
1FG1110-.....-..M1	16.48	1615/98	2630	2680	4470	264	4350	5.84	16500	16500	166.7	25
1FG1110-.....-..L1	14.52	4675/322	2570	2590	4360	300	4350	5.91	15900	15900	166.7	30
1FG1110-.....-..K1	12.72	1870/147	2510	2510	4260	342	4350	5.98	15200	15200	166.5	37
1FG1110-.....-..J1	11.09	255/23	2460	2460	4180	392	4350	6.07	14500	14500	166.4	44
1FG1110-.....-..H1	10.12	425/42	2430	2430	4130	430	4350	6.13	14100	14100	166.1	51
1FG1110-.....-..G1	8.71	2805/322	2380	2380	4040	499	4350	6.26	13400	13400	165.9	64
1FG1110-.....-..F1	8.41	589/70	2290	2290	2970	535	4500	8.55	13200	13100	126.1	29
1FG1110-.....-..E1	7.41	341/46	2280	2280	2960	607	4500	8.68	12500	12400	125.9	34
1FG1110-.....-..D1	6.5	682/105	2280	2280	2960	692	4500	8.84	11800	11700	125.5	42
1FG1110-.....-..C1	5.66	651/115	2290	2290	2970	795	4500	9.02	11100	11000	125.2	51
1FG1110-.....-..B1	5.17	31/6	2280	2280	2960	841	4350	9.13	10700	10600	124.7	60
1FG1110-.....-..A1	4.45	1023/230	2150	2150	2960	978	4350	9.39	10400	10400	124.3	75

Selection and ordering data

Shaft design, encoder system, mounting type and special designs

Gearbox type *Z109*

			Servo helical geared motors SIMOTICS S-1FG1 Article No. **1FG1110-** ■■.....-.■...**-Z**
Shaft design:	Solid shaft with feather keyway	– Design 1	**1**
Order codes and Descriptions see chapter "Options"	Special shaft design		**9**
Encoder system for motors with DRIVE-CLiQ interface:	AS20DQI encoder		**Q**
	AM20DQI encoder		**R**
	R14DQ resolver		**P**
	R15DQ resolver		**U**
Order codes and Descriptions see chapter "Options"	Special version encoder system		**Z**
Mounting type:	Foot-mounted design		**A**
	Flange-mounted design		**F**
	Housing flange design		**H**
Special designs (Options): Order codes and Descriptions see chapter "Options" The following order codes must be added to each article number: • Oil type – order codes **K06** or **K11** • Mounting position – order codes **D01** ... **D06**			**-Z**
Selection of 2-stages servo helical geared motors with gearbox size 109 from next page.			**1FG1110-** ..■■■-■.■■**-Z**

[1] Data are for option reduced-backlash version – order code **G99** required.

© Siemens 2019

Selection and ordering data (continued)

For line voltage 380 ... 480 V 3 AC (DC link voltage 510 ... 720 V DC) **– gearbox type** ***Z109***

Geared motor torque at 1450 rpm
Note: All values in **bold** print are maximum gearbox values.
M_{2dyn}
Nm

																							Servo helical geared motors SIMOTICS S-1FG1 Article No.
Max. output speed n_{2max} = 88 rpm, Transmission ratio i = 51.17																							
–	–	–	–	–	–	–	–	–	–	–	–	–	–	–	–	–	–	–	–	–	–	–	1FG1110- . . ■ ■ 6 - ■ . X1 -Z
–	–	–	–	–	–	–	–	–	–	–	–	1210	1790	2420	–	–	–	–	–	–	–	–	1FG1110- . . ■ ■ 4 - ■ . X1 -Z
–	–	–	–	–	–	–	–	–	–	–	–	1210	1790	2420	2950	3140	**3260**	2660	**3260**	**3260**	**3260**		1FG1110- . . ■ ■ 3 - ■ . X1 -Z
–	–	–	–	–	–	–	–	–	–	–	–	–	1790	2420	2950	3140	**3260**	2660	**3260**	**3260**	**3260**		1FG1110- . . ■ ■ 2 - ■ . X1 -Z
Max. output speed n_{2max} = 103 rpm, Transmission ratio i = 43.64																							
–	–	–	–	–	–	–	–	–	–	–	–	–	–	–	–	–	–	–	–	–	–	–	1FG1110- . . ■ ■ 6 - ■ . W1 -Z
–	–	–	–	–	–	–	–	–	–	–	–	1030	1530	2070	–	–	–	–	–	–	–	–	1FG1110- . . ■ ■ 4 - ■ . W1 -Z
–	–	–	–	–	–	–	–	–	–	–	–	1030	1530	2070	2520	2690	**3260**	2270	**3260**	**3260**	**3260**		1FG1110- . . ■ ■ 3 - ■ . W1 -Z
–	–	–	–	–	–	–	–	–	–	–	–	–	1530	2070	2520	2690	**3260**	2270	**3260**	**3260**	**3260**		1FG1110- . . ■ ■ 2 - ■ . W1 -Z
Max. output speed n_{2max} = 110 rpm, Transmission ratio i = 41.07																							
–	–	–	–	–	–	–	–	–	–	–	–	–	–	–	–	–	–	–	–	–	–	–	1FG1110- . . ■ ■ 6 - ■ . V1 -Z
–	–	–	–	–	–	–	–	–	–	–	–	975	1440	1950	–	–	–	–	–	–	–	–	1FG1110- . . ■ ■ 4 - ■ . V1 -Z
–	–	–	–	–	–	–	–	–	–	–	–	975	1440	1950	2380	2540	**3260**	2150	3130	**3260**	**3260**		1FG1110- . . ■ ■ 3 - ■ . V1 -Z
–	–	–	–	–	–	–	–	–	–	–	–	–	1440	1950	2380	2540	**3260**	2150	3130	**3260**	**3260**		1FG1110- . . ■ ■ 2 - ■ . V1 -Z
Max. output speed n_{2max} = 118 rpm, Transmission ratio i = 38.12																							
–	–	–	–	–	–	–	–	–	–	–	–	–	–	–	–	–	–	–	–	–	–	–	1FG1110- . . ■ ■ 6 - ■ . U1 -Z
–	–	–	–	–	–	–	–	–	–	–	–	905	1340	1810	–	–	–	–	–	–	–	–	1FG1110- . . ■ ■ 4 - ■ . U1 -Z
–	–	–	–	–	–	–	–	–	–	–	–	905	1340	1810	2210	2360	**3260**	2000	2900	**3260**	**3260**		1FG1110- . . ■ ■ 3 - ■ . U1 -Z
–	–	–	–	–	–	–	–	–	–	–	–	–	1340	1810	2210	2360	**3260**	2000	2900	**3260**	**3260**		1FG1110- . . ■ ■ 2 - ■ . U1 -Z
Max. output speed n_{2max} = 129 rpm, Transmission ratio i = 33.7																							
–	–	–	–	–	–	–	–	–	–	–	–	–	–	–	–	–	–	–	–	–	–	–	1FG1110- . . ■ ■ 6 - ■ . T1 -Z
–	–	–	–	–	–	–	–	–	–	–	–	800	1190	1600	–	–	–	–	–	–	–	–	1FG1110- . . ■ ■ 4 - ■ . T1 -Z
–	–	–	–	–	–	–	–	–	–	–	–	800	1190	1600	1960	2090	3030	1770	2570	**3240**	**3240**		1FG1110- . . ■ ■ 3 - ■ . T1 -Z
–	–	–	–	–	–	–	–	–	–	–	–	–	1190	1600	1960	2090	3030	1770	2570	**3240**	**3240**		1FG1110- . . ■ ■ 2 - ■ . T1 -Z
Max. output speed n_{2max} = 145 rpm, Transmission ratio i = 30.08																							
–	–	–	–	–	–	–	–	–	–	–	–	–	–	–	–	–	–	–	–	–	–	–	1FG1110- . . ■ ■ 6 - ■ . S1 -Z
–	–	–	–	–	–	–	–	–	–	–	–	715	1060	1430	–	–	–	–	–	–	–	–	1FG1110- . . ■ ■ 4 - ■ . S1 -Z
–	–	–	–	–	–	–	–	–	–	–	–	715	1060	1430	1750	1860	2710	1580	2300	3100	**3140**		1FG1110- . . ■ ■ 3 - ■ . S1 -Z
–	–	–	–	–	–	–	–	–	–	–	–	–	1060	1430	1750	1860	2710	1580	2300	3100	**3140**		1FG1110- . . ■ ■ 2 - ■ . S1 -Z
Max. output speed n_{2max} = 161 rpm, Transmission ratio i = 27.07																							
–	–	–	–	–	–	–	–	–	–	–	–	–	–	–	–	–	–	–	–	–	–	–	1FG1110- . . ■ ■ 6 - ■ . R1 -Z
–	–	–	–	–	–	–	–	–	–	–	–	645	955	1290	–	–	–	–	–	–	–	–	1FG1110- . . ■ ■ 4 - ■ . R1 -Z
–	–	–	–	–	–	–	–	–	–	–	–	645	955	1290	1580	1680	2440	1420	2070	2800	**3050**		1FG1110- . . ■ ■ 3 - ■ . R1 -Z
–	–	–	–	–	–	–	–	–	–	–	–	–	955	1290	1580	1680	2440	1420	2070	2800	**3050**		1FG1110- . . ■ ■ 2 - ■ . R1 -Z

Motor shaft height:

36																								**C**
			48																					**D**
							63																	**E**
												80												**F**
																		100						**G**

Motor length/motor version (**CT** = Compact, **HD** = High Dynamic)**:**

			0/CT				**0/CT**					**0/CT**						**0/CT**						**0**	**2**
													1/CT						**1/CT**					**1**	**2**
								1/HD																**1**	**4**
2/CT				**2/CT**					**2/CT**															**2**	**2**
										3/CT				**3/CT**						**3/CT**				**3**	**2**
	3/HD				**3/HD**																			**3**	**4**
		4/CT														**4/CT**								**4**	**2**
						4/HD					**4/HD**														**4**	**4**
																				5/CT				**5**	**2**
															5/HD									**5**	**4**
																6/HD								**6**	**4**

Selection of shaft design, encoder system, mounting type and special designs on page 3/78.

1FG1110- ■ ■ . . . . - . ■ . . -Z

© Siemens 2019

Gearbox size 109, 2-stage – 1FG1110

For line voltage 380 ... 480 V 3 AC (DC link voltage 510 ... 720 V DC) **– gearbox type** ***Z109***

Geared motor torque at 1450 rpm
Note: All values in **bold** print are maximum gearbox values.
M_{2dyn}
Nm

Servo helical geared motors SIMOTICS S-1FG1
Article No.

36	48	63	80	100	Article No.
Max. output speed n_{2max} = 185 rpm, Transmission ratio i = 23.49					
–	–	–	–	–	1FG1110- . . ■ ■ 6 - ■ . Q1 -Z
560 830 1120	560 830 1120	–	–	–	1FG1110- . . ■ ■ 4 - ■ . Q1 -Z
1370 1460 2120	1370 1460 2120	1230 1800 2430 **2930**	1230 1800 2430 **2930**	–	1FG1110- . . ■ ■ 3 - ■ . Q1 -Z
830 1120	830 1120	1370 1460 2120	1370 1460 2120	1230 1800 2430 **2930**	1FG1110- . . ■ ■ 2 - ■ . Q1 -Z
Max. output speed n_{2max} = 206 rpm, Transmission ratio i = 21.13					
–	–	–	–	–	1FG1110- . . ■ ■ 6 - ■ . P1 -Z
505 750 1010	505 750 1010	–	–	–	1FG1110- . . ■ ■ 4 - ■ . P1 -Z
1230 1310 1910	1230 1310 1910	1110 1620 2190 **2850**	1110 1620 2190 **2850**	–	1FG1110- . . ■ ■ 3 - ■ . P1 -Z
750 1010	750 1010	1230 1310 1910	1230 1310 1910	1110 1620 2190 **2850**	1FG1110- . . ■ ■ 2 - ■ . P1 -Z
Max. output speed n_{2max} = 236 rpm, Transmission ratio i = 18.47					
–	–	–	–	–	1FG1110- . . ■ ■ 6 - ■ . N1 -Z
440 655 885	440 655 885	–	–	–	1FG1110- . . ■ ■ 4 - ■ . N1 -Z
1080 1150 1670	1080 1150 1670	975 1410 1910 2660	975 1410 1910 2660	–	1FG1110- . . ■ ■ 3 - ■ . N1 -Z
655 885	655 885	1080 1150 1670	1080 1150 1670	975 1410 1910 2660	1FG1110- . . ■ ■ 2 - ■ . N1 -Z
Max. output speed n_{2max} = 264 rpm, Transmission ratio i = 16.48					
–	–	–	–	–	1FG1110- . . ■ ■ 6 - ■ . M1 -Z
395 585 790	395 585 790	–	–	–	1FG1110- . . ■ ■ 4 - ■ . M1 -Z
965 1020 1490	965 1020 1490	870 1260 1700 2370	870 1260 1700 2370	–	1FG1110- . . ■ ■ 3 - ■ . M1 -Z
585 790	585 790	965 1020 1490	965 1020 1490	870 1260 1700 2370	1FG1110- . . ■ ■ 2 - ■ . M1 -Z
Max. output speed n_{2max} = 300 rpm, Transmission ratio i = 14.52					
–	–	–	–	–	1FG1110- . . ■ ■ 6 - ■ . L1 -Z
345 515 695	345 515 695	–	–	–	1FG1110- . . ■ ■ 4 - ■ . L1 -Z
850 905 1310	850 905 1310	765 1110 1500 2090	765 1110 1500 2090	–	1FG1110- . . ■ ■ 3 - ■ . L1 -Z
515 695	515 695	850 905 1310	850 905 1310	765 1110 1500 2090	1FG1110- . . ■ ■ 2 - ■ . L1 -Z
Max. output speed n_{2max} = 342 rpm, Transmission ratio i = 12.72					
–	–	–	–	–	1FG1110- . . ■ ■ 6 - ■ . K1 -Z
305 450 610	305 450 610	–	–	–	1FG1110- . . ■ ■ 4 - ■ . K1 -Z
740 790 1150	740 790 1150	670 975 1310 1830	670 975 1310 1830	–	1FG1110- . . ■ ■ 3 - ■ . K1 -Z
450 610	450 610	740 790 1150	740 790 1150	670 975 1310 1830	1FG1110- . . ■ ■ 2 - ■ . K1 -Z
Max. output speed n_{2max} = 392 rpm, Transmission ratio i = 11.09					
–	–	–	–	–	1FG1110- . . ■ ■ 6 - ■ . J1 -Z
265 390 530	265 390 530	–	–	–	1FG1110- . . ■ ■ 4 - ■ . J1 -Z
650 690 1000	650 690 1000	585 850 1150 1590	585 850 1150 1590	–	1FG1110- . . ■ ■ 3 - ■ . J1 -Z
390 530	390 530	650 690 1000	650 690 1000	585 850 1150 1590	1FG1110- . . ■ ■ 2 - ■ . J1 -Z
Max. output speed n_{2max} = 430 rpm, Transmission ratio i = 10.12					
–	–	–	–	–	1FG1110- . . ■ ■ 6 - ■ . H1 -Z
240 355 485	240 355 485	–	–	–	1FG1110- . . ■ ■ 4 - ■ . H1 -Z
590 630 915	590 630 915	530 775 1040 1450	530 775 1040 1450	–	1FG1110- . . ■ ■ 3 - ■ . H1 -Z
355 485	355 485	590 630 915	590 630 915	530 775 1040 1450	1FG1110- . . ■ ■ 2 - ■ . H1 -Z

Motor shaft height:

36	48	63	80	100	
					C
					D
					E
					F
					G

Motor length/motor version (**CT** = Compact, **HD** = High Dynamic)**:**

36	48	63	80	100		
	0/CT	0/CT	0/CT	0/CT	0	2
			1/CT	1/CT	1	2
		1/HD			1	4
2/CT	2/CT	2/CT			2	2
		3/CT	3/CT	3/CT	3	2
3/HD	3/HD				3	4
4/CT			4/CT		4	2
	4/HD	4/HD			4	4
				5/CT	5	2
			5/HD		5	4
			6/HD		6	4

Selection of shaft design, encoder system, mounting type and special designs on page 3/78.

1FG1110- ■ ■ . . . - . ■ . . -Z

© Siemens 2019

Gearbox size 109, 2-stage – 1FG1110

For line voltage 380 ... 480 V 3 AC (DC link voltage 510 ... 720 V DC) **– gearbox type** ***Z109***

Geared motor torque at 1450 rpm
Note: All values in **bold** print are maximum gearbox values.
M_{2dyn}
Nm

Servo helical geared motors SIMOTICS S-1FG1
Article No.

Max. output speed n_{2max} = 499 rpm, Transmission ratio i = 8.71																						
–	–	–	–	–	–	–	–	–	–	–	–	–	–	–	–	–	–	–	–	–	–	**1FG1110- . . ■ ■ 6 - ■ . G1 -Z**
–	–	–	–	–	–	–	–	–	–	–	–	–	–	–	–	–	–	–	–	–	–	**1FG1110- . . ■ ■ 4 - ■ . G1 -Z**
–	–	–	–	–	–	–	–	–	–	–	–	–	–	–	–	–	–	455	665	900	1250	**1FG1110- . . ■ ■ 3 - ■ . G1 -Z**
–	–	–	–	–	–	–	–	–	–	–	–	–	–	–	–	–	–	455	665	900	1250	**1FG1110- . . ■ ■ 2 - ■ . G1 -Z**
Max. output speed n_{2max} = 535 rpm, Transmission ratio i = 8.41																						
–	–	–	–	–	–	–	–	–	–	–	–	–	–	–	–	–	–	–	–	–	–	**1FG1110- . . ■ ■ 6 - ■ . F1 -Z**
–	–	–	–	–	–	–	–	–	–	–	–	200	300	405	–	–	–	–	–	–	–	**1FG1110- . . ■ ■ 4 - ■ . F1 -Z**
–	–	–	–	–	–	–	–	–	–	–	–	200	300	405	495	530	770	445	650	880	1220	**1FG1110- . . ■ ■ 3 - ■ . F1 -Z**
–	–	–	–	–	–	–	–	–	–	–	–	–	300	405	495	530	770	445	650	880	1220	**1FG1110- . . ■ ■ 2 - ■ . F1 -Z**
Max. output speed n_{2max} = 607 rpm, Transmission ratio i = 7.41																						
–	–	–	–	–	–	–	–	–	–	–	–	–	–	–	–	–	–	–	–	–	–	**1FG1110- . . ■ ■ 6 - ■ . E1 -Z**
–	–	–	–	–	–	–	–	–	–	–	–	180	265	360	–	–	–	–	–	–	–	**1FG1110- . . ■ ■ 4 - ■ . E1 -Z**
–	–	–	–	–	–	–	–	–	–	–	–	180	265	360	435	465	675	395	575	775	1080	**1FG1110- . . ■ ■ 3 - ■ . E1 -Z**
–	–	–	–	–	–	–	–	–	–	–	–	–	265	360	435	465	675	395	575	775	1080	**1FG1110- . . ■ ■ 2 - ■ . E1 -Z**
Max. output speed n_{2max} = 692 rpm, Transmission ratio i = 6.5																						
–	–	–	–	–	–	–	–	–	–	–	–	–	–	–	–	–	–	–	–	–	–	**1FG1110- . . ■ ■ 6 - ■ . D1 -Z**
–	–	–	–	–	–	–	–	–	–	–	–	158	230	315	–	–	–	–	–	–	–	**1FG1110- . . ■ ■ 4 - ■ . D1 -Z**
–	–	–	–	–	–	–	–	–	–	–	–	158	230	315	385	410	595	345	505	680	945	**1FG1110- . . ■ ■ 3 - ■ . D1 -Z**
–	–	–	–	–	–	–	–	–	–	–	–	–	230	315	385	410	595	345	505	680	945	**1FG1110- . . ■ ■ 2 - ■ . D1 -Z**
Max. output speed n_{2max} = 795 rpm, Transmission ratio i = 5.66																						
–	–	–	–	–	–	–	–	–	–	–	–	–	–	–	–	–	–	–	–	–	–	**1FG1110- . . ■ ■ 6 - ■ . C1 -Z**
–	–	–	–	–	–	–	–	–	–	–	–	137	200	275	–	–	–	–	–	–	–	**1FG1110- . . ■ ■ 4 - ■ . C1 -Z**
–	–	–	–	–	–	–	–	–	–	–	–	137	200	275	335	355	515	300	440	595	825	**1FG1110- . . ■ ■ 3 - ■ . C1 -Z**
–	–	–	–	–	–	–	–	–	–	–	–	–	200	275	335	355	515	300	440	595	825	**1FG1110- . . ■ ■ 2 - ■ . C1 -Z**
Max. output speed n_{2max} = 841 rpm, Transmission ratio i = 5.17																						
–	–	–	–	–	–	–	–	–	–	–	–	–	–	–	–	–	–	–	–	–	–	**1FG1110- . . ■ ■ 6 - ■ . B1 -Z**
–	–	–	–	–	–	–	–	–	–	–	–	125	185	250	–	–	–	–	–	–	–	**1FG1110- . . ■ ■ 4 - ■ . B1 -Z**
–	–	–	–	–	–	–	–	–	–	–	–	125	185	250	305	325	470	275	400	540	750	**1FG1110- . . ■ ■ 3 - ■ . B1 -Z**
–	–	–	–	–	–	–	–	–	–	–	–	–	185	250	305	325	470	275	400	540	750	**1FG1110- . . ■ ■ 2 - ■ . B1 -Z**
Max. output speed n_{2max} = 978 rpm, Transmission ratio i = 4.45																						
–	–	–	–	–	–	–	–	–	–	–	–	–	–	–	–	–	–	–	–	–	–	**1FG1110- . . ■ ■ 6 - ■ . A1 -Z**
–	–	–	–	–	–	–	–	–	–	–	–	–	–	–	–	–	–	–	–	–	–	**1FG1110- . . ■ ■ 4 - ■ . A1 -Z**
–	–	–	–	–	–	–	–	–	–	–	–	–	–	–	–	–	–	235	345	465	645	**1FG1110- . . ■ ■ 3 - ■ . A1 -Z**
–	–	–	–	–	–	–	–	–	–	–	–	–	–	–	–	–	–	235	345	465	645	**1FG1110- . . ■ ■ 2 - ■ . A1 -Z**

Motor shaft height:

36																						**C**
			48																			**D**
						63																**E**
												80										**F**
																		100				**G**

Motor length/motor version (**CT** = Compact, **HD** = High Dynamic)**:**

			0/CT			**0/CT**				**0/CT**						**0/CT**					**0**	**2**
											1/CT						**1/CT**				**1**	**2**
							1/HD														**1**	**4**
2/CT				**2/CT**				**2/CT**													**2**	**2**
									3/CT				**3/CT**					**3/CT**			**3**	**2**
	3/HD				**3/HD**																**3**	**4**
		4/CT												**4/CT**							**4**	**2**
						4/HD				**4/HD**											**4**	**4**
																		5/CT			**5**	**2**
															5/HD						**5**	**4**
																6/HD					**6**	**4**

Selection of shaft design, encoder system, mounting type and special designs on page 3/78.

1FG1110- ■ ■ . . . - . ■ . . -Z

© Siemens 2019

Gearbox size 109, 3-stage – 1FG1210

Technical specifications

Gearbox type *D109*

Servo geared motor Type	i	R_{ex}	M_{2rated} Nm	M_{2max} Nm	$M_{2Em.Off}$ Nm	n_{2max} rpm	n_{1max} rpm	φ [1] '	F_{R2} N	F_{R2max} N	c_T Nm/ '	J_G 10^{-4} kgm^2
1FG1210-.....-..T1	348.88	263755/756	3100	3690	5270	13	4500	5.53	20200	20200	172.9	1.3
1FG1210-.....-..S1	314.98	72760/231	3100	3670	5270	14	4500	5.53	20200	20200	172.9	1.4
1FG1210-.....-..R1	285.72	864025/3024	3100	3620	5270	16	4500	5.53	20200	20200	172.9	1.6
1FG1210-.....-..Q1	263.74	864025/3276	3100	3600	5270	17	4500	5.53	20200	20200	172.9	1.9
1FG1210-.....-..P1	239.75	281945/1176	3100	3550	5270	19	4500	5.54	20200	20200	172.9	2.1
1FG1210-.....-..N1	203.01	45475/224	3100	3480	5270	22	4500	5.55	20200	20200	172.9	2.5
1FG1210-.....-..M1	191.07	2675/14	3100	3450	5270	24	4500	5.55	20200	20200	172.9	2.5
1FG1210-.....-..L1	176.45	100045/567	3100	3430	5270	26	4500	5.55	20200	20200	172.9	4
1FG1210-.....-..K1	157	52751/336	3100	3380	5270	29	4500	5.56	20200	20200	172.9	4.9
1FG1210-.....-..J1	139.44	773075/5544	3100	3330	5270	32	4500	5.56	20200	20200	172.9	5.8
1FG1210-.....-..H1	124.82	754885/6048	3100	3290	5270	36	4500	5.57	20200	20200	172.9	5.7
1FG1210-.....-..G1	106.7	154615/1449	3100	3260	5270	42	4500	5.58	20200	20200	172.9	6.7
1FG1210-.....-..F1	95.28	20009/210	3100	3260	5270	47	4500	5.63	20200	20200	172.9	8.5
1FG1210-.....-..E1	84.21	9095/108	3100	3260	5270	53	4500	5.64	20200	20200	172.9	9.6
1FG1210-.....-..D1	73.9	391085/5292	3100	3260	5270	61	4500	5.60	20200	20200	172.9	13.4
1FG1210-.....-..C1	64.34	372895/5796	3100	3250	5270	68	4350	5.62	20200	20200	172.9	16.1
1FG1210-.....-..B1	55	72760/1323	3090	3100	5250	79	4350	5.64	20200	20200	172.9	20
1FG1210-.....-..A1	47.08	45475/966	2930	2960	4980	92	4350	5.66	20200	20200	172.9	25

Selection and ordering data

Shaft design, encoder system, mounting type and special designs

Gearbox type *D109*

			Servo helical geared motors SIMOTICS S-1FG1 Article No. **1FG1210-** ■■ . . . - . ■ . . **-Z**
Shaft design:	Solid shaft with feather keyway	– Design 1	**1**
Order codes and Descriptions see chapter "Options"	Special shaft design		**9**
Encoder system for motors with DRIVE-CLiQ interface:	AS20DQI encoder		**Q**
	AM20DQI encoder		**R**
	R14DQ resolver		**P**
	R15DQ resolver		**U**
Order codes and Descriptions see chapter "Options"	Special version encoder system		**Z**
Mounting type:	Foot-mounted design		**A**
	Flange-mounted design		**F**
	Housing flange design		**H**
Special designs (Options): Order codes and Descriptions see chapter "Options" The following order codes must be added to each article number: • Oil type – order codes **K06** or **K11** • Mounting position – order codes **D01** ... **D06**			**-Z**

Selection of 3-stages servo helical geared motors with gearbox size 109 from next page. **1FG1210-** . . ■■■ - ■ . ■■ **-Z**

[1] Data are for option reduced-backlash version – order code **G99** required.

© Siemens 2019

Selection and ordering data (continued)

For line voltage 380 ... 480 V 3 AC (DC link voltage 510 ... 720 V DC) **– gearbox type** ***D109***

Geared motor torque at 1450 rpm
Note: All values in **bold** print are maximum gearbox values.

M_{2dyn} Nm																						Servo helical geared motors SIMOTICS S-1FG1 Article No.
Max. output speed n_{2max} = **13 rpm**, Transmission ratio i = **348.88**																						
–	–	–	–	–	–	–	–	–	–	–	–	–	–	–	–	–	–	–	–	–	–	1FG1210- . . ■ ■ 6 - ■ . T1 -Z
–	–	–	–	–	–	–	–	–	–	–	–	**3690**	**3690**	**3690**	–	–	–	–	–	–	–	1FG1210- . . ■ ■ 4 - ■ . T1 -Z
–	–	–	–	–	–	–	–	–	–	–	–	**3690**	**3690**	**3690**	**3690**	**3690**	**3690**	–	–	–	–	1FG1210- . . ■ ■ 3 - ■ . T1 -Z
–	–	–	–	–	–	–	–	–	–	–	–	**3690**	**3690**	**3690**	**3690**	**3690**	**3690**	–	–	–	–	1FG1210- . . ■ ■ 2 - ■ . T1 -Z
Max. output speed n_{2max} = **14 rpm**, Transmission ratio i = **314.98**																						
–	–	–	–	–	–	–	–	–	–	–	–	–	–	–	–	–	–	–	–	–	–	1FG1210- . . ■ ■ 6 - ■ . S1 -Z
–	–	–	–	–	–	–	–	–	–	–	–	**3670**	**3670**	**3670**	–	–	–	–	–	–	–	1FG1210- . . ■ ■ 4 - ■ . S1 -Z
–	–	–	–	–	–	–	–	–	–	–	–	**3670**	**3670**	**3670**	**3670**	**3670**	**3670**	–	–	–	–	1FG1210- . . ■ ■ 3 - ■ . S1 -Z
–	–	–	–	–	–	–	–	–	–	–	–	**3670**	**3670**	**3670**	**3670**	**3670**	**3670**	–	–	–	–	1FG1210- . . ■ ■ 2 - ■ . S1 -Z
Max. output speed n_{2max} = **16 rpm**, Transmission ratio i = **285.72**																						
–	–	–	–	–	–	–	–	–	–	–	–	–	–	–	–	–	–	–	–	–	–	1FG1210- . . ■ ■ 6 - ■ . R1 -Z
–	–	–	–	–	–	–	–	–	–	–	–	**3620**	**3620**	**3620**	–	–	–	–	–	–	–	1FG1210- . . ■ ■ 4 - ■ . R1 -Z
–	–	–	–	–	–	–	–	–	–	–	–	**3620**	**3620**	**3620**	**3620**	**3620**	**3620**	–	–	–	–	1FG1210- . . ■ ■ 3 - ■ . R1 -Z
–	–	–	–	–	–	–	–	–	–	–	–	**3620**	**3620**	**3620**	**3620**	**3620**	**3620**	–	–	–	–	1FG1210- . . ■ ■ 2 - ■ . R1 -Z
Max. output speed n_{2max} = **17 rpm**, Transmission ratio i = **263.74**																						
–	–	–	–	–	–	–	–	–	–	–	–	–	–	–	–	–	–	–	–	–	–	1FG1210- . . ■ ■ 6 - ■ . Q1 -Z
–	–	–	–	–	–	–	–	–	–	–	–	**3600**	**3600**	**3600**	–	–	–	–	–	–	–	1FG1210- . . ■ ■ 4 - ■ . Q1 -Z
–	–	–	–	–	–	–	–	–	–	–	–	**3600**	**3600**	**3600**	**3600**	**3600**	**3600**	–	–	–	–	1FG1210- . . ■ ■ 3 - ■ . Q1 -Z
–	–	–	–	–	–	–	–	–	–	–	–	**3600**	**3600**	**3600**	**3600**	**3600**	**3600**	–	–	–	–	1FG1210- . . ■ ■ 2 - ■ . Q1 -Z
Max. output speed n_{2max} = **19 rpm**, Transmission ratio i = **239.75**																						
–	–	–	–	–	–	–	–	–	–	–	–	–	–	–	–	–	–	–	–	–	–	1FG1210- . . ■ ■ 6 - ■ . P1 -Z
–	–	–	–	–	–	–	–	–	–	–	–	**3550**	**3550**	**3550**	–	–	–	–	–	–	–	1FG1210- . . ■ ■ 4 - ■ . P1 -Z
–	–	–	–	–	–	–	–	–	–	–	–	**3550**	**3550**	**3550**	**3550**	**3550**	**3550**	**3550**	**3550**	**3550**	**3550**	1FG1210- . . ■ ■ 3 - ■ . P1 -Z
–	–	–	–	–	–	–	–	–	–	–	–	**3550**	**3550**	**3550**	**3550**	**3550**	**3550**	**3550**	**3550**	**3550**	**3550**	1FG1210- . . ■ ■ 2 - ■ . P1 -Z
Max. output speed n_{2max} = **22 rpm**, Transmission ratio i = **203.01**																						
–	–	–	–	–	–	–	–	–	–	–	–	–	–	–	–	–	–	–	–	–	–	1FG1210- . . ■ ■ 6 - ■ . N1 -Z
–	–	–	–	–	–	–	–	–	–	–	–	**3480**	**3480**	**3480**	–	–	–	–	–	–	–	1FG1210- . . ■ ■ 4 - ■ . N1 -Z
–	–	–	–	–	–	–	–	–	–	–	–	**3480**	**3480**	**3480**	**3480**	**3480**	**3480**	**3480**	**3480**	**3480**	**3480**	1FG1210- . . ■ ■ 3 - ■ . N1 -Z
–	–	–	–	–	–	–	–	–	–	–	–	**3480**	**3480**	**3480**	**3480**	**3480**	**3480**	**3480**	**3480**	**3480**	**3480**	1FG1210- . . ■ ■ 2 - ■ . N1 -Z
Max. output speed n_{2max} = **24 rpm**, Transmission ratio i = **191.07**																						
–	–	–	–	–	–	–	–	–	–	–	–	–	–	–	–	–	–	–	–	–	–	1FG1210- . . ■ ■ 6 - ■ . M1 -Z
–	–	–	–	–	–	–	–	–	–	–	–	**3450**	**3450**	**3450**	–	–	–	–	–	–	–	1FG1210- . . ■ ■ 4 - ■ . M1 -Z
–	–	–	–	–	–	–	–	–	–	–	–	**3450**	**3450**	**3450**	**3450**	**3450**	**3450**	**3450**	**3450**	**3450**	**3450**	1FG1210- . . ■ ■ 3 - ■ . M1 -Z
–	–	–	–	–	–	–	–	–	–	–	–	**3450**	**3450**	**3450**	**3450**	**3450**	**3450**	**3450**	**3450**	**3450**	**3450**	1FG1210- . . ■ ■ 2 - ■ . M1 -Z

Motor shaft height:

36																							**C**
			48																				**D**
							63																**E**
												80											**F**
																		100					**G**

Motor length/motor version (**CT** = Compact, **HD** = High Dynamic)**:**

			0/CT				**0/CT**				**0/CT**						**0/CT**					**0**	**2**
								1/CT										**1/CT**				**1**	**2**
							1/HD															**1**	**4**
2/CT				**2/CT**				**2/CT**														**2**	**2**
									3/CT				**3/CT**						**3/CT**			**3**	**2**
	3/HD				**3/HD**										**4/CT**							**3**	**4**
		4/CT																				**4**	**2**
						4/HD					**4/HD**											**4**	**4**
																			5/CT			**5**	**2**
																5/HD						**5**	**4**
																	6/HD					**6**	**4**

Selection of shaft design, encoder system, mounting type and special designs on page 3/82.

1FG1210- ■ ■ . . . . - . ■ . . -Z

© Siemens 2019

Gearbox size 109, 3-stage – 1FG1210

For line voltage 380 ... 480 V 3 AC (DC link voltage 510 ... 720 V DC) **– gearbox type** *D109*

Geared motor torque at 1450 rpm
Note: All values in **bold** print are maximum gearbox values.
M_{2dyn}

Nm																						Servo helical geared motors SIMOTICS S-1FG1 Article No.
Max. output speed n_{2max} = 26 rpm, Transmission ratio i = 176.45																						
–	–	–	–	–	–	–	–	–	–	–	–	–	–	–	–	–	–	–	–	–	–	1FG1210- . . ■ ■ 6 - ■ . L1 -Z
–	–	–	–	–	–	–	–	–	–	–	–	**3430**	**3430**	**3430**	–	–	–	–	–	–	–	1FG1210- . . ■ ■ 4 - ■ . L1 -Z
–	–	–	–	–	–	–	–	–	–	–	–	**3430**	**3430**	**3430**	**3430**	**3430**	**3430**	**3430**	**3430**	**3430**	**3430**	1FG1210- . . ■ ■ 3 - ■ . L1 -Z
–	–	–	–	–	–	–	–	–	–	–	–	–	**3430**	**3430**	**3430**	**3430**	**3430**	**3430**	**3430**	**3430**	**3430**	1FG1210- . . ■ ■ 2 - ■ . L1 -Z
Max. output speed n_{2max} = 29 rpm, Transmission ratio i = 157																						
–	–	–	–	–	–	–	–	–	–	–	–	–	–	–	–	–	–	–	–	–	–	1FG1210- . . ■ ■ 6 - ■ . K1 -Z
–	–	–	–	–	–	–	–	–	–	–	–	**3380**	**3380**	**3380**	–	–	–	–	–	–	–	1FG1210- . . ■ ■ 4 - ■ . K1 -Z
–	–	–	–	–	–	–	–	–	–	–	–	**3380**	**3380**	**3380**	**3380**	**3380**	**3380**	**3380**	**3380**	**3380**	**3380**	1FG1210- . . ■ ■ 3 - ■ . K1 -Z
–	–	–	–	–	–	–	–	–	–	–	–	–	**3380**	**3380**	**3380**	**3380**	**3380**	**3380**	**3380**	**3380**	**3380**	1FG1210- . . ■ ■ 2 - ■ . K1 -Z
Max. output speed n_{2max} = 32 rpm, Transmission ratio i = 139.44																						
–	–	–	–	–	–	–	–	–	–	–	–	–	–	–	–	–	–	–	–	–	–	1FG1210- . . ■ ■ 6 - ■ . J1 -Z
–	–	–	–	–	–	–	–	–	–	–	–	**3200**	**3330**	**3330**	–	–	–	–	–	–	–	1FG1210- . . ■ ■ 4 - ■ . J1 -Z
–	–	–	–	–	–	–	–	–	–	–	–	**3200**	**3330**	**3330**	**3330**	**3330**	**3330**	**3330**	**3330**	**3330**	**3330**	1FG1210- . . ■ ■ 3 - ■ . J1 -Z
–	–	–	–	–	–	–	–	–	–	–	–	–	**3330**	**3330**	**3330**	**3330**	**3330**	**3330**	**3330**	**3330**	**3330**	1FG1210- . . ■ ■ 2 - ■ . J1 -Z
Max. output speed n_{2max} = 36 rpm, Transmission ratio i = 124.82																						
–	–	–	–	–	–	–	–	–	–	–	–	–	–	–	–	–	–	–	–	–	–	1FG1210- . . ■ ■ 6 - ■ . H1 -Z
–	–	–	–	–	–	–	–	–	–	–	–	**2880**	**3290**	**3290**	–	–	–	–	–	–	–	1FG1210- . . ■ ■ 4 - ■ . H1 -Z
–	–	–	–	–	–	–	–	–	–	–	–	**2880**	**3290**	**3290**	**3290**	**3290**	**3290**	**3290**	**3290**	**3290**	**3290**	1FG1210- . . ■ ■ 3 - ■ . H1 -Z
–	–	–	–	–	–	–	–	–	–	–	–	–	**3290**	**3290**	**3290**	**3290**	**3290**	**3290**	**3290**	**3290**	**3290**	1FG1210- . . ■ ■ 2 - ■ . H1 -Z
Max. output speed n_{2max} = 42 rpm, Transmission ratio i = 106.7																						
–	–	–	–	–	–	–	–	–	–	–	–	–	–	–	–	–	–	–	–	–	–	1FG1210- . . ■ ■ 6 - ■ . G1 -Z
–	–	–	–	–	–	–	–	–	–	–	–	**2470**	**3260**	**3260**	–	–	–	–	–	–	–	1FG1210- . . ■ ■ 4 - ■ . G1 -Z
–	–	–	–	–	–	–	–	–	–	–	–	**2470**	**3260**	**3260**	**3260**	**3260**	**3260**	**3260**	**3260**	**3260**	**3260**	1FG1210- . . ■ ■ 3 - ■ . G1 -Z
–	–	–	–	–	–	–	–	–	–	–	–	–	**3260**	**3260**	**3260**	**3260**	**3260**	**3260**	**3260**	**3260**	**3260**	1FG1210- . . ■ ■ 2 - ■ . G1 -Z
Max. output speed n_{2max} = 47 rpm, Transmission ratio i = 95.28																						
–	–	–	–	–	–	–	–	–	–	–	–	–	–	–	–	–	–	–	–	–	–	1FG1210- . . ■ ■ 6 - ■ . F1 -Z
–	–	–	–	–	–	–	–	–	–	–	–	**2210**	**3260**	**3260**	–	–	–	–	–	–	–	1FG1210- . . ■ ■ 4 - ■ . F1 -Z
–	–	–	–	–	–	–	–	–	–	–	–	**2210**	**3260**	**3260**	**3260**	**3260**	**3260**	**3260**	**3260**	**3260**	**3260**	1FG1210- . . ■ ■ 3 - ■ . F1 -Z
–	–	–	–	–	–	–	–	–	–	–	–	–	**3260**	**3260**	**3260**	**3260**	**3260**	**3260**	**3260**	**3260**	**3260**	1FG1210- . . ■ ■ 2 - ■ . F1 -Z
Max. output speed n_{2max} = 53 rpm, Transmission ratio i = 84.21																						
–	–	–	–	–	–	–	–	–	–	–	–	–	–	–	–	–	–	–	–	–	–	1FG1210- . . ■ ■ 6 - ■ . E1 -Z
–	–	–	–	–	–	–	–	–	–	–	–	**1950**	2890	**3260**	–	–	–	–	–	–	–	1FG1210- . . ■ ■ 4 - ■ . E1 -Z
–	–	–	–	–	–	–	–	–	–	–	–	**1950**	2890	**3260**	**3260**	**3260**	**3260**	**3260**	**3260**	**3260**	**3260**	1FG1210- . . ■ ■ 3 - ■ . E1 -Z
–	–	–	–	–	–	–	–	–	–	–	–	–	2890	**3260**	**3260**	**3260**	**3260**	**3260**	**3260**	**3260**	**3260**	1FG1210- . . ■ ■ 2 - ■ . E1 -Z
Max. output speed n_{2max} = 61 rpm, Transmission ratio i = 73.9																						
–	–	–	–	–	–	–	–	–	–	–	–	–	–	–	–	–	–	–	–	–	–	1FG1210- . . ■ ■ 6 - ■ . D1 -Z
–	–	–	–	–	–	–	–	–	–	–	–	**1710**	2540	**3260**	–	–	–	–	–	–	–	1FG1210- . . ■ ■ 4 - ■ . D1 -Z
–	–	–	–	–	–	–	–	–	–	–	–	**1710**	2540	**3260**	**3260**	**3260**	**3260**	**3260**	**3260**	**3260**	**3260**	1FG1210- . . ■ ■ 3 - ■ . D1 -Z
–	–	–	–	–	–	–	–	–	–	–	–	–	2540	**3260**	**3260**	**3260**	**3260**	**3260**	**3260**	**3260**	**3260**	1FG1210- . . ■ ■ 2 - ■ . D1 -Z

Motor shaft height:

36																						**C**
			48																			**D**
						63																**E**
												80										**F**
																	100					**G**

Motor length/motor version (**CT** = Compact, **HD** = High Dynamic)**:**

			0/CT				**0/CT**					**0/CT**						**0/CT**					**0**	**2**
											1/CT								**1/CT**				**1**	**2**
								1/HD															**1**	**4**
2/CT				**2/CT**					**2/CT**														**2**	**2**
										3/CT				**3/CT**						**3/CT**			**3**	**2**
	3/HD				**3/HD**																		**3**	**4**
		4/CT													**4/CT**								**4**	**2**
						4/HD					**4/HD**												**4**	**4**
																				5/CT			**5**	**2**
																5/HD							**5**	**4**
																	6/HD						**6**	**4**

Selection of shaft design, encoder system, mounting type and special designs on page 3/82.

1FG1210- ■ ■ . . . - . ■ . . -Z

© Siemens 2019

For line voltage 380 ... 480 V 3 AC (DC link voltage 510 ... 720 V DC) **– gearbox type** ***D109***

Geared motor torque at 1450 rpm
Note: All values in **bold** print are maximum gearbox values.
M_{2dyn}
Nm

Servo helical geared motors SIMOTICS S-1FG1
Article No.

Max. output speed n_{2max} = **68 rpm**, Transmission ratio i = **64.34**																						
–	–	–	–	–	–	–	–	–	–	–	–	–	–	–	–	–	–	–	–	–	–	1FG1210- . . ■ ■ 6 - ■ . C1 -Z
–	–	–	–	–	–	–	–	–	–	–	–	1490	2210	2990	–	–	–	–	–	–	–	1FG1210- . . ■ ■ 4 - ■ . C1 -Z
–	–	–	–	–	–	–	–	–	–	–	–	1490	2210	2990	**3250**	**3250**	**3250**	**3250**	**3250**	**3250**	**3250**	1FG1210- . . ■ ■ 3 - ■ . C1 -Z
–	–	–	–	–	–	–	–	–	–	–	–	–	2210	2990	**3250**	**3250**	**3250**	**3250**	**3250**	**3250**	**3250**	1FG1210- . . ■ ■ 2 - ■ . C1 -Z
Max. output speed n_{2max} = **79 rpm**, Transmission ratio i = **55**																						
–	–	–	–	–	–	–	–	–	–	–	–	–	–	–	–	–	–	–	–	–	–	1FG1210- . . ■ ■ 6 - ■ . B1 -Z
–	–	–	–	–	–	–	–	–	–	–	–	1280	1890	2560	–	–	–	–	–	–	–	1FG1210- . . ■ ■ 4 - ■ . B1 -Z
–	–	–	–	–	–	–	–	–	–	–	–	1280	1890	2560	**3100**	**3100**	**3100**	2810	**3100**	**3100**	**3100**	1FG1210- . . ■ ■ 3 - ■ . B1 -Z
–	–	–	–	–	–	–	–	–	–	–	–	–	1890	2560	**3100**	**3100**	**3100**	2810	**3100**	**3100**	**3100**	1FG1210- . . ■ ■ 2 - ■ . B1 -Z
Max. output speed n_{2max} = **92 rpm**, Transmission ratio i = **47.08**																						
–	–	–	–	–	–	–	–	–	–	–	–	–	–	–	–	–	–	–	–	–	–	1FG1210- . . ■ ■ 6 - ■ . A1 -Z
–	–	–	–	–	–	–	–	–	–	–	–	1090	1620	2190	–	–	–	–	–	–	–	1FG1210- . . ■ ■ 4 - ■ . A1 -Z
–	–	–	–	–	–	–	–	–	–	–	–	1090	1620	2190	2680	2850	**2960**	2410	**2960**	**2960**	**2960**	1FG1210- . . ■ ■ 3 - ■ . A1 -Z
–	–	–	–	–	–	–	–	–	–	–	–	–	1620	2190	2680	2850	**2960**	2410	**2960**	**2960**	**2960**	1FG1210- . . ■ ■ 2 - ■ . A1 -Z

Motor shaft height:

36																						**C**
			48																			**D**
							63															**E**
												80										**F**
																		100				**G**

Motor length/motor version (**CT** = Compact, **HD** = High Dynamic)**:**

			0/CT				**0/CT**					**0/CT**						**0/CT**					**0**	**2**
													1/CT						**1/CT**				**1**	**2**
								1/HD															**1**	**4**
2/CT				**2/CT**					**2/CT**														**2**	**2**
										3/CT				**3/CT**						**3/CT**			**3**	**2**
	3/HD				**3/HD**																		**3**	**4**
		4/CT														**4/CT**							**4**	**2**
						4/HD					**4/HD**													**4**	**4**
																				5/CT			**5**	**2**
															5/HD								**5**	**4**
																6/HD							**6**	**4**

Selection of shaft design, encoder system, mounting type and special designs on page 3/82.

1FG1210- ■ ■ . . . . - . ■ . . **-Z**

© Siemens 2019

Gearbox size 129, 2-stage – 1FG1111

Technical specifications

Gearbox type *Z129*

Servo geared motor Type	i	R_{ex}	M_{2rated} Nm	M_{2max} Nm	$M_{2Em.Off}$ Nm	n_{2max} rpm	n_{1max} rpm	φ [1] '	F_{R2} N	F_{R2max} N	c_T Nm/ '	J_G 10^{-4} kgm^2
1FG1111-.....-..X1	62.48	11371/182	5000	5200	8420	72	4500	6.20	29300	29200	260.3	7.5
1FG1111-.....-..W1	53.47	5561/104	5000	5100	8420	84	4500	6.20	29300	29200	260.3	9.5
1FG1111-.....-..V1	50.33	11122/221	5000	5100	8420	89	4500	6.20	29300	29200	260.3	10.7
1FG1111-.....-..U1	47.18	11039/234	5000	5000	8420	95	4500	6.20	28600	28600	260.3	11.9
1FG1111-.....-..T1	41.82	10873/260	5000	5000	8420	108	4500	6.30	27300	27300	260.3	14.4
1FG1111-.....-..S1	37.15	5312/143	5000	5000	8420	121	4500	6.30	26000	26000	260.3	17
1FG1111-.....-..R1	33.52	1743/52	5000	5000	8420	134	4500	6.30	25000	25000	260.2	19.9
1FG1111-.....-..Q1	29.7	8881/299	5000	5000	8420	152	4500	6.30	23800	23800	260.1	25
1FG1111-.....-..P1	26.3	8549/325	5000	5000	8420	171	4500	6.40	22600	22600	260.1	28
1FG1111-.....-..N1	23.41	913/39	5000	5000	8420	192	4500	6.40	21600	21600	260.1	33
1FG1111-.....-..M1	20.98	1909/91	5000	5100	8420	214	4500	6.50	20600	20400	259.9	40
1FG1111-.....-..L1	18.6	5561/299	5000	5100	8420	242	4500	6.50	19500	19400	259.8	47
1FG1111-.....-..K1	16.42	1494/91	5000	5100	8420	265	4357	6.60	18200	17300	259.7	57
1FG1111-.....-..J1	14.43	332/23	4940	4940	8390	301	4350	6.60	16400	16400	259.5	69
1FG1111-.....-..H1	13.07	3569/273	4850	4850	8240	333	4350	6.60	15500	15500	259.3	78
1FG1111-.....-..G1	11.38	3403/299	4760	4760	8090	382	4350	6.60	14400	14400	259.1	95
1FG1111-.....-..F1	9.33	1577/169	4660	4660	7920	466	4350	6.70	12800	12800	258.8	126
1FG1111-.....-..E1	8.53	162/19	3640	3640	4730	528	4500	7.36	15100	15100	196.3	66
1FG1111-.....-..D1	7.5	3276/437	3630	3630	4710	600	4500	8.30	13300	13300	196	80
1FG1111-.....-..C1	6.79	129/19	3630	3630	4710	663	4500	8.30	11900	11900	195.6	91
1FG1111-.....-..B1	5.91	2583/437	3610	3610	4730	736	4350	8.50	11900	11900	195.2	112
1FG1111-.....-..A1	4.85	63/13	3270	3270	4710	897	4350	8.80	12700	12700	194.4	151

Selection and ordering data

Shaft design, encoder system, mounting type and special designs

Gearbox type *Z129*

			Servo helical geared motors SIMOTICS S-1FG1 Article No. **1FG1111-** ■■ . . . - . ■ . . **-Z**
Shaft design:	Solid shaft with feather keyway	– Design 1	**1**
Order codes and Descriptions see chapter "Options"	Special shaft design		**9**
Encoder system for motors with DRIVE-CLiQ interface:	AS20DQI encoder		**Q**
	AM20DQI encoder		**R**
	R14DQ resolver		**P**
	R15DQ resolver		**U**
Order codes and Descriptions see chapter "Options"	Special version encoder system		**Z**
Mounting type:	Foot-mounted design		**A**
	Flange-mounted design		**F**
	Housing flange design		**H**
Special designs (Options): Order codes and Descriptions see chapter "Options" The following order codes must be added to each article number: • Oil type – order codes **K06** or **K11** • Mounting position – order codes **D01** ... **D06**			**-Z**

Selection of 2-stages servo helical geared motors with gearbox size 129 from next page. **1FG1111-** . . ■■■ - ■ . ■■ **-Z**

[1] Data are for option reduced-backlash version – order code **G99** required.

© Siemens 2019

Selection and ordering data (continued)

For line voltage 380 ... 480 V 3 AC (DC link voltage 510 ... 720 V DC) **– gearbox type** ***Z129***

Geared motor torque at 1450 rpm
Note: All values in **bold** print are maximum gearbox values.
M_{2dyn}
Nm

Servo helical geared motors SIMOTICS S-1FG1
Article No.

Max. output speed n_{2max} = **72 rpm**, Transmission ratio i = **62.48**																						
–	–	–	–	–	–	–	–	–	–	–	–	–	–	–	–	–	–	–	–	–	–	1FG1111- . . ■ ■ 6 - ■ . X1 -Z
–	–	–	–	–	–	–	–	–	–	–	–	–	–	–	–	–	–	–	–	–	–	1FG1111- . . ■ ■ 4 - ■ . X1 -Z
–	–	–	–	–	–	–	–	–	–	–	–	–	–	–	–	–	–	3250	4730	**5200**	**5200**	1FG1111- . . ■ ■ 3 - ■ . X1 -Z
–	–	–	–	–	–	–	–	–	–	–	–	–	–	–	–	–	–	3250	4730	**5200**	**5200**	1FG1111- . . ■ ■ 2 - ■ . X1 -Z
Max. output speed n_{2max} = **84 rpm**, Transmission ratio i = **53.47**																						
–	–	–	–	–	–	–	–	–	–	–	–	–	–	–	–	–	–	–	–	–	–	1FG1111- . . ■ ■ 6 - ■ . W1 -Z
–	–	–	–	–	–	–	–	–	–	–	–	–	–	–	–	–	–	–	–	–	–	1FG1111- . . ■ ■ 4 - ■ . W1 -Z
–	–	–	–	–	–	–	–	–	–	–	–	–	–	–	–	–	–	2780	4050	**5100**	**5100**	1FG1111- . . ■ ■ 3 - ■ . W1 -Z
–	–	–	–	–	–	–	–	–	–	–	–	–	–	–	–	–	–	2780	4050	**5100**	**5100**	1FG1111- . . ■ ■ 2 - ■ . W1 -Z
Max. output speed n_{2max} = **89 rpm**, Transmission ratio i = **50.33**																						
–	–	–	–	–	–	–	–	–	–	–	–	–	–	–	–	–	–	–	–	–	–	1FG1111- . . ■ ■ 6 - ■ . V1 -Z
–	–	–	–	–	–	–	–	–	–	–	–	–	–	–	–	–	–	–	–	–	–	1FG1111- . . ■ ■ 4 - ■ . V1 -Z
–	–	–	–	–	–	–	–	–	–	–	–	–	–	–	–	–	–	2630	3830	**5100**	**5100**	1FG1111- . . ■ ■ 3 - ■ . V1 -Z
–	–	–	–	–	–	–	–	–	–	–	–	–	–	–	–	–	–	2630	3830	**5100**	**5100**	1FG1111- . . ■ ■ 2 - ■ . V1 -Z
Max. output speed n_{2max} = **95 rpm**, Transmission ratio i = **47.18**																						
–	–	–	–	–	–	–	–	–	–	–	–	–	–	–	–	–	–	–	–	–	–	1FG1111- . . ■ ■ 6 - ■ . U1 -Z
–	–	–	–	–	–	–	–	–	–	–	–	–	–	–	–	–	–	–	–	–	–	1FG1111- . . ■ ■ 4 - ■ . U1 -Z
–	–	–	–	–	–	–	–	–	–	–	–	–	–	–	–	–	–	2470	3590	4850	**5000**	1FG1111- . . ■ ■ 3 - ■ . U1 -Z
–	–	–	–	–	–	–	–	–	–	–	–	–	–	–	–	–	–	2470	3590	4850	**5000**	1FG1111- . . ■ ■ 2 - ■ . U1 -Z
Max. output speed n_{2max} = **108 rpm**, Transmission ratio i = **41.82**																						
–	–	–	–	–	–	–	–	–	–	–	–	–	–	–	–	–	–	–	–	–	–	1FG1111- . . ■ ■ 6 - ■ . T1 -Z
–	–	–	–	–	–	–	–	–	–	–	–	–	–	–	–	–	–	–	–	–	–	1FG1111- . . ■ ■ 4 - ■ . T1 -Z
–	–	–	–	–	–	–	–	–	–	–	–	–	–	–	–	–	–	2190	3180	4300	**5000**	1FG1111- . . ■ ■ 3 - ■ . T1 -Z
–	–	–	–	–	–	–	–	–	–	–	–	–	–	–	–	–	–	2190	3180	4300	**5000**	1FG1111- . . ■ ■ 2 - ■ . T1 -Z
Max. output speed n_{2max} = **121 rpm**, Transmission ratio i = **37.15**																						
–	–	–	–	–	–	–	–	–	–	–	–	–	–	–	–	–	–	–	–	–	–	1FG1111- . . ■ ■ 6 - ■ . S1 -Z
–	–	–	–	–	–	–	–	–	–	–	–	–	–	–	–	–	–	–	–	–	–	1FG1111- . . ■ ■ 4 - ■ . S1 -Z
–	–	–	–	–	–	–	–	–	–	–	–	–	–	–	–	–	–	1950	2840	3830	**5000**	1FG1111- . . ■ ■ 3 - ■ . S1 -Z
–	–	–	–	–	–	–	–	–	–	–	–	–	–	–	–	–	–	1950	2840	3830	**5000**	1FG1111- . . ■ ■ 2 - ■ . S1 -Z
Max. output speed n_{2max} = **134 rpm**, Transmission ratio i = **33.52**																						
–	–	–	–	–	–	–	–	–	–	–	–	–	–	–	–	–	–	–	–	–	–	1FG1111- . . ■ ■ 6 - ■ . R1 -Z
–	–	–	–	–	–	–	–	–	–	–	–	–	–	–	–	–	–	–	–	–	–	1FG1111- . . ■ ■ 4 - ■ . R1 -Z
–	–	–	–	–	–	–	–	–	–	–	–	–	–	–	–	–	–	1760	2560	3460	4810	1FG1111- . . ■ ■ 3 - ■ . R1 -Z
–	–	–	–	–	–	–	–	–	–	–	–	–	–	–	–	–	–	1760	2560	3460	4810	1FG1111- . . ■ ■ 2 - ■ . R1 -Z

Motor shaft height:

| | | | | | | | | | | | | | | | | | | |

© Siemens 2019

Gearbox size 129, 2-stage – 1FG1111

For line voltage 380 ... 480 V 3 AC (DC link voltage 510 ... 720 V DC) **– gearbox type** ***Z129***

Geared motor torque at 1450 rpm
Note: All values in **bold** print are maximum gearbox values.

M_{2dyn} Nm																						Servo helical geared motors SIMOTICS S-1FG1 Article No.
Max. output speed n_{2max} = **152 rpm**, Transmission ratio i = **29.7**																						
–	–	–	–	–	–	–	–	–	–	–	–	–	–	–	–	–	–	–	–	–	–	1FG1111- . . ■ ■ 6 - ■ . Q1 -Z
–	–	–	–	–	–	–	–	–	–	–	–	–	–	–	–	–	–	–	–	–	–	1FG1111- . . ■ ■ 4 - ■ . Q1 -Z
–	–	–	–	–	–	–	–	–	–	–	–	–	–	–	–	–	–	–	1560	2270	3060	4260	1FG1111- . . ■ ■ 3 - ■ . Q1 -Z
–	–	–	–	–	–	–	–	–	–	–	–	–	–	–	–	–	–	–	1560	2270	3060	4260	1FG1111- . . ■ ■ 2 - ■ . Q1 -Z
Max. output speed n_{2max} = **171 rpm**, Transmission ratio i = **26.3**																						
–	–	–	–	–	–	–	–	–	–	–	–	–	–	–	–	–	–	–	–	–	–	1FG1111- . . ■ ■ 6 - ■ . P1 -Z
–	–	–	–	–	–	–	–	–	–	–	–	–	–	–	–	–	–	–	–	–	–	1FG1111- . . ■ ■ 4 - ■ . P1 -Z
–	–	–	–	–	–	–	–	–	–	–	–	–	–	–	–	–	–	–	1380	2010	2720	3780	1FG1111- . . ■ ■ 3 - ■ . P1 -Z
–	–	–	–	–	–	–	–	–	–	–	–	–	–	–	–	–	–	–	1380	2010	2720	3780	1FG1111- . . ■ ■ 2 - ■ . P1 -Z
Max. output speed n_{2max} = **192 rpm**, Transmission ratio i = **23.41**																						
–	–	–	–	–	–	–	–	–	–	–	–	–	–	–	–	–	–	–	–	–	–	1FG1111- . . ■ ■ 6 - ■ . N1 -Z
–	–	–	–	–	–	–	–	–	–	–	–	–	–	–	–	–	–	–	–	–	–	1FG1111- . . ■ ■ 4 - ■ . N1 -Z
–	–	–	–	–	–	–	–	–	–	–	–	–	–	–	–	–	–	–	1230	1790	2420	3370	1FG1111- . . ■ ■ 3 - ■ . N1 -Z
–	–	–	–	–	–	–	–	–	–	–	–	–	–	–	–	–	–	–	1230	1790	2420	3370	1FG1111- . . ■ ■ 2 - ■ . N1 -Z
Max. output speed n_{2max} = **214 rpm**, Transmission ratio i = **20.98**																						
–	–	–	–	–	–	–	–	–	–	–	–	–	–	–	–	–	–	–	–	–	–	1FG1111- . . ■ ■ 6 - ■ . M1 -Z
–	–	–	–	–	–	–	–	–	–	–	–	–	–	–	–	–	–	–	–	–	–	1FG1111- . . ■ ■ 4 - ■ . M1 -Z
–	–	–	–	–	–	–	–	–	–	–	–	–	–	–	–	–	–	–	1100	1610	2170	3020	1FG1111- . . ■ ■ 3 - ■ . M1 -Z
–	–	–	–	–	–	–	–	–	–	–	–	–	–	–	–	–	–	–	1100	1610	2170	3020	1FG1111- . . ■ ■ 2 - ■ . M1 -Z
Max. output speed n_{2max} = **242 rpm**, Transmission ratio i = **18.6**																						
–	–	–	–	–	–	–	–	–	–	–	–	–	–	–	–	–	–	–	–	–	–	1FG1111- . . ■ ■ 6 - ■ . L1 -Z
–	–	–	–	–	–	–	–	–	–	–	–	–	–	–	–	–	–	–	–	–	–	1FG1111- . . ■ ■ 4 - ■ . L1 -Z
–	–	–	–	–	–	–	–	–	–	–	–	–	–	–	–	–	–	–	980	1420	1930	2680	1FG1111- . . ■ ■ 3 - ■ . L1 -Z
–	–	–	–	–	–	–	–	–	–	–	–	–	–	–	–	–	–	–	980	1420	1930	2680	1FG1111- . . ■ ■ 2 - ■ . L1 -Z
Max. output speed n_{2max} = **265 rpm**, Transmission ratio i = **16.42**																						
–	–	–	–	–	–	–	–	–	–	–	–	–	–	–	–	–	–	–	–	–	–	1FG1111- . . ■ ■ 6 - ■ . K1 -Z
–	–	–	–	–	–	–	–	–	–	–	–	–	–	–	–	–	–	–	–	–	–	1FG1111- . . ■ ■ 4 - ■ . K1 -Z
–	–	–	–	–	–	–	–	–	–	–	–	–	–	–	–	–	–	–	865	1260	1700	2360	1FG1111- . . ■ ■ 3 - ■ . K1 -Z
–	–	–	–	–	–	–	–	–	–	–	–	–	–	–	–	–	–	–	865	1260	1700	2360	1FG1111- . . ■ ■ 2 - ■ . K1 -Z
Max. output speed n_{2max} = **301 rpm**, Transmission ratio i = **14.43**																						
–	–	–	–	–	–	–	–	–	–	–	–	–	–	–	–	–	–	–	–	–	–	1FG1111- . . ■ ■ 6 - ■ . J1 -Z
–	–	–	–	–	–	–	–	–	–	–	–	–	–	–	–	–	–	–	–	–	–	1FG1111- . . ■ ■ 4 - ■ . J1 -Z
–	–	–	–	–	–	–	–	–	–	–	–	–	–	–	–	–	–	–	760	1110	1490	2080	1FG1111- . . ■ ■ 3 - ■ . J1 -Z
–	–	–	–	–	–	–	–	–	–	–	–	–	–	–	–	–	–	–	760	1110	1490	2080	1FG1111- . . ■ ■ 2 - ■ . J1 -Z
Max. output speed n_{2max} = **333 rpm**, Transmission ratio i = **13.07**																						
–	–	–	–	–	–	–	–	–	–	–	–	–	–	–	–	–	–	–	–	–	–	1FG1111- . . ■ ■ 6 - ■ . H1 -Z
–	–	–	–	–	–	–	–	–	–	–	–	–	–	–	–	–	–	–	–	–	–	1FG1111- . . ■ ■ 4 - ■ . H1 -Z
–	–	–	–	–	–	–	–	–	–	–	–	–	–	–	–	–	–	–	690	1000	1350	1880	1FG1111- . . ■ ■ 3 - ■ . H1 -Z
–	–	–	–	–	–	–	–	–	–	–	–	–	–	–	–	–	–	–	690	1000	1350	1880	1FG1111- . . ■ ■ 2 - ■ . H1 -Z

Motor shaft height:

36																						C
			48																			D
							63															E
															80							F
																			100			G

Motor length/motor version (**CT** = Compact, **HD** = High Dynamic)**:**

			0/CT				0/CT				0/CT						0/CT					0	2
												1/CT						1/CT				1	2
								1/HD														1	4
2/CT				2/CT					2/CT													2	2
										3/CT				3/CT					3/CT			3	2
	3/HD				3/HD																	3	4
		4/CT													4/CT							4	2
						4/HD					4/HD											4	4
																			5/CT			5	2
																5/HD						5	4
																	6/HD					6	4

Selection of shaft design, encoder system, mounting type and special designs on page 3/86.

1FG1111- ■ ■ . . . - . ■ . . -Z

© Siemens 2019

For line voltage 380 ... 480 V 3 AC (DC link voltage 510 ... 720 V DC) **– gearbox type** ***Z129***

Geared motor torque at 1450 rpm
Note: All values in **bold** print are maximum gearbox values.

M_{2dyn} Nm																						Servo helical geared motors SIMOTICS S-1FG1 Article No.
Max. output speed n_{2max} = 382 rpm, Transmission ratio i = 11.38																						
–	–	–	–	–	–	–	–	–	–	–	–	–	–	–	–	–	–	–	–	–	–	1FG1111- . . ■ ■ 6 - ■ . G1 -Z
–	–	–	–	–	–	–	–	–	–	–	–	–	–	–	–	–	–	–	–	–	–	1FG1111- . . ■ ■ 4 - ■ . G1 -Z
–	–	–	–	–	–	–	–	–	–	–	–	–	–	–	–	–	–	600	875	1180	1640	1FG1111- . . ■ ■ 3 - ■ . G1 -Z
–	–	–	–	–	–	–	–	–	–	–	–	–	–	–	–	–	–	600	875	1180	1640	1FG1111- . . ■ ■ 2 - ■ . G1 -Z
Max. output speed n_{2max} = 466 rpm, Transmission ratio i = 9.33																						
–	–	–	–	–	–	–	–	–	–	–	–	–	–	–	–	–	–	–	–	–	–	1FG1111- . . ■ ■ 6 - ■ . F1 -Z
–	–	–	–	–	–	–	–	–	–	–	–	–	–	–	–	–	–	–	–	–	–	1FG1111- . . ■ ■ 4 - ■ . F1 -Z
–	–	–	–	–	–	–	–	–	–	–	–	–	–	–	–	–	–	490	715	970	1340	1FG1111- . . ■ ■ 3 - ■ . F1 -Z
–	–	–	–	–	–	–	–	–	–	–	–	–	–	–	–	–	–	490	715	970	1340	1FG1111- . . ■ ■ 2 - ■ . F1 -Z
Max. output speed n_{2max} = 528 rpm, Transmission ratio i = 8.53																						
–	–	–	–	–	–	–	–	–	–	–	–	–	–	–	–	–	–	–	–	–	–	1FG1111- . . ■ ■ 6 - ■ . E1 -Z
–	–	–	–	–	–	–	–	–	–	–	–	–	–	–	–	–	–	–	–	–	–	1FG1111- . . ■ ■ 4 - ■ . E1 -Z
–	–	–	–	–	–	–	–	–	–	–	–	–	–	–	–	–	–	455	660	895	1240	1FG1111- . . ■ ■ 3 - ■ . E1 -Z
–	–	–	–	–	–	–	–	–	–	–	–	–	–	–	–	–	–	455	660	895	1240	1FG1111- . . ■ ■ 2 - ■ . E1 -Z
Max. output speed n_{2max} = 600 rpm, Transmission ratio i = 7.5																						
–	–	–	–	–	–	–	–	–	–	–	–	–	–	–	–	–	–	–	–	–	–	1FG1111- . . ■ ■ 6 - ■ . D1 -Z
–	–	–	–	–	–	–	–	–	–	–	–	–	–	–	–	–	–	–	–	–	–	1FG1111- . . ■ ■ 4 - ■ . D1 -Z
–	–	–	–	–	–	–	–	–	–	–	–	–	–	–	–	–	–	400	580	785	1090	1FG1111- . . ■ ■ 3 - ■ . D1 -Z
–	–	–	–	–	–	–	–	–	–	–	–	–	–	–	–	–	–	400	580	785	1090	1FG1111- . . ■ ■ 2 - ■ . D1 -Z
Max. output speed n_{2max} = 663 rpm, Transmission ratio i = 6.79																						
–	–	–	–	–	–	–	–	–	–	–	–	–	–	–	–	–	–	–	–	–	–	1FG1111- . . ■ ■ 6 - ■ . C1 -Z
–	–	–	–	–	–	–	–	–	–	–	–	–	–	–	–	–	–	–	–	–	–	1FG1111- . . ■ ■ 4 - ■ . C1 -Z
–	–	–	–	–	–	–	–	–	–	–	–	–	–	–	–	–	–	360	525	710	990	1FG1111- . . ■ ■ 3 - ■ . C1 -Z
–	–	–	–	–	–	–	–	–	–	–	–	–	–	–	–	–	–	360	525	710	990	1FG1111- . . ■ ■ 2 - ■ . C1 -Z
Max. output speed n_{2max} = 736 rpm, Transmission ratio i = 5.91																						
–	–	–	–	–	–	–	–	–	–	–	–	–	–	–	–	–	–	–	–	–	–	1FG1111- . . ■ ■ 6 - ■ . B1 -Z
–	–	–	–	–	–	–	–	–	–	–	–	–	–	–	–	–	–	–	–	–	–	1FG1111- . . ■ ■ 4 - ■ . B1 -Z
–	–	–	–	–	–	–	–	–	–	–	–	–	–	–	–	–	–	315	460	620	860	1FG1111- . . ■ ■ 3 - ■ . B1 -Z
–	–	–	–	–	–	–	–	–	–	–	–	–	–	–	–	–	–	315	460	620	860	1FG1111- . . ■ ■ 2 - ■ . B1 -Z
Max. output speed n_{2max} = 897 rpm, Transmission ratio i = 4.85																						
–	–	–	–	–	–	–	–	–	–	–	–	–	–	–	–	–	–	–	–	–	–	1FG1111- . . ■ ■ 6 - ■ . A1 -Z
–	–	–	–	–	–	–	–	–	–	–	–	–	–	–	–	–	–	–	–	–	–	1FG1111- . . ■ ■ 4 - ■ . A1 -Z
–	–	–	–	–	–	–	–	–	–	–	–	–	–	–	–	–	–	255	375	510	705	1FG1111- . . ■ ■ 3 - ■ . A1 -Z
–	–	–	–	–	–	–	–	–	–	–	–	–	–	–	–	–	–	255	375	510	705	1FG1111- . . ■ ■ 2 - ■ . A1 -Z

Motor shaft height:

36																								**C**
			48																					**D**
							63																	**E**
												80												**F**
																		100						**G**

Motor length/motor version (**CT** = Compact, **HD** = High Dynamic)**:**

			0/CT				**0/CT**					**0/CT**						**0/CT**						**0**	**2**
											1/CT								**1/CT**					**1**	**2**
								1/HD																**1**	**4**
2/CT				**2/CT**					**2/CT**															**2**	**2**
										3/CT				**3/CT**						**3/CT**				**3**	**2**
	3/HD				**3/HD**																			**3**	**4**
		4/CT														**4/CT**								**4**	**2**
						4/HD						**4/HD**													**4**	**4**
																				5/CT				**5**	**2**
															5/HD									**5**	**4**
																6/HD								**6**	**4**

Selection of shaft design, encoder system, mounting type and special designs on page 3/86.

1FG1111- ■ ■ . . . - . ■ . . -Z

© Siemens 2019

Gearbox size 129, 3-stage – 1FG1211

Technical specifications

Gearbox type *D129*

Servo geared motor Type	i	R_{ex}	M_{2rated} Nm	M_{2max} Nm	$M_{2Em.Off}$ Nm	n_{2max} rpm	n_{1max} rpm	φ [1] '	F_{R2} N	F_{R2max} N	c_T Nm/ '	J_G 10^{-4} kgm^2
1FG1211-.....-..Q1	316.9	259541/819	5000	5000	8420	14	4500	6.40	29300	29300	268.5	4.5
1FG1211-.....-..P1	270.24	505885/1872	5000	5000	8420	17	4500	6.40	29300	29300	268.5	5.6
1FG1211-.....-..N1	254.34	505885/1989	5000	5000	8420	18	4500	6.40	29300	29300	268.6	6.3
1FG1211-.....-..M1	236.03	497087/2106	5000	5000	8420	19	4500	6.40	29300	29300	268.6	6.9
1FG1211-.....-..L1	208.67	162763/780	5000	5000	8420	22	4500	6.40	29300	29300	268.6	8.3
1FG1211-.....-..K1	186.28	479491/2574	5000	5000	8420	24	4500	6.40	29300	29300	268.6	9.8
1FG1211-.....-..J1	167.63	470693/2808	5000	5000	8420	27	4500	6.40	29300	29300	268.6	11.6
1FG1211-.....-..H1	145.49	391511/2691	5000	5000	8420	31	4500	6.40	29300	29300	268.5	14
1FG1211-.....-..G1	130.84	127571/975	5000	5000	8420	34	4500	6.40	29300	29300	268.5	16.4
1FG1211-.....-..F1	114.36	321127/2808	5000	5000	8420	39	4500	6.50	29300	29300	268.5	19.1
1FG1211-.....-..E1	102.05	83581/819	5000	5000	8420	44	4500	6.50	29300	29300	268.5	23
1FG1211-.....-..D1	89.91	241945/2691	5000	5000	8420	50	4500	6.50	29300	29300	268.5	27
1FG1211-.....-..C1	78.78	193556/2457	5000	5000	8420	57	4500	6.50	29300	29300	268.5	31
1FG1211-.....-..B1	68.66	61586/897	5000	5000	8420	66	4500	6.50	29300	29300	268.5	37
1FG1211-.....-..A1	62.66	21995/351	5000	5000	8420	72	4500	6.50	29300	29300	268.5	44

Selection and ordering data

Shaft design, encoder system, mounting type and special designs

Gearbox type *D129*

			Servo helical geared motors SIMOTICS S-1FG1 Article No.
			1FG1211- ■ ■ . . . - . ■ . . **-Z**
Shaft design:	Solid shaft with feather keyway	– Design 1	**1**
Order codes and Descriptions see chapter "Options"	Special shaft design		**9**
Encoder system for motors with DRIVE-CLiQ interface:	AS20DQI encoder		**Q**
	AM20DQI encoder		**R**
	R14DQ resolver		**P**
	R15DQ resolver		**U**
Order codes and Descriptions see chapter "Options"	Special version encoder system		**Z**
Mounting type:	Foot-mounted design		**A**
	Flange-mounted design		**F**
	Housing flange design		**H**
Special designs (Options): Order codes and Descriptions see chapter "Options" The following order codes must be added to each article number: • Oil type – order codes **K06** or **K11** • Mounting position – order codes **D01** ... **D06**			**-Z**
Selection of 3-stages servo helical geared motors with gearbox size 129 from next page.			**1FG1211-** . . ■ ■ ■ - ■ . ■ ■ **-Z**

[1] Data are for option reduced-backlash version – order code **G99** required.

© Siemens 2019

Selection and ordering data (continued)

For line voltage 380 ... 480 V 3 AC (DC link voltage 510 ... 720 V DC) **– gearbox type** ***D129***

Geared motor torque at 1450 rpm Note: All values in **bold** print are maximum gearbox values. M_{2dyn} Nm																						Servo helical geared motors SIMOTICS S-1FG1 Article No.
Max. output speed n_{2max} = **14 rpm**, Transmission ratio i = **316.9**																						
–	–	–	–	–	–	–	–	–	–	–	–	–	–	–	–	–	–	–	–	–	–	1FG1211- . . ■ ■ 6 - ■ . Q1 -Z
–	–	–	–	–	–	–	–	–	–	–	–	–	–	–	–	–	–	–	–	–	–	1FG1211- . . ■ ■ 4 - ■ . Q1 -Z
–	–	–	–	–	–	–	–	–	–	–	–	–	–	–	–	–	–	–	**5000**	**5000**	**5000**	1FG1211- . . ■ ■ 3 - ■ . Q1 -Z
–	–	–	–	–	–	–	–	–	–	–	–	–	–	–	–	–	–	–	**5000**	**5000**	**5000**	1FG1211- . . ■ ■ 2 - ■ . Q1 -Z
Max. output speed n_{2max} = **17 rpm**, Transmission ratio i = **270.24**																						
–	–	–	–	–	–	–	–	–	–	–	–	–	–	–	–	–	–	–	–	–	–	1FG1211- . . ■ ■ 6 - ■ . P1 -Z
–	–	–	–	–	–	–	–	–	–	–	–	–	–	–	–	–	–	–	–	–	–	1FG1211- . . ■ ■ 4 - ■ . P1 -Z
–	–	–	–	–	–	–	–	–	–	–	–	–	–	–	–	–	–	–	**5000**	**5000**	**5000**	1FG1211- . . ■ ■ 3 - ■ . P1 -Z
–	–	–	–	–	–	–	–	–	–	–	–	–	–	–	–	–	–	–	**5000**	**5000**	**5000**	1FG1211- . . ■ ■ 2 - ■ . P1 -Z
Max. output speed n_{2max} = **18 rpm**, Transmission ratio i = **254.34**																						
–	–	–	–	–	–	–	–	–	–	–	–	–	–	–	–	–	–	–	–	–	–	1FG1211- . . ■ ■ 6 - ■ . N1 -Z
–	–	–	–	–	–	–	–	–	–	–	–	–	–	–	–	–	–	–	–	–	–	1FG1211- . . ■ ■ 4 - ■ . N1 -Z
–	–	–	–	–	–	–	–	–	–	–	–	–	–	–	–	–	–	–	**5000**	**5000**	**5000**	1FG1211- . . ■ ■ 3 - ■ . N1 -Z
–	–	–	–	–	–	–	–	–	–	–	–	–	–	–	–	–	–	–	**5000**	**5000**	**5000**	1FG1211- . . ■ ■ 2 - ■ . N1 -Z
Max. output speed n_{2max} = **19 rpm**, Transmission ratio i = **236.03**																						
–	–	–	–	–	–	–	–	–	–	–	–	–	–	–	–	–	–	–	–	–	–	1FG1211- . . ■ ■ 6 - ■ . M1 -Z
–	–	–	–	–	–	–	–	–	–	–	–	–	–	–	–	–	–	–	–	–	–	1FG1211- . . ■ ■ 4 - ■ . M1 -Z
–	–	–	–	–	–	–	–	–	–	–	–	–	–	–	–	–	–	–	**5000**	**5000**	**5000**	1FG1211- . . ■ ■ 3 - ■ . M1 -Z
–	–	–	–	–	–	–	–	–	–	–	–	–	–	–	–	–	–	–	**5000**	**5000**	**5000**	1FG1211- . . ■ ■ 2 - ■ . M1 -Z
Max. output speed n_{2max} = **22 rpm**, Transmission ratio i = **208.67**																						
–	–	–	–	–	–	–	–	–	–	–	–	–	–	–	–	–	–	–	–	–	–	1FG1211- . . ■ ■ 6 - ■ . L1 -Z
–	–	–	–	–	–	–	–	–	–	–	–	–	–	–	–	–	–	–	–	–	–	1FG1211- . . ■ ■ 4 - ■ . L1 -Z
–	–	–	–	–	–	–	–	–	–	–	–	–	–	–	–	–	–	–	**5000**	**5000**	**5000**	1FG1211- . . ■ ■ 3 - ■ . L1 -Z
–	–	–	–	–	–	–	–	–	–	–	–	–	–	–	–	–	–	–	**5000**	**5000**	**5000**	1FG1211- . . ■ ■ 2 - ■ . L1 -Z
Max. output speed n_{2max} = **24 rpm**, Transmission ratio i = **186.28**																						
–	–	–	–	–	–	–	–	–	–	–	–	–	–	–	–	–	–	–	–	–	–	1FG1211- . . ■ ■ 6 - ■ . K1 -Z
–	–	–	–	–	–	–	–	–	–	–	–	–	–	–	–	–	–	–	–	–	–	1FG1211- . . ■ ■ 4 - ■ . K1 -Z
–	–	–	–	–	–	–	–	–	–	–	–	–	–	–	–	–	–	–	**5000**	**5000**	**5000**	1FG1211- . . ■ ■ 3 - ■ . K1 -Z
–	–	–	–	–	–	–	–	–	–	–	–	–	–	–	–	–	–	–	**5000**	**5000**	**5000**	1FG1211- . . ■ ■ 2 - ■ . K1 -Z
Max. output speed n_{2max} = **27 rpm**, Transmission ratio i = **167.63**																						
–	–	–	–	–	–	–	–	–	–	–	–	–	–	–	–	–	–	–	–	–	–	1FG1211- . . ■ ■ 6 - ■ . J1 -Z
–	–	–	–	–	–	–	–	–	–	–	–	–	–	–	–	–	–	–	–	–	–	1FG1211- . . ■ ■ 4 - ■ . J1 -Z
–	–	–	–	–	–	–	–	–	–	–	–	–	–	–	–	–	–	–	**5000**	**5000**	**5000**	1FG1211- . . ■ ■ 3 - ■ . J1 -Z
–	–	–	–	–	–	–	–	–	–	–	–	–	–	–	–	–	–	–	**5000**	**5000**	**5000**	1FG1211- . . ■ ■ 2 - ■ . J1 -Z

Motor shaft height:

| | | | | | | | | | | | | | | | | | | |

© Siemens 2019

Gearbox size 129, 3-stage – 1FG1211

For line voltage 380 ... 480 V 3 AC (DC link voltage 510 ... 720 V DC) **– gearbox type** *D129*

Geared motor torque at 1450 rpm
Note: All values in **bold** print are maximum gearbox values.

M_{2dyn} Nm																						Servo helical geared motors SIMOTICS S-1FG1 Article No.
Max. output speed n_{2max} = 31 rpm, Transmission ratio i = 145.49																						
–	–	–	–	–	–	–	–	–	–	–	–	–	–	–	–	–	–	–	–	–	–	1FG1211- . . ■ ■ 6 - ■ . H1 -Z
–	–	–	–	–	–	–	–	–	–	–	–	–	–	–	–	–	–	–	–	–	–	1FG1211- . . ■ ■ 4 - ■ . H1 -Z
–	–	–	–	–	–	–	–	–	–	–	–	–	–	–	–	–	–	–	**5000**	**5000**	**5000**	1FG1211- . . ■ ■ 3 - ■ . H1 -Z
–	–	–	–	–	–	–	–	–	–	–	–	–	–	–	–	–	–	–	**5000**	**5000**	**5000**	1FG1211- . . ■ ■ 2 - ■ . H1 -Z
Max. output speed n_{2max} = 34 rpm, Transmission ratio i = 130.84																						
–	–	–	–	–	–	–	–	–	–	–	–	–	–	–	–	–	–	–	–	–	–	1FG1211- . . ■ ■ 6 - ■ . G1 -Z
–	–	–	–	–	–	–	–	–	–	–	–	–	–	–	–	–	–	–	–	–	–	1FG1211- . . ■ ■ 4 - ■ . G1 -Z
–	–	–	–	–	–	–	–	–	–	–	–	–	–	–	–	–	–	–	**5000**	**5000**	**5000**	1FG1211- . . ■ ■ 3 - ■ . G1 -Z
–	–	–	–	–	–	–	–	–	–	–	–	–	–	–	–	–	–	–	**5000**	**5000**	**5000**	1FG1211- . . ■ ■ 2 - ■ . G1 -Z
Max. output speed n_{2max} = 39 rpm, Transmission ratio i = 114.36																						
–	–	–	–	–	–	–	–	–	–	–	–	–	–	–	–	–	–	–	–	–	–	1FG1211- . . ■ ■ 6 - ■ . F1 -Z
–	–	–	–	–	–	–	–	–	–	–	–	–	–	–	–	–	–	–	–	–	–	1FG1211- . . ■ ■ 4 - ■ . F1 -Z
–	–	–	–	–	–	–	–	–	–	–	–	–	–	–	–	–	–	–	**5000**	**5000**	**5000**	1FG1211- . . ■ ■ 3 - ■ . F1 -Z
–	–	–	–	–	–	–	–	–	–	–	–	–	–	–	–	–	–	–	**5000**	**5000**	**5000**	1FG1211- . . ■ ■ 2 - ■ . F1 -Z
Max. output speed n_{2max} = 44 rpm, Transmission ratio i = 102.05																						
–	–	–	–	–	–	–	–	–	–	–	–	–	–	–	–	–	–	–	–	–	–	1FG1211- . . ■ ■ 6 - ■ . E1 -Z
–	–	–	–	–	–	–	–	–	–	–	–	–	–	–	–	–	–	–	–	–	–	1FG1211- . . ■ ■ 4 - ■ . E1 -Z
–	–	–	–	–	–	–	–	–	–	–	–	–	–	–	–	–	–	–	**5000**	**5000**	**5000**	1FG1211- . . ■ ■ 3 - ■ . E1 -Z
–	–	–	–	–	–	–	–	–	–	–	–	–	–	–	–	–	–	–	**5000**	**5000**	**5000**	1FG1211- . . ■ ■ 2 - ■ . E1 -Z
Max. output speed n_{2max} = 50 rpm, Transmission ratio i = 89.91																						
–	–	–	–	–	–	–	–	–	–	–	–	–	–	–	–	–	–	–	–	–	–	1FG1211- . . ■ ■ 6 - ■ . D1 -Z
–	–	–	–	–	–	–	–	–	–	–	–	–	–	–	–	–	–	–	–	–	–	1FG1211- . . ■ ■ 4 - ■ . D1 -Z
–	–	–	–	–	–	–	–	–	–	–	–	–	–	–	–	–	–	–	**4590**	**5000**	**5000**	1FG1211- . . ■ ■ 3 - ■ . D1 -Z
–	–	–	–	–	–	–	–	–	–	–	–	–	–	–	–	–	–	–	**4590**	**5000**	**5000**	1FG1211- . . ■ ■ 2 - ■ . D1 -Z
Max. output speed n_{2max} = 57 rpm, Transmission ratio i = 78.78																						
–	–	–	–	–	–	–	–	–	–	–	–	–	–	–	–	–	–	–	–	–	–	1FG1211- . . ■ ■ 6 - ■ . C1 -Z
–	–	–	–	–	–	–	–	–	–	–	–	–	–	–	–	–	–	–	–	–	–	1FG1211- . . ■ ■ 4 - ■ . C1 -Z
–	–	–	–	–	–	–	–	–	–	–	–	–	–	–	–	–	–	–	4030	**5000**	**5000**	1FG1211- . . ■ ■ 3 - ■ . C1 -Z
–	–	–	–	–	–	–	–	–	–	–	–	–	–	–	–	–	–	–	4030	**5000**	**5000**	1FG1211- . . ■ ■ 2 - ■ . C1 -Z
Max. output speed n_{2max} = 66 rpm, Transmission ratio i = 68.66																						
–	–	–	–	–	–	–	–	–	–	–	–	–	–	–	–	–	–	–	–	–	–	1FG1211- . . ■ ■ 6 - ■ . B1 -Z
–	–	–	–	–	–	–	–	–	–	–	–	–	–	–	–	–	–	–	–	–	–	1FG1211- . . ■ ■ 4 - ■ . B1 -Z
–	–	–	–	–	–	–	–	–	–	–	–	–	–	–	–	–	–	–	3520	**5000**	**5000**	1FG1211- . . ■ ■ 3 - ■ . B1 -Z
–	–	–	–	–	–	–	–	–	–	–	–	–	–	–	–	–	–	–	3520	**5000**	**5000**	1FG1211- . . ■ ■ 2 - ■ . B1 -Z
Max. output speed n_{2max} = 72 rpm, Transmission ratio i = 62.66																						
–	–	–	–	–	–	–	–	–	–	–	–	–	–	–	–	–	–	–	–	–	–	1FG1211- . . ■ ■ 6 - ■ . A1 -Z
–	–	–	–	–	–	–	–	–	–	–	–	–	–	–	–	–	–	–	–	–	–	1FG1211- . . ■ ■ 4 - ■ . A1 -Z
–	–	–	–	–	–	–	–	–	–	–	–	–	–	–	–	–	–	–	**3210**	**4680**	**5000**	1FG1211- . . ■ ■ 3 - ■ . A1 -Z
–	–	–	–	–	–	–	–	–	–	–	–	–	–	–	–	–	–	–	**3210**	**4680**	**5000**	1FG1211- . . ■ ■ 2 - ■ . A1 -Z

Motor shaft height:

36																						**C**
			48																			**D**
						63																**E**
												80										**F**
																			100			**G**

Motor length/motor version (**CT** = Compact, **HD** = High Dynamic)**:**

			0/CT				**0/CT**				**0/CT**						**0/CT**					**0**		**2**
												1/CT						**1/CT**				**1**		**2**
								1/HD														**1**		**4**
2/CT				**2/CT**					**2/CT**													**2**		**2**
										3/CT				**3/CT**					**3/CT**			**3**		**2**
	3/HD				**3/HD**																	**3**		**4**
		4/CT														**4/CT**						**4**		**2**
						4/HD					**4/HD**											**4**		**4**
																				5/CT		**5**		**2**
															5/HD							**5**		**4**
																6/HD						**6**		**4**

Selection of shaft design, encoder system, mounting type and special designs on page 3/90.

1FG1211- ■ ■ . . . - . ■ . . -Z

© Siemens 2019

© Siemens 2019

3

Dimensional drawings

Gearbox types *Z19* and *D19*

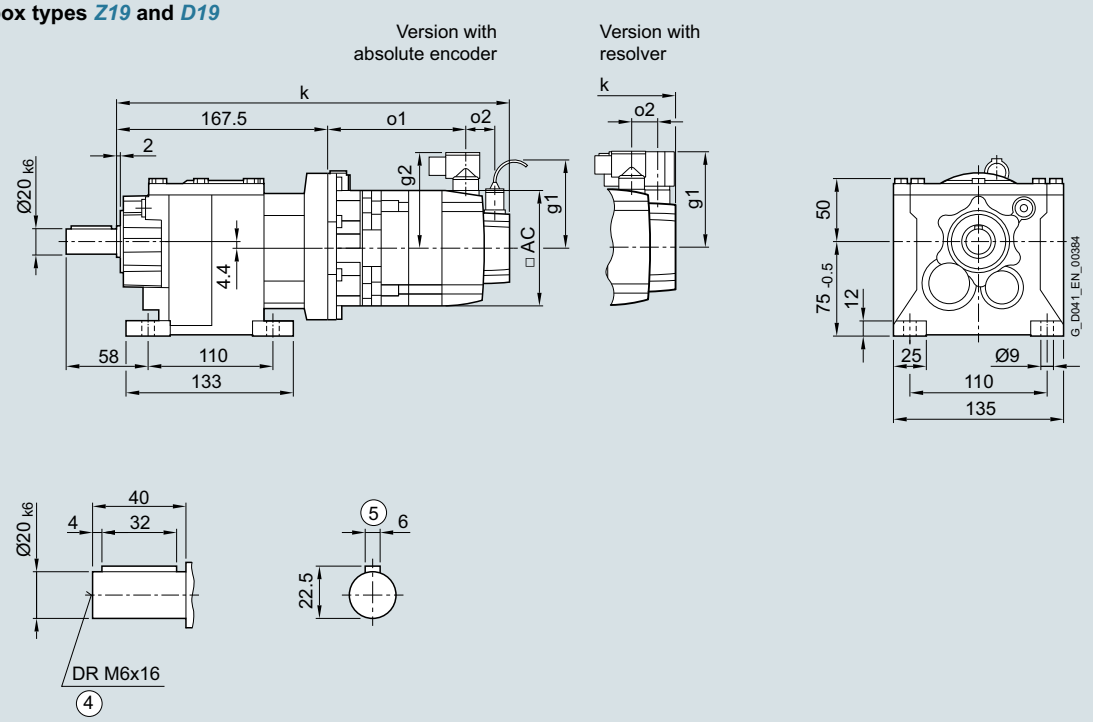

④ DIN 332 ⑤ Feather key/keyway DIN 6885

© Siemens 2019

Servo helical geared motor	Motor shaft height	Motor version	Absolute encoder with brake		with brake for increased energy		without brake					Resolver with brake		with brake for increased energy		without brake					
Type			k	o1	k	o1	k	o1	o2	g1	g2	k	o1	k	o1	k	o1	o2	g1	g2	AC
1FG1...-..C2.-....	36	CT	337	107	–	–	337	107	50	105	78	317	113	–	–	317	113	15	80	80	72
1FG1...-..C3.-....		HD	347	117	–	–	347	117				327	123	–	–	327	123				
1FG1...-..C4.-....		CT	362	132	–	–	362	132				342	138	–	–	342	138				
1FG1...-..D0.-....	48	CT	318	89	–	–	318	89	50	105	90	303	89	–	–	303	89	23	90	90	96
1FG1...-..D2.-....		CT	346	116	–	–	346	116				332	116	–	–	332	116				
1FG1...-..D3.-....		HD	372	136	–	–	372	136	56			358	142	–	–	358	142				
1FG1...-..D4.-....		HD	397	161	–	–	397	161				383	167	–	–	383	167				
1FG1...-..E0.-....	63	CT	–	–	–	–	–	–	–	–	–	–	–	–	–	–	–	–	–	–	–
1FG1...-..E1.-....		HD	–	–	–	–	–	–	–	–	–	–	–	–	–	–	–	–	–	–	–
1FG1...-..E2.-....		CT	–	–	–	–	–	–	–	–	–	–	–	–	–	–	–	–	–	–	–
1FG1...-..E3.-....		CT	–	–	–	–	–	–	–	–	–	–	–	–	–	–	–	–	–	–	–
1FG1...-..E4.-....		HD	–	–	–	–	–	–	–	–	–	–	–	–	–	–	–	–	–	–	–
1FG1...-..F0.-....	80	CT	–	–	–	–	–	–	–	–	–	–	–	–	–	–	–	–	–	–	–
1FG1...-..F1.-....		CT	–	–	–	–	–	–	–	–	–	–	–	–	–	–	–	–	–	–	–
1FG1...-..F3.-....		CT	–	–	–	–	–	–	–	–	–	–	–	–	–	–	–	–	–	–	–
1FG1...-..F4.-....		CT	–	–	–	–	–	–	–	–	–	–	–	–	–	–	–	–	–	–	–
1FG1...-..F52-....		HD	–	–	–	–	–	–	–	–	–	–	–	–	–	–	–	–	–	–	–
1FG1...-..F62-....		HD	–	–	–	–	–	–	–	–	–	–	–	–	–	–	–	–	–	–	–
1FG1...-..F53-....		HD	–	–	–	–	–	–	–	–	–	–	–	–	–	–	–	–	–	–	–
1FG1...-..F63-....		HD	–	–	–	–	–	–	–	–	–	–	–	–	–	–	–	–	–	–	–
1FG1...-..G0.-....	100	CT	–	–	–	–	–	–	–	–	–	–	–	–	–	–	–	–	–	–	–
1FG1...-..G1.-....		CT	–	–	–	–	–	–	–	–	–	–	–	–	–	–	–	–	–	–	–
1FG1...-..G3.-....		CT	–	–	–	–	–	–	–	–	–	–	–	–	–	–	–	–	–	–	–
1FG1...-..G5.-....		CT	–	–	–	–	–	–	–	–	–	–	–	–	–	–	–	–	–	–	–

© Siemens 2019

3

Dimensional drawings

Gearbox types *ZF19* and *DF19*

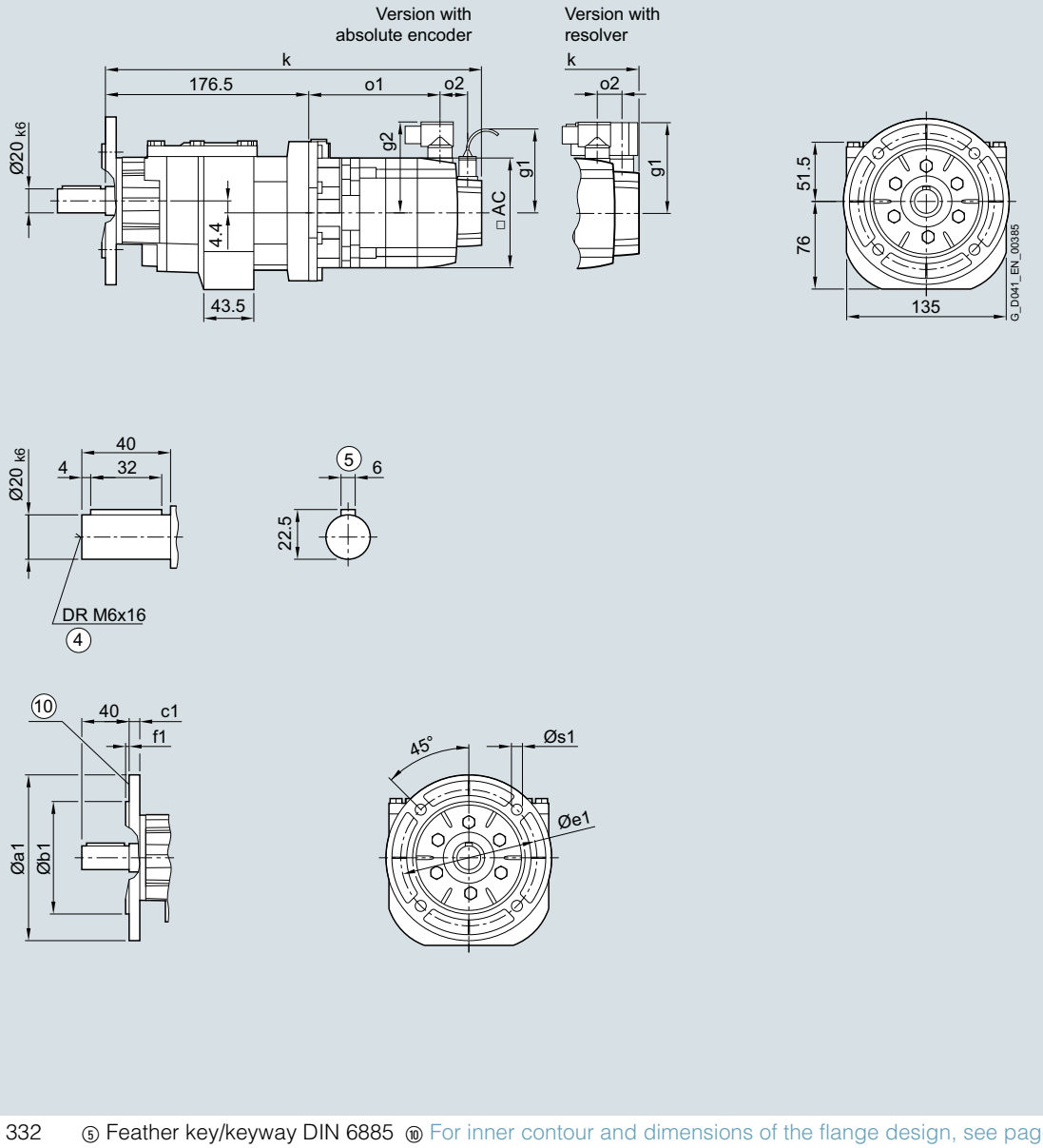

④ DIN 332 ⑤ Feather key/keyway DIN 6885 ⑩ For inner contour and dimensions of the flange design, see page 3/158

© Siemens 2019

Servo helical geared motor	Motor shaft height	Motor version	Absolute encoder with brake		with brake for increased energy		without brake					Resolver with brake		with brake for increased energy		without brake					
Type			k	o1	k	o1	k	o1	o2	g1	g2	k	o1	k	o1	k	o1	o2	g1	g2	AC
1FG1...-..C2.-....	36	CT	337	107	–	–	337	107	50	105	78	317	113	–	–	317	113	15	80	80	72
1FG1...-..C3.-....		HD	347	117	–	–	347	117				327	123	–	–	327	123				
1FG1...-..C4.-....		CT	362	132	–	–	362	132				342	138	–	–	342	138				
1FG1...-..D0.-....	48	CT	318	89	–	–	318	89	50	105	90	303	89	–	–	303	89	23	90	90	96
1FG1...-..D2.-....		CT	346	116	–	–	346	116				332	116	–	–	332	116				
1FG1...-..D3.-....		HD	372	136	–	–	372	136	56			358	142	–	–	358	142				
1FG1...-..D4.-....		HD	397	161	–	–	397	161				383	167	–	–	383	167				
1FG1...-..E0.-....	63	CT	–	–	–	–	–	–	–	–	–	–	–	–	–	–	–	–	–	–	–
1FG1...-..E1.-....		HD	–	–	–	–	–	–	–	–	–	–	–	–	–	–	–	–	–	–	–
1FG1...-..E2.-....		CT	–	–	–	–	–	–	–	–	–	–	–	–	–	–	–	–	–	–	–
1FG1...-..E3.-....		CT	–	–	–	–	–	–	–	–	–	–	–	–	–	–	–	–	–	–	–
1FG1...-..E4.-....		HD	–	–	–	–	–	–	–	–	–	–	–	–	–	–	–	–	–	–	–
1FG1...-..F0.-....	80	CT	–	–	–	–	–	–	–	–	–	–	–	–	–	–	–	–	–	–	–
1FG1...-..F1.-....		CT	–	–	–	–	–	–	–	–	–	–	–	–	–	–	–	–	–	–	–
1FG1...-..F3.-....		CT	–	–	–	–	–	–	–	–	–	–	–	–	–	–	–	–	–	–	–
1FG1...-..F4.-....		CT	–	–	–	–	–	–	–	–	–	–	–	–	–	–	–	–	–	–	–
1FG1...-..F52-....		HD	–	–	–	–	–	–	–	–	–	–	–	–	–	–	–	–	–	–	–
1FG1...-..F62-....		HD	–	–	–	–	–	–	–	–	–	–	–	–	–	–	–	–	–	–	–
1FG1...-..F53-....		HD	–	–	–	–	–	–	–	–	–	–	–	–	–	–	–	–	–	–	–
1FG1...-..F63-....		HD	–	–	–	–	–	–	–	–	–	–	–	–	–	–	–	–	–	–	–
1FG1...-..G0.-....	100	CT	–	–	–	–	–	–	–	–	–	–	–	–	–	–	–	–	–	–	–
1FG1...-..G1.-....		CT	–	–	–	–	–	–	–	–	–	–	–	–	–	–	–	–	–	–	–
1FG1...-..G3.-....		CT	–	–	–	–	–	–	–	–	–	–	–	–	–	–	–	–	–	–	–
1FG1...-..G5.-....		CT	–	–	–	–	–	–	–	–	–	–	–	–	–	–	–	–	–	–	–

© Siemens 2019

3

Dimensional drawings

Gearbox types *ZZ19* and *DZ19*

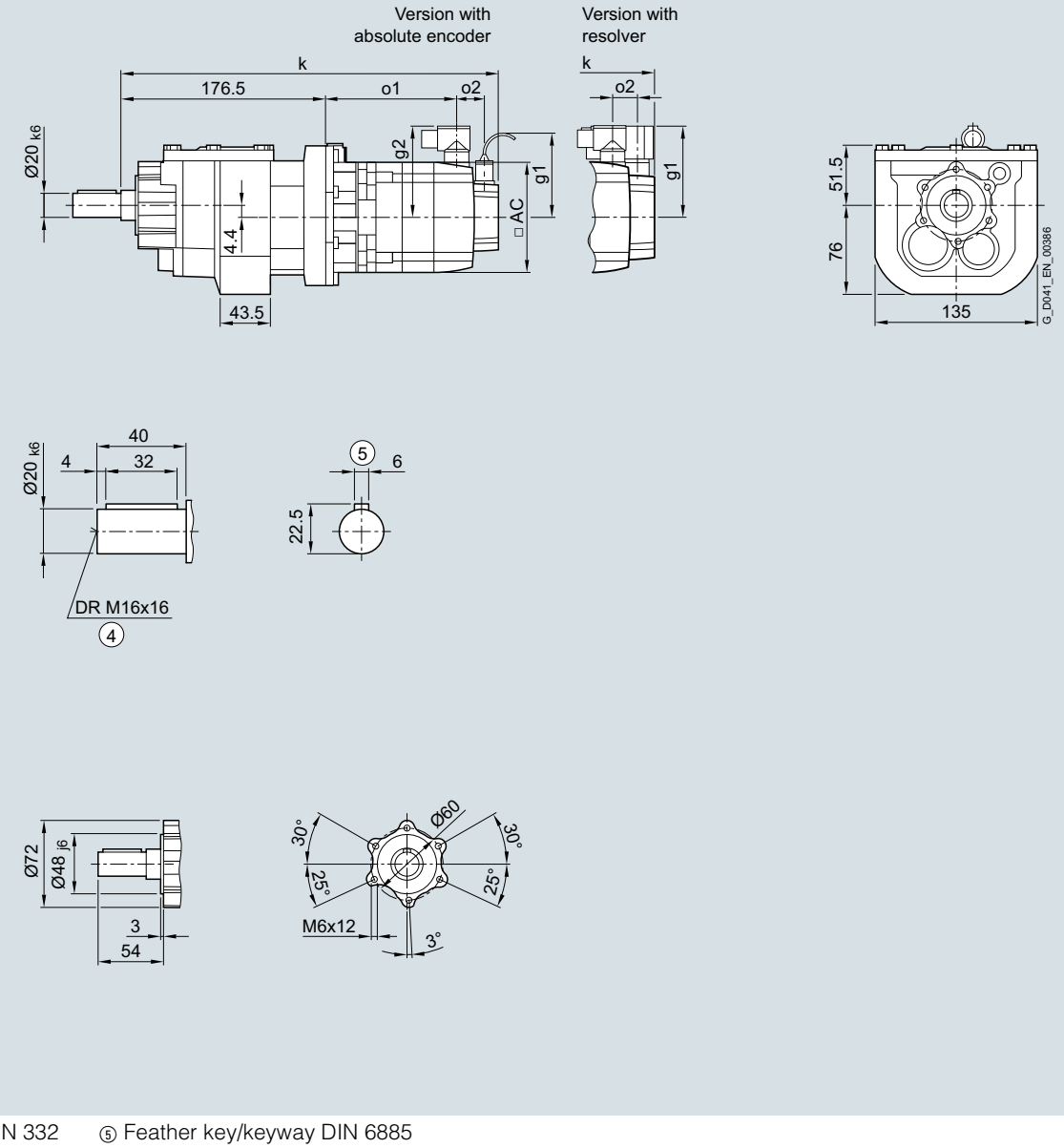

④ DIN 332 ⑤ Feather key/keyway DIN 6885

© Siemens 2019

Servo helical geared motor	Motor shaft height	Motor version	Absolute encoder with brake		with brake for increased energy		without brake					Resolver with brake		with brake for increased energy		without brake					
Type			k	o1	k	o1	k	o1	o2	g1	g2	k	o1	k	o1	k	o1	o2	g1	g2	AC
1FG1...-..C2.-....	36	CT	337	107	–	–	337	107	50	105	78	317	113	–	–	317	113	15	80	80	72
1FG1...-..C3.-....		HD	347	117	–	–	347	117				327	123	–	–	327	123				
1FG1...-..C4.-....		CT	362	132	–	–	362	132				342	138	–	–	342	138				
1FG1...-..D0.-....	48	CT	318	89	–	–	318	89	50	105	90	303	89	–	–	303	89	23	90	90	96
1FG1...-..D2.-....		CT	346	116	–	–	346	116				332	116	–	–	332	116				
1FG1...-..D3.-....		HD	372	136	–	–	372	136	56			358	142	–	–	358	142				
1FG1...-..D4.-....		HD	397	161	–	–	397	161				383	167	–	–	383	167				
1FG1...-..E0.-....	63	CT	–	–	–	–	–	–	–	–	–	–	–	–	–	–	–	–	–	–	–
1FG1...-..E1.-....		HD	–	–	–	–	–	–	–	–	–	–	–	–	–	–	–	–	–	–	–
1FG1...-..E2.-....		CT	–	–	–	–	–	–	–	–	–	–	–	–	–	–	–	–	–	–	–
1FG1...-..E3.-....		CT	–	–	–	–	–	–	–	–	–	–	–	–	–	–	–	–	–	–	–
1FG1...-..E4.-....		HD	–	–	–	–	–	–	–	–	–	–	–	–	–	–	–	–	–	–	–
1FG1...-..F0.-....	80	CT	–	–	–	–	–	–	–	–	–	–	–	–	–	–	–	–	–	–	–
1FG1...-..F1.-....		CT	–	–	–	–	–	–	–	–	–	–	–	–	–	–	–	–	–	–	–
1FG1...-..F3.-....		CT	–	–	–	–	–	–	–	–	–	–	–	–	–	–	–	–	–	–	–
1FG1...-..F4.-....		CT	–	–	–	–	–	–	–	–	–	–	–	–	–	–	–	–	–	–	–
1FG1...-..F52-....		HD	–	–	–	–	–	–	–	–	–	–	–	–	–	–	–	–	–	–	–
1FG1...-..F62-....		HD	–	–	–	–	–	–	–	–	–	–	–	–	–	–	–	–	–	–	–
1FG1...-..F53-....		HD	–	–	–	–	–	–	–	–	–	–	–	–	–	–	–	–	–	–	–
1FG1...-..F63-....		HD	–	–	–	–	–	–	–	–	–	–	–	–	–	–	–	–	–	–	–
1FG1...-..G0.-....	100	CT	–	–	–	–	–	–	–	–	–	–	–	–	–	–	–	–	–	–	–
1FG1...-..G1.-....		CT	–	–	–	–	–	–	–	–	–	–	–	–	–	–	–	–	–	–	–
1FG1...-..G3.-....		CT	–	–	–	–	–	–	–	–	–	–	–	–	–	–	–	–	–	–	–
1FG1...-..G5.-....		CT	–	–	–	–	–	–	–	–	–	–	–	–	–	–	–	–	–	–	–

© Siemens 2019

3

Dimensional drawings

Gearbox types *Z29* and *D29*

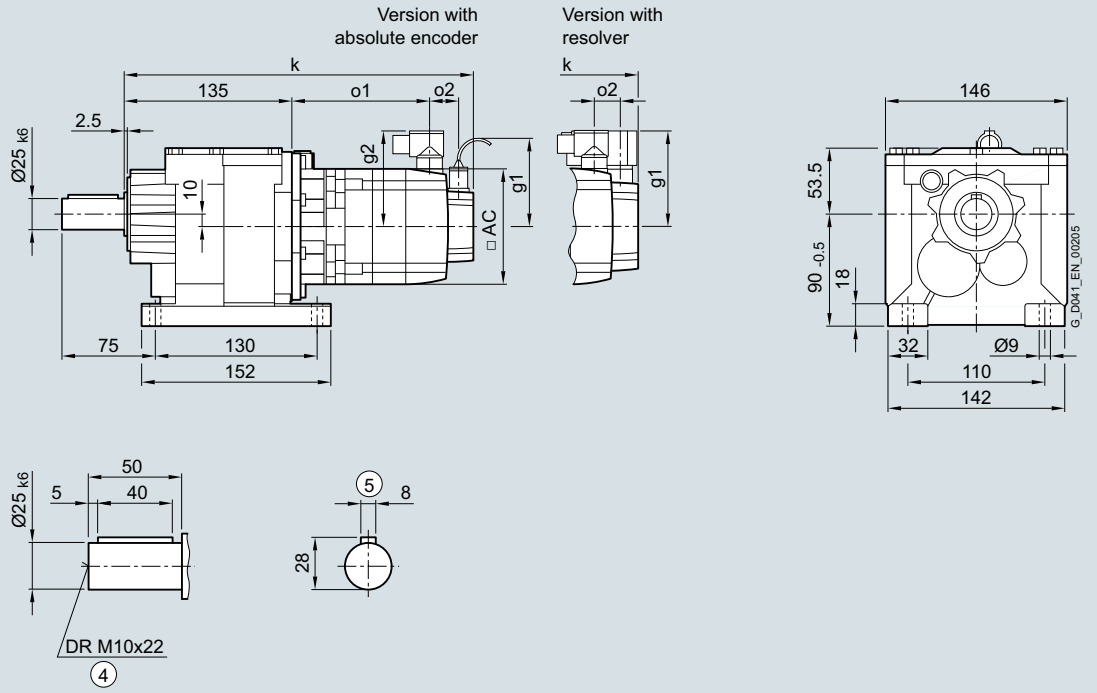

④ DIN 332 ⑤ Feather key/keyway DIN 6885

© Siemens 2019

Servo helical geared motor	Motor shaft height	Motor version	Absolute encoder with brake		with brake for increased energy		without brake					Resolver with brake		with brake for increased energy		without brake					
Type			k	o1	k	o1	k	o1	o2	g1	g2	k	o1	k	o1	k	o1	o2	g1	g2	AC
1FG1...-..C2.-....	36	CT	346	148	–	–	329	131	50	104.5	78	326	154	–	–	309	137	15	80	80	72
1FG1...-..C3.-....		HD	356	158	–	–	339	141				336	164	–	–	319	147				
1FG1...-..C4.-....		CT	371	173	–	–	354	156				351	179	–	–	334	162				
1FG1...-..D0.-....	48	CT	328	130	–	–	304	106	50	104.5	90	313	130	–	–	289	106	23	90	90	96
1FG1...-..D2.-....		CT	355	158	–	–	331	134				341	158	–	–	317	134				
1FG1...-..D3.-....		HD	381	178	–	–	357	154	56			367	184	–	–	343	160				
1FG1...-..D4.-....		HD	406	203	–	–	382	179				392	209	–	–	368	185				
1FG1...-..E0.-....	63	CT	361	163	–	–	346	148	50	104.5	104	346	163	–	–	332	148	23	103	104	126
1FG1...-..E1.-....		HD	396	198	–	–	381	183				381	198	–	–	367	183				
1FG1...-..E2.-....		CT	383	186	–	–	369	171				369	186	–	–	354	171				
1FG1...-..E3.-....		CT	406	208	–	–	391	193				391	208	–	–	377	193				
1FG1...-..E4.-....		HD	460	262	–	–	445	247				445	262	–	–	431	247				
1FG1...-..F0.-....	80	CT	400	204	411	215	363	167	48	104.5	119	385	205	396	216	349	168	21	118	119	155
1FG1...-..F1.-....		CT	419	223	430	234	382	186				404	224	415	235	368	187				
1FG1...-..F3.-....		CT	438	242	449	253	401	205				423	243	434	254	387	206				
1FG1...-..F4.-....		CT	457	262	468	273	421	225				443	263	454	274	406	226				
1FG1...-..F52-....		HD	486	290	497	301	449	253				471	291	482	302	435	254				
1FG1...-..F62-....		HD	486	290	497	301	449	253				471	291	482	302	435	254				
1FG1...-..F53-....		HD	486	290	497	301	449	253			139	471	291	482	302	435	254			139	
1FG1...-..F63-....		HD	486	290	497	301	449	253				471	291	482	302	435	254				
1FG1...-..G0.-....	100	CT	–	–	–	–	–	–	–	–	–	–	–	–	–	–	–	–	–	–	–
1FG1...-..G1.-....		CT	–	–	–	–	–	–	–	–	–	–	–	–	–	–	–	–	–	–	–
1FG1...-..G3.-....		CT	–	–	–	–	–	–	–	–	–	–	–	–	–	–	–	–	–	–	–
1FG1...-..G5.-....		CT	–	–	–	–	–	–	–	–	–	–	–	–	–	–	–	–	–	–	–

© Siemens 2019

3

Dimensional drawings

Gearbox types *ZB29* and *DB29*

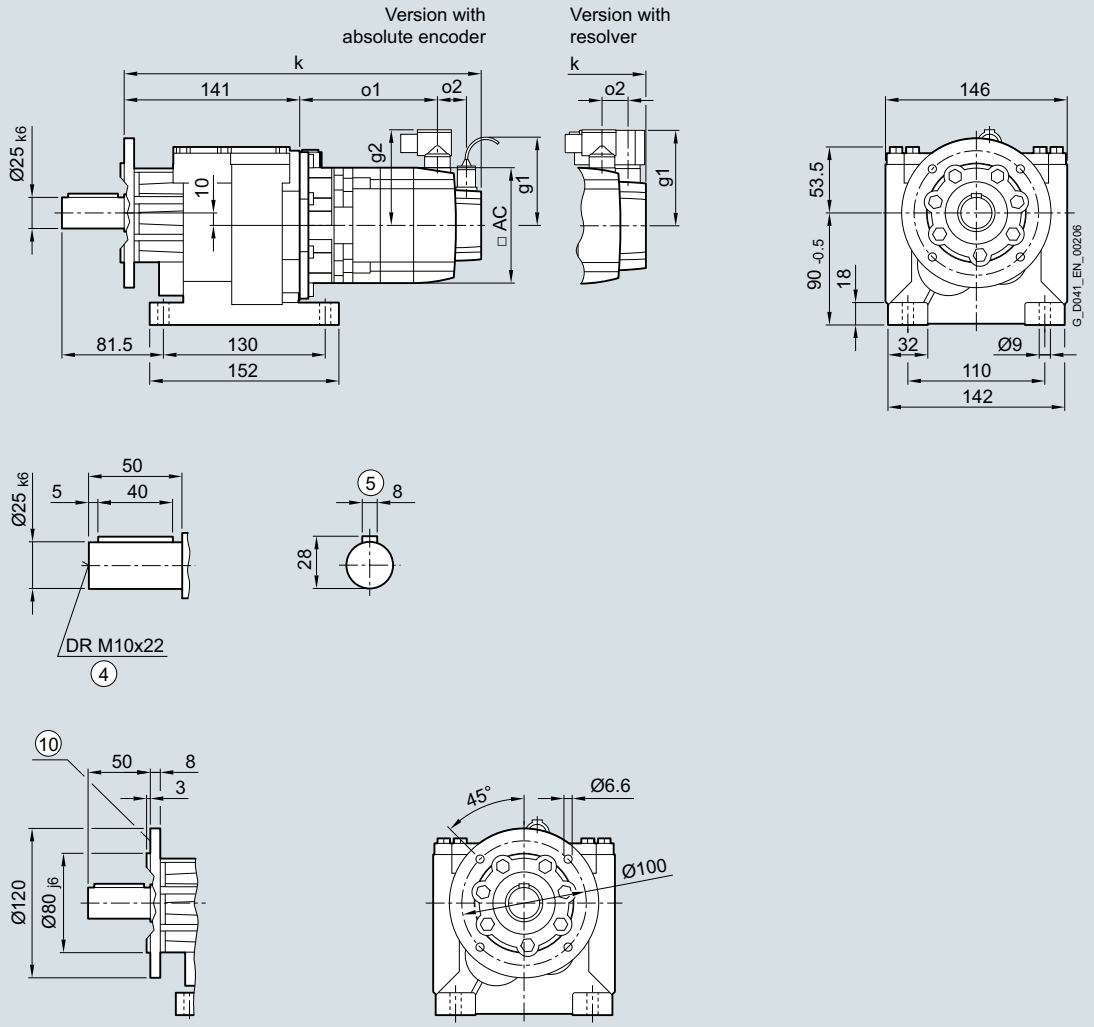

④ DIN 332 ⑤ Feather key/keyway DIN 6885 ⑩ For inner contour of the flange design, see page 3/158

© Siemens 2019

Servo helical geared motor	Motor shaft height	Motor version	Absolute encoder with brake		with brake for increased energy		without brake					Resolver with brake		with brake for increased energy		without brake					
Type			k	o1	k	o1	k	o1	o2	g1	g2	k	o1	k	o1	k	o1	o2	g1	g2	AC
1FG1...-..C2.-....	36	CT	352	148	–	–	335	131	50	104.5	78	332	154	–	–	315	137	15	80	80	72
1FG1...-..C3.-....		HD	362	158	–	–	345	141				342	164	–	–	325	147				
1FG1...-..C4.-....		CT	377	173	–	–	360	156				357	179	–	–	340	162				
1FG1...-..D0.-....	48	CT	334	130	–	–	310	106	50	104.5	90	319	130	–	–	295	106	23	90	90	96
1FG1...-..D2.-....		CT	361	158	–	–	337	134				347	158	–	–	323	134				
1FG1...-..D3.-....		HD	387	178	–	–	363	154	56			373	184	–	–	349	160				
1FG1...-..D4.-....		HD	412	203	–	–	388	179				398	209	–	–	374	185				
1FG1...-..E0.-....	63	CT	367	163	–	–	352	148	50	104.5	104	352	163	–	–	338	148	23	103	104	126
1FG1...-..E1.-....		HD	402	198	–	–	387	183				387	198	–	–	373	183				
1FG1...-..E2.-....		CT	389	186	–	–	375	171				375	186	–	–	360	171				
1FG1...-..E3.-....		CT	412	208	–	–	397	193				397	208	–	–	383	193				
1FG1...-..E4.-....		HD	466	262	–	–	451	247				451	262	–	–	437	247				
1FG1...-..F0.-....	80	CT	406	204	417	215	369	167	48	104.5	119	391	205	402	216	355	168	21	118	119	155
1FG1...-..F1.-....		CT	425	223	436	234	388	186				410	224	421	235	374	187				
1FG1...-..F3.-....		CT	444	242	455	253	407	205				429	243	440	254	393	206				
1FG1...-..F4.-....		CT	463	262	474	273	427	225				449	263	460	274	412	226				
1FG1...-..F52-....		HD	492	290	503	301	455	253				477	291	488	302	441	254				
1FG1...-..F62-....		HD	492	290	503	301	455	253				477	291	488	302	441	254				
1FG1...-..F53-....		HD	492	290	503	301	455	253			139	477	291	488	302	441	254			139	
1FG1...-..F63-....		HD	492	290	503	301	455	253				477	291	488	302	441	254				
1FG1...-..G0.-....	100	CT	–	–	–	–	–	–	–	–	–	–	–	–	–	–	–	–	–	–	–
1FG1...-..G1.-....		CT	–	–	–	–	–	–	–	–	–	–	–	–	–	–	–	–	–	–	–
1FG1...-..G3.-....		CT	–	–	–	–	–	–	–	–	–	–	–	–	–	–	–	–	–	–	–
1FG1...-..G5.-....		CT	–	–	–	–	–	–	–	–	–	–	–	–	–	–	–	–	–	–	–

© Siemens 2019

3

Dimensional drawings

Gearbox types *ZF29* and *DF29*

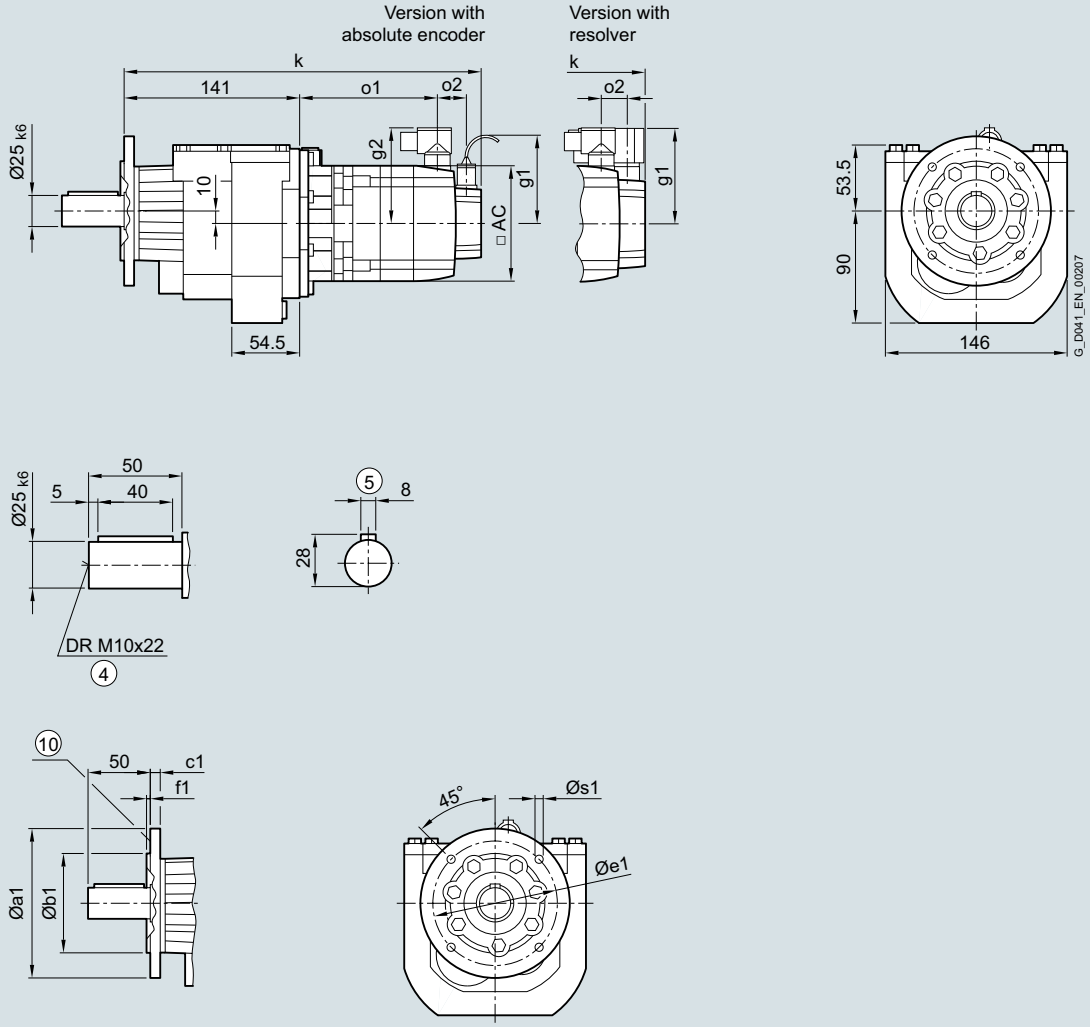

④ DIN 332 ⑤ Feather key/keyway DIN 6885 ⑩ For inner contour and dimensions of the flange design, see page 3/158

© Siemens 2019

Servo helical geared motor	Motor shaft height	Motor version	Absolute encoder with brake		with brake for increased energy		without brake					Resolver with brake		with brake for increased energy		without brake					
Type			k	o1	k	o1	k	o1	o2	g1	g2	k	o1	k	o1	k	o1	o2	g1	g2	AC
1FG1...-..C2.-....	36	CT	352	148	–	–	335	131	50	104.5	78	332	154	–	–	315	137	15	80	80	72
1FG1...-..C3.-....		HD	362	158	–	–	345	141				342	164	–	–	325	147				
1FG1...-..C4.-....		CT	377	173	–	–	360	156				357	179	–	–	340	162				
1FG1...-..D0.-....	48	CT	334	130	–	–	310	106	50	104.5	90	319	130	–	–	295	106	23	90	90	96
1FG1...-..D2.-....		CT	361	158	–	–	337	134				347	158	–	–	323	134				
1FG1...-..D3.-....		HD	387	178	–	–	363	154	56			373	184	–	–	349	160				
1FG1...-..D4.-....		HD	412	203	–	–	388	179				398	209	–	–	374	185				
1FG1...-..E0.-....	63	CT	367	163	–	–	352	148	50	104.5	104	352	163	–	–	338	148	23	103	104	126
1FG1...-..E1.-....		HD	402	198	–	–	387	183				387	198	–	–	373	183				
1FG1...-..E2.-....		CT	389	186	–	–	375	171				375	186	–	–	360	171				
1FG1...-..E3.-....		CT	412	208	–	–	397	193				397	208	–	–	383	193				
1FG1...-..E4.-....		HD	466	262	–	–	451	247				451	262	–	–	437	247				
1FG1...-..F0.-....	80	CT	406	204	417	215	369	167	48	104.5	119	391	205	402	216	355	168	21	118	119	155
1FG1...-..F1.-....		CT	425	223	436	234	388	186				410	224	421	235	374	187				
1FG1...-..F3.-....		CT	444	242	455	253	407	205				429	243	440	254	393	206				
1FG1...-..F4.-....		CT	463	262	474	273	427	225				449	263	460	274	412	226				
1FG1...-..F52-....		HD	492	290	503	301	455	253				477	291	488	302	441	254				
1FG1...-..F62-....		HD	492	290	503	301	455	253				477	291	488	302	441	254				
1FG1...-..F53-....		HD	492	290	503	301	455	253			139	477	291	488	302	441	254			139	
1FG1...-..F63-....		HD	492	290	503	301	455	253				477	291	488	302	441	254				
1FG1...-..G0.-....	100	CT	–	–	–	–	–	–	–	–	–	–	–	–	–	–	–	–	–	–	–
1FG1...-..G1.-....		CT	–	–	–	–	–	–	–	–	–	–	–	–	–	–	–	–	–	–	–
1FG1...-..G3.-....		CT	–	–	–	–	–	–	–	–	–	–	–	–	–	–	–	–	–	–	–
1FG1...-..G5.-....		CT	–	–	–	–	–	–	–	–	–	–	–	–	–	–	–	–	–	–	–

© Siemens 2019

3

Dimensional drawings

Gearbox types *ZZ29* and *DZ29*

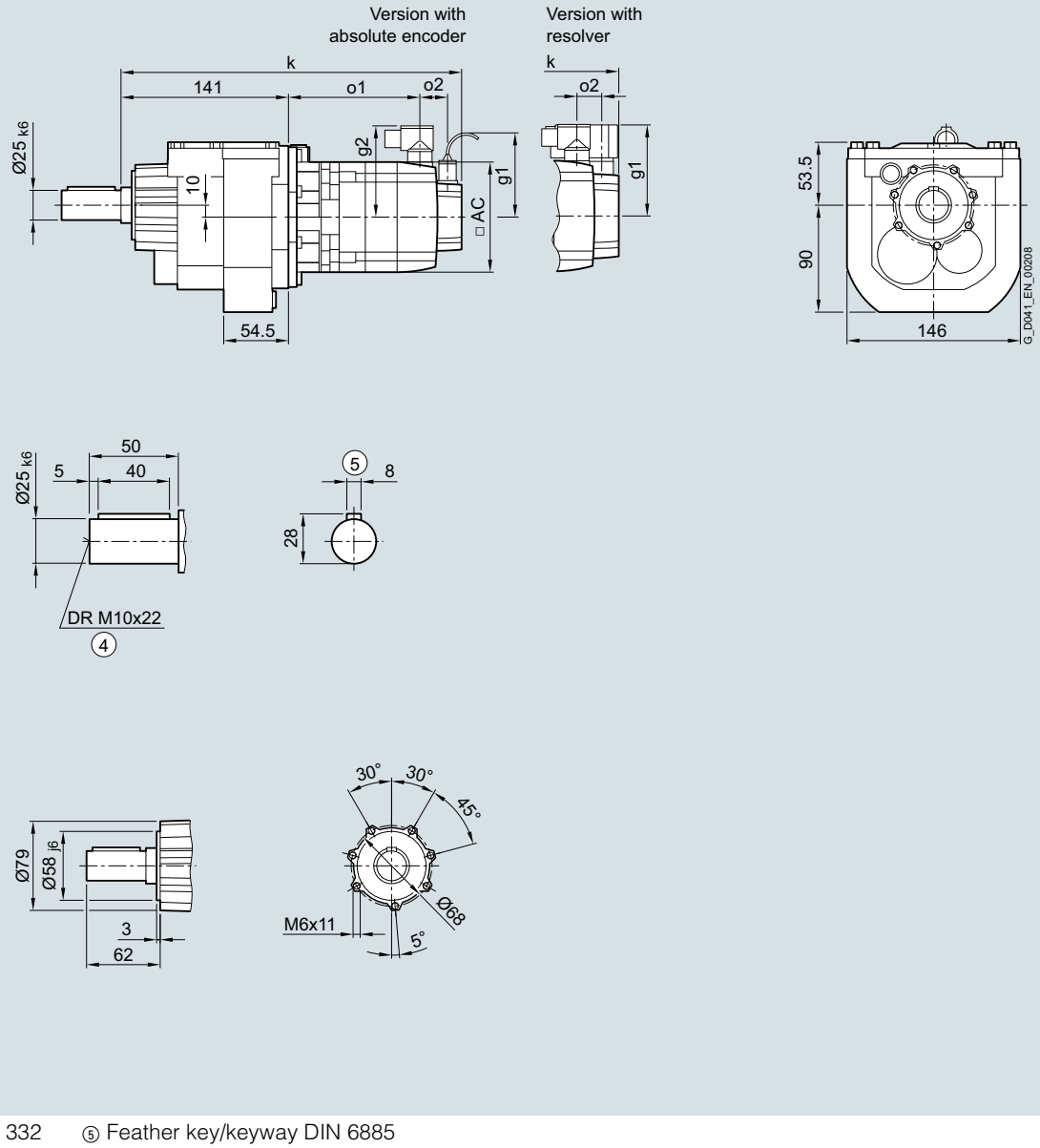

④ DIN 332 ⑤ Feather key/keyway DIN 6885

© Siemens 2019

Servo helical geared motor	Motor shaft height	Motor version	Absolute encoder with brake		with brake for increased energy		without brake					Resolver with brake		with brake for increased energy		without brake					
Type			k	o1	k	o1	k	o1	o2	g1	g2	k	o1	k	o1	k	o1	o2	g1	g2	AC
1FG1...-..C2.-....	36	CT	352	148	–	–	335	131	50	104.5	78	332	154	–	–	315	137	15	80	80	72
1FG1...-..C3.-....		HD	362	158	–	–	345	141				342	164	–	–	325	147				
1FG1...-..C4.-....		CT	377	173	–	–	360	156				357	179	–	–	340	162				
1FG1...-..D0.-....	48	CT	334	130	–	–	310	106	50	104.5	90	319	130	–	–	295	106	23	90	90	96
1FG1...-..D2.-....		CT	361	158	–	–	337	134				347	158	–	–	323	134				
1FG1...-..D3.-....		HD	387	178	–	–	363	154	56			373	184	–	–	349	160				
1FG1...-..D4.-....		HD	412	203	–	–	388	179				398	209	–	–	374	185				
1FG1...-..E0.-....	63	CT	367	163	–	–	352	148	50	104.5	104	352	163	–	–	338	148	23	103	104	126
1FG1...-..E1.-....		HD	402	198	–	–	387	183				387	198	–	–	373	183				
1FG1...-..E2.-....		CT	389	186	–	–	375	171				375	186	–	–	360	171				
1FG1...-..E3.-....		CT	412	208	–	–	397	193				397	208	–	–	383	193				
1FG1...-..E4.-....		HD	466	262	–	–	451	247				451	262	–	–	437	247				
1FG1...-..F0.-....	80	CT	406	204	417	215	369	167	48	104.5	119	391	205	402	216	355	168	21	118	119	155
1FG1...-..F1.-....		CT	425	223	436	234	388	186				410	224	421	235	374	187				
1FG1...-..F3.-....		CT	444	242	455	253	407	205				429	243	440	254	393	206				
1FG1...-..F4.-....		CT	463	262	474	273	427	225				449	263	460	274	412	226				
1FG1...-..F52-....		HD	492	290	503	301	455	253				477	291	488	302	441	254				
1FG1...-..F62-....		HD	492	290	503	301	455	253				477	291	488	302	441	254				
1FG1...-..F53-....		HD	492	290	503	301	455	253			139	477	291	488	302	441	254			139	
1FG1...-..F63-....		HD	492	290	503	301	455	253				477	291	488	302	441	254				
1FG1...-..G0.-....	100	CT	–	–	–	–	–	–	–	–	–	–	–	–	–	–	–	–	–	–	–
1FG1...-..G1.-....		CT	–	–	–	–	–	–	–	–	–	–	–	–	–	–	–	–	–	–	–
1FG1...-..G3.-....		CT	–	–	–	–	–	–	–	–	–	–	–	–	–	–	–	–	–	–	–
1FG1...-..G5.-....		CT	–	–	–	–	–	–	–	–	–	–	–	–	–	–	–	–	–	–	–

© Siemens 2019

3

Dimensional drawings

Gearbox types *Z39* and *D39*

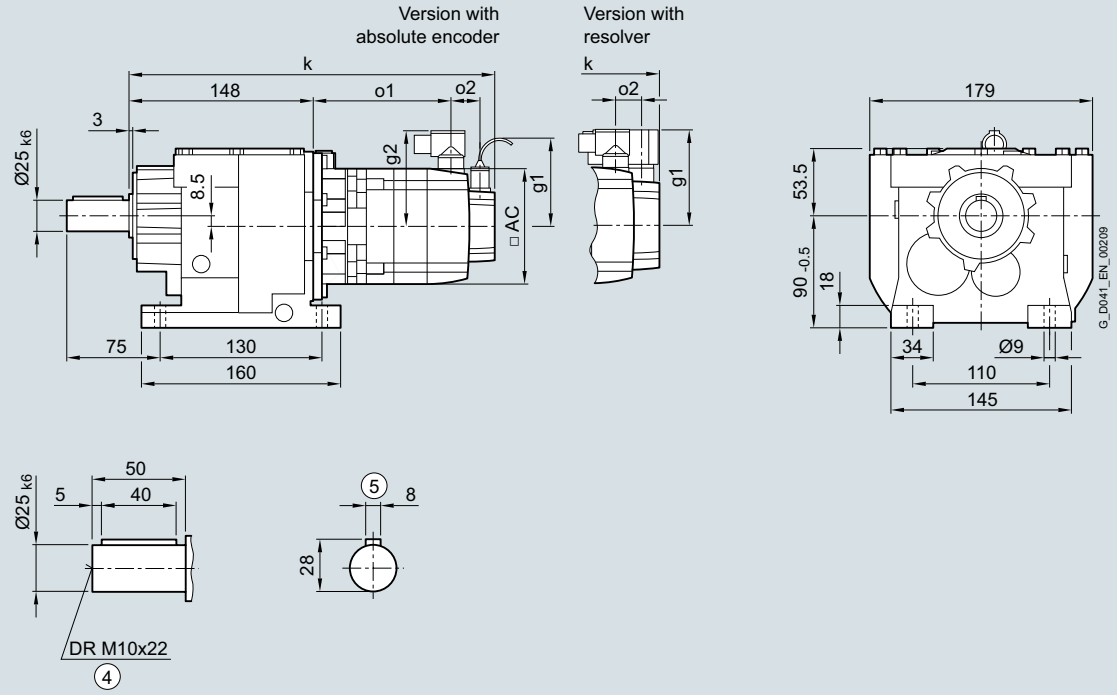

④ DIN 332 ⑤ Feather key/keyway DIN 6885

© Siemens 2019

Servo helical geared motor	Motor shaft height	Motor version	Absolute encoder with brake		with brake for increased energy		without brake					Resolver with brake		with brake for increased energy		without brake					
Type			k	o1	k	o1	k	o1	o2	g1	g2	k	o1	k	o1	k	o1	o2	g1	g2	AC
1FG1...-..C2.-....	36	CT	359	148	–	–	342	131	50	104.5	78	339	154	–	–	322	137	15	80	80	72
1FG1...-..C3.-....		HD	369	158	–	–	352	141				349	164	–	–	332	147				
1FG1...-..C4.-....		CT	384	173	–	–	367	156				364	179	–	–	347	162				
1FG1...-..D0.-....	48	CT	341	130	–	–	317	106	50	104.5	90	326	130	–	–	302	106	23	90	90	96
1FG1...-..D2.-....		CT	368	158	–	–	344	134				354	158	–	–	330	134				
1FG1...-..D3.-....		HD	394	178	–	–	370	154	56			380	184	–	–	356	160				
1FG1...-..D4.-....		HD	419	203	–	–	395	179				405	209	–	–	381	185				
1FG1...-..E0.-....	63	CT	374	163	–	–	359	148	50	104.5	104	359	163	–	–	345	148	23	103	104	126
1FG1...-..E1.-....		HD	409	198	–	–	394	183				394	198	–	–	380	183				
1FG1...-..E2.-....		CT	396	186	–	–	382	171				382	186	–	–	367	171				
1FG1...-..E3.-....		CT	419	208	–	–	404	193				404	208	–	–	390	193				
1FG1...-..E4.-....		HD	473	262	–	–	458	247				458	262	–	–	444	247				
1FG1...-..F0.-....	80	CT	413	204	424	215	376	167	48	104.5	119	398	205	409	216	362	168	21	118	119	155
1FG1...-..F1.-....		CT	432	223	443	234	395	186				417	224	428	235	381	187				
1FG1...-..F3.-....		CT	451	242	462	253	414	205				436	243	447	254	400	206				
1FG1...-..F4.-....		CT	470	262	481	273	434	225				456	263	467	274	419	226				
1FG1...-..F52-....		HD	499	290	510	301	462	253				484	291	495	302	448	254				
1FG1...-..F62-....		HD	499	290	510	301	462	253				484	291	495	302	448	254				
1FG1...-..F53-....		HD	499	290	510	301	462	253			139	484	291	495	302	448	254			139	
1FG1...-..F63-....		HD	499	290	510	301	462	253				484	291	495	302	448	254				
1FG1...-..G0.-....	100	CT	–	–	–	–	–	–	–	–	–	–	–	–	–	–	–	–	–	–	–
1FG1...-..G1.-....		CT	–	–	–	–	–	–	–	–	–	–	–	–	–	–	–	–	–	–	–
1FG1...-..G3.-....		CT	–	–	–	–	–	–	–	–	–	–	–	–	–	–	–	–	–	–	–
1FG1...-..G5.-....		CT	–	–	–	–	–	–	–	–	–	–	–	–	–	–	–	–	–	–	–

© Siemens 2019

3

Dimensional drawings

Gearbox types *ZB39* and *DB39*

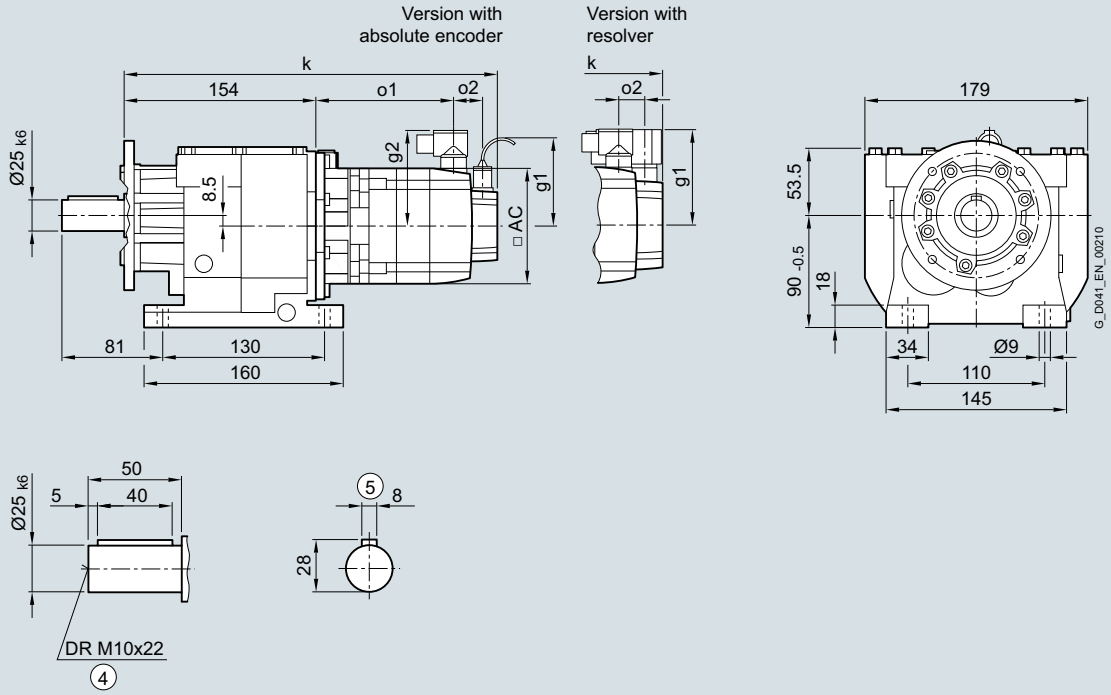

④ DIN 332 ⑤ Feather key/keyway DIN 6885 ⑩ For inner contour of the flange design, see page 3/158

© Siemens 2019

Servo helical geared motor	Motor shaft height	Motor version	Absolute encoder with brake		with brake for increased energy		without brake					Resolver with brake		with brake for increased energy		without brake					
Type			k	o1	k	o1	k	o1	o2	g1	g2	k	o1	k	o1	k	o1	o2	g1	g2	AC
1FG1...-..C2.-....	36	CT	365	148	–	–	348	131	50	104.5	78	345	154	–	–	328	137	15	80	80	72
1FG1...-..C3.-....		HD	375	158	–	–	358	141				355	164	–	–	338	147				
1FG1...-..C4.-....		CT	390	173	–	–	373	156				370	179	–	–	353	162				
1FG1...-..D0.-....	48	CT	347	130	–	–	323	106	50	104.5	90	332	130	–	–	308	106	23	90	90	96
1FG1...-..D2.-....		CT	374	158	–	–	350	134				360	158	–	–	336	134				
1FG1...-..D3.-....		HD	400	178	–	–	376	154	56			386	184	–	–	362	160				
1FG1...-..D4.-....		HD	425	203	–	–	401	179				411	209	–	–	387	185				
1FG1...-..E0.-....	63	CT	380	163	–	–	365	148	50	104.5	104	365	163	–	–	351	148	23	103	104	126
1FG1...-..E1.-....		HD	415	198	–	–	400	183				400	198	–	–	386	183				
1FG1...-..E2.-....		CT	402	186	–	–	388	171				388	186	–	–	373	171				
1FG1...-..E3.-....		CT	425	208	–	–	410	193				410	208	–	–	396	193				
1FG1...-..E4.-....		HD	479	262	–	–	464	247				464	262	–	–	450	247				
1FG1...-..F0.-....	80	CT	419	204	430	215	382	167	48	104.5	119	404	205	415	216	368	168	21	118	119	155
1FG1...-..F1.-....		CT	438	223	449	234	401	186				423	224	434	235	387	187				
1FG1...-..F3.-....		CT	457	242	468	253	420	205				442	243	453	254	406	206				
1FG1...-..F4.-....		CT	476	262	487	273	440	225				462	263	473	274	425	226				
1FG1...-..F52-....		HD	505	290	516	301	468	253				490	291	501	302	454	254				
1FG1...-..F62-....		HD	505	290	516	301	468	253				490	291	501	302	454	254				
1FG1...-..F53-....		HD	505	290	516	301	468	253			139	490	291	501	302	454	254			139	
1FG1...-..F63-....		HD	505	290	516	301	468	253				490	291	501	302	454	254				
1FG1...-..G0.-....	100	CT	–	–	–	–	–	–	–	–	–	–	–	–	–	–	–	–	–	–	–
1FG1...-..G1.-....		CT	–	–	–	–	–	–	–	–	–	–	–	–	–	–	–	–	–	–	–
1FG1...-..G3.-....		CT	–	–	–	–	–	–	–	–	–	–	–	–	–	–	–	–	–	–	–
1FG1...-..G5.-....		CT	–	–	–	–	–	–	–	–	–	–	–	–	–	–	–	–	–	–	–

© Siemens 2019

3

Dimensional drawings

Gearbox types *ZF39* and *DF39*

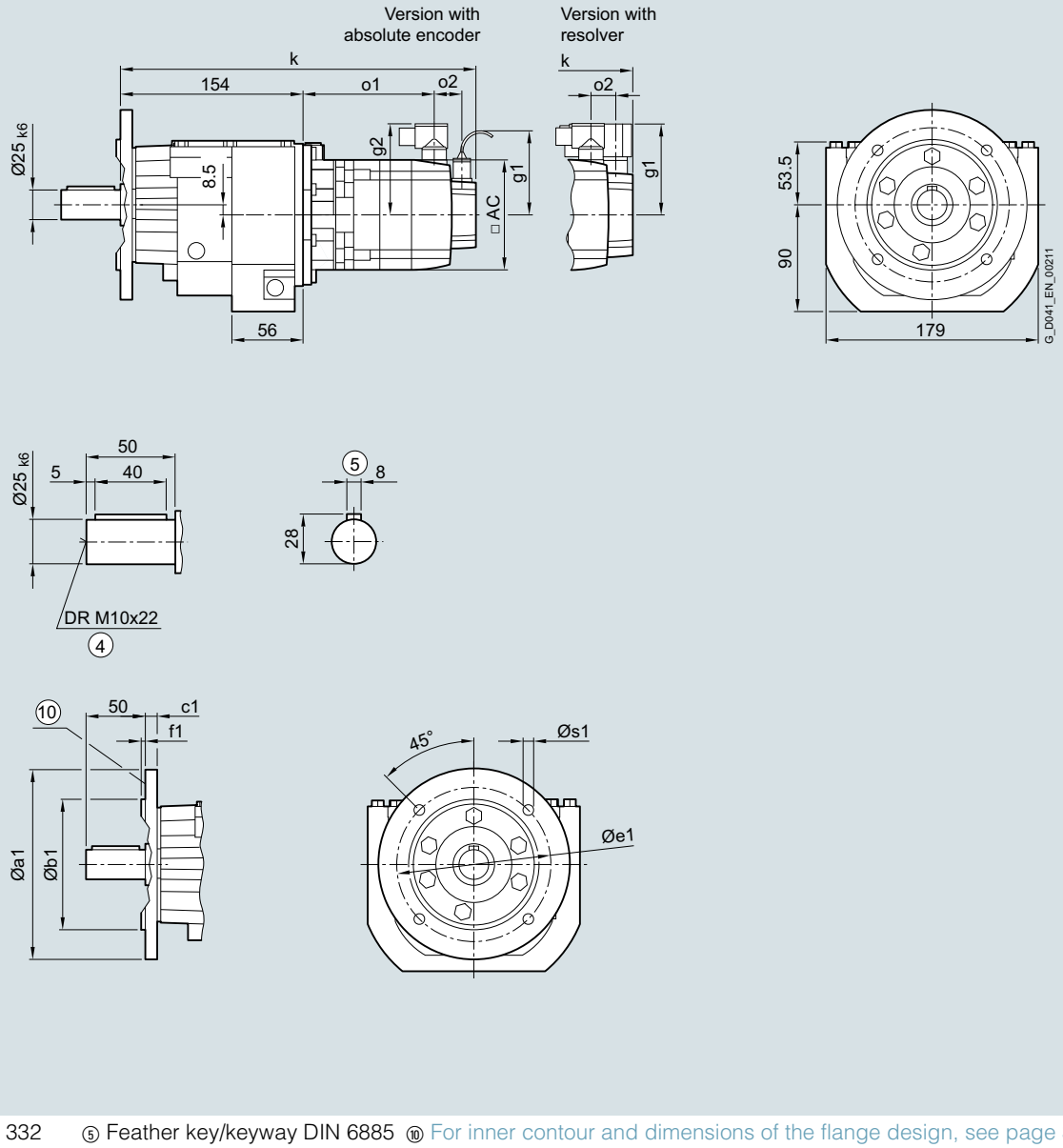

④ DIN 332 ⑤ Feather key/keyway DIN 6885 ⑩ For inner contour and dimensions of the flange design, see page 3/158

© Siemens 2019

Servo helical geared motor	Motor shaft height	Motor version	Absolute encoder with brake		with brake for increased energy		without brake					Resolver with brake		with brake for increased energy		without brake					
Type			k	o1	k	o1	k	o1	o2	g1	g2	k	o1	k	o1	k	o1	o2	g1	g2	AC
1FG1...-..C2.-....	36	CT	365	148	–	–	348	131	50	104.5	78	345	154	–	–	328	137	15	80	80	72
1FG1...-..C3.-....		HD	375	158	–	–	358	141				355	164	–	–	338	147				
1FG1...-..C4.-....		CT	390	173	–	–	373	156				370	179	–	–	353	162				
1FG1...-..D0.-....	48	CT	347	130	–	–	323	106	50	104.5	90	332	130	–	–	308	106	23	90	90	96
1FG1...-..D2.-....		CT	374	158	–	–	350	134				360	158	–	–	336	134				
1FG1...-..D3.-....		HD	400	178	–	–	376	154	56			386	184	–	–	362	160				
1FG1...-..D4.-....		HD	425	203	–	–	401	179				411	209	–	–	387	185				
1FG1...-..E0.-....	63	CT	380	163	–	–	365	148	50	104.5	104	365	163	–	–	351	148	23	103	104	126
1FG1...-..E1.-....		HD	415	198	–	–	400	183				400	198	–	–	386	183				
1FG1...-..E2.-....		CT	402	186	–	–	388	171				388	186	–	–	373	171				
1FG1...-..E3.-....		CT	425	208	–	–	410	193				410	208	–	–	396	193				
1FG1...-..E4.-....		HD	479	262	–	–	464	247				464	262	–	–	450	247				
1FG1...-..F0.-....	80	CT	419	204	430	215	382	167	48	104.5	119	404	205	415	216	368	168	21	118	119	155
1FG1...-..F1.-....		CT	438	223	449	234	401	186				423	224	434	235	387	187				
1FG1...-..F3.-....		CT	457	242	468	253	420	205				442	243	453	254	406	206				
1FG1...-..F4.-....		CT	476	262	487	273	440	225				462	263	473	274	425	226				
1FG1...-..F52-....		HD	505	290	516	301	468	253				490	291	501	302	454	254				
1FG1...-..F62-....		HD	505	290	516	301	468	253				490	291	501	302	454	254				
1FG1...-..F53-....		HD	505	290	516	301	468	253			139	490	291	501	302	454	254			139	
1FG1...-..F63-....		HD	505	290	516	301	468	253				490	291	501	302	454	254				
1FG1...-..G0.-....	100	CT	–	–	–	–	–	–	–	–	–	–	–	–	–	–	–	–	–	–	–
1FG1...-..G1.-....		CT	–	–	–	–	–	–	–	–	–	–	–	–	–	–	–	–	–	–	–
1FG1...-..G3.-....		CT	–	–	–	–	–	–	–	–	–	–	–	–	–	–	–	–	–	–	–
1FG1...-..G5.-....		CT	–	–	–	–	–	–	–	–	–	–	–	–	–	–	–	–	–	–	–

© Siemens 2019

3

Dimensional drawings

Gearbox types *ZZ39* and *DZ39*

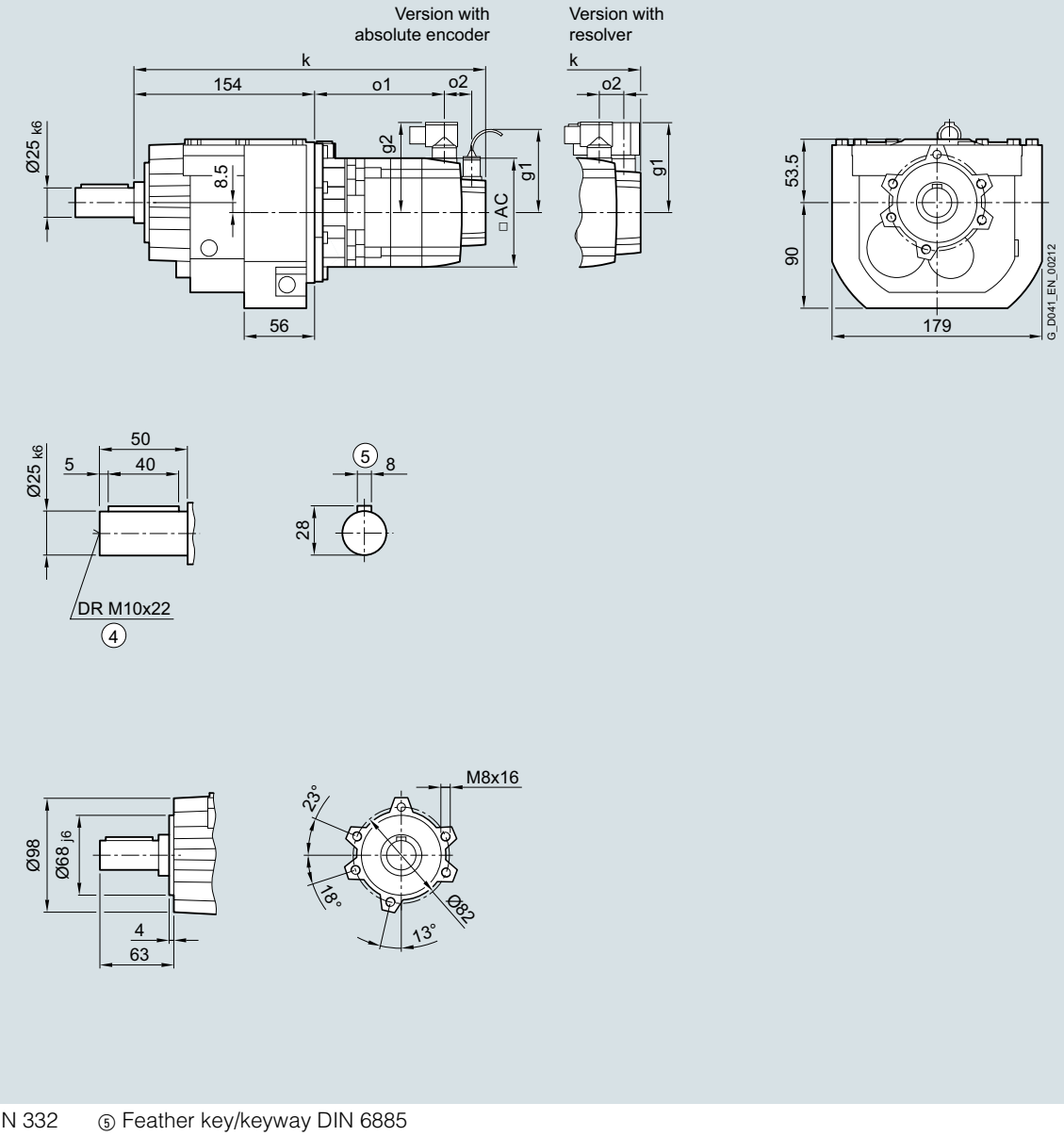

④ DIN 332 ⑤ Feather key/keyway DIN 6885

© Siemens 2019

Servo helical geared motor	Motor shaft height	Motor version	Absolute encoder with brake		with brake for increased energy		without brake					Resolver with brake		with brake for increased energy		without brake					
Type			k	o1	k	o1	k	o1	o2	g1	g2	k	o1	k	o1	k	o1	o2	g1	g2	AC
1FG1...-..C2.-....	36	CT	365	148	–	–	348	131	50	104.5	78	345	154	–	–	328	137	15	80	80	72
1FG1...-..C3.-....		HD	375	158	–	–	358	141				355	164	–	–	338	147				
1FG1...-..C4.-....		CT	390	173	–	–	373	156				370	179	–	–	353	162				
1FG1...-..D0.-....	48	CT	347	130	–	–	323	106	50	104.5	90	332	130	–	–	308	106	23	90	90	96
1FG1...-..D2.-....		CT	374	158	–	–	350	134				360	158	–	–	336	134				
1FG1...-..D3.-....		HD	400	178	–	–	376	154	56			386	184	–	–	362	160				
1FG1...-..D4.-....		HD	425	203	–	–	401	179				411	209	–	–	387	185				
1FG1...-..E0.-....	63	CT	380	163	–	–	365	148	50	104.5	104	365	163	–	–	351	148	23	103	104	126
1FG1...-..E1.-....		HD	415	198	–	–	400	183				400	198	–	–	386	183				
1FG1...-..E2.-....		CT	402	186	–	–	388	171				388	186	–	–	373	171				
1FG1...-..E3.-....		CT	425	208	–	–	410	193				410	208	–	–	396	193				
1FG1...-..E4.-....		HD	479	262	–	–	464	247				464	262	–	–	450	247				
1FG1...-..F0.-....	80	CT	419	204	430	215	382	167	48	104.5	119	404	205	415	216	368	168	21	118	119	155
1FG1...-..F1.-....		CT	438	223	449	234	401	186				423	224	434	235	387	187				
1FG1...-..F3.-....		CT	457	242	468	253	420	205				442	243	453	254	406	206				
1FG1...-..F4.-....		CT	476	262	487	273	440	225				462	263	473	274	425	226				
1FG1...-..F52-....		HD	505	290	516	301	468	253				490	291	501	302	454	254				
1FG1...-..F62-....		HD	505	290	516	301	468	253				490	291	501	302	454	254				
1FG1...-..F53-....		HD	505	290	516	301	468	253			139	490	291	501	302	454	254			139	
1FG1...-..F63-....		HD	505	290	516	301	468	253				490	291	501	302	454	254				
1FG1...-..G0.-....	100	CT	–	–	–	–	–	–	–	–	–	–	–	–	–	–	–	–	–	–	–
1FG1...-..G1.-....		CT	–	–	–	–	–	–	–	–	–	–	–	–	–	–	–	–	–	–	–
1FG1...-..G3.-....		CT	–	–	–	–	–	–	–	–	–	–	–	–	–	–	–	–	–	–	–
1FG1...-..G5.-....		CT	–	–	–	–	–	–	–	–	–	–	–	–	–	–	–	–	–	–	–

© Siemens 2019

3

Dimensional drawings

Gearbox types *Z49* and *D49*

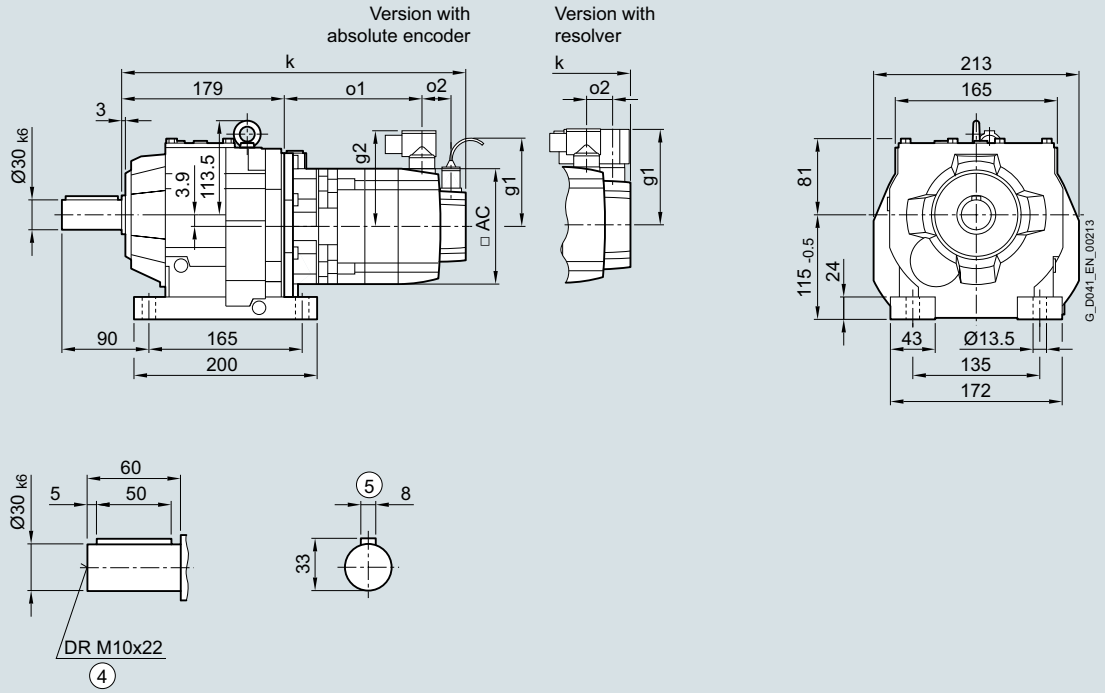

Gearbox types *ZB49* and *DB49*

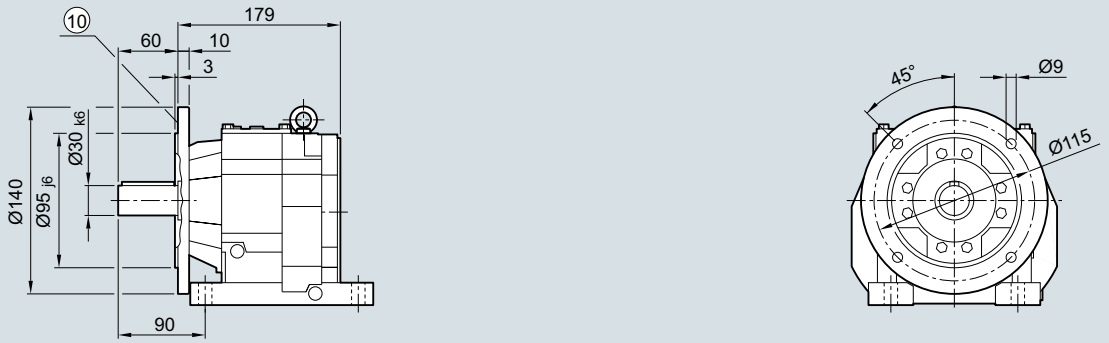

④ DIN 332 ⑤ Feather key/keyway DIN 6885 ⑩ For inner contour of the flange design, see page 3/158

© Siemens 2019

Servo helical geared motor	Motor shaft height	Motor version	Absolute encoder with brake		with brake for increased energy		without brake					Resolver with brake		with brake for increased energy		without brake					
Type			k	o1	k	o1	k	o1	o2	g1	g2	k	o1	k	o1	k	o1	o2	g1	g2	AC
1FG1...-..C2.-....	36	CT	381	139	–	–	364	122	50	104.5	78	360	144	–	–	343	127	15	80	80	72
1FG1...-..C3.-....		HD	391	149	–	–	374	132				370	154	–	–	353	137				
1FG1...-..C4.-....		CT	406	164	–	–	389	147				385	169	–	–	368	152				
1FG1...-..D0.-....	48	CT	362	121	–	–	338	97	50	104.5	90	348	121	–	–	324	97	23	90	90	96
1FG1...-..D2.-....		CT	390	148	–	–	366	124				375	148	–	–	351	124				
1FG1...-..D3.-....		HD	416	168	–	–	392	144	56			401	174	–	–	377	150				
1FG1...-..D4.-....		HD	441	193	–	–	417	169				426	199	–	–	402	175				
1FG1...-..E0.-....	63	CT	395	154	–	–	381	139	50	104.5	104	381	154	–	–	366	139	23	103	104	126
1FG1...-..E1.-....		HD	430	189	–	–	416	174				416	189	–	–	401	174				
1FG1...-..E2.-....		CT	418	176	–	–	403	161				403	176	–	–	389	161				
1FG1...-..E3.-....		CT	440	199	–	–	426	184				426	199	–	–	411	184				
1FG1...-..E4.-....		HD	494	253	–	–	480	238				480	253	–	–	465	238				
1FG1...-..F0.-....	80	CT	434	195	445	206	398	158	48	104.5	119	420	196	431	207	383	159	21	118	119	155
1FG1...-..F1.-....		CT	453	214	464	225	417	177				439	215	450	226	402	178				
1FG1...-..F3.-....		CT	472	233	483	244	436	196				458	234	469	245	421	197				
1FG1...-..F4.-....		CT	492	252	503	263	455	215				477	253	488	264	441	216				
1FG1...-..F52-....		HD	520	281	531	292	484	244				506	282	517	293	469	245				
1FG1...-..F62-....		HD	520	281	531	292	484	244				506	282	517	293	469	245				
1FG1...-..F53-....		HD	520	281	531	292	484	244			139	506	282	517	293	469	245			139	
1FG1...-..F63-....		HD	520	281	531	292	484	244				506	282	517	293	469	245				
1FG1...-..G0.-....	100	CT	465	220	492	247	430	185	53	104.5	137	450	222	477	249	415	187	26	136	137	192
1FG1...-..G1.-....		CT	491	246	518	273	456	211			158	476	248	503	275	441	213			158	
1FG1...-..G3.-....		CT	517	272	544	299	482	237				502	274	529	301	467	239				
1FG1...-..G5.-....		CT	569	324	596	351	534	289				554	326	581	353	519	291				

© Siemens 2019

3

Dimensional drawings

Gearbox types *ZF49* and *DF49*

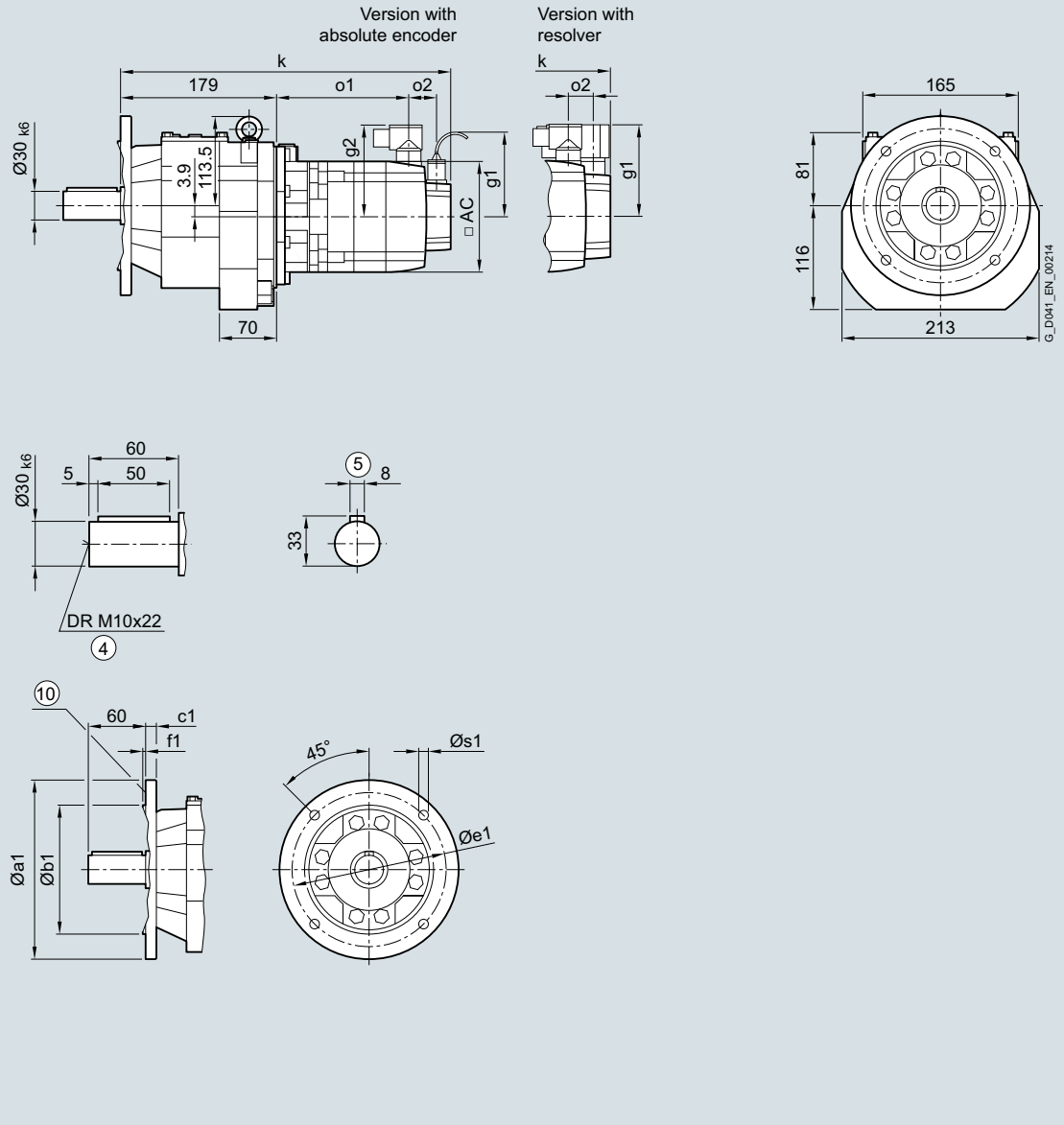

④ DIN 332 ⑤ Feather key/keyway DIN 6885 ⑩ For inner contour and dimensions of the flange design, see page 3/158

© Siemens 2019

Servo helical geared motor	Motor shaft height	Motor version	Absolute encoder with brake		with brake for increased energy		without brake					Resolver with brake		with brake for increased energy		without brake					
Type			k	o1	k	o1	k	o1	o2	g1	g2	k	o1	k	o1	k	o1	o2	g1	g2	AC
1FG1...-..C2.-....	36	CT	381	139	–	–	364	122	50	104.5	78	360	144	–	–	343	127	15	80	80	72
1FG1...-..C3.-....		HD	391	149	–	–	374	132				370	154	–	–	353	137				
1FG1...-..C4.-....		CT	406	164	–	–	389	147				385	169	–	–	368	152				
1FG1...-..D0.-....	48	CT	362	121	–	–	338	97	50	104.5	90	348	121	–	–	324	97	23	90	90	96
1FG1...-..D2.-....		CT	390	148	–	–	366	124				375	148	–	–	351	124				
1FG1...-..D3.-....		HD	416	168	–	–	392	144	56			401	174	–	–	377	150				
1FG1...-..D4.-....		HD	441	193	–	–	417	169				426	199	–	–	402	175				
1FG1...-..E0.-....	63	CT	395	154	–	–	381	139	50	104.5	104	381	154	–	–	366	139	23	103	104	126
1FG1...-..E1.-....		HD	430	189	–	–	416	174				416	189	–	–	401	174				
1FG1...-..E2.-....		CT	418	176	–	–	403	161				403	176	–	–	389	161				
1FG1...-..E3.-....		CT	440	199	–	–	426	184				426	199	–	–	411	184				
1FG1...-..E4.-....		HD	494	253	–	–	480	238				480	253	–	–	465	238				
1FG1...-..F0.-....	80	CT	434	195	445	206	398	158	48	104.5	119	420	196	431	207	383	159	21	118	119	155
1FG1...-..F1.-....		CT	453	214	464	225	417	177				439	215	450	226	402	178				
1FG1...-..F3.-....		CT	472	233	483	244	436	196				458	234	469	245	421	197				
1FG1...-..F4.-....		CT	492	252	503	263	455	215				477	253	488	264	441	216				
1FG1...-..F52-....		HD	520	281	531	292	484	244				506	282	517	293	469	245				
1FG1...-..F62-....		HD	520	281	531	292	484	244				506	282	517	293	469	245				
1FG1...-..F53-....		HD	520	281	531	292	484	244			139	506	282	517	293	469	245			139	
1FG1...-..F63-....		HD	520	281	531	292	484	244				506	282	517	293	469	245				
1FG1...-..G0.-....	100	CT	465	220	492	247	430	185	53	104.5	137	450	222	477	249	415	187	26	136	137	192
1FG1...-..G1.-....		CT	491	246	518	273	456	211			158	476	248	503	275	441	213			158	
1FG1...-..G3.-....		CT	517	272	544	299	482	237				502	274	529	301	467	239				
1FG1...-..G5.-....		CT	569	324	596	351	534	289				554	326	581	353	519	291				

© Siemens 2019

3

Dimensional drawings

Gearbox types *ZZ49* and *DZ49*

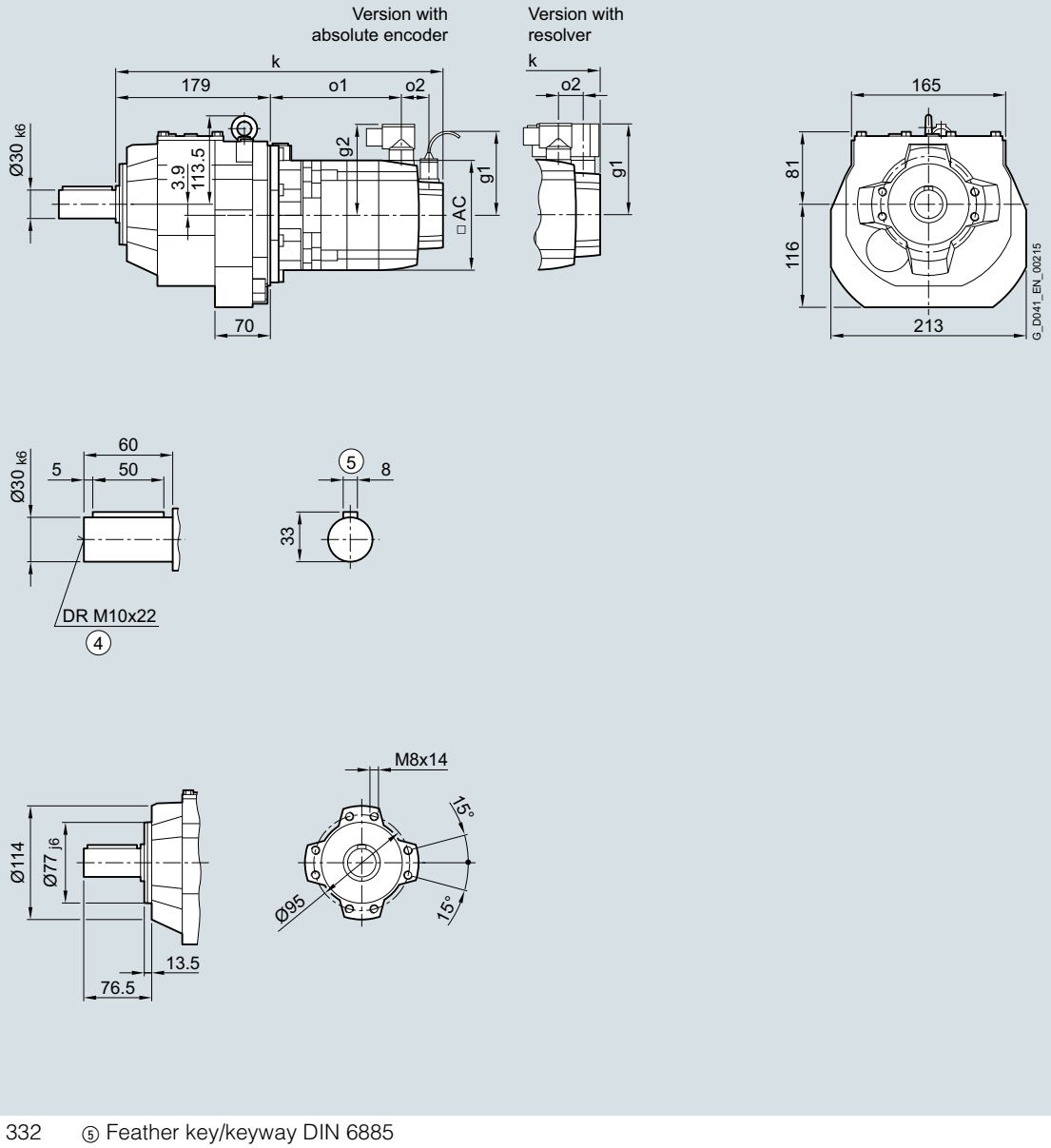

④ DIN 332 ⑤ Feather key/keyway DIN 6885

© Siemens 2019

Servo helical geared motor	Motor shaft height	Motor version	Absolute encoder with brake		with brake for increased energy		without brake					Resolver with brake		with brake for increased energy		without brake					
Type			k	o1	k	o1	k	o1	o2	g1	g2	k	o1	k	o1	k	o1	o2	g1	g2	AC
1FG1...-..C2.-....	36	CT	381	139	–	–	364	122	50	104.5	78	360	144	–	–	343	127	15	80	80	72
1FG1...-..C3.-....		HD	391	149	–	–	374	132				370	154	–	–	353	137				
1FG1...-..C4.-....		CT	406	164	–	–	389	147				385	169	–	–	368	152				
1FG1...-..D0.-....	48	CT	362	121	–	–	338	97	50	104.5	90	348	121	–	–	324	97	23	90	90	96
1FG1...-..D2.-....		CT	390	148	–	–	366	124				375	148	–	–	351	124				
1FG1...-..D3.-....		HD	416	168	–	–	392	144	56			401	174	–	–	377	150				
1FG1...-..D4.-....		HD	441	193	–	–	417	169				426	199	–	–	402	175				
1FG1...-..E0.-....	63	CT	395	154	–	–	381	139	50	104.5	104	381	154	–	–	366	139	23	103	104	126
1FG1...-..E1.-....		HD	430	189	–	–	416	174				416	189	–	–	401	174				
1FG1...-..E2.-....		CT	418	176	–	–	403	161				403	176	–	–	389	161				
1FG1...-..E3.-....		CT	440	199	–	–	426	184				426	199	–	–	411	184				
1FG1...-..E4.-....		HD	494	253	–	–	480	238				480	253	–	–	465	238				
1FG1...-..F0.-....	80	CT	434	195	445	206	398	158	48	104.5	119	420	196	431	207	383	159	21	118	119	155
1FG1...-..F1.-....		CT	453	214	464	225	417	177				439	215	450	226	402	178				
1FG1...-..F3.-....		CT	472	233	483	244	436	196				458	234	469	245	421	197				
1FG1...-..F4.-....		CT	492	252	503	263	455	215				477	253	488	264	441	216				
1FG1...-..F52-....		HD	520	281	531	292	484	244				506	282	517	293	469	245				
1FG1...-..F62-....		HD	520	281	531	292	484	244				506	282	517	293	469	245				
1FG1...-..F53-....		HD	520	281	531	292	484	244			139	506	282	517	293	469	245			139	
1FG1...-..F63-....		HD	520	281	531	292	484	244				506	282	517	293	469	245				
1FG1...-..G0.-....	100	CT	465	220	492	247	430	185	53	104.5	137	450	222	477	249	415	187	26	136	137	192
1FG1...-..G1.-....		CT	491	246	518	273	456	211			158	476	248	503	275	441	213			158	
1FG1...-..G3.-....		CT	517	272	544	299	482	237				502	274	529	301	467	239				
1FG1...-..G5.-....		CT	569	324	596	351	534	289				554	326	581	353	519	291				

© Siemens 2019

3

Dimensional drawings

Gearbox types *Z59* and *D59*

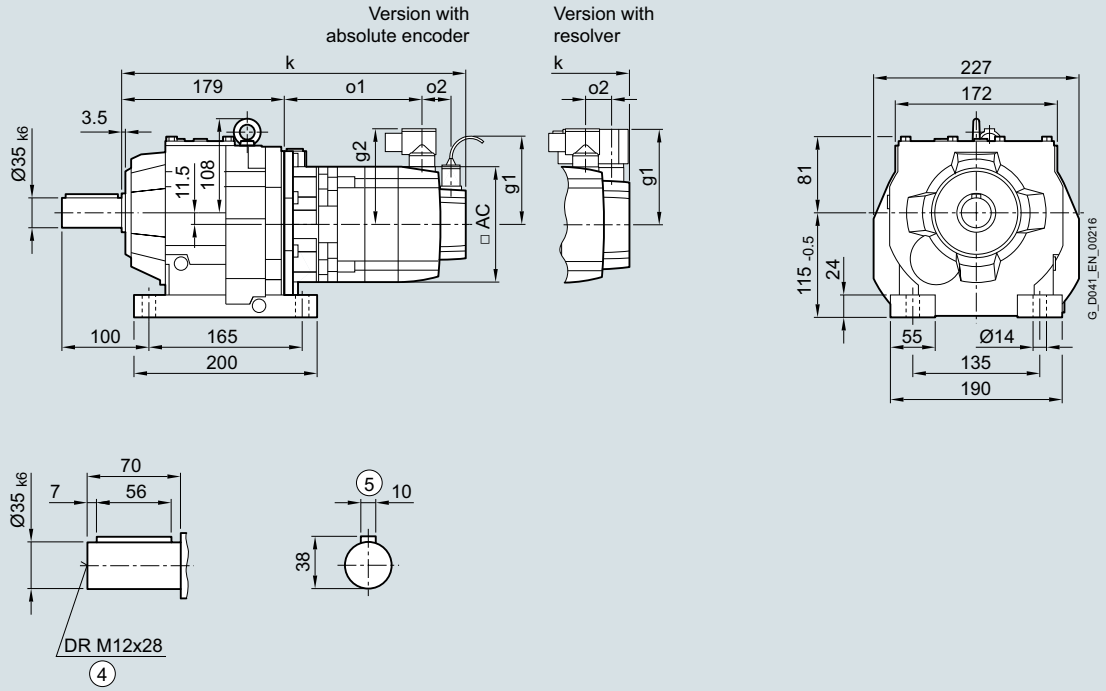

Gearbox types *ZB59* and *DB59*

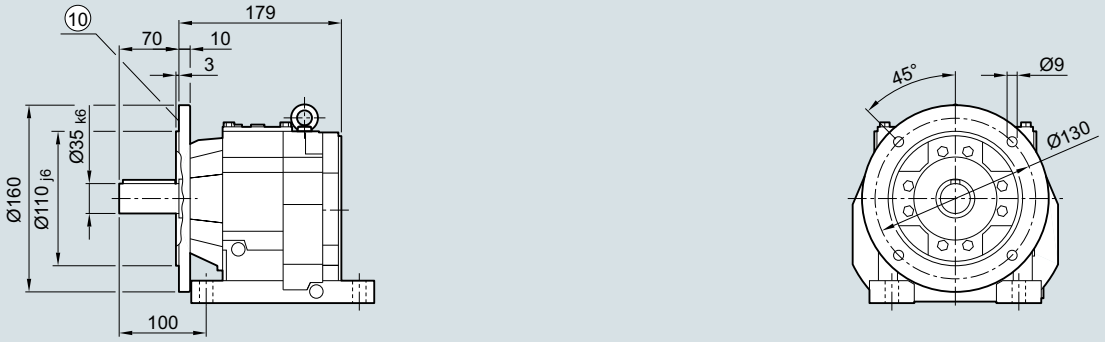

④ DIN 332 ⑤ Feather key/keyway DIN 6885 ⑩ For inner contour of the flange design, see page 3/158

© Siemens 2019

Servo helical geared motor	Motor shaft height	Motor version	Absolute encoder with brake		with brake for increased energy		without brake					Resolver with brake		with brake for increased energy		without brake					
Type			k	o1	k	o1	k	o1	o2	g1	g2	k	o1	k	o1	k	o1	o2	g1	g2	AC
1FG1...-..C2.-....	36	CT	381	139	–	–	364	122	50	104.5	78	360	144	–	–	343	127	15	80	80	72
1FG1...-..C3.-....		HD	391	149	–	–	374	132				370	154	–	–	353	137				
1FG1...-..C4.-....		CT	406	164	–	–	389	147				385	169	–	–	368	152				
1FG1...-..D0.-....	48	CT	362	121	–	–	338	97	50	104.5	90	348	121	–	–	324	97	23	90	90	96
1FG1...-..D2.-....		CT	390	148	–	–	366	124				375	148	–	–	351	124				
1FG1...-..D3.-....		HD	416	168	–	–	392	144	56			401	174	–	–	377	150				
1FG1...-..D4.-....		HD	441	193	–	–	417	169				426	199	–	–	402	175				
1FG1...-..E0.-....	63	CT	395	154	–	–	381	139	50	104.5	104	381	154	–	–	366	139	23	103	104	126
1FG1...-..E1.-....		HD	430	189	–	–	416	174				416	189	–	–	401	174				
1FG1...-..E2.-....		CT	418	176	–	–	403	161				403	176	–	–	389	161				
1FG1...-..E3.-....		CT	440	199	–	–	426	184				426	199	–	–	411	184				
1FG1...-..E4.-....		HD	494	253	–	–	480	238				480	253	–	–	465	238				
1FG1...-..F0.-....	80	CT	434	195	445	206	398	158	48	104.5	119	420	196	431	207	383	159	21	118	119	155
1FG1...-..F1.-....		CT	453	214	464	225	417	177				439	215	450	226	402	178				
1FG1...-..F3.-....		CT	472	233	483	244	436	196				458	234	469	245	421	197				
1FG1...-..F4.-....		CT	492	252	503	263	455	215				477	253	488	264	441	216				
1FG1...-..F52-....		HD	520	281	531	292	484	244				506	282	517	293	469	245				
1FG1...-..F62-....		HD	520	281	531	292	484	244				506	282	517	293	469	245				
1FG1...-..F53-....		HD	520	281	531	292	484	244			139	506	282	517	293	469	245			139	
1FG1...-..F63-....		HD	520	281	531	292	484	244				506	282	517	293	469	245				
1FG1...-..G0.-....	100	CT	465	220	492	247	430	185	53	104.5	137	450	222	477	249	415	187	26	136	137	192
1FG1...-..G1.-....		CT	491	246	518	273	456	211			158	476	248	503	275	441	213			158	
1FG1...-..G3.-....		CT	517	272	544	299	482	237				502	274	529	301	467	239				
1FG1...-..G5.-....		CT	569	324	596	351	534	289				554	326	581	353	519	291				

© Siemens 2019

3

Dimensional drawings

Gearbox types *ZF59* and *DF59*

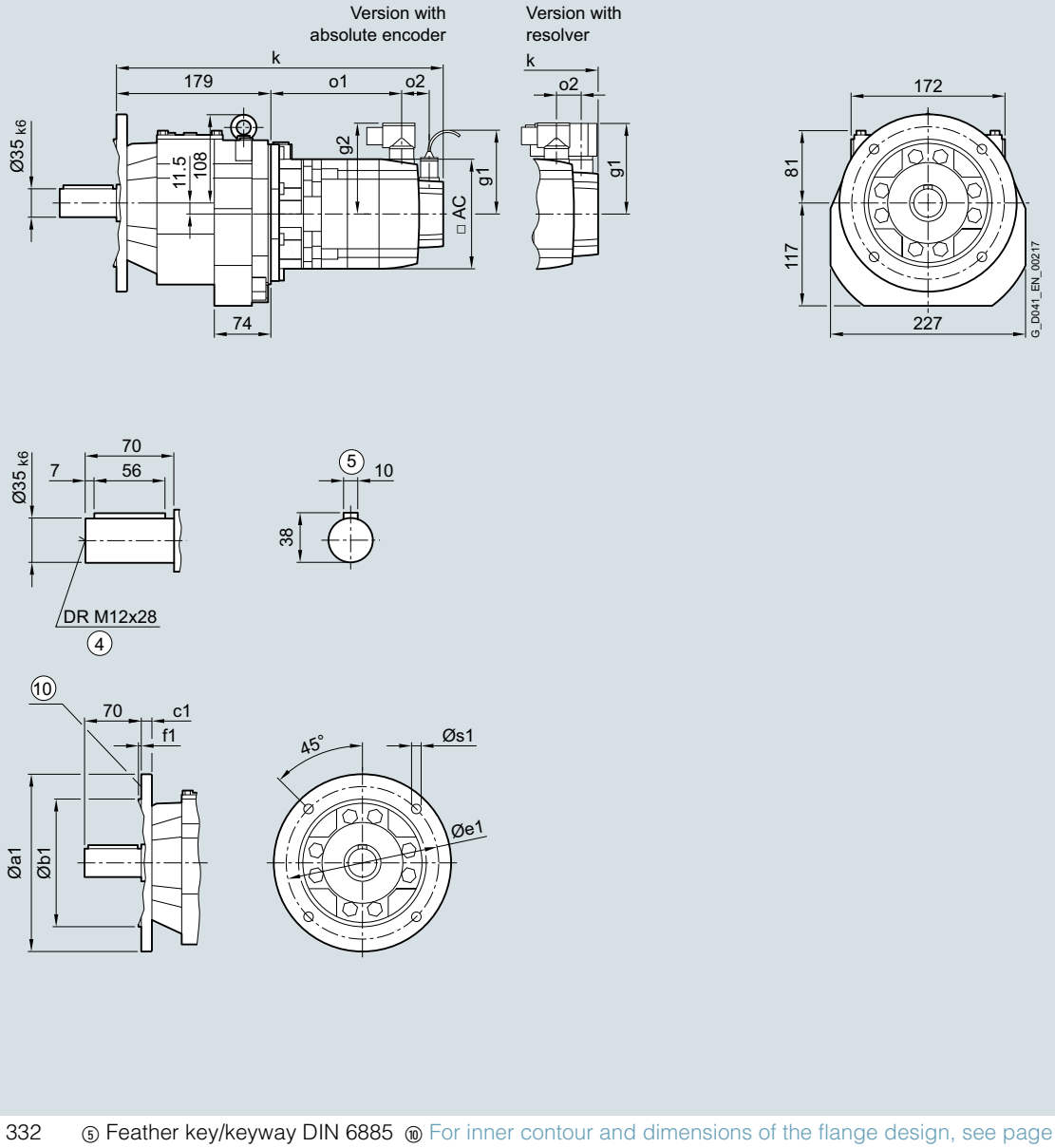

④ DIN 332 ⑤ Feather key/keyway DIN 6885 ⑩ For inner contour and dimensions of the flange design, see page 3/158

© Siemens 2019

Servo helical geared motor	Motor shaft height	Motor version	Absolute encoder with brake		with brake for increased energy		without brake					Resolver with brake		with brake for increased energy		without brake					
Type			k	o1	k	o1	k	o1	o2	g1	g2	k	o1	k	o1	k	o1	o2	g1	g2	AC
1FG1...-..C2.-....	36	CT	381	139	–	–	364	122	50	104.5	78	360	144	–	–	343	127	15	80	80	72
1FG1...-..C3.-....		HD	391	149	–	–	374	132				370	154	–	–	353	137				
1FG1...-..C4.-....		CT	406	164	–	–	389	147				385	169	–	–	368	152				
1FG1...-..D0.-....	48	CT	362	121	–	–	338	97	50	104.5	90	348	121	–	–	324	97	23	90	90	96
1FG1...-..D2.-....		CT	390	148	–	–	366	124				375	148	–	–	351	124				
1FG1...-..D3.-....		HD	416	168	–	–	392	144	56			401	174	–	–	377	150				
1FG1...-..D4.-....		HD	441	193	–	–	417	169				426	199	–	–	402	175				
1FG1...-..E0.-....	63	CT	395	154	–	–	381	139	50	104.5	104	381	154	–	–	366	139	23	103	104	126
1FG1...-..E1.-....		HD	430	189	–	–	416	174				416	189	–	–	401	174				
1FG1...-..E2.-....		CT	418	176	–	–	403	161				403	176	–	–	389	161				
1FG1...-..E3.-....		CT	440	199	–	–	426	184				426	199	–	–	411	184				
1FG1...-..E4.-....		HD	494	253	–	–	480	238				480	253	–	–	465	238				
1FG1...-..F0.-....	80	CT	434	195	445	206	398	158	48	104.5	119	420	196	431	207	383	159	21	118	119	155
1FG1...-..F1.-....		CT	453	214	464	225	417	177				439	215	450	226	402	178				
1FG1...-..F3.-....		CT	472	233	483	244	436	196				458	234	469	245	421	197				
1FG1...-..F4.-....		CT	492	252	503	263	455	215				477	253	488	264	441	216				
1FG1...-..F52-....		HD	520	281	531	292	484	244				506	282	517	293	469	245				
1FG1...-..F62-....		HD	520	281	531	292	484	244				506	282	517	293	469	245				
1FG1...-..F53-....		HD	520	281	531	292	484	244			139	506	282	517	293	469	245			139	
1FG1...-..F63-....		HD	520	281	531	292	484	244				506	282	517	293	469	245				
1FG1...-..G0.-....	100	CT	465	220	492	247	430	185	53	104.5	137	450	222	477	249	415	187	26	136	137	192
1FG1...-..G1.-....		CT	491	246	518	273	456	211			158	476	248	503	275	441	213			158	
1FG1...-..G3.-....		CT	517	272	544	299	482	237				502	274	529	301	467	239				
1FG1...-..G5.-....		CT	569	324	596	351	534	289				554	326	581	353	519	291				

© Siemens 2019

3

Dimensional drawings

Gearbox types *ZZ59* and *DZ59*

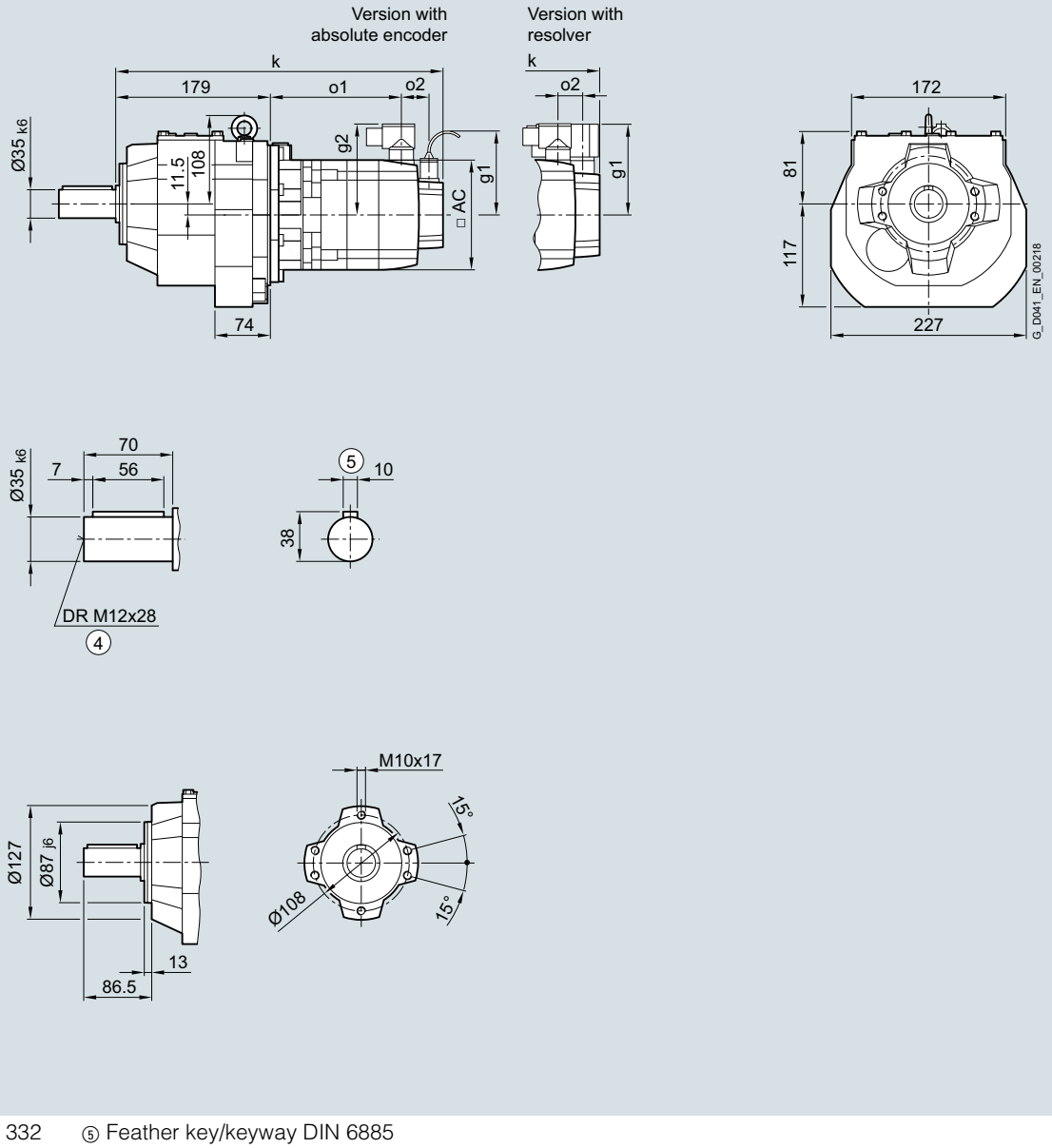

④ DIN 332 ⑤ Feather key/keyway DIN 6885

© Siemens 2019

Servo helical geared motor	Motor shaft height	Motor version	Absolute encoder with brake		with brake for increased energy		without brake					Resolver with brake		with brake for increased energy		without brake					
Type			k	o1	k	o1	k	o1	o2	g1	g2	k	o1	k	o1	k	o1	o2	g1	g2	AC
1FG1...-..C2.-....	36	CT	381	139	–	–	364	122	50	104.5	78	360	144	–	–	343	127	15	80	80	72
1FG1...-..C3.-....		HD	391	149	–	–	374	132				370	154	–	–	353	137				
1FG1...-..C4.-....		CT	406	164	–	–	389	147				385	169	–	–	368	152				
1FG1...-..D0.-....	48	CT	362	121	–	–	338	97	50	104.5	90	348	121	–	–	324	97	23	90	90	96
1FG1...-..D2.-....		CT	390	148	–	–	366	124				375	148	–	–	351	124				
1FG1...-..D3.-....		HD	416	168	–	–	392	144	56			401	174	–	–	377	150				
1FG1...-..D4.-....		HD	441	193	–	–	417	169				426	199	–	–	402	175				
1FG1...-..E0.-....	63	CT	395	154	–	–	381	139	50	104.5	104	381	154	–	–	366	139	23	103	104	126
1FG1...-..E1.-....		HD	430	189	–	–	416	174				416	189	–	–	401	174				
1FG1...-..E2.-....		CT	418	176	–	–	403	161				403	176	–	–	389	161				
1FG1...-..E3.-....		CT	440	199	–	–	426	184				426	199	–	–	411	184				
1FG1...-..E4.-....		HD	494	253	–	–	480	238				480	253	–	–	465	238				
1FG1...-..F0.-....	80	CT	434	195	445	206	398	158	48	104.5	119	420	196	431	207	383	159	21	118	119	155
1FG1...-..F1.-....		CT	453	214	464	225	417	177				439	215	450	226	402	178				
1FG1...-..F3.-....		CT	472	233	483	244	436	196				458	234	469	245	421	197				
1FG1...-..F4.-....		CT	492	252	503	263	455	215				477	253	488	264	441	216				
1FG1...-..F52-....		HD	520	281	531	292	484	244				506	282	517	293	469	245				
1FG1...-..F62-....		HD	520	281	531	292	484	244				506	282	517	293	469	245				
1FG1...-..F53-....		HD	520	281	531	292	484	244			139	506	282	517	293	469	245			139	
1FG1...-..F63-....		HD	520	281	531	292	484	244				506	282	517	293	469	245				
1FG1...-..G0.-....	100	CT	465	220	492	247	430	185	53	104.5	137	450	222	477	249	415	187	26	136	137	192
1FG1...-..G1.-....		CT	491	246	518	273	456	211			158	476	248	503	275	441	213			158	
1FG1...-..G3.-....		CT	517	272	544	299	482	237				502	274	529	301	467	239				
1FG1...-..G5.-....		CT	569	324	596	351	534	289				554	326	581	353	519	291				

© Siemens 2019

3

Dimensional drawings

Gearbox types *Z69* and *D69*

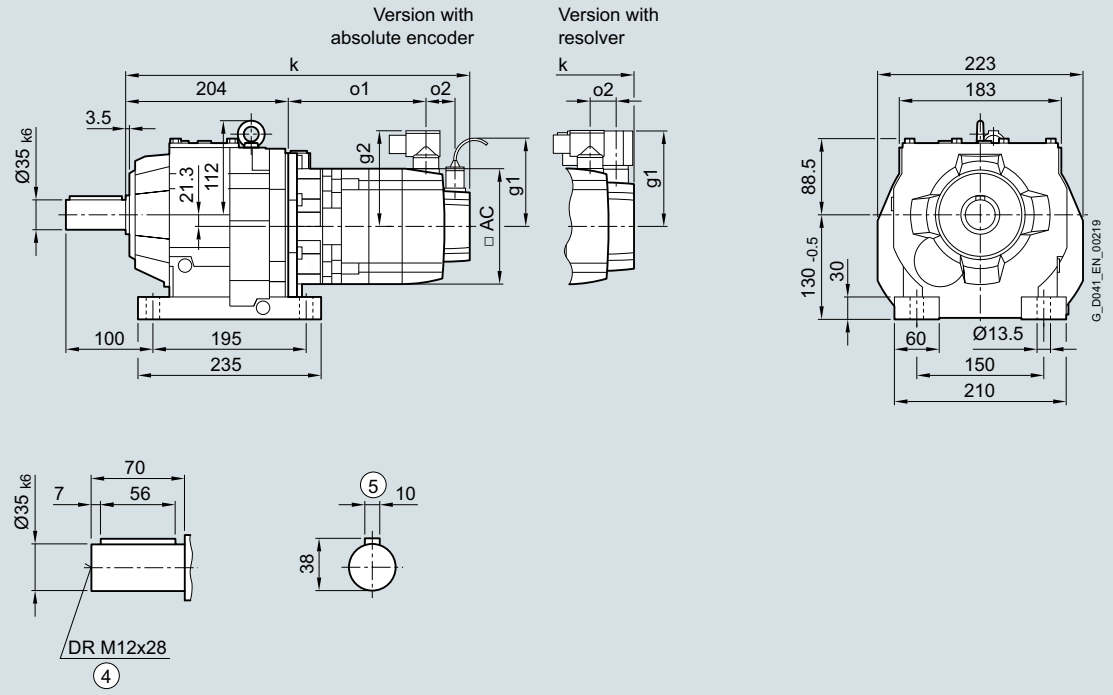

Gearbox types *ZB69* and *DB69*

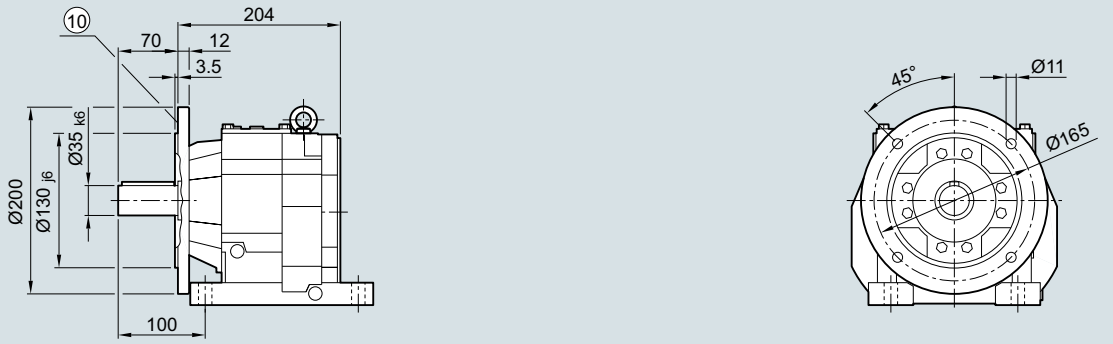

④ DIN 332 ⑤ Feather key/keyway DIN 6885 ⑩ For inner contour of the flange design, see page 3/158

© Siemens 2019

Servo helical geared motor	Motor shaft height	Motor version	Absolute encoder with brake		with brake for increased energy		without brake					Resolver with brake		with brake for increased energy		without brake					
Type			k	o1	k	o1	k	o1	o2	g1	g2	k	o1	k	o1	k	o1	o2	g1	g2	AC
1FG1...-..C2.-....	36	CT	406	139	–	–	389	122	50	104.5	78	385	144	–	–	368	127	15	80	80	72
1FG1...-..C3.-....		HD	416	149	–	–	399	132				395	154	–	–	378	137				
1FG1...-..C4.-....		CT	431	164	–	–	414	147				410	169	–	–	393	152				
1FG1...-..D0.-....	48	CT	387	121	–	–	363	97	50	104.5	90	373	121	–	–	349	97	23	90	90	96
1FG1...-..D2.-....		CT	415	148	–	–	391	124				400	148	–	–	376	124				
1FG1...-..D3.-....		HD	441	168	–	–	417	144	56			426	174	–	–	402	150				
1FG1...-..D4.-....		HD	466	193	–	–	442	169				451	199	–	–	427	175				
1FG1...-..E0.-....	63	CT	420	154	–	–	406	139	50	104.5	104	406	154	–	–	391	139	23	103	104	126
1FG1...-..E1.-....		HD	455	189	–	–	441	174				441	189	–	–	426	174				
1FG1...-..E2.-....		CT	443	176	–	–	428	161				428	176	–	–	414	161				
1FG1...-..E3.-....		CT	465	199	–	–	451	184				451	199	–	–	436	184				
1FG1...-..E4.-....		HD	519	253	–	–	505	238				505	253	–	–	490	238				
1FG1...-..F0.-....	80	CT	459	195	470	206	423	158	48	104.5	119	445	196	456	207	408	159	21	118	119	155
1FG1...-..F1.-....		CT	478	214	489	225	442	177				464	215	475	226	427	178				
1FG1...-..F3.-....		CT	497	233	508	244	461	196				483	234	494	245	446	197				
1FG1...-..F4.-....		CT	517	252	528	263	480	215				502	253	513	264	466	216				
1FG1...-..F52-....		HD	545	281	556	292	509	244				531	282	542	293	494	245				
1FG1...-..F62-....		HD	545	281	556	292	509	244				531	282	542	293	494	245				
1FG1...-..F53-....		HD	545	281	556	292	509	244			139	531	282	542	293	494	245			139	
1FG1...-..F63-....		HD	545	281	556	292	509	244				531	282	542	293	494	245				
1FG1...-..G0.-....	100	CT	490	220	517	247	455	185	53	104.5	137	475	222	502	249	440	187	26	136	137	192
1FG1...-..G1.-....		CT	516	246	543	273	481	211			158	501	248	528	275	466	213			158	
1FG1...-..G3.-....		CT	542	272	569	299	507	237				527	274	554	301	492	239				
1FG1...-..G5.-....		CT	594	324	621	351	559	289				579	326	606	353	544	291				

© Siemens 2019

3

Dimensional drawings

Gearbox types *ZF69* and *DF69*

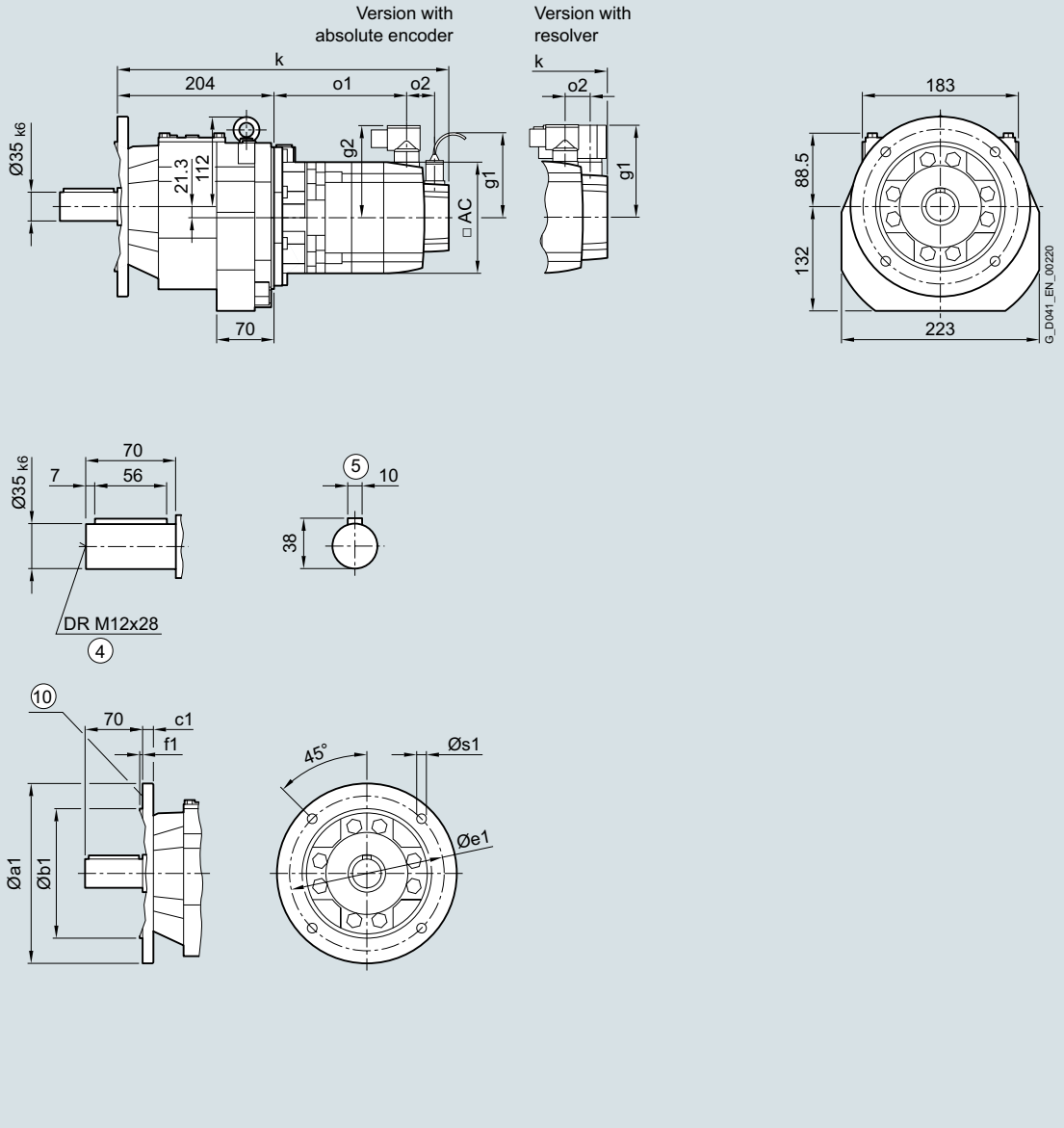

④ DIN 332 ⑤ Feather key/keyway DIN 6885 ⑩ For inner contour and dimensions of the flange design, see page 3/158

© Siemens 2019

Servo helical geared motor	Motor shaft height	Motor version	Absolute encoder with brake		with brake for increased energy		without brake					Resolver with brake		with brake for increased energy		without brake					
Type			k	o1	k	o1	k	o1	o2	g1	g2	k	o1	k	o1	k	o1	o2	g1	g2	AC
1FG1...-..C2.-....	36	CT	406	139	–	–	389	122	50	104.5	78	385	144	–	–	368	127	15	80	80	72
1FG1...-..C3.-....		HD	416	149	–	–	399	132				395	154	–	–	378	137				
1FG1...-..C4.-....		CT	431	164	–	–	414	147				410	169	–	–	393	152				
1FG1...-..D0.-....	48	CT	387	121	–	–	363	97	50	104.5	90	373	121	–	–	349	97	23	90	90	96
1FG1...-..D2.-....		CT	415	148	–	–	391	124				400	148	–	–	376	124				
1FG1...-..D3.-....		HD	441	168	–	–	417	144	56			426	174	–	–	402	150				
1FG1...-..D4.-....		HD	466	193	–	–	442	169				451	199	–	–	427	175				
1FG1...-..E0.-....	63	CT	420	154	–	–	406	139	50	104.5	104	406	154	–	–	391	139	23	103	104	126
1FG1...-..E1.-....		HD	455	189	–	–	441	174				441	189	–	–	426	174				
1FG1...-..E2.-....		CT	443	176	–	–	428	161				428	176	–	–	414	161				
1FG1...-..E3.-....		CT	465	199	–	–	451	184				451	199	–	–	436	184				
1FG1...-..E4.-....		HD	519	253	–	–	505	238				505	253	–	–	490	238				
1FG1...-..F0.-....	80	CT	459	195	470	206	423	158	48	104.5	119	445	196	456	207	408	159	21	118	119	155
1FG1...-..F1.-....		CT	478	214	489	225	442	177				464	215	475	226	427	178				
1FG1...-..F3.-....		CT	497	233	508	244	461	196				483	234	494	245	446	197				
1FG1...-..F4.-....		CT	517	252	528	263	480	215				502	253	513	264	466	216				
1FG1...-..F52-....		HD	545	281	556	292	509	244				531	282	542	293	494	245				
1FG1...-..F62-....		HD	545	281	556	292	509	244				531	282	542	293	494	245				
1FG1...-..F53-....		HD	545	281	556	292	509	244			139	531	282	542	293	494	245			139	
1FG1...-..F63-....		HD	545	281	556	292	509	244				531	282	542	293	494	245				
1FG1...-..G0.-....	100	CT	490	220	517	247	455	185	53	104.5	137	475	222	502	249	440	187	26	136	137	192
1FG1...-..G1.-....		CT	516	246	543	273	481	211			158	501	248	528	275	466	213			158	
1FG1...-..G3.-....		CT	542	272	569	299	507	237				527	274	554	301	492	239				
1FG1...-..G5.-....		CT	594	324	621	351	559	289				579	326	606	353	544	291				

© Siemens 2019

3

Dimensional drawings

Gearbox types *ZZ69* and *DZ69*

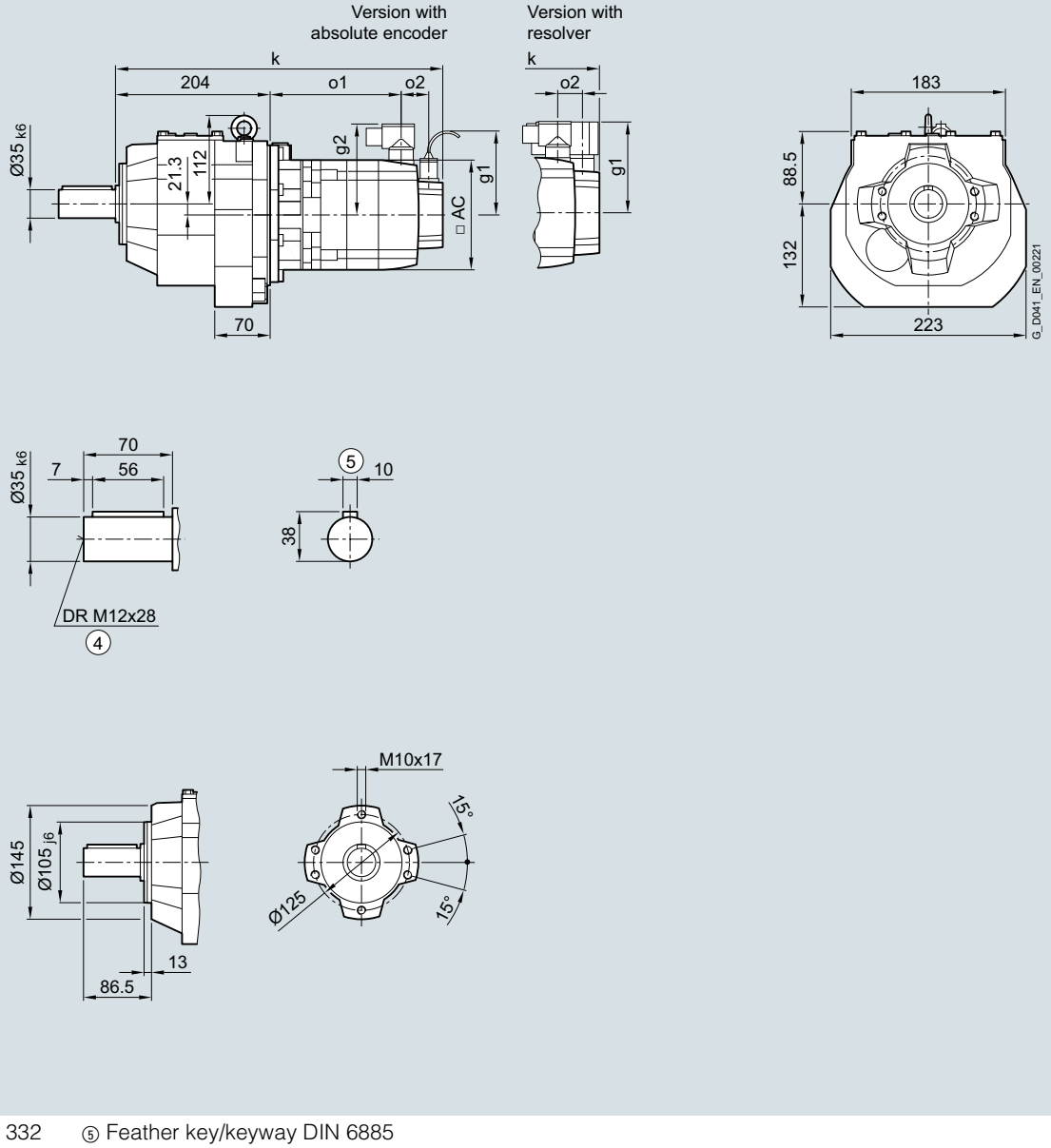

④ DIN 332 ⑤ Feather key/keyway DIN 6885

© Siemens 2019

Servo helical geared motor	Motor shaft height	Motor version	Absolute encoder with brake		with brake for increased energy		without brake					Resolver with brake		with brake for increased energy		without brake					
Type			k	o1	k	o1	k	o1	o2	g1	g2	k	o1	k	o1	k	o1	o2	g1	g2	AC
1FG1...-..C2.-....	36	CT	406	139	–	–	389	122	50	104.5	78	385	144	–	–	368	127	15	80	80	72
1FG1...-..C3.-....		HD	416	149	–	–	399	132				395	154	–	–	378	137				
1FG1...-..C4.-....		CT	431	164	–	–	414	147				410	169	–	–	393	152				
1FG1...-..D0.-....	48	CT	387	121	–	–	363	97	50	104.5	90	373	121	–	–	349	97	23	90	90	96
1FG1...-..D2.-....		CT	415	148	–	–	391	124				400	148	–	–	376	124				
1FG1...-..D3.-....		HD	441	168	–	–	417	144	56			426	174	–	–	402	150				
1FG1...-..D4.-....		HD	466	193	–	–	442	169				451	199	–	–	427	175				
1FG1...-..E0.-....	63	CT	420	154	–	–	406	139	50	104.5	104	406	154	–	–	391	139	23	103	104	126
1FG1...-..E1.-....		HD	455	189	–	–	441	174				441	189	–	–	426	174				
1FG1...-..E2.-....		CT	443	176	–	–	428	161				428	176	–	–	414	161				
1FG1...-..E3.-....		CT	465	199	–	–	451	184				451	199	–	–	436	184				
1FG1...-..E4.-....		HD	519	253	–	–	505	238				505	253	–	–	490	238				
1FG1...-..F0.-....	80	CT	459	195	470	206	423	158	48	104.5	119	445	196	456	207	408	159	21	118	119	155
1FG1...-..F1.-....		CT	478	214	489	225	442	177				464	215	475	226	427	178				
1FG1...-..F3.-....		CT	497	233	508	244	461	196				483	234	494	245	446	197				
1FG1...-..F4.-....		CT	517	252	528	263	480	215				502	253	513	264	466	216				
1FG1...-..F52-....		HD	545	281	556	292	509	244				531	282	542	293	494	245				
1FG1...-..F62-....		HD	545	281	556	292	509	244				531	282	542	293	494	245				
1FG1...-..F53-....		HD	545	281	556	292	509	244			139	531	282	542	293	494	245			139	
1FG1...-..F63-....		HD	545	281	556	292	509	244				531	282	542	293	494	245				
1FG1...-..G0.-....	100	CT	490	220	517	247	455	185	53	104.5	137	475	222	502	249	440	187	26	136	137	192
1FG1...-..G1.-....		CT	516	246	543	273	481	211			158	501	248	528	275	466	213			158	
1FG1...-..G3.-....		CT	542	272	569	299	507	237				527	274	554	301	492	239				
1FG1...-..G5.-....		CT	594	324	621	351	559	289				579	326	606	353	544	291				

© Siemens 2019

3

Dimensional drawings

Gearbox types *Z79* and *D79*

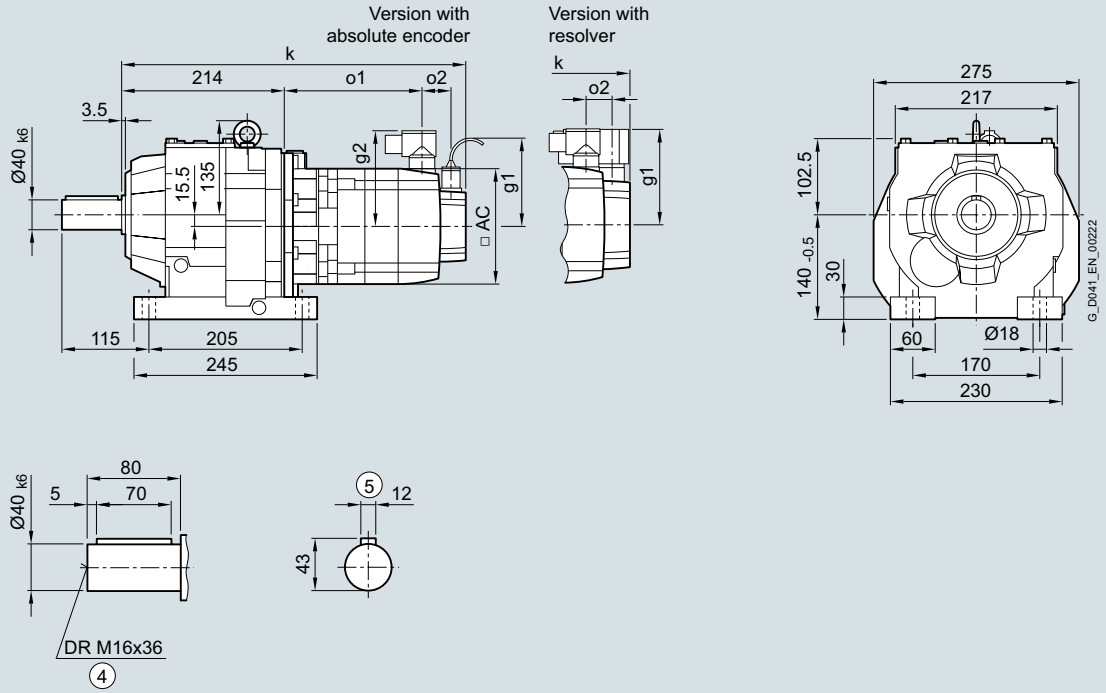

Gearbox types *ZB79* and *DB79*

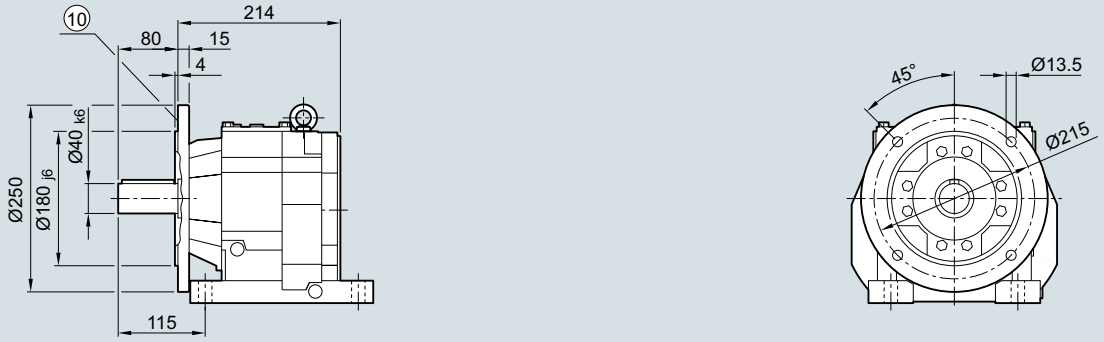

④ DIN 332 ⑤ Feather key/keyway DIN 6885 ⑩ For inner contour of the flange design, see page 3/158

© Siemens 2019

Servo helical geared motor	Motor shaft height	Motor version	Absolute encoder with brake		with brake for increased energy		without brake					Resolver with brake		with brake for increased energy		without brake					
Type			k	o1	k	o1	k	o1	o2	g1	g2	k	o1	k	o1	k	o1	o2	g1	g2	AC
1FG1...-..C2.-....	36	CT	–	–	–	–	–	–	–	–	–	–	–	–	–	–	–	–	–	–	–
1FG1...-..C3.-....		HD	–	–	–	–	–	–	–	–	–	–	–	–	–	–	–	–	–	–	–
1FG1...-..C4.-....		CT	–	–	–	–	–	–	–	–	–	–	–	–	–	–	–	–	–	–	–
1FG1...-..D0.-....	48	CT	–	–	–	–	–	–	–	–	–	–	–	–	–	–	–	–	–	–	–
1FG1...-..D2.-....		CT	–	–	–	–	–	–	–	–	–	–	–	–	–	–	–	–	–	–	–
1FG1...-..D3.-....		HD	–	–	–	–	–	–	–	–	–	–	–	–	–	–	–	–	–	–	–
1FG1...-..D4.-....		HD	–	–	–	–	–	–	–	–	–	–	–	–	–	–	–	–	–	–	–
1FG1...-..E0.-....	63	CT	424	148	–	–	410	133	50	104.5	104	410	148	–	–	395	133	23	103	104	126
1FG1...-..E1.-....		HD	459	183	–	–	445	168				445	183	–	–	430	168				
1FG1...-..E2.-....		CT	447	170	–	–	432	155				432	170	–	–	418	155				
1FG1...-..E3.-....		CT	469	193	–	–	455	178				455	193	–	–	440	178				
1FG1...-..E4.-....		HD	523	247	–	–	509	232				509	247	–	–	494	232				
1FG1...-..F0.-....	80	CT	463	189	474	200	427	152	48	104.5	119	449	190	460	201	412	153	21	118	119	155
1FG1...-..F1.-....		CT	482	208	493	219	446	171				468	209	479	220	431	172				
1FG1...-..F3.-....		CT	501	227	512	238	465	190				487	228	498	239	450	191				
1FG1...-..F4.-....		CT	521	246	532	257	484	209				506	247	517	258	470	210				
1FG1...-..F52-....		HD	549	275	560	286	513	238				535	276	546	287	498	239				
1FG1...-..F62-....		HD	549	275	560	286	513	238				535	276	546	287	498	239				
1FG1...-..F53-....		HD	549	275	560	286	513	238			139	535	276	546	287	498	239			139	
1FG1...-..F63-....		HD	549	275	560	286	513	238				535	276	546	287	498	239				
1FG1...-..G0.-....	100	CT	494	214	521	241	459	179	53	104.5	137	479	216	506	243	444	181	26	136	137	192
1FG1...-..G1.-....		CT	520	240	547	267	485	205			158	505	242	532	269	470	207			158	
1FG1...-..G3.-....		CT	546	266	573	293	511	231				531	268	558	295	496	233				
1FG1...-..G5.-....		CT	598	318	625	345	563	283				583	320	610	347	548	285				

© Siemens 2019

3

Dimensional drawings

Gearbox types *ZF79* and *DF79*

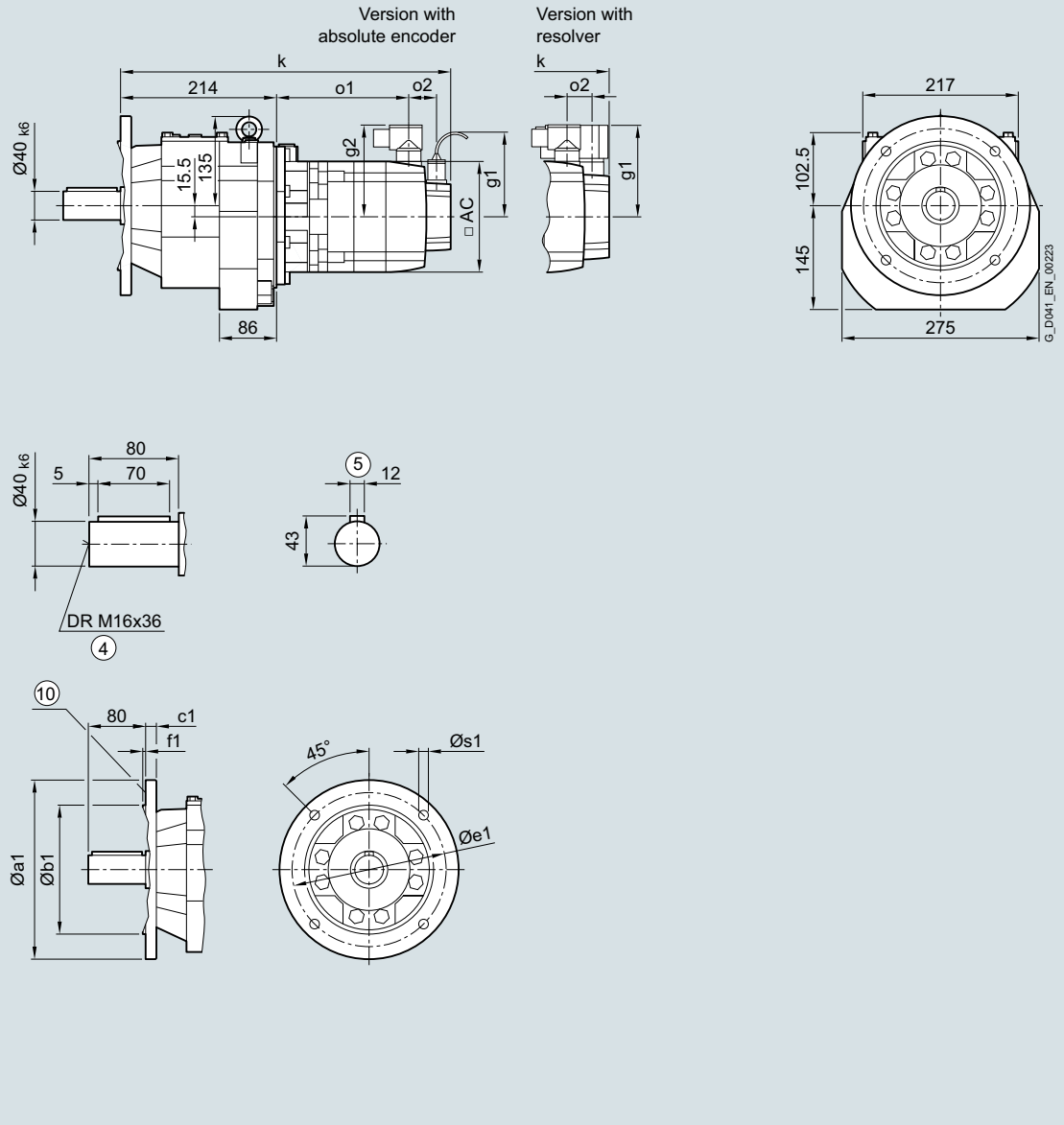

④ DIN 332 ⑤ Feather key/keyway DIN 6885 ⑩ For inner contour and dimensions of the flange design, see page 3/158

© Siemens 2019

Servo helical geared motor	Motor shaft height	Motor version	Absolute encoder with brake		with brake for increased energy		without brake					Resolver with brake		with brake for increased energy		without brake					
Type			k	o1	k	o1	k	o1	o2	g1	g2	k	o1	k	o1	k	o1	o2	g1	g2	AC
1FG1...-..C2.-....	36	CT	–	–	–	–	–	–	–	–	–	–	–	–	–	–	–	–	–	–	–
1FG1...-..C3.-....		HD	–	–	–	–	–	–	–	–	–	–	–	–	–	–	–	–	–	–	–
1FG1...-..C4.-....		CT	–	–	–	–	–	–	–	–	–	–	–	–	–	–	–	–	–	–	–
1FG1...-..D0.-....	48	CT	–	–	–	–	–	–	–	–	–	–	–	–	–	–	–	–	–	–	–
1FG1...-..D2.-....		CT	–	–	–	–	–	–	–	–	–	–	–	–	–	–	–	–	–	–	–
1FG1...-..D3.-....		HD	–	–	–	–	–	–	–	–	–	–	–	–	–	–	–	–	–	–	–
1FG1...-..D4.-....		HD	–	–	–	–	–	–	–	–	–	–	–	–	–	–	–	–	–	–	–
1FG1...-..E0.-....	63	CT	424	148	–	–	410	133	50	104.5	104	410	148	–	–	395	133	23	103	104	126
1FG1...-..E1.-....		HD	459	183	–	–	445	168				445	183	–	–	430	168				
1FG1...-..E2.-....		CT	447	170	–	–	432	155				432	170	–	–	418	155				
1FG1...-..E3.-....		CT	469	193	–	–	455	178				455	193	–	–	440	178				
1FG1...-..E4.-....		HD	523	247	–	–	509	232				509	247	–	–	494	232				
1FG1...-..F0.-....	80	CT	463	189	474	200	427	152	48	104.5	119	449	190	460	201	412	153	21	118	119	155
1FG1...-..F1.-....		CT	482	208	493	219	446	171				468	209	479	220	431	172				
1FG1...-..F3.-....		CT	501	227	512	238	465	190				487	228	498	239	450	191				
1FG1...-..F4.-....		CT	521	246	532	257	484	209				506	247	517	258	470	210				
1FG1...-..F52-....		HD	549	275	560	286	513	238				535	276	546	287	498	239				
1FG1...-..F62-....		HD	549	275	560	286	513	238				535	276	546	287	498	239				
1FG1...-..F53-....		HD	549	275	560	286	513	238			139	535	276	546	287	498	239			139	
1FG1...-..F63-....		HD	549	275	560	286	513	238				535	276	546	287	498	239				
1FG1...-..G0.-....	100	CT	494	214	521	241	459	179	53	104.5	137	479	216	506	243	444	181	26	136	137	192
1FG1...-..G1.-....		CT	520	240	547	267	485	205			158	505	242	532	269	470	207			158	
1FG1...-..G3.-....		CT	546	266	573	293	511	231				531	268	558	295	496	233				
1FG1...-..G5.-....		CT	598	318	625	345	563	283				583	320	610	347	548	285				

© Siemens 2019

3

Dimensional drawings

Gearbox types *ZZ79* and *DZ79*

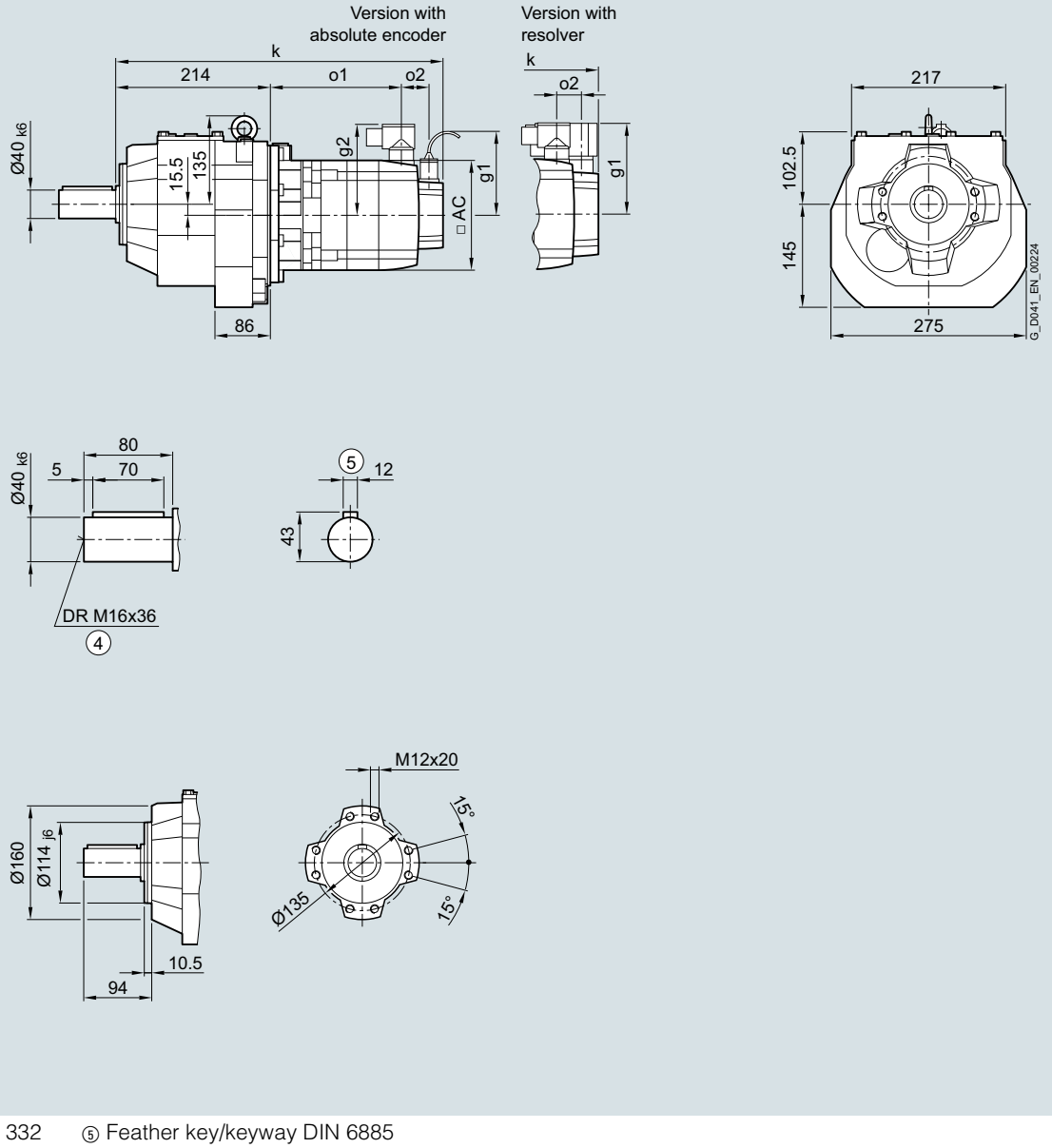

④ DIN 332 ⑤ Feather key/keyway DIN 6885

© Siemens 2019

Servo helical geared motor	Motor shaft height	Motor version	Absolute encoder with brake		with brake for increased energy		without brake					Resolver with brake		with brake for increased energy		without brake					
Type			k	o1	k	o1	k	o1	o2	g1	g2	k	o1	k	o1	k	o1	o2	g1	g2	AC
1FG1...-..C2.-....	36	CT	–	–	–	–	–	–	–	–	–	–	–	–	–	–	–	–	–	–	–
1FG1...-..C3.-....		HD	–	–	–	–	–	–	–	–	–	–	–	–	–	–	–	–	–	–	–
1FG1...-..C4.-....		CT	–	–	–	–	–	–	–	–	–	–	–	–	–	–	–	–	–	–	–
1FG1...-..D0.-....	48	CT	–	–	–	–	–	–	–	–	–	–	–	–	–	–	–	–	–	–	–
1FG1...-..D2.-....		CT	–	–	–	–	–	–	–	–	–	–	–	–	–	–	–	–	–	–	–
1FG1...-..D3.-....		HD	–	–	–	–	–	–	–	–	–	–	–	–	–	–	–	–	–	–	–
1FG1...-..D4.-....		HD	–	–	–	–	–	–	–	–	–	–	–	–	–	–	–	–	–	–	–
1FG1...-..E0.-....	63	CT	424	148	–	–	410	133	50	104.5	104	410	148	–	–	395	133	23	103	104	126
1FG1...-..E1.-....		HD	459	183	–	–	445	168				445	183	–	–	430	168				
1FG1...-..E2.-....		CT	447	170	–	–	432	155				432	170	–	–	418	155				
1FG1...-..E3.-....		CT	469	193	–	–	455	178				455	193	–	–	440	178				
1FG1...-..E4.-....		HD	523	247	–	–	509	232				509	247	–	–	494	232				
1FG1...-..F0.-....	80	CT	463	189	474	200	427	152	48	104.5	119	449	190	460	201	412	153	21	118	119	155
1FG1...-..F1.-....		CT	482	208	493	219	446	171				468	209	479	220	431	172				
1FG1...-..F3.-....		CT	501	227	512	238	465	190				487	228	498	239	450	191				
1FG1...-..F4.-....		CT	521	246	532	257	484	209				506	247	517	258	470	210				
1FG1...-..F52-....		HD	549	275	560	286	513	238				535	276	546	287	498	239				
1FG1...-..F62-....		HD	549	275	560	286	513	238				535	276	546	287	498	239				
1FG1...-..F53-....		HD	549	275	560	286	513	238			139	535	276	546	287	498	239			139	
1FG1...-..F63-....		HD	549	275	560	286	513	238				535	276	546	287	498	239				
1FG1...-..G0.-....	100	CT	494	214	521	241	459	179	53	104.5	137	479	216	506	243	444	181	26	136	137	192
1FG1...-..G1.-....		CT	520	240	547	267	485	205			158	505	242	532	269	470	207			158	
1FG1...-..G3.-....		CT	546	266	573	293	511	231				531	268	558	295	496	233				
1FG1...-..G5.-....		CT	598	318	625	345	563	283				583	320	610	347	548	285				

© Siemens 2019

3

Dimensional drawings

Gearbox types *Z89* and *D89*

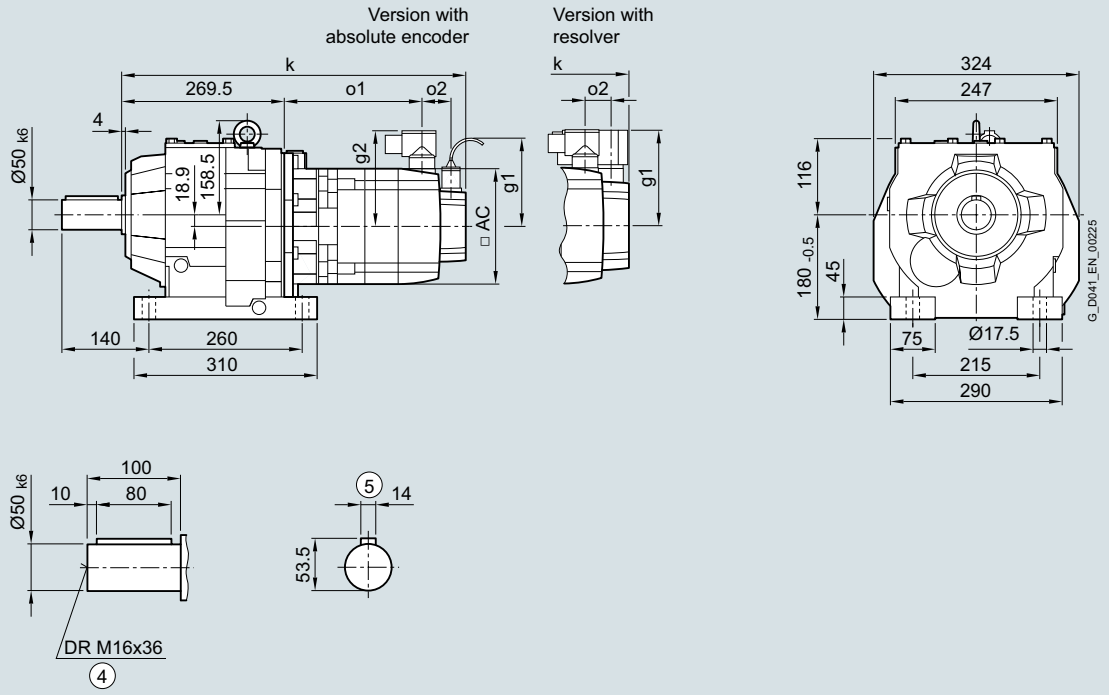

Gearbox types *ZB89* and *DB89*

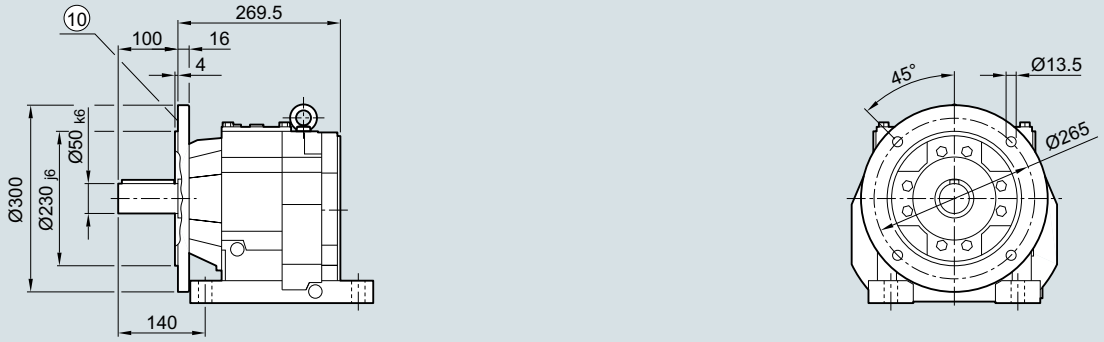

④ DIN 332 ⑤ Feather key/keyway DIN 6885 ⑩ For inner contour of the flange design, see page 3/158

© Siemens 2019

Servo helical geared motor	Motor shaft height	Motor version	Absolute encoder with brake		with brake for increased energy		without brake					Resolver with brake		with brake for increased energy		without brake					
Type			k	o1	k	o1	k	o1	o2	g1	g2	k	o1	k	o1	k	o1	o2	g1	g2	AC
1FG1...-..C2.-....	36	CT	–	–	–	–	–	–	–	–	–	–	–	–	–	–	–	–	–	–	–
1FG1...-..C3.-....		HD	–	–	–	–	–	–	–	–	–	–	–	–	–	–	–	–	–	–	–
1FG1...-..C4.-....		CT	–	–	–	–	–	–	–	–	–	–	–	–	–	–	–	–	–	–	–
1FG1...-..D0.-....	48	CT	–	–	–	–	–	–	–	–	–	–	–	–	–	–	–	–	–	–	–
1FG1...-..D2.-....		CT	–	–	–	–	–	–	–	–	–	–	–	–	–	–	–	–	–	–	–
1FG1...-..D3.-....		HD	–	–	–	–	–	–	–	–	–	–	–	–	–	–	–	–	–	–	–
1FG1...-..D4.-....		HD	–	–	–	–	–	–	–	–	–	–	–	–	–	–	–	–	–	–	–
1FG1...-..E0.-....	63	CT	467	135	–	–	452	120	50	104.5	104	452	135	–	–	438	120	23	103	104	126
1FG1...-..E1.-....		HD	502	170	–	–	487	155				487	170	–	–	473	155				
1FG1...-..E2.-....		CT	489	157	–	–	475	142				475	157	–	–	460	142				
1FG1...-..E3.-....		CT	512	180	–	–	497	165				497	180	–	–	483	165				
1FG1...-..E4.-....		HD	566	234	–	–	551	219				551	234	–	–	537	219				
1FG1...-..F0.-....	80	CT	502	172	513	183	465	135	48	104.5	119	487	173	498	184	451	136	21	118	119	155
1FG1...-..F1.-....		CT	521	191	532	202	484	154				506	192	517	203	470	155				
1FG1...-..F3.-....		CT	540	210	551	221	503	173				525	211	536	222	489	174				
1FG1...-..F4.-....		CT	559	229	570	240	523	192				545	230	556	241	508	193				
1FG1...-..F52-....		HD	588	258	599	269	551	221				573	259	584	270	537	222				
1FG1...-..F62-....		HD	588	258	599	269	551	221				573	259	584	270	537	222				
1FG1...-..F53-....		HD	588	258	599	269	551	221			139	573	259	584	270	537	222			139	
1FG1...-..F63-....		HD	588	258	599	269	551	221				573	259	584	270	537	222				
1FG1...-..G0.-....	100	CT	532	197	559	224	497	162	53	104.5	137	518	199	545	226	483	164	26	136	137	192
1FG1...-..G1.-....		CT	558	223	585	250	523	188			158	544	225	571	252	509	190			158	
1FG1...-..G3.-....		CT	584	249	611	276	549	214				570	251	597	278	535	216				
1FG1...-..G5.-....		CT	636	301	663	328	601	266				622	303	649	330	587	268				

© Siemens 2019

3

Dimensional drawings

Gearbox types *ZF89* and *DF89*

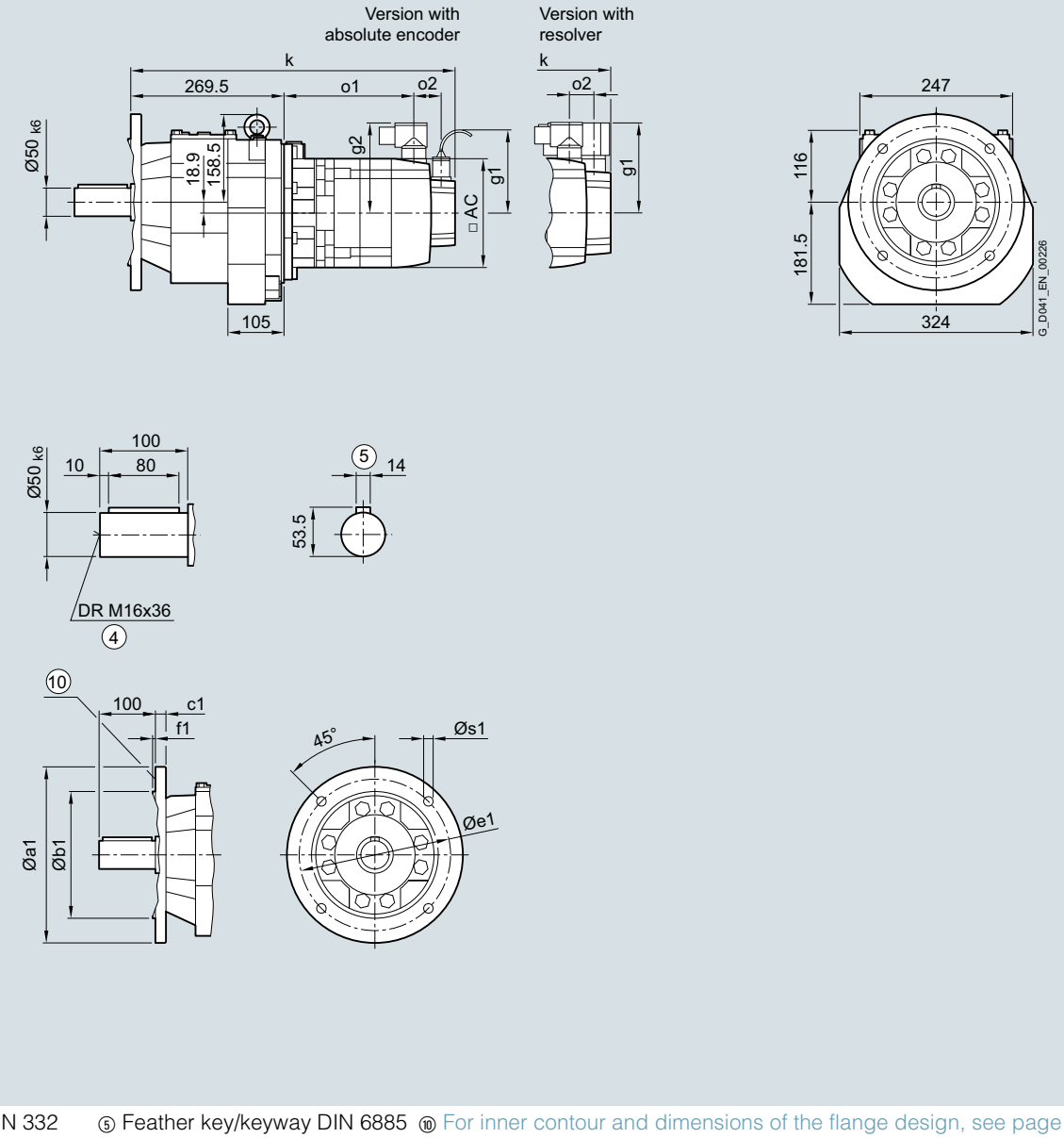

④ DIN 332 ⑤ Feather key/keyway DIN 6885 ⑩ For inner contour and dimensions of the flange design, see page 3/158

© Siemens 2019

Servo helical geared motor	Motor shaft height	Motor version	Absolute encoder with brake		with brake for increased energy		without brake					Resolver with brake		with brake for increased energy		without brake					
Type			k	o1	k	o1	k	o1	o2	g1	g2	k	o1	k	o1	k	o1	o2	g1	g2	AC
1FG1...-..C2.-....	36	CT	–	–	–	–	–	–	–	–	–	–	–	–	–	–	–	–	–	–	–
1FG1...-..C3.-....		HD	–	–	–	–	–	–	–	–	–	–	–	–	–	–	–	–	–	–	–
1FG1...-..C4.-....		CT	–	–	–	–	–	–	–	–	–	–	–	–	–	–	–	–	–	–	–
1FG1...-..D0.-....	48	CT	–	–	–	–	–	–	–	–	–	–	–	–	–	–	–	–	–	–	–
1FG1...-..D2.-....		CT	–	–	–	–	–	–	–	–	–	–	–	–	–	–	–	–	–	–	–
1FG1...-..D3.-....		HD	–	–	–	–	–	–	–	–	–	–	–	–	–	–	–	–	–	–	–
1FG1...-..D4.-....		HD	–	–	–	–	–	–	–	–	–	–	–	–	–	–	–	–	–	–	–
1FG1...-..E0.-....	63	CT	467	135	–	–	452	120	50	104.5	104	452	135	–	–	438	120	23	103	104	126
1FG1...-..E1.-....		HD	502	170	–	–	487	155				487	170	–	–	473	155				
1FG1...-..E2.-....		CT	489	157	–	–	475	142				475	157	–	–	460	142				
1FG1...-..E3.-....		CT	512	180	–	–	497	165				497	180	–	–	483	165				
1FG1...-..E4.-....		HD	566	234	–	–	551	219				551	234	–	–	537	219				
1FG1...-..F0.-....	80	CT	502	172	513	183	465	135	48	104.5	119	487	173	498	184	451	136	21	118	119	155
1FG1...-..F1.-....		CT	521	191	532	202	484	154				506	192	517	203	470	155				
1FG1...-..F3.-....		CT	540	210	551	221	503	173				525	211	536	222	489	174				
1FG1...-..F4.-....		CT	559	229	570	240	523	192				545	230	556	241	508	193				
1FG1...-..F52-....		HD	588	258	599	269	551	221				573	259	584	270	537	222				
1FG1...-..F62-....		HD	588	258	599	269	551	221				573	259	584	270	537	222				
1FG1...-..F53-....		HD	588	258	599	269	551	221			139	573	259	584	270	537	222			139	
1FG1...-..F63-....		HD	588	258	599	269	551	221				573	259	584	270	537	222				
1FG1...-..G0.-....	100	CT	532	197	559	224	497	162	53	104.5	137	518	199	545	226	483	164	26	136	137	192
1FG1...-..G1.-....		CT	558	223	585	250	523	188			158	544	225	571	252	509	190			158	
1FG1...-..G3.-....		CT	584	249	611	276	549	214				570	251	597	278	535	216				
1FG1...-..G5.-....		CT	636	301	663	328	601	266				622	303	649	330	587	268				

© Siemens 2019

3

Dimensional drawings

Gearbox types *ZZ89* and *DZ89*

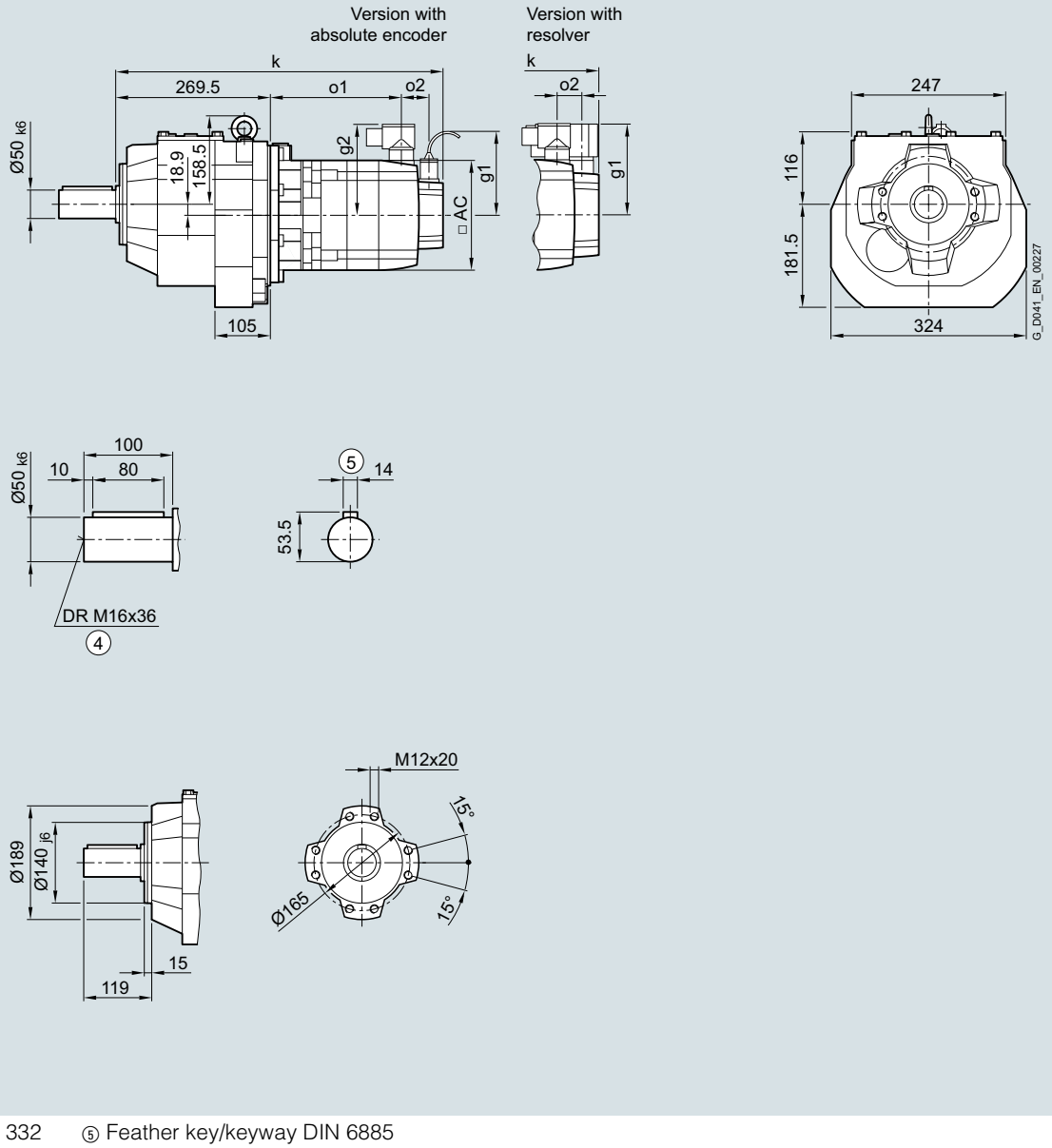

④ DIN 332 ⑤ Feather key/keyway DIN 6885

© Siemens 2019

Servo helical geared motor	Motor shaft height	Motor version	Absolute encoder with brake		with brake for increased energy		without brake					Resolver with brake		with brake for increased energy		without brake					
Type			k	o1	k	o1	k	o1	o2	g1	g2	k	o1	k	o1	k	o1	o2	g1	g2	AC
1FG1...-..C2.-....	36	CT	–	–	–	–	–	–	–	–	–	–	–	–	–	–	–	–	–	–	–
1FG1...-..C3.-....		HD	–	–	–	–	–	–	–	–	–	–	–	–	–	–	–	–	–	–	–
1FG1...-..C4.-....		CT	–	–	–	–	–	–	–	–	–	–	–	–	–	–	–	–	–	–	–
1FG1...-..D0.-....	48	CT	–	–	–	–	–	–	–	–	–	–	–	–	–	–	–	–	–	–	–
1FG1...-..D2.-....		CT	–	–	–	–	–	–	–	–	–	–	–	–	–	–	–	–	–	–	–
1FG1...-..D3.-....		HD	–	–	–	–	–	–	–	–	–	–	–	–	–	–	–	–	–	–	–
1FG1...-..D4.-....		HD	–	–	–	–	–	–	–	–	–	–	–	–	–	–	–	–	–	–	–
1FG1...-..E0.-....	63	CT	467	135	–	–	452	120	50	104.5	104	452	135	–	–	438	120	23	103	104	126
1FG1...-..E1.-....		HD	502	170	–	–	487	155				487	170	–	–	473	155				
1FG1...-..E2.-....		CT	489	157	–	–	475	142				475	157	–	–	460	142				
1FG1...-..E3.-....		CT	512	180	–	–	497	165				497	180	–	–	483	165				
1FG1...-..E4.-....		HD	566	234	–	–	551	219				551	234	–	–	537	219				
1FG1...-..F0.-....	80	CT	502	172	513	183	465	135	48	104.5	119	487	173	498	184	451	136	21	118	119	155
1FG1...-..F1.-....		CT	521	191	532	202	484	154				506	192	517	203	470	155				
1FG1...-..F3.-....		CT	540	210	551	221	503	173				525	211	536	222	489	174				
1FG1...-..F4.-....		CT	559	229	570	240	523	192				545	230	556	241	508	193				
1FG1...-..F52-....		HD	588	258	599	269	551	221				573	259	584	270	537	222				
1FG1...-..F62-....		HD	588	258	599	269	551	221				573	259	584	270	537	222				
1FG1...-..F53-....		HD	588	258	599	269	551	221			139	573	259	584	270	537	222			139	
1FG1...-..F63-....		HD	588	258	599	269	551	221				573	259	584	270	537	222				
1FG1...-..G0.-....	100	CT	532	197	559	224	497	162	53	104.5	137	518	199	545	226	483	164	26	136	137	192
1FG1...-..G1.-....		CT	558	223	585	250	523	188			158	544	225	571	252	509	190			158	
1FG1...-..G3.-....		CT	584	249	611	276	549	214				570	251	597	278	535	216				
1FG1...-..G5.-....		CT	636	301	663	328	601	266				622	303	649	330	587	268				

© Siemens 2019

3

Dimensional drawings

Gearbox types *Z109* and *D109*

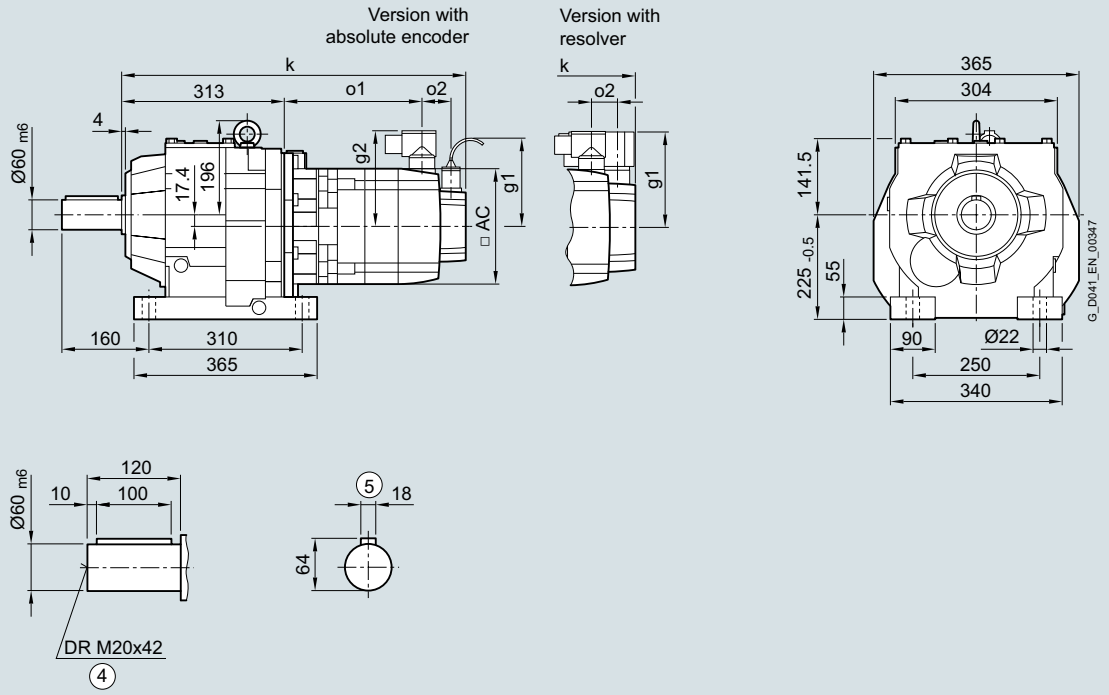

④ DIN 332 ⑤ Feather key/keyway DIN 6885

© Siemens 2019

Servo helical geared motor	Motor shaft height	Motor version	Absolute encoder with brake		with brake for increased energy		without brake					Resolver with brake		with brake for increased energy		without brake					
Type			k	o1	k	o1	k	o1	o2	g1	g2	k	o1	k	o1	k	o1	o2	g1	g2	AC
1FG1...-..C2.-....	36	CT	–	–	–	–	–	–	–	–	–	–	–	–	–	–	–	–	–	–	–
1FG1...-..C3.-....		HD	–	–	–	–	–	–	–	–	–	–	–	–	–	–	–	–	–	–	–
1FG1...-..C4.-....		CT	–	–	–	–	–	–	–	–	–	–	–	–	–	–	–	–	–	–	–
1FG1...-..D0.-....	48	CT	–	–	–	–	–	–	–	–	–	–	–	–	–	–	–	–	–	–	–
1FG1...-..D2.-....		CT	–	–	–	–	–	–	–	–	–	–	–	–	–	–	–	–	–	–	–
1FG1...-..D3.-....		HD	–	–	–	–	–	–	–	–	–	–	–	–	–	–	–	–	–	–	–
1FG1...-..D4.-....		HD	–	–	–	–	–	–	–	–	–	–	–	–	–	–	–	–	–	–	–
1FG1...-..E0.-....	63	CT	–	–	–	–	–	–	–	–	–	–	–	–	–	–	–	–	–	–	–
1FG1...-..E1.-....		HD	–	–	–	–	–	–	–	–	–	–	–	–	–	–	–	–	–	–	–
1FG1...-..E2.-....		CT	–	–	–	–	–	–	–	–	–	–	–	–	–	–	–	–	–	–	–
1FG1...-..E3.-....		CT	–	–	–	–	–	–	–	–	–	–	–	–	–	–	–	–	–	–	–
1FG1...-..E4.-....		HD	–	–	–	–	–	–	–	–	–	–	–	–	–	–	–	–	–	–	–
1FG1...-..F0.-....	80	CT	536	163	547	174	500	126	48	104.5	119	522	164	533	175	485	127	21	118	119	155
1FG1...-..F1.-....		CT	555	182	566	193	519	145				541	183	552	194	504	146				
1FG1...-..F3.-....		CT	574	201	585	212	538	164				560	202	571	213	523	165				
1FG1...-..F4.-....		CT	594	220	605	231	557	183				579	221	590	232	543	184				
1FG1...-..F52-....		HD	622	249	633	260	586	212				608	250	619	261	571	213				
1FG1...-..F62-....		HD	622	249	633	260	586	212				608	250	619	261	571	213				
1FG1...-..F53-....		HD	622	249	633	260	586	212			139	608	250	619	261	571	213			139	
1FG1...-..F63-....		HD	622	249	633	260	586	212				608	250	619	261	571	213				
1FG1...-..G0.-....	100	CT	567	188	594	215	532	153	53	104.5	137	552	190	579	217	517	155	26	136	137	192
1FG1...-..G1.-....		CT	593	214	620	241	558	179			158	578	216	605	243	543	181			158	
1FG1...-..G3.-....		CT	619	240	646	267	584	205				604	242	631	269	569	207				
1FG1...-..G5.-....		CT	671	292	698	319	636	257				656	294	683	321	621	259				

© Siemens 2019

3

Dimensional drawings

Gearbox types *ZF109* and *DF109*

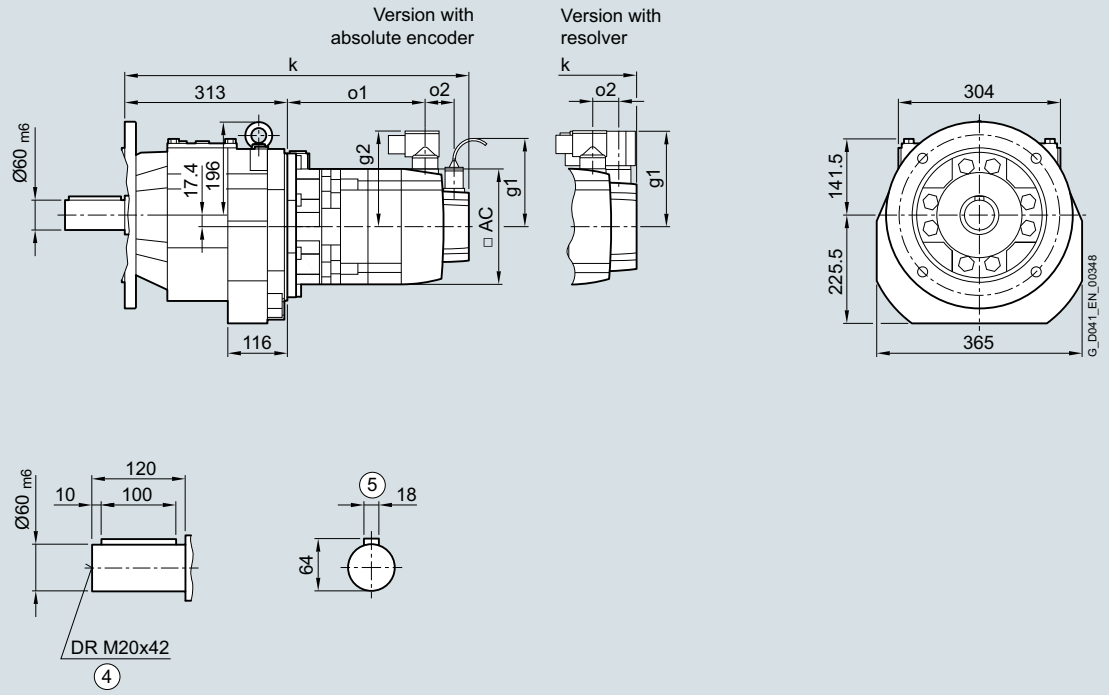

④ DIN 332 ⑤ Feather key/keyway DIN 6885 ⑩ For inner contour and dimensions of the flange design, see page 3/158

© Siemens 2019

Servo helical geared motor	Motor shaft height	Motor version	Absolute encoder with brake		with brake for increased energy		without brake					Resolver with brake		with brake for increased energy		without brake					
Type			k	o1	k	o1	k	o1	o2	g1	g2	k	o1	k	o1	k	o1	o2	g1	g2	AC
1FG1...-..C2.-....	36	CT	–	–	–	–	–	–	–	–	–	–	–	–	–	–	–	–	–	–	–
1FG1...-..C3.-....		HD	–	–	–	–	–	–	–	–	–	–	–	–	–	–	–	–	–	–	–
1FG1...-..C4.-....		CT	–	–	–	–	–	–	–	–	–	–	–	–	–	–	–	–	–	–	–
1FG1...-..D0.-....	48	CT	–	–	–	–	–	–	–	–	–	–	–	–	–	–	–	–	–	–	–
1FG1...-..D2.-....		CT	–	–	–	–	–	–	–	–	–	–	–	–	–	–	–	–	–	–	–
1FG1...-..D3.-....		HD	–	–	–	–	–	–	–	–	–	–	–	–	–	–	–	–	–	–	–
1FG1...-..D4.-....		HD	–	–	–	–	–	–	–	–	–	–	–	–	–	–	–	–	–	–	–
1FG1...-..E0.-....	63	CT	–	–	–	–	–	–	–	–	–	–	–	–	–	–	–	–	–	–	–
1FG1...-..E1.-....		HD	–	–	–	–	–	–	–	–	–	–	–	–	–	–	–	–	–	–	–
1FG1...-..E2.-....		CT	–	–	–	–	–	–	–	–	–	–	–	–	–	–	–	–	–	–	–
1FG1...-..E3.-....		CT	–	–	–	–	–	–	–	–	–	–	–	–	–	–	–	–	–	–	–
1FG1...-..E4.-....		HD	–	–	–	–	–	–	–	–	–	–	–	–	–	–	–	–	–	–	–
1FG1...-..F0.-....	80	CT	536	163	547	174	500	126	48	104.5	119	522	164	533	175	485	127	21	118	119	155
1FG1...-..F1.-....		CT	555	182	566	193	519	145				541	183	552	194	504	146				
1FG1...-..F3.-....		CT	574	201	585	212	538	164				560	202	571	213	523	165				
1FG1...-..F4.-....		CT	594	220	605	231	557	183				579	221	590	232	543	184				
1FG1...-..F52-....		HD	622	249	633	260	586	212				608	250	619	261	571	213				
1FG1...-..F62-....		HD	622	249	633	260	586	212				608	250	619	261	571	213				
1FG1...-..F53-....		HD	622	249	633	260	586	212			139	608	250	619	261	571	213			139	
1FG1...-..F63-....		HD	622	249	633	260	586	212				608	250	619	261	571	213				
1FG1...-..G0.-....	100	CT	567	188	594	215	532	153	53	104.5	137	552	190	579	217	517	155	26	136	137	192
1FG1...-..G1.-....		CT	593	214	620	241	558	179			158	578	216	605	243	543	181			158	
1FG1...-..G3.-....		CT	619	240	646	267	584	205				604	242	631	269	569	207				
1FG1...-..G5.-....		CT	671	292	698	319	636	257				656	294	683	321	621	259				

© Siemens 2019

3

Dimensional drawings

Gearbox types *ZZ109* and *DZ109*

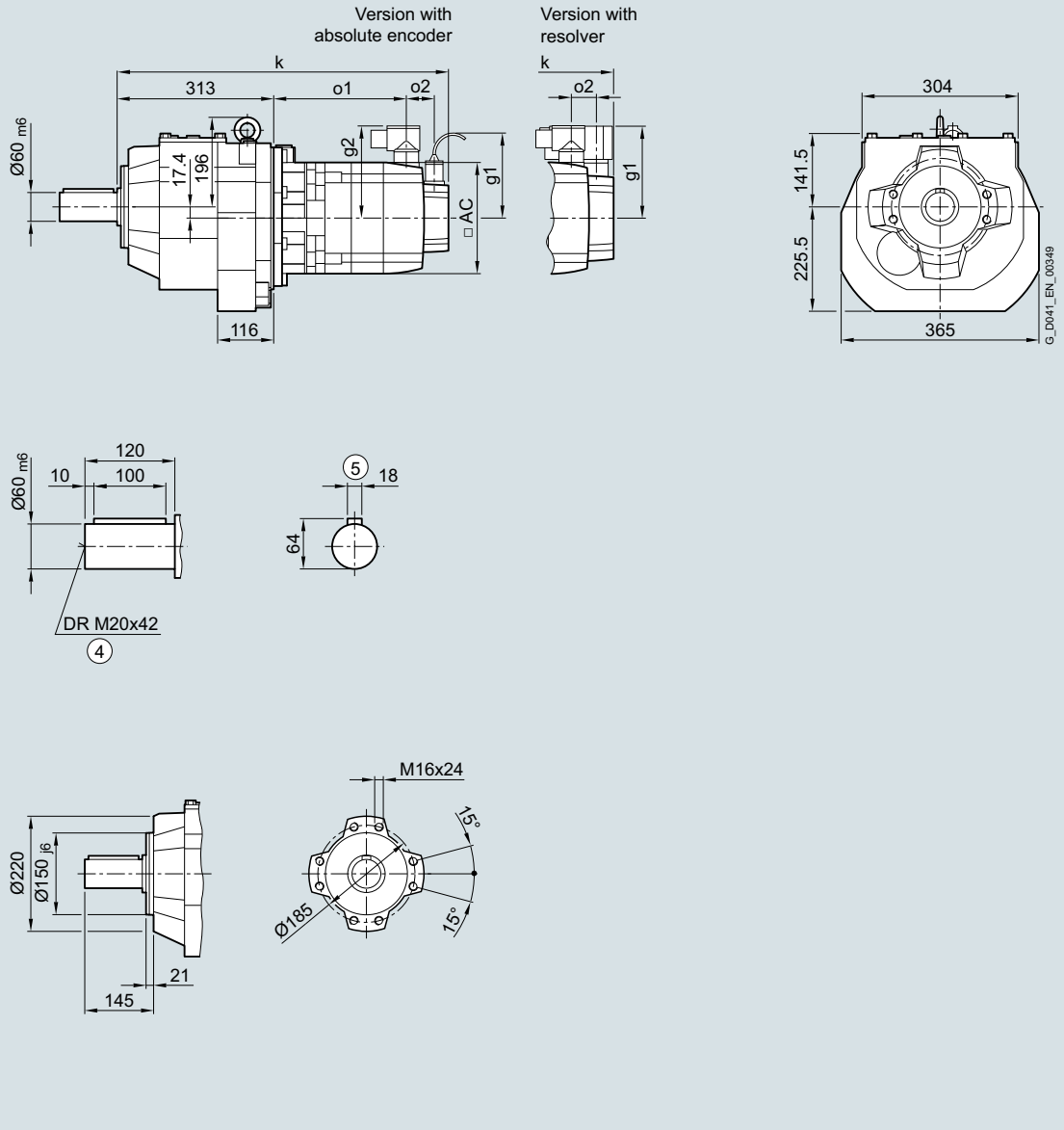

④ DIN 332 ⑤ Feather key/keyway DIN 6885

© Siemens 2019

Servo helical geared motor	Motor shaft height	Motor version	Absolute encoder with brake		with brake for increased energy		without brake					Resolver with brake		with brake for increased energy		without brake					
Type			k	o1	k	o1	k	o1	o2	g1	g2	k	o1	k	o1	k	o1	o2	g1	g2	AC
1FG1...-..C2.-....	36	CT	–	–	–	–	–	–	–	–	–	–	–	–	–	–	–	–	–	–	–
1FG1...-..C3.-....		HD	–	–	–	–	–	–	–	–	–	–	–	–	–	–	–	–	–	–	–
1FG1...-..C4.-....		CT	–	–	–	–	–	–	–	–	–	–	–	–	–	–	–	–	–	–	–
1FG1...-..D0.-....	48	CT	–	–	–	–	–	–	–	–	–	–	–	–	–	–	–	–	–	–	–
1FG1...-..D2.-....		CT	–	–	–	–	–	–	–	–	–	–	–	–	–	–	–	–	–	–	–
1FG1...-..D3.-....		HD	–	–	–	–	–	–	–	–	–	–	–	–	–	–	–	–	–	–	–
1FG1...-..D4.-....		HD	–	–	–	–	–	–	–	–	–	–	–	–	–	–	–	–	–	–	–
1FG1...-..E0.-....	63	CT	–	–	–	–	–	–	–	–	–	–	–	–	–	–	–	–	–	–	–
1FG1...-..E1.-....		HD	–	–	–	–	–	–	–	–	–	–	–	–	–	–	–	–	–	–	–
1FG1...-..E2.-....		CT	–	–	–	–	–	–	–	–	–	–	–	–	–	–	–	–	–	–	–
1FG1...-..E3.-....		CT	–	–	–	–	–	–	–	–	–	–	–	–	–	–	–	–	–	–	–
1FG1...-..E4.-....		HD	–	–	–	–	–	–	–	–	–	–	–	–	–	–	–	–	–	–	–
1FG1...-..F0.-....	80	CT	536	163	547	174	500	126	48	104.5	119	522	164	533	175	485	127	21	118	119	155
1FG1...-..F1.-....		CT	555	182	566	193	519	145				541	183	552	194	504	146				
1FG1...-..F3.-....		CT	574	201	585	212	538	164				560	202	571	213	523	165				
1FG1...-..F4.-....		CT	594	220	605	231	557	183				579	221	590	232	543	184				
1FG1...-..F52-....		HD	622	249	633	260	586	212				608	250	619	261	571	213				
1FG1...-..F62-....		HD	622	249	633	260	586	212				608	250	619	261	571	213				
1FG1...-..F53-....		HD	622	249	633	260	586	212			139	608	250	619	261	571	213			139	
1FG1...-..F63-....		HD	622	249	633	260	586	212				608	250	619	261	571	213				
1FG1...-..G0.-....	100	CT	567	188	594	215	532	153	53	104.5	137	552	190	579	217	517	155	26	136	137	192
1FG1...-..G1.-....		CT	593	214	620	241	558	179			158	578	216	605	243	543	181			158	
1FG1...-..G3.-....		CT	619	240	646	267	584	205				604	242	631	269	569	207				
1FG1...-..G5.-....		CT	671	292	698	319	636	257				656	294	683	321	621	259				

© Siemens 2019

3

Dimensional drawings

Gearbox types *Z129* and *D129*

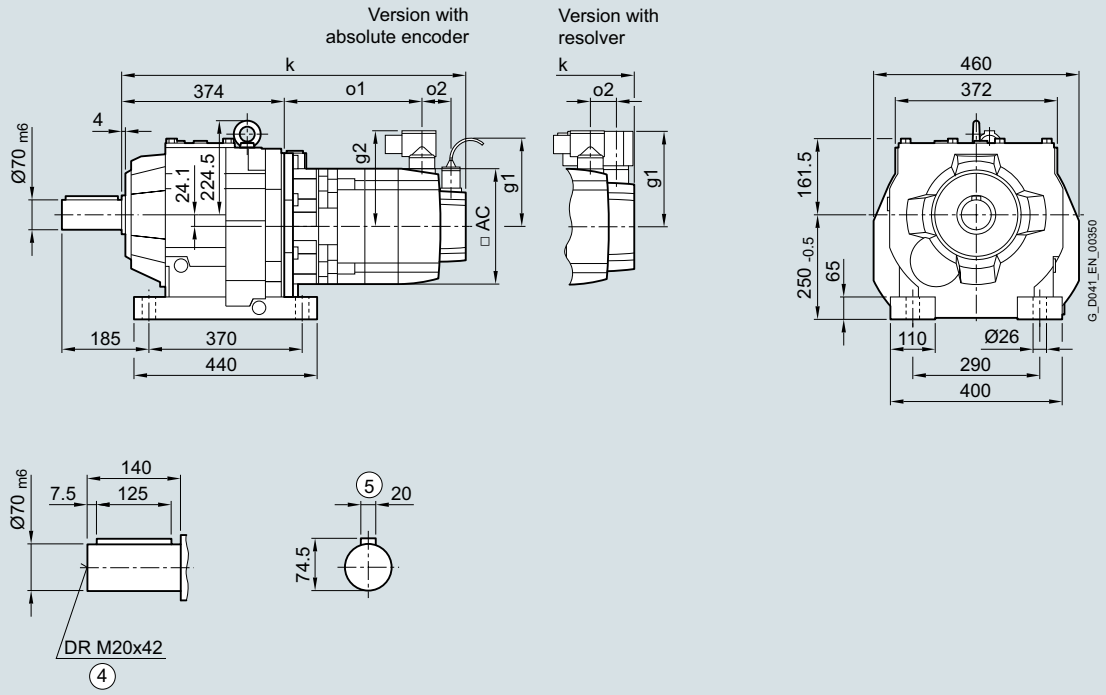

④ DIN 332 ⑤ Feather key/keyway DIN 6885

© Siemens 2019

Servo helical geared motor	Motor shaft height	Motor version	Absolute encoder with brake		with brake for increased energy		without brake					Resolver with brake		with brake for increased energy		without brake					
Type			k	o1	k	o1	k	o1	o2	g1	g2	k	o1	k	o1	k	o1	o2	g1	g2	AC
1FG1...-..C2.-....	36	CT	–	–	–	–	–	–	–	–	–	–	–	–	–	–	–	–	–	–	–
1FG1...-..C3.-....		HD	–	–	–	–	–	–	–	–	–	–	–	–	–	–	–	–	–	–	–
1FG1...-..C4.-....		CT	–	–	–	–	–	–	–	–	–	–	–	–	–	–	–	–	–	–	–
1FG1...-..D0.-....	48	CT	–	–	–	–	–	–	–	–	–	–	–	–	–	–	–	–	–	–	–
1FG1...-..D2.-....		CT	–	–	–	–	–	–	–	–	–	–	–	–	–	–	–	–	–	–	–
1FG1...-..D3.-....		HD	–	–	–	–	–	–	–	–	–	–	–	–	–	–	–	–	–	–	–
1FG1...-..D4.-....		HD	–	–	–	–	–	–	–	–	–	–	–	–	–	–	–	–	–	–	–
1FG1...-..E0.-....	63	CT	–	–	–	–	–	–	–	–	–	–	–	–	–	–	–	–	–	–	–
1FG1...-..E1.-....		HD	–	–	–	–	–	–	–	–	–	–	–	–	–	–	–	–	–	–	–
1FG1...-..E2.-....		CT	–	–	–	–	–	–	–	–	–	–	–	–	–	–	–	–	–	–	–
1FG1...-..E3.-....		CT	–	–	–	–	–	–	–	–	–	–	–	–	–	–	–	–	–	–	–
1FG1...-..E4.-....		HD	–	–	–	–	–	–	–	–	–	–	–	–	–	–	–	–	–	–	–
1FG1...-..F0.-....	80	CT	–	–	–	–	–	–	–	–	–	–	–	–	–	–	–	–	–	–	–
1FG1...-..F1.-....		CT	–	–	–	–	–	–	–	–	–	–	–	–	–	–	–	–	–	–	–
1FG1...-..F3.-....		CT	–	–	–	–	–	–	–	–	–	–	–	–	–	–	–	–	–	–	–
1FG1...-..F4.-....		CT	–	–	–	–	–	–	–	–	–	–	–	–	–	–	–	–	–	–	–
1FG1...-..F52-....		HD	–	–	–	–	–	–	–	–	–	–	–	–	–	–	–	–	–	–	–
1FG1...-..F62-....		HD	–	–	–	–	–	–	–	–	–	–	–	–	–	–	–	–	–	–	–
1FG1...-..F53-....		HD	–	–	–	–	–	–	–	–	–	–	–	–	–	–	–	–	–	–	–
1FG1...-..F63-....		HD	–	–	–	–	–	–	–	–	–	–	–	–	–	–	–	–	–	–	–
1FG1...-..G0.-....	100	CT	617	177	644	204	582	142	53	104.5	137	602	179	629	206	567	144	26	136	137	192
1FG1...-..G1.-....		CT	643	203	670	230	608	168			158	628	205	655	232	593	170			158	
1FG1...-..G3.-....		CT	669	229	696	256	634	194				654	231	681	258	619	196				
1FG1...-..G5.-....		CT	721	281	748	308	686	246				706	283	733	310	671	248				

© Siemens 2019

3

Dimensional drawings

Gearbox types *ZF129* and *DF129*

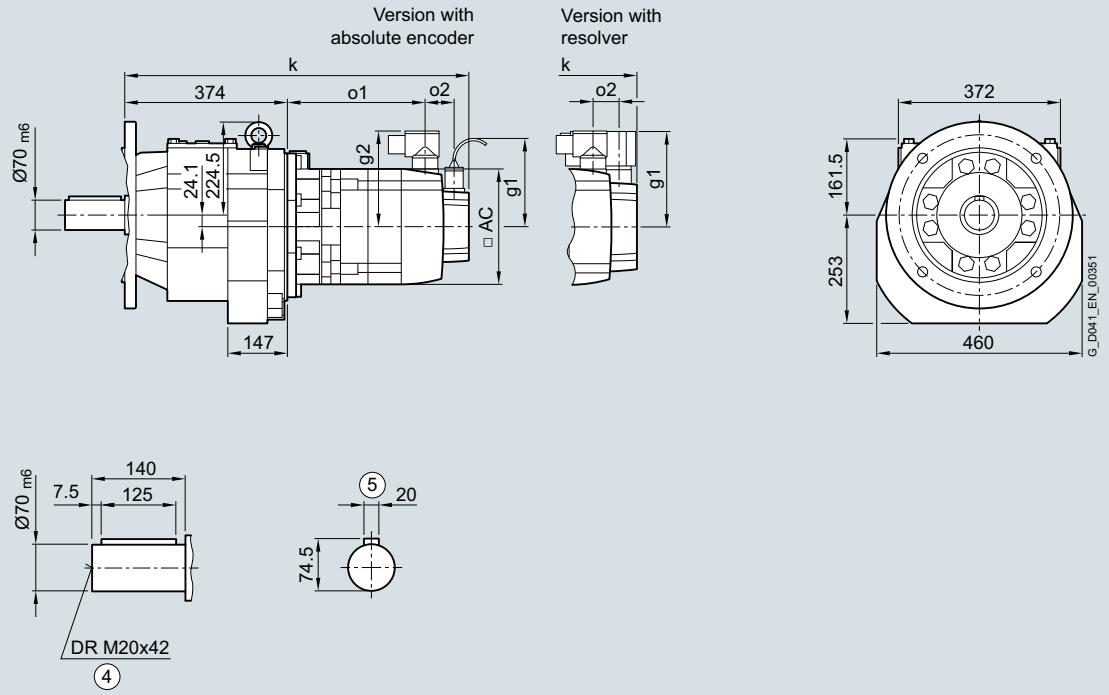

④ DIN 332 ⑤ Feather key/keyway DIN 6885 ⑩ For inner contour and dimensions of the flange design, see page 3/158

© Siemens 2019

Servo helical geared motor	Motor shaft height	Motor version	Absolute encoder with brake		with brake for increased energy		without brake					Resolver with brake		with brake for increased energy		without brake					
Type			k	o1	k	o1	k	o1	o2	g1	g2	k	o1	k	o1	k	o1	o2	g1	g2	AC
1FG1...-..C2.-....	36	CT	–	–	–	–	–	–	–	–	–	–	–	–	–	–	–	–	–	–	–
1FG1...-..C3.-....		HD	–	–	–	–	–	–	–	–	–	–	–	–	–	–	–	–	–	–	–
1FG1...-..C4.-....		CT	–	–	–	–	–	–	–	–	–	–	–	–	–	–	–	–	–	–	–
1FG1...-..D0.-....	48	CT	–	–	–	–	–	–	–	–	–	–	–	–	–	–	–	–	–	–	–
1FG1...-..D2.-....		CT	–	–	–	–	–	–	–	–	–	–	–	–	–	–	–	–	–	–	–
1FG1...-..D3.-....		HD	–	–	–	–	–	–	–	–	–	–	–	–	–	–	–	–	–	–	–
1FG1...-..D4.-....		HD	–	–	–	–	–	–	–	–	–	–	–	–	–	–	–	–	–	–	–
1FG1...-..E0.-....	63	CT	–	–	–	–	–	–	–	–	–	–	–	–	–	–	–	–	–	–	–
1FG1...-..E1.-....		HD	–	–	–	–	–	–	–	–	–	–	–	–	–	–	–	–	–	–	–
1FG1...-..E2.-....		CT	–	–	–	–	–	–	–	–	–	–	–	–	–	–	–	–	–	–	–
1FG1...-..E3.-....		CT	–	–	–	–	–	–	–	–	–	–	–	–	–	–	–	–	–	–	–
1FG1...-..E4.-....		HD	–	–	–	–	–	–	–	–	–	–	–	–	–	–	–	–	–	–	–
1FG1...-..F0.-....	80	CT	–	–	–	–	–	–	–	–	–	–	–	–	–	–	–	–	–	–	–
1FG1...-..F1.-....		CT	–	–	–	–	–	–	–	–	–	–	–	–	–	–	–	–	–	–	–
1FG1...-..F3.-....		CT	–	–	–	–	–	–	–	–	–	–	–	–	–	–	–	–	–	–	–
1FG1...-..F4.-....		CT	–	–	–	–	–	–	–	–	–	–	–	–	–	–	–	–	–	–	–
1FG1...-..F52-....		HD	–	–	–	–	–	–	–	–	–	–	–	–	–	–	–	–	–	–	–
1FG1...-..F62-....		HD	–	–	–	–	–	–	–	–	–	–	–	–	–	–	–	–	–	–	–
1FG1...-..F53-....		HD	–	–	–	–	–	–	–	–	–	–	–	–	–	–	–	–	–	–	–
1FG1...-..F63-....		HD	–	–	–	–	–	–	–	–	–	–	–	–	–	–	–	–	–	–	–
1FG1...-..G0.-....	100	CT	617	177	644	204	582	142	53	104.5	137	602	179	629	206	567	144	26	136	137	192
1FG1...-..G1.-....		CT	643	203	670	230	608	168			158	628	205	655	232	593	170			158	
1FG1...-..G3.-....		CT	669	229	696	256	634	194				654	231	681	258	619	196				
1FG1...-..G5.-....		CT	721	281	748	308	686	246				706	283	733	310	671	248				

© Siemens 2019

3

Dimensional drawings

Gearbox types *ZZ129* and *DZ129*

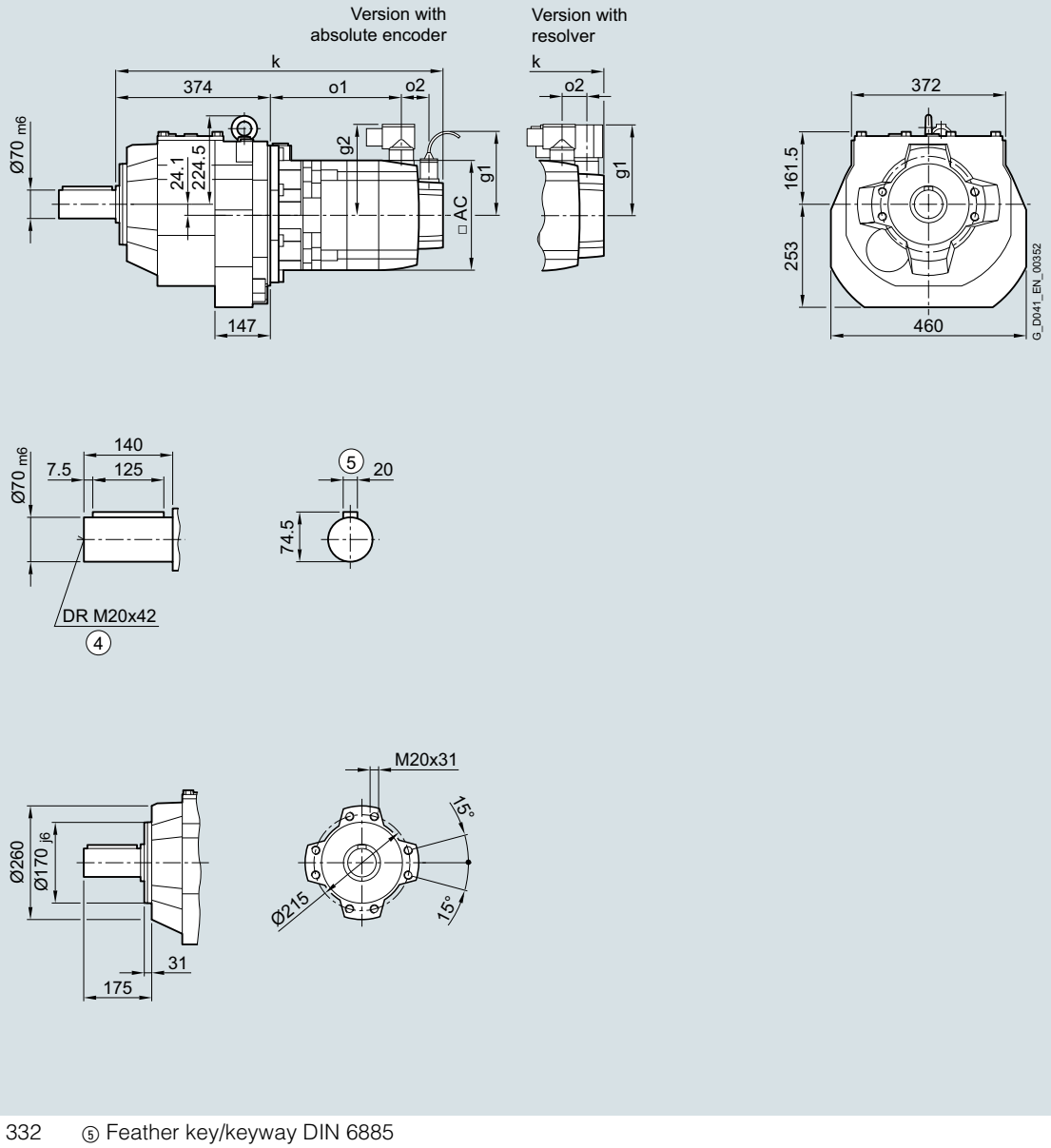

④ DIN 332 ⑤ Feather key/keyway DIN 6885

© Siemens 2019

Servo helical geared motor	Motor shaft height	Motor version	Absolute encoder with brake		with brake for increased energy		without brake					Resolver with brake		with brake for increased energy		without brake					
Type			k	o1	k	o1	k	o1	o2	g1	g2	k	o1	k	o1	k	o1	o2	g1	g2	AC
1FG1...-..C2.-....	36	CT	–	–	–	–	–	–	–	–	–	–	–	–	–	–	–	–	–	–	–
1FG1...-..C3.-....		HD	–	–	–	–	–	–	–	–	–	–	–	–	–	–	–	–	–	–	–
1FG1...-..C4.-....		CT	–	–	–	–	–	–	–	–	–	–	–	–	–	–	–	–	–	–	–
1FG1...-..D0.-....	48	CT	–	–	–	–	–	–	–	–	–	–	–	–	–	–	–	–	–	–	–
1FG1...-..D2.-....		CT	–	–	–	–	–	–	–	–	–	–	–	–	–	–	–	–	–	–	–
1FG1...-..D3.-....		HD	–	–	–	–	–	–	–	–	–	–	–	–	–	–	–	–	–	–	–
1FG1...-..D4.-....		HD	–	–	–	–	–	–	–	–	–	–	–	–	–	–	–	–	–	–	–
1FG1...-..E0.-....	63	CT	–	–	–	–	–	–	–	–	–	–	–	–	–	–	–	–	–	–	–
1FG1...-..E1.-....		HD	–	–	–	–	–	–	–	–	–	–	–	–	–	–	–	–	–	–	–
1FG1...-..E2.-....		CT	–	–	–	–	–	–	–	–	–	–	–	–	–	–	–	–	–	–	–
1FG1...-..E3.-....		CT	–	–	–	–	–	–	–	–	–	–	–	–	–	–	–	–	–	–	–
1FG1...-..E4.-....		HD	–	–	–	–	–	–	–	–	–	–	–	–	–	–	–	–	–	–	–
1FG1...-..F0.-....	80	CT	–	–	–	–	–	–	–	–	–	–	–	–	–	–	–	–	–	–	–
1FG1...-..F1.-....		CT	–	–	–	–	–	–	–	–	–	–	–	–	–	–	–	–	–	–	–
1FG1...-..F3.-....		CT	–	–	–	–	–	–	–	–	–	–	–	–	–	–	–	–	–	–	–
1FG1...-..F4.-....		CT	–	–	–	–	–	–	–	–	–	–	–	–	–	–	–	–	–	–	–
1FG1...-..F52-....		HD	–	–	–	–	–	–	–	–	–	–	–	–	–	–	–	–	–	–	–
1FG1...-..F62-....		HD	–	–	–	–	–	–	–	–	–	–	–	–	–	–	–	–	–	–	–
1FG1...-..F53-....		HD	–	–	–	–	–	–	–	–	–	–	–	–	–	–	–	–	–	–	–
1FG1...-..F63-....		HD	–	–	–	–	–	–	–	–	–	–	–	–	–	–	–	–	–	–	–
1FG1...-..G0.-....	100	CT	617	177	644	204	582	142	53	104.5	137	602	179	629	206	567	144	26	136	137	192
1FG1...-..G1.-....		CT	643	203	670	230	608	168			158	628	205	655	232	593	170			158	
1FG1...-..G3.-....		CT	669	229	696	256	634	194				654	231	681	258	619	196				
1FG1...-..G5.-....		CT	721	281	748	308	686	246				706	283	733	310	671	248				

© Siemens 2019

Inner contour and dimensions of the flange design

Dimensional drawings

Notes regarding the design of the customer's interface.

Gearbox types *ZF19* to *ZF89*, *DF19* to *DF89* and *ZB19* to *ZB89*, *DB19* to *DB89*

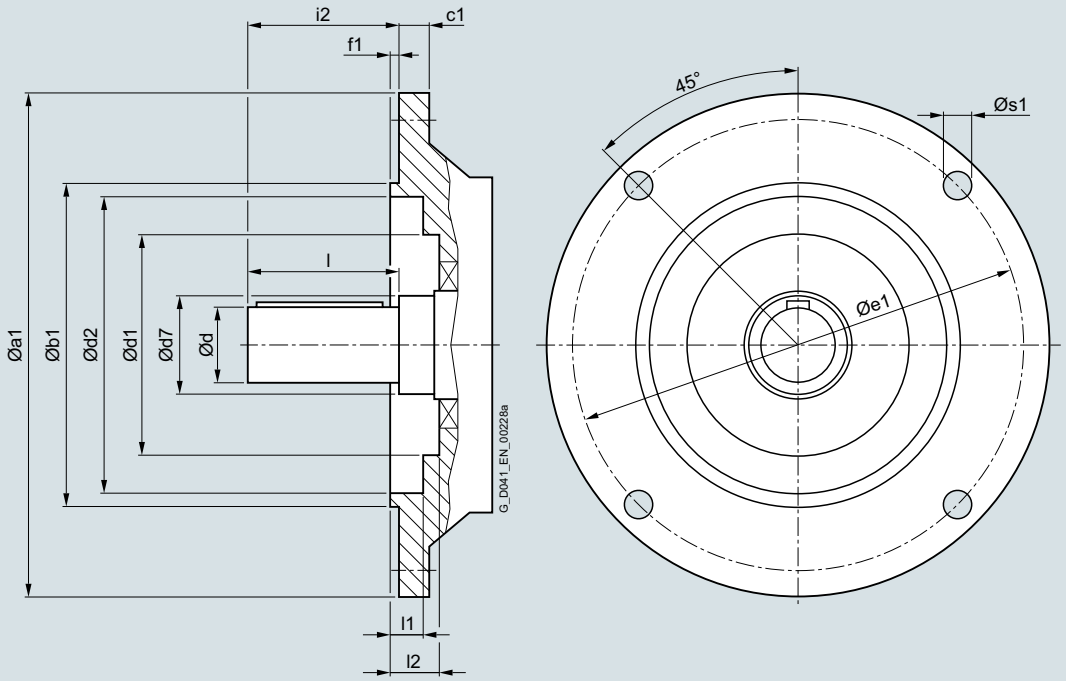

Gearbox size	a1	b1	c1	d	d7	d1	d2	e1	f1	i2	l	l1	l2	s1
Gearbox types *ZB* and *DB*														
19	120	80 $_{j6}$	8	16 $_{k6}$	25	48.0	72.0	100	3.0	28	28	1.0	6.0	6.6
	120	80 $_{j6}$	8	16 $_{k6}$	25	48.0	72.0	100	3.0	40	40	1.0	6.0	6.6
	120	80 $_{j6}$	8	20 $_{k6}$	25	48.0	72.0	100	3.0	40	40	1.0	6.0	6.6
29	120	80 $_{j6}$	8	25 $_{k6}$	30	56.0	72.0	100	3.0	50	50	2.0	8.0	6.6
39	120	80 $_{j6}$	8	25 $_{k6}$	35	66.0	72.0	100	3.0	50	50	4.0	9.0	6.6
	120	80 $_{j6}$	8	30 $_{k6}$	35	66.0	72.0	100	3.0	60	60	4.0	9.0	6.6
49	140	95 $_{j6}$	10	30 $_{k6}$	35	79.0	84.5	115	3.0	60	60	4.0	9.5	9.0
59	160	110 $_{j6}$	10	30 $_{k6}$	40	88.0	94.5	130	3.5	60	60	4.5	11.0	9.0
	160	110 $_{j6}$	10	35 $_{k6}$	40	88.0	94.5	130	3.5	70	70	4.5	11.0	9.0
	160	110 $_{j6}$	10	40 $_{k6}$	45	88.0	94.5	130	3.5	80	80	4.5	11.0	9.0
69	200	130 $_{j6}$	12	35 $_{k6}$	47	105.0	115.0	165	3.5	70	70	4.5	11.0	11.0
79	250	180 $_{j6}$	15	35 $_{k6}$	52	114.5	168.0	215	4.0	70	70	2.5	8.0	13.5
	250	180 $_{j6}$	15	40 $_{k6}$	52	114.5	168.0	215	4.0	80	80	2.5	8.0	13.5
	250	180 $_{j6}$	15	50 $_{k6}$	52	114.5	168.0	215	4.0	100	100	2.5	8.0	13.5
89	300	230 $_{j6}$	16	50 $_{k6}$	62	143.0	218.0	265	4.0	100	100	1.5	9.0	13.5
	300	230 $_{j6}$	16	60 $_{k6}$	62	143.0	218.0	265	4.0	120	120	1.5	9.0	13.5

© Siemens 2019

Gearbox size	a1	b1	c1	d	d7	d1	d2	e1	f1	i2	l	l1	l2	s1
Gearbox types *ZF* and *DF*														
19	120	80 j6	8	16 k6	25	48.0	72.0	100	3.0	28	28	1.0	6.0	6.6
	120	80 j6	8	16 k6	25	48.0	72.0	100	3.0	40	40	1.0	6.0	6.6
	120	80 j6	8	20 k6	25	48.0	72.0	100	3.0	40	40	1.0	6.0	6.6
	140	95 j6	9	20 k6	25	48.0	87.0	115	3.0	40	40	1.0	6.0	9.0
	160	110 j6	9	20 k6	25	48.0	102.0	130	3.5	40	40	1.0	6.5	9.0
29	120	80 j6	8	25 k6	30	56.0	72.0	100	3.0	50	50	2.0	8.0	6.6
	140	95 j6	9	25 k6	30	56.0	87.0	115	3.5	50	50	2.0	7.0	9.0
	160	110 j6	9	25 k6	30	56.0	102.0	130	3.5	50	50	2.0	7.5	9.0
39	120	80 j6	8	25 k6	35	69.0	72.0	100	3.0	50	50	4.0	9.0	6.6
	120	80 j6	8	30 k6	35	69.0	72.0	100	3.0	60	60	4.0	9.0	6.6
	160	110 j6	10	25 k6	35	66.5	102.0	130	3.5	50	50	1.5	6.5	9.0
	160	110 j6	10	30 k6	35	66.5	102.0	130	3.5	60	60	1.5	6.5	9.0
	200	130 j6	12	25 k6	35	66.5	120.0	165	3.5	50	50	1.5	6.5	11.0
	200	130 j6	12	30 k6	35	66.5	120.0	165	3.5	60	60	1.5	6.5	11.0
49	140	95 j6	10	30 k6	35	79.0	84.5	115	3.0	60	60	4.0	9.5	9.0
	160	110 j6	10	30 k6	35	79.0	94.5	130	3.5	60	60	5.5	11.0	9.0
	200	130 j6	12	30 k6	35	79.0	121.0	165	3.5	60	60	4.5	10.0	11.0
59	160	110 j6	10	30 k6	40	88.0	94.5	130	3.5	60	60	4.5	11.0	9.0
	160	110 j6	10	35 k6	40	88.0	94.5	130	3.5	70	70	4.5	11.0	9.0
	160	110 j6	10	40 k6	45	88.0	94.5	130	3.5	80	80	4.5	11.0	9.0
	200	130 j6	12	30 k6	40	88.0	115.0	165	3.5	60	60	4.5	9.0	11.0
	200	130 j6	12	35 k6	40	88.0	115.0	165	3.5	70	70	4.5	9.0	11.0
	200	130 j6	12	40 k6	45	88.0	115.0	165	3.5	80	80	4.5	9.0	11.0
	250	180 j6	15	30 k6	40	88.0	168.0	215	4.0	60	60	4.0	10.5	13.5
	250	180 j6	15	35 k6	40	88.0	168.0	215	4.0	70	70	4.0	10.5	13.5
	250	180 j6	15	40 k6	45	88.0	168.0	215	4.0	80	80	4.0	10.5	13.5
69	200	130 j6	12	35 k6	47	105.0	115.0	165	3.5	70	70	4.5	11.0	11.0
	250	180 j6	15	35 k6	47	105.0	168.0	215	4.0	70	70	4.0	10.5	13.5
79	250	180 j6	15	35 k6	52	113.0	168.0	215	4.0	70	70	0.5	8.0	13.5
	250	180 j6	15	40 k6	52	113.0	168.0	215	4.0	80	80	0.5	8.0	13.5
	250	180 j6	15	50 k6	52	113.0	168.0	215	4.0	100	100	0.5	8.0	13.5
	300	230 j6	16	35 k6	52	113.0	217.0	265	4.0	70	70	0.5	8.0	13.5
	300	230 j6	16	40 k6	52	113.0	217.0	265	4.0	80	80	0.5	8.0	13.5
	300	230 j6	16	50 k6	52	113.0	217.0	265	4.0	100	100	0.5	8.0	13.5
89	300	230 j6	16	50 k6	62	143.0	218.0	265	4.0	100	100	1.5	9.0	13.5
	300	230 j6	16	60 k6	62	143.0	218.0	265	4.0	120	120	1.5	9.0	13.5
	350	250 j6	18	50 k6	62	143.0	238.0	300	5.0	100	100	2.5	10.0	17.5
	350	250 j6	18	60 k6	62	143.0	238.0	300	5.0	120	120	2.5	10.0	17.5
109	350	250 h6	18	60 k6	65	157.0	236.0	300	5.0	120	120	2.0	12.0	17.5
	450	350 h6	22	60 k6	65	168.0	335.0	400	5.0	120	120	0.0	12.0	17.5
129	350	250 h6	20	70 k6	75	180.0	236.0	300	5.0	140	140	7.5	20.0	17.5
	450	350 h6	22	70 k6	75	180.0	330.0	400	5.0	140	140	7.5	20.0	17.5

© Siemens 2019

Notes

© Siemens 2019

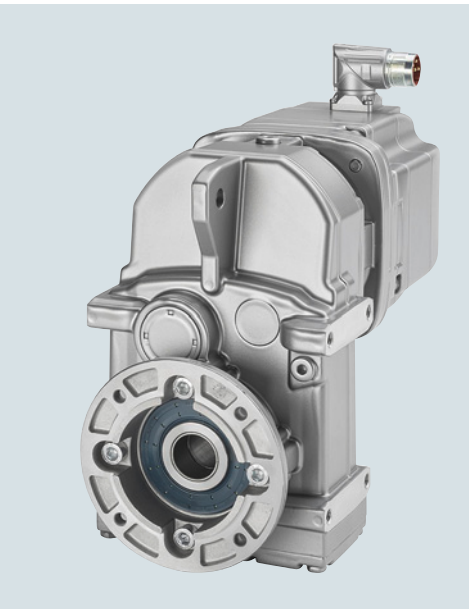

4/2	**Orientation**
4/3	**Selecting servo geared motors**
4/3	Gearbox size ***29***
4/3	• 2-stage – 1FG1301 – ***FZ29***
4/9	• 3-stage – 1FG1401 – ***FD29***
4/13	Gearbox size ***39***
4/13	• 2-stage – 1FG1302 – ***FZ39***
4/19	• 3-stage – 1FG1402 – ***FD39***
4/24	Gearbox size ***49***
4/24	• 2-stage – 1FG1303 – ***FZ49***
4/29	• 3-stage – 1FG1403 – ***FD49***
4/34	Gearbox size ***69***
4/34	• 2-stage – 1FG1304 – ***FZ69***
4/39	• 3-stage – 1FG1404 – ***FD69***
4/44	Gearbox size ***79***
4/44	• 2-stage – 1FG1305 – ***FZ79***
4/48	• 3-stage – 1FG1405 – ***FD79***
4/52	Gearbox size ***89***
4/52	• 2-stage – 1FG1306 – ***FZ89***
4/57	• 3-stage – 1FG1406 – ***FD89***
4/61	Gearbox size ***109***
4/61	• 2-stage – 1FG1307 – ***FZ109***
4/66	• 3-stage – 1FG1407 – ***FD109***
4/70	Gearbox size ***129***
4/70	• 2-stage – 1FG1308 – ***FZ129***
4/74	• 3-stage – 1FG1408 – ***FD129***
4/78	**Dimensions**
4/78	Gearbox size ***29***
4/78	Shaft-mounted design 2-stage and 3-stage – ***FZAD29*** and ***FDAD29***
4/80	Housing flange design 2-stage and 3-stage – ***FZ.Z.29*** and ***FD.Z.29***
4/82	Flange-mounted design 2-stage and 3-stage – ***FZ.F.29*** and ***FD.F.29***
4/84	Foot-mounted design 2-stage and 3-stage – ***FZ..29*** and ***FD..29***
4/86	Gearbox size ***39***
4/86	Shaft-mounted design 2-stage and 3-stage – ***FZAD39*** and ***FDAD39***
4/88	Housing flange design 2-stage and 3-stage – ***FZ.Z.39*** and ***FD.Z.39***
4/90	Flange-mounted design 2-stage and 3-stage – ***FZ.F.39*** and ***FD.F.39***
4/92	Foot-mounted design 2-stage and 3-stage – ***FZ..39*** and ***FD..39***
4/94	Gearbox size ***49***
4/94	Shaft-mounted design 2-stage and 3-stage – ***FZAD49*** and ***FDAD49***
4/96	Housing flange design 2-stage and 3-stage – ***FZ.Z.49*** and ***FD.Z.49***
4/98	Flange-mounted design 2-stage and 3-stage – ***FZ.F.49*** and ***FD.F.49***
4/100	Foot-mounted design 2-stage and 3-stage – ***FZ..49*** and ***FD..49***
4/102	Gearbox size ***69***
4/102	Shaft-mounted design 2-stage and 3-stage – ***FZAD69*** and ***FDAD69***
4/104	Housing flange design 2-stage and 3-stage – ***FZ.Z.69*** and ***FD.Z.69***
4/106	Flange-mounted design 2-stage and 3-stage – ***FZ.F.69*** and ***FD.F.69***
4/108	Foot-mounted design 2-stage and 3-stage – ***FZ..69*** and ***FD..69***
4/110	Gearbox size ***79***
4/110	Shaft-mounted design 2-stage and 3-stage – ***FZAD79*** and ***FDAD79***
4/112	Housing flange design 2-stage and 3-stage – ***FZ.Z.79*** and ***FD.Z.79***
4/114	Flange-mounted design 2-stage and 3-stage – ***FZ.F.79*** and ***FD.F.79***
4/116	Foot-mounted design 2-stage and 3-stage – ***FZ..79*** and ***FD..79***
4/118	Gearbox size ***89***
4/118	Shaft-mounted design 2-stage and 3-stage – ***FZAD89*** and ***FDAD89***
4/120	Housing flange design 2-stage and 3-stage – ***FZ.Z.89*** and ***FD.Z.89***
4/122	Flange-mounted design 2-stage and 3-stage – ***FZ.F.89*** and ***FD.F.89***
4/124	Foot-mounted design 2-stage and 3-stage – ***FZ..89*** and ***FD..89***
4/126	Gearbox size ***109***
4/126	Shaft-mounted design 2-stage and 3-stage – ***FZAD109*** and ***FDAD109***
4/128	Housing flange design 2-stage and 3-stage – ***FZ.Z.109*** and ***FD.Z.109***
4/130	Flange-mounted design 2-stage and 3-stage – ***FZ.F.109*** and ***FD.F.109***
4/132	Foot-mounted design 2-stage and 3-stage – ***FZ..109*** and ***FD..109***
4/134	Gearbox size ***129***
4/134	Shaft-mounted design 2-stage and 3-stage – ***FZAD129*** and ***FDAD129***
4/136	Housing flange design 2-stage and 3-stage – ***FZ.Z.129*** and ***FD.Z.129***
4/138	Flange-mounted design 2-stage and 3-stage – ***FZ.F.129*** and ***FD.F.129***
4/140	Foot-mounted design 2-stage and 3-stage – ***FZ..129*** and ***FD..129***
4/142	SIMOLOC assembly system for shaft-mounted design 2-stage and 3-stage
4/144	Protection cover for hollow shaft
4/144	Protection cover for hollow shaft and hollow shaft with shrink disk
4/145	Protection cover for hollow shaft with SIMOLOC assembly system
4/146	Inner contour and dimensions of the flange-mounted design

© Siemens 2019

Overview

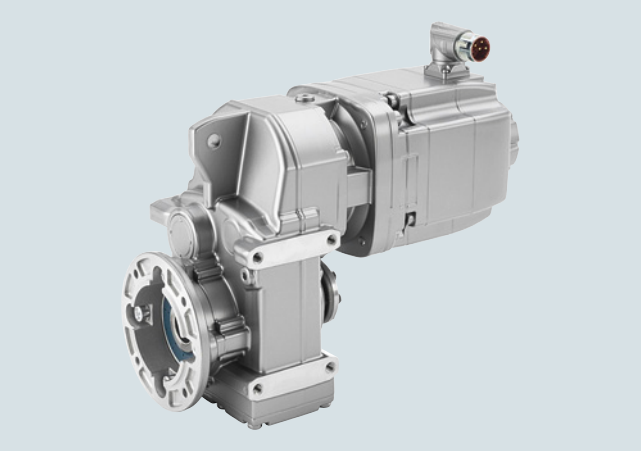

Servo parallel shaft geared motors SIMOTICS S-1FG1 are available in the following versions for mounting in any position:

- 2 or 3 stages *FZ*/*FD*
- Shaft-mounted design with torque arm *FZAD*/*FDAD*
- Flange-mounted design *FZF*/*FDF*
- Design with integrated housing flange *FZZ*/*FDZ*
- Foot-mounted design *FZ*/*FD*
- Hollow-shaft design with feather keyway *FZA*/*FDA*
- Hollow-shaft design with splined shaft *FZAT*/*FDAT*
- Hollow-shaft design with shrink disk *FZAS*/*FDAS*
- Hollow-shaft design with SIMOLOC assembly system *FZADR*/*FDADR*
- Solid shaft design with feather keyway *FZ*/*FD*

© Siemens 2019

Technical specifications

Gearbox type *FZ29*

Servo geared motor Type	i	R_{ex}	M_{2rated} Nm	M_{2max} Nm	$M_{2Em.Off}$ Nm	n_{2max} rpm	n_{1max} rpm	φ [1] '	F_{R2} N	F_{R2max} N	c_T Nm/ '	J_G 10^{-4} kgm^2
1FG1301-.....-..C2	56.73	851/15	150	162	255	79	4500	7.62	5220	5220	21.7	0.04
1FG1301-.....-..B2	50.32	1258/25	150	160	255	89	4500	7.95	5220	5220	21.7	0.05
1FG1301-.....-..A2	43.66	2183/50	150	159	255	103	4500	8.05	5220	5220	21.7	0.06
1FG1301-.....-..X1	39.69	2183/55	150	159	255	113	4500	8.05	5220	5170	21.7	0.08
1FG1301-.....-..W1	34.04	851/25	150	159	255	132	4500	8.12	4920	4850	21.7	0.1
1FG1301-.....-..V1	30.95	1702/55	150	159	255	145	4500	8.12	4730	4650	21.7	0.12
1FG1301-.....-..U1	27.13	407/15	150	159	255	166	4500	8.24	4470	4400	21.7	0.14
1FG1301-.....-..T1	24.22	1332/55	150	159	255	186	4500	8.29	4260	4180	21.7	0.17
1FG1301-.....-..S1	21.58	259/12	150	159	255	209	4500	8.38	4050	3980	21.6	0.2
1FG1301-.....-..R1	19.92	259/13	150	159	255	226	4500	8.38	3910	3840	21.7	0.24
1FG1301-.....-..Q1	17.44	1221/70	150	159	255	258	4500	8.56	3690	3610	21.7	0.28
1FG1301-.....-..P1	15.29	1147/75	150	158	255	288	4411	8.77	3480	3410	21.7	0.3
1FG1301-.....-..N1	13.88	111/8	150	153	255	313	4350	8.88	3320	3300	21.6	0.38
1FG1301-.....-..M1	13.06	222/17	150	150	255	333	4350	8.88	3230	3230	21.6	0.44
1FG1301-.....-..L1	11.51	518/45	143	143	240	378	4350	8.63	3110	3110	21.6	0.55
1FG1301-.....-..K1	9.99	999/100	136	136	230	435	4350	8.75	2970	2970	21.5	0.74
1FG1301-.....-..J1	9.69	2664/275	143	143	235	449	4350	13.80	2670	2670	16.9	0.27
1FG1301-.....-..H1	8.63	259/30	130	130	220	504	4350	14.02	2570	2570	16.8	0.33
1FG1301-.....-..G1	7.97	518/65	120	120	200	546	4350	14.01	2510	2510	16.9	0.39
1FG1301-.....-..F1	6.98	1221/175	123	123	205	623	4350	14.49	2440	2440	16.8	0.48
1FG1301-.....-..E1	6.12	2294/375	114	114	193	711	4350	15.03	2370	2370	16.7	0.53
1FG1301-.....-..D1	5.55	111/20	108	108	183	784	4350	15.32	2320	2320	16.6	0.7
1FG1301-.....-..C1	5.22	444/85	106	106	180	833	4350	15.32	2270	2270	16.7	0.8
1FG1301-.....-..B1	4.6	1036/225	97	97	164	946	4350	15.30	2220	2220	16.5	0.96
1FG1301-.....-..A1	4	999/250	91	91	154	1088	4350	14.98	2130	2130	16.3	1.3

Selection and ordering data

Shaft design, encoder system, mounting type and special designs

Gearbox type *FZ29*

| | | |

© Siemens 2019

Gearbox size 29, 2-stage – 1FG1301

Selection and ordering data (continued)

For line voltage 380 ... 480 V 3 AC (DC link voltage 510 ... 720 V DC) **– Gearbox type** ***FZ29***

Geared motor torque at 1450 rpm
Note: All values in **bold** print are maximum gearbox values.
M_{2dyn}
Nm

1	2	3	4	5	6	7	8	9	10	11	12	13	14	15	16	17	18	19	20	21	22	Article No.
Max. output speed n_{2max} = **79 rpm**, Transmission ratio i = **56.73**																						
162	**162**	**162**	**162**	**162**	**162**	–	–	–	–	–	–	–	–	–	–	–	–	–	–	–	–	1FG1301- . . ■ ■ 6 - ■ . C2 -Z
–	–	–	–	–	**162**	**162**	–	–	–	–	–	–	–	–	–	–	–	–	–	–	–	1FG1301- . . ■ ■ 4 - ■ . C2 -Z
–	–	–	–	**162**	–	**162**	–	–	–	–	–	–	–	–	–	–	–	–	–	–	–	1FG1301- . . ■ ■ 3 - ■ . C2 -Z
–	–	–	–	**162**	–	–	–	–	–	–	–	–	–	–	–	–	–	–	–	–	–	1FG1301- . . ■ ■ 2 - ■ . C2 -Z
Max. output speed n_{2max} = **89 rpm**, Transmission ratio i = **50.32**																						
160	**160**	**160**	**160**	**160**	**160**	–	–	–	–	–	–	–	–	–	–	–	–	–	–	–	–	1FG1301- . . ■ ■ 6 - ■ . B2 -Z
–	–	–	–	–	**160**	**160**	**160**	**160**	**160**	**160**	**160**	–	–	–	–	–	–	–	–	–	–	1FG1301- . . ■ ■ 4 - ■ . B2 -Z
–	–	–	–	**160**	–	**160**	**160**	**160**	**160**	**160**	**160**	–	–	–	–	–	–	–	–	–	–	1FG1301- . . ■ ■ 3 - ■ . B2 -Z
–	–	–	–	**160**	–	–	**160**	–	**160**	**160**	**160**	–	–	–	–	–	–	–	–	–	–	1FG1301- . . ■ ■ 2 - ■ . B2 -Z
Max. output speed n_{2max} = **103 rpm**, Transmission ratio i = **43.66**																						
159	**159**	**159**	**159**	**159**	**159**	–	–	–	–	–	–	–	–	–	–	–	–	–	–	–	–	1FG1301- . . ■ ■ 6 - ■ . A2 -Z
–	–	–	–	–	**159**	**159**	**159**	**159**	**159**	**159**	**159**	–	–	–	–	–	–	–	–	–	–	1FG1301- . . ■ ■ 4 - ■ . A2 -Z
–	–	–	–	**159**	–	**159**	**159**	**159**	**159**	**159**	**159**	–	–	–	–	–	–	–	–	–	–	1FG1301- . . ■ ■ 3 - ■ . A2 -Z
–	–	–	–	**159**	–	–	**159**	–	**159**	**159**	**159**	–	–	–	–	–	–	–	–	–	–	1FG1301- . . ■ ■ 2 - ■ . A2 -Z
Max. output speed n_{2max} = **113 rpm**, Transmission ratio i = **39.69**																						
159	158	**159**	**159**	**159**	**159**	–	–	–	–	–	–	–	–	–	–	–	–	–	–	–	–	1FG1301- . . ■ ■ 6 - ■ . X1 -Z
–	–	–	–	–	**159**	**159**	**159**	**159**	**159**	**159**	**159**	–	–	–	–	–	–	–	–	–	–	1FG1301- . . ■ ■ 4 - ■ . X1 -Z
–	–	–	–	**159**	–	**159**	**159**	**159**	**159**	**159**	**159**	–	–	–	–	–	–	–	–	–	–	1FG1301- . . ■ ■ 3 - ■ . X1 -Z
–	–	–	–	**159**	–	–	**159**	–	**159**	**159**	**159**	–	–	–	–	–	–	–	–	–	–	1FG1301- . . ■ ■ 2 - ■ . X1 -Z
Max. output speed n_{2max} = **132 rpm**, Transmission ratio i = **34.04**																						
141	135	**159**	**159**	**159**	**159**	–	–	–	–	–	–	–	–	–	–	–	–	–	–	–	–	1FG1301- . . ■ ■ 6 - ■ . W1 -Z
–	–	–	–	–	**159**	**159**	**159**	**159**	**159**	**159**	**159**	–	–	–	–	–	–	–	–	–	–	1FG1301- . . ■ ■ 4 - ■ . W1 -Z
–	–	–	–	**159**	–	**159**	**159**	**159**	**159**	**159**	**159**	–	–	–	–	–	–	–	–	–	–	1FG1301- . . ■ ■ 3 - ■ . W1 -Z
–	–	–	–	**159**	–	–	**159**	–	**159**	**159**	**159**	–	–	–	–	–	–	–	–	–	–	1FG1301- . . ■ ■ 2 - ■ . W1 -Z
Max. output speed n_{2max} = **145 rpm**, Transmission ratio i = **30.95**																						
129	123	**159**	146	**159**	**159**	–	–	–	–	–	–	–	–	–	–	–	–	–	–	–	–	1FG1301- . . ■ ■ 6 - ■ . V1 -Z
–	–	–	–	–	**159**	**159**	**159**	**159**	**159**	**159**	**159**	–	–	–	–	–	–	–	–	–	–	1FG1301- . . ■ ■ 4 - ■ . V1 -Z
–	–	–	–	**159**	–	**159**	**159**	**159**	**159**	**159**	**159**	–	–	–	–	–	–	–	–	–	–	1FG1301- . . ■ ■ 3 - ■ . V1 -Z
–	–	–	–	**159**	–	–	**159**	–	**159**	**159**	**159**	–	–	–	–	–	–	–	–	–	–	1FG1301- . . ■ ■ 2 - ■ . V1 -Z
Max. output speed n_{2max} = **166 rpm**, Transmission ratio i = **27.13**																						
113	108	**159**	128	**159**	**159**	–	–	–	–	–	–	–	–	–	–	–	–	–	–	–	–	1FG1301- . . ■ ■ 6 - ■ . U1 -Z
–	–	–	–	–	**159**	**159**	**159**	**159**	**159**	**159**	**159**	–	–	–	–	–	–	–	–	–	–	1FG1301- . . ■ ■ 4 - ■ . U1 -Z
–	–	–	–	**159**	–	**159**	**159**	**159**	**159**	**159**	**159**	–	–	–	–	–	–	–	–	–	–	1FG1301- . . ■ ■ 3 - ■ . U1 -Z
–	–	–	–	**159**	–	–	**159**	–	**159**	**159**	**159**	–	–	–	–	–	–	–	–	–	–	1FG1301- . . ■ ■ 2 - ■ . U1 -Z

Motor shaft height:

1	2	3	4	5	6	7	8	9	10	11	12	13	14	15	16	17	18	19	20	21	22	
36																						C
			48																			D
						63																E
												80										F
																		100				G

Motor length/motor version (**CT** = Compact. **HD** = High Dynamic)**:**

1	2	3	4	5	6	7	8	9	10	11	12	13	14	15	16	17	18	19	20	21	22		
			0/CT				**0/CT**					**0/CT**						**0/CT**				0	2
								1/CT									**1/CT**					1	2
							1/HD															1	4
2/CT				**2/CT**				**2/CT**														2	2
									3/CT				**3/CT**					**3/CT**				3	2
	3/HD				**3/HD**																	3	4
		4/CT												**4/CT**								4	2
						4/HD					**4/HD**											4	4
																			5/CT			5	2
															5/HD							5	4
																6/HD						6	4

Selection of shaft design, encoder system, mounting type and special designs on page 4/3.

1FG1301- ■ ■ . . . . - . ■ . . -Z

© Siemens 2019

For line voltage 380 ... 480 V 3 AC (DC link voltage 510 ... 720 V DC) **– Gearbox type** ***FZ29***

Geared motor torque at 1450 rpm
Note: All values in **bold** print are maximum gearbox values.
M_{2dyn}
Nm

Article No.
Servo parallel shaft geared motors SIMOTICS S-1FG1

Max. output speed n_{2max} = **186 rpm**, Transmission ratio i = **24.22**																						
101	96	146	114	**159**	**159**	–	–	–	–	–	–	–	–	–	–	–	–	–	–	–	–	1FG1301- . . ■ ■ **6** - ■ . **T1** -Z
–	–	–	–	–	**159**	**159**	**159**	**159**	**159**	**159**	**159**	–	–	–	–	–	–	–	–	–	–	1FG1301- . . ■ ■ **4** - ■ . **T1** -Z
–	–	–	–	**159**	–	**159**	**159**	**159**	**159**	**159**	**159**	–	–	–	–	–	–	–	–	–	–	1FG1301- . . ■ ■ **3** - ■ . **T1** -Z
–	–	–	–	**159**	–	–	**159**	–	**159**	**159**	**159**	–	–	–	–	–	–	–	–	–	–	1FG1301- . . ■ ■ **2** - ■ . **T1** -Z
Max. output speed n_{2max} = **209 rpm**, Transmission ratio i = **21.58**																						
90	86	130	102	**159**	**159**	–	–	–	–	–	–	–	–	–	–	–	–	–	–	–	–	1FG1301- . . ■ ■ **6** - ■ . **S1** -Z
–	–	–	–	–	**159**	**159**	**159**	**159**	**159**	**159**	**159**	–	–	–	–	–	–	–	–	–	–	1FG1301- . . ■ ■ **4** - ■ . **S1** -Z
–	–	–	–	**159**	–	**159**	**159**	**159**	**159**	**159**	**159**	–	–	–	–	–	–	–	–	–	–	1FG1301- . . ■ ■ **3** - ■ . **S1** -Z
–	–	–	–	**159**	–	–	**159**	–	**159**	**159**	**159**	–	–	–	–	–	–	–	–	–	–	1FG1301- . . ■ ■ **2** - ■ . **S1** -Z
Max. output speed n_{2max} = **226 rpm**, Transmission ratio i = **19.92**																						
83	80	121	95	**159**	**159**	–	–	–	–	–	–	–	–	–	–	–	–	–	–	–	–	1FG1301- . . ■ ■ **6** - ■ . **R1** -Z
–	–	–	–	–	**159**	**159**	**159**	**159**	**159**	**159**	**159**	–	–	–	–	–	–	–	–	–	–	1FG1301- . . ■ ■ **4** - ■ . **R1** -Z
–	–	–	–	**159**	–	**159**	**159**	**159**	**159**	**159**	**159**	–	–	–	–	–	–	–	–	–	–	1FG1301- . . ■ ■ **3** - ■ . **R1** -Z
–	–	–	–	**159**	–	–	**159**	–	**159**	**159**	**159**	–	–	–	–	–	–	–	–	–	–	1FG1301- . . ■ ■ **2** - ■ . **R1** -Z
Max. output speed n_{2max} = **258 rpm**, Transmission ratio i = **17.44**																						
73	70	106	83	**159**	**159**	–	–	–	–	–	–	–	–	–	–	–	–	–	–	–	–	1FG1301- . . ■ ■ **6** - ■ . **Q1** -Z
–	–	–	–	–	**159**	**159**	**159**	**159**	**159**	**159**	**159**	–	–	–	–	–	–	–	–	–	–	1FG1301- . . ■ ■ **4** - ■ . **Q1** -Z
–	–	–	–	**159**	–	**159**	**159**	**159**	**159**	**159**	**159**	–	–	–	–	–	–	–	–	–	–	1FG1301- . . ■ ■ **3** - ■ . **Q1** -Z
–	–	–	–	**159**	–	–	**159**	–	**159**	**159**	**159**	–	–	–	–	–	–	–	–	–	–	1FG1301- . . ■ ■ **2** - ■ . **Q1** -Z
Max. output speed n_{2max} = **288 rpm**, Transmission ratio i = **15.29**																						
64	62	93	73	151	144	–	–	–	–	–	–	–	–	–	–	–	–	–	–	–	–	1FG1301- . . ■ ■ **6** - ■ . **P1** -Z
–	–	–	–	–	144	**158**	**158**	**158**	**158**	**158**	**158**	–	–	–	–	–	–	–	–	–	–	1FG1301- . . ■ ■ **4** - ■ . **P1** -Z
–	–	–	–	151	–	**158**	**158**	**158**	**158**	**158**	**158**	–	–	–	–	–	–	–	–	–	–	1FG1301- . . ■ ■ **3** - ■ . **P1** -Z
–	–	–	–	151	–	–	**158**	–	**158**	**158**	**158**	–	–	–	–	–	–	–	–	–	–	1FG1301- . . ■ ■ **2** - ■ . **P1** -Z
Max. output speed n_{2max} = **313 rpm**, Transmission ratio i = **13.88**																						
58	56	85	66	137	130	–	–	–	–	–	–	–	–	–	–	–	–	–	–	–	–	1FG1301- . . ■ ■ **6** - ■ . **N1** -Z
–	–	–	–	–	130	147	**153**	**153**	**153**	**153**	**153**	–	–	–	–	–	–	–	–	–	–	1FG1301- . . ■ ■ **4** - ■ . **N1** -Z
–	–	–	–	137	–	147	**153**	**153**	**153**	**153**	**153**	–	–	–	–	–	–	–	–	–	–	1FG1301- . . ■ ■ **3** - ■ . **N1** -Z
–	–	–	–	137	–	–	**153**	–	**153**	**153**	**153**	–	–	–	–	–	–	–	–	–	–	1FG1301- . . ■ ■ **2** - ■ . **N1** -Z
Max. output speed n_{2max} = **333 rpm**, Transmission ratio i = **13.06**																						
55	53	80	62	129	123	–	–	–	–	–	–	–	–	–	–	–	–	–	–	–	–	1FG1301- . . ■ ■ **6** - ■ . **M1** -Z
–	–	–	–	–	123	139	**150**	**150**	**150**	**150**	**150**	–	–	–	–	–	–	–	–	–	–	1FG1301- . . ■ ■ **4** - ■ . **M1** -Z
–	–	–	–	129	–	139	**150**	**150**	**150**	**150**	**150**	–	–	–	–	–	–	–	–	–	–	1FG1301- . . ■ ■ **3** - ■ . **M1** -Z
–	–	–	–	129	–	–	**150**	–	**150**	**150**	**150**	–	–	–	–	–	–	–	–	–	–	1FG1301- . . ■ ■ **2** - ■ . **M1** -Z
Max. output speed n_{2max} = **378 rpm**, Transmission ratio i = **11.51**																						
49	46	70	55	114	108	–	–	–	–	–	–	–	–	–	–	–	–	–	–	–	–	1FG1301- . . ■ ■ **6** - ■ . **L1** -Z
–	–	–	–	–	108	122	**143**	**143**	**143**	**143**	**143**	–	–	–	–	–	–	–	–	–	–	1FG1301- . . ■ ■ **4** - ■ . **L1** -Z
–	–	–	–	114	–	122	**143**	**143**	**143**	**143**	**143**	–	–	–	–	–	–	–	–	–	–	1FG1301- . . ■ ■ **3** - ■ . **L1** -Z
–	–	–	–	114	–	–	**143**	–	**143**	**143**	**143**	–	–	–	–	–	–	–	–	–	–	1FG1301- . . ■ ■ **2** - ■ . **L1** -Z

Motor shaft height:

36																						**C**
			48																			**D**
							63															**E**
												80										**F**
																	100					**G**

Motor length/motor version (**CT** = Compact. **HD** = High Dynamic)**:**

			0/CT				**0/CT**					**0/CT**						**0/CT**					**0**	**2**
													1/CT						**1/CT**				**1**	**2**
								1/HD															**1**	**4**
2/CT				**2/CT**					**2/CT**														**2**	**2**
										3/CT				**3/CT**						**3/CT**			**3**	**2**
	3/HD				**3/HD**																		**3**	**4**
		4/CT														**4/CT**							**4**	**2**
						4/HD					**4/HD**													**4**	**4**
																				5/CT			**5**	**2**
															5/HD								**5**	**4**
																6/HD							**6**	**4**

Selection of shaft design, encoder system, mounting type and special designs on page 4/3.

1FG1301- ■ ■ . . . - . ■ . . -Z

© Siemens 2019

Gearbox size 29, 2-stage – 1FG1301

For line voltage 380 ... 480 V 3 AC (DC link voltage 510 ... 720 V DC) **– Gearbox type** ***FZ29***

Geared motor torque at 1450 rpm
Note: All values in **bold** print are maximum gearbox values.
M_{2dyn}
Nm

																						Servo parallel shaft geared motors SIMOTICS S-1FG1 Article No.
Max. output speed n_{2max} = **435 rpm**, Transmission ratio i = **9.99**																						
42	40	61	48	99	94	–	–	–	–	–	–	–	–	–	–	–	–	–	–	–	–	1FG1301- . . ■ ■ 6 - ■ . K1 -Z
–	–	–	–	–	94	106	**136**	**136**	**136**	**136**	**136**	–	–	–	–	–	–	–	–	–	–	1FG1301- . . ■ ■ 4 - ■ . K1 -Z
–	–	–	–	99	–	106	**136**	**136**	**136**	**136**	**136**	–	–	–	–	–	–	–	–	–	–	1FG1301- . . ■ ■ 3 - ■ . K1 -Z
–	–	–	–	99	–	–	**136**	–	**136**	**136**	**136**	–	–	–	–	–	–	–	–	–	–	1FG1301- . . ■ ■ 2 - ■ . K1 -Z
Max. output speed n_{2max} = **449 rpm**, Transmission ratio i = **9.69**																						
41	39	59	46	96	91	–	–	–	–	–	–	–	–	–	–	–	–	–	–	–	–	1FG1301- . . ■ ■ 6 - ■ . J1 -Z
–	–	–	–	–	91	103	**143**	**143**	**143**	**143**	**143**	–	–	–	–	–	–	–	–	–	–	1FG1301- . . ■ ■ 4 - ■ . J1 -Z
–	–	–	–	96	–	103	**143**	**143**	**143**	**143**	**143**	–	–	–	–	–	–	–	–	–	–	1FG1301- . . ■ ■ 3 - ■ . J1 -Z
–	–	–	–	96	–	–	**143**	–	**143**	**143**	**143**	–	–	–	–	–	–	–	–	–	–	1FG1301- . . ■ ■ 2 - ■ . J1 -Z
Max. output speed n_{2max} = **504 rpm**, Transmission ratio i = **8.63**																						
36	35	53	41	85	81	–	–	–	–	–	–	–	–	–	–	–	–	–	–	–	–	1FG1301- . . ■ ■ 6 - ■ . H1 -Z
–	–	–	–	–	81	91	**130**	**130**	**130**	**130**	**130**	–	–	–	–	–	–	–	–	–	–	1FG1301- . . ■ ■ 4 - ■ . H1 -Z
–	–	–	–	85	–	91	**130**	**130**	**130**	**130**	**130**	–	–	–	–	–	–	–	–	–	–	1FG1301- . . ■ ■ 3 - ■ . H1 -Z
–	–	–	–	85	–	–	**130**	–	**130**	**130**	**130**	–	–	–	–	–	–	–	–	–	–	1FG1301- . . ■ ■ 2 - ■ . H1 -Z
Max. output speed n_{2max} = **546 rpm**, Transmission ratio i = **7.97**																						
34	32	49	38	79	75	–	–	–	–	–	–	–	–	–	–	–	–	–	–	–	–	1FG1301- . . ■ ■ 6 - ■ . G1 -Z
–	–	–	–	–	75	85	**120**	**120**	**120**	**120**	**120**	–	–	–	–	–	–	–	–	–	–	1FG1301- . . ■ ■ 4 - ■ . G1 -Z
–	–	–	–	79	–	85	**120**	**120**	**120**	**120**	**120**	–	–	–	–	–	–	–	–	–	–	1FG1301- . . ■ ■ 3 - ■ . G1 -Z
–	–	–	–	79	–	–	**120**	–	**120**	**120**	**120**	–	–	–	–	–	–	–	–	–	–	1FG1301- . . ■ ■ 2 - ■ . G1 -Z
Max. output speed n_{2max} = **623 rpm**, Transmission ratio i = **6.98**																						
29	28	43	33	69	66	–	–	–	–	–	–	–	–	–	–	–	–	–	–	–	–	1FG1301- . . ■ ■ 6 - ■ . F1 -Z
–	–	–	–	–	66	74	119	115	**123**	**123**	**123**	–	–	–	–	–	–	–	–	–	–	1FG1301- . . ■ ■ 4 - ■ . F1 -Z
–	–	–	–	69	–	74	119	115	**123**	**123**	**123**	–	–	–	–	–	–	–	–	–	–	1FG1301- . . ■ ■ 3 - ■ . F1 -Z
–	–	–	–	69	–	–	119	–	**123**	**123**	**123**	–	–	–	–	–	–	–	–	–	–	1FG1301- . . ■ ■ 2 - ■ . F1 -Z
Max. output speed n_{2max} = **711 rpm**, Transmission ratio i = **6.12**																						
26	25	38	29	61	58	–	–	–	–	–	–	–	–	–	–	–	–	–	–	–	–	1FG1301- . . ■ ■ 6 - ■ . E1 -Z
–	–	–	–	–	58	65	105	101	**114**	**114**	**114**	–	–	–	–	–	–	–	–	–	–	1FG1301- . . ■ ■ 4 - ■ . E1 -Z
–	–	–	–	61	–	65	105	101	**114**	**114**	**114**	–	–	–	–	–	–	–	–	–	–	1FG1301- . . ■ ■ 3 - ■ . E1 -Z
–	–	–	–	61	–	–	105	–	**114**	**114**	**114**	–	–	–	–	–	–	–	–	–	–	1FG1301- . . ■ ■ 2 - ■ . E1 -Z
Max. output speed n_{2max} = **784 rpm**, Transmission ratio i = **5.55**																						
23	22	34	27	55	53	–	–	–	–	–	–	–	–	–	–	–	–	–	–	–	–	1FG1301- . . ■ ■ 6 - ■ . D1 -Z
–	–	–	–	–	53	59	95	91	**108**	**108**	**108**	–	–	–	–	–	–	–	–	–	–	1FG1301- . . ■ ■ 4 - ■ . D1 -Z
–	–	–	–	55	–	59	95	91	**108**	**108**	**108**	–	–	–	–	–	–	–	–	–	–	1FG1301- . . ■ ■ 3 - ■ . D1 -Z
–	–	–	–	55	–	–	95	–	**108**	**108**	**108**	–	–	–	–	–	–	–	–	–	–	1FG1301- . . ■ ■ 2 - ■ . D1 -Z
Max. output speed n_{2max} = **833 rpm**, Transmission ratio i = **5.22**																						
22	21	32	25	52	49	–	–	–	–	–	–	–	–	–	–	–	–	–	–	–	–	1FG1301- . . ■ ■ 6 - ■ . C1 -Z
–	–	–	–	–	49	56	89	86	**106**	**106**	**106**	–	–	–	–	–	–	–	–	–	–	1FG1301- . . ■ ■ 4 - ■ . C1 -Z
–	–	–	–	52	–	56	89	86	**106**	**106**	**106**	–	–	–	–	–	–	–	–	–	–	1FG1301- . . ■ ■ 3 - ■ . C1 -Z
–	–	–	–	52	–	–	89	–	**106**	**106**	**106**	–	–	–	–	–	–	–	–	–	–	1FG1301- . . ■ ■ 2 - ■ . C1 -Z

Motor shaft height:

36																						**C**
			48																			**D**
							63															**E**
												80										**F**
																	100					**G**

Motor length/motor version (**CT** = Compact. **HD** = High Dynamic)**:**

			0/CT				**0/CT**					**0/CT**						**0/CT**					**0**	**2**
													1/CT						**1/CT**				**1**	**2**
								1/HD															**1**	**4**
2/CT				**2/CT**					**2/CT**														**2**	**2**
										3/CT				**3/CT**						**3/CT**			**3**	**2**
	3/HD				**3/HD**																		**3**	**4**
		4/CT														**4/CT**							**4**	**2**
						4/HD					**4/HD**													**4**	**4**
																				5/CT			**5**	**2**
															5/HD								**5**	**4**
																6/HD							**6**	**4**

Selection of shaft design, encoder system, mounting type and special designs on page 4/3.

1FG1301- ■ ■ . . . - . ■ . . -Z

© Siemens 2019

For line voltage 380 ... 480 V 3 AC (DC link voltage 510 ... 720 V DC) **– Gearbox type** ***FZ29***

Geared motor torque at 1450 rpm
Note: All values in **bold** print are maximum gearbox values.
M_{2dyn}
Nm

Servo parallel shaft geared motors SIMOTICS S-1FG1
Article No.

Max. output speed n_{2max} = **946 rpm**, Transmission ratio i = **4.6**																					
19	18	28	22	46	44	–	–	–	–	–	–	–	–	–	–	–	–	–	–	–	1FG1301- . . ■ ■ 6 - ■ . B1 -Z
–	–	–	–	–	44	49	79	76	**97**	**97**	**97**	–	–	–	–	–	–	–	–	–	1FG1301- . . ■ ■ 4 - ■ . B1 -Z
–	–	–	–	46	–	49	79	76	**97**	**97**	**97**	–	–	–	–	–	–	–	–	–	1FG1301- . . ■ ■ 3 - ■ . B1 -Z
–	–	–	–	46	–	–	79	–	**97**	**97**	**97**	–	–	–	–	–	–	–	–	–	1FG1301- . . ■ ■ 2 - ■ . B1 -Z
Max. output speed n_{2max} = **1088 rpm**, Transmission ratio i = **4**																					
17	16	24	19	40	38	–	–	–	–	–	–	–	–	–	–	–	–	–	–	–	1FG1301- . . ■ ■ 6 - ■ . A1 -Z
–	–	–	–	–	38	43	68	66	**91**	**91**	**91**	–	–	–	–	–	–	–	–	–	1FG1301- . . ■ ■ 4 - ■ . A1 -Z
–	–	–	–	40	–	43	68	66	**91**	**91**	**91**	–	–	–	–	–	–	–	–	–	1FG1301- . . ■ ■ 3 - ■ . A1 -Z
–	–	–	–	40	–	–	68	–	**91**	**91**	**91**	–	–	–	–	–	–	–	–	–	1FG1301- . . ■ ■ 2 - ■ . A1 -Z

Motor shaft height:

36																					C	
			48																		D	
							63														E	
												80									F	
																		100			G	

Motor length/motor version (**CT** = Compact. **HD** = High Dynamic)**:**

			0/CT				**0/CT**					**0/CT**					**0/CT**				0		2
													1/CT					**1/CT**			1		2
								1/HD													1		4
2/CT				**2/CT**					**2/CT**												2		2
										3/CT				**3/CT**					**3/CT**		3		2
	3/HD				**3/HD**																3		4
		4/CT														**4/CT**					4		2
						4/HD					**4/HD**										4		4
																			5/CT		5		2
															5/HD						5		4
																6/HD					6		4

Selection of shaft design, encoder system, mounting type and special designs on page 4/3.

1FG1301- ■ ■ . . . . - . ■ . . **-Z**

© Siemens 2019

Gearbox size 29, 2-stage – 1FG1301

Selection and ordering data (continued)

For line voltage 200 ... 240 V 1 AC (DC link voltage 270 ... 330 V DC) **– Gearbox type** ***FZ29***

Max. output speed n_{2max} rpm	Transmission ratio i	Geared motor torque at 1450 rpm Note: All values in **bold** print are maximum gearbox values. M_{2dyn} Nm					**Servo parallel shaft geared motors SIMOTICS S-1FG1** Article No.
79	**56.73**	**162**	**162**	**162**	**162**	**162**	**1FG1301- . . ■ ■ 3 - ■ . C2 -Z**
89	**50.32**	**160**	**160**	**160**	**160**	**160**	**1FG1301- . . ■ ■ 3 - ■ . B2 -Z**
103	**43.66**	**159**	**159**	**159**	**159**	**159**	**1FG1301- . . ■ ■ 3 - ■ . A2 -Z**
113	**39.69**	**159**	158	**159**	**159**	**159**	**1FG1301- . . ■ ■ 3 - ■ . X1 -Z**
132	**34.04**	141	135	**159**	**159**	**159**	**1FG1301- . . ■ ■ 3 - ■ . W1 -Z**
145	**30.95**	129	123	**159**	**159**	**159**	**1FG1301- . . ■ ■ 3 - ■ . V1 -Z**
166	**27.13**	113	108	**159**	**159**	**159**	**1FG1301- . . ■ ■ 3 - ■ . U1 -Z**
186	**24.22**	101	96	146	**159**	**159**	**1FG1301- . . ■ ■ 3 - ■ . T1 -Z**
209	**21.58**	90	86	130	**159**	**159**	**1FG1301- . . ■ ■ 3 - ■ . S1 -Z**
226	**19.92**	83	80	121	**159**	**159**	**1FG1301- . . ■ ■ 3 - ■ . R1 -Z**
258	**17.44**	73	70	106	**159**	**159**	**1FG1301- . . ■ ■ 3 - ■ . Q1 -Z**
288	**15.29**	64	62	93	151	144	**1FG1301- . . ■ ■ 3 - ■ . P1 -Z**
313	**13.88**	58	56	85	137	130	**1FG1301- . . ■ ■ 3 - ■ . N1 -Z**
333	**13.06**	55	53	80	129	123	**1FG1301- . . ■ ■ 3 - ■ . M1 -Z**
378	**11.51**	49	46	70	114	108	**1FG1301- . . ■ ■ 3 - ■ . L1 -Z**
435	**9.99**	42	40	61	99	94	**1FG1301- . . ■ ■ 3 - ■ . K1 -Z**
449	**9.69**	41	39	59	96	91	**1FG1301- . . ■ ■ 3 - ■ . J1 -Z**
504	**8.63**	36	35	53	85	81	**1FG1301- . . ■ ■ 3 - ■ . H1 -Z**
546	**7.97**	34	32	49	79	75	**1FG1301- . . ■ ■ 3 - ■ . G1 -Z**
623	**6.98**	29	28	43	69	66	**1FG1301- . . ■ ■ 3 - ■ . F1 -Z**
711	**6.12**	26	25	38	61	58	**1FG1301- . . ■ ■ 3 - ■ . E1 -Z**
784	**5.55**	23	22	34	55	53	**1FG1301- . . ■ ■ 3 - ■ . D1 -Z**
833	**5.22**	22	21	32	52	49	**1FG1301- . . ■ ■ 3 - ■ . C1 -Z**
946	**4.6**	19	18	28	46	44	**1FG1301- . . ■ ■ 3 - ■ . B1 -Z**
1088	**4**	17	16	24	40	38	**1FG1301- . . ■ ■ 3 - ■ . A1 -Z**
Motor shaft height:							
		36					**C**
					48		**D**
Motor length/motor version (**CT** = Compact, **HD** = High Dynamic)**:**							
		2/CT			**2/CT**		**2**
			3/HD			**3/HD**	**3**
				4/CT			**4**
							1
							3
							1

Selection of shaft design, encoder system, mounting type and special designs on page 4/3.

1FG1301- ■ ■ . . . - . ■ . . -Z

© Siemens 2019

Technical specifications

Gearbox type *FD29*

Servo geared motor Type	i	R_{ex}	M_{2rated} Nm	M_{2max} Nm	$M_{2Em.Off}$ Nm	n_{2max} rpm	n_{1max} rpm	φ [1] '	F_{R2} N	F_{R2max} N	c_T Nm/ '	J_G 10^{-4} kgm^2
1FG1401-.....-..Q1	298.58	94054/315	150	184	255	15	4500	7.90	5220	5220	22.8	0.02
1FG1401-.....-..P1	264.39	92537/350	150	184	255	17	4500	7.96	5220	5220	22.8	0.03
1FG1401-.....-..N1	229.72	80401/350	150	184	255	20	4500	7.98	5220	5220	22.8	0.04
1FG1401-.....-..M1	208.83	80401/385	150	184	255	22	4500	7.98	5220	5220	22.8	0.04
1FG1401-.....-..L1	177.71	62197/350	150	184	255	25	4500	8.00	5220	5220	22.8	0.06
1FG1401-.....-..K1	161.55	62197/385	150	184	255	28	4500	8.00	5220	5220	22.8	0.08
1FG1401-.....-..J1	140.86	19721/140	150	183	255	32	4500	8.02	5220	5220	22.8	0.09
1FG1401-.....-..H1	126.09	48544/385	150	181	255	36	4500	8.03	5220	5220	22.8	0.11
1FG1401-.....-..G1	111.97	47027/420	150	177	255	40	4500	8.05	5220	5220	22.8	0.13
1FG1401-.....-..F1	103.36	47027/455	150	176	255	44	4500	8.05	5220	5220	22.8	0.16
1FG1401-.....-..E1	89.78	43993/490	150	173	255	50	4500	8.09	5220	5220	22.8	0.18
1FG1401-.....-..D1	78.02	13653/175	150	169	255	58	4500	8.05	5220	5220	22.8	0.19
1FG1401-.....-..C1	70.43	19721/280	150	167	255	64	4500	8.07	5220	5220	22.8	0.23
1FG1401-.....-..B1	66.29	39442/595	150	166	255	68	4500	8.07	5220	5220	22.8	0.27
1FG1401-.....-..A1	57.79	6068/105	150	163	255	78	4500	8.12	5220	5220	22.8	0.3

Selection and ordering data

Shaft design, encoder system, mounting type and special designs

Gearbox type *FD29*

		Servo parallel shaft geared motors SIMOTICS S-1FG1 Article No. **1FG1401-** ■ ■ . . . - . ■ . . **-Z**
Shaft design:	Solid shaft with feather keyway – Design 1	**1**
	Hollow-shaft with feather keyway – Design 1 – H25	**5**
Order codes and Descriptions see chapter "Options"	Special shaft design	**9**
Encoder system for motors with DRIVE-CLiQ interface:	AS20DQI encoder	**Q**
	AM20DQI encoder	**R**
	R14DQ resolver	**P**
	R15DQ resolver	**U**
Order codes and Descriptions see chapter "Options"	Special version encoder system	**Z**
Mounting type:	Foot-mounted design	**A**
	Flange-mounted design	**F**
	Housing flange design	**H**
	Shaft-mounted design (not possible with solid shaft)	**D**
Special designs (Options): Order codes and Descriptions see chapter "Options" The following order codes must be added to each article number: • Oil type – order codes **K06** or **K11** • Mounting position – order codes **D01** ... **D06**		**-Z**
Selection of 3-stages servo parallel shaft geared motors with gearbox size 29 from next page.		**1FG1401-** . . ■ ■ ■ - ■ . ■ ■ **-Z**

[1] Data are for option reduced-backlash version – order code **G99** required.

© Siemens 2019

Gearbox size 29, 3-stage – 1FG1401

Selection and ordering data (continued)

For line voltage 380 ... 480 V 3 AC (DC link voltage 510 ... 720 V DC) **– Gearbox type** ***FD29***

Geared motor torque at 1450 rpm
Note: All values in **bold** print are maximum gearbox values.

M_{2dyn} Nm																						Servo parallel shaft geared motors SIMOTICS S-1FG1 Article No.
Max. output speed n_{2max} = **15 rpm**, Transmission ratio i = **298.58**																						
184	**184**	**184**	**184**	**184**	**184**	–	–	–	–	–	–	–	–	–	–	–	–	–	–	–	–	1FG1401- . . ■ ■ 6 - ■ . Q1 -Z
–	–	–	–	–	**184**	**184**	–	–	–	–	–	–	–	–	–	–	–	–	–	–	–	1FG1401- . . ■ ■ 4 - ■ . Q1 -Z
–	–	–	–	**184**	–	**184**	–	–	–	–	–	–	–	–	–	–	–	–	–	–	–	1FG1401- . . ■ ■ 3 - ■ . Q1 -Z
–	–	–	–	**184**	–	–	–	–	–	–	–	–	–	–	–	–	–	–	–	–	–	1FG1401- . . ■ ■ 2 - ■ . Q1 -Z
Max. output speed n_{2max} = **17 rpm**, Transmission ratio i = **264.39**																						
184	**184**	**184**	**184**	**184**	**184**	–	–	–	–	–	–	–	–	–	–	–	–	–	–	–	–	1FG1401- . . ■ ■ 6 - ■ . P1 -Z
–	–	–	–	–	**184**	**184**	**184**	**184**	**184**	**184**	**184**	–	–	–	–	–	–	–	–	–	–	1FG1401- . . ■ ■ 4 - ■ . P1 -Z
–	–	–	–	**184**	–	**184**	**184**	**184**	**184**	**184**	**184**	–	–	–	–	–	–	–	–	–	–	1FG1401- . . ■ ■ 3 - ■ . P1 -Z
–	–	–	–	**184**	–	–	**184**	–	**184**	**184**	**184**	–	–	–	–	–	–	–	–	–	–	1FG1401- . . ■ ■ 2 - ■ . P1 -Z
Max. output speed n_{2max} = **20 rpm**, Transmission ratio i = **229.72**																						
184	**184**	**184**	**184**	**184**	**184**	–	–	–	–	–	–	–	–	–	–	–	–	–	–	–	–	1FG1401- . . ■ ■ 6 - ■ . N1 -Z
–	–	–	–	–	**184**	**184**	**184**	**184**	**184**	**184**	**184**	–	–	–	–	–	–	–	–	–	–	1FG1401- . . ■ ■ 4 - ■ . N1 -Z
–	–	–	–	**184**	–	**184**	**184**	**184**	**184**	**184**	**184**	–	–	–	–	–	–	–	–	–	–	1FG1401- . . ■ ■ 3 - ■ . N1 -Z
–	–	–	–	**184**	–	–	**184**	–	**184**	**184**	**184**	–	–	–	–	–	–	–	–	–	–	1FG1401- . . ■ ■ 2 - ■ . N1 -Z
Max. output speed n_{2max} = **22 rpm**, Transmission ratio i = **208.83**																						
184	**184**	**184**	**184**	**184**	**184**	–	–	–	–	–	–	–	–	–	–	–	–	–	–	–	–	1FG1401- . . ■ ■ 6 - ■ . M1 -Z
–	–	–	–	–	**184**	**184**	**184**	**184**	**184**	**184**	**184**	–	–	–	–	–	–	–	–	–	–	1FG1401- . . ■ ■ 4 - ■ . M1 -Z
–	–	–	–	**184**	–	**184**	**184**	**184**	**184**	**184**	**184**	–	–	–	–	–	–	–	–	–	–	1FG1401- . . ■ ■ 3 - ■ . M1 -Z
–	–	–	–	**184**	–	–	**184**	–	**184**	**184**	**184**	–	–	–	–	–	–	–	–	–	–	1FG1401- . . ■ ■ 2 - ■ . M1 -Z
Max. output speed n_{2max} = **25 rpm**, Transmission ratio i = **177.71**																						
184	**184**	**184**	**184**	**184**	**184**	–	–	–	–	–	–	–	–	–	–	–	–	–	–	–	–	1FG1401- . . ■ ■ 6 - ■ . L1 -Z
–	–	–	–	–	**184**	**184**	**184**	**184**	**184**	**184**	**184**	–	–	–	–	–	–	–	–	–	–	1FG1401- . . ■ ■ 4 - ■ . L1 -Z
–	–	–	–	**184**	–	**184**	**184**	**184**	**184**	**184**	**184**	–	–	–	–	–	–	–	–	–	–	1FG1401- . . ■ ■ 3 - ■ . L1 -Z
–	–	–	–	**184**	–	–	**184**	–	**184**	**184**	**184**	–	–	–	–	–	–	–	–	–	–	1FG1401- . . ■ ■ 2 - ■ . L1 -Z
Max. output speed n_{2max} = **28 rpm**, Transmission ratio i = **161.55**																						
184	**184**	**184**	**184**	**184**	**184**	–	–	–	–	–	–	–	–	–	–	–	–	–	–	–	–	1FG1401- . . ■ ■ 6 - ■ . K1 -Z
–	–	–	–	–	**184**	**184**	**184**	**184**	**184**	**184**	**184**	–	–	–	–	–	–	–	–	–	–	1FG1401- . . ■ ■ 4 - ■ . K1 -Z
–	–	–	–	**184**	–	**184**	**184**	**184**	**184**	**184**	**184**	–	–	–	–	–	–	–	–	–	–	1FG1401- . . ■ ■ 3 - ■ . K1 -Z
–	–	–	–	**184**	–	–	**184**	–	**184**	**184**	**184**	–	–	–	–	–	–	–	–	–	–	1FG1401- . . ■ ■ 2 - ■ . K1 -Z
Max. output speed n_{2max} = **32 rpm**, Transmission ratio i = **140.86**																						
183	**183**	**183**	**183**	**183**	**183**	–	–	–	–	–	–	–	–	–	–	–	–	–	–	–	–	1FG1401- . . ■ ■ 6 - ■ . J1 -Z
–	–	–	–	–	**183**	**183**	**183**	**183**	**183**	**183**	**183**	–	–	–	–	–	–	–	–	–	–	1FG1401- . . ■ ■ 4 - ■ . J1 -Z
–	–	–	–	**183**	–	**183**	**183**	**183**	**183**	**183**	**183**	–	–	–	–	–	–	–	–	–	–	1FG1401- . . ■ ■ 3 - ■ . J1 -Z
–	–	–	–	**183**	–	–	**183**	–	**183**	**183**	**183**	–	–	–	–	–	–	–	–	–	–	1FG1401- . . ■ ■ 2 - ■ . J1 -Z

Motor shaft height:

36																							**C**	
			48																				**D**	
						63																	**E**	
												80											**F**	
																		100					**G**	

Motor length/motor version (**CT** = Compact. **HD** = High Dynamic)**:**

			0/CT				**0/CT**					**0/CT**						**0/CT**					**0**	**2**
													1/CT						**1/CT**				**1**	**2**
								1/HD															**1**	**4**
2/CT				**2/CT**					**2/CT**														**2**	**2**
										3/CT				**3/CT**						**3/CT**			**3**	**2**
	3/HD				**3/HD**											**4/CT**							**3**	**4**
		4/CT																					**4**	**2**
						4/HD					**4/HD**												**4**	**4**
																				5/CT			**5**	**2**
															5/HD								**5**	**4**
																6/HD							**6**	**4**

Selection of shaft design, encoder system, mounting type and special designs on page 4/9.

1FG1401- ■ ■ . . . . - . ■ . . -Z

© Siemens 2019

For line voltage 380 ... 480 V 3 AC (DC link voltage 510 ... 720 V DC) **– Gearbox type** ***FD29***

Geared motor torque at 1450 rpm
Note: All values in **bold** print are maximum gearbox values.
M_{2dyn}
Nm

Servo parallel shaft geared motors SIMOTICS S-1FG1
Article No.

Max. output speed n_{2max} = **36 rpm**, Transmission ratio i = **126.09**																						
181	**181**	**181**	**181**	**181**	**181**	–	–	–	–	–	–	–	–	–	–	–	–	–	–	–	–	1FG1401- . . ■ ■ **6** - ■ . **H1** -Z
–	–	–	–	–	**181**	**181**	**181**	**181**	**181**	**181**	**181**	–	–	–	–	–	–	–	–	–	–	1FG1401- . . ■ ■ **4** - ■ . **H1** -Z
–	–	–	–	**181**	–	**181**	**181**	**181**	**181**	**181**	**181**	–	–	–	–	–	–	–	–	–	–	1FG1401- . . ■ ■ **3** - ■ . **H1** -Z
–	–	–	–	**181**	–	–	**181**	–	**181**	**181**	**181**	–	–	–	–	–	–	–	–	–	–	1FG1401- . . ■ ■ **2** - ■ . **H1** -Z
Max. output speed n_{2max} = **40 rpm**, Transmission ratio i = **111.97**																						
177	**177**	**177**	**177**	**177**	**177**	–	–	–	–	–	–	–	–	–	–	–	–	–	–	–	–	1FG1401- . . ■ ■ **6** - ■ . **G1** -Z
–	–	–	–	–	**177**	**177**	**177**	**177**	**177**	**177**	**177**	–	–	–	–	–	–	–	–	–	–	1FG1401- . . ■ ■ **4** - ■ . **G1** -Z
–	–	–	–	**177**	–	**177**	**177**	**177**	**177**	**177**	**177**	–	–	–	–	–	–	–	–	–	–	1FG1401- . . ■ ■ **3** - ■ . **G1** -Z
–	–	–	–	**177**	–	–	**177**	–	**177**	**177**	**177**	–	–	–	–	–	–	–	–	–	–	1FG1401- . . ■ ■ **2** - ■ . **G1** -Z
Max. output speed n_{2max} = **44 rpm**, Transmission ratio i = **103.36**																						
176	**176**	**176**	**176**	**176**	**176**	–	–	–	–	–	–	–	–	–	–	–	–	–	–	–	–	1FG1401- . . ■ ■ **6** - ■ . **F1** -Z
–	–	–	–	–	**176**	**176**	**176**	**176**	**176**	**176**	**176**	–	–	–	–	–	–	–	–	–	–	1FG1401- . . ■ ■ **4** - ■ . **F1** -Z
–	–	–	–	**176**	–	**176**	**176**	**176**	**176**	**176**	**176**	–	–	–	–	–	–	–	–	–	–	1FG1401- . . ■ ■ **3** - ■ . **F1** -Z
–	–	–	–	**176**	–	–	**176**	–	**176**	**176**	**176**	–	–	–	–	–	–	–	–	–	–	1FG1401- . . ■ ■ **2** - ■ . **F1** -Z
Max. output speed n_{2max} = **50 rpm**, Transmission ratio i = **89.78**																						
173	**173**	**173**	**173**	**173**	**173**	–	–	–	–	–	–	–	–	–	–	–	–	–	–	–	–	1FG1401- . . ■ ■ **6** - ■ . **E1** -Z
–	–	–	–	–	**173**	**173**	**173**	**173**	**173**	**173**	**173**	–	–	–	–	–	–	–	–	–	–	1FG1401- . . ■ ■ **4** - ■ . **E1** -Z
–	–	–	–	**173**	–	**173**	**173**	**173**	**173**	**173**	**173**	–	–	–	–	–	–	–	–	–	–	1FG1401- . . ■ ■ **3** - ■ . **E1** -Z
–	–	–	–	**173**	–	–	**173**	–	**173**	**173**	**173**	–	–	–	–	–	–	–	–	–	–	1FG1401- . . ■ ■ **2** - ■ . **E1** -Z
Max. output speed n_{2max} = **58 rpm**, Transmission ratio i = **78.02**																						
169	**169**	**169**	**169**	**169**	**169**	–	–	–	–	–	–	–	–	–	–	–	–	–	–	–	–	1FG1401- . . ■ ■ **6** - ■ . **D1** -Z
–	–	–	–	–	**169**	**169**	**169**	**169**	**169**	**169**	**169**	–	–	–	–	–	–	–	–	–	–	1FG1401- . . ■ ■ **4** - ■ . **D1** -Z
–	–	–	–	**169**	–	**169**	**169**	**169**	**169**	**169**	**169**	–	–	–	–	–	–	–	–	–	–	1FG1401- . . ■ ■ **3** - ■ . **D1** -Z
–	–	–	–	**169**	–	–	**169**	–	**169**	**169**	**169**	–	–	–	–	–	–	–	–	–	–	1FG1401- . . ■ ■ **2** - ■ . **D1** -Z
Max. output speed n_{2max} = **64 rpm**, Transmission ratio i = **70.43**																						
167	**167**	**167**	**167**	**167**	**167**	–	–	–	–	–	–	–	–	–	–	–	–	–	–	–	–	1FG1401- . . ■ ■ **6** - ■ . **C1** -Z
–	–	–	–	–	**167**	**167**	**167**	**167**	**167**	**167**	**167**	–	–	–	–	–	–	–	–	–	–	1FG1401- . . ■ ■ **4** - ■ . **C1** -Z
–	–	–	–	**167**	–	**167**	**167**	**167**	**167**	**167**	**167**	–	–	–	–	–	–	–	–	–	–	1FG1401- . . ■ ■ **3** - ■ . **C1** -Z
–	–	–	–	**167**	–	–	**167**	–	**167**	**167**	**167**	–	–	–	–	–	–	–	–	–	–	1FG1401- . . ■ ■ **2** - ■ . **C1** -Z
Max. output speed n_{2max} = **68 rpm**, Transmission ratio i = **66.29**																						
166	**166**	**166**	**166**	**166**	**166**	–	–	–	–	–	–	–	–	–	–	–	–	–	–	–	–	1FG1401- . . ■ ■ **6** - ■ . **B1** -Z
–	–	–	–	–	**166**	**166**	**166**	**166**	**166**	**166**	**166**	–	–	–	–	–	–	–	–	–	–	1FG1401- . . ■ ■ **4** - ■ . **B1** -Z
–	–	–	–	**166**	–	**166**	**166**	**166**	**166**	**166**	**166**	–	–	–	–	–	–	–	–	–	–	1FG1401- . . ■ ■ **3** - ■ . **B1** -Z
–	–	–	–	**166**	–	–	**166**	–	**166**	**166**	**166**	–	–	–	–	–	–	–	–	–	–	1FG1401- . . ■ ■ **2** - ■ . **B1** -Z
Max. output speed n_{2max} = **78 rpm**, Transmission ratio i = **57.79**																						
163	**163**	**163**	**163**	**163**	**163**	–	–	–	–	–	–	–	–	–	–	–	–	–	–	–	–	1FG1401- . . ■ ■ **6** - ■ . **A1** -Z
–	–	–	–	–	**163**	**163**	**163**	**163**	**163**	**163**	**163**	–	–	–	–	–	–	–	–	–	–	1FG1401- . . ■ ■ **4** - ■ . **A1** -Z
–	–	–	–	**163**	–	**163**	**163**	**163**	**163**	**163**	**163**	–	–	–	–	–	–	–	–	–	–	1FG1401- . . ■ ■ **3** - ■ . **A1** -Z
–	–	–	–	**163**	–	–	**163**	–	**163**	**163**	**163**	–	–	–	–	–	–	–	–	–	–	1FG1401- . . ■ ■ **2** - ■ . **A1** -Z

Motor shaft height:

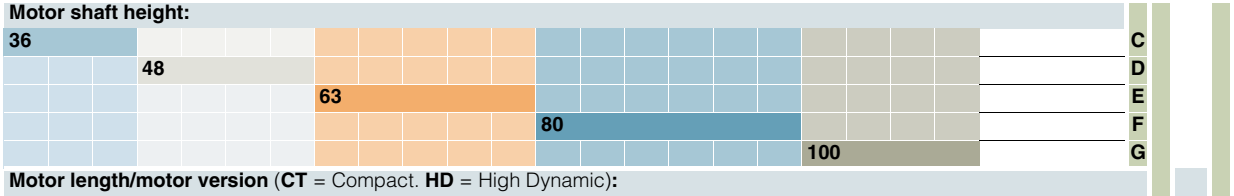

Motor length/motor version (**CT** = Compact. **HD** = High Dynamic)**:**

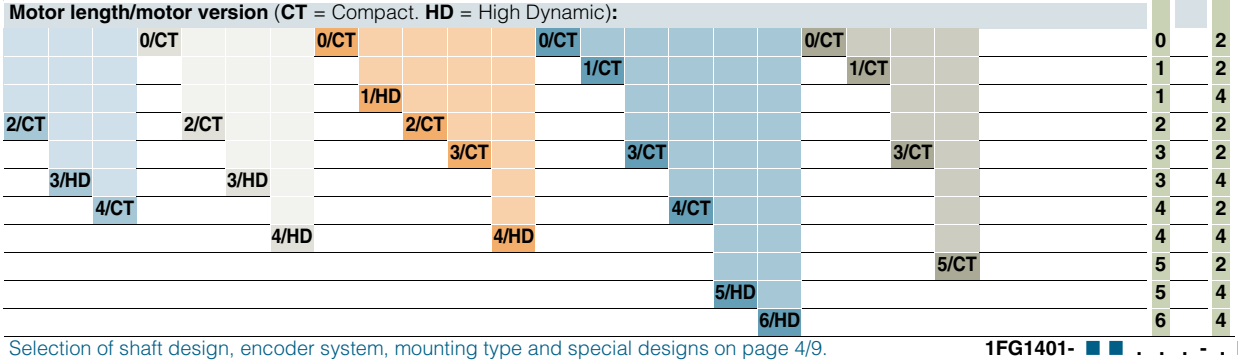

Selection of shaft design, encoder system, mounting type and special designs on page 4/9.

1FG1401- ■ ■ . . . - . ■ . . -Z

© Siemens 2019

Gearbox size 29, 3-stage – 1FG1401

Selection and ordering data (continued)

For line voltage 200 ... 240 V 1 AC (DC link voltage 270 ... 330 V DC) **– Gearbox type** ***FD29***

Max. output speed n_{2max} rpm	Transmission ratio i	Geared motor torque at 1450 rpm Note: All values in **bold** print are maximum gearbox values. M_{2dyn} Nm					**Servo parallel shaft geared motors SIMOTICS S-1FG1** Article No.
15	**298.58**	**184**	**184**	**184**	**184**	**184**	**1FG1401- . . ■ ■ 3 - ■ . Q1 -Z**
17	**264.39**	**184**	**184**	**184**	**184**	**184**	**1FG1401- . . ■ ■ 3 - ■ . P1 -Z**
20	**229.72**	**184**	**184**	**184**	**184**	**184**	**1FG1401- . . ■ ■ 3 - ■ . N1 -Z**
22	**208.83**	**184**	**184**	**184**	**184**	**184**	**1FG1401- . . ■ ■ 3 - ■ . M1 -Z**
25	**177.71**	**184**	**184**	**184**	**184**	**184**	**1FG1401- . . ■ ■ 3 - ■ . L1 -Z**
28	**161.55**	**184**	**184**	**184**	**184**	**184**	**1FG1401- . . ■ ■ 3 - ■ . K1 -Z**
32	**140.86**	**183**	**183**	**183**	**183**	**183**	**1FG1401- . . ■ ■ 3 - ■ . J1 -Z**
36	**126.09**	**181**	**181**	**181**	**181**	**181**	**1FG1401- . . ■ ■ 3 - ■ . H1 -Z**
40	**111.97**	**177**	**177**	**177**	**177**	**177**	**1FG1401- . . ■ ■ 3 - ■ . G1 -Z**
44	**103.36**	**176**	**176**	**176**	**176**	**176**	**1FG1401- . . ■ ■ 3 - ■ . F1 -Z**
50	**89.78**	**173**	**173**	**173**	**173**	**173**	**1FG1401- . . ■ ■ 3 - ■ . E1 -Z**
58	**78.02**	**169**	**169**	**169**	**169**	**169**	**1FG1401- . . ■ ■ 3 - ■ . D1 -Z**
64	**70.43**	**167**	**167**	**167**	**167**	**167**	**1FG1401- . . ■ ■ 3 - ■ . C1 -Z**
68	**66.29**	**166**	**166**	**166**	**166**	**166**	**1FG1401- . . ■ ■ 3 - ■ . B1 -Z**
78	**57.79**	**163**	**163**	**163**	**163**	**163**	**1FG1401- . . ■ ■ 3 - ■ . A1 -Z**
Motor shaft height:							
		36					**C**
					48		**D**
Motor length/motor version (**CT** = Compact, **HD** = High Dynamic)**:**							
		2/CT			**2/CT**		**2** **1**
			3/HD			**3/HD**	**3** **3**
				4/CT			**4** **1**

Selection of shaft design, encoder system, mounting type and special designs on page 4/9.

1FG1401- ■ ■ . . . - . ■ . . -Z

© Siemens 2019

Technical specifications

Gearbox type *FZ39*

Servo geared motor Type	i	R_{ex}	M_{2rated} Nm	M_{2max} Nm	$M_{2Em.Off}$ Nm	n_{2max} rpm	n_{1max} rpm	φ [1] '	F_{R2} N	F_{R2max} N	c_T Nm/ '	J_G 10^{-4} kgm^2
1FG1302-.....-..B2	65.21	913/14	290	315	475	69	4500	6.29	5820	5720	25.7	0.06
1FG1302-.....-..A2	57.99	4059/70	230	310	390	78	4500	6.58	5820	5740	25.7	0.08
1FG1302-.....-..X1	50.91	1782/35	240	305	405	88	4500	6.64	5820	5760	25.7	0.09
1FG1302-.....-..W1	46.29	324/7	255	305	430	97	4500	6.64	5820	5760	25.7	0.11
1FG1302-.....-..V1	39.6	198/5	290	305	475	114	4500	6.70	5820	5760	25.6	0.13
1FG1302-.....-..U1	36	36/1	255	300	430	121	4350	6.70	5770	5700	25.7	0.16
1FG1302-.....-..T1	31.82	891/28	285	285	475	137	4350	6.79	5490	5490	25.6	0.19
1FG1302-.....-..S1	28.93	405/14	275	275	465	150	4350	6.79	5330	5330	25.7	0.25
1FG1302-.....-..R1	25.34	1419/56	265	265	450	172	4350	6.91	5080	5080	25.6	0.29
1FG1302-.....-..Q1	23.39	4257/182	260	260	440	186	4350	6.91	4930	4930	25.7	0.35
1FG1302-.....-..P1	20.71	4059/196	250	250	425	210	4350	7.03	4740	4740	25.6	0.42
1FG1302-.....-..N1	17.24	3861/224	235	235	395	252	4350	7.17	4460	4460	25.6	0.57
1FG1302-.....-..M1	16.22	3861/238	230	230	390	268	4350	7.17	4370	4370	25.6	0.66
1FG1302-.....-..L1	14.54	407/28	220	220	370	299	4350	7.33	4220	4220	25.6	0.74
1FG1302-.....-..K1	12.38	99/8	210	210	355	351	4350	7.50	3990	3990	25.5	0.97
1FG1302-.....-..J1	10.61	297/28	199	199	335	410	4350	7.69	3800	3800	25.5	1.3
1FG1302-.....-..H1	9.13	1023/112	189	189	320	476	4350	7.91	3610	3610	25.4	1.6
1FG1302-.....-..G1	8.1	3403/420	167	167	280	537	4350	12.12	3430	3430	14	0.7
1FG1302-.....-..F1	6.74	1079/160	152	152	255	645	4350	12.50	3270	3270	13.9	0.96
1FG1302-.....-..E1	6.35	1079/170	149	149	250	685	4350	12.49	3210	3210	13.9	1.1
1FG1302-.....-..D1	5.69	3071/540	140	140	235	764	4350	12.91	3120	3120	13.9	1.3
1FG1302-.....-..C1	4.84	581/120	128	128	215	899	4350	13.37	3000	3000	13.8	1.7
1FG1302-.....-..B1	4.15	83/20	118	118	200	1048	4350	13.89	2880	2880	13.7	2.3
1FG1302-.....-..A1	3.57	2573/720	108	108	183	1218	4350	14.48	2770	2770	13.6	3

Selection and ordering data

Shaft design, encoder system, mounting type and special designs

Gearbox type *FZ39*

			Servo parallel shaft geared motors SIMOTICS S-1FG1 Article No. **1FG1302-** ■■.....-.■..-Z
Shaft design:	Solid shaft with feather keyway	– Design 1	**1**
		– Design 3	**3**
	Hollow-shaft with feather keyway	– Design 1 – H30	**5**
		– Design 2 – H25	**6**
Order codes and Descriptions see chapter "Options"	Special shaft design		**9**
Encoder system for motors with DRIVE-CLiQ interface:	AS20DQI encoder		**Q**
	AM20DQI encoder		**R**
	R14DQ resolver		**P**
	R15DQ resolver		**U**
Order codes and Descriptions see chapter "Options"	Special version encoder system		**Z**
Mounting type:	Foot-mounted design		**A**
	Flange-mounted design		**F**
	Housing flange design		**H**
	Shaft-mounted design (not possible with solid shaft)		**D**
Special designs (Options): Order codes and Descriptions see chapter "Options" The following order codes must be added to each article number: • Oil type – order codes **K06** or **K11** • Mounting position – order codes **D01** ... **D06**			**-Z**

Selection of 2-stages servo parallel shaft geared motors with gearbox size 39 from next page. **1FG1302-** ..■■■-■.■■-Z

[1] Data are for option reduced-backlash version – order code **G99** required.

© Siemens 2019

Gearbox size 39, 2-stage – 1FG1302

Selection and ordering data (continued)

For line voltage 380 ... 480 V 3 AC (DC link voltage 510 ... 720 V DC) **– Gearbox type** ***FZ39***

Geared motor torque at 1450 rpm
Note: All values in **bold** print are maximum gearbox values.

M_{2dyn} Nm																						Servo parallel shaft geared motors SIMOTICS S-1FG1 Article No.
Max. output speed n_{2max} = **69 rpm**, Transmission ratio i = **65.21**																						
265	255	**315**	305	**315**	**315**	–	–	–	–	–	–	–	–	–	–	–	–	–	–	–	–	1FG1302- . . ■ ■ 6 - ■ . B2 -Z
–	–	–	–	–	**315**	**315**	–	–	–	–	–	–	–	–	–	–	–	–	–	–	–	1FG1302- . . ■ ■ 4 - ■ . B2 -Z
–	–	–	–	**315**	–	**315**	–	–	–	–	–	–	–	–	–	–	–	–	–	–	–	1FG1302- . . ■ ■ 3 - ■ . B2 -Z
–	–	–	–	**315**	–	–	–	–	–	–	–	–	–	–	–	–	–	–	–	–	–	1FG1302- . . ■ ■ 2 - ■ . B2 -Z
Max. output speed n_{2max} = **78 rpm**, Transmission ratio i = **57.99**																						
240	225	**310**	270	**310**	**310**	–	–	–	–	–	–	–	–	–	–	–	–	–	–	–	–	1FG1302- . . ■ ■ 6 - ■ . A2 -Z
–	–	–	–	–	**310**	**310**	**310**	**310**	**310**	**310**	**310**	–	–	–	–	–	–	–	–	–	–	1FG1302- . . ■ ■ 4 - ■ . A2 -Z
–	–	–	–	**310**	–	**310**	**310**	**310**	**310**	**310**	**310**	–	–	–	–	–	–	–	–	–	–	1FG1302- . . ■ ■ 3 - ■ . A2 -Z
–	–	–	–	**310**	–	–	**310**	–	**310**	**310**	**310**	–	–	–	–	–	–	–	–	–	–	1FG1302- . . ■ ■ 2 - ■ . A2 -Z
Max. output speed n_{2max} = **88 rpm**, Transmission ratio i = **50.91**																						
210	200	305	235	**305**	**305**	–	–	–	–	–	–	–	–	–	–	–	–	–	–	–	–	1FG1302- . . ■ ■ 6 - ■ . X1 -Z
–	–	–	–	–	**305**	**305**	**305**	**305**	**305**	**305**	**305**	–	–	–	–	–	–	–	–	–	–	1FG1302- . . ■ ■ 4 - ■ . X1 -Z
–	–	–	–	**305**	–	**305**	**305**	**305**	**305**	**305**	**305**	–	–	–	–	–	–	–	–	–	–	1FG1302- . . ■ ■ 3 - ■ . X1 -Z
–	–	–	–	**305**	–	–	**305**	–	**305**	**305**	**305**	–	–	–	–	–	–	–	–	–	–	1FG1302- . . ■ ■ 2 - ■ . X1 -Z
Max. output speed n_{2max} = **97 rpm**, Transmission ratio i = **46.29**																						
194	185	280	220	**305**	**305**	–	–	–	–	–	–	–	–	–	–	–	–	–	–	–	–	1FG1302- . . ■ ■ 6 - ■ . W1 -Z
–	–	–	–	–	**305**	**305**	**305**	**305**	**305**	**305**	**305**	–	–	–	–	–	–	–	–	–	–	1FG1302- . . ■ ■ 4 - ■ . W1 -Z
–	–	–	–	**305**	–	**305**	**305**	**305**	**305**	**305**	**305**	–	–	–	–	–	–	–	–	–	–	1FG1302- . . ■ ■ 3 - ■ . W1 -Z
–	–	–	–	**305**	–	–	**305**	–	**305**	**305**	**305**	–	–	–	–	–	–	–	–	–	–	1FG1302- . . ■ ■ 2 - ■ . W1 -Z
Max. output speed n_{2max} = **114 rpm**, Transmission ratio i = **39.6**																						
165	158	235	187	**305**	**305**	–	–	–	–	–	–	–	–	–	–	–	–	–	–	–	–	1FG1302- . . ■ ■ 6 - ■ . V1 -Z
–	–	–	–	–	**305**	**305**	**305**	**305**	**305**	**305**	**305**	–	–	–	–	–	–	–	–	–	–	1FG1302- . . ■ ■ 4 - ■ . V1 -Z
–	–	–	–	**305**	–	**305**	**305**	**305**	**305**	**305**	**305**	–	–	–	–	–	–	–	–	–	–	1FG1302- . . ■ ■ 3 - ■ . V1 -Z
–	–	–	–	**305**	–	–	**305**	–	**305**	**305**	**305**	–	–	–	–	–	–	–	–	–	–	1FG1302- . . ■ ■ 2 - ■ . V1 -Z
Max. output speed n_{2max} = **121 rpm**, Transmission ratio i = **36**																						
151	144	215	171	**300**	**300**	–	–	–	–	–	–	–	–	–	–	–	–	–	–	–	–	1FG1302- . . ■ ■ 6 - ■ . U1 -Z
–	–	–	–	–	**300**	**300**	**300**	**300**	**300**	**300**	**300**	–	–	–	–	–	–	–	–	–	–	1FG1302- . . ■ ■ 4 - ■ . U1 -Z
–	–	–	–	**300**	–	**300**	**300**	**300**	**300**	**300**	**300**	–	–	–	–	–	–	–	–	–	–	1FG1302- . . ■ ■ 3 - ■ . U1 -Z
–	–	–	–	**300**	–	–	**300**	–	**300**	**300**	**300**	–	–	–	–	–	–	–	–	–	–	1FG1302- . . ■ ■ 2 - ■ . U1 -Z
Max. output speed n_{2max} = **137 rpm**, Transmission ratio i = **31.82**																						
133	127	193	151	**285**	**285**	–	–	–	–	–	–	–	–	–	–	–	–	–	–	–	–	1FG1302- . . ■ ■ 6 - ■ . T1 -Z
–	–	–	–	–	**285**	**285**	**285**	**285**	**285**	**285**	**285**	**285**	**285**	**285**	–	–	–	–	–	–	–	1FG1302- . . ■ ■ 4 - ■ . T1 -Z
–	–	–	–	**285**	–	**285**	**285**	**285**	**285**	**285**	**285**	**285**	**285**	**285**	**285**	**285**	**285**	–	–	–	–	1FG1302- . . ■ ■ 3 - ■ . T1 -Z
–	–	–	–	**285**	–	–	**285**	–	**285**	**285**	**285**	–	**285**	**285**	**285**	**285**	**285**	–	–	–	–	1FG1302- . . ■ ■ 2 - ■ . T1 -Z

Motor shaft height:

36																							**C**
			48																				**D**
						63																	**E**
												80											**F**
																		100					**G**

Motor length/motor version (**CT** = Compact. **HD** = High Dynamic)**:**

			0/CT				**0/CT**					**0/CT**						**0/CT**					**0**	**2**
								1/CT											**1/CT**				**1**	**2**
									1/HD														**1**	**4**
2/CT				**2/CT**						**2/CT**													**2**	**2**
											3/CT				**3/CT**					**3/CT**			**3**	**2**
	3/HD				**3/HD**																		**3**	**4**
		4/CT														**4/CT**							**4**	**2**
						4/HD						**4/HD**												**4**	**4**
																				5/CT			**5**	**2**
															5/HD								**5**	**4**
																6/HD							**6**	**4**

Selection of shaft design, encoder system, mounting type and special designs on page 4/13.

1FG1302- ■ ■ . . . . - . ■ . . -Z

© Siemens 2019

For line voltage 380 ... 480 V 3 AC (DC link voltage 510 ... 720 V DC) **– Gearbox type** ***FZ39***

Geared motor torque at 1450 rpm
Note: All values in **bold** print are maximum gearbox values.
M_{2dyn}
Nm

Servo parallel shaft geared motors SIMOTICS S-1FG1
Article No.

Max. output speed n_{2max} = **150 rpm**, Transmission ratio i = **28.93**																					
121	116	175	137	**275**	265	–	–	–	–	–	–	–	–	–	–	–	–	–	–	–	1FG1302- . . ■ ■ **6** - ■ . **S1** -Z
–	–	–	–	–	265	**275**	**275**	**275**	**275**	**275**	**275**	**275**	**275**	**275**	–	–	–	–	–	–	1FG1302- . . ■ ■ **4** - ■ . **S1** -Z
–	–	–	–	**275**	–	**275**	**275**	**275**	**275**	**275**	**275**	**275**	**275**	**275**	**275**	**275**	**275**	–	–	–	1FG1302- . . ■ ■ **3** - ■ . **S1** -Z
–	–	–	–	**275**	–	–	**275**	–	**275**	**275**	**275**	–	**275**	**275**	**275**	**275**	**275**	–	–	–	1FG1302- . . ■ ■ **2** - ■ . **S1** -Z
Max. output speed n_{2max} = **172 rpm**, Transmission ratio i = **25.34**																					
106	102	154	121	245	235	–	–	–	–	–	–	–	–	–	–	–	–	–	–	–	1FG1302- . . ■ ■ **6** - ■ . **R1** -Z
–	–	–	–	–	235	265	**265**	**265**	**265**	**265**	**265**	**265**	**265**	**265**	–	–	–	–	–	–	1FG1302- . . ■ ■ **4** - ■ . **R1** -Z
–	–	–	–	245	–	265	**265**	**265**	**265**	**265**	**265**	**265**	**265**	**265**	**265**	**265**	**265**	–	–	–	1FG1302- . . ■ ■ **3** - ■ . **R1** -Z
–	–	–	–	245	–	–	**265**	–	**265**	**265**	**265**	–	**265**	**265**	**265**	**265**	**265**	–	–	–	1FG1302- . . ■ ■ **2** - ■ . **R1** -Z
Max. output speed n_{2max} = **186 rpm**, Transmission ratio i = **23.39**																					
98	94	142	112	230	215	–	–	–	–	–	–	–	–	–	–	–	–	–	–	–	1FG1302- . . ■ ■ **6** - ■ . **Q1** -Z
–	–	–	–	–	215	245	**260**	**260**	**260**	**260**	**260**	**260**	**260**	**260**	–	–	–	–	–	–	1FG1302- . . ■ ■ **4** - ■ . **Q1** -Z
–	–	–	–	230	–	245	**260**	**260**	**260**	**260**	**260**	**260**	**260**	**260**	**260**	**260**	**260**	–	–	–	1FG1302- . . ■ ■ **3** - ■ . **Q1** -Z
–	–	–	–	230	–	–	**260**	–	**260**	**260**	**260**	–	**260**	**260**	**260**	**260**	**260**	–	–	–	1FG1302- . . ■ ■ **2** - ■ . **Q1** -Z
Max. output speed n_{2max} = **210 rpm**, Transmission ratio i = **20.71**																					
87	83	126	99	205	195	–	–	–	–	–	–	–	–	–	–	–	–	–	–	–	1FG1302- . . ■ ■ **6** - ■ . **P1** -Z
–	–	–	–	–	195	220	**250**	**250**	**250**	**250**	**250**	**250**	**250**	**250**	–	–	–	–	–	–	1FG1302- . . ■ ■ **4** - ■ . **P1** -Z
–	–	–	–	205	–	220	**250**	**250**	**250**	**250**	**250**	**250**	**250**	**250**	**250**	**250**	**250**	–	–	–	1FG1302- . . ■ ■ **3** - ■ . **P1** -Z
–	–	–	–	205	–	–	**250**	–	**250**	**250**	**250**	–	**250**	**250**	**250**	**250**	**250**	–	–	–	1FG1302- . . ■ ■ **2** - ■ . **P1** -Z
Max. output speed n_{2max} = **252 rpm**, Transmission ratio i = **17.24**																					
73	69	105	82	170	162	–	–	–	–	–	–	–	–	–	–	–	–	–	–	–	1FG1302- . . ■ ■ **6** - ■ . **N1** -Z
–	–	–	–	–	162	183	**235**	**235**	**235**	**235**	**235**	**235**	**235**	**235**	–	–	–	–	–	–	1FG1302- . . ■ ■ **4** - ■ . **N1** -Z
–	–	–	–	170	–	183	**235**	**235**	**235**	**235**	**235**	**235**	**235**	**235**	**235**	**235**	**235**	–	–	–	1FG1302- . . ■ ■ **3** - ■ . **N1** -Z
–	–	–	–	170	–	–	**235**	–	**235**	**235**	**235**	–	**235**	**235**	**235**	**235**	**235**	–	–	–	1FG1302- . . ■ ■ **2** - ■ . **N1** -Z
Max. output speed n_{2max} = **268 rpm**, Transmission ratio i = **16.22**																					
69	65	99	78	161	153	–	–	–	–	–	–	–	–	–	–	–	–	–	–	–	1FG1302- . . ■ ■ **6** - ■ . **M1** -Z
–	–	–	–	–	153	172	**230**	**230**	**230**	**230**	**230**	**230**	**230**	**230**	–	–	–	–	–	–	1FG1302- . . ■ ■ **4** - ■ . **M1** -Z
–	–	–	–	161	–	172	**230**	**230**	**230**	**230**	**230**	**230**	**230**	**230**	**230**	**230**	**230**	–	–	–	1FG1302- . . ■ ■ **3** - ■ . **M1** -Z
–	–	–	–	161	–	–	**230**	–	**230**	**230**	**230**	–	**230**	**230**	**230**	**230**	**230**	–	–	–	1FG1302- . . ■ ■ **2** - ■ . **M1** -Z
Max. output speed n_{2max} = **299 rpm**, Transmission ratio i = **14.54**																					
62	59	89	70	144	137	–	–	–	–	–	–	–	–	–	–	–	–	–	–	–	1FG1302- . . ■ ■ **6** - ■ . **L1** -Z
–	–	–	–	–	137	155	**220**	**220**	**220**	**220**	**220**	**220**	**220**	**220**	–	–	–	–	–	–	1FG1302- . . ■ ■ **4** - ■ . **L1** -Z
–	–	–	–	144	–	155	**220**	**220**	**220**	**220**	**220**	**220**	**220**	**220**	**220**	**220**	**220**	–	–	–	1FG1302- . . ■ ■ **3** - ■ . **L1** -Z
–	–	–	–	144	–	–	**220**	–	**220**	**220**	**220**	–	**220**	**220**	**220**	**220**	**220**	–	–	–	1FG1302- . . ■ ■ **2** - ■ . **L1** -Z
Max. output speed n_{2max} = **351 rpm**, Transmission ratio i = **12.38**																					
52	50	76	59	123	117	–	–	–	–	–	–	–	–	–	–	–	–	–	–	–	1FG1302- . . ■ ■ **6** - ■ . **K1** -Z
–	–	–	–	–	117	132	210	200	**210**	**210**	**210**	**210**	**210**	**210**	–	–	–	–	–	–	1FG1302- . . ■ ■ **4** - ■ . **K1** -Z
–	–	–	–	123	–	132	210	200	**210**	**210**	**210**	**210**	**210**	**210**	**210**	**210**	**210**	–	–	–	1FG1302- . . ■ ■ **3** - ■ . **K1** -Z
–	–	–	–	123	–	–	210	–	**210**	**210**	**210**	–	**210**	**210**	**210**	**210**	**210**	–	–	–	1FG1302- . . ■ ■ **2** - ■ . **K1** -Z

Motor shaft height:

36																					**C**	
			48																		**D**	
							63														**E**	
												80									**F**	
																	100				**G**	

Motor length/motor version (**CT** = Compact. **HD** = High Dynamic)**:**

			0/CT				**0/CT**					**0/CT**						**0/CT**				**0**	**2**
													1/CT						**1/CT**			**1**	**2**
								1/HD														**1**	**4**
2/CT				**2/CT**					**2/CT**													**2**	**2**
										3/CT				**3/CT**						**3/CT**		**3**	**2**
	3/HD				**3/HD**																	**3**	**4**
		4/CT														**4/CT**						**4**	**2**
						4/HD					**4/HD**											**4**	**4**
																				5/CT		**5**	**2**
																5/HD						**5**	**4**
																	6/HD					**6**	**4**

Selection of shaft design, encoder system, mounting type and special designs on page 4/13.

1FG1302- ■ ■ . . . - ■ . . -Z

© Siemens 2019

Gearbox size 39, 2-stage – 1FG1302

For line voltage 380 ... 480 V 3 AC (DC link voltage 510 ... 720 V DC) **– Gearbox type** ***FZ39***

Geared motor torque at 1450 rpm
Note: All values in **bold** print are maximum gearbox values.
M_{2dyn}
Nm

Servo parallel shaft geared motors SIMOTICS S-1FG1
Article No.

Max. output speed n_{2max} = **410 rpm**, Transmission ratio i = **10.61**																						
–	–	–	–	–	–	–	–	–	–	–	–	–	–	–	–	–	–	–	–	–	–	1FG1302- . . ■ ■ 6 - ■ . J1 -Z
–	–	–	–	–	–	–	181	174	**199**	**199**	**199**	**199**	**199**	**199**	–	–	–	–	–	–	–	1FG1302- . . ■ ■ 4 - ■ . J1 -Z
–	–	–	–	–	–	–	181	174	**199**	**199**	**199**	**199**	**199**	**199**	**199**	**199**	**199**	–	–	–	–	1FG1302- . . ■ ■ 3 - ■ . J1 -Z
–	–	–	–	–	–	–	181	–	**199**	**199**	**199**	–	**199**	**199**	**199**	**199**	**199**	–	–	–	–	1FG1302- . . ■ ■ 2 - ■ . J1 -Z
Max. output speed n_{2max} = **476 rpm**, Transmission ratio i = **9.13**																						
–	–	–	–	–	–	–	–	–	–	–	–	–	–	–	–	–	–	–	–	–	–	1FG1302- . . ■ ■ 6 - ■ . H1 -Z
–	–	–	–	–	–	–	156	150	**189**	**189**	**189**	**189**	**189**	**189**	–	–	–	–	–	–	–	1FG1302- . . ■ ■ 4 - ■ . H1 -Z
–	–	–	–	–	–	–	156	150	**189**	**189**	**189**	**189**	**189**	**189**	**189**	**189**	**189**	–	–	–	–	1FG1302- . . ■ ■ 3 - ■ . H1 -Z
–	–	–	–	–	–	–	156	–	**189**	**189**	**189**	–	**189**	**189**	**189**	**189**	**189**	–	–	–	–	1FG1302- . . ■ ■ 2 - ■ . H1 -Z
Max. output speed n_{2max} = **537 rpm**, Transmission ratio i = **8.1**																						
34	33	50	39	81	77	–	–	–	–	–	–	–	–	–	–	–	–	–	–	–	–	1FG1302- . . ■ ■ 6 - ■ . G1 -Z
–	–	–	–	–	77	87	139	134	**167**	**167**	**167**	**167**	**167**	**167**	–	–	–	–	–	–	–	1FG1302- . . ■ ■ 4 - ■ . G1 -Z
–	–	–	–	81	–	87	139	134	**167**	**167**	**167**	**167**	**167**	**167**	**167**	**167**	**167**	–	–	–	–	1FG1302- . . ■ ■ 3 - ■ . G1 -Z
–	–	–	–	81	–	–	139	–	**167**	**167**	**167**	–	**167**	**167**	**167**	**167**	**167**	–	–	–	–	1FG1302- . . ■ ■ 2 - ■ . G1 -Z
Max. output speed n_{2max} = **645 rpm**, Transmission ratio i = **6.74**																						
29	27	41	32	67	64	–	–	–	–	–	–	–	–	–	–	–	–	–	–	–	–	1FG1302- . . ■ ■ 6 - ■ . F1 -Z
–	–	–	–	–	64	72	116	111	**152**	**152**	**152**	**152**	**152**	**152**	–	–	–	–	–	–	–	1FG1302- . . ■ ■ 4 - ■ . F1 -Z
–	–	–	–	67	–	72	116	111	**152**	**152**	**152**	**152**	**152**	**152**	**152**	**152**	**152**	–	–	–	–	1FG1302- . . ■ ■ 3 - ■ . F1 -Z
–	–	–	–	67	–	–	116	–	**152**	**152**	**152**	–	**152**	**152**	**152**	**152**	**152**	–	–	–	–	1FG1302- . . ■ ■ 2 - ■ . F1 -Z
Max. output speed n_{2max} = **685 rpm**, Transmission ratio i = **6.35**																						
27	26	39	31	64	60	–	–	–	–	–	–	–	–	–	–	–	–	–	–	–	–	1FG1302- . . ■ ■ 6 - ■ . E1 -Z
–	–	–	–	–	60	68	109	105	**149**	**149**	**149**	**149**	**149**	**149**	–	–	–	–	–	–	–	1FG1302- . . ■ ■ 4 - ■ . E1 -Z
–	–	–	–	64	–	68	109	105	**149**	**149**	**149**	**149**	**149**	**149**	**149**	**149**	**149**	–	–	–	–	1FG1302- . . ■ ■ 3 - ■ . E1 -Z
–	–	–	–	64	–	–	109	–	**149**	**149**	**149**	–	**149**	**149**	**149**	**149**	**149**	–	–	–	–	1FG1302- . . ■ ■ 2 - ■ . E1 -Z
Max. output speed n_{2max} = **764 rpm**, Transmission ratio i = **5.69**																						
24	23	35	27	57	54	–	–	–	–	–	–	–	–	–	–	–	–	–	–	–	–	1FG1302- . . ■ ■ 6 - ■ . D1 -Z
–	–	–	–	–	54	61	98	94	**140**	**140**	**140**	136	**140**	**140**	–	–	–	–	–	–	–	1FG1302- . . ■ ■ 4 - ■ . D1 -Z
–	–	–	–	57	–	61	98	94	**140**	**140**	**140**	136	**140**	**140**	**140**	**140**	**140**	–	–	–	–	1FG1302- . . ■ ■ 3 - ■ . D1 -Z
–	–	–	–	57	–	–	98	–	**140**	**140**	**140**	–	**140**	**140**	**140**	**140**	**140**	–	–	–	–	1FG1302- . . ■ ■ 2 - ■ . D1 -Z
Max. output speed n_{2max} = **899 rpm**, Transmission ratio i = **4.84**																						
20	20	30	23	48	46	–	–	–	–	–	–	–	–	–	–	–	–	–	–	–	–	1FG1302- . . ■ ■ 6 - ■ . C1 -Z
–	–	–	–	–	46	52	83	80	120	**128**	**128**	116	**128**	**128**	–	–	–	–	–	–	–	1FG1302- . . ■ ■ 4 - ■ . C1 -Z
–	–	–	–	48	–	52	83	80	120	**128**	**128**	116	**128**	**128**	**128**	**128**	**128**	–	–	–	–	1FG1302- . . ■ ■ 3 - ■ . C1 -Z
–	–	–	–	48	–	–	83	–	120	**128**	**128**	–	**128**	**128**	**128**	**128**	**128**	–	–	–	–	1FG1302- . . ■ ■ 2 - ■ . C1 -Z

Motor shaft height:

36																						**C**
			48																			**D**
							63															**E**
												80										**F**
																	100					**G**

Motor length/motor version (**CT** = Compact. **HD** = High Dynamic)**:**

			0/CT				**0/CT**					**0/CT**						**0/CT**					**0**	**2**
													1/CT						**1/CT**				**1**	**2**
								1/HD															**1**	**4**
2/CT				**2/CT**					**2/CT**														**2**	**2**
										3/CT				**3/CT**						**3/CT**			**3**	**2**
	3/HD				**3/HD**																		**3**	**4**
		4/CT														**4/CT**							**4**	**2**
						4/HD					**4/HD**													**4**	**4**
																				5/CT			**5**	**2**
															5/HD								**5**	**4**
																6/HD							**6**	**4**

Selection of shaft design, encoder system, mounting type and special designs on page 4/13.

1FG1302- ■ ■ . . . - ■ . . -Z

© Siemens 2019

For line voltage 380 ... 480 V 3 AC (DC link voltage 510 ... 720 V DC) **– Gearbox type** ***FZ39***

Geared motor torque at 1450 rpm
Note: All values in **bold** print are maximum gearbox values.
M_{2dyn}
Nm

Servo parallel shaft geared motors SIMOTICS S-1FG1
Article No.

Max. output speed n_{2max} = **1048 rpm**, Transmission ratio i = **4.15**																						
–	–	–	–	–	–	–	–	–	–	–	–	–	–	–	–	–	–	–	–	–	**1FG1302-** . . ■ ■ **6** - ■ . **B1** **-Z**	
–	–	–	–	–	–	–	71	68	103	**118**	**118**	99	**118**	**118**	–	–	–	–	–	–	**1FG1302-** . . ■ ■ **4** - ■ . **B1** **-Z**	
–	–	–	–	–	–	–	71	68	103	**118**	**118**	99	**118**	**118**	**118**	**118**	**118**	–	–	–	**1FG1302-** . . ■ ■ **3** - ■ . **B1** **-Z**	
–	–	–	–	–	–	–	71	–	103	**118**	**118**	–	**118**	**118**	**118**	**118**	**118**	–	–	–	**1FG1302-** . . ■ ■ **2** - ■ . **B1** **-Z**	
Max. output speed n_{2max} = **1218 rpm**, Transmission ratio i = **3.57**																						
–	–	–	–	–	–	–	–	–	–	–	–	–	–	–	–	–	–	–	–	–	**1FG1302-** . . ■ ■ **6** - ■ . **A1** **-Z**	
–	–	–	–	–	–	–	61	59	89	**108**	**108**	85	**108**	**108**	–	–	–	–	–	–	**1FG1302-** . . ■ ■ **4** - ■ . **A1** **-Z**	
–	–	–	–	–	–	–	61	59	89	**108**	**108**	85	**108**	**108**	**108**	**108**	**108**	–	–	–	**1FG1302-** . . ■ ■ **3** - ■ . **A1** **-Z**	
–	–	–	–	–	–	–	61	–	89	**108**	**108**	–	**108**	**108**	**108**	**108**	**108**	–	–	–	**1FG1302-** . . ■ ■ **2** - ■ . **A1** **-Z**	

Motor shaft height:

36																					**C**	
			48																		**D**	
							63														**E**	
												80									**F**	
																	100				**G**	

Motor length/motor version (**CT** = Compact. **HD** = High Dynamic)**:**

			0/CT				**0/CT**					**0/CT**					**0/CT**				**0**		**2**
													1/CT					**1/CT**			**1**		**2**
								1/HD													**1**		**4**
2/CT				**2/CT**					**2/CT**												**2**		**2**
										3/CT				**3/CT**					**3/CT**		**3**		**2**
	3/HD				**3/HD**																**3**		**4**
		4/CT														**4/CT**					**4**		**2**
						4/HD					**4/HD**										**4**		**4**
																			5/CT		**5**		**2**
																5/HD					**5**		**4**
																	6/HD				**6**		**4**

Selection of shaft design, encoder system, mounting type and special designs on page 4/13.

1FG1302- ■ ■ . . . . - . ■ . . **-Z**

© Siemens 2019

Gearbox size 39, 2-stage – 1FG1302

Selection and ordering data (continued)

For line voltage 200 ... 240 V 1 AC (DC link voltage 270 ... 330 V DC) **– Gearbox type** ***FZ39***

Max. output speed n_{2max} rpm	Transmission ratio i	Geared motor torque at 1450 rpm Note: All values in **bold** print are maximum gearbox values. M_{2dyn} Nm					**Servo parallel shaft geared motors SIMOTICS S-1FG1** Article No.
69	**65.21**	265	255	**315**	**315**	**315**	**1FG1302- . . ■ ■ 3 - ■ . B2 -Z**
78	**57.99**	240	225	**310**	**310**	**310**	**1FG1302- . . ■ ■ 3 - ■ . A2 -Z**
88	**50.91**	210	200	305	**305**	**305**	**1FG1302- . . ■ ■ 3 - ■ . X1 -Z**
97	**46.29**	194	185	280	**305**	**305**	**1FG1302- . . ■ ■ 3 - ■ . W1 -Z**
114	**39.6**	165	158	235	**305**	**305**	**1FG1302- . . ■ ■ 3 - ■ . V1 -Z**
121	**36**	151	144	215	**300**	**300**	**1FG1302- . . ■ ■ 3 - ■ . U1 -Z**
137	**31.82**	133	127	193	**285**	**285**	**1FG1302- . . ■ ■ 3 - ■ . T1 -Z**
150	**28.93**	121	116	175	**275**	265	**1FG1302- . . ■ ■ 3 - ■ . S1 -Z**
172	**25.34**	106	102	154	245	235	**1FG1302- . . ■ ■ 3 - ■ . R1 -Z**
186	**23.39**	98	94	142	230	215	**1FG1302- . . ■ ■ 3 - ■ . Q1 -Z**
210	**20.71**	87	83	126	205	195	**1FG1302- . . ■ ■ 3 - ■ . P1 -Z**
252	**17.24**	73	69	105	170	162	**1FG1302- . . ■ ■ 3 - ■ . N1 -Z**
268	**16.22**	69	65	99	161	153	**1FG1302- . . ■ ■ 3 - ■ . M1 -Z**
299	**14.54**	62	59	89	144	137	**1FG1302- . . ■ ■ 3 - ■ . L1 -Z**
351	**12.38**	52	50	76	123	117	**1FG1302- . . ■ ■ 3 - ■ . K1 -Z**
537	**8.1**	34	33	50	81	77	**1FG1302- . . ■ ■ 3 - ■ . G1 -Z**
645	**6.74**	29	27	41	67	64	**1FG1302- . . ■ ■ 3 - ■ . F1 -Z**
685	**6.35**	27	26	39	64	60	**1FG1302- . . ■ ■ 3 - ■ . E1 -Z**
764	**5.69**	24	23	35	57	54	**1FG1302- . . ■ ■ 3 - ■ . D1 -Z**
899	**4.84**	20	20	30	48	46	**1FG1302- . . ■ ■ 3 - ■ . C1 -Z**

Motor shaft height:

	36					**C**	
				48		**D**	

Motor length/motor version (**CT** = Compact, **HD** = High Dynamic)**:**

2/CT			**2/CT**			**2**	**1**
	3/HD			**3/HD**		**3**	**3**
		4/CT				**4**	**1**

Selection of shaft design, encoder system, mounting type and special designs on page 4/13.

1FG1302- ■ ■ . . . - ■ . . -Z

© Siemens 2019

Technical specifications

Gearbox type *FD39*

Servo geared motor Type	i	R_{ex}	M_{2rated} Nm	M_{2max} Nm	$M_{2Em.Off}$ Nm	n_{2max} rpm	n_{1max} rpm	φ [1] '	F_{R2} N	F_{R2max} N	c_T Nm/ '	J_G 10^{-4} kgm^2
1FG1402-.....-..R1	274.26	32637/119	290	325	490	16	4500	6.90	5820	5690	26.2	0.04
1FG1402-.....-..Q1	243.26	8514/35	290	325	490	18	4500	6.96	5820	5690	26.2	0.05
1FG1402-.....-..P1	211.06	251163/1190	290	325	490	21	4500	6.98	5820	5690	26.2	0.05
1FG1402-.....-..N1	191.87	22833/119	290	325	490	23	4500	6.98	5820	5690	26.2	0.07
1FG1402-.....-..M1	164.56	97911/595	290	325	490	27	4500	7.00	5820	5690	26.2	0.08
1FG1402-.....-..L1	149.6	17802/119	290	325	490	30	4500	7.00	5820	5690	26.2	0.1
1FG1402-.....-..K1	131.17	15609/119	290	325	490	34	4500	7.02	5820	5690	26.2	0.12
1FG1402-.....-..J1	117.08	13932/119	290	325	490	38	4500	7.03	5820	5690	26.2	0.14
1FG1402-.....-..H1	104.34	7095/68	290	325	490	43	4500	7.05	5820	5690	26.2	0.17
1FG1402-.....-..G1	96.31	21285/221	290	325	490	47	4500	7.05	5820	5690	26.2	0.21
1FG1402-.....-..F1	84.32	140481/1666	290	325	490	53	4500	7.09	5820	5690	26.2	0.23
1FG1402-.....-..E1	73.93	43989/595	290	320	490	61	4500	7.13	5820	5700	26.2	0.24
1FG1402-.....-..D1	67.07	63855/952	290	315	490	67	4500	7.15	5820	5720	26.2	0.3
1FG1402-.....-..C1	63.13	127710/2023	290	315	490	71	4500	7.15	5820	5720	26.2	0.35
1FG1402-.....-..B1	55.65	946/17	290	310	490	81	4500	7.20	5820	5740	26.2	0.39
1FG1402-.....-..A1	48.29	114939/2380	290	305	490	93	4500	7.20	5820	5760	26.2	0.52

Selection and ordering data

Shaft design, encoder system, mounting type and special designs

Gearbox type *FD39*

			Servo parallel shaft geared motors SIMOTICS S-1FG1 Article No.
			1FG1402- ■ ■ . . . - . ■ . . **-Z**
Shaft design:	Solid shaft with feather keyway	– Design 1	**1**
		– Design 3	**3**
	Hollow-shaft with feather keyway	– Design 1 – H30	**5**
		– Design 2 – H25	**6**
Order codes and Descriptions see chapter "Options"	Special shaft design		**9**
Encoder system for motors with DRIVE-CLiQ interface:	AS20DQI encoder		**Q**
	AM20DQI encoder		**R**
	R14DQ resolver		**P**
	R15DQ resolver		**U**
Order codes and Descriptions see chapter "Options"	Special version encoder system		**Z**
Mounting type:	Foot-mounted design		**A**
	Flange-mounted design		**F**
	Housing flange design		**H**
	Shaft-mounted design (not possible with solid shaft)		**D**
Special designs (Options): Order codes and Descriptions see chapter "Options" The following order codes must be added to each article number: • Oil type – order codes **K06** or **K11** • Mounting position – order codes **D01** ... **D06**			**-Z**

Selection of 3-stages servo parallel shaft geared motors with gearbox size 39 from next page. **1FG1402-** . . ■ ■ ■ - ■ . ■ ■ **-Z**

[1] Data are for option reduced-backlash version – order code **G99** required.

© Siemens 2019

Gearbox size 39, 3-stage – 1FG1402

Selection and ordering data (continued)

For line voltage 380 ... 480 V 3 AC (DC link voltage 510 ... 720 V DC) **– Gearbox type** ***FD39***

Geared motor torque at 1450 rpm
Note: All values in **bold** print are maximum gearbox values.
M_{2dyn}
Nm

																						Servo parallel shaft geared motors SIMOTICS S-1FG1 Article No.
Max. output speed n_{2max} = **16 rpm**, Transmission ratio i = **274.26**																						
325	**325**	**325**	**325**	**325**	**325**	–	–	–	–	–	–	–	–	–	–	–	–	–	–	–	–	1FG1402- . . ■ ■ 6 - ■ . R1 -Z
–	–	–	–	–	**325**	**325**	–	–	–	–	–	–	–	–	–	–	–	–	–	–	–	1FG1402- . . ■ ■ 4 - ■ . R1 -Z
–	–	–	–	**325**	–	**325**	–	–	–	–	–	–	–	–	–	–	–	–	–	–	–	1FG1402- . . ■ ■ 3 - ■ . R1 -Z
–	–	–	–	**325**	–	–	–	–	–	–	–	–	–	–	–	–	–	–	–	–	–	1FG1402- . . ■ ■ 2 - ■ . R1 -Z
Max. output speed n_{2max} = **18 rpm**, Transmission ratio i = **243.26**																						
325	**325**	**325**	**325**	**325**	**325**	–	–	–	–	–	–	–	–	–	–	–	–	–	–	–	–	1FG1402- . . ■ ■ 6 - ■ . Q1 -Z
–	–	–	–	–	**325**	**325**	**325**	**325**	**325**	**325**	**325**	–	–	–	–	–	–	–	–	–	–	1FG1402- . . ■ ■ 4 - ■ . Q1 -Z
–	–	–	–	**325**	–	**325**	**325**	**325**	**325**	**325**	**325**	–	–	–	–	–	–	–	–	–	–	1FG1402- . . ■ ■ 3 - ■ . Q1 -Z
–	–	–	–	**325**	–	–	**325**	–	**325**	**325**	**325**	–	–	–	–	–	–	–	–	–	–	1FG1402- . . ■ ■ 2 - ■ . Q1 -Z
Max. output speed n_{2max} = **21 rpm**, Transmission ratio i = **211.06**																						
325	**325**	**325**	**325**	**325**	**325**	–	–	–	–	–	–	–	–	–	–	–	–	–	–	–	–	1FG1402- . . ■ ■ 6 - ■ . P1 -Z
–	–	–	–	–	**325**	**325**	**325**	**325**	**325**	**325**	**325**	–	–	–	–	–	–	–	–	–	–	1FG1402- . . ■ ■ 4 - ■ . P1 -Z
–	–	–	–	**325**	–	**325**	**325**	**325**	**325**	**325**	**325**	–	–	–	–	–	–	–	–	–	–	1FG1402- . . ■ ■ 3 - ■ . P1 -Z
–	–	–	–	**325**	–	–	**325**	–	**325**	**325**	**325**	–	–	–	–	–	–	–	–	–	–	1FG1402- . . ■ ■ 2 - ■ . P1 -Z
Max. output speed n_{2max} = **23 rpm**, Transmission ratio i = **191.87**																						
325	**325**	**325**	**325**	**325**	**325**	–	–	–	–	–	–	–	–	–	–	–	–	–	–	–	–	1FG1402- . . ■ ■ 6 - ■ . N1 -Z
–	–	–	–	–	**325**	**325**	**325**	**325**	**325**	**325**	**325**	–	–	–	–	–	–	–	–	–	–	1FG1402- . . ■ ■ 4 - ■ . N1 -Z
–	–	–	–	**325**	–	**325**	**325**	**325**	**325**	**325**	**325**	–	–	–	–	–	–	–	–	–	–	1FG1402- . . ■ ■ 3 - ■ . N1 -Z
–	–	–	–	**325**	–	–	**325**	–	**325**	**325**	**325**	–	–	–	–	–	–	–	–	–	–	1FG1402- . . ■ ■ 2 - ■ . N1 -Z
Max. output speed n_{2max} = **27 rpm**, Transmission ratio i = **164.56**																						
325	**325**	**325**	**325**	**325**	**325**	–	–	–	–	–	–	–	–	–	–	–	–	–	–	–	–	1FG1402- . . ■ ■ 6 - ■ . M1 -Z
–	–	–	–	–	**325**	**325**	**325**	**325**	**325**	**325**	**325**	–	–	–	–	–	–	–	–	–	–	1FG1402- . . ■ ■ 4 - ■ . M1 -Z
–	–	–	–	**325**	–	**325**	**325**	**325**	**325**	**325**	**325**	–	–	–	–	–	–	–	–	–	–	1FG1402- . . ■ ■ 3 - ■ . M1 -Z
–	–	–	–	**325**	–	–	**325**	–	**325**	**325**	**325**	–	–	–	–	–	–	–	–	–	–	1FG1402- . . ■ ■ 2 - ■ . M1 -Z
Max. output speed n_{2max} = **30 rpm**, Transmission ratio i = **149.6**																						
325	**325**	**325**	**325**	**325**	**325**	–	–	–	–	–	–	–	–	–	–	–	–	–	–	–	–	1FG1402- . . ■ ■ 6 - ■ . L1 -Z
–	–	–	–	–	**325**	**325**	**325**	**325**	**325**	**325**	**325**	–	–	–	–	–	–	–	–	–	–	1FG1402- . . ■ ■ 4 - ■ . L1 -Z
–	–	–	–	**325**	–	**325**	**325**	**325**	**325**	**325**	**325**	–	–	–	–	–	–	–	–	–	–	1FG1402- . . ■ ■ 3 - ■ . L1 -Z
–	–	–	–	**325**	–	–	**325**	–	**325**	**325**	**325**	–	–	–	–	–	–	–	–	–	–	1FG1402- . . ■ ■ 2 - ■ . L1 -Z
Max. output speed n_{2max} = **34 rpm**, Transmission ratio i = **131.17**																						
325	**325**	**325**	**325**	**325**	**325**	–	–	–	–	–	–	–	–	–	–	–	–	–	–	–	–	1FG1402- . . ■ ■ 6 - ■ . K1 -Z
–	–	–	–	–	**325**	**325**	**325**	**325**	**325**	**325**	**325**	**325**	**325**	**325**	–	–	–	–	–	–	–	1FG1402- . . ■ ■ 4 - ■ . K1 -Z
–	–	–	–	**325**	–	**325**	**325**	**325**	**325**	**325**	**325**	**325**	**325**	**325**	**325**	**325**	**325**	–	–	–	–	1FG1402- . . ■ ■ 3 - ■ . K1 -Z
–	–	–	–	**325**	–	–	**325**	–	**325**	**325**	**325**	–	**325**	**325**	**325**	**325**	**325**	–	–	–	–	1FG1402- . . ■ ■ 2 - ■ . K1 -Z

Motor shaft height:

| | | | | | | | | | | | | | | | | | | |

© Siemens 2019

For line voltage 380 ... 480 V 3 AC (DC link voltage 510 ... 720 V DC) **– Gearbox type** ***FD39***

Geared motor torque at 1450 rpm
Note: All values in **bold** print are maximum gearbox values.
M_{2dyn}
Nm

Servo parallel shaft geared motors SIMOTICS S-1FG1
Article No.

Max. output speed n_{2max} = **38 rpm**, Transmission ratio i = **117.08**																						
325	**325**	**325**	**325**	**325**	**325**	–	–	–	–	–	–	–	–	–	–	–	–	–	–	–	–	1FG1402- . . ■ ■ **6** - ■ . **J1** -Z
–	–	–	–	–	**325**	**325**	**325**	**325**	**325**	**325**	**325**	**325**	**325**	**325**	–	–	–	–	–	–	–	1FG1402- . . ■ ■ **4** - ■ . **J1** -Z
–	–	–	–	**325**	–	**325**	**325**	**325**	**325**	**325**	**325**	**325**	**325**	**325**	**325**	**325**	**325**	–	–	–	–	1FG1402- . . ■ ■ **3** - ■ . **J1** -Z
–	–	–	–	**325**	–	–	**325**	–	**325**	**325**	**325**	–	**325**	**325**	**325**	**325**	**325**	–	–	–	–	1FG1402- . . ■ ■ **2** - ■ . **J1** -Z
Max. output speed n_{2max} = **43 rpm**, Transmission ratio i = **104.34**																						
325	**325**	**325**	**325**	**325**	**325**	–	–	–	–	–	–	–	–	–	–	–	–	–	–	–	–	1FG1402- . . ■ ■ **6** - ■ . **H1** -Z
–	–	–	–	–	**325**	**325**	**325**	**325**	**325**	**325**	**325**	**325**	**325**	**325**	–	–	–	–	–	–	–	1FG1402- . . ■ ■ **4** - ■ . **H1** -Z
–	–	–	–	**325**	–	**325**	**325**	**325**	**325**	**325**	**325**	**325**	**325**	**325**	**325**	**325**	**325**	–	–	–	–	1FG1402- . . ■ ■ **3** - ■ . **H1** -Z
–	–	–	–	**325**	–	–	**325**	–	**325**	**325**	**325**	–	**325**	**325**	**325**	**325**	**325**	–	–	–	–	1FG1402- . . ■ ■ **2** - ■ . **H1** -Z
Max. output speed n_{2max} = **47 rpm**, Transmission ratio i = **96.31**																						
325	**325**	**325**	**325**	**325**	**325**	–	–	–	–	–	–	–	–	–	–	–	–	–	–	–	–	1FG1402- . . ■ ■ **6** - ■ . **G1** -Z
–	–	–	–	–	**325**	**325**	**325**	**325**	**325**	**325**	**325**	**325**	**325**	**325**	–	–	–	–	–	–	–	1FG1402- . . ■ ■ **4** - ■ . **G1** -Z
–	–	–	–	**325**	–	**325**	**325**	**325**	**325**	**325**	**325**	**325**	**325**	**325**	**325**	**325**	**325**	–	–	–	–	1FG1402- . . ■ ■ **3** - ■ . **G1** -Z
–	–	–	–	**325**	–	–	**325**	–	**325**	**325**	**325**	–	**325**	**325**	**325**	**325**	**325**	–	–	–	–	1FG1402- . . ■ ■ **2** - ■ . **G1** -Z
Max. output speed n_{2max} = **53 rpm**, Transmission ratio i = **84.32**																						
325	325	**325**	**325**	**325**	**325**	–	–	–	–	–	–	–	–	–	–	–	–	–	–	–	–	1FG1402- . . ■ ■ **6** - ■ . **F1** -Z
–	–	–	–	–	**325**	**325**	**325**	**325**	**325**	**325**	**325**	**325**	**325**	**325**	–	–	–	–	–	–	–	1FG1402- . . ■ ■ **4** - ■ . **F1** -Z
–	–	–	–	**325**	–	**325**	**325**	**325**	**325**	**325**	**325**	**325**	**325**	**325**	**325**	**325**	**325**	–	–	–	–	1FG1402- . . ■ ■ **3** - ■ . **F1** -Z
–	–	–	–	**325**	–	–	**325**	–	**325**	**325**	**325**	–	**325**	**325**	**325**	**325**	**325**	–	–	–	–	1FG1402- . . ■ ■ **2** - ■ . **F1** -Z
Max. output speed n_{2max} = **61 rpm**, Transmission ratio i = **73.93**																						
300	285	**320**	**320**	**320**	**320**	–	–	–	–	–	–	–	–	–	–	–	–	–	–	–	–	1FG1402- . . ■ ■ **6** - ■ . **E1** -Z
–	–	–	–	–	**320**	**320**	**320**	**320**	**320**	**320**	**320**	**320**	**320**	**320**	–	–	–	–	–	–	–	1FG1402- . . ■ ■ **4** - ■ . **E1** -Z
–	–	–	–	**320**	–	**320**	**320**	**320**	**320**	**320**	**320**	**320**	**320**	**320**	**320**	**320**	**320**	–	–	–	–	1FG1402- . . ■ ■ **3** - ■ . **E1** -Z
–	–	–	–	**320**	–	–	**320**	–	**320**	**320**	**320**	–	**320**	**320**	**320**	**320**	**320**	–	–	–	–	1FG1402- . . ■ ■ **2** - ■ . **E1** -Z
Max. output speed n_{2max} = **67 rpm**, Transmission ratio i = **67.07**																						
270	260	**315**	310	**315**	**315**	–	–	–	–	–	–	–	–	–	–	–	–	–	–	–	–	1FG1402- . . ■ ■ **6** - ■ . **D1** -Z
–	–	–	–	–	**315**	**315**	**315**	**315**	**315**	**315**	**315**	**315**	**315**	**315**	–	–	–	–	–	–	–	1FG1402- . . ■ ■ **4** - ■ . **D1** -Z
–	–	–	–	**315**	–	**315**	**315**	**315**	**315**	**315**	**315**	**315**	**315**	**315**	**315**	**315**	**315**	–	–	–	–	1FG1402- . . ■ ■ **3** - ■ . **D1** -Z
–	–	–	–	**315**	–	–	**315**	–	**315**	**315**	**315**	–	**315**	**315**	**315**	**315**	**315**	–	–	–	–	1FG1402- . . ■ ■ **2** - ■ . **D1** -Z
Max. output speed n_{2max} = **71 rpm**, Transmission ratio i = **63.13**																						
255	245	**315**	290	**315**	**315**	–	–	–	–	–	–	–	–	–	–	–	–	–	–	–	–	1FG1402- . . ■ ■ **6** - ■ . **C1** -Z
–	–	–	–	–	**315**	**315**	**315**	**315**	**315**	**315**	**315**	**315**	**315**	**315**	–	–	–	–	–	–	–	1FG1402- . . ■ ■ **4** - ■ . **C1** -Z
–	–	–	–	**315**	–	**315**	**315**	**315**	**315**	**315**	**315**	**315**	**315**	**315**	**315**	**315**	**315**	–	–	–	–	1FG1402- . . ■ ■ **3** - ■ . **C1** -Z
–	–	–	–	**315**	–	–	**315**	–	**315**	**315**	**315**	–	**315**	**315**	**315**	**315**	**315**	–	–	–	–	1FG1402- . . ■ ■ **2** - ■ . **C1** -Z

Motor shaft height:

36																						**C**	
			48																			**D**	
							63															**E**	
												80										**F**	
																		100				**G**	

Motor length/motor version (**CT** = Compact. **HD** = High Dynamic)**:**

			0/CT				**0/CT**					**0/CT**						**0/CT**					**0**	**2**
													1/CT						**1/CT**				**1**	**2**
								1/HD															**1**	**4**
2/CT				**2/CT**					**2/CT**														**2**	**2**
										3/CT				**3/CT**						**3/CT**			**3**	**2**
	3/HD				**3/HD**																		**3**	**4**
		4/CT														**4/CT**							**4**	**2**
						4/HD					**4/HD**													**4**	**4**
																				5/CT			**5**	**2**
															5/HD								**5**	**4**
																6/HD							**6**	**4**

Selection of shaft design, encoder system, mounting type and special designs on page 4/19.

1FG1402- ■ ■ . . . - ■ . . -Z

© Siemens 2019

Gearbox size 39, 3-stage – 1FG1402

For line voltage 380 ... 480 V 3 AC (DC link voltage 510 ... 720 V DC) **– Gearbox type** ***FD39***

Geared motor torque at 1450 rpm
Note: All values in **bold** print are maximum gearbox values.
M_{2dyn}
Nm

Servo parallel shaft geared motors SIMOTICS S-1FG1
Article No.

225	215	310	255	310	310	–	–	–	–	–	–	–	–	–	–	–	–	–	–	–	Max. output speed n_{2max} = **81 rpm**, Transmission ratio i = **55.65**
1FG1402- . . ■ ■ 6 - ■ . B1 -Z																					
–	–	–	–	–	310	310	310	310	310	310	310	310	310	310	–	–	–	–	–	–	–
1FG1402- . . ■ ■ 4 - ■ . B1 -Z																					
–	–	–	–	310	–	310	310	310	310	310	310	310	310	310	310	310	310	–	–	–	–
1FG1402- . . ■ ■ 3 - ■ . B1 -Z																					
–	–	–	–	310	–	–	310	–	310	310	310	–	310	310	310	310	310	–	–	–	–
1FG1402- . . ■ ■ 2 - ■ . B1 -Z																					
197	189	285	220	305	305	–	–	–	–	–	–	–	–	–	–	–	–	–	–	–	Max. output speed n_{2max} = **93 rpm**, Transmission ratio i = **48.29**
1FG1402- . . ■ ■ 6 - ■ . A1 -Z																					
–	–	–	–	–	305	305	305	305	305	305	305	305	305	305	–	–	–	–	–	–	–
1FG1402- . . ■ ■ 4 - ■ . A1 -Z																					
–	–	–	–	305	–	305	305	305	305	305	305	305	305	305	305	305	305	–	–	–	–
1FG1402- . . ■ ■ 3 - ■ . A1 -Z																					
–	–	–	–	305	–	–	305	–	305	305	305	–	305	305	305	305	305	–	–	–	–
1FG1402- . . ■ ■ 2 - ■ . A1 -Z																					

Motor shaft height:

36																					**C**
			48																		**D**
							63														**E**
												80									**F**
																	100				**G**

Motor length/motor version (**CT** = Compact. **HD** = High Dynamic)**:**

			0/CT				**0/CT**					**0/CT**						**0/CT**				**0**	**2**
													1/CT						**1/CT**			**1**	**2**
								1/HD														**1**	**4**
2/CT				**2/CT**					**2/CT**													**2**	**2**
										3/CT				**3/CT**						**3/CT**		**3**	**2**
	3/HD				**3/HD**											**4/CT**						**3**	**4**
		4/CT																				**4**	**2**
						4/HD					**4/HD**											**4**	**4**
																		5/CT				**5**	**2**
																5/HD						**5**	**4**
																	6/HD					**6**	**4**

Selection of shaft design, encoder system, mounting type and special designs on page 4/19.

1FG1402- ■ ■ . . . . - . ■ . . **-Z**

© Siemens 2019

Selection and ordering data (continued)

For line voltage 200 ... 240 V 1 AC (DC link voltage 270 ... 330 V DC) **– Gearbox type** ***FD39***

Max. output speed n_{2max} rpm	Transmission ratio i	Geared motor torque at 1450 rpm Note: All values in **bold** print are maximum gearbox values. M_{2dyn} Nm					Servo parallel shaft geared motors SIMOTICS S-1FG1 Article No.
16	**274.26**	**325**	**325**	**325**	**325**	**325**	**1FG1402- . . ■ ■ 3 - ■ . R1 -Z**
18	**243.26**	**325**	**325**	**325**	**325**	**325**	**1FG1402- . . ■ ■ 3 - ■ . Q1 -Z**
21	**211.06**	**325**	**325**	**325**	**325**	**325**	**1FG1402- . . ■ ■ 3 - ■ . P1 -Z**
23	**191.87**	**325**	**325**	**325**	**325**	**325**	**1FG1402- . . ■ ■ 3 - ■ . N1 -Z**
27	**164.56**	**325**	**325**	**325**	**325**	**325**	**1FG1402- . . ■ ■ 3 - ■ . M1 -Z**
30	**149.6**	**325**	**325**	**325**	**325**	**325**	**1FG1402- . . ■ ■ 3 - ■ . L1 -Z**
34	**131.17**	**325**	**325**	**325**	**325**	**325**	**1FG1402- . . ■ ■ 3 - ■ . K1 -Z**
38	**117.08**	**325**	**325**	**325**	**325**	**325**	**1FG1402- . . ■ ■ 3 - ■ . J1 -Z**
43	**104.34**	**325**	**325**	**325**	**325**	**325**	**1FG1402- . . ■ ■ 3 - ■ . H1 -Z**
47	**96.31**	**325**	**325**	**325**	**325**	**325**	**1FG1402- . . ■ ■ 3 - ■ . G1 -Z**
53	**84.32**	**325**	325	**325**	**325**	**325**	**1FG1402- . . ■ ■ 3 - ■ . F1 -Z**
61	**73.93**	300	285	**320**	**320**	**320**	**1FG1402- . . ■ ■ 3 - ■ . E1 -Z**
67	**67.07**	270	260	**315**	**315**	**315**	**1FG1402- . . ■ ■ 3 - ■ . D1 -Z**
71	**63.13**	255	245	**315**	**315**	**315**	**1FG1402- . . ■ ■ 3 - ■ . C1 -Z**
81	**55.65**	225	215	**310**	**310**	**310**	**1FG1402- . . ■ ■ 3 - ■ . B1 -Z**
93	**48.29**	197	189	285	**305**	**305**	**1FG1402- . . ■ ■ 3 - ■ . A1 -Z**

Motor shaft height:

	36					**C**	
				48		**D**	

Motor length/motor version (**CT** = Compact, **HD** = High Dynamic)**:**

2/CT			**2/CT**			**2**	**1**
	3/HD			**3/HD**		**3**	**3**
		4/CT				**4**	**1**

Selection of shaft design, encoder system, mounting type and special designs on page 4/19.

1FG1402- ■ ■ . . . - . ■ . . -Z

© Siemens 2019

4

Technical specifications

Gearbox type *FZ49*

Servo geared motor Type	i	R_{ex}	M_{2rated} Nm	M_{2max} Nm	$M_{2Em.Off}$ Nm	n_{2max} rpm	n_{1max} rpm	φ [1] '	F_{R2} N	F_{R2max} N	c_T Nm/ '	J_G 10^{-4} kgm^2
1FG1303-.....-..X1	61.43	1843/30	480	495	815	73	4500	5.97	7000	7000	39.4	0.18
1FG1303-.....-..W1	55.85	1843/33	480	495	815	81	4500	5.97	6720	6720	39.4	0.22
1FG1303-.....-..V1	47.5	95/2	480	480	815	95	4500	6.03	6270	6270	39.4	0.27
1FG1303-.....-..U1	43.18	475/11	480	480	815	104	4500	6.03	5980	5980	39.4	0.33
1FG1303-.....-..T1	38.53	1387/36	480	480	815	117	4500	6.09	5640	5640	39.4	0.39
1FG1303-.....-..S1	34.55	380/11	480	480	815	130	4500	6.12	5330	5330	39.4	0.47
1FG1303-.....-..R1	31.14	1121/36	480	480	815	145	4500	6.15	5050	5050	39.3	0.55
1FG1303-.....-..Q1	28.74	1121/39	480	480	815	157	4500	6.15	4830	4830	39.4	0.65
1FG1303-.....-..P1	26.24	551/21	480	480	815	171	4500	6.19	4600	4600	39.3	0.76
1FG1303-.....-..N1	21.77	1045/48	480	480	815	207	4500	6.30	4140	4140	39.3	0.97
1FG1303-.....-..M1	20.49	1045/51	480	480	815	220	4500	6.30	3990	3990	39.3	1.1
1FG1303-.....-..L1	19.35	1045/54	480	480	815	233	4500	6.30	3860	3860	39.3	1.3
1FG1303-.....-..K1	16.47	247/15	480	480	815	273	4500	6.43	3500	3500	39.3	1.6
1FG1303-.....-..J1	14.11	931/66	480	480	815	319	4500	6.58	3170	3170	39.2	2
1FG1303-.....-..H1	12.4	893/72	480	480	815	363	4500	6.69	2910	2910	39.2	2.5
1FG1303-.....-..G1	10.46	722/69	480	480	815	430	4500	6.85	2580	2580	39.1	3.1
1FG1303-.....-..F1	9.12	228/25	480	480	815	493	4500	7.40	2330	2330	39.1	4.2
1FG1303-.....-..E1	8.4	42/5	450	450	740	518	4350	9.35	1950	1950	35.3	2.2
1FG1303-.....-..D1	7.2	1029/143	450	450	740	604	4350	9.65	1870	1870	35.2	2.8
1FG1303-.....-..C1	6.33	329/52	430	430	730	687	4350	9.87	1840	1840	35.1	3.5
1FG1303-.....-..B1	5.34	1596/299	400	400	680	815	4350	10.19	1800	1800	34.8	4.6
1FG1303-.....-..A1	4.65	1512/325	375	375	635	935	4350	11.30	1780	1780	34.6	6.1

Selection and ordering data

Shaft design, encoder system, mounting type and special designs

Gearbox type *FZ49*

			Servo parallel shaft geared motors SIMOTICS S-1FG1 Article No. **1FG1303-** ■■.....-.■... **-Z**
Shaft design:	Solid shaft with feather keyway	– Design 1	**1**
		– Design 3	**3**
	Hollow-shaft with feather keyway	– Design 1 – H35	**5**
		– Design 2 – H30	**6**
Order codes and Descriptions see chapter "Options"	Special shaft design		**9**
Encoder system for motors with DRIVE-CLiQ interface:	AS20DQI encoder		**Q**
	AM20DQI encoder		**R**
	R14DQ resolver		**P**
	R15DQ resolver		**U**
Order codes and Descriptions see chapter "Options"	Special version encoder system		**Z**
Mounting type:	Foot-mounted design		**A**
	Flange-mounted design		**F**
	Housing flange design		**H**
	Shaft-mounted design (not possible with solid shaft)		**D**
Special designs (Options): Order codes and Descriptions see chapter "Options" The following order codes must be added to each article number: • Oil type – order codes **K06** or **K11** • Mounting position – order codes **D01** ... **D06**			**-Z**

Selection of 2-stages servo parallel shaft geared motors with gearbox size 49 from next page. **1FG1303-** ..■■■-■.■■**-Z**

[1] Data are for option reduced-backlash version – order code **G99** required.

© Siemens 2019

Selection and ordering data (continued)

For line voltage 380 ... 480 V 3 AC (DC link voltage 510 ... 720 V DC) **– Gearbox type** ***FZ49***

Geared motor torque at 1450 rpm
Note: All values in **bold** print are maximum gearbox values.
M_{2dyn}
Nm

																						Servo parallel shaft geared motors SIMOTICS S-1FG1 Article No.
Max. output speed n_{2max} = **73 rpm**, Transmission ratio i = **61.43**																						
255	240	365	290	**495**	**495**	–	–	–	–	–	–	–	–	–	–	–	–	–	–	–	–	1FG1303- . . ■ ■ 6 - ■ . X1 -Z
–	–	–	–	–	**495**	**495**	**495**	**495**	**495**	**495**	**495**	–	–	–	–	–	–	–	–	–	–	1FG1303- . . ■ ■ 4 - ■ . X1 -Z
–	–	–	–	**495**	–	**495**	**495**	**495**	**495**	**495**	**495**	–	–	–	–	–	–	–	–	–	–	1FG1303- . . ■ ■ 3 - ■ . X1 -Z
–	–	–	–	**495**	–	–	**495**	–	**495**	**495**	**495**	–	–	–	–	–	–	–	–	–	–	1FG1303- . . ■ ■ 2 - ■ . X1 -Z
Max. output speed n_{2max} = **81 rpm**, Transmission ratio i = **55.85**																						
230	220	335	265	**495**	**495**	–	–	–	–	–	–	–	–	–	–	–	–	–	–	–	–	1FG1303- . . ■ ■ 6 - ■ . W1 -Z
–	–	–	–	–	**495**	**495**	**495**	**495**	**495**	**495**	**495**	–	–	–	–	–	–	–	–	–	–	1FG1303- . . ■ ■ 4 - ■ . W1 -Z
–	–	–	–	**495**	–	**495**	**495**	**495**	**495**	**495**	**495**	–	–	–	–	–	–	–	–	–	–	1FG1303- . . ■ ■ 3 - ■ . W1 -Z
–	–	–	–	**495**	–	–	**495**	–	**495**	**495**	**495**	–	–	–	–	–	–	–	–	–	–	1FG1303- . . ■ ■ 2 - ■ . W1 -Z
Max. output speed n_{2max} = **95 rpm**, Transmission ratio i = **47.5**																						
199	190	285	225	465	440	–	–	–	–	–	–	–	–	–	–	–	–	–	–	–	–	1FG1303- . . ■ ■ 6 - ■ . V1 -Z
–	–	–	–	–	440	**480**	**480**	**480**	**480**	**480**	**480**	–	–	–	–	–	–	–	–	–	–	1FG1303- . . ■ ■ 4 - ■ . V1 -Z
–	–	–	–	465	–	**480**	**480**	**480**	**480**	**480**	**480**	–	–	–	–	–	–	–	–	–	–	1FG1303- . . ■ ■ 3 - ■ . V1 -Z
–	–	–	–	465	–	–	**480**	–	**480**	**480**	**480**	–	–	–	–	–	–	–	–	–	–	1FG1303- . . ■ ■ 2 - ■ . V1 -Z
Max. output speed n_{2max} = **104 rpm**, Transmission ratio i = **43.18**																						
182	174	260	205	425	405	–	–	–	–	–	–	–	–	–	–	–	–	–	–	–	–	1FG1303- . . ■ ■ 6 - ■ . U1 -Z
–	–	–	–	–	405	455	**480**	**480**	**480**	**480**	**480**	–	–	–	–	–	–	–	–	–	–	1FG1303- . . ■ ■ 4 - ■ . U1 -Z
–	–	–	–	425	–	455	**480**	**480**	**480**	**480**	**480**	–	–	–	–	–	–	–	–	–	–	1FG1303- . . ■ ■ 3 - ■ . U1 -Z
–	–	–	–	425	–	–	**480**	–	**480**	**480**	**480**	–	–	–	–	–	–	–	–	–	–	1FG1303- . . ■ ■ 2 - ■ . U1 -Z
Max. output speed n_{2max} = **117 rpm**, Transmission ratio i = **38.53**																						
162	155	235	184	380	360	–	–	–	–	–	–	–	–	–	–	–	–	–	–	–	–	1FG1303- . . ■ ■ 6 - ■ . T1 -Z
–	–	–	–	–	360	405	**480**	**480**	**480**	**480**	**480**	**480**	**480**	**480**	–	–	–	–	–	–	–	1FG1303- . . ■ ■ 4 - ■ . T1 -Z
–	–	–	–	380	–	405	**480**	**480**	**480**	**480**	**480**	**480**	**480**	**480**	**480**	**480**	**480**	–	–	–	–	1FG1303- . . ■ ■ 3 - ■ . T1 -Z
–	–	–	–	380	–	–	**480**	–	**480**	**480**	**480**	–	**480**	**480**	**480**	**480**	**480**	–	–	–	–	1FG1303- . . ■ ■ 2 - ■ . T1 -Z
Max. output speed n_{2max} = **130 rpm**, Transmission ratio i = **34.55**																						
146	139	210	165	340	325	–	–	–	–	–	–	–	–	–	–	–	–	–	–	–	–	1FG1303- . . ■ ■ 6 - ■ . S1 -Z
–	–	–	–	–	325	365	**480**	**480**	**480**	**480**	**480**	**480**	**480**	**480**	–	–	–	–	–	–	–	1FG1303- . . ■ ■ 4 - ■ . S1 -Z
–	–	–	–	340	–	365	**480**	**480**	**480**	**480**	**480**	**480**	**480**	**480**	**480**	**480**	**480**	–	–	–	–	1FG1303- . . ■ ■ 3 - ■ . S1 -Z
–	–	–	–	340	–	–	**480**	–	**480**	**480**	**480**	–	**480**	**480**	**480**	**480**	**480**	–	–	–	–	1FG1303- . . ■ ■ 2 - ■ . S1 -Z
Max. output speed n_{2max} = **145 rpm**, Transmission ratio i = **31.14**																						
132	126	190	149	305	290	–	–	–	–	–	–	–	–	–	–	–	–	–	–	–	–	1FG1303- . . ■ ■ 6 - ■ . R1 -Z
–	–	–	–	–	290	330	**480**	**480**	**480**	**480**	**480**	**480**	**480**	**480**	–	–	–	–	–	–	–	1FG1303- . . ■ ■ 4 - ■ . R1 -Z
–	–	–	–	305	–	330	**480**	**480**	**480**	**480**	**480**	**480**	**480**	**480**	**480**	**480**	**480**	–	–	–	–	1FG1303- . . ■ ■ 3 - ■ . R1 -Z
–	–	–	–	305	–	–	**480**	–	**480**	**480**	**480**	–	**480**	**480**	**480**	**480**	**480**	–	–	–	–	1FG1303- . . ■ ■ 2 - ■ . R1 -Z

Motor shaft height:

36																						**C**
			48																			**D**
							63															**E**
												80										**F**
																		100				**G**

Motor length/motor version (**CT** = Compact. **HD** = High Dynamic)**:**

			0/CT				**0/CT**					**0/CT**						**0/CT**					**0**	**2**
								1/CT											**1/CT**				**1**	**2**
								1/HD															**1**	**4**
2/CT				**2/CT**					**2/CT**														**2**	**2**
										3/CT				**3/CT**						**3/CT**			**3**	**2**
	3/HD				**3/HD**																		**3**	**4**
		4/CT														**4/CT**							**4**	**2**
						4/HD					**4/HD**													**4**	**4**
																				5/CT			**5**	**2**
															5/HD								**5**	**4**
																6/HD							**6**	**4**

Selection of shaft design, encoder system, mounting type and special designs on page 4/24.

1FG1303- ■ ■ . . . . - . ■ . . -Z

© Siemens 2019

Gearbox size 49, 2-stage – 1FG1303

For line voltage 380 ... 480 V 3 AC (DC link voltage 510 ... 720 V DC) **– Gearbox type** ***FZ49***

Geared motor torque at 1450 rpm
Note: All values in **bold** print are maximum gearbox values.
M_{2dyn}
Nm

																					Servo parallel shaft geared motors SIMOTICS S-1FG1 Article No.
Max. output speed n_{2max} = **157 rpm**, Transmission ratio i = **28.74**																					
122	116	176	138	285	270	–	–	–	–	–	–	–	–	–	–	–	–	–	–	–	1FG1303- . . ■ ■ 6 - ■ . Q1 -Z
–	–	–	–	–	270	305	**480**	470	**480**	**480**	**480**	**480**	**480**	**480**	–	–	–	–	–	–	1FG1303- . . ■ ■ 4 - ■ . Q1 -Z
–	–	–	–	285	–	305	**480**	470	**480**	**480**	**480**	**480**	**480**	**480**	**480**	**480**	**480**	–	–	–	1FG1303- . . ■ ■ 3 - ■ . Q1 -Z
–	–	–	–	285	–	–	**480**	–	**480**	**480**	**480**	–	**480**	**480**	**480**	**480**	**480**	–	–	–	1FG1303- . . ■ ■ 2 - ■ . Q1 -Z
Max. output speed n_{2max} = **171 rpm**, Transmission ratio i = **26.24**																					
111	106	161	126	260	245	–	–	–	–	–	–	–	–	–	–	–	–	–	–	–	1FG1303- . . ■ ■ 6 - ■ . P1 -Z
–	–	–	–	–	245	280	445	425	**480**	**480**	**480**	**480**	**480**	**480**	–	–	–	–	–	–	1FG1303- . . ■ ■ 4 - ■ . P1 -Z
–	–	–	–	260	–	280	445	425	**480**	**480**	**480**	**480**	**480**	**480**	**480**	**480**	**480**	**480**	**480**	**480**	1FG1303- . . ■ ■ 3 - ■ . P1 -Z
–	–	–	–	260	–	–	445	–	**480**	**480**	**480**	–	**480**	**480**	**480**	**480**	**480**	**480**	**480**	**480**	1FG1303- . . ■ ■ 2 - ■ . P1 -Z
Max. output speed n_{2max} = **207 rpm**, Transmission ratio i = **21.77**																					
93	88	134	105	215	205	–	–	–	–	–	–	–	–	–	–	–	–	–	–	–	1FG1303- . . ■ ■ 6 - ■ . N1 -Z
–	–	–	–	–	205	230	370	355	**480**	**480**	**480**	**480**	**480**	**480**	–	–	–	–	–	–	1FG1303- . . ■ ■ 4 - ■ . N1 -Z
–	–	–	–	215	–	230	370	355	**480**	**480**	**480**	**480**	**480**	**480**	**480**	**480**	**480**	**480**	**480**	**480**	1FG1303- . . ■ ■ 3 - ■ . N1 -Z
–	–	–	–	215	–	–	370	–	**480**	**480**	**480**	–	**480**	**480**	**480**	**480**	**480**	**480**	**480**	**480**	1FG1303- . . ■ ■ 2 - ■ . N1 -Z
Max. output speed n_{2max} = **220 rpm**, Transmission ratio i = **20.49**																					
87	83	126	99	200	195	–	–	–	–	–	–	–	–	–	–	–	–	–	–	–	1FG1303- . . ■ ■ 6 - ■ . M1 -Z
–	–	–	–	–	195	215	350	335	**480**	**480**	**480**	**480**	**480**	**480**	–	–	–	–	–	–	1FG1303- . . ■ ■ 4 - ■ . M1 -Z
–	–	–	–	200	–	215	350	335	**480**	**480**	**480**	**480**	**480**	**480**	**480**	**480**	**480**	**480**	**480**	**480**	1FG1303- . . ■ ■ 3 - ■ . M1 -Z
–	–	–	–	200	–	–	350	–	**480**	**480**	**480**	–	**480**	**480**	**480**	**480**	**480**	**480**	**480**	**480**	1FG1303- . . ■ ■ 2 - ■ . M1 -Z
Max. output speed n_{2max} = **233 rpm**, Transmission ratio i = **19.35**																					
82	79	119	93	193	184	–	–	–	–	–	–	–	–	–	–	–	–	–	–	–	1FG1303- . . ■ ■ 6 - ■ . L1 -Z
–	–	–	–	–	184	205	330	315	475	**480**	**480**	460	**480**	**480**	–	–	–	–	–	–	1FG1303- . . ■ ■ 4 - ■ . L1 -Z
–	–	–	–	193	–	205	330	315	475	**480**	**480**	460	**480**	**480**	**480**	**480**	**480**	**480**	**480**	**480**	1FG1303- . . ■ ■ 3 - ■ . L1 -Z
–	–	–	–	193	–	–	330	–	475	**480**	**480**	–	**480**	**480**	**480**	**480**	**480**	**480**	**480**	**480**	1FG1303- . . ■ ■ 2 - ■ . L1 -Z
Max. output speed n_{2max} = **273 rpm**, Transmission ratio i = **16.47**																					
70	67	102	80	164	157	–	–	–	–	–	–	–	–	–	–	–	–	–	–	–	1FG1303- . . ■ ■ 6 - ■ . K1 -Z
–	–	–	–	–	157	177	280	270	405	**480**	**480**	390	**480**	**480**	–	–	–	–	–	–	1FG1303- . . ■ ■ 4 - ■ . K1 -Z
–	–	–	–	164	–	177	280	270	405	**480**	**480**	390	**480**	**480**	**480**	**480**	**480**	**480**	**480**	**480**	1FG1303- . . ■ ■ 3 - ■ . K1 -Z
–	–	–	–	164	–	–	280	–	405	**480**	**480**	–	**480**	**480**	**480**	**480**	**480**	**480**	**480**	**480**	1FG1303- . . ■ ■ 2 - ■ . K1 -Z
Max. output speed n_{2max} = **319 rpm**, Transmission ratio i = **14.11**																					
–	–	–	–	–	–	–	–	–	–	–	–	–	–	–	–	–	–	–	–	–	1FG1303- . . ■ ■ 6 - ■ . J1 -Z
–	–	–	–	–	–	–	240	230	350	470	430	335	**480**	**480**	–	–	–	–	–	–	1FG1303- . . ■ ■ 4 - ■ . J1 -Z
–	–	–	–	–	–	–	240	230	350	470	430	335	**480**	**480**	**480**	**480**	**480**	**480**	**480**	**480**	1FG1303- . . ■ ■ 3 - ■ . J1 -Z
–	–	–	–	–	–	–	240	–	350	470	430	–	**480**	**480**	**480**	**480**	**480**	**480**	**480**	**480**	1FG1303- . . ■ ■ 2 - ■ . J1 -Z
Max. output speed n_{2max} = **363 rpm**, Transmission ratio i = **12.4**																					
–	–	–	–	–	–	–	–	–	–	–	–	–	–	–	–	–	–	–	–	–	1FG1303- . . ■ ■ 6 - ■ . H1 -Z
–	–	–	–	–	–	–	210	205	305	415	380	295	435	**480**	–	–	–	–	–	–	1FG1303- . . ■ ■ 4 - ■ . H1 -Z
–	–	–	–	–	–	–	210	205	305	415	380	295	435	**480**	**480**	**480**	**480**	**480**	**480**	**480**	1FG1303- . . ■ ■ 3 - ■ . H1 -Z
–	–	–	–	–	–	–	210	–	305	415	380	–	435	**480**	**480**	**480**	**480**	**480**	**480**	**480**	1FG1303- . . ■ ■ 2 - ■ . H1 -Z

Motor shaft height:

36																					**C**
			48																		**D**
							63														**E**
												80									**F**
																	100				**G**

Motor length/motor version (**CT** = Compact. **HD** = High Dynamic)**:**

			0/CT				**0/CT**					**0/CT**						**0/CT**				**0**	**2**
													1/CT						**1/CT**			**1**	**2**
								1/HD														**1**	**4**
2/CT				**2/CT**					**2/CT**													**2**	**2**
										3/CT				**3/CT**					**3/CT**			**3**	**2**
	3/HD				**3/HD**																	**3**	**4**
		4/CT														**4/CT**						**4**	**2**
						4/HD					**4/HD**											**4**	**4**
																				5/CT		**5**	**2**
																	5/HD					**5**	**4**
																		6/HD				**6**	**4**

Selection of shaft design, encoder system, mounting type and special designs on page 4/24.

1FG1303- ■ ■ . . . - . ■ . . -Z

© Siemens 2019

For line voltage 380 ... 480 V 3 AC (DC link voltage 510 ... 720 V DC) **– Gearbox type** ***FZ49***

Geared motor torque at 1450 rpm
Note: All values in **bold** print are maximum gearbox values.
M_{2dyn}
Nm

																						Article No.
Max. output speed n_{2max} = 430 rpm, Transmission ratio i = 10.46																						
–	–	–	–	–	–	–	–	–	–	–	–	–	–	–	–	–	–	–	–	–	–	1FG1303- . . ■ ■ 6 - ■ . G1 -Z
–	–	–	–	–	–	–	180	173	260	350	320	250	370	**480**	–	–	–	–	–	–	–	1FG1303- . . ■ ■ 4 - ■ . G1 -Z
–	–	–	–	–	–	–	180	173	260	350	320	250	370	**480**	**480**	**480**	**480**	**480**	**480**	**480**	**480**	1FG1303- . . ■ ■ 3 - ■ . G1 -Z
–	–	–	–	–	–	–	180	–	260	350	320	–	370	**480**	**480**	**480**	**480**	**480**	**480**	**480**	**480**	1FG1303- . . ■ ■ 2 - ■ . G1 -Z
Max. output speed n_{2max} = 493 rpm, Transmission ratio i = 9.12																						
–	–	–	–	–	–	–	–	–	–	–	–	–	–	–	–	–	–	–	–	–	–	1FG1303- . . ■ ■ 6 - ■ . F1 -Z
–	–	–	–	–	–	–	157	151	225	305	280	215	320	435	–	–	–	–	–	–	–	1FG1303- . . ■ ■ 4 - ■ . F1 -Z
–	–	–	–	–	–	–	157	151	225	305	280	215	320	435	**480**	**480**	**480**	480	**480**	**480**	**480**	1FG1303- . . ■ ■ 3 - ■ . F1 -Z
–	–	–	–	–	–	–	157	–	225	305	280	–	320	435	**480**	**480**	**480**	480	**480**	**480**	**480**	1FG1303- . . ■ ■ 2 - ■ . F1 -Z
Max. output speed n_{2max} = 518 rpm, Transmission ratio i = 8.4																						
36	34	52	41	85	81	–	–	–	–	–	–	–	–	–	–	–	–	–	–	–	–	1FG1303- . . ■ ■ 6 - ■ . E1 -Z
–	–	–	–	–	81	91	146	140	210	280	255	200	300	405	–	–	–	–	–	–	–	1FG1303- . . ■ ■ 4 - ■ . E1 -Z
–	–	–	–	85	–	91	146	140	210	280	255	200	300	405	**450**	**450**	**450**	445	**450**	**450**	**450**	1FG1303- . . ■ ■ 3 - ■ . E1 -Z
–	–	–	–	85	–	–	146	–	210	280	255	–	300	405	**450**	**450**	**450**	445	**450**	**450**	**450**	1FG1303- . . ■ ■ 2 - ■ . E1 -Z
Max. output speed n_{2max} = 604 rpm, Transmission ratio i = 7.2																						
–	–	–	–	–	–	–	–	–	–	–	–	–	–	–	–	–	–	–	–	–	–	1FG1303- . . ■ ■ 6 - ■ . D1 -Z
–	–	–	–	–	–	–	125	120	181	240	220	174	255	345	–	–	–	–	–	–	–	1FG1303- . . ■ ■ 4 - ■ . D1 -Z
–	–	–	–	–	–	–	125	120	181	240	220	174	255	345	425	450	**450**	380	**450**	**450**	**450**	1FG1303- . . ■ ■ 3 - ■ . D1 -Z
–	–	–	–	–	–	–	125	–	181	240	220	–	255	345	425	450	**450**	380	**450**	**450**	**450**	1FG1303- . . ■ ■ 2 - ■ . D1 -Z
Max. output speed n_{2max} = 687 rpm, Transmission ratio i = 6.33																						
–	–	–	–	–	–	–	–	–	–	–	–	–	–	–	–	–	–	–	–	–	–	1FG1303- . . ■ ■ 6 - ■ . C1 -Z
–	–	–	–	–	–	–	110	106	159	215	196	153	225	305	–	–	–	–	–	–	–	1FG1303- . . ■ ■ 4 - ■ . C1 -Z
–	–	–	–	–	–	–	110	106	159	215	196	153	225	305	370	395	**430**	335	**430**	**430**	**430**	1FG1303- . . ■ ■ 3 - ■ . C1 -Z
–	–	–	–	–	–	–	110	–	159	215	196	–	225	305	370	395	**430**	335	**430**	**430**	**430**	1FG1303- . . ■ ■ 2 - ■ . C1 -Z
Max. output speed n_{2max} = 815 rpm, Transmission ratio i = 5.34																						
–	–	–	–	–	–	–	–	–	–	–	–	–	–	–	–	–	–	–	–	–	–	1FG1303- . . ■ ■ 6 - ■ . B1 -Z
–	–	–	–	–	–	–	93	89	134	181	165	129	191	255	–	–	–	–	–	–	–	1FG1303- . . ■ ■ 4 - ■ . B1 -Z
–	–	–	–	–	–	–	93	89	134	181	165	129	191	255	315	335	**400**	280	**400**	**400**	**400**	1FG1303- . . ■ ■ 3 - ■ . B1 -Z
–	–	–	–	–	–	–	93	–	134	181	165	–	191	255	315	335	**400**	280	**400**	**400**	**400**	1FG1303- . . ■ ■ 2 - ■ . B1 -Z
Max. output speed n_{2max} = 935 rpm, Transmission ratio i = 4.65																						
–	–	–	–	–	–	–	–	–	–	–	–	–	–	–	–	–	–	–	–	–	–	1FG1303- . . ■ ■ 6 - ■ . A1 -Z
–	–	–	–	–	–	–	81	78	117	157	144	112	166	225	–	–	–	–	–	–	–	1FG1303- . . ■ ■ 4 - ■ . A1 -Z
–	–	–	–	–	–	–	81	78	117	157	144	112	166	225	275	290	**375**	245	360	**375**	**375**	1FG1303- . . ■ ■ 3 - ■ . A1 -Z
–	–	–	–	–	–	–	81	–	117	157	144	–	166	225	275	290	**375**	245	360	**375**	**375**	1FG1303- . . ■ ■ 2 - ■ . A1 -Z

Motor shaft height:

36																									**C**	
			48																						**D**	
							63																		**E**	
												80													**F**	
																		100							**G**	
Motor length/motor version (**CT** = Compact. **HD** = High Dynamic)**:**																										
			0/CT				**0/CT**					**0/CT**						**0/CT**							**0**	**2**
													1/CT						**1/CT**						**1**	**2**
								1/HD																	**1**	**4**
2/CT				**2/CT**					**2/CT**																**2**	**2**
										3/CT				**3/CT**						**3/CT**					**3**	**2**
	3/HD				**3/HD**																				**3**	**4**
		4/CT														**4/CT**									**4**	**2**
						4/HD					**4/HD**														**4**	**4**
																					5/CT				**5**	**2**
																5/HD									**5**	**4**
																	6/HD								**6**	**4**

Selection of shaft design, encoder system, mounting type and special designs on page 4/24.

1FG1303- ■ ■ . . . - ■ . . -Z

© Siemens 2019

Gearbox size 49, 2-stage – 1FG1303

Selection and ordering data (continued)

For line voltage 200 ... 240 V 1 AC (DC link voltage 270 ... 330 V DC) **– Gearbox type** ***FZ49***

Max. output speed n_{2max} rpm	Transmission ratio i	Geared motor torque at 1450 rpm Note: All values in **bold** print are maximum gearbox values. M_{2dyn} Nm					**Servo parallel shaft geared motors SIMOTICS S-1FG1** Article No.
73	**61.43**	255	240	365	**495**	**495**	**1FG1303- . . ■ ■ 3 - ■ . X1 -Z**
81	**55.85**	230	220	335	**495**	**495**	**1FG1303- . . ■ ■ 3 - ■ . W1 -Z**
95	**47.5**	199	190	285	465	440	**1FG1303- . . ■ ■ 3 - ■ . V1 -Z**
104	**43.18**	182	174	260	425	405	**1FG1303- . . ■ ■ 3 - ■ . U1 -Z**
117	**38.53**	162	155	235	380	360	**1FG1303- . . ■ ■ 3 - ■ . T1 -Z**
130	**34.55**	146	139	210	340	325	**1FG1303- . . ■ ■ 3 - ■ . S1 -Z**
145	**31.14**	132	126	190	305	290	**1FG1303- . . ■ ■ 3 - ■ . R1 -Z**
157	**28.74**	122	116	176	285	270	**1FG1303- . . ■ ■ 3 - ■ . Q1 -Z**
171	**26.24**	111	106	161	260	245	**1FG1303- . . ■ ■ 3 - ■ . P1 -Z**
207	**21.77**	93	88	134	215	205	**1FG1303- . . ■ ■ 3 - ■ . N1 -Z**
220	**20.49**	87	83	126	200	195	**1FG1303- . . ■ ■ 3 - ■ . M1 -Z**
233	**19.35**	82	79	119	193	184	**1FG1303- . . ■ ■ 3 - ■ . L1 -Z**
273	**16.47**	70	67	102	164	157	**1FG1303- . . ■ ■ 3 - ■ . K1 -Z**
518	**8.4**	36	34	52	85	81	**1FG1303- . . ■ ■ 3 - ■ . E1 -Z**
Motor shaft height:							
		36					**C**
					48		**D**
Motor length/motor version (**CT** = Compact, **HD** = High Dynamic)**:**							
		2/CT			**2/CT**		**2** **1**
			3/HD			**3/HD**	**3** **3**
				4/CT			**4** **1**

Selection of shaft design, encoder system, mounting type and special designs on page 4/24.

1FG1303- ■ ■ . . . - . ■ . . -Z

© Siemens 2019

Technical specifications

Gearbox type *FD49*

Servo geared motor Type	i	R_{ex}	M_{2rated} Nm	M_{2max} Nm	$M_{2Em.Off}$ Nm	n_{2max} rpm	n_{1max} rpm	φ [1] '	F_{R2} N	F_{R2max} N	c_T Nm/ '	J_G 10^{-4} kgm^2
1FG1403-.....-..S1	330.98	26809/81	480	580	815	14	4500	6.22	7960	7300	41	0.06
1FG1403-.....-..R1	294.29	13243/45	480	580	815	15	4500	6.28	7960	7340	41	0.07
1FG1403-.....-..Q1	258.4	1292/5	480	580	815	17	4500	6.29	7960	7400	41	0.08
1FG1403-.....-..P1	234.91	2584/11	480	580	815	19	4500	6.29	7960	7430	41	0.1
1FG1403-.....-..N1	200.98	9044/45	480	570	815	22	4500	6.30	7960	7500	41	0.12
1FG1403-.....-..M1	182.71	18088/99	480	565	815	25	4500	6.30	7960	7530	41	0.14
1FG1403-.....-..L1	161.5	323/2	480	560	815	28	4500	6.32	7960	7600	41	0.16
1FG1403-.....-..K1	146.82	1615/11	480	550	815	31	4500	6.32	7960	7630	41	0.22
1FG1403-.....-..J1	128.6	13889/108	480	545	815	35	4500	6.34	7960	7700	41	0.25
1FG1403-.....-..H1	118.71	13889/117	480	540	815	38	4500	6.34	7960	7700	41	0.3
1FG1403-.....-..G1	105.1	13243/126	480	530	815	43	4500	6.36	7960	7760	41	0.34
1FG1403-.....-..F1	87.48	4199/48	480	520	815	51	4500	6.39	7960	7820	41	0.44
1FG1403-.....-..E1	82.33	247/3	480	515	815	55	4500	6.39	7960	7860	41	0.51
1FG1403-.....-..D1	73.77	11951/162	480	510	815	61	4500	6.42	7640	7580	41	0.57
1FG1403-.....-..C1	62.81	2261/36	480	500	815	72	4500	6.45	7080	7080	41	0.72
1FG1403-.....-..B1	53.83	323/6	480	490	815	84	4500	6.49	6630	6630	41	0.91
1FG1403-.....-..A1	46.36	10013/216	480	480	815	97	4500	6.53	6190	6190	41	1.1

Selection and ordering data

Shaft design, encoder system, mounting type and special designs

Gearbox type *FD49*

			Servo parallel shaft geared motors SIMOTICS S-1FG1 Article No.							
			1FG1403- ■ ■ . . . - . ■ . .							**-Z**
Shaft design:	Solid shaft with feather keyway	– Design 1	**1**							
		– Design 3	**3**							
	Hollow-shaft with feather keyway	– Design 1 – H35	**5**							
		– Design 2 – H30	**6**							
Order codes and Descriptions see chapter "Options"	Special shaft design		**9**							
Encoder system for motors with DRIVE-CLiQ interface:	AS20DQI encoder			**Q**						
	AM20DQI encoder			**R**						
	R14DQ resolver			**P**						
	R15DQ resolver			**U**						
Order codes and Descriptions see chapter "Options"	Special version encoder system			**Z**						
Mounting type:	Foot-mounted design							**A**		
	Flange-mounted design							**F**		
	Housing flange design							**H**		
	Shaft-mounted design (not possible with solid shaft)							**D**		
Special designs (Options): Order codes and Descriptions see chapter "Options" The following order codes must be added to each article number: • Oil type – order codes **K06** or **K11** • Mounting position – order codes **D01** ... **D06**										**-Z**
Selection of 3-stages servo parallel shaft geared motors with gearbox size 49 from next page.			**1FG1403-** . . ■ ■ ■ - ■ . ■ ■							**-Z**

[1] Data are for option reduced-backlash version – order code **G99** required.

© Siemens 2019

Gearbox size 49, 3-stage – 1FG1403

Selection and ordering data (continued)

For line voltage 380 ... 480 V 3 AC (DC link voltage 510 ... 720 V DC) **– Gearbox type** ***FD49***

Geared motor torque at 1450 rpm
Note: All values in **bold** print are maximum gearbox values.
M_{2dyn}
Nm

Max. output speed n_{2max} = **14 rpm**, Transmission ratio i = **330.98**	Servo parallel shaft geared motors SIMOTICS S-1FG1 Article No.
580 **580** **580** **580** **580** **580** – – – – – – – – – – – – – – –	1FG1403- . . ■ ■ 6 - ■ . S1 -Z
– – – – – **580** **580** – – – – – – – – – – – – – – –	1FG1403- . . ■ ■ 4 - ■ . S1 -Z
– – – – **580** – **580** – – – – – – – – – – – – – – –	1FG1403- . . ■ ■ 3 - ■ . S1 -Z
– – – – **580** – – – – – – – – – – – – – – – – – – –	1FG1403- . . ■ ■ 2 - ■ . S1 -Z
Max. output speed n_{2max} = 15 rpm, Transmission ratio i = 294.29	
580 **580** **580** **580** **580** **580** – – – – – – – – – – – – – – –	1FG1403- . . ■ ■ 6 - ■ . R1 -Z
– – – – – **580** **580** **580** **580** **580** **580** **580** – – – – – – – – – –	1FG1403- . . ■ ■ 4 - ■ . R1 -Z
– – – – **580** – **580** **580** **580** **580** **580** **580** – – – – – – – – – –	1FG1403- . . ■ ■ 3 - ■ . R1 -Z
– – – – **580** – – **580** – **580** **580** **580** – – – – – – – – – –	1FG1403- . . ■ ■ 2 - ■ . R1 -Z
Max. output speed n_{2max} = 17 rpm, Transmission ratio i = 258.4	
580 **580** **580** **580** **580** **580** – – – – – – – – – – – – – – –	1FG1403- . . ■ ■ 6 - ■ . Q1 -Z
– – – – – **580** **580** **580** **580** **580** **580** **580** – – – – – – – – – –	1FG1403- . . ■ ■ 4 - ■ . Q1 -Z
– – – – **580** – **580** **580** **580** **580** **580** **580** – – – – – – – – – –	1FG1403- . . ■ ■ 3 - ■ . Q1 -Z
– – – – **580** – – **580** – **580** **580** **580** – – – – – – – – – –	1FG1403- . . ■ ■ 2 - ■ . Q1 -Z
Max. output speed n_{2max} = 19 rpm, Transmission ratio i = 234.91	
580 **580** **580** **580** **580** **580** – – – – – – – – – – – – – – –	1FG1403- . . ■ ■ 6 - ■ . P1 -Z
– – – – – **580** **580** **580** **580** **580** **580** **580** – – – – – – – – – –	1FG1403- . . ■ ■ 4 - ■ . P1 -Z
– – – – **580** – **580** **580** **580** **580** **580** **580** – – – – – – – – – –	1FG1403- . . ■ ■ 3 - ■ . P1 -Z
– – – – **580** – – **580** – **580** **580** **580** – – – – – – – – – –	1FG1403- . . ■ ■ 2 - ■ . P1 -Z
Max. output speed n_{2max} = 22 rpm, Transmission ratio i = 200.98	
570 **570** **570** **570** **570** **570** – – – – – – – – – – – – – – –	1FG1403- . . ■ ■ 6 - ■ . N1 -Z
– – – – – **570** **570** **570** **570** **570** **570** **570** – – – – – – – – – –	1FG1403- . . ■ ■ 4 - ■ . N1 -Z
– – – – **570** – **570** **570** **570** **570** **570** **570** – – – – – – – – – –	1FG1403- . . ■ ■ 3 - ■ . N1 -Z
– – – – **570** – – **570** – **570** **570** **570** – – – – – – – – – –	1FG1403- . . ■ ■ 2 - ■ . N1 -Z
Max. output speed n_{2max} = 25 rpm, Transmission ratio i = 182.71	
565 **565** **565** **565** **565** **565** – – – – – – – – – – – – – – –	1FG1403- . . ■ ■ 6 - ■ . M1 -Z
– – – – – **565** **565** **565** **565** **565** **565** **565** – – – – – – – – – –	1FG1403- . . ■ ■ 4 - ■ . M1 -Z
– – – – **565** – **565** **565** **565** **565** **565** **565** – – – – – – – – – –	1FG1403- . . ■ ■ 3 - ■ . M1 -Z
– – – – **565** – – **565** – **565** **565** **565** – – – – – – – – – –	1FG1403- . . ■ ■ 2 - ■ . M1 -Z
Max. output speed n_{2max} = 28 rpm, Transmission ratio i = 161.5	
560 **560** **560** **560** **560** **560** – – – – – – – – – – – – – – –	1FG1403- . . ■ ■ 6 - ■ . L1 -Z
– – – – – **560** **560** **560** **560** **560** **560** **560** **560** **560** **560** – – – – – – –	1FG1403- . . ■ ■ 4 - ■ . L1 -Z
– – – – **560** – **560** **560** **560** **560** **560** **560** **560** **560** **560** **560** **560** **560** – – – –	1FG1403- . . ■ ■ 3 - ■ . L1 -Z
– – – – **560** – – **560** – **560** **560** **560** – **560** **560** **560** **560** **560** – – – –	1FG1403- . . ■ ■ 2 - ■ . L1 -Z

Motor shaft height:

36	**C**
48	**D**
63	**E**
80	**F**
100	**G**

Motor length/motor version (**CT** = Compact. **HD** = High Dynamic)**:**

0/CT **0/CT** **0/CT** **0/CT**	**0** **2**
1/CT **1/CT**	**1** **2**
1/HD	**1** **4**
2/CT **2/CT** **2/CT**	**2** **2**
3/CT **3/CT** **3/CT**	**3** **2**
3/HD **3/HD**	**3** **4**
4/CT **4/CT**	**4** **2**
4/HD **4/HD**	**4** **4**
5/CT	**5** **2**
5/HD	**5** **4**
6/HD	**6** **4**

Selection of shaft design, encoder system, mounting type and special designs on page 4/29.

1FG1403- ■ ■ . . . . - . ■ . . -Z

© Siemens 2019

For line voltage 380 ... 480 V 3 AC (DC link voltage 510 ... 720 V DC) **– Gearbox type** ***FD49***

Geared motor torque at 1450 rpm
Note: All values in **bold** print are maximum gearbox values.
M_{2dyn}
Nm

Servo parallel shaft geared motors SIMOTICS S-1FG1
Article No.

Max. output speed n_{2max} = **31 rpm**, Transmission ratio i = **146.82**																						
550	**550**	**550**	**550**	**550**	**550**	–	–	–	–	–	–	–	–	–	–	–	–	–	–	–	–	1FG1403- . . ■ ■ **6** - ■ . **K1** -Z
–	–	–	–	–	**550**	**550**	**550**	**550**	**550**	**550**	**550**	**550**	**550**	**550**	–	–	–	–	–	–	–	1FG1403- . . ■ ■ **4** - ■ . **K1** -Z
–	–	–	–	**550**	–	**550**	**550**	**550**	**550**	**550**	**550**	**550**	**550**	**550**	**550**	**550**	**550**	–	–	–	–	1FG1403- . . ■ ■ **3** - ■ . **K1** -Z
–	–	–	–	**550**	–	–	**550**	–	**550**	**550**	**550**	–	**550**	**550**	**550**	**550**	**550**	–	–	–	–	1FG1403- . . ■ ■ **2** - ■ . **K1** -Z
Max. output speed n_{2max} = **35 rpm**, Transmission ratio i = **128.6**																						
520	495	**545**	**545**	**545**	**545**	–	–	–	–	–	–	–	–	–	–	–	–	–	–	–	–	1FG1403- . . ■ ■ **6** - ■ . **J1** -Z
–	–	–	–	–v	**545**	**545**	**545**	**545**	**545**	**545**	**545**	**545**	**545**	**545**	–	–	–	–	–	–	–	1FG1403- . . ■ ■ **4** - ■ . **J1** -Z
–	–	–	–	**545**	–	**545**	**545**	**545**	**545**	**545**	**545**	**545**	**545**	**545**	**545**	**545**	**545**	–	–	–	–	1FG1403- . . ■ ■ **3** - ■ . **J1** -Z
–	–	–	–	**545**	–	–	**545**	–	**545**	**545**	**545**	–	**545**	**545**	**545**	**545**	**545**	–	–	–	–	1FG1403- . . ■ ■ **2** - ■ . **J1** -Z
Max. output speed n_{2max} = **38 rpm**, Transmission ratio i = **118.71**																						
480	460	**540**	**540**	**540**	**540**	–	–	–	–	–	–	–	–	–	–	–	–	–	–	–	–	1FG1403- . . ■ ■ **6** - ■ . **H1** -Z
–	–	–	–	–	**540**	**540**	**540**	**540**	**540**	**540**	**540**	**540**	**540**	**540**	–	–	–	–	–	–	–	1FG1403- . . ■ ■ **4** - ■ . **H1** -Z
–	–	–	–	**540**	–	**540**	**540**	**540**	**540**	**540**	**540**	**540**	**540**	**540**	**540**	**540**	**540**	–	–	–	–	1FG1403- . . ■ ■ **3** - ■ . **H1** -Z
–	–	–	–	**540**	–	–	**540**	–	**540**	**540**	**540**	–	**540**	**540**	**540**	**540**	**540**	–	–	–	–	1FG1403- . . ■ ■ **2** - ■ . **H1** -Z
Max. output speed n_{2max} = **43 rpm**, Transmission ratio i = **105.1**																						
430	410	**530**	485	**530**	**530**	–	–	–	–	–	–	–	–	–	–	–	–	–	–	–	–	1FG1403- . . ■ ■ **6** - ■ . **G1** -Z
–	–	–	–	–	**530**	**530**	**530**	**530**	**530**	**530**	**530**	**530**	**530**	**530**	–	–	–	–	–	–	–	1FG1403- . . ■ ■ **4** - ■ . **G1** -Z
–	–	–	–	**530**	–	**530**	**530**	**530**	**530**	**530**	**530**	**530**	**530**	**530**	**530**	**530**	**530**	**530**	**530**	**530**	**530**	1FG1403- . . ■ ■ **3** - ■ . **G1** -Z
–	–	–	–	**530**	–	–	**530**	–	**530**	**530**	**530**	–	**530**	**530**	**530**	**530**	**530**	**530**	**530**	**530**	**530**	1FG1403- . . ■ ■ **2** - ■ . **G1** -Z
Max. output speed n_{2max} = **51 rpm**, Transmission ratio i = **87.48**																						
355	340	515	405	**520**	**520**	–	–	–	–	–	–	–	–	–	–	–	–	–	–	–	–	1FG1403- . . ■ ■ **6** - ■ . **F1** -Z
–	–	–	–	–	**520**	**520**	**520**	**520**	**520**	**520**	**520**	**520**	**520**	**520**	–	–	–	–	–	–	–	1FG1403- . . ■ ■ **4** - ■ . **F1** -Z
–	–	–	–	**520**	–	**520**	**520**	**520**	**520**	**520**	**520**	**520**	**520**	**520**	**520**	**520**	**520**	**520**	**520**	**520**	**520**	1FG1403- . . ■ ■ **3** - ■ . **F1** -Z
–	–	–	–	**520**	–	–	**520**	–	**520**	**520**	**520**	–	**520**	**520**	**520**	**520**	**520**	**520**	**520**	**520**	**520**	1FG1403- . . ■ ■ **2** - ■ . **F1** -Z
Max. output speed n_{2max} = **55 rpm**, Transmission ratio i = **82.33**																						
335	320	485	380	**515**	**515**	–	–	–	–	–	–	–	–	–	–	–	–	–	–	–	–	1FG1403- . . ■ ■ **6** - ■ . **E1** -Z
–	–	–	–	–	**515**	**515**	**515**	**515**	**515**	**515**	**515**	**515**	**515**	**515**	–	–	–	–	–	–	–	1FG1403- . . ■ ■ **4** - ■ . **E1** -Z
–	–	–	–	**515**	–	**515**	**515**	**515**	**515**	**515**	**515**	**515**	**515**	**515**	**515**	**515**	**515**	**515**	**515**	**515**	**515**	1FG1403- . . ■ ■ **3** - ■ . **E1** -Z
–	–	–	–	**515**	–	–	**515**	–	**515**	**515**	**515**	–	**515**	**515**	**515**	**515**	**515**	**515**	**515**	**515**	**515**	1FG1403- . . ■ ■ **2** - ■ . **E1** -Z
Max. output speed n_{2max} = **61 rpm**, Transmission ratio i = **73.77**																						
300	290	440	345	**510**	**510**	–	–	–	–	–	–	–	–	–	–	–	–	–	–	–	–	1FG1403- . . ■ ■ **6** - ■ . **D1** -Z
–	–	–	–	–	**510**	**510**	**510**	**510**	**510**	**510**	**510**	**510**	**510**	**510**	–	–	–	–	–	–	–	1FG1403- . . ■ ■ **4** - ■ . **D1** -Z
–	–	–	–	**510**	–	**510**	**510**	**510**	**510**	**510**	**510**	**510**	**510**	**510**	**510**	**510**	**510**	**510**	**510**	**510**	**510**	1FG1403- . . ■ ■ **3** - ■ . **D1** -Z
–	–	–	–	**510**	–	–	**510**	–	**510**	**510**	**510**	–	**510**	**510**	**510**	**510**	**510**	**510**	**510**	**510**	**510**	1FG1403- . . ■ ■ **2** - ■ . **D1** -Z
Max. output speed n_{2max} = **72 rpm**, Transmission ratio i = **62.81**																						
260	245	375	290	**500**	**500**	–	–	–	–	–	–	–	–	–	–	–	–	–	–	–	–	1FG1403- . . ■ ■ **6** - ■ . **C1** -Z
–	–	–	–	–	**500**	**500**	**500**	**500**	**500**	**500**	**500**	**500**	**500**	**500**	–	–	–	–	–	–	–	1FG1403- . . ■ ■ **4** - ■ . **C1** -Z
–	–	–	–	**500**	–	**500**	**500**	**500**	**500**	**500**	**500**	**500**	**500**	**500**	**500**	**500**	**500**	**500**	**500**	**500**	**500**	1FG1403- . . ■ ■ **3** - ■ . **C1** -Z
–	–	–	–	**500**	–	–	**500**	–	**500**	**500**	**500**	–	**500**	**500**	**500**	**500**	**500**	**500**	**500**	**500**	**500**	1FG1403- . . ■ ■ **2** - ■ . **C1** -Z

Motor shaft height:

36																							**C**
			48																				**D**
							63																**E**
												80											**F**
																		100					**G**

Motor length/motor version (**CT** = Compact. **HD** = High Dynamic)**:**

			0/CT				**0/CT**					**0/CT**						**0/CT**					**0**		**2**
													1/CT						**1/CT**				**1**		**2**
								1/HD															**1**		**4**
2/CT				**2/CT**					**2/CT**														**2**		**2**
										3/CT				**3/CT**						**3/CT**			**3**		**2**
	3/HD				**3/HD**																		**3**		**4**
		4/CT														**4/CT**							**4**		**2**
						4/HD					**4/HD**													**4**		**4**
																					5/CT		**5**		**2**
																	5/HD						**5**		**4**
																		6/HD					**6**		**4**

Selection of shaft design, encoder system, mounting type and special designs on page 4/29.

1FG1403- ■ ■ . . . - . ■ . . -Z

© Siemens 2019

Gearbox size 49, 3-stage – 1FG1403

For line voltage 380 ... 480 V 3 AC (DC link voltage 510 ... 720 V DC) **– Gearbox type** ***FD49***

Geared motor torque at 1450 rpm
Note: All values in **bold** print are maximum gearbox values.
M_{2dyn}
Nm

Servo parallel shaft geared motors SIMOTICS S-1FG1
Article No.

Max. output speed n_{2max} = **84 rpm**, Transmission ratio i = **53.83**																					
–	–	–	–	–	–	–	–	–	–	–	–	–	–	–	–	–	–	–	–	–	1FG1403- . . ■ ■ 6 - ■ . B1 -Z
–	–	–	–	–	–	–	**490**	**490**	**490**	**490**	**490**	**490**	**490**	**490**	–	–	–	–	–	–	–	1FG1403- . . ■ ■ 4 - ■ . B1 -Z
–	–	–	–	–	–	–	**490**	**490**	**490**	**490**	**490**	**490**	**490**	**490**	**490**	**490**	**490**	**490**	**490**	**490**	1FG1403- . . ■ ■ 3 - ■ . B1 -Z
–	–	–	–	–	–	–	**490**	–	**490**	**490**	**490**	–	**490**	**490**	**490**	**490**	**490**	**490**	**490**	**490**	**490**	1FG1403- . . ■ ■ 2 - ■ . B1 -Z
Max. output speed n_{2max} = **97 rpm**, Transmission ratio i = **46.36**																					
–	–	–	–	–	–	–	–	–	–	–	–	–	–	–	–	–	–	–	–	–	1FG1403- . . ■ ■ 6 - ■ . A1 -Z
–	–	–	–	–	–	–	**480**	**480**	**480**	**480**	**480**	**480**	**480**	**480**	–	–	–	–	–	–	–	1FG1403- . . ■ ■ 4 - ■ . A1 -Z
–	–	–	–	–	–	–	**480**	**480**	**480**	**480**	**480**	**480**	**480**	**480**	**480**	**480**	**480**	**480**	**480**	**480**	1FG1403- . . ■ ■ 3 - ■ . A1 -Z
–	–	–	–	–	–	–	**480**	–	**480**	**480**	**480**	–	**480**	**480**	**480**	**480**	**480**	**480**	**480**	**480**	**480**	1FG1403- . . ■ ■ 2 - ■ . A1 -Z

Motor shaft height:

36																						**C**
			48																			**D**
							63															**E**
												80										**F**
																	100					**G**

Motor length/motor version (**CT** = Compact. **HD** = High Dynamic)**:**

			0/CT				**0/CT**					**0/CT**					**0/CT**					**0**	**2**
													1/CT					**1/CT**			**1**	**2**
								1/HD													**1**	**4**
2/CT				**2/CT**					**2/CT**												**2**	**2**
										3/CT				**3/CT**					**3/CT**		**3**	**2**
	3/HD				**3/HD**																**3**	**4**
		4/CT														**4/CT**					**4**	**2**
						4/HD					**4/HD**										**4**	**4**
																			5/CT		**5**	**2**
																	5/HD				**5**	**4**
																		6/HD			**6**	**4**

Selection of shaft design, encoder system, mounting type and special designs on page 4/29.

1FG1403- ■ ■ . . . . - . ■ . . **-Z**

© Siemens 2019

Selection and ordering data (continued)

For line voltage 200 ... 240 V 1 AC (DC link voltage 270 ... 330 V DC) **– Gearbox type** ***FD49***

Max. output speed n_{2max} rpm	Transmission ratio i	Geared motor torque at 1450 rpm Note: All values in **bold** print are maximum gearbox values. M_{2dyn} Nm					**Servo parallel shaft geared motors SIMOTICS S-1FG1** Article No.
14	**330.98**	**580**	**580**	**580**	**580**	**580**	**1FG1403- . . ■ ■ 3 - ■ . S1 -Z**
15	**294.29**	**580**	**580**	**580**	**580**	**580**	**1FG1403- . . ■ ■ 3 - ■ . R1 -Z**
17	**258.4**	**580**	**580**	**580**	**580**	**580**	**1FG1403- . . ■ ■ 3 - ■ . Q1 -Z**
19	**234.91**	**580**	**580**	**580**	**580**	**580**	**1FG1403- . . ■ ■ 3 - ■ . P1 -Z**
22	**200.98**	**570**	**570**	**570**	**570**	**570**	**1FG1403- . . ■ ■ 3 - ■ . N1 -Z**
25	**182.71**	**565**	**565**	**565**	**565**	**565**	**1FG1403- . . ■ ■ 3 - ■ . M1 -Z**
28	**161.5**	**560**	**560**	**560**	**560**	**560**	**1FG1403- . . ■ ■ 3 - ■ . L1 -Z**
31	**146.82**	**550**	**550**	**550**	**550**	**550**	**1FG1403- . . ■ ■ 3 - ■ . K1 -Z**
35	**128.6**	520	495	**545**	**545**	**545**	**1FG1403- . . ■ ■ 3 - ■ . J1 -Z**
38	**118.71**	480	460	**540**	**540**	**540**	**1FG1403- . . ■ ■ 3 - ■ . H1 -Z**
43	**105.1**	430	410	**530**	**530**	**530**	**1FG1403- . . ■ ■ 3 - ■ . G1 -Z**
51	**87.48**	355	340	515	**520**	**520**	**1FG1403- . . ■ ■ 3 - ■ . F1 -Z**
55	**82.33**	335	320	485	**515**	**515**	**1FG1403- . . ■ ■ 3 - ■ . E1 -Z**
61	**73.77**	300	290	440	**510**	**510**	**1FG1403- . . ■ ■ 3 - ■ . D1 -Z**
72	**62.81**	260	245	375	**500**	**500**	**1FG1403- . . ■ ■ 3 - ■ . C1 -Z**

Motor shaft height:

	36				**C**	
			48		**D**	

Motor length/motor version (**CT** = Compact, **HD** = High Dynamic)**:**

2/CT			**2/CT**		**2**	**1**
	3/HD			**3/HD**	**3**	**3**
		4/CT			**4**	**1**

Selection of shaft design, encoder system, mounting type and special designs on page 4/29.

1FG1403- ■ ■ . . . - . ■ . . -Z

© Siemens 2019

Gearbox size 69, 2-stage – 1FG1304

Technical specifications

Gearbox type *FZ69*

Servo geared motor Type	i	R_{ex}	M_{2rated} Nm	M_{2max} Nm	$M_{2Em.Off}$ Nm	n_{2max} rpm	n_{1max} rpm	φ [1] '	F_{R2} N	F_{R2max} N	c_T Nm/ '	J_G 10^{-4} kgm^2
1FG1304-.....-..X1	64.67	194/3	600	615	1020	70	4500	5.73	9640	9540	56.8	0.19
1FG1304-.....-..W1	58.79	1940/33	600	605	1020	77	4500	5.73	9220	9190	56.9	0.23
1FG1304-.....-..V1	50	50/1	600	605	1020	90	4500	5.79	8540	8510	56.8	0.29
1FG1304-.....-..U1	45.45	500/11	600	605	1020	99	4500	5.79	8160	8130	56.8	0.35
1FG1304-.....-..T1	40.56	365/9	600	605	1020	111	4500	5.84	7720	7680	56.8	0.41
1FG1304-.....-..S1	36.36	400/11	600	605	1020	124	4500	5.87	7310	7280	56.7	0.49
1FG1304-.....-..R1	32.78	295/9	600	605	1020	137	4500	5.90	6930	6900	56.7	0.58
1FG1304-.....-..Q1	30.26	1180/39	600	605	1020	149	4500	5.90	6650	6620	56.8	0.69
1FG1304-.....-..P1	27.62	580/21	600	605	1020	163	4500	5.93	6340	6310	56.7	0.81
1FG1304-.....-..N1	22.92	275/12	600	605	1020	196	4500	6.04	5740	5700	56.7	1
1FG1304-.....-..M1	21.57	1100/51	600	605	1020	209	4500	6.04	5550	5520	56.7	1.2
1FG1304-.....-..L1	20.37	550/27	600	605	1020	221	4500	6.04	5370	5340	56.6	1.4
1FG1304-.....-..K1	17.33	52/3	600	605	1020	260	4500	6.17	4900	4870	56.6	1.7
1FG1304-.....-..J1	14.85	490/33	600	600	1020	303	4500	6.17	4460	4460	56.5	2.2
1FG1304-.....-..H1	13.06	235/18	600	600	1020	345	4500	6.17	4120	4120	56.5	2.7
1FG1304-.....-..G1	11.01	760/69	600	600	1020	395	4350	6.17	3690	3690	56.3	3.5
1FG1304-.....-..F1	9.6	48/5	600	600	1020	453	4350	6.17	3450	3450	56.2	4.6
1FG1304-.....-..E1	8.9	89/10	475	475	805	489	4350	8.91	3800	3800	49	2.4
1FG1304-.....-..D1	7.62	4361/572	465	465	790	571	4350	8.91	3680	3680	48.9	3.1
1FG1304-.....-..C1	6.7	4183/624	440	440	745	649	4350	8.91	3570	3570	48.7	3.9
1FG1304-.....-..B1	5.66	1691/299	410	410	695	769	4350	8.91	3450	3450	48.3	5.1
1FG1304-.....-..A1	4.93	1602/325	385	385	650	882	4350	8.91	3350	3350	47.9	6.8

Selection and ordering data

Shaft design, encoder system, mounting type and special designs

Gearbox type *FZ69*

Servo parallel shaft geared motors SIMOTICS S-1FG1
Article No.

1FG1304- ■ ■ . . . - . ■ . . **-Z**

Shaft design:	Solid shaft with feather keyway – Design 1	**1**				
	Hollow-shaft with feather keyway – Design 1 – H40	**5**				
Order codes and Descriptions see chapter "Options"	Special shaft design	**9**				
Encoder system for motors with DRIVE-CLiQ interface:	AS20DQI encoder		**Q**			
	AM20DQI encoder		**R**			
	R14DQ resolver		**P**			
	R15DQ resolver		**U**			
Order codes and Descriptions see chapter "Options"	Special version encoder system		**Z**			
Mounting type:	Foot-mounted design			**A**		
	Flange-mounted design			**F**		
	Housing flange design			**H**		
	Shaft-mounted design (not possible with solid shaft)			**D**		
Special designs (Options): Order codes and Descriptions see chapter "Options" The following order codes must be added to each article number: • Oil type – order codes **K06** or **K11** • Mounting position – order codes **D01** ... **D06**						**-Z**

Selection of 2-stages servo parallel shaft geared motors with gearbox size 69 from next page. **1FG1304-** . . ■ ■ ■ - ■ . ■ ■ **-Z**

[1] Data are for option reduced-backlash version – order code **G99** required.

© Siemens 2019

Selection and ordering data (continued)

For line voltage 380 ... 480 V 3 AC (DC link voltage 510 ... 720 V DC) **– Gearbox type** ***FZ69***

Geared motor torque at 1450 rpm
Note: All values in **bold** print are maximum gearbox values.
M_{2dyn}
Nm

Servo parallel shaft geared motors SIMOTICS S-1FG1 Article No.
Max. output speed n_{2max} = 70 rpm, Transmission ratio i = 64.67
265 255 385 305 **615** 595 – – – – – – – – – – – – – – – – – – **1FG1304- . . ■ ■ 6 - ■ . X1 -Z**
– – – – – 595 **615** **615** **615** **615** **615** **615** – – – – – – – – – – – – **1FG1304- . . ■ ■ 4 - ■ . X1 -Z**
– – – – **615** – **615** **615** **615** **615** **615** **615** – – – – – – – – – – – – **1FG1304- . . ■ ■ 3 - ■ . X1 -Z**
– – – – **615** – – **615** – **615** **615** **615** – – – – – – – – – – – – **1FG1304- . . ■ ■ 2 - ■ . X1 -Z**
Max. output speed n_{2max} = 77 rpm, Transmission ratio i = 58.79
245 235 355 280 575 545 – – – – – – – – – – – – – – – – – – **1FG1304- . . ■ ■ 6 - ■ . W1 -Z**
– – – – – 545 **605** **605** **605** **605** **605** **605** – – – – – – – – – – – – **1FG1304- . . ■ ■ 4 - ■ . W1 -Z**
– – – – 575 – **605** **605** **605** **605** **605** **605** – – – – – – – – – – – – **1FG1304- . . ■ ■ 3 - ■ . W1 -Z**
– – – – 575 – – **605** – **605** **605** **605** – – – – – – – – – – – – **1FG1304- . . ■ ■ 2 - ■ . W1 -Z**
Max. output speed n_{2max} = 90 rpm, Transmission ratio i = 50
205 200 300 235 485 465 – – – – – – – – – – – – – – – – – – **1FG1304- . . ■ ■ 6 - ■ . V1 -Z**
– – – – – 465 525 **605** **605** **605** **605** **605** – – – – – – – – – – – – **1FG1304- . . ■ ■ 4 - ■ . V1 -Z**
– – – – 485 – 525 **605** **605** **605** **605** **605** – – – – – – – – – – – – **1FG1304- . . ■ ■ 3 - ■ . V1 -Z**
– – – – 485 – – **605** – **605** **605** **605** – – – – – – – – – – – – **1FG1304- . . ■ ■ 2 - ■ . V1 -Z**
Max. output speed n_{2max} = 99 rpm, Transmission ratio i = 45.45
192 183 275 215 445 425 – – – – – – – – – – – – – – – – – – **1FG1304- . . ■ ■ 6 - ■ . U1 -Z**
– – – – – 425 480 **605** **605** **605** **605** **605** – – – – – – – – – – – – **1FG1304- . . ■ ■ 4 - ■ . U1 -Z**
– – – – 445 – 480 **605** **605** **605** **605** **605** – – – – – – – – – – – – **1FG1304- . . ■ ■ 3 - ■ . U1 -Z**
– – – – 445 – – **605** – **605** **605** **605** – – – – – – – – – – – – **1FG1304- . . ■ ■ 2 - ■ . U1 -Z**
Max. output speed n_{2max} = 111 rpm, Transmission ratio i = 40.56
171 163 245 194 400 380 – – – – – – – – – – – – – – – – – – **1FG1304- . . ■ ■ 6 - ■ . T1 -Z**
– – – – – 380 425 **605** **605** **605** **605** **605** **605** **605** **605** – – – – – – – – **1FG1304- . . ■ ■ 4 - ■ . T1 -Z**
– – – – 400 – 425 **605** **605** **605** **605** **605** **605** **605** **605** **605** **605** **605** – – – – **1FG1304- . . ■ ■ 3 - ■ . T1 -Z**
– – – – 400 – – **605** – **605** **605** **605** – **605** **605** **605** **605** **605** – – – – **1FG1304- . . ■ ■ 2 - ■ . T1 -Z**
Max. output speed n_{2max} = 124 rpm, Transmission ratio i = 36.36
153 147 220 174 355 340 – – – – – – – – – – – – – – – – – – **1FG1304- . . ■ ■ 6 - ■ . S1 -Z**
– – – – – 340 385 **605** 590 **605** **605** **605** **605** **605** **605** – – – – – – – – **1FG1304- . . ■ ■ 4 - ■ . S1 -Z**
– – – – 355 – 385 **605** 590 **605** **605** **605** **605** **605** **605** **605** **605** **605** – – – – **1FG1304- . . ■ ■ 3 - ■ . S1 -Z**
– – – – 355 – – **605** – **605** **605** **605** – **605** **605** **605** **605** **605** – – – – **1FG1304- . . ■ ■ 2 - ■ . S1 -Z**
Max. output speed n_{2max} = 137 rpm, Transmission ratio i = 32.78
138 132 200 157 320 305 – – – – – – – – – – – – – – – – – – **1FG1304- . . ■ ■ 6 - ■ . R1 -Z**
– – – – – 305 345 555 530 **605** **605** **605** **605** **605** **605** – – – – – – – – **1FG1304- . . ■ ■ 4 - ■ . R1 -Z**
– – – – 320 – 345 555 530 **605** **605** **605** **605** **605** **605** **605** **605** **605** – – – – **1FG1304- . . ■ ■ 3 - ■ . R1 -Z**
– – – – 320 – – 555 – **605** **605** **605** – **605** **605** **605** **605** **605** – – – – **1FG1304- . . ■ ■ 2 - ■ . R1 -Z**

Motor shaft height:

36																							**C**	
			48																				**D**	
							63																**E**	
												80											**F**	
																		100					**G**	

Motor length/motor version (**CT** = Compact. **HD** = High Dynamic)**:**

			0/CT				**0/CT**					**0/CT**						**0/CT**					**0**	**2**
													1/CT						**1/CT**				**1**	**2**
								1/HD															**1**	**4**
2/CT				**2/CT**					**2/CT**														**2**	**2**
										3/CT				**3/CT**						**3/CT**			**3**	**2**
	3/HD				**3/HD**											**4/CT**							**3**	**4**
		4/CT																					**4**	**2**
						4/HD					**4/HD**												**4**	**4**
																				5/CT			**5**	**2**
																	5/HD						**5**	**4**
																		6/HD					**6**	**4**

Selection of shaft design, encoder system, mounting type and special designs on page 4/34.

1FG1304- ■ ■ . . . . - ■ . . -Z

© Siemens 2019

Servo parallel shaft geared motors SIMOTICS S-1FG1

Selecting servo geared motors

Gearbox size 69, 2-stage – 1FG1304

For line voltage 380 ... 480 V 3 AC (DC link voltage 510 ... 720 V DC) **– Gearbox type** ***FZ69***

Geared motor torque at 1450 rpm
Note: All values in **bold** print are maximum gearbox values.
M_{2dyn}
Nm

Servo parallel shaft geared motors SIMOTICS S-1FG1
Article No.

Max. output speed n_{2max} = **149 rpm**, Transmission ratio i = **30.26**																					
128	123	186	145	300	285	–	–	–	–	–	–	–	–	–	–	–	–	–	–	–	1FG1304- . . ■ ■ 6 - ■ . Q1 -Z
–	–	–	–	–	285	320	515	495	**605**	**605**	**605**	**605**	**605**	**605**	–	–	–	–	–	–	1FG1304- . . ■ ■ 4 - ■ . Q1 -Z
–	–	–	–	300	–	320	515	495	**605**	**605**	**605**	**605**	**605**	**605**	**605**	**605**	**605**	–	–	–	1FG1304- . . ■ ■ 3 - ■ . Q1 -Z
–	–	–	–	300	–	–	515	–	**605**	**605**	**605**	–	**605**	**605**	**605**	**605**	**605**	–	–	–	1FG1304- . . ■ ■ 2 - ■ . Q1 -Z
Max. output speed n_{2max} = **163 rpm**, Transmission ratio i = **27.62**																					
117	112	170	133	270	260	–	–	–	–	–	–	–	–	–	–	–	–	–	–	–	1FG1304- . . ■ ■ 6 - ■ . P1 -Z
–	–	–	–	–	260	290	470	450	**605**	**605**	**605**	**605**	**605**	**605**	–	–	–	–	–	–	1FG1304- . . ■ ■ 4 - ■ . P1 -Z
–	–	–	–	270	–	290	470	450	**605**	**605**	**605**	**605**	**605**	**605**	**605**	**605**	**605**	**605**	**605**	**605**	1FG1304- . . ■ ■ 3 - ■ . P1 -Z
–	–	–	–	270	–	–	470	–	**605**	**605**	**605**	–	**605**	**605**	**605**	**605**	**605**	**605**	**605**	**605**	1FG1304- . . ■ ■ 2 - ■ . P1 -Z
Max. output speed n_{2max} = **196 rpm**, Transmission ratio i = **22.92**																					
97	93	141	111	225	215	–	–	–	–	–	–	–	–	–	–	–	–	–	–	–	1FG1304- . . ■ ■ 6 - ■ . N1 -Z
–	–	–	–	–	215	245	390	375	565	**605**	**605**	540	**605**	**605**	–	–	–	–	–	–	1FG1304- . . ■ ■ 4 - ■ . N1 -Z
–	–	–	–	225	–	245	390	375	565	**605**	**605**	540	**605**	**605**	**605**	**605**	**605**	**605**	**605**	**605**	1FG1304- . . ■ ■ 3 - ■ . N1 -Z
–	–	–	–	225	–	–	390	–	565	**605**	**605**	–	**605**	**605**	**605**	**605**	**605**	**605**	**605**	**605**	1FG1304- . . ■ ■ 2 - ■ . N1 -Z
Max. output speed n_{2max} = **209 rpm**, Transmission ratio i = **21.57**																					
92	88	133	104	215	205	–	–	–	–	–	–	–	–	–	–	–	–	–	–	–	1FG1304- . . ■ ■ 6 - ■ . M1 -Z
–	–	–	–	–	205	230	370	355	530	**605**	**605**	510	**605**	**605**	–	–	–	–	–	–	1FG1304- . . ■ ■ 4 - ■ . M1 -Z
–	–	–	–	215	–	230	370	355	530	**605**	**605**	510	**605**	**605**	**605**	**605**	**605**	**605**	**605**	**605**	1FG1304- . . ■ ■ 3 - ■ . M1 -Z
–	–	–	–	215	–	–	370	–	530	**605**	**605**	–	**605**	**605**	**605**	**605**	**605**	**605**	**605**	**605**	1FG1304- . . ■ ■ 2 - ■ . M1 -Z
Max. output speed n_{2max} = **221 rpm**, Transmission ratio i = **20.37**																					
87	83	125	98	200	193	–	–	–	–	–	–	–	–	–	–	–	–	–	–	–	1FG1304- . . ■ ■ 6 - ■ . L1 -Z
–	–	–	–	–	193	215	345	335	500	**605**	**605**	480	**605**	**605**	–	–	–	–	–	–	1FG1304- . . ■ ■ 4 - ■ . L1 -Z
–	–	–	–	200	–	215	345	335	500	**605**	**605**	480	**605**	**605**	**605**	**605**	**605**	**605**	**605**	**605**	1FG1304- . . ■ ■ 3 - ■ . L1 -Z
–	–	–	–	200	–	–	345	–	500	**605**	**605**	–	**605**	**605**	**605**	**605**	**605**	**605**	**605**	**605**	1FG1304- . . ■ ■ 2 - ■ . L1 -Z
Max. output speed n_{2max} = **260 rpm**, Transmission ratio i = **17.33**																					
74	71	107	84	173	165	–	–	–	–	–	–	–	–	–	–	–	–	–	–	–	1FG1304- . . ■ ■ 6 - ■ . K1 -Z
–	–	–	–	–	165	186	295	285	425	575	525	410	**605**	**605**	–	–	–	–	–	–	1FG1304- . . ■ ■ 4 - ■ . K1 -Z
–	–	–	–	173	–	186	295	285	425	575	525	410	**605**	**605**	**605**	**605**	**605**	**605**	**605**	**605**	1FG1304- . . ■ ■ 3 - ■ . K1 -Z
–	–	–	–	173	–	–	295	–	425	575	525	–	**605**	**605**	**605**	**605**	**605**	**605**	**605**	**605**	1FG1304- . . ■ ■ 2 - ■ . K1 -Z
Max. output speed n_{2max} = **303 rpm**, Transmission ratio i = **14.85**																					
–	–	–	–	–	–	–	–	–	–	–	–	–	–	–	–	–	–	–	–	–	1FG1304- . . ■ ■ 6 - ■ . J1 -Z
–	–	–	–	–	–	–	255	245	365	495	450	355	525	**600**	–	–	–	–	–	–	1FG1304- . . ■ ■ 4 - ■ . J1 -Z
–	–	–	–	–	–	–	255	245	365	495	450	355	525	**600**	**600**	**600**	**600**	**600**	**600**	**600**	1FG1304- . . ■ ■ 3 - ■ . J1 -Z
–	–	–	–	–	–	–	255	–	365	495	450	–	525	**600**	**600**	**600**	**600**	**600**	**600**	**600**	1FG1304- . . ■ ■ 2 - ■ . J1 -Z
Max. output speed n_{2max} = **345 rpm**, Transmission ratio i = **13.06**																					
–	–	–	–	–	–	–	–	–	–	–	–	–	–	–	–	–	–	–	–	–	1FG1304- . . ■ ■ 6 - ■ . H1 -Z
–	–	–	–	–	–	–	225	215	325	435	400	310	460	**600**	–	–	–	–	–	–	1FG1304- . . ■ ■ 4 - ■ . H1 -Z
–	–	–	–	–	–	–	225	215	325	435	400	310	460	**600**	**600**	**600**	**600**	**600**	**600**	**600**	1FG1304- . . ■ ■ 3 - ■ . H1 -Z
–	–	–	–	–	–	–	225	–	325	435	400	–	460	**600**	**600**	**600**	**600**	**600**	**600**	**600**	1FG1304- . . ■ ■ 2 - ■ . H1 -Z

Motor shaft height:

36																					**C**
			48																		**D**
							63														**E**
												80									**F**
																	100				**G**

Motor length/motor version (**CT** = Compact. **HD** = High Dynamic)**:**

			0/CT				**0/CT**					**0/CT**						**0/CT**				**0**	**2**
													1/CT						**1/CT**			**1**	**2**
								1/HD														**1**	**4**
2/CT				**2/CT**					**2/CT**													**2**	**2**
										3/CT				**3/CT**					**3/CT**			**3**	**2**
	3/HD				**3/HD**																	**3**	**4**
		4/CT														**4/CT**						**4**	**2**
						4/HD					**4/HD**											**4**	**4**
																				5/CT		**5**	**2**
																5/HD						**5**	**4**
																	6/HD					**6**	**4**

Selection of shaft design, encoder system, mounting type and special designs on page 4/34.

1FG1304- ■ ■ . . . - . ■ . . -Z

© Siemens 2019

For line voltage 380 ... 480 V 3 AC (DC link voltage 510 ... 720 V DC) **– Gearbox type** ***FZ69***

Geared motor torque at 1450 rpm
Note: All values in **bold** print are maximum gearbox values.
M_{2dyn}
Nm

																						Article No.
Max. output speed n_{2max} = 395 rpm, Transmission ratio i = 11.01																						
–	–	–	–	–	–	–	–	–	–	–	–	–	–	–	–	–	–	–	–	–	–	1FG1304- . . ■ ■ 6 - ■ . G1 -Z
–	–	–	–	–	–	–	190	182	270	365	335	260	390	525	–	–	–	–	–	–	–	1FG1304- . . ■ ■ 4 - ■ . G1 -Z
–	–	–	–	–	–	–	190	182	270	365	335	260	390	525	**600**	**600**	**600**	580	**600**	**600**	**600**	1FG1304- . . ■ ■ 3 - ■ . G1 -Z
–	–	–	–	–	–	–	190	–	270	365	335	–	390	525	**600**	**600**	**600**	580	**600**	**600**	**600**	1FG1304- . . ■ ■ 2 - ■ . G1 -Z
Max. output speed n_{2max} = 453 rpm, Transmission ratio i = 9.6																						
–	–	–	–	–	–	–	–	–	–	–	–	–	–	–	–	–	–	–	–	–	–	1FG1304- . . ■ ■ 6 - ■ . F1 -Z
–	–	–	–	–	–	–	165	159	235	320	290	230	340	460	–	–	–	–	–	–	–	1FG1304- . . ■ ■ 4 - ■ . F1 -Z
–	–	–	–	–	–	–	165	159	235	320	290	230	340	460	560	595	**600**	505	**600**	**600**	**600**	1FG1304- . . ■ ■ 3 - ■ . F1 -Z
–	–	–	–	–	–	–	165	–	235	320	290	–	340	460	560	595	**600**	505	**600**	**600**	**600**	1FG1304- . . ■ ■ 2 - ■ . F1 -Z
Max. output speed n_{2max} = 489 rpm, Transmission ratio i = 8.9																						
38	36	55	43	90	85	–	–	–	–	–	–	–	–	–	–	–	–	–	–	–	–	1FG1304- . . ■ ■ 6 - ■ . E1 -Z
–	–	–	–	–	85	96	154	148	220	300	270	210	315	425	–	–	–	–	–	–	–	1FG1304- . . ■ ■ 4 - ■ . E1 -Z
–	–	–	–	90	–	96	154	148	220	300	270	210	315	425	**475**	**475**	**475**	470	**475**	**475**	**475**	1FG1304- . . ■ ■ 3 - ■ . E1 -Z
–	–	–	–	90	–	–	154	–	220	300	270	–	315	425	**475**	**475**	**475**	470	**475**	**475**	**475**	1FG1304- . . ■ ■ 2 - ■ . E1 -Z
Max. output speed n_{2max} = 571 rpm, Transmission ratio i = 7.62																						
–	–	–	–	–	–	–	–	–	–	–	–	–	–	–	–	–	–	–	–	–	–	1FG1304- . . ■ ■ 6 - ■ . D1 -Z
–	–	–	–	–	–	–	132	127	191	255	235	184	270	365	–	–	–	–	–	–	–	1FG1304- . . ■ ■ 4 - ■ . D1 -Z
–	–	–	–	–	–	–	132	127	191	255	235	184	270	365	450	**465**	**465**	405	**465**	**465**	**465**	1FG1304- . . ■ ■ 3 - ■ . D1 -Z
–	–	–	–	–	–	–	132	–	191	255	235	–	270	365	450	**465**	**465**	405	**465**	**465**	**465**	1FG1304- . . ■ ■ 2 - ■ . D1 -Z
Max. output speed n_{2max} = 649 rpm, Transmission ratio i = 6.7																						
–	–	–	–	–	–	–	–	–	–	–	–	–	–	–	–	–	–	–	–	–	–	1FG1304- . . ■ ■ 6 - ■ . C1 -Z
–	–	–	–	–	–	–	116	112	168	225	205	162	240	320	–	–	–	–	–	–	–	1FG1304- . . ■ ■ 4 - ■ . C1 -Z
–	–	–	–	–	–	–	116	112	168	225	205	162	240	320	395	420	**440**	355	**440**	**440**	**440**	1FG1304- . . ■ ■ 3 - ■ . C1 -Z
–	–	–	–	–	–	–	116	–	168	225	205	–	240	320	395	420	**440**	355	**440**	**440**	**440**	1FG1304- . . ■ ■ 2 - ■ . C1 -Z
Max. output speed n_{2max} = 769 rpm, Transmission ratio i = 5.66																						
–	–	–	–	–	–	–	–	–	–	–	–	–	–	–	–	–	–	–	–	–	–	1FG1304- . . ■ ■ 6 - ■ . B1 -Z
–	–	–	–	–	–	–	98	94	142	191	175	136	200	270	–	–	–	–	–	–	–	1FG1304- . . ■ ■ 4 - ■ . B1 -Z
–	–	–	–	–	–	–	98	94	142	191	175	136	200	270	330	355	**410**	300	**410**	**410**	**410**	1FG1304- . . ■ ■ 3 - ■ . B1 -Z
–	–	–	–	–	–	–	98	–	142	191	175	–	200	270	330	355	**410**	300	**410**	**410**	**410**	1FG1304- . . ■ ■ 2 - ■ . B1 -Z
Max. output speed n_{2max} = 882 rpm, Transmission ratio i = 4.93																						
–	–	–	–	–	–	–	–	–	–	–	–	–	–	–	–	–	–	–	–	–	–	1FG1304- . . ■ ■ 6 - ■ . A1 -Z
–	–	–	–	–	–	–	85	82	124	167	152	119	176	235	–	–	–	–	–	–	–	1FG1304- . . ■ ■ 4 - ■ . A1 -Z
–	–	–	–	–	–	–	85	82	124	167	152	119	176	235	290	310	**385**	260	380	**385**	**385**	1FG1304- . . ■ ■ 3 - ■ . A1 -Z
–	–	–	–	–	–	–	85	–	124	167	152	–	176	235	290	310	**385**	260	380	**385**	**385**	1FG1304- . . ■ ■ 2 - ■ . A1 -Z

Motor shaft height:

36																																		**C**
			48																															**D**
							63																											**E**
												80																						**F**
																		100																**G**

Motor length/motor version (**CT** = Compact. **HD** = High Dynamic)**:**

			0/CT				**0/CT**					**0/CT**						**0/CT**																	**0**	**2**
													1/CT						**1/CT**															**1**	**2**
								1/HD																											**1**	**4**
2/CT				**2/CT**					**2/CT**																										**2**	**2**
										3/CT					**3/CT**										**3/CT**										**3**	**2**
	3/HD				**3/HD**																														**3**	**4**
		4/CT															**4/CT**																		**4**	**2**
						4/HD					**4/HD**																										**4**	**4**
																							5/CT												**5**	**2**
																5/HD																			**5**	**4**
																	6/HD																		**6**	**4**

Selection of shaft design, encoder system, mounting type and special designs on page 4/34.

1FG1304- ■ ■ . . . - ■ . . -Z

© Siemens 2019

Gearbox size 69, 2-stage – 1FG1304

Selection and ordering data (continued)

For line voltage 200 ... 240 V 1 AC (DC link voltage 270 ... 330 V DC) **– Gearbox type** ***FZ69***

Max. output speed n_{2max} rpm	Transmission ratio i	Geared motor torque at 1450 rpm Note: All values in **bold** print are maximum gearbox values. M_{2dyn} Nm					**Servo parallel shaft geared motors SIMOTICS S-1FG1** Article No.
70	**64.67**	265	255	385	**615**	595	**1FG1304- . . ■ ■ 3 - ■ . X1 -Z**
77	**58.79**	245	235	355	575	545	**1FG1304- . . ■ ■ 3 - ■ . W1 -Z**
90	**50**	205	200	300	485	465	**1FG1304- . . ■ ■ 3 - ■ . V1 -Z**
99	**45.45**	192	183	275	445	425	**1FG1304- . . ■ ■ 3 - ■ . U1 -Z**
111	**40.56**	171	163	245	400	380	**1FG1304- . . ■ ■ 3 - ■ . T1 -Z**
124	**36.36**	153	147	220	355	340	**1FG1304- . . ■ ■ 3 - ■ . S1 -Z**
137	**32.78**	138	132	200	320	305	**1FG1304- . . ■ ■ 3 - ■ . R1 -Z**
149	**30.26**	128	123	186	300	285	**1FG1304- . . ■ ■ 3 - ■ . Q1 -Z**
163	**27.62**	117	112	170	270	260	**1FG1304- . . ■ ■ 3 - ■ . P1 -Z**
196	**22.92**	97	93	141	225	215	**1FG1304- . . ■ ■ 3 - ■ . N1 -Z**
209	**21.57**	92	88	133	215	205	**1FG1304- . . ■ ■ 3 - ■ . M1 -Z**
221	**20.37**	87	83	125	200	193	**1FG1304- . . ■ ■ 3 - ■ . L1 -Z**
260	**17.33**	74	71	107	173	165	**1FG1304- . . ■ ■ 3 - ■ . K1 -Z**
489	**8.9**	38	36	55	90	85	**1FG1304- . . ■ ■ 3 - ■ . E1 -Z**
Motor shaft height:							
		36					**C**
					48		**D**
Motor length/motor version (**CT** = Compact, **HD** = High Dynamic)**:**							
		2/CT			**2/CT**		**2** **1**
			3/HD			**3/HD**	**3** **3**
				4/CT			**4** **1**

Selection of shaft design, encoder system, mounting type and special designs on page 4/34.

1FG1304- ■ ■ . . . - . ■ . . -Z

© Siemens 2019

Technical specifications

Gearbox type *FD69*

Servo geared motor Type	i	R_{ex}	M_{2rated} Nm	M_{2max} Nm	$M_{2Em.Off}$ Nm	n_{2max} rpm	n_{1max} rpm	φ [1] '	F_{R2} N	F_{R2max} N	c_T Nm/ '	J_G 10^{-4} kgm^2
1FG1404-.....-..S1	348.4	28220/81	600	665	1020	13	4500	5.97	10800	10700	60.2	0.06
1FG1404-.....-..R1	309.78	2788/9	600	665	1020	15	4500	6.02	10800	10700	60.2	0.07
1FG1404-.....-..Q1	272	272/1	600	665	1020	17	4500	6.03	10800	10700	60.2	0.08
1FG1404-.....-..P1	247.27	2720/11	600	665	1020	18	4500	6.03	10800	10700	60.2	0.1
1FG1404-.....-..N1	211.56	1904/9	600	665	1020	21	4500	6.04	10800	10700	60.2	0.12
1FG1404-.....-..M1	192.32	19040/99	600	665	1020	23	4500	6.04	10800	10700	60.2	0.14
1FG1404-.....-..L1	170	170/1	600	665	1020	26	4500	6.06	10800	10700	60.2	0.17
1FG1404-.....-..K1	154.55	1700/11	600	665	1020	29	4500	6.06	10800	10700	60.2	0.22
1FG1404-.....-..J1	135.37	3655/27	600	665	1020	33	4500	6.08	10800	10700	60.2	0.25
1FG1404-.....-..H1	124.96	14620/117	600	660	1020	36	4500	6.08	10800	10700	60.2	0.3
1FG1404-.....-..G1	110.63	6970/63	600	655	1020	41	4500	6.10	10800	10700	60.2	0.34
1FG1404-.....-..F1	92.08	1105/12	600	640	1020	49	4500	6.12	10800	10700	60.2	0.45
1FG1404-.....-..E1	86.67	260/3	600	635	1020	52	4500	6.12	10800	10700	60.2	0.52
1FG1404-.....-..D1	77.65	6290/81	600	625	1020	58	4500	6.15	10400	10300	60.2	0.57
1FG1404-.....-..C1	66.11	595/9	600	615	1020	68	4500	6.18	9740	9640	60.2	0.73
1FG1404-.....-..B1	56.67	170/3	600	605	1020	79	4500	6.18	9060	9030	60.1	0.92
1FG1404-.....-..A1	48.8	2635/54	600	605	1020	92	4500	6.18	8440	8410	60.1	1.3

Selection and ordering data

Shaft design, encoder system, mounting type and special designs

Gearbox type *FD69*

		Servo parallel shaft geared motors SIMOTICS S-1FG1 Article No. **1FG1404-** ■■.....-.■... **-Z**
Shaft design:	Solid shaft with feather keyway – Design 1	**1**
	Hollow-shaft with feather keyway – Design 1 – H40	**5**
Order codes and Descriptions see chapter "Options"	Special shaft design	**9**
Encoder system for motors with DRIVE-CLiQ interface:	AS20DQI encoder	**Q**
	AM20DQI encoder	**R**
	R14DQ resolver	**P**
	R15DQ resolver	**U**
Order codes and Descriptions see chapter "Options"	Special version encoder system	**Z**
Mounting type:	Foot-mounted design	**A**
	Flange-mounted design	**F**
	Housing flange design	**H**
	Shaft-mounted design (not possible with solid shaft)	**D**
Special designs (Options): Order codes and Descriptions see chapter "Options" The following order codes must be added to each article number: • Oil type – order codes **K06** or **K11** • Mounting position – order codes **D01** ... **D06**		**-Z**
Selection of 3-stages servo parallel shaft geared motors with gearbox size 69 from next page.		**1FG1404-** ..■■■-■.■■**-Z**

[1] Data are for option reduced-backlash version – order code **G99** required.

© Siemens 2019

Gearbox size 69, 3-stage – 1FG1404

Selection and ordering data (continued)

For line voltage 380 ... 480 V 3 AC (DC link voltage 510 ... 720 V DC) **– Gearbox type** ***FD69***

Geared motor torque at 1450 rpm
Note: All values in **bold** print are maximum gearbox values.

M_{2dyn} Nm																						Servo parallel shaft geared motors SIMOTICS S-1FG1 Article No.
Max. output speed n_{2max} = **13 rpm**, Transmission ratio i = **348.4**																						
665	**665**	**665**	**665**	**665**	**665**	–	–	–	–	–	–	–	–	–	–	–	–	–	–	–	–	1FG1404- . . ■ ■ 6 - ■ . S1 -Z
–	–	–	–	–	**665**	**665**	–	–	–	–	–	–	–	–	–	–	–	–	–	–	–	1FG1404- . . ■ ■ 4 - ■ . S1 -Z
–	–	–	–	**665**	–	**665**	–	–	–	–	–	–	–	–	–	–	–	–	–	–	–	1FG1404- . . ■ ■ 3 - ■ . S1 -Z
–	–	–	–	**665**	–	–	–	–	–	–	–	–	–	–	–	–	–	–	–	–	–	1FG1404- . . ■ ■ 2 - ■ . S1 -Z
Max. output speed n_{2max} = **15 rpm**, Transmission ratio i = **309.78**																						
665	**665**	**665**	**665**	**665**	**665**	–	–	–	–	–	–	–	–	–	–	–	–	–	–	–	–	1FG1404- . . ■ ■ 6 - ■ . R1 -Z
–	–	–	–	–	**665**	**665**	**665**	**665**	**665**	**665**	**665**	–	–	–	–	–	–	–	–	–	–	1FG1404- . . ■ ■ 4 - ■ . R1 -Z
–	–	–	–	**665**	–	**665**	**665**	**665**	**665**	**665**	**665**	–	–	–	–	–	–	–	–	–	–	1FG1404- . . ■ ■ 3 - ■ . R1 -Z
–	–	–	–	**665**	–	–	**665**	–	**665**	**665**	**665**	–	–	–	–	–	–	–	–	–	–	1FG1404- . . ■ ■ 2 - ■ . R1 -Z
Max. output speed n_{2max} = **17 rpm**, Transmission ratio i = **272**																						
665	**665**	**665**	**665**	**665**	**665**	–	–	–	–	–	–	–	–	–	–	–	–	–	–	–	–	1FG1404- . . ■ ■ 6 - ■ . Q1 -Z
–	–	–	–	–	**665**	**665**	**665**	**665**	**665**	**665**	**665**	–	–	–	–	–	–	–	–	–	–	1FG1404- . . ■ ■ 4 - ■ . Q1 -Z
–	–	–	–	**665**	–	**665**	**665**	**665**	**665**	**665**	**665**	–	–	–	–	–	–	–	–	–	–	1FG1404- . . ■ ■ 3 - ■ . Q1 -Z
–	–	–	–	**665**	–	–	**665**	–	**665**	**665**	**665**	–	–	–	–	–	–	–	–	–	–	1FG1404- . . ■ ■ 2 - ■ . Q1 -Z
Max. output speed n_{2max} = **18 rpm**, Transmission ratio i = **247.27**																						
665	**665**	**665**	**665**	**665**	**665**	–	–	–	–	–	–	–	–	–	–	–	–	–	–	–	–	1FG1404- . . ■ ■ 6 - ■ . P1 -Z
–	–	–	–	–	**665**	**665**	**665**	**665**	**665**	**665**	**665**	–	–	–	–	–	–	–	–	–	–	1FG1404- . . ■ ■ 4 - ■ . P1 -Z
–	–	–	–	**665**	–	**665**	**665**	**665**	**665**	**665**	**665**	–	–	–	–	–	–	–	–	–	–	1FG1404- . . ■ ■ 3 - ■ . P1 -Z
–	–	–	–	**665**	–	–	**665**	–	**665**	**665**	**665**	–	–	–	–	–	–	–	–	–	–	1FG1404- . . ■ ■ 2 - ■ . P1 -Z
Max. output speed n_{2max} = **21 rpm**, Transmission ratio i = **211.56**																						
665	**665**	**665**	**665**	**665**	**665**	–	–	–	–	–	–	–	–	–	–	–	–	–	–	–	–	1FG1404- . . ■ ■ 6 - ■ . N1 -Z
–	–	–	–	–	**665**	**665**	**665**	**665**	**665**	**665**	**665**	–	–	–	–	–	–	–	–	–	–	1FG1404- . . ■ ■ 4 - ■ . N1 -Z
–	–	–	–	**665**	–	**665**	**665**	**665**	**665**	**665**	**665**	–	–	–	–	–	–	–	–	–	–	1FG1404- . . ■ ■ 3 - ■ . N1 -Z
–	–	–	–	**665**	–	–	**665**	–	**665**	**665**	**665**	–	–	–	–	–	–	–	–	–	–	1FG1404- . . ■ ■ 2 - ■ . N1 -Z
Max. output speed n_{2max} = **23 rpm**, Transmission ratio i = **192.32**																						
665	**665**	**665**	**665**	**665**	**665**	–	–	–	–	–	–	–	–	–	–	–	–	–	–	–	–	1FG1404- . . ■ ■ 6 - ■ . M1 -Z
–	–	–	–	–	**665**	**665**	**665**	**665**	**665**	**665**	**665**	–	–	–	–	–	–	–	–	–	–	1FG1404- . . ■ ■ 4 - ■ . M1 -Z
–	–	–	–	**665**	–	**665**	**665**	**665**	**665**	**665**	**665**	–	–	–	–	–	–	–	–	–	–	1FG1404- . . ■ ■ 3 - ■ . M1 -Z
–	–	–	–	**665**	–	–	**665**	–	**665**	**665**	**665**	–	–	–	–	–	–	–	–	–	–	1FG1404- . . ■ ■ 2 - ■ . M1 -Z
Max. output speed n_{2max} = **26 rpm**, Transmission ratio i = **170**																						
665	655	**665**	**665**	**665**	**665**	–	–	–	–	–	–	–	–	–	–	–	–	–	–	–	–	1FG1404- . . ■ ■ 6 - ■ . L1 -Z
–	–	–	–	–	**665**	**665**	**665**	**665**	**665**	**665**	**665**	**665**	**665**	**665**	–	–	–	–	–	–	–	1FG1404- . . ■ ■ 4 - ■ . L1 -Z
–	–	–	–	**665**	–	**665**	**665**	**665**	**665**	**665**	**665**	**665**	**665**	**665**	**665**	**665**	**665**	–	–	–	–	1FG1404- . . ■ ■ 3 - ■ . L1 -Z
–	–	–	–	**665**	–	–	**665**	–	**665**	**665**	**665**	–	**665**	**665**	**665**	**665**	**665**	–	–	–	–	1FG1404- . . ■ ■ 2 - ■ . L1 -Z

Motor shaft height:

36																							**C**	
			48																				**D**	
							63																**E**	
												80											**F**	
																		100					**G**	

Motor length/motor version (**CT** = Compact. **HD** = High Dynamic)**:**

			0/CT				**0/CT**					**0/CT**						**0/CT**					**0**	**2**
													1/CT						**1/CT**				**1**	**2**
								1/HD															**1**	**4**
2/CT				**2/CT**					**2/CT**														**2**	**2**
										3/CT				**3/CT**						**3/CT**			**3**	**2**
	3/HD				**3/HD**																		**3**	**4**
		4/CT														**4/CT**							**4**	**2**
						4/HD					**4/HD**													**4**	**4**
																					5/CT		**5**	**2**
																	5/HD						**5**	**4**
																		6/HD					**6**	**4**

Selection of shaft design, encoder system, mounting type and special designs on page 4/39.

1FG1404- ■ ■ . . . . - . ■ . . -Z

© Siemens 2019

For line voltage 380 ... 480 V 3 AC (DC link voltage 510 ... 720 V DC) **– Gearbox type** ***FD69***

Geared motor torque at 1450 rpm
Note: All values in **bold** print are maximum gearbox values.
M_{2dyn}
Nm

Servo parallel shaft geared motors SIMOTICS S-1FG1
Article No.

Max. output speed n_{2max} = **29 rpm**, Transmission ratio i = **154.55**																						
625	595	**665**	665	665	665	–	–	–	–	–	–	–	–	–	–	–	–	–	–	–	–	1FG1404- . . ■ ■ **6** - ■ . **K1** -Z
–	–	–	–	–	665	665	665	665	665	665	665	665	665	665	–	–	–	–	–	–	–	1FG1404- . . ■ ■ **4** - ■ . **K1** -Z
–	–	–	–	665	–	665	665	665	665	665	665	665	665	665	665	665	665	–	–	–	–	1FG1404- . . ■ ■ **3** - ■ . **K1** -Z
–	–	–	–	665	–	–	665	–	665	665	665	–	665	665	665	665	665	–	–	–	–	1FG1404- . . ■ ■ **2** - ■ . **K1** -Z
Max. output speed n_{2max} = **33 rpm**, Transmission ratio i = **135.37**																						
550	525	**665**	620	665	665	–	–	–	–	–	–	–	–	–	–	–	–	–	–	–	–	1FG1404- . . ■ ■ **6** - ■ . **J1** -Z
–	–	–	–	–	665	665	665	665	665	665	665	665	665	665	–	–	–	–	–	–	–	1FG1404- . . ■ ■ **4** - ■ . **J1** -Z
–	–	–	–	665	–	665	665	665	665	665	665	665	665	665	665	665	665	–	–	–	–	1FG1404- . . ■ ■ **3** - ■ . **J1** -Z
–	–	–	–	665	–	–	665	–	665	665	665	–	665	665	665	665	665	–	–	–	–	1FG1404- . . ■ ■ **2** - ■ . **J1** -Z
Max. output speed n_{2max} = **36 rpm**, Transmission ratio i = **124.96**																						
510	485	**660**	575	660	660	–	–	–	–	–	–	–	–	–	–	–	–	–	–	–	–	1FG1404- . . ■ ■ **6** - ■ . **H1** -Z
–	–	–	–	–	660	660	660	660	660	660	660	660	660	660	–	–	–	–	–	–	–	1FG1404- . . ■ ■ **4** - ■ . **H1** -Z
–	–	–	–	660	–	660	660	660	660	660	660	660	660	660	660	660	660	–	–	–	–	1FG1404- . . ■ ■ **3** - ■ . **H1** -Z
–	–	–	–	660	–	–	660	–	660	660	660	–	660	660	660	660	660	–	–	–	–	1FG1404- . . ■ ■ **2** - ■ . **H1** -Z
Max. output speed n_{2max} = **41 rpm**, Transmission ratio i = **110.63**																						
450	430	655	510	**655**	**655**	–	–	–	–	–	–	–	–	–	–	–	–	–	–	–	–	1FG1404- . . ■ ■ **6** - ■ . **G1** -Z
–	–	–	–	–	655	655	655	655	655	655	655	655	655	655	–	–	–	–	–	–	–	1FG1404- . . ■ ■ **4** - ■ . **G1** -Z
–	–	–	–	655	–	655	655	655	655	655	655	655	655	655	655	655	655	655	655	655	655	1FG1404- . . ■ ■ **3** - ■ . **G1** -Z
–	–	–	–	655	–	–	655	–	655	655	655	–	655	655	655	655	655	655	655	655	655	1FG1404- . . ■ ■ **2** - ■ . **G1** -Z
Max. output speed n_{2max} = **49 rpm**, Transmission ratio i = **92.08**																						
375	360	545	425	**640**	**640**	–	–	–	–	–	–	–	–	–	–	–	–	–	–	–	–	1FG1404- . . ■ ■ **6** - ■ . **F1** -Z
–	–	–	–	–	640	640	640	640	640	640	640	640	640	640	–	–	–	–	–	–	–	1FG1404- . . ■ ■ **4** - ■ . **F1** -Z
–	–	–	–	640	–	640	640	640	640	640	640	640	640	640	640	640	640	640	640	640	640	1FG1404- . . ■ ■ **3** - ■ . **F1** -Z
–	–	–	–	640	–	–	640	–	640	640	640	–	640	640	640	640	640	640	640	640	640	1FG1404- . . ■ ■ **2** - ■ . **F1** -Z
Max. output speed n_{2max} = **52 rpm**, Transmission ratio i = **86.67**																						
355	340	515	400	**635**	**635**	–	–	–	–	–	–	–	–	–	–	–	–	–	–	–	–	1FG1404- . . ■ ■ **6** - ■ . **E1** -Z
–	–	–	–	–	635	635	635	635	635	635	635	635	635	635	–	–	–	–	–	–	–	1FG1404- . . ■ ■ **4** - ■ . **E1** -Z
–	–	–	–	635	–	635	635	635	635	635	635	635	635	635	635	635	635	635	635	635	635	1FG1404- . . ■ ■ **3** - ■ . **E1** -Z
–	–	–	–	635	–	–	635	–	635	635	635	–	635	635	635	635	635	635	635	635	635	1FG1404- . . ■ ■ **2** - ■ . **E1** -Z
Max. output speed n_{2max} = **58 rpm**, Transmission ratio i = **77.65**																						
320	305	460	360	**625**	**625**	–	–	–	–	–	–	–	–	–	–	–	–	–	–	–	–	1FG1404- . . ■ ■ **6** - ■ . **D1** -Z
–	–	–	–	–	625	625	625	625	625	625	625	625	625	625	–	–	–	–	–	–	–	1FG1404- . . ■ ■ **4** - ■ . **D1** -Z
–	–	–	–	625	–	625	625	625	625	625	625	625	625	625	625	625	625	625	625	625	625	1FG1404- . . ■ ■ **3** - ■ . **D1** -Z
–	–	–	–	625	–	–	625	–	625	625	625	–	625	625	625	625	625	625	625	625	625	1FG1404- . . ■ ■ **2** - ■ . **D1** -Z
Max. output speed n_{2max} = **68 rpm**, Transmission ratio i = **66.11**																						
270	260	395	310	**615**	605	–	–	–	–	–	–	–	–	–	–	–	–	–	–	–	–	1FG1404- . . ■ ■ **6** - ■ . **C1** -Z
–	–	–	–	–	605	**615**	**615**	**615**	**615**	**615**	**615**	**615**	**615**	**615**	–	–	–	–	–	–	–	1FG1404- . . ■ ■ **4** - ■ . **C1** -Z
–	–	–	–	**615**	–	**615**	**615**	**615**	**615**	**615**	**615**	**615**	**615**	**615**	**615**	**615**	**615**	**615**	**615**	**615**	**615**	1FG1404- . . ■ ■ **3** - ■ . **C1** -Z
–	–	–	–	**615**	–	–	**615**	–	**615**	**615**	**615**	–	**615**	**615**	**615**	**615**	**615**	**615**	**615**	**615**	**615**	1FG1404- . . ■ ■ **2** - ■ . **C1** -Z

Motor shaft height:

36																																		**C**
			48																															**D**
							63																											**E**
													80																					**F**
																		100																**G**

Motor length/motor version (**CT** = Compact. **HD** = High Dynamic)**:**

			0/CT				**0/CT**						**0/CT**						**0/CT**																**0**		**2**
														1/CT						**1/CT**														**1**		**2**
								1/HD																										**1**		**4**
2/CT				**2/CT**					**2/CT**																										**2**		**2**
										3/CT					**3/CT**								**3/CT**												**3**		**2**
	3/HD				**3/HD**																														**3**		**4**
		4/CT															**4/CT**																		**4**		**2**
						4/HD						**4/HD**																								**4**		**4**
																								5/CT											**5**		**2**
																	5/HD																		**5**		**4**
																		6/HD																	**6**		**4**

Selection of shaft design, encoder system, mounting type and special designs on page 4/39.

1FG1404- ■ ■ . . . - . ■ . . **-Z**

© Siemens 2019

Gearbox size 69, 3-stage – 1FG1404

For line voltage 380 ... 480 V 3 AC (DC link voltage 510 ... 720 V DC) **– Gearbox type** ***FD69***

Geared motor torque at 1450 rpm
Note: All values in **bold** print are maximum gearbox values.
M_{2dyn}
Nm

Servo parallel shaft geared motors SIMOTICS S-1FG1
Article No.

Max. output speed n_{2max} = **79 rpm**, Transmission ratio i = **56.67**																					
–	–	–	–	–	–	–	–	–	–	–	–	–	–	–	–	–	–	–	–	–	1FG1404- . . ■ ■ 6 - ■ . B1 -Z
–	–	–	–	–	–	–	**605**	**605**	**605**	**605**	**605**	**605**	**605**	**605**	–	–	–	–	–	–	–	1FG1404- . . ■ ■ 4 - ■ . B1 -Z
–	–	–	–	–	–	–	**605**	**605**	**605**	**605**	**605**	**605**	**605**	**605**	**605**	**605**	**605**	**605**	**605**	**605**	1FG1404- . . ■ ■ 3 - ■ . B1 -Z
–	–	–	–	–	–	–	**605**	–	**605**	**605**	**605**	–	**605**	**605**	**605**	**605**	**605**	**605**	**605**	**605**	**605**	1FG1404- . . ■ ■ 2 - ■ . B1 -Z
Max. output speed n_{2max} = **92 rpm**, Transmission ratio i = **48.8**																					
–	–	–	–	–	–	–	–	–	–	–	–	–	–	–	–	–	–	–	–	–	1FG1404- . . ■ ■ 6 - ■ . A1 -Z
–	–	–	–	–	–	–	**605**	**605**	**605**	**605**	**605**	**605**	**605**	**605**	–	–	–	–	–	–	–	1FG1404- . . ■ ■ 4 - ■ . A1 -Z
–	–	–	–	–	–	–	**605**	**605**	**605**	**605**	**605**	**605**	**605**	**605**	**605**	**605**	**605**	**605**	**605**	**605**	1FG1404- . . ■ ■ 3 - ■ . A1 -Z
–	–	–	–	–	–	–	**605**	–	**605**	**605**	**605**	–	**605**	**605**	**605**	**605**	**605**	**605**	**605**	**605**	**605**	1FG1404- . . ■ ■ 2 - ■ . A1 -Z

Motor shaft height:

36																					**C**	
			48																		**D**	
							63														**E**	
												80									**F**	
																		100			**G**	

Motor length/motor version (**CT** = Compact. **HD** = High Dynamic)**:**

			0/CT				**0/CT**					**0/CT**						**0/CT**				**0**	**2**
													1/CT						**1/CT**			**1**	**2**
								1/HD														**1**	**4**
2/CT				**2/CT**					**2/CT**													**2**	**2**
										3/CT				**3/CT**						**3/CT**		**3**	**2**
	3/HD				**3/HD**																	**3**	**4**
		4/CT														**4/CT**						**4**	**2**
						4/HD					**4/HD**											**4**	**4**
																				5/CT		**5**	**2**
																	5/HD					**5**	**4**
																		6/HD				**6**	**4**

Selection of shaft design, encoder system, mounting type and special designs on page 4/39.

1FG1404- ■ ■ . . . . - . ■ . . **-Z**

© Siemens 2019

Selection and ordering data (continued)

For line voltage 200 ... 240 V 1 AC (DC link voltage 270 ... 330 V DC) **– Gearbox type** ***FD69***

Max. output speed n_{2max} rpm	Transmission ratio i	Geared motor torque at 1450 rpm Note: All values in **bold** print are maximum gearbox values. M_{2dyn} Nm					**Servo parallel shaft geared motors SIMOTICS S-1FG1** Article No.
13	**348.4**	**665**	**665**	**665**	**665**	**665**	**1FG1404- . . ■ ■ 3 - ■ . S1 -Z**
15	**309.78**	**665**	**665**	**665**	**665**	**665**	**1FG1404- . . ■ ■ 3 - ■ . R1 -Z**
17	**272**	**665**	**665**	**665**	**665**	**665**	**1FG1404- . . ■ ■ 3 - ■ . Q1 -Z**
18	**247.27**	**665**	**665**	**665**	**665**	**665**	**1FG1404- . . ■ ■ 3 - ■ . P1 -Z**
21	**211.56**	**665**	**665**	**665**	**665**	**665**	**1FG1404- . . ■ ■ 3 - ■ . N1 -Z**
23	**192.32**	**665**	**665**	**665**	**665**	**665**	**1FG1404- . . ■ ■ 3 - ■ . M1 -Z**
26	**170**	**665**	655	**665**	**665**	**665**	**1FG1404- . . ■ ■ 3 - ■ . L1 -Z**
29	**154.55**	625	595	**665**	**665**	**665**	**1FG1404- . . ■ ■ 3 - ■ . K1 -Z**
33	**135.37**	550	525	**665**	**665**	**665**	**1FG1404- . . ■ ■ 3 - ■ . J1 -Z**
36	**124.96**	510	485	**660**	**660**	**660**	**1FG1404- . . ■ ■ 3 - ■ . H1 -Z**
41	**110.63**	450	430	655	**655**	**655**	**1FG1404- . . ■ ■ 3 - ■ . G1 -Z**
49	**92.08**	375	360	545	**640**	**640**	**1FG1404- . . ■ ■ 3 - ■ . F1 -Z**
52	**86.67**	355	340	515	**635**	**635**	**1FG1404- . . ■ ■ 3 - ■ . E1 -Z**
58	**77.65**	320	305	460	**625**	**625**	**1FG1404- . . ■ ■ 3 - ■ . D1 -Z**
68	**66.11**	270	260	395	**615**	605	**1FG1404- . . ■ ■ 3 - ■ . C1 -Z**
Motor shaft height:							
		36					**C**
					48		**D**
Motor length/motor version (**CT** = Compact, **HD** = High Dynamic)**:**							
		2/CT			**2/CT**		**2** **1**
			3/HD			**3/HD**	**3** **3**
				4/CT			**4** **1**

Selection of shaft design, encoder system, mounting type and special designs on page 4/39.

1FG1404- ■ ■ . . . - . ■ . . -Z

© Siemens 2019

Gearbox size 79, 2-stage – 1FG1305

Technical specifications

Gearbox type *FZ79*

Servo geared motor Type	i	R_{ex}	M_{2rated} Nm	M_{2max} Nm	$M_{2Em.Off}$ Nm	n_{2max} rpm	n_{1max} rpm	φ [1] '	F_{R2} N	F_{R2max} N	c_T Nm/ '	J_G 10^{-4} kgm^2
1FG1305-.....-..X1	53.55	589/11	1000	1010	1700	84	4500	5.60	13600	13600	77.5	0.56
1FG1305-.....-..W1	48.03	1729/36	1000	1010	1700	94	4500	5.64	13600	13600	77.6	0.77
1FG1305-.....-..V1	43.18	475/11	1000	1010	1700	104	4500	5.66	13600	13600	77.5	0.87
1FG1305-.....-..U1	39.06	703/18	1000	1010	1700	115	4500	5.69	13600	13600	77.5	0.97
1FG1305-.....-..T1	36.05	1406/39	1000	1010	1700	125	4500	5.69	13600	13600	77.5	1.1
1FG1305-.....-..S1	33.02	1387/42	1000	1010	1700	136	4500	5.72	13600	13600	77.6	1.5
1FG1305-.....-..R1	27.71	665/24	1000	1010	1700	162	4500	5.70	13600	13600	77.3	1.6
1FG1305-.....-..Q1	26.08	1330/51	1000	1010	1700	173	4500	5.70	13600	13600	77.4	1.9
1FG1305-.....-..P1	23.93	646/27	1000	1010	1700	188	4500	5.70	13600	13600	77.4	2
1FG1305-.....-..N1	20.9	209/10	1000	1010	1700	215	4500	5.70	13600	13500	77.5	2.9
1FG1305-.....-..M1	18.71	1235/66	1000	1010	1700	241	4500	5.70	13000	12900	77.5	3.6
1FG1305-.....-..L1	16.36	589/36	1000	1010	1700	275	4500	5.70	12200	12200	77.4	4.2
1FG1305-.....-..K1	14.04	323/23	1000	1010	1700	321	4500	5.78	11400	11400	77.1	4.7
1FG1305-.....-..J1	12.41	931/75	1000	1010	1700	363	4500	6.16	10800	10800	77	6
1FG1305-.....-..H1	10.56	95/9	1000	1010	1700	426	4500	6.34	10100	10000	77	7.8
1FG1305-.....-..G1	9.05	190/21	1000	1000	1700	497	4500	6.51	9420	9420	76.9	10.3
1FG1305-.....-..F1	8.51	468/55	720	825	1190	511	4350	8.95	9790	9790	63.7	4.6
1FG1305-.....-..E1	7.44	186/25	725	775	1190	585	4350	9.16	9510	9510	63.5	5.5
1FG1305-.....-..D1	6.39	3672/575	720	725	1190	681	4350	9.35	9160	9160	62.4	6.5
1FG1305-.....-..C1	5.64	3528/625	700	700	1190	771	4350	10.19	8910	8910	62.2	8.3
1FG1305-.....-..B1	4.8	24/5	650	650	1100	906	4350	10.59	8610	8610	62.1	10.9
1FG1305-.....-..A1	4.11	144/35	605	605	1020	1058	4350	11.00	8340	8340	61.9	14.6

Selection and ordering data

Shaft design, encoder system, mounting type and special designs

Gearbox type *FZ79*

			Servo parallel shaft geared motors SIMOTICS S-1FG1 Article No.							
			1FG1305- ■ ■ . . . - . ■ . .							**-Z**
Shaft design:	Solid shaft with feather keyway	– Design 1	**1**							
		– Design 3	**3**							
	Hollow-shaft with feather keyway	– Design 1 – H40	**5**							
Order codes and Descriptions see chapter "Options"	Special shaft design		**9**							
Encoder system for motors with DRIVE-CLiQ interface:	AS20DQI encoder			**Q**						
	AM20DQI encoder			**R**						
	R14DQ resolver			**P**						
	R15DQ resolver			**U**						
Order codes and Descriptions see chapter "Options"	Special version encoder system			**Z**						
Mounting type:	Foot-mounted design							**A**		
	Flange-mounted design							**F**		
	Housing flange design							**H**		
	Shaft-mounted design (not possible with solid shaft)							**D**		
Special designs (Options): Order codes and Descriptions see chapter "Options" The following order codes must be added to each article number: • Oil type – order codes **K06** or **K11** • Mounting position – order codes **D01** ... **D06**										**-Z**

Selection of 2-stages servo parallel shaft geared motors with gearbox size 79 from next page.

1FG1305- . . ■ ■ ■ - ■ . ■ ■ **-Z**

[1] Data are for option reduced-backlash version – order code **G99** required.

© Siemens 2019

Selection and ordering data (continued)

For line voltage 380 ... 480 V 3 AC (DC link voltage 510 ... 720 V DC) **– Gearbox type** ***FZ79***

Geared motor torque at 1450 rpm
Note: All values in **bold** print are maximum gearbox values.
M_{2dyn} Nm

| | | |

© Siemens 2019

Gearbox size 79, 2-stage – 1FG1305

For line voltage 380 ... 480 V 3 AC (DC link voltage 510 ... 720 V DC) **– Gearbox type** ***FZ79***

Geared motor torque at 1450 rpm
Note: All values in **bold** print are maximum gearbox values.
M_{2dyn}
Nm

Max. output speed n_{2max} = **173 rpm**, Transmission ratio i = **26.08**	Article No.
– –	1FG1305- . . ■ ■ 6 - ■ . Q1 -Z
– – – – – – – 445 430 645 870 795 620 920 **1010** – – – – – – – –	1FG1305- . . ■ ■ 4 - ■ . Q1 -Z
– – – – – – – 445 430 645 870 795 620 920 **1010** **1010** **1010** **1010** **1010** **1010** **1010** **1010**	1FG1305- . . ■ ■ 3 - ■ . Q1 -Z
– – – – – – – 445 – 645 870 795 – 920 **1010** **1010** **1010** **1010** **1010** **1010** **1010** **1010**	1FG1305- . . ■ ■ 2 - ■ . Q1 -Z
Max. output speed n_{2max} = 188 rpm, Transmission ratio i = 23.93	
– –	1FG1305- . . ■ ■ 6 - ■ . P1 -Z
– – – – – – – 410 395 590 800 730 570 845 **1010** – – – – – – – –	1FG1305- . . ■ ■ 4 - ■ . P1 -Z
– – – – – – – 410 395 590 800 730 570 845 **1010** **1010** **1010** **1010** **1010** **1010** **1010** **1010**	1FG1305- . . ■ ■ 3 - ■ . P1 -Z
– – – – – – – 410 – 590 800 730 – 845 **1010** **1010** **1010** **1010** **1010** **1010** **1010** **1010**	1FG1305- . . ■ ■ 2 - ■ . P1 -Z
Max. output speed n_{2max} = 215 rpm, Transmission ratio i = 20.9	
– –	1FG1305- . . ■ ■ 6 - ■ . N1 -Z
– – – – – – – 360 345 520 700 640 500 740 1000 – – – – – – – –	1FG1305- . . ■ ■ 4 - ■ . N1 -Z
– – – – – – – 360 345 520 700 640 500 740 1000 **1010** **1010** **1010** **1010** **1010** **1010** **1010**	1FG1305- . . ■ ■ 3 - ■ . N1 -Z
– – – – – – – 360 – 520 700 640 – 740 1000 **1010** **1010** **1010** **1010** **1010** **1010** **1010**	1FG1305- . . ■ ■ 2 - ■ . N1 -Z
Max. output speed n_{2max} = 241 rpm, Transmission ratio i = 18.71	
– –	1FG1305- . . ■ ■ 6 - ■ . M1 -Z
– – – – – – – 320 305 465 625 570 445 660 890 – – – – – – – –	1FG1305- . . ■ ■ 4 - ■ . M1 -Z
– – – – – – – 320 305 465 625 570 445 660 890 **1010** **1010** **1010** 980 **1010** **1010** **1010**	1FG1305- . . ■ ■ 3 - ■ . M1 -Z
– – – – – – – 320 – 465 625 570 – 660 890 **1010** **1010** **1010** 980 **1010** **1010** **1010**	1FG1305- . . ■ ■ 2 - ■ . M1 -Z
Max. output speed n_{2max} = 275 rpm, Transmission ratio i = 16.36	
– –	1FG1305- . . ■ ■ 6 - ■ . L1 -Z
– – – – – – – 280 270 405 545 500 390 580 780 – – – – – – – –	1FG1305- . . ■ ■ 4 - ■ . L1 -Z
– – – – – – – 280 270 405 545 500 390 580 780 955 1010 **1010** 860 **1010** **1010** **1010**	1FG1305- . . ■ ■ 3 - ■ . L1 -Z
– – – – – – – 280 – 405 545 500 – 580 780 955 1010 **1010** 860 **1010** **1010** **1010**	1FG1305- . . ■ ■ 2 - ■ . L1 -Z
Max. output speed n_{2max} = 321 rpm, Transmission ratio i = 14.04	
– –	1FG1305- . . ■ ■ 6 - ■ . K1 -Z
– – – – – – – 240 230 350 470 430 335 495 670 – – – – – – – –	1FG1305- . . ■ ■ 4 - ■ . K1 -Z
– – – – – – – 240 230 350 470 430 335 495 670 820 875 **1010** 740 **1010** **1010** **1010**	1FG1305- . . ■ ■ 3 - ■ . K1 -Z
– – – – – – – 240 – 350 470 430 – 495 670 820 875 **1010** 740 **1010** **1010** **1010**	1FG1305- . . ■ ■ 2 - ■ . K1 -Z
Max. output speed n_{2max} = 363 rpm, Transmission ratio i = 12.41	
– –	1FG1305- . . ■ ■ 6 - ■ . J1 -Z
– – – – – – – 210 205 305 415 380 295 440 595 – – – – – – – –	1FG1305- . . ■ ■ 4 - ■ . J1 -Z
– – – – – – – 210 205 305 415 380 295 440 595 725 770 **1010** 655 950 **1010** **1010**	1FG1305- . . ■ ■ 3 - ■ . J1 -Z
– – – – – – – 210 – 305 415 380 – 440 595 725 770 **1010** 655 950 **1010** **1010**	1FG1305- . . ■ ■ 2 - ■ . J1 -Z
Max. output speed n_{2max} = 426 rpm, Transmission ratio i = 10.56	
– – – – – – – – – – – – 250 375 505 – – – – – – –	1FG1305- . . ■ ■ 6 - ■ . H1 -Z
– – – – – – – – – – – – 250 375 505 615 660 955 555 810 **1010** **1010**	1FG1305- . . ■ ■ 4 - ■ . H1 -Z
– – – – – – – – – – – – – 375 505 615 660 955 555 810 **1010** **1010**	1FG1305- . . ■ ■ 3 - ■ . H1 -Z
	1FG1305- . . ■ ■ 2 - ■ . H1 -Z

Motor shaft height:

| | | |

© Siemens 2019

For line voltage 380 ... 480 V 3 AC (DC link voltage 510 ... 720 V DC) **– Gearbox type** ***FZ79***

Geared motor torque at 1450 rpm
Note: All values in **bold** print are maximum gearbox values.
M_{2dyn}
Nm

																							Article No.
Max. output speed n_{2max} = 497 rpm, Transmission ratio i = 9.05																							
–	–	–	–	–	–	–	–	–	–	–	–	–	–	–	–	–	–	–	–	–	–	–	1FG1305- . . ■ ■ 6 - ■ . G1 -Z
–	–	–	–	–	–	–	–	–	–	–	–	215	320	430	–	–	–	–	–	–	–	–	1FG1305- . . ■ ■ 4 - ■ . G1 -Z
–	–	–	–	–	–	–	–	–	–	–	–	215	320	430	530	565	820	475	695	935	**1000**		1FG1305- . . ■ ■ 3 - ■ . G1 -Z
–	–	–	–	–	–	–	–	–	–	–	–	–	320	430	530	565	820	475	695	935	**1000**		1FG1305- . . ■ ■ 2 - ■ . G1 -Z
Max. output speed n_{2max} = 511 rpm, Transmission ratio i = 8.51																							
–	–	–	–	–	–	–	–	–	–	–	–	–	–	–	–	–	–	–	–	–	–	–	1FG1305- . . ■ ■ 6 - ■ . F1 -Z
–	–	–	–	–	–	–	148	142	210	285	260	205	300	410	–	–	–	–	–	–	–	–	1FG1305- . . ■ ■ 4 - ■ . F1 -Z
–	–	–	–	–	–	–	148	142	210	285	260	205	300	410	500	530	775	450	655	**825**	**825**		1FG1305- . . ■ ■ 3 - ■ . F1 -Z
–	–	–	–	–	–	–	148	–	210	285	260	–	300	410	500	530	775	450	655	**825**	**825**		1FG1305- . . ■ ■ 2 - ■ . F1 -Z
Max. output speed n_{2max} = 585 rpm, Transmission ratio i = 7.44																							
–	–	–	–	–	–	–	–	–	–	–	–	–	–	–	–	–	–	–	–	–	–	–	1FG1305- . . ■ ■ 6 - ■ . E1 -Z
–	–	–	–	–	–	–	129	124	187	250	230	180	265	360	–	–	–	–	–	–	–	–	1FG1305- . . ■ ■ 4 - ■ . E1 -Z
–	–	–	–	–	–	–	129	124	187	250	230	180	265	360	440	465	680	395	575	775	**775**		1FG1305- . . ■ ■ 3 - ■ . E1 -Z
–	–	–	–	–	–	–	129	–	187	250	230	–	265	360	440	465	680	395	575	775	**775**		1FG1305- . . ■ ■ 2 - ■ . E1 -Z
Max. output speed n_{2max} = 681 rpm, Transmission ratio i = 6.39																							
–	–	–	–	–	–	–	–	–	–	–	–	–	–	–	–	–	–	–	–	–	–	–	1FG1305- . . ■ ■ 6 - ■ . D1 -Z
–	–	–	–	–	–	–	111	107	160	215	198	154	225	305	–	–	–	–	–	–	–	–	1FG1305- . . ■ ■ 4 - ■ . D1 -Z
–	–	–	–	–	–	–	111	107	160	215	198	154	225	305	375	400	580	340	495	665	**725**		1FG1305- . . ■ ■ 3 - ■ . D1 -Z
–	–	–	–	–	–	–	111	–	160	215	198	–	225	305	375	400	580	340	495	665	**725**		1FG1305- . . ■ ■ 2 - ■ . D1 -Z
Max. output speed n_{2max} = 771 rpm, Transmission ratio i = 5.64																							
–	–	–	–	–	–	–	–	–	–	–	–	–	–	–	–	–	–	–	–	–	–	–	1FG1305- . . ■ ■ 6 - ■ . C1 -Z
–	–	–	–	–	–	–	98	94	142	191	175	136	200	270	–	–	–	–	–	–	–	–	1FG1305- . . ■ ■ 4 - ■ . C1 -Z
–	–	–	–	–	–	–	98	94	142	191	175	136	200	270	330	355	515	300	435	590	**700**		1FG1305- . . ■ ■ 3 - ■ . C1 -Z
–	–	–	–	–	–	–	98	–	142	191	175	–	200	270	330	355	515	300	435	590	**700**		1FG1305- . . ■ ■ 2 - ■ . C1 -Z
Max. output speed n_{2max} = 906 rpm, Transmission ratio i = 4.8																							
–	–	–	–	–	–	–	–	–	–	–	–	–	–	–	–	–	–	–	–	–	–	–	1FG1305- . . ■ ■ 6 - ■ . B1 -Z
–	–	–	–	–	–	–	–	–	–	–	–	116	172	230	–	–	–	–	–	–	–	–	1FG1305- . . ■ ■ 4 - ■ . B1 -Z
–	–	–	–	–	–	–	–	–	–	–	–	116	172	230	280	300	435	255	370	500	**650**		1FG1305- . . ■ ■ 3 - ■ . B1 -Z
–	–	–	–	–	–	–	–	–	–	–	–	–	172	230	280	300	435	255	370	500	**650**		1FG1305- . . ■ ■ 2 - ■ . B1 -Z
Max. output speed n_{2max} = 1058 rpm, Transmission ratio i = 4.11																							
–	–	–	–	–	–	–	–	–	–	–	–	–	–	–	–	–	–	–	–	–	–	–	1FG1305- . . ■ ■ 6 - ■ . A1 -Z
–	–	–	–	–	–	–	–	–	–	–	–	99	147	199	–	–	–	–	–	–	–	–	1FG1305- . . ■ ■ 4 - ■ . A1 -Z
–	–	–	–	–	–	–	–	–	–	–	–	99	147	199	240	255	375	215	315	430	595		1FG1305- . . ■ ■ 3 - ■ . A1 -Z
–	–	–	–	–	–	–	–	–	–	–	–	–	147	199	240	255	375	215	315	430	595		1FG1305- . . ■ ■ 2 - ■ . A1 -Z

Motor shaft height:

36																								**C**
			48																					**D**
							63																	**E**
												80												**F**
																		100						**G**

Motor length/motor version (**CT** = Compact. **HD** = High Dynamic)**:**

			0/CT				**0/CT**					**0/CT**						**0/CT**						**0**	**2**
													1/CT						**1/CT**					**1**	**2**
								1/HD																**1**	**4**
2/CT				**2/CT**					**2/CT**															**2**	**2**
										3/CT					**3/CT**						**3/CT**			**3**	**2**
	3/HD				**3/HD**																			**3**	**4**
		4/CT														**4/CT**								**4**	**2**
						4/HD					**4/HD**														**4**	**4**
																					5/CT			**5**	**2**
																5/HD								**5**	**4**
																	6/HD							**6**	**4**

Selection of shaft design, encoder system, mounting type and special designs on page 4/44

1FG1305- ■ ■ . . . - ■ . . -Z

Servo parallel shaft geared motors SIMOTICS S-1FG1

© Siemens 2019

Gearbox size 79, 3-stage – 1FG1405

Technical specifications

Gearbox type *FD79*

Servo geared motor Type	i	R_{ex}	M_{2rated} Nm	M_{2max} Nm	$M_{2Em.Off}$ Nm	n_{2max} rpm	n_{1max} rpm	φ [1] '	F_{R2} N	F_{R2max} N	c_T Nm/ '	J_G 10^{-4} kgm^2
1FG1405-.....-..S1	357.08	57133/160	1000	1100	1700	13	4500	5.60	13600	13400	80.2	0.17
1FG1405-.....-..R1	324.62	57133/176	1000	1100	1700	14	4500	5.60	13600	13400	80.2	0.2
1FG1405-.....-..Q1	276.09	8835/32	1000	1100	1700	16	4500	5.61	13600	13400	80.2	0.25
1FG1405-.....-..P1	250.99	44175/176	1000	1100	1700	18	4500	5.61	13600	13400	80.2	0.3
1FG1405-.....-..N1	223.94	42997/192	1000	1100	1700	20	4500	5.62	13600	13400	80.2	0.35
1FG1405-.....-..M1	200.8	8835/44	1000	1100	1700	22	4500	5.62	13600	13400	80.2	0.41
1FG1405-.....-..L1	180.99	34751/192	1000	1100	1700	25	4500	5.63	13600	13400	80.2	0.48
1FG1405-.....-..K1	167.07	34751/208	1000	1100	1700	27	4500	5.63	13600	13400	80.2	0.57
1FG1405-.....-..J1	152.51	17081/112	1000	1100	1700	30	4500	5.63	13600	13400	80.2	0.65
1FG1405-.....-..H1	126.54	32395/256	1000	1100	1700	36	4500	5.65	13600	13400	80.2	0.81
1FG1405-.....-..G1	119.1	32395/272	1000	1100	1700	38	4500	5.65	13600	13400	80.2	0.93
1FG1405-.....-..F1	112.48	32395/288	1000	1090	1700	40	4500	5.65	13600	13400	80.2	1.1
1FG1405-.....-..E1	95.71	7657/80	1000	1070	1700	47	4500	5.67	13600	13400	80.1	1.3
1FG1405-.....-..D1	81.99	28861/352	1000	1050	1700	55	4500	5.70	13600	13500	80.1	1.6
1FG1405-.....-..C1	72.09	27683/384	1000	1030	1700	62	4500	5.72	13600	13500	80.1	1.9
1FG1405-.....-..B1	60.82	11191/184	1000	1020	1700	74	4500	5.74	13600	13500	80.1	2.4
1FG1405-.....-..A1	53.01	5301/100	1000	1010	1700	85	4500	5.83	13600	13600	80.1	3

Selection and ordering data

Shaft design, encoder system, mounting type and special designs

Gearbox type *FD79*

| | | |

© Siemens 2019

Selection and ordering data (continued)

For line voltage 380 ... 480 V 3 AC (DC link voltage 510 ... 720 V DC) **– Gearbox type** ***FD79***

Geared motor torque at 1450 rpm
Note: All values in **bold** print are maximum gearbox values.
M_{2dyn}
Nm

Max. output speed n_{2max} = **13 rpm**, Transmission ratio i = **357.08**	Servo parallel shaft geared motors SIMOTICS S-1FG1 Article No.
– – – – – – – – – – – – – – – – – – – –	1FG1405- . . ■ ■ 6 - ■ . S1 -Z
– – – – – – – **1100 1100 1100 1100 1100** – – – – – – – – – –	1FG1405- . . ■ ■ 4 - ■ . S1 -Z
– – – – – – – **1100 1100 1100 1100 1100** – – – – – – – – – –	1FG1405- . . ■ ■ 3 - ■ . S1 -Z
– – – – – – – **1100** – **1100 1100 1100** – – – – – – – – – –	1FG1405- . . ■ ■ 2 - ■ . S1 -Z
Max. output speed n_{2max} = 14 rpm, Transmission ratio i = 324.62	
– – – – – – – – – – – – – – – – – – – –	1FG1405- . . ■ ■ 6 - ■ . R1 -Z
– – – – – – – **1100 1100 1100 1100 1100** – – – – – – – – – –	1FG1405- . . ■ ■ 4 - ■ . R1 -Z
– – – – – – – **1100 1100 1100 1100 1100** – – – – – – – – – –	1FG1405- . . ■ ■ 3 - ■ . R1 -Z
– – – – – – – **1100** – **1100 1100 1100** – – – – – – – – – –	1FG1405- . . ■ ■ 2 - ■ . R1 -Z
Max. output speed n_{2max} = 16 rpm, Transmission ratio i = 276.09	
– – – – – – – – – – – – – – – – – – – –	1FG1405- . . ■ ■ 6 - ■ . Q1 -Z
– – – – – – – **1100 1100 1100 1100 1100** – – – – – – – – – –	1FG1405- . . ■ ■ 4 - ■ . Q1 -Z
– – – – – – – **1100 1100 1100 1100 1100** – – – – – – – – – –	1FG1405- . . ■ ■ 3 - ■ . Q1 -Z
– – – – – – – **1100** – **1100 1100 1100** – – – – – – – – – –	1FG1405- . . ■ ■ 2 - ■ . Q1 -Z
Max. output speed n_{2max} = 18 rpm, Transmission ratio i = 250.99	
– – – – – – – – – – – – – – – – – – – –	1FG1405- . . ■ ■ 6 - ■ . P1 -Z
– – – – – – – **1100 1100 1100 1100 1100** – – – – – – – – – –	1FG1405- . . ■ ■ 4 - ■ . P1 -Z
– – – – – – – **1100 1100 1100 1100 1100** – – – – – – – – – –	1FG1405- . . ■ ■ 3 - ■ . P1 -Z
– – – – – – – **1100** – **1100 1100 1100** – – – – – – – – – –	1FG1405- . . ■ ■ 2 - ■ . P1 -Z
Max. output speed n_{2max} = 20 rpm, Transmission ratio i = 223.94	
– – – – – – – – – – – – – – – – – – – –	1FG1405- . . ■ ■ 6 - ■ . N1 -Z
– – – – – – – **1100 1100 1100 1100 1100 1100 1100 1100** – – – – – –	1FG1405- . . ■ ■ 4 - ■ . N1 -Z
– – – – – – – **1100 1100 1100 1100 1100 1100 1100 1100 1100 1100 1100** – – – –	1FG1405- . . ■ ■ 3 - ■ . N1 -Z
– – – – – – – **1100** – **1100 1100 1100** – **1100 1100 1100 1100 1100** – – – –	1FG1405- . . ■ ■ 2 - ■ . N1 -Z
Max. output speed n_{2max} = 22 rpm, Transmission ratio i = 200.8	
– – – – – – – – – – – – – – – – – – – –	1FG1405- . . ■ ■ 6 - ■ . M1 -Z
– – – – – – – **1100 1100 1100 1100 1100 1100 1100 1100** – – – – – –	1FG1405- . . ■ ■ 4 - ■ . M1 -Z
– – – – – – – **1100 1100 1100 1100 1100 1100 1100 1100 1100 1100 1100** – – – –	1FG1405- . . ■ ■ 3 - ■ . M1 -Z
– – – – – – – **1100** – **1100 1100 1100** – **1100 1100 1100 1100 1100** – – – –	1FG1405- . . ■ ■ 2 - ■ . M1 -Z
Max. output speed n_{2max} = 25 rpm, Transmission ratio i = 180.99	
– – – – – – – – – – – – – – – – – – – –	1FG1405- . . ■ ■ 6 - ■ . L1 -Z
– – – – – – – **1100 1100 1100 1100 1100 1100 1100 1100** – – – – – –	1FG1405- . . ■ ■ 4 - ■ . L1 -Z
– – – – – – – **1100 1100 1100 1100 1100 1100 1100 1100 1100 1100 1100** – – – –	1FG1405- . . ■ ■ 3 - ■ . L1 -Z
– – – – – – – **1100** – **1100 1100 1100** – **1100 1100 1100 1100 1100** – – – –	1FG1405- . . ■ ■ 2 - ■ . L1 -Z

Motor shaft height:

36	**C**
48	**D**
63	**E**
80	**F**
100	**G**

Motor length/motor version (**CT** = Compact. **HD** = High Dynamic)**:**

0/CT	**0**	**2**
1/CT	**1**	**2**
1/HD	**1**	**4**
2/CT	**2**	**2**
3/CT	**3**	**2**
3/HD	**3**	**4**
4/CT	**4**	**2**
4/HD	**4**	**4**
5/CT	**5**	**2**
5/HD	**5**	**4**
6/HD	**6**	**4**

Selection of shaft design, encoder system, mounting type and special designs on page 4/48.

1FG1405- ■ ■ . . . . - . ■ . . -Z

© Siemens 2019

Gearbox size 79, 3-stage – 1FG1405

For line voltage 380 ... 480 V 3 AC (DC link voltage 510 ... 720 V DC) **– Gearbox type** ***FD79***

Geared motor torque at 1450 rpm
Note: All values in **bold** print are maximum gearbox values.
M_{2dyn}
Nm

36	48	63	80	100	Article No.
Max. output speed n_{2max} = 27 rpm, Transmission ratio i = 167.07					
–	–	–	–	–	1FG1405- . . ■ ■ 6 - ■ . K1 -Z
–	1100	1100	1100	–	1FG1405- . . ■ ■ 4 - ■ . K1 -Z
–	1100	1100	1100	1100	1FG1405- . . ■ ■ 3 - ■ . K1 -Z
–	1100	–	1100	–	1FG1405- . . ■ ■ 2 - ■ . K1 -Z
Max. output speed n_{2max} = 30 rpm, Transmission ratio i = 152.51					
–	–	–	–	–	1FG1405- . . ■ ■ 6 - ■ . J1 -Z
–	1100	1100	1100	–	1FG1405- . . ■ ■ 4 - ■ . J1 -Z
–	1100	1100	1100	1100	1FG1405- . . ■ ■ 3 - ■ . J1 -Z
–	1100	–	1100	–	1FG1405- . . ■ ■ 2 - ■ . J1 -Z
Max. output speed n_{2max} = 36 rpm, Transmission ratio i = 126.54					
–	–	–	–	–	1FG1405- . . ■ ■ 6 - ■ . H1 -Z
–	1100	1100	1100	–	1FG1405- . . ■ ■ 4 - ■ . H1 -Z
–	1100	1100	1100	1100	1FG1405- . . ■ ■ 3 - ■ . H1 -Z
–	1100	–	1100	–	1FG1405- . . ■ ■ 2 - ■ . H1 -Z
Max. output speed n_{2max} = 38 rpm, Transmission ratio i = 119.1					
–	–	–	–	–	1FG1405- . . ■ ■ 6 - ■ . G1 -Z
–	1100	1100	1100	–	1FG1405- . . ■ ■ 4 - ■ . G1 -Z
–	1100	1100	1100	1100	1FG1405- . . ■ ■ 3 - ■ . G1 -Z
–	1100	–	1100	–	1FG1405- . . ■ ■ 2 - ■ . G1 -Z
Max. output speed n_{2max} = 40 rpm, Transmission ratio i = 112.48					
–	–	–	–	–	1FG1405- . . ■ ■ 6 - ■ . F1 -Z
–	1090	1090	1090	–	1FG1405- . . ■ ■ 4 - ■ . F1 -Z
–	1090	1090	1090	1090	1FG1405- . . ■ ■ 3 - ■ . F1 -Z
–	1090	–	1090	–	1FG1405- . . ■ ■ 2 - ■ . F1 -Z
Max. output speed n_{2max} = 47 rpm, Transmission ratio i = 95.71					
–	–	–	–	–	1FG1405- . . ■ ■ 6 - ■ . E1 -Z
–	1070	1070	1070	–	1FG1405- . . ■ ■ 4 - ■ . E1 -Z
–	1070	1070	1070	1070	1FG1405- . . ■ ■ 3 - ■ . E1 -Z
–	1070	–	1070	–	1FG1405- . . ■ ■ 2 - ■ . E1 -Z
Max. output speed n_{2max} = 55 rpm, Transmission ratio i = 81.99					
–	–	–	–	–	1FG1405- . . ■ ■ 6 - ■ . D1 -Z
–	1050	1050	1050	–	1FG1405- . . ■ ■ 4 - ■ . D1 -Z
–	1050	1050	1050	1050	1FG1405- . . ■ ■ 3 - ■ . D1 -Z
–	1050	–	1050	–	1FG1405- . . ■ ■ 2 - ■ . D1 -Z
Max. output speed n_{2max} = 62 rpm, Transmission ratio i = 72.09					
–	–	–	–	–	1FG1405- . . ■ ■ 6 - ■ . C1 -Z
–	1030	1030	1030	–	1FG1405- . . ■ ■ 4 - ■ . C1 -Z
–	1030	1030	1030	1030	1FG1405- . . ■ ■ 3 - ■ . C1 -Z
–	1030	–	1030	–	1FG1405- . . ■ ■ 2 - ■ . C1 -Z

36	48	63	80	100		
Motor shaft height:						
					C	
					D	
					E	
					F	
					G	
Motor length/motor version (CT = Compact. **HD** = High Dynamic)**:**						
	0/CT	0/CT	0/CT	0/CT	0	2
			1/CT	1/CT	1	2
		1/HD			1	4
2/CT	2/CT	2/CT			2	2
		3/CT	3/CT	3/CT	3	2
3/HD	3/HD				3	4
4/CT			4/CT		4	2
	4/HD	4/HD			4	4
				5/CT	5	2
			5/HD		5	4
			6/HD		6	4

Selection of shaft design, encoder system, mounting type and special designs on page 4/48.

Servo parallel shaft geared motors SIMOTICS S-1FG1
Article No.
1FG1405- ■ ■ . . . - . ■ . . -Z

© Siemens 2019

For line voltage 380 ... 480 V 3 AC (DC link voltage 510 ... 720 V DC) **– Gearbox type** ***FD79***

Geared motor torque at 1450 rpm
Note: All values in **bold** print are maximum gearbox values.
M_{2dyn}
Nm

Servo parallel shaft geared motors SIMOTICS S-1FG1
Article No.

Max. output speed n_{2max} = **74 rpm**, Transmission ratio i = **60.82**																						
–	–	–	–	–	–	–	–	–	–	–	–	–	–	–	–	–	–	–	–	–	–	1FG1405- . . ■ ■ 6 - ■ . B1 -Z
–	–	–	–	–	–	–	1010	975	**1020**	**1020**	**1020**	**1020**	**1020**	**1020**	–	–	–	–	–	–	–	1FG1405- . . ■ ■ 4 - ■ . B1 -Z
–	–	–	–	–	–	–	1010	975	**1020**	**1020**	**1020**	**1020**	**1020**	**1020**	**1020**	**1020**	**1020**	**1020**	**1020**	**1020**	**1020**	1FG1405- . . ■ ■ 3 - ■ . B1 -Z
–	–	–	–	–	–	–	1010	–	**1020**	**1020**	**1020**	–	**1020**	**1020**	**1020**	**1020**	**1020**	**1020**	**1020**	**1020**	**1020**	1FG1405- . . ■ ■ 2 - ■ . B1 -Z
Max. output speed n_{2max} = **85 rpm**, Transmission ratio i = **53.01**																						
–	–	–	–	–	–	–	–	–	–	–	–	–	–	–	–	–	–	–	–	–	–	1FG1405- . . ■ ■ 6 - ■ . A1 -Z
–	–	–	–	–	–	–	885	850	**1010**	**1010**	**1010**	**1010**	**1010**	**1010**	–	–	–	–	–	–	–	1FG1405- . . ■ ■ 4 - ■ . A1 -Z
–	–	–	–	–	–	–	885	850	**1010**	**1010**	**1010**	**1010**	**1010**	**1010**	**1010**	**1010**	**1010**	**1010**	**1010**	**1010**	**1010**	1FG1405- . . ■ ■ 3 - ■ . A1 -Z
–	–	–	–	–	–	–	885	–	**1010**	**1010**	**1010**	–	**1010**	**1010**	**1010**	**1010**	**1010**	**1010**	**1010**	**1010**	**1010**	1FG1405- . . ■ ■ 2 - ■ . A1 -Z

Motor shaft height:

36																						**C**
			48																			**D**
							63															**E**
											80											**F**
																	100					**G**

Motor length/motor version (**CT** = Compact. **HD** = High Dynamic)**:**

			0/CT				**0/CT**				**0/CT**						**0/CT**					**0**	**2**
												1/CT						**1/CT**				**1**	**2**
								1/HD														**1**	**4**
2/CT				**2/CT**					**2/CT**													**2**	**2**
										3/CT				**3/CT**					**3/CT**			**3**	**2**
	3/HD				**3/HD**																	**3**	**4**
		4/CT													**4/CT**							**4**	**2**
						4/HD					**4/HD**											**4**	**4**
																				5/CT		**5**	**2**
																5/HD						**5**	**4**
																	6/HD					**6**	**4**

Selection of shaft design, encoder system, mounting type and special designs on page 4/48.

1FG1405- ■ ■ . . . . - . ■ . . **-Z**

© Siemens 2019

Gearbox size 89, 2-stage – 1FG1306

Technical specifications

Gearbox type *FZ89*

Servo geared motor Type	i	R_{ex}	M_{2rated} Nm	M_{2max} Nm	$M_{2Em.Off}$ Nm	n_{2max} rpm	n_{1max} rpm	φ [1] '	F_{R2} N	F_{R2max} N	c_T Nm/ '	J_G 10^{-4} kgm^2
1FG1306-.....-..B2	61.72	2407/39	1850	2000	3140	73	4500	4.82	17400	17400	156	1.4
1FG1306-.....-..A2	55.72	7968/143	1850	1970	3140	81	4500	4.83	17400	17400	155.8	1.5
1FG1306-.....-..X1	50.54	7885/156	1850	1970	3140	89	4500	4.84	17400	17400	155.8	1.8
1FG1306-.....-..W1	46.66	7885/169	1850	1970	3140	96	4500	4.84	17400	17400	155.9	2.1
1FG1306-.....-..V1	42.41	7719/182	1850	1970	3140	106	4500	4.88	17400	17400	155.9	2.4
1FG1306-.....-..U1	35.91	3735/104	1850	1970	3140	125	4500	4.93	17400	17400	155.7	2.9
1FG1306-.....-..T1	33.8	7470/221	1850	1970	3140	133	4500	4.93	17400	17400	155.5	3
1FG1306-.....-..S1	31.21	3652/117	1850	1970	3140	144	4500	4.97	17400	17400	156.2	4.5
1FG1306-.....-..R1	27.77	7221/260	1850	1970	3140	162	4500	4.98	17400	17400	156.1	5.5
1FG1306-.....-..Q1	24.67	7055/286	1850	1970	3140	182	4500	5.02	17400	17400	156	6.7
1FG1306-.....-..P1	22.08	6889/312	1850	1970	3140	204	4500	5.07	17400	17400	155.6	6.7
1FG1306-.....-..N1	18.88	5644/299	1850	1970	3140	238	4500	5.15	17200	16700	155.3	7.9
1FG1306-.....-..M1	16.86	5478/325	1850	1970	3140	267	4500	5.41	16400	15900	155.3	10.1
1FG1306-.....-..L1	14.9	581/39	1850	1970	3140	302	4500	5.48	15500	15000	154.8	11.6
1FG1306-.....-..K1	13.07	3569/273	1850	1970	3140	344	4500	5.25	14600	14100	155.1	16
1FG1306-.....-..J1	11.38	3403/299	1850	1960	3140	382	4350	5.35	13700	13300	154.9	19.8
1FG1306-.....-..H1	9.73	2656/273	1850	1850	3140	447	4350	5.49	12900	12900	154.8	26
1FG1306-.....-..G1	8.33	2490/299	1740	1740	2950	522	4350	5.63	12500	12500	154.5	33
1FG1306-.....-..F1	7.6	4752/625	1100	1130	1840	592	4500	9.01	14000	14000	126.6	14.4
1FG1306-.....-..E1	6.72	168/25	1110	1140	1830	670	4500	9.16	13200	13200	124.9	17.1
1FG1306-.....-..D1	5.9	1032/175	1110	1160	1830	737	4350	9.20	12400	12400	126	23
1FG1306-.....-..C1	5.13	2952/575	1110	1110	1830	848	4350	9.20	12000	12000	125.3	29
1FG1306-.....-..B1	4.39	768/175	1060	1060	1800	991	4350	9.18	11700	11700	124.9	39
1FG1306-.....-..A1	3.76	432/115	985	985	1670	1157	4350	9.51	11300	11300	123.9	50

Selection and ordering data

Shaft design, encoder system, mounting type and special designs

Gearbox type *FZ89*

		Servo parallel shaft geared motors SIMOTICS S-1FG1 Article No. **1FG1306-** ■■....-.■... **-Z**
Shaft design:	Solid shaft with feather keyway – Design 1	**1**
	Hollow-shaft with feather keyway – Design 1 – H50	**5**
Order codes and Descriptions see chapter "Options"	Special shaft design	**9**
Encoder system for motors with DRIVE-CLiQ interface:	AS20DQI encoder	**Q**
	AM20DQI encoder	**R**
	R14DQ resolver	**P**
	R15DQ resolver	**U**
Order codes and Descriptions see chapter "Options"	Special version encoder system	**Z**
Mounting type:	Foot-mounted design	**A**
	Flange-mounted design	**F**
	Housing flange design	**H**
	Shaft-mounted design (not possible with solid shaft)	**D**
Special designs (Options): Order codes and Descriptions see chapter "Options" The following order codes must be added to each article number: • Oil type – order codes **K06** or **K11** • Mounting position – order codes **D01** ... **D06**		**-Z**

Selection of 2-stages servo parallel shaft geared motors with gearbox size 89 from next page. **1FG1306-** ..■■■-■.■■**-Z**

[1] Data are for option reduced-backlash version – order code **G99** required.

© Siemens 2019

Selection and ordering data (continued)

For line voltage 380 ... 480 V 3 AC (DC link voltage 510 ... 720 V DC) **– Gearbox type** ***FZ89***

Geared motor torque at 1450 rpm
Note: All values in **bold** print are maximum gearbox values.
M_{2dyn}
Nm

| | | |

© Siemens 2019

Gearbox size 89, 2-stage – 1FG1306

For line voltage 380 ... 480 V 3 AC (DC link voltage 510 ... 720 V DC) **– Gearbox type** ***FZ89***

Geared motor torque at 1450 rpm
Note: All values in **bold** print are maximum gearbox values.
M_{2dyn} Nm

																						Article No.
Max. output speed n_{2max} = 144 rpm, Transmission ratio i = 31.21																						
–	–	–	–	–	–	–	–	–	–	–	–	–	–	–	–	–	–	–	–	–	–	1FG1306- . . ■ ■ 6 - ■ . S1 -Z
–	–	–	–	–	–	–	535	515	775	1040	955	745	1100	1490	–	–	–	–	–	–	–	1FG1306- . . ■ ■ 4 - ■ . S1 -Z
–	–	–	–	–	–	–	535	515	775	1040	955	745	1100	1490	1820	1940	**1970**	1640	**1970**	**1970**	**1970**	1FG1306- . . ■ ■ 3 - ■ . S1 -Z
–	–	–	–	–	–	–	535	–	775	1040	955	–	1100	1490	1820	1940	**1970**	1640	**1970**	**1970**	**1970**	1FG1306- . . ■ ■ 2 - ■ . S1 -Z
Max. output speed n_{2max} = 162 rpm, Transmission ratio i = 27.77																						
–	–	–	–	–	–	–	–	–	–	–	–	–	–	–	–	–	–	–	–	–	–	1FG1306- . . ■ ■ 6 - ■ . R1 -Z
–	–	–	–	–	–	–	475	460	690	930	850	665	985	1330	–	–	–	–	–	–	–	1FG1306- . . ■ ■ 4 - ■ . R1 -Z
–	–	–	–	–	–	–	475	460	690	930	850	665	985	1330	1620	1730	**1970**	1460	**1970**	**1970**	**1970**	1FG1306- . . ■ ■ 3 - ■ . R1 -Z
–	–	–	–	–	–	–	475	–	690	930	850	–	985	1330	1620	1730	**1970**	1460	**1970**	**1970**	**1970**	1FG1306- . . ■ ■ 2 - ■ . R1 -Z
Max. output speed n_{2max} = 182 rpm, Transmission ratio i = 24.67																						
–	–	–	–	–	–	–	–	–	–	–	–	–	–	–	–	–	–	–	–	–	–	1FG1306- . . ■ ■ 6 - ■ . Q1 -Z
–	–	–	–	–	–	–	425	405	615	825	755	590	875	1180	–	–	–	–	–	–	–	1FG1306- . . ■ ■ 4 - ■ . Q1 -Z
–	–	–	–	–	–	–	425	405	615	825	755	590	875	1180	1440	1530	**1970**	1300	1890	**1970**	**1970**	1FG1306- . . ■ ■ 3 - ■ . Q1 -Z
–	–	–	–	–	–	–	425	–	615	825	755	–	875	1180	1440	1530	**1970**	1300	1890	**1970**	**1970**	1FG1306- . . ■ ■ 2 - ■ . Q1 -Z
Max. output speed n_{2max} = 204 rpm, Transmission ratio i = 22.08																						
–	–	–	–	–	–	–	–	–	–	–	–	–	–	–	–	–	–	–	–	–	–	1FG1306- . . ■ ■ 6 - ■ . P1 -Z
–	–	–	–	–	–	–	380	365	550	740	675	530	785	1060	–	–	–	–	–	–	–	1FG1306- . . ■ ■ 4 - ■ . P1 -Z
–	–	–	–	–	–	–	380	365	550	740	675	530	785	1060	1290	1380	**1970**	1160	1690	**1970**	**1970**	1FG1306- . . ■ ■ 3 - ■ . P1 -Z
–	–	–	–	–	–	–	380	–	550	740	675	–	785	1060	1290	1380	**1970**	1160	1690	**1970**	**1970**	1FG1306- . . ■ ■ 2 - ■ . P1 -Z
Max. output speed n_{2max} = 238 rpm, Transmission ratio i = 18.88																						
–	–	–	–	–	–	–	–	–	–	–	–	–	–	–	–	–	–	–	–	–	–	1FG1306- . . ■ ■ 6 - ■ . N1 -Z
–	–	–	–	–	–	–	325	310	470	635	580	450	670	905	–	–	–	–	–	–	–	1FG1306- . . ■ ■ 4 - ■ . N1 -Z
–	–	–	–	–	–	–	325	310	470	635	580	450	670	905	1100	1180	1710	995	1450	1960	**1970**	1FG1306- . . ■ ■ 3 - ■ . N1 -Z
–	–	–	–	–	–	–	325	–	470	635	580	–	670	905	1100	1180	1710	995	1450	1960	**1970**	1FG1306- . . ■ ■ 2 - ■ . N1 -Z
Max. output speed n_{2max} = 267 rpm, Transmission ratio i = 16.86																						
–	–	–	–	–	–	–	–	–	–	–	–	–	–	–	–	–	–	–	–	–	–	1FG1306- . . ■ ■ 6 - ■ . M1 -Z
–	–	–	–	–	–	–	290	280	420	565	520	405	600	810	–	–	–	–	–	–	–	1FG1306- . . ■ ■ 4 - ■ . M1 -Z
–	–	–	–	–	–	–	290	280	420	565	520	405	600	810	990	1050	1530	890	1300	1750	**1970**	1FG1306- . . ■ ■ 3 - ■ . M1 -Z
–	–	–	–	–	–	–	290	–	420	565	520	–	600	810	990	1050	1530	890	1300	1750	**1970**	1FG1306- . . ■ ■ 2 - ■ . M1 -Z
Max. output speed n_{2max} = 302 rpm, Transmission ratio i = 14.9																						
–	–	–	–	–	–	–	–	–	–	–	–	–	–	–	–	–	–	–	–	–	–	1FG1306- . . ■ ■ 6 - ■ . L1 -Z
–	–	–	–	–	–	–	–	–	–	–	–	355	530	715	–	–	–	–	–	–	–	1FG1306- . . ■ ■ 4 - ■ . L1 -Z
–	–	–	–	–	–	–	–	–	–	–	–	355	530	715	875	930	1350	785	1140	1550	**1970**	1FG1306- . . ■ ■ 3 - ■ . L1 -Z
–	–	–	–	–	–	–	–	–	–	–	–	–	530	715	875	930	1350	785	1140	1550	**1970**	1FG1306- . . ■ ■ 2 - ■ . L1 -Z
Max. output speed n_{2max} = 344 rpm, Transmission ratio i = 13.07																						
–	–	–	–	–	–	–	–	–	–	–	–	–	–	–	–	–	–	–	–	–	–	1FG1306- . . ■ ■ 6 - ■ . K1 -Z
–	–	–	–	–	–	–	–	–	–	–	–	310	465	625	–	–	–	–	–	–	–	1FG1306- . . ■ ■ 4 - ■ . K1 -Z
–	–	–	–	–	–	–	–	–	–	–	–	310	465	625	765	815	1180	690	1000	1350	1880	1FG1306- . . ■ ■ 3 - ■ . K1 -Z
–	–	–	–	–	–	–	–	–	–	–	–	–	465	625	765	815	1180	690	1000	1350	1880	1FG1306- . . ■ ■ 2 - ■ . K1 -Z

Motor shaft height:

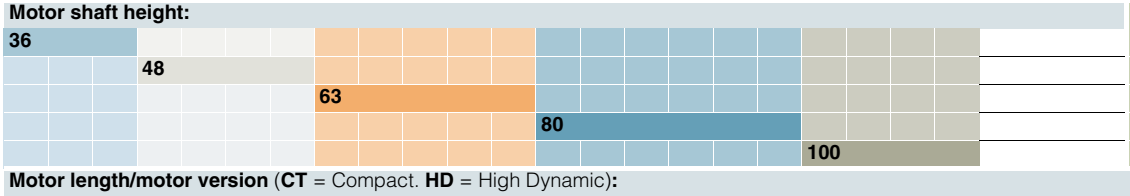

Motor length/motor version (**CT** = Compact. **HD** = High Dynamic)**:**

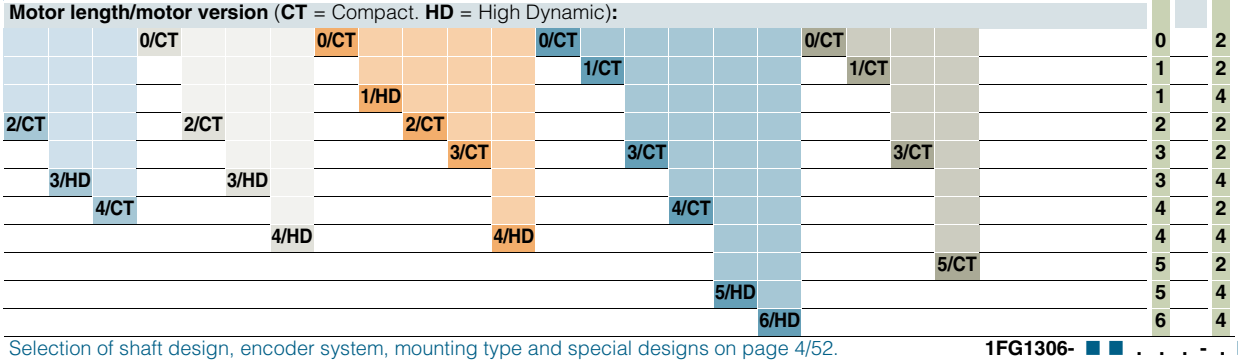

Selection of shaft design, encoder system, mounting type and special designs on page 4/52.

1FG1306- ■ ■ . . . - . ■ . . -Z

© Siemens 2019

For line voltage 380 ... 480 V 3 AC (DC link voltage 510 ... 720 V DC) **– Gearbox type** ***FZ89***

Geared motor torque at 1450 rpm
Note: All values in **bold** print are maximum gearbox values.
M_{2dyn}
Nm

																							Article No.
Max. output speed n_{2max} = 382 rpm, Transmission ratio i = 11.38																							
–	–	–	–	–	–	–	–	–	–	–	–	–	–	–	–	–	–	–	–	–	–	–	1FG1306- . . ■ ■ 6 - ■ . J1 -Z
–	–	–	–	–	–	–	–	–	–	–	–	270	405	545	–	–	–	–	–	–	–	–	1FG1306- . . ■ ■ 4 - ■ . J1 -Z
–	–	–	–	–	–	–	–	–	–	–	–	270	405	545	665	710	1030	600	875	1180	1640		1FG1306- . . ■ ■ 3 - ■ . J1 -Z
–	–	–	–	–	–	–	–	–	–	–	–	–	405	545	665	710	1030	600	875	1180	1640		1FG1306- . . ■ ■ 2 - ■ . J1 -Z
Max. output speed n_{2max} = 447 rpm, Transmission ratio i = 9.73																							
–	–	–	–	–	–	–	–	–	–	–	–	–	–	–	–	–	–	–	–	–	–	–	1FG1306- . . ■ ■ 6 - ■ . H1 -Z
–	–	–	–	–	–	–	–	–	–	–	–	230	345	465	–	–	–	–	–	–	–	–	1FG1306- . . ■ ■ 4 - ■ . H1 -Z
–	–	–	–	–	–	–	–	–	–	–	–	230	345	465	570	605	880	515	750	1010	1400		1FG1306- . . ■ ■ 3 - ■ . H1 -Z
–	–	–	–	–	–	–	–	–	–	–	–	–	345	465	570	605	880	515	750	1010	1400		1FG1306- . . ■ ■ 2 - ■ . H1 -Z
Max. output speed n_{2max} = 522 rpm, Transmission ratio i = 8.33																							
–	–	–	–	–	–	–	–	–	–	–	–	–	–	–	–	–	–	–	–	–	–	–	1FG1306- . . ■ ■ 6 - ■ . G1 -Z
–	–	–	–	–	–	–	–	–	–	–	–	200	295	400	–	–	–	–	–	–	–	–	1FG1306- . . ■ ■ 4 - ■ . G1 -Z
–	–	–	–	–	–	–	–	–	–	–	–	200	295	400	490	520	755	440	640	865	1200		1FG1306- . . ■ ■ 3 - ■ . G1 -Z
–	–	–	–	–	–	–	–	–	–	–	–	–	295	400	490	520	755	440	640	865	1200		1FG1306- . . ■ ■ 2 - ■ . G1 -Z
Max. output speed n_{2max} = 592 rpm, Transmission ratio i = 7.6																							
–	–	–	–	–	–	–	–	–	–	–	–	–	–	–	–	–	–	–	–	–	–	–	1FG1306- . . ■ ■ 6 - ■ . F1 -Z
–	–	–	–	–	–	–	133	127	192	255	235	184	270	365	–	–	–	–	–	–	–	–	1FG1306- . . ■ ■ 4 - ■ . F1 -Z
–	–	–	–	–	–	–	133	127	192	255	235	184	270	365	450	480	695	405	590	795	1100		1FG1306- . . ■ ■ 3 - ■ . F1 -Z
–	–	–	–	–	–	–	133	–	192	255	235	–	270	365	450	480	695	405	590	795	1100		1FG1306- . . ■ ■ 2 - ■ . F1 -Z
Max. output speed n_{2max} = 670 rpm, Transmission ratio i = 6.72																							
–	–	–	–	–	–	–	–	–	–	–	–	–	–	–	–	–	–	–	–	–	–	–	1FG1306- . . ■ ■ 6 - ■ . E1 -Z
–	–	–	–	–	–	–	–	–	–	–	–	163	240	325	–	–	–	–	–	–	–	–	1FG1306- . . ■ ■ 4 - ■ . E1 -Z
–	–	–	–	–	–	–	–	–	–	–	–	163	240	325	395	425	615	355	520	705	980		1FG1306- . . ■ ■ 3 - ■ . E1 -Z
–	–	–	–	–	–	–	–	–	–	–	–	–	240	325	395	425	615	355	520	705	980		1FG1306- . . ■ ■ 2 - ■ . E1 -Z
Max. output speed n_{2max} = 737 rpm, Transmission ratio i = 5.9																							
–	–	–	–	–	–	–	–	–	–	–	–	–	–	–	–	–	–	–	–	–	–	–	1FG1306- . . ■ ■ 6 - ■ . D1 -Z
–	–	–	–	–	–	–	–	–	–	–	–	143	210	285	–	–	–	–	–	–	–	–	1FG1306- . . ■ ■ 4 - ■ . D1 -Z
–	–	–	–	–	–	–	–	–	–	–	–	143	210	285	345	370	540	315	455	615	860		1FG1306- . . ■ ■ 3 - ■ . D1 -Z
–	–	–	–	–	–	–	–	–	–	–	–	–	210	285	345	370	540	315	455	615	860		1FG1306- . . ■ ■ 2 - ■ . D1 -Z
Max. output speed n_{2max} = 848 rpm, Transmission ratio i = 5.13																							
–	–	–	–	–	–	–	–	–	–	–	–	–	–	–	–	–	–	–	–	–	–	–	1FG1306- . . ■ ■ 6 - ■ . C1 -Z
–	–	–	–	–	–	–	–	–	–	–	–	124	184	245	–	–	–	–	–	–	–	–	1FG1306- . . ■ ■ 4 - ■ . C1 -Z
–	–	–	–	–	–	–	–	–	–	–	–	124	184	245	300	320	470	270	395	535	745		1FG1306- . . ■ ■ 3 - ■ . C1 -Z
–	–	–	–	–	–	–	–	–	–	–	–	–	184	245	300	320	470	270	395	535	745		1FG1306- . . ■ ■ 2 - ■ . C1 -Z

Motor shaft height:

36																								**C**
			48																					**D**
							63																	**E**
												80												**F**
																		100						**G**

Motor length/motor version (**CT** = Compact. **HD** = High Dynamic)**:**

			0/CT				**0/CT**					**0/CT**						**0/CT**						**0**	**2**
													1/CT						**1/CT**					**1**	**2**
								1/HD																**1**	**4**
2/CT				**2/CT**					**2/CT**															**2**	**2**
										3/CT					**3/CT**						**3/CT**			**3**	**2**
	3/HD				**3/HD**																			**3**	**4**
		4/CT														**4/CT**								**4**	**2**
						4/HD					**4/HD**														**4**	**4**
																				5/CT				**5**	**2**
																5/HD								**5**	**4**
																	6/HD							**6**	**4**

Selection of shaft design, encoder system, mounting type and special designs on page 4/52.

1FG1306- ■ ■ . . . - ■ . . -Z

© Siemens 2019

Gearbox size 89, 2-stage – 1FG1306

For line voltage 380 ... 480 V 3 AC (DC link voltage 510 ... 720 V DC) **– Gearbox type** ***FZ89***

Geared motor torque at 1450 rpm
Note: All values in **bold** print are maximum gearbox values.
M_{2dyn}
Nm

Servo parallel shaft geared motors SIMOTICS S-1FG1
Article No.

Max. output speed n_{2max} = **991 rpm**, Transmission ratio i = **4.39**																						
–	–	–	–	–	–	–	–	–	–	–	–	–	–	–	–	–	–	–	–	–	–	1FG1306- . . ■ ■ 6 - ■ . B1 -Z
–	–	–	–	–	–	–	–	–	–	–	–	106	157	210	–	–	–	–	–	–	–	1FG1306- . . ■ ■ 4 - ■ . B1 -Z
–	–	–	–	–	–	–	–	–	–	–	–	106	157	210	260	275	400	230	340	460	640	1FG1306- . . ■ ■ 3 - ■ . B1 -Z
–	–	–	–	–	–	–	–	–	–	–	–	–	157	210	260	275	400	230	340	460	640	1FG1306- . . ■ ■ 2 - ■ . B1 -Z
Max. output speed n_{2max} = **1157 rpm**, Transmission ratio i = **3.76**																						
–	–	–	–	–	–	–	–	–	–	–	–	–	–	–	–	–	–	–	–	–	–	1FG1306- . . ■ ■ 6 - ■ . A1 -Z
–	–	–	–	–	–	–	–	–	–	–	–	91	135	182	–	–	–	–	–	–	–	1FG1306- . . ■ ■ 4 - ■ . A1 -Z
–	–	–	–	–	–	–	–	–	–	–	–	91	135	182	220	235	340	200	290	390	545	1FG1306- . . ■ ■ 3 - ■ . A1 -Z
–	–	–	–	–	–	–	–	–	–	–	–	–	135	182	220	235	340	200	290	390	545	1FG1306- . . ■ ■ 2 - ■ . A1 -Z

Motor shaft height:

36																						**C**
			48																			**D**
						63																**E**
												80										**F**
																		100				**G**

Motor length/motor version (**CT** = Compact. **HD** = High Dynamic)**:**

			0/CT				**0/CT**					**0/CT**						**0/CT**					**0**	**2**
													1/CT						**1/CT**				**1**	**2**
								1/HD															**1**	**4**
2/CT				**2/CT**					**2/CT**														**2**	**2**
										3/CT				**3/CT**						**3/CT**			**3**	**2**
	3/HD				**3/HD**																		**3**	**4**
		4/CT														**4/CT**							**4**	**2**
						4/HD					**4/HD**												**4**	**4**
																				5/CT			**5**	**2**
															5/HD								**5**	**4**
																6/HD							**6**	**4**

Selection of shaft design, encoder system, mounting type and special designs on page 4/52.

1FG1306- ■ ■ . . . . - . ■ . . **-Z**

© Siemens 2019

Technical specifications

Gearbox type *FD89*

Servo geared motor Type	i	R_{ex}	M_{2rated} Nm	M_{2max} Nm	$M_{2Em.Off}$ Nm	n_{2max} rpm	n_{1max} rpm	φ [1] '	F_{R2} N	F_{R2max} N	c_T Nm/ '	J_G 10^{-4} kgm^2
1FG1406-.....-..S1	335.3	370512/1105	1850	2010	3140	13	4500	5.13	17400	17400	162.5	0.42
1FG1406-.....-..R1	304.82	741024/2431	1850	2010	3140	15	4500	5.13	17400	17400	162.5	0.51
1FG1406-.....-..Q1	273.41	4648/17	1850	2010	3140	16	4500	5.13	17400	17400	162.5	0.7
1FG1406-.....-..P1	245.82	597600/2431	1850	2010	3140	18	4500	5.14	17400	17400	162.5	0.79
1FG1406-.....-..N1	222.33	49136/221	1850	2010	3140	20	4500	5.14	17400	17400	162.5	0.87
1FG1406-.....-..M1	205.23	589632/2873	1850	2010	3140	22	4500	5.14	17400	17400	162.5	1
1FG1406-.....-..L1	188	290832/1547	1850	2010	3140	24	4500	5.15	17400	17400	162.5	1.3
1FG1406-.....-..K1	157.74	34860/221	1850	2010	3140	29	4500	5.11	17400	17400	162.5	1.4
1FG1406-.....-..J1	148.46	557760/3757	1850	2010	3140	30	4500	5.11	17400	17400	162.5	1.6
1FG1406-.....-..H1	136.21	5312/39	1850	2010	3140	33	4500	5.11	17400	17400	162.5	1.7
1FG1406-.....-..G1	118.98	131472/1105	1850	2010	3140	38	4500	5.12	17400	17400	162.5	2.5
1FG1406-.....-..F1	106.52	19920/187	1850	2010	3140	42	4500	5.13	17400	17400	162.5	3.1
1FG1406-.....-..E1	93.14	20584/221	1850	2010	3140	48	4500	5.14	17400	17400	162.5	3.5
1FG1406-.....-..D1	79.95	23904/299	1850	2010	3140	56	4500	5.16	17400	17400	162.5	3.8
1FG1406-.....-..C1	70.67	390432/5525	1850	2010	3140	64	4500	5.22	17400	17400	162.5	4.6
1FG1406-.....-..B1	60.09	13280/221	1850	1980	3140	72	4350	5.25	17400	17400	162.5	6.5
1FG1406-.....-..A1	51.51	79680/1547	1850	1890	3140	84	4350	5.28	17400	17400	162.4	8.5

Selection and ordering data

Shaft design, encoder system, mounting type and special designs

Gearbox type *FD89*

		Servo parallel shaft geared motors SIMOTICS S-1FG1 Article No. **1FG1406-** ■■.....-.■... **-Z**
Shaft design:	Solid shaft with feather keyway – Design 1	**1**
	Hollow-shaft with feather keyway – Design 1 – H50	**5**
Order codes and Descriptions see chapter "Options"	Special shaft design	**9**
Encoder system for motors with DRIVE-CLiQ interface:	AS20DQI encoder	**Q**
	AM20DQI encoder	**R**
	R14DQ resolver	**P**
	R15DQ resolver	**U**
Order codes and Descriptions see chapter "Options"	Special version encoder system	**Z**
Mounting type:	Foot-mounted design	**A**
	Flange-mounted design	**F**
	Housing flange design	**H**
	Shaft-mounted design (not possible with solid shaft)	**D**
Special designs (Options): Order codes and Descriptions see chapter "Options" The following order codes must be added to each article number: • Oil type – order codes **K06** or **K11** • Mounting position – order codes **D01** ... **D06**		**-Z**
Selection of 3-stages servo parallel shaft geared motors with gearbox size 89 from next page.		**1FG1406-** ..■■■-■.■■**-Z**

[1] Data are for option reduced-backlash version – order code **G99** required.

© Siemens 2019

Gearbox size 89, 3-stage – 1FG1406

Selection and ordering data (continued)

For line voltage 380 ... 480 V 3 AC (DC link voltage 510 ... 720 V DC) **– Gearbox type** ***FD89***

Geared motor torque at 1450 rpm
Note: All values in **bold** print are maximum gearbox values.
M_{2dyn}
Nm

Servo parallel shaft geared motors SIMOTICS S-1FG1
Article No.

Max. output speed n_{2max} = **13 rpm**, Transmission ratio i = **335.3**																					
–	–	–	–	–	–	–	–	–	–	–	–	–	–	–	–	–	–	–	–	–	1FG1406- . . ■ ■ 6 - ■ . S1 -Z
–	–	–	–	–	–	–	**2010**	**2010**	**2010**	**2010**	**2010**	–	–	–	–	–	–	–	–	–	1FG1406- . . ■ ■ 4 - ■ . S1 -Z
–	–	–	–	–	–	–	**2010**	**2010**	**2010**	**2010**	**2010**	–	–	–	–	–	–	–	–	–	1FG1406- . . ■ ■ 3 - ■ . S1 -Z
–	–	–	–	–	–	–	**2010**	–	**2010**	**2010**	**2010**	–	–	–	–	–	–	–	–	–	1FG1406- . . ■ ■ 2 - ■ . S1 -Z
Max. output speed n_{2max} = **15 rpm**, Transmission ratio i = **304.82**																					
–	–	–	–	–	–	–	–	–	–	–	–	–	–	–	–	–	–	–	–	–	1FG1406- . . ■ ■ 6 - ■ . R1 -Z
–	–	–	–	–	–	–	**2010**	**2010**	**2010**	**2010**	**2010**	–	–	–	–	–	–	–	–	–	1FG1406- . . ■ ■ 4 - ■ . R1 -Z
–	–	–	–	–	–	–	**2010**	**2010**	**2010**	**2010**	**2010**	–	–	–	–	–	–	–	–	–	1FG1406- . . ■ ■ 3 - ■ . R1 -Z
–	–	–	–	–	–	–	**2010**	–	**2010**	**2010**	**2010**	–	–	–	–	–	–	–	–	–	1FG1406- . . ■ ■ 2 - ■ . R1 -Z
Max. output speed n_{2max} = **16 rpm**, Transmission ratio i = **273.41**																					
–	–	–	–	–	–	–	–	–	–	–	–	–	–	–	–	–	–	–	–	–	1FG1406- . . ■ ■ 6 - ■ . Q1 -Z
–	–	–	–	–	–	–	**2010**	**2010**	**2010**	**2010**	**2010**	**2010**	**2010**	**2010**	–	–	–	–	–	–	1FG1406- . . ■ ■ 4 - ■ . Q1 -Z
–	–	–	–	–	–	–	**2010**	**2010**	**2010**	**2010**	**2010**	**2010**	**2010**	**2010**	**2010**	**2010**	**2010**	–	–	–	1FG1406- . . ■ ■ 3 - ■ . Q1 -Z
–	–	–	–	–	–	–	**2010**	–	**2010**	**2010**	**2010**	–	**2010**	**2010**	**2010**	**2010**	**2010**	–	–	–	1FG1406- . . ■ ■ 2 - ■ . Q1 -Z
Max. output speed n_{2max} = **18 rpm**, Transmission ratio i = **245.82**																					
–	–	–	–	–	–	–	–	–	–	–	–	–	–	–	–	–	–	–	–	–	1FG1406- . . ■ ■ 6 - ■ . P1 -Z
–	–	–	–	–	–	–	**2010**	**2010**	**2010**	**2010**	**2010**	**2010**	**2010**	**2010**	–	–	–	–	–	–	1FG1406- . . ■ ■ 4 - ■ . P1 -Z
–	–	–	–	–	–	–	**2010**	**2010**	**2010**	**2010**	**2010**	**2010**	**2010**	**2010**	**2010**	**2010**	**2010**	–	–	–	1FG1406- . . ■ ■ 3 - ■ . P1 -Z
–	–	–	–	–	–	–	**2010**	–	**2010**	**2010**	**2010**	–	**2010**	**2010**	**2010**	**2010**	**2010**	–	–	–	1FG1406- . . ■ ■ 2 - ■ . P1 -Z
Max. output speed n_{2max} = **20 rpm**, Transmission ratio i = **222.33**																					
–	–	–	–	–	–	–	–	–	–	–	–	–	–	–	–	–	–	–	–	–	1FG1406- . . ■ ■ 6 - ■ . N1 -Z
–	–	–	–	–	–	–	**2010**	**2010**	**2010**	**2010**	**2010**	**2010**	**2010**	**2010**	–	–	–	–	–	–	1FG1406- . . ■ ■ 4 - ■ . N1 -Z
–	–	–	–	–	–	–	**2010**	**2010**	**2010**	**2010**	**2010**	**2010**	**2010**	**2010**	**2010**	**2010**	**2010**	–	–	–	1FG1406- . . ■ ■ 3 - ■ . N1 -Z
–	–	–	–	–	–	–	**2010**	–	**2010**	**2010**	**2010**	–	**2010**	**2010**	**2010**	**2010**	**2010**	–	–	–	1FG1406- . . ■ ■ 2 - ■ . N1 -Z
Max. output speed n_{2max} = **22 rpm**, Transmission ratio i = **205.23**																					
–	–	–	–	–	–	–	–	–	–	–	–	–	–	–	–	–	–	–	–	–	1FG1406- . . ■ ■ 6 - ■ . M1 -Z
–	–	–	–	–	–	–	**2010**	**2010**	**2010**	**2010**	**2010**	**2010**	**2010**	**2010**	–	–	–	–	–	–	1FG1406- . . ■ ■ 4 - ■ . M1 -Z
–	–	–	–	–	–	–	**2010**	**2010**	**2010**	**2010**	**2010**	**2010**	**2010**	**2010**	**2010**	**2010**	**2010**	–	–	–	1FG1406- . . ■ ■ 3 - ■ . M1 -Z
–	–	–	–	–	–	–	**2010**	–	**2010**	**2010**	**2010**	–	**2010**	**2010**	**2010**	**2010**	**2010**	–	–	–	1FG1406- . . ■ ■ 2 - ■ . M1 -Z
Max. output speed n_{2max} = **24 rpm**, Transmission ratio i = **188**																					
–	–	–	–	–	–	–	–	–	–	–	–	–	–	–	–	–	–	–	–	–	1FG1406- . . ■ ■ 6 - ■ . L1 -Z
–	–	–	–	–	–	–	**2010**	**2010**	**2010**	**2010**	**2010**	**2010**	**2010**	**2010**	–	–	–	–	–	–	1FG1406- . . ■ ■ 4 - ■ . L1 -Z
–	–	–	–	–	–	–	**2010**	**2010**	**2010**	**2010**	**2010**	**2010**	**2010**	**2010**	**2010**	**2010**	**2010**	**2010**	**2010**	**2010**	1FG1406- . . ■ ■ 3 - ■ . L1 -Z
–	–	–	–	–	–	–	**2010**	–	**2010**	**2010**	**2010**	–	**2010**	**2010**	**2010**	**2010**	**2010**	**2010**	**2010**	**2010**	1FG1406- . . ■ ■ 2 - ■ . L1 -Z

Motor shaft height:

| | | | | | | | | | | | | | | | | | | |

© Siemens 2019

Gearbox size 89, 3-stage – 1FG1406

For line voltage 380 ... 480 V 3 AC (DC link voltage 510 ... 720 V DC) **– Gearbox type** ***FD89***

Geared motor torque at 1450 rpm
Note: All values in **bold** print are maximum gearbox values.
M_{2dyn}
Nm

Servo parallel shaft geared motors SIMOTICS S-1FG1
Article No.

Max. output speed n_{2max} = 29 rpm, Transmission ratio i = 157.74																						
–	–	–	–	–	–	–	–	–	–	–	–	–	–	–	–	–	–	–	–	–	–	1FG1406- . . ■ ■ 6 - ■ . K1 -Z
–	–	–	–	–	–	–	2010	2010	2010	2010	2010	2010	2010	2010	–	–	–	–	–	–	–	1FG1406- . . ■ ■ 4 - ■ . K1 -Z
–	–	–	–	–	–	–	2010	2010	2010	2010	2010	2010	2010	2010	2010	2010	2010	2010	2010	2010	2010	1FG1406- . . ■ ■ 3 - ■ . K1 -Z
–	–	–	–	–	–	–	2010	–	2010	2010	2010	–	2010	2010	2010	2010	2010	2010	2010	2010	2010	1FG1406- . . ■ ■ 2 - ■ . K1 -Z
Max. output speed n_{2max} = 30 rpm, Transmission ratio i = 148.46																						
–	–	–	–	–	–	–	–	–	–	–	–	–	–	–	–	–	–	–	–	–	–	1FG1406- . . ■ ■ 6 - ■ . J1 -Z
–	–	–	–	–	–	–	2010	2010	2010	2010	2010	2010	2010	2010	–	–	–	–	–	–	–	1FG1406- . . ■ ■ 4 - ■ . J1 -Z
–	–	–	–	–	–	–	2010	2010	2010	2010	2010	2010	2010	2010	2010	2010	2010	2010	2010	2010	2010	1FG1406- . . ■ ■ 3 - ■ . J1 -Z
–	–	–	–	–	–	–	2010	–	2010	2010	2010	–	2010	2010	2010	2010	2010	2010	2010	2010	2010	1FG1406- . . ■ ■ 2 - ■ . J1 -Z
Max. output speed n_{2max} = 33 rpm, Transmission ratio i = 136.21																						
–	–	–	–	–	–	–	–	–	–	–	–	–	–	–	–	–	–	–	–	–	–	1FG1406- . . ■ ■ 6 - ■ . H1 -Z
–	–	–	–	–	–	–	2010	2010	2010	2010	2010	2010	2010	2010	–	–	–	–	–	–	–	1FG1406- . . ■ ■ 4 - ■ . H1 -Z
–	–	–	–	–	–	–	2010	2010	2010	2010	2010	2010	2010	2010	2010	2010	2010	2010	2010	2010	2010	1FG1406- . . ■ ■ 3 - ■ . H1 -Z
–	–	–	–	–	–	–	2010	–	2010	2010	2010	–	2010	2010	2010	2010	2010	2010	2010	2010	2010	1FG1406- . . ■ ■ 2 - ■ . H1 -Z
Max. output speed n_{2max} = 38 rpm, Transmission ratio i = 118.98																						
–	–	–	–	–	–	–	–	–	–	–	–	–	–	–	–	–	–	–	–	–	–	1FG1406- . . ■ ■ 6 - ■ . G1 -Z
–	–	–	–	–	–	–	1980	1900	2010	2010	2010	2010	2010	2010	–	–	–	–	–	–	–	1FG1406- . . ■ ■ 4 - ■ . G1 -Z
–	–	–	–	–	–	–	1980	1900	2010	2010	2010	2010	2010	2010	2010	2010	2010	2010	2010	2010	2010	1FG1406- . . ■ ■ 3 - ■ . G1 -Z
–	–	–	–	–	–	–	1980	–	2010	2010	2010	–	2010	2010	2010	2010	2010	2010	2010	2010	2010	1FG1406- . . ■ ■ 2 - ■ . G1 -Z
Max. output speed n_{2max} = 42 rpm, Transmission ratio i = 106.52																						
–	–	–	–	–	–	–	–	–	–	–	–	–	–	–	–	–	–	–	–	–	–	1FG1406- . . ■ ■ 6 - ■ . F1 -Z
–	–	–	–	–	–	–	1770	1700	2010	2010	2010	2010	2010	2010	–	–	–	–	–	–	–	1FG1406- . . ■ ■ 4 - ■ . F1 -Z
–	–	–	–	–	–	–	1770	1700	2010	2010	2010	2010	2010	2010	2010	2010	2010	2010	2010	2010	2010	1FG1406- . . ■ ■ 3 - ■ . F1 -Z
–	–	–	–	–	–	–	1770	–	2010	2010	2010	–	2010	2010	2010	2010	2010	2010	2010	2010	2010	1FG1406- . . ■ ■ 2 - ■ . F1 -Z
Max. output speed n_{2max} = 48 rpm, Transmission ratio i = 93.14																						
–	–	–	–	–	–	–	–	–	–	–	–	–	–	–	–	–	–	–	–	–	–	1FG1406- . . ■ ■ 6 - ■ . E1 -Z
–	–	–	–	–	–	–	1560	1500	2010	2010	2010	2010	2010	2010	–	–	–	–	–	–	–	1FG1406- . . ■ ■ 4 - ■ . E1 -Z
–	–	–	–	–	–	–	1560	1500	2010	2010	2010	2010	2010	2010	2010	2010	2010	2010	2010	2010	2010	1FG1406- . . ■ ■ 3 - ■ . E1 -Z
–	–	–	–	–	–	–	1560	–	2010	2010	2010	–	2010	2010	2010	2010	2010	2010	2010	2010	2010	1FG1406- . . ■ ■ 2 - ■ . E1 -Z
Max. output speed n_{2max} = 56 rpm, Transmission ratio i = 79.95																						
–	–	–	–	–	–	–	–	–	–	–	–	–	–	–	–	–	–	–	–	–	–	1FG1406- . . ■ ■ 6 - ■ . D1 -Z
–	–	–	–	–	–	–	1340	1290	1930	2010	2010	1860	2010	2010	–	–	–	–	–	–	–	1FG1406- . . ■ ■ 4 - ■ . D1 -Z
–	–	–	–	–	–	–	1340	1290	1930	2010	2010	1860	2010	2010	2010	2010	2010	2010	2010	2010	2010	1FG1406- . . ■ ■ 3 - ■ . D1 -Z
–	–	–	–	–	–	–	1340	–	1930	2010	2010	–	2010	2010	2010	2010	2010	2010	2010	2010	2010	1FG1406- . . ■ ■ 2 - ■ . D1 -Z
Max. output speed n_{2max} = 64 rpm, Transmission ratio i = 70.67																						
–	–	–	–	–	–	–	–	–	–	–	–	–	–	–	–	–	–	–	–	–	–	1FG1406- . . ■ ■ 6 - ■ . C1 -Z
–	–	–	–	–	–	–	1180	1140	1710	2010	2010	1650	2010	2010	–	–	–	–	–	–	–	1FG1406- . . ■ ■ 4 - ■ . C1 -Z
–	–	–	–	–	–	–	1180	1140	1710	2010	2010	1650	2010	2010	2010	2010	2010	2010	2010	2010	2010	1FG1406- . . ■ ■ 3 - ■ . C1 -Z
–	–	–	–	–	–	–	1180	–	1710	2010	2010	–	2010	2010	2010	2010	2010	2010	2010	2010	2010	1FG1406- . . ■ ■ 2 - ■ . C1 -Z

Motor shaft height:

36																						**C**
			48																			**D**
							63															**E**
												80										**F**
																	100					**G**

Motor length/motor version (**CT** = Compact. **HD** = High Dynamic)**:**

			0/CT				**0/CT**				**0/CT**						**0/CT**					**0**	**2**
												1/CT						**1/CT**				**1**	**2**
								1/HD														**1**	**4**
2/CT				**2/CT**					**2/CT**													**2**	**2**
										3/CT				**3/CT**					**3/CT**			**3**	**2**
	3/HD				**3/HD**																	**3**	**4**
		4/CT													**4/CT**							**4**	**2**
						4/HD					**4/HD**											**4**	**4**
																				5/CT		**5**	**2**
																5/HD						**5**	**4**
																	6/HD					**6**	**4**

Selection of shaft design, encoder system, mounting type and special designs on page 4/57.

1FG1406- ■ ■ . . . - . ■ . . -Z

© Siemens 2019

Servo parallel shaft geared motors SIMOTICS S-1FG1

Selecting servo geared motors

Gearbox size 89, 3-stage – 1FG1406

For line voltage 380 ... 480 V 3 AC (DC link voltage 510 ... 720 V DC) **– Gearbox type** ***FD89***

Geared motor torque at 1450 rpm
Note: All values in **bold** print are maximum gearbox values.
M_{2dyn}

Nm

Servo parallel shaft geared motors SIMOTICS S-1FG1

Article No.

Max. output speed n_{2max} = **72 rpm**, Transmission ratio i = **60.09**																										
–	–	–	–	–	–	–	–	–	–	–	–	–	–	–	–	–	–	–	–	–	–	1FG1406-	. .	■ ■	6 - ■	. B1 -Z
–	–	–	–	–	–	–	–	–	–	–	–	1400	1980	1980	–	–	–	–	–	–	–	1FG1406-	. .	■ ■	4 - ■	. B1 -Z
–	–	–	–	–	–	–	–	–	–	–	–	1400	1980	1980	1980	1980	1980	1980	1980	1980	1980	1FG1406-	. .	■ ■	3 - ■	. B1 -Z
–	–	–	–	–	–	–	–	–	–	–	–	–	1980	1980	1980	1980	1980	1980	1980	1980	1980	1FG1406-	. .	■ ■	2 - ■	. B1 -Z
Max. output speed n_{2max} = **84 rpm**, Transmission ratio i = **51.51**																										
–	–	–	–	–	–	–	–	–	–	–	–	–	–	–	–	–	–	–	–	–	–	1FG1406-	. .	■ ■	6 - ■	. A1 -Z
–	–	–	–	–	–	–	–	–	–	–	–	1200	1780	1890	–	–	–	–	–	–	–	1FG1406-	. .	■ ■	4 - ■	. A1 -Z
–	–	–	–	–	–	–	–	–	–	–	–	1200	1780	1890	1890	1890	1890	1890	1890	1890	1890	1FG1406-	. .	■ ■	3 - ■	. A1 -Z
–	–	–	–	–	–	–	–	–	–	–	–	–	1780	1890	1890	1890	1890	1890	1890	1890	1890	1FG1406-	. .	■ ■	2 - ■	. A1 -Z

Motor shaft height:

36																							C			
			48																				D			
							63																E			
												80											F			
																		100					G			

Motor length/motor version (**CT** = Compact. **HD** = High Dynamic)**:**

			0/CT				0/CT					0/CT						0/CT					0		2
													1/CT						1/CT				1		2
								1/HD															1		4
2/CT				2/CT					2/CT														2		2
										3/CT				3/CT						3/CT			3		2
	3/HD				3/HD																		3		4
		4/CT													4/CT								4		2
						4/HD					4/HD												4		4
																					5/CT		5		2
																5/HD							5		4
																	6/HD						6		4

Selection of shaft design, encoder system, mounting type and special designs on page 4/57.

1FG1406- ■ ■ . . . - . ■ . . -Z

4/60 Siemens D 41 · May 2019

© Siemens 2019

Technical specifications

Gearbox type *FZ109*

Servo geared motor Type	i	R_{ex}	M_{2rated} Nm	M_{2max} Nm	$M_{2Em.Off}$ Nm	n_{2max} rpm	n_{1max} rpm	φ [1] '	F_{R2} N	F_{R2max} N	c_T Nm/ '	J_G 10^{-4} kgm^2
1FG1307-.....-..B2	70.74	12733/180	3100	3360	5270	64	4500	4.57	25000	25000	300.7	3.6
1FG1307-.....-..A2	65.3	12733/195	3100	3360	5270	69	4500	4.57	25000	25000	300.8	4.3
1FG1307-.....-..X1	60.12	6313/105	3100	3360	5270	75	4500	4.57	25000	25000	300.7	4.9
1FG1307-.....-..W1	51.27	2461/48	3100	3360	5270	88	4500	4.60	25000	25000	300.7	6.3
1FG1307-.....-..V1	48.25	2461/51	3100	3350	5270	93	4500	4.60	25000	25000	300.8	7.1
1FG1307-.....-..U1	44.78	12091/270	3100	3350	5270	100	4500	4.62	25000	25000	300.8	7.8
1FG1307-.....-..T1	39.59	3959/100	3100	3350	5270	114	4500	4.64	25000	25000	300.7	9.5
1FG1307-.....-..S1	35.34	11663/330	3100	3360	5270	127	4500	4.66	24700	23900	300.6	11.3
1FG1307-.....-..R1	31.8	11449/360	3100	3360	5270	142	4500	4.69	23600	22800	300.5	13.3
1FG1307-.....-..Q1	27.6	9523/345	3100	3360	5270	163	4500	4.72	22200	21400	300.4	16.2
1FG1307-.....-..P1	24.82	3103/125	3100	3360	5270	181	4500	4.89	21200	20300	300.3	19.2
1FG1307-.....-..N1	21.7	7811/360	3100	3360	5270	207	4500	4.95	20000	19100	300.2	23
1FG1307-.....-..M1	19.36	2033/105	3100	3360	5270	232	4500	4.99	18900	18100	299.9	27
1FG1307-.....-..L1	17.06	1177/69	3100	3360	5270	264	4500	5.04	17900	17000	299.7	33
1FG1307-.....-..K1	14.95	4708/315	3100	3360	5270	292	4363	5.11	16800	15900	299.3	40
1FG1307-.....-..J1	13.03	1498/115	3100	3160	5270	334	4350	5.19	15700	15500	299	48
1FG1307-.....-..H1	11.89	107/9	3060	3060	5200	366	4350	5.24	15200	15200	298.5	56
1FG1307-.....-..G1	10.23	1177/115	2880	2880	4890	425	4350	5.34	14700	14700	297.9	70
1FG1307-.....-..F1	9.02	1767/196	2090	2100	3170	482	4350	7.63	16100	16100	245.8	36
1FG1307-.....-..E1	7.94	5115/644	2000	2000	3190	548	4350	7.75	15600	15600	245.1	44
1FG1307-.....-..D1	6.96	341/49	1900	1900	3180	625	4350	7.90	15100	15100	243.9	54
1FG1307-.....-..C1	6.07	279/46	1800	1800	3060	717	4350	8.07	14600	14600	243	68
1FG1307-.....-..B1	5.54	155/28	1730	1730	2940	785	4350	8.18	14300	14300	241.4	79
1FG1307-.....-..A1	4.77	3069/644	1620	1620	2750	912	4350	8.41	13800	13800	239.8	102

Selection and ordering data

Shaft design, encoder system, mounting type and special designs

Gearbox type *FZ109*

			Servo parallel shaft geared motors SIMOTICS S-1FG1 Article No.
			1FG1307- ■ ■ . . . - . ■ . . **-Z**
Shaft design:	Solid shaft with feather keyway	– Design 1	**1**
		– Design 3	**3**
	Hollow-shaft with feather keyway	– Design 1 – H60	**5**
		– Design 3 – H70	**7**
Order codes and Descriptions see chapter "Options"	Special shaft design		**9**
Encoder system for motors with DRIVE-CLiQ interface:	AS20DQI encoder		**Q**
	AM20DQI encoder		**R**
	R14DQ resolver		**P**
	R15DQ resolver		**U**
Order codes and Descriptions see chapter "Options"	Special version encoder system		**Z**
Mounting type:	Foot-mounted design		**A**
	Flange-mounted design		**F**
	Housing flange design		**H**
	Shaft-mounted design (not possible with solid shaft)		**D**
Special designs (Options): Order codes and Descriptions see chapter "Options" The following order codes must be added to each article number: • Oil type – order codes **K06** or **K11** • Mounting position – order codes **D01** ... **D06**			**-Z**
Selection of 2-stages servo parallel shaft geared motors with gearbox size 109 from next page.			**1FG1307-** . . ■ ■ ■ - ■ . ■ ■ **-Z**

[1] Data are for option reduced-backlash version – order code **G99** required.

© Siemens 2019

Gearbox size 109, 2-stage – 1FG1307

Selection and ordering data (continued)

For line voltage 380 ... 480 V 3 AC (DC link voltage 510 ... 720 V DC) **– Gearbox type** ***FZ109***

Geared motor torque at 1450 rpm
Note: All values in **bold** print are maximum gearbox values.
M_{2dyn}
Nm

Servo parallel shaft geared motors SIMOTICS S-1FG1 Article No.
Max. output speed n_{2max} = 64 rpm, Transmission ratio i = 70.74
1FG1307- . . ■ ■ 6 - ■ . B2 -Z
1FG1307- . . ■ ■ 4 - ■ . B2 -Z
1FG1307- . . ■ ■ 3 - ■ . B2 -Z
1FG1307- . . ■ ■ 2 - ■ . B2 -Z
Max. output speed n_{2max} = 69 rpm, Transmission ratio i = 65.3
1FG1307- . . ■ ■ 6 - ■ . A2 -Z
1FG1307- . . ■ ■ 4 - ■ . A2 -Z
1FG1307- . . ■ ■ 3 - ■ . A2 -Z
1FG1307- . . ■ ■ 2 - ■ . A2 -Z
Max. output speed n_{2max} = 75 rpm, Transmission ratio i = 60.12
1FG1307- . . ■ ■ 6 - ■ . X1 -Z
1FG1307- . . ■ ■ 4 - ■ . X1 -Z
1FG1307- . . ■ ■ 3 - ■ . X1 -Z
1FG1307- . . ■ ■ 2 - ■ . X1 -Z
Max. output speed n_{2max} = 88 rpm, Transmission ratio i = 51.27
1FG1307- . . ■ ■ 6 - ■ . W1 -Z
1FG1307- . . ■ ■ 4 - ■ . W1 -Z
1FG1307- . . ■ ■ 3 - ■ . W1 -Z
1FG1307- . . ■ ■ 2 - ■ . W1 -Z
Max. output speed n_{2max} = 93 rpm, Transmission ratio i = 48.25
1FG1307- . . ■ ■ 6 - ■ . V1 -Z
1FG1307- . . ■ ■ 4 - ■ . V1 -Z
1FG1307- . . ■ ■ 3 - ■ . V1 -Z
1FG1307- . . ■ ■ 2 - ■ . V1 -Z
Max. output speed n_{2max} = 100 rpm, Transmission ratio i = 44.78
1FG1307- . . ■ ■ 6 - ■ . U1 -Z
1FG1307- . . ■ ■ 4 - ■ . U1 -Z
1FG1307- . . ■ ■ 3 - ■ . U1 -Z
1FG1307- . . ■ ■ 2 - ■ . U1 -Z
Max. output speed n_{2max} = 114 rpm, Transmission ratio i = 39.59
1FG1307- . . ■ ■ 6 - ■ . T1 -Z
1FG1307- . . ■ ■ 4 - ■ . T1 -Z
1FG1307- . . ■ ■ 3 - ■ . T1 -Z
1FG1307- . . ■ ■ 2 - ■ . T1 -Z

Motor shaft height:

36	C
48	D
63	E
80	F
100	G

Motor length/motor version (**CT** = Compact. **HD** = High Dynamic)**:**

0/CT	0	2
1/CT	1	2
1/HD	1	4
2/CT	2	2
3/CT	3	2
3/HD	3	4
4/CT	4	2
4/HD	4	4
5/CT	5	2
5/HD	5	4
6/HD	6	4

Selection of shaft design, encoder system, mounting type and special designs on page 4/61.

1FG1307- ■ ■ . . . . - . ■ . . -Z

© Siemens 2019

For line voltage 380 ... 480 V 3 AC (DC link voltage 510 ... 720 V DC) **– Gearbox type** ***FZ109***

Geared motor torque at 1450 rpm
Note: All values in **bold** print are maximum gearbox values.
M_{2dyn}
Nm

1.36	1.81	2.26	2.71	3.62	4.52	5.43	6.33	7.24	9.05	10.9	12.7	14.5	18.1	21.7	25.3	28.9	36.2	43.4	50.6	57.9	72.3	Article No.
Max. output speed n_{2max} = 127 rpm, Transmission ratio i = 35.34																						
–	–	–	–	–	–	–	–	–	–	–	–	–	–	–	–	–	–	–	–	–	–	1FG1307- . . ■ ■ 6 - ■ . S1 -Z
–	–	–	–	–	–	–	–	–	–	–	–	845	1250	1690	–	–	–	–	–	–	–	1FG1307- . . ■ ■ 4 - ■ . S1 -Z
–	–	–	–	–	–	–	–	–	–	–	–	845	1250	1690	2060	2200	3190	1860	2700	**3360**	**3360**	1FG1307- . . ■ ■ 3 - ■ . S1 -Z
–	–	–	–	–	–	–	–	–	–	–	–	–	1250	1690	2060	2200	3190	1860	2700	**3360**	**3360**	1FG1307- . . ■ ■ 2 - ■ . S1 -Z
Max. output speed n_{2max} = 142 rpm, Transmission ratio i = 31.8																						
–	–	–	–	–	–	–	–	–	–	–	–	–	–	–	–	–	–	–	–	–	–	1FG1307- . . ■ ■ 6 - ■ . R1 -Z
–	–	–	–	–	–	–	–	–	–	–	–	760	1120	1520	–	–	–	–	–	–	–	1FG1307- . . ■ ■ 4 - ■ . R1 -Z
–	–	–	–	–	–	–	–	–	–	–	–	760	1120	1520	1860	1980	2870	1670	2440	3290	**3360**	1FG1307- . . ■ ■ 3 - ■ . R1 -Z
–	–	–	–	–	–	–	–	–	–	–	–	–	1120	1520	1860	1980	2870	1670	2440	3290	**3360**	1FG1307- . . ■ ■ 2 - ■ . R1 -Z
Max. output speed n_{2max} = 163 rpm, Transmission ratio i = 27.6																						
–	–	–	–	–	–	–	–	–	–	–	–	–	–	–	–	–	–	–	–	–	–	1FG1307- . . ■ ■ 6 - ■ . Q1 -Z
–	–	–	–	–	–	–	–	–	–	–	–	660	980	1320	–	–	–	–	–	–	–	1FG1307- . . ■ ■ 4 - ■ . Q1 -Z
–	–	–	–	–	–	–	–	–	–	–	–	660	980	1320	1610	1720	2500	1450	2120	2860	**3360**	1FG1307- . . ■ ■ 3 - ■ . Q1 -Z
–	–	–	–	–	–	–	–	–	–	–	–	–	980	1320	1610	1720	2500	1450	2120	2860	**3360**	1FG1307- . . ■ ■ 2 - ■ . Q1 -Z
Max. output speed n_{2max} = 181 rpm, Transmission ratio i = 24.82																						
–	–	–	–	–	–	–	–	–	–	–	–	–	–	–	–	–	–	–	–	–	–	1FG1307- . . ■ ■ 6 - ■ . P1 -Z
–	–	–	–	–	–	–	–	–	–	–	–	595	880	1190	–	–	–	–	–	–	–	1FG1307- . . ■ ■ 4 - ■ . P1 -Z
–	–	–	–	–	–	–	–	–	–	–	–	595	880	1190	1450	1550	2250	1310	1910	2570	**3360**	1FG1307- . . ■ ■ 3 - ■ . P1 -Z
–	–	–	–	–	–	–	–	–	–	–	–	–	880	1190	1450	1550	2250	1310	1910	2570	**3360**	1FG1307- . . ■ ■ 2 - ■ . P1 -Z
Max. output speed n_{2max} = 207 rpm, Transmission ratio i = 21.7																						
–	–	–	–	–	–	–	–	–	–	–	–	–	–	–	–	–	–	–	–	–	–	1FG1307- . . ■ ■ 6 - ■ . N1 -Z
–	–	–	–	–	–	–	–	–	–	–	–	520	770	1040	–	–	–	–	–	–	–	1FG1307- . . ■ ■ 4 - ■ . N1 -Z
–	–	–	–	–	–	–	–	–	–	–	–	520	770	1040	1270	1350	1970	1140	1670	2250	3130	1FG1307- . . ■ ■ 3 - ■ . N1 -Z
–	–	–	–	–	–	–	–	–	–	–	–	–	770	1040	1270	1350	1970	1140	1670	2250	3130	1FG1307- . . ■ ■ 2 - ■ . N1 -Z
Max. output speed n_{2max} = 232 rpm, Transmission ratio i = 19.36																						
–	–	–	–	–	–	–	–	–	–	–	–	–	–	–	–	–	–	–	–	–	–	1FG1307- . . ■ ■ 6 - ■ . M1 -Z
–	–	–	–	–	–	–	–	–	–	–	–	465	685	930	–	–	–	–	–	–	–	1FG1307- . . ■ ■ 4 - ■ . M1 -Z
–	–	–	–	–	–	–	–	–	–	–	–	465	685	930	1130	1210	1750	1020	1490	2010	2790	1FG1307- . . ■ ■ 3 - ■ . M1 -Z
–	–	–	–	–	–	–	–	–	–	–	–	–	685	930	1130	1210	1750	1020	1490	2010	2790	1FG1307- . . ■ ■ 2 - ■ . M1 -Z
Max. output speed n_{2max} = 264 rpm, Transmission ratio i = 17.06																						
–	–	–	–	–	–	–	–	–	–	–	–	–	–	–	–	–	–	–	–	–	–	1FG1307- . . ■ ■ 6 - ■ . L1 -Z
–	–	–	–	–	–	–	–	–	–	–	–	410	605	820	–	–	–	–	–	–	–	1FG1307- . . ■ ■ 4 - ■ . L1 -Z
–	–	–	–	–	–	–	–	–	–	–	–	410	605	820	1000	1060	1550	900	1310	1770	2460	1FG1307- . . ■ ■ 3 - ■ . L1 -Z
–	–	–	–	–	–	–	–	–	–	–	–	–	605	820	1000	1060	1550	900	1310	1770	2460	1FG1307- . . ■ ■ 2 - ■ . L1 -Z
Max. output speed n_{2max} = 292 rpm, Transmission ratio i = 14.95																						
–	–	–	–	–	–	–	–	–	–	–	–	–	–	–	–	–	–	–	–	–	–	1FG1307- . . ■ ■ 6 - ■ . K1 -Z
–	–	–	–	–	–	–	–	–	–	–	–	360	530	720	–	–	–	–	–	–	–	1FG1307- . . ■ ■ 4 - ■ . K1 -Z
–	–	–	–	–	–	–	–	–	–	–	–	360	530	720	875	935	1350	790	1150	1550	2160	1FG1307- . . ■ ■ 3 - ■ . K1 -Z
–	–	–	–	–	–	–	–	–	–	–	–	–	530	720	875	935	1350	790	1150	1550	2160	1FG1307- . . ■ ■ 2 - ■ . K1 -Z

Motor shaft height:

1.36	1.81	2.26	2.71	3.62	4.52	5.43	6.33	7.24	9.05	10.9	12.7	14.5	18.1	21.7	25.3	28.9	36.2	43.4	50.6	57.9	72.3	
36																						**C**
			48																			**D**
					63																	**E**
												80										**F**
																	100					**G**

Motor length/motor version (**CT** = Compact. **HD** = High Dynamic)**:**

1.36	1.81	2.26	2.71	3.62	4.52	5.43	6.33	7.24	9.05	10.9	12.7	14.5	18.1	21.7	25.3	28.9	36.2	43.4	50.6	57.9	72.3		
			0/CT				**0/CT**					**0/CT**						**0/CT**					**0**	**2**
													1/CT						**1/CT**				**1**	**2**
								1/HD															**1**	**4**
2/CT				**2/CT**					**2/CT**														**2**	**2**
										3/CT				**3/CT**						**3/CT**			**3**	**2**
	3/HD				**3/HD**																		**3**	**4**
		4/CT														**4/CT**							**4**	**2**
						4/HD					**4/HD**													**4**	**4**
																				5/CT			**5**	**2**
															5/HD								**5**	**4**
																6/HD							**6**	**4**

Selection of shaft design, encoder system, mounting type and special designs on page 4/61.

1FG1307- ■ ■ . . . - . ■ . . -Z

Servo parallel shaft geared motors SIMOTICS S-1FG1
Article No.

© Siemens 2019

Gearbox size 109, 2-stage – 1FG1307

For line voltage 380 ... 480 V 3 AC (DC link voltage 510 ... 720 V DC) **– Gearbox type** ***FZ109***

Geared motor torque at 1450 rpm
Note: All values in **bold** print are maximum gearbox values.
M_{2dyn}

Nm																						Servo parallel shaft geared motors SIMOTICS S-1FG1 Article No.
Max. output speed n_{2max} = **334 rpm**, Transmission ratio i = **13.03**																						
–	–	–	–	–	–	–	–	–	–	–	–	–	–	–	–	–	–	–	–	–	–	1FG1307- . . ■ ■ 6 - ■ . J1 -Z
–	–	–	–	–	–	–	–	–	–	–	–	310	465	625	–	–	–	–	–	–	–	1FG1307- . . ■ ■ 4 - ■ . J1 -Z
–	–	–	–	–	–	–	–	–	–	–	–	310	465	625	765	815	1180	690	1000	1350	1880	1FG1307- . . ■ ■ 3 - ■ . J1 -Z
–	–	–	–	–	–	–	–	–	–	–	–	–	465	625	765	815	1180	690	1000	1350	1880	1FG1307- . . ■ ■ 2 - ■ . J1 -Z
Max. output speed n_{2max} = **366 rpm**, Transmission ratio i = **11.89**																						
–	–	–	–	–	–	–	–	–	–	–	–	–	–	–	–	–	–	–	–	–	–	1FG1307- . . ■ ■ 6 - ■ . H1 -Z
–	–	–	–	–	–	–	–	–	–	–	–	285	420	570	–	–	–	–	–	–	–	1FG1307- . . ■ ■ 4 - ■ . H1 -Z
–	–	–	–	–	–	–	–	–	–	–	–	285	420	570	695	740	1070	625	915	1230	1710	1FG1307- . . ■ ■ 3 - ■ . H1 -Z
–	–	–	–	–	–	–	–	–	–	–	–	–	420	570	695	740	1070	625	915	1230	1710	1FG1307- . . ■ ■ 2 - ■ . H1 -Z
Max. output speed n_{2max} = **425 rpm**, Transmission ratio i = **10.23**																						
–	–	–	–	–	–	–	–	–	–	–	–	–	–	–	–	–	–	–	–	–	–	1FG1307- . . ■ ■ 6 - ■ . G1 -Z
–	–	–	–	–	–	–	–	–	–	–	–	–	–	–	–	–	–	–	–	–	–	1FG1307- . . ■ ■ 4 - ■ . G1 -Z
–	–	–	–	–	–	–	–	–	–	–	–	–	–	–	–	–	–	540	785	1060	1470	1FG1307- . . ■ ■ 3 - ■ . G1 -Z
–	–	–	–	–	–	–	–	–	–	–	–	–	–	–	–	–	–	540	785	1060	1470	1FG1307- . . ■ ■ 2 - ■ . G1 -Z
Max. output speed n_{2max} = **482 rpm**, Transmission ratio i = **9.02**																						
–	–	–	–	–	–	–	–	–	–	–	–	–	–	–	–	–	–	–	–	–	–	1FG1307- . . ■ ■ 6 - ■ . F1 -Z
–	–	–	–	–	–	–	–	–	–	–	–	215	325	435	–	–	–	–	–	–	–	1FG1307- . . ■ ■ 4 - ■ . F1 -Z
–	–	–	–	–	–	–	–	–	–	–	–	215	325	435	535	570	825	480	700	945	1310	1FG1307- . . ■ ■ 3 - ■ . F1 -Z
–	–	–	–	–	–	–	–	–	–	–	–	–	325	435	535	570	825	480	700	945	1310	1FG1307- . . ■ ■ 2 - ■ . F1 -Z
Max. output speed n_{2max} = **548 rpm**, Transmission ratio i = **7.94**																						
–	–	–	–	–	–	–	–	–	–	–	–	–	–	–	–	–	–	–	–	–	–	1FG1307- . . ■ ■ 6 - ■ . E1 -Z
–	–	–	–	–	–	–	–	–	–	–	–	193	285	385	–	–	–	–	–	–	–	1FG1307- . . ■ ■ 4 - ■ . E1 -Z
–	–	–	–	–	–	–	–	–	–	–	–	193	285	385	470	500	725	425	615	835	1160	1FG1307- . . ■ ■ 3 - ■ . E1 -Z
–	–	–	–	–	–	–	–	–	–	–	–	–	285	385	470	500	725	425	615	835	1160	1FG1307- . . ■ ■ 2 - ■ . E1 -Z
Max. output speed n_{2max} = **625 rpm**, Transmission ratio i = **6.96**																						
–	–	–	–	–	–	–	–	–	–	–	–	–	–	–	–	–	–	–	–	–	–	1FG1307- . . ■ ■ 6 - ■ . D1 -Z
–	–	–	–	–	–	–	–	–	–	–	–	169	250	335	–	–	–	–	–	–	–	1FG1307- . . ■ ■ 4 - ■ . D1 -Z
–	–	–	–	–	–	–	–	–	–	–	–	169	250	335	410	440	635	370	540	730	1010	1FG1307- . . ■ ■ 3 - ■ . D1 -Z
–	–	–	–	–	–	–	–	–	–	–	–	–	250	335	410	440	635	370	540	730	1010	1FG1307- . . ■ ■ 2 - ■ . D1 -Z
Max. output speed n_{2max} = **717 rpm**, Transmission ratio i = **6.07**																						
–	–	–	–	–	–	–	–	–	–	–	–	–	–	–	–	–	–	–	–	–	–	1FG1307- . . ■ ■ 6 - ■ . C1 -Z
–	–	–	–	–	–	–	–	–	–	–	–	147	215	295	–	–	–	–	–	–	–	1FG1307- . . ■ ■ 4 - ■ . C1 -Z
–	–	–	–	–	–	–	–	–	–	–	–	147	215	295	360	380	555	325	470	635	885	1FG1307- . . ■ ■ 3 - ■ . C1 -Z
–	–	–	–	–	–	–	–	–	–	–	–	–	215	295	360	380	555	325	470	635	885	1FG1307- . . ■ ■ 2 - ■ . C1 -Z

Motor shaft height:

| | | | | | | | | | | | | | | | | | | |

© Siemens 2019

For line voltage 380 ... 480 V 3 AC (DC link voltage 510 ... 720 V DC) **– Gearbox type** ***FZ109***

Geared motor torque at 1450 rpm
Note: All values in **bold** print are maximum gearbox values.
M_{2dyn}
Nm

Servo parallel shaft geared motors SIMOTICS S-1FG1
Article No.

Max. output speed n_{2max} = **785 rpm**, Transmission ratio i = **5.54**																						
–	–	–	–	–	–	–	–	–	–	–	–	–	–	–	–	–	–	–	–	–	–	1FG1307- . . ■ ■ 6 - ■ . B1 -Z
–	–	–	–	–	–	–	–	–	–	–	–	134	199	265	–	–	–	–	–	–	–	1FG1307- . . ■ ■ 4 - ■ . B1 -Z
–	–	–	–	–	–	–	–	–	–	–	–	134	199	265	325	350	505	295	430	580	805	1FG1307- . . ■ ■ 3 - ■ . B1 -Z
–	–	–	–	–	–	–	–	–	–	–	–	–	199	265	325	350	505	295	430	580	805	1FG1307- . . ■ ■ 2 - ■ . B1 -Z
Max. output speed n_{2max} = **912 rpm**, Transmission ratio i = **4.77**																						
–	–	–	–	–	–	–	–	–	–	–	–	–	–	–	–	–	–	–	–	–	–	1FG1307- . . ■ ■ 6 - ■ . A1 -Z
–	–	–	–	–	–	–	–	–	–	–	–	–	–	–	–	–	–	–	–	–	–	1FG1307- . . ■ ■ 4 - ■ . A1 -Z
–	–	–	–	–	–	–	–	–	–	–	–	–	–	–	–	–	–	255	370	500	695	1FG1307- . . ■ ■ 3 - ■ . A1 -Z
–	–	–	–	–	–	–	–	–	–	–	–	–	–	–	–	–	–	255	370	500	695	1FG1307- . . ■ ■ 2 - ■ . A1 -Z

Motor shaft height:

36																						**C**
			48																			**D**
							63															**E**
												80										**F**
																		100				**G**

Motor length/motor version (**CT** = Compact. **HD** = High Dynamic)**:**

			0/CT				**0/CT**					**0/CT**						**0/CT**					**0**	**2**
													1/CT						**1/CT**				**1**	**2**
								1/HD															**1**	**4**
2/CT				**2/CT**					**2/CT**														**2**	**2**
										3/CT				**3/CT**						**3/CT**			**3**	**2**
	3/HD				**3/HD**											**4/CT**							**3**	**4**
		4/CT																					**4**	**2**
						4/HD					**4/HD**												**4**	**4**
																				5/CT			**5**	**2**
																5/HD							**5**	**4**
																	6/HD						**6**	**4**

Selection of shaft design, encoder system, mounting type and special designs on page 4/61.

1FG1307- ■ ■ . . . . - . ■ . . **-Z**

© Siemens 2019

Gearbox size 109, 3-stage – 1FG1407

Technical specifications

Gearbox type *FD109*

Servo geared motor Type	i	R_{ex}	M_{2rated} Nm	M_{2max} Nm	$M_{2Em.Off}$ Nm	n_{2max} rpm	n_{1max} rpm	φ [1] '	F_{R2} N	F_{R2max} N	c_T Nm/ '	J_G 10^{-4} kgm^2
1FG1407-.....-..T1	409.9	332021/810	3100	3530	5270	11	4500	6.50	25000	25000	313.1	1.3
1FG1407-.....-..S1	370.07	183184/495	3100	3530	5270	12	4500	6.50	25000	25000	313.1	1.4
1FG1407-.....-..R1	335.7	217531/648	3100	3530	5270	13	4500	6.50	25000	25000	313.1	1.6
1FG1407-.....-..Q1	309.87	217531/702	3100	3530	5270	15	4500	6.50	25000	25000	313.1	1.9
1FG1407-.....-..P1	281.68	354919/1260	3100	3530	5270	16	4500	6.50	25000	25000	313.1	2.1
1FG1407-.....-..N1	238.52	11449/48	3100	3530	5270	19	4500	6.50	25000	25000	313.1	2.5
1FG1407-.....-..M1	224.49	11449/51	3100	3530	5270	20	4500	6.50	25000	25000	313.1	2.6
1FG1407-.....-..L1	207.31	251878/1215	3100	3530	5270	22	4500	6.50	25000	25000	313.1	4
1FG1407-.....-..K1	184.46	332021/1800	3100	3530	5270	24	4500	6.50	25000	25000	313.1	4.9
1FG1407-.....-..J1	163.83	194633/1188	3100	3500	5270	27	4500	6.50	25000	25000	313.1	5.8
1FG1407-.....-..H1	146.65	950267/6480	3100	3450	5270	31	4500	6.50	25000	25000	313.1	5.7
1FG1407-.....-..G1	125.37	389266/3105	3100	3410	5270	36	4500	6.50	25000	25000	313.1	6.6
1FG1407-.....-..F1	111.95	125939/1125	3100	3360	5270	40	4500	6.50	25000	25000	313.1	8.1
1FG1407-.....-..E1	98.94	80143/810	3100	3360	5270	45	4500	6.50	25000	25000	313.1	9.6
1FG1407-.....-..D1	86.83	492307/5670	3100	3360	5270	52	4500	6.50	25000	25000	313	13.5
1FG1407-.....-..C1	75.59	469409/6210	3100	3360	5270	60	4500	6.50	25000	25000	313	16.3
1FG1407-.....-..B1	64.62	183184/2835	3100	3360	5270	70	4500	6.50	25000	25000	313	21
1FG1407-.....-..A1	55.31	11449/207	3100	3360	5270	81	4500	6.50	25000	25000	313	25

Selection and ordering data

Shaft design, encoder system, mounting type and special designs

Gearbox type *FD109*

| | | |

© Siemens 2019

Selection and ordering data (continued)

For line voltage 380 ... 480 V 3 AC (DC link voltage 510 ... 720 V DC) **– Gearbox type** ***FD109***

Geared motor torque at 1450 rpm Note: All values in **bold** print are maximum gearbox values. M_{2dyn} Nm	Servo parallel shaft geared motors SIMOTICS S-1FG1 Article No.
Max. output speed n_{2max} = **11 rpm**, Transmission ratio i = **409.9**	
– – – – – – – – – – – – – – – – – – – –	1FG1407- . . ■ ■ 6 - ■ . T1 -Z
– – – – – – – – – – – – **3530 3530 3530** – – – – – –	1FG1407- . . ■ ■ 4 - ■ . T1 -Z
– – – – – – – – – – – – **3530 3530 3530 3530 3530 3530** – – – –	1FG1407- . . ■ ■ 3 - ■ . T1 -Z
– – – – – – – – – – – **3530 3530 3530 3530 3530 3530** – – – –	1FG1407- . . ■ ■ 2 - ■ . T1 -Z
Max. output speed n_{2max} = **12 rpm**, Transmission ratio i = **370.07**	
– – – – – – – – – – – – – – – – – – – –	1FG1407- . . ■ ■ 6 - ■ . S1 -Z
– – – – – – – – – – – – **3530 3530 3530** – – – – – –	1FG1407- . . ■ ■ 4 - ■ . S1 -Z
– – – – – – – – – – – – **3530 3530 3530 3530 3530 3530** – – – –	1FG1407- . . ■ ■ 3 - ■ . S1 -Z
– – – – – – – – – – – **3530 3530 3530 3530 3530 3530** – – – –	1FG1407- . . ■ ■ 2 - ■ . S1 -Z
Max. output speed n_{2max} = **13 rpm**, Transmission ratio i = **335.7**	
– – – – – – – – – – – – – – – – – – – –	1FG1407- . . ■ ■ 6 - ■ . R1 -Z
– – – – – – – – – – – – **3530 3530 3530** – – – – – –	1FG1407- . . ■ ■ 4 - ■ . R1 -Z
– – – – – – – – – – – – **3530 3530 3530 3530 3530 3530** – – – –	1FG1407- . . ■ ■ 3 - ■ . R1 -Z
– – – – – – – – – – – **3530 3530 3530 3530 3530 3530** – – – –	1FG1407- . . ■ ■ 2 - ■ . R1 -Z
Max. output speed n_{2max} = **15 rpm**, Transmission ratio i = **309.87**	
– – – – – – – – – – – – – – – – – – – –	1FG1407- . . ■ ■ 6 - ■ . Q1 -Z
– – – – – – – – – – – – **3530 3530 3530** – – – – – –	1FG1407- . . ■ ■ 4 - ■ . Q1 -Z
– – – – – – – – – – – – **3530 3530 3530 3530 3530 3530** – – – –	1FG1407- . . ■ ■ 3 - ■ . Q1 -Z
– – – – – – – – – – – **3530 3530 3530 3530 3530 3530** – – – –	1FG1407- . . ■ ■ 2 - ■ . Q1 -Z
Max. output speed n_{2max} = **16 rpm**, Transmission ratio i = **281.68**	
– – – – – – – – – – – – – – – – – – – –	1FG1407- . . ■ ■ 6 - ■ . P1 -Z
– – – – – – – – – – – – **3530 3530 3530** – – – – – –	1FG1407- . . ■ ■ 4 - ■ . P1 -Z
– – – – – – – – – – – – **3530 3530 3530 3530 3530 3530 3530 3530 3530 3530**	1FG1407- . . ■ ■ 3 - ■ . P1 -Z
– – – – – – – – – – – **3530 3530 3530 3530 3530 3530 3530 3530 3530 3530**	1FG1407- . . ■ ■ 2 - ■ . P1 -Z
Max. output speed n_{2max} = **19 rpm**, Transmission ratio i = **238.52**	
– – – – – – – – – – – – – – – – – – – –	1FG1407- . . ■ ■ 6 - ■ . N1 -Z
– – – – – – – – – – – – **3530 3530 3530** – – – – – –	1FG1407- . . ■ ■ 4 - ■ . N1 -Z
– – – – – – – – – – – – **3530 3530 3530 3530 3530 3530 3530 3530 3530 3530**	1FG1407- . . ■ ■ 3 - ■ . N1 -Z
– – – – – – – – – – – **3530 3530 3530 3530 3530 3530 3530 3530 3530 3530**	1FG1407- . . ■ ■ 2 - ■ . N1 -Z
Max. output speed n_{2max} = **20 rpm**, Transmission ratio i = **224.49**	
– – – – – – – – – – – – – – – – – – – –	1FG1407- . . ■ ■ 6 - ■ . M1 -Z
– – – – – – – – – – – – **3530 3530 3530** – – – – – –	1FG1407- . . ■ ■ 4 - ■ . M1 -Z
– – – – – – – – – – – – **3530 3530 3530 3530 3530 3530 3530 3530 3530 3530**	1FG1407- . . ■ ■ 3 - ■ . M1 -Z
– – – – – – – – – – – **3530 3530 3530 3530 3530 3530 3530 3530 3530 3530**	1FG1407- . . ■ ■ 2 - ■ . M1 -Z

Motor shaft height:

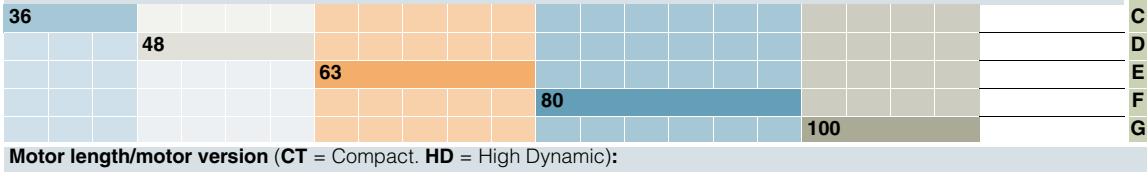

Motor length/motor version (**CT** = Compact. **HD** = High Dynamic)**:**

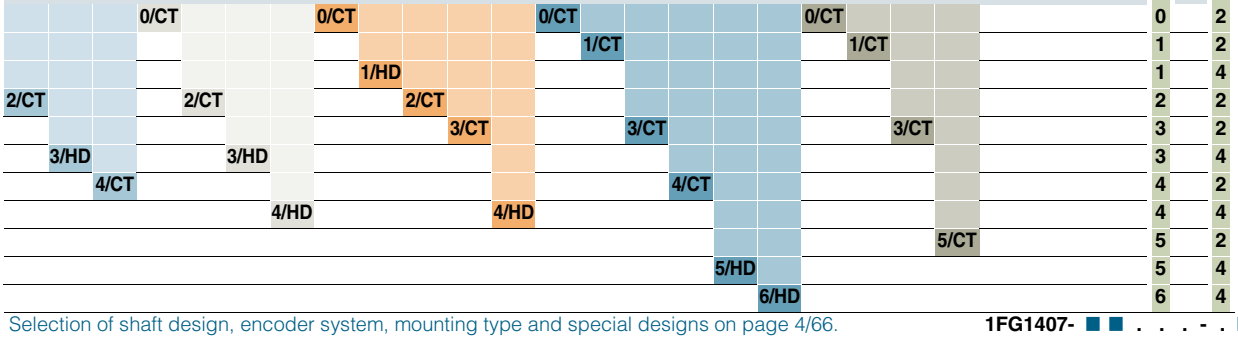

Selection of shaft design, encoder system, mounting type and special designs on page 4/66. **1FG1407- ■ ■ . . . . - . ■ . . -Z**

© Siemens 2019

Gearbox size 109, 3-stage – 1FG1407

For line voltage 380 ... 480 V 3 AC (DC link voltage 510 ... 720 V DC) **– Gearbox type** ***FD109***

Geared motor torque at 1450 rpm
Note: All values in **bold** print are maximum gearbox values.
M_{2dyn}
Nm

Servo parallel shaft geared motors SIMOTICS S-1FG1
Article No.

1	2	3	4	5	6	7	8	9	10	11	12	13	14	15	16	17	18	19	20	21	22	Article No.
Max. output speed n_{2max} = 22 rpm, Transmission ratio i = 207.31																						
–	–	–	–	–	–	–	–	–	–	–	–	–	–	–	–	–	–	–	–	–	–	1FG1407- . . ■ ■ 6 - ■ . L1 -Z
–	–	–	–	–	–	–	–	–	–	–	–	**3530**	**3530**	**3530**	–	–	–	–	–	–	–	1FG1407- . . ■ ■ 4 - ■ . L1 -Z
–	–	–	–	–	–	–	–	–	–	–	–	**3530**	**3530**	**3530**	**3530**	**3530**	**3530**	**3530**	**3530**	**3530**	**3530**	1FG1407- . . ■ ■ 3 - ■ . L1 -Z
–	–	–	–	–	–	–	–	–	–	–	–	–	**3530**	**3530**	**3530**	**3530**	**3530**	**3530**	**3530**	**3530**	**3530**	1FG1407- . . ■ ■ 2 - ■ . L1 -Z
Max. output speed n_{2max} = 24 rpm, Transmission ratio i = 184.46																						
–	–	–	–	–	–	–	–	–	–	–	–	–	–	–	–	–	–	–	–	–	–	1FG1407- . . ■ ■ 6 - ■ . K1 -Z
–	–	–	–	–	–	–	–	–	–	–	–	**3530**	**3530**	**3530**	–	–	–	–	–	–	–	1FG1407- . . ■ ■ 4 - ■ . K1 -Z
–	–	–	–	–	–	–	–	–	–	–	–	**3530**	**3530**	**3530**	**3530**	**3530**	**3530**	**3530**	**3530**	**3530**	**3530**	1FG1407- . . ■ ■ 3 - ■ . K1 -Z
–	–	–	–	–	–	–	–	–	–	–	–	–	**3530**	**3530**	**3530**	**3530**	**3530**	**3530**	**3530**	**3530**	**3530**	1FG1407- . . ■ ■ 2 - ■ . K1 -Z
Max. output speed n_{2max} = 27 rpm, Transmission ratio i = 163.83																						
–	–	–	–	–	–	–	–	–	–	–	–	–	–	–	–	–	–	–	–	–	–	1FG1407- . . ■ ■ 6 - ■ . J1 -Z
–	–	–	–	–	–	–	–	–	–	–	–	**3500**	**3500**	**3500**	–	–	–	–	–	–	–	1FG1407- . . ■ ■ 4 - ■ . J1 -Z
–	–	–	–	–	–	–	–	–	–	–	–	**3500**	**3500**	**3500**	**3500**	**3500**	**3500**	**3500**	**3500**	**3500**	**3500**	1FG1407- . . ■ ■ 3 - ■ . J1 -Z
–	–	–	–	–	–	–	–	–	–	–	–	–	**3500**	**3500**	**3500**	**3500**	**3500**	**3500**	**3500**	**3500**	**3500**	1FG1407- . . ■ ■ 2 - ■ . J1 -Z
Max. output speed n_{2max} = 31 rpm, Transmission ratio i = 146.65																						
–	–	–	–	–	–	–	–	–	–	–	–	–	–	–	–	–	–	–	–	–	–	1FG1407- . . ■ ■ 6 - ■ . H1 -Z
–	–	–	–	–	–	–	–	–	–	–	–	**3380**	**3450**	**3450**	–	–	–	–	–	–	–	1FG1407- . . ■ ■ 4 - ■ . H1 -Z
–	–	–	–	–	–	–	–	–	–	–	–	**3380**	**3450**	**3450**	**3450**	**3450**	**3450**	**3450**	**3450**	**3450**	**3450**	1FG1407- . . ■ ■ 3 - ■ . H1 -Z
–	–	–	–	–	–	–	–	–	–	–	–	–	**3450**	**3450**	**3450**	**3450**	**3450**	**3450**	**3450**	**3450**	**3450**	1FG1407- . . ■ ■ 2 - ■ . H1 -Z
Max. output speed n_{2max} = 36 rpm, Transmission ratio i = 125.37																						
–	–	–	–	–	–	–	–	–	–	–	–	–	–	–	–	–	–	–	–	–	–	1FG1407- . . ■ ■ 6 - ■ . G1 -Z
–	–	–	–	–	–	–	–	–	–	–	–	**2900**	**3410**	**3410**	–	–	–	–	–	–	–	1FG1407- . . ■ ■ 4 - ■ . G1 -Z
–	–	–	–	–	–	–	–	–	–	–	–	**2900**	**3410**	**3410**	**3410**	**3410**	**3410**	**3410**	**3410**	**3410**	**3410**	1FG1407- . . ■ ■ 3 - ■ . G1 -Z
–	–	–	–	–	–	–	–	–	–	–	–	–	**3410**	**3410**	**3410**	**3410**	**3410**	**3410**	**3410**	**3410**	**3410**	1FG1407- . . ■ ■ 2 - ■ . G1 -Z
Max. output speed n_{2max} = 40 rpm, Transmission ratio i = 111.95																						
–	–	–	–	–	–	–	–	–	–	–	–	–	–	–	–	–	–	–	–	–	–	1FG1407- . . ■ ■ 6 - ■ . F1 -Z
–	–	–	–	–	–	–	–	–	–	–	–	**2590**	**3360**	**3360**	–	–	–	–	–	–	–	1FG1407- . . ■ ■ 4 - ■ . F1 -Z
–	–	–	–	–	–	–	–	–	–	–	–	**2590**	**3360**	**3360**	**3360**	**3360**	**3360**	**3360**	**3360**	**3360**	**3360**	1FG1407- . . ■ ■ 3 - ■ . F1 -Z
–	–	–	–	–	–	–	–	–	–	–	–	–	**3360**	**3360**	**3360**	**3360**	**3360**	**3360**	**3360**	**3360**	**3360**	1FG1407- . . ■ ■ 2 - ■ . F1 -Z
Max. output speed n_{2max} = 45 rpm, Transmission ratio i = 98.94																						
–	–	–	–	–	–	–	–	–	–	–	–	–	–	–	–	–	–	–	–	–	–	1FG1407- . . ■ ■ 6 - ■ . E1 -Z
–	–	–	–	–	–	–	–	–	–	–	–	**2300**	**3360**	**3360**	–	–	–	–	–	–	–	1FG1407- . . ■ ■ 4 - ■ . E1 -Z
–	–	–	–	–	–	–	–	–	–	–	–	**2300**	**3360**	**3360**	**3360**	**3360**	**3360**	**3360**	**3360**	**3360**	**3360**	1FG1407- . . ■ ■ 3 - ■ . E1 -Z
–	–	–	–	–	–	–	–	–	–	–	–	–	**3360**	**3360**	**3360**	**3360**	**3360**	**3360**	**3360**	**3360**	**3360**	1FG1407- . . ■ ■ 2 - ■ . E1 -Z
Max. output speed n_{2max} = 52 rpm, Transmission ratio i = 86.83																						
–	–	–	–	–	–	–	–	–	–	–	–	–	–	–	–	–	–	–	–	–	–	1FG1407- . . ■ ■ 6 - ■ . D1 -Z
–	–	–	–	–	–	–	–	–	–	–	–	**2010**	**2980**	**3360**	–	–	–	–	–	–	–	1FG1407- . . ■ ■ 4 - ■ . D1 -Z
–	–	–	–	–	–	–	–	–	–	–	–	**2010**	**2980**	**3360**	**3360**	**3360**	**3360**	**3360**	**3360**	**3360**	**3360**	1FG1407- . . ■ ■ 3 - ■ . D1 -Z
–	–	–	–	–	–	–	–	–	–	–	–	–	**2980**	**3360**	**3360**	**3360**	**3360**	**3360**	**3360**	**3360**	**3360**	1FG1407- . . ■ ■ 2 - ■ . D1 -Z

Motor shaft height:

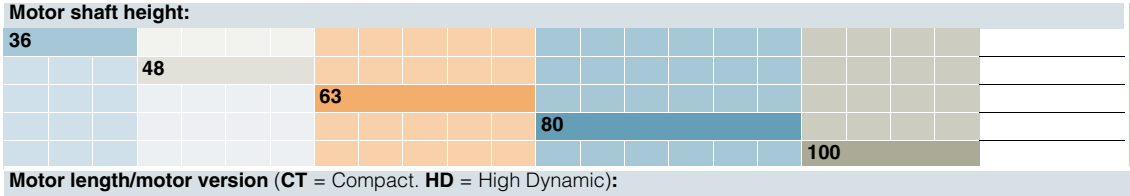

Motor length/motor version (**CT** = Compact. **HD** = High Dynamic)**:**

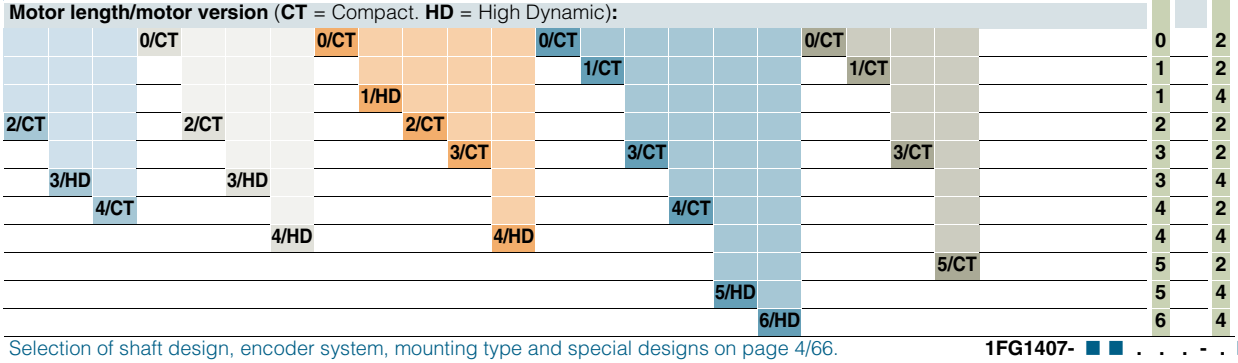

Selection of shaft design, encoder system, mounting type and special designs on page 4/66.

1FG1407- ■ ■ . . . - . ■ . . -Z

© Siemens 2019

For line voltage 380 ... 480 V 3 AC (DC link voltage 510 ... 720 V DC) **– Gearbox type** ***FD109***

Geared motor torque at 1450 rpm
Note: All values in **bold** print are maximum gearbox values.
M_{2dyn}
Nm

Servo parallel shaft geared motors SIMOTICS S-1FG1
Article No.

Max. output speed n_{2max} = **60 rpm**, Transmission ratio i = **75.59**																						
–	–	–	–	–	–	–	–	–	–	–	–	–	–	–	–	–	–	–	–	–	–	1FG1407- . . ■ ■ 6 - ■ . C1 -Z
–	–	–	–	–	–	–	–	–	–	–	–	1760	2600	**3360**	–	–	–	–	–	–	–	1FG1407- . . ■ ■ 4 - ■ . C1 -Z
–	–	–	–	–	–	–	–	–	–	–	–	1760	2600	**3360**	**3360**	**3360**	**3360**	**3360**	**3360**	**3360**	**3360**	1FG1407- . . ■ ■ 3 - ■ . C1 -Z
–	–	–	–	–	–	–	–	–	–	–	–	–	2600	**3360**	**3360**	**3360**	**3360**	**3360**	**3360**	**3360**	**3360**	1FG1407- . . ■ ■ 2 - ■ . C1 -Z
Max. output speed n_{2max} = **70 rpm**, Transmission ratio i = **64.62**																						
–	–	–	–	–	–	–	–	–	–	–	–	–	–	–	–	–	–	–	–	–	–	1FG1407- . . ■ ■ 6 - ■ . B1 -Z
–	–	–	–	–	–	–	–	–	–	–	–	1500	2230	3010	–	–	–	–	–	–	–	1FG1407- . . ■ ■ 4 - ■ . B1 -Z
–	–	–	–	–	–	–	–	–	–	–	–	1500	2230	3010	**3360**	**3360**	**3360**	3310	**3360**	**3360**	**3360**	1FG1407- . . ■ ■ 3 - ■ . B1 -Z
–	–	–	–	–	–	–	–	–	–	–	–	–	2230	3010	**3360**	**3360**	**3360**	3310	**3360**	**3360**	**3360**	1FG1407- . . ■ ■ 2 - ■ . B1 -Z
Max. output speed n_{2max} = **81 rpm**, Transmission ratio i = **55.31**																						
–	–	–	–	–	–	–	–	–	–	–	–	–	–	–	–	–	–	–	–	–	–	1FG1407- . . ■ ■ 6 - ■ . A1 -Z
–	–	–	–	–	–	–	–	–	–	–	–	1290	1910	2580	–	–	–	–	–	–	–	1FG1407- . . ■ ■ 4 - ■ . A1 -Z
–	–	–	–	–	–	–	–	–	–	–	–	1290	1910	2580	3150	3360	**3360**	2840	**3360**	**3360**	**3360**	1FG1407- . . ■ ■ 3 - ■ . A1 -Z
–	–	–	–	–	–	–	–	–	–	–	–	–	1910	2580	3150	3360	**3360**	2840	**3360**	**3360**	**3360**	1FG1407- . . ■ ■ 2 - ■ . A1 -Z

Motor shaft height:

36																					**C**	
			48																		**D**	
							63														**E**	
												80									**F**	
																		100			**G**	

Motor length/motor version (**CT** = Compact. **HD** = High Dynamic)**:**

			0/CT				**0/CT**					**0/CT**						**0/CT**				**0**	**2**
													1/CT						**1/CT**			**1**	**2**
								1/HD														**1**	**4**
2/CT				**2/CT**					**2/CT**													**2**	**2**
										3/CT				**3/CT**						**3/CT**		**3**	**2**
	3/HD				**3/HD**											**4/CT**						**3**	**4**
		4/CT																				**4**	**2**
						4/HD					**4/HD**											**4**	**4**
																			5/CT			**5**	**2**
															5/HD							**5**	**4**
																6/HD						**6**	**4**

Selection of shaft design, encoder system, mounting type and special designs on page 4/66.

1FG1407- ■ ■ . . . . - . ■ . . **-Z**

© Siemens 2019

Gearbox size 129, 2-stage – 1FG1308

Technical specifications

Gearbox type *FZ129*

Servo geared motor Type	i	R_{ex}	M_{2rated} Nm	M_{2max} Nm	$M_{2Em.Off}$ Nm	n_{2max} rpm	n_{1max} rpm	φ [1] '	F_{R2} N	F_{R2max} N	c_T Nm/ '	J_G 10^{-4} kgm^2
1FG1308-.....-..A2	69.2	13563/196	4850	5140	8170	65	4500	5.10	37500	37500	426.5	7.7
1FG1308-.....-..X1	59.22	6633/112	4850	5040	8170	76	4500	5.10	37500	37500	426.4	9.7
1FG1308-.....-..W1	55.74	6633/119	4850	4940	8170	81	4500	5.10	37500	37400	426.5	11
1FG1308-.....-..V1	52.25	209/4	4850	4940	8170	86	4500	5.10	36700	36400	426.5	12.2
1FG1308-.....-..U1	46.32	12969/280	4850	4850	8170	97	4500	5.10	34900	34900	426.4	14.9
1FG1308-.....-..T1	41.14	288/7	4850	4850	8170	109	4500	5.10	33200	33200	426.4	17.5
1FG1308-.....-..S1	37.12	297/8	4850	4940	8170	121	4500	5.10	31800	31500	426.4	21
1FG1308-.....-..R1	32.9	10593/322	4850	4940	8170	137	4500	5.20	30100	29900	426	26
1FG1308-.....-..Q1	29.13	10197/350	4850	4940	8170	154	4500	5.30	28600	28300	426.2	29
1FG1308-.....-..P1	25.93	363/14	4850	4940	8170	174	4500	5.30	27100	26900	426	35
1FG1308-.....-..N1	23.23	2277/98	4850	4940	8170	194	4500	5.30	25800	25600	425.7	41
1FG1308-.....-..M1	20.6	6633/322	4850	4940	8170	218	4500	5.30	24400	24200	425.5	49
1FG1308-.....-..L1	18.18	891/49	4850	4940	8170	247	4499	5.40	23000	22800	425.1	59
1FG1308-.....-..K1	15.99	2574/161	4800	4800	8160	272	4350	5.40	21800	21800	424.9	73
1FG1308-.....-..J1	14.48	1419/98	4690	4690	7970	300	4350	5.50	21200	21200	424.4	83
1FG1308-.....-..H1	12.61	4059/322	4530	4530	7700	345	4350	5.50	20400	20400	424	101
1FG1308-.....-..G1	10.34	1881/182	4320	4320	7340	421	4350	5.50	19200	19200	423.1	135
1FG1308-.....-..F1	9.8	2479/253	3630	3630	5440	459	4500	8.10	19300	19300	347.2	64
1FG1308-.....-..E1	8.65	666/77	3640	3640	5460	520	4500	8.10	18200	18200	346	79
1FG1308-.....-..D1	7.6	1924/253	3620	3620	5480	592	4500	8.10	17000	17000	345.2	97
1FG1308-.....-..C1	6.89	1591/231	3630	3630	5440	653	4500	8.20	16300	16300	343.9	112
1FG1308-.....-..B1	6	1517/253	3640	3640	5460	750	4500	8.30	15100	15100	342.7	140
1FG1308-.....-..A1	4.92	703/143	3030	3030	5150	884	4350	8.50	14500	14500	340.3	192

Selection and ordering data

Shaft design, encoder system, mounting type and special designs

Gearbox type *FZ129*

			Servo parallel shaft geared motors SIMOTICS S-1FG1 Article No. **1FG1308-** ■■...-...■... **-Z**
Shaft design:	Solid shaft with feather keyway	– Design 1	**1**
		– Design 3	**3**
	Hollow-shaft with feather keyway	– Design 1 – H70	**5**
Order codes and Descriptions see chapter "Options"	Special shaft design		**9**
Encoder system for motors with DRIVE-CLiQ interface:	AS20DQI encoder		**Q**
	AM20DQI encoder		**R**
	R14DQ resolver		**P**
	R15DQ resolver		**U**
Order codes and Descriptions see chapter "Options"	Special version encoder system		**Z**
Mounting type:	Foot-mounted design		**A**
	Flange-mounted design		**F**
	Housing flange design		**H**
	Shaft-mounted design (not possible with solid shaft)		**D**
Special designs (Options): Order codes and Descriptions see chapter "Options" The following order codes must be added to each article number: • Oil type – order codes **K06** or **K11** • Mounting position – order codes **D01** ... **D06**			**-Z**

Selection of 2-stages servo parallel shaft geared motors with gearbox size 129 from next page. **1FG1308-** ..■■■-■.■■**-Z**

[1] Data are for option reduced-backlash version – order code **G99** required.

© Siemens 2019

Selection and ordering data (continued)

For line voltage 380 ... 480 V 3 AC (DC link voltage 510 ... 720 V DC) **– Gearbox type** ***FZ129***

Geared motor torque at 1450 rpm Note: All values in **bold** print are maximum gearbox values. M_{2dyn} Nm																						Servo parallel shaft geared motors SIMOTICS S-1FG1 Article No.
Max. output speed n_{2max} = **65 rpm**, Transmission ratio i = **69.2**																						
–	–	–	–	–	–	–	–	–	–	–	–	–	–	–	–	–	–	–	–	–	–	1FG1308- . . ■ ■ 6 - ■ . A2 -Z
–	–	–	–	–	–	–	–	–	–	–	–	–	–	–	–	–	–	–	–	–	–	1FG1308- . . ■ ■ 4 - ■ . A2 -Z
–	–	–	–	–	–	–	–	–	–	–	–	–	–	–	–	–	–	–	3610	**5140**	**5140**	**5140** 1FG1308- . . ■ ■ 3 - ■ . A2 -Z
–	–	–	–	–	–	–	–	–	–	–	–	–	–	–	–	–	–	–	3610	**5140**	**5140**	**5140** 1FG1308- . . ■ ■ 2 - ■ . A2 -Z
Max. output speed n_{2max} = **76 rpm**, Transmission ratio i = **59.22**																						
–	–	–	–	–	–	–	–	–	–	–	–	–	–	–	–	–	–	–	–	–	–	1FG1308- . . ■ ■ 6 - ■ . X1 -Z
–	–	–	–	–	–	–	–	–	–	–	–	–	–	–	–	–	–	–	–	–	–	1FG1308- . . ■ ■ 4 - ■ . X1 -Z
–	–	–	–	–	–	–	–	–	–	–	–	–	–	–	–	–	–	–	3090	4500	**5040**	**5040** 1FG1308- . . ■ ■ 3 - ■ . X1 -Z
–	–	–	–	–	–	–	–	–	–	–	–	–	–	–	–	–	–	–	3090	4500	**5040**	**5040** 1FG1308- . . ■ ■ 2 - ■ . X1 -Z
Max. output speed n_{2max} = **81 rpm**, Transmission ratio i = **55.74**																						
–	–	–	–	–	–	–	–	–	–	–	–	–	–	–	–	–	–	–	–	–	–	1FG1308- . . ■ ■ 6 - ■ . W1 -Z
–	–	–	–	–	–	–	–	–	–	–	–	–	–	–	–	–	–	–	–	–	–	1FG1308- . . ■ ■ 4 - ■ . W1 -Z
–	–	–	–	–	–	–	–	–	–	–	–	–	–	–	–	–	–	–	2920	4250	**4940**	**4940** 1FG1308- . . ■ ■ 3 - ■ . W1 -Z
–	–	–	–	–	–	–	–	–	–	–	–	–	–	–	–	–	–	–	2920	4250	**4940**	**4940** 1FG1308- . . ■ ■ 2 - ■ . W1 -Z
Max. output speed n_{2max} = **86 rpm**, Transmission ratio i = **52.25**																						
–	–	–	–	–	–	–	–	–	–	–	–	–	–	–	–	–	–	–	–	–	–	1FG1308- . . ■ ■ 6 - ■ . V1 -Z
–	–	–	–	–	–	–	–	–	–	–	–	–	–	–	–	–	–	–	–	–	–	1FG1308- . . ■ ■ 4 - ■ . V1 -Z
–	–	–	–	–	–	–	–	–	–	–	–	–	–	–	–	–	–	–	2740	3990	**4940**	**4940** 1FG1308- . . ■ ■ 3 - ■ . V1 -Z
–	–	–	–	–	–	–	–	–	–	–	–	–	–	–	–	–	–	–	2740	3990	**4940**	**4940** 1FG1308- . . ■ ■ 2 - ■ . V1 -Z
Max. output speed n_{2max} = **97 rpm**, Transmission ratio i = **46.32**																						
–	–	–	–	–	–	–	–	–	–	–	–	–	–	–	–	–	–	–	–	–	–	1FG1308- . . ■ ■ 6 - ■ . U1 -Z
–	–	–	–	–	–	–	–	–	–	–	–	–	–	–	–	–	–	–	–	–	–	1FG1308- . . ■ ■ 4 - ■ . U1 -Z
–	–	–	–	–	–	–	–	–	–	–	–	–	–	–	–	–	–	–	2430	3540	4780	**4850** 1FG1308- . . ■ ■ 3 - ■ . U1 -Z
–	–	–	–	–	–	–	–	–	–	–	–	–	–	–	–	–	–	–	2430	3540	4780	**4850** 1FG1308- . . ■ ■ 2 - ■ . U1 -Z
Max. output speed n_{2max} = **109 rpm**, Transmission ratio i = **41.14**																						
–	–	–	–	–	–	–	–	–	–	–	–	–	–	–	–	–	–	–	–	–	–	1FG1308- . . ■ ■ 6 - ■ . T1 -Z
–	–	–	–	–	–	–	–	–	–	–	–	–	–	–	–	–	–	–	–	–	–	1FG1308- . . ■ ■ 4 - ■ . T1 -Z
–	–	–	–	–	–	–	–	–	–	–	–	–	–	–	–	–	–	–	2160	3150	4250	**4850** 1FG1308- . . ■ ■ 3 - ■ . T1 -Z
–	–	–	–	–	–	–	–	–	–	–	–	–	–	–	–	–	–	–	2160	3150	4250	**4850** 1FG1308- . . ■ ■ 2 - ■ . T1 -Z
Max. output speed n_{2max} = **121 rpm**, Transmission ratio i = **37.12**																						
–	–	–	–	–	–	–	–	–	–	–	–	–	–	–	–	–	–	–	–	–	–	1FG1308- . . ■ ■ 6 - ■ . S1 -Z
–	–	–	–	–	–	–	–	–	–	–	–	–	–	–	–	–	–	–	–	–	–	1FG1308- . . ■ ■ 4 - ■ . S1 -Z
–	–	–	–	–	–	–	–	–	–	–	–	–	–	–	–	–	–	–	1950	2850	3840	**4940** 1FG1308- . . ■ ■ 3 - ■ . S1 -Z
–	–	–	–	–	–	–	–	–	–	–	–	–	–	–	–	–	–	–	1950	2850	3840	**4940** 1FG1308- . . ■ ■ 2 - ■ . S1 -Z

Motor shaft height:

| | | | | | | | | | | | | | | | | | | |

© Siemens 2019

Gearbox size 129, 2-stage – 1FG1308

For line voltage 380 ... 480 V 3 AC (DC link voltage 510 ... 720 V DC) **– Gearbox type** ***FZ129***

Geared motor torque at 1450 rpm
Note: All values in **bold** print are maximum gearbox values.
M_{2dyn}
Nm

																							Servo parallel shaft geared motors SIMOTICS S-1FG1 Article No.
Max. output speed n_{2max} = 137 rpm, Transmission ratio i = 32.9																							
–	–	–	–	–	–	–	–	–	–	–	–	–	–	–	–	–	–	–	–	–	–	–	1FG1308- . . ■ ■ 6 - ■ . R1 -Z
–	–	–	–	–	–	–	–	–	–	–	–	–	–	–	–	–	–	–	–	–	–	–	1FG1308- . . ■ ■ 4 - ■ . R1 -Z
–	–	–	–	–	–	–	–	–	–	–	–	–	–	–	–	–	–	1730	2520	3400	4730		1FG1308- . . ■ ■ 3 - ■ . R1 -Z
–	–	–	–	–	–	–	–	–	–	–	–	–	–	–	–	–	–	1730	2520	3400	4730		1FG1308- . . ■ ■ 2 - ■ . R1 -Z
Max. output speed n_{2max} = 154 rpm, Transmission ratio i = 29.13																							
–	–	–	–	–	–	–	–	–	–	–	–	–	–	–	–	–	–	–	–	–	–	–	1FG1308- . . ■ ■ 6 - ■ . Q1 -Z
–	–	–	–	–	–	–	–	–	–	–	–	–	–	–	–	–	–	–	–	–	–	–	1FG1308- . . ■ ■ 4 - ■ . Q1 -Z
–	–	–	–	–	–	–	–	–	–	–	–	–	–	–	–	–	–	1540	2240	3020	4200		1FG1308- . . ■ ■ 3 - ■ . Q1 -Z
–	–	–	–	–	–	–	–	–	–	–	–	–	–	–	–	–	–	1540	2240	3020	4200		1FG1308- . . ■ ■ 2 - ■ . Q1 -Z
Max. output speed n_{2max} = 174 rpm, Transmission ratio i = 25.93																							
–	–	–	–	–	–	–	–	–	–	–	–	–	–	–	–	–	–	–	–	–	–	–	1FG1308- . . ■ ■ 6 - ■ . P1 -Z
–	–	–	–	–	–	–	–	–	–	–	–	–	–	–	–	–	–	–	–	–	–	–	1FG1308- . . ■ ■ 4 - ■ . P1 -Z
–	–	–	–	–	–	–	–	–	–	–	–	–	–	–	–	–	–	1370	1990	2690	3740		1FG1308- . . ■ ■ 3 - ■ . P1 -Z
–	–	–	–	–	–	–	–	–	–	–	–	–	–	–	–	–	–	1370	1990	2690	3740		1FG1308- . . ■ ■ 2 - ■ . P1 -Z
Max. output speed n_{2max} = 194 rpm, Transmission ratio i = 23.23																							
–	–	–	–	–	–	–	–	–	–	–	–	–	–	–	–	–	–	–	–	–	–	–	1FG1308- . . ■ ■ 6 - ■ . N1 -Z
–	–	–	–	–	–	–	–	–	–	–	–	–	–	–	–	–	–	–	–	–	–	–	1FG1308- . . ■ ■ 4 - ■ . N1 -Z
–	–	–	–	–	–	–	–	–	–	–	–	–	–	–	–	–	–	1230	1780	2410	3350		1FG1308- . . ■ ■ 3 - ■ . N1 -Z
–	–	–	–	–	–	–	–	–	–	–	–	–	–	–	–	–	–	1230	1780	2410	3350		1FG1308- . . ■ ■ 2 - ■ . N1 -Z
Max. output speed n_{2max} = 218 rpm, Transmission ratio i = 20.6																							
–	–	–	–	–	–	–	–	–	–	–	–	–	–	–	–	–	–	–	–	–	–	–	1FG1308- . . ■ ■ 6 - ■ . M1 -Z
–	–	–	–	–	–	–	–	–	–	–	–	–	–	–	–	–	–	–	–	–	–	–	1FG1308- . . ■ ■ 4 - ■ . M1 -Z
–	–	–	–	–	–	–	–	–	–	–	–	–	–	–	–	–	–	1090	1580	2140	2970		1FG1308- . . ■ ■ 3 - ■ . M1 -Z
–	–	–	–	–	–	–	–	–	–	–	–	–	–	–	–	–	–	1090	1580	2140	2970		1FG1308- . . ■ ■ 2 - ■ . M1 -Z
Max. output speed n_{2max} = 247 rpm, Transmission ratio i = 18.18																							
–	–	–	–	–	–	–	–	–	–	–	–	–	–	–	–	–	–	–	–	–	–	–	1FG1308- . . ■ ■ 6 - ■ . L1 -Z
–	–	–	–	–	–	–	–	–	–	–	–	–	–	–	–	–	–	–	–	–	–	–	1FG1308- . . ■ ■ 4 - ■ . L1 -Z
–	–	–	–	–	–	–	–	–	–	–	–	–	–	–	–	–	–	960	1400	1890	2620		1FG1308- . . ■ ■ 3 - ■ . L1 -Z
–	–	–	–	–	–	–	–	–	–	–	–	–	–	–	–	–	–	960	1400	1890	2620		1FG1308- . . ■ ■ 2 - ■ . L1 -Z
Max. output speed n_{2max} = 272 rpm, Transmission ratio i = 15.99																							
–	–	–	–	–	–	–	–	–	–	–	–	–	–	–	–	–	–	–	–	–	–	–	1FG1308- . . ■ ■ 6 - ■ . K1 -Z
–	–	–	–	–	–	–	–	–	–	–	–	–	–	–	–	–	–	–	–	–	–	–	1FG1308- . . ■ ■ 4 - ■ . K1 -Z
–	–	–	–	–	–	–	–	–	–	–	–	–	–	–	–	–	–	845	1230	1660	2310		1FG1308- . . ■ ■ 3 - ■ . K1 -Z
–	–	–	–	–	–	–	–	–	–	–	–	–	–	–	–	–	–	845	1230	1660	2310		1FG1308- . . ■ ■ 2 - ■ . K1 -Z
Max. output speed n_{2max} = 300 rpm, Transmission ratio i = 14.48																							
–	–	–	–	–	–	–	–	–	–	–	–	–	–	–	–	–	–	–	–	–	–	–	1FG1308- . . ■ ■ 6 - ■ . J1 -Z
–	–	–	–	–	–	–	–	–	–	–	–	–	–	–	–	–	–	–	–	–	–	–	1FG1308- . . ■ ■ 4 - ■ . J1 -Z
–	–	–	–	–	–	–	–	–	–	–	–	–	–	–	–	–	–	765	1110	1500	2090		1FG1308- . . ■ ■ 3 - ■ . J1 -Z
–	–	–	–	–	–	–	–	–	–	–	–	–	–	–	–	–	–	765	1110	1500	2090		1FG1308- . . ■ ■ 2 - ■ . J1 -Z

Motor shaft height:

36																							C
			48																				D
							63																E
												80											F
																		100					G

Motor length/motor version (**CT** = Compact. **HD** = High Dynamic)**:**

			0/CT				0/CT				0/CT						0/CT						0 2
												1/CT						1/CT					1 2
								1/HD															1 4
2/CT				2/CT					2/CT														2 2
										3/CT				3/CT						3/CT			3 2
	3/HD				3/HD																		3 4
		4/CT												4/CT									4 2
						4/HD					4/HD												4 4
																				5/CT			5 2
															5/HD								5 4
																6/HD							6 4

Selection of shaft design, encoder system, mounting type and special designs on page 4/70.

1FG1308- ■ ■ . . . - . ■ . . -Z

© Siemens 2019

For line voltage 380 ... 480 V 3 AC (DC link voltage 510 ... 720 V DC) **– Gearbox type** ***FZ129***

Geared motor torque at 1450 rpm
Note: All values in **bold** print are maximum gearbox values.
M_{2dyn}
Nm

																							Article No.
Max. output speed n_{2max} = 345 rpm, Transmission ratio i = 12.61																							
–	–	–	–	–	–	–	–	–	–	–	–	–	–	–	–	–	–	–	–	–	–	–	1FG1308- . . ■ ■ 6 - ■ . H1 -Z
–	–	–	–	–	–	–	–	–	–	–	–	–	–	–	–	–	–	–	–	–	–	–	1FG1308- . . ■ ■ 4 - ■ . H1 -Z
–	–	–	–	–	–	–	–	–	–	–	–	–	–	–	–	–	–	665	970	1310	1820		1FG1308- . . ■ ■ 3 - ■ . H1 -Z
–	–	–	–	–	–	–	–	–	–	–	–	–	–	–	–	–	–	665	970	1310	1820		1FG1308- . . ■ ■ 2 - ■ . H1 -Z
Max. output speed n_{2max} = 421 rpm, Transmission ratio i = 10.34																							
–	–	–	–	–	–	–	–	–	–	–	–	–	–	–	–	–	–	–	–	–	–	–	1FG1308- . . ■ ■ 6 - ■ . G1 -Z
–	–	–	–	–	–	–	–	–	–	–	–	–	–	–	–	–	–	–	–	–	–	–	1FG1308- . . ■ ■ 4 - ■ . G1 -Z
–	–	–	–	–	–	–	–	–	–	–	–	–	–	–	–	–	–	545	795	1070	1490		1FG1308- . . ■ ■ 3 - ■ . G1 -Z
–	–	–	–	–	–	–	–	–	–	–	–	–	–	–	–	–	–	545	795	1070	1490		1FG1308- . . ■ ■ 2 - ■ . G1 -Z
Max. output speed n_{2max} = 459 rpm, Transmission ratio i = 9.8																							
–	–	–	–	–	–	–	–	–	–	–	–	–	–	–	–	–	–	–	–	–	–	–	1FG1308- . . ■ ■ 6 - ■ . F1 -Z
–	–	–	–	–	–	–	–	–	–	–	–	–	–	–	–	–	–	–	–	–	–	–	1FG1308- . . ■ ■ 4 - ■ . F1 -Z
–	–	–	–	–	–	–	–	–	–	–	–	–	–	–	–	–	–	520	760	1030	1430		1FG1308- . . ■ ■ 3 - ■ . F1 -Z
–	–	–	–	–	–	–	–	–	–	–	–	–	–	–	–	–	–	520	760	1030	1430		1FG1308- . . ■ ■ 2 - ■ . F1 -Z
Max. output speed n_{2max} = 520 rpm, Transmission ratio i = 8.65																							
–	–	–	–	–	–	–	–	–	–	–	–	–	–	–	–	–	–	–	–	–	–	–	1FG1308- . . ■ ■ 6 - ■ . E1 -Z
–	–	–	–	–	–	–	–	–	–	–	–	–	–	–	–	–	–	–	–	–	–	–	1FG1308- . . ■ ■ 4 - ■ . E1 -Z
–	–	–	–	–	–	–	–	–	–	–	–	–	–	–	–	–	–	460	670	905	1260		1FG1308- . . ■ ■ 3 - ■ . E1 -Z
–	–	–	–	–	–	–	–	–	–	–	–	–	–	–	–	–	–	460	670	905	1260		1FG1308- . . ■ ■ 2 - ■ . E1 -Z
Max. output speed n_{2max} = 592 rpm, Transmission ratio i = 7.6																							
–	–	–	–	–	–	–	–	–	–	–	–	–	–	–	–	–	–	–	–	–	–	–	1FG1308- . . ■ ■ 6 - ■ . D1 -Z
–	–	–	–	–	–	–	–	–	–	–	–	–	–	–	–	–	–	–	–	–	–	–	1FG1308- . . ■ ■ 4 - ■ . D1 -Z
–	–	–	–	–	–	–	–	–	–	–	–	–	–	–	–	–	–	405	590	800	1110		1FG1308- . . ■ ■ 3 - ■ . D1 -Z
–	–	–	–	–	–	–	–	–	–	–	–	–	–	–	–	–	–	405	590	800	1110		1FG1308- . . ■ ■ 2 - ■ . D1 -Z
Max. output speed n_{2max} = 653 rpm, Transmission ratio i = 6.89																							
–	–	–	–	–	–	–	–	–	–	–	–	–	–	–	–	–	–	–	–	–	–	–	1FG1308- . . ■ ■ 6 - ■ . C1 -Z
–	–	–	–	–	–	–	–	–	–	–	–	–	–	–	–	–	–	–	–	–	–	–	1FG1308- . . ■ ■ 4 - ■ . C1 -Z
–	–	–	–	–	–	–	–	–	–	–	–	–	–	–	–	–	–	365	535	725	1000		1FG1308- . . ■ ■ 3 - ■ . C1 -Z
–	–	–	–	–	–	–	–	–	–	–	–	–	–	–	–	–	–	365	535	725	1000		1FG1308- . . ■ ■ 2 - ■ . C1 -Z
Max. output speed n_{2max} = 750 rpm, Transmission ratio i = 6																							
–	–	–	–	–	–	–	–	–	–	–	–	–	–	–	–	–	–	–	–	–	–	–	1FG1308- . . ■ ■ 6 - ■ . B1 -Z
–	–	–	–	–	–	–	–	–	–	–	–	–	–	–	–	–	–	–	–	–	–	–	1FG1308- . . ■ ■ 4 - ■ . B1 -Z
–	–	–	–	–	–	–	–	–	–	–	–	–	–	–	–	–	–	320	465	630	875		1FG1308- . . ■ ■ 3 - ■ . B1 -Z
–	–	–	–	–	–	–	–	–	–	–	–	–	–	–	–	–	–	320	465	630	875		1FG1308- . . ■ ■ 2 - ■ . B1 -Z
Max. output speed n_{2max} = 884 rpm, Transmission ratio i = 4.92																							
–	–	–	–	–	–	–	–	–	–	–	–	–	–	–	–	–	–	–	–	–	–	–	1FG1308- . . ■ ■ 6 - ■ . A1 -Z
–	–	–	–	–	–	–	–	–	–	–	–	–	–	–	–	–	–	–	–	–	–	–	1FG1308- . . ■ ■ 4 - ■ . A1 -Z
–	–	–	–	–	–	–	–	–	–	–	–	–	–	–	–	–	–	260	380	515	715		1FG1308- . . ■ ■ 3 - ■ . A1 -Z
–	–	–	–	–	–	–	–	–	–	–	–	–	–	–	–	–	–	260	380	515	715		1FG1308- . . ■ ■ 2 - ■ . A1 -Z

Motor shaft height:

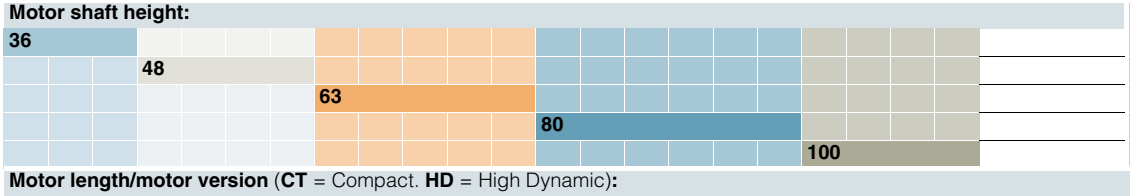

Motor length/motor version (**CT** = Compact. **HD** = High Dynamic)**:**

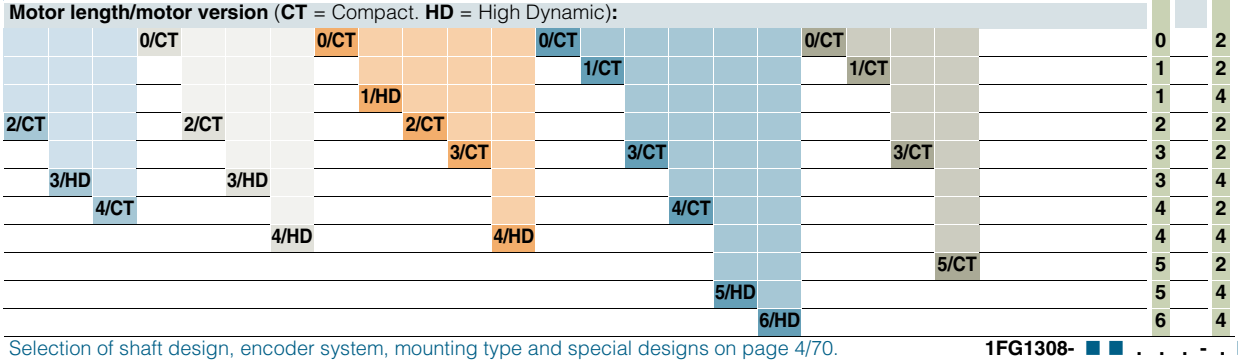

Selection of shaft design, encoder system, mounting type and special designs on page 4/70.

1FG1308- ■ ■ . . . - . ■ . . -Z

© Siemens 2019

Gearbox size 129, 3-stage – 1FG1408

Technical specifications

Gearbox type *FD129*

Servo geared motor Type	i	R_{ex}	M_{2rated} Nm	M_{2max} Nm	$M_{2Em.Off}$ Nm	n_{2max} rpm	n_{1max} rpm	φ [1] '	F_{R2} N	F_{R2max} N	c_T Nm/ '	J_G 10^{-4} kgm^2
1FG1408-.....-..R1	350.99	34397/98	4850	5010	8240	13	4500	5.50	37500	37500	445.8	4.5
1FG1408-.....-..Q1	299.31	67045/224	4850	5010	8240	15	4500	5.50	37500	37500	445.8	5.6
1FG1408-.....-..P1	281.7	67045/238	4850	5010	8240	16	4500	5.50	37500	37500	445.8	6.3
1FG1408-.....-..N1	261.42	65879/252	4850	5010	8240	17	4500	5.50	37500	37500	445.8	6.9
1FG1408-.....-..M1	231.12	64713/280	4850	5010	8240	19	4500	5.50	37500	37500	445.8	8.3
1FG1408-.....-..L1	206.32	5777/28	4850	5010	8240	22	4500	5.50	37500	37500	445.8	9.9
1FG1408-.....-..K1	185.66	62381/336	4850	5010	8240	24	4500	5.50	37500	37500	445.8	11.5
1FG1408-.....-..J1	161.14	51887/322	4850	5010	8240	28	4500	5.50	37500	37500	445.8	14
1FG1408-.....-..H1	144.92	50721/350	4850	5010	8240	31	4500	5.50	37500	37500	445.8	16.5
1FG1408-.....-..G1	126.66	42559/336	4850	5010	8240	36	4500	5.50	37500	37500	445.8	19.1
1FG1408-.....-..F1	113.03	11077/98	4850	5010	8240	40	4500	5.50	37500	37500	445.7	23
1FG1408-.....-..E1	99.58	32065/322	4850	5010	8240	45	4500	5.50	37500	37500	445.7	27
1FG1408-.....-..D1	87.25	12826/147	4850	5010	8170	52	4500	5.50	37500	37500	445.7	32
1FG1408-.....-..C1	76.04	1749/23	4850	5010	8170	59	4500	5.50	37500	37500	445.7	37
1FG1408-.....-..B1	69.4	2915/42	4850	5010	8170	65	4500	5.50	37500	37500	445.7	44
1FG1408-.....-..A1	59.75	19239/322	4850	4850	8170	73	4350	5.50	37500	37500	445.7	53

Selection and ordering data

Shaft design, encoder system, mounting type and special designs

Gearbox type *FD129*

			Servo parallel shaft geared motors SIMOTICS S-1FG1 Article No.
			1FG1408- ■ ■ . . . - . ■ . . **-Z**
Shaft design:	Solid shaft with feather keyway	– Design 1	**1**
		– Design 3	**3**
	Hollow-shaft with feather keyway	– Design 1 – H70	**5**
Order codes and Descriptions see chapter "Options"	Special shaft design		**9**
Encoder system for motors with DRIVE-CLiQ interface:	AS20DQI encoder		**Q**
	AM20DQI encoder		**R**
	R14DQ resolver		**P**
	R15DQ resolver		**U**
Order codes and Descriptions see chapter "Options"	Special version encoder system		**Z**
Mounting type:	Foot-mounted design		**A**
	Flange-mounted design		**F**
	Housing flange design		**H**
	Shaft-mounted design (not possible with solid shaft)		**D**
Special designs (Options): Order codes and Descriptions see chapter "Options" The following order codes must be added to each article number: • Oil type – order codes **K06** or **K11** • Mounting position – order codes **D01** ... **D06**			**-Z**

Selection of 3-stages servo parallel shaft geared motors with gearbox size 89 from next page. **1FG1408-** . . ■ ■ ■ - ■ . ■ ■ **-Z**

[1] Data are for option reduced-backlash version – order code **G99** required.

© Siemens 2019

Selection and ordering data (continued)

For line voltage 380 ... 480 V 3 AC (DC link voltage 510 ... 720 V DC) **– Gearbox type** ***FD129***

Geared motor torque at 1450 rpm Note: All values in **bold** print are maximum gearbox values. M_{2dyn} Nm																						Servo parallel shaft geared motors SIMOTICS S-1FG1 Article No.
Max. output speed n_{2max} = **13 rpm**, Transmission ratio i = **350.99**																						
–	–	–	–	–	–	–	–	–	–	–	–	–	–	–	–	–	–	–	–	–	–	1FG1408- . . ■ ■ 6 - ■ . R1 -Z
–	–	–	–	–	–	–	–	–	–	–	–	–	–	–	–	–	–	–	–	–	–	1FG1408- . . ■ ■ 4 - ■ . R1 -Z
–	–	–	–	–	–	–	–	–	–	–	–	–	–	–	–	–	–	–	**5010**	**5010**	**5010**	1FG1408- . . ■ ■ 3 - ■ . R1 -Z
–	–	–	–	–	–	–	–	–	–	–	–	–	–	–	–	–	**5010**	**5010**	**5010**	**5010**	**5010**	1FG1408- . . ■ ■ 2 - ■ . R1 -Z
Max. output speed n_{2max} = **15 rpm**, Transmission ratio i = **299.31**																						
–	–	–	–	–	–	–	–	–	–	–	–	–	–	–	–	–	–	–	–	–	–	1FG1408- . . ■ ■ 6 - ■ . Q1 -Z
–	–	–	–	–	–	–	–	–	–	–	–	–	–	–	–	–	–	–	–	–	–	1FG1408- . . ■ ■ 4 - ■ . Q1 -Z
–	–	–	–	–	–	–	–	–	–	–	–	–	–	–	–	–	–	–	**5010**	**5010**	**5010**	1FG1408- . . ■ ■ 3 - ■ . Q1 -Z
–	–	–	–	–	–	–	–	–	–	–	–	–	–	–	–	–	**5010**	**5010**	**5010**	**5010**	**5010**	1FG1408- . . ■ ■ 2 - ■ . Q1 -Z
Max. output speed n_{2max} = **16 rpm**, Transmission ratio i = **281.7**																						
–	–	–	–	–	–	–	–	–	–	–	–	–	–	–	–	–	–	–	–	–	–	1FG1408- . . ■ ■ 6 - ■ . P1 -Z
–	–	–	–	–	–	–	–	–	–	–	–	–	–	–	–	–	–	–	–	–	–	1FG1408- . . ■ ■ 4 - ■ . P1 -Z
–	–	–	–	–	–	–	–	–	–	–	–	–	–	–	–	–	–	–	**5010**	**5010**	**5010**	1FG1408- . . ■ ■ 3 - ■ . P1 -Z
–	–	–	–	–	–	–	–	–	–	–	–	–	–	–	–	–	**5010**	**5010**	**5010**	**5010**	**5010**	1FG1408- . . ■ ■ 2 - ■ . P1 -Z
Max. output speed n_{2max} = **17 rpm**, Transmission ratio i = **261.42**																						
–	–	–	–	–	–	–	–	–	–	–	–	–	–	–	–	–	–	–	–	–	–	1FG1408- . . ■ ■ 6 - ■ . N1 -Z
–	–	–	–	–	–	–	–	–	–	–	–	–	–	–	–	–	–	–	–	–	–	1FG1408- . . ■ ■ 4 - ■ . N1 -Z
–	–	–	–	–	–	–	–	–	–	–	–	–	–	–	–	–	–	–	**5010**	**5010**	**5010**	1FG1408- . . ■ ■ 3 - ■ . N1 -Z
–	–	–	–	–	–	–	–	–	–	–	–	–	–	–	–	–	**5010**	**5010**	**5010**	**5010**	**5010**	1FG1408- . . ■ ■ 2 - ■ . N1 -Z
Max. output speed n_{2max} = **19 rpm**, Transmission ratio i = **231.12**																						
–	–	–	–	–	–	–	–	–	–	–	–	–	–	–	–	–	–	–	–	–	–	1FG1408- . . ■ ■ 6 - ■ . M1 -Z
–	–	–	–	–	–	–	–	–	–	–	–	–	–	–	–	–	–	–	–	–	–	1FG1408- . . ■ ■ 4 - ■ . M1 -Z
–	–	–	–	–	–	–	–	–	–	–	–	–	–	–	–	–	–	–	**5010**	**5010**	**5010**	1FG1408- . . ■ ■ 3 - ■ . M1 -Z
–	–	–	–	–	–	–	–	–	–	–	–	–	–	–	–	–	**5010**	**5010**	**5010**	**5010**	**5010**	1FG1408- . . ■ ■ 2 - ■ . M1 -Z
Max. output speed n_{2max} = **22 rpm**, Transmission ratio i = **206.32**																						
–	–	–	–	–	–	–	–	–	–	–	–	–	–	–	–	–	–	–	–	–	–	1FG1408- . . ■ ■ 6 - ■ . L1 -Z
–	–	–	–	–	–	–	–	–	–	–	–	–	–	–	–	–	–	–	–	–	–	1FG1408- . . ■ ■ 4 - ■ . L1 -Z
–	–	–	–	–	–	–	–	–	–	–	–	–	–	–	–	–	–	–	**5010**	**5010**	**5010**	1FG1408- . . ■ ■ 3 - ■ . L1 -Z
–	–	–	–	–	–	–	–	–	–	–	–	–	–	–	–	–	**5010**	**5010**	**5010**	**5010**	**5010**	1FG1408- . . ■ ■ 2 - ■ . L1 -Z
Max. output speed n_{2max} = **24 rpm**, Transmission ratio i = **185.66**																						
–	–	–	–	–	–	–	–	–	–	–	–	–	–	–	–	–	–	–	–	–	–	1FG1408- . . ■ ■ 6 - ■ . K1 -Z
–	–	–	–	–	–	–	–	–	–	–	–	–	–	–	–	–	–	–	–	–	–	1FG1408- . . ■ ■ 4 - ■ . K1 -Z
–	–	–	–	–	–	–	–	–	–	–	–	–	–	–	–	–	–	–	**5010**	**5010**	**5010**	1FG1408- . . ■ ■ 3 - ■ . K1 -Z
–	–	–	–	–	–	–	–	–	–	–	–	–	–	–	–	–	**5010**	**5010**	**5010**	**5010**	**5010**	1FG1408- . . ■ ■ 2 - ■ . K1 -Z

Motor shaft height:

36																						**C**
			48																			**D**
						63																**E**
												80										**F**
																		100				**G**

Motor length/motor version (**CT** = Compact. **HD** = High Dynamic)**:**

			0/CT				**0/CT**					**0/CT**						**0/CT**					**0**	**2**
													1/CT						**1/CT**				**1**	**2**
								1/HD															**1**	**4**
2/CT				**2/CT**					**2/CT**														**2**	**2**
										3/CT				**3/CT**						**3/CT**			**3**	**2**
	3/HD				**3/HD**																		**3**	**4**
		4/CT														**4/CT**							**4**	**2**
						4/HD					**4/HD**													**4**	**4**
																				5/CT			**5**	**2**
															5/HD								**5**	**4**
																6/HD							**6**	**4**

Selection of shaft design, encoder system, mounting type and special designs on page 4/74.

1FG1408- ■ ■ . . . . - . ■ . . -Z

© Siemens 2019

Gearbox size 129, 3-stage – 1FG1408

For line voltage 380 ... 480 V 3 AC (DC link voltage 510 ... 720 V DC) **– Gearbox type** ***FD129***

Geared motor torque at 1450 rpm
Note: All values in **bold** print are maximum gearbox values.
M_{2dyn}
Nm

Servo parallel shaft geared motors SIMOTICS S-1FG1
Article No.

36	48	63	80	100	Article No.
Max. output speed n_{2max} = 28 rpm, Transmission ratio i = 161.14					
–	–	–	–	–	1FG1408- . . ■ ■ 6 - ■ . J1 -Z
–	–	–	–	–	1FG1408- . . ■ ■ 4 - ■ . J1 -Z
–	–	–	–	**5010**	1FG1408- . . ■ ■ 3 - ■ . J1 -Z
–	–	–	–	**5010**	1FG1408- . . ■ ■ 2 - ■ . J1 -Z
Max. output speed n_{2max} = 31 rpm, Transmission ratio i = 144.92					
–	–	–	–	–	1FG1408- . . ■ ■ 6 - ■ . H1 -Z
–	–	–	–	–	1FG1408- . . ■ ■ 4 - ■ . H1 -Z
–	–	–	–	**5010**	1FG1408- . . ■ ■ 3 - ■ . H1 -Z
–	–	–	–	**5010**	1FG1408- . . ■ ■ 2 - ■ . H1 -Z
Max. output speed n_{2max} = 36 rpm, Transmission ratio i = 126.66					
–	–	–	–	–	1FG1408- . . ■ ■ 6 - ■ . G1 -Z
–	–	–	–	–	1FG1408- . . ■ ■ 4 - ■ . G1 -Z
–	–	–	–	**5010**	1FG1408- . . ■ ■ 3 - ■ . G1 -Z
–	–	–	–	**5010**	1FG1408- . . ■ ■ 2 - ■ . G1 -Z
Max. output speed n_{2max} = 40 rpm, Transmission ratio i = 113.03					
–	–	–	–	–	1FG1408- . . ■ ■ 6 - ■ . F1 -Z
–	–	–	–	–	1FG1408- . . ■ ■ 4 - ■ . F1 -Z
–	–	–	–	**5010**	1FG1408- . . ■ ■ 3 - ■ . F1 -Z
–	–	–	–	**5010**	1FG1408- . . ■ ■ 2 - ■ . F1 -Z
Max. output speed n_{2max} = 45 rpm, Transmission ratio i = 99.58					
–	–	–	–	–	1FG1408- . . ■ ■ 6 - ■ . E1 -Z
–	–	–	–	–	1FG1408- . . ■ ■ 4 - ■ . E1 -Z
–	–	–	–	**5010**	1FG1408- . . ■ ■ 3 - ■ . E1 -Z
–	–	–	–	**5010**	1FG1408- . . ■ ■ 2 - ■ . E1 -Z
Max. output speed n_{2max} = 52 rpm, Transmission ratio i = 87.25					
–	–	–	–	–	1FG1408- . . ■ ■ 6 - ■ . D1 -Z
–	–	–	–	–	1FG1408- . . ■ ■ 4 - ■ . D1 -Z
–	–	–	–	**5010**	1FG1408- . . ■ ■ 3 - ■ . D1 -Z
–	–	–	–	**5010**	1FG1408- . . ■ ■ 2 - ■ . D1 -Z
Max. output speed n_{2max} = 59 rpm, Transmission ratio i = 76.04					
–	–	–	–	–	1FG1408- . . ■ ■ 6 - ■ . C1 -Z
–	–	–	–	–	1FG1408- . . ■ ■ 4 - ■ . C1 -Z
–	–	–	–	**5010**	1FG1408- . . ■ ■ 3 - ■ . C1 -Z
–	–	–	–	**5010**	1FG1408- . . ■ ■ 2 - ■ . C1 -Z

Motor shaft height:

36	48	63	80	100	
					C
					D
					E
					F
					G

Motor length/motor version (**CT** = Compact. **HD** = High Dynamic)**:**

36	48	63	80	100		
	0/CT	0/CT	0/CT	0/CT	0	2
			1/CT	1/CT	1	2
		1/HD			1	4
2/CT	2/CT	2/CT			2	2
		3/CT	3/CT	3/CT	3	2
3/HD	3/HD				3	4
4/CT			4/CT		4	2
	4/HD	4/HD			4	4
				5/CT	5	2
			5/HD		5	4
			6/HD		6	4

Selection of shaft design, encoder system, mounting type and special designs on page 4/74.

1FG1408- ■ ■ . . . - ■ . . -Z

© Siemens 2019

Gearbox size 129, 3-stage – 1FG1408

For line voltage 380 ... 480 V 3 AC (DC link voltage 510 ... 720 V DC) **– Gearbox type** ***FD129***

Geared motor torque at 1450 rpm
Note: All values in **bold** print are maximum gearbox values.
M_{2dyn}
Nm

Servo parallel shaft geared motors SIMOTICS S-1FG1
Article No.

36	48	63	80	100		
Max. output speed n_{2max} = **65 rpm**, Transmission ratio i = **69.4**						
–	–	–	–	–	**1FG1408-** . . ■ ■ **6** - ■ . **B1** **-Z**	C
–	–	–	–	–	**1FG1408-** . . ■ ■ **4** - ■ . **B1** **-Z**	D
–	–	–	–	3560 **5010**	**1FG1408-** . . ■ ■ **3** - ■ . **B1** **-Z**	E
–	–	–	–	3560 **5010**	**1FG1408-** . . ■ ■ **2** - ■ . **B1** **-Z**	F
Max. output speed n_{2max} = **73 rpm**, Transmission ratio i = **59.75**						
–	–	–	–	–	**1FG1408-** . . ■ ■ **6** - ■ . **A1** **-Z**	G
–	–	–	–	–	**1FG1408-** . . ■ ■ **4** - ■ . **A1** **-Z**	
–	–	–	–	3070 4470 **4850** **4850**	**1FG1408-** . . ■ ■ **3** - ■ . **A1** **-Z**	
–	–	–	–	3070 4470 **4850** **4850**	**1FG1408-** . . ■ ■ **2** - ■ . **A1** **-Z**	

Motor shaft height:

Motor length/motor version (**CT** = Compact. **HD** = High Dynamic)**:**

36	48	63	80	100		
0/CT	0/CT	0/CT	0/CT		0	2
			1/CT	1/CT	1	2
		1/HD			1	4
2/CT	2/CT	2/CT			2	2
		3/CT	3/CT	3/CT	3	2
3/HD	3/HD				3	4
4/CT			4/CT		4	2
	4/HD	4/HD			4	4
				5/CT	5	2
			5/HD		5	4
			6/HD		6	4

Selection of shaft design, encoder system, mounting type and special designs on page 4/74.

1FG1408- ■ ■ . . . . - . ■ . . **-Z**

© Siemens 2019

4

Dimensional drawings

Gearbox types *FZAD29* and *FDAD29*

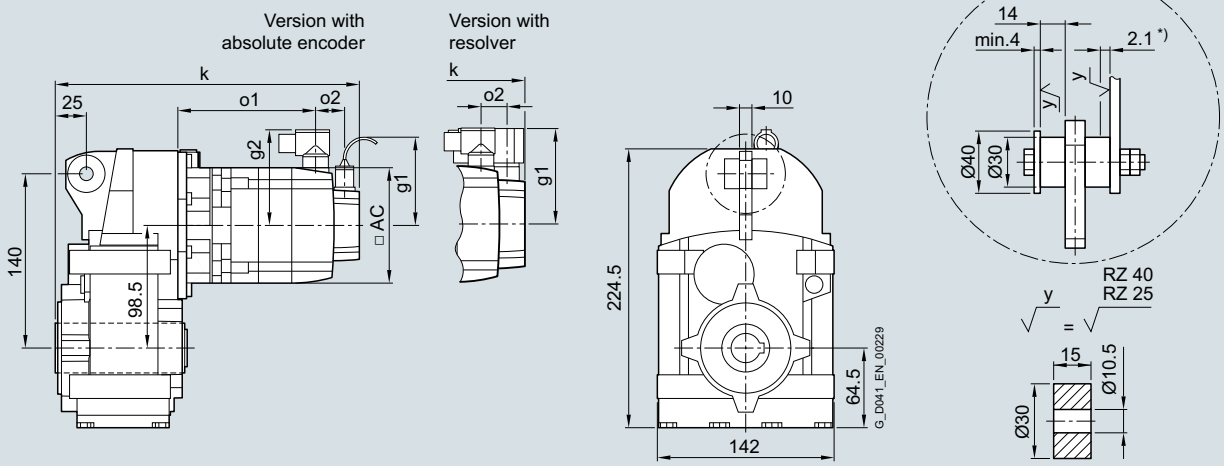

Gearbox types *FZAD29* and *FDAD29*

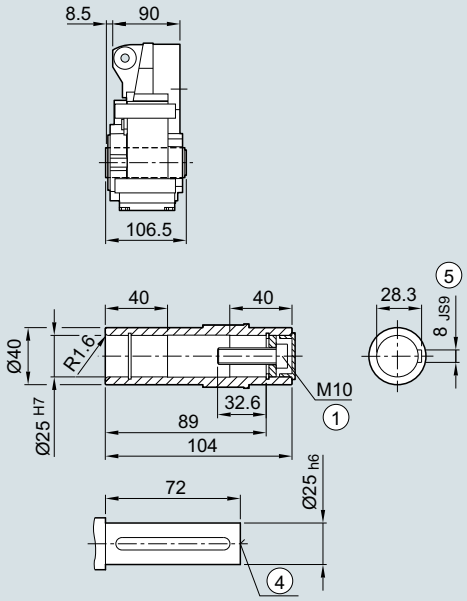

Gearbox types *FZADS29* and *FDADS29*

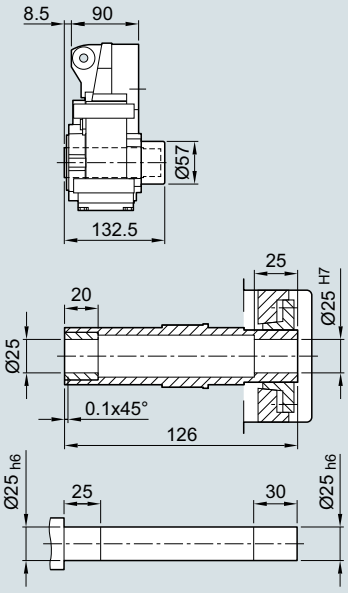

① ISO 4017 ④ DIN 332 ⑤ Feather key/keyway DIN 6885

* Spring compression at max. torque

© Siemens 2019

Servo parallel shaft geared motor	Motor shaft height	Motor version	Absolute encoder with brake		with brake for increased energy		without brake					Resolver with brake		with brake for increased energy		without brake					
Type			k	o1	k	o1	k	o1	o2	g1	g2	k	o1	k	o1	k	o1	o2	g1	g2	AC
1FG1...-..C2.-....	36	CT	311	148	–	–	294	131	50	104.5	78	290	154	–	–	273	137	15	80	80	72
1FG1...-..C3.-....		HD	321	158	–	–	304	141				300	164	–	–	283	147				
1FG1...-..C4.-....		CT	336	173	–	–	319	156				315	179	–	–	298	162				
1FG1...-..D0.-....	48	CT	292	130	–	–	268	106	50	104.5	90	278	130	–	–	254	106	23	90	90	96
1FG1...-..D2.-....		CT	320	158	–	–	296	134				305	158	–	–	281	134				
1FG1...-..D3.-....		HD	346	178	–	–	322	154	56			331	184	–	–	307	160				
1FG1...-..D4.-....		HD	371	203	–	–	347	179				356	209	–	–	332	185				
1FG1...-..E0.-....	63	CT	325	163	–	–	311	148	50	104.5	104	311	163	–	–	296	148	23	103	104	126
1FG1...-..E1.-....		HD	360	198	–	–	346	183				346	198	–	–	331	183				
1FG1...-..E2.-....		CT	348	186	–	–	333	171				333	186	–	–	319	171				
1FG1...-..E3.-....		CT	370	208	–	–	356	193				356	208	–	–	341	193				
1FG1...-..E4.-....		HD	424	262	–	–	410	247				410	262	–	–	395	247				
1FG1...-..F0.-....	80	CT	–	–	–	–	–	–	–	–	–	–	–	–	–	–	–	–	–	–	–
1FG1...-..F1.-....		CT	–	–	–	–	–	–	–	–	–	–	–	–	–	–	–	–	–	–	–
1FG1...-..F3.-....		CT	–	–	–	–	–	–	–	–	–	–	–	–	–	–	–	–	–	–	–
1FG1...-..F4.-....		CT	–	–	–	–	–	–	–	–	–	–	–	–	–	–	–	–	–	–	–
1FG1...-..F52-....		HD	–	–	–	–	–	–	–	–	–	–	–	–	–	–	–	–	–	–	–
1FG1...-..F62-....		HD	–	–	–	–	–	–	–	–	–	–	–	–	–	–	–	–	–	–	–
1FG1...-..F53-....		HD	–	–	–	–	–	–	–	–	–	–	–	–	–	–	–	–	–	–	–
1FG1...-..F63-....		HD	–	–	–	–	–	–	–	–	–	–	–	–	–	–	–	–	–	–	–
1FG1...-..G0.-....	100	CT	–	–	–	–	–	–	–	–	–	–	–	–	–	–	–	–	–	–	–
1FG1...-..G1.-....		CT	–	–	–	–	–	–	–	–	–	–	–	–	–	–	–	–	–	–	–
1FG1...-..G3.-....		CT	–	–	–	–	–	–	–	–	–	–	–	–	–	–	–	–	–	–	–
1FG1...-..G5.-....		CT	–	–	–	–	–	–	–	–	–	–	–	–	–	–	–	–	–	–	–

© Siemens 2019

4

Dimensional drawings

Gearbox types *FZZ29* and *FDZ29*

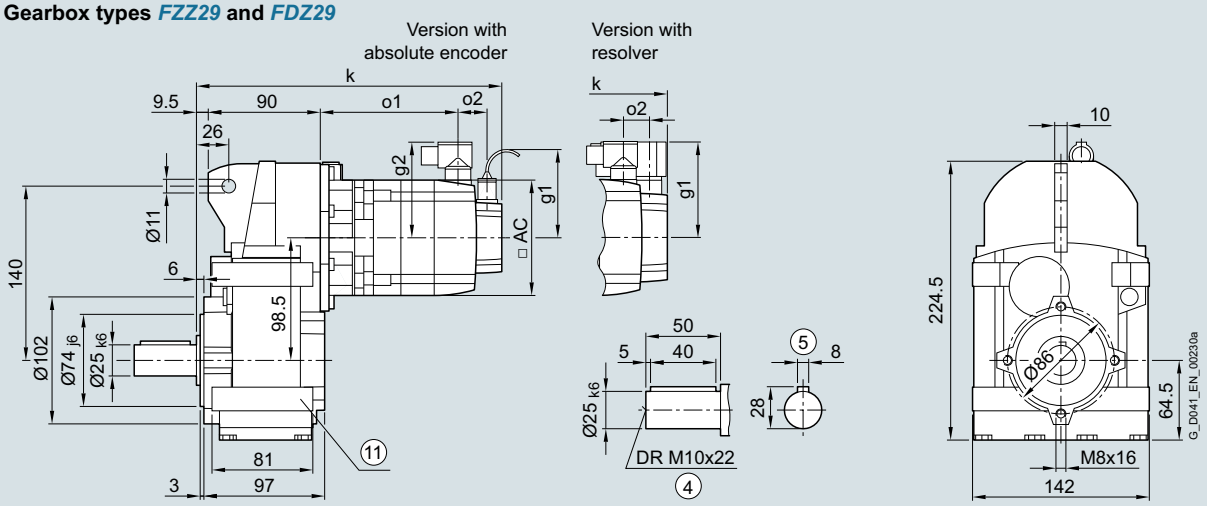

Gearbox types *FZAZ29* and *FDAZ29*

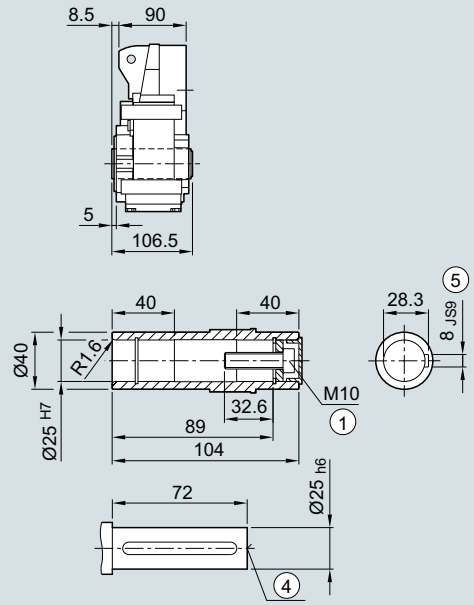

Gearbox types *FZAZS29* and *FDAZS29*

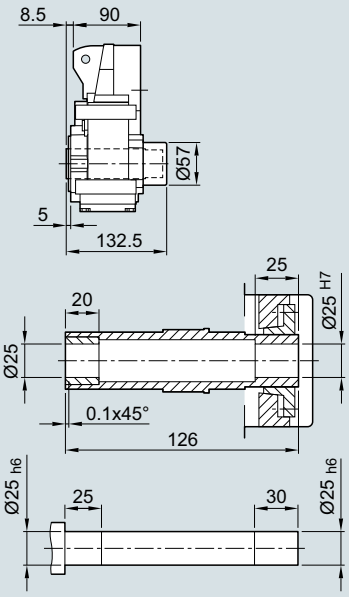

① ISO 4017 ④ DIN 332 ⑤ Feather key/keyway DIN 6885

⑪ Use bores only for foot-mounted design

© Siemens 2019

Servo parallel shaft geared motor	Motor shaft height	Motor version	Absolute encoder with brake		with brake for increased energy		without brake					Resolver with brake		with brake for increased energy		without brake					
Type			k	o1	k	o1	k	o1	o2	g1	g2	k	o1	k	o1	k	o1	o2	g1	g2	AC
1FG1...-..C2.-....	36	CT	311	148	–	–	294	131	50	104.5	78	290	154	–	–	273	137	15	80	80	72
1FG1...-..C3.-....		HD	321	158	–	–	304	141				300	164	–	–	283	147				
1FG1...-..C4.-....		CT	336	173	–	–	319	156				315	179	–	–	298	162				
1FG1...-..D0.-....	48	CT	292	130	–	–	268	106	50	104.5	90	278	130	–	–	254	106	23	90	90	96
1FG1...-..D2.-....		CT	320	158	–	–	296	134				305	158	–	–	281	134				
1FG1...-..D3.-....		HD	346	178	–	–	322	154	56			331	184	–	–	307	160				
1FG1...-..D4.-....		HD	371	203	–	–	347	179				356	209	–	–	332	185				
1FG1...-..E0.-....	63	CT	325	163	–	–	311	148	50	104.5	104	311	163	–	–	296	148	23	103	104	126
1FG1...-..E1.-....		HD	360	198	–	–	346	183				346	198	–	–	331	183				
1FG1...-..E2.-....		CT	348	186	–	–	333	171				333	186	–	–	319	171				
1FG1...-..E3.-....		CT	370	208	–	–	356	193				356	208	–	–	341	193				
1FG1...-..E4.-....		HD	424	262	–	–	410	247				410	262	–	–	395	247				
1FG1...-..F0.-....	80	CT	–	–	–	–	–	–	–	–	–	–	–	–	–	–	–	–	–	–	–
1FG1...-..F1.-....		CT	–	–	–	–	–	–	–	–	–	–	–	–	–	–	–	–	–	–	–
1FG1...-..F3.-....		CT	–	–	–	–	–	–	–	–	–	–	–	–	–	–	–	–	–	–	–
1FG1...-..F4.-....		CT	–	–	–	–	–	–	–	–	–	–	–	–	–	–	–	–	–	–	–
1FG1...-..F52-....		HD	–	–	–	–	–	–	–	–	–	–	–	–	–	–	–	–	–	–	–
1FG1...-..F62-....		HD	–	–	–	–	–	–	–	–	–	–	–	–	–	–	–	–	–	–	–
1FG1...-..F53-....		HD	–	–	–	–	–	–	–	–	–	–	–	–	–	–	–	–	–	–	–
1FG1...-..F63-....		HD	–	–	–	–	–	–	–	–	–	–	–	–	–	–	–	–	–	–	–
1FG1...-..G0.-....	100	CT	–	–	–	–	–	–	–	–	–	–	–	–	–	–	–	–	–	–	–
1FG1...-..G1.-....		CT	–	–	–	–	–	–	–	–	–	–	–	–	–	–	–	–	–	–	–
1FG1...-..G3.-....		CT	–	–	–	–	–	–	–	–	–	–	–	–	–	–	–	–	–	–	–
1FG1...-..G5.-....		CT	–	–	–	–	–	–	–	–	–	–	–	–	–	–	–	–	–	–	–

© Siemens 2019

4

Dimensional drawings

Gearbox types *FZF29* and *FDF29*

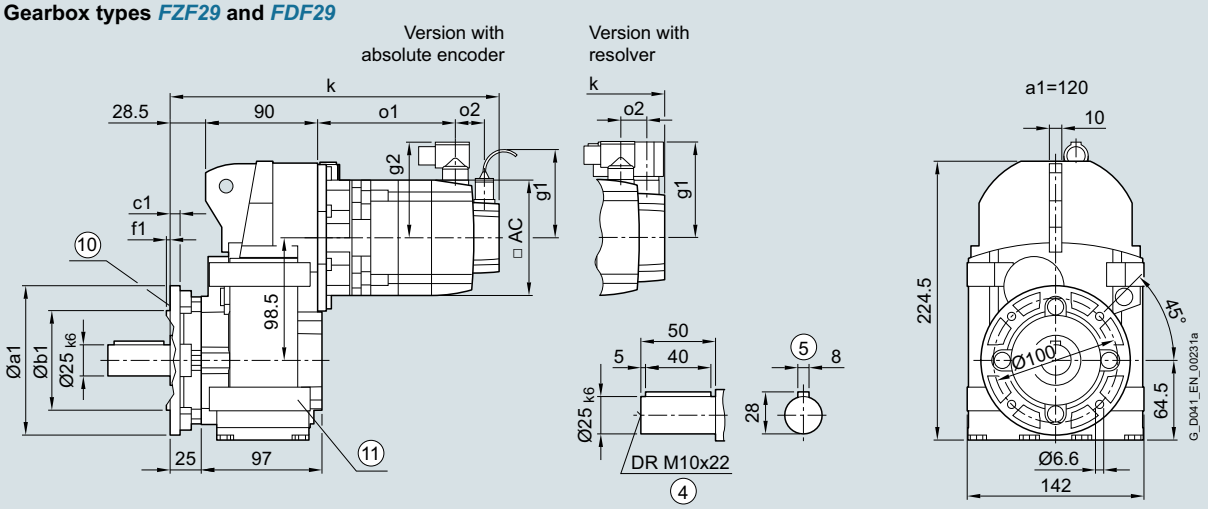

Gearbox types *FZAF29* and *FDAF29*

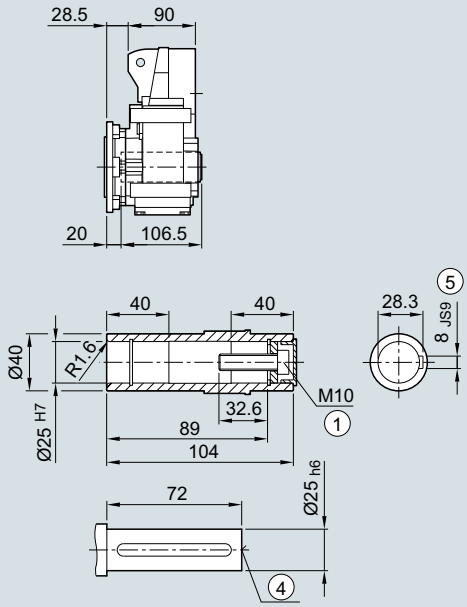

Gearbox types *FZAFS29* and *FDAFS29*

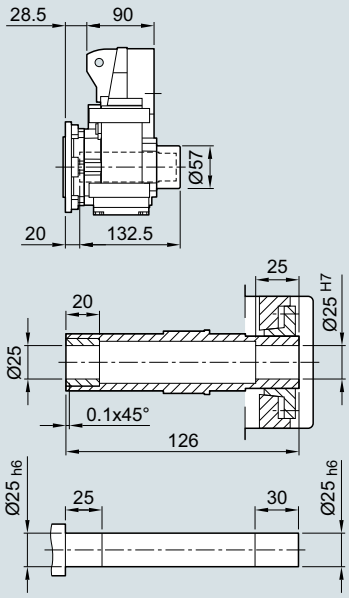

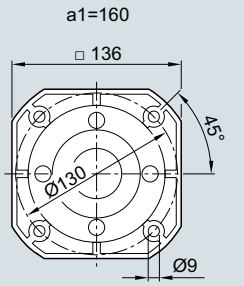

① ISO 4017 ② DIN 332 ⑤ Feather key/keyway DIN 6885

⑩ For inner contour and dimensions of the flange design, see page 4/146 ⑪ Use bores only for foot-mounted design

© Siemens 2019

Servo parallel shaft geared motor	Motor shaft height	Motor version	Absolute encoder with brake		with brake for increased energy		without brake					Resolver with brake		with brake for increased energy		without brake					
Type			k	o1	k	o1	k	o1	o2	g1	g2	k	o1	k	o1	k	o1	o2	g1	g2	AC
1FG1...-..C2.-....	36	CT	330	148	–	–	313	131	50	104.5	78	309	154	–	–	292	137	15	80	80	72
1FG1...-..C3.-....		HD	340	158	–	–	323	141				319	164	–	–	302	147				
1FG1...-..C4.-....		CT	355	173	–	–	338	156				334	179	–	–	317	162				
1FG1...-..D0.-....	48	CT	311	130	–	–	287	106	50	104.5	90	297	130	–	–	273	106	23	90	90	96
1FG1...-..D2.-....		CT	339	158	–	–	315	134				324	158	–	–	300	134				
1FG1...-..D3.-....		HD	365	178	–	–	341	154	56			350	184	–	–	326	160				
1FG1...-..D4.-....		HD	390	203	–	–	366	179				375	209	–	–	351	185				
1FG1...-..E0.-....	63	CT	344	163	–	–	330	148	50	104.5	104	330	163	–	–	315	148	23	103	104	126
1FG1...-..E1.-....		HD	379	198	–	–	365	183				365	198	–	–	350	183				
1FG1...-..E2.-....		CT	367	186	–	–	352	171				352	186	–	–	338	171				
1FG1...-..E3.-....		CT	389	208	–	–	375	193				375	208	–	–	360	193				
1FG1...-..E4.-....		HD	443	262	–	–	429	247				429	262	–	–	414	247				
1FG1...-..F0.-....	80	CT	–	–	–	–	–	–	–	–	–	–	–	–	–	–	–	–	–	–	–
1FG1...-..F1.-....		CT	–	–	–	–	–	–	–	–	–	–	–	–	–	–	–	–	–	–	–
1FG1...-..F3.-....		CT	–	–	–	–	–	–	–	–	–	–	–	–	–	–	–	–	–	–	–
1FG1...-..F4.-....		CT	–	–	–	–	–	–	–	–	–	–	–	–	–	–	–	–	–	–	–
1FG1...-..F52-....		HD	–	–	–	–	–	–	–	–	–	–	–	–	–	–	–	–	–	–	–
1FG1...-..F62-....		HD	–	–	–	–	–	–	–	–	–	–	–	–	–	–	–	–	–	–	–
1FG1...-..F53-....		HD	–	–	–	–	–	–	–	–	–	–	–	–	–	–	–	–	–	–	–
1FG1...-..F63-....		HD	–	–	–	–	–	–	–	–	–	–	–	–	–	–	–	–	–	–	–
1FG1...-..G0.-....	100	CT	–	–	–	–	–	–	–	–	–	–	–	–	–	–	–	–	–	–	–
1FG1...-..G1.-....		CT	–	–	–	–	–	–	–	–	–	–	–	–	–	–	–	–	–	–	–
1FG1...-..G3.-....		CT	–	–	–	–	–	–	–	–	–	–	–	–	–	–	–	–	–	–	–
1FG1...-..G5.-....		CT	–	–	–	–	–	–	–	–	–	–	–	–	–	–	–	–	–	–	–

© Siemens 2019

4

Dimensional drawings

Gearbox types *FZ29* and *FD29*

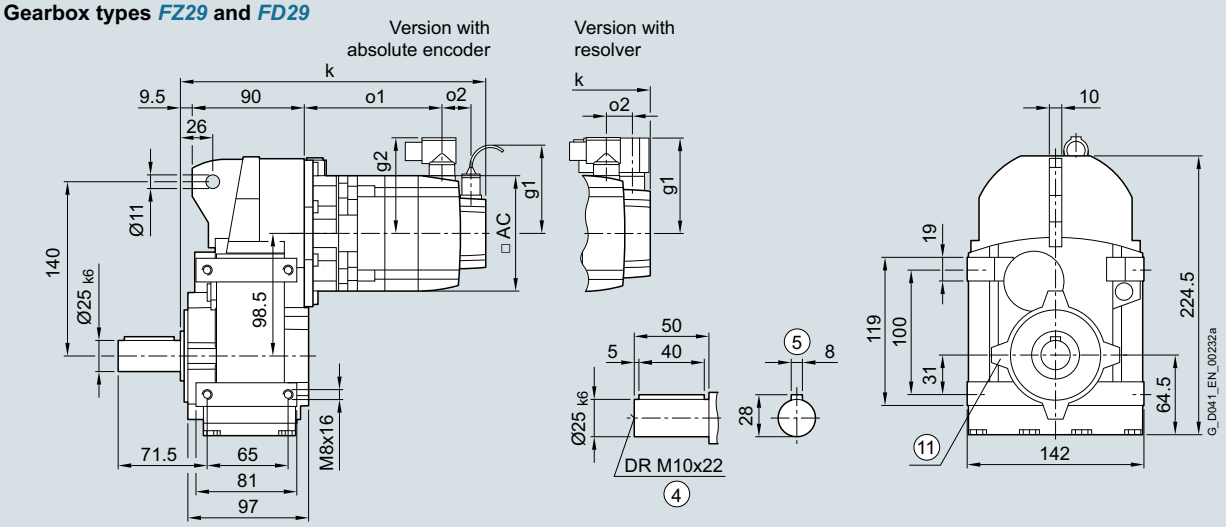

Gearbox types *FZA29* and *FDA29*

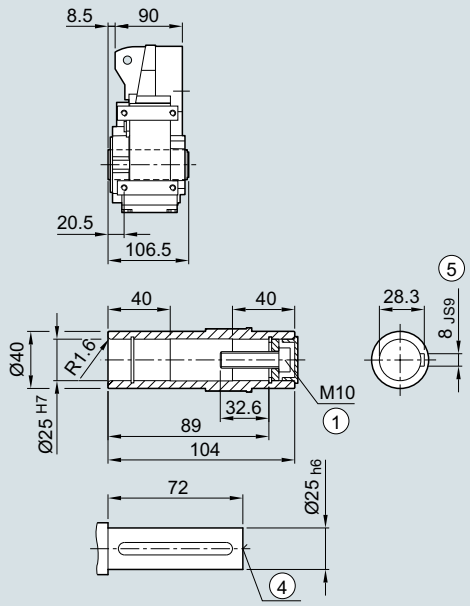

Gearbox types *FZAS29* and *FDAS29*

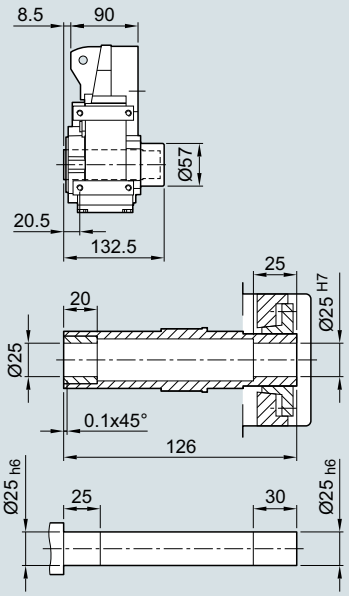

① ISO 4017 ④ DIN 332 ⑤ Feather key/keyway DIN 6885

⑪ Use bores only for housing flange design

© Siemens 2019

Servo parallel shaft geared motor	Motor shaft height	Motor version	Absolute encoder with brake		with brake for increased energy		without brake					Resolver with brake		with brake for increased energy		without brake					
Type			k	o1	k	o1	k	o1	o2	g1	g2	k	o1	k	o1	k	o1	o2	g1	g2	AC
1FG1...-..C2.-....	36	CT	311	148	–	–	294	131	50	104.5	78	290	154	–	–	273	137	15	80	80	72
1FG1...-..C3.-....		HD	321	158	–	–	304	141				300	164	–	–	283	147				
1FG1...-..C4.-....		CT	336	173	–	–	319	156				315	179	–	–	298	162				
1FG1...-..D0.-....	48	CT	292	130	–	–	268	106	50	104.5	90	278	130	–	–	254	106	23	90	90	96
1FG1...-..D2.-....		CT	320	158	–	–	296	134				305	158	–	–	281	134				
1FG1...-..D3.-....		HD	346	178	–	–	322	154	56			331	184	–	–	307	160				
1FG1...-..D4.-....		HD	371	203	–	–	347	179				356	209	–	–	332	185				
1FG1...-..E0.-....	63	CT	325	163	–	–	311	148	50	104.5	104	311	163	–	–	296	148	23	103	104	126
1FG1...-..E1.-....		HD	360	198	–	–	346	183				346	198	–	–	331	183				
1FG1...-..E2.-....		CT	348	186	–	–	333	171				333	186	–	–	319	171				
1FG1...-..E3.-....		CT	370	208	–	–	356	193				356	208	–	–	341	193				
1FG1...-..E4.-....		HD	424	262	–	–	410	247				410	262	–	–	395	247				
1FG1...-..F0.-....	80	CT	–	–	–	–	–	–	–	–	–	–	–	–	–	–	–	–	–	–	–
1FG1...-..F1.-....		CT	–	–	–	–	–	–	–	–	–	–	–	–	–	–	–	–	–	–	–
1FG1...-..F3.-....		CT	–	–	–	–	–	–	–	–	–	–	–	–	–	–	–	–	–	–	–
1FG1...-..F4.-....		CT	–	–	–	–	–	–	–	–	–	–	–	–	–	–	–	–	–	–	–
1FG1...-..F52-....		HD	–	–	–	–	–	–	–	–	–	–	–	–	–	–	–	–	–	–	–
1FG1...-..F62-....		HD	–	–	–	–	–	–	–	–	–	–	–	–	–	–	–	–	–	–	–
1FG1...-..F53-....		HD	–	–	–	–	–	–	–	–	–	–	–	–	–	–	–	–	–	–	–
1FG1...-..F63-....		HD	–	–	–	–	–	–	–	–	–	–	–	–	–	–	–	–	–	–	–
1FG1...-..G0.-....	100	CT	–	–	–	–	–	–	–	–	–	–	–	–	–	–	–	–	–	–	–
1FG1...-..G1.-....		CT	–	–	–	–	–	–	–	–	–	–	–	–	–	–	–	–	–	–	–
1FG1...-..G3.-....		CT	–	–	–	–	–	–	–	–	–	–	–	–	–	–	–	–	–	–	–
1FG1...-..G5.-....		CT	–	–	–	–	–	–	–	–	–	–	–	–	–	–	–	–	–	–	–

© Siemens 2019

4

Dimensional drawings

Gearbox types *FZAD39* and *FDAD39*

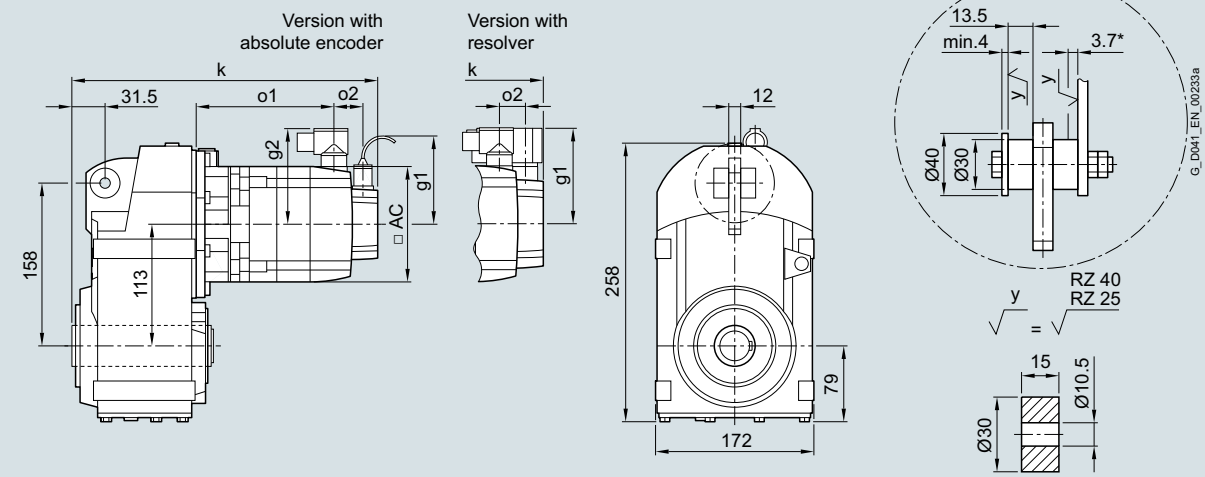

Gearbox types *FZAD39* and *FDAD39*

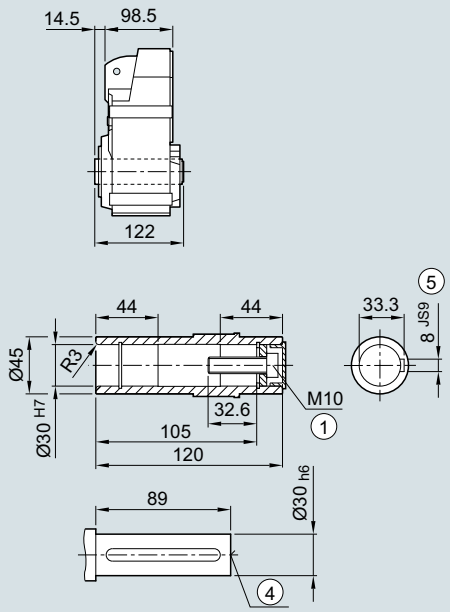

Gearbox types *FZADS39* and *FDADS39*

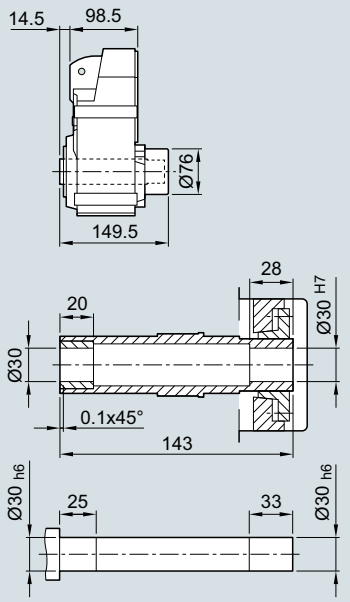

Gearbox types *FZADT39* and *FDADT39*

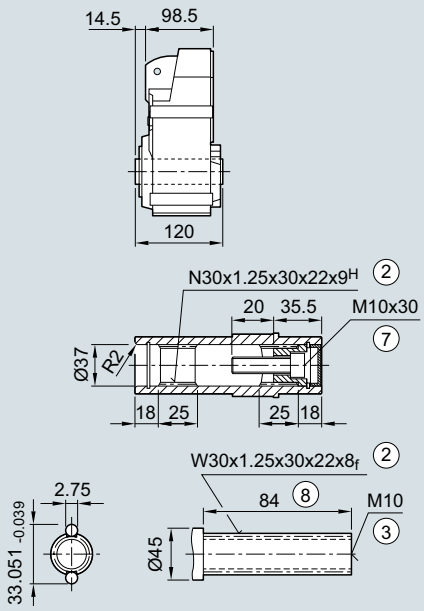

① ISO 4014 ② DIN 5480 ③ DIN 332-D ④ DIN 332
⑤ Feather key/keyway DIN 6885 ⑦ ISO 4762 ⑧ Without locating shoulder +1 mm

* Spring compression at max. torque

© Siemens 2019

Servo parallel shaft geared motor	Motor shaft height	Motor version	Absolute encoder with brake		with brake for increased energy		without brake					Resolver with brake		with brake for increased energy		without brake					
Type			k	o1	k	o1	k	o1	o2	g1	g2	k	o1	k	o1	k	o1	o2	g1	g2	AC
1FG1...-..C2.-....	36	CT	324	148	–	–	307	131	50	104.5	78	304	154	–	–	287	137	15	80	80	72
1FG1...-..C3.-....		HD	334	158	–	–	317	141				314	164	–	–	297	147				
1FG1...-..C4.-....		CT	349	173	–	–	332	156				329	179	–	–	312	162				
1FG1...-..D0.-....	48	CT	306	130	–	–	282	106	50	104.5	90	291	130	–	–	267	106	23	90	90	96
1FG1...-..D2.-....		CT	333	158	–	–	309	134				319	158	–	–	295	134				
1FG1...-..D3.-....		HD	359	178	–	–	335	154	56			345	184	–	–	321	160				
1FG1...-..D4.-....		HD	384	203	–	–	360	179				370	209	–	–	346	185				
1FG1...-..E0.-....	63	CT	339	163	–	–	324	148	50	104.5	104	324	163	–	–	310	148	23	103	104	126
1FG1...-..E1.-....		HD	374	198	–	–	359	183				359	198	–	–	345	183				
1FG1...-..E2.-....		CT	361	186	–	–	347	171				347	186	–	–	332	171				
1FG1...-..E3.-....		CT	384	208	–	–	369	193				369	208	–	–	355	193				
1FG1...-..E4.-....		HD	438	262	–	–	423	247				423	262	–	–	409	247				
1FG1...-..F0.-....	80	CT	378	204	389	215	341	167	48	104.5	119	363	205	374	216	327	168	21	118	119	155
1FG1...-..F1.-....		CT	397	223	408	234	360	186				382	224	393	235	346	187				
1FG1...-..F3.-....		CT	416	242	427	253	379	205				401	243	412	254	365	206				
1FG1...-..F4.-....		CT	435	262	446	273	399	225				421	263	432	274	384	226				
1FG1...-..F52-....		HD	464	290	475	301	427	253				449	291	460	302	413	254				
1FG1...-..F62-....		HD	464	290	475	301	427	253				449	291	460	302	413	254				
1FG1...-..F53-....		HD	464	290	475	301	427	253			139	449	291	460	302	413	254			139	
1FG1...-..F63-....		HD	464	290	475	301	427	253				449	291	460	302	413	254				
1FG1...-..G0.-....	100	CT	–	–	–	–	–	–	–	–	–	–	–	–	–	–	–	–	–	–	–
1FG1...-..G1.-....		CT	–	–	–	–	–	–	–	–	–	–	–	–	–	–	–	–	–	–	–
1FG1...-..G3.-....		CT	–	–	–	–	–	–	–	–	–	–	–	–	–	–	–	–	–	–	–
1FG1...-..G5.-....		CT	–	–	–	–	–	–	–	–	–	–	–	–	–	–	–	–	–	–	–

© Siemens 2019

4

Dimensional drawings

Gearbox types *FZZ39* and *FDZ39*

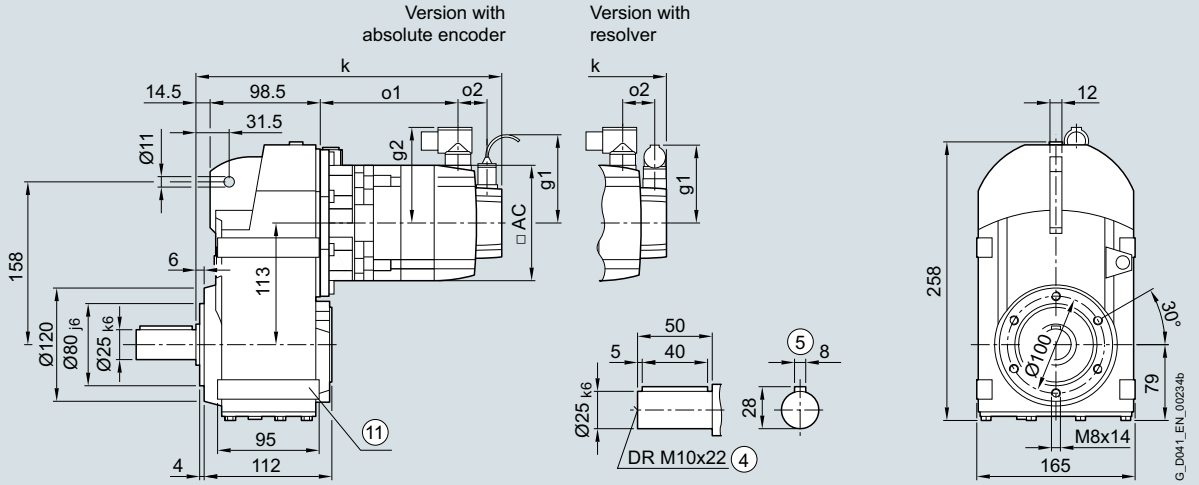

Gearbox types *FZAZ39* and *FDAZ39*

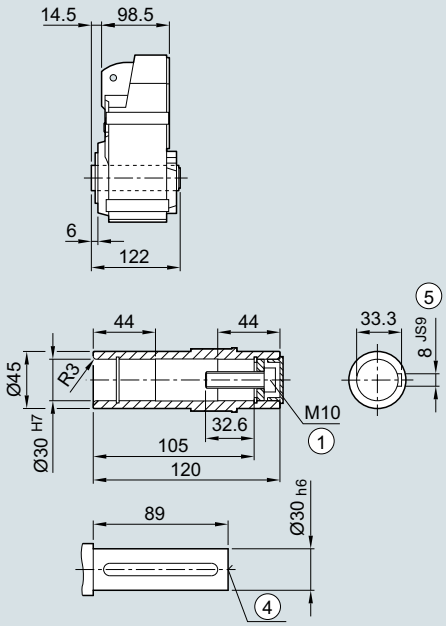

Gearbox types *FZAZS39* and *FDAZS39*

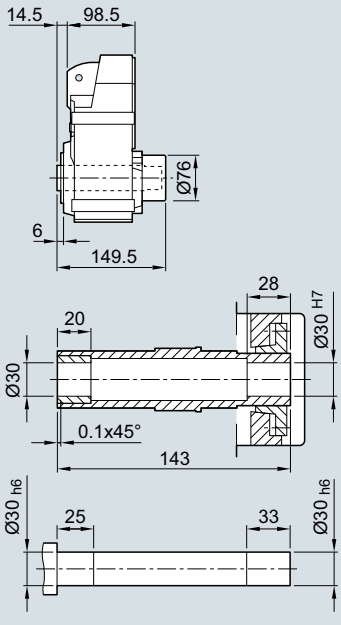

Gearbox types *FZAZT39* and *FDAZT39*

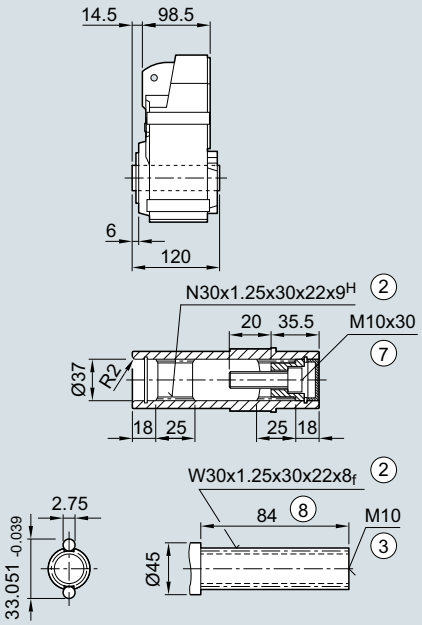

① ISO 4014 ② DIN 5480 ③ DIN 332-D ④ DIN 332
⑤ Feather key/keyway DIN 6885 ⑦ ISO 4762 ⑧ Without locating shoulder +1 mm
⑪ Use bores only for foot-mounted design

© Siemens 2019

Servo parallel shaft geared motor	Motor shaft height	Motor version	Absolute encoder with brake		with brake for increased energy		without brake					Resolver with brake		with brake for increased energy		without brake					
Type			k	o1	k	o1	k	o1	o2	g1	g2	k	o1	k	o1	k	o1	o2	g1	g2	AC
1FG1...-..C2.-....	36	CT	324	148	–	–	307	131	50	104.5	78	304	154	–	–	287	137	15	80	80	72
1FG1...-..C3.-....		HD	334	158	–	–	317	141				314	164	–	–	297	147				
1FG1...-..C4.-....		CT	349	173	–	–	332	156				329	179	–	–	312	162				
1FG1...-..D0.-....	48	CT	306	130	–	–	282	106	50	104.5	90	291	130	–	–	267	106	23	90	90	96
1FG1...-..D2.-....		CT	333	158	–	–	309	134				319	158	–	–	295	134				
1FG1...-..D3.-....		HD	359	178	–	–	335	154	56			345	184	–	–	321	160				
1FG1...-..D4.-....		HD	384	203	–	–	360	179				370	209	–	–	346	185				
1FG1...-..E0.-....	63	CT	339	163	–	–	324	148	50	104.5	104	324	163	–	–	310	148	23	103	104	126
1FG1...-..E1.-....		HD	374	198	–	–	359	183				359	198	–	–	345	183				
1FG1...-..E2.-....		CT	361	186	–	–	347	171				347	186	–	–	332	171				
1FG1...-..E3.-....		CT	384	208	–	–	369	193				369	208	–	–	355	193				
1FG1...-..E4.-....		HD	438	262	–	–	423	247				423	262	–	–	409	247				
1FG1...-..F0.-....	80	CT	378	204	389	215	341	167	48	104.5	119	363	205	374	216	327	168	21	118	119	155
1FG1...-..F1.-....		CT	397	223	408	234	360	186				382	224	393	235	346	187				
1FG1...-..F3.-....		CT	416	242	427	253	379	205				401	243	412	254	365	206				
1FG1...-..F4.-....		CT	435	262	446	273	399	225				421	263	432	274	384	226				
1FG1...-..F52-....		HD	464	290	475	301	427	253				449	291	460	302	413	254				
1FG1...-..F62-....		HD	464	290	475	301	427	253				449	291	460	302	413	254				
1FG1...-..F53-....		HD	464	290	475	301	427	253			139	449	291	460	302	413	254			139	
1FG1...-..F63-....		HD	464	290	475	301	427	253				449	291	460	302	413	254				
1FG1...-..G0.-....	100	CT	–	–	–	–	–	–	–	–	–	–	–	–	–	–	–	–	–	–	–
1FG1...-..G1.-....		CT	–	–	–	–	–	–	–	–	–	–	–	–	–	–	–	–	–	–	–
1FG1...-..G3.-....		CT	–	–	–	–	–	–	–	–	–	–	–	–	–	–	–	–	–	–	–
1FG1...-..G5.-....		CT	–	–	–	–	–	–	–	–	–	–	–	–	–	–	–	–	–	–	–

© Siemens 2019

4

Dimensional drawings

Gearbox types *FZF39* and *FDF39*

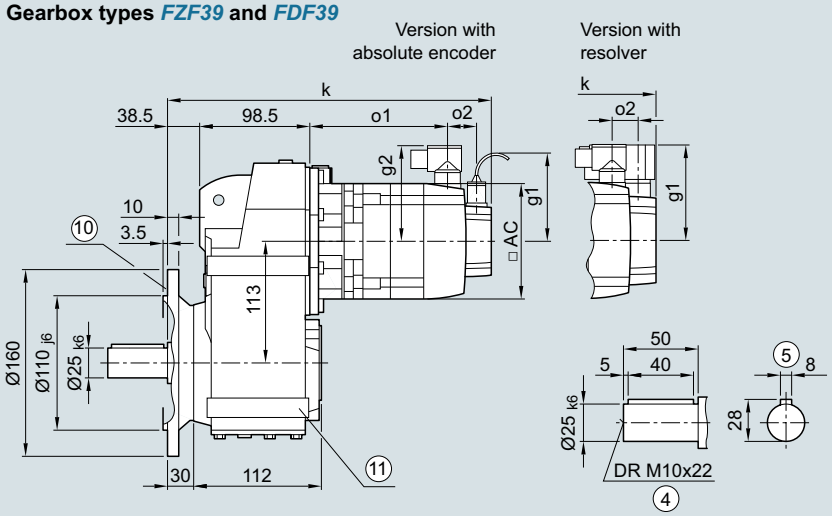

Gearbox types *FZAF39* and *FDAF39*

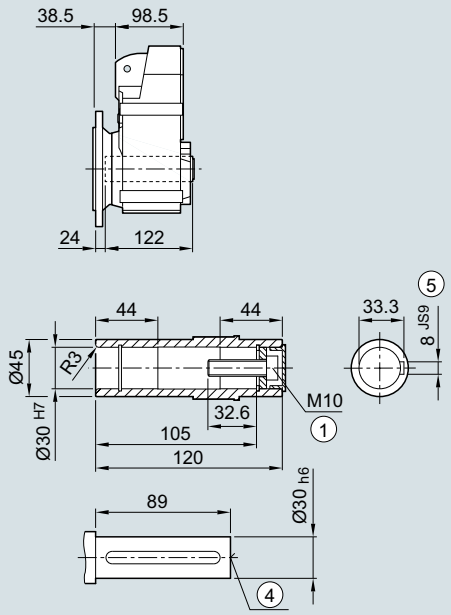

Gearbox types *FZAFS39* and *FDAFS39*

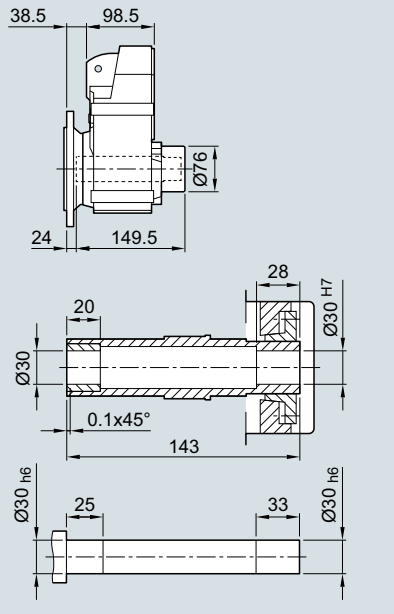

Gearbox types *FZAFT39* and *FDAFT39*

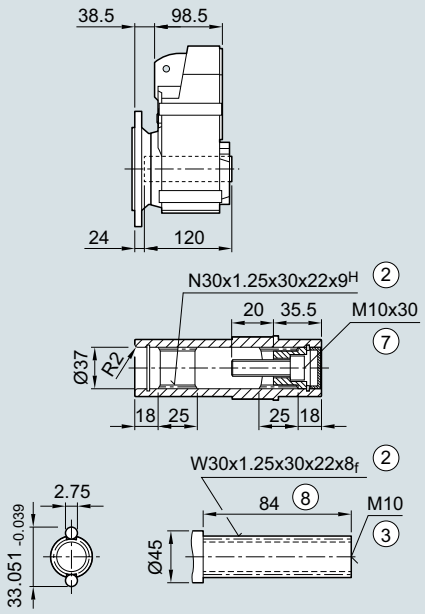

① ISO 4014 ② DIN 5480 ③ DIN 332-D ④ DIN 332
⑤ Feather key/keyway DIN 6885 ⑦ ISO 4762 ⑧ Without locating shoulder +1 mm
⑩ For inner contour of the flange design, see page 4/146 ⑪ Use bores only for foot-mounted design

© Siemens 2019

Servo parallel shaft geared motor	Motor shaft height	Motor version	Absolute encoder with brake		with brake for increased energy		without brake					Resolver with brake		with brake for increased energy		without brake					
Type			k	o1	k	o1	k	o1	o2	g1	g2	k	o1	k	o1	k	o1	o2	g1	g2	AC
1FG1...-..C2.-....	36	CT	348	148	–	–	331	131	50	104.5	78	328	154	–	–	311	137	15	80	80	72
1FG1...-..C3.-....		HD	358	158	–	–	341	141				338	164	–	–	321	147				
1FG1...-..C4.-....		CT	373	173	–	–	356	156				353	179	–	–	336	162				
1FG1...-..D0.-....	48	CT	330	130	–	–	306	106	50	104.5	90	315	130	–	–	291	106	23	90	90	96
1FG1...-..D2.-....		CT	357	158	–	–	333	134				343	158	–	–	319	134				
1FG1...-..D3.-....		HD	383	178	–	–	359	154	56			369	184	–	–	345	160				
1FG1...-..D4.-....		HD	408	203	–	–	384	179				394	209	–	–	370	185				
1FG1...-..E0.-....	63	CT	363	163	–	–	348	148	50	104.5	104	348	163	–	–	334	148	23	103	104	126
1FG1...-..E1.-....		HD	398	198	–	–	383	183				383	198	–	–	369	183				
1FG1...-..E2.-....		CT	385	186	–	–	371	171				371	186	–	–	356	171				
1FG1...-..E3.-....		CT	408	208	–	–	393	193				393	208	–	–	379	193				
1FG1...-..E4.-....		HD	462	262	–	–	447	247				447	262	–	–	433	247				
1FG1...-..F0.-....	80	CT	402	204	413	215	365	167	48	104.5	119	387	205	398	216	351	168	21	118	119	155
1FG1...-..F1.-....		CT	421	223	432	234	384	186				406	224	417	235	370	187				
1FG1...-..F3.-....		CT	440	242	451	253	403	205				425	243	436	254	389	206				
1FG1...-..F4.-....		CT	459	262	470	273	423	225				445	263	456	274	408	226				
1FG1...-..F52-....		HD	488	290	499	301	451	253				473	291	484	302	437	254				
1FG1...-..F62-....		HD	488	290	499	301	451	253				473	291	484	302	437	254				
1FG1...-..F53-....		HD	488	290	499	301	451	253			139	473	291	484	302	437	254			139	
1FG1...-..F63-....		HD	488	290	499	301	451	253				473	291	484	302	437	254				
1FG1...-..G0.-....	100	CT	–	–	–	–	–	–	–	–	–	–	–	–	–	–	–	–	–	–	–
1FG1...-..G1.-....		CT	–	–	–	–	–	–	–	–	–	–	–	–	–	–	–	–	–	–	–
1FG1...-..G3.-....		CT	–	–	–	–	–	–	–	–	–	–	–	–	–	–	–	–	–	–	–
1FG1...-..G5.-....		CT	–	–	–	–	–	–	–	–	–	–	–	–	–	–	–	–	–	–	–

© Siemens 2019

4

Dimensional drawings

Gearbox types *FZ39* and *FD39*

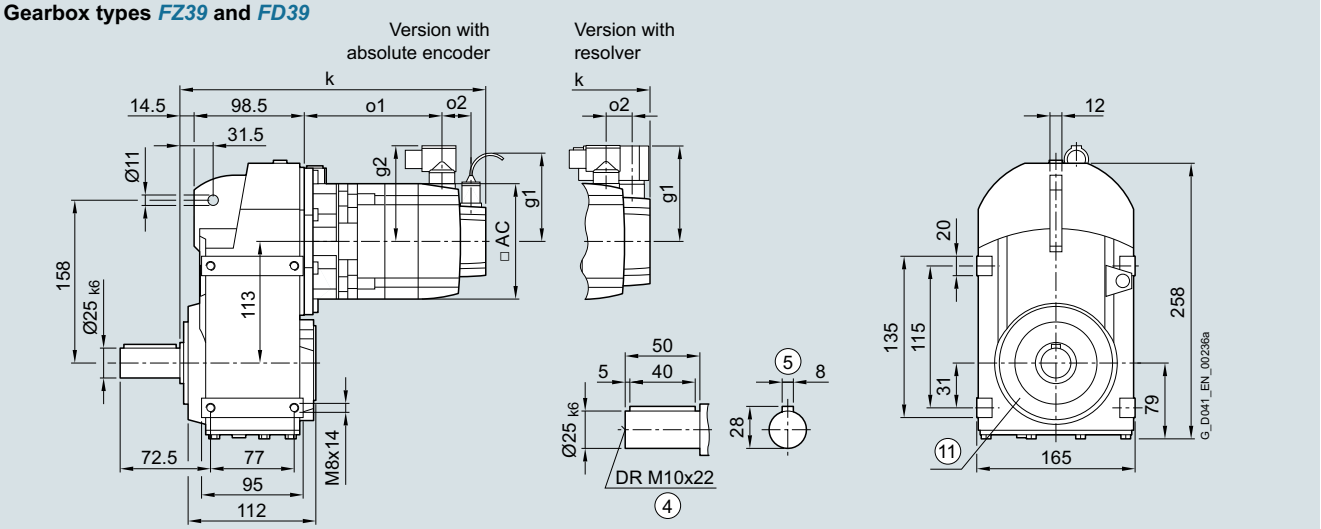

Gearbox types *FZA39* and *FDA39*

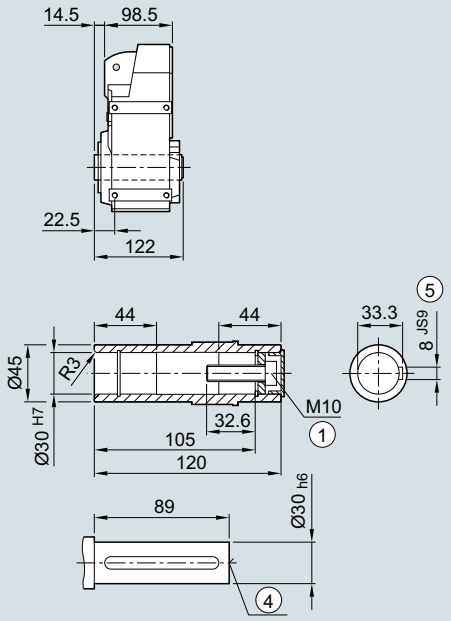

Gearbox types *FZAS39* and *FDAS39*

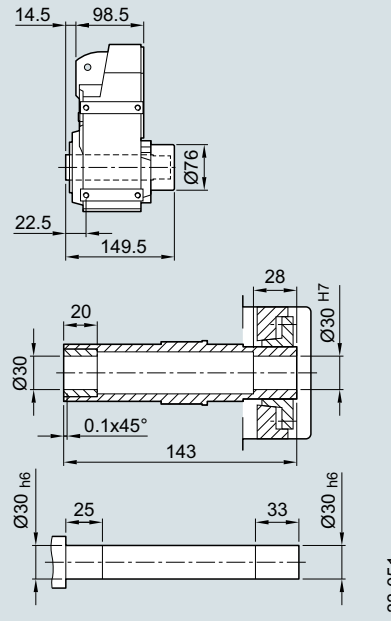

Gearbox types *FZAT39* and *FDAT39*

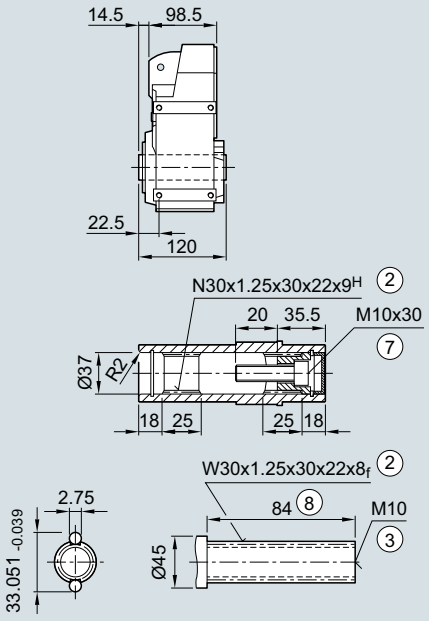

① ISO 4014 ② DIN 5480 ③ DIN 332-D ④ DIN 332
⑤ Feather key/keyway DIN 6885 ⑦ ISO 4762 ⑧ Without locating shoulder +1 mm
⑪ Use bores only for housing flange design

© Siemens 2019

Servo parallel shaft geared motor	Motor shaft height	Motor version	Absolute encoder with brake		with brake for increased energy		without brake					Resolver with brake		with brake for increased energy		without brake					
Type			k	o1	k	o1	k	o1	o2	g1	g2	k	o1	k	o1	k	o1	o2	g1	g2	AC
1FG1...-..C2.-....	36	CT	324	148	–	–	307	131	50	104.5	78	304	154	–	–	287	137	15	80	80	72
1FG1...-..C3.-....		HD	334	158	–	–	317	141				314	164	–	–	297	147				
1FG1...-..C4.-....		CT	349	173	–	–	332	156				329	179	–	–	312	162				
1FG1...-..D0.-....	48	CT	306	130	–	–	282	106	50	104.5	90	291	130	–	–	267	106	23	90	90	96
1FG1...-..D2.-....		CT	333	158	–	–	309	134				319	158	–	–	295	134				
1FG1...-..D3.-....		HD	359	178	–	–	335	154	56			345	184	–	–	321	160				
1FG1...-..D4.-....		HD	384	203	–	–	360	179				370	209	–	–	346	185				
1FG1...-..E0.-....	63	CT	339	163	–	–	324	148	50	104.5	104	324	163	–	–	310	148	23	103	104	126
1FG1...-..E1.-....		HD	374	198	–	–	359	183				359	198	–	–	345	183				
1FG1...-..E2.-....		CT	361	186	–	–	347	171				347	186	–	–	332	171				
1FG1...-..E3.-....		CT	384	208	–	–	369	193				369	208	–	–	355	193				
1FG1...-..E4.-....		HD	438	262	–	–	423	247				423	262	–	–	409	247				
1FG1...-..F0.-....	80	CT	378	204	389	215	341	167	48	104.5	119	363	205	374	216	327	168	21	118	119	155
1FG1...-..F1.-....		CT	397	223	408	234	360	186				382	224	393	235	346	187				
1FG1...-..F3.-....		CT	416	242	427	253	379	205				401	243	412	254	365	206				
1FG1...-..F4.-....		CT	435	262	446	273	399	225				421	263	432	274	384	226				
1FG1...-..F52-....		HD	464	290	475	301	427	253				449	291	460	302	413	254				
1FG1...-..F62-....		HD	464	290	475	301	427	253				449	291	460	302	413	254				
1FG1...-..F53-....		HD	464	290	475	301	427	253			139	449	291	460	302	413	254			139	
1FG1...-..F63-....		HD	464	290	475	301	427	253				449	291	460	302	413	254				
1FG1...-..G0.-....	100	CT	–	–	–	–	–	–	–	–	–	–	–	–	–	–	–	–	–	–	–
1FG1...-..G1.-....		CT	–	–	–	–	–	–	–	–	–	–	–	–	–	–	–	–	–	–	–
1FG1...-..G3.-....		CT	–	–	–	–	–	–	–	–	–	–	–	–	–	–	–	–	–	–	–
1FG1...-..G5.-....		CT	–	–	–	–	–	–	–	–	–	–	–	–	–	–	–	–	–	–	–

© Siemens 2019

4

Dimensional drawings

Gearbox types *FZAD49* and *FDAD49*

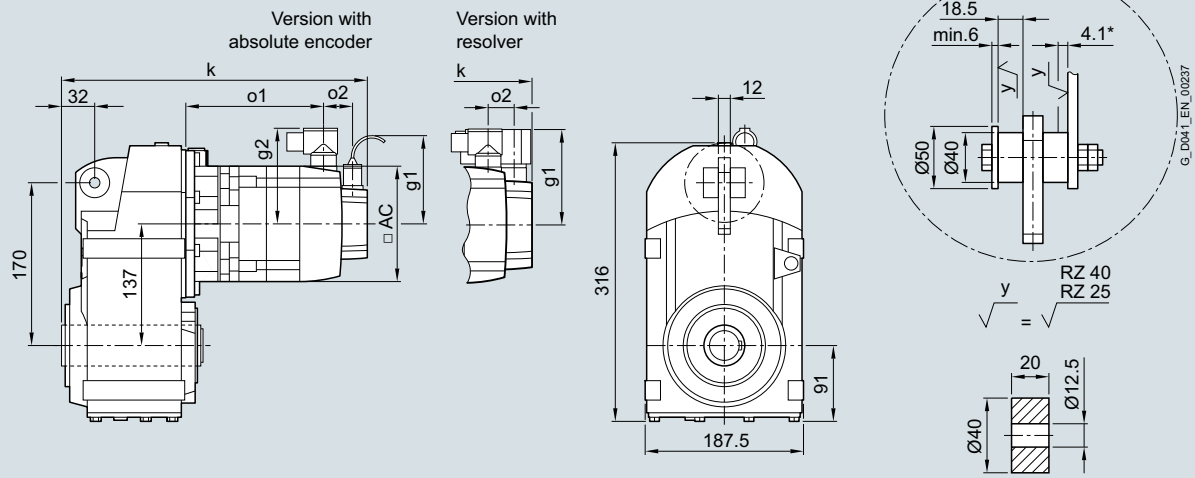

Gearbox types *FZAD49* and *FDAD49*

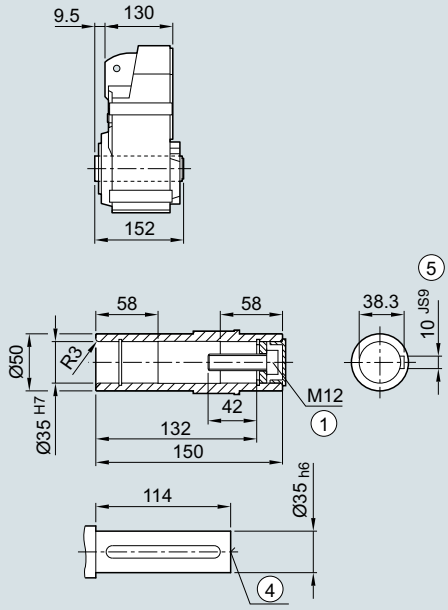

Gearbox types *FZADS49* and *FDADS49*

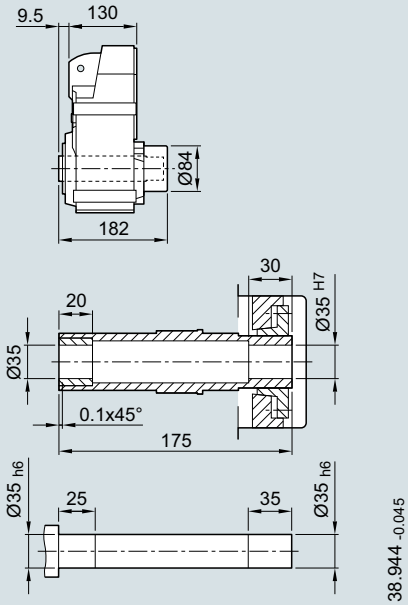

Gearbox types *FZADT49* and *FDADT49*

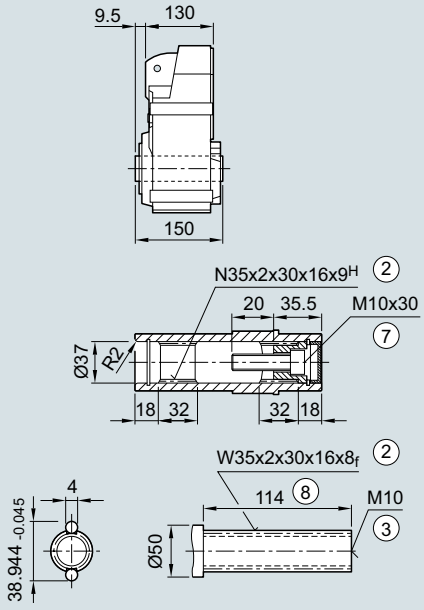

① ISO 4014 ② DIN 5480 ③ DIN 332-D ④ DIN 332
⑤ Feather key/keyway DIN 6885 ⑦ ISO 4762 ⑧ Without locating shoulder +1 mm

* Spring compression at max. torque

© Siemens 2019

Servo parallel shaft geared motor	Motor shaft height	Motor version	Absolute encoder with brake		with brake for increased energy		without brake					Resolver with brake		with brake for increased energy		without brake					
Type			k	o1	k	o1	k	o1	o2	g1	g2	k	o1	k	o1	k	o1	o2	g1	g2	AC
1FG1...-..C2.-....	36	CT	341	139	–	–	324	122	50	104.5	78	321	144	–	–	304	127	15	80	80	72
1FG1...-..C3.-....		HD	351	149	–	–	334	132				331	154	–	–	314	137				
1FG1...-..C4.-....		CT	366	164	–	–	349	147				346	169	–	–	329	152				
1FG1...-..D0.-....	48	CT	323	121	–	–	299	97	50	104.5	90	308	121	–	–	284	97	23	90	90	96
1FG1...-..D2.-....		CT	350	148	–	–	326	124				336	148	–	–	312	124				
1FG1...-..D3.-....		HD	376	168	–	–	352	144	56			362	174	–	–	338	150				
1FG1...-..D4.-....		HD	401	193	–	–	377	169				387	199	–	–	363	175				
1FG1...-..E0.-....	63	CT	356	154	–	–	341	139	50	104.5	104	341	154	–	–	327	139	23	103	104	126
1FG1...-..E1.-....		HD	391	189	–	–	376	174				376	189	–	–	362	174				
1FG1...-..E2.-....		CT	378	176	–	–	364	161				364	176	–	–	349	161				
1FG1...-..E3.-....		CT	401	199	–	–	386	184				386	199	–	–	372	184				
1FG1...-..E4.-....		HD	455	253	–	–	440	238				440	253	–	–	426	238				
1FG1...-..F0.-....	80	CT	395	195	406	206	358	158	48	104.5	119	380	196	391	207	344	159	21	118	119	155
1FG1...-..F1.-....		CT	414	214	425	225	377	177				399	215	410	226	363	178				
1FG1...-..F3.-....		CT	433	233	444	244	396	196				418	234	429	245	382	197				
1FG1...-..F4.-....		CT	452	252	463	263	416	215				438	253	449	264	401	216				
1FG1...-..F52-....		HD	481	281	492	292	444	244				466	282	477	293	430	245				
1FG1...-..F62-....		HD	481	281	492	292	444	244				466	282	477	293	430	245				
1FG1...-..F53-....		HD	481	281	492	292	444	244			139	466	282	477	293	430	245			139	
1FG1...-..F63-....		HD	481	281	492	292	444	244				466	282	477	293	430	245				
1FG1...-..G0.-....	100	CT	425	220	452	247	390	185	53	104.5	137	411	222	438	249	376	187	26	136	137	192
1FG1...-..G1.-....		CT	451	246	478	273	416	211			158	437	248	464	275	402	213			158	
1FG1...-..G3.-....		CT	477	272	504	299	442	237				463	274	490	301	428	239				
1FG1...-..G5.-....		CT	529	324	556	351	494	289				515	326	542	353	480	291				

© Siemens 2019

4

Dimensional drawings

Gearbox types *FZZ49* and *FDZ49*

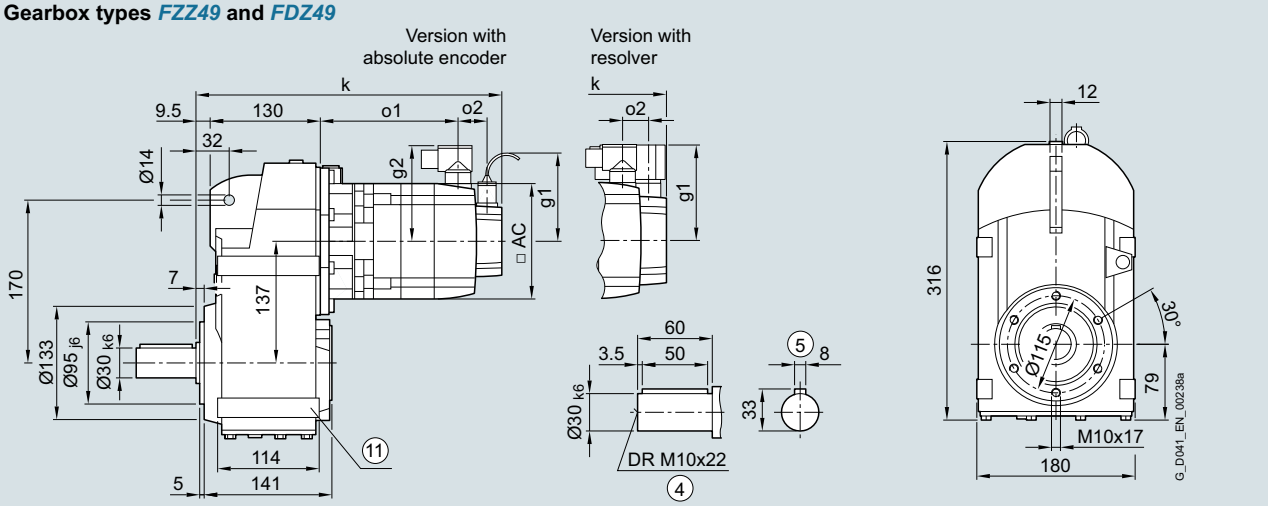

Gearbox types *FZAZ49* and *FDAZ49*

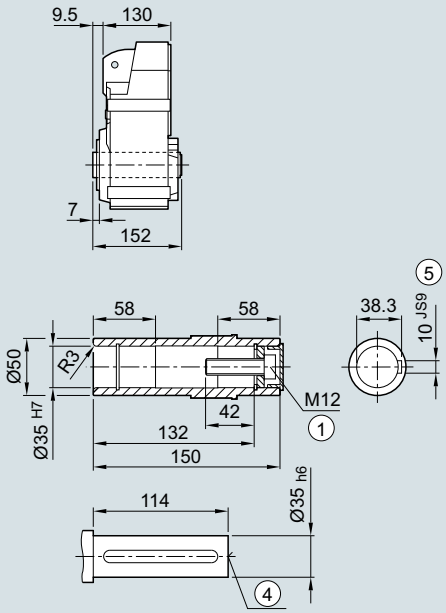

Gearbox types *FZAZS49* and *FDAZS49*

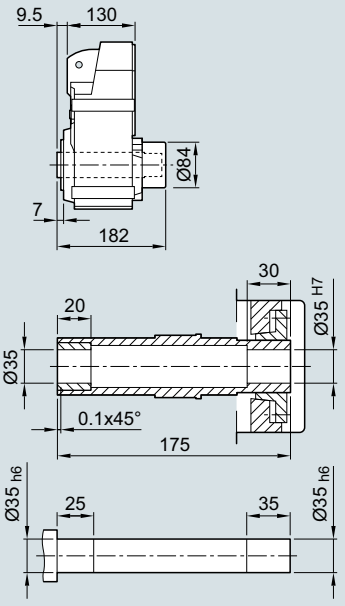

Gearbox types *FZAZT49* and *FDAZT49*

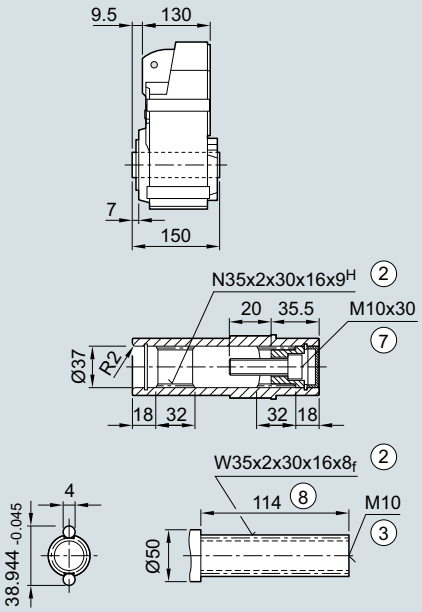

① ISO 4014 ② DIN 5480 ③ DIN 332-D ④ DIN 332
⑤ Feather key/keyway DIN 6885 ⑦ ISO 4762 ⑧ Without locating shoulder +1 mm
⑪ Use bores only for foot-mounted design

© Siemens 2019

Servo parallel shaft geared motor	Motor shaft height	Motor version	Absolute encoder with brake		with brake for increased energy		without brake					Resolver with brake		with brake for increased energy		without brake					
Type			k	o1	k	o1	k	o1	o2	g1	g2	k	o1	k	o1	k	o1	o2	g1	g2	AC
1FG1...-..C2.-....	36	CT	341	139	–	–	324	122	50	104.5	78	321	144	–	–	304	127	15	80	80	72
1FG1...-..C3.-....		HD	351	149	–	–	334	132				331	154	–	–	314	137				
1FG1...-..C4.-....		CT	366	164	–	–	349	147				346	169	–	–	329	152				
1FG1...-..D0.-....	48	CT	323	121	–	–	299	97	50	104.5	90	308	121	–	–	284	97	23	90	90	96
1FG1...-..D2.-....		CT	350	148	–	–	326	124				336	148	–	–	312	124				
1FG1...-..D3.-....		HD	376	168	–	–	352	144	56			362	174	–	–	338	150				
1FG1...-..D4.-....		HD	401	193	–	–	377	169				387	199	–	–	363	175				
1FG1...-..E0.-....	63	CT	356	154	–	–	341	139	50	104.5	104	341	154	–	–	327	139	23	103	104	126
1FG1...-..E1.-....		HD	391	189	–	–	376	174				376	189	–	–	362	174				
1FG1...-..E2.-....		CT	378	176	–	–	364	161				364	176	–	–	349	161				
1FG1...-..E3.-....		CT	401	199	–	–	386	184				386	199	–	–	372	184				
1FG1...-..E4.-....		HD	455	253	–	–	440	238				440	253	–	–	426	238				
1FG1...-..F0.-....	80	CT	395	195	406	206	358	158	48	104.5	119	380	196	391	207	344	159	21	118	119	155
1FG1...-..F1.-....		CT	414	214	425	225	377	177				399	215	410	226	363	178				
1FG1...-..F3.-....		CT	433	233	444	244	396	196				418	234	429	245	382	197				
1FG1...-..F4.-....		CT	452	252	463	263	416	215				438	253	449	264	401	216				
1FG1...-..F52-....		HD	481	281	492	292	444	244				466	282	477	293	430	245				
1FG1...-..F62-....		HD	481	281	492	292	444	244				466	282	477	293	430	245				
1FG1...-..F53-....		HD	481	281	492	292	444	244			139	466	282	477	293	430	245			139	
1FG1...-..F63-....		HD	481	281	492	292	444	244				466	282	477	293	430	245				
1FG1...-..G0.-....	100	CT	425	220	452	247	390	185	53	104.5	137	411	222	438	249	376	187	26	136	137	192
1FG1...-..G1.-....		CT	451	246	478	273	416	211			158	437	248	464	275	402	213			158	
1FG1...-..G3.-....		CT	477	272	504	299	442	237				463	274	490	301	428	239				
1FG1...-..G5.-....		CT	529	324	556	351	494	289				515	326	542	353	480	291				

© Siemens 2019

4

Dimensional drawings

Gearbox types *FZF49* and *FDF49*

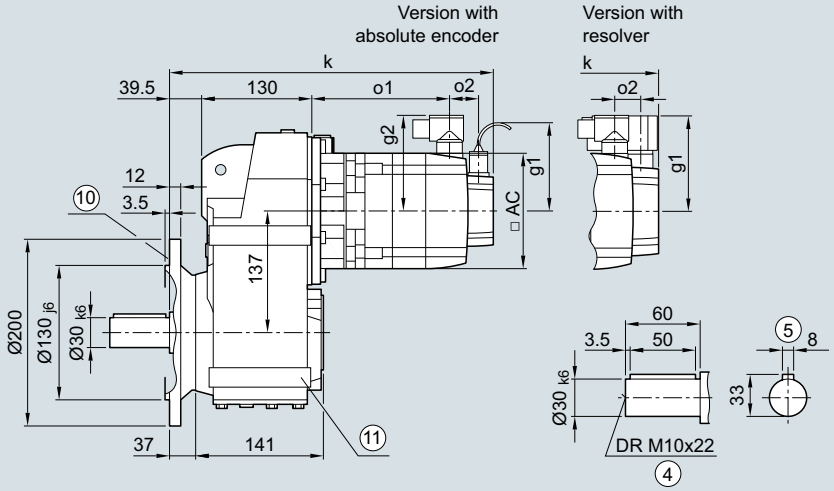

Gearbox types *FZAF49* and *FDAF49*

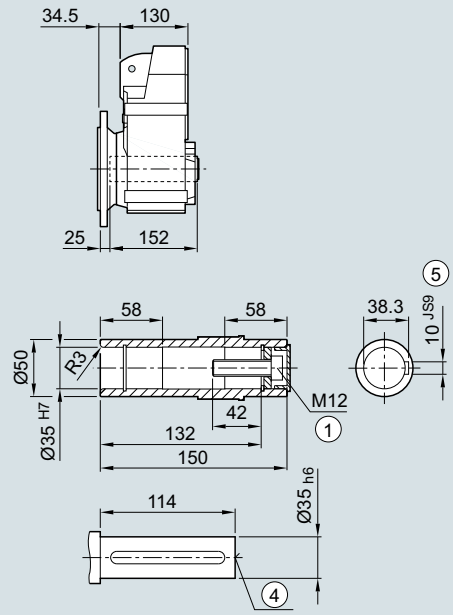

Gearbox types *FZAFS49* and *FDAFS49*

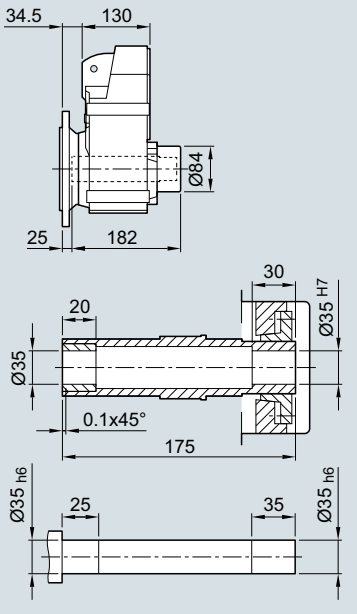

Gearbox types *FZAFT49* and *FDAFT49*

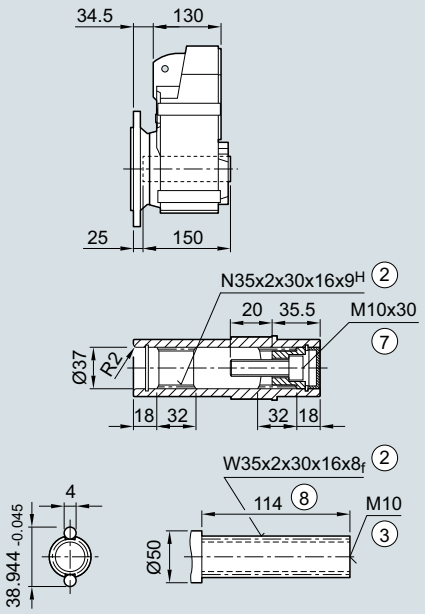

① ISO 4014 ② DIN 5480 ③ DIN 332-D ④ DIN 332
⑤ Feather key/keyway DIN 6885 ⑦ ISO 4762 ⑧ Without locating shoulder +1 mm
⑩ For inner contour of the flange design, see page 4/146 ⑪ Use bores only for foot-mounted design

© Siemens 2019

Servo parallel shaft geared motor	Motor shaft height	Motor version	Absolute encoder with brake		with brake for increased energy		without brake					Resolver with brake		with brake for increased energy		without brake					
Type			k	o1	k	o1	k	o1	o2	g1	g2	k	o1	k	o1	k	o1	o2	g1	g2	AC
1FG1...-..C2.-....	36	CT	371	139	–	–	354	122	50	104.5	78	351	144	–	–	334	127	15	80	80	72
1FG1...-..C3.-....		HD	381	149	–	–	364	132				361	154	–	–	344	137				
1FG1...-..C4.-....		CT	396	164	–	–	379	147				376	169	–	–	359	152				
1FG1...-..D0.-....	48	CT	353	121	–	–	329	97	50	104.5	90	338	121	–	–	314	97	23	90	90	96
1FG1...-..D2.-....		CT	380	148	–	–	356	124				366	148	–	–	342	124				
1FG1...-..D3.-....		HD	406	168	–	–	382	144	56			392	174	–	–	368	150				
1FG1...-..D4.-....		HD	431	193	–	–	407	169				417	199	–	–	393	175				
1FG1...-..E0.-....	63	CT	386	154	–	–	371	139	50	104.5	104	371	154	–	–	357	139	23	103	104	126
1FG1...-..E1.-....		HD	421	189	–	–	406	174				406	189	–	–	392	174				
1FG1...-..E2.-....		CT	408	176	–	–	394	161				394	176	–	–	379	161				
1FG1...-..E3.-....		CT	431	199	–	–	416	184				416	199	–	–	402	184				
1FG1...-..E4.-....		HD	485	253	–	–	470	238				470	253	–	–	456	238				
1FG1...-..F0.-....	80	CT	425	195	436	206	388	158	48	104.5	119	410	196	421	207	374	159	21	118	119	155
1FG1...-..F1.-....		CT	444	214	455	225	407	177				429	215	440	226	393	178				
1FG1...-..F3.-....		CT	463	233	474	244	426	196				448	234	459	245	412	197				
1FG1...-..F4.-....		CT	482	252	493	263	446	215				468	253	479	264	431	216				
1FG1...-..F52-....		HD	511	281	522	292	474	244				496	282	507	293	460	245				
1FG1...-..F62-....		HD	511	281	522	292	474	244				496	282	507	293	460	245				
1FG1...-..F53-....		HD	511	281	522	292	474	244			139	496	282	507	293	460	245			139	
1FG1...-..F63-....		HD	511	281	522	292	474	244				496	282	507	293	460	245				
1FG1...-..G0.-....	100	CT	455	220	482	247	420	185	53	104.5	137	441	222	468	249	406	187	26	136	137	192
1FG1...-..G1.-....		CT	481	246	508	273	446	211			158	467	248	494	275	432	213			158	
1FG1...-..G3.-....		CT	507	272	534	299	472	237				493	274	520	301	458	239				
1FG1...-..G5.-....		CT	559	324	586	351	524	289				545	326	572	353	510	291				

© Siemens 2019

4

Dimensional drawings

Gearbox types *FZ49* and *FD49*

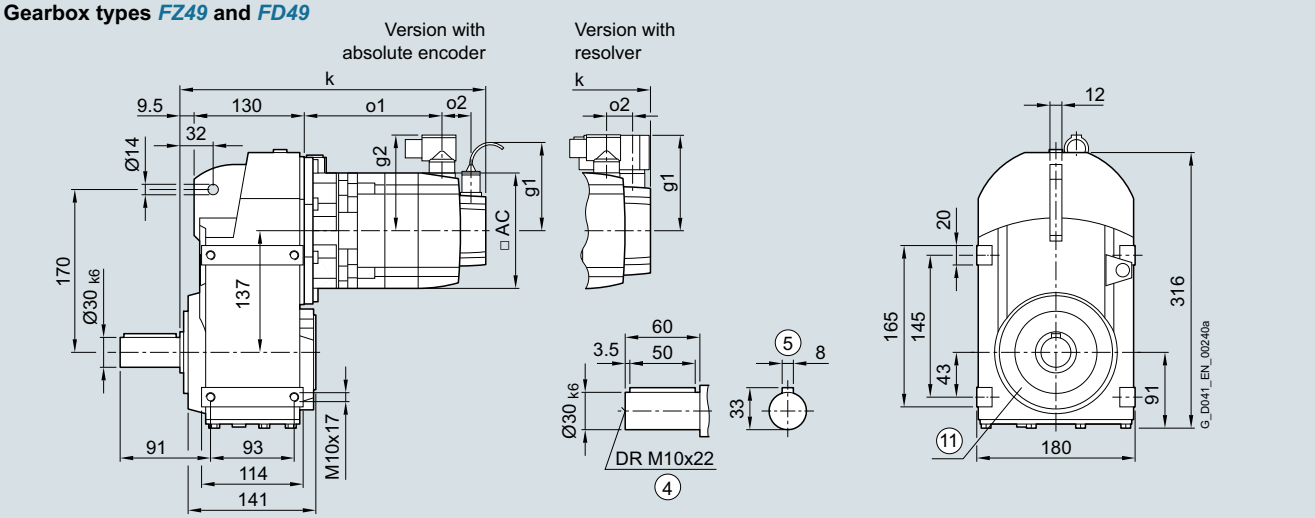

Gearbox types *FZA49* and *FDA49*

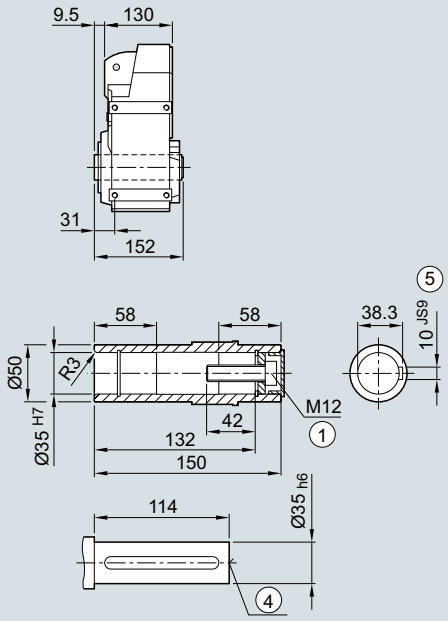

Gearbox types *FZAS49* and *FDAS49*

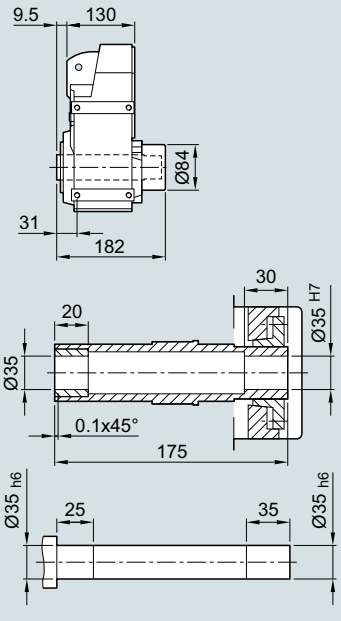

Gearbox types *FZAT49* and *FDAT49*

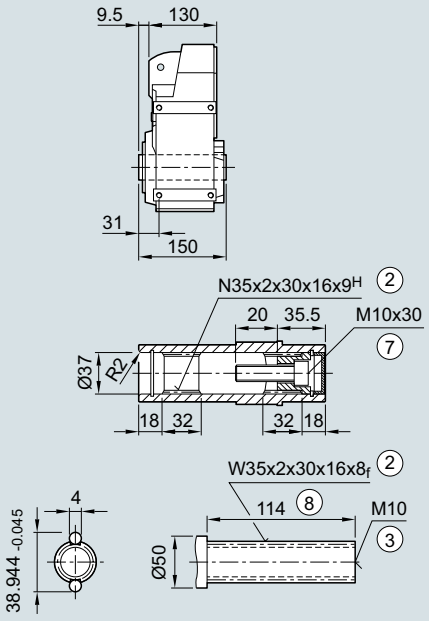

① ISO 4014 ② DIN 5480 ③ DIN 332-D ④ DIN 332
⑤ Feather key/keyway DIN 6885 ⑦ ISO 4762 ⑧ Without locating shoulder +1 mm
⑪ Use bores only for housing flange design

© Siemens 2019

Servo parallel shaft geared motor	Motor shaft height	Motor version	Absolute encoder with brake		with brake for increased energy		without brake					Resolver with brake		with brake for increased energy		without brake					
Type			k	o1	k	o1	k	o1	o2	g1	g2	k	o1	k	o1	k	o1	o2	g1	g2	AC
1FG1...-..C2.-....	36	CT	341	139	–	–	324	122	50	104.5	78	321	144	–	–	304	127	15	80	80	72
1FG1...-..C3.-....		HD	351	149	–	–	334	132				331	154	–	–	314	137				
1FG1...-..C4.-....		CT	366	164	–	–	349	147				346	169	–	–	329	152				
1FG1...-..D0.-....	48	CT	323	121	–	–	299	97	50	104.5	90	308	121	–	–	284	97	23	90	90	96
1FG1...-..D2.-....		CT	350	148	–	–	326	124				336	148	–	–	312	124				
1FG1...-..D3.-....		HD	376	168	–	–	352	144	56			362	174	–	–	338	150				
1FG1...-..D4.-....		HD	401	193	–	–	377	169				387	199	–	–	363	175				
1FG1...-..E0.-....	63	CT	356	154	–	–	341	139	50	104.5	104	341	154	–	–	327	139	23	103	104	126
1FG1...-..E1.-....		HD	391	189	–	–	376	174				376	189	–	–	362	174				
1FG1...-..E2.-....		CT	378	176	–	–	364	161				364	176	–	–	349	161				
1FG1...-..E3.-....		CT	401	199	–	–	386	184				386	199	–	–	372	184				
1FG1...-..E4.-....		HD	455	253	–	–	440	238				440	253	–	–	426	238				
1FG1...-..F0.-....	80	CT	395	195	406	206	358	158	48	104.5	119	380	196	391	207	344	159	21	118	119	155
1FG1...-..F1.-....		CT	414	214	425	225	377	177				399	215	410	226	363	178				
1FG1...-..F3.-....		CT	433	233	444	244	396	196				418	234	429	245	382	197				
1FG1...-..F4.-....		CT	452	252	463	263	416	215				438	253	449	264	401	216				
1FG1...-..F52-....		HD	481	281	492	292	444	244				466	282	477	293	430	245				
1FG1...-..F62-....		HD	481	281	492	292	444	244				466	282	477	293	430	245				
1FG1...-..F53-....		HD	481	281	492	292	444	244			139	466	282	477	293	430	245			139	
1FG1...-..F63-....		HD	481	281	492	292	444	244				466	282	477	293	430	245				
1FG1...-..G0.-....	100	CT	425	220	452	247	390	185	53	104.5	137	411	222	438	249	376	187	26	136	137	192
1FG1...-..G1.-....		CT	451	246	478	273	416	211			158	437	248	464	275	402	213			158	
1FG1...-..G3.-....		CT	477	272	504	299	442	237				463	274	490	301	428	239				
1FG1...-..G5.-....		CT	529	324	556	351	494	289				515	326	542	353	480	291				

© Siemens 2019

4

Dimensional drawings

Gearbox types *FZAD69* and *FDAD69*

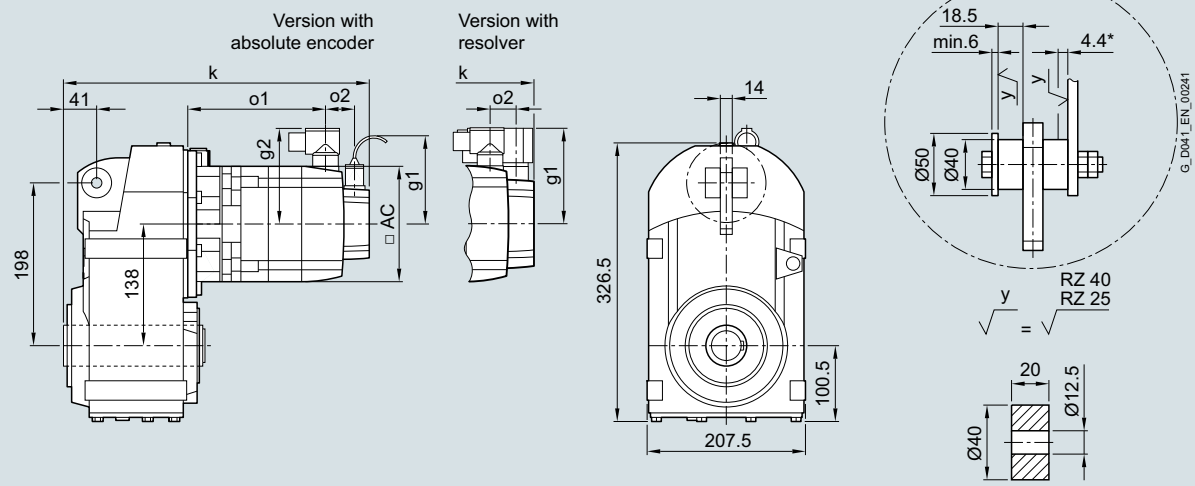

Gearbox types *FZAD69* and *FDAD69*

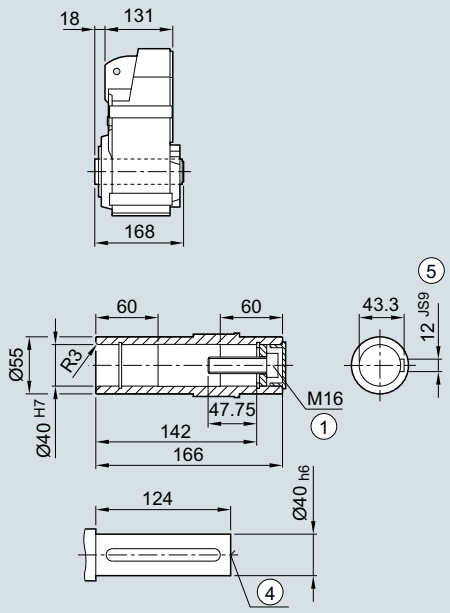

Gearbox types *FZADS69* and *FDADS69*

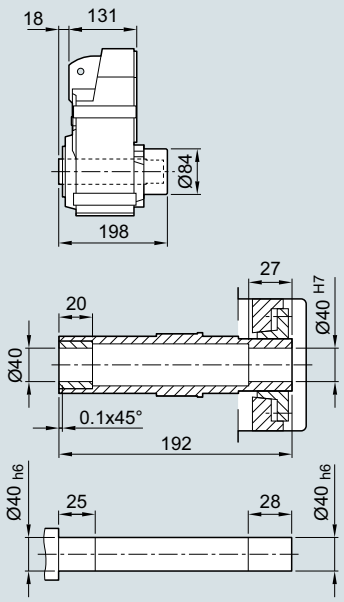

Gearbox types *FZADT69* and *FDADT69*

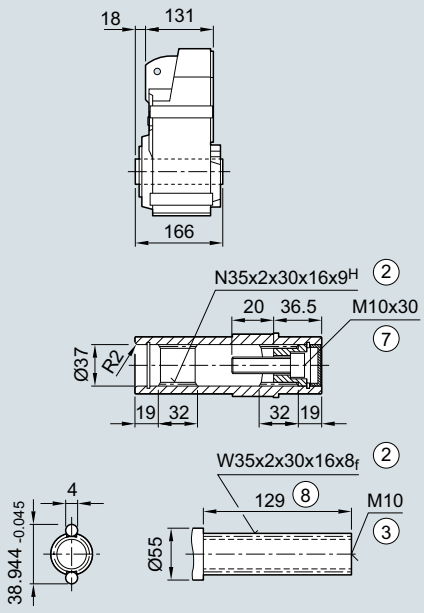

① ISO 4014 ② DIN 5480 ③ DIN 332-D ④ DIN 332
⑤ Feather key/keyway DIN 6885 ⑦ ISO 4762 ⑧ Without locating shoulder +1 mm

* Spring compression at max. torque

© Siemens 2019

Servo parallel shaft geared motor	Motor shaft height	Motor version	Absolute encoder with brake		with brake for increased energy		without brake					Resolver with brake		with brake for increased energy		without brake					
Type			k	o1	k	o1	k	o1	o2	g1	g2	k	o1	k	o1	k	o1	o2	g1	g2	AC
1FG1...-..C2.-....	36	CT	351	139	–	–	334	122	50	104.5	78	330	144	–	–	313	127	15	80	80	72
1FG1...-..C3.-....		HD	361	149	–	–	344	132				340	154	–	–	323	137				
1FG1...-..C4.-....		CT	376	164	–	–	359	147				355	169	–	–	338	152				
1FG1...-..D0.-....	48	CT	332	121	–	–	308	97	50	104.5	90	318	121	–	–	294	97	23	90	90	96
1FG1...-..D2.-....		CT	360	148	–	–	336	124				345	148	–	–	321	124				
1FG1...-..D3.-....		HD	386	168	–	–	362	144	56			371	174	–	–	347	150				
1FG1...-..D4.-....		HD	411	193	–	–	387	169				396	199	–	–	372	175				
1FG1...-..E0.-....	63	CT	365	154	–	–	351	139	50	104.5	104	351	154	–	–	336	139	23	103	104	126
1FG1...-..E1.-....		HD	400	189	–	–	386	174				386	189	–	–	371	174				
1FG1...-..E2.-....		CT	388	176	–	–	373	161				373	176	–	–	359	161				
1FG1...-..E3.-....		CT	410	199	–	–	396	184				396	199	–	–	381	184				
1FG1...-..E4.-....		HD	464	253	–	–	450	238				450	253	–	–	435	238				
1FG1...-..F0.-....	80	CT	404	195	415	206	368	158	48	104.5	119	390	196	401	207	353	159	21	118	119	155
1FG1...-..F1.-....		CT	423	214	434	225	387	177				409	215	420	226	372	178				
1FG1...-..F3.-....		CT	442	233	453	244	406	196				428	234	439	245	391	197				
1FG1...-..F4.-....		CT	462	252	473	263	425	215				447	253	458	264	411	216				
1FG1...-..F52-....		HD	490	281	501	292	454	244				476	282	487	293	439	245				
1FG1...-..F62-....		HD	490	281	501	292	454	244				476	282	487	293	439	245				
1FG1...-..F53-....		HD	490	281	501	292	454	244			139	476	282	487	293	439	245			139	
1FG1...-..F63-....		HD	490	281	501	292	454	244				476	282	487	293	439	245				
1FG1...-..G0.-....	100	CT	435	220	462	247	400	185	53	104.5	137	420	222	447	249	385	187	26	136	137	192
1FG1...-..G1.-....		CT	461	246	488	273	426	211			158	446	248	473	275	411	213			158	
1FG1...-..G3.-....		CT	487	272	514	299	452	237				472	274	499	301	437	239				
1FG1...-..G5.-....		CT	539	324	566	351	504	289				524	326	551	353	489	291				

© Siemens 2019

4

Dimensional drawings

Gearbox types *FZZ69* and *FDZ69*

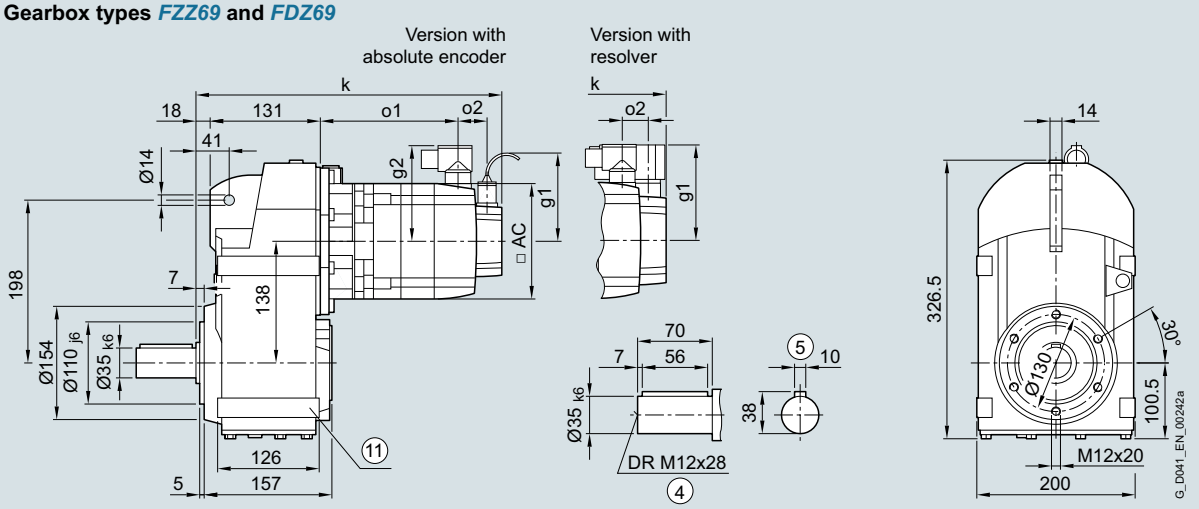

Gearbox types *FZAZ69* and *FDAZ69*

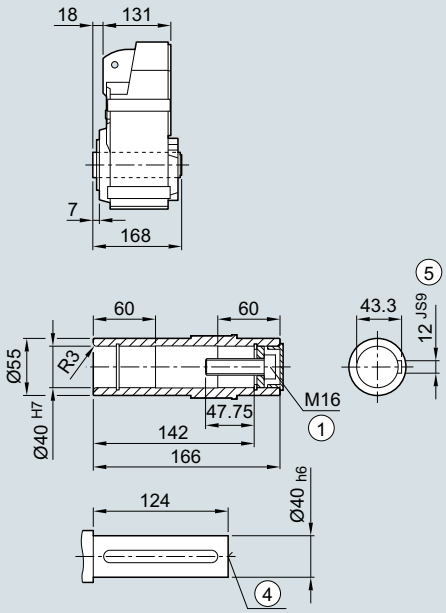

Gearbox types *FZAZS69* and *FDAZS69*

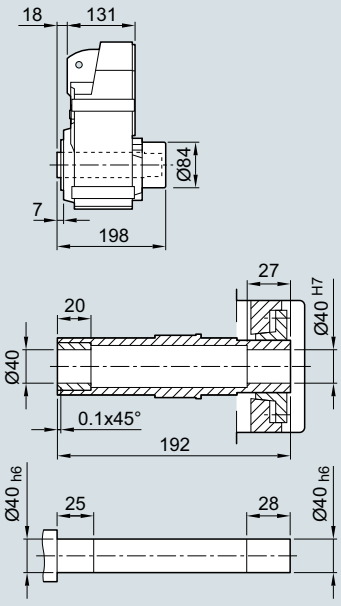

Gearbox types *FZAZT69* and *FDAZT69*

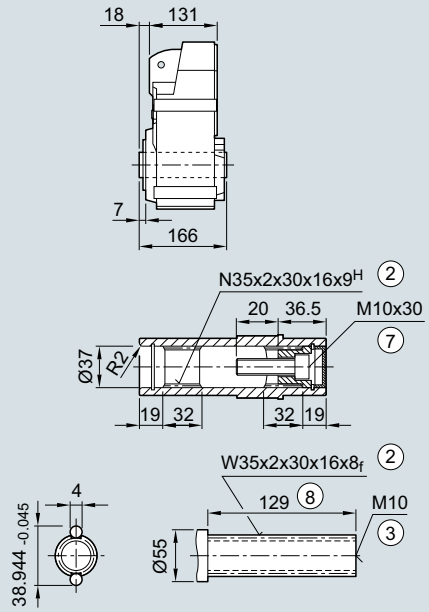

① ISO 4014 ② DIN 5480 ③ DIN 332-D ④ DIN 332
⑤ Feather key/keyway DIN 6885 ⑦ ISO 4762 ⑧ Without locating shoulder +1 mm
⑪ Use bores only for foot-mounted design

© Siemens 2019

Servo parallel shaft geared motor	Motor shaft height	Motor version	Absolute encoder with brake		with brake for increased energy		without brake					Resolver with brake		with brake for increased energy		without brake					
Type			k	o1	k	o1	k	o1	o2	g1	g2	k	o1	k	o1	k	o1	o2	g1	g2	AC
1FG1...-..C2.-....	36	CT	351	139	–	–	334	122	50	104.5	78	330	144	–	–	313	127	15	80	80	72
1FG1...-..C3.-....		HD	361	149	–	–	344	132				340	154	–	–	323	137				
1FG1...-..C4.-....		CT	376	164	–	–	359	147				355	169	–	–	338	152				
1FG1...-..D0.-....	48	CT	332	121	–	–	308	97	50	104.5	90	318	121	–	–	294	97	23	90	90	96
1FG1...-..D2.-....		CT	360	148	–	–	336	124				345	148	–	–	321	124				
1FG1...-..D3.-....		HD	386	168	–	–	362	144	56			371	174	–	–	347	150				
1FG1...-..D4.-....		HD	411	193	–	–	387	169				396	199	–	–	372	175				
1FG1...-..E0.-....	63	CT	365	154	–	–	351	139	50	104.5	104	351	154	–	–	336	139	23	103	104	126
1FG1...-..E1.-....		HD	400	189	–	–	386	174				386	189	–	–	371	174				
1FG1...-..E2.-....		CT	388	176	–	–	373	161				373	176	–	–	359	161				
1FG1...-..E3.-....		CT	410	199	–	–	396	184				396	199	–	–	381	184				
1FG1...-..E4.-....		HD	464	253	–	–	450	238				450	253	–	–	435	238				
1FG1...-..F0.-....	80	CT	404	195	415	206	368	158	48	104.5	119	390	196	401	207	353	159	21	118	119	155
1FG1...-..F1.-....		CT	423	214	434	225	387	177				409	215	420	226	372	178				
1FG1...-..F3.-....		CT	442	233	453	244	406	196				428	234	439	245	391	197				
1FG1...-..F4.-....		CT	462	252	473	263	425	215				447	253	458	264	411	216				
1FG1...-..F52-....		HD	490	281	501	292	454	244				476	282	487	293	439	245				
1FG1...-..F62-....		HD	490	281	501	292	454	244				476	282	487	293	439	245				
1FG1...-..F53-....		HD	490	281	501	292	454	244			139	476	282	487	293	439	245			139	
1FG1...-..F63-....		HD	490	281	501	292	454	244				476	282	487	293	439	245				
1FG1...-..G0.-....	100	CT	435	220	462	247	400	185	53	104.5	137	420	222	447	249	385	187	26	136	137	192
1FG1...-..G1.-....		CT	461	246	488	273	426	211			158	446	248	473	275	411	213			158	
1FG1...-..G3.-....		CT	487	272	514	299	452	237				472	274	499	301	437	239				
1FG1...-..G5.-....		CT	539	324	566	351	504	289				524	326	551	353	489	291				

© Siemens 2019

4

Dimensional drawings

Gearbox types *FZF69* and *FDF69*

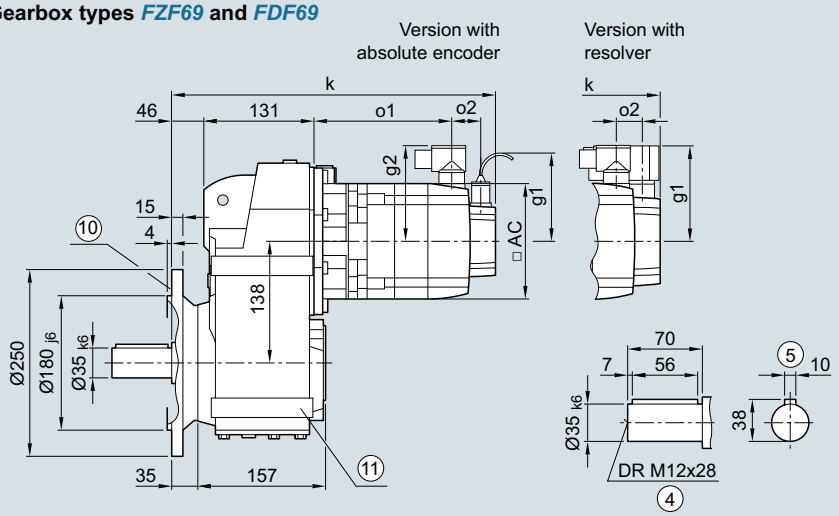

Gearbox types *FZAF69* and *FDAF69*

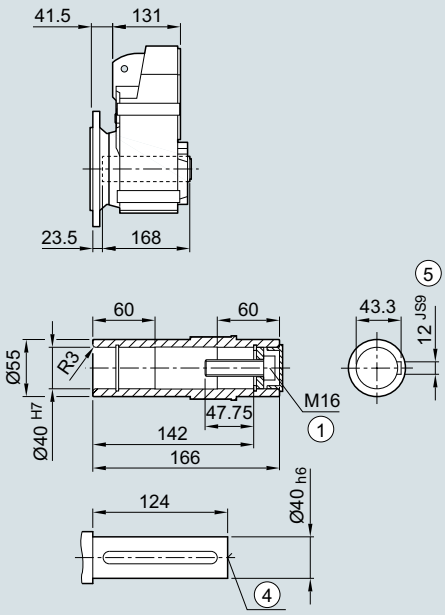

Gearbox types *FZAFS69* and *FDAFS69*

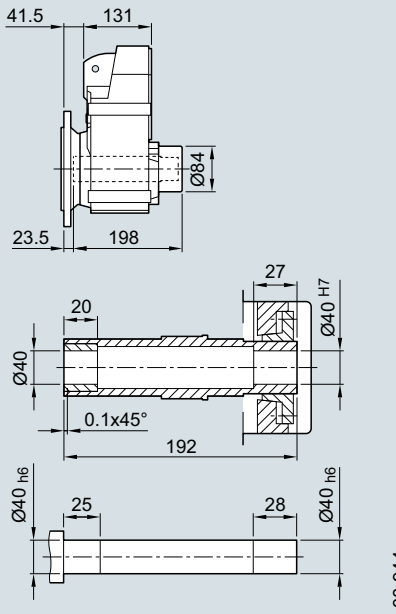

Gearbox types *FZAFT69* and *FDAFT69*

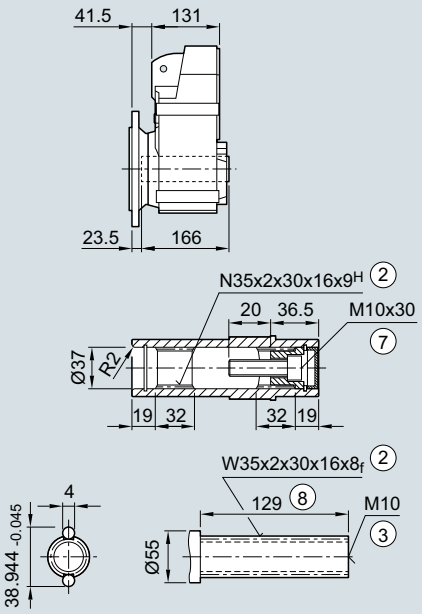

① ISO 4014
② DIN 5480
③ DIN 332-D
④ DIN 332
⑤ Feather key/keyway DIN 6885
⑦ ISO 4762
⑧ Without locating shoulder +1 mm
⑩ For inner contour of the flange design, see page 4/146
⑪ Use bores only for foot-mounted design

© Siemens 2019

Servo parallel shaft geared motor	Motor shaft height	Motor version	Absolute encoder with brake		with brake for increased energy		without brake					Resolver with brake		with brake for increased energy		without brake					
Type			k	o1	k	o1	k	o1	o2	g1	g2	k	o1	k	o1	k	o1	o2	g1	g2	AC
1FG1...-..C2.-....	36	CT	379	139	–	–	362	122	50	104.5	78	358	144	–	–	341	127	15	80	80	72
1FG1...-..C3.-....		HD	389	149	–	–	372	132				368	154	–	–	351	137				
1FG1...-..C4.-....		CT	404	164	–	–	387	147				383	169	–	–	366	152				
1FG1...-..D0.-....	48	CT	360	121	–	–	336	97	50	104.5	90	346	121	–	–	322	97	23	90	90	96
1FG1...-..D2.-....		CT	388	148	–	–	364	124				373	148	–	–	349	124				
1FG1...-..D3.-....		HD	414	168	–	–	390	144	56			399	174	–	–	375	150				
1FG1...-..D4.-....		HD	439	193	–	–	415	169				424	199	–	–	400	175				
1FG1...-..E0.-....	63	CT	393	154	–	–	379	139	50	104.5	104	379	154	–	–	364	139	23	103	104	126
1FG1...-..E1.-....		HD	428	189	–	–	414	174				414	189	–	–	399	174				
1FG1...-..E2.-....		CT	416	176	–	–	401	161				401	176	–	–	387	161				
1FG1...-..E3.-....		CT	438	199	–	–	424	184				424	199	–	–	409	184				
1FG1...-..E4.-....		HD	492	253	–	–	478	238				478	253	–	–	463	238				
1FG1...-..F0.-....	80	CT	432	195	443	206	396	158	48	104.5	119	418	196	429	207	381	159	21	118	119	155
1FG1...-..F1.-....		CT	451	214	462	225	415	177				437	215	448	226	400	178				
1FG1...-..F3.-....		CT	470	233	481	244	434	196				456	234	467	245	419	197				
1FG1...-..F4.-....		CT	490	252	501	263	453	215				475	253	486	264	439	216				
1FG1...-..F52-....		HD	518	281	529	292	482	244				504	282	515	293	467	245				
1FG1...-..F62-....		HD	518	281	529	292	482	244				504	282	515	293	467	245				
1FG1...-..F53-....		HD	518	281	529	292	482	244			139	504	282	515	293	467	245			139	
1FG1...-..F63-....		HD	518	281	529	292	482	244				504	282	515	293	467	245				
1FG1...-..G0.-....	100	CT	463	220	490	247	428	185	53	104.5	137	448	222	475	249	413	187	26	136	137	192
1FG1...-..G1.-....		CT	489	246	516	273	454	211			158	474	248	501	275	439	213			158	
1FG1...-..G3.-....		CT	515	272	542	299	480	237				500	274	527	301	465	239				
1FG1...-..G5.-....		CT	567	324	594	351	532	289				552	326	579	353	517	291				

© Siemens 2019

4

Dimensional drawings

Gearbox types *FZ69* and *FD69*

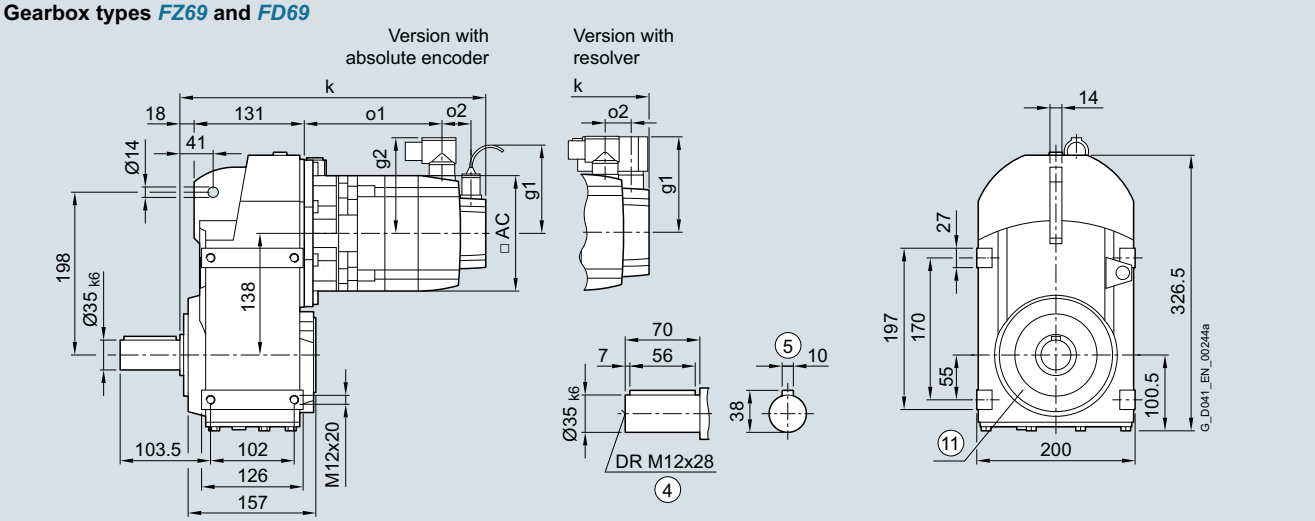

Gearbox types *FZA69* and *FDA69*

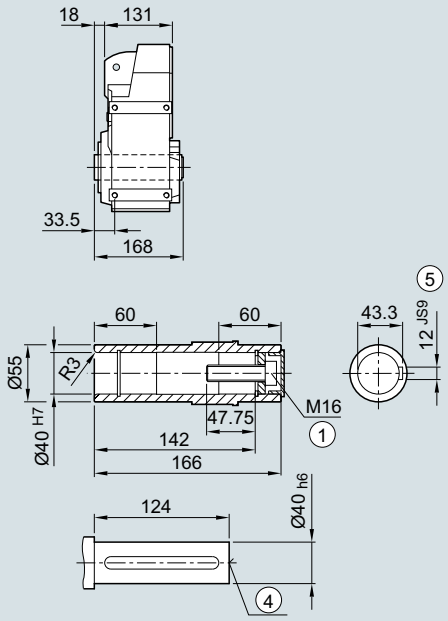

Gearbox types *FZAS69* and *FDAS69*

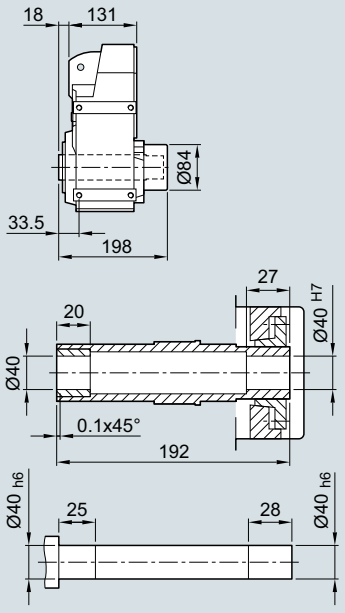

Gearbox types *FZAT69* and *FDAT69*

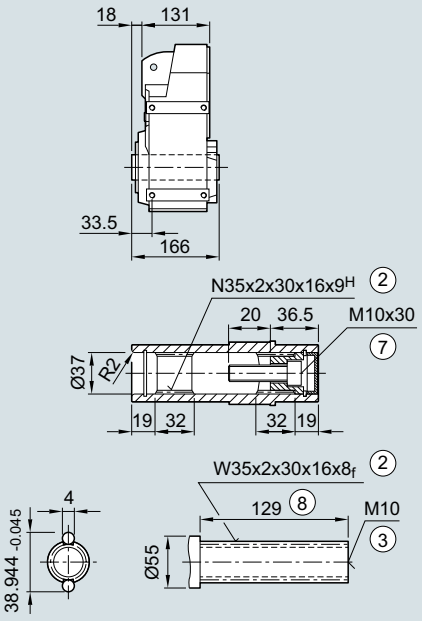

① ISO 4014 ② DIN 5480 ③ DIN 332-D ④ DIN 332
⑤ Feather key/keyway DIN 6885 ⑦ ISO 4762 ⑧ Without locating shoulder +1 mm
⑪ Use bores only for housing flange design

© Siemens 2019

Servo parallel shaft geared motor	Motor shaft height	Motor version	Absolute encoder with brake		with brake for increased energy		without brake					Resolver with brake		with brake for increased energy		without brake					
Type			k	o1	k	o1	k	o1	o2	g1	g2	k	o1	k	o1	k	o1	o2	g1	g2	AC
1FG1...-..C2.-....	36	CT	351	139	–	–	334	122	50	104.5	78	330	144	–	–	313	127	15	80	80	72
1FG1...-..C3.-....		HD	361	149	–	–	344	132				340	154	–	–	323	137				
1FG1...-..C4.-....		CT	376	164	–	–	359	147				355	169	–	–	338	152				
1FG1...-..D0.-....	48	CT	332	121	–	–	308	97	50	104.5	90	318	121	–	–	294	97	23	90	90	96
1FG1...-..D2.-....		CT	360	148	–	–	336	124				345	148	–	–	321	124				
1FG1...-..D3.-....		HD	386	168	–	–	362	144	56			371	174	–	–	347	150				
1FG1...-..D4.-....		HD	411	193	–	–	387	169				396	199	–	–	372	175				
1FG1...-..E0.-....	63	CT	365	154	–	–	351	139	50	104.5	104	351	154	–	–	336	139	23	103	104	126
1FG1...-..E1.-....		HD	400	189	–	–	386	174				386	189	–	–	371	174				
1FG1...-..E2.-....		CT	388	176	–	–	373	161				373	176	–	–	359	161				
1FG1...-..E3.-....		CT	410	199	–	–	396	184				396	199	–	–	381	184				
1FG1...-..E4.-....		HD	464	253	–	–	450	238				450	253	–	–	435	238				
1FG1...-..F0.-....	80	CT	404	195	415	206	368	158	48	104.5	119	390	196	401	207	353	159	21	118	119	155
1FG1...-..F1.-....		CT	423	214	434	225	387	177				409	215	420	226	372	178				
1FG1...-..F3.-....		CT	442	233	453	244	406	196				428	234	439	245	391	197				
1FG1...-..F4.-....		CT	462	252	473	263	425	215				447	253	458	264	411	216				
1FG1...-..F52-....		HD	490	281	501	292	454	244				476	282	487	293	439	245				
1FG1...-..F62-....		HD	490	281	501	292	454	244				476	282	487	293	439	245				
1FG1...-..F53-....		HD	490	281	501	292	454	244			139	476	282	487	293	439	245			139	
1FG1...-..F63-....		HD	490	281	501	292	454	244				476	282	487	293	439	245				
1FG1...-..G0.-....	100	CT	435	220	462	247	400	185	53	104.5	137	420	222	447	249	385	187	26	136	137	192
1FG1...-..G1.-....		CT	461	246	488	273	426	211			158	446	248	473	275	411	213			158	
1FG1...-..G3.-....		CT	487	272	514	299	452	237				472	274	499	301	437	239				
1FG1...-..G5.-....		CT	539	324	566	351	504	289				524	326	551	353	489	291				

© Siemens 2019

4

Dimensional drawings

Gearbox types *FZAD79* and *FDAD79*

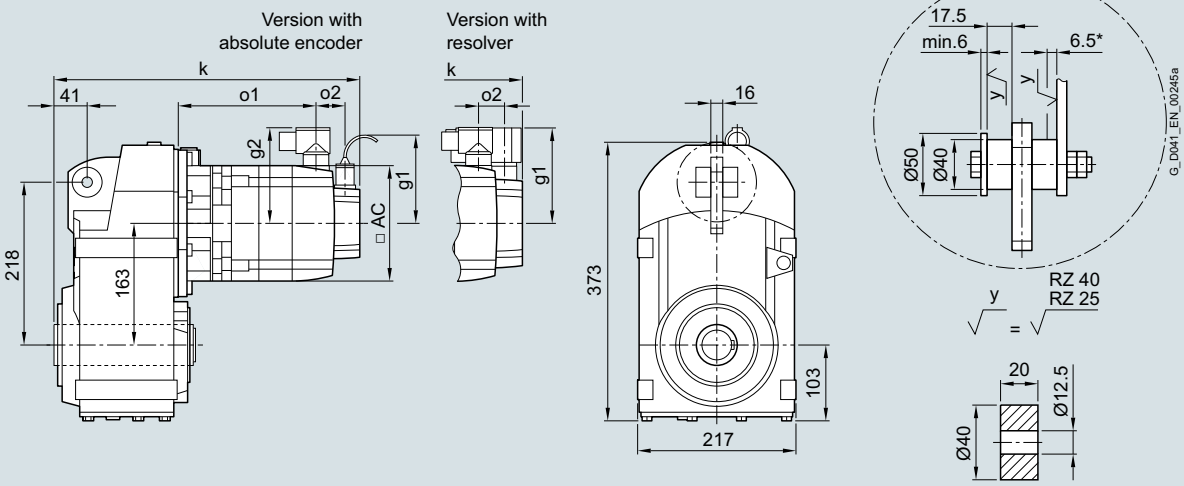

Gearbox types *FZAD79* and *FDAD79*

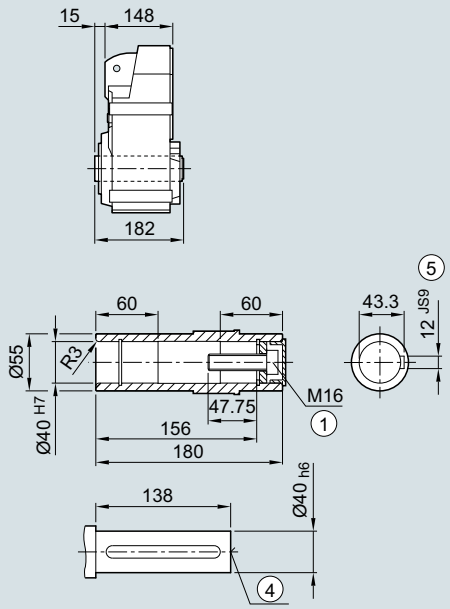

Gearbox types *FZADS79* and *FDADS79*

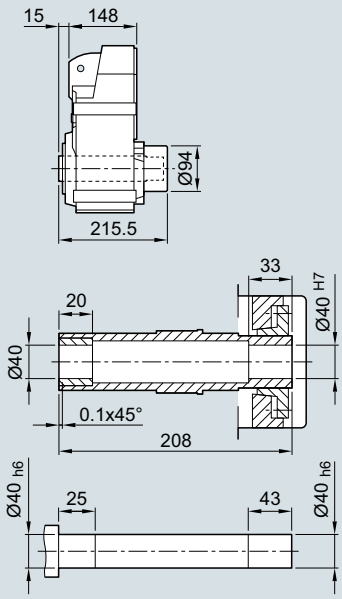

Gearbox types *FZADT79* and *FDADT79*

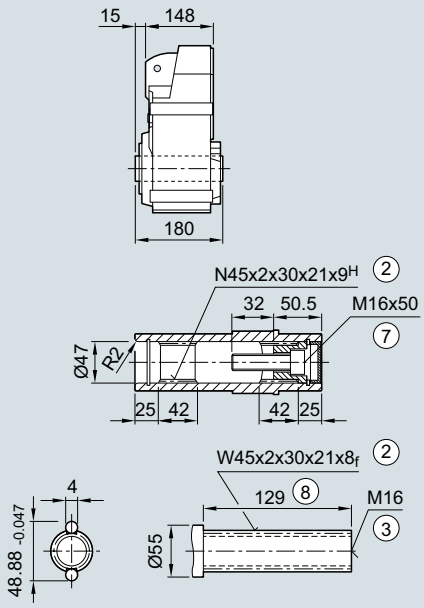

① ISO 4014 ② DIN 5480 ③ DIN 332-D ④ DIN 332
⑤ Feather key/keyway DIN 6885 ⑦ ISO 4762 ⑧ Without locating shoulder +1 mm

* Spring compression at max. torque

© Siemens 2019

Servo parallel shaft geared motor	Motor shaft height	Motor version	Absolute encoder with brake		with brake for increased energy		without brake					Resolver with brake		with brake for increased energy		without brake					
Type			k	o1	k	o1	k	o1	o2	g1	g2	k	o1	k	o1	k	o1	o2	g1	g2	AC
1FG1...-..C2.-....	36	CT	–	–	–	–	–	–	–	–	–	–	–	–	–	–	–	–	–	–	–
1FG1...-..C3.-....		HD	–	–	–	–	–	–	–	–	–	–	–	–	–	–	–	–	–	–	–
1FG1...-..C4.-....		CT	–	–	–	–	–	–	–	–	–	–	–	–	–	–	–	–	–	–	–
1FG1...-..D0.-....	48	CT	–	–	–	–	–	–	–	–	–	–	–	–	–	–	–	–	–	–	–
1FG1...-..D2.-....		CT	–	–	–	–	–	–	–	–	–	–	–	–	–	–	–	–	–	–	–
1FG1...-..D3.-....		HD	–	–	–	–	–	–	–	–	–	–	–	–	–	–	–	–	–	–	–
1FG1...-..D4.-....		HD	–	–	–	–	–	–	–	–	–	–	–	–	–	–	–	–	–	–	–
1FG1...-..E0.-....	63	CT	373	148	–	–	359	133	50	104.5	104	359	148	–	–	344	133	23	103	104	126
1FG1...-..E1.-....		HD	408	183	–	–	394	168				394	183	–	–	379	168				
1FG1...-..E2.-....		CT	396	170	–	–	381	155				381	170	–	–	367	155				
1FG1...-..E3.-....		CT	418	193	–	–	404	178				404	193	–	–	389	178				
1FG1...-..E4.-....		HD	472	247	–	–	458	232				458	247	–	–	443	232				
1FG1...-..F0.-....	80	CT	412	189	423	200	376	152	48	104.5	119	398	190	409	201	361	153	21	118	119	155
1FG1...-..F1.-....		CT	431	208	442	219	395	171				417	209	428	220	380	172				
1FG1...-..F3.-....		CT	450	227	461	238	414	190				436	228	447	239	399	191				
1FG1...-..F4.-....		CT	470	246	481	257	433	209				455	247	466	258	419	210				
1FG1...-..F52-....		HD	498	275	509	286	462	238				484	276	495	287	447	239				
1FG1...-..F62-....		HD	498	275	509	286	462	238				484	276	495	287	447	239				
1FG1...-..F53-....		HD	498	275	509	286	462	238			139	484	276	495	287	447	239			139	
1FG1...-..F63-....		HD	498	275	509	286	462	238				484	276	495	287	447	239				
1FG1...-..G0.-....	100	CT	443	214	470	241	408	179	53	104.5	137	428	216	455	243	393	181	26	136	137	192
1FG1...-..G1.-....		CT	469	240	496	267	434	205			158	454	242	481	269	419	207			158	
1FG1...-..G3.-....		CT	495	266	522	293	460	231				480	268	507	295	445	233				
1FG1...-..G5.-....		CT	547	318	574	345	512	283				532	320	559	347	497	285				

© Siemens 2019

4

Dimensional drawings

Gearbox types *FZZ79* and *FDZ79*

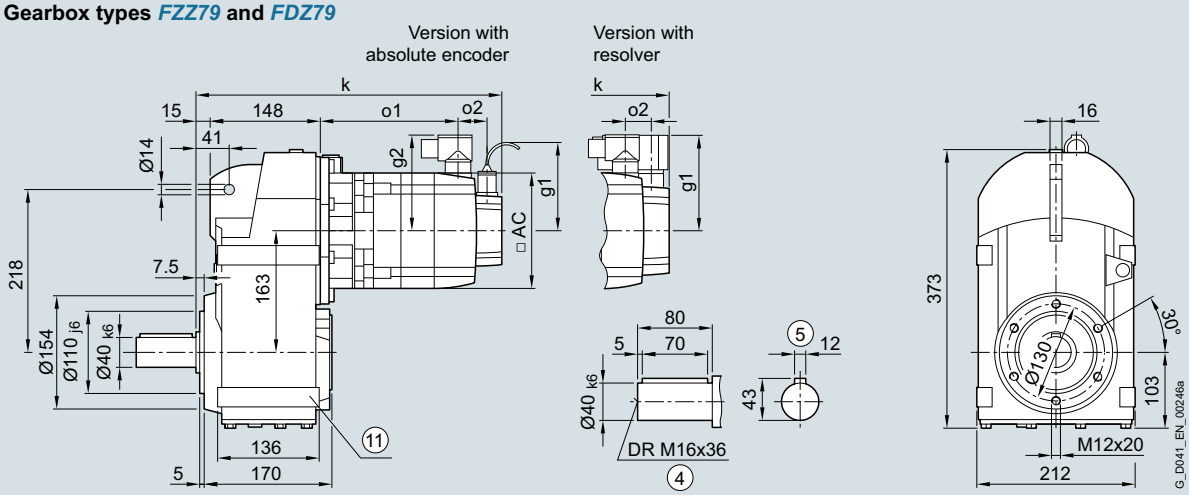

Gearbox types *FZAZ79* and *FDAZ79*

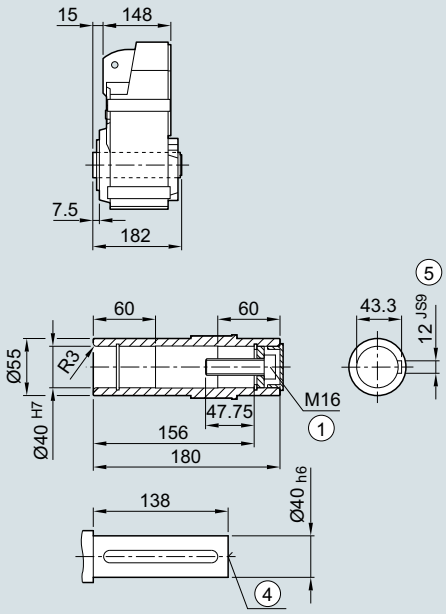

Gearbox types *FZAZS79* and *FDAZS79*

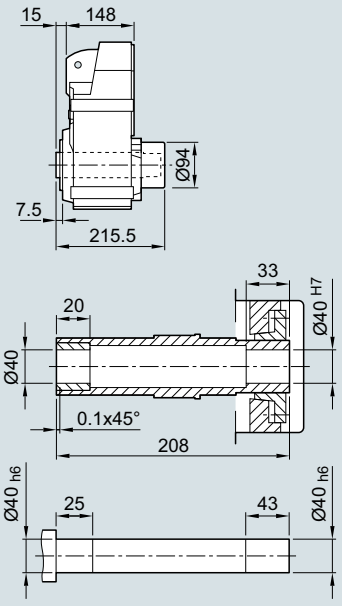

Gearbox types *FZAZT79* and *FDAZT79*

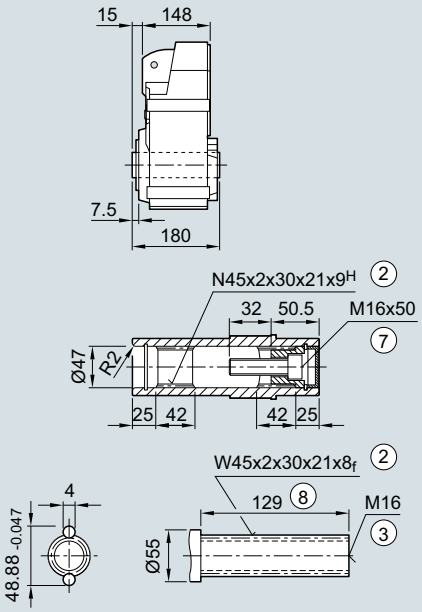

① ISO 4014 ② DIN 5480 ③ DIN 332-D ④ DIN 332
⑤ Feather key/keyway DIN 6885 ⑦ ISO 4762 ⑧ Without locating shoulder +1 mm
⑪ Use bores only for foot-mounted design

© Siemens 2019

Servo parallel shaft geared motor	Motor shaft height	Motor version	Absolute encoder with brake		with brake for increased energy		without brake					Resolver with brake		with brake for increased energy		without brake					
Type			k	o1	k	o1	k	o1	o2	g1	g2	k	o1	k	o1	k	o1	o2	g1	g2	AC
1FG1...-..C2.-....	36	CT	–	–	–	–	–	–	–	–	–	–	–	–	–	–	–	–	–	–	–
1FG1...-..C3.-....		HD	–	–	–	–	–	–	–	–	–	–	–	–	–	–	–	–	–	–	–
1FG1...-..C4.-....		CT	–	–	–	–	–	–	–	–	–	–	–	–	–	–	–	–	–	–	–
1FG1...-..D0.-....	48	CT	–	–	–	–	–	–	–	–	–	–	–	–	–	–	–	–	–	–	–
1FG1...-..D2.-....		CT	–	–	–	–	–	–	–	–	–	–	–	–	–	–	–	–	–	–	–
1FG1...-..D3.-....		HD	–	–	–	–	–	–	–	–	–	–	–	–	–	–	–	–	–	–	–
1FG1...-..D4.-....		HD	–	–	–	–	–	–	–	–	–	–	–	–	–	–	–	–	–	–	–
1FG1...-..E0.-....	63	CT	373	148	–	–	359	133	50	104.5	104	359	148	–	–	344	133	23	103	104	126
1FG1...-..E1.-....		HD	408	183	–	–	394	168				394	183	–	–	379	168				
1FG1...-..E2.-....		CT	396	170	–	–	381	155				381	170	–	–	367	155				
1FG1...-..E3.-....		CT	418	193	–	–	404	178				404	193	–	–	389	178				
1FG1...-..E4.-....		HD	472	247	–	–	458	232				458	247	–	–	443	232				
1FG1...-..F0.-....	80	CT	412	189	423	200	376	152	48	104.5	119	398	190	409	201	361	153	21	118	119	155
1FG1...-..F1.-....		CT	431	208	442	219	395	171				417	209	428	220	380	172				
1FG1...-..F3.-....		CT	450	227	461	238	414	190				436	228	447	239	399	191				
1FG1...-..F4.-....		CT	470	246	481	257	433	209				455	247	466	258	419	210				
1FG1...-..F52-....		HD	498	275	509	286	462	238				484	276	495	287	447	239				
1FG1...-..F62-....		HD	498	275	509	286	462	238				484	276	495	287	447	239				
1FG1...-..F53-....		HD	498	275	509	286	462	238			139	484	276	495	287	447	239			139	
1FG1...-..F63-....		HD	498	275	509	286	462	238				484	276	495	287	447	239				
1FG1...-..G0.-....	100	CT	443	214	470	241	408	179	53	104.5	137	428	216	455	243	393	181	26	136	137	192
1FG1...-..G1.-....		CT	469	240	496	267	434	205			158	454	242	481	269	419	207			158	
1FG1...-..G3.-....		CT	495	266	522	293	460	231				480	268	507	295	445	233				
1FG1...-..G5.-....		CT	547	318	574	345	512	283				532	320	559	347	497	285				

© Siemens 2019

4

Dimensional drawings

Gearbox types *FZF79* and *FDF79*

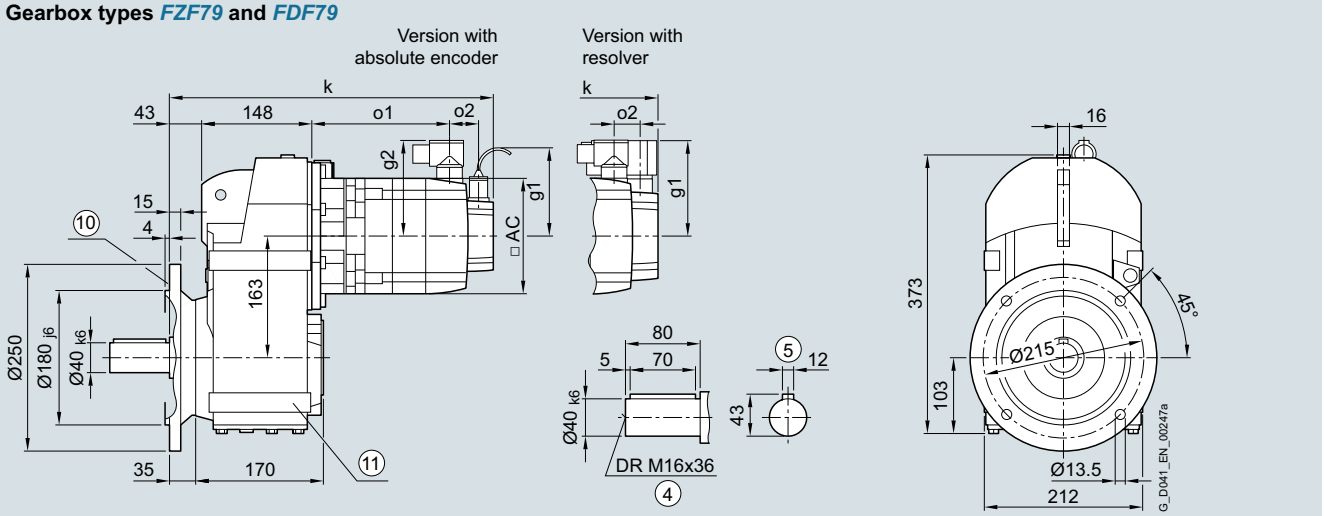

Gearbox types *FZAF79* and *FDAF79*

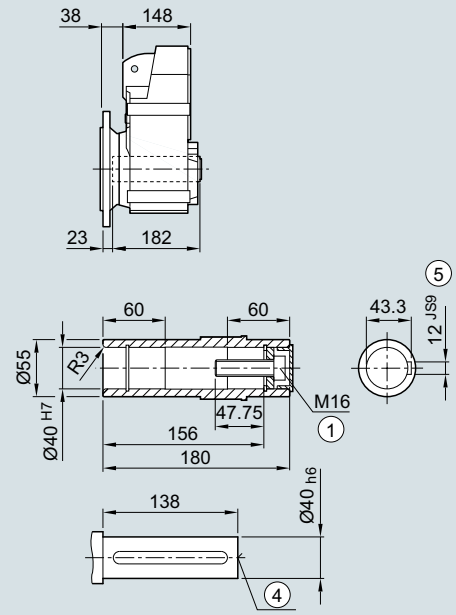

Gearbox types *FZAFS79* and *FDAFS79*

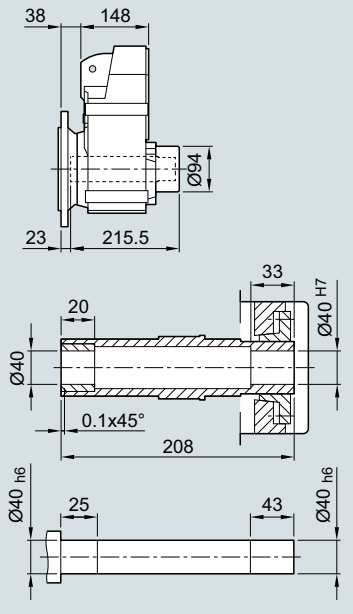

Gearbox types *FZAFT79* and *FDAFT79*

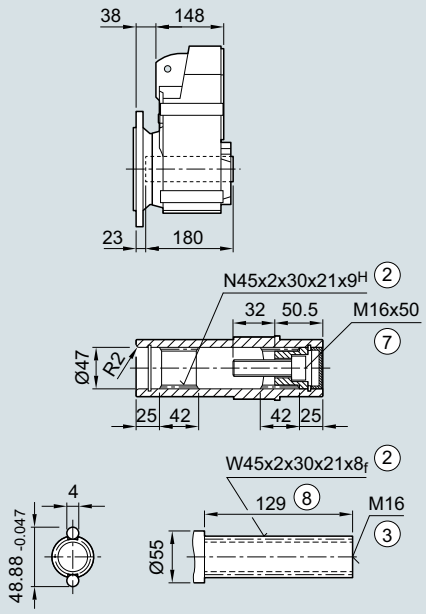

① ISO 4014
② DIN 5480
③ DIN 332-D
④ DIN 332
⑤ Feather key/keyway DIN 6885
⑦ ISO 4762
⑧ Without locating shoulder +1 mm
⑩ For inner contour of the flange design, see page 4/146
⑪ Use bores only for foot-mounted design

© Siemens 2019

Servo parallel shaft geared motor	Motor shaft height	Motor version	Absolute encoder with brake		with brake for increased energy		without brake					Resolver with brake		with brake for increased energy		without brake					
Type			k	o1	k	o1	k	o1	o2	g1	g2	k	o1	k	o1	k	o1	o2	g1	g2	AC
1FG1...-..C2.-....	36	CT	–	–	–	–	–	–	–	–	–	–	–	–	–	–	–	–	–	–	–
1FG1...-..C3.-....		HD	–	–	–	–	–	–	–	–	–	–	–	–	–	–	–	–	–	–	–
1FG1...-..C4.-....		CT	–	–	–	–	–	–	–	–	–	–	–	–	–	–	–	–	–	–	–
1FG1...-..D0.-....	48	CT	–	–	–	–	–	–	–	–	–	–	–	–	–	–	–	–	–	–	–
1FG1...-..D2.-....		CT	–	–	–	–	–	–	–	–	–	–	–	–	–	–	–	–	–	–	–
1FG1...-..D3.-....		HD	–	–	–	–	–	–	–	–	–	–	–	–	–	–	–	–	–	–	–
1FG1...-..D4.-....		HD	–	–	–	–	–	–	–	–	–	–	–	–	–	–	–	–	–	–	–
1FG1...-..E0.-....	63	CT	401	148	–	–	387	133	50	104.5	104	387	148	–	–	372	133	23	103	104	126
1FG1...-..E1.-....		HD	436	183	–	–	422	168				422	183	–	–	407	168				
1FG1...-..E2.-....		CT	424	170	–	–	409	155				409	170	–	–	395	155				
1FG1...-..E3.-....		CT	446	193	–	–	432	178				432	193	–	–	417	178				
1FG1...-..E4.-....		HD	500	247	–	–	486	232				486	247	–	–	471	232				
1FG1...-..F0.-....	80	CT	440	189	451	200	404	152	48	104.5	119	426	190	437	201	389	153	21	118	119	155
1FG1...-..F1.-....		CT	459	208	470	219	423	171				445	209	456	220	408	172				
1FG1...-..F3.-....		CT	478	227	489	238	442	190				464	228	475	239	427	191				
1FG1...-..F4.-....		CT	498	246	509	257	461	209				483	247	494	258	447	210				
1FG1...-..F52-....		HD	526	275	537	286	490	238				512	276	523	287	475	239				
1FG1...-..F62-....		HD	526	275	537	286	490	238				512	276	523	287	475	239				
1FG1...-..F53-....		HD	526	275	537	286	490	238			139	512	276	523	287	475	239			139	
1FG1...-..F63-....		HD	526	275	537	286	490	238				512	276	523	287	475	239				
1FG1...-..G0.-....	100	CT	471	214	498	241	436	179	53	104.5	137	456	216	483	243	421	181	26	136	137	192
1FG1...-..G1.-....		CT	497	240	524	267	462	205			158	482	242	509	269	447	207			158	
1FG1...-..G3.-....		CT	523	266	550	293	488	231				508	268	535	295	473	233				
1FG1...-..G5.-....		CT	575	318	602	345	540	283				560	320	587	347	525	285				

© Siemens 2019

4

Dimensional drawings

Gearbox types *FZ79* and *FD79*

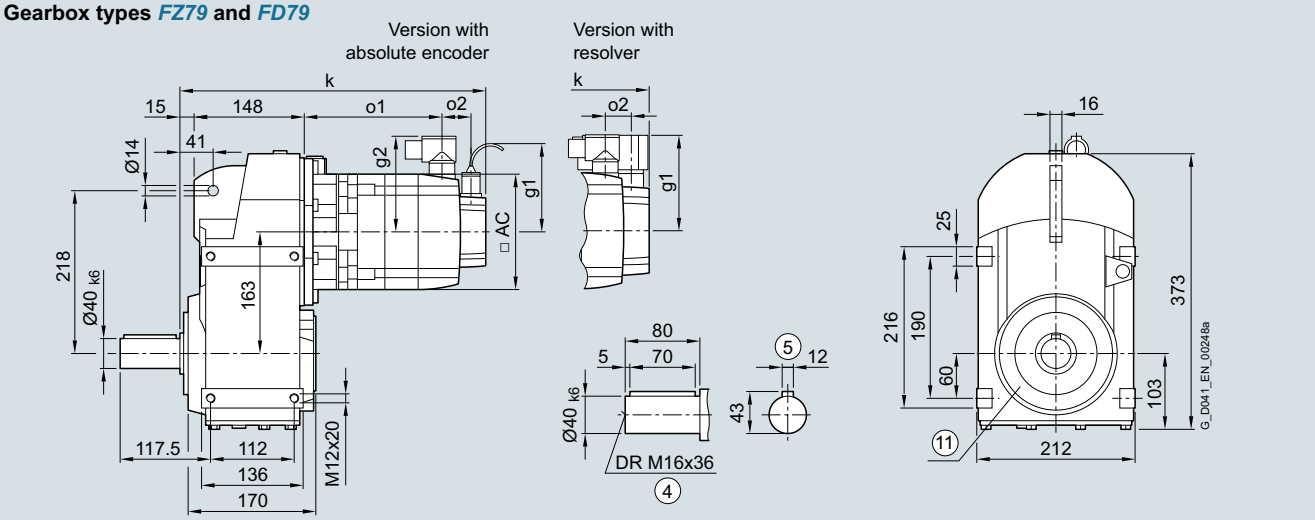

Gearbox types *FZA79* and *FDA79*

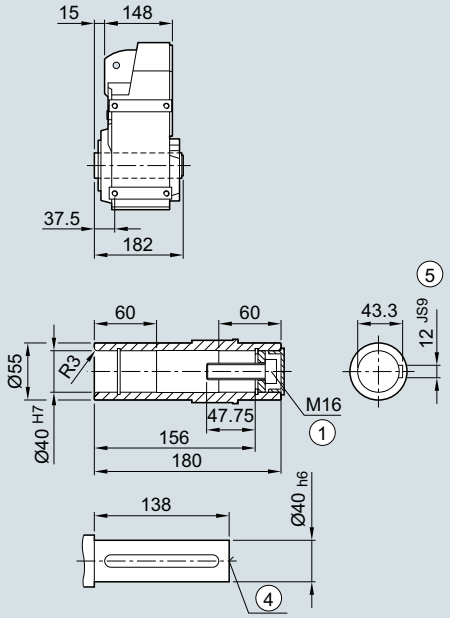

Gearbox types *FZAS79* and *FDAS79*

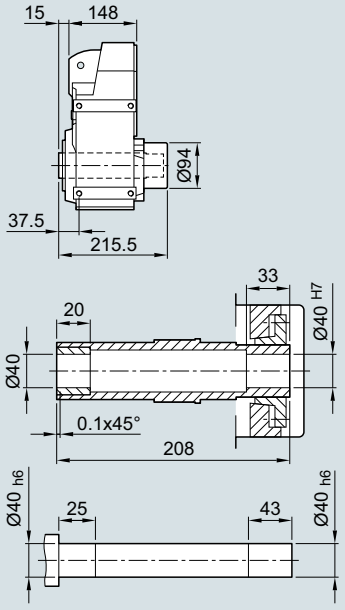

Gearbox types *FZAT79* and *FDAT79*

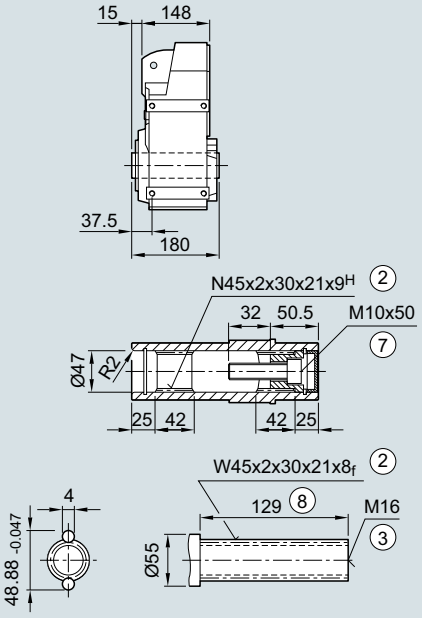

① ISO 4014 ② DIN 5480 ③ DIN 332-D ④ DIN 332
⑤ Feather key/keyway DIN 6885 ⑦ ISO 4762 ⑧ Without locating shoulder +1 mm
⑪ Use bores only for housing flange design

© Siemens 2019

Servo parallel shaft geared motor	Motor shaft height	Motor version	Absolute encoder with brake		with brake for increased energy		without brake					Resolver with brake		with brake for increased energy		without brake					
Type			k	o1	k	o1	k	o1	o2	g1	g2	k	o1	k	o1	k	o1	o2	g1	g2	AC
1FG1...-..C2.-....	36	CT	–	–	–	–	–	–	–	–	–	–	–	–	–	–	–	–	–	–	–
1FG1...-..C3.-....		HD	–	–	–	–	–	–	–	–	–	–	–	–	–	–	–	–	–	–	–
1FG1...-..C4.-....		CT	–	–	–	–	–	–	–	–	–	–	–	–	–	–	–	–	–	–	–
1FG1...-..D0.-....	48	CT	–	–	–	–	–	–	–	–	–	–	–	–	–	–	–	–	–	–	–
1FG1...-..D2.-....		CT	–	–	–	–	–	–	–	–	–	–	–	–	–	–	–	–	–	–	–
1FG1...-..D3.-....		HD	–	–	–	–	–	–	–	–	–	–	–	–	–	–	–	–	–	–	–
1FG1...-..D4.-....		HD	–	–	–	–	–	–	–	–	–	–	–	–	–	–	–	–	–	–	–
1FG1...-..E0.-....	63	CT	373	148	–	–	359	133	50	104.5	104	359	148	–	–	344	133	23	103	104	126
1FG1...-..E1.-....		HD	408	183	–	–	394	168				394	183	–	–	379	168				
1FG1...-..E2.-....		CT	396	170	–	–	381	155				381	170	–	–	367	155				
1FG1...-..E3.-....		CT	418	193	–	–	404	178				404	193	–	–	389	178				
1FG1...-..E4.-....		HD	472	247	–	–	458	232				458	247	–	–	443	232				
1FG1...-..F0.-....	80	CT	412	189	423	200	376	152	48	104.5	119	398	190	409	201	361	153	21	118	119	155
1FG1...-..F1.-....		CT	431	208	442	219	395	171				417	209	428	220	380	172				
1FG1...-..F3.-....		CT	450	227	461	238	414	190				436	228	447	239	399	191				
1FG1...-..F4.-....		CT	470	246	481	257	433	209				455	247	466	258	419	210				
1FG1...-..F52-....		HD	498	275	509	286	462	238				484	276	495	287	447	239				
1FG1...-..F62-....		HD	498	275	509	286	462	238				484	276	495	287	447	239				
1FG1...-..F53-....		HD	498	275	509	286	462	238			139	484	276	495	287	447	239			139	
1FG1...-..F63-....		HD	498	275	509	286	462	238				484	276	495	287	447	239				
1FG1...-..G0.-....	100	CT	443	214	470	241	408	179	53	104.5	137	428	216	455	243	393	181	26	136	137	192
1FG1...-..G1.-....		CT	469	240	496	267	434	205			158	454	242	481	269	419	207			158	
1FG1...-..G3.-....		CT	495	266	522	293	460	231				480	268	507	295	445	233				
1FG1...-..G5.-....		CT	547	318	574	345	512	283				532	320	559	347	497	285				

© Siemens 2019

4

Dimensional drawings

Gearbox types *FZAD89* and *FDAD89*

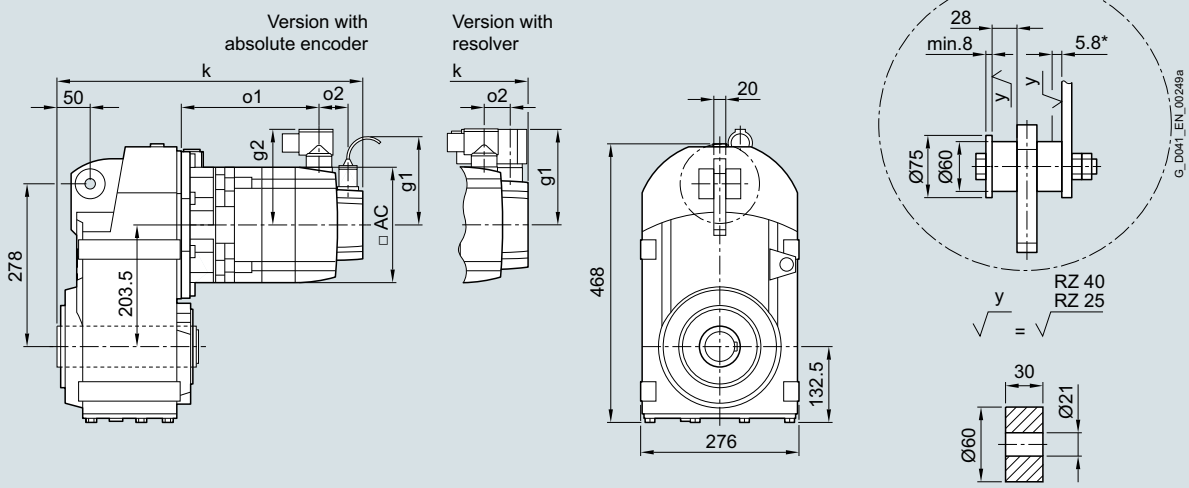

Gearbox types *FZAD89* and *FDAD89*

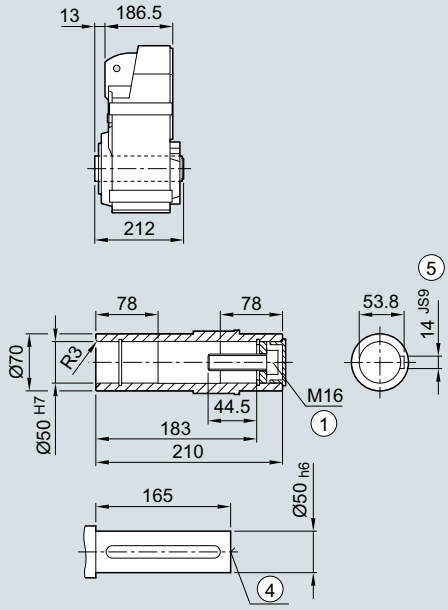

Gearbox types *FZADS89* and *FDADS89*

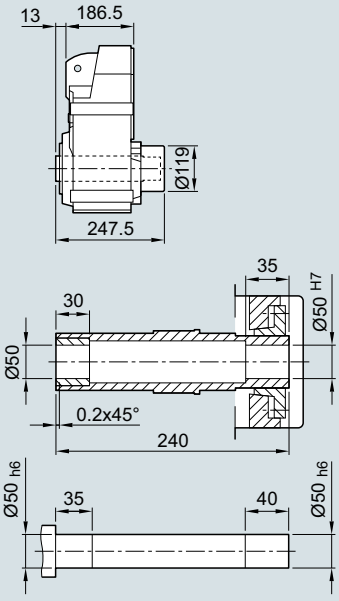

Gearbox types *FZADT89* and *FDADT89*

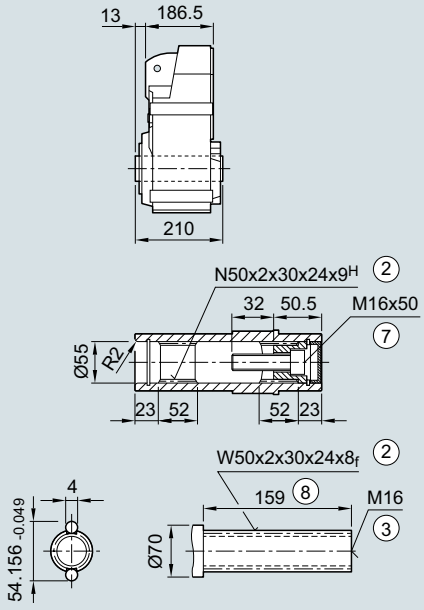

① ISO 4014 ② DIN 5480 ③ DIN 332-D ④ DIN 332
⑤ Feather key/keyway DIN 6885 ⑦ ISO 4762 ⑧ Without locating shoulder +1 mm

* Spring compression at max. torque

© Siemens 2019

Servo parallel shaft geared motor	Motor shaft height	Motor version	Absolute encoder with brake		with brake for increased energy		without brake					Resolver with brake		with brake for increased energy		without brake					
Type			k	o1	k	o1	k	o1	o2	g1	g2	k	o1	k	o1	k	o1	o2	g1	g2	AC
1FG1...-..C2.-....	36	CT	–	–	–	–	–	–	–	–	–	–	–	–	–	–	–	–	–	–	–
1FG1...-..C3.-....		HD	–	–	–	–	–	–	–	–	–	–	–	–	–	–	–	–	–	–	–
1FG1...-..C4.-....		CT	–	–	–	–	–	–	–	–	–	–	–	–	–	–	–	–	–	–	–
1FG1...-..D0.-....	48	CT	–	–	–	–	–	–	–	–	–	–	–	–	–	–	–	–	–	–	–
1FG1...-..D2.-....		CT	–	–	–	–	–	–	–	–	–	–	–	–	–	–	–	–	–	–	–
1FG1...-..D3.-....		HD	–	–	–	–	–	–	–	–	–	–	–	–	–	–	–	–	–	–	–
1FG1...-..D4.-....		HD	–	–	–	–	–	–	–	–	–	–	–	–	–	–	–	–	–	–	–
1FG1...-..E0.-....	63	CT	397	135	–	–	382	120	50	104.5	104	382	135	–	–	368	120	23	103	104	126
1FG1...-..E1.-....		HD	432	170	–	–	417	155				417	170	–	–	403	155				
1FG1...-..E2.-....		CT	419	157	–	–	405	142				405	157	–	–	390	142				
1FG1...-..E3.-....		CT	442	180	–	–	427	165				427	180	–	–	413	165				
1FG1...-..E4.-....		HD	496	234	–	–	481	219				481	234	–	–	467	219				
1FG1...-..F0.-....	80	CT	432	172	443	183	395	135	48	104.5	119	417	173	428	184	381	136	21	118	119	155
1FG1...-..F1.-....		CT	451	191	462	202	414	154				436	192	447	203	400	155				
1FG1...-..F3.-....		CT	470	210	481	221	433	173				455	211	466	222	419	174				
1FG1...-..F4.-....		CT	489	229	500	240	453	192				475	230	486	241	438	193				
1FG1...-..F52-....		HD	518	258	529	269	481	221				503	259	514	270	467	222				
1FG1...-..F62-....		HD	518	258	529	269	481	221				503	259	514	270	467	222				
1FG1...-..F53-....		HD	518	258	529	269	481	221			139	503	259	514	270	467	222			139	
1FG1...-..F63-....		HD	518	258	529	269	481	221				503	259	514	270	467	222				
1FG1...-..G0.-....	100	CT	462	197	489	224	427	162	53	104.5	137	448	199	475	226	413	164	26	136	137	192
1FG1...-..G1.-....		CT	488	223	515	250	453	188			158	474	225	501	252	439	190			158	
1FG1...-..G3.-....		CT	514	249	541	276	479	214				500	251	527	278	465	216				
1FG1...-..G5.-....		CT	566	301	593	328	531	266				552	303	579	330	517	268				

© Siemens 2019

4

Dimensional drawings

Gearbox types *FZZ89* and *FDZ89*

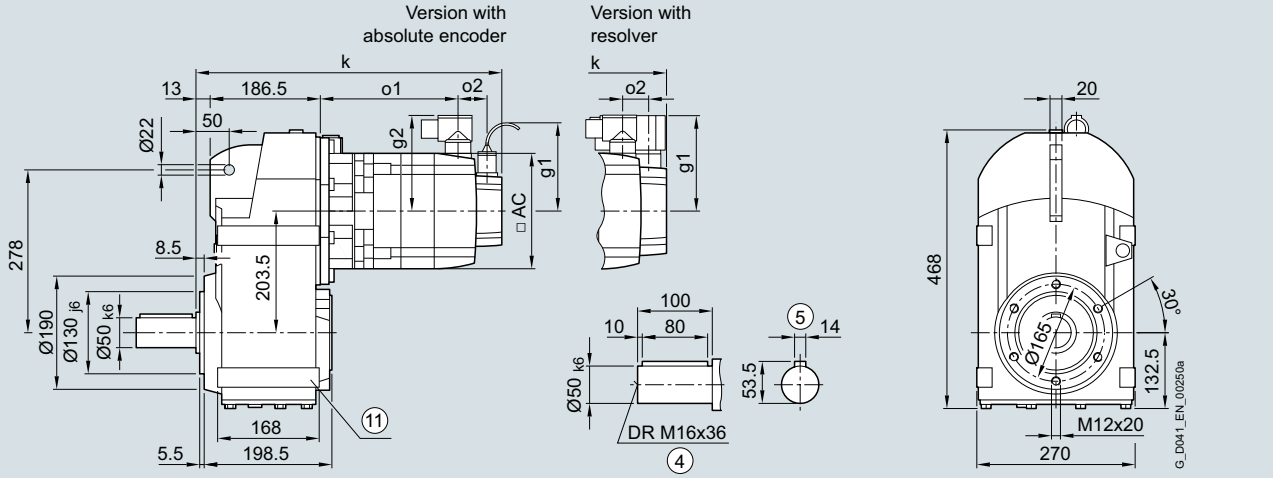

Gearbox types *FZAZ89* and *FDAZ89*

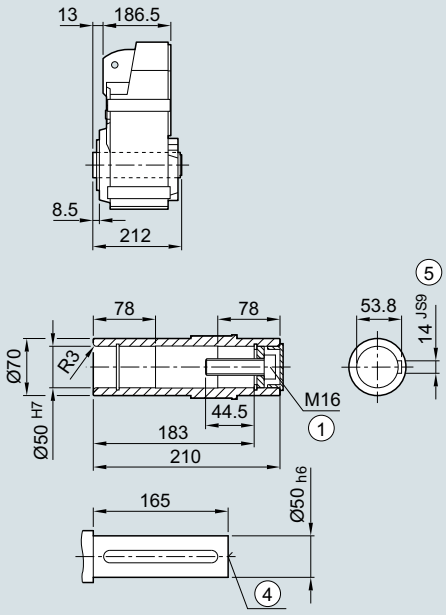

Gearbox types *FZAZS89* and *FDAZS89*

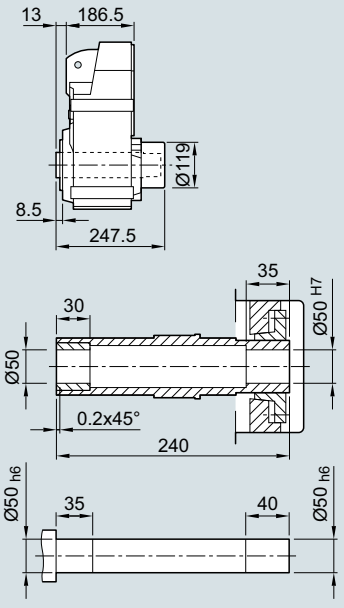

Gearbox types *FZAZT89* and *FDAZT89*

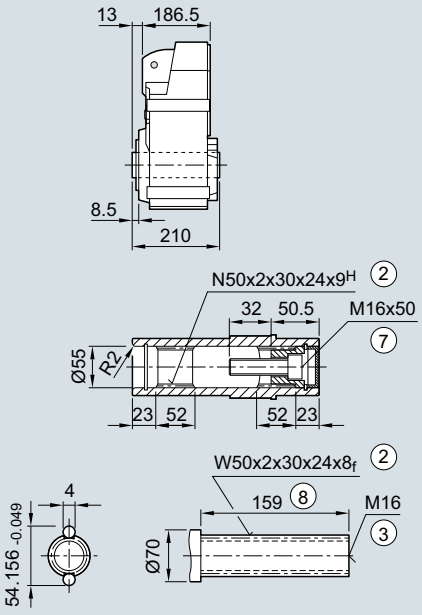

① ISO 4014 ② DIN 5480 ③ DIN 332-D ④ DIN 332
⑤ Feather key/keyway DIN 6885 ⑦ ISO 4762 ⑧ Without locating shoulder +1 mm
⑪ Use bores only for foot-mounted design

© Siemens 2019

Servo parallel shaft geared motor	Motor shaft height	Motor version	Absolute encoder with brake		with brake for increased energy		without brake					Resolver with brake		with brake for increased energy		without brake					
Type			k	o1	k	o1	k	o1	o2	g1	g2	k	o1	k	o1	k	o1	o2	g1	g2	AC
1FG1...-..C2.-....	36	CT	–	–	–	–	–	–	–	–	–	–	–	–	–	–	–	–	–	–	–
1FG1...-..C3.-....		HD	–	–	–	–	–	–	–	–	–	–	–	–	–	–	–	–	–	–	–
1FG1...-..C4.-....		CT	–	–	–	–	–	–	–	–	–	–	–	–	–	–	–	–	–	–	–
1FG1...-..D0.-....	48	CT	–	–	–	–	–	–	–	–	–	–	–	–	–	–	–	–	–	–	–
1FG1...-..D2.-....		CT	–	–	–	–	–	–	–	–	–	–	–	–	–	–	–	–	–	–	–
1FG1...-..D3.-....		HD	–	–	–	–	–	–	–	–	–	–	–	–	–	–	–	–	–	–	–
1FG1...-..D4.-....		HD	–	–	–	–	–	–	–	–	–	–	–	–	–	–	–	–	–	–	–
1FG1...-..E0.-....	63	CT	397	135	–	–	382	120	50	104.5	104	382	135	–	–	368	120	23	103	104	126
1FG1...-..E1.-....		HD	432	170	–	–	417	155				417	170	–	–	403	155				
1FG1...-..E2.-....		CT	419	157	–	–	405	142				405	157	–	–	390	142				
1FG1...-..E3.-....		CT	442	180	–	–	427	165				427	180	–	–	413	165				
1FG1...-..E4.-....		HD	496	234	–	–	481	219				481	234	–	–	467	219				
1FG1...-..F0.-....	80	CT	432	172	443	183	395	135	48	104.5	119	417	173	428	184	381	136	21	118	119	155
1FG1...-..F1.-....		CT	451	191	462	202	414	154				436	192	447	203	400	155				
1FG1...-..F3.-....		CT	470	210	481	221	433	173				455	211	466	222	419	174				
1FG1...-..F4.-....		CT	489	229	500	240	453	192				475	230	486	241	438	193				
1FG1...-..F52-....		HD	518	258	529	269	481	221				503	259	514	270	467	222				
1FG1...-..F62-....		HD	518	258	529	269	481	221				503	259	514	270	467	222				
1FG1...-..F53-....		HD	518	258	529	269	481	221			139	503	259	514	270	467	222			139	
1FG1...-..F63-....		HD	518	258	529	269	481	221				503	259	514	270	467	222				
1FG1...-..G0.-....	100	CT	462	197	489	224	427	162	53	104.5	137	448	199	475	226	413	164	26	136	137	192
1FG1...-..G1.-....		CT	488	223	515	250	453	188			158	474	225	501	252	439	190			158	
1FG1...-..G3.-....		CT	514	249	541	276	479	214				500	251	527	278	465	216				
1FG1...-..G5.-....		CT	566	301	593	328	531	266				552	303	579	330	517	268				

© Siemens 2019

4

Dimensional drawings

Gearbox types *FZF89* and *FDF89*

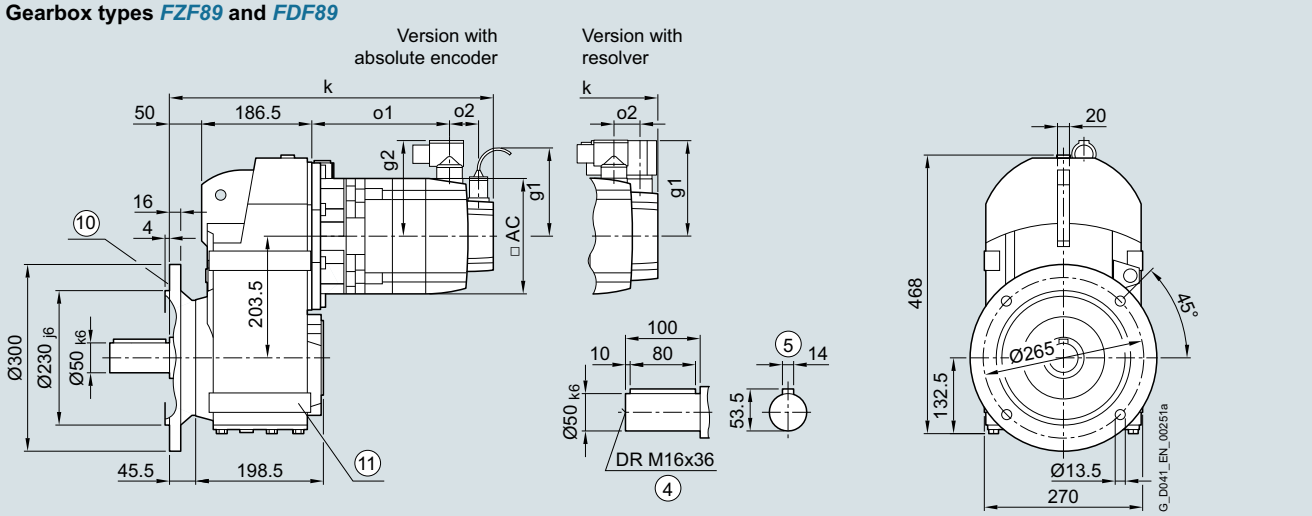

Gearbox types *FZAF89* and *FDAF89*

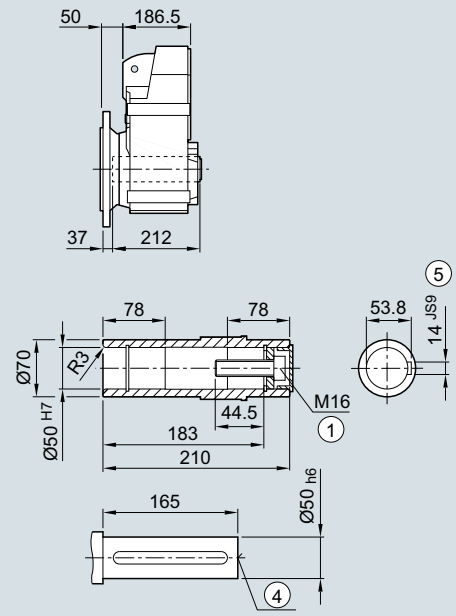

Gearbox types *FZAFS89* and *FDAFS89*

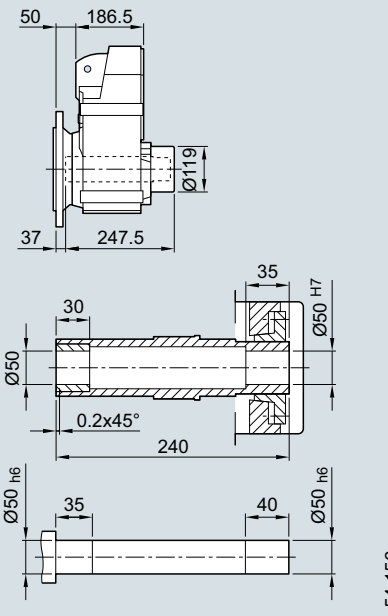

Gearbox types *FZAFT89* and *FDAFT89*

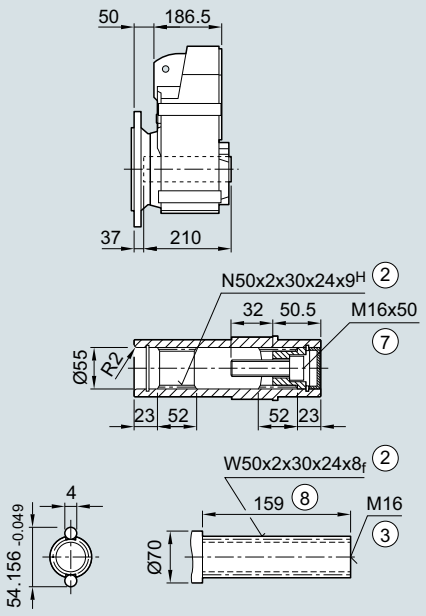

① ISO 4014
② DIN 5480
③ DIN 332-D
④ DIN 332
⑤ Feather key/keyway DIN 6885
⑦ ISO 4762
⑧ Without locating shoulder +1 mm
⑩ For inner contour of the flange design, see page 4/146
⑪ Use bores only for foot-mounted design

© Siemens 2019

Servo parallel shaft geared motor	Motor shaft height	Motor version	Absolute encoder with brake		with brake for increased energy		without brake					Resolver with brake		with brake for increased energy		without brake					
Type			k	o1	k	o1	k	o1	o2	g1	g2	k	o1	k	o1	k	o1	o2	g1	g2	AC
1FG1...-..C2.-....	36	CT	–	–	–	–	–	–	–	–	–	–	–	–	–	–	–	–	–	–	–
1FG1...-..C3.-....		HD	–	–	–	–	–	–	–	–	–	–	–	–	–	–	–	–	–	–	–
1FG1...-..C4.-....		CT	–	–	–	–	–	–	–	–	–	–	–	–	–	–	–	–	–	–	–
1FG1...-..D0.-....	48	CT	–	–	–	–	–	–	–	–	–	–	–	–	–	–	–	–	–	–	–
1FG1...-..D2.-....		CT	–	–	–	–	–	–	–	–	–	–	–	–	–	–	–	–	–	–	–
1FG1...-..D3.-....		HD	–	–	–	–	–	–	–	–	–	–	–	–	–	–	–	–	–	–	–
1FG1...-..D4.-....		HD	–	–	–	–	–	–	–	–	–	–	–	–	–	–	–	–	–	–	–
1FG1...-..E0.-....	63	CT	434	135	–	–	419	120	50	104.5	104	419	135	–	–	405	120	23	103	104	126
1FG1...-..E1.-....		HD	469	170	–	–	454	155				454	170	–	–	440	155				
1FG1...-..E2.-....		CT	456	157	–	–	442	142				442	157	–	–	427	142				
1FG1...-..E3.-....		CT	479	180	–	–	464	165				464	180	–	–	450	165				
1FG1...-..E4.-....		HD	533	234	–	–	518	219				518	234	–	–	504	219				
1FG1...-..F0.-....	80	CT	469	172	480	183	432	135	48	104.5	119	454	173	465	184	418	136	21	118	119	155
1FG1...-..F1.-....		CT	488	191	499	202	451	154				473	192	484	203	437	155				
1FG1...-..F3.-....		CT	507	210	518	221	470	173				492	211	503	222	456	174				
1FG1...-..F4.-....		CT	526	229	537	240	490	192				512	230	523	241	475	193				
1FG1...-..F52-....		HD	555	258	566	269	518	221				540	259	551	270	504	222				
1FG1...-..F62-....		HD	555	258	566	269	518	221				540	259	551	270	504	222				
1FG1...-..F53-....		HD	555	258	566	269	518	221			139	540	259	551	270	504	222			139	
1FG1...-..F63-....		HD	555	258	566	269	518	221				540	259	551	270	504	222				
1FG1...-..G0.-....	100	CT	499	197	526	224	464	162	53	104.5	137	485	199	512	226	450	164	26	136	137	192
1FG1...-..G1.-....		CT	525	223	552	250	490	188			158	511	225	538	252	476	190			158	
1FG1...-..G3.-....		CT	551	249	578	276	516	214				537	251	564	278	502	216				
1FG1...-..G5.-....		CT	603	301	630	328	568	266				589	303	616	330	554	268				

© Siemens 2019

4

Dimensional drawings

Gearbox types *FZ89* and *FD89*

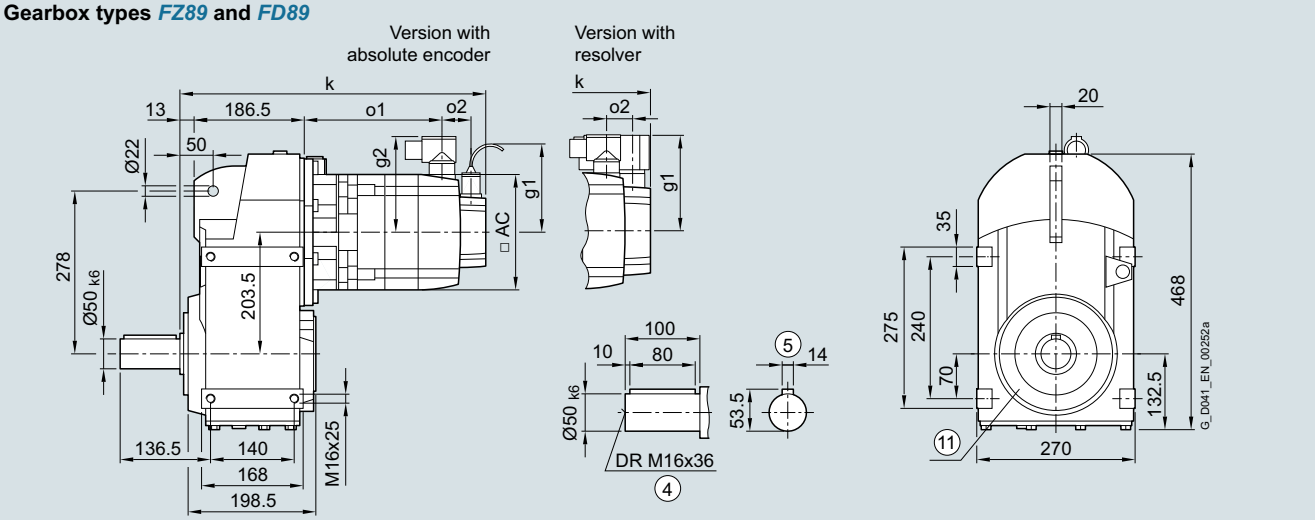

Gearbox types *FZA89* and *FDA89*

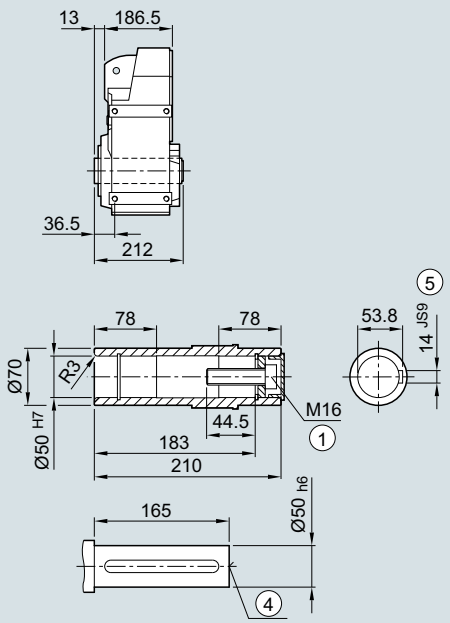

Gearbox types *FZAS89* and *FDAS89*

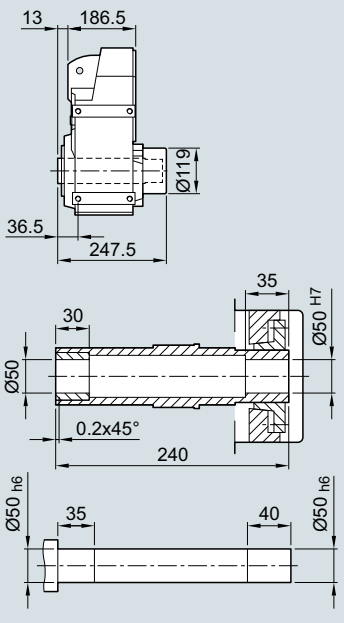

Gearbox types *FZAT89* and *FDAT89*

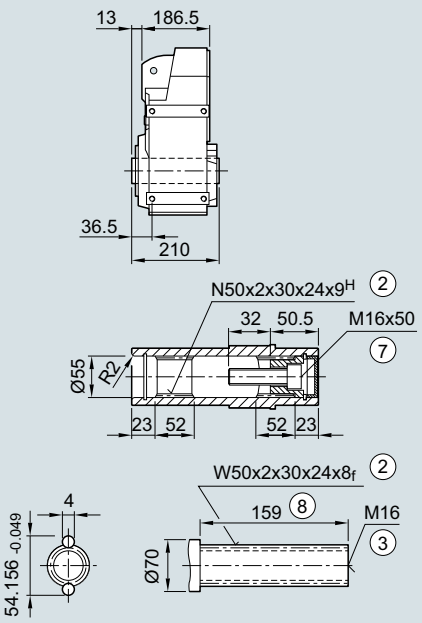

① ISO 4014 ② DIN 5480 ③ DIN 332-D ④ DIN 332
⑤ Feather key/keyway DIN 6885 ⑦ ISO 4762 ⑧ Without locating shoulder +1 mm
⑪ Use bores only for housing flange design

© Siemens 2019

Servo parallel shaft geared motor	Motor shaft height	Motor version	Absolute encoder with brake		with brake for increased energy		without brake					Resolver with brake		with brake for increased energy		without brake					
Type			k	o1	k	o1	k	o1	o2	g1	g2	k	o1	k	o1	k	o1	o2	g1	g2	AC
1FG1...-..C2.-....	36	CT	–	–	–	–	–	–	–	–	–	–	–	–	–	–	–	–	–	–	–
1FG1...-..C3.-....		HD	–	–	–	–	–	–	–	–	–	–	–	–	–	–	–	–	–	–	–
1FG1...-..C4.-....		CT	–	–	–	–	–	–	–	–	–	–	–	–	–	–	–	–	–	–	–
1FG1...-..D0.-....	48	CT	–	–	–	–	–	–	–	–	–	–	–	–	–	–	–	–	–	–	–
1FG1...-..D2.-....		CT	–	–	–	–	–	–	–	–	–	–	–	–	–	–	–	–	–	–	–
1FG1...-..D3.-....		HD	–	–	–	–	–	–	–	–	–	–	–	–	–	–	–	–	–	–	–
1FG1...-..D4.-....		HD	–	–	–	–	–	–	–	–	–	–	–	–	–	–	–	–	–	–	–
1FG1...-..E0.-....	63	CT	397	135	–	–	382	120	50	104.5	104	382	135	–	–	368	120	23	103	104	126
1FG1...-..E1.-....		HD	432	170	–	–	417	155				417	170	–	–	403	155				
1FG1...-..E2.-....		CT	419	157	–	–	405	142				405	157	–	–	390	142				
1FG1...-..E3.-....		CT	442	180	–	–	427	165				427	180	–	–	413	165				
1FG1...-..E4.-....		HD	496	234	–	–	481	219				481	234	–	–	467	219				
1FG1...-..F0.-....	80	CT	432	172	443	183	395	135	48	104.5	119	417	173	428	184	381	136	21	118	119	155
1FG1...-..F1.-....		CT	451	191	462	202	414	154				436	192	447	203	400	155				
1FG1...-..F3.-....		CT	470	210	481	221	433	173				455	211	466	222	419	174				
1FG1...-..F4.-....		CT	489	229	500	240	453	192				475	230	486	241	438	193				
1FG1...-..F52-....		HD	518	258	529	269	481	221				503	259	514	270	467	222				
1FG1...-..F62-....		HD	518	258	529	269	481	221				503	259	514	270	467	222				
1FG1...-..F53-....		HD	518	258	529	269	481	221			139	503	259	514	270	467	222			139	
1FG1...-..F63-....		HD	518	258	529	269	481	221				503	259	514	270	467	222				
1FG1...-..G0.-....	100	CT	462	197	489	224	427	162	53	104.5	137	448	199	475	226	413	164	26	136	137	192
1FG1...-..G1.-....		CT	488	223	515	250	453	188			158	474	225	501	252	439	190			158	
1FG1...-..G3.-....		CT	514	249	541	276	479	214				500	251	527	278	465	216				
1FG1...-..G5.-....		CT	566	301	593	328	531	266				552	303	579	330	517	268				

© Siemens 2019

4

Dimensional drawings

Gearbox types *FZAD109* and *FDAD109*

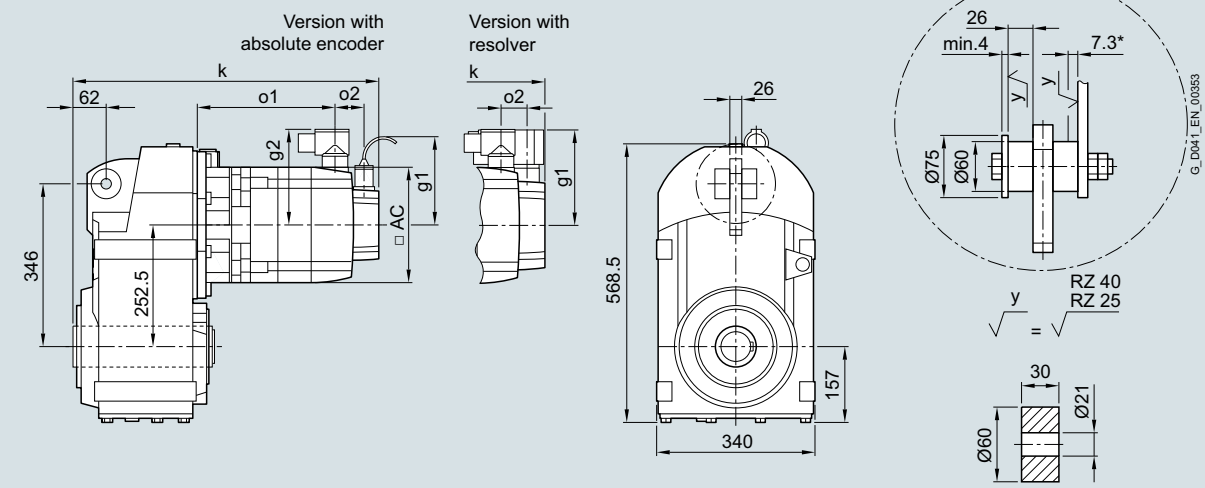

Gearbox types *FZAD109* and *FDAD109*

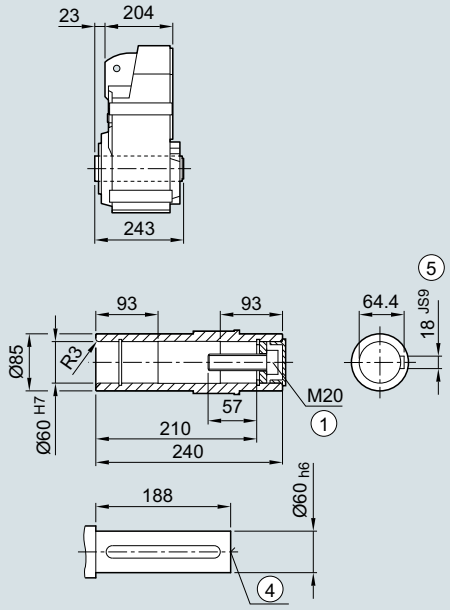

Gearbox types *FZADS109* and *FDADS109*

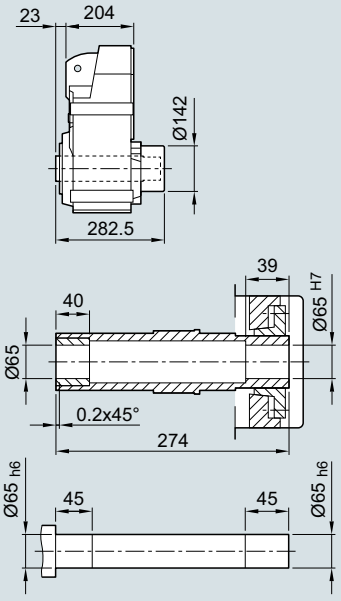

Gearbox types *FZADT109* and *FDADT109*

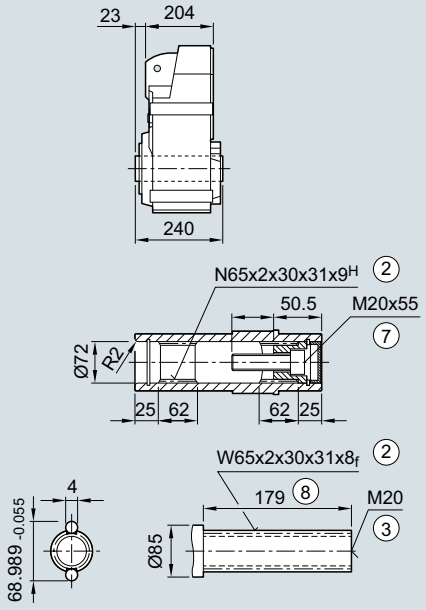

① ISO 4014 ② DIN 5480 ③ DIN 332-D ④ DIN 332
⑤ Feather key/keyway DIN 6885 ⑦ ISO 4762 ⑧ Without locating shoulder +1 mm

* Spring compression at max. torque

© Siemens 2019

Servo parallel shaft geared motor	Motor shaft height	Motor version	Absolute encoder with brake		with brake for increased energy		without brake					Resolver with brake		with brake for increased energy		without brake					
Type			k	o1	k	o1	k	o1	o2	g1	g2	k	o1	k	o1	k	o1	o2	g1	g2	AC
1FG1...-..C2.-....	36	CT	–	–	–	–	–	–	–	–	–	–	–	–	–	–	–	–	–	–	–
1FG1...-..C3.-....		HD	–	–	–	–	–	–	–	–	–	–	–	–	–	–	–	–	–	–	–
1FG1...-..C4.-....		CT	–	–	–	–	–	–	–	–	–	–	–	–	–	–	–	–	–	–	–
1FG1...-..D0.-....	48	CT	–	–	–	–	–	–	–	–	–	–	–	–	–	–	–	–	–	–	–
1FG1...-..D2.-....		CT	–	–	–	–	–	–	–	–	–	–	–	–	–	–	–	–	–	–	–
1FG1...-..D3.-....		HD	–	–	–	–	–	–	–	–	–	–	–	–	–	–	–	–	–	–	–
1FG1...-..D4.-....		HD	–	–	–	–	–	–	–	–	–	–	–	–	–	–	–	–	–	–	–
1FG1...-..E0.-....	63	CT	–	–	–	–	–	–	–	–	–	–	–	–	–	–	–	–	–	–	–
1FG1...-..E1.-....		HD	–	–	–	–	–	–	–	–	–	–	–	–	–	–	–	–	–	–	–
1FG1...-..E2.-....		CT	–	–	–	–	–	–	–	–	–	–	–	–	–	–	–	–	–	–	–
1FG1...-..E3.-....		CT	–	–	–	–	–	–	–	–	–	–	–	–	–	–	–	–	–	–	–
1FG1...-..E4.-....		HD	–	–	–	–	–	–	–	–	–	–	–	–	–	–	–	–	–	–	–
1FG1...-..F0.-....	80	CT	450	163	461	174	414	126	48	104.5	119	436	164	447	175	399	127	21	118	119	155
1FG1...-..F1.-....		CT	469	182	480	193	433	145				455	183	466	194	418	146				
1FG1...-..F3.-....		CT	488	201	499	212	452	164				474	202	485	213	437	165				
1FG1...-..F4.-....		CT	508	220	519	231	471	183				493	221	504	232	457	184				
1FG1...-..F52-....		HD	536	249	547	260	500	212				522	250	533	261	485	213				
1FG1...-..F62-....		HD	536	249	547	260	500	212				522	250	533	261	485	213				
1FG1...-..F53-....		HD	536	249	547	260	500	212			139	522	250	533	261	485	213			139	
1FG1...-..F63-....		HD	536	249	547	260	500	212				522	250	533	261	485	213				
1FG1...-..G0.-....	100	CT	481	188	508	215	446	153	53	104.5	137	466	190	493	217	431	155	26	136	137	192
1FG1...-..G1.-....		CT	507	214	534	241	472	179			158	492	216	519	243	457	181			158	
1FG1...-..G3.-....		CT	533	240	560	267	498	205				518	242	545	269	483	207				
1FG1...-..G5.-....		CT	585	292	612	319	550	257				570	294	597	321	535	259				

© Siemens 2019

4

Dimensional drawings

Gearbox types *FZZ89* and *FDZ89*

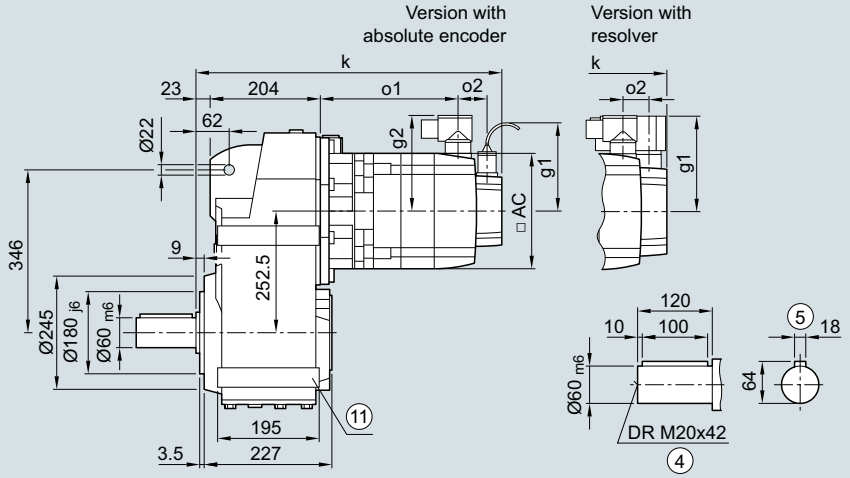

Gearbox types *FZAZ109* and *FDAZ109*

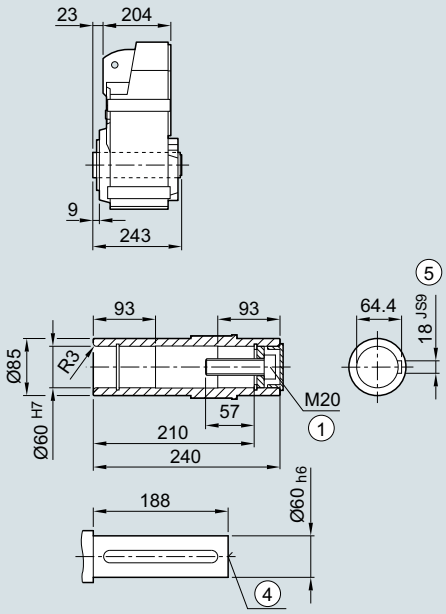

Gearbox types *FZAZS109* and *FDAZS109*

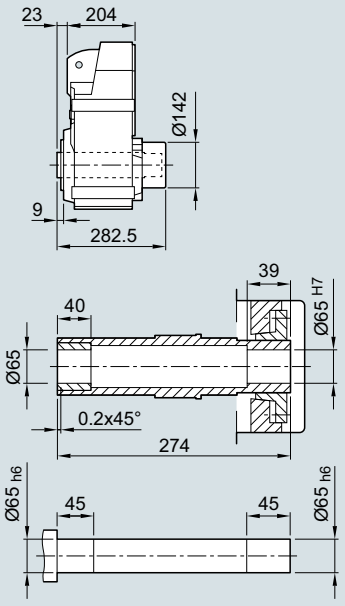

Gearbox types *FZAZT109* and *FDAZT109*

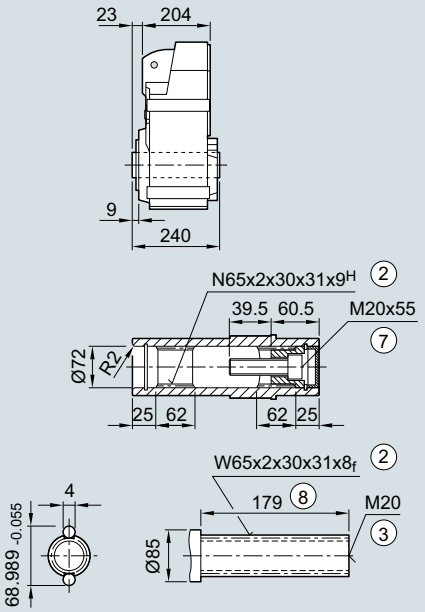

① ISO 4014 ② DIN 5480 ③ DIN 332-D ④ DIN 332
⑤ Feather key/keyway DIN 6885 ⑦ ISO 4762 ⑧ Without locating shoulder +1 mm
⑪ Use bores only for foot-mounted design

© Siemens 2019

Servo parallel shaft geared motor	Motor shaft height	Motor version	Absolute encoder with brake		with brake for increased energy		without brake					Resolver with brake		with brake for increased energy		without brake					
Type			k	o1	k	o1	k	o1	o2	g1	g2	k	o1	k	o1	k	o1	o2	g1	g2	AC
1FG1...-..C2.-....	36	CT	–	–	–	–	–	–	–	–	–	–	–	–	–	–	–	–	–	–	–
1FG1...-..C3.-....		HD	–	–	–	–	–	–	–	–	–	–	–	–	–	–	–	–	–	–	–
1FG1...-..C4.-....		CT	–	–	–	–	–	–	–	–	–	–	–	–	–	–	–	–	–	–	–
1FG1...-..D0.-....	48	CT	–	–	–	–	–	–	–	–	–	–	–	–	–	–	–	–	–	–	–
1FG1...-..D2.-....		CT	–	–	–	–	–	–	–	–	–	–	–	–	–	–	–	–	–	–	–
1FG1...-..D3.-....		HD	–	–	–	–	–	–	–	–	–	–	–	–	–	–	–	–	–	–	–
1FG1...-..D4.-....		HD	–	–	–	–	–	–	–	–	–	–	–	–	–	–	–	–	–	–	–
1FG1...-..E0.-....	63	CT	–	–	–	–	–	–	–	–	–	–	–	–	–	–	–	–	–	–	–
1FG1...-..E1.-....		HD	–	–	–	–	–	–	–	–	–	–	–	–	–	–	–	–	–	–	–
1FG1...-..E2.-....		CT	–	–	–	–	–	–	–	–	–	–	–	–	–	–	–	–	–	–	–
1FG1...-..E3.-....		CT	–	–	–	–	–	–	–	–	–	–	–	–	–	–	–	–	–	–	–
1FG1...-..E4.-....		HD	–	–	–	–	–	–	–	–	–	–	–	–	–	–	–	–	–	–	–
1FG1...-..F0.-....	80	CT	450	163	461	174	414	126	48	104.5	119	436	164	447	175	399	127	21	118	119	155
1FG1...-..F1.-....		CT	469	182	480	193	433	145				455	183	466	194	418	146				
1FG1...-..F3.-....		CT	488	201	499	212	452	164				474	202	485	213	437	165				
1FG1...-..F4.-....		CT	508	220	519	231	471	183				493	221	504	232	457	184				
1FG1...-..F52-....		HD	536	249	547	260	500	212				522	250	533	261	485	213				
1FG1...-..F62-....		HD	536	249	547	260	500	212				522	250	533	261	485	213				
1FG1...-..F53-....		HD	536	249	547	260	500	212			139	522	250	533	261	485	213			139	
1FG1...-..F63-....		HD	536	249	547	260	500	212				522	250	533	261	485	213				
1FG1...-..G0.-....	100	CT	481	188	508	215	446	153	53	104.5	137	466	190	493	217	431	155	26	136	137	192
1FG1...-..G1.-....		CT	507	214	534	241	472	179			158	492	216	519	243	457	181			158	
1FG1...-..G3.-....		CT	533	240	560	267	498	205				518	242	545	269	483	207				
1FG1...-..G5.-....		CT	585	292	612	319	550	257				570	294	597	321	535	259				

© Siemens 2019

4

Dimensional drawings

Gearbox types *FZF109* and *FDF109*

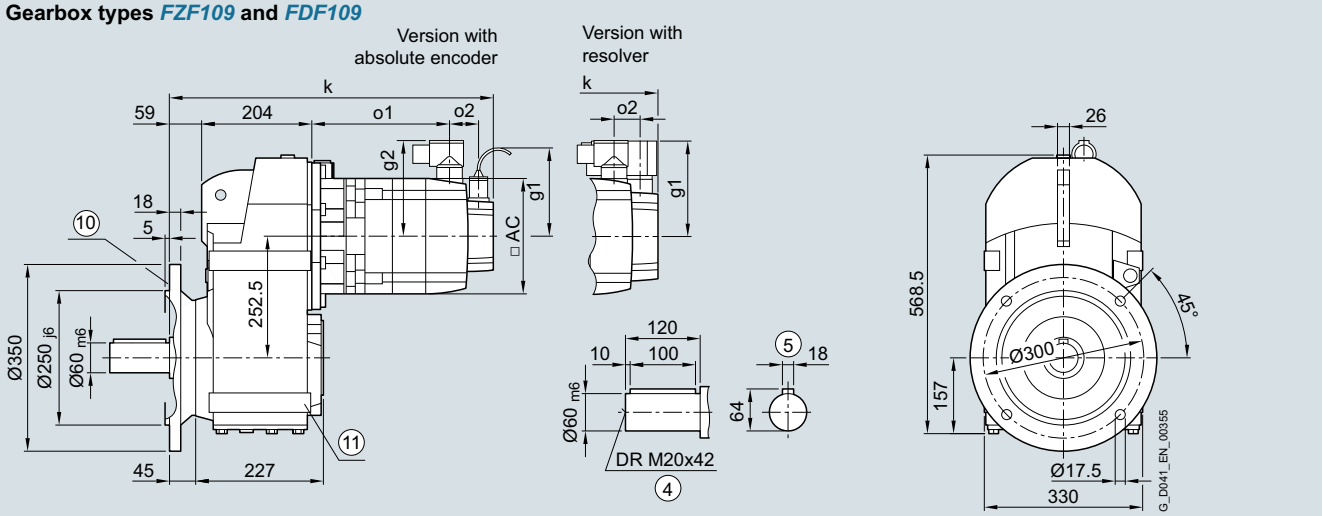

Gearbox types *FZAF109* and *FDAF109*

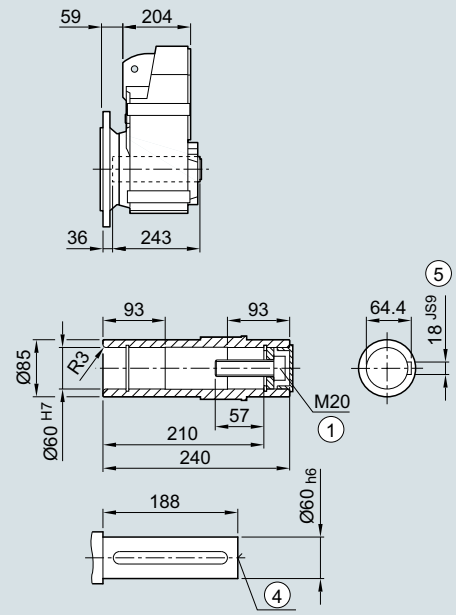

Gearbox types *FZAFS109* and *FDAFS109*

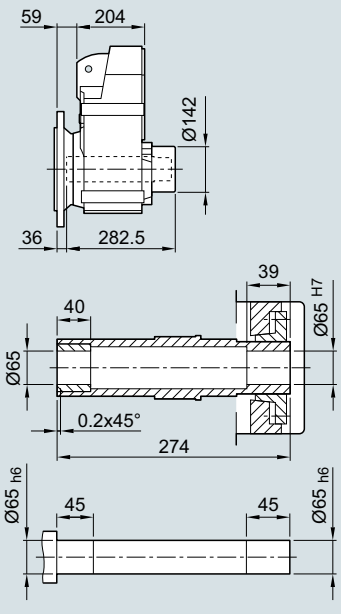

Gearbox types *FZAFT109* and *FDAFT109*

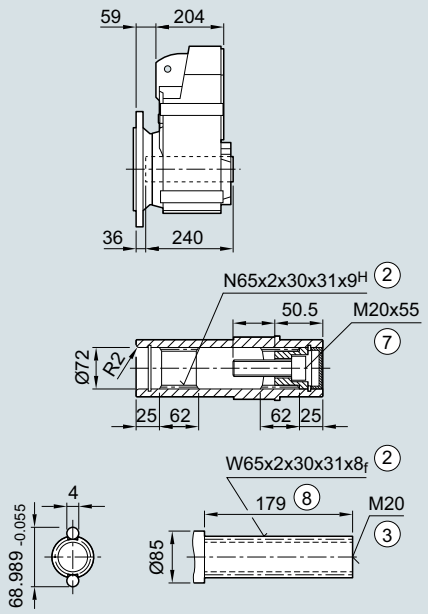

① ISO 4014
② DIN 5480
③ DIN 332-D
④ DIN 332
⑤ Feather key/keyway DIN 6885
⑦ ISO 4762
⑧ Without locating shoulder +1 mm
⑩ For inner contour of the flange design, see page 4/146
⑪ Use bores only for foot-mounted design

© Siemens 2019

Servo parallel shaft geared motor	Motor shaft height	Motor version	Absolute encoder									Resolver									
			with brake		with brake for increased energy		without brake					with brake		with brake for increased energy		without brake					
Type			k	o1	k	o1	k	o1	o2	g1	g2	k	o1	k	o1	k	o1	o2	g1	g2	AC
1FG1...-..C2.-....	36	CT	–	–	–	–	–	–	–	–	–	–	–	–	–	–	–	–	–	–	–
1FG1...-..C3.-....		HD	–	–	–	–	–	–	–	–	–	–	–	–	–	–	–	–	–	–	–
1FG1...-..C4.-....		CT	–	–	–	–	–	–	–	–	–	–	–	–	–	–	–	–	–	–	–
1FG1...-..D0.-....	48	CT	–	–	–	–	–	–	–	–	–	–	–	–	–	–	–	–	–	–	–
1FG1...-..D2.-....		CT	–	–	–	–	–	–	–	–	–	–	–	–	–	–	–	–	–	–	–
1FG1...-..D3.-....		HD	–	–	–	–	–	–	–	–	–	–	–	–	–	–	–	–	–	–	–
1FG1...-..D4.-....		HD	–	–	–	–	–	–	–	–	–	–	–	–	–	–	–	–	–	–	–
1FG1...-..E0.-....	63	CT	–	–	–	–	–	–	–	–	–	–	–	–	–	–	–	–	–	–	–
1FG1...-..E1.-....		HD	–	–	–	–	–	–	–	–	–	–	–	–	–	–	–	–	–	–	–
1FG1...-..E2.-....		CT	–	–	–	–	–	–	–	–	–	–	–	–	–	–	–	–	–	–	–
1FG1...-..E3.-....		CT	–	–	–	–	–	–	–	–	–	–	–	–	–	–	–	–	–	–	–
1FG1...-..E4.-....		HD	–	–	–	–	–	–	–	–	–	–	–	–	–	–	–	–	–	–	–
1FG1...-..F0.-....	80	CT	486	163	497	174	450	126	48	104.5	119	472	164	483	175	435	127	21	118	119	155
1FG1...-..F1.-....		CT	505	182	516	193	469	145				491	183	502	194	454	146				
1FG1...-..F3.-....		CT	524	201	535	212	488	164				510	202	521	213	473	165				
1FG1...-..F4.-....		CT	544	220	555	231	507	183				529	221	540	232	493	184				
1FG1...-..F52-....		HD	572	249	583	260	536	212				558	250	569	261	521	213				
1FG1...-..F62-....		HD	572	249	583	260	536	212				558	250	569	261	521	213				
1FG1...-..F53-....		HD	572	249	583	260	536	212			139	558	250	569	261	521	213			139	
1FG1...-..F63-....		HD	572	249	583	260	536	212				558	250	569	261	521	213				
1FG1...-..G0.-....	100	CT	517	188	544	215	482	153	53	104.5	137	502	190	529	217	467	155	26	136	137	192
1FG1...-..G1.-....		CT	543	214	570	241	508	179			158	528	216	555	243	493	181			158	
1FG1...-..G3.-....		CT	569	240	596	267	534	205				554	242	581	269	519	207				
1FG1...-..G5.-....		CT	621	292	648	319	586	257				606	294	633	321	571	259				

© Siemens 2019

4

Dimensional drawings

Gearbox types *FZ109* and *FD109*

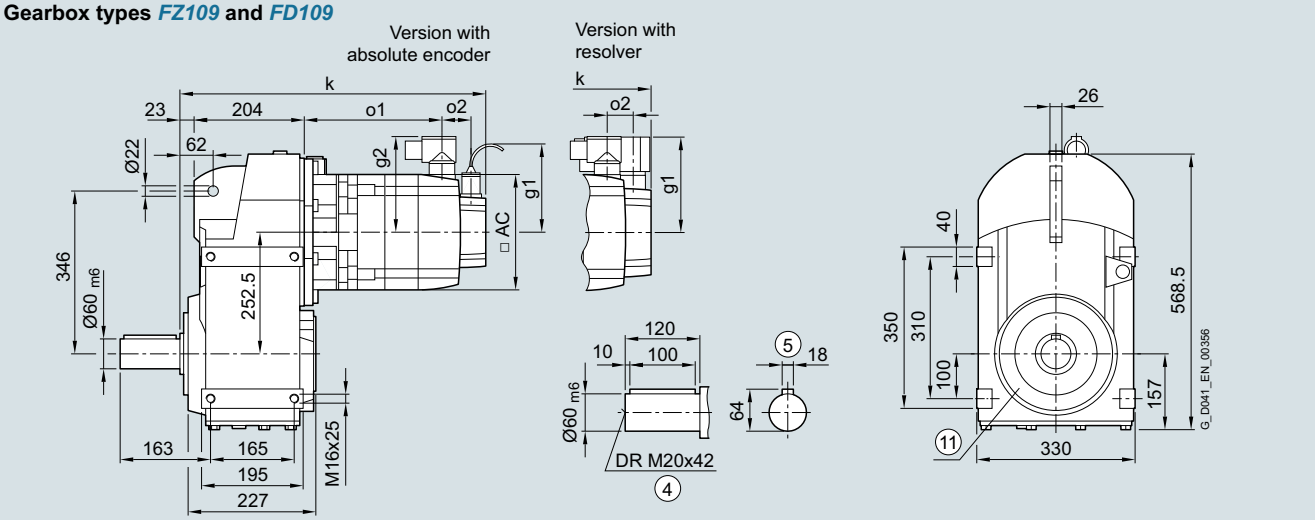

Gearbox types *FZA109* and *FDA109*

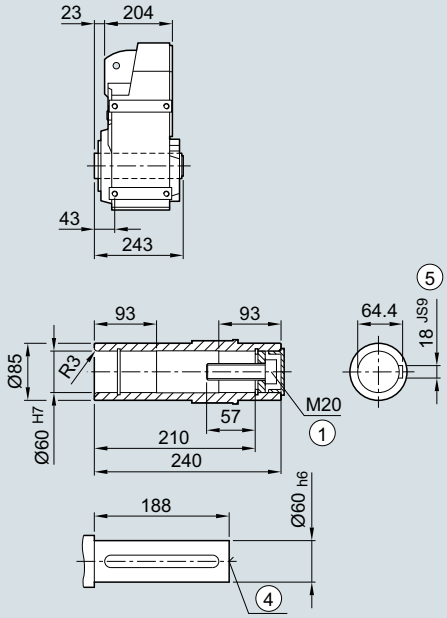

Gearbox types *FZAS109* and *FDAS109*

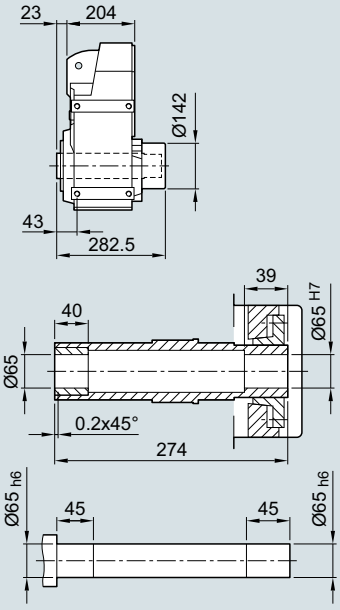

Gearbox types *FZAT109* and *FDAT109*

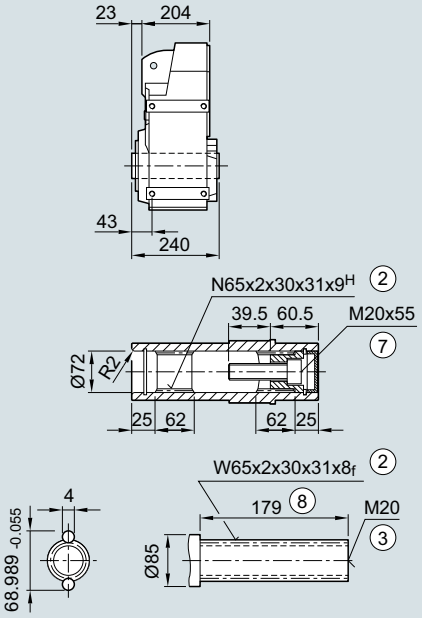

① ISO 4014 ② DIN 5480 ③ DIN 332-D ④ DIN 332
⑤ Feather key/keyway DIN 6885 ⑦ ISO 4762 ⑧ Without locating shoulder +1 mm
⑪ Use bores only for housing flange design

© Siemens 2019

Servo parallel shaft geared motor	Motor shaft height	Motor version	Absolute encoder with brake		with brake for increased energy		without brake					Resolver with brake		with brake for increased energy		without brake					
Type			k	o1	k	o1	k	o1	o2	g1	g2	k	o1	k	o1	k	o1	o2	g1	g2	AC
1FG1...-..C2.-....	36	CT	–	–	–	–	–	–	–	–	–	–	–	–	–	–	–	–	–	–	–
1FG1...-..C3.-....		HD	–	–	–	–	–	–	–	–	–	–	–	–	–	–	–	–	–	–	–
1FG1...-..C4.-....		CT	–	–	–	–	–	–	–	–	–	–	–	–	–	–	–	–	–	–	–
1FG1...-..D0.-....	48	CT	–	–	–	–	–	–	–	–	–	–	–	–	–	–	–	–	–	–	–
1FG1...-..D2.-....		CT	–	–	–	–	–	–	–	–	–	–	–	–	–	–	–	–	–	–	–
1FG1...-..D3.-....		HD	–	–	–	–	–	–	–	–	–	–	–	–	–	–	–	–	–	–	–
1FG1...-..D4.-....		HD	–	–	–	–	–	–	–	–	–	–	–	–	–	–	–	–	–	–	–
1FG1...-..E0.-....	63	CT	–	–	–	–	–	–	–	–	–	–	–	–	–	–	–	–	–	–	–
1FG1...-..E1.-....		HD	–	–	–	–	–	–	–	–	–	–	–	–	–	–	–	–	–	–	–
1FG1...-..E2.-....		CT	–	–	–	–	–	–	–	–	–	–	–	–	–	–	–	–	–	–	–
1FG1...-..E3.-....		CT	–	–	–	–	–	–	–	–	–	–	–	–	–	–	–	–	–	–	–
1FG1...-..E4.-....		HD	–	–	–	–	–	–	–	–	–	–	–	–	–	–	–	–	–	–	–
1FG1...-..F0.-....	80	CT	450	163	461	174	414	126	48	104.5	119	436	164	447	175	399	127	21	118	119	155
1FG1...-..F1.-....		CT	469	182	480	193	433	145				455	183	466	194	418	146				
1FG1...-..F3.-....		CT	488	201	499	212	452	164				474	202	485	213	437	165				
1FG1...-..F4.-....		CT	508	220	519	231	471	183				493	221	504	232	457	184				
1FG1...-..F52-....		HD	536	249	547	260	500	212				522	250	533	261	485	213				
1FG1...-..F62-....		HD	536	249	547	260	500	212				522	250	533	261	485	213				
1FG1...-..F53-....		HD	536	249	547	260	500	212			139	522	250	533	261	485	213			139	
1FG1...-..F63-....		HD	536	249	547	260	500	212				522	250	533	261	485	213				
1FG1...-..G0.-....	100	CT	481	188	508	215	446	153	53	104.5	137	466	190	493	217	431	155	26	136	137	192
1FG1...-..G1.-....		CT	507	214	534	241	472	179			158	492	216	519	243	457	181			158	
1FG1...-..G3.-....		CT	533	240	560	267	498	205				518	242	545	269	483	207				
1FG1...-..G5.-....		CT	585	292	612	319	550	257				570	294	597	321	535	259				

© Siemens 2019

4

Dimensional drawings

Gearbox types *FZAD129* and *FDAD129*

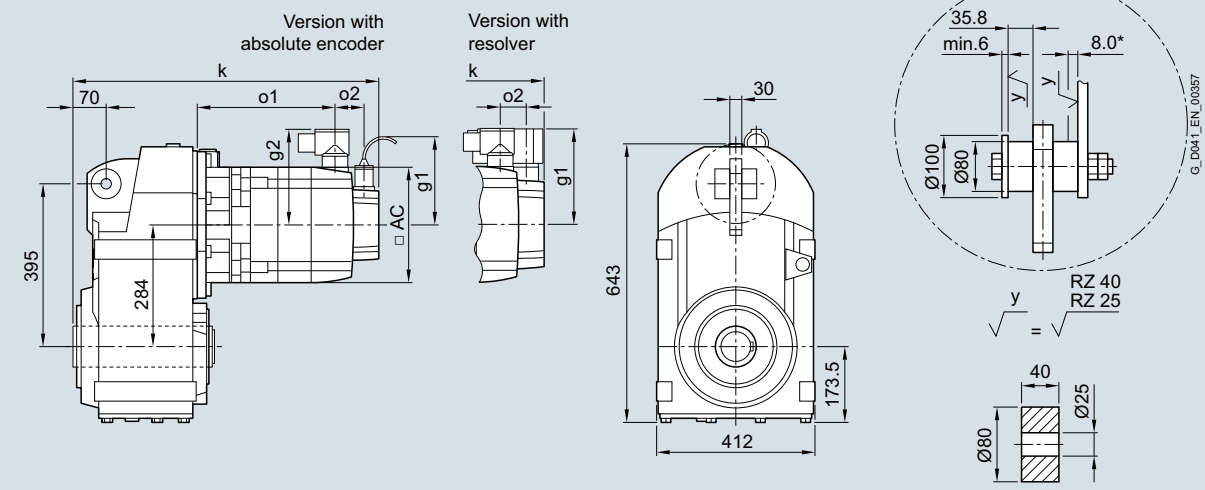

Gearbox types *FZAD129* and *FDAD129*

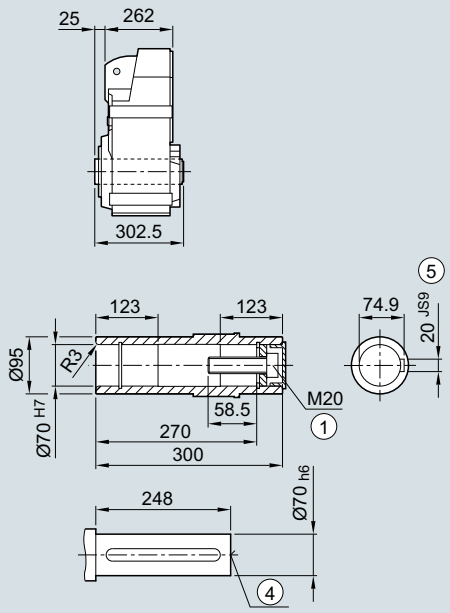

Gearbox types *FZADS129* and *FDADS129*

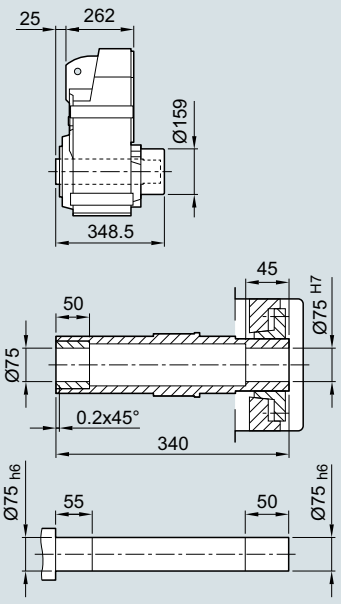

Gearbox types *FZADT129* and *FDADT129*

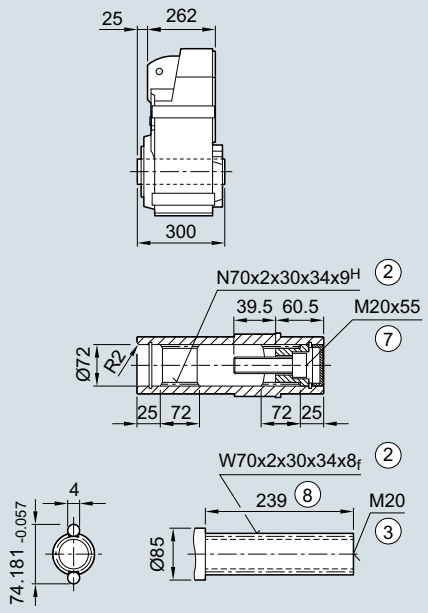

① ISO 4014 ② DIN 5480 ③ DIN 332-D ④ DIN 332
⑤ Feather key/keyway DIN 6885 ⑦ ISO 4762 ⑧ Without locating shoulder +1 mm

* Spring compression at max. torque

© Siemens 2019

Servo parallel shaft geared motor	Motor shaft height	Motor version	Absolute encoder with brake		with brake for increased energy		without brake					Resolver with brake		with brake for increased energy		without brake					
Type			k	o1	k	o1	k	o1	o2	g1	g2	k	o1	k	o1	k	o1	o2	g1	g2	AC
1FG1...-..C2.-....	36	CT	–	–	–	–	–	–	–	–	–	–	–	–	–	–	–	–	–	–	–
1FG1...-..C3.-....		HD	–	–	–	–	–	–	–	–	–	–	–	–	–	–	–	–	–	–	–
1FG1...-..C4.-....		CT	–	–	–	–	–	–	–	–	–	–	–	–	–	–	–	–	–	–	–
1FG1...-..D0.-....	48	CT	–	–	–	–	–	–	–	–	–	–	–	–	–	–	–	–	–	–	–
1FG1...-..D2.-....		CT	–	–	–	–	–	–	–	–	–	–	–	–	–	–	–	–	–	–	–
1FG1...-..D3.-....		HD	–	–	–	–	–	–	–	–	–	–	–	–	–	–	–	–	–	–	–
1FG1...-..D4.-....		HD	–	–	–	–	–	–	–	–	–	–	–	–	–	–	–	–	–	–	–
1FG1...-..E0.-....	63	CT	–	–	–	–	–	–	–	–	–	–	–	–	–	–	–	–	–	–	–
1FG1...-..E1.-....		HD	–	–	–	–	–	–	–	–	–	–	–	–	–	–	–	–	–	–	–
1FG1...-..E2.-....		CT	–	–	–	–	–	–	–	–	–	–	–	–	–	–	–	–	–	–	–
1FG1...-..E3.-....		CT	–	–	–	–	–	–	–	–	–	–	–	–	–	–	–	–	–	–	–
1FG1...-..E4.-....		HD	–	–	–	–	–	–	–	–	–	–	–	–	–	–	–	–	–	–	–
1FG1...-..F0.-....	80	CT	–	–	–	–	–	–	–	–	–	–	–	–	–	–	–	–	–	–	–
1FG1...-..F1.-....		CT	–	–	–	–	–	–	–	–	–	–	–	–	–	–	–	–	–	–	–
1FG1...-..F3.-....		CT	–	–	–	–	–	–	–	–	–	–	–	–	–	–	–	–	–	–	–
1FG1...-..F4.-....		CT	–	–	–	–	–	–	–	–	–	–	–	–	–	–	–	–	–	–	–
1FG1...-..F52-....		HD	–	–	–	–	–	–	–	–	–	–	–	–	–	–	–	–	–	–	–
1FG1...-..F62-....		HD	–	–	–	–	–	–	–	–	–	–	–	–	–	–	–	–	–	–	–
1FG1...-..F53-....		HD	–	–	–	–	–	–	–	–	–	–	–	–	–	–	–	–	–	–	–
1FG1...-..F63-....		HD	–	–	–	–	–	–	–	–	–	–	–	–	–	–	–	–	–	–	–
1FG1...-..G0.-....	100	CT	530	177	557	204	495	142	53	104.5	137	515	179	542	206	480	144	26	136	137	192
1FG1...-..G1.-....		CT	556	203	583	230	521	168			158	541	205	568	232	506	170			158	
1FG1...-..G3.-....		CT	582	229	609	256	547	194				567	231	594	258	532	196				
1FG1...-..G5.-....		CT	634	281	661	308	599	246				619	283	646	310	584	248				

© Siemens 2019

4

Dimensional drawings

Gearbox types *FZZ129* and *FDZ129*

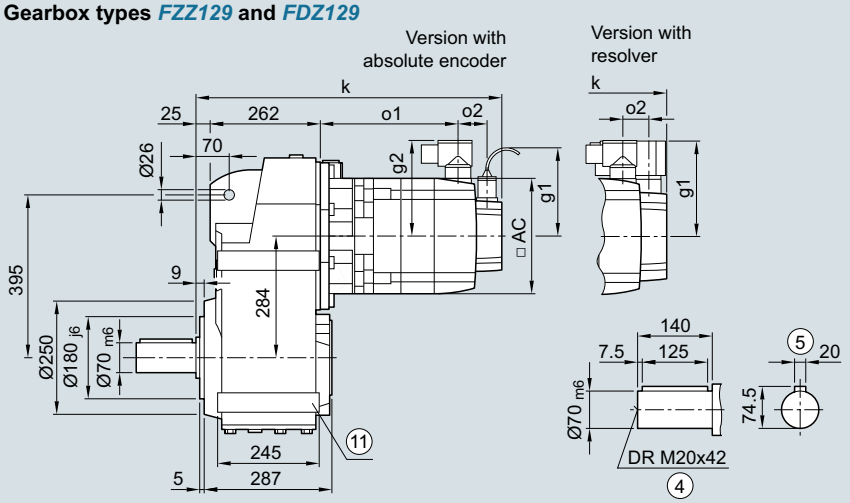

Gearbox types *FZAZ129* and *FDAZ129*

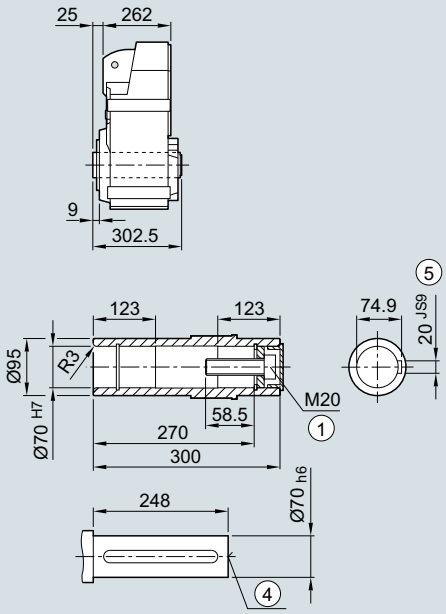

Gearbox types *FZAZS129* and *FDAZS129*

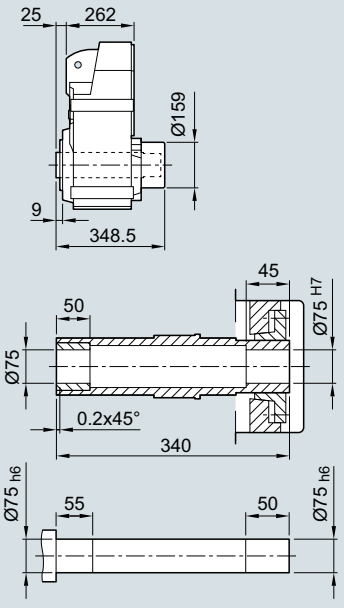

Gearbox types *FZAZT129* and *FDAZT129*

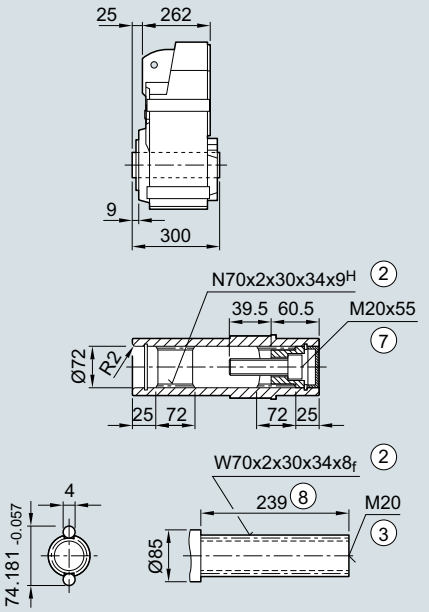

① ISO 4014 ② DIN 5480 ③ DIN 332-D ④ DIN 332
⑤ Feather key/keyway DIN 6885 ⑦ ISO 4762 ⑧ Without locating shoulder +1 mm
⑪ Use bores only for foot-mounted design

© Siemens 2019

Servo parallel shaft geared motor	Motor shaft height	Motor version	Absolute encoder with brake		with brake for increased energy		without brake					Resolver with brake		with brake for increased energy		without brake					
Type			k	o1	k	o1	k	o1	o2	g1	g2	k	o1	k	o1	k	o1	o2	g1	g2	AC
1FG1...-..C2.-....	36	CT	–	–	–	–	–	–	–	–	–	–	–	–	–	–	–	–	–	–	–
1FG1...-..C3.-....		HD	–	–	–	–	–	–	–	–	–	–	–	–	–	–	–	–	–	–	–
1FG1...-..C4.-....		CT	–	–	–	–	–	–	–	–	–	–	–	–	–	–	–	–	–	–	–
1FG1...-..D0.-....	48	CT	–	–	–	–	–	–	–	–	–	–	–	–	–	–	–	–	–	–	–
1FG1...-..D2.-....		CT	–	–	–	–	–	–	–	–	–	–	–	–	–	–	–	–	–	–	–
1FG1...-..D3.-....		HD	–	–	–	–	–	–	–	–	–	–	–	–	–	–	–	–	–	–	–
1FG1...-..D4.-....		HD	–	–	–	–	–	–	–	–	–	–	–	–	–	–	–	–	–	–	–
1FG1...-..E0.-....	63	CT	–	–	–	–	–	–	–	–	–	–	–	–	–	–	–	–	–	–	–
1FG1...-..E1.-....		HD	–	–	–	–	–	–	–	–	–	–	–	–	–	–	–	–	–	–	–
1FG1...-..E2.-....		CT	–	–	–	–	–	–	–	–	–	–	–	–	–	–	–	–	–	–	–
1FG1...-..E3.-....		CT	–	–	–	–	–	–	–	–	–	–	–	–	–	–	–	–	–	–	–
1FG1...-..E4.-....		HD	–	–	–	–	–	–	–	–	–	–	–	–	–	–	–	–	–	–	–
1FG1...-..F0.-....	80	CT	–	–	–	–	–	–	–	–	–	–	–	–	–	–	–	–	–	–	–
1FG1...-..F1.-....		CT	–	–	–	–	–	–	–	–	–	–	–	–	–	–	–	–	–	–	–
1FG1...-..F3.-....		CT	–	–	–	–	–	–	–	–	–	–	–	–	–	–	–	–	–	–	–
1FG1...-..F4.-....		CT	–	–	–	–	–	–	–	–	–	–	–	–	–	–	–	–	–	–	–
1FG1...-..F52-....		HD	–	–	–	–	–	–	–	–	–	–	–	–	–	–	–	–	–	–	–
1FG1...-..F62-....		HD	–	–	–	–	–	–	–	–	–	–	–	–	–	–	–	–	–	–	–
1FG1...-..F53-....		HD	–	–	–	–	–	–	–	–	–	–	–	–	–	–	–	–	–	–	–
1FG1...-..F63-....		HD	–	–	–	–	–	–	–	–	–	–	–	–	–	–	–	–	–	–	–
1FG1...-..G0.-....	100	CT	530	177	557	204	495	142	53	104.5	137	515	179	542	206	480	144	26	136	137	192
1FG1...-..G1.-....		CT	556	203	583	230	521	168			158	541	205	568	232	506	170			158	
1FG1...-..G3.-....		CT	582	229	609	256	547	194				567	231	594	258	532	196				
1FG1...-..G5.-....		CT	634	281	661	308	599	246				619	283	646	310	584	248				

© Siemens 2019

4

Dimensional drawings

Gearbox types *FZF129* and *FDF129*

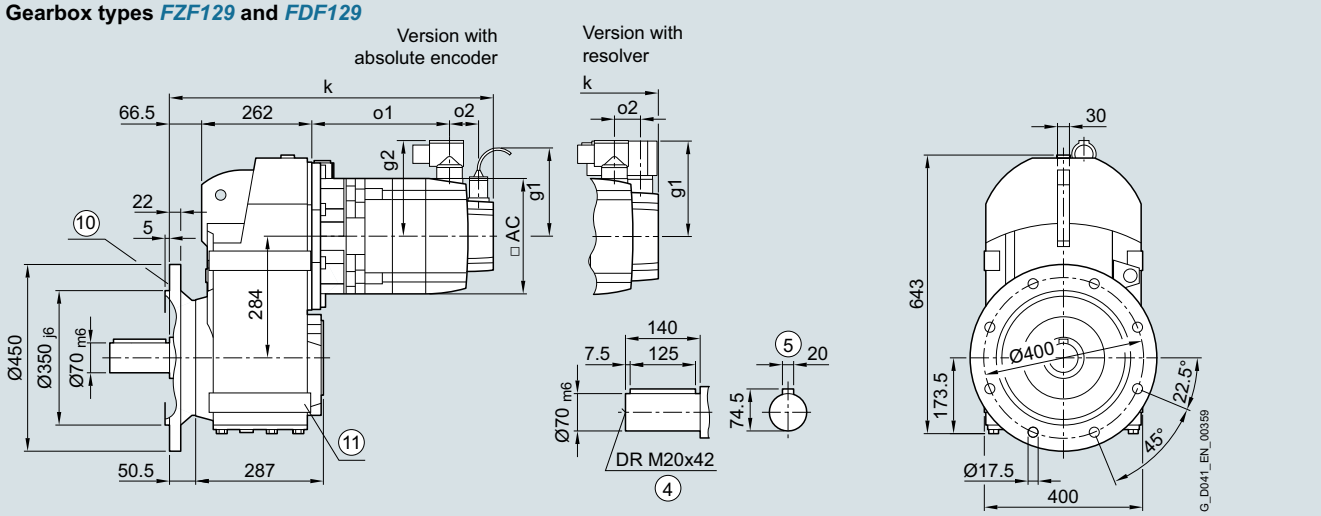

Gearbox types *FZAF129* and *FDAF129*

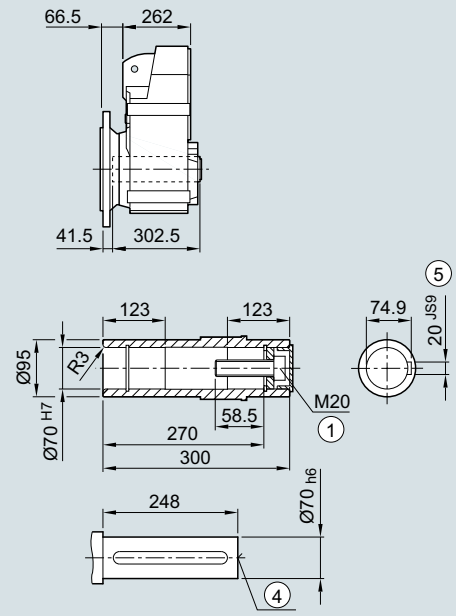

Gearbox types *FZAFS129* and *FDAFS129*

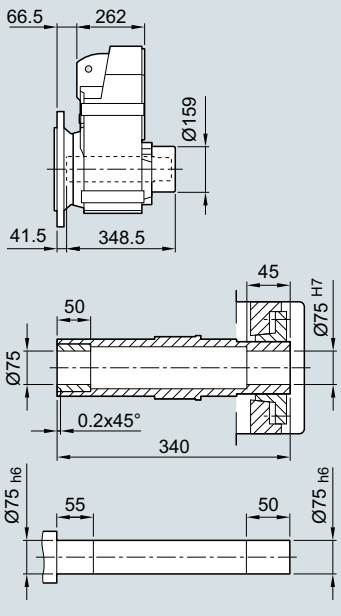

Gearbox types *FZAFT129* and *FDAFT129*

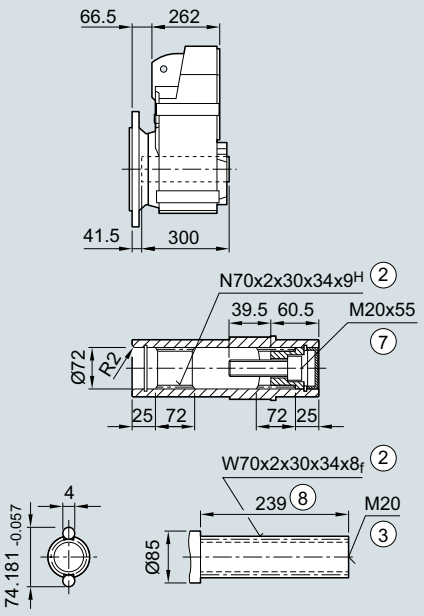

① ISO 4014
② DIN 5480
③ DIN 332-D
④ DIN 332
⑤ Feather key/keyway DIN 6885
⑦ ISO 4762
⑧ Without locating shoulder +1 mm
⑩ For inner contour of the flange design, see page 4/146
⑪ Use bores only for foot-mounted design

© Siemens 2019

Servo parallel shaft geared motor	Motor shaft height	Motor version	Absolute encoder with brake		with brake for increased energy		without brake					Resolver with brake		with brake for increased energy		without brake					
Type			k	o1	k	o1	k	o1	o2	g1	g2	k	o1	k	o1	k	o1	o2	g1	g2	AC
1FG1...-..C2.-....	36	CT	–	–	–	–	–	–	–	–	–	–	–	–	–	–	–	–	–	–	–
1FG1...-..C3.-....		HD	–	–	–	–	–	–	–	–	–	–	–	–	–	–	–	–	–	–	–
1FG1...-..C4.-....		CT	–	–	–	–	–	–	–	–	–	–	–	–	–	–	–	–	–	–	–
1FG1...-..D0.-....	48	CT	–	–	–	–	–	–	–	–	–	–	–	–	–	–	–	–	–	–	–
1FG1...-..D2.-....		CT	–	–	–	–	–	–	–	–	–	–	–	–	–	–	–	–	–	–	–
1FG1...-..D3.-....		HD	–	–	–	–	–	–	–	–	–	–	–	–	–	–	–	–	–	–	–
1FG1...-..D4.-....		HD	–	–	–	–	–	–	–	–	–	–	–	–	–	–	–	–	–	–	–
1FG1...-..E0.-....	63	CT	–	–	–	–	–	–	–	–	–	–	–	–	–	–	–	–	–	–	–
1FG1...-..E1.-....		HD	–	–	–	–	–	–	–	–	–	–	–	–	–	–	–	–	–	–	–
1FG1...-..E2.-....		CT	–	–	–	–	–	–	–	–	–	–	–	–	–	–	–	–	–	–	–
1FG1...-..E3.-....		CT	–	–	–	–	–	–	–	–	–	–	–	–	–	–	–	–	–	–	–
1FG1...-..E4.-....		HD	–	–	–	–	–	–	–	–	–	–	–	–	–	–	–	–	–	–	–
1FG1...-..F0.-....	80	CT	–	–	–	–	–	–	–	–	–	–	–	–	–	–	–	–	–	–	–
1FG1...-..F1.-....		CT	–	–	–	–	–	–	–	–	–	–	–	–	–	–	–	–	–	–	–
1FG1...-..F3.-....		CT	–	–	–	–	–	–	–	–	–	–	–	–	–	–	–	–	–	–	–
1FG1...-..F4.-....		CT	–	–	–	–	–	–	–	–	–	–	–	–	–	–	–	–	–	–	–
1FG1...-..F52-....		HD	–	–	–	–	–	–	–	–	–	–	–	–	–	–	–	–	–	–	–
1FG1...-..F62-....		HD	–	–	–	–	–	–	–	–	–	–	–	–	–	–	–	–	–	–	–
1FG1...-..F53-....		HD	–	–	–	–	–	–	–	–	–	–	–	–	–	–	–	–	–	–	–
1FG1...-..F63-....		HD	–	–	–	–	–	–	–	–	–	–	–	–	–	–	–	–	–	–	–
1FG1...-..G0.-....	100	CT	571	177	598	204	536	142	53	104.5	137	557	179	584	206	522	144	26	136	137	192
1FG1...-..G1.-....		CT	597	203	624	230	562	168			158	583	205	610	232	548	170			158	
1FG1...-..G3.-....		CT	623	229	650	256	588	194				609	231	636	258	574	196				
1FG1...-..G5.-....		CT	675	281	702	308	640	246				661	283	688	310	626	248				

© Siemens 2019

4

Dimensional drawings

Gearbox types *FZ129* and *FD129*

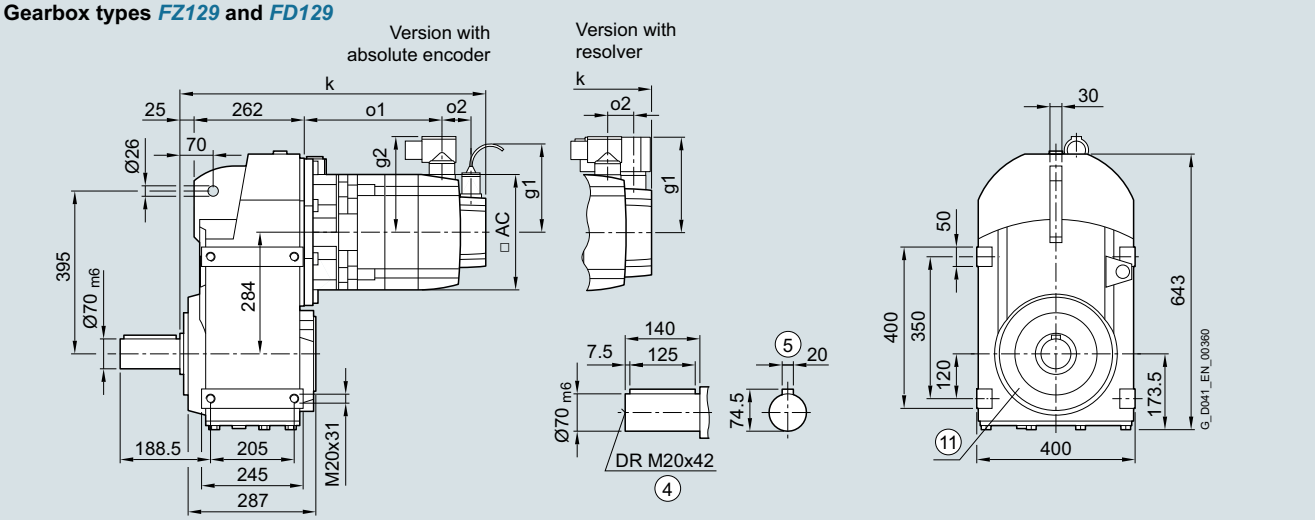

Gearbox types *FZA129* and *FDA129*

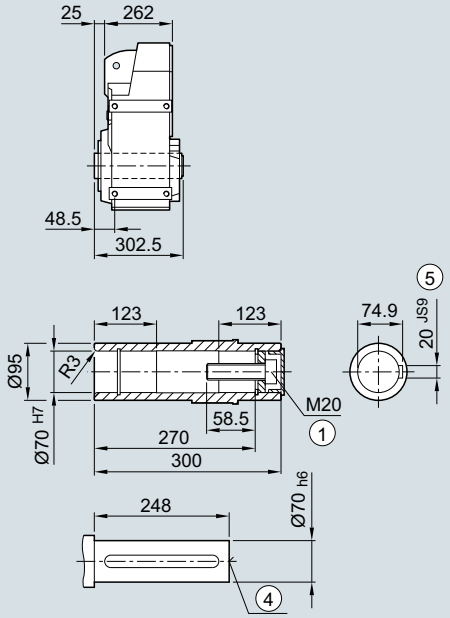

Gearbox types *FZAS129* and *FDAS129*

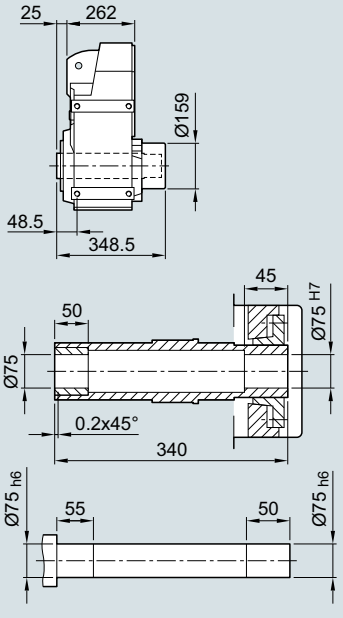

Gearbox types *FZAT129* and *FDAT129*

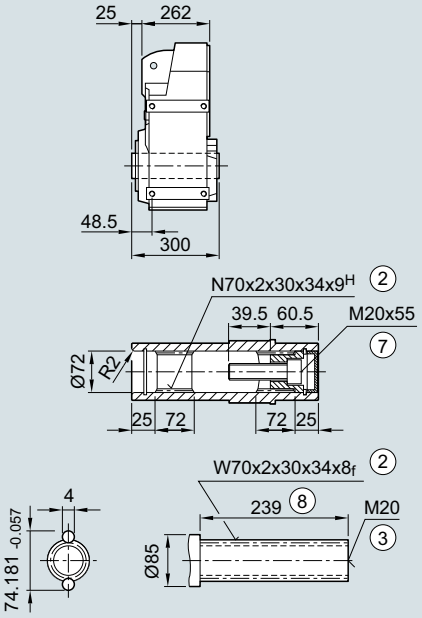

① ISO 4014 ② DIN 5480 ③ DIN 332-D ④ DIN 332
⑤ Feather key/keyway DIN 6885 ⑦ ISO 4762 ⑧ Without locating shoulder +1 mm
⑪ Use bores only for housing flange design

© Siemens 2019

Servo parallel shaft geared motor	Motor shaft height	Motor version	Absolute encoder with brake		with brake for increased energy		without brake					Resolver with brake		with brake for increased energy		without brake					
Type			k	o1	k	o1	k	o1	o2	g1	g2	k	o1	k	o1	k	o1	o2	g1	g2	AC
1FG1...-..C2.-....	36	CT	–	–	–	–	–	–	–	–	–	–	–	–	–	–	–	–	–	–	–
1FG1...-..C3.-....		HD	–	–	–	–	–	–	–	–	–	–	–	–	–	–	–	–	–	–	–
1FG1...-..C4.-....		CT	–	–	–	–	–	–	–	–	–	–	–	–	–	–	–	–	–	–	–
1FG1...-..D0.-....	48	CT	–	–	–	–	–	–	–	–	–	–	–	–	–	–	–	–	–	–	–
1FG1...-..D2.-....		CT	–	–	–	–	–	–	–	–	–	–	–	–	–	–	–	–	–	–	–
1FG1...-..D3.-....		HD	–	–	–	–	–	–	–	–	–	–	–	–	–	–	–	–	–	–	–
1FG1...-..D4.-....		HD	–	–	–	–	–	–	–	–	–	–	–	–	–	–	–	–	–	–	–
1FG1...-..E0.-....	63	CT	–	–	–	–	–	–	–	–	–	–	–	–	–	–	–	–	–	–	–
1FG1...-..E1.-....		HD	–	–	–	–	–	–	–	–	–	–	–	–	–	–	–	–	–	–	–
1FG1...-..E2.-....		CT	–	–	–	–	–	–	–	–	–	–	–	–	–	–	–	–	–	–	–
1FG1...-..E3.-....		CT	–	–	–	–	–	–	–	–	–	–	–	–	–	–	–	–	–	–	–
1FG1...-..E4.-....		HD	–	–	–	–	–	–	–	–	–	–	–	–	–	–	–	–	–	–	–
1FG1...-..F0.-....	80	CT	–	–	–	–	–	–	–	–	–	–	–	–	–	–	–	–	–	–	–
1FG1...-..F1.-....		CT	–	–	–	–	–	–	–	–	–	–	–	–	–	–	–	–	–	–	–
1FG1...-..F3.-....		CT	–	–	–	–	–	–	–	–	–	–	–	–	–	–	–	–	–	–	–
1FG1...-..F4.-....		CT	–	–	–	–	–	–	–	–	–	–	–	–	–	–	–	–	–	–	–
1FG1...-..F52-....		HD	–	–	–	–	–	–	–	–	–	–	–	–	–	–	–	–	–	–	–
1FG1...-..F62-....		HD	–	–	–	–	–	–	–	–	–	–	–	–	–	–	–	–	–	–	–
1FG1...-..F53-....		HD	–	–	–	–	–	–	–	–	–	–	–	–	–	–	–	–	–	–	–
1FG1...-..F63-....		HD	–	–	–	–	–	–	–	–	–	–	–	–	–	–	–	–	–	–	–
1FG1...-..G0.-....	100	CT	530	177	557	204	495	142	53	104.5	137	515	179	542	206	480	144	26	136	137	192
1FG1...-..G1.-....		CT	556	203	583	230	521	168			158	541	205	568	232	506	170			158	
1FG1...-..G3.-....		CT	582	229	609	256	547	194				567	231	594	258	532	196				
1FG1...-..G5.-....		CT	634	281	661	308	599	246				619	283	646	310	584	248				

© Siemens 2019

4

Dimensional drawings

Gearbox types *FZADR* and *FDADR*

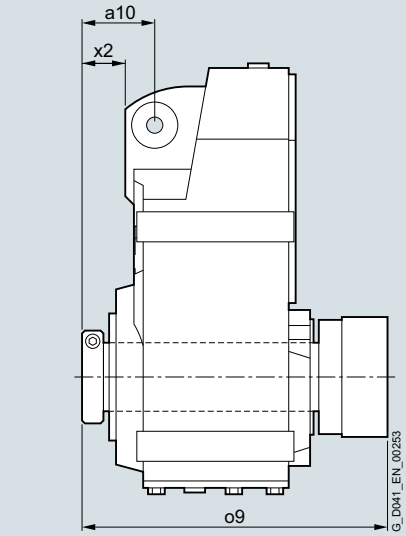

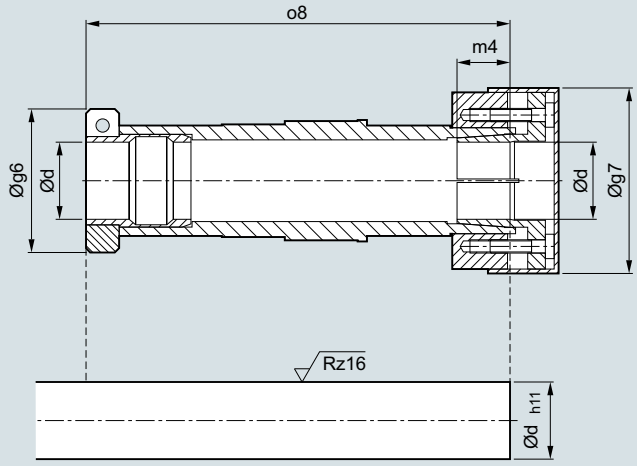

Note mounting tolerance when positioning the torque arm.

Associated dimensions see next page.

© Siemens 2019

d	g6	g7	m4	o8	o9	a10	x2
Gearbox size *29*							
25	58.5	56	18.5	140.5	161	$40.0^{+2.1}_{+0.6}$	$23.5^{+2.1}_{+0.6}$
20							
1“							
0.75“							
Gearbox size *39*							
30	62.0	76	22	160.5	181	$46.5^{+2.2}_{+0.7}$	$29.5^{+2.2}_{+0.7}$
25							
1.25“							
1.1875“							
1“							
Gearbox size *49*							
35	65.0	84	24	192.0	214	$47.0^{+2.6}_{+0.8}$	$24.5^{+2.6}_{+0.8}$
30							
1.375“							
1.4375“							
1.25“							
1.1875“							
Gearbox size *69*							
40	79.5	94	30	217.5	240	$59.5^{+2.5}_{+0.7}$	$37.0^{+2.5}_{+0.7}$
35							
1.5“							
1.625“							
1.4375“							
1.375“							
Gearbox size *79*							
40	79.5	94	30	232.0	259	$60.0^{+3.2}_{+1.4}$	$34.0^{+3.2}_{+1.4}$
35							
1.5“							
1.625“							
1.4375“							
1.375“							
Gearbox size *89*							
50	89.0	114	32	264.0	295	$69.0^{+3.4}_{+1.5}$	$32.0^{+3.4}_{+1.5}$
40							
2“							
1.9375“							
1.75“							
1.625“							

© Siemens 2019

Protection cover for hollow shaft

Dimensional drawings

Protection cover for hollow shaft

Gearbox types *F.A*, *F.AF*, *F.AZ*, *F.AD*

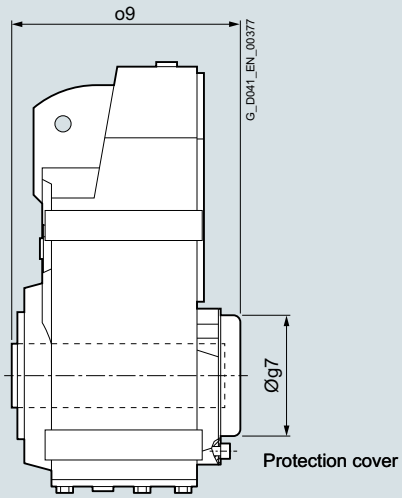

Gearbox size	29	39	49	69	79	89	109	129
Protection cover								
max. motor size that can be mounted								
g7	67	82.5	80	99	99	137	187	187
o9	120.5	134	177	179	192.5	232.5	281.5	348

Protection cover for hollow shaft with shrink disk

Gearbox types *F.AS*, *F.AFS*, *F.AZS*, *F.ADS*

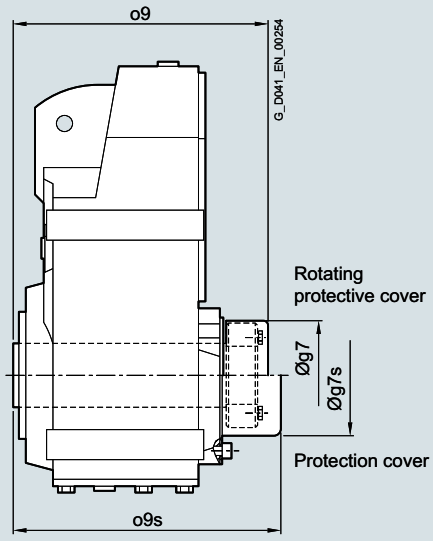

Gearbox size	29	39	49	69	79	89	109	129
Rotating protective cover with shrink disk version								
max. motor size that can be mounted	63	80	100	80	100	100	100	100
g7	57	76	84	84	94	119	145	159
o9	132.5	149.5	182	198	215.5	247.5	282.5	348.5
Protection cover with shrink disk version								
max. motor size that can be mounted	63	63	80	80	100	100	100	100
g7s	58	82.5	86	99	99	137	187	187
o9s	135.5	170	198	210	223.5	284.5	308.5	375

© Siemens 2019

Protection cover for hollow shaft with SIMOLOC assembly system

Gearbox type *F.ADR*

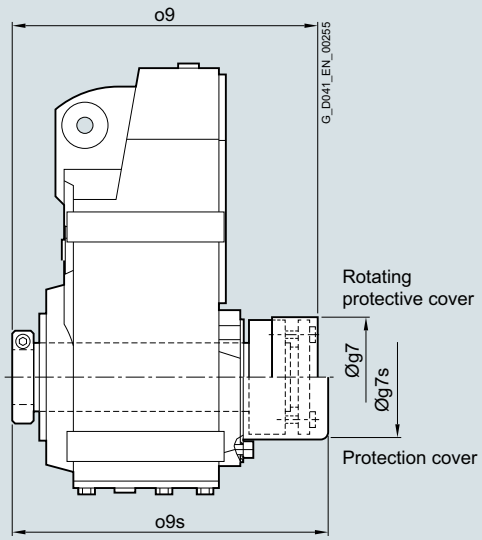

Gearbox size	***29***	***39***	***49***	***69***	***79***	***89***
Rotating protective cover with SIMOLOC assembly system						
max. motor size that can be mounted	63	80	100	100	80	100
g7	56	76	84	94	94	114
o9	161	181	214	240	259	295
Protection cover with SIMOLOC assembly system						
max. motor size that can be mounted	63	63	80	80	100	100
g7s	58	82.5	86	99	99	137
o9s	164	184	219	249.5	263.5	303.5

© Siemens 2019

Inner contour and dimensions of the flange-mounted design

Dimensional drawings

Notes regarding the design of the customer's interface.

Gearbox types *FZF29* to *FZF89* and *FDF29* to *FDF89*

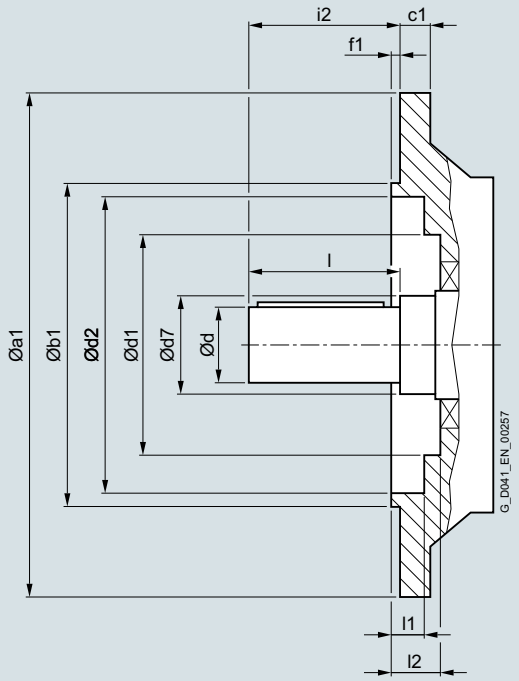

Gearbox size	a1	b1	c1	d	d7	d1	d2	f1	i2	l	l1	l2
29	120	80 $_{j6}$	8	25 $_{k6}$	40	–	70	3.0	50	50	24.0	–
	160	110 $_{j6}$	9	25 $_{k6}$	40	70	101	3.5	50	50	8.5	24.5
39	160	110 $_{j6}$	10	25 $_{k6}$	30	–	100	3.5	50	50	5.0	–
	160	110 $_{j6}$	10	35 $_{k6}$	45	80	102	3.5	46	70	2.0	29.5
49	200	130 $_{j6}$	12	30 $_{k6}$	35	–	118	3.5	60	60	5.5	–
	200	130 $_{j6}$	12	40 $_{k6}$	50	90	120	3.5	55	80	4.0	30.5
69	250	180 $_{j6}$	15	35 $_{k6}$	45	–	165	4.0	70	70	6.5	–
79	250	180 $_{j6}$	15	40 $_{k6}$	55	–	165	4.0	80	80	6.5	–
	250	180 $_{j6}$	15	50 $_{k6}$	55	104	165	4.0	77	100	2.0	29.5
89	300	230 $_{j6}$	16	50 $_{k6}$	55	–	165	4.0	100	100	8.0	–
109	350	250 $_{j6}$	18	60 $_{k6}$	65	–	235	5.0	120	120	9.0	–
	350	250 $_{j6}$	18	80 $_{k6}$	85	184	210	5.0	134	170	13.0	45
129	450	350 $_{j6}$	22	70 $_{k6}$	75	–	336	5.0	140	140	9.0	–
	450	350 $_{j6}$	22	90 $_{k6}$	95	184	336	5.0	128.5	170	16.5	48.5

© Siemens 2019

Notes regarding the design of the customer's interface, e.g. plug-in shaft for hollow shaft design.

Gearbox types *FZAF.* and *FDAF.*

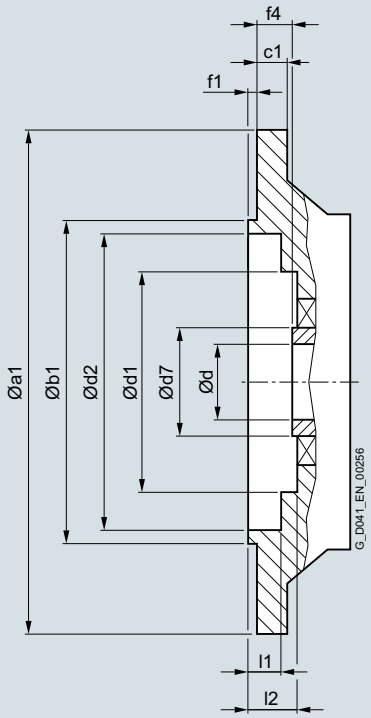

Gearbox size	a1	b1	c1	d	d7	d1	d2	f1	f4	l1	l2
29	120	80_{j6}	8	25^{H7}	40	–	70	3.0	20.0	24.0	–
	160	110_{j6}	9	25^{H7}	40	70	101	3.5	20.0	8.5	24.5
39	160	110_{j6}	10	25^{H7}	45	80	102	3.5	24.0	2.0	29.5
	160	110_{j6}	10	30^{H7}	45	80	102	3.5	24.0	2.0	29.5
49	200	130_{j6}	12	30^{H7}	50	90	120	3.5	25.0	4.0	30.5
	200	130_{j6}	12	35^{H7}	50	90	120	3.5	25.0	4.0	30.5
69	250	180_{j6}	15	40^{H7}	55	104	165	4.0	23.5	2.0	29.5
79	250	180_{j6}	15	40^{H7}	55	104	165	4.0	23.0	2.0	29.5
89	300	230_{j6}	16	50^{H7}	70	135	215	4.0	37.0	2.0	44.5
109	350	250_{j6}	18	60^{H7}	85	184	210	5.0	36.0	13.0	45.0
	350	250_{j6}	18	70^{H7}	90	184	210	5.0	36.0	13.0	45.0
129	450	350_{j6}	22	70^{H7}	95	184	336	5.0	41.5	16.5	48.5

© Siemens 2019

Notes

© Siemens 2019

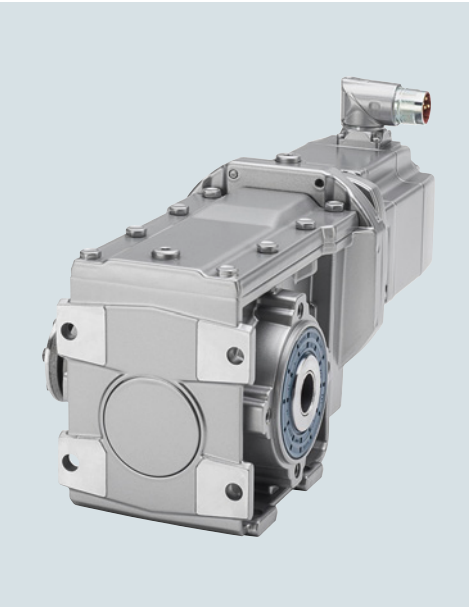

5/2 Orientation

5/3 Selecting servo geared motors
5/3 Gearbox size ***19***
5/3 • 2-stage – 1FG1500 – ***B19***
5/8 Gearbox size ***29***
5/8 • 2-stage – 1FG1501 – ***B29***
5/14 Gearbox size ***39***
5/14 • 2-stage – 1FG1502 – ***B39***
5/19 Gearbox size ***49***
5/19 • 2-stage – 1FG1503 – ***B49***
5/25 Gearbox size ***39***
5/25 • 3-stage – 1FG1504 – ***K39***
5/31 Gearbox size ***49***
5/31 • 3-stage – 1FG1505 – ***K49***
5/37 Gearbox size ***69***
5/37 • 3-stage – 1FG1507 – ***K69***
5/43 Gearbox size ***79***
5/43 • 3-stage – 1FG1508 – ***K79***
5/49 Gearbox size ***89***
5/49 • 3-stage – 1FG1510 – ***K89***
5/55 Gearbox size ***109***
5/55 • 3-stage – 1FG1511 – ***K109***
5/60 Gearbox size ***129***
5/60 • 3-stage – 1FG1512 – ***K129***
5/65 Gearbox size ***149***
5/65 • 3-stage – 1FG1513 – ***K149***

5/70 Dimensions
5/70 Gearbox size ***19***
5/70 Foot-mounted design 2-stage – ***B..19***
5/72 Flange-mounted design 2-stage – ***B.F.19***
5/74 Housing flange design 2-stage – ***B.Z.19***
5/76 Shaft-mounted design 2-stage – ***BAD.19***
5/78 Gearbox size ***29***
5/78 Foot-mounted design 2-stage – ***B..29***
5/80 Flange-mounted design 2-stage – ***B.F.29***
5/82 Housing flange design 2-stage – ***B.Z.29***
5/84 Shaft-mounted design 2-stage – ***BAD.29***
5/86 Gearbox size ***39***
5/86 Foot-mounted design 2-stage – ***B..39***
5/88 Flange-mounted design 2-stage – ***B.F.39***
5/90 Housing flange design 2-stage – ***B.Z.39***
5/92 Shaft-mounted design 2-stage – ***BAD.39***
5/94 Gearbox size ***49***
5/94 Foot-mounted design 2-stage – ***B..49***
5/96 Flange-mounted design 2-stage – ***B.F.49***
5/98 Housing flange design 2-stage – ***B.Z.49***
5/100 Shaft-mounted design 2-stage – ***BAD.49***
5/102 Gearbox size ***39***
5/102 Foot-mounted design 3-stage – ***K..39***
5/104 Flange-mounted design 3-stage – ***K.F.39***
5/106 Housing flange design 3-stage – ***K.Z.39***
5/108 Shaft-mounted design 3-stage – ***KAD.39***

5/110 Gearbox size ***49***
5/110 Foot-mounted design 3-stage – ***K..49***
5/112 Flange-mounted design 3-stage – ***K.F.49***
5/114 Housing flange design 3-stage – ***K.Z.49***
5/116 Shaft-mounted design 3-stage – ***KAD.49***
5/118 Gearbox size ***69***
5/118 Foot-mounted design 3-stage – ***K..69***
5/120 Flange-mounted design 3-stage – ***K.F.69***
5/122 Housing flange design 3-stage – ***K.Z.69***
5/124 Shaft-mounted design 3-stage – ***KAD.69***
5/126 Gearbox size ***79***
5/126 Foot-mounted design 3-stage – ***K..79***
5/128 Flange-mounted design 3-stage – ***K.F.79***
5/130 Housing flange design 3-stage – ***K.Z.79***
5/132 Shaft-mounted design 3-stage – ***KAD.79***
5/134 Gearbox size ***89***
5/134 Foot-mounted design 3-stage – ***K..89***
5/136 Flange-mounted design 3-stage – ***K.F.89***
5/138 Housing flange design 3-stage – ***K.Z.89***
5/140 Shaft-mounted design 3-stage – ***KAD.89***
5/142 Gearbox size ***109***
5/142 Foot-mounted design 3-stage – ***K..109***
5/144 Flange-mounted design 3-stage – ***K.F.109***
5/146 Housing flange design 3-stage – ***K.Z.109***
5/148 Shaft-mounted design 3-stage – ***KAD.109***
5/150 Gearbox size ***129***
5/150 Foot-mounted design 3-stage – ***K..129***
5/152 Flange-mounted design 3-stage – ***K.F.129***
5/154 Housing flange design 3-stage – ***K.Z.129***
5/156 Shaft-mounted design 3-stage – ***KAD.129***
5/158 Gearbox size ***149***
5/158 Foot-mounted design 3-stage – ***K..149***
5/160 Flange-mounted design 3-stage – ***K.F.149***
5/162 Housing flange design 3-stage – ***K.Z.149***
5/164 Shaft-mounted design 3-stage – ***KAD.149***
5/166 SIMOLOC assembly system for shaft-mounted design 2-stage and 3-stage
5/168 Protection cover for hollow shaft
5/168 Protection cover for hollow shaft and hollow shaft with shrink disk
5/169 Protection cover for hollow shaft with SIMOLOC assembly system
5/170 Inner contour and dimensions of the flange-mounted design

© Siemens 2019

Overview

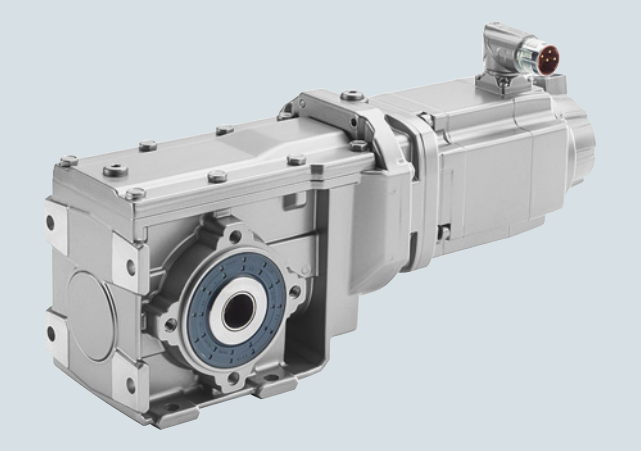

Servo bevel geared motors SIMOTICS S-1FG1 are available in the following versions for mounting in any position:

- 2 or 3 stages *B*/*K*
- Shaft-mounted design with torque arm *BAD*/*KAD*
- Flange-mounted design *BF*/*KF*
- Design with integrated housing flange *BZ*/*KZ*
- Foot-mounted design *B*/*K*
- Hollow-shaft design with feather keyway *BA*/*KA*
- Hollow-shaft design with splined shaft *KAT*
- Hollow-shaft design with shrink disk *BAS*/*KAS*
- Hollow-shaft design with SIMOLOC assembly system *BADR*/*KADR*
- Solid shaft design with feather keyway (at one end or both ends) *B*/*K*

For 2-stage bevel gearboxes *B*, the torque arm is supplied loose to enable it to be mounted as required on site. The position of the torque arm can be freely selected.

© Siemens 2019

Technical specifications

Gearbox type *B19*

Servo geared motor Type	i	R_{ex}	M_{2rated} Nm	M_{2max} Nm	$M_{2Em.Off}$ Nm	n_{2max} rpm	n_{1max} rpm	φ [1] '	F_{R2} N	F_{R2max} N	c_T Nm/ '	J_G 10^{-4} kgm^2
1FG1500-.....-..A2	42.1	3410/81	50	51	85	107	4500	13.0	1910	1910	9	0.02
1FG1500-.....-..X1	37.28	671/18	50	51	85	121	4500	13.5	1910	1910	9	0.03
1FG1500-.....-..W1	32.39	583/18	50	51	85	139	4500	13.6	1910	1910	9	0.04
1FG1500-.....-..V1	29.44	265/9	50	51	85	153	4500	13.6	1910	1910	9	0.05
1FG1500-.....-..U1	25.06	451/18	50	51	85	180	4500	13.7	1910	1910	9	0.06
1FG1500-.....-..T1	22.78	205/9	50	51	85	198	4500	13.7	1910	1910	9	0.08
1FG1500-.....-..S1	19.86	715/36	50	51	85	227	4500	13.9	1910	1910	9	0.09
1FG1500-.....-..R1	17.78	160/9	50	51	85	253	4500	14.0	1910	1910	9	0.12
1FG1500-.....-..Q1	15.79	1705/108	50	52	85	285	4500	14.1	1910	1910	9	0.14
1FG1500-.....-..P1	14.57	1705/117	50	52	85	309	4500	14.1	1910	1910	9	0.17
1FG1500-.....-..N1	12.66	1595/126	50	52	85	355	4500	14.4	1910	1910	9	0.19
1FG1500-.....-..M1	11	11/1	50	52	85	409	4500	14.1	1910	1910	9	0.19
1FG1500-.....-..L1	9.93	715/72	50	51	85	438	4350	14.2	1910	1910	9	0.25
1FG1500-.....-..K1	9.35	1430/153	50	50	85	465	4350	14.2	1910	1910	9	0.29
1FG1500-.....-..J1	8.15	220/27	47	48	79	534	4350	14.6	1910	1910	9	0.33
1FG1500-.....-..H1	7.87	1472/187	38	38	64	572	4500	21.4	1910	1910	7	0.14
1FG1500-.....-..G1	6.99	713/102	38	38	64	644	4500	21.7	1910	1910	7	0.17
1FG1500-.....-..F1	6.45	1426/221	39	39	66	698	4500	21.6	1910	1910	7	0.20
1FG1500-.....-..E1	5.61	667/119	37	39	62	775	4350	22.3	1910	1910	7	0.23
1FG1500-.....-..D1	4.87	414/85	35	37	59	893	4350	21.6	1910	1910	7	0.24
1FG1500-.....-..C1	4.4	299/68	34	35	57	989	4350	21.9	1910	1900	7	0.32
1FG1500-.....-..B1	4.14	1196/289	33	35	56	1051	4350	22.0	1880	1860	7	0.37
1FG1500-.....-..A1	3.61	184/51	31	33	52	1205	4350	22.8	1800	1780	7	0.43

Selection and ordering data

Shaft design, encoder system, mounting type and special designs

Gearbox type *B19*

		Servo bevel geared motors SIMOTICS S-1FG1 Article No. **1FG1500-** ■■...-.■... -Z
Shaft design:	Solid shaft with feather keyway – Design 1	**1**
	Hollow-shaft with feather keyway – Design 1 – H20	**5**
Order codes and Descriptions see chapter "Options"	Special shaft design	**9**
Encoder system for motors with DRIVE-CLiQ interface:	AS20DQI encoder	**Q**
	AM20DQI encoder	**R**
	R14DQ resolver	**P**
	R15DQ resolver	**U**
Order codes and Descriptions see chapter "Options"	Special version encoder system	**Z**
Mounting type:	Foot-mounted design	**A**
	Flange-mounted design	**F**
	Housing flange design	**H**
	Shaft-mounted design (not possible with solid shaft)	**D**
Special designs (Options): Order codes and Descriptions see chapter "Options" The following order codes must be added to each article number: • Oil type – order codes **K07** or **K11** • Mounting position – order codes **D11** ... **D16** or **D21** ... **D26**		**-Z**
Selection of 2-stages servo bevel geared motors with gearbox size 19 from next page.		**1FG1500-** ..■■■-■.■■**-Z**

[1] Data are for option reduced-backlash version – order code **G99** required.

© Siemens 2019

Gearbox size 19, 2-stage – 1FG1500

Selection and ordering data (continued)

For line voltage 380 ... 480 V 3 AC (DC link voltage 510 ... 720 V DC) **– Gearbox type** ***B19***

Geared motor torque at 1450 rpm
Note: All values in **bold** print are maximum gearbox values.

M_{2dyn} Nm																						Servo bevel geared motors SIMOTICS S-1FG1 Article No.
Max. output speed n_{2max} = **107 rpm**, Transmission ratio i = **42.1**																						
51	**51**	**51**	**51**	**51**	**51**	–	–	–	–	–	–	–	–	–	–	–	–	–	–	–	–	1FG1500- . . ■ ■ 6 - ■ . A2 -Z
–	–	–	–	–	**51**	**51**	–	–	–	–	–	–	–	–	–	–	–	–	–	–	–	1FG1500- . . ■ ■ 4 - ■ . A2 -Z
–	–	–	–	**51**	–	**51**	–	–	–	–	–	–	–	–	–	–	–	–	–	–	–	1FG1500- . . ■ ■ 3 - ■ . A2 -Z
–	–	–	–	**51**	–	–	–	–	–	–	–	–	–	–	–	–	–	–	–	–	–	1FG1500- . . ■ ■ 2 - ■ . A2 -Z
Max. output speed n_{2max} = **121 rpm**, Transmission ratio i = **37.28**																						
51	**51**	**51**	**51**	**51**	**51**	–	–	–	–	–	–	–	–	–	–	–	–	–	–	–	–	1FG1500- . . ■ ■ 6 - ■ . X1 -Z
–	–	–	–		**51**	**51**	–	–	–	–	–	–	–	–	–	–	–	–	–	–	–	1FG1500- . . ■ ■ 4 - ■ . X1 -Z
–	–	–	–	**51**	–	**51**	–	–	–	–	–	–	–	–	–	–	–	–	–	–	–	1FG1500- . . ■ ■ 3 - ■ . X1 -Z
–	–	–	–	**51**	–	–	–	–	–	–	–	–	–	–	–	–	–	–	–	–	–	1FG1500- . . ■ ■ 2 - ■ . X1 -Z
Max. output speed n_{2max} = **139 rpm**, Transmission ratio i = **32.39**																						
51	**51**	**51**	**51**	**51**	**51**	–	–	–	–	–	–	–	–	–	–	–	–	–	–	–	–	1FG1500- . . ■ ■ 6 - ■ . W1 -Z
–	–	–	–	–	**51**	**51**	–	–	–	–	–	–	–	–	–	–	–	–	–	–	–	1FG1500- . . ■ ■ 4 - ■ . W1 -Z
–	–	–	–	**51**	–	**51**	–	–	–	–	–	–	–	–	–	–	–	–	–	–	–	1FG1500- . . ■ ■ 3 - ■ . W1 -Z
–	–	–	–	**51**	–	–	–	–	–	–	–	–	–	–	–	–	–	–	–	–	–	1FG1500- . . ■ ■ 2 - ■ . W1 -Z
Max. output speed n_{2max} = **153 rpm**, Transmission ratio i = **29.44**																						
51	**51**	**51**	**51**	**51**	**51**	–	–	–	–	–	–	–	–	–	–	–	–	–	–	–	–	1FG1500- . . ■ ■ 6 - ■ . V1 -Z
–	–	–	–	–	**51**	**51**	–	–	–	–	–	–	–	–	–	–	–	–	–	–	–	1FG1500- . . ■ ■ 4 - ■ . V1 -Z
–	–	–	–	**51**	–	**51**	–	–	–	–	–	–	–	–	–	–	–	–	–	–	–	1FG1500- . . ■ ■ 3 - ■ . V1 -Z
–	–	–	–	**51**	–	–	–	–	–	–	–	–	–	–	–	–	–	–	–	–	–	1FG1500- . . ■ ■ 2 - ■ . V1 -Z
Max. output speed n_{2max} = **180 rpm**, Transmission ratio i = **25.06**																						
51	**51**	**51**	**51**	**51**	**51**	–	–	–	–	–	–	–	–	–	–	–	–	–	–	–	–	1FG1500- . . ■ ■ 6 - ■ . U1 -Z
–	–	–	–	–	**51**	**51**	–	–	–	–	–	–	–	–	–	–	–	–	–	–	–	1FG1500- . . ■ ■ 4 - ■ . U1 -Z
–	–	–	–	**51**	–	**51**	–	–	–	–	–	–	–	–	–	–	–	–	–	–	–	1FG1500- . . ■ ■ 3 - ■ . U1 -Z
–	–	–	–	**51**	–	–	–	–	–	–	–	–	–	–	–	–	–	–	–	–	–	1FG1500- . . ■ ■ 2 - ■ . U1 -Z
Max. output speed n_{2max} = **198 rpm**, Transmission ratio i = **22.78**																						
51	**51**	**51**	**51**	**51**	**51**	–	–	–	–	–	–	–	–	–	–	–	–	–	–	–	–	1FG1500- . . ■ ■ 6 - ■ . T1 -Z
–	–	–	–	–	**51**	**51**	–	–	–	–	–	–	–	–	–	–	–	–	–	–	–	1FG1500- . . ■ ■ 4 - ■ . T1 -Z
–	–	–	–	**51**	–	**51**	–	–	–	–	–	–	–	–	–	–	–	–	–	–	–	1FG1500- . . ■ ■ 3 - ■ . T1 -Z
–	–	–	–	**51**	–	–	–	–	–	–	–	–	–	–	–	–	–	–	–	–	–	1FG1500- . . ■ ■ 2 - ■ . T1 -Z
Max. output speed n_{2max} = **227 rpm**, Transmission ratio i = **19.86**																						
51	**51**	**51**	**51**	**51**	**51**	–	–	–	–	–	–	–	–	–	–	–	–	–	–	–	–	1FG1500- . . ■ ■ 6 - ■ . S1 -Z
–	–	–	–	–	**51**	**51**	–	–	–	–	–	–	–	–	–	–	–	–	–	–	–	1FG1500- . . ■ ■ 4 - ■ . S1 -Z
–	–	–	–	**51**	–	**51**	–	–	–	–	–	–	–	–	–	–	–	–	–	–	–	1FG1500- . . ■ ■ 3 - ■ . S1 -Z
–	–	–	–	**51**	–	–	–	–	–	–	–	–	–	–	–	–	–	–	–	–	–	1FG1500- . . ■ ■ 2 - ■ . S1 -Z

Motor shaft height:

36																							**C**
			48																				**D**
							63																**E**
												80											**F**
																		100					**G**

Motor length/motor version (**CT** = Compact, **HD** = High Dynamic)**:**

			0/CT				**0/CT**					**0/CT**						**0/CT**					**0**	**2**
													1/CT						**1/CT**				**1**	**2**
								1/HD															**1**	**4**
2/CT				**2/CT**					**2/CT**														**2**	**2**
										3/CT				**3/CT**						**3/CT**			**3**	**2**
	3/HD				**3/HD**											**4/CT**							**3**	**4**
		4/CT																					**4**	**2**
						4/HD					**4/HD**												**4**	**4**
																				5/CT			**5**	**2**
																	5/HD						**5**	**4**
																		6/HD					**6**	**4**

Selection of Shaft design, encoder system, mounting type and special designs on page 5/3.

1FG1500- ■ ■ . . . . - . ■ . . -Z

© Siemens 2019

For line voltage 380 ... 480 V 3 AC (DC link voltage 510 ... 720 V DC) **– Gearbox type** ***B19***

Geared motor torque at 1450 rpm
Note: All values in **bold** print are maximum gearbox values.

M_{2dyn} Nm																						Servo bevel geared motors SIMOTICS S-1FG1 Article No.
Max. output speed n_{2max} = **253 rpm**, Transmission ratio i = **17.78**																						
51	**51**	**51**	**51**	**51**	**51**	–	–	–	–	–	–	–	–	–	–	–	–	–	–	–	–	1FG1500- . . ■ ■ 6 - ■ . R1 -Z
–	–	–	–	–	**51**	**51**	–	–	–	–	–	–	–	–	–	–	–	–	–	–	–	1FG1500- . . ■ ■ 4 - ■ . R1 -Z
–	–	–	–	**51**	–	**51**	–	–	–	–	–	–	–	–	–	–	–	–	–	–	–	1FG1500- . . ■ ■ 3 - ■ . R1 -Z
–	–	–	–	**51**	–	–	–	–	–	–	–	–	–	–	–	–	–	–	–	–	–	1FG1500- . . ■ ■ 2 - ■ . R1 -Z
Max. output speed n_{2max} = **285 rpm**, Transmission ratio i = **15.79**																						
52	**52**	**52**	**52**	**52**	**52**	–	–	–	–	–	–	–	–	–	–	–	–	–	–	–	–	1FG1500- . . ■ ■ 6 - ■ . Q1 -Z
–	–	–	–	–	**52**	**52**	–	–	–	–	–	–	–	–	–	–	–	–	–	–	–	1FG1500- . . ■ ■ 4 - ■ . Q1 -Z
–	–	–	–	**52**	–	**52**	–	–	–	–	–	–	–	–	–	–	–	–	–	–	–	1FG1500- . . ■ ■ 3 - ■ . Q1 -Z
–	–	–	–	**52**	–	–	–	–	–	–	–	–	–	–	–	–	–	–	–	–	–	1FG1500- . . ■ ■ 2 - ■ . Q1 -Z
Max. output speed n_{2max} = **309 rpm**, Transmission ratio i = **14.57**																						
52	**52**	**52**	**52**	**52**	**52**	–	–	–	–	–	–	–	–	–	–	–	–	–	–	–	–	1FG1500- . . ■ ■ 6 - ■ . P1 -Z
–	–	–	–	–	**52**	**52**	–	–	–	–	–	–	–	–	–	–	–	–	–	–	–	1FG1500- . . ■ ■ 4 - ■ . P1 -Z
–	–	–	–	**52**	–	**52**	–	–	–	–	–	–	–	–	–	–	–	–	–	–	–	1FG1500- . . ■ ■ 3 - ■ . P1 -Z
–	–	–	–	**52**	–	–	–	–	–	–	–	–	–	–	–	–	–	–	–	–	–	1FG1500- . . ■ ■ 2 - ■ . P1 -Z
Max. output speed n_{2max} = **355 rpm**, Transmission ratio i = **12.66**																						
52	50	**52**	**52**	**52**	**52**	–	–	–	–	–	–	–	–	–	–	–	–	–	–	–	–	1FG1500- . . ■ ■ 6 - ■ . N1 -Z
–	–	–	–	–	**52**	**52**	–	–	–	–	–	–	–	–	–	–	–	–	–	–	–	1FG1500- . . ■ ■ 4 - ■ . N1 -Z
–	–	–	–	**52**	–	**52**	–	–	–	–	–	–	–	–	–	–	–	–	–	–	–	1FG1500- . . ■ ■ 3 - ■ . N1 -Z
–	–	–	–	**52**	–	–	–	–	–	–	–	–	–	–	–	–	–	–	–	–	–	1FG1500- . . ■ ■ 2 - ■ . N1 -Z
Max. output speed n_{2max} = **409 rpm**, Transmission ratio i = **11**																						
46	43	**52**	52	**52**	**52**	–	–	–	–	–	–	–	–	–	–	–	–	–	–	–	–	1FG1500- . . ■ ■ 6 - ■ . M1 -Z
–	–	–	–	–	**52**	**52**	–	–	–	–	–	–	–	–	–	–	–	–	–	–	–	1FG1500- . . ■ ■ 4 - ■ . M1 -Z
–	–	–	–	**52**	–	**52**	–	–	–	–	–	–	–	–	–	–	–	–	–	–	–	1FG1500- . . ■ ■ 3 - ■ . M1 -Z
–	–	–	–	**52**	–	–	–	–	–	–	–	–	–	–	–	–	–	–	–	–	–	1FG1500- . . ■ ■ 2 - ■ . M1 -Z
Max. output speed n_{2max} = **438 rpm**, Transmission ratio i = **9.93**																						
41	39	**51**	47	**51**	**51**	–	–	–	–	–	–	–	–	–	–	–	–	–	–	–	–	1FG1500- . . ■ ■ 6 - ■ . L1 -Z
–	–	–	–	–	**51**	**51**	–	–	–	–	–	–	–	–	–	–	–	–	–	–	–	1FG1500- . . ■ ■ 4 - ■ . L1 -Z
–	–	–	–	**51**	–	**51**	–	–	–	–	–	–	–	–	–	–	–	–	–	–	–	1FG1500- . . ■ ■ 3 - ■ . L1 -Z
–	–	–	–	**51**	–	–	–	–	–	–	–	–	–	–	–	–	–	–	–	–	–	1FG1500- . . ■ ■ 2 - ■ . L1 -Z
Max. output speed n_{2max} = **465 rpm**, Transmission ratio i = **9.35**																						
39	37	**50**	44	**50**	**50**	–	–	–	–	–	–	–	–	–	–	–	–	–	–	–	–	1FG1500- . . ■ ■ 6 - ■ . K1 -Z
–	–	–	–	–	**50**	**50**	–	–	–	–	–	–	–	–	–	–	–	–	–	–	–	1FG1500- . . ■ ■ 4 - ■ . K1 -Z
–	–	–	–	**50**	–	**50**	–	–	–	–	–	–	–	–	–	–	–	–	–	–	–	1FG1500- . . ■ ■ 3 - ■ . K1 -Z
–	–	–	–	**50**	–	–	–	–	–	–	–	–	–	–	–	–	–	–	–	–	–	1FG1500- . . ■ ■ 2 - ■ . K1 -Z
Max. output speed n_{2max} = **534 rpm**, Transmission ratio i = **8.15**																						
34	32	**48**	38	**48**	**48**	–	–	–	–	–	–	–	–	–	–	–	–	–	–	–	–	1FG1500- . . ■ ■ 6 - ■ . J1 -Z
–	–	–	–	–	**48**	**48**	–	–	–	–	–	–	–	–	–	–	–	–	–	–	–	1FG1500- . . ■ ■ 4 - ■ . J1 -Z
–	–	–	–	**48**	–	**48**	–	–	–	–	–	–	–	–	–	–	–	–	–	–	–	1FG1500- . . ■ ■ 3 - ■ . J1 -Z
–	–	–	–	**48**	–	–	–	–	–	–	–	–	–	–	–	–	–	–	–	–	–	1FG1500- . . ■ ■ 2 - ■ . J1 -Z

Motor shaft height:

36																							**C**
			48																				**D**
							63																**E**
													80										**F**
																			100				**G**

Motor length/motor version (**CT** = Compact, **HD** = High Dynamic)**:**

			0/CT				**0/CT**						**0/CT**						**0/CT**					**0**	**2**
														1/CT						**1/CT**				**1**	**2**
								1/HD																**1**	**4**
2/CT				**2/CT**					**2/CT**															**2**	**2**
										3/CT					**3/CT**						**3/CT**			**3**	**2**
	3/HD				**3/HD**																			**3**	**4**
		4/CT															**4/CT**							**4**	**2**
						4/HD					**4/HD**													**4**	**4**
																					5/CT			**5**	**2**
																	5/HD							**5**	**4**
																		6/HD						**6**	**4**

Selection of Shaft design, encoder system, mounting type and special designs on page 5/3.

1FG1500- ■ ■ . . . - . ■ . . **-Z**

5

© Siemens 2019

Gearbox size 19, 2-stage – 1FG1500

For line voltage 380 ... 480 V 3 AC (DC link voltage 510 ... 720 V DC) **– Gearbox type** ***B19***

Geared motor torque at 1450 rpm
Note: All values in **bold** print are maximum gearbox values.
M_{2dyn}
Nm

Servo bevel geared motors SIMOTICS S-1FG1
Article No.

Max. output speed n_{2max} = **572 rpm**, Transmission ratio i = **7.87**																						
33	31	**38**	37	**38**	**38**	–	–	–	–	–	–	–	–	–	–	–	–	–	–	–	–	1FG1500- . . ■ ■ 6 - ■ . H1 -Z
–	–	–	–	–	**38**	**38**	–	–	–	–	–	–	–	–	–	–	–	–	–	–	–	1FG1500- . . ■ ■ 4 - ■ . H1 -Z
–	–	–	–	**38**	–	**38**	–	–	–	–	–	–	–	–	–	–	–	–	–	–	–	1FG1500- . . ■ ■ 3 - ■ . H1 -Z
–	–	–	–	**38**	–	–	–	–	–	–	–	–	–	–	–	–	–	–	–	–	–	1FG1500- . . ■ ■ 2 - ■ . H1 -Z
Max. output speed n_{2max} = **644 rpm**, Transmission ratio i = **6.99**																						
29	28	**38**	33	**38**	**38**	–	–	–	–	–	–	–	–	–	–	–	–	–	–	–	–	1FG1500- . . ■ ■ 6 - ■ . G1 -Z
–	–	–	–	–	**38**	**38**	–	–	–	–	–	–	–	–	–	–	–	–	–	–	–	1FG1500- . . ■ ■ 4 - ■ . G1 -Z
–	–	–	–	**38**	–	**38**	–	–	–	–	–	–	–	–	–	–	–	–	–	–	–	1FG1500- . . ■ ■ 3 - ■ . G1 -Z
–	–	–	–	**38**	–	–	–	–	–	–	–	–	–	–	–	–	–	–	–	–	–	1FG1500- . . ■ ■ 2 - ■ . G1 -Z
Max. output speed n_{2max} = **698 rpm**, Transmission ratio i = **6.45**																						
27	26	**39**	30	**39**	**39**	–	–	–	–	–	–	–	–	–	–	–	–	–	–	–	–	1FG1500- . . ■ ■ 6 - ■ . F1 -Z
–	–	–	–	–	**39**	**39**	–	–	–	–	–	–	–	–	–	–	–	–	–	–	–	1FG1500- . . ■ ■ 4 - ■ . F1 -Z
–	–	–	–	**39**	–	**39**	–	–	–	–	–	–	–	–	–	–	–	–	–	–	–	1FG1500- . . ■ ■ 3 - ■ . F1 -Z
–	–	–	–	**39**	–	–	–	–	–	–	–	–	–	–	–	–	–	–	–	–	–	1FG1500- . . ■ ■ 2 - ■ . F1 -Z
Max. output speed n_{2max} = **748 rpm**, Transmission ratio i = **5.61**																						
23	22	34	26	**39**	**39**	–	–	–	–	–	–	–	–	–	–	–	–	–	–	–	–	1FG1500- . . ■ ■ 6 - ■ . E1 -Z
–	–	–	–	–	**39**	**39**	–	–	–	–	–	–	–	–	–	–	–	–	–	–	–	1FG1500- . . ■ ■ 4 - ■ . E1 -Z
–	–	–	–	**39**	–	**39**	–	–	–	–	–	–	–	–	–	–	–	–	–	–	–	1FG1500- . . ■ ■ 3 - ■ . E1 -Z
–	–	–	–	**39**	–	–	–	–	–	–	–	–	–	–	–	–	–	–	–	–	–	1FG1500- . . ■ ■ 2 - ■ . E1 -Z
Max. output speed n_{2max} = **893 rpm**, Transmission ratio i = **4.87**																						
20	19	29	23	**37**	**37**	–	–	–	–	–	–	–	–	–	–	–	–	–	–	–	–	1FG1500- . . ■ ■ 6 - ■ . D1 -Z
–	–	–	–	–	**37**	**37**	–	–	–	–	–	–	–	–	–	–	–	–	–	–	–	1FG1500- . . ■ ■ 4 - ■ . D1 -Z
–	–	–	–	**37**	–	**37**	–	–	–	–	–	–	–	–	–	–	–	–	–	–	–	1FG1500- . . ■ ■ 3 - ■ . D1 -Z
–	–	–	–	**37**	–	–	–	–	–	–	–	–	–	–	–	–	–	–	–	–	–	1FG1500- . . ■ ■ 2 - ■ . D1 -Z
Max. output speed n_{2max} = **989 rpm**, Transmission ratio i = **4.4**																						
18	17	26	21	**35**	**35**	–	–	–	–	–	–	–	–	–	–	–	–	–	–	–	–	1FG1500- . . ■ ■ 6 - ■ . C1 -Z
–	–	–	–	–	**35**	**35**	–	–	–	–	–	–	–	–	–	–	–	–	–	–	–	1FG1500- . . ■ ■ 4 - ■ . C1 -Z
–	–	–	–	**35**	–	**35**	–	–	–	–	–	–	–	–	–	–	–	–	–	–	–	1FG1500- . . ■ ■ 3 - ■ . C1 -Z
–	–	–	–	**35**	–	–	–	–	–	–	–	–	–	–	–	–	–	–	–	–	–	1FG1500- . . ■ ■ 2 - ■ . C1 -Z
Max. output speed n_{2max} = **1051 rpm**, Transmission ratio i = **4.14**																						
17	16	25	19	**35**	**35**	–	–	–	–	–	–	–	–	–	–	–	–	–	–	–	–	1FG1500- . . ■ ■ 6 - ■ . B1 -Z
–	–	–	–	–	**35**	**35**	–	–	–	–	–	–	–	–	–	–	–	–	–	–	–	1FG1500- . . ■ ■ 4 - ■ . B1 -Z
–	–	–	–	**35**	–	**35**	–	–	–	–	–	–	–	–	–	–	–	–	–	–	–	1FG1500- . . ■ ■ 3 - ■ . B1 -Z
–	–	–	–	**35**	–	–	–	–	–	–	–	–	–	–	–	–	–	–	–	–	–	1FG1500- . . ■ ■ 2 - ■ . B1 -Z
Max. output speed n_{2max} = **1205 rpm**, Transmission ratio i = **3.61**																						
15	14	22	17	**33**	33	–	–	–	–	–	–	–	–	–	–	–	–	–	–	–	–	1FG1500- . . ■ ■ 6 - ■ . A1 -Z
–	–	–	–	–	33	**33**	–	–	–	–	–	–	–	–	–	–	–	–	–	–	–	1FG1500- . . ■ ■ 4 - ■ . A1 -Z
–	–	–	–	**33**	–	**33**	–	–	–	–	–	–	–	–	–	–	–	–	–	–	–	1FG1500- . . ■ ■ 3 - ■ . A1 -Z
–	–	–	–	**33**	–	–	–	–	–	–	–	–	–	–	–	–	–	–	–	–	–	1FG1500- . . ■ ■ 2 - ■ . A1 -Z

Motor shaft height:

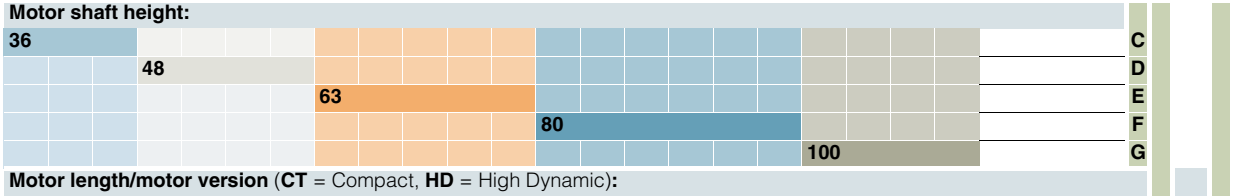

Motor length/motor version (**CT** = Compact, **HD** = High Dynamic)**:**

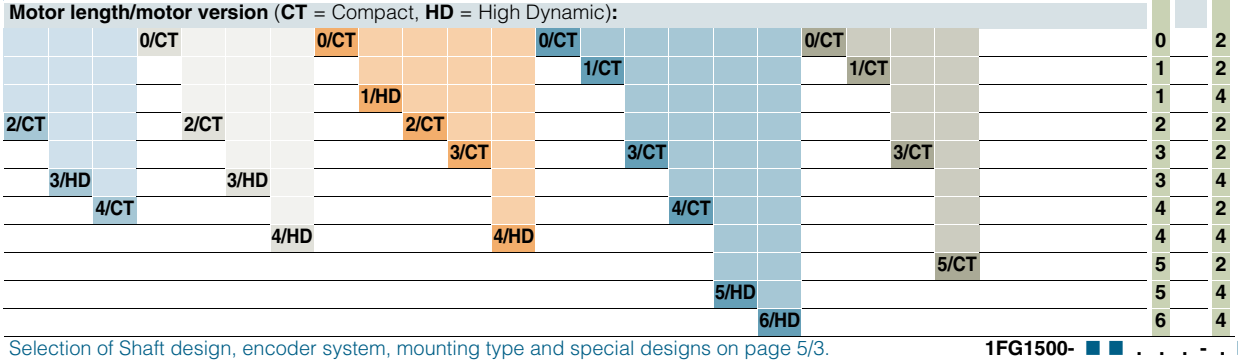

Selection of Shaft design, encoder system, mounting type and special designs on page 5/3.

1FG1500- ■ ■ . . . - . ■ . . -Z

© Siemens 2019

Selection and ordering data (continued)

For line voltage 200 ... 240 V 1 AC (DC link voltage 270 ... 330 V DC) **– Gearbox type *B19***

Max. output speed n_{2max} rpm	Transmission ratio i	Geared motor torque at 1450 rpm Note: All values in **bold** print are maximum gearbox values. M_{2dyn} Nm					**Servo bevel geared motors SIMOTICS S-1FG1** Article No.
107	**42.1**	**51**	**51**	**51**	**51**	**51**	**1FG1500- . . ■ ■ 3 - ■ . A2 -Z**
121	**37.28**	**51**	**51**	**51**	**51**	**51**	**1FG1500- . . ■ ■ 3 - ■ . X1 -Z**
139	**32.39**	**51**	**51**	**51**	**51**	**51**	**1FG1500- . . ■ ■ 3 - ■ . W1 -Z**
153	**29.44**	**51**	**51**	**51**	**51**	**51**	**1FG1500- . . ■ ■ 3 - ■ . V1 -Z**
180	**25.06**	**51**	**51**	**51**	**51**	**51**	**1FG1500- . . ■ ■ 3 - ■ . U1 -Z**
198	**22.78**	**51**	**51**	**51**	**51**	**51**	**1FG1500- . . ■ ■ 3 - ■ . T1 -Z**
227	**19.86**	**51**	**51**	**51**	**51**	**51**	**1FG1500- . . ■ ■ 3 - ■ . S1 -Z**
253	**17.78**	**51**	**51**	**51**	**51**	**51**	**1FG1500- . . ■ ■ 3 - ■ . R1 -Z**
285	**15.79**	**52**	**52**	**52**	**52**	**52**	**1FG1500- . . ■ ■ 3 - ■ . Q1 -Z**
309	**14.57**	**52**	**52**	**52**	**52**	**52**	**1FG1500- . . ■ ■ 3 - ■ . P1 -Z**
355	**12.66**	52	50	**52**	**52**	**52**	**1FG1500- . . ■ ■ 3 - ■ . N1 -Z**
409	**11**	46	43	**52**	**52**	**52**	**1FG1500- . . ■ ■ 3 - ■ . M1 -Z**
438	**9.93**	41	39	**51**	**51**	**51**	**1FG1500- . . ■ ■ 3 - ■ . L1 -Z**
465	**9.35**	39	37	**50**	**50**	**50**	**1FG1500- . . ■ ■ 3 - ■ . K1 -Z**
534	**8.15**	34	32	**48**	**48**	**48**	**1FG1500- . . ■ ■ 3 - ■ . J1 -Z**
572	**7.87**	33	31	**38**	**38**	**38**	**1FG1500- . . ■ ■ 3 - ■ . H1 -Z**
644	**6.99**	29	28	**38**	**38**	**38**	**1FG1500- . . ■ ■ 3 - ■ . G1 -Z**
698	**6.45**	27	26	39	**39**	**39**	**1FG1500- . . ■ ■ 3 - ■ . F1 -Z**
748	**5.61**	23	22	34	**39**	**39**	**1FG1500- . . ■ ■ 3 - ■ . E1 -Z**
893	**4.87**	20	19	29	**37**	**37**	**1FG1500- . . ■ ■ 3 - ■ . D1 -Z**
989	**4.4**	18	17	26	**35**	**35**	**1FG1500- . . ■ ■ 3 - ■ . C1 -Z**
1051	**4.14**	17	16	25	**35**	**35**	**1FG1500- . . ■ ■ 3 - ■ . B1 -Z**
1205	**3.61**	15	14	22	**33**	33	**1FG1500- . . ■ ■ 3 - ■ . A1 -Z**

Motor shaft height:

	36					**C**	
				48		**D**	

Motor length/motor version (**CT** = Compact, **HD** = High Dynamic)**:**

2/CT			**2/CT**			**2**	**1**
	3/HD			**3/HD**		**3**	**3**
		4/CT				**4**	**1**

Selection of Shaft design, encoder system, mounting type and special designs on page 5/3.

1FG1500- ■ ■ . . . - ■ . . -Z

© Siemens 2019

Gearbox size 29, 2-stage – 1FG1501

Technical specifications

Gearbox type *B29*

Servo geared motor Type	i	R_{ex}	M_{2rated} Nm	M_{2max} Nm	$M_{2Em.Off}$ Nm	n_{2max} rpm	n_{1max} rpm	φ [1] '	F_{R2} N	F_{R2max} N	c_T Nm/ '	J_G 10^{-4} kgm^2
1FG1501-.....-..B2	46.85	1265/27	110	112	187	96	4500	10.61	4130	4120	13.3	0.04
1FG1501-.....-..A2	41.56	374/9	110	112	187	108	4500	11.02	4130	4120	13.3	0.05
1FG1501-.....-..X1	36.06	649/18	110	112	187	125	4500	11.13	4130	4120	13.3	0.06
1FG1501-.....-..W1	32.78	295/9	110	112	187	137	4500	11.13	4130	4120	13.3	0.07
1FG1501-.....-..V1	28.11	253/9	110	114	187	160	4500	11.21	4130	4110	13.2	0.09
1FG1501-.....-..U1	25.56	230/9	110	114	187	176	4500	11.21	4130	4110	13.3	0.11
1FG1501-.....-..T1	22.41	605/27	110	114	187	201	4500	11.36	4130	4110	13.3	0.13
1FG1501-.....-..S1	20	20/1	110	114	187	225	4500	11.43	4130	4110	13.3	0.16
1FG1501-.....-..R1	17.82	1925/108	110	114	187	253	4500	11.53	4130	4110	13.2	0.19
1FG1501-.....-..Q1	16.45	1925/117	110	114	187	274	4500	11.53	4130	4110	13.3	0.23
1FG1501-.....-..P1	14.4	605/42	110	114	187	313	4500	11.75	4020	3980	13.2	0.26
1FG1501-.....-..N1	12.63	341/27	110	114	187	356	4500	12.00	3800	3770	13.2	0.27
1FG1501-.....-..M1	11.46	275/24	110	114	187	393	4500	12.14	3650	3610	13.2	0.34
1FG1501-.....-..L1	10.78	550/51	110	114	187	417	4500	12.13	3560	3520	13.2	0.4
1FG1501-.....-..K1	9.51	770/81	110	114	187	473	4500	11.84	3370	3330	13.2	0.45
1FG1501-.....-..J1	8.25	33/4	110	111	187	527	4350	11.98	3170	3160	13.2	0.67
1FG1501-.....-..H1	7.84	345/44	75	75	127	574	4500	16.50	3350	3400	12.1	0.37
1FG1501-.....-..G1	7.38	1380/187	75	75	127	610	4500	16.50	3270	3320	12.1	0.43
1FG1501-.....-..F1	6.51	644/99	75	75	127	691	4500	16.06	3100	3150	12	0.5
1FG1501-.....-..E1	5.65	621/110	75	75	127	796	4500	16.28	2920	2970	12	0.73
1FG1501-.....-..D1	5.07	345/68	74	101	125	858	4350	18.95	2900	2660	10.3	0.6
1FG1501-.....-..C1	4.78	1380/289	74	99	125	910	4350	18.94	2830	2610	10.4	0.7
1FG1501-.....-..B1	4.21	644/153	74	96	125	1033	4350	18.24	2690	2490	10.3	0.82
1FG1501-.....-..A1	3.65	621/170	73	91	124	1192	4350	18.58	2540	2380	10.2	1.1

Selection and ordering data

Shaft design, encoder system, mounting type and special designs

Gearbox type *B29*

| | | |

© Siemens 2019

Selection and ordering data (continued)

For line voltage 380 ... 480 V 3 AC (DC link voltage 510 ... 720 V DC) **– Gearbox type** ***B29***

Geared motor torque at 1450 rpm
Note: All values in **bold** print are maximum gearbox values.
M_{2dyn}
Nm

1	2	3	4	5	6	7	8	9	10	11	12	13	14	15	16	17	18	19	20	21	22	Servo bevel geared motors SIMOTICS S-1FG1 Article No.
Max. output speed n_{2max} = **96 rpm**, Transmission ratio i = **46.85**																						
112	**112**	**112**	**112**	**112**	**112**	–	–	–	–	–	–	–	–	–	–	–	–	–	–	–	–	1FG1501- . . ■ ■ 6 - ■ . B2 -Z
–	–	–	–	–	**112**	**112**	–	–	–	–	–	–	–	–	–	–	–	–	–	–	–	1FG1501- . . ■ ■ 4 - ■ . B2 -Z
–	–	–	–	**112**	–	**112**	–	–	–	–	–	–	–	–	–	–	–	–	–	–	–	1FG1501- . . ■ ■ 3 - ■ . B2 -Z
–	–	–	–	**112**	–	–	–	–	–	–	–	–	–	–	–	–	–	–	–	–	–	1FG1501- . . ■ ■ 2 - ■ . B2 -Z
Max. output speed n_{2max} = **108 rpm**, Transmission ratio i = **41.56**																						
112	**112**	**112**	**112**	**112**	**112**	–	–	–	–	–	–	–	–	–	–	–	–	–	–	–	–	1FG1501- . . ■ ■ 6 - ■ . A2 -Z
–	–	–	–	–	**112**	**112**	**112**	**112**	**112**	**112**	**112**	–	–	–	–	–	–	–	–	–	–	1FG1501- . . ■ ■ 4 - ■ . A2 -Z
–	–	–	–	**112**	–	**112**	**112**	**112**	**112**	**112**	**112**	–	–	–	–	–	–	–	–	–	–	1FG1501- . . ■ ■ 3 - ■ . A2 -Z
–	–	–	–	**112**	–	–	**112**	–	**112**	**112**	**112**	–	–	–	–	–	–	–	–	–	–	1FG1501- . . ■ ■ 2 - ■ . A2 -Z
Max. output speed n_{2max} = **125 rpm**, Transmission ratio i = **36.06**																						
112	**112**	**112**	**112**	**112**	**112**	–	–	–	–	–	–	–	–	–	–	–	–	–	–	–	–	1FG1501- . . ■ ■ 6 - ■ . X1 -Z
–	–	–	–	–	**112**	**112**	**112**	**112**	**112**	**112**	**112**	–	–	–	–	–	–	–	–	–	–	1FG1501- . . ■ ■ 4 - ■ . X1 -Z
–	–	–	–	**112**	–	**112**	**112**	**112**	**112**	**112**	**112**	–	–	–	–	–	–	–	–	–	–	1FG1501- . . ■ ■ 3 - ■ . X1 -Z
–	–	–	–	**112**	–	–	**112**	–	**112**	**112**	**112**	–	–	–	–	–	–	–	–	–	–	1FG1501- . . ■ ■ 2 - ■ . X1 -Z
Max. output speed n_{2max} = **137 rpm**, Transmission ratio i = **32.78**																						
112	**112**	**112**	**112**	**112**	**112**	–	–	–	–	–	–	–	–	–	–	–	–	–	–	–	–	1FG1501- . . ■ ■ 6 - ■ . W1 -Z
–	–	–	–	–	**112**	**112**	**112**	**112**	**112**	**112**	**112**	–	–	–	–	–	–	–	–	–	–	1FG1501- . . ■ ■ 4 - ■ . W1 -Z
–	–	–	–	**112**	–	**112**	**112**	**112**	**112**	**112**	**112**	–	–	–	–	–	–	–	–	–	–	1FG1501- . . ■ ■ 3 - ■ . W1 -Z
–	–	–	–	**112**	–	–	**112**	–	**112**	**112**	**112**	–	–	–	–	–	–	–	–	–	–	1FG1501- . . ■ ■ 2 - ■ . W1 -Z
Max. output speed n_{2max} = **160 rpm**, Transmission ratio i = **28.11**																						
114	111	**114**	**114**	**114**	**114**	–	–	–	–	–	–	–	–	–	–	–	–	–	–	–	–	1FG1501- . . ■ ■ 6 - ■ . V1 -Z
–	–	–	–	–	**114**	**114**	**114**	**114**	**114**	**114**	**114**	–	–	–	–	–	–	–	–	–	–	1FG1501- . . ■ ■ 4 - ■ . V1 -Z
–	–	–	–	**114**	–	**114**	**114**	**114**	**114**	**114**	**114**	–	–	–	–	–	–	–	–	–	–	1FG1501- . . ■ ■ 3 - ■ . V1 -Z
–	–	–	–	**114**	–	–	**114**	–	**114**	**114**	**114**	–	–	–	–	–	–	–	–	–	–	1FG1501- . . ■ ■ 2 - ■ . V1 -Z
Max. output speed n_{2max} = **176 rpm**, Transmission ratio i = **25.56**																						
106	101	**114**	**114**	**114**	**114**	–	–	–	–	–	–	–	–	–	–	–	–	–	–	–	–	1FG1501- . . ■ ■ 6 - ■ . U1 -Z
–	–	–	–	–	**114**	**114**	**114**	**114**	**114**	**114**	**114**	–	–	–	–	–	–	–	–	–	–	1FG1501- . . ■ ■ 4 - ■ . U1 -Z
–	–	–	–	**114**	–	**114**	**114**	**114**	**114**	**114**	**114**	–	–	–	–	–	–	–	–	–	–	1FG1501- . . ■ ■ 3 - ■ . U1 -Z
–	–	–	–	**114**	–	–	**114**	–	**114**	**114**	**114**	–	–	–	–	–	–	–	–	–	–	1FG1501- . . ■ ■ 2 - ■ . U1 -Z
Max. output speed n_{2max} = **201 rpm**, Transmission ratio i = **22.41**																						
93	89	**114**	105	**114**	**114**	–	–	–	–	–	–	–	–	–	–	–	–	–	–	–	–	1FG1501- . . ■ ■ 6 - ■ . T1 -Z
–	–	–	–	–	**114**	**114**	**114**	**114**	**114**	**114**	**114**	**114**	**114**	**114**	–	–	–	–	–	–	–	1FG1501- . . ■ ■ 4 - ■ . T1 -Z
–	–	–	–	**114**	–	**114**	**114**	**114**	**114**	**114**	**114**	**114**	**114**	**114**	**114**	**114**	**114**	–	–	–	–	1FG1501- . . ■ ■ 3 - ■ . T1 -Z
–	–	–	–	**114**	–	–	**114**	–	**114**	**114**	**114**	–	**114**	**114**	**114**	**114**	**114**	–	–	–	–	1FG1501- . . ■ ■ 2 - ■ . T1 -Z

Motor shaft height:

1	2	3	4	5	6	7	8	9	10	11	12	13	14	15	16	17	18	19	20	21	22	
36																						**C**
			48																			**D**
						63																**E**
												80										**F**
																		100				**G**

Motor length/motor version (**CT** = Compact, **HD** = High Dynamic)**:**

1	2	3	4	5	6	7	8	9	10	11	12	13	14	15	16	17	18	19	20	21	22		
			0/CT				**0/CT**					**0/CT**						**0/CT**				**0**	**2**
													1/CT						**1/CT**			**1**	**2**
								1/HD														**1**	**4**
2/CT				**2/CT**					**2/CT**													**2**	**2**
										3/CT				**3/CT**					**3/CT**			**3**	**2**
	3/HD				**3/HD**											**4/CT**						**3**	**4**
		4/CT																				**4**	**2**
						4/HD					**4/HD**											**4**	**4**
																			5/CT			**5**	**2**
																	5/HD					**5**	**4**
																		6/HD				**6**	**4**

Selection of Shaft design, encoder system, mounting type and special designs on page 5/8.

1FG1501- ■ ■ . . . . - . ■ . . -Z

© Siemens 2019

Servo bevel geared motors SIMOTICS S-1FG1

Selecting servo geared motors

Gearbox size 29, 2-stage – 1FG1501

For line voltage 380 ... 480 V 3 AC (DC link voltage 510 ... 720 V DC) **– Gearbox type** ***B29***

Geared motor torque at 1450 rpm
Note: All values in **bold** print are maximum gearbox values.
M_{2dyn}
Nm

																						Servo bevel geared motors SIMOTICS S-1FG1 Article No.
Max. output speed n_{2max} = **225 rpm**, Transmission ratio i = **20**																						
83	79	**114**	94	**114**	**114**	–	–	–	–	–	–	–	–	–	–	–	–	–	–	–	–	1FG1501- . . ■ ■ 6 - ■ . S1 -Z
–	–	–	–	–	**114**	**114**	**114**	**114**	**114**	**114**	**114**	**114**	**114**	**114**	–	–	–	–	–	–	–	1FG1501- . . ■ ■ 4 - ■ . S1 -Z
–	–	–	–	**114**	–	**114**	**114**	**114**	**114**	**114**	**114**	**114**	**114**	**114**	**114**	**114**	**114**	–	–	–	–	1FG1501- . . ■ ■ 3 - ■ . S1 -Z
–	–	–	–	**114**	–	–	**114**	–	**114**	**114**	**114**	–	**114**	**114**	**114**	**114**	**114**	–	–	–	–	1FG1501- . . ■ ■ 2 - ■ . S1 -Z
Max. output speed n_{2max} = **253 rpm**, Transmission ratio i = **17.82**																						
74	70	107	84	**114**	**114**	–	–	–	–	–	–	–	–	–	–	–	–	–	–	–	–	1FG1501- . . ■ ■ 6 - ■ . R1 -Z
–	–	–	–	–	**114**	**114**	**114**	**114**	**114**	**114**	**114**	**114**	**114**	**114**	–	–	–	–	–	–	–	1FG1501- . . ■ ■ 4 - ■ . R1 -Z
–	–	–	–	**114**	–	**114**	**114**	**114**	**114**	**114**	**114**	**114**	**114**	**114**	**114**	**114**	**114**	–	–	–	–	1FG1501- . . ■ ■ 3 - ■ . R1 -Z
–	–	–	–	**114**	–	–	**114**	–	**114**	**114**	**114**	–	**114**	**114**	**114**	**114**	**114**	–	–	–	–	1FG1501- . . ■ ■ 2 - ■ . R1 -Z
Max. output speed n_{2max} = **274 rpm**, Transmission ratio i = **16.45**																						
68	65	99	77	**114**	**114**	–	–	–	–	–	–	–	–	–	–	–	–	–	–	–	–	1FG1501- . . ■ ■ 6 - ■ . Q1 -Z
–	–	–	–	–	**114**	**114**	**114**	**114**	**114**	**114**	**114**	**114**	**114**	**114**	–	–	–	–	–	–	–	1FG1501- . . ■ ■ 4 - ■ . Q1 -Z
–	–	–	–	**114**	–	**114**	**114**	**114**	**114**	**114**	**114**	**114**	**114**	**114**	**114**	**114**	**114**	–	–	–	–	1FG1501- . . ■ ■ 3 - ■ . Q1 -Z
–	–	–	–	**114**	–	–	**114**	–	**114**	**114**	**114**	–	**114**	**114**	**114**	**114**	**114**	–	–	–	–	1FG1501- . . ■ ■ 2 - ■ . Q1 -Z
Max. output speed n_{2max} = **313 rpm**, Transmission ratio i = **14.4**																						
60	57	87	68	**114**	**114**	–	–	–	–	–	–	–	–	–	–	–	–	–	–	–	–	1FG1501- . . ■ ■ 6 - ■ . P1 -Z
–	–	–	–	–	**114**	**114**	**114**	**114**	**114**	**114**	**114**	**114**	**114**	**114**	–	–	–	–	–	–	–	1FG1501- . . ■ ■ 4 - ■ . P1 -Z
–	–	–	–	**114**	–	**114**	**114**	**114**	**114**	**114**	**114**	**114**	**114**	**114**	**114**	**114**	**114**	–	–	–	–	1FG1501- . . ■ ■ 3 - ■ . P1 -Z
–	–	–	–	**114**	–	–	**114**	–	**114**	**114**	**114**	–	**114**	**114**	**114**	**114**	**114**	–	–	–	–	1FG1501- . . ■ ■ 2 - ■ . P1 -Z
Max. output speed n_{2max} = **356 rpm**, Transmission ratio i = **12.63**																						
53	50	76	60	**114**	**114**	–	–	–	–	–	–	–	–	–	–	–	–	–	–	–	–	1FG1501- . . ■ ■ 6 - ■ . N1 -Z
–	–	–	–	–	**114**	**114**	**114**	**114**	**114**	**114**	**114**	**114**	**114**	**114**	–	–	–	–	–	–	–	1FG1501- . . ■ ■ 4 - ■ . N1 -Z
–	–	–	–	**114**	–	**114**	**114**	**114**	**114**	**114**	**114**	**114**	**114**	**114**	**114**	**114**	**114**	–	–	–	–	1FG1501- . . ■ ■ 3 - ■ . N1 -Z
–	–	–	–	**114**	–	–	**114**	–	**114**	**114**	**114**	–	**114**	**114**	**114**	**114**	**114**	–	–	–	–	1FG1501- . . ■ ■ 2 - ■ . N1 -Z
Max. output speed n_{2max} = **393 rpm**, Transmission ratio i = **11.46**																						
48	45	69	54	112	106	–	–	–	–	–	–	–	–	–	–	–	–	–	–	–	–	1FG1501- . . ■ ■ 6 - ■ . M1 -Z
–	–	–	–	–	106	**114**	**114**	**114**	**114**	**114**	**114**	**114**	**114**	**114**	–	–	–	–	–	–	–	1FG1501- . . ■ ■ 4 - ■ . M1 -Z
–	–	–	–	112	–	**114**	**114**	**114**	**114**	**114**	**114**	**114**	**114**	**114**	**114**	**114**	**114**	–	–	–	–	1FG1501- . . ■ ■ 3 - ■ . M1 -Z
–	–	–	–	112	–	–	**114**	–	**114**	**114**	**114**	–	**114**	**114**	**114**	**114**	**114**	–	–	–	–	1FG1501- . . ■ ■ 2 - ■ . M1 -Z
Max. output speed n_{2max} = **417 rpm**, Transmission ratio i = **10.78**																						
45	43	65	51	105	100	–	–	–	–	–	–	–	–	–	–	–	–	–	–	–	–	1FG1501- . . ■ ■ 6 - ■ . L1 -Z
–	–	–	–	–	100	113	**114**	**114**	**114**	**114**	**114**	**114**	**114**	**114**	–	–	–	–	–	–	–	1FG1501- . . ■ ■ 4 - ■ . L1 -Z
–	–	–	–	105	–	113	**114**	**114**	**114**	**114**	**114**	**114**	**114**	**114**	**114**	**114**	**114**	–	–	–	–	1FG1501- . . ■ ■ 3 - ■ . L1 -Z
–	–	–	–	105	–	–	**114**	–	**114**	**114**	**114**	–	**114**	**114**	**114**	**114**	**114**	–	–	–	–	1FG1501- . . ■ ■ 2 - ■ . L1 -Z
Max. output speed n_{2max} = **473 rpm**, Transmission ratio i = **9.51**																						
40	38	57	45	93	89	–	–	–	–	–	–	–	–	–	–	–	–	–	–	–	–	1FG1501- . . ■ ■ 6 - ■ . K1 -Z
–	–	–	–	–	89	100	**114**	**114**	**114**	**114**	**114**	**114**	**114**	**114**	–	–	–	–	–	–	–	1FG1501- . . ■ ■ 4 - ■ . K1 -Z
–	–	–	–	93	–	100	**114**	**114**	**114**	**114**	**114**	**114**	**114**	**114**	**114**	**114**	**114**	–	–	–	–	1FG1501- . . ■ ■ 3 - ■ . K1 -Z
–	–	–	–	93	–	–	**114**	–	**114**	**114**	**114**	–	**114**	**114**	**114**	**114**	**114**	–	–	–	–	1FG1501- . . ■ ■ 6 - ■ . K1 -Z

Motor shaft height:

36																						**C**
			48																			**D**
							63															**E**
												80										**F**
																	100					**G**

Motor length/motor version (**CT** = Compact, **HD** = High Dynamic)**:**

			0/CT				**0/CT**					**0/CT**						**0/CT**					**0**	**2**
													1/CT						**1/CT**				**1**	**2**
								1/HD															**1**	**4**
2/CT				**2/CT**					**2/CT**														**2**	**2**
										3/CT				**3/CT**						**3/CT**			**3**	**2**
	3/HD				**3/HD**																		**3**	**4**
		4/CT														**4/CT**							**4**	**2**
						4/HD					**4/HD**													**4**	**4**
																				5/CT			**5**	**2**
															5/HD								**5**	**4**
																6/HD							**6**	**4**

Selection of Shaft design, encoder system, mounting type and special designs on page 5/8.

1FG1501- ■ ■ . . . - . ■ . . -Z

© Siemens 2019

For line voltage 380 ... 480 V 3 AC (DC link voltage 510 ... 720 V DC) **– Gearbox type** ***B29***

Geared motor torque at 1450 rpm
Note: All values in **bold** print are maximum gearbox values.

M_{2dyn} Nm																					Article No.
Max. output speed n_{2max} = 527 rpm, Transmission ratio i = 8.25																					
34	33	50	39	80	77	–	–	–	–	–	–	–	–	–	–	–	–	–	–	–	1FG1501- . . ■ ■ 6 - ■ . J1 -Z
–	–	–	–	–	77	86	**111**	**111**	**111**	**111**	**111**	**111**	**111**	**111**	–	–	–	–	–	–	1FG1501- . . ■ ■ 4 - ■ . J1 -Z
–	–	–	–	80	–	86	**111**	**111**	**111**	**111**	**111**	**111**	**111**	**111**	**111**	**111**	**111**	–	–	–	1FG1501- . . ■ ■ 3 - ■ . J1 -Z
–	–	–	–	80	–	–	**111**	–	**111**	**111**	**111**	–	**111**	**111**	**111**	**111**	**111**	–	–	–	1FG1501- . . ■ ■ 2 - ■ . J1 -Z
Max. output speed n_{2max} = 574 rpm, Transmission ratio i = 7.84																					
32	31	47	37	**75**	72	–	–	–	–	–	–	–	–	–	–	–	–	–	–	–	1FG1501- . . ■ ■ 6 - ■ . H1 -Z
–	–	–	–	–	72	**75**	**75**	**75**	**75**	**75**	**75**	**75**	**75**	**75**	–	–	–	–	–	–	1FG1501- . . ■ ■ 4 - ■ . H1 -Z
–	–	–	–	**75**	–	**75**	**75**	**75**	**75**	**75**	**75**	**75**	**75**	**75**	**75**	**75**	**75**	–	–	–	1FG1501- . . ■ ■ 3 - ■ . H1 -Z
–	–	–	–	**75**	–	–	**75**	–	**75**	**75**	**75**	–	**75**	**75**	**75**	**75**	**75**	–	–	–	1FG1501- . . ■ ■ 2 - ■ . H1 -Z
Max. output speed n_{2max} = 610 rpm, Transmission ratio i = 7.38																					
30	29	44	35	72	68	–	–	–	–	–	–	–	–	–	–	–	–	–	–	–	1FG1501- . . ■ ■ 6 - ■ . G1 -Z
–	–	–	–	–	68	**75**	**75**	**75**	**75**	**75**	**75**	**75**	**75**	**75**	–	–	–	–	–	–	1FG1501- . . ■ ■ 4 - ■ . G1 -Z
–	–	–	–	72	–	**75**	**75**	**75**	**75**	**75**	**75**	**75**	**75**	**75**	**75**	**75**	**75**	–	–	–	1FG1501- . . ■ ■ 3 - ■ . G1 -Z
–	–	–	–	72	–	–	**75**	–	**75**	**75**	**75**	–	**75**	**75**	**75**	**75**	**75**	–	–	–	1FG1501- . . ■ ■ 2 - ■ . G1 -Z
Max. output speed n_{2max} = 691 rpm, Transmission ratio i = 6.51																					
27	26	39	30	63	60	–	–	–	–	–	–	–	–	–	–	–	–	–	–	–	1FG1501- . . ■ ■ 6 - ■ . F1 -Z
–	–	–	–	–	60	68	**75**	**75**	**75**	**75**	**75**	**75**	**75**	**75**	–	–	–	–	–	–	1FG1501- . . ■ ■ 4 - ■ . F1 -Z
–	–	–	–	63	–	68	**75**	**75**	**75**	**75**	**75**	**75**	**75**	**75**	**75**	**75**	**75**	–	–	–	1FG1501- . . ■ ■ 3 - ■ . F1 -Z
–	–	–	–	63	–	–	**75**	–	**75**	**75**	**75**	–	**75**	**75**	**75**	**75**	**75**	–	–	–	1FG1501- . . ■ ■ 2 - ■ . F1 -Z
Max. output speed n_{2max} = 796 rpm, Transmission ratio i = 5.65																					
23	22	34	26	55	52	–	–	–	–	–	–	–	–	–	–	–	–	–	–	–	1FG1501- . . ■ ■ 6 - ■ . E1 -Z
–	–	–	–	–	52	59	**75**	**75**	**75**	**75**	**75**	**75**	**75**	**75**	–	–	–	–	–	–	1FG1501- . . ■ ■ 4 - ■ . E1 -Z
–	–	–	–	55	–	59	**75**	**75**	**75**	**75**	**75**	**75**	**75**	**75**	**75**	**75**	**75**	–	–	–	1FG1501- . . ■ ■ 3 - ■ . E1 -Z
–	–	–	–	55	–	–	**75**	–	**75**	**75**	**75**	–	**75**	**75**	**75**	**75**	**75**	–	–	–	1FG1501- . . ■ ■ 2 - ■ . E1 -Z
Max. output speed n_{2max} = 858 rpm, Transmission ratio i = 5.07																					
21	20	31	24	50	48	–	–	–	–	–	–	–	–	–	–	–	–	–	–	–	1FG1501- . . ■ ■ 6 - ■ . D1 -Z
–	–	–	–	–	48	54	86	83	**101**	**101**	**101**	**101**	**101**	**101**	–	–	–	–	–	–	1FG1501- . . ■ ■ 4 - ■ . D1 -Z
–	–	–	–	50	–	54	86	83	**101**	**101**	**101**	**101**	**101**	**101**	**101**	**101**	**101**	–	–	–	1FG1501- . . ■ ■ 3 - ■ . D1 -Z
–	–	–	–	50	–	–	86	–	**101**	**101**	**101**	–	**101**	**101**	**101**	**101**	**101**	–	–	–	1FG1501- . . ■ ■ 2 - ■ . D1 -Z
Max. output speed n_{2max} = 910 rpm, Transmission ratio i = 4.78																					
20	19	29	23	47	45	–	–	–	–	–	–	–	–	–	–	–	–	–	–	–	1FG1501- . . ■ ■ 6 - ■ . C1 -Z
–	–	–	–	–	45	51	81	78	**99**	**99**	**99**	**99**	**99**	**99**	–	–	–	–	–	–	1FG1501- . . ■ ■ 4 - ■ . C1 -Z
–	–	–	–	47	–	51	81	78	**99**	**99**	**99**	**99**	**99**	**99**	**99**	**99**	**99**	–	–	–	1FG1501- . . ■ ■ 3 - ■ . C1 -Z
–	–	–	–	47	–	–	81	–	**99**	**99**	**99**	–	**99**	**99**	**99**	**99**	**99**	–	–	–	1FG1501- . . ■ ■ 2 - ■ . C1 -Z

Motor shaft height:

36																					**C**	
			48																		**D**	
						63															**E**	
											80										**F**	
																	100				**G**	

Motor length/motor version (**CT** = Compact, **HD** = High Dynamic)**:**

			0/CT			**0/CT**				**0/CT**						**0/CT**					**0**	**2**
							1/CT										**1/CT**				**1**	**2**
						1/HD															**1**	**4**
2/CT				**2/CT**				**2/CT**													**2**	**2**
									3/CT				**3/CT**					**3/CT**			**3**	**2**
	3/HD				**3/HD**																**3**	**4**
		4/CT												**4/CT**							**4**	**2**
						4/HD				**4/HD**											**4**	**4**
																			5/CT		**5**	**2**
															5/HD						**5**	**4**
																6/HD					**6**	**4**

Selection of Shaft design, encoder system, mounting type and special designs on page 5/8.

1FG1501- ■ ■ . . . - . ■ . . -Z

© Siemens 2019

Gearbox size 29, 2-stage – 1FG1501

For line voltage 380 ... 480 V 3 AC (DC link voltage 510 ... 720 V DC) **– Gearbox type** ***B29***

Geared motor torque at 1450 rpm
Note: All values in **bold** print are maximum gearbox values.
M_{2dyn}
Nm

Servo bevel geared motors SIMOTICS S-1FG1
Article No.

Max. output speed n_{2max} = **1033 rpm**, Transmission ratio i = **4.21**

18	17	26	20	42	40	–	–	–	–	–	–	–	–	–	–	–	–	–	–	–	1FG1501- . . ■ ■ 6 - ■ . B1 -Z
–	–	–	–	–	40	45	72	69	**96**	**96**	**96**	**96**	**96**	**96**	–	–	–	–	–	–	1FG1501- . . ■ ■ 4 - ■ . B1 -Z
–	–	–	–	42	–	45	72	69	**96**	**96**	**96**	**96**	**96**	**96**	**96**	**96**	**96**	–	–	–	1FG1501- . . ■ ■ 3 - ■ . B1 -Z
–	–	–	–	42	–	–	72	–	**96**	**96**	**96**	–	**96**	**96**	**96**	**96**	**96**	–	–	–	1FG1501- . . ■ ■ 2 - ■ . B1 -Z

Max. output speed n_{2max} = **1192 rpm**, Transmission ratio i = **3.65**

15	14	22	17	36	34	–	–	–	–	–	–	–	–	–	–	–	–	–	–	–	1FG1501- . . ■ ■ 6 - ■ . A1 -Z
–	–	–	–	–	34	39	62	59	90	**91**	**91**	86	**91**	**91**	–	–	–	–	–	–	1FG1501- . . ■ ■ 4 - ■ . A1 -Z
–	–	–	–	36	–	39	62	59	90	**91**	**91**	86	**91**	**91**	**91**	**91**	**91**	–	–	–	1FG1501- . . ■ ■ 3 - ■ . A1 -Z
–	–	–	–	36	–	–	62	–	90	**91**	**91**	–	**91**	**91**	**91**	**91**	**91**	–	–	–	1FG1501- . . ■ ■ 2 - ■ . A1 -Z

Motor shaft height:

36																					C	
			48																		D	
							63														E	
												80									F	
																		100			G	

Motor length/motor version (**CT** = Compact, **HD** = High Dynamic)**:**

			0/CT				**0/CT**					**0/CT**						**0/CT**				0	2
													1/CT						**1/CT**			1	2
								1/HD														1	4
2/CT				**2/CT**					**2/CT**													2	2
										3/CT				**3/CT**					**3/CT**			3	2
	3/HD				**3/HD**																	3	4
		4/CT													**4/CT**							4	2
						4/HD					**4/HD**											4	4
																				5/CT		5	2
																5/HD						5	4
																	6/HD					6	4

Selection of Shaft design, encoder system, mounting type and special designs on page 5/8.

1FG1501- ■ ■ . . . . - . ■ . . **-Z**

5

© Siemens 2019

Selection and ordering data (continued)

For line voltage 200 ... 240 V 1 AC (DC link voltage 270 ... 330 V DC) **– Gearbox type** ***B29***

Max. output speed n_{2max} rpm	Transmission ratio i	Geared motor torque at 1450 rpm Note: All values in **bold** print are maximum gearbox values. M_{2dyn} Nm					**Servo bevel geared motors SIMOTICS S-1FG1** Article No.
96	**46.85**	**112**	**112**	**112**	**112**	**112**	**1FG1501- . . ■ ■ 3 - ■ . B2 -Z**
108	**41.56**	**112**	**112**	**112**	**112**	**112**	**1FG1501- . . ■ ■ 3 - ■ . A2 -Z**
125	**36.06**	**112**	**112**	**112**	**112**	**112**	**1FG1501- . . ■ ■ 3 - ■ . X1 -Z**
137	**32.78**	**112**	**112**	**112**	**112**	**112**	**1FG1501- . . ■ ■ 3 - ■ . W1 -Z**
160	**28.11**	**114**	111	**114**	**114**	**114**	**1FG1501- . . ■ ■ 3 - ■ . V1 -Z**
176	**25.56**	106	101	**114**	**114**	**114**	**1FG1501- . . ■ ■ 3 - ■ . U1 -Z**
201	**22.41**	93	89	**114**	**114**	**114**	**1FG1501- . . ■ ■ 3 - ■ . T1 -Z**
225	**20**	83	79	**114**	**114**	**114**	**1FG1501- . . ■ ■ 3 - ■ . S1 -Z**
253	**17.82**	74	70	107	**114**	**114**	**1FG1501- . . ■ ■ 3 - ■ . R1 -Z**
274	**16.45**	68	65	99	**114**	**114**	**1FG1501- . . ■ ■ 3 - ■ . Q1 -Z**
313	**14.4**	60	57	87	**114**	**114**	**1FG1501- . . ■ ■ 3 - ■ . P1 -Z**
356	**12.63**	53	50	76	**114**	**114**	**1FG1501- . . ■ ■ 3 - ■ . N1 -Z**
393	**11.46**	48	45	69	112	106	**1FG1501- . . ■ ■ 3 - ■ . M1 -Z**
417	**10.78**	45	43	65	105	100	**1FG1501- . . ■ ■ 3 - ■ . L1 -Z**
473	**9.51**	40	38	57	93	89	**1FG1501- . . ■ ■ 3 - ■ . K1 -Z**
527	**8.25**	34	33	50	80	77	**1FG1501- . . ■ ■ 3 - ■ . J1 -Z**
574	**7.84**	32	31	47	**75**	72	**1FG1501- . . ■ ■ 3 - ■ . H1 -Z**
610	**7.38**	30	29	44	72	68	**1FG1501- . . ■ ■ 3 - ■ . G1 -Z**
691	**6.51**	27	26	39	63	60	**1FG1501- . . ■ ■ 3 - ■ . F1 -Z**
796	**5.65**	23	22	34	55	52	**1FG1501- . . ■ ■ 3 - ■ . E1 -Z**
858	**5.07**	21	20	31	50	48	**1FG1501- . . ■ ■ 3 - ■ . D1 -Z**
910	**4.78**	20	19	29	47	45	**1FG1501- . . ■ ■ 3 - ■ . C1 -Z**
1033	**4.21**	18	17	26	42	40	**1FG1501- . . ■ ■ 3 - ■ . B1 -Z**
1192	**3.65**	15	14	22	36	34	**1FG1501- . . ■ ■ 3 - ■ . A1 -Z**
Motor shaft height:							
		36					**C**
					48		**D**
Motor length/motor version (**CT** = Compact, **HD** = High Dynamic)**:**							
		2/CT			**2/CT**		**2** **1**
			3/HD			**3/HD**	**3** **3**
				4/CT			**4** **1**

Selection of Shaft design, encoder system, mounting type and special designs on page 5/8.

1FG1501- ■ ■ . . . - . ■ . . -Z

5

© Siemens 2019

Gearbox size 39, 2-stage – 1FG1502

Technical specifications

Gearbox type *B39*

Servo geared motor Type	i	R_{ex}	M_{2rated} Nm	M_{2max} Nm	$M_{2Em.Off}$ Nm	n_{2max} rpm	n_{1max} rpm	φ [1] '	F_{R2} N	F_{R2max} N	c_T Nm/ '	J_G 10^{-4} kgm^2
1FG1502-.....-..A2	56.36	4565/81	250	250	425	80	4500	8.46	6980	6980	39.8	0.06
1FG1502-.....-..X1	50.11	451/9	210	245	355	90	4500	8.79	6980	6980	39.7	0.08
1FG1502-.....-..W1	44	44/1	250	250	425	102	4500	8.85	6980	6980	39.8	0.09
1FG1502-.....-..V1	40	40/1	230	250	390	113	4500	8.85	6980	6980	39.8	0.11
1FG1502-.....-..U1	34.22	308/9	250	250	425	132	4500	8.93	6980	6980	39.6	0.13
1FG1502-.....-..T1	31.11	280/9	250	250	425	145	4500	8.93	6980	6980	39.7	0.16
1FG1502-.....-..S1	27.5	55/2	250	250	425	164	4500	9.03	6980	6980	39.6	0.19
1FG1502-.....-..R1	25	25/1	250	250	425	180	4500	9.03	6980	6980	39.6	0.25
1FG1502-.....-..Q1	21.9	2365/108	250	250	425	205	4500	9.16	6720	6720	39.6	0.3
1FG1502-.....-..P1	20.21	2365/117	250	250	425	223	4500	9.16	6490	6490	39.7	0.36
1FG1502-.....-..N1	17.9	2255/126	250	250	425	251	4500	9.30	6160	6160	39.6	0.43
1FG1502-.....-..M1	14.9	715/48	250	250	425	302	4500	9.46	5680	5680	39.4	0.58
1FG1502-.....-..L1	14.02	715/51	250	250	425	321	4500	9.46	5530	5530	39.5	0.67
1FG1502-.....-..K1	12.56	2035/162	250	250	425	351	4412	9.64	5260	5260	39.4	0.75
1FG1502-.....-..J1	10.69	385/36	240	240	405	407	4350	9.84	4960	4960	39.3	0.98
1FG1502-.....-..H1	9.17	55/6	230	230	390	474	4350	10.06	4700	4700	39.1	1.3
1FG1502-.....-..G1	7.89	1705/216	220	220	370	551	4350	10.31	4460	4460	38.9	1.7
1FG1502-.....-..F1	6.6	897/136	200	200	340	682	4500	15.13	4410	4410	24.5	0.94
1FG1502-.....-..E1	6.21	1794/289	200	200	340	725	4500	15.12	4290	4290	24.6	1.1
1FG1502-.....-..D1	5.56	851/153	200	200	340	809	4500	15.54	4090	4090	24.5	1.3
1FG1502-.....-..C1	4.74	161/34	200	200	340	949	4500	16.00	3800	3800	24.2	1.7
1FG1502-.....-..B1	4.06	69/17	200	200	340	1071	4350	16.52	3540	3540	23.9	2.3
1FG1502-.....-..A1	3.5	713/204	192	193	325	1243	4350	17.10	3350	3350	23.5	3

Selection and ordering data

Shaft design, encoder system, mounting type and special designs

Gearbox type *B39*

			Servo bevel geared motors SIMOTICS S-1FG1 Article No. **1FG1502-** ■■.....-.■..**-Z**
Shaft design:	Solid shaft with feather keyway	– Design 1	**1**
	Hollow-shaft with feather keyway	– Design 1 – H30	**5**
		– Design 2 – H35	**6**
		– Design 2 – H40	**7**
Order codes and Descriptions see chapter "Options"	Special shaft design		**9**
Encoder system for motors with DRIVE-CLiQ interface:	AS20DQI encoder		**Q**
	AM20DQI encoder		**R**
	R14DQ resolver		**P**
	R15DQ resolver		**U**
Order codes and Descriptions see chapter "Options"	Special version encoder system		**Z**
Mounting type:	Foot-mounted design		**A**
	Flange-mounted design		**F**
	Housing flange design		**H**
	Shaft-mounted design (not possible with solid shaft)		**D**
Special designs (Options): Order codes and Descriptions see chapter "Options" The following order codes must be added to each article number: • Oil type – order codes **K07** or **K11** • Mounting position – order codes **D11** ... **D16** or **D21** ... **D26**			**-Z**

Selection of 2-stages servo bevel geared motors with gearbox size 39 from next page. **1FG1502-** ..■■■-■.■■**-Z**

[1] Data are for option reduced-backlash version – order code **G99** required.

© Siemens 2019

Selection and ordering data (continued)

For line voltage 380 ... 480 V 3 AC (DC link voltage 510 ... 720 V DC) **– Gearbox type** ***B39***

Geared motor torque at 1450 rpm
Note: All values in **bold** print are maximum gearbox values.
M_{2dyn}
Nm

Servo bevel geared motors SIMOTICS S-1FG1 Article No.
Max. output speed n_{2max} = **80 rpm**, Transmission ratio i = **56.36**
235 225 **250** 250 250 250 – – –

© Siemens 2019

Gearbox size 39, 2-stage – 1FG1502

For line voltage 380 ... 480 V 3 AC (DC link voltage 510 ... 720 V DC) **– Gearbox type** ***B39***

Geared motor torque at 1450 rpm
Note: All values in **bold** print are maximum gearbox values.
M_{2dyn} Nm

																					Article No.
Max. output speed n_{2max} = **180 rpm**, Transmission ratio i = **25**																					
105	101	152	119	245	235	–	–	–	–	–	–	–	–	–	–	–	–	–	–	–	1FG1502- . . ■ ■ 6 - ■ . R1 -Z
–	–	–	–	–	235	**250**	**250**	**250**	**250**	**250**	**250**	**250**	**250**	**250**	–	–	–	–	–	–	1FG1502- . . ■ ■ 4 - ■ . R1 -Z
–	–	–	–	245	–	**250**	**250**	**250**	**250**	**250**	**250**	**250**	**250**	**250**	**250**	**250**	**250**	–	–	–	1FG1502- . . ■ ■ 3 - ■ . R1 -Z
–	–	–	–	245	–	–	**250**	–	**250**	**250**	**250**	–	**250**	**250**	**250**	**250**	**250**	–	–	–	1FG1502- . . ■ ■ 2 - ■ . R1 -Z
Max. output speed n_{2max} = **205 rpm**, Transmission ratio i = **21.9**																					
93	88	134	105	215	205	–	–	–	–	–	–	–	–	–	–	–	–	–	–	–	1FG1502- . . ■ ■ 6 - ■ . Q1 -Z
–	–	–	–	–	205	230	**250**	**250**	**250**	**250**	**250**	**250**	**250**	**250**	–	–	–	–	–	–	1FG1502- . . ■ ■ 4 - ■ . Q1 -Z
–	–	–	–	215	–	230	**250**	**250**	**250**	**250**	**250**	**250**	**250**	**250**	**250**	**250**	**250**	–	–	–	1FG1502- . . ■ ■ 3 - ■ . Q1 -Z
–	–	–	–	215	–	–	**250**	–	**250**	**250**	**250**	–	**250**	**250**	**250**	**250**	**250**	–	–	–	1FG1502- . . ■ ■ 2 - ■ . Q1 -Z
Max. output speed n_{2max} = **223 rpm**, Transmission ratio i = **20.21**																					
86	82	124	97	200	191	–	–	–	–	–	–	–	–	–	–	–	–	–	–	–	1FG1502- . . ■ ■ 6 - ■ . P1 -Z
–	–	–	–	–	191	215	**250**	**250**	**250**	**250**	**250**	**250**	**250**	**250**	–	–	–	–	–	–	1FG1502- . . ■ ■ 4 - ■ . P1 -Z
–	–	–	–	200	–	215	**250**	**250**	**250**	**250**	**250**	**250**	**250**	**250**	**250**	**250**	**250**	–	–	–	1FG1502- . . ■ ■ 3 - ■ . P1 -Z
–	–	–	–	200	–	–	**250**	–	**250**	**250**	**250**	–	**250**	**250**	**250**	**250**	**250**	–	–	–	1FG1502- . . ■ ■ 2 - ■ . P1 -Z
Max. output speed n_{2max} = **251 rpm**, Transmission ratio i = **17.9**																					
76	73	110	86	178	169	–	–	–	–	–	–	–	–	–	–	–	–	–	–	–	1FG1502- . . ■ ■ 6 - ■ . N1 -Z
–	–	–	–	–	169	191	**250**	**250**	**250**	**250**	**250**	**250**	**250**	**250**	–	–	–	–	–	–	1FG1502- . . ■ ■ 4 - ■ . N1 -Z
–	–	–	–	178	–	191	**250**	**250**	**250**	**250**	**250**	**250**	**250**	**250**	**250**	**250**	**250**	–	–	–	1FG1502- . . ■ ■ 3 - ■ . N1 -Z
–	–	–	–	178	–	–	**250**	–	**250**	**250**	**250**	–	**250**	**250**	**250**	**250**	**250**	–	–	–	1FG1502- . . ■ ■ 2 - ■ . N1 -Z
Max. output speed n_{2max} = **302 rpm**, Transmission ratio i = **14.9**																					
63	60	91	72	148	141	–	–	–	–	–	–	–	–	–	–	–	–	–	–	–	1FG1502- . . ■ ■ 6 - ■ . M1 -Z
–	–	–	–	–	141	159	250	240	**250**	**250**	**250**	**250**	**250**	**250**	–	–	–	–	–	–	1FG1502- . . ■ ■ 4 - ■ . M1 -Z
–	–	–	–	148	–	159	250	240	**250**	**250**	**250**	**250**	**250**	**250**	**250**	**250**	**250**	–	–	–	1FG1502- . . ■ ■ 3 - ■ . M1 -Z
–	–	–	–	148	–	–	250	–	**250**	**250**	**250**	–	**250**	**250**	**250**	**250**	**250**	–	–	–	1FG1502- . . ■ ■ 2 - ■ . M1 -Z
Max. output speed n_{2max} = **321 rpm**, Transmission ratio i = **14.02**																					
59	57	86	67	139	133	–	–	–	–	–	–	–	–	–	–	–	–	–	–	–	1FG1502- . . ■ ■ 6 - ■ . L1 -Z
–	–	–	–	–	133	150	235	230	**250**	**250**	**250**	**250**	**250**	**250**	–	–	–	–	–	–	1FG1502- . . ■ ■ 4 - ■ . L1 -Z
–	–	–	–	139	–	150	235	230	**250**	**250**	**250**	**250**	**250**	**250**	**250**	**250**	**250**	–	–	–	1FG1502- . . ■ ■ 3 - ■ . L1 -Z
–	–	–	–	139	–	–	235	–	**250**	**250**	**250**	–	**250**	**250**	**250**	**250**	**250**	–	–	–	1FG1502- . . ■ ■ 2 - ■ . L1 -Z
Max. output speed n_{2max} = **351 rpm**, Transmission ratio i = **12.56**																					
53	51	77	60	125	119	–	–	–	–	–	–	–	–	–	–	–	–	–	–	–	1FG1502- . . ■ ■ 6 - ■ . K1 -Z
–	–	–	–	–	119	134	215	205	**250**	**250**	**250**	**250**	**250**	**250**	–	–	–	–	–	–	1FG1502- . . ■ ■ 4 - ■ . K1 -Z
–	–	–	–	125	–	134	215	205	**250**	**250**	**250**	**250**	**250**	**250**	**250**	**250**	**250**	–	–	–	1FG1502- . . ■ ■ 3 - ■ . K1 -Z
–	–	–	–	125	–	–	215	–	**250**	**250**	**250**	–	**250**	**250**	**250**	**250**	**250**	–	–	–	1FG1502- . . ■ ■ 2 - ■ . K1 -Z
Max. output speed n_{2max} = **407 rpm**, Transmission ratio i = **10.69**																					
45	43	66	51	106	101	–	–	–	–	–	–	–	–	–	–	–	–	–	–	–	1FG1502- . . ■ ■ 6 - ■ . J1 -Z
–	–	–	–	–	101	114	183	176	**240**	**240**	**240**	**240**	**240**	**240**	–	–	–	–	–	–	1FG1502- . . ■ ■ 4 - ■ . J1 -Z
–	–	–	–	106	–	114	183	176	**240**	**240**	**240**	**240**	**240**	**240**	**240**	**240**	**240**	–	–	–	1FG1502- . . ■ ■ 3 - ■ . J1 -Z
–	–	–	–	106	–	–	183	–	**240**	**240**	**240**	–	**240**	**240**	**240**	**240**	**240**	–	–	–	1FG1502- . . ■ ■ 2 - ■ . J1 -Z

Motor shaft height:

36																						**C**
			48																			**D**
							63															**E**
												80										**F**
																		100				**G**

Motor length/motor version (**CT** = Compact, **HD** = High Dynamic)**:**

			0/CT				**0/CT**					**0/CT**						**0/CT**					**0**	**2**
													1/CT						**1/CT**				**1**	**2**
								1/HD															**1**	**4**
2/CT				**2/CT**					**2/CT**														**2**	**2**
										3/CT				**3/CT**						**3/CT**			**3**	**2**
	3/HD				**3/HD**																		**3**	**4**
		4/CT														**4/CT**							**4**	**2**
						4/HD					**4/HD**													**4**	**4**
																				5/CT			**5**	**2**
															5/HD								**5**	**4**
																6/HD							**6**	**4**

Selection of Shaft design, encoder system, mounting type and special designs on page 5/14.

1FG1502- ■ ■ . . . - . ■ . . -Z

© Siemens 2019

For line voltage 380 ... 480 V 3 AC (DC link voltage 510 ... 720 V DC) **– Gearbox type** ***B39***

Geared motor torque at 1450 rpm
Note: All values in **bold** print are maximum gearbox values.
M_{2dyn}
Nm

																						Article No.
Max. output speed n_{2max} = **474 rpm**, Transmission ratio i = **9.17**																						
–	–	–	–	–	–	–	–	–	–	–	–	–	–	–	–	–	–	–	–	–	–	1FG1502- . . ■ ■ 6 - ■ . H1 -Z
–	–	–	–	–	–	–	157	151	225	**230**	**230**	215	**230**	**230**	–	–	–	–	–	–	–	1FG1502- . . ■ ■ 4 - ■ . H1 -Z
–	–	–	–	–	–	–	157	151	225	**230**	**230**	215	**230**	**230**	**230**	**230**	**230**	–	–	–	–	1FG1502- . . ■ ■ 3 - ■ . H1 -Z
–	–	–	–	–	–	–	157	–	225	**230**	**230**	–	**230**	**230**	**230**	**230**	**230**	–	–	–	–	1FG1502- . . ■ ■ 2 - ■ . H1 -Z
Max. output speed n_{2max} = **551 rpm**, Transmission ratio i = **7.89**																						
–	–	–	–	–	–	–	–	–	–	–	–	–	–	–	–	–	–	–	–	–	–	1FG1502- . . ■ ■ 6 - ■ . G1 -Z
–	–	–	–	–	–	–	135	130	195	**220**	**220**	188	**220**	**220**	–	–	–	–	–	–	–	1FG1502- . . ■ ■ 4 - ■ . G1 -Z
–	–	–	–	–	–	–	135	130	195	**220**	**220**	188	**220**	**220**	**220**	**220**	**220**	–	–	–	–	1FG1502- . . ■ ■ 3 - ■ . G1 -Z
–	–	–	–	–	–	–	135	–	195	**220**	**220**	–	**220**	**220**	**220**	**220**	**220**	–	–	–	–	1FG1502- . . ■ ■ 2 - ■ . G1 -Z
Max. output speed n_{2max} = **682 rpm**, Transmission ratio i = **6.6**																						
28	27	41	32	66	63	–	–	–	–	–	–	–	–	–	–	–	–	–	–	–	–	1FG1502- . . ■ ■ 6 - ■ . F1 -Z
–	–	–	–	–	63	71	113	109	164	**200**	200	158	**200**	**200**	–	–	–	–	–	–	–	1FG1502- . . ■ ■ 4 - ■ . F1 -Z
–	–	–	–	66	–	71	113	109	164	**200**	200	158	**200**	**200**	**200**	**200**	**200**	–	–	–	–	1FG1502- . . ■ ■ 3 - ■ . F1 -Z
–	–	–	–	66	–	–	113	–	164	**200**	200	–	**200**	**200**	**200**	**200**	**200**	–	–	–	–	1FG1502- . . ■ ■ 2 - ■ . F1 -Z
Max. output speed n_{2max} = **725 rpm**, Transmission ratio i = **6.21**																						
26	25	38	30	62	59	–	–	–	–	–	–	–	–	–	–	–	–	–	–	–	–	1FG1502- . . ■ ■ 6 - ■ . E1 -Z
–	–	–	–	–	59	67	107	103	155	**200**	190	149	**200**	**200**	–	–	–	–	–	–	–	1FG1502- . . ■ ■ 4 - ■ . E1 -Z
–	–	–	–	62	–	67	107	103	155	**200**	190	149	**200**	**200**	**200**	**200**	**200**	–	–	–	–	1FG1502- . . ■ ■ 3 - ■ . E1 -Z
–	–	–	–	62	–	–	107	–	155	**200**	190	–	**200**	**200**	**200**	**200**	**200**	–	–	–	–	1FG1502- . . ■ ■ 2 - ■ . E1 -Z
Max. output speed n_{2max} = **809 rpm**, Transmission ratio i = **5.56**																						
24	22	34	27	56	53	–	–	–	–	–	–	–	–	–	–	–	–	–	–	–	–	1FG1502- . . ■ ■ 6 - ■ . D1 -Z
–	–	–	–	–	53	60	96	92	139	187	171	133	197	**200**	–	–	–	–	–	–	–	1FG1502- . . ■ ■ 4 - ■ . D1 -Z
–	–	–	–	56	–	60	96	92	139	187	171	133	197	**200**	**200**	**200**	**200**	–	–	–	–	1FG1502- . . ■ ■ 3 - ■ . D1 -Z
–	–	–	–	56	–	–	96	–	139	187	171	–	197	**200**	**200**	**200**	**200**	–	–	–	–	1FG1502- . . ■ ■ 2 - ■ . D1 -Z
Max. output speed n_{2max} = **949 rpm**, Transmission ratio i = **4.74**																						
20	19	29	23	47	45	–	–	–	–	–	–	–	–	–	–	–	–	–	–	–	–	1FG1502- . . ■ ■ 6 - ■ . C1 -Z
–	–	–	–	–	45	51	82	78	118	159	145	113	168	**200**	–	–	–	–	–	–	–	1FG1502- . . ■ ■ 4 - ■ . C1 -Z
–	–	–	–	47	–	51	82	78	118	159	145	113	168	**200**	**200**	**200**	**200**	–	–	–	–	1FG1502- . . ■ ■ 3 - ■ . C1 -Z
–	–	–	–	47	–	–	82	–	118	159	145	–	168	**200**	**200**	**200**	**200**	–	–	–	–	1FG1502- . . ■ ■ 2 - ■ . C1 -Z
Max. output speed n_{2max} = **1071 rpm**, Transmission ratio i = **4.06**																						
–	–	–	–	–	–	–	–	–	–	–	–	–	–	–	–	–	–	–	–	–	–	1FG1502- . . ■ ■ 6 - ■ . B1 -Z
–	–	–	–	–	–	–	70	67	101	136	125	97	144	195	–	–	–	–	–	–	–	1FG1502- . . ■ ■ 4 - ■ . B1 -Z
–	–	–	–	–	–	–	70	67	101	136	125	97	144	195	**200**	**200**	**200**	–	–	–	–	1FG1502- . . ■ ■ 3 - ■ . B1 -Z
–	–	–	–	–	–	–	70	–	101	136	125	–	144	195	**200**	**200**	**200**	–	–	–	–	1FG1502- . . ■ ■ 2 - ■ . B1 -Z
Max. output speed n_{2max} = **1243 rpm**, Transmission ratio i = **3.5**																						
–	–	–	–	–	–	–	–	–	–	–	–	–	–	–	–	–	–	–	–	–	–	1FG1502- . . ■ ■ 6 - ■ . A1 -Z
–	–	–	–	–	–	–	60	58	87	117	107	84	124	168	–	–	–	–	–	–	–	1FG1502- . . ■ ■ 4 - ■ . A1 -Z
–	–	–	–	–	–	–	60	58	87	117	107	84	124	168	**193**	**193**	**193**	–	–	–	–	1FG1502- . . ■ ■ 3 - ■ . A1 -Z
–	–	–	–	–	–	–	60	–	87	117	107	–	124	168	**193**	**193**	**193**	–	–	–	–	1FG1502- . . ■ ■ 2 - ■ . A1 -Z

Motor shaft height:

36																									**C**	
			48																						**D**	
							63																		**E**	
												80													**F**	
																		100							**G**	

Motor length/motor version (**CT** = Compact, **HD** = High Dynamic)**:**

			0/CT				**0/CT**					**0/CT**						**0/CT**							**0**	**2**
													1/CT						**1/CT**						**1**	**2**
								1/HD																	**1**	**4**
2/CT				**2/CT**					**2/CT**																**2**	**2**
										3/CT					**3/CT**						**3/CT**				**3**	**2**
	3/HD				**3/HD**																				**3**	**4**
		4/CT															**4/CT**								**4**	**2**
						4/HD					**4/HD**														**4**	**4**
																						5/CT			**5**	**2**
																5/HD									**5**	**4**
																	6/HD								**6**	**4**

Selection of Shaft design, encoder system, mounting type and special designs on page 5/14.

1FG1502- ■ ■ . . . - . ■ . . -Z

Servo bevel geared motors SIMOTICS S-1FG1

Article No.

5

© Siemens 2019

Gearbox size 39, 2-stage – 1FG1502

Selection and ordering data (continued)

For line voltage 200 ... 240 V 1 AC (DC link voltage 270 ... 330 V DC) **– Gearbox type** ***B39***

Max. output speed n_{2max} rpm	Transmission ratio i	Geared motor torque at 1450 rpm Note: All values in **bold** print are maximum gearbox values. M_{2dyn} Nm					**Servo bevel geared motors SIMOTICS S-1FG1** Article No.
80	**56.36**	235	225	**250**	**250**	**250**	**1FG1502- . . ■ ■ 3 - ■ . A2 -Z**
90	**50.11**	210	200	**245**	**245**	**245**	**1FG1502- . . ■ ■ 3 - ■ . X1 -Z**
102	**44**	185	177	**250**	**250**	**250**	**1FG1502- . . ■ ■ 3 - ■ . W1 -Z**
113	**40**	169	161	240	**250**	**250**	**1FG1502- . . ■ ■ 3 - ■ . V1 -Z**
132	**34.22**	144	138	205	**250**	**250**	**1FG1502- . . ■ ■ 3 - ■ . U1 -Z**
145	**31.11**	131	126	190	**250**	**250**	**1FG1502- . . ■ ■ 3 - ■ . T1 -Z**
164	**27.5**	116	111	168	**250**	**250**	**1FG1502- . . ■ ■ 3 - ■ . S1 -Z**
180	**25**	105	101	152	245	235	**1FG1502- . . ■ ■ 3 - ■ . R1 -Z**
205	**21.9**	93	88	134	215	205	**1FG1502- . . ■ ■ 3 - ■ . Q1 -Z**
223	**20.21**	86	82	124	200	191	**1FG1502- . . ■ ■ 3 - ■ . P1 -Z**
251	**17.9**	76	73	110	178	169	**1FG1502- . . ■ ■ 3 - ■ . N1 -Z**
302	**14.9**	63	60	91	148	141	**1FG1502- . . ■ ■ 3 - ■ . M1 -Z**
321	**14.02**	59	57	86	139	133	**1FG1502- . . ■ ■ 3 - ■ . L1 -Z**
351	**12.56**	53	51	77	125	119	**1FG1502- . . ■ ■ 3 - ■ . K1 -Z**
407	**10.69**	45	43	66	106	101	**1FG1502- . . ■ ■ 3 - ■ . J1 -Z**
682	**6.6**	28	27	41	66	63	**1FG1502- . . ■ ■ 3 - ■ . F1 -Z**
725	**6.21**	26	25	38	62	59	**1FG1502- . . ■ ■ 3 - ■ . E1 -Z**
809	**5.56**	24	22	34	56	53	**1FG1502- . . ■ ■ 3 - ■ . D1 -Z**
949	**4.74**	20	19	29	47	45	**1FG1502- . . ■ ■ 3 - ■ . C1 -Z**
Motor shaft height:							
		36					**C**
					48		**D**
Motor length/motor version (**CT** = Compact, **HD** = High Dynamic)**:**							
		2/CT			**2/CT**		**2** **1**
			3/HD			**3/HD**	**3** **3**
				4/CT			**4** **1**

Selection of Shaft design, encoder system, mounting type and special designs on page 5/14.

1FG1502- ■ ■ . . . - ■ . . -Z

© Siemens 2019

Technical specifications

Gearbox type *B49*

Servo geared motor Type	i	R_{ex}	M_{2rated} Nm	M_{2max} Nm	$M_{2Em.Off}$ Nm	n_{2max} rpm	n_{1max} rpm	φ [1] '	F_{R2} N	F_{R2max} N	c_T Nm/ '	J_G 10^{-4} kgm^2
1FG1503-.....-..C2	59.28	1067/18	450	465	765	76	4500	8.25	9510	9410	54.2	0.19
1FG1503-.....-..B2	53.89	485/9	450	465	765	84	4500	8.25	9120	9020	54.3	0.23
1FG1503-.....-..A2	45.83	275/6	450	465	765	98	4500	8.32	8480	8380	54.2	0.28
1FG1503-.....-..X1	41.67	125/3	450	465	765	108	4500	8.32	8120	8030	54.2	0.34
1FG1503-.....-..W1	37.18	4015/108	450	465	765	121	4500	8.38	7710	7610	54.2	0.4
1FG1503-.....-..V1	33.33	100/3	450	465	765	135	4500	8.41	7330	7230	54.2	0.48
1FG1503-.....-..U1	30.05	3245/108	450	465	765	150	4500	8.44	6980	6880	54.1	0.56
1FG1503-.....-..T1	27.74	3245/117	450	465	765	162	4500	8.44	6710	6610	54.2	0.67
1FG1503-.....-..S1	25.32	1595/63	450	465	765	178	4500	8.48	6420	6320	54.1	0.78
1FG1503-.....-..R1	21.01	3025/144	450	465	765	214	4500	8.60	5850	5750	54.1	1
1FG1503-.....-..Q1	19.77	3025/153	450	465	765	228	4500	8.60	5680	5580	54.1	1.1
1FG1503-.....-..P1	18.67	3025/162	450	465	765	241	4500	8.60	5510	5410	54.1	1.3
1FG1503-.....-..N1	15.89	143/9	450	465	765	283	4500	8.73	5070	4970	54	1.6
1FG1503-.....-..M1	13.61	245/18	450	465	765	331	4500	8.88	4660	4560	53.9	2.1
1FG1503-.....-..L1	11.97	2585/216	450	465	765	376	4500	8.99	4340	4240	53.9	2.5
1FG1503-.....-..K1	10.1	2090/207	450	465	765	446	4500	9.16	3940	3840	53.7	3.3
1FG1503-.....-..J1	8.8	44/5	450	465	765	502	4414	9.72	3630	3530	53.5	4.4
1FG1503-.....-..H1	8.29	2255/272	330	400	560	543	4500	14.09	4250	4130	29.7	1.5
1FG1503-.....-..G1	7.8	2255/289	330	400	560	577	4500	14.09	4120	4000	29.7	1.7
1FG1503-.....-..F1	7.37	2255/306	330	400	560	593	4373	14.09	4000	3880	29.6	2
1FG1503-.....-..E1	6.27	533/85	330	385	560	694	4350	14.44	3540	3260	29.5	2.5
1FG1503-.....-..D1	5.37	2009/374	330	365	560	810	4350	14.83	2950	2950	29.4	3.3
1FG1503-.....-..C1	4.72	1927/408	330	355	560	922	4350	15.13	2370	2370	29.3	4.1
1FG1503-.....-..B1	3.98	1558/391	330	335	560	1093	4350	15.56	2080	2080	29	5.4
1FG1503-.....-..A1	3.47	1476/425	325	325	550	1254	4350	17.04	1550	1550	28.7	7.2

Selection and ordering data

Shaft design, encoder system, mounting type and special designs

Gearbox type *B49*

			Servo bevel geared motors SIMOTICS S-1FG1 Article No. **1FG1503-** ■■ . . . - . ■ . . **-Z**
Shaft design:	Solid shaft with feather keyway	– Design 1	**1**
	Hollow-shaft with feather keyway	– Design 1 – H40	**5**
		– Design 2 – H35	**6**
Order codes and Descriptions see chapter "Options"	Special shaft design		**9**
Encoder system for motors with DRIVE-CLiQ interface:	AS20DQI encoder		**Q**
	AM20DQI encoder		**R**
	R14DQ resolver		**P**
	R15DQ resolver		**U**
Order codes and Descriptions see chapter "Options"	Special version encoder system		**Z**
Mounting type:	Foot-mounted design		**A**
	Flange-mounted design		**F**
	Housing flange design		**H**
	Shaft-mounted design (not possible with solid shaft)		**D**
Special designs (Options): Order codes and Descriptions see chapter "Options" The following order codes must be added to each article number: • Oil type – order codes **K07** or **K11** • Mounting position – order codes **D11** ... **D16** or **D21** ... **D26**			**-Z**
Selection of 2-stages servo bevel geared motors with gearbox size 49 from next page.			**1FG1503-** . . ■■■ - ■ . ■■ **-Z**

[1] Data are for option reduced-backlash version – order code **G99** required.

© Siemens 2019

Gearbox size 49, 2-stage – 1FG1503

Selection and ordering data (continued)

For line voltage 380 ... 480 V 3 AC (DC link voltage 510 ... 720 V DC) **– Gearbox type** ***B49***

Geared motor torque at 1450 rpm
Note: All values in **bold** print are maximum gearbox values.
M_{2dyn}
Nm

																						Servo bevel geared motors SIMOTICS S-1FG1 Article No.
Max. output speed n_{2max} = **76 rpm**, Transmission ratio i = **59.28**																						
250	240	360	285	**465**	**465**	–	–	–	–	–	–	–	–	–	–	–	–	–	–	–	–	1FG1503- . . ■ ■ 6 - ■ . C2 -Z
–	–	–	–	–	**465**	**465**	**465**	**465**	**465**	**465**	**465**	–	–	–	–	–	–	–	–	–	–	1FG1503- . . ■ ■ 4 - ■ . C2 -Z
–	–	–	–	**465**	–	**465**	**465**	**465**	**465**	**465**	**465**	–	–	–	–	–	–	–	–	–	–	1FG1503- . . ■ ■ 3 - ■ . C2 -Z
–	–	–	–	**465**	–	–	**465**	–	**465**	**465**	**465**	–	–	–	–	–	–	–	–	–	–	1FG1503- . . ■ ■ 2 - ■ . C2 -Z
Max. output speed n_{2max} = **84 rpm**, Transmission ratio i = **53.89**																						
230	215	330	260	**465**	**465**	–	–	–	–	–	–	–	–	–	–	–	–	–	–	–	–	1FG1503- . . ■ ■ 6 - ■ . B2 -Z
–	–	–	–	–	**465**	**465**	**465**	**465**	**465**	**465**	**465**	–	–	–	–	–	–	–	–	–	–	1FG1503- . . ■ ■ 4 - ■ . B2 -Z
–	–	–	–	**465**	–	**465**	**465**	**465**	**465**	**465**	**465**	–	–	–	–	–	–	–	–	–	–	1FG1503- . . ■ ■ 3 - ■ . B2 -Z
–	–	–	–	**465**	–	–	**465**	–	**465**	**465**	**465**	–	–	–	–	–	–	–	–	–	–	1FG1503- . . ■ ■ 2 - ■ . B2 -Z
Max. output speed n_{2max} = **98 rpm**, Transmission ratio i = **45.83**																						
195	186	280	220	455	430	–	–	–	–	–	–	–	–	–	–	–	–	–	–	–	–	1FG1503- . . ■ ■ 6 - ■ . A2 -Z
–	–	–	–	–	430	**465**	**465**	**465**	**465**	**465**	**465**	–	–	–	–	–	–	–	–	–	–	1FG1503- . . ■ ■ 4 - ■ . A2 -Z
–	–	–	–	455	–	**465**	**465**	**465**	**465**	**465**	**465**	–	–	–	–	–	–	–	–	–	–	1FG1503- . . ■ ■ 3 - ■ . A2 -Z
–	–	–	–	455	–	–	**465**	–	**465**	**465**	**465**	–	–	–	–	–	–	–	–	–	–	1FG1503- . . ■ ■ 2 - ■ . A2 -Z
Max. output speed n_{2max} = **108 rpm**, Transmission ratio i = **41.67**																						
178	170	255	200	415	395	–	–	–	–	–	–	–	–	–	–	–	–	–	–	–	–	1FG1503- . . ■ ■ 6 - ■ . X1 -Z
–	–	–	–	–	395	445	**465**	**465**	**465**	**465**	**465**	–	–	–	–	–	–	–	–	–	–	1FG1503- . . ■ ■ 4 - ■ . X1 -Z
–	–	–	–	415	–	445	**465**	**465**	**465**	**465**	**465**	–	–	–	–	–	–	–	–	–	–	1FG1503- . . ■ ■ 3 - ■ . X1 -Z
–	–	–	–	415	–	–	**465**	–	**465**	**465**	**465**	–	–	–	–	–	–	–	–	–	–	1FG1503- . . ■ ■ 2 - ■ . X1 -Z
Max. output speed n_{2max} = **121 rpm**, Transmission ratio i = **37.18**																						
159	152	230	180	370	350	–	–	–	–	–	–	–	–	–	–	–	–	–	–	–	–	1FG1503- . . ■ ■ 6 - ■ . W1 -Z
–	–	–	–	–	350	395	**465**	**465**	**465**	**465**	**465**	**465**	**465**	**465**	–	–	–	–	–	–	–	1FG1503- . . ■ ■ 4 - ■ . W1 -Z
–	–	–	–	370	–	395	**465**	**465**	**465**	**465**	**465**	**465**	**465**	**465**	**465**	**465**	**465**	–	–	–	–	1FG1503- . . ■ ■ 3 - ■ . W1 -Z
–	–	–	–	370	–	–	**465**	–	**465**	**465**	**465**	–	**465**	**465**	**465**	**465**	**465**	–	–	–	–	1FG1503- . . ■ ■ 2 - ■ . W1 -Z
Max. output speed n_{2max} = **135 rpm**, Transmission ratio i = **33.33**																						
142	136	205	161	330	315	–	–	–	–	–	–	–	–	–	–	–	–	–	–	–	–	1FG1503- . . ■ ■ 6 - ■ . V1 -Z
–	–	–	–	–	315	355	**465**	**465**	**465**	**465**	**465**	**465**	**465**	**465**	–	–	–	–	–	–	–	1FG1503- . . ■ ■ 4 - ■ . V1 -Z
–	–	–	–	330	–	355	**465**	**465**	**465**	**465**	**465**	**465**	**465**	**465**	**465**	**465**	**465**	–	–	–	–	1FG1503- . . ■ ■ 3 - ■ . V1 -Z
–	–	–	–	330	–	–	**465**	–	**465**	**465**	**465**	–	**465**	**465**	**465**	**465**	**465**	–	–	–	–	1FG1503- . . ■ ■ 2 - ■ . V1 -Z
Max. output speed n_{2max} = **150 rpm**, Transmission ratio i = **30.05**																						
128	123	186	146	300	285	–	–	–	–	–	–	–	–	–	–	–	–	–	–	–	–	1FG1503- . . ■ ■ 6 - ■ . U1 -Z
–	–	–	–	–	285	320	**465**	**465**	**465**	**465**	**465**	**465**	**465**	**465**	–	–	–	–	–	–	–	1FG1503- . . ■ ■ 4 - ■ . U1 -Z
–	–	–	–	300	–	320	**465**	**465**	**465**	**465**	**465**	**465**	**465**	**465**	**465**	**465**	**465**	–	–	–	–	1FG1503- . . ■ ■ 3 - ■ . U1 -Z
–	–	–	–	300	–	–	**465**	–	**465**	**465**	**465**	–	**465**	**465**	**465**	**465**	**465**	–	–	–	–	1FG1503- . . ■ ■ 2 - ■ . U1 -Z

Motor shaft height:

36																								**C**
			48																					**D**
							63																	**E**
												80												**F**
																		100						**G**

Motor length/motor version (**CT** = Compact, **HD** = High Dynamic)**:**

			0/CT				**0/CT**					**0/CT**						**0/CT**						**0**	**2**
													1/CT						**1/CT**					**1**	**2**
								1/HD																**1**	**4**
2/CT				**2/CT**					**2/CT**															**2**	**2**
										3/CT				**3/CT**						**3/CT**				**3**	**2**
	3/HD				**3/HD**																			**3**	**4**
		4/CT														**4/CT**								**4**	**2**
						4/HD					**4/HD**														**4**	**4**
																				5/CT				**5**	**2**
																	5/HD							**5**	**4**
																		6/HD						**6**	**4**

Selection of Shaft design, encoder system, mounting type and special designs on page 5/19.

1FG1503- ■ ■ . . . . - . ■ . . -Z

© Siemens 2019

For line voltage 380 ... 480 V 3 AC (DC link voltage 510 ... 720 V DC) **– Gearbox type** ***B49***

Geared motor torque at 1450 rpm
Note: All values in **bold** print are maximum gearbox values.

M_{2dyn} Nm																						Servo bevel geared motors SIMOTICS S-1FG1 Article No.
Max. output speed n_{2max} = **162 rpm**, Transmission ratio i = **27.74**																						
119	113	172	135	275	260	–	–	–	–	–	–	–	–	–	–	–	–	–	–	–	–	1FG1503- . . ■ ■ 6 - ■ . T1 -Z
–	–	–	–	–	260	295	**465**	455	**465**	**465**	**465**	**465**	**465**	**465**	–	–	–	–	–	–	–	1FG1503- . . ■ ■ 4 - ■ . T1 -Z
–	–	–	–	275	–	295	**465**	455	**465**	**465**	**465**	**465**	**465**	**465**	**465**	**465**	**465**	–	–	–	–	1FG1503- . . ■ ■ 3 - ■ . T1 -Z
–	–	–	–	275	–	–	**465**	–	**465**	**465**	**465**	–	**465**	**465**	**465**	**465**	**465**	–	–	–	–	1FG1503- . . ■ ■ 2 - ■ . T1 -Z
Max. output speed n_{2max} = **178 rpm**, Transmission ratio i = **25.32**																						
108	103	157	123	250	240	–	–	–	–	–	–	–	–	–	–	–	–	–	–	–	–	1FG1503- . . ■ ■ 6 - ■ . S1 -Z
–	–	–	–	–	240	270	435	415	**465**	**465**	**465**	**465**	**465**	**465**	–	–	–	–	–	–	–	1FG1503- . . ■ ■ 4 - ■ . S1 -Z
–	–	–	–	250	–	270	435	415	**465**	**465**	**465**	**465**	**465**	**465**	**465**	**465**	**465**	**465**	**465**	**465**	**465**	1FG1503- . . ■ ■ 3 - ■ . S1 -Z
–	–	–	–	250	–	–	435	–	**465**	**465**	**465**	–	**465**	**465**	**465**	**465**	**465**	**465**	**465**	**465**	**465**	1FG1503- . . ■ ■ 2 - ■ . S1 -Z
Max. output speed n_{2max} = **214 rpm**, Transmission ratio i = **21.01**																						
90	86	130	102	210	200	–	–	–	–	–	–	–	–	–	–	–	–	–	–	–	–	1FG1503- . . ■ ■ 6 - ■ . R1 -Z
–	–	–	–	–	200	225	360	345	**465**	**465**	**465**	**465**	**465**	**465**	–	–	–	–	–	–	–	1FG1503- . . ■ ■ 4 - ■ . R1 -Z
–	–	–	–	210	–	225	360	345	**465**	**465**	**465**	**465**	**465**	**465**	**465**	**465**	**465**	**465**	**465**	**465**	**465**	1FG1503- . . ■ ■ 3 - ■ . R1 -Z
–	–	–	–	210	–	–	360	–	**465**	**465**	**465**	–	**465**	**465**	**465**	**465**	**465**	**465**	**465**	**465**	**465**	1FG1503- . . ■ ■ 2 - ■ . R1 -Z
Max. output speed n_{2max} = **228 rpm**, Transmission ratio i = **19.77**																						
85	81	123	96	198	189	–	–	–	–	–	–	–	–	–	–	–	–	–	–	–	–	1FG1503- . . ■ ■ 6 - ■ . Q1 -Z
–	–	–	–	–	189	210	340	325	**465**	**465**	**465**	**465**	**465**	**465**	–	–	–	–	–	–	–	1FG1503- . . ■ ■ 4 - ■ . Q1 -Z
–	–	–	–	198	–	210	340	325	**465**	**465**	**465**	**465**	**465**	**465**	**465**	**465**	**465**	**465**	**465**	**465**	**465**	1FG1503- . . ■ ■ 3 - ■ . Q1 -Z
–	–	–	–	198	–	–	340	–	**465**	**465**	**465**	–	**465**	**465**	**465**	**465**	**465**	**465**	**465**	**465**	**465**	1FG1503- . . ■ ■ 2 - ■ . Q1 -Z
Max. output speed n_{2max} = **241 rpm**, Transmission ratio i = **18.67**																						
80	76	116	91	187	178	–	–	–	–	–	–	–	–	–	–	–	–	–	–	–	–	1FG1503- . . ■ ■ 6 - ■ . P1 -Z
–	–	–	–	–	178	200	320	305	465	**465**	**465**	445	**465**	**465**	–	–	–	–	–	–	–	1FG1503- . . ■ ■ 4 - ■ . P1 -Z
–	–	–	–	187	–	200	320	305	465	**465**	**465**	445	**465**	**465**	**465**	**465**	**465**	**465**	**465**	**465**	**465**	1FG1503- . . ■ ■ 3 - ■ . P1 -Z
–	–	–	–	187	–	–	320	–	465	**465**	**465**	–	**465**	**465**	**465**	**465**	**465**	**465**	**465**	**465**	**465**	1FG1503- . . ■ ■ 2 - ■ . P1 -Z
Max. output speed n_{2max} = **283 rpm**, Transmission ratio i = **15.89**																						
68	65	99	77	160	152	–	–	–	–	–	–	–	–	–	–	–	–	–	–	–	–	1FG1503- . . ■ ■ 6 - ■ . N1 -Z
–	–	–	–	–	152	171	270	260	395	**465**	**465**	380	**465**	**465**	–	–	–	–	–	–	–	1FG1503- . . ■ ■ 4 - ■ . N1 -Z
–	–	–	–	160	–	171	270	260	395	**465**	**465**	380	**465**	**465**	**465**	**465**	**465**	**465**	**465**	**465**	**465**	1FG1503- . . ■ ■ 3 - ■ . N1 -Z
–	–	–	–	160	–	–	270	–	395	**465**	**465**	–	**465**	**465**	**465**	**465**	**465**	**465**	**465**	**465**	**465**	1FG1503- . . ■ ■ 2 - ■ . N1 -Z
Max. output speed n_{2max} = **331 rpm**, Transmission ratio i = **13.61**																						
–	–	–	–	–	–	–	–	–	–	–	–	–	–	–	–	–	–	–	–	–	–	1FG1503- . . ■ ■ 6 - ■ . M1 -Z
–	–	–	–	–	–	–	235	225	340	455	415	325	**465**	**465**	–	–	–	–	–	–	–	1FG1503- . . ■ ■ 4 - ■ . M1 -Z
–	–	–	–	–	–	–	235	225	340	455	415	325	**465**	**465**	**465**	**465**	**465**	**465**	**465**	**465**	**465**	1FG1503- . . ■ ■ 3 - ■ . M1 -Z
–	–	–	–	–	–	–	235	–	340	455	415	–	**465**	**465**	**465**	**465**	**465**	**465**	**465**	**465**	**465**	1FG1503- . . ■ ■ 2 - ■ . M1 -Z
Max. output speed n_{2max} = **376 rpm**, Transmission ratio i = **11.97**																						
–	–	–	–	–	–	–	–	–	–	–	–	–	–	–	–	–	–	–	–	–	–	1FG1503- . . ■ ■ 6 - ■ . L1 -Z
–	–	–	–	–	–	–	205	199	295	400	365	285	425	**465**	–	–	–	–	–	–	–	1FG1503- . . ■ ■ 4 - ■ . L1 -Z
–	–	–	–	–	–	–	205	199	295	400	365	285	425	**465**	**465**	**465**	**465**	**465**	**465**	**465**	**465**	1FG1503- . . ■ ■ 3 - ■ . L1 -Z
–	–	–	–	–	–	–	205	–	295	400	365	–	425	**465**	**465**	**465**	**465**	**465**	**465**	**465**	**465**	1FG1503- . . ■ ■ 2 - ■ . L1 -Z

Motor shaft height:

36																					**C**	
			48																		**D**	
							63														**E**	
												80									**F**	
																	100				**G**	

Motor length/motor version (**CT** = Compact, **HD** = High Dynamic)**:**

			0/CT				**0/CT**					**0/CT**						**0/CT**				**0**	**2**
													1/CT						**1/CT**			**1**	**2**
								1/HD														**1**	**4**
2/CT				**2/CT**					**2/CT**													**2**	**2**
										3/CT				**3/CT**						**3/CT**		**3**	**2**
	3/HD				**3/HD**																	**3**	**4**
		4/CT														**4/CT**						**4**	**2**
						4/HD					**4/HD**											**4**	**4**
																				5/CT		**5**	**2**
																	5/HD					**5**	**4**
																		6/HD				**6**	**4**

Selection of Shaft design, encoder system, mounting type and special designs on page 5/19.

1FG1503- ■ ■ . . . - . ■ . . -Z

5

© Siemens 2019

Servo bevel geared motors SIMOTICS S-1FG1

Selecting servo geared motors

Gearbox size 49, 2-stage – 1FG1503

For line voltage 380 ... 480 V 3 AC (DC link voltage 510 ... 720 V DC) **– Gearbox type** ***B49***

Geared motor torque at 1450 rpm
Note: All values in **bold** print are maximum gearbox values.
M_{2dyn}
Nm

																						Servo bevel geared motors SIMOTICS S-1FG1 Article No.
Max. output speed n_{2max} = **446 rpm**, Transmission ratio i = **10.1**																						
–	–	–	–	–	–	–	–	–	–	–	–	–	–	–	–	–	–	–	–	–	–	1FG1503- . . ■ ■ 6 - ■ . K1 -Z
–	–	–	–	–	–	–	174	168	250	340	310	240	355	**465**	–	–	–	–	–	–	–	1FG1503- . . ■ ■ 4 - ■ . K1 -Z
–	–	–	–	–	–	–	174	168	250	340	310	240	355	**465**	**465**	**465**	**465**	**465**	**465**	**465**	**465**	1FG1503- . . ■ ■ 3 - ■ . K1 -Z
–	–	–	–	–	–	–	174	–	250	340	310	–	355	**465**	**465**	**465**	**465**	**465**	**465**	**465**	**465**	1FG1503- . . ■ ■ 2 - ■ . K1 -Z
Max. output speed n_{2max} = **502 rpm**, Transmission ratio i = **8.8**																						
–	–	–	–	–	–	–	–	–	–	–	–	–	–	–	–	–	–	–	–	–	–	1FG1503- . . ■ ■ 6 - ■ . J1 -Z
–	–	–	–	–	–	–	152	146	220	295	270	210	310	420	–	–	–	–	–	–	–	1FG1503- . . ■ ■ 4 - ■ . J1 -Z
–	–	–	–	–	–	–	152	146	220	295	270	210	310	420	**465**	**465**	**465**	465	**465**	**465**	**465**	1FG1503- . . ■ ■ 3 - ■ . J1 -Z
–	–	–	–	–	–	–	152	–	220	295	270	–	310	420	**465**	**465**	**465**	465	**465**	**465**	**465**	1FG1503- . . ■ ■ 2 - ■ . J1 -Z
Max. output speed n_{2max} = **543 rpm**, Transmission ratio i = **8.29**																						
35	34	51	40	83	79	–	–	–	–	–	–	–	–	–	–	–	–	–	–	–	–	1FG1503- . . ■ ■ 6 - ■ . H1 -Z
–	–	–	–	–	79	90	143	138	205	275	255	199	295	395	–	–	–	–	–	–	–	1FG1503- . . ■ ■ 4 - ■ . H1 -Z
–	–	–	–	83	–	90	143	138	205	275	255	199	295	395	**400**	**400**	**400**	**400**	**400**	**400**	**400**	1FG1503- . . ■ ■ 3 - ■ . H1 -Z
–	–	–	–	83	–	–	143	–	205	275	255	–	295	395	**400**	**400**	**400**	**400**	**400**	**400**	**400**	1FG1503- . . ■ ■ 2 - ■ . H1 -Z
Max. output speed n_{2max} = **577 rpm**, Transmission ratio i = **7.8**																						
33	32	48	38	79	75	–	–	–	–	–	–	–	–	–	–	–	–	–	–	–	–	1FG1503- . . ■ ■ 6 - ■ . G1 -Z
–	–	–	–	–	75	84	135	130	195	260	240	188	275	375	–	–	–	–	–	–	–	1FG1503- . . ■ ■ 4 - ■ . G1 -Z
–	–	–	–	79	–	84	135	130	195	260	240	188	275	375	**400**	**400**	**400**	**400**	**400**	**400**	**400**	1FG1503- . . ■ ■ 3 - ■ . G1 -Z
–	–	–	–	79	–	–	135	–	195	260	240	–	275	375	**400**	**400**	**400**	**400**	**400**	**400**	**400**	1FG1503- . . ■ ■ 2 - ■ . G1 -Z
Max. output speed n_{2max} = **593 rpm**, Transmission ratio i = **7.37**																						
32	30	46	36	74	71	–	–	–	–	–	–	–	–	–	–	–	–	–	–	–	–	1FG1503- . . ■ ■ 6 - ■ . F1 -Z
–	–	–	–	–	71	80	128	123	184	245	225	177	260	355	–	–	–	–	–	–	–	1FG1503- . . ■ ■ 4 - ■ . F1 -Z
–	–	–	–	74	–	80	128	123	184	245	225	177	260	355	**400**	**400**	**400**	390	**400**	**400**	**400**	1FG1503- . . ■ ■ 3 - ■ . F1 -Z
–	–	–	–	74	–	–	128	–	184	245	225	–	260	355	**400**	**400**	**400**	390	**400**	**400**	**400**	1FG1503- . . ■ ■ 2 - ■ . F1 -Z
Max. output speed n_{2max} = **694 rpm**, Transmission ratio i = **6.27**																						
27	26	39	30	63	60	–	–	–	–	–	–	–	–	–	–	–	–	–	–	–	–	1FG1503- . . ■ ■ 6 - ■ . E1 -Z
–	–	–	–	–	60	68	109	104	157	210	194	151	220	300	–	–	–	–	–	–	–	1FG1503- . . ■ ■ 4 - ■ . E1 -Z
–	–	–	–	63	–	68	109	104	157	210	194	151	220	300	365	**385**	**385**	330	**385**	**385**	**385**	1FG1503- . . ■ ■ 3 - ■ . E1 -Z
–	–	–	–	63	–	–	109	–	157	210	194	–	220	300	365	**385**	**385**	330	**385**	**385**	**385**	1FG1503- . . ■ ■ 2 - ■ . E1 -Z
Max. output speed n_{2max} = **810 rpm**, Transmission ratio i = **5.37**																						
–	–	–	–	–	–	–	–	–	–	–	–	–	–	–	–	–	–	–	–	–	–	1FG1503- . . ■ ■ 6 - ■ . D1 -Z
–	–	–	–	–	–	–	93	90	135	182	166	130	192	260	–	–	–	–	–	–	–	1FG1503- . . ■ ■ 4 - ■ . D1 -Z
–	–	–	–	–	–	–	93	90	135	182	166	130	192	260	315	335	**365**	285	**365**	**365**	**365**	1FG1503- . . ■ ■ 3 - ■ . D1 -Z
–	–	–	–	–	–	–	93	–	135	182	166	–	192	260	315	335	**365**	285	**365**	**365**	**365**	1FG1503- . . ■ ■ 2 - ■ . D1 -Z
Max. output speed n_{2max} = **922 rpm**, Transmission ratio i = **4.72**																						
–	–	–	–	–	–	–	–	–	–	–	–	–	–	–	–	–	–	–	–	–	–	1FG1503- . . ■ ■ 6 - ■ . C1 -Z
–	–	–	–	–	–	–	82	79	119	160	146	114	169	225	–	–	–	–	–	–	–	1FG1503- . . ■ ■ 4 - ■ . C1 -Z
–	–	–	–	–	–	–	82	79	119	160	146	114	169	225	275	295	**355**	250	**355**	**355**	**355**	1FG1503- . . ■ ■ 3 - ■ . C1 -Z
–	–	–	–	–	–	–	82	–	119	160	146	–	169	225	275	295	**355**	250	**355**	**355**	**355**	1FG1503- . . ■ ■ 2 - ■ . C1 -Z

Motor shaft height:

36																						**C**
			48																			**D**
							63															**E**
												80										**F**
																	100					**G**

Motor length/motor version (**CT** = Compact, **HD** = High Dynamic)**:**

			0/CT				**0/CT**				**0/CT**						**0/CT**					**0**	**2**
												1/CT						**1/CT**				**1**	**2**
								1/HD														**1**	**4**
2/CT				**2/CT**					**2/CT**													**2**	**2**
										3/CT				**3/CT**					**3/CT**			**3**	**2**
	3/HD				**3/HD**																	**3**	**4**
		4/CT														**4/CT**						**4**	**2**
						4/HD					**4/HD**												**4**	**4**
																				5/CT		**5**	**2**
															5/HD							**5**	**4**
																6/HD						**6**	**4**

Selection of Shaft design, encoder system, mounting type and special designs on page 5/19.

1FG1503- ■ ■ . . . - . ■ . . -Z

© Siemens 2019

For line voltage 380 ... 480 V 3 AC (DC link voltage 510 ... 720 V DC) **– Gearbox type** ***B49***

Geared motor torque at 1450 rpm
Note: All values in **bold** print are maximum gearbox values.
M_{2dyn}
Nm

Servo bevel geared motors SIMOTICS S-1FG1
Article No.

Max. output speed n_{2max} = **1093 rpm**, Transmission ratio i = **3.98**																					
–	–	–	–	–	–	–	–	–	–	–	–	–	–	–	–	–	–	–	–	–	1FG1503- . . ■ ■ 6 - ■ . B1 -Z
–	–	–	–	–	–	–	69	66	100	135	123	96	142	193	–	–	–	–	–	–	1FG1503- . . ■ ■ 4 - ■ . B1 -Z
–	–	–	–	–	–	–	69	66	100	135	123	96	142	193	235	250	**335**	210	305	**335**	**335** 1FG1503- . . ■ ■ 3 - ■ . B1 -Z
–	–	–	–	–	–	–	69	–	100	135	123	–	142	193	235	250	**335**	210	305	**335**	**335** 1FG1503- . . ■ ■ 2 - ■ . B1 -Z
Max. output speed n_{2max} = **1254 rpm**, Transmission ratio i = **3.47**																					
–	–	–	–	–	–	–	–	–	–	–	–	–	–	–	–	–	–	–	–	–	1FG1503- . . ■ ■ 6 - ■ . A1 -Z
–	–	–	–	–	–	–	60	58	87	117	107	84	124	168	–	–	–	–	–	–	1FG1503- . . ■ ■ 4 - ■ . A1 -Z
–	–	–	–	–	–	–	60	58	87	117	107	84	124	168	205	215	315	185	265	**325**	**325** 1FG1503- . . ■ ■ 3 - ■ . A1 -Z
–	–	–	–	–	–	–	60	–	87	117	107	–	124	168	205	215	315	185	265	**325**	**325** 1FG1503- . . ■ ■ 2 - ■ . A1 -Z

Motor shaft height:

36																						**C**
			48																			**D**
							63															**E**
												80										**F**
																		100				**G**

Motor length/motor version (**CT** = Compact, **HD** = High Dynamic)**:**

			0/CT				**0/CT**					**0/CT**						**0/CT**					**0**	**2**
													1/CT						**1/CT**				**1**	**2**
								1/HD															**1**	**4**
2/CT				**2/CT**					**2/CT**														**2**	**2**
										3/CT				**3/CT**						**3/CT**			**3**	**2**
	3/HD				**3/HD**																		**3**	**4**
		4/CT														**4/CT**							**4**	**2**
						4/HD					**4/HD**													**4**	**4**
																					5/CT		**5**	**2**
																5/HD							**5**	**4**
																	6/HD						**6**	**4**

Selection of Shaft design, encoder system, mounting type and special designs on page 5/19.

1FG1503- ■ ■ . . . . - . ■ . . **-Z**

© Siemens 2019

Gearbox size 49, 2-stage – 1FG1503

Selection and ordering data (continued)

For line voltage 200 ... 240 V 1 AC (DC link voltage 270 ... 330 V DC) **– Gearbox type** ***B49***

Max. output speed n_{2max} rpm	Transmission ratio i	Geared motor torque at 1450 rpm Note: All values in **bold** print are maximum gearbox values. M_{2dyn} Nm					**Servo bevel geared motors SIMOTICS S-1FG1** Article No.
76	**59.28**	250	240	360	**465**	**465**	**1FG1503- . . ■ ■ 3 - ■ . C2 -Z**
84	**53.89**	230	215	330	**465**	**465**	**1FG1503- . . ■ ■ 3 - ■ . B2 -Z**
98	**45.83**	195	186	280	455	430	**1FG1503- . . ■ ■ 3 - ■ . A2 -Z**
108	**41.67**	178	170	255	415	395	**1FG1503- . . ■ ■ 3 - ■ . X1 -Z**
121	**37.18**	159	152	230	370	350	**1FG1503- . . ■ ■ 3 - ■ . W1 -Z**
135	**33.33**	142	136	205	330	315	**1FG1503- . . ■ ■ 3 - ■ . V1 -Z**
150	**30.05**	128	123	186	300	285	**1FG1503- . . ■ ■ 3 - ■ . U1 -Z**
162	**27.74**	119	113	172	275	260	**1FG1503- . . ■ ■ 3 - ■ . T1 -Z**
178	**25.32**	108	103	157	250	240	**1FG1503- . . ■ ■ 3 - ■ . S1 -Z**
214	**21.01**	90	86	130	210	200	**1FG1503- . . ■ ■ 3 - ■ . R1 -Z**
228	**19.77**	85	81	123	198	189	**1FG1503- . . ■ ■ 3 - ■ . Q1 -Z**
241	**18.67**	80	76	116	187	178	**1FG1503- . . ■ ■ 3 - ■ . P1 -Z**
283	**15.89**	68	65	99	160	152	**1FG1503- . . ■ ■ 3 - ■ . N1 -Z**
543	**8.29**	35	34	51	83	79	**1FG1503- . . ■ ■ 3 - ■ . H1 -Z**
577	**7.8**	33	32	48	79	75	**1FG1503- . . ■ ■ 3 - ■ . G1 -Z**
593	**7.37**	32	30	46	74	71	**1FG1503- . . ■ ■ 3 - ■ . F1 -Z**
694	**6.27**	27	26	39	63	60	**1FG1503- . . ■ ■ 3 - ■ . E1 -Z**
Motor shaft height:							
		36					**C**
					48		**D**
Motor length/motor version (**CT** = Compact, **HD** = High Dynamic)**:**							
		2/CT			**2/CT**		**2** **1**
			3/HD			**3/HD**	**3** **3**
				4/CT			**4** **1**

Selection of Shaft design, encoder system, mounting type and special designs on page 5/19.

1FG1503- ■ ■ . . . - . ■ . . -Z

© Siemens 2019

Technical specifications

Gearbox type *K39*

Servo geared motor Type	i	R_{ex}	M_{2rated} Nm	M_{2max} Nm	$M_{2Em.Off}$ Nm	n_{2max} rpm	n_{1max} rpm	φ [1] '	F_{R2} N	F_{R2max} N	c_T Nm/ '	J_G 10^{-4} kgm^2
1FG1504-.....-..J2	157.32	3933/25	220	220	370	29	4500	7.27	6080	6080	24.5	0.04
1FG1504-.....-..H2	139.54	17442/125	220	220	370	32	4500	7.39	6080	6080	24.5	0.05
1FG1504-.....-..G2	121.07	30267/250	220	220	370	37	4500	7.42	6080	6080	24.5	0.06
1FG1504-.....-..F2	110.06	30267/275	220	220	370	41	4500	7.42	6080	6080	24.5	0.07
1FG1504-.....-..E2	94.39	11799/125	220	220	370	48	4500	7.45	6080	6080	24.5	0.08
1FG1504-.....-..D2	85.81	23598/275	220	220	370	52	4500	7.45	6080	6080	24.5	0.1
1FG1504-.....-..C2	75.24	1881/25	220	220	370	60	4500	7.49	6080	6080	24.5	0.12
1FG1504-.....-..B2	67.16	18468/275	220	220	370	67	4500	7.51	6080	6080	24.5	0.15
1FG1504-.....-..A2	59.85	1197/20	220	220	370	75	4500	7.54	6080	6080	24.4	0.17
1FG1504-.....-..X1	55.25	3591/65	220	220	370	81	4500	7.54	6080	6080	24.5	0.21
1FG1504-.....-..W1	48.37	16929/350	220	225	370	93	4500	7.60	6080	6060	24.5	0.23
1FG1504-.....-..V1	42.41	5301/125	220	225	370	106	4500	7.68	5790	5740	24.5	0.24
1FG1504-.....-..U1	38.48	1539/40	220	225	370	117	4500	7.72	5540	5500	24.4	0.3
1FG1504-.....-..T1	36.21	3078/85	220	225	370	124	4500	7.72	5390	5350	24.4	0.36
1FG1504-.....-..S1	31.92	798/25	220	225	370	141	4500	7.63	5090	5040	24.4	0.4
1FG1504-.....-..R1	27.7	13851/500	220	225	370	162	4500	7.67	4760	4710	24.4	0.53
1FG1504-.....-..Q1	26.89	6804/253	220	230	370	167	4500	9.18	4690	4600	22.8	0.25
1FG1504-.....-..P1	23.97	2205/92	220	230	370	188	4500	9.26	4440	4350	22.8	0.31
1FG1504-.....-..N1	22.12	6615/299	220	230	370	203	4500	9.26	4270	4180	22.8	0.37
1FG1504-.....-..M1	19.37	891/46	220	230	370	232	4500	9.42	4000	3910	22.8	0.44
1FG1504-.....-..L1	16.98	1953/115	220	230	370	265	4500	9.61	3740	3650	22.7	0.51
1FG1504-.....-..K1	15.41	2835/184	220	230	370	292	4500	9.71	3560	3470	22.7	0.67
1FG1504-.....-..J1	14.5	5670/391	220	230	370	310	4500	9.71	3450	3360	22.7	0.78
1FG1504-.....-..H1	12.78	294/23	220	225	370	352	4500	9.70	3220	3180	22.7	0.92
1FG1504-.....-..G1	11.09	5103/460	220	225	370	406	4500	9.80	2980	2940	22.6	1.2
1FG1504-.....-..F1	10.04	231/23	184	196	310	448	4500	14.73	2890	2760	16.6	0.55
1FG1504-.....-..E1	8.81	3038/345	183	191	310	511	4500	15.10	2690	2610	16.5	0.62
1FG1504-.....-..D1	7.99	735/92	175	189	295	563	4500	15.30	2630	2480	16.5	0.8
1FG1504-.....-..C1	7.52	2940/391	171	189	290	598	4500	15.30	2580	2390	16.5	0.92
1FG1504-.....-..B1	6.63	1372/207	161	184	270	679	4500	15.30	2500	2260	16.4	1.1
1FG1504-.....-..A1	5.75	1323/230	150	182	255	783	4500	15.40	2430	2090	16.3	1.5

Selection and ordering data

Shaft design, encoder system, mounting type and special designs

Gearbox type *K39*

| | | |

© Siemens 2019

Gearbox size 39, 3-stage – 1FG1504

Selection and ordering data (continued)

For line voltage 380 ... 480 V 3 AC (DC link voltage 510 ... 720 V DC) **– Gearbox type** ***K39***

Geared motor torque at 1450 rpm
Note: All values in **bold** print are maximum gearbox values.
M_{2dyn}
Nm

36						48						63						80						100						Motor shaft height	Article No.
Max. output speed n_{2max} = 29 rpm, Transmission ratio i = 157.32																															
220	**220**	**220**	**220**	**220**	**220**	–	–	–	–	–	–	–	–	–	–	–	–	–	–	–	–	–	–	–	–	–	–	–	–		1FG1504- . . ■ ■ 6 - ■ . J2 -Z
–	–	–	–	–	**220**	**220**	–	–	–	–	–	–	–	–	–	–	–	–	–	–	–	–	–	–	–	–	–	–	–		1FG1504- . . ■ ■ 4 - ■ . J2 -Z
–	–	–	–	**220**	–	**220**	–	–	–	–	–	–	–	–	–	–	–	–	–	–	–	–	–	–	–	–	–	–	–		1FG1504- . . ■ ■ 3 - ■ . J2 -Z
–	–	–	–	**220**	–	–	–	–	–	–	–	–	–	–	–	–	–	–	–	–	–	–	–	–	–	–	–	–	–		1FG1504- . . ■ ■ 2 - ■ . J2 -Z
Max. output speed n_{2max} = 32 rpm, Transmission ratio i = 139.54																															
220	**220**	**220**	**220**	**220**	**220**	–	–	–	–	–	–	–	–	–	–	–	–	–	–	–	–	–	–	–	–	–	–	–	–		1FG1504- . . ■ ■ 6 - ■ . H2 -Z
–	–	–	–	–	**220**	**220**	**220**	**220**	**220**	**220**	**220**	–	–	–	–	–	–	–	–	–	–	–	–	–	–	–	–	–	–		1FG1504- . . ■ ■ 4 - ■ . H2 -Z
–	–	–	–	**220**	–	**220**	**220**	**220**	**220**	**220**	**220**	–	–	–	–	–	–	–	–	–	–	–	–	–	–	–	–	–	–		1FG1504- . . ■ ■ 3 - ■ . H2 -Z
–	–	–	–	**220**	–	–	**220**	–	**220**	**220**	**220**	–	–	–	–	–	–	–	–	–	–	–	–	–	–	–	–	–	–		1FG1504- . . ■ ■ 2 - ■ . H2 -Z
Max. output speed n_{2max} = 37 rpm, Transmission ratio i = 121.07																															
220	**220**	**220**	**220**	**220**	**220**	–	–	–	–	–	–	–	–	–	–	–	–	–	–	–	–	–	–	–	–	–	–	–	–		1FG1504- . . ■ ■ 6 - ■ . G2 -Z
–	–	–	–	–	**220**	**220**	**220**	**220**	**220**	**220**	**220**	–	–	–	–	–	–	–	–	–	–	–	–	–	–	–	–	–	–		1FG1504- . . ■ ■ 4 - ■ . G2 -Z
–	–	–	–	**220**	–	**220**	**220**	**220**	**220**	**220**	**220**	–	–	–	–	–	–	–	–	–	–	–	–	–	–	–	–	–	–		1FG1504- . . ■ ■ 3 - ■ . G2 -Z
–	–	–	–	**220**	–	–	**220**	–	**220**	**220**	**220**	–	–	–	–	–	–	–	–	–	–	–	–	–	–	–	–	–	–		1FG1504- . . ■ ■ 2 - ■ . G2 -Z
Max. output speed n_{2max} = 41 rpm, Transmission ratio i = 110.06																															
220	**220**	**220**	**220**	**220**	**220**	–	–	–	–	–	–	–	–	–	–	–	–	–	–	–	–	–	–	–	–	–	–	–	–		1FG1504- . . ■ ■ 6 - ■ . F2 -Z
–	–	–	–	–	**220**	**220**	**220**	**220**	**220**	**220**	**220**	–	–	–	–	–	–	–	–	–	–	–	–	–	–	–	–	–	–		1FG1504- . . ■ ■ 4 - ■ . F2 -Z
–	–	–	–	**220**	–	**220**	**220**	**220**	**220**	**220**	**220**	–	–	–	–	–	–	–	–	–	–	–	–	–	–	–	–	–	–		1FG1504- . . ■ ■ 3 - ■ . F2 -Z
–	–	–	–	**220**	–	–	**220**	–	**220**	**220**	**220**	–	–	–	–	–	–	–	–	–	–	–	–	–	–	–	–	–	–		1FG1504- . . ■ ■ 2 - ■ . F2 -Z
Max. output speed n_{2max} = 48 rpm, Transmission ratio i = 94.39																															
220	**220**	**220**	**220**	**220**	**220**	–	–	–	–	–	–	–	–	–	–	–	–	–	–	–	–	–	–	–	–	–	–	–	–		1FG1504- . . ■ ■ 6 - ■ . E2 -Z
–	–	–	–	–	**220**	**220**	**220**	**220**	**220**	**220**	**220**	–	–	–	–	–	–	–	–	–	–	–	–	–	–	–	–	–	–		1FG1504- . . ■ ■ 4 - ■ . E2 -Z
–	–	–	–	**220**	–	**220**	**220**	**220**	**220**	**220**	**220**	–	–	–	–	–	–	–	–	–	–	–	–	–	–	–	–	–	–		1FG1504- . . ■ ■ 3 - ■ . E2 -Z
–	–	–	–	**220**	–	–	**220**	–	**220**	**220**	**220**	–	–	–	–	–	–	–	–	–	–	–	–	–	–	–	–	–	–		1FG1504- . . ■ ■ 2 - ■ . E2 -Z
Max. output speed n_{2max} = 52 rpm, Transmission ratio i = 85.81																															
220	**220**	**220**	**220**	**220**	**220**	–	–	–	–	–	–	–	–	–	–	–	–	–	–	–	–	–	–	–	–	–	–	–	–		1FG1504- . . ■ ■ 6 - ■ . D2 -Z
–	–	–	–	–	**220**	**220**	**220**	**220**	**220**	**220**	**220**	–	–	–	–	–	–	–	–	–	–	–	–	–	–	–	–	–	–		1FG1504- . . ■ ■ 4 - ■ . D2 -Z
–	–	–	–	**220**	–	**220**	**220**	**220**	**220**	**220**	**220**	–	–	–	–	–	–	–	–	–	–	–	–	–	–	–	–	–	–		1FG1504- . . ■ ■ 3 - ■ . D2 -Z
–	–	–	–	**220**	–	–	**220**	–	**220**	**220**	**220**	–	–	–	–	–	–	–	–	–	–	–	–	–	–	–	–	–	–		1FG1504- . . ■ ■ 2 - ■ . D2 -Z
Max. output speed n_{2max} = 60 rpm, Transmission ratio i = 75.24																															
220	**220**	**220**	**220**	**220**	**220**	–	–	–	–	–	–	–	–	–	–	–	–	–	–	–	–	–	–	–	–	–	–	–	–		1FG1504- . . ■ ■ 6 - ■ . C2 -Z
–	–	–	–	–	**220**	**220**	**220**	**220**	**220**	**220**	**220**	**220**	**220**	**220**	–	–	–	–	–	–	–	–	–	–	–	–	–	–	–		1FG1504- . . ■ ■ 4 - ■ . C2 -Z
–	–	–	–	**220**	–	**220**	**220**	**220**	**220**	**220**	**220**	**220**	**220**	**220**	**220**	**220**	**220**	–	–	–	–	–	–	–	–	–	–	–	–		1FG1504- . . ■ ■ 3 - ■ . C2 -Z
–	–	–	–	**220**	–	–	**220**	–	**220**	**220**	**220**	–	**220**	**220**	**220**	**220**	**220**	–	–	–	–	–	–	–	–	–	–	–	–		1FG1504- . . ■ ■ 2 - ■ . C2 -Z
Motor shaft height:																															
36																														**C**	
						48																								**D**	
												63																		**E**	
																		80												**F**	
																								100						**G**	
Motor length/motor version (**CT** = Compact, **HD** = High Dynamic)**:**																															
			0/CT					**0/CT**						**0/CT**						**0/CT**										**0**	**2**
									1/CT												**1/CT**									**1**	**2**
									1/HD																					**1**	**4**
2/CT				**2/CT**						**2/CT**																					**2**	**2**
											3/CT					**3/CT**							**3/CT**								**3**	**2**
	3/HD				**3/HD**																										**3**	**4**
		4/CT																**4/CT**													**4**	**2**
							4/HD						**4/HD**																		**4**	**4**
																									5/CT						**5**	**2**
																	5/HD														**5**	**4**
																		6/HD													**6**	**4**

Selection of Shaft design, encoder system, mounting type and special designs on page 5/25.

1FG1504- ■ ■ . . . . - . ■ . . -Z

© Siemens 2019

Gearbox size 39, 3-stage – 1FG1504

For line voltage 380 ... 480 V 3 AC (DC link voltage 510 ... 720 V DC) **– Gearbox type** *K39*

Geared motor torque at 1450 rpm
Note: All values in **bold** print are maximum gearbox values.
M_{2dyn}
Nm

1	2	3	4	5	6	7	8	9	10	11	12	13	14	15	16	17	18	19	20	21	22	**Servo bevel geared motors SIMOTICS S-1FG1** Article No.
Max. output speed n_{2max} = **67 rpm**, Transmission ratio i = **67.16**																						
220	**220**	**220**	**220**	**220**	**220**	–	–	–	–	–	–	–	–	–	–	–	–	–	–	–	–	1FG1504- . . ■ ■ **6** - ■ . **B2** -Z
–	–	–	–	–	**220**	**220**	**220**	**220**	**220**	**220**	**220**	**220**	**220**	**220**	–	–	–	–	–	–	–	1FG1504- . . ■ ■ **4** - ■ . **B2** -Z
–	–	–	–	**220**	–	**220**	**220**	**220**	**220**	**220**	**220**	**220**	**220**	**220**	**220**	**220**	**220**	–	–	–	–	1FG1504- . . ■ ■ **3** - ■ . **B2** -Z
–	–	–	–	**220**	–	–	**220**	–	**220**	**220**	**220**	–	**220**	**220**	**220**	**220**	**220**	–	–	–	–	1FG1504- . . ■ ■ **2** - ■ . **B2** -Z
Max. output speed n_{2max} = **75 rpm**, Transmission ratio i = **59.85**																						
220	**220**	**220**	**220**	**220**	**220**	–	–	–	–	–	–	–	–	–	–	–	–	–	–	–	–	1FG1504- . . ■ ■ **6** - ■ . **A2** -Z
–	–	–	–	–	**220**	**220**	**220**	**220**	**220**	**220**	**220**	**220**	**220**	**220**	–	–	–	–	–	–	–	1FG1504- . . ■ ■ **4** - ■ . **A2** -Z
–	–	–	–	**220**	–	**220**	**220**	**220**	**220**	**220**	**220**	**220**	**220**	**220**	**220**	**220**	**220**	–	–	–	–	1FG1504- . . ■ ■ **3** - ■ . **A2** -Z
–	–	–	–	**220**	–	–	**220**	–	**220**	**220**	**220**	–	**220**	**220**	**220**	**220**	**220**	–	–	–	–	1FG1504- . . ■ ■ **2** - ■ . **A2** -Z
Max. output speed n_{2max} = **81 rpm**, Transmission ratio i = **55.25**																						
220	215	**220**	**220**	**220**	**220**	–	–	–	–	–	–	–	–	–	–	–	–	–	–	–	–	1FG1504- . . ■ ■ **6** - ■ . **X1** -Z
–	–	–	–	–	**220**	**220**	**220**	**220**	**220**	**220**	**220**	**220**	**220**	**220**	–	–	–	–	–	–	–	1FG1504- . . ■ ■ **4** - ■ . **X1** -Z
–	–	–	–	**220**	–	**220**	**220**	**220**	**220**	**220**	**220**	**220**	**220**	**220**	**220**	**220**	**220**	–	–	–	–	1FG1504- . . ■ ■ **3** - ■ . **X1** -Z
–	–	–	–	**220**	–	–	**220**	–	**220**	**220**	**220**	–	**220**	**220**	**220**	**220**	**220**	–	–	–	–	1FG1504- . . ■ ■ **2** - ■ . **X1** -Z
Max. output speed n_{2max} = **93 rpm**, Transmission ratio i = **48.37**																						
198	189	**225**	225	**225**	**225**	–	–	–	–	–	–	–	–	–	–	–	–	–	–	–	–	1FG1504- . . ■ ■ **6** - ■ . **W1** -Z
–	–	–	–	–	**225**	**225**	**225**	**225**	**225**	**225**	**225**	**225**	**225**	**225**	–	–	–	–	–	–	–	1FG1504- . . ■ ■ **4** - ■ . **W1** -Z
–	–	–	–	**225**	–	**225**	**225**	**225**	**225**	**225**	**225**	**225**	**225**	**225**	**225**	**225**	**225**	–	–	–	–	1FG1504- . . ■ ■ **3** - ■ . **W1** -Z
–	–	–	–	**225**	–	–	**225**	–	**225**	**225**	**225**	–	**225**	**225**	**225**	**225**	**225**	–	–	–	–	1FG1504- . . ■ ■ **2** - ■ . **W1** -Z
Max. output speed n_{2max} = **106 rpm**, Transmission ratio i = **42.41**																						
175	167	**225**	198	**225**	**225**	–	–	–	–	–	–	–	–	–	–	–	–	–	–	–	–	1FG1504- . . ■ ■ **6** - ■ . **V1** -Z
–	–	–	–	–	**225**	**225**	**225**	**225**	**225**	**225**	**225**	**225**	**225**	**225**	–	–	–	–	–	–	–	1FG1504- . . ■ ■ **4** - ■ . **V1** -Z
–	–	–	–	**225**	–	**225**	**225**	**225**	**225**	**225**	**225**	**225**	**225**	**225**	**225**	**225**	**225**	–	–	–	–	1FG1504- . . ■ ■ **3** - ■ . **V1** -Z
–	–	–	–	**225**	–	–	**225**	–	**225**	**225**	**225**	–	**225**	**225**	**225**	**225**	**225**	–	–	–	–	1FG1504- . . ■ ■ **2** - ■ . **V1** -Z
Max. output speed n_{2max} = **117 rpm**, Transmission ratio i = **38.48**																						
158	151	225	180	**225**	**225**	–	–	–	–	–	–	–	–	–	–	–	–	–	–	–	–	1FG1504- . . ■ ■ **6** - ■ . **U1** -Z
–	–	–	–	–	**225**	**225**	**225**	**225**	**225**	**225**	**225**	**225**	**225**	**225**	–	–	–	–	–	–	–	1FG1504- . . ■ ■ **4** - ■ . **U1** -Z
–	–	–	–	**225**	–	**225**	**225**	**225**	**225**	**225**	**225**	**225**	**225**	**225**	**225**	**225**	**225**	–	–	–	–	1FG1504- . . ■ ■ **3** - ■ . **U1** -Z
–	–	–	–	**225**	–	–	**225**	–	**225**	**225**	**225**	–	**225**	**225**	**225**	**225**	**225**	–	–	–	–	1FG1504- . . ■ ■ **2** - ■ . **U1** -Z
Max. output speed n_{2max} = **124 rpm**, Transmission ratio i = **36.21**																						
149	143	215	169	**225**	**225**	–	–	–	–	–	–	–	–	–	–	–	–	–	–	–	–	1FG1504- . . ■ ■ **6** - ■ . **T1** -Z
–	–	–	–	–	**225**	**225**	**225**	**225**	**225**	**225**	**225**	**225**	**225**	**225**	–	–	–	–	–	–	–	1FG1504- . . ■ ■ **4** - ■ . **T1** -Z
–	–	–	–	**225**	–	**225**	**225**	**225**	**225**	**225**	**225**	**225**	**225**	**225**	**225**	**225**	**225**	–	–	–	–	1FG1504- . . ■ ■ **3** - ■ . **T1** -Z
–	–	–	–	**225**	–	–	**225**	–	**225**	**225**	**225**	–	**225**	**225**	**225**	**225**	**225**	–	–	–	–	1FG1504- . . ■ ■ **2** - ■ . **T1** -Z
Max. output speed n_{2max} = **141 rpm**, Transmission ratio i = **31.92**																						
132	126	191	150	**225**	**225**	–	–	–	–	–	–	–	–	–	–	–	–	–	–	–	–	1FG1504- . . ■ ■ **6** - ■ . **S1** -Z
–	–	–	–	–	**225**	**225**	**225**	**225**	**225**	**225**	**225**	**225**	**225**	**225**	–	–	–	–	–	–	–	1FG1504- . . ■ ■ **4** - ■ . **S1** -Z
–	–	–	–	**225**	–	**225**	**225**	**225**	**225**	**225**	**225**	**225**	**225**	**225**	**225**	**225**	**225**	–	–	–	–	1FG1504- . . ■ ■ **3** - ■ . **S1** -Z
–	–	–	–	**225**	–	–	**225**	–	**225**	**225**	**225**	–	**225**	**225**	**225**	**225**	**225**	–	–	–	–	1FG1504- . . ■ ■ **2** - ■ . **S1** -Z

Motor shaft height:

1	2	3	4	5	6	7	8	9	10	11	12	13	14	15	16	17	18	19	20	21	22	
36																						**C**
			48																			**D**
							63															**E**
												80										**F**
																	100					**G**

Motor length/motor version (**CT** = Compact, **HD** = High Dynamic)**:**

1	2	3	4	5	6	7	8	9	10	11	12	13	14	15	16	17	18	19	20	21	22		
			0/CT				**0/CT**					**0/CT**						**0/CT**				**0**	**2**
													1/CT						**1/CT**			**1**	**2**
								1/HD														**1**	**4**
2/CT				**2/CT**					**2/CT**													**2**	**2**
										3/CT				**3/CT**					**3/CT**			**3**	**2**
	3/HD				**3/HD**																	**3**	**4**
		4/CT													**4/CT**							**4**	**2**
						4/HD					**4/HD**											**4**	**4**
																			5/CT			**5**	**2**
																5/HD						**5**	**4**
																	6/HD					**6**	**4**

Selection of Shaft design, encoder system, mounting type and special designs on page 5/25.

1FG1504- ■ ■ . . . - . ■ . . -Z

5

© Siemens 2019

Gearbox size 39, 3-stage – 1FG1504

For line voltage 380 ... 480 V 3 AC (DC link voltage 510 ... 720 V DC) **– Gearbox type** *K39*

Geared motor torque at 1450 rpm
Note: All values in **bold** print are maximum gearbox values.
M_{2dyn}
Nm

1FG1504-	Article No.
Max. output speed n_{2max} = **162 rpm**, Transmission ratio i = **27.7**	
114 109 165 130 **225** **225** – – – – – – – – – – – – – – – –	1FG1504- . . ■ ■ 6 - ■ . R1 -Z
– – – – – **225** **225** **225** **225** **225** **225** **225** **225** **225** **225** – – – – – – –	1FG1504- . . ■ ■ 4 - ■ . R1 -Z
– – – – **225** – **225** **225** **225** **225** **225** **225** **225** **225** **225** **225** **225** **225** – – – –	1FG1504- . . ■ ■ 3 - ■ . R1 -Z
– – – – **225** – – **225** – **225** **225** **225** – **225** **225** **225** **225** **225** – – – –	1FG1504- . . ■ ■ 2 - ■ . R1 -Z
Max. output speed n_{2max} = **167 rpm**, Transmission ratio i = **26.89**	
111 106 161 126 **230** **230** – – – – – – – – – – – – – – – –	1FG1504- . . ■ ■ 6 - ■ . Q1 -Z
– – – – – **230** **230** **230** **230** **230** **230** **230** **230** **230** **230** – – – – – – –	1FG1504- . . ■ ■ 4 - ■ . Q1 -Z
– – – – **230** – **230** **230** **230** **230** **230** **230** **230** **230** **230** **230** **230** **230** – – – –	1FG1504- . . ■ ■ 3 - ■ . Q1 -Z
– – – – **230** – – **230** – **230** **230** **230** – **230** **230** **230** **230** **230** – – – –	1FG1504- . . ■ ■ 2 - ■ . Q1 -Z
Max. output speed n_{2max} = **188 rpm**, Transmission ratio i = **23.97**	
99 95 143 112 230 220 – – – – – – – – – – – – – – – –	1FG1504- . . ■ ■ 6 - ■ . P1 -Z
– – – – – 220 **230** **230** **230** **230** **230** **230** **230** **230** **230** – – – – – – –	1FG1504- . . ■ ■ 4 - ■ . P1 -Z
– – – – 230 – **230** **230** **230** **230** **230** **230** **230** **230** **230** **230** **230** **230** – – – –	1FG1504- . . ■ ■ 3 - ■ . P1 -Z
– – – – 230 – – **230** – **230** **230** **230** – **230** **230** **230** **230** **230** – – – –	1FG1504- . . ■ ■ 2 - ■ . P1 -Z
Max. output speed n_{2max} = **203 rpm**, Transmission ratio i = **22.12**	
92 88 133 104 215 205 – – – – – – – – – – – – – – – –	1FG1504- . . ■ ■ 6 - ■ . N1 -Z
– – – – – 205 230 **230** **230** **230** **230** **230** **230** **230** **230** – – – – – – –	1FG1504- . . ■ ■ 4 - ■ . N1 -Z
– – – – 215 – 230 **230** **230** **230** **230** **230** **230** **230** **230** **230** **230** **230** – – – –	1FG1504- . . ■ ■ 3 - ■ . N1 -Z
– – – – 215 – – **230** – **230** **230** **230** – **230** **230** **230** **230** **230** – – – –	1FG1504- . . ■ ■ 2 - ■ . N1 -Z
Max. output speed n_{2max} = **232 rpm**, Transmission ratio i = **19.37**	
81 77 117 91 189 180 – – – – – – – – – – – – – – – –	1FG1504- . . ■ ■ 6 - ■ . M1 -Z
– – – – – 180 200 **230** **230** **230** **230** **230** **230** **230** **230** – – – – – – –	1FG1504- . . ■ ■ 4 - ■ . M1 -Z
– – – – 189 – 200 **230** **230** **230** **230** **230** **230** **230** **230** **230** **230** **230** – – – –	1FG1504- . . ■ ■ 3 - ■ . M1 -Z
– – – – 189 – – **230** – **230** **230** **230** – **230** **230** **230** **230** **230** – – – –	1FG1504- . . ■ ■ 2 - ■ . M1 -Z
Max. output speed n_{2max} = **265 rpm**, Transmission ratio i = **16.98**	
71 68 103 80 166 158 – – – – – – – – – – – – – – – –	1FG1504- . . ■ ■ 6 - ■ . L1 -Z
– – – – – 158 178 **230** **230** **230** **230** **230** **230** **230** **230** – – – – – – –	1FG1504- . . ■ ■ 4 - ■ . L1 -Z
– – – – 166 – 178 **230** **230** **230** **230** **230** **230** **230** **230** **230** **230** **230** – – – –	1FG1504- . . ■ ■ 3 - ■ . L1 -Z
– – – – 166 – – **230** – **230** **230** **230** – **230** **230** **230** **230** **230** – – – –	1FG1504- . . ■ ■ 2 - ■ . L1 -Z
Max. output speed n_{2max} = **292 rpm**, Transmission ratio i = **15.41**	
64 61 93 73 151 144 – – – – – – – – – – – – – – – –	1FG1504- . . ■ ■ 6 - ■ . K1 -Z
– – – – – 144 162 **230** **230** **230** **230** **230** **230** **230** **230** – – – – – – –	1FG1504- . . ■ ■ 4 - ■ . K1 -Z
– – – – 151 – 162 **230** **230** **230** **230** **230** **230** **230** **230** **230** **230** **230** – – – –	1FG1504- . . ■ ■ 3 - ■ . K1 -Z
– – – – 151 – – **230** – **230** **230** **230** – **230** **230** **230** **230** **230** – – – –	1FG1504- . . ■ ■ 2 - ■ . K1 -Z
Max. output speed n_{2max} = **310 rpm**, Transmission ratio i = **14.5**	
61 58 88 69 142 135 – – – – – – – – – – – – – – – –	1FG1504- . . ■ ■ 6 - ■ . J1 -Z
– – – – – 135 153 **230** **230** **230** **230** **230** **230** **230** **230** – – – – – – –	1FG1504- . . ■ ■ 4 - ■ . J1 -Z
– – – – 142 – 153 **230** **230** **230** **230** **230** **230** **230** **230** **230** **230** **230** – – – –	1FG1504- . . ■ ■ 3 - ■ . J1 -Z
– – – – 142 – – **230** – **230** **230** **230** – **230** **230** **230** **230** **230** – – – –	1FG1504- . . ■ ■ 2 - ■ . J1 -Z

Motor shaft height:

36																							C	
			48																				D	
							63																E	
												80											F	
																		100					G	

Motor length/motor version (**CT** = Compact, **HD** = High Dynamic)**:**

			0/CT				**0/CT**					**0/CT**						**0/CT**						0	2
													1/CT						**1/CT**					1	2
								1/HD																1	4
2/CT				**2/CT**					**2/CT**															2	2
										3/CT				**3/CT**						**3/CT**				3	2
	3/HD				**3/HD**																			3	4
		4/CT														**4/CT**								4	2
						4/HD					**4/HD**														4	4
																					5/CT			5	2
																	5/HD							5	4
																		6/HD						6	4

Selection of Shaft design, encoder system, mounting type and special designs on page 5/25.

1FG1504- ■ ■ . . . - . ■ . . -Z

© Siemens 2019

Gearbox size 39, 3-stage – 1FG1504

For line voltage 380 ... 480 V 3 AC (DC link voltage 510 ... 720 V DC) **– Gearbox type** *K39*

Geared motor torque at 1450 rpm
Note: All values in **bold** print are maximum gearbox values.
M_{2dyn}
Nm

0/CT	0/HD	1/CT	1/HD	2/CT	2/HD	3/CT	3/HD	4/CT	4/HD	5/CT	5/HD	6/HD	Article No.
Max. output speed n_{2max} = 352 rpm, Transmission ratio i = 12.78													
54	51	78	61	126	120	–	–	–	–	–	–	–	1FG1504- . . ■ ■ 6 - ■ . H1 -Z
–	–	–	–	–	120	135	215	205	**225**	**225**	**225**	**225**	1FG1504- . . ■ ■ 4 - ■ . H1 -Z
–	–	–	–	126	–	135	215	205	**225**	**225**	**225**	**225**	1FG1504- . . ■ ■ 3 - ■ . H1 -Z
–	–	–	–	126	–	–	215	–	**225**	**225**	**225**	–	1FG1504- . . ■ ■ 2 - ■ . H1 -Z
Max. output speed n_{2max} = 406 rpm, Transmission ratio i = 11.09													
46	44	67	52	109	103	–	–	–	–	–	–	–	1FG1504- . . ■ ■ 6 - ■ . G1 -Z
–	–	–	–	–	103	117	187	179	**225**	**225**	**225**	**225**	1FG1504- . . ■ ■ 4 - ■ . G1 -Z
–	–	–	–	109	–	117	187	179	**225**	**225**	**225**	**225**	1FG1504- . . ■ ■ 3 - ■ . G1 -Z
–	–	–	–	109	–	–	187	–	**225**	**225**	**225**	–	1FG1504- . . ■ ■ 2 - ■ . G1 -Z
Max. output speed n_{2max} = 448 rpm, Transmission ratio i = 10.04													
42	40	61	48	99	95	–	–	–	–	–	–	–	1FG1504- . . ■ ■ 6 - ■ . F1 -Z
–	–	–	–	–	95	107	171	164	**196**	**196**	**196**	**196**	1FG1504- . . ■ ■ 4 - ■ . F1 -Z
–	–	–	–	99	–	107	171	164	**196**	**196**	**196**	**196**	1FG1504- . . ■ ■ 3 - ■ . F1 -Z
–	–	–	–	99	–	–	171	–	**196**	**196**	**196**	–	1FG1504- . . ■ ■ 2 - ■ . F1 -Z
Max. output speed n_{2max} = 511 rpm, Transmission ratio i = 8.81													
37	36	54	42	88	83	–	–	–	–	–	–	–	1FG1504- . . ■ ■ 6 - ■ . E1 -Z
–	–	–	–	–	83	94	150	145	**191**	**191**	**191**	**191**	1FG1504- . . ■ ■ 4 - ■ . E1 -Z
–	–	–	–	88	–	94	150	145	**191**	**191**	**191**	**191**	1FG1504- . . ■ ■ 3 - ■ . E1 -Z
–	–	–	–	88	–	–	150	–	**191**	**191**	**191**	–	1FG1504- . . ■ ■ 2 - ■ . E1 -Z
Max. output speed n_{2max} = 563 rpm, Transmission ratio i = 7.99													
34	32	49	38	79	75	–	–	–	–	–	–	–	1FG1504- . . ■ ■ 6 - ■ . D1 -Z
–	–	–	–	–	75	85	136	131	**189**	**189**	**189**	189	1FG1504- . . ■ ■ 4 - ■ . D1 -Z
–	–	–	–	79	–	85	136	131	**189**	**189**	**189**	189	1FG1504- . . ■ ■ 3 - ■ . D1 -Z
–	–	–	–	79	–	–	136	–	**189**	**189**	**189**	–	1FG1504- . . ■ ■ 2 - ■ . D1 -Z
Max. output speed n_{2max} = 598 rpm, Transmission ratio i = 7.52													
32	30	46	36	75	71	–	–	–	–	–	–	–	1FG1504- . . ■ ■ 6 - ■ . C1 -Z
–	–	–	–	–	71	80	128	123	186	**189**	**189**	179	1FG1504- . . ■ ■ 4 - ■ . C1 -Z
–	–	–	–	75	–	80	128	123	186	**189**	**189**	179	1FG1504- . . ■ ■ 3 - ■ . C1 -Z
–	–	–	–	75	–	–	128	–	186	**189**	**189**	–	1FG1504- . . ■ ■ 2 - ■ . C1 -Z
Max. output speed n_{2max} = 679 rpm, Transmission ratio i = 6.63													
28	27	41	32	66	63	–	–	–	–	–	–	–	1FG1504- . . ■ ■ 6 - ■ . B1 -Z
–	–	–	–	–	63	71	113	109	164	**184**	**184**	158	1FG1504- . . ■ ■ 4 - ■ . B1 -Z
–	–	–	–	66	–	71	113	109	164	**184**	**184**	158	1FG1504- . . ■ ■ 3 - ■ . B1 -Z
–	–	–	–	66	–	–	113	–	164	**184**	**184**	–	1FG1504- . . ■ ■ 2 - ■ . B1 -Z
Max. output speed n_{2max} = 783 rpm, Transmission ratio i = 5.75													
24	23	35	27	57	54	–	–	–	–	–	–	–	1FG1504- . . ■ ■ 6 - ■ . A1 -Z
–	–	–	–	–	54	61	98	94	142	**182**	174	136	1FG1504- . . ■ ■ 4 - ■ . A1 -Z
–	–	–	–	57	–	61	98	94	142	**182**	174	136	1FG1504- . . ■ ■ 3 - ■ . A1 -Z
–	–	–	–	57	–	–	98	–	142	**182**	174	–	1FG1504- . . ■ ■ 2 - ■ . A1 -Z

Motor shaft height:

0/CT	0/HD	1/CT	1/HD	2/CT	2/HD	3/CT	3/HD	4/CT	4/HD	5/CT	5/HD	6/HD	
36													C
		48											D
			63										E
							80						F
											100		G

Motor length/motor version (**CT** = Compact, **HD** = High Dynamic)**:**

0/CT	0/HD	1/CT	1/HD	2/CT	2/HD	3/CT	3/HD	4/CT	4/HD	5/CT	5/HD	6/HD		
0/CT					0/CT				0/CT				0/CT	0 2
		1/CT									1/CT			1 2
	1/HD													1 4
2/CT				2/CT		2/CT								2 2
						3/CT		3/CT				3/CT		3 2
	3/HD			3/HD										3 4
		4/CT						4/CT						4 2
					4/HD				4/HD					4 4
										5/CT				5 2
											5/HD			5 4
												6/HD		6 4

Selection of Shaft design, encoder system, mounting type and special designs on page 5/25.

1FG1504- ■ ■ . . . - . ■ . . -Z

© Siemens 2019

Gearbox size 39, 3-stage – 1FG1504

Selection and ordering data (continued)

For line voltage 200 ... 240 V 1 AC (DC link voltage 270 ... 330 V DC) **– Gearbox type** ***K39***

Max. output speed n_{2max} rpm	Transmission ratio i	Geared motor torque at 1450 rpm Note: All values in **bold** print are maximum gearbox values. M_{2dyn} Nm					**Servo bevel geared motors SIMOTICS S-1FG1** Article No.
29	**157.32**	**220**	**220**	**220**	**220**	**220**	**1FG1504- . . ■ ■ 3 - ■ . J2 -Z**
32	**139.54**	**220**	**220**	**220**	**220**	**220**	**1FG1504- . . ■ ■ 3 - ■ . H2 -Z**
37	**121.07**	**220**	**220**	**220**	**220**	**220**	**1FG1504- . . ■ ■ 3 - ■ . G2 -Z**
41	**110.06**	**220**	**220**	**220**	**220**	**220**	**1FG1504- . . ■ ■ 3 - ■ . F2 -Z**
48	**94.39**	**220**	**220**	**220**	**220**	**220**	**1FG1504- . . ■ ■ 3 - ■ . E2 -Z**
52	**85.81**	**220**	**220**	**220**	**220**	**220**	**1FG1504- . . ■ ■ 3 - ■ . D2 -Z**
60	**75.24**	**220**	**220**	**220**	**220**	**220**	**1FG1504- . . ■ ■ 3 - ■ . C2 -Z**
67	**67.16**	**220**	**220**	**220**	**220**	**220**	**1FG1504- . . ■ ■ 3 - ■ . B2 -Z**
75	**59.85**	**220**	**220**	**220**	**220**	**220**	**1FG1504- . . ■ ■ 3 - ■ . A2 -Z**
81	**55.25**	**220**	215	**220**	**220**	**220**	**1FG1504- . . ■ ■ 3 - ■ . X1 -Z**
93	**48.37**	198	189	**225**	**225**	**225**	**1FG1504- . . ■ ■ 3 - ■ . W1 -Z**
106	**42.41**	175	167	**225**	**225**	**225**	**1FG1504- . . ■ ■ 3 - ■ . V1 -Z**
117	**38.48**	158	151	225	**225**	**225**	**1FG1504- . . ■ ■ 3 - ■ . U1 -Z**
124	**36.21**	149	143	215	**225**	**225**	**1FG1504- . . ■ ■ 3 - ■ . T1 -Z**
141	**31.92**	132	126	191	**225**	**225**	**1FG1504- . . ■ ■ 3 - ■ . S1 -Z**
162	**27.7**	114	109	165	**225**	**225**	**1FG1504- . . ■ ■ 3 - ■ . R1 -Z**
167	**26.89**	111	106	161	**230**	**230**	**1FG1504- . . ■ ■ 3 - ■ . Q1 -Z**
188	**23.97**	99	95	143	230	220	**1FG1504- . . ■ ■ 3 - ■ . P1 -Z**
203	**22.12**	92	88	133	215	205	**1FG1504- . . ■ ■ 3 - ■ . N1 -Z**
232	**19.37**	81	77	117	189	180	**1FG1504- . . ■ ■ 3 - ■ . M1 -Z**
265	**16.98**	71	68	103	166	158	**1FG1504- . . ■ ■ 3 - ■ . L1 -Z**
292	**15.41**	64	61	93	151	144	**1FG1504- . . ■ ■ 3 - ■ . K1 -Z**
310	**14.5**	61	58	88	142	135	**1FG1504- . . ■ ■ 3 - ■ . J1 -Z**
352	**12.78**	54	51	78	126	120	**1FG1504- . . ■ ■ 3 - ■ . H1 -Z**
406	**11.09**	46	44	67	109	103	**1FG1504- . . ■ ■ 3 - ■ . G1 -Z**
448	**10.04**	42	40	61	99	95	**1FG1504- . . ■ ■ 3 - ■ . F1 -Z**
511	**8.81**	37	36	54	88	83	**1FG1504- . . ■ ■ 3 - ■ . E1 -Z**
563	**7.99**	34	32	49	79	75	**1FG1504- . . ■ ■ 3 - ■ . D1 -Z**
598	**7.52**	32	30	46	75	71	**1FG1504- . . ■ ■ 3 - ■ . C1 -Z**
679	**6.63**	28	27	41	66	63	**1FG1504- . . ■ ■ 3 - ■ . B1 -Z**
783	**5.75**	24	23	35	57	54	**1FG1504- . . ■ ■ 3 - ■ . A1 -Z**

Motor shaft height:

	36						**C**			
				48			**D**			

Motor length/motor version (**CT** = Compact, **HD** = High Dynamic)**:**

2/CT			**2/CT**			**2**		**1**	
	3/HD			**3/HD**		**3**		**3**	
		4/CT				**4**		**1**	

Selection of Shaft design, encoder system, mounting type and special designs on page 5/25.

1FG1504- ■ ■ . . . - ■ . . -Z

© Siemens 2019

Technical specifications

Gearbox type *K49*

Servo geared motor Type	i	R_{ex}	M_{2rated} Nm	M_{2max} Nm	$M_{2Em.Off}$ Nm	n_{2max} rpm	n_{1max} rpm	φ [1] '	F_{R2} N	F_{R2max} N	c_T Nm/ '	J_G 10^{-4} kgm^2
1FG1505-.....-..J2	200.25	12616/63	420	420	710	22	4500	6.68	7900	7900	40.5	0.06
1FG1505-.....-..H2	178.06	6232/35	420	420	710	25	4500	6.77	7820	7820	40.5	0.07
1FG1505-.....-..G2	156.34	5472/35	420	420	710	29	4500	6.79	7820	7820	40.5	0.08
1FG1505-.....-..F2	142.13	10944/77	420	420	710	32	4500	6.79	7820	7820	40.5	0.1
1FG1505-.....-..E2	121.6	608/5	420	420	710	37	4500	6.81	7820	7820	40.5	0.12
1FG1505-.....-..D2	110.55	1216/11	420	420	710	41	4500	6.81	7820	7820	40.5	0.14
1FG1505-.....-..C2	97.71	684/7	420	420	710	46	4500	6.83	7720	7720	40.5	0.16
1FG1505-.....-..B2	88.83	6840/77	420	420	710	51	4500	6.83	7370	7370	40.5	0.22
1FG1505-.....-..A2	77.81	1634/21	420	420	710	58	4500	6.87	6910	6910	40.5	0.25
1FG1505-.....-..X1	71.82	6536/91	420	420	710	63	4500	6.87	6650	6650	40.5	0.3
1FG1505-.....-..W1	63.59	3116/49	420	420	710	71	4500	6.91	6250	6250	40.5	0.33
1FG1505-.....-..V1	52.93	741/14	420	420	710	85	4500	6.95	5680	5680	40.5	0.44
1FG1505-.....-..U1	49.82	5928/119	420	420	710	90	4500	6.95	5510	5510	40.5	0.5
1FG1505-.....-..T1	44.63	2812/63	420	420	710	101	4500	7.00	5190	5190	40.5	0.56
1FG1505-.....-..S1	38	38/1	420	425	710	118	4500	7.06	4750	4710	40.5	0.71
1FG1505-.....-..R1	32.57	228/7	420	425	710	138	4500	7.12	4350	4310	40.5	1
1FG1505-.....-..Q1	28.05	589/21	420	425	710	160	4500	7.18	3970	3940	40.5	1.3
1FG1505-.....-..P1	26.3	55040/2093	420	460	710	171	4500	8.59	3820	3510	37.5	0.52
1FG1505-.....-..N1	23.28	26240/1127	420	450	710	193	4500	8.70	3540	3300	37.4	0.63
1FG1505-.....-..M1	19.38	3120/161	420	445	710	232	4500	8.83	3130	2940	37.3	0.87
1FG1505-.....-..L1	18.24	49920/2737	420	445	710	247	4500	8.82	3010	2810	37.4	1
1FG1505-.....-..K1	16.34	23680/1449	420	445	710	275	4500	8.96	2780	2580	37.3	1.2
1FG1505-.....-..J1	13.91	320/23	420	445	710	324	4500	9.11	2460	2270	37.2	1.6
1FG1505-.....-..H1	11.93	1920/161	420	430	710	365	4350	9.29	2180	2100	37.2	2.1
1FG1505-.....-..G1	10.27	4960/483	415	415	705	424	4350	9.48	2030	2030	37.1	2.7
1FG1505-.....-..F1	9.75	39/4	275	275	440	462	4500	14.24	2850	2850	25.6	1
1FG1505-.....-..E1	9.18	156/17	270	270	440	490	4500	14.24	2790	2790	25.7	1.2
1FG1505-.....-..D1	8.22	74/9	255	255	430	547	4500	14.51	2730	2730	25.6	1.4
1FG1505-.....-..C1	7	7/1	240	240	405	643	4500	14.82	2610	2610	25.4	1.8
1FG1505-.....-..B1	6	6/1	225	225	380	750	4500	15.17	2500	2500	25.3	2.4
1FG1505-.....-..A1	5.17	31/6	210	210	355	870	4500	15.40	2420	2420	25.1	3.2

Selection and ordering data

Shaft design, encoder system, mounting type and special designs

Gearbox type *K49*

			Servo bevel geared motors SIMOTICS S-1FG1 Article No.
			1FG15..- ■ ■ . . . . - ■ . . **-Z**
Shaft design:	Solid shaft with feather keyway	– Design 1	**1**
		– Design 3	**3**
	Hollow-shaft with feather keyway	– Design 1 – H35	**5**
		– Design 2 – H30	**6**
Order codes and Descriptions see chapter "Options"	Special shaft design		**9**
Encoder system for motors with DRIVE-CLiQ interface:	AS20DQI encoder		**Q**
	AM20DQI encoder		**R**
	R14DQ resolver		**P**
	R15DQ resolver		**U**
Order codes and Descriptions see chapter "Options"	Special version encoder system		**Z**
Mounting type:	Foot-mounted design		**A**
	Flange-mounted design		**F**
	Housing flange design		**H**
	Shaft-mounted design (not possible with solid shaft)		**C**
Special designs (Options): Order codes and Descriptions see chapter "Options" The following order codes must be added to each article number: • Oil type – order codes **K06** or **K11** • Mounting position – order codes **D11** ... **D16** or **D21** ... **D26**			**-Z**
Selection of 3-stages servo bevel geared motors with gearbox size 49 from next page.			**1FG15..-** . . ■ ■ ■ - ■ . ■ ■ **-Z**

[1] Data are for option reduced-backlash version – order code **G99** required.

© Siemens 2019

Gearbox size 49, 3-stage – 1FG1505

Selection and ordering data (continued)

For line voltage 380 ... 480 V 3 AC (DC link voltage 510 ... 720 V DC) **– Gearbox type** ***K49***

Geared motor torque at 1450 rpm
Note: All values in **bold** print are maximum gearbox values.
M_{2dyn}
Nm

36	48	63	80	100	Servo bevel geared motors SIMOTICS S-1FG1 Article No.
Max. output speed n_{2max} = 22 rpm, Transmission ratio i = 200.25					
420	–	–	–	–	1FG1505- . . ■ ■ 6 - ■ . J2 -Z
–	**420**	**420**	–	–	1FG1505- . . ■ ■ 4 - ■ . J2 -Z
–	**420**	–	**420**	–	1FG1505- . . ■ ■ 3 - ■ . J2 -Z
–	**420**	–	–	–	1FG1505- . . ■ ■ 2 - ■ . J2 -Z
Max. output speed n_{2max} = 25 rpm, Transmission ratio i = 178.06					
420	–	–	–	–	1FG1505- . . ■ ■ 6 - ■ . H2 -Z
–	**420**	**420**	**420**	–	1FG1505- . . ■ ■ 4 - ■ . H2 -Z
–	**420**	**420**	**420**	–	1FG1505- . . ■ ■ 3 - ■ . H2 -Z
–	**420**	–	**420**	–	1FG1505- . . ■ ■ 2 - ■ . H2 -Z
Max. output speed n_{2max} = 29 rpm, Transmission ratio i = 156.34					
420	–	–	–	–	1FG1505- . . ■ ■ 6 - ■ . G2 -Z
–	**420**	**420**	**420**	–	1FG1505- . . ■ ■ 4 - ■ . G2 -Z
–	**420**	**420**	**420**	–	1FG1505- . . ■ ■ 3 - ■ . G2 -Z
–	**420**	–	**420**	–	1FG1505- . . ■ ■ 2 - ■ . G2 -Z
Max. output speed n_{2max} = 32 rpm, Transmission ratio i = 142.13					
420	–	–	–	–	1FG1505- . . ■ ■ 6 - ■ . F2 -Z
–	**420**	**420**	**420**	–	1FG1505- . . ■ ■ 4 - ■ . F2 -Z
–	**420**	**420**	**420**	–	1FG1505- . . ■ ■ 3 - ■ . F2 -Z
–	**420**	–	**420**	–	1FG1505- . . ■ ■ 2 - ■ . F2 -Z
Max. output speed n_{2max} = 37 rpm, Transmission ratio i = 121.6					
420	–	–	–	–	1FG1505- . . ■ ■ 6 - ■ . E2 -Z
–	**420**	**420**	**420**	–	1FG1505- . . ■ ■ 4 - ■ . E2 -Z
–	**420**	**420**	**420**	–	1FG1505- . . ■ ■ 3 - ■ . E2 -Z
–	**420**	–	**420**	–	1FG1505- . . ■ ■ 2 - ■ . E2 -Z
Max. output speed n_{2max} = 41 rpm, Transmission ratio i = 110.55					
420	–	–	–	–	1FG1505- . . ■ ■ 6 - ■ . D2 -Z
–	**420**	**420**	**420**	–	1FG1505- . . ■ ■ 4 - ■ . D2 -Z
–	**420**	**420**	**420**	–	1FG1505- . . ■ ■ 3 - ■ . D2 -Z
–	**420**	–	**420**	–	1FG1505- . . ■ ■ 2 - ■ . D2 -Z
Max. output speed n_{2max} = 46 rpm, Transmission ratio i = 97.71					
400	380	**420**	–	–	1FG1505- . . ■ ■ 6 - ■ . C2 -Z
–	**420**	**420**	**420**	–	1FG1505- . . ■ ■ 4 - ■ . C2 -Z
–	**420**	**420**	**420**	–	1FG1505- . . ■ ■ 3 - ■ . C2 -Z
–	**420**	–	**420**	–	1FG1505- . . ■ ■ 2 - ■ . C2 -Z
Motor shaft height:					
36	**48**	**63**	**80**	**100**	
					C
					D
					E
					F
					G
Motor length/motor version (**CT** = Compact, **HD** = High Dynamic)**:**					
0/CT	**0/CT**	**0/CT**	**0/CT**		**0** **2**
1/CT		**1/CT**	**1/CT**		**1** **2**
1/HD					**1** **4**
2/CT	**2/CT**	**2/CT**			**2** **2**
3/CT		**3/CT**	**3/CT**		**3** **2**
3/HD	**3/HD**				**3** **4**
4/CT		**4/CT**			**4** **2**
4/HD	**4/HD**				**4** **4**
			5/CT		**5** **2**
		5/HD			**5** **4**
		6/HD			**6** **4**

Selection of Shaft design, encoder system, mounting type and special designs on page 5/31.

1FG1505- ■ ■ . . . . - . ■ . . -Z

© Siemens 2019

For line voltage 380 ... 480 V 3 AC (DC link voltage 510 ... 720 V DC) **– Gearbox type** *K49*

Geared motor torque at 1450 rpm
Note: All values in **bold** print are maximum gearbox values.
M_{2dyn}
Nm

Article No.
Servo bevel geared motors SIMOTICS S-1FG1

Max. output speed n_{2max} = **51 rpm**, Transmission ratio i = **88.83**																						
360	345	**420**	410	**420**	**420**	–	–	–	–	–	–	–	–	–	–	–	–	–	–	–	–	1FG1505- . . ■ ■ 6 - ■ . B2 -Z
–	–	–	–	–	**420**	**420**	**420**	**420**	**420**	**420**	**420**	**420**	**420**	**420**	–	–	–	–	–	–	–	1FG1505- . . ■ ■ 4 - ■ . B2 -Z
–	–	–	–	**420**	–	**420**	**420**	**420**	**420**	**420**	**420**	**420**	**420**	**420**	**420**	**420**	**420**	–	–	–	–	1FG1505- . . ■ ■ 3 - ■ . B2 -Z
–	–	–	–	**420**	–	–	**420**	–	**420**	**420**	**420**	–	**420**	**420**	**420**	**420**	**420**	–	–	–	–	1FG1505- . . ■ ■ 2 - ■ . B2 -Z
Max. output speed n_{2max} = **58 rpm**, Transmission ratio i = **77.81**																						
320	305	**420**	360	**420**	**420**	–	–	–	–	–	–	–	–	–	–	–	–	–	–	–	–	1FG1505- . . ■ ■ 6 - ■ . A2 -Z
–	–	–	–	–	**420**	**420**	**420**	**420**	**420**	**420**	**420**	**420**	**420**	**420**	–	–	–	–	–	–	–	1FG1505- . . ■ ■ 4 - ■ . A2 -Z
–	–	–	–	**420**	–	**420**	**420**	**420**	**420**	**420**	**420**	**420**	**420**	**420**	**420**	**420**	**420**	–	–	–	–	1FG1505- . . ■ ■ 3 - ■ . A2 -Z
–	–	–	–	**420**	–	–	**420**	–	**420**	**420**	**420**	–	**420**	**420**	**420**	**420**	**420**	–	–	–	–	1FG1505- . . ■ ■ 2 - ■ . A2 -Z
Max. output speed n_{2max} = **63 rpm**, Transmission ratio i = **71.82**																						
295	280	**420**	335	**420**	**420**	–	–	–	–	–	–	–	–	–	–	–	–	–	–	–	–	1FG1505- . . ■ ■ 6 - ■ . X1 -Z
–	–	–	–	–	**420**	**420**	**420**	**420**	**420**	**420**	**420**	**420**	**420**	**420**	–	–	–	–	–	–	–	1FG1505- . . ■ ■ 4 - ■ . X1 -Z
–	–	–	–	**420**	–	**420**	**420**	**420**	**420**	**420**	**420**	**420**	**420**	**420**	**420**	**420**	**420**	–	–	–	–	1FG1505- . . ■ ■ 3 - ■ . X1 -Z
–	–	–	–	**420**	–	–	**420**	–	**420**	**420**	**420**	–	**420**	**420**	**420**	**420**	**420**	–	–	–	–	1FG1505- . . ■ ■ 2 - ■ . X1 -Z
Max. output speed n_{2max} = **71 rpm**, Transmission ratio i = **63.59**																						
260	250	380	295	**420**	**420**	–	–	–	–	–	–	–	–	–	–	–	–	–	–	–	–	1FG1505- . . ■ ■ 6 - ■ . W1 -Z
–	–	–	–	–	**420**	**420**	**420**	**420**	**420**	**420**	**420**	**420**	**420**	**420**	–	–	–	–	–	–	–	1FG1505- . . ■ ■ 4 - ■ . W1 -Z
–	–	–	–	**420**	–	**420**	**420**	**420**	**420**	**420**	**420**	**420**	**420**	**420**	**420**	**420**	**420**	**420**	**420**	**420**	**420**	1FG1505- . . ■ ■ 3 - ■ . W1 -Z
–	–	–	–	**420**	–	–	**420**	–	**420**	**420**	**420**	–	**420**	**420**	**420**	**420**	**420**	**420**	**420**	**420**	**420**	1FG1505- . . ■ ■ 2 - ■ . W1 -Z
Max. output speed n_{2max} = **85 rpm**, Transmission ratio i = **52.93**																						
220	210	315	245	**420**	**420**	–	–	–	–	–	–	–	–	–	–	–	–	–	–	–	–	1FG1505- . . ■ ■ 6 - ■ . V1 -Z
–	–	–	–	–	**420**	**420**	**420**	**420**	**420**	**420**	**420**	**420**	**420**	**420**	–	–	–	–	–	–	–	1FG1505- . . ■ ■ 4 - ■ . V1 -Z
–	–	–	–	**420**	–	**420**	**420**	**420**	**420**	**420**	**420**	**420**	**420**	**420**	**420**	**420**	**420**	**420**	**420**	**420**	**420**	1FG1505- . . ■ ■ 3 - ■ . V1 -Z
–	–	–	–	**420**	–	–	**420**	–	**420**	**420**	**420**	–	**420**	**420**	**420**	**420**	**420**	**420**	**420**	**420**	**420**	1FG1505- . . ■ ■ 2 - ■ . V1 -Z
Max. output speed n_{2max} = **90 rpm**, Transmission ratio i = **49.82**																						
205	198	300	235	**420**	**420**	–	–	–	–	–	–	–	–	–	–	–	–	–	–	–	–	1FG1505- . . ■ ■ 6 - ■ . U1 -Z
–	–	–	–	–	**420**	**420**	**420**	**420**	**420**	**420**	**420**	**420**	**420**	**420**	–	–	–	–	–	–	–	1FG1505- . . ■ ■ 4 - ■ . U1 -Z
–	–	–	–	**420**	–	**420**	**420**	**420**	**420**	**420**	**420**	**420**	**420**	**420**	**420**	**420**	**420**	**420**	**420**	**420**	**420**	1FG1505- . . ■ ■ 3 - ■ . U1 -Z
–	–	–	–	**420**	–	–	**420**	–	**420**	**420**	**420**	–	**420**	**420**	**420**	**420**	**420**	**420**	**420**	**420**	**420**	1FG1505- . . ■ ■ 2 - ■ . U1 -Z
Max. output speed n_{2max} = **101 rpm**, Transmission ratio i = **44.63**																						
186	178	265	210	**420**	415	–	–	–	–	–	–	–	–	–	–	–	–	–	–	–	–	1FG1505- . . ■ ■ 6 - ■ . T1 -Z
–	–	–	–	–	415	**420**	**420**	**420**	**420**	**420**	**420**	**420**	**420**	**420**	–	–	–	–	–	–	–	1FG1505- . . ■ ■ 4 - ■ . T1 -Z
–	–	–	–	**420**	–	**420**	**420**	**420**	**420**	**420**	**420**	**420**	**420**	**420**	**420**	**420**	**420**	**420**	**420**	**420**	**420**	1FG1505- . . ■ ■ 3 - ■ . T1 -Z
–	–	–	–	**420**	–	–	**420**	–	**420**	**420**	**420**	–	**420**	**420**	**420**	**420**	**420**	**420**	**420**	**420**	**420**	1FG1505- . . ■ ■ 2 - ■ . T1 -Z
Max. output speed n_{2max} = **118 rpm**, Transmission ratio i = **38**																						
159	152	230	180	370	350	–	–	–	–	–	–	–	–	–	–	–	–	–	–	–	–	1FG1505- . . ■ ■ 6 - ■ . S1 -Z
–	–	–	–	–	350	395	**425**	**425**	**425**	**425**	**425**	**425**	**425**	**425**	–	–	–	–	–	–	–	1FG1505- . . ■ ■ 4 - ■ . S1 -Z
–	–	–	–	370	–	395	**425**	**425**	**425**	**425**	**425**	**425**	**425**	**425**	**425**	**425**	**425**	**425**	**425**	**425**	**425**	1FG1505- . . ■ ■ 3 - ■ . S1 -Z
–	–	–	–	370	–	–	**425**	–	**425**	**425**	**425**	–	**425**	**425**	**425**	**425**	**425**	**425**	**425**	**425**	**425**	1FG1505- . . ■ ■ 2 - ■ . S1 -Z

Motor shaft height:

36																							**C**
			48																				**D**
							63																**E**
												80											**F**
																		100					**G**

Motor length/motor version (**CT** = Compact, **HD** = High Dynamic)**:**

			0/CT				**0/CT**					**0/CT**						**0/CT**					**0**		**2**
													1/CT						**1/CT**				**1**		**2**
								1/HD															**1**		**4**
2/CT				**2/CT**					**2/CT**														**2**		**2**
										3/CT				**3/CT**						**3/CT**			**3**		**2**
	3/HD				**3/HD**																		**3**		**4**
		4/CT														**4/CT**							**4**		**2**
						4/HD					**4/HD**													**4**		**4**
																					5/CT		**5**		**2**
																	5/HD						**5**		**4**
																		6/HD					**6**		**4**

Selection of Shaft design, encoder system, mounting type and special designs on page 5/31.

1FG1505- ■ ■ . . . - . ■ . . -Z

© Siemens 2019

Servo bevel geared motors SIMOTICS S-1FG1

Selecting servo geared motors

Gearbox size 49, 3-stage – 1FG1505

For line voltage 380 ... 480 V 3 AC (DC link voltage 510 ... 720 V DC) **– Gearbox type** *K49*

Geared motor torque at 1450 rpm
Note: All values in **bold** print are maximum gearbox values.
M_{2dyn}

Nm																						Servo bevel geared motors SIMOTICS S-1FG1 Article No.
Max. output speed n_{2max} = **138 rpm**, Transmission ratio i = **32.57**																						
–	–	–	–	–	–	–	–	–	–	–	–	–	–	–	–	–	–	–	–	–	–	1FG1505- . . ■ ■ 6 - ■ . R1 -Z
–	–	–	–	–	–	–	**425**	**425**	**425**	**425**	**425**	**425**	**425**	**425**	–	–	–	–	–	–	–	1FG1505- . . ■ ■ 4 - ■ . R1 -Z
–	–	–	–	–	–	–	**425**	**425**	**425**	**425**	**425**	**425**	**425**	**425**	**425**	**425**	**425**	**425**	**425**	**425**	**425**	1FG1505- . . ■ ■ 3 - ■ . R1 -Z
–	–	–	–	–	–	–	**425**	–	**425**	**425**	**425**	–	**425**	**425**	**425**	**425**	**425**	**425**	**425**	**425**	**425**	1FG1505- . . ■ ■ 2 - ■ . R1 -Z
Max. output speed n_{2max} = **160 rpm**, Transmission ratio i = **28.05**																						
–	–	–	–	–	–	–	–	–	–	–	–	–	–	–	–	–	–	–	–	–	–	1FG1505- . . ■ ■ 6 - ■ . Q1 -Z
–	–	–	–	–	–	–	**425**	**425**	**425**	**425**	**425**	**425**	**425**	**425**	–	–	–	–	–	–	–	1FG1505- . . ■ ■ 4 - ■ . Q1 -Z
–	–	–	–	–	–	–	**425**	**425**	**425**	**425**	**425**	**425**	**425**	**425**	**425**	**425**	**425**	**425**	**425**	**425**	**425**	1FG1505- . . ■ ■ 3 - ■ . Q1 -Z
–	–	–	–	–	–	–	**425**	–	**425**	**425**	**425**	–	**425**	**425**	**425**	**425**	**425**	**425**	**425**	**425**	**425**	1FG1505- . . ■ ■ 2 - ■ . Q1 -Z
Max. output speed n_{2max} = **171 rpm**, Transmission ratio i = **26.3**																						
110	105	160	125	255	245	–	–	–	–	–	–	–	–	–	–	–	–	–	–	–	–	1FG1505- . . ■ ■ 6 - ■ . P1 -Z
–	–	–	–	–	245	275	440	425	**460**	**460**	**460**	**460**	**460**	**460**	–	–	–	–	–	–	–	1FG1505- . . ■ ■ 4 - ■ . P1 -Z
–	–	–	–	255	–	275	440	425	**460**	**460**	**460**	**460**	**460**	**460**	**460**	**460**	**460**	–	–	–	–	1FG1505- . . ■ ■ 3 - ■ . P1 -Z
–	–	–	–	255	–	–	440	–	**460**	**460**	**460**	–	**460**	**460**	**460**	**460**	**460**	–	–	–	–	1FG1505- . . ■ ■ 2 - ■ . P1 -Z
Max. output speed n_{2max} = **193 rpm**, Transmission ratio i = **23.28**																						
98	94	142	111	225	215	–	–	–	–	–	–	–	–	–	–	–	–	–	–	–	–	1FG1505- . . ■ ■ 6 - ■ . N1 -Z
–	–	–	–	–	215	245	390	375	**450**	**450**	**450**	**450**	**450**	**450**	–	–	–	–	–	–	–	1FG1505- . . ■ ■ 4 - ■ . N1 -Z
–	–	–	–	225	–	245	390	375	**450**	**450**	**450**	**450**	**450**	**450**	**450**	**450**	**450**	**450**	**450**	**450**	**450**	1FG1505- . . ■ ■ 3 - ■ . N1 -Z
–	–	–	–	225	–	–	390	–	**450**	**450**	**450**	–	**450**	**450**	**450**	**450**	**450**	**450**	**450**	**450**	**450**	1FG1505- . . ■ ■ 2 - ■ . N1 -Z
Max. output speed n_{2max} = **232 rpm**, Transmission ratio i = **19.38**																						
81	78	118	92	191	182	–	–	–	–	–	–	–	–	–	–	–	–	–	–	–	–	1FG1505- . . ■ ■ 6 - ■ . M1 -Z
–	–	–	–	–	182	205	325	315	**445**	**445**	**445**	**445**	**445**	**445**	–	–	–	–	–	–	–	1FG1505- . . ■ ■ 4 - ■ . M1 -Z
–	–	–	–	191	–	205	325	315	**445**	**445**	**445**	**445**	**445**	**445**	**445**	**445**	**445**	**445**	**445**	**445**	**445**	1FG1505- . . ■ ■ 3 - ■ . M1 -Z
–	–	–	–	191	–	–	325	–	**445**	**445**	**445**	–	**445**	**445**	**445**	**445**	**445**	**445**	**445**	**445**	**445**	1FG1505- . . ■ ■ 2 - ■ . M1 -Z
Max. output speed n_{2max} = **247 rpm**, Transmission ratio i = **18.24**																						
77	73	111	87	180	172	–	–	–	–	–	–	–	–	–	–	–	–	–	–	–	–	1FG1505- . . ■ ■ 6 - ■ . L1 -Z
–	–	–	–	–	172	193	305	295	445	**445**	**445**	430	**445**	**445**	–	–	–	–	–	–	–	1FG1505- . . ■ ■ 4 - ■ . L1 -Z
–	–	–	–	180	–	193	305	295	445	**445**	**445**	430	**445**	**445**	**445**	**445**	**445**	**445**	**445**	**445**	**445**	1FG1505- . . ■ ■ 3 - ■ . L1 -Z
–	–	–	–	180	–	–	305	–	445	**445**	**445**	–	**445**	**445**	**445**	**445**	**445**	**445**	**445**	**445**	**445**	1FG1505- . . ■ ■ 2 - ■ . L1 -Z
Max. output speed n_{2max} = **275 rpm**, Transmission ratio i = **16.34**																						
69	66	100	78	162	154	–	–	–	–	–	–	–	–	–	–	–	–	–	–	–	–	1FG1505- . . ■ ■ 6 - ■ . K1 -Z
–	–	–	–	–	154	174	275	265	400	**445**	**445**	385	**445**	**445**	–	–	–	–	–	–	–	1FG1505- . . ■ ■ 4 - ■ . K1 -Z
–	–	–	–	162	–	174	275	265	400	**445**	**445**	385	**445**	**445**	**445**	**445**	**445**	**445**	**445**	**445**	**445**	1FG1505- . . ■ ■ 3 - ■ . K1 -Z
–	–	–	–	162	–	–	275	–	400	**445**	**445**	–	**445**	**445**	**445**	**445**	**445**	**445**	**445**	**445**	**445**	1FG1505- . . ■ ■ 2 - ■ . K1 -Z
Max. output speed n_{2max} = **324 rpm**, Transmission ratio i = **13.91**																						
59	56	85	67	138	131	–	–	–	–	–	–	–	–	–	–	–	–	–	–	–	–	1FG1505- . . ■ ■ 6 - ■ . J1 -Z
–	–	–	–	–	131	148	235	225	340	**445**	420	325	**445**	**445**	–	–	–	–	–	–	–	1FG1505- . . ■ ■ 4 - ■ . J1 -Z
–	–	–	–	138	–	148	235	225	340	**445**	420	325	**445**	**445**	**445**	**445**	**445**	**445**	**445**	**445**	**445**	1FG1505- . . ■ ■ 3 - ■ . J1 -Z
–	–	–	–	138	–	–	235	–	340	**445**	420	–	**445**	**445**	**445**	**445**	**445**	**445**	**445**	**445**	**445**	1FG1505- . . ■ ■ 2 - ■ . J1 -Z

Motor shaft height:

36																									**C**	
			48																						**D**	
							63																		**E**	
												80													**F**	
																		100							**G**	

Motor length/motor version (**CT** = Compact, **HD** = High Dynamic)**:**

			0/CT				**0/CT**					**0/CT**						**0/CT**							**0**	**2**
													1/CT						**1/CT**						**1**	**2**
								1/HD																	**1**	**4**
2/CT				**2/CT**					**2/CT**																**2**	**2**
										3/CT					**3/CT**					**3/CT**					**3**	**2**
	3/HD				**3/HD**																				**3**	**4**
		4/CT														**4/CT**									**4**	**2**
						4/HD					**4/HD**														**4**	**4**
																					5/CT				**5**	**2**
																	5/HD								**5**	**4**
																		6/HD							**6**	**4**

Selection of Shaft design, encoder system, mounting type and special designs on page 5/31.

1FG1505- ■ ■ . . . - . ■ . . -Z

© Siemens 2019

For line voltage 380 ... 480 V 3 AC (DC link voltage 510 ... 720 V DC) **– Gearbox type** *K49*

Geared motor torque at 1450 rpm
Note: All values in **bold** print are maximum gearbox values.
M_{2dyn}
Nm

																						Article No.
Max. output speed n_{2max} = **365 rpm**, Transmission ratio i = **11.93**																						
–	–	–	–	–	–	–	–	–	–	–	–	–	–	–	–	–	–	–	–	–	–	1FG1505- . . ■ ■ 6 - ■ . H1 -Z
–	–	–	–	–	–	–	200	195	290	395	360	280	415	**430**	–	–	–	–	–	–	–	1FG1505- . . ■ ■ 4 - ■ . H1 -Z
–	–	–	–	–	–	–	200	195	290	395	360	280	415	**430**	**430**	**430**	**430**	**430**	**430**	**430**	**430**	1FG1505- . . ■ ■ 3 - ■ . H1 -Z
–	–	–	–	–	–	–	200	–	290	395	360	–	415	**430**	**430**	**430**	**430**	**430**	**430**	**430**	**430**	1FG1505- . . ■ ■ 2 - ■ . H1 -Z
Max. output speed n_{2max} = **424 rpm**, Transmission ratio i = **10.27**																						
–	–	–	–	–	–	–	–	–	–	–	–	–	–	–	–	–	–	–	–	–	–	1FG1505- . . ■ ■ 6 - ■ . G1 -Z
–	–	–	–	–	–	–	175	168	250	340	310	240	360	**415**	–	–	–	–	–	–	–	1FG1505- . . ■ ■ 4 - ■ . G1 -Z
–	–	–	–	–	–	–	175	168	250	340	310	240	360	**415**	**415**	**415**	**415**	**415**	**415**	**415**	**415**	1FG1505- . . ■ ■ 3 - ■ . G1 -Z
–	–	–	–	–	–	–	175	–	250	340	310	–	360	**415**	**415**	**415**	**415**	**415**	**415**	**415**	**415**	1FG1505- . . ■ ■ 2 - ■ . G1 -Z
Max. output speed n_{2max} = **462 rpm**, Transmission ratio i = **9.75**																						
41	39	60	47	97	92	–	–	–	–	–	–	–	–	–	–	–	–	–	–	–	–	1FG1505- . . ■ ■ 6 - ■ . F1 -Z
–	–	–	–	–	92	104	166	160	240	**275**	**275**	230	**275**	**275**	–	–	–	–	–	–	–	1FG1505- . . ■ ■ 4 - ■ . F1 -Z
–	–	–	–	97	–	104	166	160	240	**275**	**275**	230	**275**	**275**	**275**	**275**	**275**	**275**	**275**	**275**	**275**	1FG1505- . . ■ ■ 3 - ■ . F1 -Z
–	–	–	–	97	–	–	166	–	240	**275**	**275**	–	**275**	**275**	**275**	**275**	**275**	**275**	**275**	**275**	**275**	1FG1505- . . ■ ■ 2 - ■ . F1 -Z
Max. output speed n_{2max} = **490 rpm**, Transmission ratio i = **9.18**																						
39	37	56	44	91	87	–	–	–	–	–	–	–	–	–	–	–	–	–	–	–	–	1FG1505- . . ■ ■ 6 - ■ . E1 -Z
–	–	–	–	–	87	98	157	151	225	**270**	**270**	215	**270**	**270**	–	–	–	–	–	–	–	1FG1505- . . ■ ■ 4 - ■ . E1 -Z
–	–	–	–	91	–	98	157	151	225	**270**	**270**	215	**270**	**270**	**270**	**270**	**270**	**270**	**270**	**270**	**270**	1FG1505- . . ■ ■ 3 - ■ . E1 -Z
–	–	–	–	91	–	–	157	–	225	**270**	**270**	–	**270**	**270**	**270**	**270**	**270**	**270**	**270**	**270**	**270**	1FG1505- . . ■ ■ 2 - ■ . E1 -Z
Max. output speed n_{2max} = **547 rpm**, Transmission ratio i = **8.22**																						
35	33	51	40	82	78	–	–	–	–	–	–	–	–	–	–	–	–	–	–	–	–	1FG1505- . . ■ ■ 6 - ■ . D1 -Z
–	–	–	–	–	78	88	141	135	200	**255**	250	196	**255**	**255**	–	–	–	–	–	–	–	1FG1505- . . ■ ■ 4 - ■ . D1 -Z
–	–	–	–	82	–	88	141	135	200	**255**	250	196	**255**	**255**	**255**	**255**	**255**	**255**	**255**	**255**	**255**	1FG1505- . . ■ ■ 3 - ■ . D1 -Z
–	–	–	–	82	–	–	141	–	200	**255**	250	–	**255**	**255**	**255**	**255**	**255**	**255**	**255**	**255**	**255**	1FG1505- . . ■ ■ 2 - ■ . D1 -Z
Max. output speed n_{2max} = **643 rpm**, Transmission ratio i = **7**																						
30	28	43	34	70	66	–	–	–	–	–	–	–	–	–	–	–	–	–	–	–	–	1FG1505- . . ■ ■ 6 - ■ . C1 -Z
–	–	–	–	–	66	75	120	115	173	230	210	167	**240**	**240**	–	–	–	–	–	–	–	1FG1505- . . ■ ■ 4 - ■ . C1 -Z
–	–	–	–	70	–	75	120	115	173	230	210	167	**240**	**240**	**240**	**240**	**240**	**240**	**240**	**240**	**240**	1FG1505- . . ■ ■ 3 - ■ . C1 -Z
–	–	–	–	70	–	–	120	–	173	230	210	–	**240**	**240**	**240**	**240**	**240**	**240**	**240**	**240**	**240**	1FG1505- . . ■ ■ 2 - ■ . C1 -Z
Max. output speed n_{2max} = **750 rpm**, Transmission ratio i = **6**																						
–	–	–	–	–	–	–	–	–	–	–	–	–	–	–	–	–	–	–	–	–	–	1FG1505- . . ■ ■ 6 - ■ . B1 -Z
–	–	–	–	–	–	–	103	99	149	200	183	143	210	**225**	–	–	–	–	–	–	–	1FG1505- . . ■ ■ 4 - ■ . B1 -Z
–	–	–	–	–	–	–	103	99	149	200	183	143	210	**225**	**225**	**225**	**225**	**225**	**225**	**225**	**225**	1FG1505- . . ■ ■ 3 - ■ . B1 -Z
–	–	–	–	–	–	–	103	–	149	200	183	–	210	**225**	**225**	**225**	**225**	**225**	**225**	**225**	**225**	1FG1505- . . ■ ■ 2 - ■ . B1 -Z
Max. output speed n_{2max} = **870 rpm**, Transmission ratio i = **5.17**																						
–	–	–	–	–	–	–	–	–	–	–	–	–	–	–	–	–	–	–	–	–	–	1FG1505- . . ■ ■ 6 - ■ . A1 -Z
–	–	–	–	–	–	–	89	85	128	173	158	123	183	**210**	–	–	–	–	–	–	–	1FG1505- . . ■ ■ 4 - ■ . A1 -Z
–	–	–	–	–	–	–	89	85	128	173	158	123	183	**210**	**210**	**210**	**210**	**210**	**210**	**210**	**210**	1FG1505- . . ■ ■ 3 - ■ . A1 -Z
–	–	–	–	–	–	–	89	–	128	173	158	–	183	**210**	**210**	**210**	**210**	**210**	**210**	**210**	**210**	1FG1505- . . ■ ■ 2 - ■ . A1 -Z

Motor shaft height:

36																						**C**
			48																			**D**
							63															**E**
												80										**F**
																	100					**G**

Motor length/motor version (**CT** = Compact, **HD** = High Dynamic)**:**

			0/CT				**0/CT**					**0/CT**						**0/CT**					**0**	**2**
													1/CT						**1/CT**				**1**	**2**
								1/HD															**1**	**4**
2/CT				**2/CT**					**2/CT**														**2**	**2**
										3/CT				**3/CT**						**3/CT**			**3**	**2**
	3/HD				**3/HD**																		**3**	**4**
		4/CT														**4/CT**							**4**	**2**
						4/HD					**4/HD**													**4**	**4**
																					5/CT		**5**	**2**
																	5/HD						**5**	**4**
																		6/HD					**6**	**4**

Selection of Shaft design, encoder system, mounting type and special designs on page 5/31.

1FG1505- ■ ■ . . . - . ■ . . -Z

© Siemens 2019

Gearbox size 49, 3-stage – 1FG1505

Selection and ordering data (continued)

For line voltage 200 ... 240 V 1 AC (DC link voltage 270 ... 330 V DC) **– Gearbox type** ***K49***

Max. output speed n_{2max} rpm	Transmission ratio i	Geared motor torque at 1450 rpm Note: All values in **bold** print are maximum gearbox values. M_{2dyn} Nm					**Servo bevel geared motors SIMOTICS S-1FG1** Article No.
22	**200.25**	**420**	**420**	**420**	**420**	**420**	**1FG1505- . . ■ ■ 3 - ■ . J2 -Z**
25	**178.06**	**420**	**420**	**420**	**420**	**420**	**1FG1505- . . ■ ■ 3 - ■ . H2 -Z**
29	**156.34**	**420**	**420**	**420**	**420**	**420**	**1FG1505- . . ■ ■ 3 - ■ . G2 -Z**
32	**142.13**	**420**	**420**	**420**	**420**	**420**	**1FG1505- . . ■ ■ 3 - ■ . F2 -Z**
37	**121.6**	**420**	**420**	**420**	**420**	**420**	**1FG1505- . . ■ ■ 3 - ■ . E2 -Z**
41	**110.55**	**420**	**420**	**420**	**420**	**420**	**1FG1505- . . ■ ■ 3 - ■ . D2 -Z**
46	**97.71**	400	380	**420**	**420**	**420**	**1FG1505- . . ■ ■ 3 - ■ . C2 -Z**
51	**88.83**	360	345	**420**	**420**	**420**	**1FG1505- . . ■ ■ 3 - ■ . B2 -Z**
58	**77.81**	320	305	**420**	**420**	**420**	**1FG1505- . . ■ ■ 3 - ■ . A2 -Z**
63	**71.82**	295	280	**420**	**420**	**420**	**1FG1505- . . ■ ■ 3 - ■ . X1 -Z**
71	**63.59**	260	250	380	**420**	**420**	**1FG1505- . . ■ ■ 3 - ■ . W1 -Z**
85	**52.93**	220	210	315	**420**	**420**	**1FG1505- . . ■ ■ 3 - ■ . V1 -Z**
90	**49.82**	205	198	300	**420**	**420**	**1FG1505- . . ■ ■ 3 - ■ . U1 -Z**
101	**44.63**	186	178	265	**420**	415	**1FG1505- . . ■ ■ 3 - ■ . T1 -Z**
118	**38**	159	152	230	370	350	**1FG1505- . . ■ ■ 3 - ■ . S1 -Z**
171	**26.3**	110	105	160	255	245	**1FG1505- . . ■ ■ 3 - ■ . P1 -Z**
193	**23.28**	98	94	142	225	215	**1FG1505- . . ■ ■ 3 - ■ . N1 -Z**
232	**19.38**	81	78	118	191	182	**1FG1505- . . ■ ■ 3 - ■ . M1 -Z**
247	**18.24**	77	73	111	180	172	**1FG1505- . . ■ ■ 3 - ■ . L1 -Z**
275	**16.34**	69	66	100	162	154	**1FG1505- . . ■ ■ 3 - ■ . K1 -Z**
324	**13.91**	59	56	85	138	131	**1FG1505- . . ■ ■ 3 - ■ . J1 -Z**
462	**9.75**	41	39	60	97	92	**1FG1505- . . ■ ■ 3 - ■ . F1 -Z**
490	**9.18**	39	37	56	91	87	**1FG1505- . . ■ ■ 3 - ■ . E1 -Z**
547	**8.22**	35	33	51	82	78	**1FG1505- . . ■ ■ 3 - ■ . D1 -Z**
643	**7**	30	28	43	70	66	**1FG1505- . . ■ ■ 3 - ■ . C1 -Z**
Motor shaft height:							
		36					**C**
					48		**D**
Motor length/motor version (**CT** = Compact, **HD** = High Dynamic)**:**							
		2/CT			**2/CT**		**2** **1**
			3/HD			**3/HD**	**3** **3**
				4/CT			**4** **1**

Selection of Shaft design, encoder system, mounting type and special designs on page 5/31.

1FG1505- ■ ■ . . . - ■ . . -Z

© Siemens 2019

Technical specifications

Gearbox type *K69*

Servo geared motor Type	i	R_{ex}	M_{2rated} Nm	M_{2max} Nm	$M_{2Em.Off}$ Nm	n_{2max} rpm	n_{1max} rpm	φ [1] '	F_{R2} N	F_{R2max} N	c_T Nm/ '	J_G 10^{-4} kgm^2
1FG1507-.....-..H2	196.59	14744/75	600	640	1020	23	4500	6.35	10800	10600	58.7	0.17
1FG1507-.....-..G2	178.72	29488/165	600	640	1020	25	4500	6.35	10800	10600	58.7	0.2
1FG1507-.....-..F2	152	152/1	600	640	1020	30	4500	6.37	10800	10600	58.7	0.25
1FG1507-.....-..E2	138.18	1520/11	600	640	1020	33	4500	6.37	10800	10600	58.7	0.3
1FG1507-.....-..D2	123.29	5548/45	600	640	1020	36	4500	6.39	10800	10600	58.7	0.35
1FG1507-.....-..C2	110.55	1216/11	600	640	1020	41	4500	6.40	10800	10600	58.7	0.41
1FG1507-.....-..B2	99.64	4484/45	600	640	1020	45	4500	6.41	10800	10600	58.7	0.48
1FG1507-.....-..A2	91.98	17936/195	600	640	1020	49	4500	6.41	10600	10300	58.7	0.57
1FG1507-.....-..X1	83.96	8816/105	600	635	1020	54	4500	6.42	10100	9930	58.7	0.65
1FG1507-.....-..W1	69.67	209/3	600	620	1020	65	4500	6.45	9300	9160	58.7	0.81
1FG1507-.....-..V1	65.57	3344/51	600	615	1020	69	4500	6.45	9030	8930	58.7	0.93
1FG1507-.....-..U1	61.93	1672/27	600	610	1020	73	4500	6.45	8780	8710	58.7	1.1
1FG1507-.....-..T1	52.69	3952/75	600	605	1020	85	4500	6.49	8100	8060	58.7	1.3
1FG1507-.....-..S1	45.14	7448/165	600	605	1020	100	4500	6.49	7470	7440	58.7	1.6
1FG1507-.....-..R1	39.69	1786/45	600	605	1020	113	4500	6.49	6980	6940	58.7	1.9
1FG1507-.....-..Q1	33.48	11552/345	580	580	985	134	4500	6.49	6500	6500	58.7	2.4
1FG1507-.....-..P1	29.18	3648/125	555	560	940	154	4500	6.49	6170	6170	58.7	3
1FG1507-.....-..N1	26.05	3751/144	600	605	1020	173	4500	7.85	5510	5470	54.8	1.2
1FG1507-.....-..M1	24.52	3751/153	595	595	1010	184	4500	7.85	5350	5350	54.8	1.4
1FG1507-.....-..L1	23.15	3751/162	585	585	990	194	4500	7.85	5240	5240	54.8	1.6
1FG1507-.....-..K1	19.7	4433/225	555	555	940	228	4500	7.96	4960	4960	54.7	2
1FG1507-.....-..J1	16.88	1519/90	530	530	900	267	4500	7.96	4690	4690	54.7	2.6
1FG1507-.....-..H1	14.84	16027/1080	515	515	875	303	4500	7.96	4470	4470	54.6	3.3
1FG1507-.....-..G1	12.52	12958/1035	490	490	830	347	4350	7.96	4200	4200	54.5	4.3
1FG1507-.....-..F1	10.91	1364/125	470	470	795	399	4350	7.96	4000	4000	54.4	5.7
1FG1507-.....-..E1	9.34	3224/345	370	395	625	482	4500	12.96	3420	3420	40	2.4
1FG1507-.....-..D1	8.01	6076/759	365	375	620	543	4350	12.96	3240	3240	39.9	3.1
1FG1507-.....-..C1	7.04	1457/207	365	365	620	618	4350	12.96	3100	3100	39.8	3.9
1FG1507-.....-..B1	5.94	9424/1587	345	345	585	732	4350	12.96	2890	2890	39.5	5.1
1FG1507-.....-..A1	5.18	2976/575	330	330	560	840	4350	12.96	2750	2750	39.3	6.8

Selection and ordering data

Shaft design, encoder system, mounting type and special designs

Gearbox type *K69*

		Servo bevel geared motors SIMOTICS S-1FG1 Article No.				
		1FG1507- ■ ■ . . . - . ■ . .				**-Z**
Shaft design:	Solid shaft with feather keyway – Design 1	**1**				
	Hollow-shaft with feather keyway – Design 1 – H40	**5**				
Order codes and Descriptions see chapter "Options"	Special shaft design	**9**				
Encoder system for motors with DRIVE-CLiQ interface:	AS20DQI encoder		**Q**			
	AM20DQI encoder		**R**			
	R14DQ resolver		**P**			
	R15DQ resolver		**U**			
Order codes and Descriptions see chapter "Options"	Special version encoder system		**Z**			
Mounting type:	Foot-mounted design			**A**		
	Flange-mounted design			**F**		
	Housing flange design			**H**		
	Shaft-mounted design (not possible with solid shaft)			**C**		
Special designs (Options): Order codes and Descriptions see chapter "Options" The following order codes must be added to each article number: • Oil type – order codes **K06** or **K11** • Mounting position – order codes **D11** ... **D16** or **D21** ... **D26**						**-Z**
Selection of 3-stages servo bevel geared motors with gearbox size 69 from next page.		**1FG1507-** . . ■ ■ ■ - ■ . ■ ■				**-Z**

[1] Data are for option reduced-backlash version – order code **G99** required.

© Siemens 2019

Gearbox size 69, 3-stage – 1FG1507

Selection and ordering data (continued)

For line voltage 380 ... 480 V 3 AC (DC link voltage 510 ... 720 V DC) **– Gearbox type** ***K69***

Geared motor torque at 1450 rpm
Note: All values in **bold** print are maximum gearbox values.
M_{2dyn}
Nm

																						Servo bevel geared motors SIMOTICS S-1FG1 Article No.
Max. output speed n_{2max} = **23 rpm**, Transmission ratio i = **196.59**																						
640	**640**	**640**	**640**	**640**	**640**	–	–	–	–	–	–	–	–	–	–	–	–	–	–	–	–	1FG1507- . . ■ ■ 6 - ■ . H2 -Z
–	–	–	–	–	**640**	**640**	**640**	**640**	**640**	**640**	**640**	–	–	–	–	–	–	–	–	–	–	1FG1507- . . ■ ■ 4 - ■ . H2 -Z
–	–	–	–	**640**	–	**640**	**640**	**640**	**640**	**640**	**640**	–	–	–	–	–	–	–	–	–	–	1FG1507- . . ■ ■ 3 - ■ . H2 -Z
–	–	–	–	**640**	–	–	**640**	–	**640**	**640**	**640**	–	–	–	–	–	–	–	–	–	–	1FG1507- . . ■ ■ 2 - ■ . H2 -Z
Max. output speed n_{2max} = **25 rpm**, Transmission ratio i = **178.72**																						
640	**640**	**640**	**640**	**640**	**640**	–	–	–	–	–	–	–	–	–	–	–	–	–	–	–	–	1FG1507- . . ■ ■ 6 - ■ . G2 -Z
–	–	–	–	–	**640**	**640**	**640**	**640**	**640**	**640**	**640**	–	–	–	–	–	–	–	–	–	–	1FG1507- . . ■ ■ 4 - ■ . G2 -Z
–	–	–	–	**640**	–	**640**	**640**	**640**	**640**	**640**	**640**	–	–	–	–	–	–	–	–	–	–	1FG1507- . . ■ ■ 3 - ■ . G2 -Z
–	–	–	–	**640**	–	–	**640**	–	**640**	**640**	**640**	–	–	–	–	–	–	–	–	–	–	1FG1507- . . ■ ■ 2 - ■ . G2 -Z
Max. output speed n_{2max} = **30 rpm**, Transmission ratio i = **152**																						
620	590	**640**	**640**	**640**	**640**	–	–	–	–	–	–	–	–	–	–	–	–	–	–	–	–	1FG1507- . . ■ ■ 6 - ■ . F2 -Z
–	–	–	–	–	**640**	**640**	**640**	**640**	**640**	**640**	**640**	–	–	–	–	–	–	–	–	–	–	1FG1507- . . ■ ■ 4 - ■ . F2 -Z
–	–	–	–	**640**	–	**640**	**640**	**640**	**640**	**640**	**640**	–	–	–	–	–	–	–	–	–	–	1FG1507- . . ■ ■ 3 - ■ . F2 -Z
–	–	–	–	**640**	–	–	**640**	–	**640**	**640**	**640**	–	–	–	–	–	–	–	–	–	–	1FG1507- . . ■ ■ 2 - ■ . F2 -Z
Max. output speed n_{2max} = **33 rpm**, Transmission ratio i = **138.18**																						
565	540	**640**	640	**640**	**640**	–	–	–	–	–	–	–	–	–	–	–	–	–	–	–	–	1FG1507- . . ■ ■ 6 - ■ . E2 -Z
–	–	–	–	–	**640**	**640**	**640**	**640**	**640**	**640**	**640**	–	–	–	–	–	–	–	–	–	–	1FG1507- . . ■ ■ 4 - ■ . E2 -Z
–	–	–	–	**640**	–	**640**	**640**	**640**	**640**	**640**	**640**	–	–	–	–	–	–	–	–	–	–	1FG1507- . . ■ ■ 3 - ■ . E2 -Z
–	–	–	–	**640**	–	–	**640**	–	**640**	**640**	**640**	–	–	–	–	–	–	–	–	–	–	1FG1507- . . ■ ■ 2 - ■ . E2 -Z
Max. output speed n_{2max} = **36 rpm**, Transmission ratio i = **123.29**																						
505	485	**640**	575	**640**	**640**	–	–	–	–	–	–	–	–	–	–	–	–	–	–	–	–	1FG1507- . . ■ ■ 6 - ■ . D2 -Z
–	–	–	–	–	**640**	**640**	**640**	**640**	**640**	**640**	**640**	**640**	**640**	**640**	–	–	–	–	–	–	–	1FG1507- . . ■ ■ 4 - ■ . D2 -Z
–	–	–	–	**640**	–	**640**	**640**	**640**	**640**	**640**	**640**	**640**	**640**	**640**	**640**	**640**	**640**	–	–	–	–	1FG1507- . . ■ ■ 3 - ■ . D2 -Z
–	–	–	–	**640**	–	–	**640**	–	**640**	**640**	**640**	–	**640**	**640**	**640**	**640**	**640**	–	–	–	–	1FG1507- . . ■ ■ 2 - ■ . D2 -Z
Max. output speed n_{2max} = **41 rpm**, Transmission ratio i = **110.55**																						
455	435	**640**	515	**640**	**640**	–	–	–	–	–	–	–	–	–	–	–	–	–	–	–	–	1FG1507- . . ■ ■ 6 - ■ . C2 -Z
–	–	–	–	–	**640**	**640**	**640**	**640**	**640**	**640**	**640**	**640**	**640**	**640**	–	–	–	–	–	–	–	1FG1507- . . ■ ■ 4 - ■ . C2 -Z
–	–	–	–	**640**	–	**640**	**640**	**640**	**640**	**640**	**640**	**640**	**640**	**640**	**640**	**640**	**640**	–	–	–	–	1FG1507- . . ■ ■ 3 - ■ . C2 -Z
–	–	–	–	**640**	–	–	**640**	–	**640**	**640**	**640**	–	**640**	**640**	**640**	**640**	**640**	–	–	–	–	1FG1507- . . ■ ■ 2 - ■ . C2 -Z
Max. output speed n_{2max} = **45 rpm**, Transmission ratio i = **99.64**																						
410	390	595	465	**640**	**640**	–	–	–	–	–	–	–	–	–	–	–	–	–	–	–	–	1FG1507- . . ■ ■ 6 - ■ . B2 -Z
–	–	–	–	–	**640**	**640**	**640**	**640**	**640**	**640**	**640**	**640**	**640**	**640**	–	–	–	–	–	–	–	1FG1507- . . ■ ■ 4 - ■ . B2 -Z
–	–	–	–	**640**	–	**640**	**640**	**640**	**640**	**640**	**640**	**640**	**640**	**640**	**640**	**640**	**640**	–	–	–	–	1FG1507- . . ■ ■ 3 - ■ . B2 -Z
–	–	–	–	**640**	–	–	**640**	–	**640**	**640**	**640**	–	**640**	**640**	**640**	**640**	**640**	–	–	–	–	1FG1507- . . ■ ■ 2 - ■ . B2 -Z

Motor shaft height:

36																						**C**
			48																			**D**
						63																**E**
												80										**F**
																		100				**G**

Motor length/motor version (**CT** = Compact, **HD** = High Dynamic)**:**

			0/CT				**0/CT**					**0/CT**						**0/CT**					**0**	**2**
													1/CT						**1/CT**				**1**	**2**
								1/HD															**1**	**4**
2/CT				**2/CT**					**2/CT**														**2**	**2**
										3/CT				**3/CT**						**3/CT**			**3**	**2**
	3/HD				**3/HD**																		**3**	**4**
		4/CT														**4/CT**							**4**	**2**
						4/HD					**4/HD**													**4**	**4**
																				5/CT			**5**	**2**
															5/HD								**5**	**4**
																6/HD							**6**	**4**

Selection of Shaft design, encoder system, mounting type and special designs on page 5/37.

1FG1507- ■ ■ . . . . - . ■ . . -Z

© Siemens 2019

For line voltage 380 ... 480 V 3 AC (DC link voltage 510 ... 720 V DC) **– Gearbox type** ***K69***

Geared motor torque at 1450 rpm
Note: All values in **bold** print are maximum gearbox values.
M_{2dyn}
Nm

																						Servo bevel geared motors SIMOTICS S-1FG1 Article No.
Max. output speed n_{2max} = **49 rpm**, Transmission ratio i = **91.98**																						
380	360	550	430	**640**	**640**	–	–	–	–	–	–	–	–	–	–	–	–	–	–	–	–	1FG1507- . . ■ ■ **6** - ■ . **A2** -Z
–	–	–	–	–	640	640	640	640	640	640	640	640	640	640	–	–	–	–	–	–	–	1FG1507- . . ■ ■ **4** - ■ . **A2** -Z
–	–	–	–	640	–	640	640	640	640	640	640	640	640	640	640	640	640	–	–	–	–	1FG1507- . . ■ ■ **3** - ■ . **A2** -Z
–	–	–	–	640	–	–	640	–	640	640	640	–	640	640	640	640	640	–	–	–	–	1FG1507- . . ■ ■ **2** - ■ . **A2** -Z
Max. output speed n_{2max} = **54 rpm**, Transmission ratio i = **83.96**																						
345	330	500	395	**635**	**635**	–	–	–	–	–	–	–	–	–	–	–	–	–	–	–	–	1FG1507- . . ■ ■ **6** - ■ . **X1** -Z
–	–	–	–	–	635	635	635	635	635	635	635	635	635	635	–	–	–	–	–	–	–	1FG1507- . . ■ ■ **4** - ■ . **X1** -Z
–	–	–	–	635	–	635	635	635	635	635	635	635	635	635	635	635	635	635	635	635	635	1FG1507- . . ■ ■ **3** - ■ . **X1** -Z
–	–	–	–	635	–	–	635	–	635	635	635	–	635	635	635	635	635	635	635	635	635	1FG1507- . . ■ ■ **2** - ■ . **X1** -Z
Max. output speed n_{2max} = **65 rpm**, Transmission ratio i = **69.67**																						
290	275	415	325	**620**	**620**	–	–	–	–	–	–	–	–	–	–	–	–	–	–	–	–	1FG1507- . . ■ ■ **6** - ■ . **W1** -Z
–	–	–	–	–	620	620	620	620	620	620	620	620	620	620	–	–	–	–	–	–	–	1FG1507- . . ■ ■ **4** - ■ . **W1** -Z
–	–	–	–	620	–	620	620	620	620	620	620	620	620	620	620	620	620	620	620	620	620	1FG1507- . . ■ ■ **3** - ■ . **W1** -Z
–	–	–	–	620	–	–	620	–	620	620	620	–	620	620	620	620	620	620	620	620	620	1FG1507- . . ■ ■ **2** - ■ . **W1** -Z
Max. output speed n_{2max} = **69 rpm**, Transmission ratio i = **65.57**																						
270	260	395	310	**615**	605	–	–	–	–	–	–	–	–	–	–	–	–	–	–	–	–	1FG1507- . . ■ ■ **6** - ■ . **V1** -Z
–	–	–	–	–	605	615	615	615	615	615	615	615	615	615	–	–	–	–	–	–	–	1FG1507- . . ■ ■ **4** - ■ . **V1** -Z
–	–	–	–	615	–	615	615	615	615	615	615	615	615	615	615	615	615	615	615	615	615	1FG1507- . . ■ ■ **3** - ■ . **V1** -Z
–	–	–	–	615	–	–	615	–	615	615	615	–	615	615	615	615	615	615	615	615	615	1FG1507- . . ■ ■ **2** - ■ . **V1** -Z
Max. output speed n_{2max} = **73 rpm**, Transmission ratio i = **61.93**																						
255	245	370	290	600	575	–	–	–	–	–	–	–	–	–	–	–	–	–	–	–	–	1FG1507- . . ■ ■ **6** - ■ . **U1** -Z
–	–	–	–	–	575	610	610	610	610	610	610	610	610	610	–	–	–	–	–	–	–	1FG1507- . . ■ ■ **4** - ■ . **U1** -Z
–	–	–	–	600	–	610	610	610	610	610	610	610	610	610	610	610	610	610	610	610	610	1FG1507- . . ■ ■ **3** - ■ . **U1** -Z
–	–	–	–	600	–	–	610	–	610	610	610	–	610	610	610	610	610	610	610	610	610	1FG1507- . . ■ ■ **2** - ■ . **U1** -Z
Max. output speed n_{2max} = **85 rpm**, Transmission ratio i = **52.69**																						
220	210	315	250	515	490	–	–	–	–	–	–	–	–	–	–	–	–	–	–	–	–	1FG1507- . . ■ ■ **6** - ■ . **T1** -Z
–	–	–	–	–	490	550	605	605	605	605	605	605	605	605	–	–	–	–	–	–	–	1FG1507- . . ■ ■ **4** - ■ . **T1** -Z
–	–	–	–	515	–	550	605	605	605	605	605	605	605	605	605	605	605	605	605	605	605	1FG1507- . . ■ ■ **3** - ■ . **T1** -Z
–	–	–	–	515	–	–	605	–	605	605	605	–	605	605	605	605	605	605	605	605	605	1FG1507- . . ■ ■ **2** - ■ . **T1** -Z
Max. output speed n_{2max} = **100 rpm**, Transmission ratio i = **45.14**																						
–	–	–	–	–	–	–	–	–	–	–	–	–	–	–	–	–	–	–	–	–	–	1FG1507- . . ■ ■ **6** - ■ . **S1** -Z
–	–	–	–	–	–	–	605	605	605	605	605	605	605	605	–	–	–	–	–	–	–	1FG1507- . . ■ ■ **4** - ■ . **S1** -Z
–	–	–	–	–	–	–	605	605	605	605	605	605	605	605	605	605	605	605	605	605	605	1FG1507- . . ■ ■ **3** - ■ . **S1** -Z
–	–	–	–	–	–	–	605	–	605	605	605	–	605	605	605	605	605	605	605	605	605	1FG1507- . . ■ ■ **2** - ■ . **S1** -Z
Max. output speed n_{2max} = **113 rpm**, Transmission ratio i = **39.69**																						
–	–	–	–	–	–	–	–	–	–	–	–	–	–	–	–	–	–	–	–	–	–	1FG1507- . . ■ ■ **6** - ■ . **R1** -Z
–	–	–	–	–	–	–	605	605	605	605	605	605	605	605	–	–	–	–	–	–	–	1FG1507- . . ■ ■ **4** - ■ . **R1** -Z
–	–	–	–	–	–	–	605	605	605	605	605	605	605	605	605	605	605	605	605	605	605	1FG1507- . . ■ ■ **3** - ■ . **R1** -Z
–	–	–	–	–	–	–	605	–	605	605	605	–	605	605	605	605	605	605	605	605	605	1FG1507- . . ■ ■ **2** - ■ . **R1** -Z

Motor shaft height:

36																						**C**
			48																			**D**
							63															**E**
												80										**F**
																	100					**G**

Motor length/motor version (**CT** = Compact, **HD** = High Dynamic)**:**

			0/CT				**0/CT**					**0/CT**						**0/CT**					**0**	**2**
													1/CT						**1/CT**				**1**	**2**
								1/HD															**1**	**4**
2/CT				**2/CT**					**2/CT**														**2**	**2**
										3/CT					**3/CT**					**3/CT**			**3**	**2**
	3/HD				**3/HD**																		**3**	**4**
		4/CT														**4/CT**							**4**	**2**
						4/HD					**4/HD**													**4**	**4**
																				5/CT			**5**	**2**
																	5/HD						**5**	**4**
																		6/HD					**6**	**4**

Selection of Shaft design, encoder system, mounting type and special designs on page 5/37.

1FG1507- ■ ■ . . . - . ■ . . -Z

© Siemens 2019

Servo bevel geared motors SIMOTICS S-1FG1

Selecting servo geared motors

Gearbox size 69, 3-stage – 1FG1507

For line voltage 380 ... 480 V 3 AC (DC link voltage 510 ... 720 V DC) **– Gearbox type** *K69*

Geared motor torque at 1450 rpm
Note: All values in **bold** print are maximum gearbox values.
M_{2dyn}
Nm

Servo bevel geared motors SIMOTICS S-1FG1
Article No.

Max. output speed n_{2max} = **134 rpm**, Transmission ratio i = **33.48**																						
–	–	–	–	–	–	–	–	–	–	–	–	–	–	–	–	–	–	–	–	–	–	1FG1507- . . ■ ■ 6 - ■ . Q1 -Z
–	–	–	–	–	–	–	565	540	**580**	**580**	**580**	**580**	**580**	**580**	–	–	–	–	–	–	–	1FG1507- . . ■ ■ 4 - ■ . Q1 -Z
–	–	–	–	–	–	–	565	540	**580**	**580**	**580**	**580**	**580**	**580**	**580**	**580**	**580**	**580**	**580**	**580**	**580**	1FG1507- . . ■ ■ 3 - ■ . Q1 -Z
–	–	–	–	–	–	–	565	–	**580**	**580**	**580**	–	**580**	**580**	**580**	**580**	**580**	**580**	**580**	**580**	**580**	1FG1507- . . ■ ■ 2 - ■ . Q1 -Z
Max. output speed n_{2max} = **154 rpm**, Transmission ratio i = **29.18**																						
–	–	–	–	–	–	–	–	–	–	–	–	–	–	–	–	–	–	–	–	–	–	1FG1507- . . ■ ■ 6 - ■ . P1 -Z
–	–	–	–	–	–	–	490	470	**560**	**560**	**560**	**560**	**560**	**560**	–	–	–	–	–	–	–	1FG1507- . . ■ ■ 4 - ■ . P1 -Z
–	–	–	–	–	–	–	490	470	**560**	**560**	**560**	**560**	**560**	**560**	**560**	**560**	**560**	**560**	**560**	**560**	**560**	1FG1507- . . ■ ■ 3 - ■ . P1 -Z
–	–	–	–	–	–	–	490	–	**560**	**560**	**560**	–	**560**	**560**	**560**	**560**	**560**	**560**	**560**	**560**	**560**	1FG1507- . . ■ ■ 2 - ■ . P1 -Z
Max. output speed n_{2max} = **173 rpm**, Transmission ratio i = **26.05**																						
110	105	159	125	255	245	–	–	–	–	–	–	–	–	–	–	–	–	–	–	–	–	1FG1507- . . ■ ■ 6 - ■ . N1 -Z
–	–	–	–	–	245	275	440	420	**605**	**605**	**605**	**605**	**605**	**605**	–	–	–	–	–	–	–	1FG1507- . . ■ ■ 4 - ■ . N1 -Z
–	–	–	–	255	–	275	440	420	**605**	**605**	**605**	**605**	**605**	**605**	**605**	**605**	**605**	**605**	**605**	**605**	**605**	1FG1507- . . ■ ■ 3 - ■ . N1 -Z
–	–	–	–	255	–	–	440	–	**605**	**605**	**605**	–	**605**	**605**	**605**	**605**	**605**	**605**	**605**	**605**	**605**	1FG1507- . . ■ ■ 2 - ■ . N1 -Z
Max. output speed n_{2max} = **184 rpm**, Transmission ratio i = **24.52**																						
104	99	150	118	240	230	–	–	–	–	–	–	–	–	–	–	–	–	–	–	–	–	1FG1507- . . ■ ■ 6 - ■ . M1 -Z
–	–	–	–	–	230	260	415	400	**595**	**595**	**595**	575	**595**	**595**	–	–	–	–	–	–	–	1FG1507- . . ■ ■ 4 - ■ . M1 -Z
–	–	–	–	240	–	260	415	400	**595**	**595**	**595**	575	**595**	**595**	**595**	**595**	**595**	**595**	**595**	**595**	**595**	1FG1507- . . ■ ■ 3 - ■ . M1 -Z
–	–	–	–	240	–	–	415	–	**595**	**595**	**595**	–	**595**	**595**	**595**	**595**	**595**	**595**	**595**	**595**	**595**	1FG1507- . . ■ ■ 2 - ■ . M1 -Z
Max. output speed n_{2max} = **194 rpm**, Transmission ratio i = **23.15**																						
98	94	142	111	225	215	–	–	–	–	–	–	–	–	–	–	–	–	–	–	–	–	1FG1507- . . ■ ■ 6 - ■ . L1 -Z
–	–	–	–	–	215	245	390	375	565	**585**	**585**	545	**585**	**585**	–	–	–	–	–	–	–	1FG1507- . . ■ ■ 4 - ■ . L1 -Z
–	–	–	–	225	–	245	390	375	565	**585**	**585**	545	**585**	**585**	**585**	**585**	**585**	**585**	**585**	**585**	**585**	1FG1507- . . ■ ■ 3 - ■ . L1 -Z
–	–	–	–	225	–	–	390	–	565	**585**	**585**	–	**585**	**585**	**585**	**585**	**585**	**585**	**585**	**585**	**585**	1FG1507- . . ■ ■ 2 - ■ . L1 -Z
Max. output speed n_{2max} = **228 rpm**, Transmission ratio i = **19.7**																						
83	80	121	95	195	186	–	–	–	–	–	–	–	–	–	–	–	–	–	–	–	–	1FG1507- . . ■ ■ 6 - ■ . K1 -Z
–	–	–	–	–	186	210	335	320	485	**555**	**555**	465	**555**	**555**	–	–	–	–	–	–	–	1FG1507- . . ■ ■ 4 - ■ . K1 -Z
–	–	–	–	195	–	210	335	320	485	**555**	**555**	465	**555**	**555**	**555**	**555**	**555**	**555**	**555**	**555**	**555**	1FG1507- . . ■ ■ 3 - ■ . K1 -Z
–	–	–	–	195	–	–	335	–	485	**555**	**555**	–	**555**	**555**	**555**	**555**	**555**	**555**	**555**	**555**	**555**	1FG1507- . . ■ ■ 2 - ■ . K1 -Z
Max. output speed n_{2max} = **267 rpm**, Transmission ratio i = **16.88**																						
–	–	–	–	–	–	–	–	–	–	–	–	–	–	–	–	–	–	–	–	–	–	1FG1507- . . ■ ■ 6 - ■ . J1 -Z
–	–	–	–	–	–	–	285	275	415	**530**	510	400	**530**	**530**	–	–	–	–	–	–	–	1FG1507- . . ■ ■ 4 - ■ . J1 -Z
–	–	–	–	–	–	–	285	275	415	**530**	510	400	**530**	**530**	**530**	**530**	**530**	**530**	**530**	**530**	**530**	1FG1507- . . ■ ■ 3 - ■ . J1 -Z
–	–	–	–	–	–	–	285	–	415	**530**	510	–	**530**	**530**	**530**	**530**	**530**	**530**	**530**	**530**	**530**	1FG1507- . . ■ ■ 2 - ■ . J1 -Z
Max. output speed n_{2max} = **303 rpm**, Transmission ratio i = **14.84**																						
–	–	–	–	–	–	–	–	–	–	–	–	–	–	–	–	–	–	–	–	–	–	1FG1507- . . ■ ■ 6 - ■ . H1 -Z
–	–	–	–	–	–	–	250	240	365	490	450	350	**515**	**515**	–	–	–	–	–	–	–	1FG1507- . . ■ ■ 4 - ■ . H1 -Z
–	–	–	–	–	–	–	250	240	365	490	450	350	**515**	**515**	**515**	**515**	**515**	**515**	**515**	**515**	**515**	1FG1507- . . ■ ■ 3 - ■ . H1 -Z
–	–	–	–	–	–	–	250	–	365	490	450	–	**515**	**515**	**515**	**515**	**515**	**515**	**515**	**515**	**515**	1FG1507- . . ■ ■ 2 - ■ . H1 -Z

Motor shaft height:

36																						**C**
			48																			**D**
							63															**E**
												80										**F**
																	100					**G**

Motor length/motor version (**CT** = Compact, **HD** = High Dynamic)**:**

			0/CT				**0/CT**					**0/CT**						**0/CT**					**0**	**2**
													1/CT						**1/CT**				**1**	**2**
								1/HD															**1**	**4**
2/CT				**2/CT**					**2/CT**														**2**	**2**
										3/CT				**3/CT**						**3/CT**			**3**	**2**
	3/HD				**3/HD**																		**3**	**4**
		4/CT														**4/CT**							**4**	**2**
						4/HD					**4/HD**													**4**	**4**
																					5/CT		**5**	**2**
																	5/HD						**5**	**4**
																		6/HD					**6**	**4**

Selection of Shaft design, encoder system, mounting type and special designs on page 5/37.

1FG1507- ■ ■ . . . - . ■ . . -Z

© Siemens 2019

For line voltage 380 ... 480 V 3 AC (DC link voltage 510 ... 720 V DC) **– Gearbox type** ***K69***

Geared motor torque at 1450 rpm
Note: All values in **bold** print are maximum gearbox values.
M_{2dyn}
Nm

																						Article No.
Max. output speed n_{2max} = **347 rpm**, Transmission ratio i = **12.52**																						
–	–	–	–	–	–	–	–	–	–	–	–	–	–	–	–	–	–	–	–	–	–	1FG1507- . . ■ ■ 6 - ■ . G1 -Z
–	–	–	–	–	–	–	210	205	305	415	380	295	440	**490**	–	–	–	–	–	–	–	1FG1507- . . ■ ■ 4 - ■ . G1 -Z
–	–	–	–	–	–	–	210	205	305	415	380	295	440	**490**	**490**	**490**	**490**	**490**	**490**	**490**	**490**	1FG1507- . . ■ ■ 3 - ■ . G1 -Z
–	–	–	–	–	–	–	210	–	305	415	380	–	440	**490**	**490**	**490**	**490**	**490**	**490**	**490**	**490**	1FG1507- . . ■ ■ 2 - ■ . G1 -Z
Max. output speed n_{2max} = **399 rpm**, Transmission ratio i = **10.91**																						
–	–	–	–	–	–	–	–	–	–	–	–	–	–	–	–	–	–	–	–	–	–	1FG1507- . . ■ ■ 6 - ■ . F1 -Z
–	–	–	–	–	–	–	186	179	265	360	330	255	380	**470**	–	–	–	–	–	–	–	1FG1507- . . ■ ■ 4 - ■ . F1 -Z
–	–	–	–	–	–	–	186	179	265	360	330	255	380	**470**	**470**	**470**	**470**	**470**	**470**	**470**	**470**	1FG1507- . . ■ ■ 3 - ■ . F1 -Z
–	–	–	–	–	–	–	186	–	265	360	330	–	380	**470**	**470**	**470**	**470**	**470**	**470**	**470**	**470**	1FG1507- . . ■ ■ 2 - ■ . F1 -Z
Max. output speed n_{2max} = **482 rpm**, Transmission ratio i = **9.34**																						
40	38	58	45	93	89	–	–	–	–	–	–	–	–	–	–	–	–	–	–	–	–	1FG1507- . . ■ ■ 6 - ■ . E1 -Z
–	–	–	–	–	89	100	161	154	230	310	285	220	330	**395**	–	–	–	–	–	–	–	1FG1507- . . ■ ■ 4 - ■ . E1 -Z
–	–	–	–	93	–	100	161	154	230	310	285	220	330	**395**	**395**	**395**	**395**	**395**	**395**	**395**	**395**	1FG1507- . . ■ ■ 3 - ■ . E1 -Z
–	–	–	–	93	–	–	161	–	230	310	285	–	330	**395**	**395**	**395**	**395**	**395**	**395**	**395**	**395**	1FG1507- . . ■ ■ 2 - ■ . E1 -Z
Max. output speed n_{2max} = **543 rpm**, Transmission ratio i = **8.01**																						
–	–	–	–	–	–	–	–	–	–	–	–	–	–	–	–	–	–	–	–	–	–	1FG1507- . . ■ ■ 6 - ■ . D1 -Z
–	–	–	–	–	–	–	138	133	200	265	245	192	285	**375**	–	–	–	–	–	–	–	1FG1507- . . ■ ■ 4 - ■ . D1 -Z
–	–	–	–	–	–	–	138	133	200	265	245	192	285	**375**	**375**	**375**	**375**	**375**	**375**	**375**	**375**	1FG1507- . . ■ ■ 3 - ■ . D1 -Z
–	–	–	–	–	–	–	138	–	200	265	245	–	285	**375**	**375**	**375**	**375**	**375**	**375**	**375**	**375**	1FG1507- . . ■ ■ 2 - ■ . D1 -Z
Max. output speed n_{2max} = **618 rpm**, Transmission ratio i = **7.04**																						
–	–	–	–	–	–	–	–	–	–	–	–	–	–	–	–	–	–	–	–	–	–	1FG1507- . . ■ ■ 6 - ■ . C1 -Z
–	–	–	–	–	–	–	122	117	176	235	215	169	250	335	–	–	–	–	–	–	–	1FG1507- . . ■ ■ 4 - ■ . C1 -Z
–	–	–	–	–	–	–	122	117	176	235	215	169	250	335	**365**	**365**	**365**	**365**	**365**	**365**	**365**	1FG1507- . . ■ ■ 3 - ■ . C1 -Z
–	–	–	–	–	–	–	122	–	176	235	215	–	250	335	**365**	**365**	**365**	**365**	**365**	**365**	**365**	1FG1507- . . ■ ■ 2 - ■ . C1 -Z
Max. output speed n_{2max} = **732 rpm**, Transmission ratio i = **5.94**																						
–	–	–	–	–	–	–	–	–	–	–	–	–	–	–	–	–	–	–	–	–	–	1FG1507- . . ■ ■ 6 - ■ . B1 -Z
–	–	–	–	–	–	–	102	98	148	199	182	142	210	285	–	–	–	–	–	–	–	1FG1507- . . ■ ■ 4 - ■ . B1 -Z
–	–	–	–	–	–	–	102	98	148	199	182	142	210	285	345	**345**	**345**	310	**345**	**345**	**345**	1FG1507- . . ■ ■ 3 - ■ . B1 -Z
–	–	–	–	–	–	–	102	–	148	199	182	–	210	285	345	**345**	**345**	310	**345**	**345**	**345**	1FG1507- . . ■ ■ 2 - ■ . B1 -Z
Max. output speed n_{2max} = **840 rpm**, Transmission ratio i = **5.18**																						
–	–	–	–	–	–	–	–	–	–	–	–	–	–	–	–	–	–	–	–	–	–	1FG1507- . . ■ ■ 6 - ■ . A1 -Z
–	–	–	–	–	–	–	89	86	129	174	159	124	184	245	–	–	–	–	–	–	–	1FG1507- . . ■ ■ 4 - ■ . A1 -Z
–	–	–	–	–	–	–	89	86	129	174	159	124	184	245	300	320	**330**	270	**330**	**330**	**330**	1FG1507- . . ■ ■ 3 - ■ . A1 -Z
–	–	–	–	–	–	–	89	–	129	174	159	–	184	245	300	320	**330**	270	**330**	**330**	**330**	1FG1507- . . ■ ■ 2 - ■ . A1 -Z

Motor shaft height:

36																									**C**	
			48																						**D**	
							63																		**E**	
												80													**F**	
																		100							**G**	

Motor length/motor version (**CT** = Compact, **HD** = High Dynamic)**:**

			0/CT				**0/CT**					**0/CT**						**0/CT**							**0**	**2**
													1/CT						**1/CT**						**1**	**2**
								1/HD																	**1**	**4**
2/CT				**2/CT**					**2/CT**																**2**	**2**
										3/CT					**3/CT**						**3/CT**				**3**	**2**
	3/HD				**3/HD**																				**3**	**4**
		4/CT														**4/CT**									**4**	**2**
						4/HD					**4/HD**															**4**	**4**
																					5/CT				**5**	**2**
																5/HD									**5**	**4**
																	6/HD								**6**	**4**

Selection of Shaft design, encoder system, mounting type and special designs on page 5/37.

1FG1507- ■ ■ . . . - . ■ . . -Z

Servo bevel geared motors SIMOTICS S-1FG1
Article No.

5

© Siemens 2019

Gearbox size 69, 3-stage – 1FG1507

Selection and ordering data (continued)

For line voltage 200 ... 240 V 1 AC (DC link voltage 270 ... 330 V DC) **– Gearbox type** ***K69***

Max. output speed n_{2max} rpm	Transmission ratio i	Geared motor torque at 1450 rpm Note: All values in **bold** print are maximum gearbox values. M_{2dyn} Nm					Servo bevel geared motors SIMOTICS S-1FG1 Article No.
23	**196.59**	**640**	**640**	**640**	**640**	**640**	**1FG1507- . . ■ ■ 3 - ■ . H2 -Z**
25	**178.72**	**640**	**640**	**640**	**640**	**640**	**1FG1507- . . ■ ■ 3 - ■ . G2 -Z**
30	**152**	620	590	**640**	**640**	**640**	**1FG1507- . . ■ ■ 3 - ■ . F2 -Z**
33	**138.18**	565	540	**640**	**640**	**640**	**1FG1507- . . ■ ■ 3 - ■ . E2 -Z**
36	**123.29**	505	485	**640**	**640**	**640**	**1FG1507- . . ■ ■ 3 - ■ . D2 -Z**
41	**110.55**	455	435	**640**	**640**	**640**	**1FG1507- . . ■ ■ 3 - ■ . C2 -Z**
45	**99.64**	410	390	595	**640**	**640**	**1FG1507- . . ■ ■ 3 - ■ . B2 -Z**
49	**91.98**	380	360	550	**640**	**640**	**1FG1507- . . ■ ■ 3 - ■ . A2 -Z**
54	**83.96**	345	330	500	**635**	**635**	**1FG1507- . . ■ ■ 3 - ■ . X1 -Z**
65	**69.67**	290	275	415	**620**	**620**	**1FG1507- . . ■ ■ 3 - ■ . W1 -Z**
69	**65.57**	270	260	395	**615**	605	**1FG1507- . . ■ ■ 3 - ■ . V1 -Z**
73	**61.93**	255	245	370	600	575	**1FG1507- . . ■ ■ 3 - ■ . U1 -Z**
85	**52.69**	220	210	315	515	490	**1FG1507- . . ■ ■ 3 - ■ . T1 -Z**
173	**26.05**	110	105	159	255	245	**1FG1507- . . ■ ■ 3 - ■ . N1 -Z**
184	**24.52**	104	99	150	240	230	**1FG1507- . . ■ ■ 3 - ■ . M1 -Z**
194	**23.15**	98	94	142	225	215	**1FG1507- . . ■ ■ 3 - ■ . L1 -Z**
228	**19.7**	83	80	121	195	186	**1FG1507- . . ■ ■ 3 - ■ . K1 -Z**
482	**9.34**	40	38	58	93	89	**1FG1507- . . ■ ■ 3 - ■ . E1 -Z**

Motor shaft height:										
	36						**C**			
				48			**D**			
Motor length/motor version (**CT** = Compact, **HD** = High Dynamic)**:**										
	2/CT			**2/CT**			**2**		**1**	
		3/HD			**3/HD**		**3**		**3**	
			4/CT				**4**		**1**	

Selection of Shaft design, encoder system, mounting type and special designs on page 5/37.

1FG1507- ■ ■ . . . - ■ . . -Z

© Siemens 2019

Technical specifications

Gearbox type *K79*

Servo geared motor Type	i	R_{ex}	M_{2rated} Nm	M_{2max} Nm	$M_{2Em.Off}$ Nm	n_{2max} rpm	n_{1max} rpm	φ [1] '	F_{R2} N	F_{R2max} N	c_T Nm/ '	J_G 10^{-4} kgm^2
1FG1508-.....-..J2	244.25	175861/720	820	825	1390	18	4500	5.73	13900	13900	72.9	0.17
1FG1508-.....-..H2	222.05	175861/792	820	825	1390	20	4500	5.73	13900	13900	73	0.2
1FG1508-.....-..G2	188.85	9065/48	820	825	1390	24	4500	5.75	13900	13900	72.9	0.25
1FG1508-.....-..F2	171.69	45325/264	820	825	1390	26	4500	5.75	13900	13900	72.9	0.31
1FG1508-.....-..E2	153.18	132349/864	820	825	1390	29	4500	5.76	13900	13900	72.9	0.35
1FG1508-.....-..D2	137.35	9065/66	820	840	1390	33	4500	5.77	13900	13900	72.9	0.42
1FG1508-.....-..C2	123.8	106967/864	820	840	1390	36	4500	5.78	13900	13900	72.9	0.49
1FG1508-.....-..B2	114.28	106967/936	820	840	1390	39	4500	5.78	13900	13900	72.9	0.58
1FG1508-.....-..A2	104.32	7511/72	820	840	1390	43	4500	5.79	13900	13900	72.9	0.66
1FG1508-.....-..X1	86.56	99715/1152	820	840	1390	52	4500	5.83	13900	13900	72.9	0.82
1FG1508-.....-..W1	81.47	99715/1224	820	840	1390	55	4500	5.83	13900	13900	72.9	0.94
1FG1508-.....-..V1	76.94	99715/1296	820	840	1390	58	4500	5.83	13900	13900	72.9	1.1
1FG1508-.....-..U1	65.47	23569/360	820	840	1390	69	4500	5.86	13900	13900	72.9	1.4
1FG1508-.....-..T1	56.08	88837/1584	820	830	1390	80	4500	5.91	13900	13900	72.9	1.6
1FG1508-.....-..S1	49.31	85211/1728	820	830	1390	91	4500	5.94	13900	13900	72.9	2
1FG1508-.....-..R1	41.6	34447/828	800	800	1360	105	4350	5.98	14000	14000	72.9	2.5
1FG1508-.....-..Q1	36.26	1813/50	770	770	1300	120	4350	6.14	14000	14000	72.9	3.1
1FG1508-.....-..P1	32.78	6293/192	820	830	1390	137	4500	7.16	13900	13900	66.4	0.92
1FG1508-.....-..N1	27.2	83545/3072	800	805	1360	165	4500	7.27	14000	14000	66.4	1.2
1FG1508-.....-..M1	25.6	83545/3264	785	790	1330	176	4500	7.27	14000	14000	66.4	1.4
1FG1508-.....-..L1	24.17	83545/3456	770	775	1300	186	4500	7.27	14000	14000	66.4	1.6
1FG1508-.....-..K1	20.57	19747/960	740	740	1250	219	4500	7.39	14100	14100	66.3	2
1FG1508-.....-..J1	17.62	74431/4224	715	715	1210	255	4500	7.52	13900	13900	66.3	2.6
1FG1508-.....-..H1	15.49	71393/4608	695	695	1180	290	4488	7.62	13300	13300	66.2	3.2
1FG1508-.....-..G1	13.07	28861/2208	665	665	1130	333	4350	7.77	12700	12700	66	4.2
1FG1508-.....-..F1	11.39	4557/400	645	645	1090	382	4350	8.28	12200	12200	65.9	5.5
1FG1508-.....-..E1	10.51	1209/115	445	445	755	428	4500	10.37	12600	12600	49.5	2.3
1FG1508-.....-..D1	9.01	4557/506	450	450	765	499	4500	10.64	12000	12000	49.3	3
1FG1508-.....-..C1	7.92	1457/184	450	450	765	568	4500	10.83	11400	11400	49.2	3.7
1FG1508-.....-..B1	6.68	3534/529	455	455	770	674	4500	11.12	10800	10800	48.9	4.9
1FG1508-.....-..A1	5.82	3348/575	430	430	730	766	4458	12.11	10400	10400	48.6	6.6

Selection and ordering data

Shaft design, encoder system, mounting type and special designs

Gearbox type *K79*

			Servo bevel geared motors SIMOTICS S-1FG1 Article No.
			1FG1508- ■ ■ . . . - . ■ . . **-Z**
Shaft design:	Solid shaft with feather keyway	– Design 1	**1**
		– Design 3	**3**
	Hollow-shaft with feather keyway	– Design 1 – H40	**5**
Order codes and Descriptions see chapter "Options"	Special shaft design		**9**
Encoder system for motors with DRIVE-CLiQ interface:	AS20DQI encoder		**Q**
	AM20DQI encoder		**R**
	R14DQ resolver		**P**
	R15DQ resolver		**U**
Order codes and Descriptions see chapter "Options"	Special version encoder system		**Z**
Mounting type:	Foot-mounted design		**A**
	Flange-mounted design		**F**
	Housing flange design		**H**
	Shaft-mounted design (not possible with solid shaft)		**C**
Special designs (Options): Order codes and Descriptions see chapter "Options" The following order codes must be added to each article number: • Oil type – order codes **K06** or **K11** • Mounting position – order codes **D11** ... **D16** or **D21** ... **D26**			**-Z**

Selection of 3-stages servo bevel geared motors with gearbox size 79 from next page. **1FG1508-** . . ■ ■ ■ - ■ . ■ ■ **-Z**

[1] Data are for option reduced-backlash version – order code **G99** required.

© Siemens 2019

Gearbox size 79, 3-stage – 1FG1508

Selection and ordering data (continued)

For line voltage 380 ... 480 V 3 AC (DC link voltage 510 ... 720 V DC) **– Gearbox type** *K79*

Geared motor torque at 1450 rpm
Note: All values in **bold** print are maximum gearbox values.
M_{2dyn}
Nm

Servo bevel geared motors SIMOTICS S-1FG1 Article No.
Max. output speed n_{2max} = **18 rpm**, Transmission ratio i = **244.25**
825 **825** **825** 825 **825** **825** – – – – – – – – – – – – – – – –	1FG1508- . . ■ ■ 6 - ■ . J2 -Z
– – – – – **825** **825** **825** **825** **825** **825** **825** – – – – – – – – – –	1FG1508- . . ■ ■ 4 - ■ . J2 -Z
– – – – **825** – **825** **825** **825** **825** **825** **825** – – – – – – – – –	1FG1508- . . ■ ■ 3 - ■ . J2 -Z
– – – – **825** – – **825** – **825** **825** **825** – – – – – – – – –	1FG1508- . . ■ ■ 2 - ■ . J2 -Z
Max. output speed n_{2max} = **20 rpm**, Transmission ratio i = **222.05**
825 **825** **825** 825 **825** **825** – – – – – – – – – – – – – – – –	1FG1508- . . ■ ■ 6 - ■ . H2 -Z
– – – – – **825** **825** **825** **825** **825** **825** **825** – – – – – – – – – –	1FG1508- . . ■ ■ 4 - ■ . H2 -Z
– – – – **825** – **825** **825** **825** **825** **825** **825** – – – – – – – – –	1FG1508- . . ■ ■ 3 - ■ . H2 -Z
– – – – **825** – – **825** – **825** **825** **825** – – – – – – – – –	1FG1508- . . ■ ■ 2 - ■ . H2 -Z
Max. output speed n_{2max} = **24 rpm**, Transmission ratio i = **188.85**
770 735 **825** 825 **825** **825** – – – – – – – – – – – – – – – –	1FG1508- . . ■ ■ 6 - ■ . G2 -Z
– – – – – **825** **825** **825** **825** **825** **825** **825** – – – – – – – – – –	1FG1508- . . ■ ■ 4 - ■ . G2 -Z
– – – – **825** – **825** **825** **825** **825** **825** **825** – – – – – – – – –	1FG1508- . . ■ ■ 3 - ■ . G2 -Z
– – – – **825** – – **825** – **825** **825** **825** – – – – – – – – –	1FG1508- . . ■ ■ 2 - ■ . G2 -Z
Max. output speed n_{2max} = **26 rpm**, Transmission ratio i = **171.69**
700 670 **825** 795 **825** **825** – – – – – – – – – – – – – – – –	1FG1508- . . ■ ■ 6 - ■ . F2 -Z
– – – – – **825** **825** **825** **825** **825** **825** **825** – – – – – – – – – –	1FG1508- . . ■ ■ 4 - ■ . F2 -Z
– – – – **825** – **825** **825** **825** **825** **825** **825** – – – – – – – – –	1FG1508- . . ■ ■ 3 - ■ . F2 -Z
– – – – **825** – – **825** – **825** **825** **825** – – – – – – – – –	1FG1508- . . ■ ■ 2 - ■ . F2 -Z
Max. output speed n_{2max} = **29 rpm**, Transmission ratio i = **153.18**
630 600 **825** 710 **825** **825** – – – – – – – – – – – – – – – –	1FG1508- . . ■ ■ 6 - ■ . E2 -Z
– – – – – **825** **825** **825** **825** **825** **825** **825** **825** **825** **825** – – – – – – – –	1FG1508- . . ■ ■ 4 - ■ . E2 -Z
– – – – **825** – **825** **825** **825** **825** **825** **825** **825** **825** **825** **825** **825** **825** – – – –	1FG1508- . . ■ ■ 3 - ■ . E2 -Z
– – – – **825** – – **825** – **825** **825** **825** – **825** **825** **825** **825** **825** – – – –	1FG1508- . . ■ ■ 2 - ■ . E2 -Z
Max. output speed n_{2max} = **33 rpm**, Transmission ratio i = **137.35**
565 540 815 640 **840** **840** – – – – – – – – – – – – – – – –	1FG1508- . . ■ ■ 6 - ■ . D2 -Z
– – – – – **840** **840** **840** **840** **840** **840** **840** **840** **840** **840** – – – – – – – –	1FG1508- . . ■ ■ 4 - ■ . D2 -Z
– – – – **840** – **840** **840** **840** **840** **840** **840** **840** **840** **840** **840** **840** **840** – – – –	1FG1508- . . ■ ■ 3 - ■ . D2 -Z
– – – – **840** – – **840** – **840** **840** **840** – **840** **840** **840** **840** **840** – – – –	1FG1508- . . ■ ■ 2 - ■ . D2 -Z
Max. output speed n_{2max} = **36 rpm**, Transmission ratio i = **123.8**
510 485 735 580 **840** **840** – – – – – – – – – – – – – – – –	1FG1508- . . ■ ■ 6 - ■ . C2 -Z
– – – – – **840** **840** **840** **840** **840** **840** **840** **840** **840** **840** – – – – – – – –	1FG1508- . . ■ ■ 4 - ■ . C2 -Z
– – – – **840** – **840** **840** **840** **840** **840** **840** **840** **840** **840** **840** **840** **840** – – – –	1FG1508- . . ■ ■ 3 - ■ . C2 -Z
– – – – **840** – – **840** – **840** **840** **840** – **840** **840** **840** **840** **840** – – – –	1FG1508- . . ■ ■ 2 - ■ . C2 -Z

Motor shaft height:

36	C
48	D
63	E
80	F
100	G

Motor length/motor version (**CT** = Compact, **HD** = High Dynamic)**:**

0/CT **0/CT** **0/CT** **0/CT**	0	2
1/CT **1/CT**	1	2
1/HD	1	4
2/CT **2/CT** **2/CT**	2	2
3/CT **3/CT**	3	2
3/HD **3/HD**	3	4
4/CT **4/CT**	4	2
4/HD **4/HD**	4	4
5/CT	5	2
5/HD	5	4
6/HD	6	4

Selection of Shaft design, encoder system, mounting type and special designs on page 5/43.

1FG1508- ■ ■ . . . . - . ■ . . -Z

© Siemens 2019

For line voltage 380 ... 480 V 3 AC (DC link voltage 510 ... 720 V DC) **– Gearbox type** ***K79***

Geared motor torque at 1450 rpm
Note: All values in **bold** print are maximum gearbox values.
M_{2dyn}
Nm

Servo bevel geared motors SIMOTICS S-1FG1
Article No.

Max. output speed n_{2max} = **39 rpm**, Transmission ratio i = **114.28**																						
470	450	680	535	**840**	**840**	–	–	–	–	–	–	–	–	–	–	–	–	–	–	–	–	1FG1508- . . ■ ■ 6 - ■ . B2 -Z
–	–	–	–	–	**840**	**840**	**840**	**840**	**840**	**840**	**840**	**840**	**840**	**840**	–	–	–	–	–	–	–	1FG1508- . . ■ ■ 4 - ■ . B2 -Z
–	–	–	–	**840**	–	**840**	**840**	**840**	**840**	**840**	**840**	**840**	**840**	**840**	**840**	**840**	**840**	–	–	–	–	1FG1508- . . ■ ■ 3 - ■ . B2 -Z
–	–	–	–	**840**	–	–	**840**	–	**840**	**840**	**840**	–	**840**	**840**	**840**	**840**	**840**	–	–	–	–	1FG1508- . . ■ ■ 2 - ■ . B2 -Z
Max. output speed n_{2max} = **43 rpm**, Transmission ratio i = **104.32**																						
430	410	625	490	**840**	**840**	–	–	–	–	–	–	–	–	–	–	–	–	–	–	–	–	1FG1508- . . ■ ■ 6 - ■ . A2 -Z
–	–	–	–	–	**840**	**840**	**840**	**840**	**840**	**840**	**840**	**840**	**840**	**840**	–	–	–	–	–	–	–	1FG1508- . . ■ ■ 4 - ■ . A2 -Z
–	–	–	–	**840**	–	**840**	**840**	**840**	**840**	**840**	**840**	**840**	**840**	**840**	**840**	**840**	**840**	**840**	**840**	**840**	**840**	1FG1508- . . ■ ■ 3 - ■ . A2 -Z
–	–	–	–	**840**	–	–	**840**	–	**840**	**840**	**840**	–	**840**	**840**	**840**	**840**	**840**	**840**	**840**	**840**	**840**	1FG1508- . . ■ ■ 2 - ■ . A2 -Z
Max. output speed n_{2max} = **52 rpm**, Transmission ratio i = **86.56**																						
360	345	520	405	840	800	–	–	–	–	–	–	–	–	–	–	–	–	–	–	–	–	1FG1508- . . ■ ■ 6 - ■ . X1 -Z
–	–	–	–	–	800	**840**	**840**	**840**	**840**	**840**	**840**	**840**	**840**	**840**	–	–	–	–	–	–	–	1FG1508- . . ■ ■ 4 - ■ . X1 -Z
–	–	–	–	840	–	**840**	**840**	**840**	**840**	**840**	**840**	**840**	**840**	**840**	**840**	**840**	**840**	**840**	**840**	**840**	**840**	1FG1508- . . ■ ■ 3 - ■ . X1 -Z
–	–	–	–	840	–	–	**840**	–	**840**	**840**	**840**	–	**840**	**840**	**840**	**840**	**840**	**840**	**840**	**840**	**840**	1FG1508- . . ■ ■ 2 - ■ . X1 -Z
Max. output speed n_{2max} = **55 rpm**, Transmission ratio i = **81.47**																						
340	325	490	385	790	755	–	–	–	–	–	–	–	–	–	–	–	–	–	–	–	–	1FG1508- . . ■ ■ 6 - ■ . W1 -Z
–	–	–	–	–	755	**840**	**840**	**840**	**840**	**840**	**840**	**840**	**840**	**840**	–	–	–	–	–	–	–	1FG1508- . . ■ ■ 4 - ■ . W1 -Z
–	–	–	–	790	–	**840**	**840**	**840**	**840**	**840**	**840**	**840**	**840**	**840**	**840**	**840**	**840**	**840**	**840**	**840**	**840**	1FG1508- . . ■ ■ 3 - ■ . W1 -Z
–	–	–	–	790	–	–	**840**	–	**840**	**840**	**840**	–	**840**	**840**	**840**	**840**	**840**	**840**	**840**	**840**	**840**	1FG1508- . . ■ ■ 2 - ■ . W1 -Z
Max. output speed n_{2max} = **58 rpm**, Transmission ratio i = **76.94**																						
320	305	460	360	750	710	–	–	–	–	–	–	–	–	–	–	–	–	–	–	–	–	1FG1508- . . ■ ■ 6 - ■ . V1 -Z
–	–	–	–	–	710	805	**840**	**840**	**840**	**840**	**840**	**840**	**840**	**840**	–	–	–	–	–	–	–	1FG1508- . . ■ ■ 4 - ■ . V1 -Z
–	–	–	–	750	–	805	**840**	**840**	**840**	**840**	**840**	**840**	**840**	**840**	**840**	**840**	**840**	**840**	**840**	**840**	**840**	1FG1508- . . ■ ■ 3 - ■ . V1 -Z
–	–	–	–	750	–	–	**840**	–	**840**	**840**	**840**	–	**840**	**840**	**840**	**840**	**840**	**840**	**840**	**840**	**840**	1FG1508- . . ■ ■ 2 - ■ . V1 -Z
Max. output speed n_{2max} = **69 rpm**, Transmission ratio i = **65.47**																						
270	260	395	310	640	605	–	–	–	–	–	–	–	–	–	–	–	–	–	–	–	–	1FG1508- . . ■ ■ 6 - ■ . U1 -Z
–	–	–	–	–	605	685	**840**	**840**	**840**	**840**	**840**	**840**	**840**	**840**	–	–	–	–	–	–	–	1FG1508- . . ■ ■ 4 - ■ . U1 -Z
–	–	–	–	640	–	685	**840**	**840**	**840**	**840**	**840**	**840**	**840**	**840**	**840**	**840**	**840**	**840**	**840**	**840**	**840**	1FG1508- . . ■ ■ 3 - ■ . U1 -Z
–	–	–	–	640	–	–	**840**	–	**840**	**840**	**840**	–	**840**	**840**	**840**	**840**	**840**	**840**	**840**	**840**	**840**	1FG1508- . . ■ ■ 2 - ■ . U1 -Z
Max. output speed n_{2max} = **80 rpm**, Transmission ratio i = **56.08**																						
–	–	–	–	–	–	–	–	–	–	–	–	–	–	–	–	–	–	–	–	–	–	1FG1508- . . ■ ■ 6 - ■ . T1 -Z
–	–	–	–	–	–	–	**830**	**830**	**830**	**830**	**830**	**830**	**830**	**830**	–	–	–	–	–	–	–	1FG1508- . . ■ ■ 4 - ■ . T1 -Z
–	–	–	–	–	–	–	**830**	**830**	**830**	**830**	**830**	**830**	**830**	**830**	**830**	**830**	**830**	**830**	**830**	**830**	**830**	1FG1508- . . ■ ■ 3 - ■ . T1 -Z
–	–	–	–	–	–	–	**830**	–	**830**	**830**	**830**	–	**830**	**830**	**830**	**830**	**830**	**830**	**830**	**830**	**830**	1FG1508- . . ■ ■ 2 - ■ . T1 -Z
Max. output speed n_{2max} = **91 rpm**, Transmission ratio i = **49.31**																						
–	–	–	–	–	–	–	–	–	–	–	–	–	–	–	–	–	–	–	–	–	–	1FG1508- . . ■ ■ 6 - ■ . S1 -Z
–	–	–	–	–	–	–	830	795	**830**	**830**	**830**	**830**	**830**	**830**	–	–	–	–	–	–	–	1FG1508- . . ■ ■ 4 - ■ . S1 -Z
–	–	–	–	–	–	–	830	795	**830**	**830**	**830**	**830**	**830**	**830**	**830**	**830**	**830**	**830**	**830**	**830**	**830**	1FG1508- . . ■ ■ 3 - ■ . S1 -Z
–	–	–	–	–	–	–	830	–	**830**	**830**	**830**	–	**830**	**830**	**830**	**830**	**830**	**830**	**830**	**830**	**830**	1FG1508- . . ■ ■ 2 - ■ . S1 -Z

Motor shaft height:

36																						**C**	
			48																			**D**	
							63															**E**	
												80										**F**	
																		100				**G**	

Motor length/motor version (**CT** = Compact, **HD** = High Dynamic)**:**

			0/CT				**0/CT**					**0/CT**						**0/CT**					**0**	**2**
													1/CT						**1/CT**				**1**	**2**
								1/HD															**1**	**4**
2/CT				**2/CT**					**2/CT**														**2**	**2**
										3/CT				**3/CT**						**3/CT**			**3**	**2**
	3/HD				**3/HD**																		**3**	**4**
		4/CT														**4/CT**							**4**	**2**
						4/HD					**4/HD**													**4**	**4**
																					5/CT		**5**	**2**
																	5/HD						**5**	**4**
																		6/HD					**6**	**4**

Selection of Shaft design, encoder system, mounting type and special designs on page 5/43.

1FG1508- ■ ■ . . . - . ■ . . -Z

© Siemens 2019

Gearbox size 79, 3-stage – 1FG1508

For line voltage 380 ... 480 V 3 AC (DC link voltage 510 ... 720 V DC) **– Gearbox type** *K79*

Geared motor torque at 1450 rpm
Note: All values in **bold** print are maximum gearbox values.
M_{2dyn} Nm

Servo bevel geared motors SIMOTICS S-1FG1
Article No.

Max. output speed n_{2max} = 105 rpm, Transmission ratio i = 41.6																						
–	–	–	–	–	–	–	–	–	–	–	–	–	–	–	–	–	–	–	–	–	–	1FG1508- . . ■ ■ 6 - ■ . R1 -Z
–	–	–	–	–	–	–	700	670	**800**	**800**	**800**	**800**	**800**	**800**	–	–	–	–	–	–	–	1FG1508- . . ■ ■ 4 - ■ . R1 -Z
–	–	–	–	–	–	–	700	670	**800**	**800**	**800**	**800**	**800**	**800**	**800**	**800**	**800**	**800**	**800**	**800**	**800**	1FG1508- . . ■ ■ 3 - ■ . R1 -Z
–	–	–	–	–	–	–	700	–	**800**	**800**	**800**	–	**800**	**800**	**800**	**800**	**800**	**800**	**800**	**800**	**800**	1FG1508- . . ■ ■ 2 - ■ . R1 -Z
Max. output speed n_{2max} = 120 rpm, Transmission ratio i = 36.26																						
–	–	–	–	–	–	–	–	–	–	–	–	–	–	–	–	–	–	–	–	–	–	1FG1508- . . ■ ■ 6 - ■ . Q1 -Z
–	–	–	–	–	–	–	610	585	**770**	**770**	**770**	**770**	**770**	**770**	–	–	–	–	–	–	–	1FG1508- . . ■ ■ 4 - ■ . Q1 -Z
–	–	–	–	–	–	–	610	585	**770**	**770**	**770**	**770**	**770**	**770**	**770**	**770**	**770**	**770**	**770**	**770**	**770**	1FG1508- . . ■ ■ 3 - ■ . Q1 -Z
–	–	–	–	–	–	–	610	–	**770**	**770**	**770**	–	**770**	**770**	**770**	**770**	**770**	**770**	**770**	**770**	**770**	1FG1508- . . ■ ■ 2 - ■ . Q1 -Z
Max. output speed n_{2max} = 137 rpm, Transmission ratio i = 32.78																						
138	132	200	157	320	305	–	–	–	–	–	–	–	–	–	–	–	–	–	–	–	–	1FG1508- . . ■ ■ 6 - ■ . P1 -Z
–	–	–	–	–	305	345	555	530	800	**830**	**830**	770	**830**	**830**	–	–	–	–	–	–	–	1FG1508- . . ■ ■ 4 - ■ . P1 -Z
–	–	–	–	320	–	345	555	530	800	**830**	**830**	770	**830**	**830**	**830**	**830**	**830**	**830**	**830**	**830**	**830**	1FG1508- . . ■ ■ 3 - ■ . P1 -Z
–	–	–	–	320	–	–	555	–	800	**830**	**830**	–	**830**	**830**	**830**	**830**	**830**	**830**	**830**	**830**	**830**	1FG1508- . . ■ ■ 2 - ■ . P1 -Z
Max. output speed n_{2max} = 165 rpm, Transmission ratio i = 27.2																						
115	110	166	130	265	255	–	–	–	–	–	–	–	–	–	–	–	–	–	–	–	–	1FG1508- . . ■ ■ 6 - ■ . N1 -Z
–	–	–	–	–	255	285	460	440	665	**805**	**805**	640	**805**	**805**	–	–	–	–	–	–	–	1FG1508- . . ■ ■ 4 - ■ . N1 -Z
–	–	–	–	265	–	285	460	440	665	**805**	**805**	640	**805**	**805**	**805**	**805**	**805**	**805**	**805**	**805**	**805**	1FG1508- . . ■ ■ 3 - ■ . N1 -Z
–	–	–	–	265	–	–	460	–	665	**805**	**805**	–	**805**	**805**	**805**	**805**	**805**	**805**	**805**	**805**	**805**	1FG1508- . . ■ ■ 2 - ■ . N1 -Z
Max. output speed n_{2max} = 176 rpm, Transmission ratio i = 25.6																						
108	104	157	123	250	240	–	–	–	–	–	–	–	–	–	–	–	–	–	–	–	–	1FG1508- . . ■ ■ 6 - ■ . M1 -Z
–	–	–	–	–	240	270	435	415	625	**790**	770	605	**790**	**790**	–	–	–	–	–	–	–	1FG1508- . . ■ ■ 4 - ■ . M1 -Z
–	–	–	–	250	–	270	435	415	625	**790**	770	605	**790**	**790**	**790**	**790**	**790**	**790**	**790**	**790**	**790**	1FG1508- . . ■ ■ 3 - ■ . M1 -Z
–	–	–	–	250	–	–	435	–	625	**790**	770	–	**790**	**790**	**790**	**790**	**790**	**790**	**790**	**790**	**790**	1FG1508- . . ■ ■ 2 - ■ . M1 -Z
Max. output speed n_{2max} = 186 rpm, Transmission ratio i = 24.17																						
102	98	148	116	235	225	–	–	–	–	–	–	–	–	–	–	–	–	–	–	–	–	1FG1508- . . ■ ■ 6 - ■ . L1 -Z
–	–	–	–	–	225	255	410	390	590	**775**	730	570	**775**	**775**	–	–	–	–	–	–	–	1FG1508- . . ■ ■ 4 - ■ . L1 -Z
–	–	–	–	235	–	255	410	390	590	**775**	730	570	**775**	**775**	**775**	**775**	**775**	**775**	**775**	**775**	**775**	1FG1508- . . ■ ■ 3 - ■ . L1 -Z
–	–	–	–	235	–	–	410	–	590	**775**	730	–	**775**	**775**	**775**	**775**	**775**	**775**	**775**	**775**	**775**	1FG1508- . . ■ ■ 2 - ■ . L1 -Z
Max. output speed n_{2max} = 219 rpm, Transmission ratio i = 20.57																						
87	83	126	99	200	194	–	–	–	–	–	–	–	–	–	–	–	–	–	–	–	–	1FG1508- . . ■ ■ 6 - ■ . K1 -Z
–	–	–	–	–	194	215	350	335	505	680	620	485	715	**740**	–	–	–	–	–	–	–	1FG1508- . . ■ ■ 4 - ■ . K1 -Z
–	–	–	–	200	–	215	350	335	505	680	620	485	715	**740**	**740**	**740**	**740**	**740**	**740**	**740**	**740**	1FG1508- . . ■ ■ 3 - ■ . K1 -Z
–	–	–	–	200	–	–	350	–	505	680	620	–	715	**740**	**740**	**740**	**740**	**740**	**740**	**740**	**740**	1FG1508- . . ■ ■ 2 - ■ . K1 -Z
Max. output speed n_{2max} = 255 rpm, Transmission ratio i = 17.62																						
–	–	–	–	–	–	–	–	–	–	–	–	–	–	–	–	–	–	–	–	–	–	1FG1508- . . ■ ■ 6 - ■ . J1 -Z
–	–	–	–	–	–	–	300	285	430	585	535	415	615	**715**	–	–	–	–	–	–	–	1FG1508- . . ■ ■ 4 - ■ . J1 -Z
–	–	–	–	–	–	–	300	285	430	585	535	415	615	**715**	**715**	**715**	**715**	**715**	**715**	**715**	**715**	1FG1508- . . ■ ■ 3 - ■ . J1 -Z
–	–	–	–	–	–	–	300	–	430	585	535	–	615	**715**	**715**	**715**	**715**	**715**	**715**	**715**	**715**	1FG1508- . . ■ ■ 2 - ■ . J1 -Z

Motor shaft height:

36																						**C**
			48																			**D**
							63															**E**
												80										**F**
																	100					**G**

Motor length/motor version (**CT** = Compact, **HD** = High Dynamic)**:**

			0/CT				**0/CT**					**0/CT**						**0/CT**					**0**	**2**
													1/CT						**1/CT**				**1**	**2**
								1/HD															**1**	**4**
2/CT				**2/CT**					**2/CT**														**2**	**2**
										3/CT				**3/CT**					**3/CT**				**3**	**2**
	3/HD				**3/HD**																		**3**	**4**
		4/CT														**4/CT**							**4**	**2**
						4/HD					**4/HD**													**4**	**4**
																				5/CT			**5**	**2**
															5/HD								**5**	**4**
																6/HD							**6**	**4**

Selection of Shaft design, encoder system, mounting type and special designs on page 5/43.

1FG1508- ■ ■ . . . - . ■ . . -Z

© Siemens 2019

Gearbox size 79, 3-stage – 1FG1508

For line voltage 380 ... 480 V 3 AC (DC link voltage 510 ... 720 V DC) **– Gearbox type** *K79*

Geared motor torque at 1450 rpm
Note: All values in **bold** print are maximum gearbox values.
M_{2dyn}

Nm																						Article No.
Max. output speed n_{2max} = **290 rpm**, Transmission ratio i = **15.49**																						
–	–	–	–	–	–	–	–	–	–	–	–	–	–	–	–	–	–	–	–	–	–	1FG1508- . . ■ ■ 6 - ■ . H1 -Z
–	–	–	–	–	–	–	260	250	380	515	470	365	540	**695**	–	–	–	–	–	–	–	1FG1508- . . ■ ■ 4 - ■ . H1 -Z
–	–	–	–	–	–	–	260	250	380	515	470	365	540	**695**	**695**	**695**	**695**	**695**	**695**	**695**	**695**	1FG1508- . . ■ ■ 3 - ■ . H1 -Z
–	–	–	–	–	–	–	260	–	380	515	470	–	540	**695**	**695**	**695**	**695**	**695**	**695**	**695**	**695**	1FG1508- . . ■ ■ 2 - ■ . H1 -Z
Max. output speed n_{2max} = **333 rpm**, Transmission ratio i = **13.07**																						
–	–	–	–	–	–	–	–	–	–	–	–	–	–	–	–	–	–	–	–	–	–	1FG1508- . . ■ ■ 6 - ■ . G1 -Z
–	–	–	–	–	–	–	220	210	320	430	395	310	455	620	–	–	–	–	–	–	–	1FG1508- . . ■ ■ 4 - ■ . G1 -Z
–	–	–	–	–	–	–	220	210	320	430	395	310	455	620	**665**	**665**	**665**	**665**	**665**	**665**	**665**	1FG1508- . . ■ ■ 3 - ■ . G1 -Z
–	–	–	–	–	–	–	220	–	320	430	395	–	455	620	**665**	**665**	**665**	**665**	**665**	**665**	**665**	1FG1508- . . ■ ■ 2 - ■ . G1 -Z
Max. output speed n_{2max} = **382 rpm**, Transmission ratio i = **11.39**																						
–	–	–	–	–	–	–	–	–	–	–	–	–	–	–	–	–	–	–	–	–	–	1FG1508- . . ■ ■ 6 - ■ . F1 -Z
–	–	–	–	–	–	–	194	187	280	375	345	270	400	540	–	–	–	–	–	–	–	1FG1508- . . ■ ■ 4 - ■ . F1 -Z
–	–	–	–	–	–	–	194	187	280	375	345	270	400	540	**645**	**645**	**645**	595	**645**	**645**	**645**	1FG1508- . . ■ ■ 3 - ■ . F1 -Z
–	–	–	–	–	–	–	194	–	280	375	345	–	400	540	**645**	**645**	**645**	595	**645**	**645**	**645**	1FG1508- . . ■ ■ 2 - ■ . F1 -Z
Max. output speed n_{2max} = **428 rpm**, Transmission ratio i = **10.51**																						
45	43	65	51	105	100	–	–	–	–	–	–	–	–	–	–	–	–	–	–	–	–	1FG1508- . . ■ ■ 6 - ■ . E1 -Z
–	–	–	–	–	100	113	181	174	260	350	320	250	370	**445**	–	–	–	–	–	–	–	1FG1508- . . ■ ■ 4 - ■ . E1 -Z
–	–	–	–	105	–	113	181	174	260	350	320	250	370	**445**	**445**	**445**	**445**	**445**	**445**	**445**	**445**	1FG1508- . . ■ ■ 3 - ■ . E1 -Z
–	–	–	–	105	–	–	181	–	260	350	320	–	370	**445**	**445**	**445**	**445**	**445**	**445**	**445**	**445**	1FG1508- . . ■ ■ 2 - ■ . E1 -Z
Max. output speed n_{2max} = **499 rpm**, Transmission ratio i = **9.01**																						
–	–	–	–	–	–	–	–	–	–	–	–	–	–	–	–	–	–	–	–	–	–	1FG1508- . . ■ ■ 6 - ■ . D1 -Z
–	–	–	–	–	–	–	155	149	220	300	275	215	320	430	–	–	–	–	–	–	–	1FG1508- . . ■ ■ 4 - ■ . D1 -Z
–	–	–	–	–	–	–	155	149	220	300	275	215	320	430	**450**	**450**	**450**	**450**	**450**	**450**	**450**	1FG1508- . . ■ ■ 3 - ■ . D1 -Z
–	–	–	–	–	–	–	155	–	220	300	275	–	320	430	**450**	**450**	**450**	**450**	**450**	**450**	**450**	1FG1508- . . ■ ■ 2 - ■ . D1 -Z
Max. output speed n_{2max} = **568 rpm**, Transmission ratio i = **7.92**																						
–	–	–	–	–	–	–	–	–	–	–	–	–	–	–	–	–	–	–	–	–	–	1FG1508- . . ■ ■ 6 - ■ . C1 -Z
–	–	–	–	–	–	–	137	131	198	265	240	190	280	380	–	–	–	–	–	–	–	1FG1508- . . ■ ■ 4 - ■ . C1 -Z
–	–	–	–	–	–	–	137	131	198	265	240	190	280	380	**450**	**450**	**450**	415	**450**	**450**	**450**	1FG1508- . . ■ ■ 3 - ■ . C1 -Z
–	–	–	–	–	–	–	137	–	198	265	240	–	280	380	**450**	**450**	**450**	415	**450**	**450**	**450**	1FG1508- . . ■ ■ 2 - ■ . C1 -Z
Max. output speed n_{2max} = **674 rpm**, Transmission ratio i = **6.68**																						
–	–	–	–	–	–	–	–	–	–	–	–	–	–	–	–	–	–	–	–	–	–	1FG1508- . . ■ ■ 6 - ■ . B1 -Z
–	–	–	–	–	–	–	115	111	166	220	205	160	235	320	–	–	–	–	–	–	–	1FG1508- . . ■ ■ 4 - ■ . B1 -Z
–	–	–	–	–	–	–	115	111	166	220	205	160	235	320	390	415	**455**	350	**455**	**455**	**455**	1FG1508- . . ■ ■ 3 - ■ . B1 -Z
–	–	–	–	–	–	–	115	–	166	220	205	–	235	320	390	415	**455**	350	**455**	**455**	**455**	1FG1508- . . ■ ■ 2 - ■ . B1 -Z
Max. output speed n_{2max} = **766 rpm**, Transmission ratio i = **5.82**																						
–	–	–	–	–	–	–	–	–	–	–	–	–	–	–	–	–	–	–	–	–	–	1FG1508- . . ■ ■ 6 - ■ . A1 -Z
–	–	–	–	–	–	–	100	96	145	195	178	139	205	275	–	–	–	–	–	–	–	1FG1508- . . ■ ■ 4 - ■ . A1 -Z
–	–	–	–	–	–	–	100	96	145	195	178	139	205	275	340	360	**430**	305	**430**	**430**	**430**	1FG1508- . . ■ ■ 3 - ■ . A1 -Z
–	–	–	–	–	–	–	100	–	145	195	178	–	205	275	340	360	**430**	305	**430**	**430**	**430**	1FG1508- . . ■ ■ 2 - ■ . A1 -Z

Motor shaft height:

36																						**C**
			48																			**D**
							63															**E**
												80										**F**
																	100					**G**

Motor length/motor version (**CT** = Compact, **HD** = High Dynamic)**:**

			0/CT				**0/CT**					**0/CT**						**0/CT**				**0**	**2**
													1/CT						**1/CT**			**1**	**2**
								1/HD														**1**	**4**
2/CT				**2/CT**					**2/CT**													**2**	**2**
										3/CT				**3/CT**					**3/CT**			**3**	**2**
	3/HD				**3/HD**																	**3**	**4**
		4/CT														**4/CT**						**4**	**2**
						4/HD					**4/HD**											**4**	**4**
																				5/CT		**5**	**2**
															5/HD							**5**	**4**
																6/HD						**6**	**4**

Selection of Shaft design, encoder system, mounting type and special designs on page 5/43.

1FG1508- ■ ■ . . . - . ■ . . -Z

Servo bevel geared motors SIMOTICS S-1FG1

5

© Siemens 2019

Gearbox size 79, 3-stage – 1FG1508

Selection and ordering data (continued)

For line voltage 200 ... 240 V 1 AC (DC link voltage 270 ... 330 V DC) **– Gearbox type** ***K79***

Max. output speed n_{2max} rpm	Transmission ratio i	Geared motor torque at 1450 rpm Note: All values in **bold** print are maximum gearbox values. M_{2dyn} Nm					**Servo bevel geared motors SIMOTICS S-1FG1** Article No.
18	**244.25**	**825**	**825**	**825**	**825**	**825**	**1FG1508- . . ■ ■ 3 - ■ . J2 -Z**
20	**222.05**	**825**	**825**	**825**	**825**	**825**	**1FG1508- . . ■ ■ 3 - ■ . H2 -Z**
24	**188.85**	770	735	**825**	**825**	**825**	**1FG1508- . . ■ ■ 3 - ■ . G2 -Z**
26	**171.69**	700	670	**825**	**825**	**825**	**1FG1508- . . ■ ■ 3 - ■ . F2 -Z**
29	**153.18**	630	600	**825**	**825**	**825**	**1FG1508- . . ■ ■ 3 - ■ . E2 -Z**
33	**137.35**	565	540	815	**840**	**840**	**1FG1508- . . ■ ■ 3 - ■ . D2 -Z**
36	**123.8**	510	485	735	**840**	**840**	**1FG1508- . . ■ ■ 3 - ■ . C2 -Z**
39	**114.28**	470	450	680	**840**	**840**	**1FG1508- . . ■ ■ 3 - ■ . B2 -Z**
43	**104.32**	430	410	625	**840**	**840**	**1FG1508- . . ■ ■ 3 - ■ . A2 -Z**
52	**86.56**	360	345	520	840	800	**1FG1508- . . ■ ■ 3 - ■ . X1 -Z**
55	**81.47**	340	325	490	790	755	**1FG1508- . . ■ ■ 3 - ■ . W1 -Z**
58	**76.94**	320	305	460	750	710	**1FG1508- . . ■ ■ 3 - ■ . V1 -Z**
69	**65.47**	270	260	395	640	605	**1FG1508- . . ■ ■ 3 - ■ . U1 -Z**
137	**32.78**	138	132	200	320	305	**1FG1508- . . ■ ■ 3 - ■ . P1 -Z**
165	**27.2**	115	110	166	265	255	**1FG1508- . . ■ ■ 3 - ■ . N1 -Z**
176	**25.6**	108	104	157	250	240	**1FG1508- . . ■ ■ 3 - ■ . M1 -Z**
186	**24.17**	102	98	148	235	225	**1FG1508- . . ■ ■ 3 - ■ . L1 -Z**
219	**20.57**	87	83	126	200	194	**1FG1508- . . ■ ■ 3 - ■ . K1 -Z**
428	**10.51**	45	43	65	105	100	**1FG1508- . . ■ ■ 3 - ■ . E1 -Z**
Motor shaft height:							
		36					**C**
					48		**D**
Motor length/motor version (**CT** = Compact, **HD** = High Dynamic)**:**							
		2/CT			**2/CT**		**2** **1**
			3/HD			**3/HD**	**3** **3**
				4/CT			**4** **1**

Selection of Shaft design, encoder system, mounting type and special designs on page 5/43.

1FG1508- ■ ■ . . . - . ■ . . -Z

© Siemens 2019

Technical specifications

Gearbox type *K89*

Servo geared motor Type	i	R_{ex}	M_{2rated} Nm	M_{2max} Nm	$M_{2Em.Off}$ Nm	n_{2max} rpm	n_{1max} rpm	φ [1] '	F_{R2} N	F_{R2max} N	c_T Nm/ '	J_G 10^{-4} kgm^2
1FG1510-.....-..K2	231.8	10199/44	1600	1610	2720	19	4500	5.56	18100	18100	163.8	0.42
1FG1510-.....-..J2	210.72	50995/242	1600	1610	2720	21	4500	5.56	18100	18100	163.8	0.51
1FG1510-.....-..H2	189.01	149695/792	1600	1610	2720	24	4500	5.57	18100	18100	163.8	0.71
1FG1510-.....-..G2	169.94	41125/242	1600	1610	2720	26	4500	5.58	18100	18100	163.8	0.8
1FG1510-.....-..F2	153.7	60865/396	1600	1610	2720	29	4500	5.58	18100	18100	163.8	0.88
1FG1510-.....-..E2	141.88	60865/429	1600	1610	2720	32	4500	5.58	18100	18100	163.8	1
1FG1510-.....-..D2	129.96	17155/132	1600	1610	2720	35	4500	5.59	18100	18100	163.8	1.4
1FG1510-.....-..C2	109.04	57575/528	1600	1610	2720	41	4500	5.60	18100	18100	163.8	1.4
1FG1510-.....-..B2	102.63	57575/561	1600	1610	2720	44	4500	5.60	18100	18100	163.8	1.6
1FG1510-.....-..A2	94.16	27965/297	1600	1610	2720	48	4500	5.60	18100	18100	163.8	1.8
1FG1510-.....-..X1	82.25	329/4	1600	1610	2720	55	4500	5.56	18100	18100	163.8	2.5
1FG1510-.....-..W1	73.64	106925/1452	1600	1610	2720	61	4500	5.56	18100	18100	163.8	3.1
1FG1510-.....-..V1	64.39	50995/792	1600	1610	2720	70	4500	5.56	18100	18100	163.8	3.6
1FG1510-.....-..U1	55.27	27965/506	1600	1610	2720	81	4500	5.56	18100	18100	163.7	3.9
1FG1510-.....-..T1	48.85	16121/330	1600	1610	2720	92	4500	5.56	18100	18100	163.7	5.2
1FG1510-.....-..S1	41.54	8225/198	1570	1570	2660	108	4500	5.56	18100	18100	163.7	6.6
1FG1510-.....-..R1	39.29	11315/288	1600	1610	2720	115	4500	7.00	18100	18100	143.4	1.9
1FG1510-.....-..Q1	32.96	37975/1152	1600	1610	2720	137	4500	6.99	18100	18100	142.8	2.1
1FG1510-.....-..P1	31.03	37975/1224	1600	1610	2720	145	4500	6.99	18100	18100	143	2.4
1FG1510-.....-..N1	28.46	18445/648	1600	1610	2720	158	4500	7.03	18100	18100	142.9	2.7
1FG1510-.....-..M1	24.86	2387/96	1600	1610	2720	181	4500	7.08	18100	18100	143.2	3.8
1FG1510-.....-..L1	22.26	70525/3168	1600	1610	2720	202	4500	7.08	18100	18100	143.1	4.7
1FG1510-.....-..K1	19.46	33635/1728	1560	1560	2650	224	4354	7.08	18000	18000	143	5.7
1FG1510-.....-..J1	16.71	18445/1104	1480	1480	2510	260	4350	7.08	17300	17300	142.2	6.8
1FG1510-.....-..H1	14.77	10633/720	1420	1420	2410	295	4350	7.08	16800	16800	142	8.6
1FG1510-.....-..G1	12.56	5425/432	1330	1330	2260	346	4350	7.08	16100	16100	141.9	11.4
1FG1510-.....-..F1	10.76	775/72	1250	1250	2120	404	4350	7.08	15500	15500	141.7	15.3
1FG1510-.....-..E1	10.51	6727/640	845	845	1430	428	4500	10.76	16100	16100	95.7	6.4
1FG1510-.....-..D1	9.02	33201/3680	800	800	1360	499	4500	10.76	15500	15500	94.5	7.7
1FG1510-.....-..C1	7.97	31899/4000	770	770	1300	565	4500	10.76	15000	15000	94.2	9.8
1FG1510-.....-..B1	6.78	217/32	720	720	1220	656	4449	10.76	14400	14400	94.1	13
1FG1510-.....-..A1	5.81	93/16	675	675	1140	749	4350	10.76	13800	13800	93.8	17.5

Selection and ordering data

Shaft design, encoder system, mounting type and special designs

Gearbox type *K89*

		Servo bevel geared motors SIMOTICS S-1FG1 Article No.																				
		1FG1510-	■	■	.	.	.	.	-	.	■	.	.	.	**-Z**
Shaft design:	Solid shaft with feather keyway – Design 1		**1**																			
	Hollow-shaft with feather keyway – Design 1 – H50		**5**																			
Order codes and Descriptions see chapter "Options"	Special shaft design		**9**																			
Encoder system for motors with DRIVE-CLiQ interface:	AS20DQI encoder			**Q**																		
	AM20DQI encoder			**R**																		
	R14DQ resolver			**P**																		
	R15DQ resolver			**U**																		
Order codes and Descriptions see chapter "Options"	Special version encoder system			**Z**																		
Mounting type:	Foot-mounted design										**A**											
	Flange-mounted design										**F**											
	Housing flange design										**H**											
	Shaft-mounted design (not possible with solid shaft)										**C**											
Special designs (Options): Order codes and Descriptions see chapter "Options" The following order codes must be added to each article number: • Oil type – order codes **K06** or **K11** • Mounting position – order codes **D11** ... **D16** or **D21** ... **D26**																						**-Z**
Selection of 3-stages servo bevel geared motors with gearbox size 89 from next page.		**1FG1510-**	.	.	■	■	■	-	■	.	■	■	**-Z**									

[1] Data are for option reduced-backlash version – order code **G99** required.

© Siemens 2019

Gearbox size 89, 3-stage – 1FG1510

Selection and ordering data (continued)

For line voltage 380 ... 480 V 3 AC (DC link voltage 510 ... 720 V DC) **– Gearbox type** ***K89***

Geared motor torque at 1450 rpm
Note: All values in **bold** print are maximum gearbox values.
M_{2dyn}
Nm

Servo bevel geared motors SIMOTICS S-1FG1
Article No.

Max. output speed n_{2max} = **19 rpm**, Transmission ratio i = **231.8**																					
–	–	–	–	–	–	–	–	–	–	–	–	–	–	–	–	–	–	–	–	–	1FG1510- . . ■ ■ 6 - ■ . K2 -Z
–	–	–	–	–	–	–	**1610**	**1610**	**1610**	**1610**	**1610**	–	–	–	–	–	–	–	–	–	1FG1510- . . ■ ■ 4 - ■ . K2 -Z
–	–	–	–	–	–	–	**1610**	**1610**	**1610**	**1610**	**1610**	–	–	–	–	–	–	–	–	–	1FG1510- . . ■ ■ 3 - ■ . K2 -Z
–	–	–	–	–	–	–	**1610**	–	**1610**	**1610**	**1610**	–	–	–	–	–	–	–	–	–	1FG1510- . . ■ ■ 2 - ■ . K2 -Z
Max. output speed n_{2max} = **21 rpm**, Transmission ratio i = **210.72**																					
–	–	–	–	–	–	–	–	–	–	–	–	–	–	–	–	–	–	–	–	–	1FG1510- . . ■ ■ 6 - ■ . J2 -Z
–	–	–	–	–	–	–	**1610**	**1610**	**1610**	**1610**	**1610**	–	–	–	–	–	–	–	–	–	1FG1510- . . ■ ■ 4 - ■ . J2 -Z
–	–	–	–	–	–	–	**1610**	**1610**	**1610**	**1610**	**1610**	–	–	–	–	–	–	–	–	–	1FG1510- . . ■ ■ 3 - ■ . J2 -Z
–	–	–	–	–	–	–	**1610**	–	**1610**	**1610**	**1610**	–	–	–	–	–	–	–	–	–	1FG1510- . . ■ ■ 2 - ■ . J2 -Z
Max. output speed n_{2max} = **24 rpm**, Transmission ratio i = **189.01**																					
–	–	–	–	–	–	–	–	–	–	–	–	–	–	–	–	–	–	–	–	–	1FG1510- . . ■ ■ 6 - ■ . H2 -Z
–	–	–	–	–	–	–	**1610**	**1610**	**1610**	**1610**	**1610**	**1610**	**1610**	**1610**	–	–	–	–	–	–	1FG1510- . . ■ ■ 4 - ■ . H2 -Z
–	–	–	–	–	–	–	**1610**	**1610**	**1610**	**1610**	**1610**	**1610**	**1610**	**1610**	**1610**	**1610**	**1610**	–	–	–	1FG1510- . . ■ ■ 3 - ■ . H2 -Z
–	–	–	–	–	–	–	**1610**	–	**1610**	**1610**	**1610**	–	**1610**	**1610**	**1610**	**1610**	**1610**	–	–	–	1FG1510- . . ■ ■ 2 - ■ . H2 -Z
Max. output speed n_{2max} = **26 rpm**, Transmission ratio i = **169.94**																					
–	–	–	–	–	–	–	–	–	–	–	–	–	–	–	–	–	–	–	–	–	1FG1510- . . ■ ■ 6 - ■ . G2 -Z
–	–	–	–	–	–	–	**1610**	**1610**	**1610**	**1610**	**1610**	**1610**	**1610**	**1610**	–	–	–	–	–	–	1FG1510- . . ■ ■ 4 - ■ . G2 -Z
–	–	–	–	–	–	–	**1610**	**1610**	**1610**	**1610**	**1610**	**1610**	**1610**	**1610**	**1610**	**1610**	**1610**	–	–	–	1FG1510- . . ■ ■ 3 - ■ . G2 -Z
–	–	–	–	–	–	–	**1610**	–	**1610**	**1610**	**1610**	–	**1610**	**1610**	**1610**	**1610**	**1610**	–	–	–	1FG1510- . . ■ ■ 2 - ■ . G2 -Z
Max. output speed n_{2max} = **29 rpm**, Transmission ratio i = **153.7**																					
–	–	–	–	–	–	–	–	–	–	–	–	–	–	–	–	–	–	–	–	–	1FG1510- . . ■ ■ 6 - ■ . F2 -Z
–	–	–	–	–	–	–	**1610**	**1610**	**1610**	**1610**	**1610**	**1610**	**1610**	**1610**	–	–	–	–	–	–	1FG1510- . . ■ ■ 4 - ■ . F2 -Z
–	–	–	–	–	–	–	**1610**	**1610**	**1610**	**1610**	**1610**	**1610**	**1610**	**1610**	**1610**	**1610**	**1610**	–	–	–	1FG1510- . . ■ ■ 3 - ■ . F2 -Z
–	–	–	–	–	–	–	**1610**	–	**1610**	**1610**	**1610**	–	**1610**	**1610**	**1610**	**1610**	**1610**	–	–	–	1FG1510- . . ■ ■ 2 - ■ . F2 -Z
Max. output speed n_{2max} = **32 rpm**, Transmission ratio i = **141.88**																					
–	–	–	–	–	–	–	–	–	–	–	–	–	–	–	–	–	–	–	–	–	1FG1510- . . ■ ■ 6 - ■ . E2 -Z
–	–	–	–	–	–	–	**1610**	**1610**	**1610**	**1610**	**1610**	**1610**	**1610**	**1610**	–	–	–	–	–	–	1FG1510- . . ■ ■ 4 - ■ . E2 -Z
–	–	–	–	–	–	–	**1610**	**1610**	**1610**	**1610**	**1610**	**1610**	**1610**	**1610**	**1610**	**1610**	**1610**	–	–	–	1FG1510- . . ■ ■ 3 - ■ . E2 -Z
–	–	–	–	–	–	–	**1610**	–	**1610**	**1610**	**1610**	–	**1610**	**1610**	**1610**	**1610**	**1610**	–	–	–	1FG1510- . . ■ ■ 2 - ■ . E2 -Z
Max. output speed n_{2max} = **35 rpm**, Transmission ratio i = **129.96**																					
–	–	–	–	–	–	–	–	–	–	–	–	–	–	–	–	–	–	–	–	–	1FG1510- . . ■ ■ 6 - ■ . D2 -Z
–	–	–	–	–	–	–	**1610**	**1610**	**1610**	**1610**	**1610**	**1610**	**1610**	**1610**	–	–	–	–	–	–	1FG1510- . . ■ ■ 4 - ■ . D2 -Z
–	–	–	–	–	–	–	**1610**	**1610**	**1610**	**1610**	**1610**	**1610**	**1610**	**1610**	**1610**	**1610**	**1610**	**1610**	**1610**	**1610**	1FG1510- . . ■ ■ 3 - ■ . D2 -Z
–	–	–	–	–	–	–	**1610**	–	**1610**	**1610**	**1610**	–	**1610**	**1610**	**1610**	**1610**	**1610**	**1610**	**1610**	**1610**	1FG1510- . . ■ ■ 2 - ■ . D2 -Z

Motor shaft height:

| | | | | | | | | | | | | | | | | | | |

© Siemens 2019

For line voltage 380 ... 480 V 3 AC (DC link voltage 510 ... 720 V DC) **– Gearbox type** ***K89***

Geared motor torque at 1450 rpm
Note: All values in **bold** print are maximum gearbox values.
M_{2dyn}
Nm

																						Article No.
Max. output speed n_{2max} = 41 rpm, Transmission ratio i = 109.04																						
–	–	–	–	–	–	–	–	–	–	–	–	–	–	–	–	–	–	–	–	–	–	1FG1510- . . ■ ■ 6 - ■ . C2 -Z
–	–	–	–	–	–	–	**1610**	**1610**	**1610**	**1610**	**1610**	**1610**	**1610**	**1610**	–	–	–	–	–	–	–	1FG1510- . . ■ ■ 4 - ■ . C2 -Z
–	–	–	–	–	–	–	**1610**	**1610**	**1610**	**1610**	**1610**	**1610**	**1610**	**1610**	**1610**	**1610**	**1610**	**1610**	**1610**	**1610**	**1610**	1FG1510- . . ■ ■ 3 - ■ . C2 -Z
–	–	–	–	–	–	–	**1610**	–	**1610**	**1610**	**1610**	–	**1610**	**1610**	**1610**	**1610**	**1610**	**1610**	**1610**	**1610**	**1610**	1FG1510- . . ■ ■ 2 - ■ . C2 -Z
Max. output speed n_{2max} = 44 rpm, Transmission ratio i = 102.63																						
–	–	–	–	–	–	–	–	–	–	–	–	–	–	–	–	–	–	–	–	–	–	1FG1510- . . ■ ■ 6 - ■ . B2 -Z
–	–	–	–	–	–	–	**1610**	**1610**	**1610**	**1610**	**1610**	**1610**	**1610**	**1610**	–	–	–	–	–	–	–	1FG1510- . . ■ ■ 4 - ■ . B2 -Z
–	–	–	–	–	–	–	**1610**	**1610**	**1610**	**1610**	**1610**	**1610**	**1610**	**1610**	**1610**	**1610**	**1610**	**1610**	**1610**	**1610**	**1610**	1FG1510- . . ■ ■ 3 - ■ . B2 -Z
–	–	–	–	–	–	–	**1610**	–	**1610**	**1610**	**1610**	–	**1610**	**1610**	**1610**	**1610**	**1610**	**1610**	**1610**	**1610**	**1610**	1FG1510- . . ■ ■ 2 - ■ . B2 -Z
Max. output speed n_{2max} = 48 rpm, Transmission ratio i = 94.16																						
–	–	–	–	–	–	–	–	–	–	–	–	–	–	–	–	–	–	–	–	–	–	1FG1510- . . ■ ■ 6 - ■ . A2 -Z
–	–	–	–	–	–	–	1580	1520	**1610**	**1610**	**1610**	**1610**	**1610**	**1610**	–	–	–	–	–	–	–	1FG1510- . . ■ ■ 4 - ■ . A2 -Z
–	–	–	–	–	–	–	1580	1520	**1610**	**1610**	**1610**	**1610**	**1610**	**1610**	**1610**	**1610**	**1610**	**1610**	**1610**	**1610**	**1610**	1FG1510- . . ■ ■ 3 - ■ . A2 -Z
–	–	–	–	–	–	–	1580	–	**1610**	**1610**	**1610**	–	**1610**	**1610**	**1610**	**1610**	**1610**	**1610**	**1610**	**1610**	**1610**	1FG1510- . . ■ ■ 2 - ■ . A2 -Z
Max. output speed n_{2max} = 55 rpm, Transmission ratio i = 82.25																						
–	–	–	–	–	–	–	–	–	–	–	–	–	–	–	–	–	–	–	–	–	–	1FG1510- . . ■ ■ 6 - ■ . X1 -Z
–	–	–	–	–	–	–	1380	1330	**1610**	**1610**	**1610**	**1610**	**1610**	**1610**	–	–	–	–	–	–	–	1FG1510- . . ■ ■ 4 - ■ . X1 -Z
–	–	–	–	–	–	–	1380	1330	**1610**	**1610**	**1610**	**1610**	**1610**	**1610**	**1610**	**1610**	**1610**	**1610**	**1610**	**1610**	**1610**	1FG1510- . . ■ ■ 3 - ■ . X1 -Z
–	–	–	–	–	–	–	1380	–	**1610**	**1610**	**1610**	–	**1610**	**1610**	**1610**	**1610**	**1610**	**1610**	**1610**	**1610**	**1610**	1FG1510- . . ■ ■ 2 - ■ . X1 -Z
Max. output speed n_{2max} = 61 rpm, Transmission ratio i = 73.64																						
–	–	–	–	–	–	–	–	–	–	–	–	–	–	–	–	–	–	–	–	–	–	1FG1510- . . ■ ■ 6 - ■ . W1 -Z
–	–	–	–	–	–	–	1240	1190	**1610**	**1610**	**1610**	**1610**	**1610**	**1610**	–	–	–	–	–	–	–	1FG1510- . . ■ ■ 4 - ■ . W1 -Z
–	–	–	–	–	–	–	1240	1190	**1610**	**1610**	**1610**	**1610**	**1610**	**1610**	**1610**	**1610**	**1610**	**1610**	**1610**	**1610**	**1610**	1FG1510- . . ■ ■ 3 - ■ . W1 -Z
–	–	–	–	–	–	–	1240	–	**1610**	**1610**	**1610**	–	**1610**	**1610**	**1610**	**1610**	**1610**	**1610**	**1610**	**1610**	**1610**	1FG1510- . . ■ ■ 2 - ■ . W1 -Z
Max. output speed n_{2max} = 70 rpm, Transmission ratio i = 64.39																						
–	–	–	–	–	–	–	–	–	–	–	–	–	–	–	–	–	–	–	–	–	–	1FG1510- . . ■ ■ 6 - ■ . V1 -Z
–	–	–	–	–	–	–	1090	1040	1570	**1610**	**1610**	1510	**1610**	**1610**	–	–	–	–	–	–	–	1FG1510- . . ■ ■ 4 - ■ . V1 -Z
–	–	–	–	–	–	–	1090	1040	1570	**1610**	**1610**	1510	**1610**	**1610**	**1610**	**1610**	**1610**	**1610**	**1610**	**1610**	**1610**	1FG1510- . . ■ ■ 3 - ■ . V1 -Z
–	–	–	–	–	–	–	1090	–	1570	**1610**	**1610**	–	**1610**	**1610**	**1610**	**1610**	**1610**	**1610**	**1610**	**1610**	**1610**	1FG1510- . . ■ ■ 2 - ■ . V1 -Z
Max. output speed n_{2max} = 81 rpm, Transmission ratio i = 55.27																						
–	–	–	–	–	–	–	–	–	–	–	–	–	–	–	–	–	–	–	–	–	–	1FG1510- . . ■ ■ 6 - ■ . U1 -Z
–	–	–	–	–	–	–	935	900	1350	**1610**	**1610**	1300	**1610**	**1610**	–	–	–	–	–	–	–	1FG1510- . . ■ ■ 4 - ■ . U1 -Z
–	–	–	–	–	–	–	935	900	1350	**1610**	**1610**	1300	**1610**	**1610**	**1610**	**1610**	**1610**	**1610**	**1610**	**1610**	**1610**	1FG1510- . . ■ ■ 3 - ■ . U1 -Z
–	–	–	–	–	–	–	935	–	1350	**1610**	**1610**	–	**1610**	**1610**	**1610**	**1610**	**1610**	**1610**	**1610**	**1610**	**1610**	1FG1510- . . ■ ■ 2 - ■ . U1 -Z
Max. output speed n_{2max} = 92 rpm, Transmission ratio i = 48.85																						
–	–	–	–	–	–	–	–	–	–	–	–	–	–	–	–	–	–	–	–	–	–	1FG1510- . . ■ ■ 6 - ■ . T1 -Z
–	–	–	–	–	–	–	830	795	1190	1610	1470	1150	**1610**	**1610**	–	–	–	–	–	–	–	1FG1510- . . ■ ■ 4 - ■ . T1 -Z
–	–	–	–	–	–	–	830	795	1190	1610	1470	1150	**1610**	**1610**	**1610**	**1610**	**1610**	**1610**	**1610**	**1610**	**1610**	1FG1510- . . ■ ■ 3 - ■ . T1 -Z
–	–	–	–	–	–	–	830	–	1190	1610	1470	–	**1610**	**1610**	**1610**	**1610**	**1610**	**1610**	**1610**	**1610**	**1610**	1FG1510- . . ■ ■ 2 - ■ . T1 -Z

Motor shaft height:

36																						**C**
			48																			**D**
							63															**E**
												80										**F**
																	100					**G**

Motor length/motor version (**CT** = Compact, **HD** = High Dynamic)**:**

			0/CT				**0/CT**				**0/CT**						**0/CT**					**0**	**2**
												1/CT						**1/CT**				**1**	**2**
								1/HD														**1**	**4**
2/CT				**2/CT**					**2/CT**													**2**	**2**
										3/CT				**3/CT**					**3/CT**			**3**	**2**
	3/HD				**3/HD**																	**3**	**4**
		4/CT														**4/CT**						**4**	**2**
						4/HD					**4/HD**											**4**	**4**
																				5/CT		**5**	**2**
															5/HD							**5**	**4**
																6/HD						**6**	**4**

Selection of Shaft design, encoder system, mounting type and special designs on page 5/49.

1FG1510- ■ ■ . . . - . ■ . . -Z

© Siemens 2019

Gearbox size 89, 3-stage – 1FG1510

For line voltage 380 ... 480 V 3 AC (DC link voltage 510 ... 720 V DC) **– Gearbox type** *K89*

Geared motor torque at 1450 rpm
Note: All values in **bold** print are maximum gearbox values.
M_{2dyn} Nm

																						Servo bevel geared motors SIMOTICS S-1FG1 Article No.
Max. output speed n_{2max} = 108 rpm, Transmission ratio i = 41.54																						
–	–	–	–	–	–	–	–	–	–	–	–	–	–	–	–	–	–	–	–	–	–	1FG1510- . . ■ ■ 6 - ■ . S1 -Z
–	–	–	–	–	–	–	–	–	–	–	–	980	1450	**1570**	–	–	–	–	–	–	–	1FG1510- . . ■ ■ 4 - ■ . S1 -Z
–	–	–	–	–	–	–	–	–	–	–	–	980	1450	**1570**	**1570**	**1570**	**1570**	**1570**	**1570**	**1570**	**1570**	1FG1510- . . ■ ■ 3 - ■ . S1 -Z
–	–	–	–	–	–	–	–	–	–	–	–	–	1450	**1570**	**1570**	**1570**	**1570**	**1570**	**1570**	**1570**	**1570**	1FG1510- . . ■ ■ 2 - ■ . S1 -Z
Max. output speed n_{2max} = 115 rpm, Transmission ratio i = 39.29																						
–	–	–	–	–	–	–	–	–	–	–	–	–	–	–	–	–	–	–	–	–	–	1FG1510- . . ■ ■ 6 - ■ . R1 -Z
–	–	–	–	–	–	–	665	640	965	1290	1180	925	1370	**1610**	–	–	–	–	–	–	–	1FG1510- . . ■ ■ 4 - ■ . R1 -Z
–	–	–	–	–	–	–	665	640	965	1290	1180	925	1370	**1610**	**1610**	**1610**	**1610**	**1610**	**1610**	**1610**	**1610**	1FG1510- . . ■ ■ 3 - ■ . R1 -Z
–	–	–	–	–	–	–	665	–	965	1290	1180	–	1370	**1610**	**1610**	**1610**	**1610**	**1610**	**1610**	**1610**	**1610**	1FG1510- . . ■ ■ 2 - ■ . R1 -Z
Max. output speed n_{2max} = 137 rpm, Transmission ratio i = 32.96																						
–	–	–	–	–	–	–	–	–	–	–	–	–	–	–	–	–	–	–	–	–	–	1FG1510- . . ■ ■ 6 - ■ . Q1 -Z
–	–	–	–	–	–	–	560	535	810	1090	995	775	1150	1550	–	–	–	–	–	–	–	1FG1510- . . ■ ■ 4 - ■ . Q1 -Z
–	–	–	–	–	–	–	560	535	810	1090	995	775	1150	1550	**1610**	**1610**	**1610**	**1610**	**1610**	**1610**	**1610**	1FG1510- . . ■ ■ 3 - ■ . Q1 -Z
–	–	–	–	–	–	–	560	–	810	1090	995	–	1150	1550	**1610**	**1610**	**1610**	**1610**	**1610**	**1610**	**1610**	1FG1510- . . ■ ■ 2 - ■ . Q1 -Z
Max. output speed n_{2max} = 145 rpm, Transmission ratio i = 31.03																						
–	–	–	–	–	–	–	–	–	–	–	–	–	–	–	–	–	–	–	–	–	–	1FG1510- . . ■ ■ 6 - ■ . P1 -Z
–	–	–	–	–	–	–	530	505	765	1030	940	735	1090	1470	–	–	–	–	–	–	–	1FG1510- . . ■ ■ 4 - ■ . P1 -Z
–	–	–	–	–	–	–	530	505	765	1030	940	735	1090	1470	**1610**	**1610**	**1610**	**1610**	**1610**	**1610**	**1610**	1FG1510- . . ■ ■ 3 - ■ . P1 -Z
–	–	–	–	–	–	–	530	–	765	1030	940	–	1090	1470	**1610**	**1610**	**1610**	**1610**	**1610**	**1610**	**1610**	1FG1510- . . ■ ■ 2 - ■ . P1 -Z
Max. output speed n_{2max} = 158 rpm, Transmission ratio i = 28.46																						
–	–	–	–	–	–	–	–	–	–	–	–	–	–	–	–	–	–	–	–	–	–	1FG1510- . . ■ ■ 6 - ■ . N1 -Z
–	–	–	–	–	–	–	485	465	700	945	865	675	1000	1350	–	–	–	–	–	–	–	1FG1510- . . ■ ■ 4 - ■ . N1 -Z
–	–	–	–	–	–	–	485	465	700	945	865	675	1000	1350	**1610**	**1610**	**1610**	**1490**	**1610**	**1610**	**1610**	1FG1510- . . ■ ■ 3 - ■ . N1 -Z
–	–	–	–	–	–	–	485	–	700	945	865	–	1000	1350	**1610**	**1610**	**1610**	**1490**	**1610**	**1610**	**1610**	1FG1510- . . ■ ■ 2 - ■ . N1 -Z
Max. output speed n_{2max} = 181 rpm, Transmission ratio i = 24.86																						
–	–	–	–	–	–	–	–	–	–	–	–	–	–	–	–	–	–	–	–	–	–	1FG1510- . . ■ ■ 6 - ■ . M1 -Z
–	–	–	–	–	–	–	425	405	615	825	755	590	875	1180	–	–	–	–	–	–	–	1FG1510- . . ■ ■ 4 - ■ . M1 -Z
–	–	–	–	–	–	–	425	405	615	825	755	590	875	1180	1440	1530	**1610**	1300	**1610**	**1610**	**1610**	1FG1510- . . ■ ■ 3 - ■ . M1 -Z
–	–	–	–	–	–	–	425	–	615	825	755	–	875	1180	1440	1530	**1610**	1300	**1610**	**1610**	**1610**	1FG1510- . . ■ ■ 2 - ■ . M1 -Z
Max. output speed n_{2max} = 202 rpm, Transmission ratio i = 22.26																						
–	–	–	–	–	–	–	–	–	–	–	–	–	–	–	–	–	–	–	–	–	–	1FG1510- . . ■ ■ 6 - ■ . L1 -Z
–	–	–	–	–	–	–	380	365	550	740	675	525	780	1050	–	–	–	–	–	–	–	1FG1510- . . ■ ■ 4 - ■ . L1 -Z
–	–	–	–	–	–	–	380	365	550	740	675	525	780	1050	1290	1370	**1610**	1160	**1610**	**1610**	**1610**	1FG1510- . . ■ ■ 3 - ■ . L1 -Z
–	–	–	–	–	–	–	380	–	550	740	675	–	780	1050	1290	1370	**1610**	1160	**1610**	**1610**	**1610**	1FG1510- . . ■ ■ 2 - ■ . L1 -Z
Max. output speed n_{2max} = 224 rpm, Transmission ratio i = 19.46																						
–	–	–	–	–	–	–	–	–	–	–	–	–	–	–	–	–	–	–	–	–	–	1FG1510- . . ■ ■ 6 - ■ . K1 -Z
–	–	–	–	–	–	–	330	320	480	650	590	460	685	925	–	–	–	–	–	–	–	1FG1510- . . ■ ■ 4 - ■ . K1 -Z
–	–	–	–	–	–	–	330	320	480	650	590	460	685	925	1130	1200	**1560**	1020	1480	**1560**	**1560**	1FG1510- . . ■ ■ 3 - ■ . K1 -Z
–	–	–	–	–	–	–	330	–	480	650	590	–	685	925	1130	1200	**1560**	1020	1480	**1560**	**1560**	1FG1510- . . ■ ■ 2 - ■ . K1 -Z

Motor shaft height:

36																						**C**	
			48																			**D**	
							63															**E**	
												80										**F**	
																		100				**G**	

Motor length/motor version (**CT** = Compact, **HD** = High Dynamic)**:**

			0/CT				**0/CT**				**0/CT**						**0/CT**					**0**	**2**
												1/CT						**1/CT**				**1**	**2**
								1/HD														**1**	**4**
2/CT				**2/CT**					**2/CT**													**2**	**2**
										3/CT				**3/CT**					**3/CT**			**3**	**2**
	3/HD				**3/HD**																	**3**	**4**
		4/CT													**4/CT**							**4**	**2**
						4/HD					**4/HD**											**4**	**4**
																				5/CT		**5**	**2**
																5/HD						**5**	**4**
																	6/HD					**6**	**4**

Selection of Shaft design, encoder system, mounting type and special designs on page 5/49.

1FG1510- ■ ■ . . . - . ■ . . -Z

© Siemens 2019

For line voltage 380 ... 480 V 3 AC (DC link voltage 510 ... 720 V DC) **– Gearbox type** ***K89***

Geared motor torque at 1450 rpm
Note: All values in **bold** print are maximum gearbox values.
M_{2dyn}
Nm

Servo bevel geared motors SIMOTICS S-1FG1
Article No.

Max. output speed n_{2max} = **260 rpm**, Transmission ratio i = **16.71**																						
–	–	–	–	–	–	–	–	–	–	–	–	–	–	–	–	–	–	–	–	–	–	1FG1510- . . ■ ■ 6 - ■ . J1 -Z
–	–	–	–	–	–	–	285	275	410	555	510	395	585	795	–	–	–	–	–	–	–	1FG1510- . . ■ ■ 4 - ■ . J1 -Z
–	–	–	–	–	–	–	285	275	410	555	510	395	585	795	970	1030	**1480**	875	1270	**1480**	**1480**	1FG1510- . . ■ ■ 3 - ■ . J1 -Z
–	–	–	–	–	–	–	285	–	410	555	510	–	585	795	970	1030	**1480**	875	1270	**1480**	**1480**	1FG1510- . . ■ ■ 2 - ■ . J1 -Z
Max. output speed n_{2max} = **295 rpm**, Transmission ratio i = **14.77**																						
–	–	–	–	–	–	–	–	–	–	–	–	–	–	–	–	–	–	–	–	–	–	1FG1510- . . ■ ■ 6 - ■ . H1 -Z
–	–	–	–	–	–	–	250	240	365	490	450	350	520	705	–	–	–	–	–	–	–	1FG1510- . . ■ ■ 4 - ■ . H1 -Z
–	–	–	–	–	–	–	250	240	365	490	450	350	520	705	860	915	1320	775	1120	**1420**	**1420**	1FG1510- . . ■ ■ 3 - ■ . H1 -Z
–	–	–	–	–	–	–	250	–	365	490	450	–	520	705	860	915	1320	775	1120	**1420**	**1420**	1FG1510- . . ■ ■ 2 - ■ . H1 -Z
Max. output speed n_{2max} = **346 rpm**, Transmission ratio i = **12.56**																						
–	–	–	–	–	–	–	–	–	–	–	–	–	–	–	–	–	–	–	–	–	–	1FG1510- . . ■ ■ 6 - ■ . G1 -Z
–	–	–	–	–	–	–	–	–	–	–	–	300	440	600	–	–	–	–	–	–	–	1FG1510- . . ■ ■ 4 - ■ . G1 -Z
–	–	–	–	–	–	–	–	–	–	–	–	300	440	600	730	780	1130	660	960	1290	**1330**	1FG1510- . . ■ ■ 3 - ■ . G1 -Z
–	–	–	–	–	–	–	–	–	–	–	–	–	440	600	730	780	1130	660	960	1290	**1330**	1FG1510- . . ■ ■ 2 - ■ . G1 -Z
Max. output speed n_{2max} = **404 rpm**, Transmission ratio i = **10.76**																						
–	–	–	–	–	–	–	–	–	–	–	–	–	–	–	–	–	–	–	–	–	–	1FG1510- . . ■ ■ 6 - ■ . F1 -Z
–	–	–	–	–	–	–	–	–	–	–	–	255	375	510	–	–	–	–	–	–	–	1FG1510- . . ■ ■ 4 - ■ . F1 -Z
–	–	–	–	–	–	–	–	–	–	–	–	255	375	510	625	665	965	560	820	1100	**1250**	1FG1510- . . ■ ■ 3 - ■ . F1 -Z
–	–	–	–	–	–	–	–	–	–	–	–	–	375	510	625	665	965	560	820	1100	**1250**	1FG1510- . . ■ ■ 2 - ■ . F1 -Z
Max. output speed n_{2max} = **428 rpm**, Transmission ratio i = **10.51**																						
–	–	–	–	–	–	–	–	–	–	–	–	–	–	–	–	–	–	–	–	–	–	1FG1510- . . ■ ■ 6 - ■ . E1 -Z
–	–	–	–	–	–	–	182	175	260	350	320	250	370	505	–	–	–	–	–	–	–	1FG1510- . . ■ ■ 4 - ■ . E1 -Z
–	–	–	–	–	–	–	182	175	260	350	320	250	370	505	615	655	**845**	555	805	**845**	**845**	1FG1510- . . ■ ■ 3 - ■ . E1 -Z
–	–	–	–	–	–	–	182	–	260	350	320	–	370	505	615	655	**845**	555	805	**845**	**845**	1FG1510- . . ■ ■ 2 - ■ . E1 -Z
Max. output speed n_{2max} = **499 rpm**, Transmission ratio i = **9.02**																						
–	–	–	–	–	–	–	–	–	–	–	–	–	–	–	–	–	–	–	–	–	–	1FG1510- . . ■ ■ 6 - ■ . D1 -Z
–	–	–	–	–	–	–	156	150	225	300	275	215	320	430	–	–	–	–	–	–	–	1FG1510- . . ■ ■ 4 - ■ . D1 -Z
–	–	–	–	–	–	–	156	150	225	300	275	215	320	430	525	560	**800**	475	690	**800**	**800**	1FG1510- . . ■ ■ 3 - ■ . D1 -Z
–	–	–	–	–	–	–	156	–	225	300	275	–	320	430	525	560	**800**	475	690	**800**	**800**	1FG1510- . . ■ ■ 2 - ■ . D1 -Z
Max. output speed n_{2max} = **565 rpm**, Transmission ratio i = **7.97**																						
–	–	–	–	–	–	–	–	–	–	–	–	–	–	–	–	–	–	–	–	–	–	1FG1510- . . ■ ■ 6 - ■ . C1 -Z
–	–	–	–	–	–	–	138	132	199	265	245	191	280	380	–	–	–	–	–	–	–	1FG1510- . . ■ ■ 4 - ■ . C1 -Z
–	–	–	–	–	–	–	138	132	199	265	245	191	280	380	465	495	720	420	610	**770**	**770**	1FG1510- . . ■ ■ 3 - ■ . C1 -Z
–	–	–	–	–	–	–	138	–	199	265	245	–	280	380	465	495	720	420	610	**770**	**770**	1FG1510- . . ■ ■ 2 - ■ . C1 -Z

Motor shaft height:

36																						**C**
			48																			**D**
							63															**E**
												80										**F**
																		100				**G**

Motor length/motor version (**CT** = Compact, **HD** = High Dynamic)**:**

			0/CT				**0/CT**					**0/CT**						**0/CT**					**0**	**2**
													1/CT						**1/CT**				**1**	**2**
								1/HD															**1**	**4**
2/CT				**2/CT**					**2/CT**														**2**	**2**
										3/CT					**3/CT**					**3/CT**			**3**	**2**
	3/HD				**3/HD**																		**3**	**4**
		4/CT													**4/CT**								**4**	**2**
						4/HD					**4/HD**													**4**	**4**
																				5/CT			**5**	**2**
																5/HD							**5**	**4**
																	6/HD						**6**	**4**

Selection of Shaft design, encoder system, mounting type and special designs on page 5/49.

1FG1510- ■ ■ . . . - . ■ . . -Z

© Siemens 2019

Gearbox size 89, 3-stage – 1FG1510

For line voltage 380 ... 480 V 3 AC (DC link voltage 510 ... 720 V DC) **– Gearbox type** ***K89***

Geared motor torque at 1450 rpm
Note: All values in **bold** print are maximum gearbox values.
M_{2dyn}
Nm

Servo bevel geared motors SIMOTICS S-1FG1
Article No.

36	48	63	80	100	Motor shaft height:	Motor length/motor version (**CT** = Compact, **HD** = High Dynamic):	Article No.
Max. output speed n_{2max} = 656 rpm, Transmission ratio i = 6.78							
– – – – – – – – – – – –	– – –	– – –	– – –	– – –			1FG1510- . . ■ ■ 6 - ■ . B1 -Z
– – – – – – – – – – – –	163 240 325	– – –	– – –	– – –			1FG1510- . . ■ ■ 4 - ■ . B1 -Z
– – – – – – – – – – – –	163 240 325	395 420 615	355 520 705	**720**			1FG1510- . . ■ ■ 3 - ■ . B1 -Z
– – – – – – – – – – – –	– 240 325	395 420 615	355 520 705	**720**			1FG1510- . . ■ ■ 2 - ■ . B1 -Z
Max. output speed n_{2max} = 749 rpm, Transmission ratio i = 5.81							
– – – – – – – – – – – –	– – –	– – –	– – –	– – –			1FG1510- . . ■ ■ 6 - ■ . A1 -Z
– – – – – – – – – – – –	139 205 275	– – –	– – –	– – –			1FG1510- . . ■ ■ 4 - ■ . A1 -Z
– – – – – – – – – – – –	139 205 275	340 360 525	305 445 600	**675**			1FG1510- . . ■ ■ 3 - ■ . A1 -Z
– – – – – – – – – – – –	– 205 275	340 360 525	305 445 600	**675**			1FG1510- . . ■ ■ 2 - ■ . A1 -Z
36					**C**		
	48				**D**		
		63			**E**		
			80		**F**		
				100	**G**		
						0/CT	**0** **2**
						1/CT	**1** **2**
						1/HD	**1** **4**
						2/CT	**2** **2**
						3/CT	**3** **2**
						3/HD	**3** **4**
						4/CT	**4** **2**
						4/HD	**4** **4**
						5/CT	**5** **2**
						5/HD	**5** **4**
						6/HD	**6** **4**

Selection of Shaft design, encoder system, mounting type and special designs on page 5/49.

1FG1510- ■ ■ . . . . - . ■ . . **-Z**

© Siemens 2019

Technical specifications

Gearbox type *K109*

Servo geared motor Type	i	R_{ex}	M_{2rated} Nm	M_{2max} Nm	$M_{2Em.Off}$ Nm	n_{2max} rpm	n_{1max} rpm	φ [1] '	F_{R2} N	F_{R2max} N	c_T Nm/ '	J_G 10^{-4} kgm^2
1FG1511-.....-..H2	216.65	107242/495	2900	3070	4930	21	4500	5.60	24500	24500	291	1.3
1FG1511-.....-..G2	195.6	118336/605	2900	3070	4930	23	4500	5.60	24500	24500	291	1.4
1FG1511-.....-..F2	177.43	35131/198	2900	3070	4930	25	4500	5.60	24500	24500	291	1.6
1FG1511-.....-..E2	163.78	70262/429	2900	3070	4930	27	4500	5.60	24500	24500	291	1.9
1FG1511-.....-..D2	148.88	57319/385	2900	3070	4930	30	4500	5.61	24500	24500	291	2.1
1FG1511-.....-..C2	126.07	5547/44	2900	3050	4930	36	4500	5.63	24500	24500	291	2.6
1FG1511-.....-..B2	118.65	22188/187	2900	3030	4930	38	4500	5.63	24500	24500	290.9	2.6
1FG1511-.....-..A2	109.57	14792/135	2900	3030	4930	41	4500	5.64	24500	24500	291.1	4
1FG1511-.....-..X1	97.49	53621/550	2900	3030	4930	46	4500	5.64	24500	24500	291.1	5
1FG1511-.....-..W1	86.59	31433/363	2900	3030	4930	52	4500	5.65	24500	24500	291	6
1FG1511-.....-..V1	77.51	153467/1980	2900	3030	4930	58	4500	5.67	24500	24500	290.9	5.9
1FG1511-.....-..U1	66.26	251464/3795	2900	3030	4930	68	4500	5.69	24500	24500	290.9	6.8
1FG1511-.....-..T1	59.17	7396/125	2900	3030	4930	76	4500	5.76	24500	24500	290.9	8.6
1FG1511-.....-..S1	52.29	25886/495	2900	3030	4930	86	4500	5.78	24500	24500	290.7	9.7
1FG1511-.....-..R1	45.89	159014/3465	2900	3030	4930	98	4500	5.80	24500	24500	290.8	13.6
1FG1511-.....-..Q1	39.95	151618/3795	2820	3020	4790	113	4500	5.80	23600	23100	290.8	16.4
1FG1511-.....-..P1	34.15	118336/3465	2710	2910	4600	127	4350	5.78	22000	22000	290.7	21
1FG1511-.....-..N1	29.23	7396/253	2620	2800	4450	149	4350	5.82	20900	20900	290.6	25
1FG1511-.....-..M1	24.98	163744/6555	2380	2520	4040	180	4500	6.88	20100	20500	260.9	9.9
1FG1511-.....-..L1	22.31	52976/2375	2380	2510	4040	202	4500	7.08	19100	19500	261	12.5
1FG1511-.....-..K1	19.71	16856/855	2380	2510	4040	228	4500	7.13	18000	18500	260.1	14.7
1FG1511-.....-..J1	17.3	14792/855	2400	2510	4080	260	4500	7.10	17200	17400	260.7	20
1FG1511-.....-..H1	15.06	98728/6555	2310	2470	3920	299	4500	7.10	16400	16400	260.3	25
1FG1511-.....-..G1	12.87	11008/855	2200	2350	3740	350	4500	7.13	15700	15700	260.1	33
1FG1511-.....-..F1	11.02	4816/437	2100	2250	3570	408	4500	7.24	15000	15000	259.6	43
1FG1511-.....-..E1	10.45	784/75	1260	1330	2140	431	4500	10.81	17100	17400	181.1	16.8
1FG1511-.....-..D1	9.17	688/75	1270	1330	2150	491	4500	10.80	16300	16500	182	23
1FG1511-.....-..C1	7.99	4592/575	1280	1330	2170	563	4500	10.80	15300	15600	181.5	29
1FG1511-.....-..B1	6.83	512/75	1300	1320	2210	659	4500	10.82	14400	14600	181.1	38
1FG1511-.....-..A1	5.84	672/115	1300	1320	2210	771	4500	11.02	13400	13700	180.2	49

Selection and ordering data

Shaft design, encoder system, mounting type and special designs

Gearbox type *K109*

			Servo bevel geared motors SIMOTICS S-1FG1 Article No.
			1FG1511- ■ ■ . . . - . ■ . . **-Z**
Shaft design:	Solid shaft with feather keyway	– Design 1	**1**
		– Design 3	**3**
	Hollow-shaft with feather keyway	– Design 1 – H60	**5**
		– Design 3 – H70	**7**
Order codes and Descriptions see chapter "Options"	Special shaft design		**9**
Encoder system for motors with DRIVE-CLiQ interface:	AS20DQI encoder		**Q**
	AM20DQI encoder		**R**
	R14DQ resolver		**P**
	R15DQ resolver		**U**
Order codes and Descriptions see chapter "Options"	Special version encoder system		**Z**
Mounting type:	Foot-mounted design		**A**
	Flange-mounted design		**F**
	Housing flange design		**H**
	Shaft-mounted design (not possible with solid shaft)		**C**
Special designs (Options): Order codes and Descriptions see chapter "Options" The following order codes must be added to each article number: • Oil type – order codes **K06** or **K11** • Mounting position – order codes **D11** ... **D16** or **D21** ... **D26**			**-Z**
Selection of 3-stages servo bevel geared motors with gearbox size 109 from next page.			**1FG1511-** . . ■ ■ ■ - ■ . ■ ■ **-Z**

[1] Data are for option reduced-backlash version – order code **G99** required.

© Siemens 2019

Gearbox size 109, 3-stage – 1FG1511

Selection and ordering data (continued)

For line voltage 380 ... 480 V 3 AC (DC link voltage 510 ... 720 V DC) **– Gearbox type** ***K109***

Geared motor torque at 1450 rpm
Note: All values in **bold** print are maximum gearbox values.
M_{2dyn}
Nm

Servo bevel geared motors SIMOTICS S-1FG1
Article No.

Max. output speed n_{2max} = **21 rpm**, Transmission ratio i = **216.65**																					
–	–	–	–	–	–	–	–	–	–	–	–	–	–	–	–	–	–	–	–	–	1FG1511- . . ■ ■ 6 - ■ . H2 -Z
–	–	–	–	–	–	–	**3070**	**3070**	**3070**	**3070**	**3070**	**3070**	**3070**	**3070**	–	–	–	–	–	–	–	1FG1511- . . ■ ■ 4 - ■ . H2 -Z
–	–	–	–	–	–	–	**3070**	**3070**	**3070**	**3070**	**3070**	**3070**	**3070**	**3070**	**3070**	**3070**	**3070**	–	–	–	–	1FG1511- . . ■ ■ 3 - ■ . H2 -Z
–	–	–	–	–	–	–	**3070**	–	**3070**	**3070**	**3070**	–	**3070**	**3070**	**3070**	**3070**	**3070**	–	–	–	–	1FG1511- . . ■ ■ 2 - ■ . H2 -Z
Max. output speed n_{2max} = **23 rpm**, Transmission ratio i = **195.6**																					
–	–	–	–	–	–	–	–	–	–	–	–	–	–	–	–	–	–	–	–	–	–	1FG1511- . . ■ ■ 6 - ■ . G2 -Z
–	–	–	–	–	–	–	**3070**	**3070**	**3070**	**3070**	**3070**	**3070**	**3070**	**3070**	–	–	–	–	–	–	–	1FG1511- . . ■ ■ 4 - ■ . G2 -Z
–	–	–	–	–	–	–	**3070**	**3070**	**3070**	**3070**	**3070**	**3070**	**3070**	**3070**	**3070**	**3070**	**3070**	–	–	–	–	1FG1511- . . ■ ■ 3 - ■ . G2 -Z
–	–	–	–	–	–	–	**3070**	–	**3070**	**3070**	**3070**	–	**3070**	**3070**	**3070**	**3070**	**3070**	–	–	–	–	1FG1511- . . ■ ■ 2 - ■ . G2 -Z
Max. output speed n_{2max} = **25 rpm**, Transmission ratio i = **177.43**																					
–	–	–	–	–	–	–	–	–	–	–	–	–	–	–	–	–	–	–	–	–	–	1FG1511- . . ■ ■ 6 - ■ . F2 -Z
–	–	–	–	–	–	–	**2960**	**2850**	**3070**	**3070**	**3070**	**3070**	**3070**	**3070**	–	–	–	–	–	–	–	1FG1511- . . ■ ■ 4 - ■ . F2 -Z
–	–	–	–	–	–	–	**2960**	**2850**	**3070**	**3070**	**3070**	**3070**	**3070**	**3070**	**3070**	**3070**	**3070**	–	–	–	–	1FG1511- . . ■ ■ 3 - ■ . F2 -Z
–	–	–	–	–	–	–	**2960**	–	**3070**	**3070**	**3070**	–	**3070**	**3070**	**3070**	**3070**	**3070**	–	–	–	–	1FG1511- . . ■ ■ 2 - ■ . F2 -Z
Max. output speed n_{2max} = **27 rpm**, Transmission ratio i = **163.78**																					
–	–	–	–	–	–	–	–	–	–	–	–	–	–	–	–	–	–	–	–	–	–	1FG1511- . . ■ ■ 6 - ■ . E2 -Z
–	–	–	–	–	–	–	**2750**	**2640**	**3070**	**3070**	**3070**	**3070**	**3070**	**3070**	–	–	–	–	–	–	–	1FG1511- . . ■ ■ 4 - ■ . E2 -Z
–	–	–	–	–	–	–	**2750**	**2640**	**3070**	**3070**	**3070**	**3070**	**3070**	**3070**	**3070**	**3070**	**3070**	–	–	–	–	1FG1511- . . ■ ■ 3 - ■ . E2 -Z
–	–	–	–	–	–	–	**2750**	–	**3070**	**3070**	**3070**	–	**3070**	**3070**	**3070**	**3070**	**3070**	–	–	–	–	1FG1511- . . ■ ■ 2 - ■ . E2 -Z
Max. output speed n_{2max} = **30 rpm**, Transmission ratio i = **148.88**																					
–	–	–	–	–	–	–	–	–	–	–	–	–	–	–	–	–	–	–	–	–	–	1FG1511- . . ■ ■ 6 - ■ . D2 -Z
–	–	–	–	–	–	–	**2500**	**2410**	**3070**	**3070**	**3070**	**3070**	**3070**	**3070**	–	–	–	–	–	–	–	1FG1511- . . ■ ■ 4 - ■ . D2 -Z
–	–	–	–	–	–	–	**2500**	**2410**	**3070**	**3070**	**3070**	**3070**	**3070**	**3070**	**3070**	**3070**	**3070**	**3070**	**3070**	**3070**	**3070**	1FG1511- . . ■ ■ 3 - ■ . D2 -Z
–	–	–	–	–	–	–	**2500**	–	**3070**	**3070**	**3070**	–	**3070**	**3070**	**3070**	**3070**	**3070**	**3070**	**3070**	**3070**	**3070**	1FG1511- . . ■ ■ 2 - ■ . D2 -Z
Max. output speed n_{2max} = **36 rpm**, Transmission ratio i = **126.07**																					
–	–	–	–	–	–	–	–	–	–	–	–	–	–	–	–	–	–	–	–	–	–	1FG1511- . . ■ ■ 6 - ■ . C2 -Z
–	–	–	–	–	–	–	**2120**	**2040**	**3050**	**3050**	**3050**	**2950**	**3050**	**3050**	–	–	–	–	–	–	–	1FG1511- . . ■ ■ 4 - ■ . C2 -Z
–	–	–	–	–	–	–	**2120**	**2040**	**3050**	**3050**	**3050**	**2950**	**3050**	**3050**	**3050**	**3050**	**3050**	**3050**	**3050**	**3050**	**3050**	1FG1511- . . ■ ■ 3 - ■ . C2 -Z
–	–	–	–	–	–	–	**2120**	–	**3050**	**3050**	**3050**	–	**3050**	**3050**	**3050**	**3050**	**3050**	**3050**	**3050**	**3050**	**3050**	1FG1511- . . ■ ■ 2 - ■ . C2 -Z
Max. output speed n_{2max} = **38 rpm**, Transmission ratio i = **118.65**																					
–	–	–	–	–	–	–	–	–	–	–	–	–	–	–	–	–	–	–	–	–	–	1FG1511- . . ■ ■ 6 - ■ . B2 -Z
–	–	–	–	–	–	–	**2000**	**1930**	**2900**	**3030**	**3030**	**2790**	**3030**	**3030**	–	–	–	–	–	–	–	1FG1511- . . ■ ■ 4 - ■ . B2 -Z
–	–	–	–	–	–	–	**2000**	**1930**	**2900**	**3030**	**3030**	**2790**	**3030**	**3030**	**3030**	**3030**	**3030**	**3030**	**3030**	**3030**	**3030**	1FG1511- . . ■ ■ 3 - ■ . B2 -Z
–	–	–	–	–	–	–	**2000**	–	**2900**	**3030**	**3030**	–	**3030**	**3030**	**3030**	**3030**	**3030**	**3030**	**3030**	**3030**	**3030**	1FG1511- . . ■ ■ 2 - ■ . B2 -Z

Motor shaft height:

| | | | | | | | | | | | | | | | | | | |

© Siemens 2019

For line voltage 380 ... 480 V 3 AC (DC link voltage 510 ... 720 V DC) **– Gearbox type** ***K109***

Geared motor torque at 1450 rpm
Note: All values in **bold** print are maximum gearbox values.
M_{2dyn}
Nm

Servo bevel geared motors SIMOTICS S-1FG1
Article No.

1000	1100	1200	1300	1400	1500	1600	1700	1800	1900	2000	2100	2200	2300	2400	2500	2600	2700	2800	2900	3000	Article No.
Max. output speed n_{2max} = 41 rpm, Transmission ratio i = 109.57																					
–	–	–	–	–	–	–	–	–	–	–	–	–	–	–	–	–	–	–	–	–	1FG1511- . . ■ ■ 6 - ■ . A2 -Z
–	–	–	–	–	–	–	1850	1780	2680	**3030**	**3030**	2570	**3030**	**3030**	–	–	–	–	–	–	1FG1511- . . ■ ■ 4 - ■ . A2 -Z
–	–	–	–	–	–	–	1850	1780	2680	**3030**	**3030**	2570	**3030**	**3030**	**3030**	**3030**	**3030**	**3030**	**3030**	**3030**	1FG1511- . . ■ ■ 3 - ■ . A2 -Z
–	–	–	–	–	–	–	1850	–	2680	**3030**	**3030**	–	**3030**	**3030**	**3030**	**3030**	**3030**	**3030**	**3030**	**3030**	1FG1511- . . ■ ■ 2 - ■ . A2 -Z
Max. output speed n_{2max} = 46 rpm, Transmission ratio i = 97.49																					
–	–	–	–	–	–	–	–	–	–	–	–	–	–	–	–	–	–	–	–	–	1FG1511- . . ■ ■ 6 - ■ . X1 -Z
–	–	–	–	–	–	–	1650	1580	2380	**3030**	2930	2290	**3030**	**3030**	–	–	–	–	–	–	1FG1511- . . ■ ■ 4 - ■ . X1 -Z
–	–	–	–	–	–	–	1650	1580	2380	**3030**	2930	2290	**3030**	**3030**	**3030**	**3030**	**3030**	**3030**	**3030**	**3030**	1FG1511- . . ■ ■ 3 - ■ . X1 -Z
–	–	–	–	–	–	–	1650	–	2380	**3030**	2930	–	**3030**	**3030**	**3030**	**3030**	**3030**	**3030**	**3030**	**3030**	1FG1511- . . ■ ■ 2 - ■ . X1 -Z
Max. output speed n_{2max} = 52 rpm, Transmission ratio i = 86.59																					
–	–	–	–	–	–	–	–	–	–	–	–	–	–	–	–	–	–	–	–	–	1FG1511- . . ■ ■ 6 - ■ . W1 -Z
–	–	–	–	–	–	–	1460	1410	2120	2850	2610	2040	3020	**3030**	–	–	–	–	–	–	1FG1511- . . ■ ■ 4 - ■ . W1 -Z
–	–	–	–	–	–	–	1460	1410	2120	2850	2610	2040	3020	**3030**	**3030**	**3030**	**3030**	**3030**	**3030**	**3030**	1FG1511- . . ■ ■ 3 - ■ . W1 -Z
–	–	–	–	–	–	–	1460	–	2120	2850	2610	–	3020	**3030**	**3030**	**3030**	**3030**	**3030**	**3030**	**3030**	1FG1511- . . ■ ■ 2 - ■ . W1 -Z
Max. output speed n_{2max} = 58 rpm, Transmission ratio i = 77.51																					
–	–	–	–	–	–	–	–	–	–	–	–	–	–	–	–	–	–	–	–	–	1FG1511- . . ■ ■ 6 - ■ . V1 -Z
–	–	–	–	–	–	–	1310	1260	1900	2560	2340	1830	2710	**3030**	–	–	–	–	–	–	1FG1511- . . ■ ■ 4 - ■ . V1 -Z
–	–	–	–	–	–	–	1310	1260	1900	2560	2340	1830	2710	**3030**	**3030**	**3030**	**3030**	**3030**	**3030**	**3030**	1FG1511- . . ■ ■ 3 - ■ . V1 -Z
–	–	–	–	–	–	–	1310	–	1900	2560	2340	–	2710	**3030**	**3030**	**3030**	**3030**	**3030**	**3030**	**3030**	1FG1511- . . ■ ■ 2 - ■ . V1 -Z
Max. output speed n_{2max} = 68 rpm, Transmission ratio i = 66.26																					
–	–	–	–	–	–	–	–	–	–	–	–	–	–	–	–	–	–	–	–	–	1FG1511- . . ■ ■ 6 - ■ . U1 -Z
–	–	–	–	–	–	–	1120	1080	1630	2190	2000	1560	2320	**3030**	–	–	–	–	–	–	1FG1511- . . ■ ■ 4 - ■ . U1 -Z
–	–	–	–	–	–	–	1120	1080	1630	2190	2000	1560	2320	**3030**	**3030**	**3030**	**3030**	**3030**	**3030**	**3030**	1FG1511- . . ■ ■ 3 - ■ . U1 -Z
–	–	–	–	–	–	–	1120	–	1630	2190	2000	–	2320	**3030**	**3030**	**3030**	**3030**	**3030**	**3030**	**3030**	1FG1511- . . ■ ■ 2 - ■ . U1 -Z
Max. output speed n_{2max} = 76 rpm, Transmission ratio i = 59.17																					
–	–	–	–	–	–	–	–	–	–	–	–	–	–	–	–	–	–	–	–	–	1FG1511- . . ■ ■ 6 - ■ . T1 -Z
–	–	–	–	–	–	–	1010	970	1450	1960	1790	1400	2070	2800	–	–	–	–	–	–	1FG1511- . . ■ ■ 4 - ■ . T1 -Z
–	–	–	–	–	–	–	1010	970	1450	1960	1790	1400	2070	2800	**3030**	**3030**	**3030**	**3030**	**3030**	**3030**	1FG1511- . . ■ ■ 3 - ■ . T1 -Z
–	–	–	–	–	–	–	1010	–	1450	1960	1790	–	2070	2800	**3030**	**3030**	**3030**	**3030**	**3030**	**3030**	1FG1511- . . ■ ■ 2 - ■ . T1 -Z
Max. output speed n_{2max} = 86 rpm, Transmission ratio i = 52.29																					
–	–	–	–	–	–	–	–	–	–	–	–	–	–	–	–	–	–	–	–	–	1FG1511- . . ■ ■ 6 - ■ . S1 -Z
–	–	–	–	–	–	–	–	–	–	–	–	1240	1830	2480	–	–	–	–	–	–	1FG1511- . . ■ ■ 4 - ■ . S1 -Z
–	–	–	–	–	–	–	–	–	–	–	–	1240	1830	2480	3020	**3030**	**3030**	2720	**3030**	**3030**	1FG1511- . . ■ ■ 3 - ■ . S1 -Z
–	–	–	–	–	–	–	–	–	–	–	–	–	1830	2480	3020	**3030**	**3030**	2720	**3030**	**3030**	1FG1511- . . ■ ■ 2 - ■ . S1 -Z
Max. output speed n_{2max} = 98 rpm, Transmission ratio i = 45.89																					
–	–	–	–	–	–	–	–	–	–	–	–	–	–	–	–	–	–	–	–	–	1FG1511- . . ■ ■ 6 - ■ . R1 -Z
–	–	–	–	–	–	–	–	–	–	–	–	1080	1600	2170	–	–	–	–	–	–	1FG1511- . . ■ ■ 4 - ■ . R1 -Z
–	–	–	–	–	–	–	–	–	–	–	–	1080	1600	2170	2650	2820	**3030**	2390	**3030**	**3030**	1FG1511- . . ■ ■ 3 - ■ . R1 -Z
–	–	–	–	–	–	–	–	–	–	–	–	–	1600	2170	2650	2820	**3030**	2390	**3030**	**3030**	1FG1511- . . ■ ■ 2 - ■ . R1 -Z

Motor shaft height:

1000	1100	1200	1300	1400	1500	1600	1700	1800	1900	2000	2100	2200	2300	2400	2500	2600	2700	2800	2900	3000	
36																					C
			48																		D
							63														E
												80									F
																	100				G

Motor length/motor version (**CT** = Compact, **HD** = High Dynamic)**:**

1000	1100	1200	1300	1400	1500	1600	1700	1800	1900	2000	2100	2200	2300	2400	2500	2600	2700	2800	2900	3000		
			0/CT				**0/CT**				**0/CT**						**0/CT**				0	2
												1/CT						**1/CT**			1	2
								1/HD													1	4
2/CT				**2/CT**					**2/CT**												2	2
										3/CT					**3/CT**				**3/CT**		3	2
	3/HD				**3/HD**																3	4
		4/CT												**4/CT**							4	2
						4/HD					**4/HD**										4	4
																		5/CT			5	2
															5/HD						5	4
																6/HD					6	4

Selection of Shaft design, encoder system, mounting type and special designs on page 5/55.

1FG1511- ■ ■ . . . - . ■ . . -Z

5

© Siemens 2019

Gearbox size 109, 3-stage – 1FG1511

For line voltage 380 ... 480 V 3 AC (DC link voltage 510 ... 720 V DC) **– Gearbox type** ***K109***

Geared motor torque at 1450 rpm
Note: All values in **bold** print are maximum gearbox values.
M_{2dyn} Nm

1	2	3	4	5	6	7	8	9	10	11	12	13	14	15	16	17	18	19	20	21	22	Servo bevel geared motors SIMOTICS S-1FG1 Article No.
Max. output speed n_{2max} = **113 rpm**, Transmission ratio i = **39.95**																						
–	–	–	–	–	–	–	–	–	–	–	–	–	–	–	–	–	–	–	–	–	–	1FG1511- . . ■ ■ 6 - ■ . Q1 -Z
–	–	–	–	–	–	–	–	–	–	–	–	945	1400	1890	–	–	–	–	–	–	–	1FG1511- . . ■ ■ 4 - ■ . Q1 -Z
–	–	–	–	–	–	–	–	–	–	–	–	945	1400	1890	2310	2460	**3020**	2080	**3020**	**3020**	**3020**	1FG1511- . . ■ ■ 3 - ■ . Q1 -Z
–	–	–	–	–	–	–	–	–	–	–	–	–	1400	1890	2310	2460	**3020**	2080	**3020**	**3020**	**3020**	1FG1511- . . ■ ■ 2 - ■ . Q1 -Z
Max. output speed n_{2max} = **127 rpm**, Transmission ratio i = **34.15**																						
–	–	–	–	–	–	–	–	–	–	–	–	–	–	–	–	–	–	–	–	–	–	1FG1511- . . ■ ■ 6 - ■ . P1 -Z
–	–	–	–	–	–	–	–	–	–	–	–	810	1190	1620	–	–	–	–	–	–	–	1FG1511- . . ■ ■ 4 - ■ . P1 -Z
–	–	–	–	–	–	–	–	–	–	–	–	810	1190	1620	1970	2100	**2910**	1780	2590	**2910**	**2910**	1FG1511- . . ■ ■ 3 - ■ . P1 -Z
–	–	–	–	–	–	–	–	–	–	–	–	–	1190	1620	1970	2100	**2910**	1780	2590	**2910**	**2910**	1FG1511- . . ■ ■ 2 - ■ . P1 -Z
Max. output speed n_{2max} = **149 rpm**, Transmission ratio i = **29.23**																						
–	–	–	–	–	–	–	–	–	–	–	–	–	–	–	–	–	–	–	–	–	–	1FG1511- . . ■ ■ 6 - ■ . N1 -Z
–	–	–	–	–	–	–	–	–	–	–	–	690	1020	1380	–	–	–	–	–	–	–	1FG1511- . . ■ ■ 4 - ■ . N1 -Z
–	–	–	–	–	–	–	–	–	–	–	–	690	1020	1380	1690	1800	2610	1520	2220	**2800**	**2800**	1FG1511- . . ■ ■ 3 - ■ . N1 -Z
–	–	–	–	–	–	–	–	–	–	–	–	–	1020	1380	1690	1800	2610	1520	2220	**2800**	**2800**	1FG1511- . . ■ ■ 2 - ■ . N1 -Z
Max. output speed n_{2max} = **180 rpm**, Transmission ratio i = **24.98**																						
–	–	–	–	–	–	–	–	–	–	–	–	–	–	–	–	–	–	–	–	–	–	1FG1511- . . ■ ■ 6 - ■ . M1 -Z
–	–	–	–	–	–	–	425	410	620	835	760	595	880	1190	–	–	–	–	–	–	–	1FG1511- . . ■ ■ 4 - ■ . M1 -Z
–	–	–	–	–	–	–	425	410	620	835	760	595	880	1190	1450	1550	2250	1310	1910	**2520**	**2520**	1FG1511- . . ■ ■ 3 - ■ . M1 -Z
–	–	–	–	–	–	–	425	–	620	835	760	–	880	1190	1450	1550	2250	1310	1910	**2520**	**2520**	1FG1511- . . ■ ■ 2 - ■ . M1 -Z
Max. output speed n_{2max} = **202 rpm**, Transmission ratio i = **22.31**																						
–	–	–	–	–	–	–	–	–	–	–	–	–	–	–	–	–	–	–	–	–	–	1FG1511- . . ■ ■ 6 - ■ . L1 -Z
–	–	–	–	–	–	–	380	365	555	745	680	530	785	1060	–	–	–	–	–	–	–	1FG1511- . . ■ ■ 4 - ■ . L1 -Z
–	–	–	–	–	–	–	380	365	555	745	680	530	785	1060	1300	1380	2010	1170	1700	2300	**2510**	1FG1511- . . ■ ■ 3 - ■ . L1 -Z
–	–	–	–	–	–	–	380	–	555	745	680	–	785	1060	1300	1380	2010	1170	1700	2300	**2510**	1FG1511- . . ■ ■ 2 - ■ . L1 -Z
Max. output speed n_{2max} = **228 rpm**, Transmission ratio i = **19.71**																						
–	–	–	–	–	–	–	–	–	–	–	–	–	–	–	–	–	–	–	–	–	–	1FG1511- . . ■ ■ 6 - ■ . K1 -Z
–	–	–	–	–	–	–	–	–	–	–	–	470	695	940	–	–	–	–	–	–	–	1FG1511- . . ■ ■ 4 - ■ . K1 -Z
–	–	–	–	–	–	–	–	–	–	–	–	470	695	940	1150	1220	1770	1030	1500	2030	**2510**	1FG1511- . . ■ ■ 3 - ■ . K1 -Z
–	–	–	–	–	–	–	–	–	–	–	–	–	695	940	1150	1220	1770	1030	1500	2030	**2510**	1FG1511- . . ■ ■ 2 - ■ . K1 -Z
Max. output speed n_{2max} = **260 rpm**, Transmission ratio i = **17.3**																						
–	–	–	–	–	–	–	–	–	–	–	–	–	–	–	–	–	–	–	–	–	–	1FG1511- . . ■ ■ 6 - ■ . J1 -Z
–	–	–	–	–	–	–	–	–	–	–	–	410	610	825	–	–	–	–	–	–	–	1FG1511- . . ■ ■ 4 - ■ . J1 -Z
–	–	–	–	–	–	–	–	–	–	–	–	410	610	825	1000	1070	1550	905	1320	1780	2480	1FG1511- . . ■ ■ 3 - ■ . J1 -Z
–	–	–	–	–	–	–	–	–	–	–	–	–	610	825	1000	1070	1550	905	1320	1780	2480	1FG1511- . . ■ ■ 2 - ■ . J1 -Z
Max. output speed n_{2max} = **299 rpm**, Transmission ratio i = **15.06**																						
–	–	–	–	–	–	–	–	–	–	–	–	–	–	–	–	–	–	–	–	–	–	1FG1511- . . ■ ■ 6 - ■ . H1 -Z
–	–	–	–	–	–	–	–	–	–	–	–	360	530	720	–	–	–	–	–	–	–	1FG1511- . . ■ ■ 4 - ■ . H1 -Z
–	–	–	–	–	–	–	–	–	–	–	–	360	530	720	875	935	1350	790	1150	1550	2160	1FG1511- . . ■ ■ 3 - ■ . H1 -Z
–	–	–	–	–	–	–	–	–	–	–	–	–	530	720	875	935	1350	790	1150	1550	2160	1FG1511- . . ■ ■ 2 - ■ . H1 -Z

Motor shaft height:

1	2	3	4	5	6	7	8	9	10	11	12	13	14	15	16	17	18	19	20	21	22	
36																						**C**
			48																			**D**
							63															**E**
												80										**F**
																	100					**G**

Motor length/motor version (**CT** = Compact, **HD** = High Dynamic)**:**

1	2	3	4	5	6	7	8	9	10	11	12	13	14	15	16	17	18	19	20	21	22		
			0/CT				**0/CT**					**0/CT**						**0/CT**				**0**	**2**
													1/CT						**1/CT**			**1**	**2**
								1/HD														**1**	**4**
2/CT				**2/CT**					**2/CT**													**2**	**2**
										3/CT				**3/CT**						**3/CT**		**3**	**2**
	3/HD				**3/HD**																	**3**	**4**
		4/CT													**4/CT**							**4**	**2**
						4/HD					**4/HD**											**4**	**4**
																				5/CT		**5**	**2**
																5/HD						**5**	**4**
																	6/HD					**6**	**4**

Selection of Shaft design, encoder system, mounting type and special designs on page 5/55.

1FG1511- ■ ■ . . . - . ■ . . -Z

© Siemens 2019

For line voltage 380 ... 480 V 3 AC (DC link voltage 510 ... 720 V DC) **– Gearbox type** ***K109***

Geared motor torque at 1450 rpm
Note: All values in **bold** print are maximum gearbox values.
M_{2dyn}
Nm

Servo bevel geared motors SIMOTICS S-1FG1
Article No.

Max. output speed n_{2max} = **350 rpm**, Transmission ratio i = **12.87**																						
–	–	–	–	–	–	–	–	–	–	–	–	–	–	–	–	–	–	–	–	–	–	**1FG1511- . . ■ ■ 6 - ■ . G1 -Z**
–	–	–	–	–	–	–	–	–	–	–	–	305	455	615	–	–	–	–	–	–	–	**1FG1511- . . ■ ■ 4 - ■ . G1 -Z**
–	–	–	–	–	–	–	–	–	–	–	–	305	455	615	750	795	1160	675	980	1320	1840	**1FG1511- . . ■ ■ 3 - ■ . G1 -Z**
–	–	–	–	–	–	–	–	–	–	–	–	–	455	615	750	795	1160	675	980	1320	1840	**1FG1511- . . ■ ■ 2 - ■ . G1 -Z**
Max. output speed n_{2max} = **408 rpm**, Transmission ratio i = **11.02**																						
–	–	–	–	–	–	–	–	–	–	–	–	–	–	–	–	–	–	–	–	–	–	**1FG1511- . . ■ ■ 6 - ■ . F1 -Z**
–	–	–	–	–	–	–	–	–	–	–	–	260	390	525	–	–	–	–	–	–	–	**1FG1511- . . ■ ■ 4 - ■ . F1 -Z**
–	–	–	–	–	–	–	–	–	–	–	–	260	390	525	640	685	990	580	840	1130	1580	**1FG1511- . . ■ ■ 3 - ■ . F1 -Z**
–	–	–	–	–	–	–	–	–	–	–	–	–	390	525	640	685	990	580	840	1130	1580	**1FG1511- . . ■ ■ 2 - ■ . F1 -Z**
Max. output speed n_{2max} = **431 rpm**, Transmission ratio i = **10.45**																						
–	–	–	–	–	–	–	–	–	–	–	–	–	–	–	–	–	–	–	–	–	–	**1FG1511- . . ■ ■ 6 - ■ . E1 -Z**
–	–	–	–	–	–	–	–	–	–	–	–	250	370	505	–	–	–	–	–	–	–	**1FG1511- . . ■ ■ 4 - ■ . E1 -Z**
–	–	–	–	–	–	–	–	–	–	–	–	250	370	505	615	655	950	555	805	1090	**1330**	**1FG1511- . . ■ ■ 3 - ■ . E1 -Z**
–	–	–	–	–	–	–	–	–	–	–	–	–	370	505	615	655	950	555	805	1090	**1330**	**1FG1511- . . ■ ■ 2 - ■ . E1 -Z**
Max. output speed n_{2max} = **491 rpm**, Transmission ratio i = **9.17**																						
–	–	–	–	–	–	–	–	–	–	–	–	–	–	–	–	–	–	–	–	–	–	**1FG1511- . . ■ ■ 6 - ■ . D1 -Z**
–	–	–	–	–	–	–	–	–	–	–	–	220	325	440	–	–	–	–	–	–	–	**1FG1511- . . ■ ■ 4 - ■ . D1 -Z**
–	–	–	–	–	–	–	–	–	–	–	–	220	325	440	540	575	835	485	705	955	1320	**1FG1511- . . ■ ■ 3 - ■ . D1 -Z**
–	–	–	–	–	–	–	–	–	–	–	–	–	325	440	540	575	835	485	705	955	1320	**1FG1511- . . ■ ■ 2 - ■ . D1 -Z**
Max. output speed n_{2max} = **563 rpm**, Transmission ratio i = **7.99**																						
–	–	–	–	–	–	–	–	–	–	–	–	–	–	–	–	–	–	–	–	–	–	**1FG1511- . . ■ ■ 6 - ■ . C1 -Z**
–	–	–	–	–	–	–	–	–	–	–	–	192	285	385	–	–	–	–	–	–	–	**1FG1511- . . ■ ■ 4 - ■ . C1 -Z**
–	–	–	–	–	–	–	–	–	–	–	–	192	285	385	470	500	725	420	615	830	1150	**1FG1511- . . ■ ■ 3 - ■ . C1 -Z**
–	–	–	–	–	–	–	–	–	–	–	–	–	285	385	470	500	725	420	615	830	1150	**1FG1511- . . ■ ■ 2 - ■ . C1 -Z**
Max. output speed n_{2max} = **659 rpm**, Transmission ratio i = **6.83**																						
–	–	–	–	–	–	–	–	–	–	–	–	–	–	–	–	–	–	–	–	–	–	**1FG1511- . . ■ ■ 6 - ■ . B1 -Z**
–	–	–	–	–	–	–	–	–	–	–	–	164	240	325	–	–	–	–	–	–	–	**1FG1511- . . ■ ■ 4 - ■ . B1 -Z**
–	–	–	–	–	–	–	–	–	–	–	–	164	240	325	400	425	620	360	525	710	985	**1FG1511- . . ■ ■ 3 - ■ . B1 -Z**
–	–	–	–	–	–	–	–	–	–	–	–	–	240	325	400	425	620	360	525	710	985	**1FG1511- . . ■ ■ 2 - ■ . B1 -Z**
Max. output speed n_{2max} = **771 rpm**, Transmission ratio i = **5.84**																						
–	–	–	–	–	–	–	–	–	–	–	–	–	–	–	–	–	–	–	–	–	–	**1FG1511- . . ■ ■ 6 - ■ . A1 -Z**
–	–	–	–	–	–	–	–	–	–	–	–	141	205	280	–	–	–	–	–	–	–	**1FG1511- . . ■ ■ 4 - ■ . A1 -Z**
–	–	–	–	–	–	–	–	–	–	–	–	141	205	280	340	365	530	310	450	605	845	**1FG1511- . . ■ ■ 3 - ■ . A1 -Z**
–	–	–	–	–	–	–	–	–	–	–	–	–	205	280	340	365	530	310	450	605	845	**1FG1511- . . ■ ■ 2 - ■ . A1 -Z**

Motor shaft height:

36																						**C**
			48																			**D**
							63															**E**
												80										**F**
																		100				**G**

Motor length/motor version (**CT** = Compact, **HD** = High Dynamic)**:**

			0/CT				**0/CT**					**0/CT**						**0/CT**					**0**	**2**
													1/CT						**1/CT**				**1**	**2**
								1/HD															**1**	**4**
2/CT				**2/CT**					**2/CT**														**2**	**2**
										3/CT				**3/CT**						**3/CT**			**3**	**2**
	3/HD				**3/HD**																		**3**	**4**
		4/CT														**4/CT**							**4**	**2**
						4/HD					**4/HD**													**4**	**4**
																				5/CT			**5**	**2**
															5/HD								**5**	**4**
																6/HD							**6**	**4**

Selection of Shaft design, encoder system, mounting type and special designs on page 5/55.

1FG1511- ■ ■ . . . - . ■ . . -Z

© Siemens 2019

Gearbox size 129, 3-stage – 1FG1512

Technical specifications

Gearbox type *K129*

Servo geared motor Type	i	R_{ex}	M_{2rated} Nm	M_{2max} Nm	$M_{2Em.Off}$ Nm	n_{2max} rpm	n_{1max} rpm	φ [1] '	F_{R2} N	F_{R2max} N	c_T Nm/ '	J_G 10^{-4} kgm^2
1FG1512-.....-..J2	228.3	30821/135	4400	4480	7480	20	4500	6.30	40000	40000	421	3.3
1FG1512-.....-..H2	210.74	123284/585	4400	4480	7480	21	4500	6.30	40000	40000	421	3.9
1FG1512-.....-..G2	194.04	8732/45	4400	4480	7480	23	4500	6.30	40000	40000	421	4.5
1FG1512-.....-..F2	165.47	5957/36	4400	4480	7480	27	4500	6.30	40000	40000	421	5.6
1FG1512-.....-..E2	155.74	23828/153	4400	4480	7480	29	4500	6.30	40000	40000	421	6.4
1FG1512-.....-..D2	144.53	58534/405	4400	4480	7480	31	4500	6.30	40000	40000	421.1	7
1FG1512-.....-..C2	127.77	9583/75	4400	4480	7480	35	4500	6.30	40000	40000	421	8.4
1FG1512-.....-..B2	114.06	56462/495	4400	4480	7480	39	4500	6.30	40000	40000	421	10
1FG1512-.....-..A2	102.64	27713/270	4400	4570	7480	44	4500	6.30	40000	40000	421	11.7
1FG1512-.....-..X1	89.09	92204/1035	4400	4570	7480	51	4500	6.30	40000	40000	421	14.1
1FG1512-.....-..W1	80.12	30044/375	4400	4570	7480	56	4500	6.30	40000	39600	421	16.6
1FG1512-.....-..V1	70.03	18907/270	4400	4570	7480	64	4500	6.30	38000	37400	421	19.3
1FG1512-.....-..U1	62.49	2812/45	4400	4570	7480	72	4500	6.40	36200	35600	420.9	23
1FG1512-.....-..T1	55.05	11396/207	4400	4570	7480	82	4500	6.40	34300	33700	420.9	27
1FG1512-.....-..S1	48.24	6512/135	4400	4570	7480	93	4500	6.40	32400	31800	420.8	32
1FG1512-.....-..R1	42.04	14504/345	4400	4660	7480	107	4500	6.41	30500	29600	420.8	39
1FG1512-.....-..Q1	38.37	1036/27	4400	4640	7480	117	4500	6.90	29500	28400	420.6	45
1FG1512-.....-..P1	33.03	11396/345	4400	4430	7480	136	4500	7.00	28200	27200	420.6	55
1FG1512-.....-..N1	31.55	3944/125	4400	4700	7480	143	4500	7.00	26700	25700	394.9	23
1FG1512-.....-..M1	27.58	1241/45	4400	4590	7480	163	4500	7.00	25400	24400	394.8	27
1FG1512-.....-..L1	24.61	2584/105	4400	4430	7480	183	4500	7.10	24600	23600	394.5	33
1FG1512-.....-..K1	21.68	1496/69	4270	4270	7250	208	4500	7.10	23700	22700	394.2	40
1FG1512-.....-..J1	19	5984/315	4140	4140	7030	237	4500	7.10	22800	21800	393.8	50
1FG1512-.....-..H1	16.56	1904/115	4020	4020	6830	272	4500	7.20	21800	21000	393.5	62
1FG1512-.....-..G1	15.11	136/9	3940	3940	6690	298	4500	7.20	21200	20400	392.9	72
1FG1512-.....-..F1	13.01	1496/115	3810	3810	6470	343	4462	7.20	20300	19500	392.4	91
1FG1512-.....-..E1	11.8	119680/10143	2830	2830	4120	381	4500	9.51	21900	21500	307.9	46
1FG1512-.....-..D1	10.34	95744/9261	2850	2850	4110	435	4500	9.61	20700	20300	307	57
1FG1512-.....-..C1	9.01	4352/483	2760	2800	4120	499	4500	9.72	19400	19100	306.4	71
1FG1512-.....-..B1	8.22	10880/1323	2680	2810	4110	547	4500	9.79	18600	18200	305.2	83
1FG1512-.....-..A1	7.08	23936/3381	2530	2810	4110	623	4414	9.94	17600	17000	304.1	107

Selection and ordering data

Shaft design, encoder system, mounting type and special designs

Gearbox type *K129*

			Servo bevel geared motors SIMOTICS S-1FG1 Article No. **1FG1512-** ■■.....-.■..**-Z**
Shaft design:	Solid shaft with feather keyway	– Design 1	**1**
		– Design 3	**3**
	Hollow-shaft with feather keyway	– Design 1 – H70	**5**
Order codes and Descriptions see chapter "Options"	Special shaft design		**9**
Encoder system for motors with DRIVE-CLiQ interface:	AS20DQI encoder		**Q**
	AM20DQI encoder		**R**
	R14DQ resolver		**P**
	R15DQ resolver		**U**
Order codes and Descriptions see chapter "Options"	Special version encoder system		**Z**
Mounting type:	Foot-mounted design		**A**
	Flange-mounted design		**F**
	Housing flange design		**H**
	Shaft-mounted design (not possible with solid shaft)		**C**
Special designs (Options): Order codes and Descriptions see chapter "Options" The following order codes must be added to each article number: • Oil type – order codes **K06** or **K11** • Mounting position – order codes **D11** ... **D16** or **D21** ... **D26**			**-Z**

Selection of 3-stages servo bevel geared motors with gearbox size 129 from next page. **1FG1512-** ..■■■-■.■■**-Z**

[1] Data are for option reduced-backlash version – order code **G99** required.

© Siemens 2019

Selection and ordering data (continued)

For line voltage 380 ... 480 V 3 AC (DC link voltage 510 ... 720 V DC) **– Gearbox type** ***K129***

Geared motor torque at 1450 rpm Note: All values in **bold** print are maximum gearbox values. M_{2dyn} Nm																						**Servo bevel geared motors SIMOTICS S-1FG1** Article No.
Max. output speed n_{2max} = **20 rpm**, Transmission ratio i = **228.3**																						
–	–	–	–	–	–	–	–	–	–	–	–	–	–	–	–	–	–	–	–	–	–	1FG1512- . . ■ ■ 6 - ■ . J2 -Z
–	–	–	–	–	–	–	–	–	–	–	–	**4480**	**4480**	**4480**	–	–	–	–	–	–	–	1FG1512- . . ■ ■ 4 - ■ . J2 -Z
–	–	–	–	–	–	–	–	–	–	–	–	**4480**	**4480**	**4480**	**4480**	**4480**	**4480**	–	–	–	–	1FG1512- . . ■ ■ 3 - ■ . J2 -Z
–	–	–	–	–	–	–	–	–	–	–	–	**4480**	**4480**	**4480**	**4480**	**4480**	**4480**	–	–	–	–	1FG1512- . . ■ ■ 2 - ■ . J2 -Z
Max. output speed n_{2max} = **21 rpm**, Transmission ratio i = **210.74**																						
–	–	–	–	–	–	–	–	–	–	–	–	–	–	–	–	–	–	–	–	–	–	1FG1512- . . ■ ■ 6 - ■ . H2 -Z
–	–	–	–	–	–	–	–	–	–	–	–	**4480**	**4480**	**4480**	–	–	–	–	–	–	–	1FG1512- . . ■ ■ 4 - ■ . H2 -Z
–	–	–	–	–	–	–	–	–	–	–	–	**4480**	**4480**	**4480**	**4480**	**4480**	**4480**	–	–	–	–	1FG1512- . . ■ ■ 3 - ■ . H2 -Z
–	–	–	–	–	–	–	–	–	–	–	–	**4480**	**4480**	**4480**	**4480**	**4480**	**4480**	–	–	–	–	1FG1512- . . ■ ■ 2 - ■ . H2 -Z
Max. output speed n_{2max} = **23 rpm**, Transmission ratio i = **194.04**																						
–	–	–	–	–	–	–	–	–	–	–	–	–	–	–	–	–	–	–	–	–	–	1FG1512- . . ■ ■ 6 - ■ . G2 -Z
–	–	–	–	–	–	–	–	–	–	–	–	**4480**	**4480**	**4480**	–	–	–	–	–	–	–	1FG1512- . . ■ ■ 4 - ■ . G2 -Z
–	–	–	–	–	–	–	–	–	–	–	–	**4480**	**4480**	**4480**	**4480**	**4480**	**4480**	**4480**	**4480**	**4480**	**4480**	1FG1512- . . ■ ■ 3 - ■ . G2 -Z
–	–	–	–	–	–	–	–	–	–	–	–	**4480**	**4480**	**4480**	**4480**	**4480**	**4480**	**4480**	**4480**	**4480**	**4480**	1FG1512- . . ■ ■ 2 - ■ . G2 -Z
Max. output speed n_{2max} = **27 rpm**, Transmission ratio i = **165.47**																						
–	–	–	–	–	–	–	–	–	–	–	–	–	–	–	–	–	–	–	–	–	–	1FG1512- . . ■ ■ 6 - ■ . F2 -Z
–	–	–	–	–	–	–	–	–	–	–	–	**3860**	**4480**	**4480**	–	–	–	–	–	–	–	1FG1512- . . ■ ■ 4 - ■ . F2 -Z
–	–	–	–	–	–	–	–	–	–	–	–	**3860**	**4480**	**4480**	**4480**	**4480**	**4480**	**4480**	**4480**	**4480**	**4480**	1FG1512- . . ■ ■ 3 - ■ . F2 -Z
–	–	–	–	–	–	–	–	–	–	–	–	**4480**	**4480**	**4480**	**4480**	**4480**	**4480**	**4480**	**4480**	**4480**	**4480**	1FG1512- . . ■ ■ 2 - ■ . F2 -Z
Max. output speed n_{2max} = **29 rpm**, Transmission ratio i = **155.74**																						
–	–	–	–	–	–	–	–	–	–	–	–	–	–	–	–	–	–	–	–	–	–	1FG1512- . . ■ ■ 6 - ■ . E2 -Z
–	–	–	–	–	–	–	–	–	–	–	–	**3650**	**4480**	**4480**	–	–	–	–	–	–	–	1FG1512- . . ■ ■ 4 - ■ . E2 -Z
–	–	–	–	–	–	–	–	–	–	–	–	**3650**	**4480**	**4480**	**4480**	**4480**	**4480**	**4480**	**4480**	**4480**	**4480**	1FG1512- . . ■ ■ 3 - ■ . E2 -Z
–	–	–	–	–	–	–	–	–	–	–	–	**4480**	**4480**	**4480**	**4480**	**4480**	**4480**	**4480**	**4480**	**4480**	**4480**	1FG1512- . . ■ ■ 2 - ■ . E2 -Z
Max. output speed n_{2max} = **31 rpm**, Transmission ratio i = **144.53**																						
–	–	–	–	–	–	–	–	–	–	–	–	–	–	–	–	–	–	–	–	–	–	1FG1512- . . ■ ■ 6 - ■ . D2 -Z
–	–	–	–	–	–	–	–	–	–	–	–	**3390**	**4480**	**4480**	–	–	–	–	–	–	–	1FG1512- . . ■ ■ 4 - ■ . D2 -Z
–	–	–	–	–	–	–	–	–	–	–	–	**3390**	**4480**	**4480**	**4480**	**4480**	**4480**	**4480**	**4480**	**4480**	**4480**	1FG1512- . . ■ ■ 3 - ■ . D2 -Z
–	–	–	–	–	–	–	–	–	–	–	–	**4480**	**4480**	**4480**	**4480**	**4480**	**4480**	**4480**	**4480**	**4480**	**4480**	1FG1512- . . ■ ■ 2 - ■ . D2 -Z
Max. output speed n_{2max} = **35 rpm**, Transmission ratio i = **127.77**																						
–	–	–	–	–	–	–	–	–	–	–	–	–	–	–	–	–	–	–	–	–	–	1FG1512- . . ■ ■ 6 - ■ . C2 -Z
–	–	–	–	–	–	–	–	–	–	–	–	**3000**	4450	**4480**	–	–	–	–	–	–	–	1FG1512- . . ■ ■ 4 - ■ . C2 -Z
–	–	–	–	–	–	–	–	–	–	–	–	**3000**	4450	**4480**	**4480**	**4480**	**4480**	**4480**	**4480**	**4480**	**4480**	1FG1512- . . ■ ■ 3 - ■ . C2 -Z
–	–	–	–	–	–	–	–	–	–	–	–	4450	**4480**	**4480**	**4480**	**4480**	**4480**	**4480**	**4480**	**4480**	**4480**	1FG1512- . . ■ ■ 2 - ■ . C2 -Z

Motor shaft height:

| | | | | | | | | | | | | | | | | | | |

© Siemens 2019

Gearbox size 129, 3-stage – 1FG1512

For line voltage 380 ... 480 V 3 AC (DC link voltage 510 ... 720 V DC) **– Gearbox type** ***K129***

Geared motor torque at 1450 rpm
Note: All values in **bold** print are maximum gearbox values.
M_{2dyn}
Nm

1	2	3	4	5	6	7	8	9	10	11	12	13	14	15	16	17	18	19	20	21	22	Servo bevel geared motors SIMOTICS S-1FG1 Article No.
Max. output speed n_{2max} = 39 rpm, Transmission ratio i = 114.06																						
–	–	–	–	–	–	–	–	–	–	–	–	–	–	–	–	–	–	–	–	–	–	1FG1512- . . ■ ■ 6 - ■ . B2 -Z
–	–	–	–	–	–	–	–	–	–	–	–	2690	3980	**4480**	–	–	–	–	–	–	–	1FG1512- . . ■ ■ 4 - ■ . B2 -Z
–	–	–	–	–	–	–	–	–	–	–	–	2690	3980	**4480**	**4480**	**4480**	**4480**	**4480**	**4480**	**4480**	**4480**	1FG1512- . . ■ ■ 3 - ■ . B2 -Z
–	–	–	–	–	–	–	–	–	–	–	–	–	3980	**4480**	**4480**	**4480**	**4480**	**4480**	**4480**	**4480**	**4480**	1FG1512- . . ■ ■ 2 - ■ . B2 -Z
Max. output speed n_{2max} = 44 rpm, Transmission ratio i = 102.64																						
–	–	–	–	–	–	–	–	–	–	–	–	–	–	–	–	–	–	–	–	–	–	1FG1512- . . ■ ■ 6 - ■ . A2 -Z
–	–	–	–	–	–	–	–	–	–	–	–	2420	3590	**4570**	–	–	–	–	–	–	–	1FG1512- . . ■ ■ 4 - ■ . A2 -Z
–	–	–	–	–	–	–	–	–	–	–	–	2420	3590	**4570**	**4570**	**4570**	**4570**	**4570**	**4570**	**4570**	**4570**	1FG1512- . . ■ ■ 3 - ■ . A2 -Z
–	–	–	–	–	–	–	–	–	–	–	–	–	3590	**4570**	**4570**	**4570**	**4570**	**4570**	**4570**	**4570**	**4570**	1FG1512- . . ■ ■ 2 - ■ . A2 -Z
Max. output speed n_{2max} = 51 rpm, Transmission ratio i = 89.09																						
–	–	–	–	–	–	–	–	–	–	–	–	–	–	–	–	–	–	–	–	–	–	1FG1512- . . ■ ■ 6 - ■ . X1 -Z
–	–	–	–	–	–	–	–	–	–	–	–	2100	3120	4210	–	–	–	–	–	–	–	1FG1512- . . ■ ■ 4 - ■ . X1 -Z
–	–	–	–	–	–	–	–	–	–	–	–	2100	3120	4210	**4570**	**4570**	**4570**	**4570**	**4570**	**4570**	**4570**	1FG1512- . . ■ ■ 3 - ■ . X1 -Z
–	–	–	–	–	–	–	–	–	–	–	–	–	3120	4210	**4570**	**4570**	**4570**	**4570**	**4570**	**4570**	**4570**	1FG1512- . . ■ ■ 2 - ■ . X1 -Z
Max. output speed n_{2max} = 56 rpm, Transmission ratio i = 80.12																						
–	–	–	–	–	–	–	–	–	–	–	–	–	–	–	–	–	–	–	–	–	–	1FG1512- . . ■ ■ 6 - ■ . W1 -Z
–	–	–	–	–	–	–	–	–	–	–	–	1890	2810	3790	–	–	–	–	–	–	–	1FG1512- . . ■ ■ 4 - ■ . W1 -Z
–	–	–	–	–	–	–	–	–	–	–	–	1890	2810	3790	**4570**	**4570**	**4570**	4170	**4570**	**4570**	**4570**	1FG1512- . . ■ ■ 3 - ■ . W1 -Z
–	–	–	–	–	–	–	–	–	–	–	–	–	2810	3790	**4570**	**4570**	**4570**	4170	**4570**	**4570**	**4570**	1FG1512- . . ■ ■ 2 - ■ . W1 -Z
Max. output speed n_{2max} = 64 rpm, Transmission ratio i = 70.03																						
–	–	–	–	–	–	–	–	–	–	–	–	–	–	–	–	–	–	–	–	–	–	1FG1512- . . ■ ■ 6 - ■ . V1 -Z
–	–	–	–	–	–	–	–	–	–	–	–	1660	2460	3320	–	–	–	–	–	–	–	1FG1512- . . ■ ■ 4 - ■ . V1 -Z
–	–	–	–	–	–	–	–	–	–	–	–	1660	2460	3320	4050	4320	**4570**	3650	**4570**	**4570**	**4570**	1FG1512- . . ■ ■ 3 - ■ . V1 -Z
–	–	–	–	–	–	–	–	–	–	–	–	–	2460	3320	4050	4320	**4570**	3650	**4570**	**4570**	**4570**	1FG1512- . . ■ ■ 2 - ■ . V1 -Z
Max. output speed n_{2max} = 72 rpm, Transmission ratio i = 62.49																						
–	–	–	–	–	–	–	–	–	–	–	–	–	–	–	–	–	–	–	–	–	–	1FG1512- . . ■ ■ 6 - ■ . U1 -Z
–	–	–	–	–	–	–	–	–	–	–	–	1480	2190	2960	–	–	–	–	–	–	–	1FG1512- . . ■ ■ 4 - ■ . U1 -Z
–	–	–	–	–	–	–	–	–	–	–	–	1480	2190	2960	3620	3850	**4570**	3260	**4570**	**4570**	**4570**	1FG1512- . . ■ ■ 3 - ■ . U1 -Z
–	–	–	–	–	–	–	–	–	–	–	–	–	2190	2960	3620	3850	**4570**	3260	**4570**	**4570**	**4570**	1FG1512- . . ■ ■ 2 - ■ . U1 -Z
Max. output speed n_{2max} = 82 rpm, Transmission ratio i = 55.05																						
–	–	–	–	–	–	–	–	–	–	–	–	–	–	–	–	–	–	–	–	–	–	1FG1512- . . ■ ■ 6 - ■ . T1 -Z
–	–	–	–	–	–	–	–	–	–	–	–	1300	1930	2610	–	–	–	–	–	–	–	1FG1512- . . ■ ■ 4 - ■ . T1 -Z
–	–	–	–	–	–	–	–	–	–	–	–	1300	1930	2610	3190	3400	**4570**	2870	4180	**4570**	**4570**	1FG1512- . . ■ ■ 3 - ■ . T1 -Z
–	–	–	–	–	–	–	–	–	–	–	–	–	1930	2610	3190	3400	**4570**	2870	4180	**4570**	**4570**	1FG1512- . . ■ ■ 2 - ■ . T1 -Z
Max. output speed n_{2max} = 93 rpm, Transmission ratio i = 48.24																						
–	–	–	–	–	–	–	–	–	–	–	–	–	–	–	–	–	–	–	–	–	–	1FG1512- . . ■ ■ 6 - ■ . S1 -Z
–	–	–	–	–	–	–	–	–	–	–	–	1140	1690	2290	–	–	–	–	–	–	–	1FG1512- . . ■ ■ 4 - ■ . S1 -Z
–	–	–	–	–	–	–	–	–	–	–	–	1140	1690	2290	2790	2980	4320	2520	3670	**4570**	**4570**	1FG1512- . . ■ ■ 3 - ■ . S1 -Z
–	–	–	–	–	–	–	–	–	–	–	–	–	1690	2290	2790	2980	4320	2520	3670	**4570**	**4570**	1FG1512- . . ■ ■ 2 - ■ . S1 -Z

Motor shaft height:

1	2	3	4	5	6	7	8	9	10	11	12	13	14	15	16	17	18	19	20	21	22	
36																						**C**
			48																			**D**
					63																	**E**
												80										**F**
																	100					**G**

Motor length/motor version (**CT** = Compact, **HD** = High Dynamic)**:**

1	2	3	4	5	6	7	8	9	10	11	12	13	14	15	16	17	18	19	20	21	22		
			0/CT				**0/CT**					**0/CT**						**0/CT**				**0**	**2**
													1/CT						**1/CT**			**1**	**2**
								1/HD														**1**	**4**
2/CT				**2/CT**					**2/CT**													**2**	**2**
										3/CT				**3/CT**						**3/CT**		**3**	**2**
	3/HD				**3/HD**											**4/CT**						**3**	**4**
		4/CT													**4/CT**							**4**	**2**
						4/HD					**4/HD**											**4**	**4**
																			5/CT			**5**	**2**
																5/HD						**5**	**4**
																	6/HD					**6**	**4**

Selection of Shaft design, encoder system, mounting type and special designs on page 5/60.

1FG1512- ■ ■ . . . - . ■ . . -Z

© Siemens 2019

Gearbox size 129, 3-stage – 1FG1512

For line voltage 380 ... 480 V 3 AC (DC link voltage 510 ... 720 V DC) **– Gearbox type** ***K129***

Geared motor torque at 1450 rpm
Note: All values in **bold** print are maximum gearbox values.
M_{2dyn} Nm

1000	1480	2000	2440	2600	3770	2200	3200	4320	**4660**	Article No.
Max. output speed n_{2max} = 107 rpm, Transmission ratio i = 42.04										
–	–	–	–	–	–	–	–	–	–	1FG1512- . . ■ ■ 6 - ■ . R1 -Z
1000	1480	2000	–	–	–	–	–	–	–	1FG1512- . . ■ ■ 4 - ■ . R1 -Z
1000	1480	2000	2440	2600	3770	2200	3200	4320	**4660**	1FG1512- . . ■ ■ 3 - ■ . R1 -Z
–	1480	2000	2440	2600	3770	2200	3200	4320	**4660**	1FG1512- . . ■ ■ 2 - ■ . R1 -Z
Max. output speed n_{2max} = 117 rpm, Transmission ratio i = 38.37										
–	–	–	–	–	–	–	–	–	–	1FG1512- . . ■ ■ 6 - ■ . Q1 -Z
910	1350	1820	–	–	–	–	–	–	–	1FG1512- . . ■ ■ 4 - ■ . Q1 -Z
910	1350	1820	2220	2370	3440	2000	2920	3940	**4640**	1FG1512- . . ■ ■ 3 - ■ . Q1 -Z
–	1350	1820	2220	2370	3440	2000	2920	3940	**4640**	1FG1512- . . ■ ■ 2 - ■ . Q1 -Z
Max. output speed n_{2max} = 136 rpm, Transmission ratio i = 33.03										
–	–	–	–	–	–	–	–	–	–	1FG1512- . . ■ ■ 6 - ■ . P1 -Z
–	–	–	–	–	–	–	–	–	–	1FG1512- . . ■ ■ 4 - ■ . P1 -Z
–	–	–	–	–	–	1720	2510	3390	**4430**	1FG1512- . . ■ ■ 3 - ■ . P1 -Z
–	–	–	–	–	–	1720	2510	3390	**4430**	1FG1512- . . ■ ■ 2 - ■ . P1 -Z
Max. output speed n_{2max} = 143 rpm, Transmission ratio i = 31.55										
–	–	–	–	–	–	–	–	–	–	1FG1512- . . ■ ■ 6 - ■ . N1 -Z
755	1110	1510	–	–	–	–	–	–	–	1FG1512- . . ■ ■ 4 - ■ . N1 -Z
755	1110	1510	1840	1960	2850	1660	2420	3260	4530	1FG1512- . . ■ ■ 3 - ■ . N1 -Z
–	1110	1510	1840	1960	2850	1660	2420	3260	4530	1FG1512- . . ■ ■ 2 - ■ . N1 -Z
Max. output speed n_{2max} = 163 rpm, Transmission ratio i = 27.58										
–	–	–	–	–	–	–	–	–	–	1FG1512- . . ■ ■ 6 - ■ . M1 -Z
660	980	1320	–	–	–	–	–	–	–	1FG1512- . . ■ ■ 4 - ■ . M1 -Z
660	980	1320	1610	1720	2490	1450	2120	2860	3970	1FG1512- . . ■ ■ 3 - ■ . M1 -Z
–	980	1320	1610	1720	2490	1450	2120	2860	3970	1FG1512- . . ■ ■ 2 - ■ . M1 -Z
Max. output speed n_{2max} = 183 rpm, Transmission ratio i = 24.61										
–	–	–	–	–	–	–	–	–	–	1FG1512- . . ■ ■ 6 - ■ . L1 -Z
590	870	1180	–	–	–	–	–	–	–	1FG1512- . . ■ ■ 4 - ■ . L1 -Z
590	870	1180	1440	1530	2220	1290	1890	2550	3540	1FG1512- . . ■ ■ 3 - ■ . L1 -Z
–	870	1180	1440	1530	2220	1290	1890	2550	3540	1FG1512- . . ■ ■ 2 - ■ . L1 -Z
Max. output speed n_{2max} = 208 rpm, Transmission ratio i = 21.68										
–	–	–	–	–	–	–	–	–	–	1FG1512- . . ■ ■ 6 - ■ . K1 -Z
520	770	1040	–	–	–	–	–	–	–	1FG1512- . . ■ ■ 4 - ■ . K1 -Z
520	770	1040	1260	1350	1960	1140	1660	2240	3120	1FG1512- . . ■ ■ 3 - ■ . K1 -Z
–	770	1040	1260	1350	1960	1140	1660	2240	3120	1FG1512- . . ■ ■ 2 - ■ . K1 -Z
Max. output speed n_{2max} = 237 rpm, Transmission ratio i = 19										
–	–	–	–	–	–	–	–	–	–	1FG1512- . . ■ ■ 6 - ■ . J1 -Z
455	670	910	–	–	–	–	–	–	–	1FG1512- . . ■ ■ 4 - ■ . J1 -Z
455	670	910	1110	1180	1710	1000	1450	1960	2730	1FG1512- . . ■ ■ 3 - ■ . J1 -Z
–	670	910	1110	1180	1710	1000	1450	1960	2730	1FG1512- . . ■ ■ 2 - ■ . J1 -Z

Motor shaft height:

36																						**C**
			48																			**D**
							63															**E**
												80										**F**
																	100					**G**

Motor length/motor version (**CT** = Compact, **HD** = High Dynamic)**:**

			0/CT				**0/CT**				**0/CT**						**0/CT**					**0**		**2**
								1/CT										**1/CT**				**1**		**2**
									1/HD													**1**		**4**
2/CT				**2/CT**						**2/CT**												**2**		**2**
											3/CT				**3/CT**				**3/CT**			**3**		**2**
	3/HD				**3/HD**																	**3**		**4**
		4/CT												**4/CT**								**4**		**2**
						4/HD						**4/HD**										**4**		**4**
																				5/CT		**5**		**2**
															5/HD							**5**		**4**
																6/HD						**6**		**4**

Selection of Shaft design, encoder system, mounting type and special designs on page 5/60.

1FG1512- ■ ■ . . . - . ■ . . -Z

© Siemens 2019

Gearbox size 129, 3-stage – 1FG1512

For line voltage 380 ... 480 V 3 AC (DC link voltage 510 ... 720 V DC) **– Gearbox type** ***K129***

Geared motor torque at 1450 rpm
Note: All values in **bold** print are maximum gearbox values.
M_{2dyn}
Nm

1.5	2.1	2.8	3.5	4.2	5.6	7.0	8.4	11.2	14.0	16.8	21.0	28.0	35.0	42.0	56.0	70.0	84.0	112	140	168	210	Servo bevel geared motors SIMOTICS S-1FG1 Article No.
Max. output speed n_{2max} = 272 rpm, Transmission ratio i = 16.56																						
–	–	–	–	–	–	–	–	–	–	–	–	–	–	–	–	–	–	–	–	–	–	1FG1512- . . ■ ■ 6 - ■ . H1 -Z
–	–	–	–	–	–	–	–	–	–	–	–	395	585	795	–	–	–	–	–	–	–	1FG1512- . . ■ ■ 4 - ■ . H1 -Z
–	–	–	–	–	–	–	–	–	–	–	–	395	585	795	970	1030	1500	875	1270	1710	2380	1FG1512- . . ■ ■ 3 - ■ . H1 -Z
–	–	–	–	–	–	–	–	–	–	–	–	–	585	795	970	1030	1500	875	1270	1710	2380	1FG1512- . . ■ ■ 2 - ■ . H1 -Z
Max. output speed n_{2max} = 298 rpm, Transmission ratio i = 15.11																						
–	–	–	–	–	–	–	–	–	–	–	–	–	–	–	–	–	–	–	–	–	–	1FG1512- . . ■ ■ 6 - ■ . G1 -Z
–	–	–	–	–	–	–	–	–	–	–	–	360	535	720	–	–	–	–	–	–	–	1FG1512- . . ■ ■ 4 - ■ . G1 -Z
–	–	–	–	–	–	–	–	–	–	–	–	360	535	720	880	940	1360	795	1150	1560	2170	1FG1512- . . ■ ■ 3 - ■ . G1 -Z
–	–	–	–	–	–	–	–	–	–	–	–	–	535	720	880	940	1360	795	1150	1560	2170	1FG1512- . . ■ ■ 2 - ■ . G1 -Z
Max. output speed n_{2max} = 343 rpm, Transmission ratio i = 13.01																						
–	–	–	–	–	–	–	–	–	–	–	–	–	–	–	–	–	–	–	–	–	–	1FG1512- . . ■ ■ 6 - ■ . F1 -Z
–	–	–	–	–	–	–	–	–	–	–	–	–	–	–	–	–	–	–	–	–	–	1FG1512- . . ■ ■ 4 - ■ . F1 -Z
–	–	–	–	–	–	–	–	–	–	–	–	–	–	–	–	–	–	685	995	1340	1870	1FG1512- . . ■ ■ 3 - ■ . F1 -Z
–	–	–	–	–	–	–	–	–	–	–	–	–	–	–	–	–	–	685	995	1340	1870	1FG1512- . . ■ ■ 2 - ■ . F1 -Z
Max. output speed n_{2max} = 381 rpm, Transmission ratio i = 11.8																						
–	–	–	–	–	–	–	–	–	–	–	–	–	–	–	–	–	–	–	–	–	–	1FG1512- . . ■ ■ 6 - ■ . E1 -Z
–	–	–	–	–	–	–	–	–	–	–	–	285	420	570	–	–	–	–	–	–	–	1FG1512- . . ■ ■ 4 - ■ . E1 -Z
–	–	–	–	–	–	–	–	–	–	–	–	285	420	570	695	740	1070	625	910	1230	1710	1FG1512- . . ■ ■ 3 - ■ . E1 -Z
–	–	–	–	–	–	–	–	–	–	–	–	–	420	570	695	740	1070	625	910	1230	1710	1FG1512- . . ■ ■ 2 - ■ . E1 -Z
Max. output speed n_{2max} = 435 rpm, Transmission ratio i = 10.34																						
–	–	–	–	–	–	–	–	–	–	–	–	–	–	–	–	–	–	–	–	–	–	1FG1512- . . ■ ■ 6 - ■ . D1 -Z
–	–	–	–	–	–	–	–	–	–	–	–	250	370	500	–	–	–	–	–	–	–	1FG1512- . . ■ ■ 4 - ■ . D1 -Z
–	–	–	–	–	–	–	–	–	–	–	–	250	370	500	610	650	940	550	800	1080	1500	1FG1512- . . ■ ■ 3 - ■ . D1 -Z
–	–	–	–	–	–	–	–	–	–	–	–	–	370	500	610	650	940	550	800	1080	1500	1FG1512- . . ■ ■ 2 - ■ . D1 -Z
Max. output speed n_{2max} = 499 rpm, Transmission ratio i = 9.01																						
–	–	–	–	–	–	–	–	–	–	–	–	–	–	–	–	–	–	–	–	–	–	1FG1512- . . ■ ■ 6 - ■ . C1 -Z
–	–	–	–	–	–	–	–	–	–	–	–	215	320	435	–	–	–	–	–	–	–	1FG1512- . . ■ ■ 4 - ■ . C1 -Z
–	–	–	–	–	–	–	–	–	–	–	–	215	320	435	530	565	820	480	695	940	1300	1FG1512- . . ■ ■ 3 - ■ . C1 -Z
–	–	–	–	–	–	–	–	–	–	–	–	–	320	435	530	565	820	480	695	940	1300	1FG1512- . . ■ ■ 2 - ■ . C1 -Z
Max. output speed n_{2max} = 547 rpm, Transmission ratio i = 8.22																						
–	–	–	–	–	–	–	–	–	–	–	–	–	–	–	–	–	–	–	–	–	–	1FG1512- . . ■ ■ 6 - ■ . B1 -Z
–	–	–	–	–	–	–	–	–	–	–	–	198	290	395	–	–	–	–	–	–	–	1FG1512- . . ■ ■ 4 - ■ . B1 -Z
–	–	–	–	–	–	–	–	–	–	–	–	198	290	395	480	515	745	435	635	855	1190	1FG1512- . . ■ ■ 3 - ■ . B1 -Z
–	–	–	–	–	–	–	–	–	–	–	–	–	290	395	480	515	745	435	635	855	1190	1FG1512- . . ■ ■ 2 - ■ . B1 -Z
Max. output speed n_{2max} = 623 rpm, Transmission ratio i = 7.08																						
–	–	–	–	–	–	–	–	–	–	–	–	–	–	–	–	–	–	–	–	–	–	1FG1512- . . ■ ■ 6 - ■ . A1 -Z
–	–	–	–	–	–	–	–	–	–	–	–	–	–	–	–	–	–	–	–	–	–	1FG1512- . . ■ ■ 4 - ■ . A1 -Z
–	–	–	–	–	–	–	–	–	–	–	–	–	–	–	–	–	–	375	545	740	1020	1FG1512- . . ■ ■ 3 - ■ . A1 -Z
–	–	–	–	–	–	–	–	–	–	–	–	–	–	–	–	–	–	375	545	740	1020	1FG1512- . . ■ ■ 2 - ■ . A1 -Z

Motor shaft height:

36																						C
			48																			D
						63																E
												80										F
																		100				G

Motor length/motor version (**CT** = Compact, **HD** = High Dynamic)**:**

			0/CT				0/CT					0/CT						0/CT					0 2
											1/CT								1/CT				1 2
						1/HD																	1 4
2/CT				2/CT				2/CT															2 2
									3/CT					3/CT						3/CT			3 2
	3/HD				3/HD																		3 4
		4/CT														4/CT							4 2
						4/HD					4/HD												4 4
																				5/CT			5 2
															5/HD								5 4
																6/HD							6 4

Selection of Shaft design, encoder system, mounting type and special designs on page 5/60.

1FG1512- ■ ■ . . . - ■ . . -Z

© Siemens 2019

Technical specifications

Gearbox type *K149*

Servo geared motor Type	i	R_{ex}	M_{2rated} Nm	M_{2max} Nm	$M_{2Em.Off}$ Nm	n_{2max} rpm	n_{1max} rpm	φ [1] '	F_{R2} N	F_{R2max} N	c_T Nm/ '	J_G 10^{-4} kgm^2
1FG1513-.....-..J2	237.03	83433/352	8000	8160	13200	19	4500	5.28	65000	65000	919.6	7.1
1FG1513-.....-..H2	202.86	285621/1408	8000	8160	13200	22	4500	5.29	65000	65000	919.6	9
1FG1513-.....-..G2	190.92	285621/1496	8000	8160	13200	24	4500	5.29	65000	65000	919.6	10.2
1FG1513-.....-..F2	178.97	188993/1056	8000	8160	13200	25	4500	5.29	65000	65000	919.6	11.3
1FG1513-.....-..E2	158.65	558453/3520	8000	8160	13200	28	4500	5.30	65000	65000	919.6	13.6
1FG1513-.....-..D2	140.93	17052/121	8000	8160	13200	32	4500	5.30	64100	63600	919.6	16
1FG1513-.....-..C2	127.16	89523/704	8000	8160	13200	35	4500	5.31	61500	61000	919.6	18.7
1FG1513-.....-..B2	112.68	456141/4048	8000	8120	13200	40	4500	5.31	58500	58100	919.4	23
1FG1513-.....-..A2	99.79	439089/4400	8000	8120	13200	45	4500	5.35	55600	55200	919.5	26
1FG1513-.....-..X1	88.81	1421/16	8000	8120	13200	51	4500	5.36	52900	52600	919.4	31
1FG1513-.....-..W1	79.59	14007/176	8000	8120	13200	57	4500	5.37	50500	50100	919.3	37
1FG1513-.....-..V1	70.56	285621/4048	8000	8120	13200	64	4500	5.38	47900	47500	919.2	43
1FG1513-.....-..U1	62.28	5481/88	8000	8120	13200	72	4500	5.39	45300	45000	919.1	51
1FG1513-.....-..T1	54.76	55419/1012	8000	8120	13200	82	4500	5.41	42700	42400	919	60
1FG1513-.....-..S1	49.6	8729/176	8000	8120	13200	91	4500	5.42	40800	40500	918.8	67
1FG1513-.....-..R1	43.18	174783/4048	8000	8120	13200	104	4500	5.44	38300	37900	918.6	81
1FG1513-.....-..Q1	35.4	80997/2288	7850	7850	13100	123	4350	5.48	35200	35200	918.3	104
1FG1513-.....-..P1	32.33	12673/392	7700	7700	13100	135	4350	6.07	34000	34000	848.1	49
1FG1513-.....-..N1	28.66	36917/1288	7630	7630	13100	152	4350	6.10	32300	32300	847.7	59
1FG1513-.....-..M1	25.3	4959/196	7410	7410	13200	172	4350	6.13	30900	30900	846.8	73
1FG1513-.....-..L1	22.25	7163/322	7210	7210	13200	196	4350	6.17	29500	29500	846.3	89
1FG1513-.....-..K1	20.15	23693/1176	7070	7070	13200	216	4350	6.20	28500	28500	845.4	103
1FG1513-.....-..J1	17.54	22591/1288	6890	6890	13200	248	4350	6.25	27000	27000	844.5	128
1FG1513-.....-..H1	14.38	10469/728	6660	6660	13300	303	4350	6.34	25000	25000	842.8	174
1FG1513-.....-..G1	14.15	17328/1225	4140	4140	10700	307	4350	7.97	31200	31200	620.4	78
1FG1513-.....-..F1	12.44	150176/12075	4030	4030	10600	350	4350	8.03	29800	29800	619.6	97
1FG1513-.....-..E1	11.26	124184/11025	3950	3950	10500	386	4350	8.10	28900	28900	618	113
1FG1513-.....-..D1	9.81	118408/12075	3850	3850	10400	443	4350	8.19	27500	27500	616.5	141
1FG1513-.....-..C1	8.04	54872/6825	3720	3720	10300	541	4350	8.35	25600	25600	613.6	194
1FG1513-.....-..B1	6.82	89528/13125	3630	3630	10200	638	4350	8.40	24100	24100	610.7	266

Selection and ordering data

Shaft design, encoder system, mounting type and special designs

Gearbox type *K149*

			Servo bevel geared motors SIMOTICS S-1FG1 Article No. **1FG1513-** ■■ . . . - . ■ . . -Z
Shaft design:	Solid shaft with feather keyway	– Design 1	**1**
		– Design 3	**3**
	Hollow-shaft with feather keyway	– Design 1 – H90	**5**
		– Design 2 – H80	**6**
Order codes and Descriptions see chapter "Options"	Special shaft design		**9**
Encoder system for motors with DRIVE-CLiQ interface:	AS20DQI encoder		**Q**
	AM20DQI encoder		**R**
	R14DQ resolver		**P**
	R15DQ resolver		**U**
Order codes and Descriptions see chapter "Options"	Special version encoder system		**Z**
Mounting type:	Foot-mounted design		**A**
	Flange-mounted design		**F**
	Housing flange design		**H**
	Shaft-mounted design (not possible with solid shaft)		**C**
Special designs (Options): Order codes and Descriptions see chapter "Options" The following order codes must be added to each article number: • Oil type – order codes **K06** or **K11** • Mounting position – order codes **D11** ... **D16** or **D21** ... **D26**			**-Z**

Selection of 3-stages servo bevel geared motors with gearbox size 149 from next page. **1FG1513-** . . ■■■ - ■ . ■■ -Z

[1] Data are for option reduced-backlash version – order code **G99** required.

© Siemens 2019

Gearbox size 149, 3-stage – 1FG1513

Selection and ordering data (continued)

For line voltage 380 ... 480 V 3 AC (DC link voltage 510 ... 720 V DC) **– Gearbox type** *K149*

Geared motor torque at 1450 rpm Note: All values in **bold** print are maximum gearbox values. M_{2dyn} Nm	Servo bevel geared motors SIMOTICS S-1FG1 Article No.
Max. output speed n_{2max} = 19 rpm, Transmission ratio i = 237.03	
– – – – – – – – – – – – – – – – – – – –	1FG1513- . . ■ ■ 6 - ■ . J2 -Z
– – – – – – – – – – – – – – – – – – – –	1FG1513- . . ■ ■ 4 - ■ . J2 -Z
– – – – – – – – – – – – – – – – – – – –	**8160 8160 8160 8160** 1FG1513- . . ■ ■ 3 - ■ . J2 -Z
– – – – – – – – – – – – – – – – – – – –	**8160 8160 8160 8160** 1FG1513- . . ■ ■ 2 - ■ . J2 -Z
Max. output speed n_{2max} = 22 rpm, Transmission ratio i = 202.86	
– – – – – – – – – – – – – – – – – – – –	1FG1513- . . ■ ■ 6 - ■ . H2 -Z
– – – – – – – – – – – – – – – – – – – –	1FG1513- . . ■ ■ 4 - ■ . H2 -Z
– – – – – – – – – – – – – – – – – – – –	**8160 8160 8160 8160** 1FG1513- . . ■ ■ 3 - ■ . H2 -Z
– – – – – – – – – – – – – – – – – – – –	**8160 8160 8160 8160** 1FG1513- . . ■ ■ 2 - ■ . H2 -Z
Max. output speed n_{2max} = 24 rpm, Transmission ratio i = 190.92	
– – – – – – – – – – – – – – – – – – – –	1FG1513- . . ■ ■ 6 - ■ . G2 -Z
– – – – – – – – – – – – – – – – – – – –	1FG1513- . . ■ ■ 4 - ■ . G2 -Z
– – – – – – – – – – – – – – – – – – – –	**8160 8160 8160 8160** 1FG1513- . . ■ ■ 3 - ■ . G2 -Z
– – – – – – – – – – – – – – – – – – – –	**8160 8160 8160 8160** 1FG1513- . . ■ ■ 2 - ■ . G2 -Z
Max. output speed n_{2max} = 25 rpm, Transmission ratio i = 178.97	
– – – – – – – – – – – – – – – – – – – –	1FG1513- . . ■ ■ 6 - ■ . F2 -Z
– – – – – – – – – – – – – – – – – – – –	1FG1513- . . ■ ■ 4 - ■ . F2 -Z
– – – – – – – – – – – – – – – – – – – –	**8160 8160 8160 8160** 1FG1513- . . ■ ■ 3 - ■ . F2 -Z
– – – – – – – – – – – – – – – – – – – –	**8160 8160 8160 8160** 1FG1513- . . ■ ■ 2 - ■ . F2 -Z
Max. output speed n_{2max} = 28 rpm, Transmission ratio i = 158.65	
– – – – – – – – – – – – – – – – – – – –	1FG1513- . . ■ ■ 6 - ■ . E2 -Z
– – – – – – – – – – – – – – – – – – – –	1FG1513- . . ■ ■ 4 - ■ . E2 -Z
– – – – – – – – – – – – – – – – – – – –	8160 **8160 8160 8160** 1FG1513- . . ■ ■ 3 - ■ . E2 -Z
– – – – – – – – – – – – – – – – – – – –	8160 **8160 8160 8160** 1FG1513- . . ■ ■ 2 - ■ . E2 -Z
Max. output speed n_{2max} = 32 rpm, Transmission ratio i = 140.93	
– – – – – – – – – – – – – – – – – – – –	1FG1513- . . ■ ■ 6 - ■ . D2 -Z
– – – – – – – – – – – – – – – – – – – –	1FG1513- . . ■ ■ 4 - ■ . D2 -Z
– – – – – – – – – – – – – – – – – – – –	7270 **8160 8160 8160** 1FG1513- . . ■ ■ 3 - ■ . D2 -Z
– – – – – – – – – – – – – – – – – – – –	7270 **8160 8160 8160** 1FG1513- . . ■ ■ 2 - ■ . D2 -Z
Max. output speed n_{2max} = 35 rpm, Transmission ratio i = 127.16	
– – – – – – – – – – – – – – – – – – – –	1FG1513- . . ■ ■ 6 - ■ . C2 -Z
– – – – – – – – – – – – – – – – – – – –	1FG1513- . . ■ ■ 4 - ■ . C2 -Z
– – – – – – – – – – – – – – – – – – – –	6580 **8160 8160 8160** 1FG1513- . . ■ ■ 3 - ■ . C2 -Z
– – – – – – – – – – – – – – – – – – – –	6580 **8160 8160 8160** 1FG1513- . . ■ ■ 2 - ■ . C2 -Z

Motor shaft height:

| | | |

© Siemens 2019

For line voltage 380 ... 480 V 3 AC (DC link voltage 510 ... 720 V DC) **– Gearbox type** ***K149***

Geared motor torque at 1450 rpm
Note: All values in **bold** print are maximum gearbox values.
M_{2dyn}
Nm

																							Article No.
Max. output speed n_{2max} = 40 rpm, Transmission ratio i = 112.68																							
–	–	–	–	–	–	–	–	–	–	–	–	–	–	–	–	–	–	–	–	–	–	–	1FG1513- . . ■ ■ 6 - ■ . B2 -Z
–	–	–	–	–	–	–	–	–	–	–	–	–	–	–	–	–	–	–	–	–	–	–	1FG1513- . . ■ ■ 4 - ■ . B2 -Z
–	–	–	–	–	–	–	–	–	–	–	–	–	–	–	–	–	–	–	–	5830	**8120**	**8120**	**8120**	1FG1513- . . ■ ■ 3 - ■ . B2 -Z
–	–	–	–	–	–	–	–	–	–	–	–	–	–	–	–	–	–	–	–	5830	**8120**	**8120**	**8120**	1FG1513- . . ■ ■ 2 - ■ . B2 -Z
Max. output speed n_{2max} = 45 rpm, Transmission ratio i = 99.79																							
–	–	–	–	–	–	–	–	–	–	–	–	–	–	–	–	–	–	–	–	–	–	–	1FG1513- . . ■ ■ 6 - ■ . A2 -Z
–	–	–	–	–	–	–	–	–	–	–	–	–	–	–	–	–	–	–	–	–	–	–	1FG1513- . . ■ ■ 4 - ■ . A2 -Z
–	–	–	–	–	–	–	–	–	–	–	–	–	–	–	–	–	–	–	–	5180	7530	**8120**	**8120**	1FG1513- . . ■ ■ 3 - ■ . A2 -Z
–	–	–	–	–	–	–	–	–	–	–	–	–	–	–	–	–	–	–	–	5180	7530	**8120**	**8120**	1FG1513- . . ■ ■ 2 - ■ . A2 -Z
Max. output speed n_{2max} = 51 rpm, Transmission ratio i = 88.81																							
–	–	–	–	–	–	–	–	–	–	–	–	–	–	–	–	–	–	–	–	–	–	–	1FG1513- . . ■ ■ 6 - ■ . X1 -Z
–	–	–	–	–	–	–	–	–	–	–	–	–	–	–	–	–	–	–	–	–	–	–	1FG1513- . . ■ ■ 4 - ■ . X1 -Z
–	–	–	–	–	–	–	–	–	–	–	–	–	–	–	–	–	–	–	–	4610	6710	**8120**	**8120**	1FG1513- . . ■ ■ 3 - ■ . X1 -Z
–	–	–	–	–	–	–	–	–	–	–	–	–	–	–	–	–	–	–	–	4610	6710	**8120**	**8120**	1FG1513- . . ■ ■ 2 - ■ . X1 -Z
Max. output speed n_{2max} = 57 rpm, Transmission ratio i = 79.59																							
–	–	–	–	–	–	–	–	–	–	–	–	–	–	–	–	–	–	–	–	–	–	–	1FG1513- . . ■ ■ 6 - ■ . W1 -Z
–	–	–	–	–	–	–	–	–	–	–	–	–	–	–	–	–	–	–	–	–	–	–	1FG1513- . . ■ ■ 4 - ■ . W1 -Z
–	–	–	–	–	–	–	–	–	–	–	–	–	–	–	–	–	–	–	–	4130	6010	8120	**8120**	1FG1513- . . ■ ■ 3 - ■ . W1 -Z
–	–	–	–	–	–	–	–	–	–	–	–	–	–	–	–	–	–	–	–	4130	6010	8120	**8120**	1FG1513- . . ■ ■ 2 - ■ . W1 -Z
Max. output speed n_{2max} = 64 rpm, Transmission ratio i = 70.56																							
–	–	–	–	–	–	–	–	–	–	–	–	–	–	–	–	–	–	–	–	–	–	–	1FG1513- . . ■ ■ 6 - ■ . V1 -Z
–	–	–	–	–	–	–	–	–	–	–	–	–	–	–	–	–	–	–	–	–	–	–	1FG1513- . . ■ ■ 4 - ■ . V1 -Z
–	–	–	–	–	–	–	–	–	–	–	–	–	–	–	–	–	–	–	–	3670	5340	7210	**8120**	1FG1513- . . ■ ■ 3 - ■ . V1 -Z
–	–	–	–	–	–	–	–	–	–	–	–	–	–	–	–	–	–	–	–	3670	5340	7210	**8120**	1FG1513- . . ■ ■ 2 - ■ . V1 -Z
Max. output speed n_{2max} = 72 rpm, Transmission ratio i = 62.28																							
–	–	–	–	–	–	–	–	–	–	–	–	–	–	–	–	–	–	–	–	–	–	–	1FG1513- . . ■ ■ 6 - ■ . U1 -Z
–	–	–	–	–	–	–	–	–	–	–	–	–	–	–	–	–	–	–	–	–	–	–	1FG1513- . . ■ ■ 4 - ■ . U1 -Z
–	–	–	–	–	–	–	–	–	–	–	–	–	–	–	–	–	–	–	–	3240	4710	6360	**8120**	1FG1513- . . ■ ■ 3 - ■ . U1 -Z
–	–	–	–	–	–	–	–	–	–	–	–	–	–	–	–	–	–	–	–	3240	4710	6360	**8120**	1FG1513- . . ■ ■ 2 - ■ . U1 -Z
Max. output speed n_{2max} = 82 rpm, Transmission ratio i = 54.76																							
–	–	–	–	–	–	–	–	–	–	–	–	–	–	–	–	–	–	–	–	–	–	–	1FG1513- . . ■ ■ 6 - ■ . T1 -Z
–	–	–	–	–	–	–	–	–	–	–	–	–	–	–	–	–	–	–	–	–	–	–	1FG1513- . . ■ ■ 4 - ■ . T1 -Z
–	–	–	–	–	–	–	–	–	–	–	–	–	–	–	–	–	–	–	–	2850	4150	5600	7780	1FG1513- . . ■ ■ 3 - ■ . T1 -Z
–	–	–	–	–	–	–	–	–	–	–	–	–	–	–	–	–	–	–	–	2850	4150	5600	7780	1FG1513- . . ■ ■ 2 - ■ . T1 -Z
Max. output speed n_{2max} = 91 rpm, Transmission ratio i = 49.6																							
–	–	–	–	–	–	–	–	–	–	–	–	–	–	–	–	–	–	–	–	–	–	–	1FG1513- . . ■ ■ 6 - ■ . S1 -Z
–	–	–	–	–	–	–	–	–	–	–	–	–	–	–	–	–	–	–	–	–	–	–	1FG1513- . . ■ ■ 4 - ■ . S1 -Z
–	–	–	–	–	–	–	–	–	–	–	–	–	–	–	–	–	–	–	–	2580	3760	5080	7060	1FG1513- . . ■ ■ 3 - ■ . S1 -Z
–	–	–	–	–	–	–	–	–	–	–	–	–	–	–	–	–	–	–	–	2580	3760	5080	7060	1FG1513- . . ■ ■ 2 - ■ . S1 -Z

Motor shaft height:

36																							**C**
			48																				**D**
							63																**E**
												80											**F**
																		100					**G**

Motor length/motor version (**CT** = Compact, **HD** = High Dynamic)**:**

			0/CT				**0/CT**				**0/CT**						**0/CT**						**0**	**2**
												1/CT						**1/CT**					**1**	**2**
								1/HD															**1**	**4**
2/CT				**2/CT**					**2/CT**														**2**	**2**
										3/CT				**3/CT**					**3/CT**				**3**	**2**
	3/HD				**3/HD**																		**3**	**4**
		4/CT													**4/CT**								**4**	**2**
						4/HD					**4/HD**												**4**	**4**
																			5/CT				**5**	**2**
																5/HD							**5**	**4**
																	6/HD						**6**	**4**

Selection of Shaft design, encoder system, mounting type and special designs on page 5/65.

1FG1513- ■ ■ . . . - . ■ . . -Z

© Siemens 2019

Gearbox size 149, 3-stage – 1FG1513

For line voltage 380 ... 480 V 3 AC (DC link voltage 510 ... 720 V DC) **– Gearbox type** *K149*

Geared motor torque at 1450 rpm
Note: All values in **bold** print are maximum gearbox values.

M_{2dyn} Nm																						Servo bevel geared motors SIMOTICS S-1FG1 Article No.
Max. output speed n_{2max} = **104 rpm**, Transmission ratio i = **43.18**																						
–	–	–	–	–	–	–	–	–	–	–	–	–	–	–	–	–	–	–	–	–	–	1FG1513- . . ■ ■ 6 - ■ . R1 -Z
–	–	–	–	–	–	–	–	–	–	–	–	–	–	–	–	–	–	–	–	–	–	1FG1513- . . ■ ■ 4 - ■ . R1 -Z
–	–	–	–	–	–	–	–	–	–	–	–	–	–	–	–	–	–	–	–	2250	3280 4430 6150	1FG1513- . . ■ ■ 3 - ■ . R1 -Z
–	–	–	–	–	–	–	–	–	–	–	–	–	–	–	–	–	–	–	–	2250	3280 4430 6150	1FG1513- . . ■ ■ 2 - ■ . R1 -Z
Max. output speed n_{2max} = **123 rpm**, Transmission ratio i = **35.4**																						
–	–	–	–	–	–	–	–	–	–	–	–	–	–	–	–	–	–	–	–	–	–	1FG1513- . . ■ ■ 6 - ■ . Q1 -Z
–	–	–	–	–	–	–	–	–	–	–	–	–	–	–	–	–	–	–	–	–	–	1FG1513- . . ■ ■ 4 - ■ . Q1 -Z
–	–	–	–	–	–	–	–	–	–	–	–	–	–	–	–	–	–	–	–	1840	2690 3630 5040	1FG1513- . . ■ ■ 3 - ■ . Q1 -Z
–	–	–	–	–	–	–	–	–	–	–	–	–	–	–	–	–	–	–	–	1840	2690 3630 5040	1FG1513- . . ■ ■ 2 - ■ . Q1 -Z
Max. output speed n_{2max} = **135 rpm**, Transmission ratio i = **32.33**																						
–	–	–	–	–	–	–	–	–	–	–	–	–	–	–	–	–	–	–	–	–	–	1FG1513- . . ■ ■ 6 - ■ . P1 -Z
–	–	–	–	–	–	–	–	–	–	–	–	–	–	–	–	–	–	–	–	–	–	1FG1513- . . ■ ■ 4 - ■ . P1 -Z
–	–	–	–	–	–	–	–	–	–	–	–	–	–	–	–	–	–	–	–	1700	2470 3340 4640	1FG1513- . . ■ ■ 3 - ■ . P1 -Z
–	–	–	–	–	–	–	–	–	–	–	–	–	–	–	–	–	–	–	–	1700	2470 3340 4640	1FG1513- . . ■ ■ 2 - ■ . P1 -Z
Max. output speed n_{2max} = **152 rpm**, Transmission ratio i = **28.66**																						
–	–	–	–	–	–	–	–	–	–	–	–	–	–	–	–	–	–	–	–	–	–	1FG1513- . . ■ ■ 6 - ■ . N1 -Z
–	–	–	–	–	–	–	–	–	–	–	–	–	–	–	–	–	–	–	–	–	–	1FG1513- . . ■ ■ 4 - ■ . N1 -Z
–	–	–	–	–	–	–	–	–	–	–	–	–	–	–	–	–	–	–	–	1510	2190 2960 4110	1FG1513- . . ■ ■ 3 - ■ . N1 -Z
–	–	–	–	–	–	–	–	–	–	–	–	–	–	–	–	–	–	–	–	1510	2190 2960 4110	1FG1513- . . ■ ■ 2 - ■ . N1 -Z
Max. output speed n_{2max} = **172 rpm**, Transmission ratio i = **25.3**																						
–	–	–	–	–	–	–	–	–	–	–	–	–	–	–	–	–	–	–	–	–	–	1FG1513- . . ■ ■ 6 - ■ . M1 -Z
–	–	–	–	–	–	–	–	–	–	–	–	–	–	–	–	–	–	–	–	–	–	1FG1513- . . ■ ■ 4 - ■ . M1 -Z
–	–	–	–	–	–	–	–	–	–	–	–	–	–	–	–	–	–	–	–	1330	1930 2610 3630	1FG1513- . . ■ ■ 3 - ■ . M1 -Z
–	–	–	–	–	–	–	–	–	–	–	–	–	–	–	–	–	–	–	–	1330	1930 2610 3630	1FG1513- . . ■ ■ 2 - ■ . M1 -Z
Max. output speed n_{2max} = **196 rpm**, Transmission ratio i = **22.25**																						
–	–	–	–	–	–	–	–	–	–	–	–	–	–	–	–	–	–	–	–	–	–	1FG1513- . . ■ ■ 6 - ■ . L1 -Z
–	–	–	–	–	–	–	–	–	–	–	–	–	–	–	–	–	–	–	–	–	–	1FG1513- . . ■ ■ 4 - ■ . L1 -Z
–	–	–	–	–	–	–	–	–	–	–	–	–	–	–	–	–	–	–	–	1170	1700 2300 3200	1FG1513- . . ■ ■ 3 - ■ . L1 -Z
–	–	–	–	–	–	–	–	–	–	–	–	–	–	–	–	–	–	–	–	1170	1700 2300 3200	1FG1513- . . ■ ■ 2 - ■ . L1 -Z
Max. output speed n_{2max} = **216 rpm**, Transmission ratio i = **20.15**																						
–	–	–	–	–	–	–	–	–	–	–	–	–	–	–	–	–	–	–	–	–	–	1FG1513- . . ■ ■ 6 - ■ . K1 -Z
–	–	–	–	–	–	–	–	–	–	–	–	–	–	–	–	–	–	–	–	–	–	1FG1513- . . ■ ■ 4 - ■ . K1 -Z
–	–	–	–	–	–	–	–	–	–	–	–	–	–	–	–	–	–	–	–	1060	1540 2080 2890	1FG1513- . . ■ ■ 3 - ■ . K1 -Z
–	–	–	–	–	–	–	–	–	–	–	–	–	–	–	–	–	–	–	–	1060	1540 2080 2890	1FG1513- . . ■ ■ 2 - ■ . K1 -Z
Max. output speed n_{2max} = **248 rpm**, Transmission ratio i = **17.54**																						
–	–	–	–	–	–	–	–	–	–	–	–	–	–	–	–	–	–	–	–	–	–	1FG1513- . . ■ ■ 6 - ■ . J1 -Z
–	–	–	–	–	–	–	–	–	–	–	–	–	–	–	–	–	–	–	–	–	–	1FG1513- . . ■ ■ 4 - ■ . J1 -Z
–	–	–	–	–	–	–	–	–	–	–	–	–	–	–	–	–	–	–	–	925	1340 1810 2520	1FG1513- . . ■ ■ 3 - ■ . J1 -Z
–	–	–	–	–	–	–	–	–	–	–	–	–	–	–	–	–	–	–	–	925	1340 1810 2520	1FG1513- . . ■ ■ 2 - ■ . J1 -Z

Motor shaft height:

| | | | | | | | | | | | | | | | | | | |

© Siemens 2019

For line voltage 380 ... 480 V 3 AC (DC link voltage 510 ... 720 V DC) **– Gearbox type** ***K149***

Geared motor torque at 1450 rpm
Note: All values in **bold** print are maximum gearbox values.
M_{2dyn} Nm

																							Servo bevel geared motors SIMOTICS S-1FG1 Article No.
Max. output speed n_{2max} = 303 rpm, Transmission ratio i = 14.38																							
–	–	–	–	–	–	–	–	–	–	–	–	–	–	–	–	–	–	–	–	–	–	–	**1FG1513- . . ■ ■ 6 - ■ . H1 -Z**
–	–	–	–	–	–	–	–	–	–	–	–	–	–	–	–	–	–	–	–	–	–	–	**1FG1513- . . ■ ■ 4 - ■ . H1 -Z**
–	–	–	–	–	–	–	–	–	–	–	–	–	–	–	–	–	–	755	1100	1480	2060		**1FG1513- . . ■ ■ 3 - ■ . H1 -Z**
–	–	–	–	–	–	–	–	–	–	–	–	–	–	–	–	–	–	755	1100	1480	2060		**1FG1513- . . ■ ■ 2 - ■ . H1 -Z**
Max. output speed n_{2max} = 307 rpm, Transmission ratio i = 14.15																							
–	–	–	–	–	–	–	–	–	–	–	–	–	–	–	–	–	–	–	–	–	–	–	**1FG1513- . . ■ ■ 6 - ■ . G1 -Z**
–	–	–	–	–	–	–	–	–	–	–	–	–	–	–	–	–	–	–	–	–	–	–	**1FG1513- . . ■ ■ 4 - ■ . G1 -Z**
–	–	–	–	–	–	–	–	–	–	–	–	–	–	–	–	–	–	750	1090	1470	2050		**1FG1513- . . ■ ■ 3 - ■ . G1 -Z**
–	–	–	–	–	–	–	–	–	–	–	–	–	–	–	–	–	–	750	1090	1470	2050		**1FG1513- . . ■ ■ 2 - ■ . G1 -Z**
Max. output speed n_{2max} = 350 rpm, Transmission ratio i = 12.44																							
–	–	–	–	–	–	–	–	–	–	–	–	–	–	–	–	–	–	–	–	–	–	–	**1FG1513- . . ■ ■ 6 - ■ . F1 -Z**
–	–	–	–	–	–	–	–	–	–	–	–	–	–	–	–	–	–	–	–	–	–	–	**1FG1513- . . ■ ■ 4 - ■ . F1 -Z**
–	–	–	–	–	–	–	–	–	–	–	–	–	–	–	–	–	–	660	960	1300	1800		**1FG1513- . . ■ ■ 3 - ■ . F1 -Z**
–	–	–	–	–	–	–	–	–	–	–	–	–	–	–	–	–	–	660	960	1300	1800		**1FG1513- . . ■ ■ 2 - ■ . F1 -Z**
Max. output speed n_{2max} = 386 rpm, Transmission ratio i = 11.26																							
–	–	–	–	–	–	–	–	–	–	–	–	–	–	–	–	–	–	–	–	–	–	–	**1FG1513- . . ■ ■ 6 - ■ . E1 -Z**
–	–	–	–	–	–	–	–	–	–	–	–	–	–	–	–	–	–	–	–	–	–	–	**1FG1513- . . ■ ■ 4 - ■ . E1 -Z**
–	–	–	–	–	–	–	–	–	–	–	–	–	–	–	–	–	–	595	870	1170	1630		**1FG1513- . . ■ ■ 3 - ■ . E1 -Z**
–	–	–	–	–	–	–	–	–	–	–	–	–	–	–	–	–	–	595	870	1170	1630		**1FG1513- . . ■ ■ 2 - ■ . E1 -Z**
Max. output speed n_{2max} = 443 rpm, Transmission ratio i = 9.81																							
–	–	–	–	–	–	–	–	–	–	–	–	–	–	–	–	–	–	–	–	–	–	–	**1FG1513- . . ■ ■ 6 - ■ . D1 -Z**
–	–	–	–	–	–	–	–	–	–	–	–	–	–	–	–	–	–	–	–	–	–	–	**1FG1513- . . ■ ■ 4 - ■ . D1 -Z**
–	–	–	–	–	–	–	–	–	–	–	–	–	–	–	–	–	–	520	755	1020	1420		**1FG1513- . . ■ ■ 3 - ■ . D1 -Z**
–	–	–	–	–	–	–	–	–	–	–	–	–	–	–	–	–	–	520	755	1020	1420		**1FG1513- . . ■ ■ 2 - ■ . D1 -Z**
Max. output speed n_{2max} = 541 rpm, Transmission ratio i = 8.04																							
–	–	–	–	–	–	–	–	–	–	–	–	–	–	–	–	–	–	–	–	–	–	–	**1FG1513- . . ■ ■ 6 - ■ . C1 -Z**
–	–	–	–	–	–	–	–	–	–	–	–	–	–	–	–	–	–	–	–	–	–	–	**1FG1513- . . ■ ■ 4 - ■ . C1 -Z**
–	–	–	–	–	–	–	–	–	–	–	–	–	–	–	–	–	–	425	620	840	1160		**1FG1513- . . ■ ■ 3 - ■ . C1 -Z**
–	–	–	–	–	–	–	–	–	–	–	–	–	–	–	–	–	–	425	620	840	1160		**1FG1513- . . ■ ■ 2 - ■ . C1 -Z**
Max. output speed n_{2max} = 638 rpm, Transmission ratio i = 6.82																							
–	–	–	–	–	–	–	–	–	–	–	–	–	–	–	–	–	–	–	–	–	–	–	**1FG1513- . . ■ ■ 6 - ■ . B1 -Z**
–	–	–	–	–	–	–	–	–	–	–	–	–	–	–	–	–	–	–	–	–	–	–	**1FG1513- . . ■ ■ 4 - ■ . B1 -Z**
–	–	–	–	–	–	–	–	–	–	–	–	–	–	–	–	–	–	360	525	710	990		**1FG1513- . . ■ ■ 3 - ■ . B1 -Z**
–	–	–	–	–	–	–	–	–	–	–	–	–	–	–	–	–	–	360	525	710	990		**1FG1513- . . ■ ■ 2 - ■ . B1 -Z**

Motor shaft height:

36																								**C**
			48																					**D**
						63																		**E**
												80												**F**
																		100						**G**

Motor length/motor version (**CT** = Compact, **HD** = High Dynamic)**:**

			0/CT				**0/CT**					**0/CT**						**0/CT**						**0**	**2**
											1/CT								**1/CT**					**1**	**2**
								1/HD																**1**	**4**
2/CT					**2/CT**				**2/CT**															**2**	**2**
										3/CT				**3/CT**						**3/CT**				**3**	**2**
	3/HD					**3/HD**																		**3**	**4**
		4/CT														**4/CT**								**4**	**2**
						4/HD						**4/HD**												**4**	**4**
																				5/CT				**5**	**2**
															5/HD									**5**	**4**
																6/HD								**6**	**4**

Selection of Shaft design, encoder system, mounting type and special designs on page 5/65.

1FG1513- ■ ■ . . . - . ■ . . -Z

© Siemens 2019

Dimensional drawings

Gearbox type *B..19*

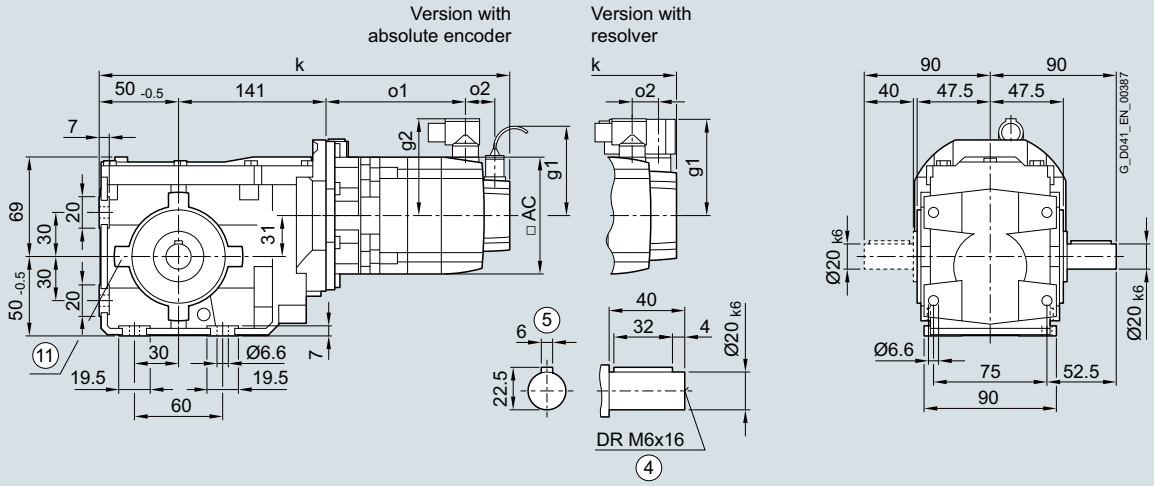

Gearbox type *BA.19*

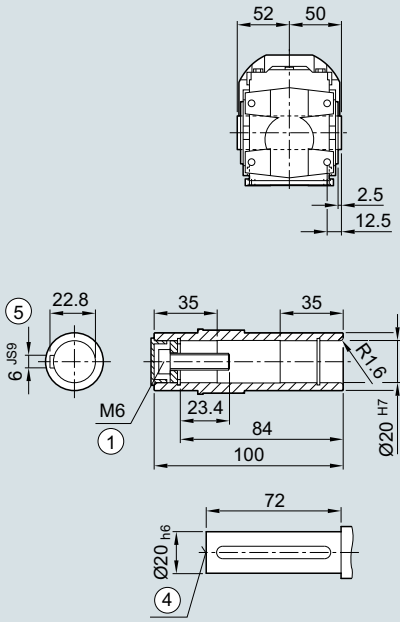

Gearbox type *BAS19*

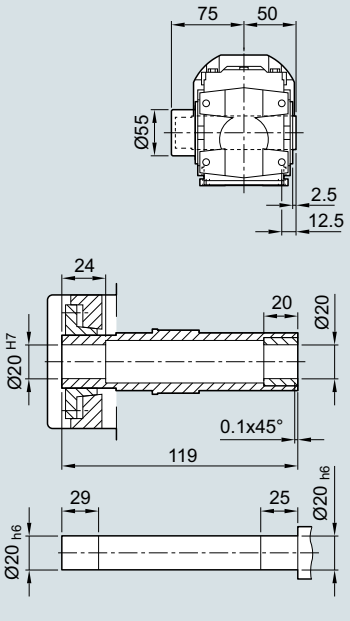

① ISO 4014 ④ DIN 332 ⑤ Feather key/keyway DIN 6885

⑪ Use bores only for housing flange design

© Siemens 2019

Servo bevel geared motor	Motor shaft height	Motor version	Absolute encoder with brake		with brake for increased energy		without brake					Resolver with brake		with brake for increased energy		without brake					
Type			k	o1	k	o1	k	o1	o2	g1	g2	k	o1	k	o1	k	o1	o2	g1	g2	AC
1FG1...-..C2.-....	36	CT	360	107	–	–	360	107	50	105	78	340	113	–	–	340	113	15	80	80	72
1FG1...-..C3.-....		HD	370	117	–	–	370	117				350	123	–	–	350	123				
1FG1...-..C4.-....		CT	385	132	–	–	385	132				365	138	–	–	365	138				
1FG1...-..D0.-....	48	CT	342	89	–	–	342	89	50	105	90	327	89	–	–	327	89	23	90	90	96
1FG1...-..D2.-....		CT	369	116	–	–	369	116				355	116	–	–	355	116				
1FG1...-..D3.-....		HD	395	136	–	–	395	136	56			381	142	–	–	381	142				
1FG1...-..D4.-....		HD	420	161	–	–	420	161				406	167	–	–	406	167				
1FG1...-..E0.-....	63	CT	–	–	–	–	–	–	–	–	–	–	–	–	–	–	–	–	–	–	–
1FG1...-..E1.-....		HD	–	–	–	–	–	–	–	–	–	–	–	–	–	–	–	–	–	–	–
1FG1...-..E2.-....		CT	–	–	–	–	–	–	–	–	–	–	–	–	–	–	–	–	–	–	–
1FG1...-..E3.-....		CT	–	–	–	–	–	–	–	–	–	–	–	–	–	–	–	–	–	–	–
1FG1...-..E4.-....		HD	–	–	–	–	–	–	–	–	–	–	–	–	–	–	–	–	–	–	–
1FG1...-..F0.-....	80	CT	–	–	–	–	–	–	–	–	–	–	–	–	–	–	–	–	–	–	–
1FG1...-..F1.-....		CT	–	–	–	–	–	–	–	–	–	–	–	–	–	–	–	–	–	–	–
1FG1...-..F3.-....		CT	–	–	–	–	–	–	–	–	–	–	–	–	–	–	–	–	–	–	–
1FG1...-..F4.-....		CT	–	–	–	–	–	–	–	–	–	–	–	–	–	–	–	–	–	–	–
1FG1...-..F52-....		HD	–	–	–	–	–	–	–	–	–	–	–	–	–	–	–	–	–	–	–
1FG1...-..F62-....		HD	–	–	–	–	–	–	–	–	–	–	–	–	–	–	–	–	–	–	–
1FG1...-..F53-....		HD	–	–	–	–	–	–	–	–	–	–	–	–	–	–	–	–	–	–	–
1FG1...-..F63-....		HD	–	–	–	–	–	–	–	–	–	–	–	–	–	–	–	–	–	–	–
1FG1...-..G0.-....	100	CT	–	–	–	–	–	–	–	–	–	–	–	–	–	–	–	–	–	–	–
1FG1...-..G1.-....		CT	–	–	–	–	–	–	–	–	–	–	–	–	–	–	–	–	–	–	–
1FG1...-..G3.-....		CT	–	–	–	–	–	–	–	–	–	–	–	–	–	–	–	–	–	–	–
1FG1...-..G5.-....		CT	–	–	–	–	–	–	–	–	–	–	–	–	–	–	–	–	–	–	–

© Siemens 2019

Dimensional drawings

Gearbox type *B.F.19*

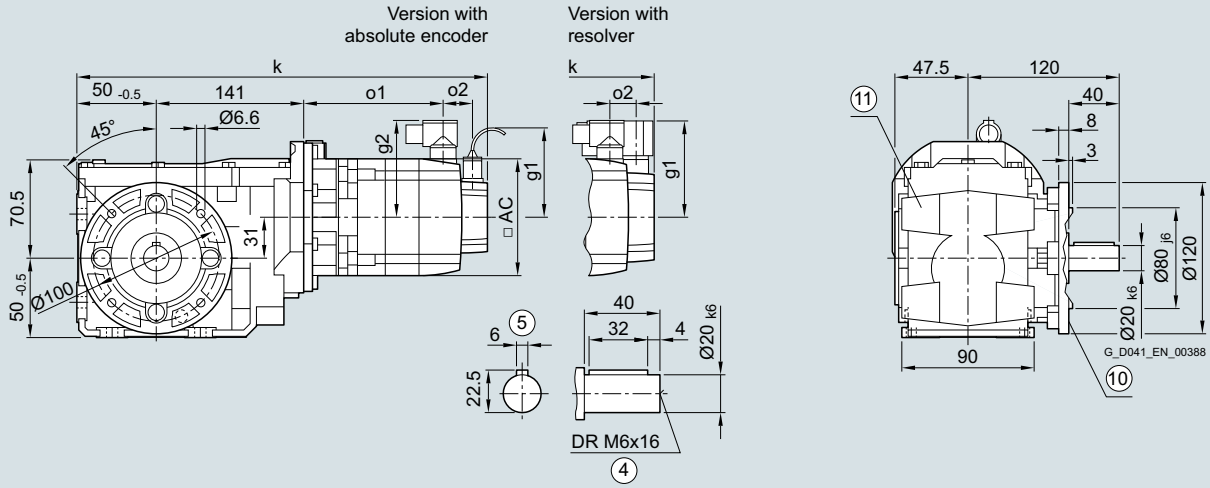

Gearbox type *BAF.19*

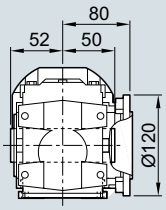

Gearbox type *BAFS19*

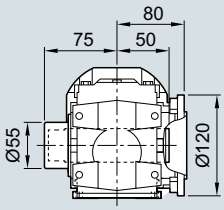

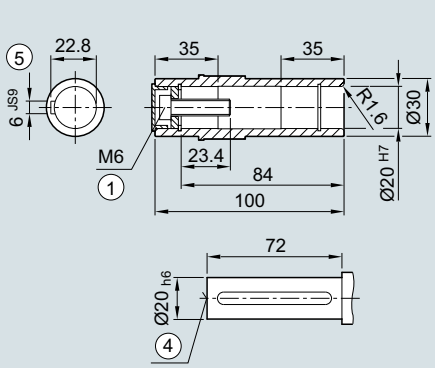

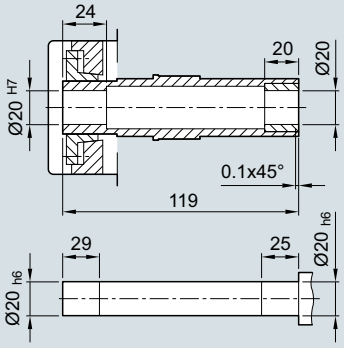

① ISO 4014
④ DIN 332
⑤ Feather key/keyway DIN 6885
⑩ For inner contour and dimensions of the flange design, see page 5/170
⑪ Use bores only for foot-mounted design

© Siemens 2019

Servo bevel geared motor	Motor shaft height	Motor version	Absolute encoder with brake		with brake for increased energy		without brake					Resolver with brake		with brake for increased energy		without brake					
Type			k	o1	k	o1	k	o1	o2	g1	g2	k	o1	k	o1	k	o1	o2	g1	g2	AC
1FG1...-..C2.-....	36	CT	360	107	–	–	360	107	50	105	78	340	113	–	–	340	113	15	80	80	72
1FG1...-..C3.-....		HD	370	117	–	–	370	117				350	123	–	–	350	123				
1FG1...-..C4.-....		CT	385	132	–	–	385	132				365	138	–	–	365	138				
1FG1...-..D0.-....	48	CT	342	89	–	–	342	89	50	105	90	327	89	–	–	327	89	23	90	90	96
1FG1...-..D2.-....		CT	369	116	–	–	369	116				355	116	–	–	355	116				
1FG1...-..D3.-....		HD	395	136	–	–	395	136	56			381	142	–	–	381	142				
1FG1...-..D4.-....		HD	420	161	–	–	420	161				406	167	–	–	406	167				
1FG1...-..E0.-....	63	CT	–	–	–	–	–	–	–	–	–	–	–	–	–	–	–	–	–	–	–
1FG1...-..E1.-....		HD	–	–	–	–	–	–	–	–	–	–	–	–	–	–	–	–	–	–	–
1FG1...-..E2.-....		CT	–	–	–	–	–	–	–	–	–	–	–	–	–	–	–	–	–	–	–
1FG1...-..E3.-....		CT	–	–	–	–	–	–	–	–	–	–	–	–	–	–	–	–	–	–	–
1FG1...-..E4.-....		HD	–	–	–	–	–	–	–	–	–	–	–	–	–	–	–	–	–	–	–
1FG1...-..F0.-....	80	CT	–	–	–	–	–	–	–	–	–	–	–	–	–	–	–	–	–	–	–
1FG1...-..F1.-....		CT	–	–	–	–	–	–	–	–	–	–	–	–	–	–	–	–	–	–	–
1FG1...-..F3.-....		CT	–	–	–	–	–	–	–	–	–	–	–	–	–	–	–	–	–	–	–
1FG1...-..F4.-....		CT	–	–	–	–	–	–	–	–	–	–	–	–	–	–	–	–	–	–	–
1FG1...-..F52-....		HD	–	–	–	–	–	–	–	–	–	–	–	–	–	–	–	–	–	–	–
1FG1...-..F62-....		HD	–	–	–	–	–	–	–	–	–	–	–	–	–	–	–	–	–	–	–
1FG1...-..F53-....		HD	–	–	–	–	–	–	–	–	–	–	–	–	–	–	–	–	–	–	–
1FG1...-..F63-....		HD	–	–	–	–	–	–	–	–	–	–	–	–	–	–	–	–	–	–	–
1FG1...-..G0.-....	100	CT	–	–	–	–	–	–	–	–	–	–	–	–	–	–	–	–	–	–	–
1FG1...-..G1.-....		CT	–	–	–	–	–	–	–	–	–	–	–	–	–	–	–	–	–	–	–
1FG1...-..G3.-....		CT	–	–	–	–	–	–	–	–	–	–	–	–	–	–	–	–	–	–	–
1FG1...-..G5.-....		CT	–	–	–	–	–	–	–	–	–	–	–	–	–	–	–	–	–	–	–

© Siemens 2019

Dimensional drawings

Gearbox type *B.Z.19*

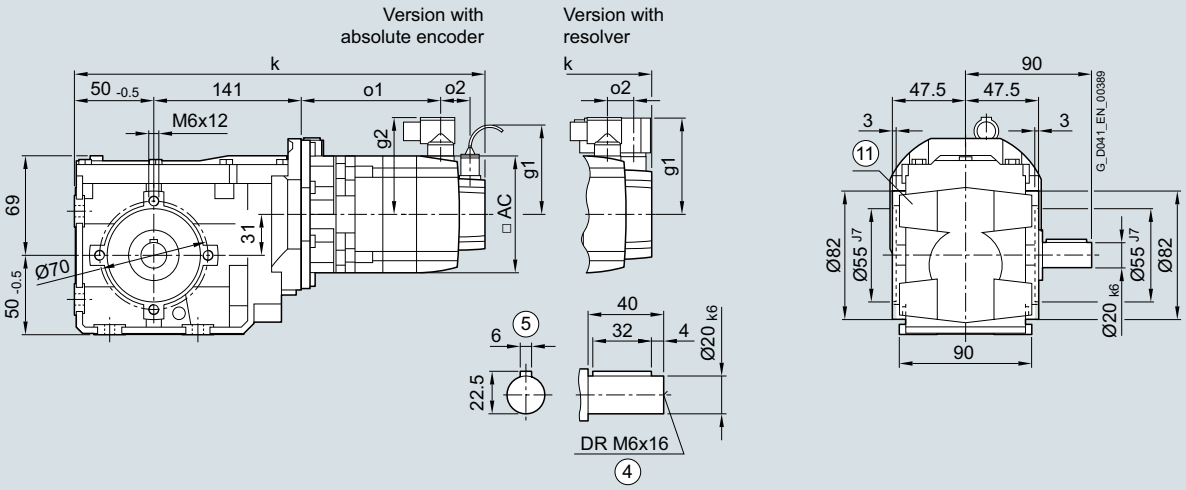

Gearbox type *BAZ.19*

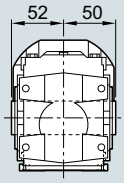

Gearbox type *BAZS19*

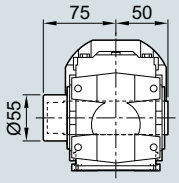

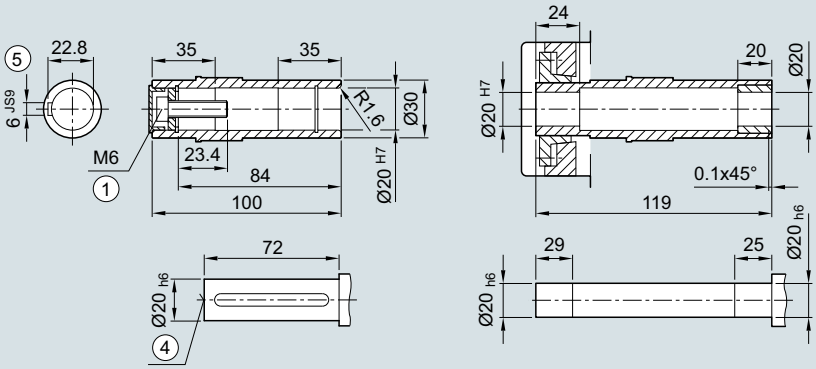

① ISO 4014 ④ DIN 332 ⑤ Feather key/keyway DIN 6885

⑪ Use bores only for foot-mounted design

© Siemens 2019

Servo bevel geared motor	Motor shaft height	Motor version	Absolute encoder with brake		with brake for increased energy		without brake					Resolver with brake		with brake for increased energy		without brake					
Type			k	o1	k	o1	k	o1	o2	g1	g2	k	o1	k	o1	k	o1	o2	g1	g2	AC
1FG1...-..C2.-....	36	CT	360	107	–	–	360	107	50	105	78	340	113	–	–	340	113	15	80	80	72
1FG1...-..C3.-....		HD	370	117	–	–	370	117				350	123	–	–	350	123				
1FG1...-..C4.-....		CT	385	132	–	–	385	132				365	138	–	–	365	138				
1FG1...-..D0.-....	48	CT	342	89	–	–	342	89	50	105	90	327	89	–	–	327	89	23	90	90	96
1FG1...-..D2.-....		CT	369	116	–	–	369	116				355	116	–	–	355	116				
1FG1...-..D3.-....		HD	395	136	–	–	395	136	56			381	142	–	–	381	142				
1FG1...-..D4.-....		HD	420	161	–	–	420	161				406	167	–	–	406	167				
1FG1...-..E0.-....	63	CT	–	–	–	–	–	–	–	–	–	–	–	–	–	–	–	–	–	–	–
1FG1...-..E1.-....		HD	–	–	–	–	–	–	–	–	–	–	–	–	–	–	–	–	–	–	–
1FG1...-..E2.-....		CT	–	–	–	–	–	–	–	–	–	–	–	–	–	–	–	–	–	–	–
1FG1...-..E3.-....		CT	–	–	–	–	–	–	–	–	–	–	–	–	–	–	–	–	–	–	–
1FG1...-..E4.-....		HD	–	–	–	–	–	–	–	–	–	–	–	–	–	–	–	–	–	–	–
1FG1...-..F0.-....	80	CT	–	–	–	–	–	–	–	–	–	–	–	–	–	–	–	–	–	–	–
1FG1...-..F1.-....		CT	–	–	–	–	–	–	–	–	–	–	–	–	–	–	–	–	–	–	–
1FG1...-..F3.-....		CT	–	–	–	–	–	–	–	–	–	–	–	–	–	–	–	–	–	–	–
1FG1...-..F4.-....		CT	–	–	–	–	–	–	–	–	–	–	–	–	–	–	–	–	–	–	–
1FG1...-..F52-....		HD	–	–	–	–	–	–	–	–	–	–	–	–	–	–	–	–	–	–	–
1FG1...-..F62-....		HD	–	–	–	–	–	–	–	–	–	–	–	–	–	–	–	–	–	–	–
1FG1...-..F53-....		HD	–	–	–	–	–	–	–	–	–	–	–	–	–	–	–	–	–	–	–
1FG1...-..F63-....		HD	–	–	–	–	–	–	–	–	–	–	–	–	–	–	–	–	–	–	–
1FG1...-..G0.-....	100	CT	–	–	–	–	–	–	–	–	–	–	–	–	–	–	–	–	–	–	–
1FG1...-..G1.-....		CT	–	–	–	–	–	–	–	–	–	–	–	–	–	–	–	–	–	–	–
1FG1...-..G3.-....		CT	–	–	–	–	–	–	–	–	–	–	–	–	–	–	–	–	–	–	–
1FG1...-..G5.-....		CT	–	–	–	–	–	–	–	–	–	–	–	–	–	–	–	–	–	–	–

© Siemens 2019

Dimensional drawings

Gearbox type *BAD.19*

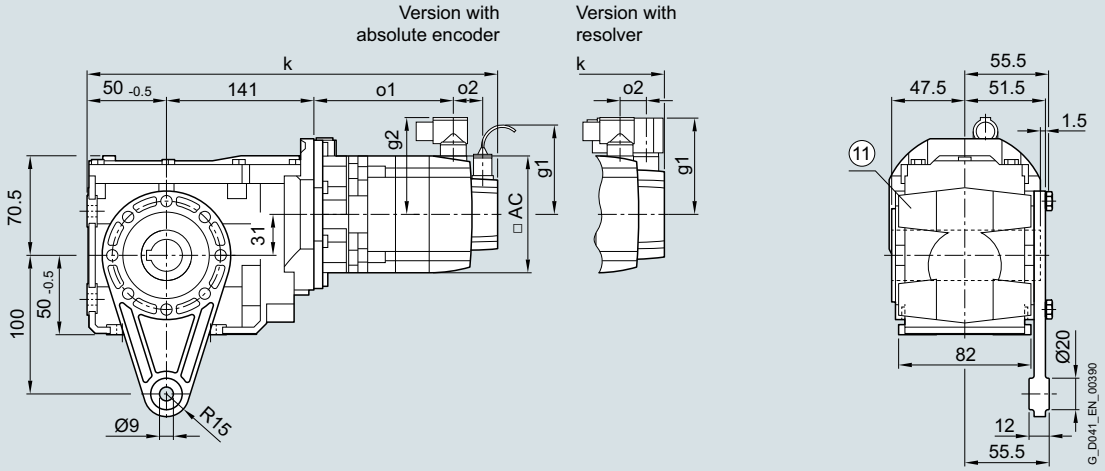

Gearbox type *BAD.19*

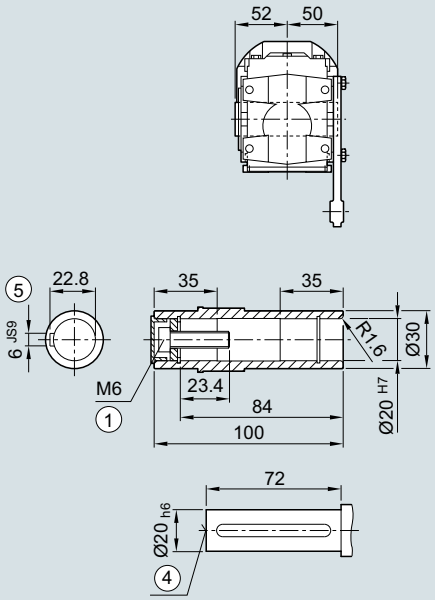

Gearbox type *BADS19*

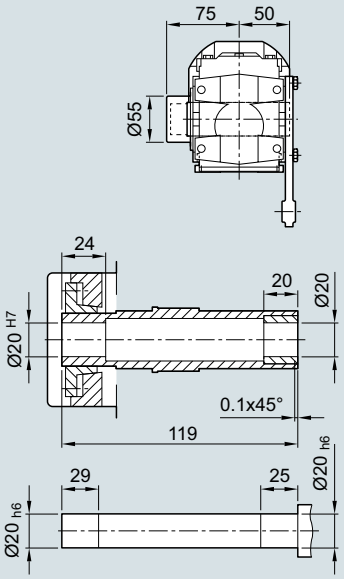

① ISO 4014
④ DIN 332
⑤ Feather key/keyway DIN 6885
⑪ Use bores only for foot-mounted design

© Siemens 2019

Servo bevel geared motor	Motor shaft height	Motor version	Absolute encoder with brake		with brake for increased energy		without brake					Resolver with brake		with brake for increased energy		without brake					
Type			k	o1	k	o1	k	o1	o2	g1	g2	k	o1	k	o1	k	o1	o2	g1	g2	AC
1FG1...-..C2.-....	36	CT	360	107	–	–	360	107	50	105	78	340	113	–	–	340	113	15	80	80	72
1FG1...-..C3.-....		HD	370	117	–	–	370	117				350	123	–	–	350	123				
1FG1...-..C4.-....		CT	385	132	–	–	385	132				365	138	–	–	365	138				
1FG1...-..D0.-....	48	CT	342	89	–	–	342	89	50	105	90	327	89	–	–	327	89	23	90	90	96
1FG1...-..D2.-....		CT	369	116	–	–	369	116				355	116	–	–	355	116				
1FG1...-..D3.-....		HD	395	136	–	–	395	136	56			381	142	–	–	381	142				
1FG1...-..D4.-....		HD	420	161	–	–	420	161				406	167	–	–	406	167				
1FG1...-..E0.-....	63	CT	–	–	–	–	–	–	–	–	–	–	–	–	–	–	–	–	–	–	–
1FG1...-..E1.-....		HD	–	–	–	–	–	–	–	–	–	–	–	–	–	–	–	–	–	–	–
1FG1...-..E2.-....		CT	–	–	–	–	–	–	–	–	–	–	–	–	–	–	–	–	–	–	–
1FG1...-..E3.-....		CT	–	–	–	–	–	–	–	–	–	–	–	–	–	–	–	–	–	–	–
1FG1...-..E4.-....		HD	–	–	–	–	–	–	–	–	–	–	–	–	–	–	–	–	–	–	–
1FG1...-..F0.-....	80	CT	–	–	–	–	–	–	–	–	–	–	–	–	–	–	–	–	–	–	–
1FG1...-..F1.-....		CT	–	–	–	–	–	–	–	–	–	–	–	–	–	–	–	–	–	–	–
1FG1...-..F3.-....		CT	–	–	–	–	–	–	–	–	–	–	–	–	–	–	–	–	–	–	–
1FG1...-..F4.-....		CT	–	–	–	–	–	–	–	–	–	–	–	–	–	–	–	–	–	–	–
1FG1...-..F52-....		HD	–	–	–	–	–	–	–	–	–	–	–	–	–	–	–	–	–	–	–
1FG1...-..F62-....		HD	–	–	–	–	–	–	–	–	–	–	–	–	–	–	–	–	–	–	–
1FG1...-..F53-....		HD	–	–	–	–	–	–	–	–	–	–	–	–	–	–	–	–	–	–	–
1FG1...-..F63-....		HD	–	–	–	–	–	–	–	–	–	–	–	–	–	–	–	–	–	–	–
1FG1...-..G0.-....	100	CT	–	–	–	–	–	–	–	–	–	–	–	–	–	–	–	–	–	–	–
1FG1...-..G1.-....		CT	–	–	–	–	–	–	–	–	–	–	–	–	–	–	–	–	–	–	–
1FG1...-..G3.-....		CT	–	–	–	–	–	–	–	–	–	–	–	–	–	–	–	–	–	–	–
1FG1...-..G5.-....		CT	–	–	–	–	–	–	–	–	–	–	–	–	–	–	–	–	–	–	–

© Siemens 2019

Dimensional drawings

Gearbox type *B..29*

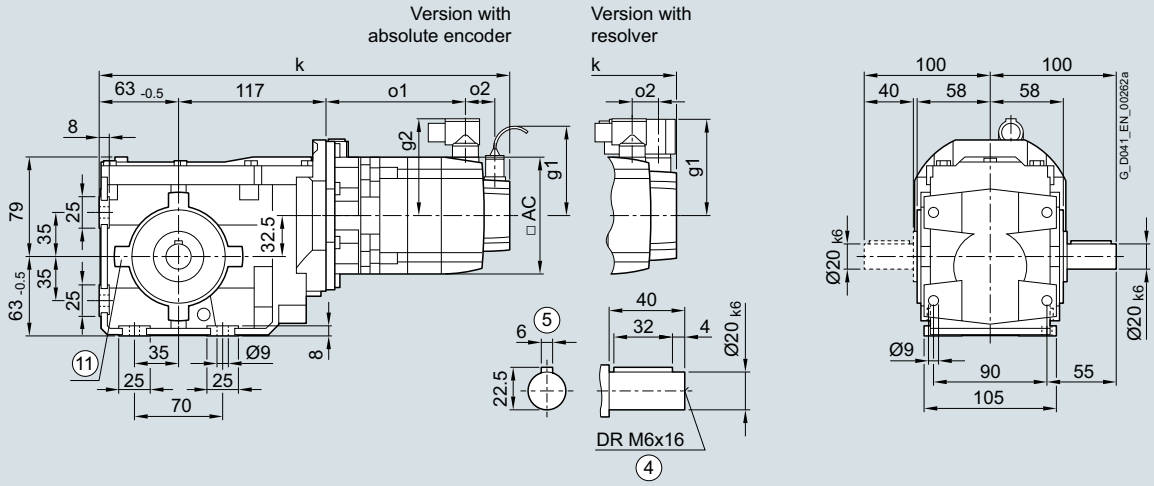

Gearbox type *BA.29*

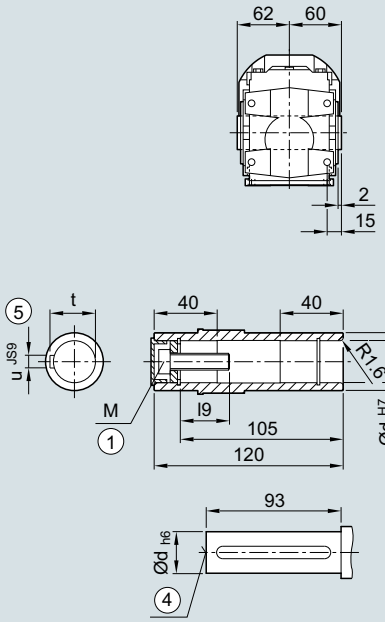

Gearbox type *BAS29*

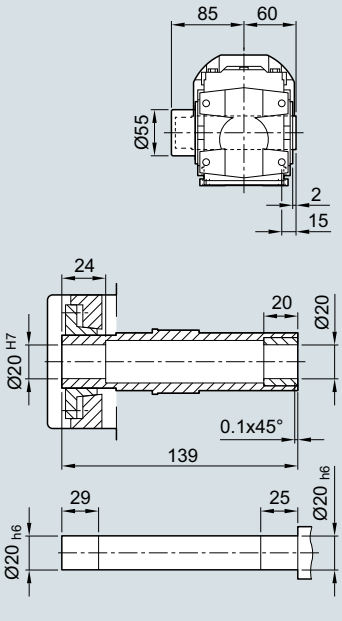

① ISO 4014 ④ DIN 332 ⑤ Feather key/keyway DIN 6885

⑪ Use bores only for housing flange design

© Siemens 2019

Servo bevel geared motor	Motor shaft height	Motor version	Absolute encoder with brake		with brake for increased energy		without brake					Resolver with brake		with brake for increased energy		without brake					
Type			k	o1	k	o1	k	o1	o2	g1	g2	k	o1	k	o1	k	o1	o2	g1	g2	AC
1FG1...-..C2.-....	36	CT	391	148	–	–	374	131	50	104.5	78	371	154	–	–	354	137	15	80	80	72
1FG1...-..C3.-....		HD	401	158	–	–	384	141				381	164	–	–	364	147				
1FG1...-..C4.-....		CT	416	173	–	–	399	156				396	179	–	–	379	162				
1FG1...-..D0.-....	48	CT	373	130	–	–	349	106	50	104.5	90	358	130	–	–	334	106	23	90	90	96
1FG1...-..D2.-....		CT	400	158	–	–	376	134				386	158	–	–	362	134				
1FG1...-..D3.-....		HD	426	178	–	–	402	154	56			412	184	–	–	388	160				
1FG1...-..D4.-....		HD	451	203	–	–	427	179				437	209	–	–	413	185				
1FG1...-..E0.-....	63	CT	406	163	–	–	391	148	50	104.5	104	391	163	–	–	377	148	23	103	104	126
1FG1...-..E1.-....		HD	441	198	–	–	426	183				426	198	–	–	412	183				
1FG1...-..E2.-....		CT	428	186	–	–	414	171				414	186	–	–	399	171				
1FG1...-..E3.-....		CT	451	208	–	–	436	193				436	208	–	–	422	193				
1FG1...-..E4.-....		HD	505	262	–	–	490	247				490	262	–	–	476	247				
1FG1...-..F0.-....	80	CT	445	204	456	215	408	167	48	104.5	119	430	205	441	216	394	168	21	118	119	155
1FG1...-..F1.-....		CT	464	223	475	234	427	186				449	224	460	235	413	187				
1FG1...-..F3.-....		CT	483	242	494	253	446	205				468	243	479	254	432	206				
1FG1...-..F4.-....		CT	502	262	513	273	466	225				488	263	499	274	451	226				
1FG1...-..F52-....		HD	531	290	542	301	494	253				516	291	527	302	480	254				
1FG1...-..F62-....		HD	531	290	542	301	494	253				516	291	527	302	480	254				
1FG1...-..F53-....		HD	531	290	542	301	494	253			139	516	291	527	302	480	254			139	
1FG1...-..F63-....		HD	531	290	542	301	494	253				516	291	527	302	480	254				
1FG1...-..G0.-....	100	CT	–	–	–	–	–	–	–	–	–	–	–	–	–	–	–	–	–	–	–
1FG1...-..G1.-....		CT	–	–	–	–	–	–	–	–	–	–	–	–	–	–	–	–	–	–	–
1FG1...-..G3.-....		CT	–	–	–	–	–	–	–	–	–	–	–	–	–	–	–	–	–	–	–
1FG1...-..G5.-....		CT	–	–	–	–	–	–	–	–	–	–	–	–	–	–	–	–	–	–	–

Hollow-shaft				
d	l9	M	t	u
20	23.4	M6	22.8	6
25	27.6	M10	28.3	8

© Siemens 2019

Dimensional drawings

Gearbox type *B.F.29*

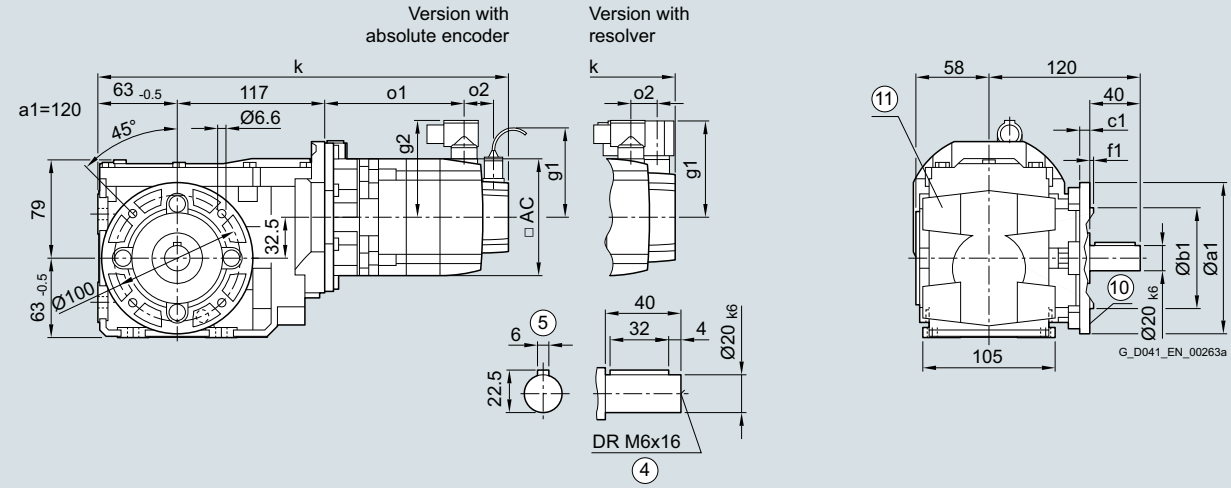

Gearbox type *BAF.29*

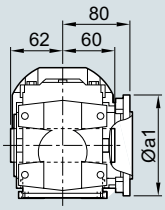

Gearbox type *BAFS29*

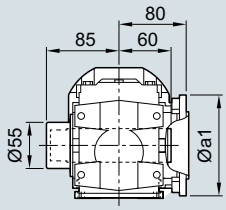

a1=160

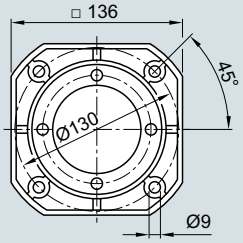

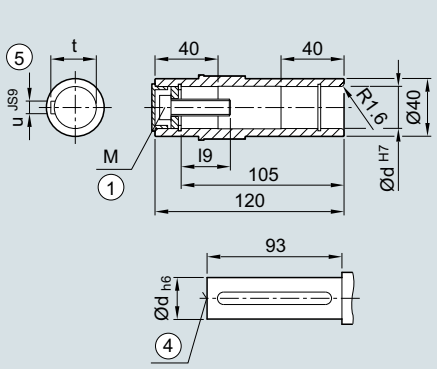

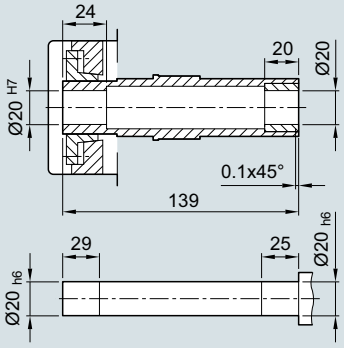

① ISO 4014
④ DIN 332
⑤ Feather key/keyway DIN 6885
⑩ For inner contour and dimensions of the flange design, see page 5/170
⑪ Use bores only for foot-mounted design

© Siemens 2019

Servo bevel geared motor	Motor shaft height	Motor version	Absolute encoder with brake		with brake for increased energy		without brake					Resolver with brake		with brake for increased energy		without brake					
Type			k	o1	k	o1	k	o1	o2	g1	g2	k	o1	k	o1	k	o1	o2	g1	g2	AC
1FG1...-..C2.-....	36	CT	391	148	–	–	374	131	50	104.5	78	371	154	–	–	354	137	15	80	80	72
1FG1...-..C3.-....		HD	401	158	–	–	384	141				381	164	–	–	364	147				
1FG1...-..C4.-....		CT	416	173	–	–	399	156				396	179	–	–	379	162				
1FG1...-..D0.-....	48	CT	373	130	–	–	349	106	50	104.5	90	358	130	–	–	334	106	23	90	90	96
1FG1...-..D2.-....		CT	400	158	–	–	376	134				386	158	–	–	362	134				
1FG1...-..D3.-....		HD	426	178	–	–	402	154	56			412	184	–	–	388	160				
1FG1...-..D4.-....		HD	451	203	–	–	427	179				437	209	–	–	413	185				
1FG1...-..E0.-....	63	CT	406	163	–	–	391	148	50	104.5	104	391	163	–	–	377	148	23	103	104	126
1FG1...-..E1.-....		HD	441	198	–	–	426	183				426	198	–	–	412	183				
1FG1...-..E2.-....		CT	428	186	–	–	414	171				414	186	–	–	399	171				
1FG1...-..E3.-....		CT	451	208	–	–	436	193				436	208	–	–	422	193				
1FG1...-..E4.-....		HD	505	262	–	–	490	247				490	262	–	–	476	247				
1FG1...-..F0.-....	80	CT	445	204	456	215	408	167	48	104.5	119	430	205	441	216	394	168	21	118	119	155
1FG1...-..F1.-....		CT	464	223	475	234	427	186				449	224	460	235	413	187				
1FG1...-..F3.-....		CT	483	242	494	253	446	205				468	243	479	254	432	206				
1FG1...-..F4.-....		CT	502	262	513	273	466	225				488	263	499	274	451	226				
1FG1...-..F52-....		HD	531	290	542	301	494	253				516	291	527	302	480	254				
1FG1...-..F62-....		HD	531	290	542	301	494	253				516	291	527	302	480	254				
1FG1...-..F53-....		HD	531	290	542	301	494	253			139	516	291	527	302	480	254			139	
1FG1...-..F63-....		HD	531	290	542	301	494	253				516	291	527	302	480	254				
1FG1...-..G0.-....	100	CT	–	–	–	–	–	–	–	–	–	–	–	–	–	–	–	–	–	–	–
1FG1...-..G1.-....		CT	–	–	–	–	–	–	–	–	–	–	–	–	–	–	–	–	–	–	–
1FG1...-..G3.-....		CT	–	–	–	–	–	–	–	–	–	–	–	–	–	–	–	–	–	–	–
1FG1...-..G5.-....		CT	–	–	–	–	–	–	–	–	–	–	–	–	–	–	–	–	–	–	–

Hollow-shaft				
d	l9	M	t	u
20	23.4	M6	22.8	6
25	27.6	M10	28.3	8

© Siemens 2019

Dimensional drawings

Gearbox type *B.Z.29*

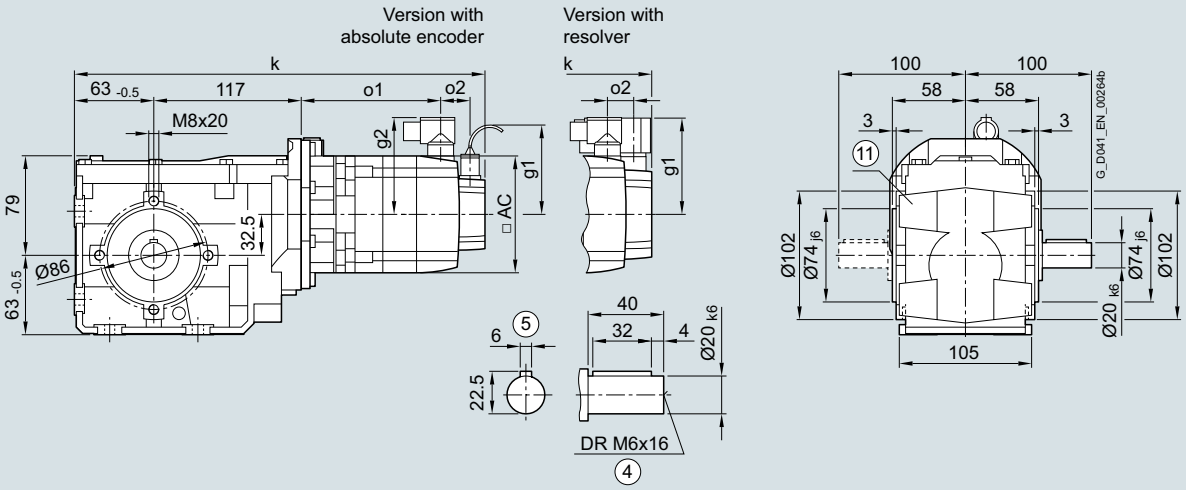

Gearbox type *BAZ.29*

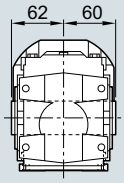

Gearbox type *BAZS29*

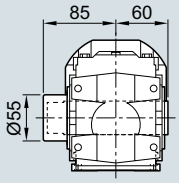

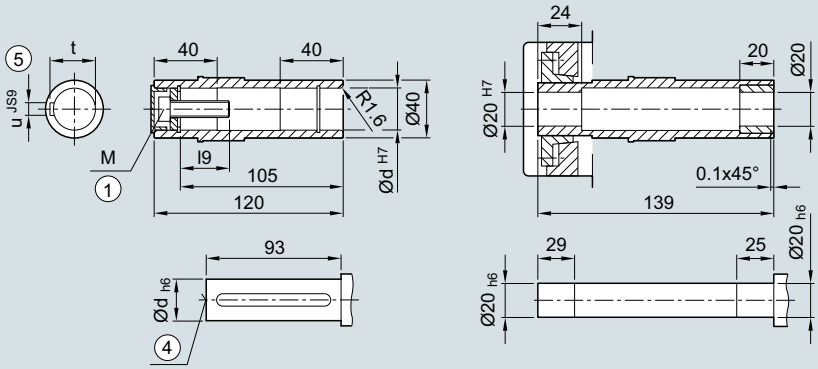

① ISO 4014 ④ DIN 332 ⑤ Feather key/keyway DIN 6885

⑪ Use bores only for foot-mounted design

© Siemens 2019

Servo bevel geared motor	Motor shaft height	Motor version	Absolute encoder with brake		with brake for increased energy		without brake					Resolver with brake		with brake for increased energy		without brake					
Type			k	o1	k	o1	k	o1	o2	g1	g2	k	o1	k	o1	k	o1	o2	g1	g2	AC
1FG1...-..C2.-....	36	CT	391	148	–	–	374	131	50	104.5	78	371	154	–	–	354	137	15	80	80	72
1FG1...-..C3.-....		HD	401	158	–	–	384	141				381	164	–	–	364	147				
1FG1...-..C4.-....		CT	416	173	–	–	399	156				396	179	–	–	379	162				
1FG1...-..D0.-....	48	CT	373	130	–	–	349	106	50	104.5	90	358	130	–	–	334	106	23	90	90	96
1FG1...-..D2.-....		CT	400	158	–	–	376	134				386	158	–	–	362	134				
1FG1...-..D3.-....		HD	426	178	–	–	402	154	56			412	184	–	–	388	160				
1FG1...-..D4.-....		HD	451	203	–	–	427	179				437	209	–	–	413	185				
1FG1...-..E0.-....	63	CT	406	163	–	–	391	148	50	104.5	104	391	163	–	–	377	148	23	103	104	126
1FG1...-..E1.-....		HD	441	198	–	–	426	183				426	198	–	–	412	183				
1FG1...-..E2.-....		CT	428	186	–	–	414	171				414	186	–	–	399	171				
1FG1...-..E3.-....		CT	451	208	–	–	436	193				436	208	–	–	422	193				
1FG1...-..E4.-....		HD	505	262	–	–	490	247				490	262	–	–	476	247				
1FG1...-..F0.-....	80	CT	445	204	456	215	408	167	48	104.5	119	430	205	441	216	394	168	21	118	119	155
1FG1...-..F1.-....		CT	464	223	475	234	427	186				449	224	460	235	413	187				
1FG1...-..F3.-....		CT	483	242	494	253	446	205				468	243	479	254	432	206				
1FG1...-..F4.-....		CT	502	262	513	273	466	225				488	263	499	274	451	226				
1FG1...-..F52-....		HD	531	290	542	301	494	253				516	291	527	302	480	254				
1FG1...-..F62-....		HD	531	290	542	301	494	253				516	291	527	302	480	254				
1FG1...-..F53-....		HD	531	290	542	301	494	253			139	516	291	527	302	480	254			139	
1FG1...-..F63-....		HD	531	290	542	301	494	253				516	291	527	302	480	254				
1FG1...-..G0.-....	100	CT	–	–	–	–	–	–	–	–	–	–	–	–	–	–	–	–	–	–	–
1FG1...-..G1.-....		CT	–	–	–	–	–	–	–	–	–	–	–	–	–	–	–	–	–	–	–
1FG1...-..G3.-....		CT	–	–	–	–	–	–	–	–	–	–	–	–	–	–	–	–	–	–	–
1FG1...-..G5.-....		CT	–	–	–	–	–	–	–	–	–	–	–	–	–	–	–	–	–	–	–

Hollow-shaft				
d	l9	M	t	u
20	23.4	M6	22.8	6
25	27.6	M10	28.3	8

© Siemens 2019

Dimensional drawings

Gearbox type *BAD.29*

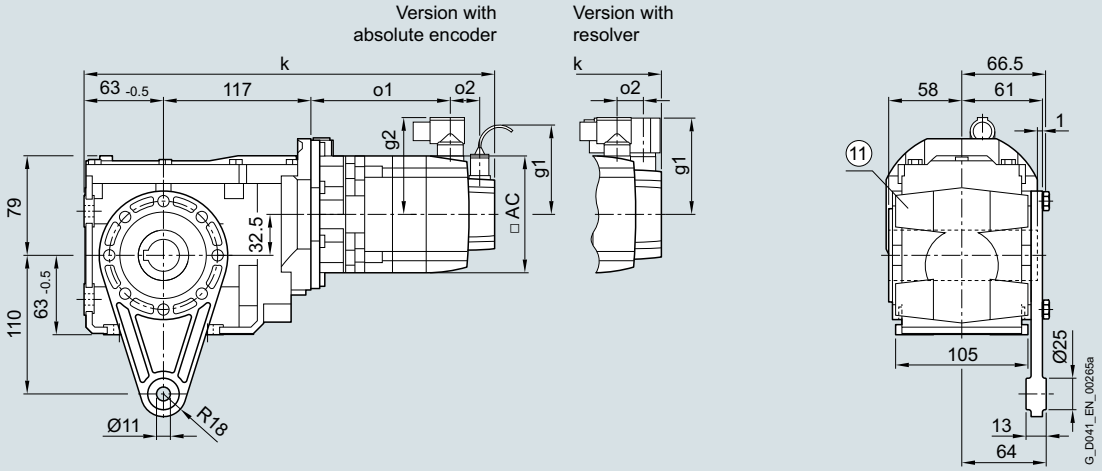

Gearbox type *BAD.29*

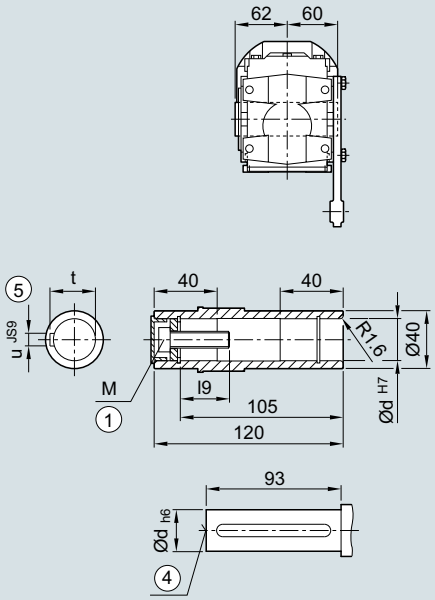

Gearbox type *BADS29*

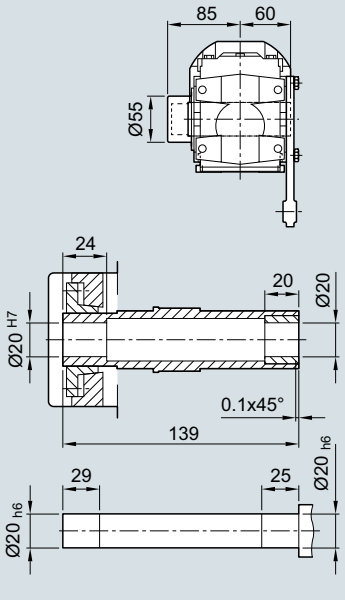

① ISO 4014
④ DIN 332
⑤ Feather key/keyway DIN 6885
⑪ Use bores only for foot-mounted design

© Siemens 2019

Servo bevel geared motor	Motor shaft height	Motor version	Absolute encoder with brake		with brake for increased energy		without brake					Resolver with brake		with brake for increased energy		without brake					
Type			k	o1	k	o1	k	o1	o2	g1	g2	k	o1	k	o1	k	o1	o2	g1	g2	AC
1FG1...-..C2.-....	36	CT	391	148	–	–	374	131	50	104.5	78	371	154	–	–	354	137	15	80	80	72
1FG1...-..C3.-....		HD	401	158	–	–	384	141				381	164	–	–	364	147				
1FG1...-..C4.-....		CT	416	173	–	–	399	156				396	179	–	–	379	162				
1FG1...-..D0.-....	48	CT	373	130	–	–	349	106	50	104.5	90	358	130	–	–	334	106	23	90	90	96
1FG1...-..D2.-....		CT	400	158	–	–	376	134				386	158	–	–	362	134				
1FG1...-..D3.-....		HD	426	178	–	–	402	154	56			412	184	–	–	388	160				
1FG1...-..D4.-....		HD	451	203	–	–	427	179				437	209	–	–	413	185				
1FG1...-..E0.-....	63	CT	406	163	–	–	391	148	50	104.5	104	391	163	–	–	377	148	23	103	104	126
1FG1...-..E1.-....		HD	441	198	–	–	426	183				426	198	–	–	412	183				
1FG1...-..E2.-....		CT	428	186	–	–	414	171				414	186	–	–	399	171				
1FG1...-..E3.-....		CT	451	208	–	–	436	193				436	208	–	–	422	193				
1FG1...-..E4.-....		HD	505	262	–	–	490	247				490	262	–	–	476	247				
1FG1...-..F0.-....	80	CT	445	204	456	215	408	167	48	104.5	119	430	205	441	216	394	168	21	118	119	155
1FG1...-..F1.-....		CT	464	223	475	234	427	186				449	224	460	235	413	187				
1FG1...-..F3.-....		CT	483	242	494	253	446	205				468	243	479	254	432	206				
1FG1...-..F4.-....		CT	502	262	513	273	466	225				488	263	499	274	451	226				
1FG1...-..F52-....		HD	531	290	542	301	494	253				516	291	527	302	480	254				
1FG1...-..F62-....		HD	531	290	542	301	494	253				516	291	527	302	480	254				
1FG1...-..F53-....		HD	531	290	542	301	494	253			139	516	291	527	302	480	254			139	
1FG1...-..F63-....		HD	531	290	542	301	494	253				516	291	527	302	480	254				
1FG1...-..G0.-....	100	CT	–	–	–	–	–	–	–	–	–	–	–	–	–	–	–	–	–	–	–
1FG1...-..G1.-....		CT	–	–	–	–	–	–	–	–	–	–	–	–	–	–	–	–	–	–	–
1FG1...-..G3.-....		CT	–	–	–	–	–	–	–	–	–	–	–	–	–	–	–	–	–	–	–
1FG1...-..G5.-....		CT	–	–	–	–	–	–	–	–	–	–	–	–	–	–	–	–	–	–	–

Hollow-shaft				
d	l9	M	t	u
20	23.4	M6	22.8	6
25	27.6	M10	28.3	8

© Siemens 2019

Dimensional drawings

Gearbox type *B..39*

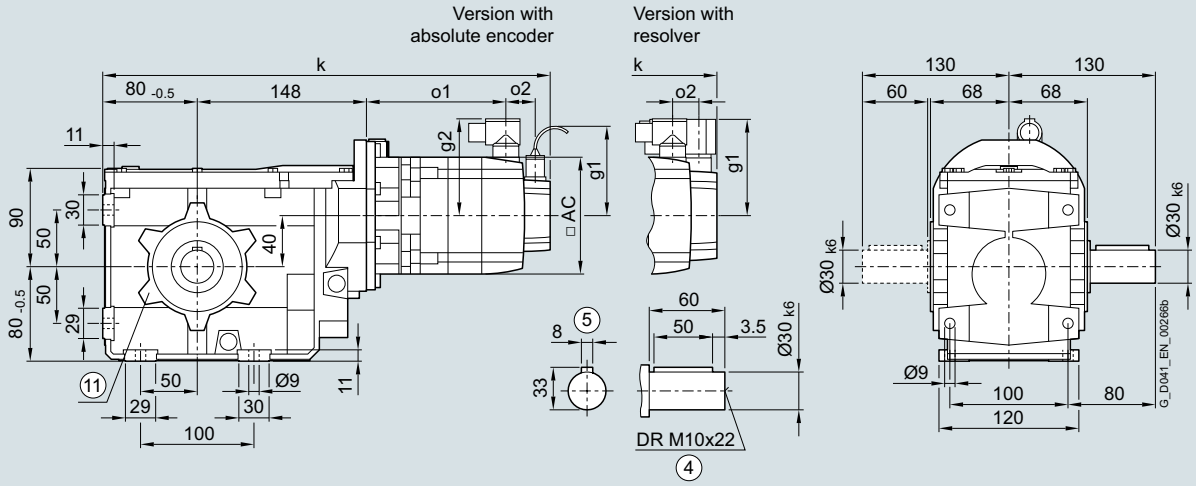

Gearbox type *BA.39*

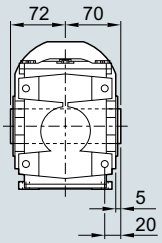

Gearbox type *BAS39*

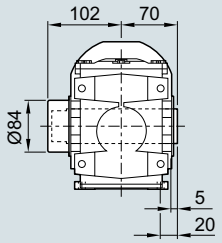

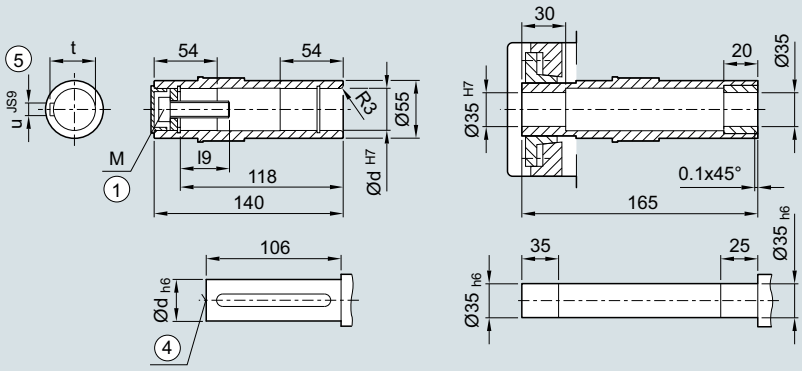

① ISO 4014 ④ DIN 332 ⑤ Feather key/keyway DIN 6885

⑪ Use bores only for housing flange design

© Siemens 2019

Servo bevel geared motor	Motor shaft height	Motor version	Absolute encoder with brake		with brake for increased energy		without brake					Resolver with brake		with brake for increased energy		without brake					
Type			k	o1	k	o1	k	o1	o2	g1	g2	k	o1	k	o1	k	o1	o2	g1	g2	AC
1FG1...-..C2.-....	36	CT	439	148	–	–	422	131	50	104.5	78	419	154	–	–	402	137	15	80	80	72
1FG1...-..C3.-....		HD	449	158	–	–	432	141				429	164	–	–	412	147				
1FG1...-..C4.-....		CT	464	173	–	–	447	156				444	179	–	–	427	162				
1FG1...-..D0.-....	48	CT	421	130	–	–	397	106	50	104.5	90	406	130	–	–	382	106	23	90	90	96
1FG1...-..D2.-....		CT	448	158	–	–	424	134				434	158	–	–	410	134				
1FG1...-..D3.-....		HD	474	178	–	–	450	154	56			460	184	–	–	436	160				
1FG1...-..D4.-....		HD	499	203	–	–	475	179				485	209	–	–	461	185				
1FG1...-..E0.-....	63	CT	454	163	–	–	439	148	50	104.5	104	439	163	–	–	425	148	23	103	104	126
1FG1...-..E1.-....		HD	489	198	–	–	474	183				474	198	–	–	460	183				
1FG1...-..E2.-....		CT	476	186	–	–	462	171				462	186	–	–	447	171				
1FG1...-..E3.-....		CT	499	208	–	–	484	193				484	208	–	–	470	193				
1FG1...-..E4.-....		HD	553	262	–	–	538	247				538	262	–	–	524	247				
1FG1...-..F0.-....	80	CT	493	204	504	215	456	167	48	104.5	119	478	205	489	216	442	168	21	118	119	155
1FG1...-..F1.-....		CT	512	223	523	234	475	186				497	224	508	235	461	187				
1FG1...-..F3.-....		CT	531	242	542	253	494	205				516	243	527	254	480	206				
1FG1...-..F4.-....		CT	550	262	561	273	514	225				536	263	547	274	499	226				
1FG1...-..F52-....		HD	579	290	590	301	542	253				564	291	575	302	528	254				
1FG1...-..F62-....		HD	579	290	590	301	542	253				564	291	575	302	528	254				
1FG1...-..F53-....		HD	579	290	590	301	542	253			139	564	291	575	302	528	254			139	
1FG1...-..F63-....		HD	579	290	590	301	542	253				564	291	575	302	528	254				
1FG1...-..G0.-....	100	CT	–	–	–	–	–	–	–	–	–	–	–	–	–	–	–	–	–	–	–
1FG1...-..G1.-....		CT	–	–	–	–	–	–	–	–	–	–	–	–	–	–	–	–	–	–	–
1FG1...-..G3.-....		CT	–	–	–	–	–	–	–	–	–	–	–	–	–	–	–	–	–	–	–
1FG1...-..G5.-....		CT	–	–	–	–	–	–	–	–	–	–	–	–	–	–	–	–	–	–	–

Hollow-shaft				
d	l9	M	t	u
30	32.6	M10	33.3	8
35	37	M12	38.3	10
40	47.75	M16	43.3	12

© Siemens 2019

Dimensional drawings

Gearbox type *B.F.39*

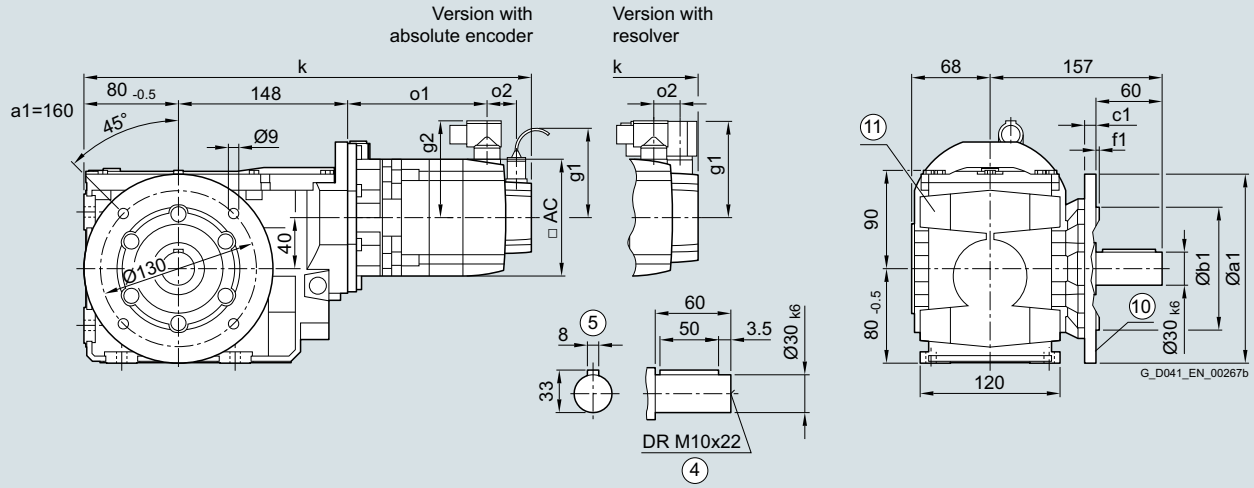

Gearbox type *BAF.9*

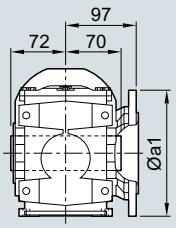

Gearbox type *BAFS39*

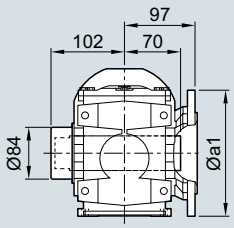

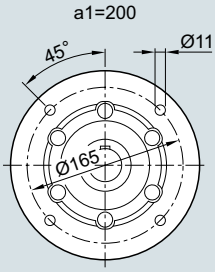

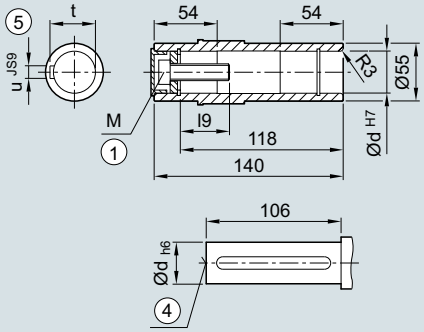

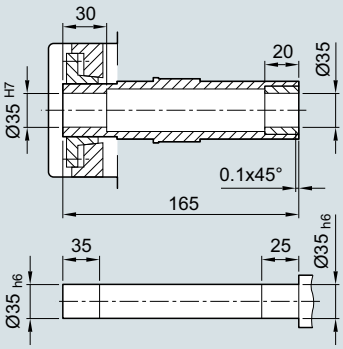

① ISO 4014
④ DIN 332
⑤ Feather key/keyway DIN 6885
⑩ For inner contour and dimensions of the flange design, see page 5/170
⑪ Use bores only for foot-mounted design

© Siemens 2019

Servo bevel geared motor	Motor shaft height	Motor version	Absolute encoder with brake		with brake for increased energy		without brake					Resolver with brake		with brake for increased energy		without brake					
Type			k	o1	k	o1	k	o1	o2	g1	g2	k	o1	k	o1	k	o1	o2	g1	g2	AC
1FG1...-..C2.-....	36	CT	439	148	–	–	422	131	50	104.5	78	419	154	–	–	402	137	15	80	80	72
1FG1...-..C3.-....		HD	449	158	–	–	432	141				429	164	–	–	412	147				
1FG1...-..C4.-....		CT	464	173	–	–	447	156				444	179	–	–	427	162				
1FG1...-..D0.-....	48	CT	421	130	–	–	397	106	50	104.5	90	406	130	–	–	382	106	23	90	90	96
1FG1...-..D2.-....		CT	448	158	–	–	424	134				434	158	–	–	410	134				
1FG1...-..D3.-....		HD	474	178	–	–	450	154	56			460	184	–	–	436	160				
1FG1...-..D4.-....		HD	499	203	–	–	475	179				485	209	–	–	461	185				
1FG1...-..E0.-....	63	CT	454	163	–	–	439	148	50	104.5	104	439	163	–	–	425	148	23	103	104	126
1FG1...-..E1.-....		HD	489	198	–	–	474	183				474	198	–	–	460	183				
1FG1...-..E2.-....		CT	476	186	–	–	462	171				462	186	–	–	447	171				
1FG1...-..E3.-....		CT	499	208	–	–	484	193				484	208	–	–	470	193				
1FG1...-..E4.-....		HD	553	262	–	–	538	247				538	262	–	–	524	247				
1FG1...-..F0.-....	80	CT	493	204	504	215	456	167	48	104.5	119	478	205	489	216	442	168	21	118	119	155
1FG1...-..F1.-....		CT	512	223	523	234	475	186				497	224	508	235	461	187				
1FG1...-..F3.-....		CT	531	242	542	253	494	205				516	243	527	254	480	206				
1FG1...-..F4.-....		CT	550	262	561	273	514	225				536	263	547	274	499	226				
1FG1...-..F52-....		HD	579	290	590	301	542	253				564	291	575	302	528	254				
1FG1...-..F62-....		HD	579	290	590	301	542	253				564	291	575	302	528	254				
1FG1...-..F53-....		HD	579	290	590	301	542	253			139	564	291	575	302	528	254			139	
1FG1...-..F63-....		HD	579	290	590	301	542	253				564	291	575	302	528	254				
1FG1...-..G0.-....	100	CT	–	–	–	–	–	–	–	–	–	–	–	–	–	–	–	–	–	–	–
1FG1...-..G1.-....		CT	–	–	–	–	–	–	–	–	–	–	–	–	–	–	–	–	–	–	–
1FG1...-..G3.-....		CT	–	–	–	–	–	–	–	–	–	–	–	–	–	–	–	–	–	–	–
1FG1...-..G5.-....		CT	–	–	–	–	–	–	–	–	–	–	–	–	–	–	–	–	–	–	–

Hollow-shaft				
d	l9	M	t	u
30	32.6	M10	33.3	8
35	37	M12	38.3	10
40	47.75	M16	43.3	12

© Siemens 2019

Dimensional drawings

Gearbox type *B.Z.39*

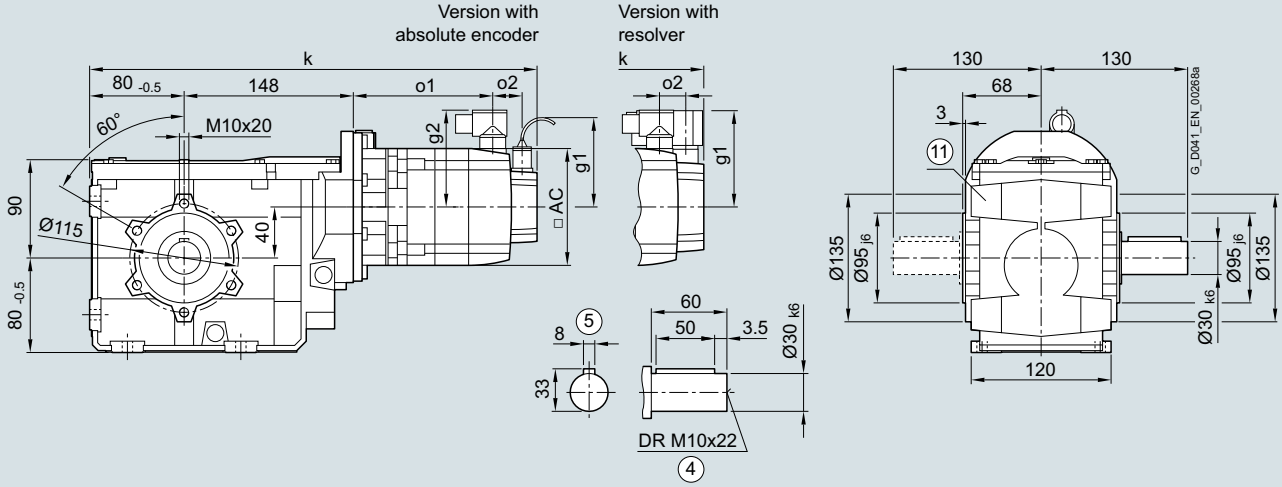

Gearbox type *BAZ.39*

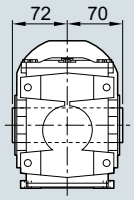

Gearbox type *BAZS39*

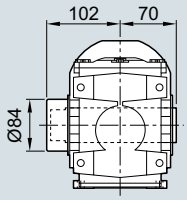

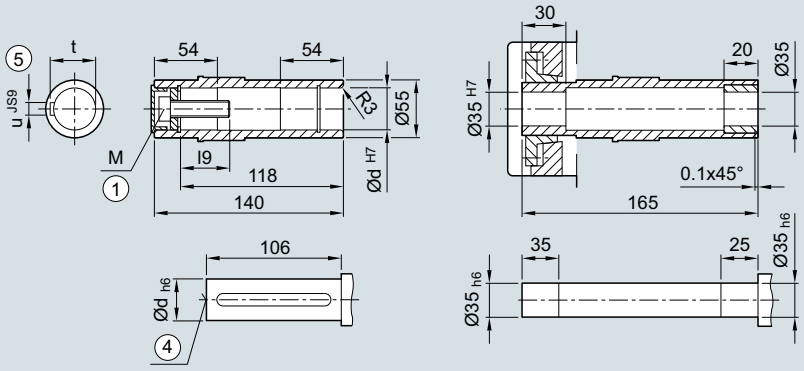

① ISO 4014 ④ DIN 332 ⑤ Feather key/keyway DIN 6885
⑪ Use bores only for foot-mounted design

© Siemens 2019

Servo bevel geared motor	Motor shaft height	Motor version	Absolute encoder with brake		with brake for increased energy		without brake					Resolver with brake		with brake for increased energy		without brake					
Type			k	o1	k	o1	k	o1	o2	g1	g2	k	o1	k	o1	k	o1	o2	g1	g2	AC
1FG1...-..C2.-....	36	CT	439	148	–	–	422	131	50	104.5	78	419	154	–	–	402	137	15	80	80	72
1FG1...-..C3.-....		HD	449	158	–	–	432	141				429	164	–	–	412	147				
1FG1...-..C4.-....		CT	464	173	–	–	447	156				444	179	–	–	427	162				
1FG1...-..D0.-....	48	CT	421	130	–	–	397	106	50	104.5	90	406	130	–	–	382	106	23	90	90	96
1FG1...-..D2.-....		CT	448	158	–	–	424	134				434	158	–	–	410	134				
1FG1...-..D3.-....		HD	474	178	–	–	450	154	56			460	184	–	–	436	160				
1FG1...-..D4.-....		HD	499	203	–	–	475	179				485	209	–	–	461	185				
1FG1...-..E0.-....	63	CT	454	163	–	–	439	148	50	104.5	104	439	163	–	–	425	148	23	103	104	126
1FG1...-..E1.-....		HD	489	198	–	–	474	183				474	198	–	–	460	183				
1FG1...-..E2.-....		CT	476	186	–	–	462	171				462	186	–	–	447	171				
1FG1...-..E3.-....		CT	499	208	–	–	484	193				484	208	–	–	470	193				
1FG1...-..E4.-....		HD	553	262	–	–	538	247				538	262	–	–	524	247				
1FG1...-..F0.-....	80	CT	493	204	504	215	456	167	48	104.5	119	478	205	489	216	442	168	21	118	119	155
1FG1...-..F1.-....		CT	512	223	523	234	475	186				497	224	508	235	461	187				
1FG1...-..F3.-....		CT	531	242	542	253	494	205				516	243	527	254	480	206				
1FG1...-..F4.-....		CT	550	262	561	273	514	225				536	263	547	274	499	226				
1FG1...-..F52-....		HD	579	290	590	301	542	253				564	291	575	302	528	254				
1FG1...-..F62-....		HD	579	290	590	301	542	253				564	291	575	302	528	254				
1FG1...-..F53-....		HD	579	290	590	301	542	253			139	564	291	575	302	528	254			139	
1FG1...-..F63-....		HD	579	290	590	301	542	253				564	291	575	302	528	254				
1FG1...-..G0.-....	100	CT	–	–	–	–	–	–	–	–	–	–	–	–	–	–	–	–	–	–	–
1FG1...-..G1.-....		CT	–	–	–	–	–	–	–	–	–	–	–	–	–	–	–	–	–	–	–
1FG1...-..G3.-....		CT	–	–	–	–	–	–	–	–	–	–	–	–	–	–	–	–	–	–	–
1FG1...-..G5.-....		CT	–	–	–	–	–	–	–	–	–	–	–	–	–	–	–	–	–	–	–

Hollow-shaft				
d	l9	M	t	u
30	32.6	M10	33.3	8
35	37	M12	38.3	10
40	47.75	M16	43.3	12

© Siemens 2019

Dimensional drawings

Gearbox type *BAD.39*

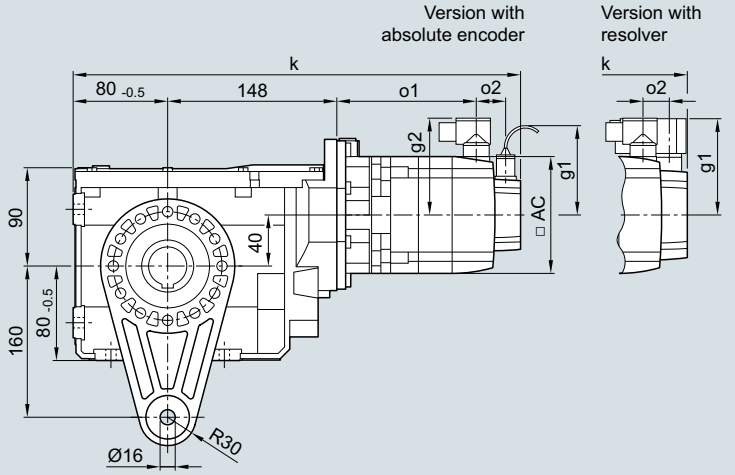

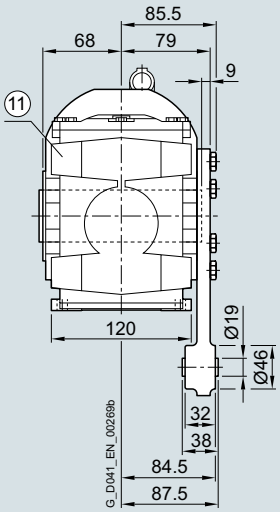

Gearbox type *BAD.39*

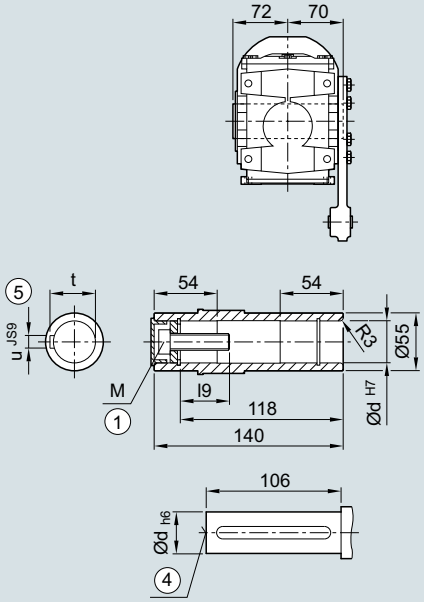

Gearbox type *BADS39*

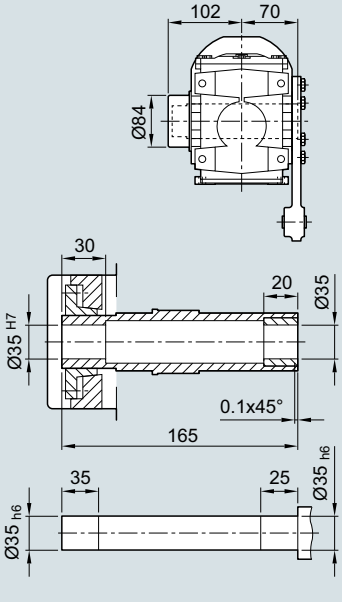

① ISO 4014
④ DIN 332
⑤ Feather key/keyway DIN 6885
⑪ Use bores only for foot-mounted design

© Siemens 2019

Servo bevel geared motor	Motor shaft height	Motor version	Absolute encoder with brake		with brake for increased energy		without brake					Resolver with brake		with brake for increased energy		without brake					
Type			k	o1	k	o1	k	o1	o2	g1	g2	k	o1	k	o1	k	o1	o2	g1	g2	AC
1FG1...-..C2.-....	36	CT	439	148	–	–	422	131	50	104.5	78	419	154	–	–	402	137	15	80	80	72
1FG1...-..C3.-....		HD	449	158	–	–	432	141				429	164	–	–	412	147				
1FG1...-..C4.-....		CT	464	173	–	–	447	156				444	179	–	–	427	162				
1FG1...-..D0.-....	48	CT	421	130	–	–	397	106	50	104.5	90	406	130	–	–	382	106	23	90	90	96
1FG1...-..D2.-....		CT	448	158	–	–	424	134				434	158	–	–	410	134				
1FG1...-..D3.-....		HD	474	178	–	–	450	154	56			460	184	–	–	436	160				
1FG1...-..D4.-....		HD	499	203	–	–	475	179				485	209	–	–	461	185				
1FG1...-..E0.-....	63	CT	454	163	–	–	439	148	50	104.5	104	439	163	–	–	425	148	23	103	104	126
1FG1...-..E1.-....		HD	489	198	–	–	474	183				474	198	–	–	460	183				
1FG1...-..E2.-....		CT	476	186	–	–	462	171				462	186	–	–	447	171				
1FG1...-..E3.-....		CT	499	208	–	–	484	193				484	208	–	–	470	193				
1FG1...-..E4.-....		HD	553	262	–	–	538	247				538	262	–	–	524	247				
1FG1...-..F0.-....	80	CT	493	204	504	215	456	167	48	104.5	119	478	205	489	216	442	168	21	118	119	155
1FG1...-..F1.-....		CT	512	223	523	234	475	186				497	224	508	235	461	187				
1FG1...-..F3.-....		CT	531	242	542	253	494	205				516	243	527	254	480	206				
1FG1...-..F4.-....		CT	550	262	561	273	514	225				536	263	547	274	499	226				
1FG1...-..F52-....		HD	579	290	590	301	542	253				564	291	575	302	528	254				
1FG1...-..F62-....		HD	579	290	590	301	542	253				564	291	575	302	528	254				
1FG1...-..F53-....		HD	579	290	590	301	542	253			139	564	291	575	302	528	254			139	
1FG1...-..F63-....		HD	579	290	590	301	542	253				564	291	575	302	528	254				
1FG1...-..G0.-....	100	CT	–	–	–	–	–	–	–	–	–	–	–	–	–	–	–	–	–	–	–
1FG1...-..G1.-....		CT	–	–	–	–	–	–	–	–	–	–	–	–	–	–	–	–	–	–	–
1FG1...-..G3.-....		CT	–	–	–	–	–	–	–	–	–	–	–	–	–	–	–	–	–	–	–
1FG1...-..G5.-....		CT	–	–	–	–	–	–	–	–	–	–	–	–	–	–	–	–	–	–	–

Hollow-shaft				
d	l9	M	t	u
30	32.6	M10	33.3	8
35	37	M12	38.3	10
40	47.75	M16	43.3	12

© Siemens 2019

Dimensional drawings

Gearbox type *B..49*

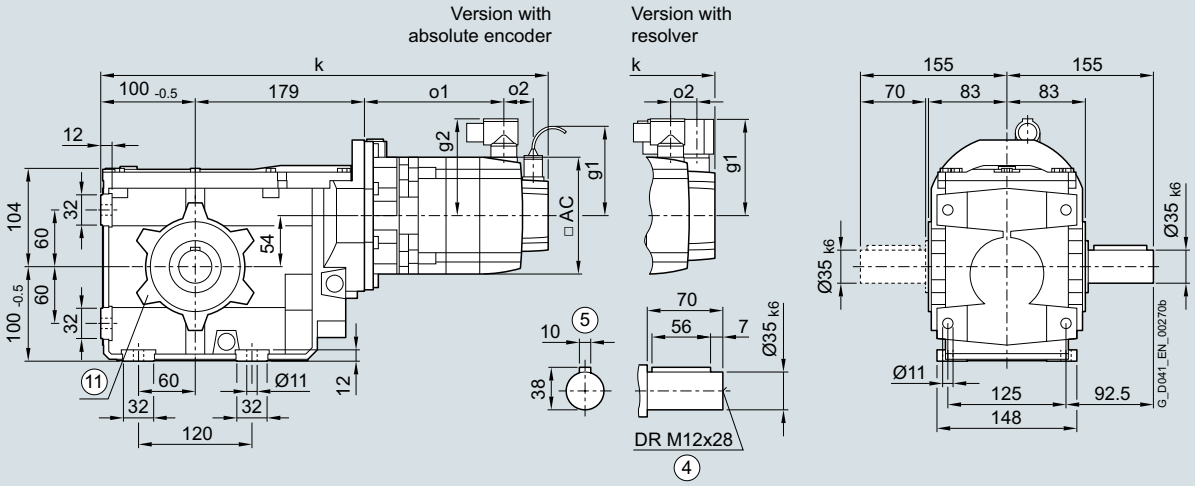

Gearbox type *BA.49*

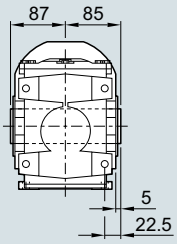

Gearbox type *BAS49*

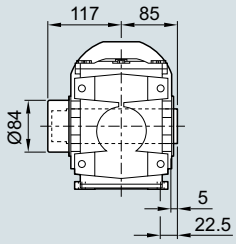

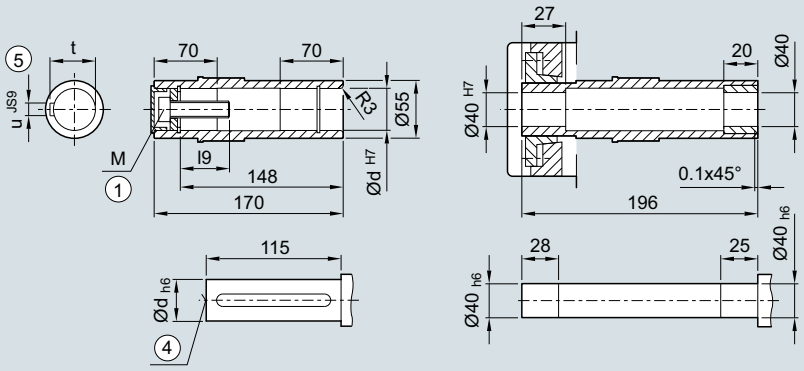

① ISO 4014 ④ DIN 332 ⑤ Feather key/keyway DIN 6885

⑪ Use bores only for housing flange design

© Siemens 2019

Servo bevel geared motor	Motor shaft height	Motor version	Absolute encoder with brake		with brake for increased energy		without brake					Resolver with brake		with brake for increased energy		without brake					
Type			k	o1	k	o1	k	o1	o2	g1	g2	k	o1	k	o1	k	o1	o2	g1	g2	AC
1FG1...-..C2.-....	36	CT	481	139	–	–	464	122	50	104.5	78	460	144	–	–	443	127	15	80	80	72
1FG1...-..C3.-....		HD	491	149	–	–	474	132				470	154	–	–	453	137				
1FG1...-..C4.-....		CT	506	164	–	–	489	147				485	169	–	–	468	152				
1FG1...-..D0.-....	48	CT	462	121	–	–	438	97	50	104.5	90	448	121	–	–	424	97	23	90	90	96
1FG1...-..D2.-....		CT	490	148	–	–	466	124				475	148	–	–	451	124				
1FG1...-..D3.-....		HD	516	168	–	–	492	144	56			501	174	–	–	477	150				
1FG1...-..D4.-....		HD	541	193	–	–	517	169				526	199	–	–	502	175				
1FG1...-..E0.-....	63	CT	495	154	–	–	481	139	50	104.5	104	481	154	–	–	466	139	23	103	104	126
1FG1...-..E1.-....		HD	530	189	–	–	516	174				516	189	–	–	501	174				
1FG1...-..E2.-....		CT	518	176	–	–	503	161				503	176	–	–	489	161				
1FG1...-..E3.-....		CT	540	199	–	–	526	184				526	199	–	–	511	184				
1FG1...-..E4.-....		HD	594	253	–	–	580	238				580	253	–	–	565	238				
1FG1...-..F0.-....	80	CT	534	195	545	206	498	158	48	104.5	119	520	196	531	207	483	159	21	118	119	155
1FG1...-..F1.-....		CT	553	214	564	225	517	177				539	215	550	226	502	178				
1FG1...-..F3.-....		CT	572	233	583	244	536	196				558	234	569	245	521	197				
1FG1...-..F4.-....		CT	592	252	603	263	555	215				577	253	588	264	541	216				
1FG1...-..F52-....		HD	620	281	631	292	584	244				606	282	617	293	569	245				
1FG1...-..F62-....		HD	620	281	631	292	584	244				606	282	617	293	569	245				
1FG1...-..F53-....		HD	620	281	631	292	584	244			139	606	282	617	293	569	245			139	
1FG1...-..F63-....		HD	620	281	631	292	584	244				606	282	617	293	569	245				
1FG1...-..G0.-....	100	CT	565	220	592	247	530	185	53	104.5	137	550	222	577	249	515	187	26	136	137	192
1FG1...-..G1.-....		CT	591	246	618	273	556	211			158	576	248	603	275	541	213			158	
1FG1...-..G3.-....		CT	617	272	644	299	582	237				602	274	629	301	567	239				
1FG1...-..G5.-....		CT	669	324	696	351	634	289				654	326	681	353	619	291				

Hollow-shaft				
d	l9	M	t	u
35	57	M12	38.3	10
40	67.75	M16	38.3	12

© Siemens 2019

Dimensional drawings

Gearbox type *B.F.49*

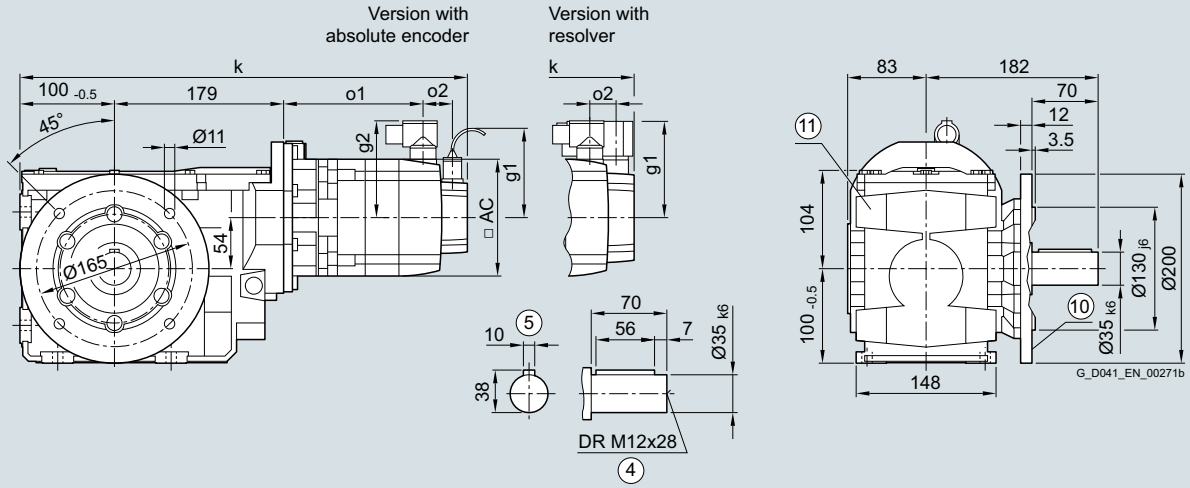

Gearbox type *BAF.49*

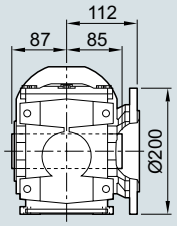

Gearbox type *BAFS49*

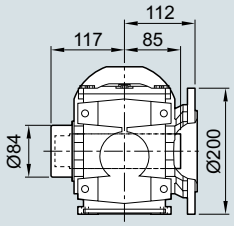

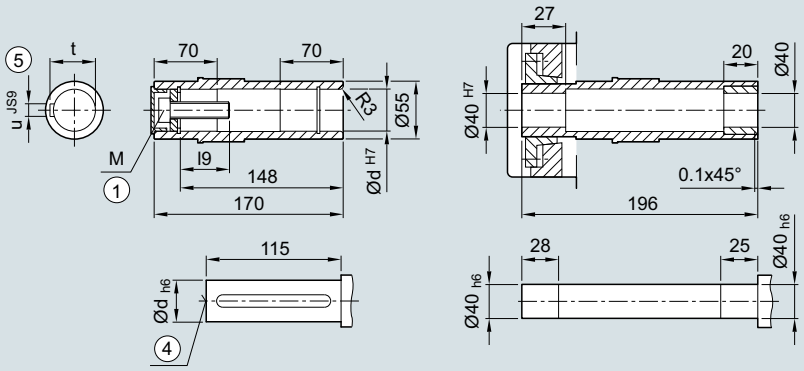

① ISO 4014
④ DIN 332
⑤ Feather key/keyway DIN 6885
⑩ For inner contour of the flange design, see page 5/170
⑪ Use bores only for foot-mounted design

© Siemens 2019

Servo bevel geared motor	Motor shaft height	Motor version	Absolute encoder with brake		with brake for increased energy		without brake					Resolver with brake		with brake for increased energy		without brake					
Type			k	o1	k	o1	k	o1	o2	g1	g2	k	o1	k	o1	k	o1	o2	g1	g2	AC
1FG1...-..C2.-....	36	CT	481	139	–	–	464	122	50	104.5	78	460	144	–	–	443	127	15	80	80	72
1FG1...-..C3.-....		HD	491	149	–	–	474	132				470	154	–	–	453	137				
1FG1...-..C4.-....		CT	506	164	–	–	489	147				485	169	–	–	468	152				
1FG1...-..D0.-....	48	CT	462	121	–	–	438	97	50	104.5	90	448	121	–	–	424	97	23	90	90	96
1FG1...-..D2.-....		CT	490	148	–	–	466	124				475	148	–	–	451	124				
1FG1...-..D3.-....		HD	516	168	–	–	492	144	56			501	174	–	–	477	150				
1FG1...-..D4.-....		HD	541	193	–	–	517	169				526	199	–	–	502	175				
1FG1...-..E0.-....	63	CT	495	154	–	–	481	139	50	104.5	104	481	154	–	–	466	139	23	103	104	126
1FG1...-..E1.-....		HD	530	189	–	–	516	174				516	189	–	–	501	174				
1FG1...-..E2.-....		CT	518	176	–	–	503	161				503	176	–	–	489	161				
1FG1...-..E3.-....		CT	540	199	–	–	526	184				526	199	–	–	511	184				
1FG1...-..E4.-....		HD	594	253	–	–	580	238				580	253	–	–	565	238				
1FG1...-..F0.-....	80	CT	534	195	545	206	498	158	48	104.5	119	520	196	531	207	483	159	21	118	119	155
1FG1...-..F1.-....		CT	553	214	564	225	517	177				539	215	550	226	502	178				
1FG1...-..F3.-....		CT	572	233	583	244	536	196				558	234	569	245	521	197				
1FG1...-..F4.-....		CT	592	252	603	263	555	215				577	253	588	264	541	216				
1FG1...-..F52-....		HD	620	281	631	292	584	244				606	282	617	293	569	245				
1FG1...-..F62-....		HD	620	281	631	292	584	244				606	282	617	293	569	245				
1FG1...-..F53-....		HD	620	281	631	292	584	244			139	606	282	617	293	569	245			139	
1FG1...-..F63-....		HD	620	281	631	292	584	244				606	282	617	293	569	245				
1FG1...-..G0.-....	100	CT	565	220	592	247	530	185	53	104.5	137	550	222	577	249	515	187	26	136	137	192
1FG1...-..G1.-....		CT	591	246	618	273	556	211			158	576	248	603	275	541	213			158	
1FG1...-..G3.-....		CT	617	272	644	299	582	237				602	274	629	301	567	239				
1FG1...-..G5.-....		CT	669	324	696	351	634	289				654	326	681	353	619	291				

Hollow-shaft				
d	l9	M	t	u
35	57	M12	38.3	10
40	67.75	M16	38.3	12

© Siemens 2019

Dimensional drawings

Gearbox type *B.Z.49*

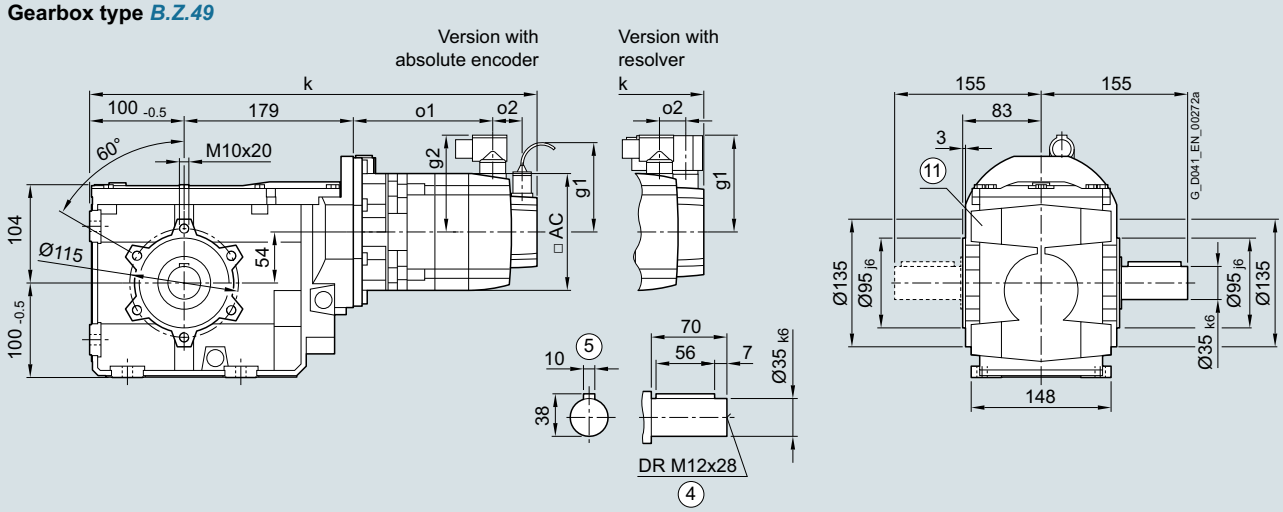

Gearbox type *BAZ.49*

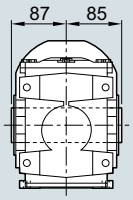

Gearbox type *BAZS49*

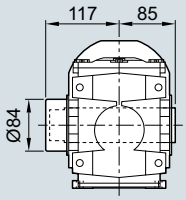

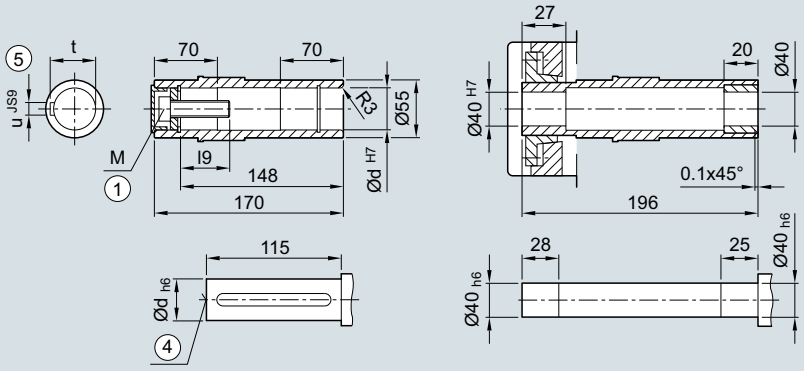

① ISO 4014 ④ DIN 332 ⑤ Feather key/keyway DIN 6885

⑪ Use bores only for foot-mounted design

© Siemens 2019

Servo bevel geared motor	Motor shaft height	Motor version	Absolute encoder with brake		with brake for increased energy		without brake					Resolver with brake		with brake for increased energy		without brake					
Type			k	o1	k	o1	k	o1	o2	g1	g2	k	o1	k	o1	k	o1	o2	g1	g2	AC
1FG1...-..C2.-....	36	CT	481	139	–	–	464	122	50	104.5	78	460	144	–	–	443	127	15	80	80	72
1FG1...-..C3.-....		HD	491	149	–	–	474	132				470	154	–	–	453	137				
1FG1...-..C4.-....		CT	506	164	–	–	489	147				485	169	–	–	468	152				
1FG1...-..D0.-....	48	CT	462	121	–	–	438	97	50	104.5	90	448	121	–	–	424	97	23	90	90	96
1FG1...-..D2.-....		CT	490	148	–	–	466	124				475	148	–	–	451	124				
1FG1...-..D3.-....		HD	516	168	–	–	492	144	56			501	174	–	–	477	150				
1FG1...-..D4.-....		HD	541	193	–	–	517	169				526	199	–	–	502	175				
1FG1...-..E0.-....	63	CT	495	154	–	–	481	139	50	104.5	104	481	154	–	–	466	139	23	103	104	126
1FG1...-..E1.-....		HD	530	189	–	–	516	174				516	189	–	–	501	174				
1FG1...-..E2.-....		CT	518	176	–	–	503	161				503	176	–	–	489	161				
1FG1...-..E3.-....		CT	540	199	–	–	526	184				526	199	–	–	511	184				
1FG1...-..E4.-....		HD	594	253	–	–	580	238				580	253	–	–	565	238				
1FG1...-..F0.-....	80	CT	534	195	545	206	498	158	48	104.5	119	520	196	531	207	483	159	21	118	119	155
1FG1...-..F1.-....		CT	553	214	564	225	517	177				539	215	550	226	502	178				
1FG1...-..F3.-....		CT	572	233	583	244	536	196				558	234	569	245	521	197				
1FG1...-..F4.-....		CT	592	252	603	263	555	215				577	253	588	264	541	216				
1FG1...-..F52-....		HD	620	281	631	292	584	244				606	282	617	293	569	245				
1FG1...-..F62-....		HD	620	281	631	292	584	244				606	282	617	293	569	245				
1FG1...-..F53-....		HD	620	281	631	292	584	244			139	606	282	617	293	569	245			139	
1FG1...-..F63-....		HD	620	281	631	292	584	244				606	282	617	293	569	245				
1FG1...-..G0.-....	100	CT	565	220	592	247	530	185	53	104.5	137	550	222	577	249	515	187	26	136	137	192
1FG1...-..G1.-....		CT	591	246	618	273	556	211			158	576	248	603	275	541	213			158	
1FG1...-..G3.-....		CT	617	272	644	299	582	237				602	274	629	301	567	239				
1FG1...-..G5.-....		CT	669	324	696	351	634	289				654	326	681	353	619	291				

Hollow-shaft				
d	l9	M	t	u
35	57	M12	38.3	10
40	67.75	M16	38.3	12

© Siemens 2019

Dimensional drawings

Gearbox type *BAD.49*

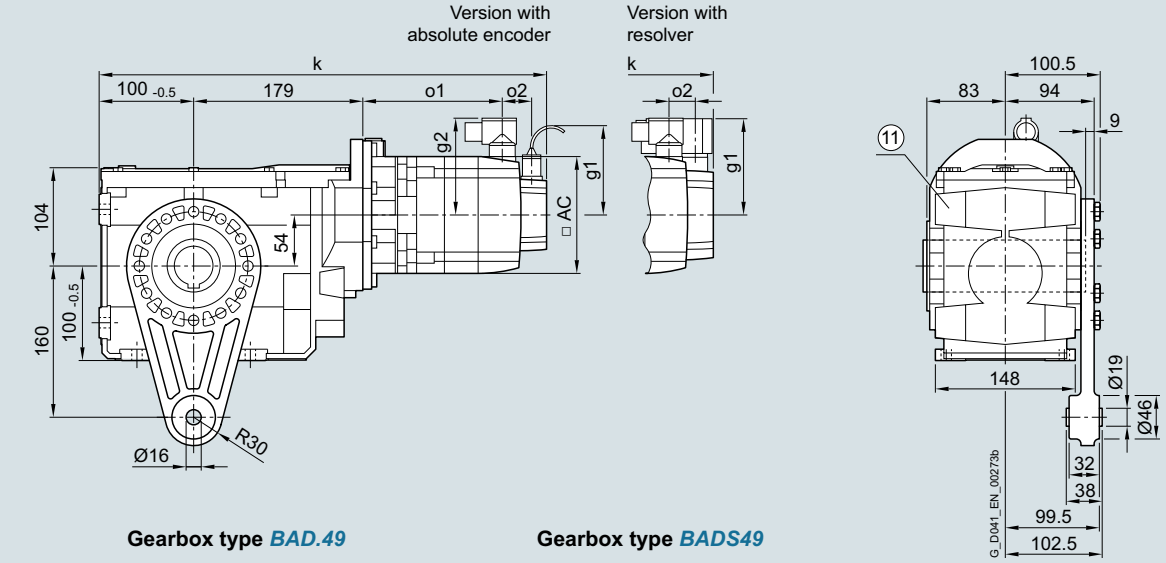

Gearbox type *BAD.49*

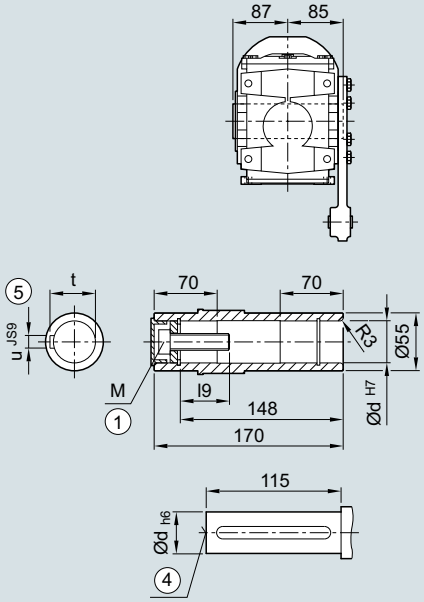

Gearbox type *BADS49*

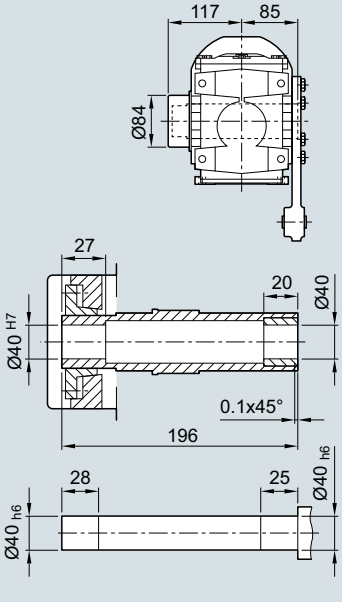

① ISO 4014
④ DIN 332
⑤ Feather key/keyway DIN 6885
⑪ Use bores only for foot-mounted design

© Siemens 2019

Servo bevel geared motor	Motor shaft height	Motor version	Absolute encoder with brake		with brake for increased energy		without brake					Resolver with brake		with brake for increased energy		without brake					
Type			k	o1	k	o1	k	o1	o2	g1	g2	k	o1	k	o1	k	o1	o2	g1	g2	AC
1FG1...-..C2.-....	36	CT	481	139	–	–	464	122	50	104.5	78	460	144	–	–	443	127	15	80	80	72
1FG1...-..C3.-....		HD	491	149	–	–	474	132				470	154	–	–	453	137				
1FG1...-..C4.-....		CT	506	164	–	–	489	147				485	169	–	–	468	152				
1FG1...-..D0.-....	48	CT	462	121	–	–	438	97	50	104.5	90	448	121	–	–	424	97	23	90	90	96
1FG1...-..D2.-....		CT	490	148	–	–	466	124				475	148	–	–	451	124				
1FG1...-..D3.-....		HD	516	168	–	–	492	144	56			501	174	–	–	477	150				
1FG1...-..D4.-....		HD	541	193	–	–	517	169				526	199	–	–	502	175				
1FG1...-..E0.-....	63	CT	495	154	–	–	481	139	50	104.5	104	481	154	–	–	466	139	23	103	104	126
1FG1...-..E1.-....		HD	530	189	–	–	516	174				516	189	–	–	501	174				
1FG1...-..E2.-....		CT	518	176	–	–	503	161				503	176	–	–	489	161				
1FG1...-..E3.-....		CT	540	199	–	–	526	184				526	199	–	–	511	184				
1FG1...-..E4.-....		HD	594	253	–	–	580	238				580	253	–	–	565	238				
1FG1...-..F0.-....	80	CT	534	195	545	206	498	158	48	104.5	119	520	196	531	207	483	159	21	118	119	155
1FG1...-..F1.-....		CT	553	214	564	225	517	177				539	215	550	226	502	178				
1FG1...-..F3.-....		CT	572	233	583	244	536	196				558	234	569	245	521	197				
1FG1...-..F4.-....		CT	592	252	603	263	555	215				577	253	588	264	541	216				
1FG1...-..F52-....		HD	620	281	631	292	584	244				606	282	617	293	569	245				
1FG1...-..F62-....		HD	620	281	631	292	584	244				606	282	617	293	569	245				
1FG1...-..F53-....		HD	620	281	631	292	584	244			139	606	282	617	293	569	245			139	
1FG1...-..F63-....		HD	620	281	631	292	584	244				606	282	617	293	569	245				
1FG1...-..G0.-....	100	CT	565	220	592	247	530	185	53	104.5	137	550	222	577	249	515	187	26	136	137	192
1FG1...-..G1.-....		CT	591	246	618	273	556	211			158	576	248	603	275	541	213			158	
1FG1...-..G3.-....		CT	617	272	644	299	582	237				602	274	629	301	567	239				
1FG1...-..G5.-....		CT	669	324	696	351	634	289				654	326	681	353	619	291				

Hollow-shaft				
d	l9	M	t	u
35	57	M12	38.3	10
40	67.75	M16	38.3	12

© Siemens 2019

5

Dimensional drawings

Gearbox type *K..39*

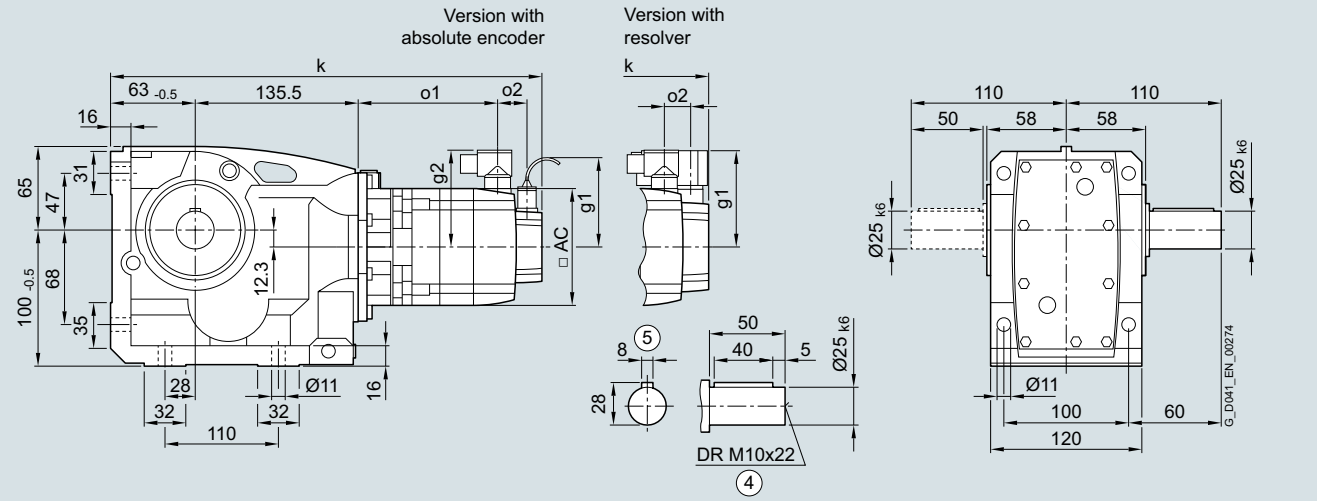

Gearbox type *KA.39*

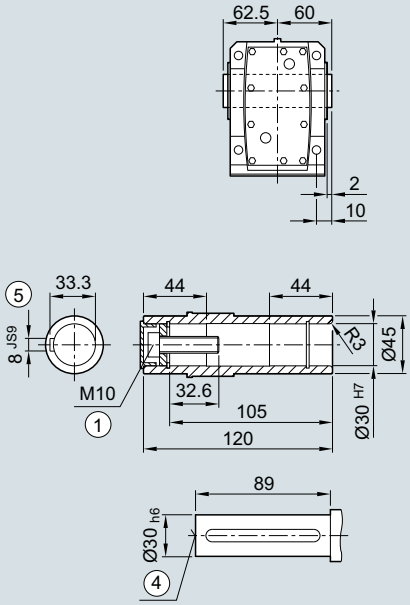

Gearbox type *KAS39*

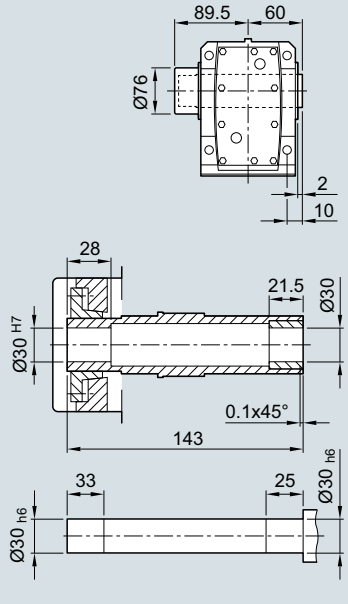

Gearbox type *KAT39*

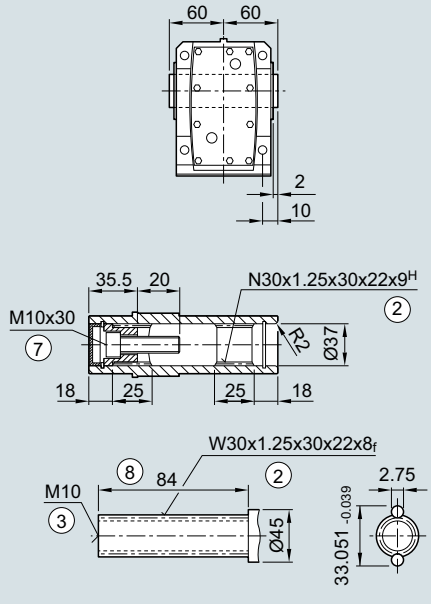

① ISO 4014 ② DIN 5480 ③ DIN 332-D ④ DIN 332
⑤ Feather key/keyway DIN 6885 ⑦ ISO 4762 ⑧ Without locating shoulder +1 mm

© Siemens 2019

Servo bevel geared motor	Motor shaft height	Motor version	Absolute encoder with brake		with brake for increased energy		without brake					Resolver with brake		with brake for increased energy		without brake					
Type			k	o1	k	o1	k	o1	o2	g1	g2	k	o1	k	o1	k	o1	o2	g1	g2	AC
1FG1...-..C2.-....	36	CT	409	148	–	–	392	131	50	104.5	78	389	154	–	–	372	137	15	80	80	72
1FG1...-..C3.-....		HD	419	158	–	–	402	141				399	164	–	–	382	147				
1FG1...-..C4.-....		CT	434	173	–	–	417	156				414	179	–	–	397	162				
1FG1...-..D0.-....	48	CT	391	130	–	–	367	106	50	104.5	90	376	130	–	–	352	106	23	90	90	96
1FG1...-..D2.-....		CT	418	158	–	–	394	134				404	158	–	–	380	134				
1FG1...-..D3.-....		HD	444	178	–	–	420	154	56			430	184	–	–	406	160				
1FG1...-..D4.-....		HD	469	203	–	–	445	179				455	209	–	–	431	185				
1FG1...-..E0.-....	63	CT	424	163	–	–	409	148	50	104.5	104	409	163	–	–	395	148	23	103	104	126
1FG1...-..E1.-....		HD	459	198	–	–	444	183				444	198	–	–	430	183				
1FG1...-..E2.-....		CT	446	186	–	–	432	171				432	186	–	–	417	171				
1FG1...-..E3.-....		CT	469	208	–	–	454	193				454	208	–	–	440	193				
1FG1...-..E4.-....		HD	523	262	–	–	508	247				508	262	–	–	494	247				
1FG1...-..F0.-....	80	CT	463	204	474	215	426	167	48	104.5	119	448	205	459	216	412	168	21	118	119	155
1FG1...-..F1.-....		CT	482	223	493	234	445	186				467	224	478	235	431	187				
1FG1...-..F3.-....		CT	501	242	512	253	464	205				486	243	497	254	450	206				
1FG1...-..F4.-....		CT	520	262	531	273	484	225				506	263	517	274	469	226				
1FG1...-..F52-....		HD	549	290	560	301	512	253				534	291	545	302	498	254				
1FG1...-..F62-....		HD	549	290	560	301	512	253				534	291	545	302	498	254				
1FG1...-..F53-....		HD	549	290	560	301	512	253			139	534	291	545	302	498	254			139	
1FG1...-..F63-....		HD	549	290	560	301	512	253				534	291	545	302	498	254				
1FG1...-..G0.-....	100	CT	–	–	–	–	–	–	–	–	–	–	–	–	–	–	–	–	–	–	–
1FG1...-..G1.-....		CT	–	–	–	–	–	–	–	–	–	–	–	–	–	–	–	–	–	–	–
1FG1...-..G3.-....		CT	–	–	–	–	–	–	–	–	–	–	–	–	–	–	–	–	–	–	–
1FG1...-..G5.-....		CT	–	–	–	–	–	–	–	–	–	–	–	–	–	–	–	–	–	–	–

5

© Siemens 2019

Dimensional drawings

Gearbox type *K.F.39*

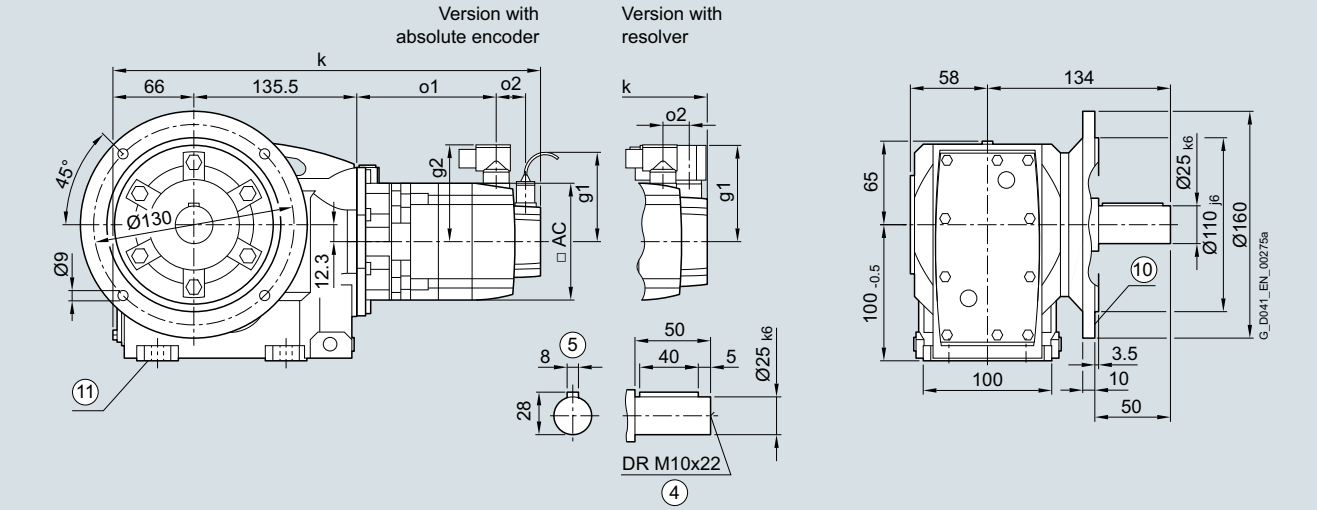

Gearbox type *KAF.39*

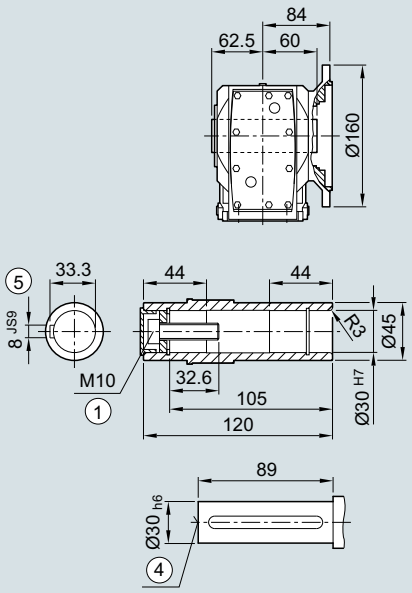

Gearbox type *KAFS39*

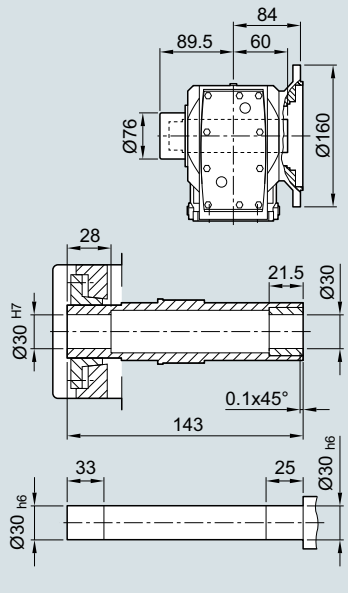

Gearbox type *KAFT39*

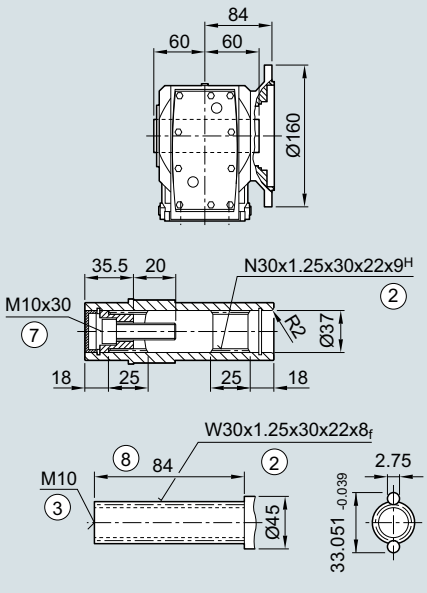

① ISO 4014 ② DIN 5480 ③ DIN 332-D ④ DIN 332
⑤ Feather key/keyway DIN 6885 ⑦ ISO 4762 ⑧ Without locating shoulder +1 mm
⑩ For inner contour of the flange design, see page 5/170 ⑪ Use bores only for foot-mounted design

© Siemens 2019

Servo bevel geared motor	Motor shaft height	Motor version	Absolute encoder with brake		with brake for increased energy		without brake					Resolver with brake		with brake for increased energy		without brake					
Type			k	o1	k	o1	k	o1	o2	g1	g2	k	o1	k	o1	k	o1	o2	g1	g2	AC
1FG1...-..C2.-....	36	CT	413	148	–	–	396	131	50	104.5	78	392	154	–	–	375	137	15	80	80	72
1FG1...-..C3.-....		HD	423	158	–	–	406	141				402	164	–	–	385	147				
1FG1...-..C4.-....		CT	438	173	–	–	421	156				417	179	–	–	400	162				
1FG1...-..D0.-....	48	CT	394	130	–	–	370	106	50	104.5	90	380	130	–	–	356	106	23	90	90	96
1FG1...-..D2.-....		CT	422	158	–	–	398	134				407	158	–	–	383	134				
1FG1...-..D3.-....		HD	448	178	–	–	424	154	56			433	184	–	–	409	160				
1FG1...-..D4.-....		HD	473	203	–	–	449	179				458	209	–	–	434	185				
1FG1...-..E0.-....	63	CT	427	163	–	–	413	148	50	104.5	104	413	163	–	–	398	148	23	103	104	126
1FG1...-..E1.-....		HD	462	198	–	–	448	183				448	198	–	–	433	183				
1FG1...-..E2.-....		CT	450	186	–	–	435	171				435	186	–	–	421	171				
1FG1...-..E3.-....		CT	472	208	–	–	458	193				458	208	–	–	443	193				
1FG1...-..E4.-....		HD	526	262	–	–	512	247				512	262	–	–	497	247				
1FG1...-..F0.-....	80	CT	466	204	477	215	430	167	48	104.5	119	452	205	463	216	415	168	21	118	119	155
1FG1...-..F1.-....		CT	485	223	496	234	449	186				471	224	482	235	434	187				
1FG1...-..F3.-....		CT	504	242	515	253	468	205				490	243	501	254	453	206				
1FG1...-..F4.-....		CT	524	262	535	273	487	225				509	263	520	274	473	226				
1FG1...-..F52-....		HD	552	290	563	301	516	253				538	291	549	302	501	254				
1FG1...-..F62-....		HD	552	290	563	301	516	253				538	291	549	302	501	254				
1FG1...-..F53-....		HD	552	290	563	301	516	253			139	538	291	549	302	501	254			139	
1FG1...-..F63-....		HD	552	290	563	301	516	253				538	291	549	302	501	254				
1FG1...-..G0.-....	100	CT	–	–	–	–	–	–	–	–	–	–	–	–	–	–	–	–	–	–	–
1FG1...-..G1.-....		CT	–	–	–	–	–	–	–	–	–	–	–	–	–	–	–	–	–	–	–
1FG1...-..G3.-....		CT	–	–	–	–	–	–	–	–	–	–	–	–	–	–	–	–	–	–	–
1FG1...-..G5.-....		CT	–	–	–	–	–	–	–	–	–	–	–	–	–	–	–	–	–	–	–

© Siemens 2019

Dimensional drawings

Gearbox type *K.Z.39*

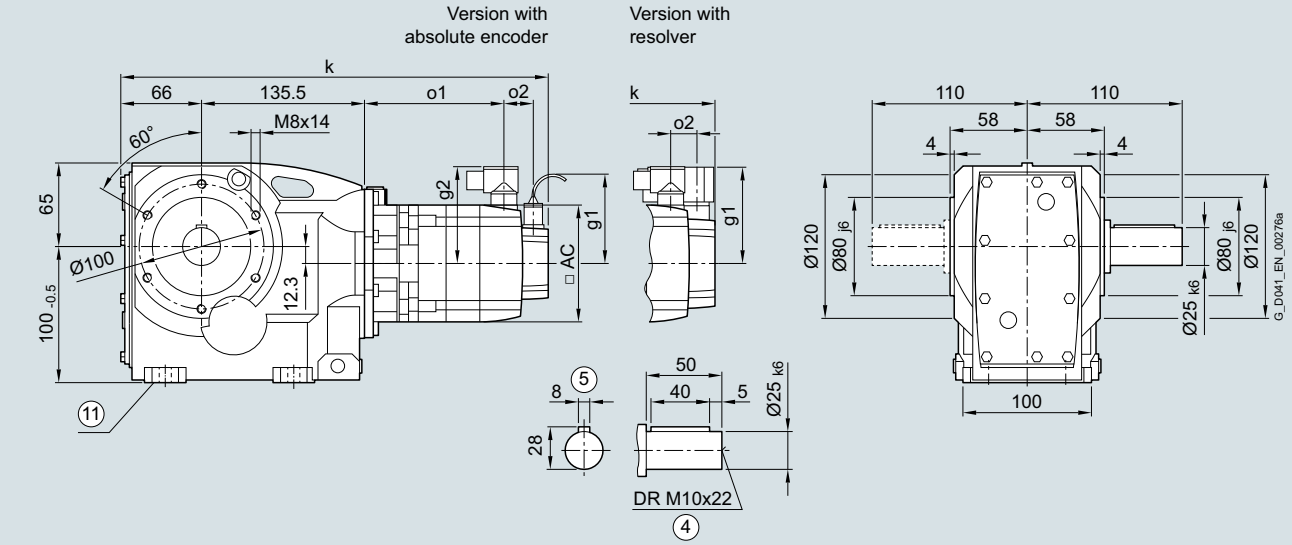

Gearbox type *KAZ.39*

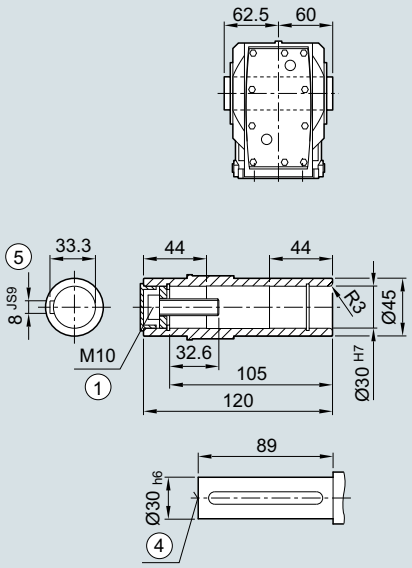

Gearbox type *KAZS39*

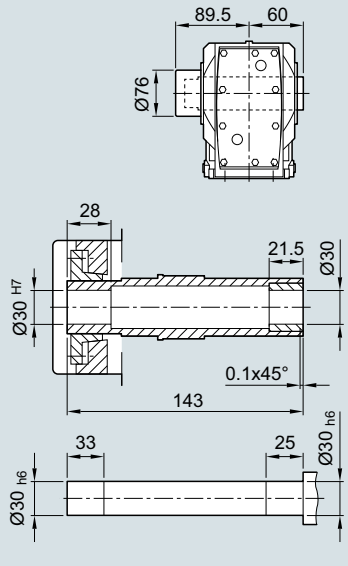

Gearbox type *KAZT39*

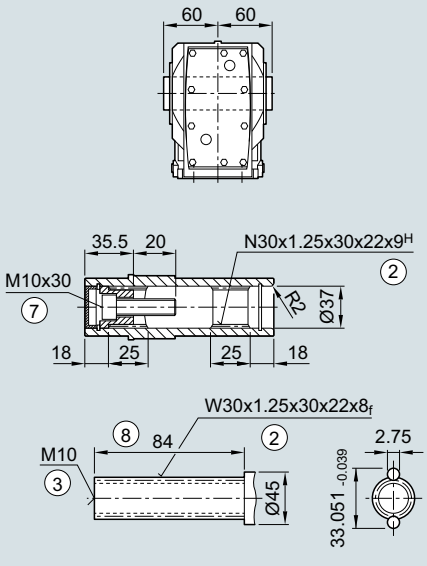

① ISO 4014 ② DIN 5480 ③ DIN 332-D ④ DIN 332
⑤ Feather key/keyway DIN 6885 ⑦ ISO 4762 ⑧ Without locating shoulder +1 mm
⑪ Use bores only for foot-mounted design

© Siemens 2019

Servo bevel geared motor	Motor shaft height	Motor version	Absolute encoder with brake		with brake for increased energy		without brake					Resolver with brake		with brake for increased energy		without brake					
Type			k	o1	k	o1	k	o1	o2	g1	g2	k	o1	k	o1	k	o1	o2	g1	g2	AC
1FG1...-..C2.-....	36	CT	413	148	–	–	396	131	50	104.5	78	392	154	–	–	375	137	15	80	80	72
1FG1...-..C3.-....		HD	423	158	–	–	406	141				402	164	–	–	385	147				
1FG1...-..C4.-....		CT	438	173	–	–	421	156				417	179	–	–	400	162				
1FG1...-..D0.-....	48	CT	394	130	–	–	370	106	50	104.5	90	380	130	–	–	356	106	23	90	90	96
1FG1...-..D2.-....		CT	422	158	–	–	398	134				407	158	–	–	383	134				
1FG1...-..D3.-....		HD	448	178	–	–	424	154	56			433	184	–	–	409	160				
1FG1...-..D4.-....		HD	473	203	–	–	449	179				458	209	–	–	434	185				
1FG1...-..E0.-....	63	CT	427	163	–	–	413	148	50	104.5	104	413	163	–	–	398	148	23	103	104	126
1FG1...-..E1.-....		HD	462	198	–	–	448	183				448	198	–	–	433	183				
1FG1...-..E2.-....		CT	450	186	–	–	435	171				435	186	–	–	421	171				
1FG1...-..E3.-....		CT	472	208	–	–	458	193				458	208	–	–	443	193				
1FG1...-..E4.-....		HD	526	262	–	–	512	247				512	262	–	–	497	247				
1FG1...-..F0.-....	80	CT	466	204	477	215	430	167	48	104.5	119	452	205	463	216	415	168	21	118	119	155
1FG1...-..F1.-....		CT	485	223	496	234	449	186				471	224	482	235	434	187				
1FG1...-..F3.-....		CT	504	242	515	253	468	205				490	243	501	254	453	206				
1FG1...-..F4.-....		CT	524	262	535	273	487	225				509	263	520	274	473	226				
1FG1...-..F52-....		HD	552	290	563	301	516	253				538	291	549	302	501	254				
1FG1...-..F62-....		HD	552	290	563	301	516	253				538	291	549	302	501	254				
1FG1...-..F53-....		HD	552	290	563	301	516	253			139	538	291	549	302	501	254			139	
1FG1...-..F63-....		HD	552	290	563	301	516	253				538	291	549	302	501	254				
1FG1...-..G0.-....	100	CT	–	–	–	–	–	–	–	–	–	–	–	–	–	–	–	–	–	–	–
1FG1...-..G1.-....		CT	–	–	–	–	–	–	–	–	–	–	–	–	–	–	–	–	–	–	–
1FG1...-..G3.-....		CT	–	–	–	–	–	–	–	–	–	–	–	–	–	–	–	–	–	–	–
1FG1...-..G5.-....		CT	–	–	–	–	–	–	–	–	–	–	–	–	–	–	–	–	–	–	–

© Siemens 2019

Dimensional drawings

Gearbox type *KAD.39*

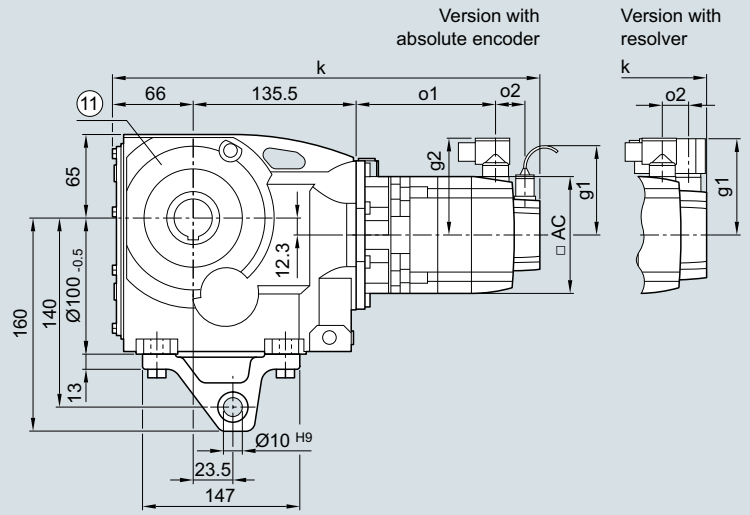

Gearbox type *KAD.39*

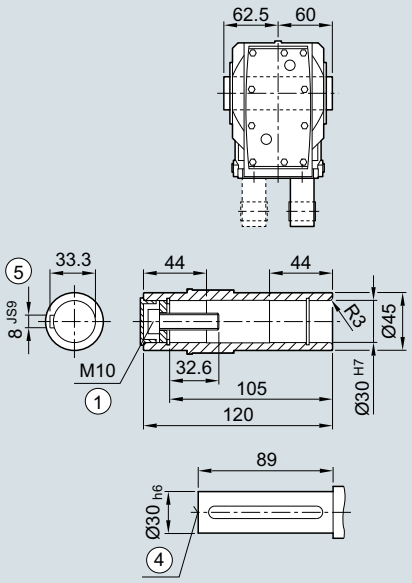

Gearbox type *KADS39*

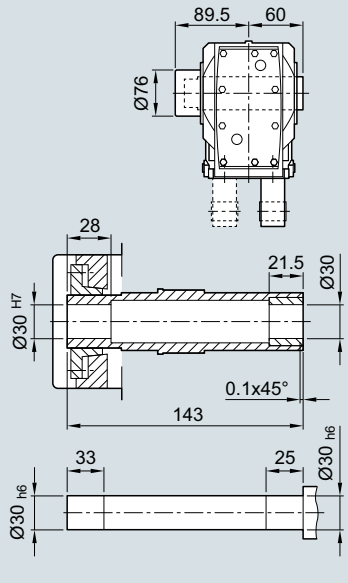

Gearbox type *KADT39*

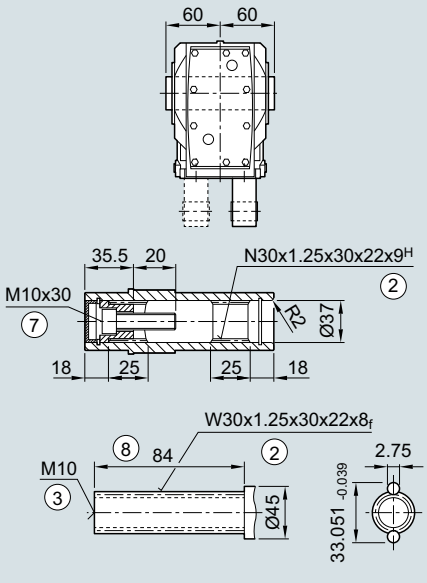

① ISO 4014 ② DIN 5480 ③ DIN 332-D ④ DIN 332
⑤ Feather key/keyway DIN 6885 ⑦ ISO 4762 ⑧ Without locating shoulder +1 mm
⑪ Use bores only for housing flange design

© Siemens 2019

Servo bevel geared motor	Motor shaft height	Motor version	Absolute encoder with brake		with brake for increased energy		without brake					Resolver with brake		with brake for increased energy		without brake					
Type			k	o1	k	o1	k	o1	o2	g1	g2	k	o1	k	o1	k	o1	o2	g1	g2	AC
1FG1...-..C2.-....	36	CT	413	148	–	–	396	131	50	104.5	78	392	154	–	–	375	137	15	80	80	72
1FG1...-..C3.-....		HD	423	158	–	–	406	141				402	164	–	–	385	147				
1FG1...-..C4.-....		CT	438	173	–	–	421	156				417	179	–	–	400	162				
1FG1...-..D0.-....	48	CT	394	130	–	–	370	106	50	104.5	90	380	130	–	–	356	106	23	90	90	96
1FG1...-..D2.-....		CT	422	158	–	–	398	134				407	158	–	–	383	134				
1FG1...-..D3.-....		HD	448	178	–	–	424	154	56			433	184	–	–	409	160				
1FG1...-..D4.-....		HD	473	203	–	–	449	179				458	209	–	–	434	185				
1FG1...-..E0.-....	63	CT	427	163	–	–	413	148	50	104.5	104	413	163	–	–	398	148	23	103	104	126
1FG1...-..E1.-....		HD	462	198	–	–	448	183				448	198	–	–	433	183				
1FG1...-..E2.-....		CT	450	186	–	–	435	171				435	186	–	–	421	171				
1FG1...-..E3.-....		CT	472	208	–	–	458	193				458	208	–	–	443	193				
1FG1...-..E4.-....		HD	526	262	–	–	512	247				512	262	–	–	497	247				
1FG1...-..F0.-....	80	CT	466	204	477	215	430	167	48	104.5	119	452	205	463	216	415	168	21	118	119	155
1FG1...-..F1.-....		CT	485	223	496	234	449	186				471	224	482	235	434	187				
1FG1...-..F3.-....		CT	504	242	515	253	468	205				490	243	501	254	453	206				
1FG1...-..F4.-....		CT	524	262	535	273	487	225				509	263	520	274	473	226				
1FG1...-..F52-....		HD	552	290	563	301	516	253				538	291	549	302	501	254				
1FG1...-..F62-....		HD	552	290	563	301	516	253				538	291	549	302	501	254				
1FG1...-..F53-....		HD	552	290	563	301	516	253			139	538	291	549	302	501	254			139	
1FG1...-..F63-....		HD	552	290	563	301	516	253				538	291	549	302	501	254				
1FG1...-..G0.-....	100	CT	–	–	–	–	–	–	–	–	–	–	–	–	–	–	–	–	–	–	–
1FG1...-..G1.-....		CT	–	–	–	–	–	–	–	–	–	–	–	–	–	–	–	–	–	–	–
1FG1...-..G3.-....		CT	–	–	–	–	–	–	–	–	–	–	–	–	–	–	–	–	–	–	–
1FG1...-..G5.-....		CT	–	–	–	–	–	–	–	–	–	–	–	–	–	–	–	–	–	–	–

© Siemens 2019

Dimensional drawings

Gearbox type *K..49*

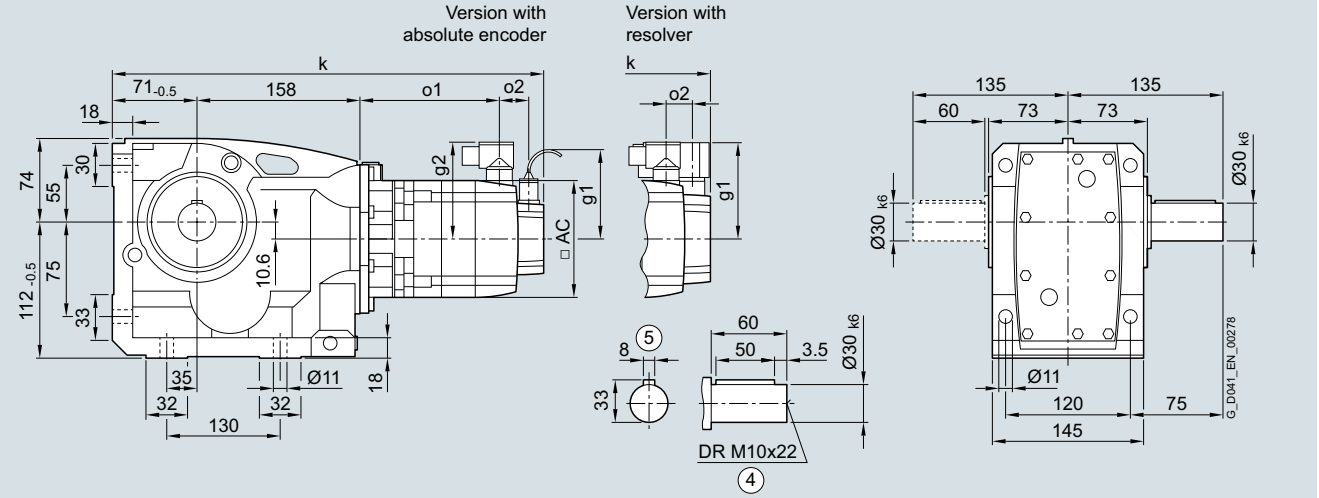

Gearbox type *KA.49*

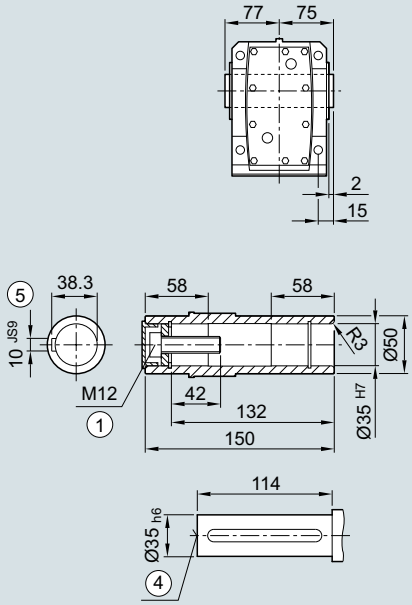

Gearbox type *KAS49*

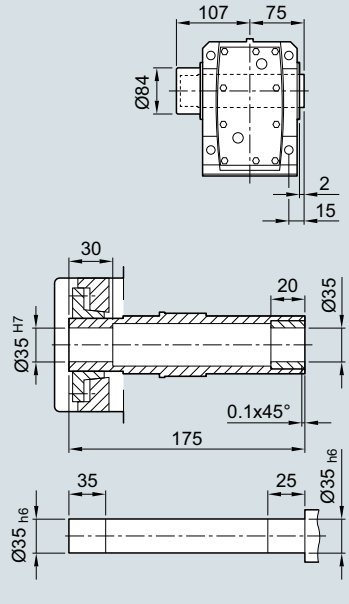

Gearbox type *KAT49*

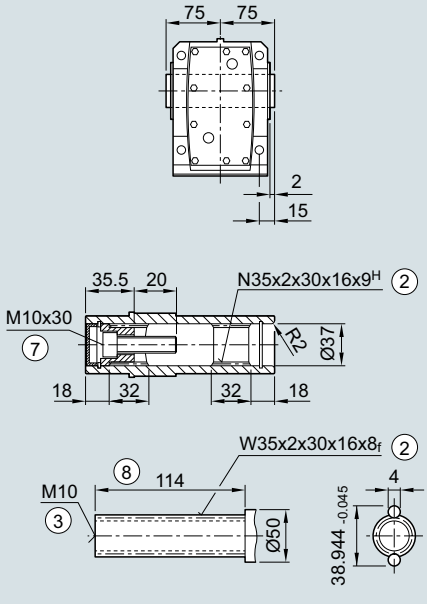

① ISO 4014 ② DIN 5480 ③ DIN 332-D ④ DIN 332
⑤ Feather key/keyway DIN 6885 ⑦ ISO 4762 ⑧ Without locating shoulder +1 mm

© Siemens 2019

Servo bevel geared motor	Motor shaft height	Motor version	Absolute encoder with brake		with brake for increased energy		without brake					Resolver with brake		with brake for increased energy		without brake					
Type			k	o1	k	o1	k	o1	o2	g1	g2	k	o1	k	o1	k	o1	o2	g1	g2	AC
1FG1...-..C2.-....	36	CT	431	139	–	–	414	122	50	104.5	78	410	144	–	–	393	127	15	80	80	72
1FG1...-..C3.-....		HD	441	149	–	–	424	132				420	154	–	–	403	137				
1FG1...-..C4.-....		CT	456	164	–	–	439	147				435	169	–	–	418	152				
1FG1...-..D0.-....	48	CT	412	121	–	–	388	97	50	104.5	90	398	121	–	–	374	97	23	90	90	96
1FG1...-..D2.-....		CT	440	148	–	–	416	124				425	148	–	–	401	124				
1FG1...-..D3.-....		HD	466	168	–	–	442	144	56			451	174	–	–	427	150				
1FG1...-..D4.-....		HD	491	193	–	–	467	169				476	199	–	–	452	175				
1FG1...-..E0.-....	63	CT	445	154	–	–	431	139	50	104.5	104	431	154	–	–	416	139	23	103	104	126
1FG1...-..E1.-....		HD	480	189	–	–	466	174				466	189	–	–	451	174				
1FG1...-..E2.-....		CT	468	176	–	–	453	161				453	176	–	–	439	161				
1FG1...-..E3.-....		CT	490	199	–	–	476	184				476	199	–	–	461	184				
1FG1...-..E4.-....		HD	544	253	–	–	530	238				530	253	–	–	515	238				
1FG1...-..F0.-....	80	CT	484	195	495	206	448	158	48	104.5	119	470	196	481	207	433	159	21	118	119	155
1FG1...-..F1.-....		CT	503	214	514	225	467	177				489	215	500	226	452	178				
1FG1...-..F3.-....		CT	522	233	533	244	486	196				508	234	519	245	471	197				
1FG1...-..F4.-....		CT	542	252	553	263	505	215				527	253	538	264	491	216				
1FG1...-..F52-....		HD	570	281	581	292	534	244				556	282	567	293	519	245				
1FG1...-..F62-....		HD	570	281	581	292	534	244				556	282	567	293	519	245				
1FG1...-..F53-....		HD	570	281	581	292	534	244			139	556	282	567	293	519	245			139	
1FG1...-..F63-....		HD	570	281	581	292	534	244				556	282	567	293	519	245				
1FG1...-..G0.-....	100	CT	515	220	542	247	480	185	53	104.5	137	500	222	527	249	465	187	26	136	137	192
1FG1...-..G1.-....		CT	541	246	568	273	506	211			158	526	248	553	275	491	213			158	
1FG1...-..G3.-....		CT	567	272	594	299	532	237				552	274	579	301	517	239				
1FG1...-..G5.-....		CT	619	324	646	351	584	289				604	326	631	353	569	291				

© Siemens 2019

Dimensional drawings

Gearbox type *K.F.49*

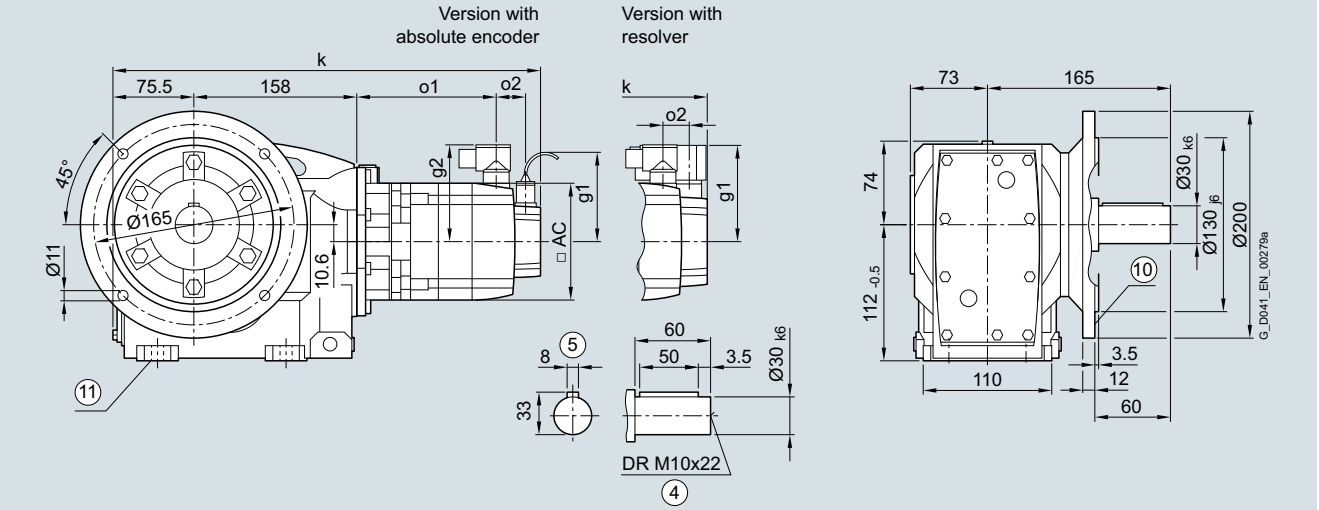

Gearbox type *KAF.49*

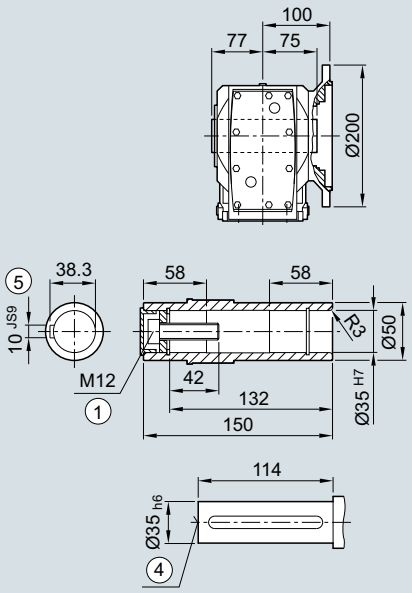

Gearbox type *KAFS49*

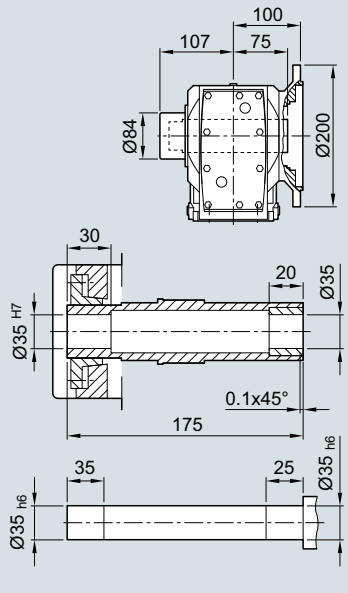

Gearbox type *KAFT49*

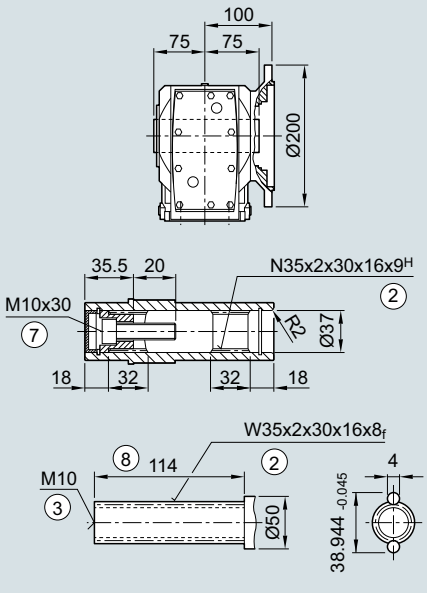

① ISO 4014 ② DIN 5480 ③ DIN 332-D ④ DIN 332
⑤ Feather key/keyway DIN 6885 ⑦ ISO 4762 ⑧ Without locating shoulder +1 mm
⑩ For inner contour of the flange design, see page 5/170 ⑪ Use bores only for foot-mounted design

© Siemens 2019

Servo bevel geared motor	Motor shaft height	Motor version	Absolute encoder with brake		with brake for increased energy		without brake					Resolver with brake		with brake for increased energy		without brake					
Type			k	o1	k	o1	k	o1	o2	g1	g2	k	o1	k	o1	k	o1	o2	g1	g2	AC
1FG1...-..C2.-....	36	CT	435	139	–	–	418	122	50	104.5	78	415	144	–	–	398	127	15	80	80	72
1FG1...-..C3.-....		HD	445	149	–	–	428	132				425	154	–	–	408	137				
1FG1...-..C4.-....		CT	460	164	–	–	443	147				440	169	–	–	423	152				
1FG1...-..D0.-....	48	CT	417	121	–	–	393	97	50	104.5	90	402	121	–	–	378	97	23	90	90	96
1FG1...-..D2.-....		CT	444	148	–	–	420	124				430	148	–	–	406	124				
1FG1...-..D3.-....		HD	470	168	–	–	446	144	56			456	174	–	–	432	150				
1FG1...-..D4.-....		HD	495	193	–	–	471	169				481	199	–	–	457	175				
1FG1...-..E0.-....	63	CT	450	154	–	–	435	139	50	104.5	104	435	154	–	–	421	139	23	103	104	126
1FG1...-..E1.-....		HD	485	189	–	–	470	174				470	189	–	–	456	174				
1FG1...-..E2.-....		CT	472	176	–	–	458	161				458	176	–	–	443	161				
1FG1...-..E3.-....		CT	495	199	–	–	480	184				480	199	–	–	466	184				
1FG1...-..E4.-....		HD	549	253	–	–	534	238				534	253	–	–	520	238				
1FG1...-..F0.-....	80	CT	489	195	500	206	452	158	48	104.5	119	474	196	485	207	438	159	21	118	119	155
1FG1...-..F1.-....		CT	508	214	519	225	471	177				493	215	504	226	457	178				
1FG1...-..F3.-....		CT	527	233	538	244	490	196				512	234	523	245	476	197				
1FG1...-..F4.-....		CT	546	252	557	263	510	215				532	253	543	264	495	216				
1FG1...-..F52-....		HD	575	281	586	292	538	244				560	282	571	293	524	245				
1FG1...-..F62-....		HD	575	281	586	292	538	244				560	282	571	293	524	245				
1FG1...-..F53-....		HD	575	281	586	292	538	244			139	560	282	571	293	524	245			139	
1FG1...-..F63-....		HD	575	281	586	292	538	244				560	282	571	293	524	245				
1FG1...-..G0.-....	100	CT	519	220	546	247	484	185	53	104.5	137	505	222	532	249	470	187	26	136	137	192
1FG1...-..G1.-....		CT	545	246	572	273	510	211			158	531	248	558	275	496	213			158	
1FG1...-..G3.-....		CT	571	272	598	299	536	237				557	274	584	301	522	239				
1FG1...-..G5.-....		CT	623	324	650	351	588	289				609	326	636	353	574	291				

© Siemens 2019

Dimensional drawings

Gearbox type *K.Z.49*

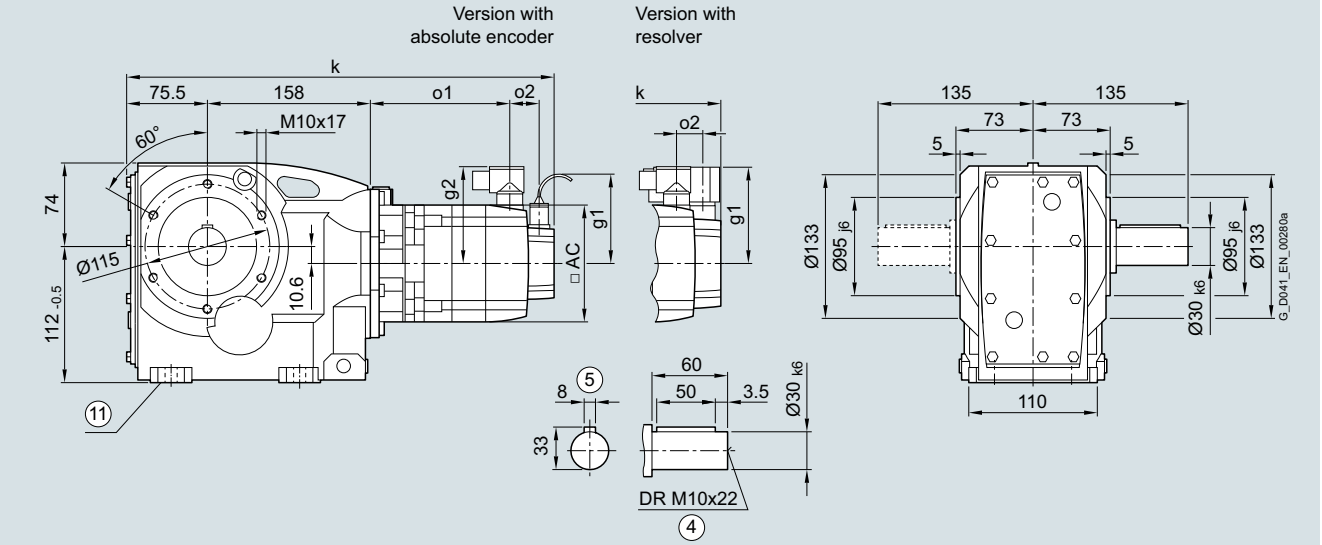

Gearbox type *KAZ.49*

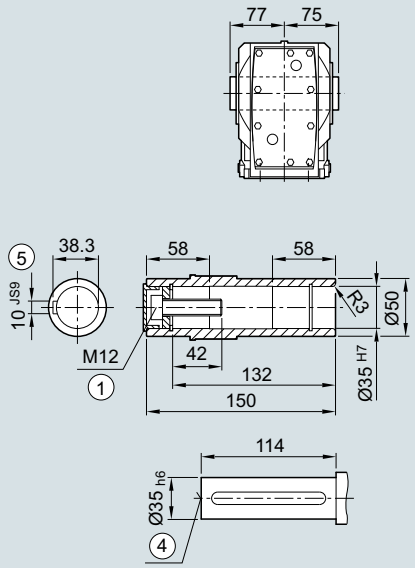

Gearbox type *KAZS49*

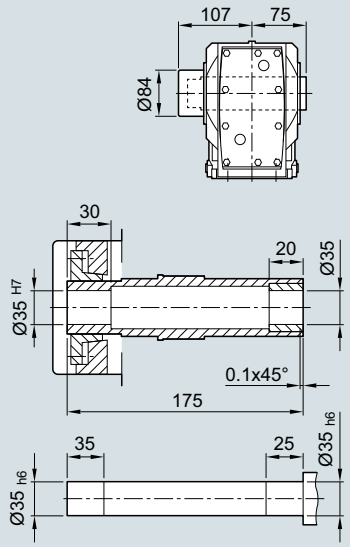

Gearbox type *KAZT49*

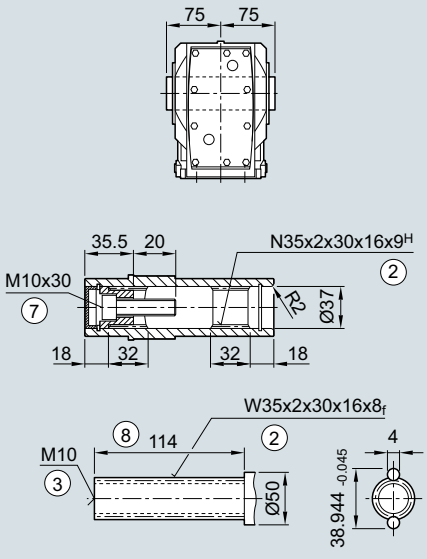

① ISO 4014 ② DIN 5480 ③ DIN 332-D ④ DIN 332
⑤ Feather key/keyway DIN 6885 ⑦ ISO 4762 ⑧ Without locating shoulder +1 mm
⑪ Use bores only for foot-mounted design

© Siemens 2019

Servo bevel geared motor	Motor shaft height	Motor version	Absolute encoder with brake		with brake for increased energy		without brake					Resolver with brake		with brake for increased energy		without brake					
Type			k	o1	k	o1	k	o1	o2	g1	g2	k	o1	k	o1	k	o1	o2	g1	g2	AC
1FG1...-..C2.-....	36	CT	435	139	–	–	418	122	50	104.5	78	415	144	–	–	398	127	15	80	80	72
1FG1...-..C3.-....		HD	445	149	–	–	428	132				425	154	–	–	408	137				
1FG1...-..C4.-....		CT	460	164	–	–	443	147				440	169	–	–	423	152				
1FG1...-..D0.-....	48	CT	417	121	–	–	393	97	50	104.5	90	402	121	–	–	378	97	23	90	90	96
1FG1...-..D2.-....		CT	444	148	–	–	420	124				430	148	–	–	406	124				
1FG1...-..D3.-....		HD	470	168	–	–	446	144	56			456	174	–	–	432	150				
1FG1...-..D4.-....		HD	495	193	–	–	471	169				481	199	–	–	457	175				
1FG1...-..E0.-....	63	CT	450	154	–	–	435	139	50	104.5	104	435	154	–	–	421	139	23	103	104	126
1FG1...-..E1.-....		HD	485	189	–	–	470	174				470	189	–	–	456	174				
1FG1...-..E2.-....		CT	472	176	–	–	458	161				458	176	–	–	443	161				
1FG1...-..E3.-....		CT	495	199	–	–	480	184				480	199	–	–	466	184				
1FG1...-..E4.-....		HD	549	253	–	–	534	238				534	253	–	–	520	238				
1FG1...-..F0.-....	80	CT	489	195	500	206	452	158	48	104.5	119	474	196	485	207	438	159	21	118	119	155
1FG1...-..F1.-....		CT	508	214	519	225	471	177				493	215	504	226	457	178				
1FG1...-..F3.-....		CT	527	233	538	244	490	196				512	234	523	245	476	197				
1FG1...-..F4.-....		CT	546	252	557	263	510	215				532	253	543	264	495	216				
1FG1...-..F52-....		HD	575	281	586	292	538	244				560	282	571	293	524	245				
1FG1...-..F62-....		HD	575	281	586	292	538	244				560	282	571	293	524	245				
1FG1...-..F53-....		HD	575	281	586	292	538	244			139	560	282	571	293	524	245			139	
1FG1...-..F63-....		HD	575	281	586	292	538	244				560	282	571	293	524	245				
1FG1...-..G0.-....	100	CT	519	220	546	247	484	185	53	104.5	137	505	222	532	249	470	187	26	136	137	192
1FG1...-..G1.-....		CT	545	246	572	273	510	211			158	531	248	558	275	496	213			158	
1FG1...-..G3.-....		CT	571	272	598	299	536	237				557	274	584	301	522	239				
1FG1...-..G5.-....		CT	623	324	650	351	588	289				609	326	636	353	574	291				

© Siemens 2019

Dimensional drawings

Gearbox type *KAD.49*

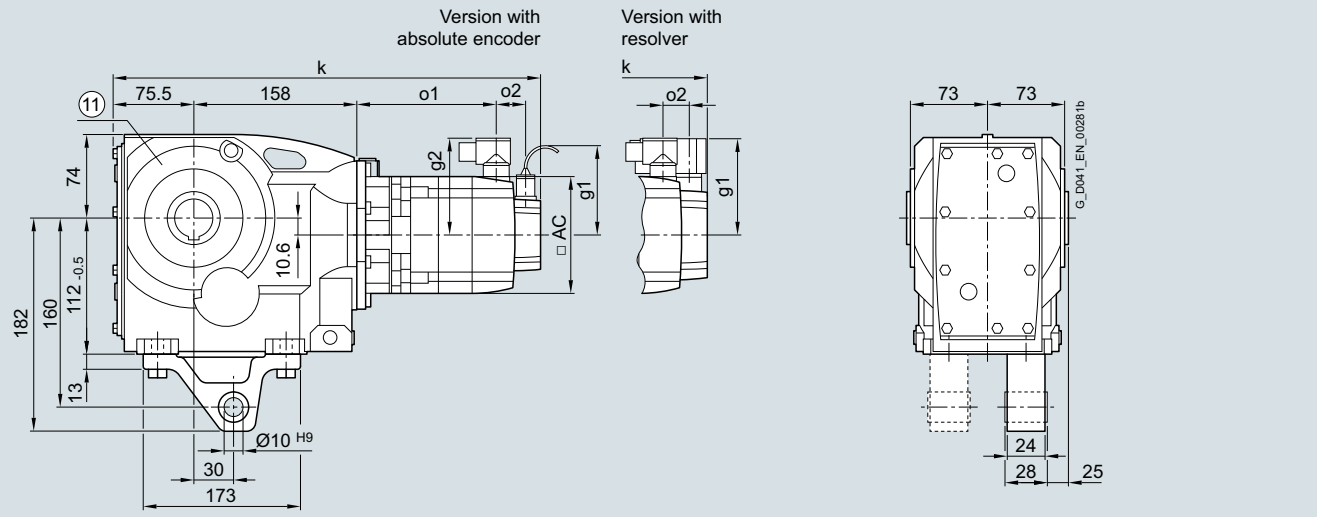

Gearbox type *KAD.49*

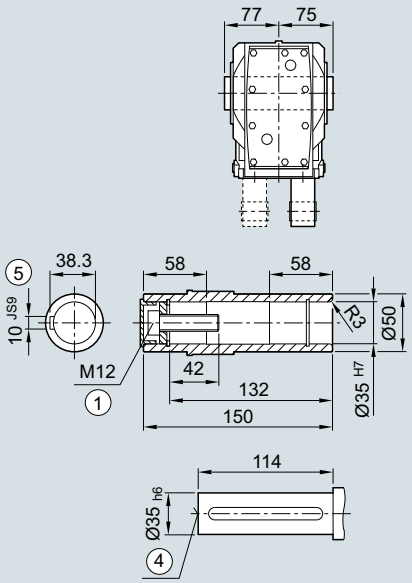

Gearbox type *KADS49*

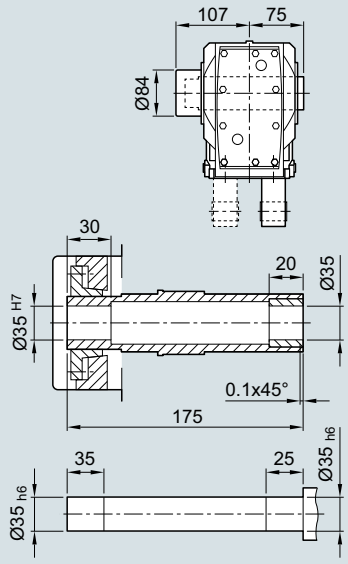

Gearbox type *KADT49*

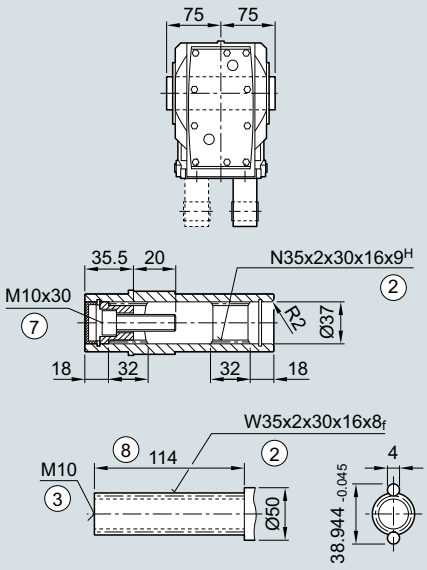

① ISO 4014 ② DIN 5480 ③ DIN 332-D ④ DIN 332
⑤ Feather key/keyway DIN 6885 ⑦ ISO 4762 ⑧ Without locating shoulder +1 mm
⑪ Use bores only for housing flange design

© Siemens 2019

Servo bevel geared motor	Motor shaft height	Motor version	Absolute encoder with brake		with brake for increased energy		without brake					Resolver with brake		with brake for increased energy		without brake					
Type			k	o1	k	o1	k	o1	o2	g1	g2	k	o1	k	o1	k	o1	o2	g1	g2	AC
1FG1...-..C2.-....	36	CT	435	139	–	–	418	122	50	104.5	78	415	144	–	–	398	127	15	80	80	72
1FG1...-..C3.-....		HD	445	149	–	–	428	132				425	154	–	–	408	137				
1FG1...-..C4.-....		CT	460	164	–	–	443	147				440	169	–	–	423	152				
1FG1...-..D0.-....	48	CT	417	121	–	–	393	97	50	104.5	90	402	121	–	–	378	97	23	90	90	96
1FG1...-..D2.-....		CT	444	148	–	–	420	124				430	148	–	–	406	124				
1FG1...-..D3.-....		HD	470	168	–	–	446	144	56			456	174	–	–	432	150				
1FG1...-..D4.-....		HD	495	193	–	–	471	169				481	199	–	–	457	175				
1FG1...-..E0.-....	63	CT	450	154	–	–	435	139	50	104.5	104	435	154	–	–	421	139	23	103	104	126
1FG1...-..E1.-....		HD	485	189	–	–	470	174				470	189	–	–	456	174				
1FG1...-..E2.-....		CT	472	176	–	–	458	161				458	176	–	–	443	161				
1FG1...-..E3.-....		CT	495	199	–	–	480	184				480	199	–	–	466	184				
1FG1...-..E4.-....		HD	549	253	–	–	534	238				534	253	–	–	520	238				
1FG1...-..F0.-....	80	CT	489	195	500	206	452	158	48	104.5	119	474	196	485	207	438	159	21	118	119	155
1FG1...-..F1.-....		CT	508	214	519	225	471	177				493	215	504	226	457	178				
1FG1...-..F3.-....		CT	527	233	538	244	490	196				512	234	523	245	476	197				
1FG1...-..F4.-....		CT	546	252	557	263	510	215				532	253	543	264	495	216				
1FG1...-..F52-....		HD	575	281	586	292	538	244				560	282	571	293	524	245				
1FG1...-..F62-....		HD	575	281	586	292	538	244				560	282	571	293	524	245				
1FG1...-..F53-....		HD	575	281	586	292	538	244			139	560	282	571	293	524	245			139	
1FG1...-..F63-....		HD	575	281	586	292	538	244				560	282	571	293	524	245				
1FG1...-..G0.-....	100	CT	519	220	546	247	484	185	53	104.5	137	505	222	532	249	470	187	26	136	137	192
1FG1...-..G1.-....		CT	545	246	572	273	510	211			158	531	248	558	275	496	213			158	
1FG1...-..G3.-....		CT	571	272	598	299	536	237				557	274	584	301	522	239				
1FG1...-..G5.-....		CT	623	324	650	351	588	289				609	326	636	353	574	291				

© Siemens 2019

Dimensional drawings

Gearbox type *K..69*

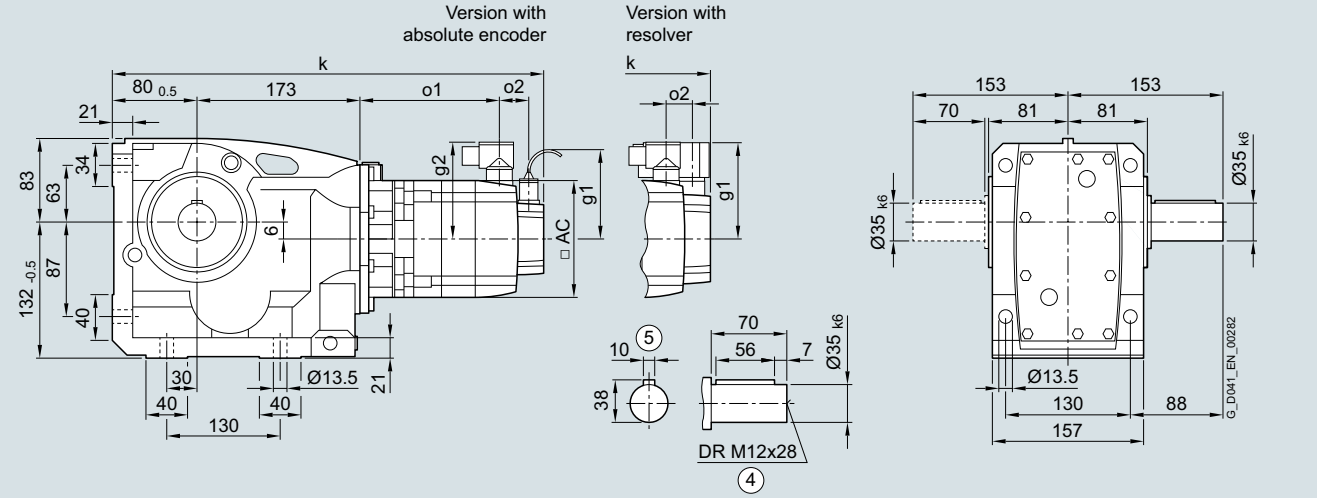

Gearbox type *KA.69*

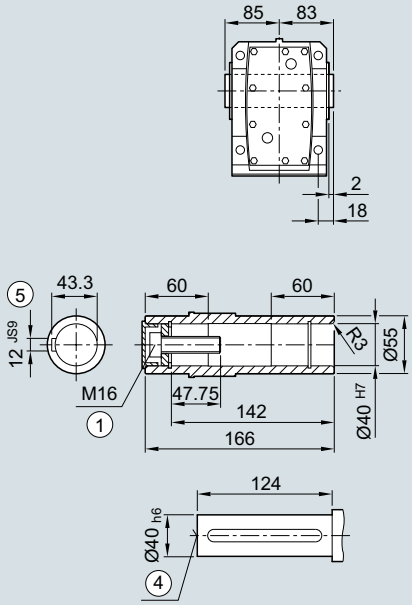

Gearbox type *KAS69*

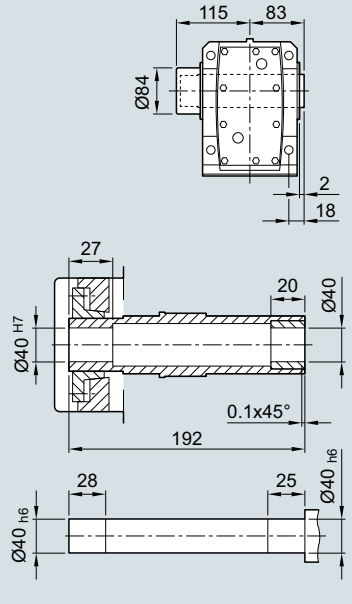

Gearbox type *KAT69*

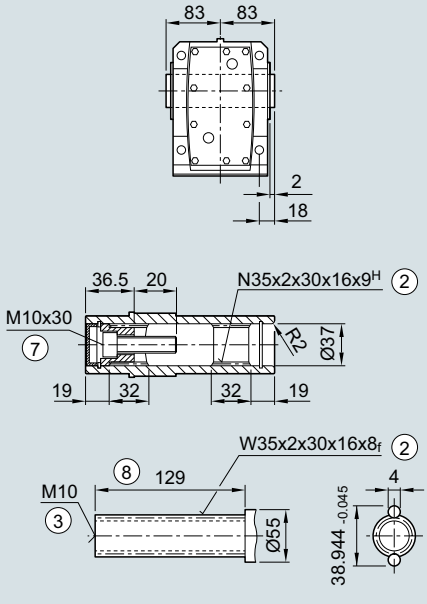

① ISO 4014 ② DIN 5480 ③ DIN 332-D ④ DIN 332
⑤ Feather key/keyway DIN 6885 ⑦ ISO 4762 ⑧ Without locating shoulder +1 mm

© Siemens 2019

Servo bevel geared motor	Motor shaft height	Motor version	Absolute encoder with brake		with brake for increased energy		without brake					Resolver with brake		with brake for increased energy		without brake					
Type			k	o1	k	o1	k	o1	o2	g1	g2	k	o1	k	o1	k	o1	o2	g1	g2	AC
1FG1...-..C2.-....	36	CT	455	139	–	–	438	122	50	104.5	78	434	144	–	–	417	127	15	80	80	72
1FG1...-..C3.-....		HD	465	149	–	–	448	132				444	154	–	–	427	137				
1FG1...-..C4.-....		CT	480	164	–	–	463	147				459	169	–	–	442	152				
1FG1...-..D0.-....	48	CT	436	121	–	–	412	97	50	104.5	90	422	121	–	–	398	97	23	90	90	96
1FG1...-..D2.-....		CT	464	148	–	–	440	124				449	148	–	–	425	124				
1FG1...-..D3.-....		HD	490	168	–	–	466	144	56			475	174	–	–	451	150				
1FG1...-..D4.-....		HD	515	193	–	–	491	169				500	199	–	–	476	175				
1FG1...-..E0.-....	63	CT	469	154	–	–	455	139	50	104.5	104	455	154	–	–	440	139	23	103	104	126
1FG1...-..E1.-....		HD	504	189	–	–	490	174				490	189	–	–	475	174				
1FG1...-..E2.-....		CT	492	176	–	–	477	161				477	176	–	–	463	161				
1FG1...-..E3.-....		CT	514	199	–	–	500	184				500	199	–	–	485	184				
1FG1...-..E4.-....		HD	568	253	–	–	554	238				554	253	–	–	539	238				
1FG1...-..F0.-....	80	CT	508	195	519	206	472	158	48	104.5	119	494	196	505	207	457	159	21	118	119	155
1FG1...-..F1.-....		CT	527	214	538	225	491	177				513	215	524	226	476	178				
1FG1...-..F3.-....		CT	546	233	557	244	510	196				532	234	543	245	495	197				
1FG1...-..F4.-....		CT	566	252	577	263	529	215				551	253	562	264	515	216				
1FG1...-..F52-....		HD	594	281	605	292	558	244				580	282	591	293	543	245				
1FG1...-..F62-....		HD	594	281	605	292	558	244				580	282	591	293	543	245				
1FG1...-..F53-....		HD	594	281	605	292	558	244			139	580	282	591	293	543	245			139	
1FG1...-..F63-....		HD	594	281	605	292	558	244				580	282	591	293	543	245				
1FG1...-..G0.-....	100	CT	539	220	566	247	504	185	53	104.5	137	524	222	551	249	489	187	26	136	137	192
1FG1...-..G1.-....		CT	565	246	592	273	530	211			158	550	248	577	275	515	213			158	
1FG1...-..G3.-....		CT	591	272	618	299	556	237				576	274	603	301	541	239				
1FG1...-..G5.-....		CT	643	324	670	351	608	289				628	326	655	353	593	291				

© Siemens 2019

Dimensional drawings

Gearbox type *K.F.69*

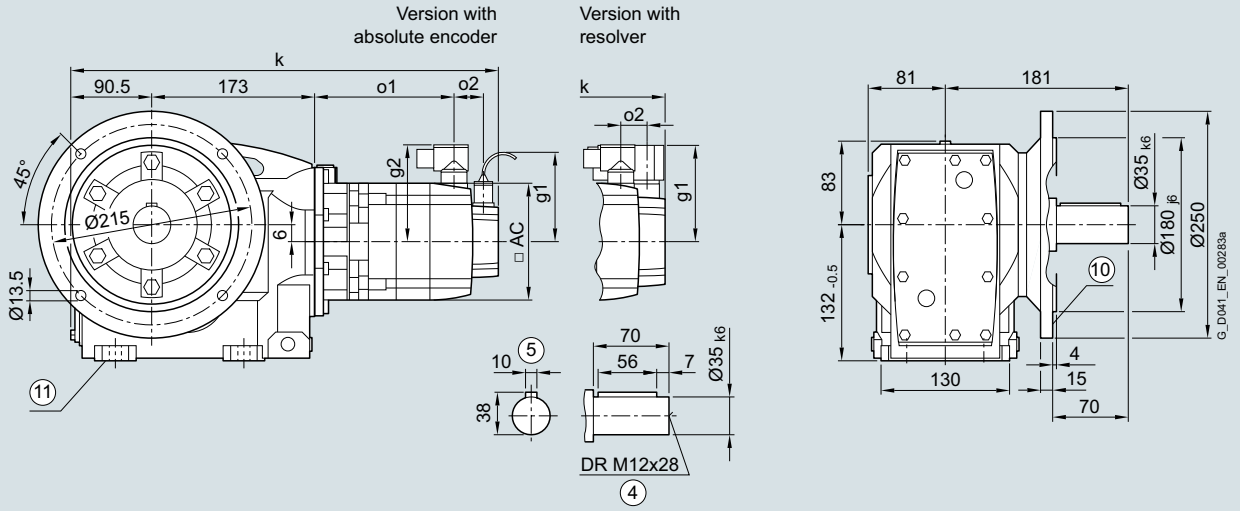

Gearbox type *KAF.69*

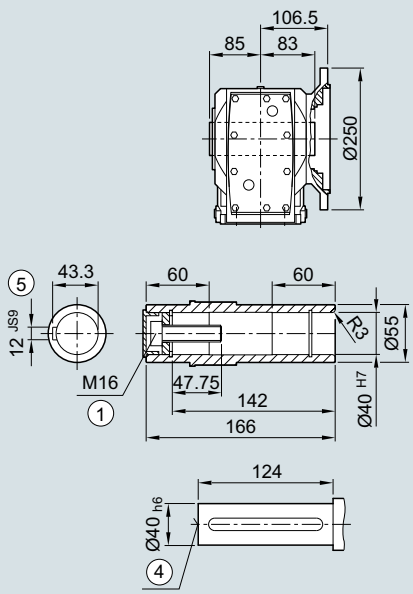

Gearbox type *KAFS69*

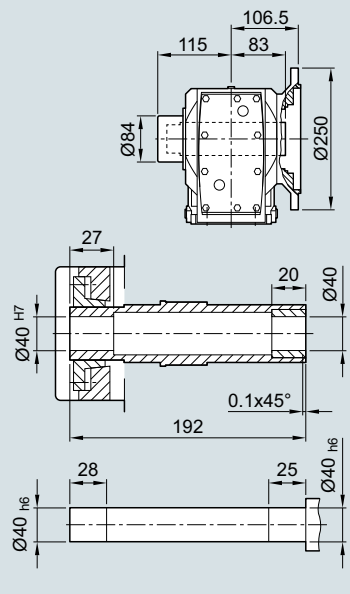

Gearbox type *KAFT69*

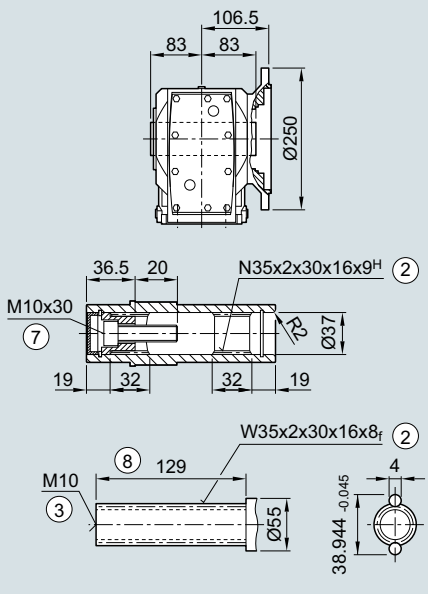

① ISO 4014 ② DIN 5480 ③ DIN 332-D ④ DIN 332
⑤ Feather key/keyway DIN 6885 ⑦ ISO 4762 ⑧ Without locating shoulder +1 mm
⑩ For inner contour of the flange design, see page 5/170 ⑪ Use bores only for foot-mounted design

© Siemens 2019

Servo bevel geared motor	Motor shaft height	Motor version	Absolute encoder with brake		with brake for increased energy		without brake					Resolver with brake		with brake for increased energy		without brake					
Type			k	o1	k	o1	k	o1	o2	g1	g2	k	o1	k	o1	k	o1	o2	g1	g2	AC
1FG1...-..C2.-....	36	CT	465	139	–	–	448	122	50	104.5	78	445	144	–	–	428	127	15	80	80	72
1FG1...-..C3.-....		HD	475	149	–	–	458	132				455	154	–	–	438	137				
1FG1...-..C4.-....		CT	490	164	–	–	473	147				470	169	–	–	453	152				
1FG1...-..D0.-....	48	CT	447	121	–	–	423	97	50	104.5	90	432	121	–	–	408	97	23	90	90	96
1FG1...-..D2.-....		CT	474	148	–	–	450	124				460	148	–	–	436	124				
1FG1...-..D3.-....		HD	500	168	–	–	476	144	56			486	174	–	–	462	150				
1FG1...-..D4.-....		HD	525	193	–	–	501	169				511	199	–	–	487	175				
1FG1...-..E0.-....	63	CT	480	154	–	–	465	139	50	104.5	104	465	154	–	–	451	139	23	103	104	126
1FG1...-..E1.-....		HD	515	189	–	–	500	174				500	189	–	–	486	174				
1FG1...-..E2.-....		CT	502	176	–	–	488	161				488	176	–	–	473	161				
1FG1...-..E3.-....		CT	525	199	–	–	510	184				510	199	–	–	496	184				
1FG1...-..E4.-....		HD	579	253	–	–	564	238				564	253	–	–	550	238				
1FG1...-..F0.-....	80	CT	519	195	530	206	482	158	48	104.5	119	504	196	515	207	468	159	21	118	119	155
1FG1...-..F1.-....		CT	538	214	549	225	501	177				523	215	534	226	487	178				
1FG1...-..F3.-....		CT	557	233	568	244	520	196				542	234	553	245	506	197				
1FG1...-..F4.-....		CT	576	252	587	263	540	215				562	253	573	264	525	216				
1FG1...-..F52-....		HD	605	281	616	292	568	244				590	282	601	293	554	245				
1FG1...-..F62-....		HD	605	281	616	292	568	244				590	282	601	293	554	245				
1FG1...-..F53-....		HD	605	281	616	292	568	244			139	590	282	601	293	554	245			139	
1FG1...-..F63-....		HD	605	281	616	292	568	244				590	282	601	293	554	245				
1FG1...-..G0.-....	100	CT	549	220	576	247	514	185	53	104.5	137	535	222	562	249	500	187	26	136	137	192
1FG1...-..G1.-....		CT	575	246	602	273	540	211			158	561	248	588	275	526	213			158	
1FG1...-..G3.-....		CT	601	272	628	299	566	237				587	274	614	301	552	239				
1FG1...-..G5.-....		CT	653	324	680	351	618	289				639	326	666	353	604	291				

© Siemens 2019

Dimensional drawings

Gearbox type *K.Z.69*

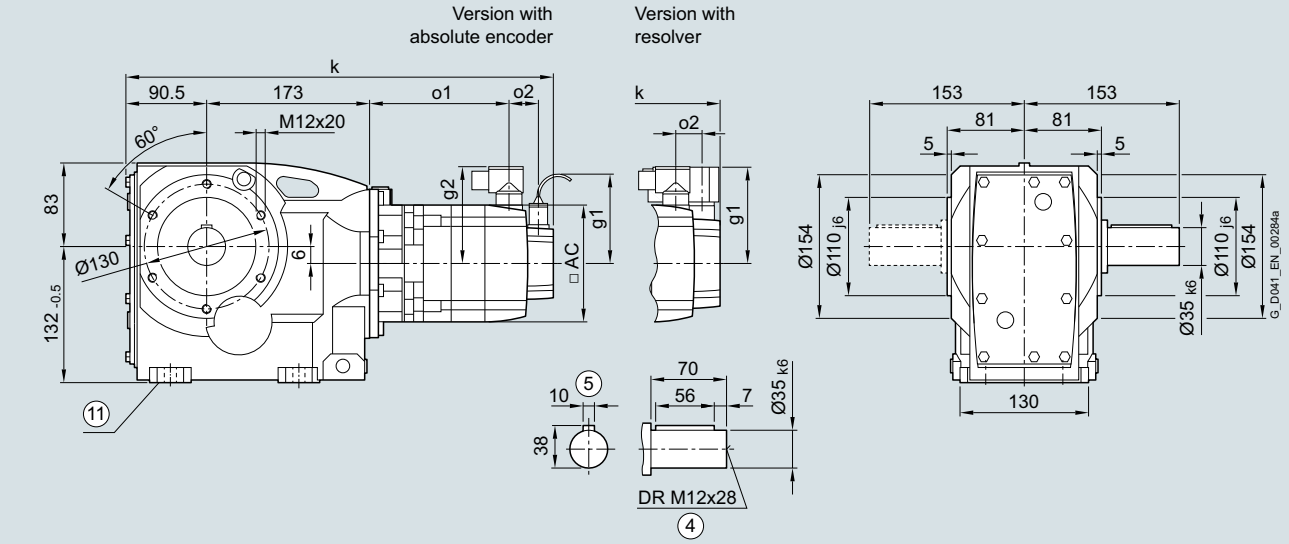

Gearbox type *KAZ.69*

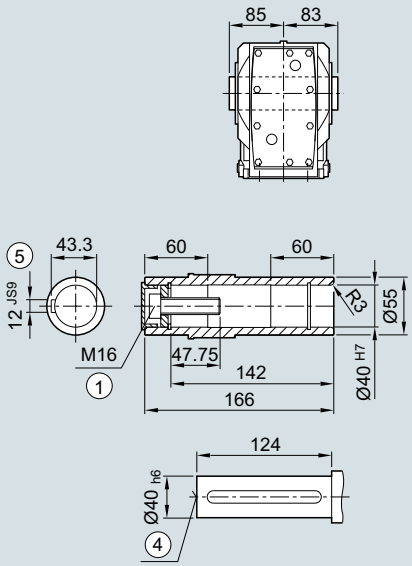

Gearbox type *KAZS69*

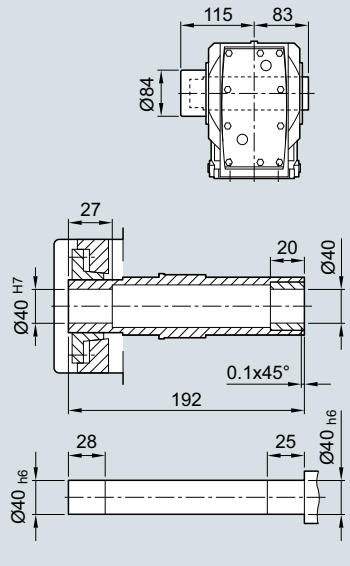

Gearbox type *KAZT69*

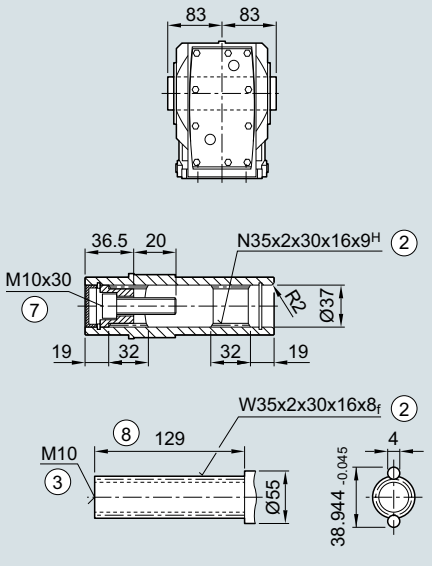

① ISO 4014 ② DIN 5480 ③ DIN 332-D ④ DIN 332
⑤ Feather key/keyway DIN 6885 ⑦ ISO 4762 ⑧ Without locating shoulder +1 mm
⑪ Use bores only for foot-mounted design

© Siemens 2019

Servo bevel geared motor	Motor shaft height	Motor version	Absolute encoder with brake		with brake for increased energy		without brake					Resolver with brake		with brake for increased energy		without brake					
Type			k	o1	k	o1	k	o1	o2	g1	g2	k	o1	k	o1	k	o1	o2	g1	g2	AC
1FG1...-..C2.-....	36	CT	465	139	–	–	448	122	50	104.5	78	445	144	–	–	428	127	15	80	80	72
1FG1...-..C3.-....		HD	475	149	–	–	458	132				455	154	–	–	438	137				
1FG1...-..C4.-....		CT	490	164	–	–	473	147				470	169	–	–	453	152				
1FG1...-..D0.-....	48	CT	447	121	–	–	423	97	50	104.5	90	432	121	–	–	408	97	23	90	90	96
1FG1...-..D2.-....		CT	474	148	–	–	450	124				460	148	–	–	436	124				
1FG1...-..D3.-....		HD	500	168	–	–	476	144	56			486	174	–	–	462	150				
1FG1...-..D4.-....		HD	525	193	–	–	501	169				511	199	–	–	487	175				
1FG1...-..E0.-....	63	CT	480	154	–	–	465	139	50	104.5	104	465	154	–	–	451	139	23	103	104	126
1FG1...-..E1.-....		HD	515	189	–	–	500	174				500	189	–	–	486	174				
1FG1...-..E2.-....		CT	502	176	–	–	488	161				488	176	–	–	473	161				
1FG1...-..E3.-....		CT	525	199	–	–	510	184				510	199	–	–	496	184				
1FG1...-..E4.-....		HD	579	253	–	–	564	238				564	253	–	–	550	238				
1FG1...-..F0.-....	80	CT	519	195	530	206	482	158	48	104.5	119	504	196	515	207	468	159	21	118	119	155
1FG1...-..F1.-....		CT	538	214	549	225	501	177				523	215	534	226	487	178				
1FG1...-..F3.-....		CT	557	233	568	244	520	196				542	234	553	245	506	197				
1FG1...-..F4.-....		CT	576	252	587	263	540	215				562	253	573	264	525	216				
1FG1...-..F52-....		HD	605	281	616	292	568	244				590	282	601	293	554	245				
1FG1...-..F62-....		HD	605	281	616	292	568	244				590	282	601	293	554	245				
1FG1...-..F53-....		HD	605	281	616	292	568	244			139	590	282	601	293	554	245			139	
1FG1...-..F63-....		HD	605	281	616	292	568	244				590	282	601	293	554	245				
1FG1...-..G0.-....	100	CT	549	220	576	247	514	185	53	104.5	137	535	222	562	249	500	187	26	136	137	192
1FG1...-..G1.-....		CT	575	246	602	273	540	211			158	561	248	588	275	526	213			158	
1FG1...-..G3.-....		CT	601	272	628	299	566	237				587	274	614	301	552	239				
1FG1...-..G5.-....		CT	653	324	680	351	618	289				639	326	666	353	604	291				

© Siemens 2019

Dimensional drawings

Gearbox type *KAD.69*

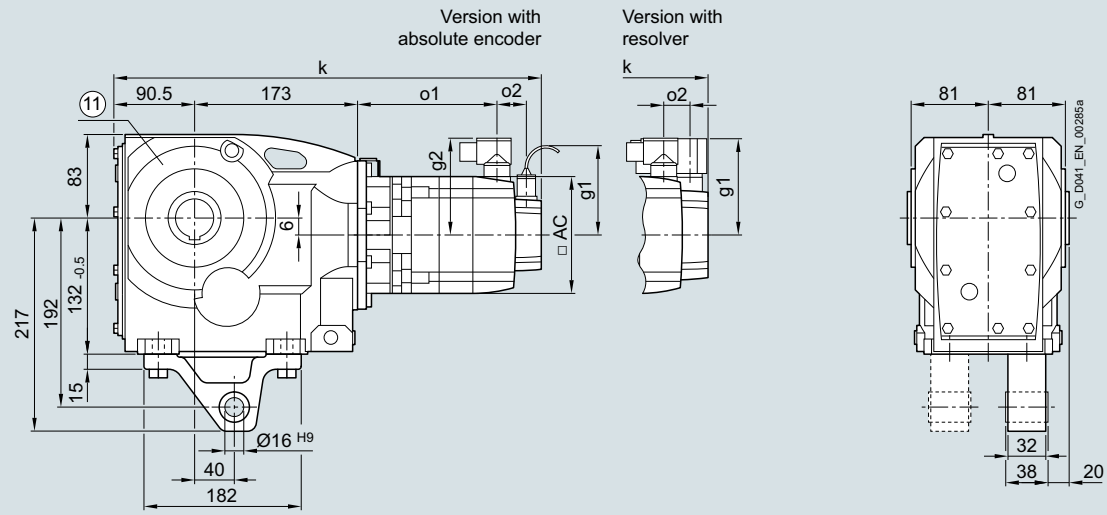

Gearbox type *KAD.69*

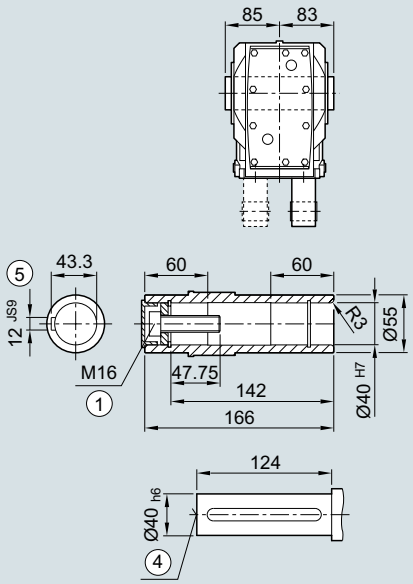

Gearbox type *KADS69*

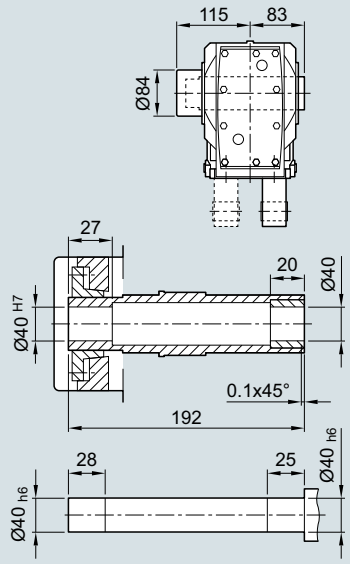

Gearbox type *KADT69*

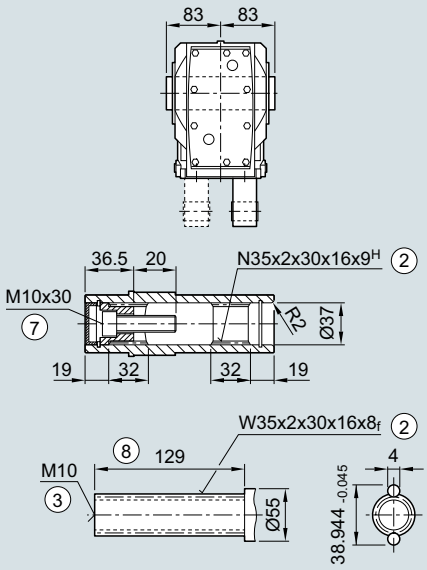

① ISO 4014 ② DIN 5480 ③ DIN 332-D ④ DIN 332
⑤ Feather key/keyway DIN 6885 ⑦ ISO 4762 ⑧ Without locating shoulder +1 mm
⑪ Use bores only for housing flange design

© Siemens 2019

Servo bevel geared motor	Motor shaft height	Motor version	Absolute encoder with brake		with brake for increased energy		without brake					Resolver with brake		with brake for increased energy		without brake					
Type			k	o1	k	o1	k	o1	o2	g1	g2	k	o1	k	o1	k	o1	o2	g1	g2	AC
1FG1...-..C2.-....	36	CT	465	139	–	–	448	122	50	104.5	78	445	144	–	–	428	127	15	80	80	72
1FG1...-..C3.-....		HD	475	149	–	–	458	132				455	154	–	–	438	137				
1FG1...-..C4.-....		CT	490	164	–	–	473	147				470	169	–	–	453	152				
1FG1...-..D0.-....	48	CT	447	121	–	–	423	97	50	104.5	90	432	121	–	–	408	97	23	90	90	96
1FG1...-..D2.-....		CT	474	148	–	–	450	124				460	148	–	–	436	124				
1FG1...-..D3.-....		HD	500	168	–	–	476	144	56			486	174	–	–	462	150				
1FG1...-..D4.-....		HD	525	193	–	–	501	169				511	199	–	–	487	175				
1FG1...-..E0.-....	63	CT	480	154	–	–	465	139	50	104.5	104	465	154	–	–	451	139	23	103	104	126
1FG1...-..E1.-....		HD	515	189	–	–	500	174				500	189	–	–	486	174				
1FG1...-..E2.-....		CT	502	176	–	–	488	161				488	176	–	–	473	161				
1FG1...-..E3.-....		CT	525	199	–	–	510	184				510	199	–	–	496	184				
1FG1...-..E4.-....		HD	579	253	–	–	564	238				564	253	–	–	550	238				
1FG1...-..F0.-....	80	CT	519	195	530	206	482	158	48	104.5	119	504	196	515	207	468	159	21	118	119	155
1FG1...-..F1.-....		CT	538	214	549	225	501	177				523	215	534	226	487	178				
1FG1...-..F3.-....		CT	557	233	568	244	520	196				542	234	553	245	506	197				
1FG1...-..F4.-....		CT	576	252	587	263	540	215				562	253	573	264	525	216				
1FG1...-..F52-....		HD	605	281	616	292	568	244				590	282	601	293	554	245				
1FG1...-..F62-....		HD	605	281	616	292	568	244				590	282	601	293	554	245				
1FG1...-..F53-....		HD	605	281	616	292	568	244			139	590	282	601	293	554	245			139	
1FG1...-..F63-....		HD	605	281	616	292	568	244				590	282	601	293	554	245				
1FG1...-..G0.-....	100	CT	549	220	576	247	514	185	53	104.5	137	535	222	562	249	500	187	26	136	137	192
1FG1...-..G1.-....		CT	575	246	602	273	540	211			158	561	248	588	275	526	213			158	
1FG1...-..G3.-....		CT	601	272	628	299	566	237				587	274	614	301	552	239				
1FG1...-..G5.-....		CT	653	324	680	351	618	289				639	326	666	353	604	291				

© Siemens 2019

Dimensional drawings

Gearbox type *K..79*

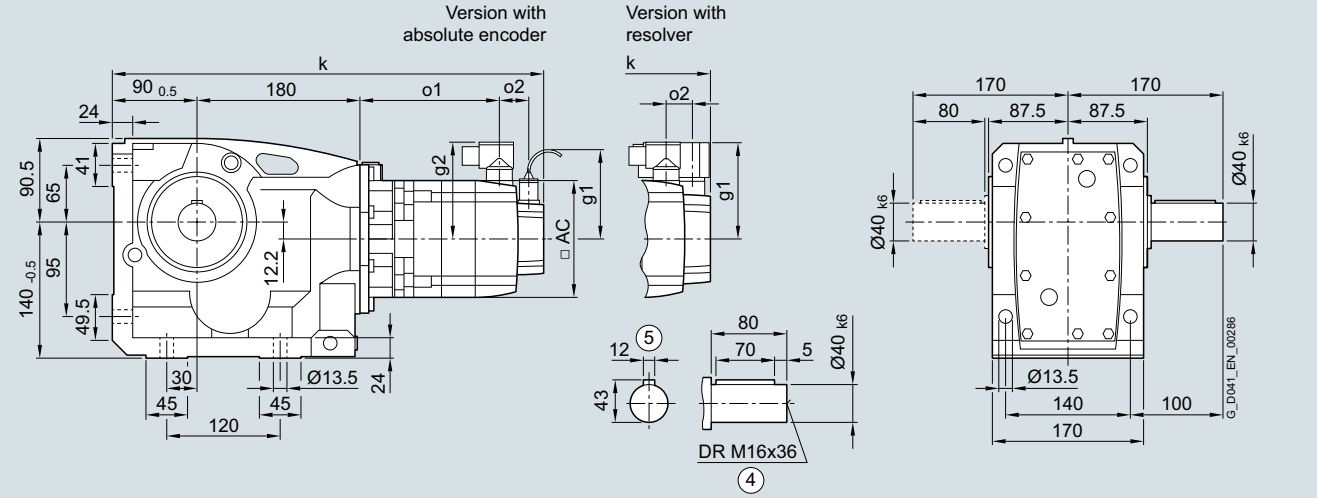

Gearbox type *KA.79*

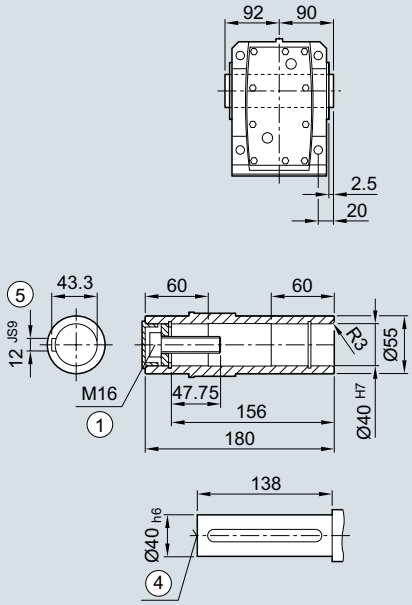

Gearbox type *KAS79*

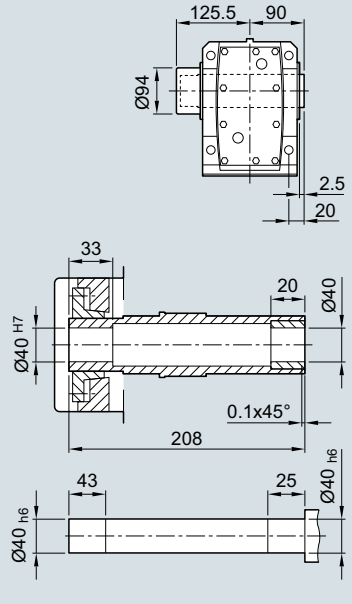

Gearbox type *KAT79*

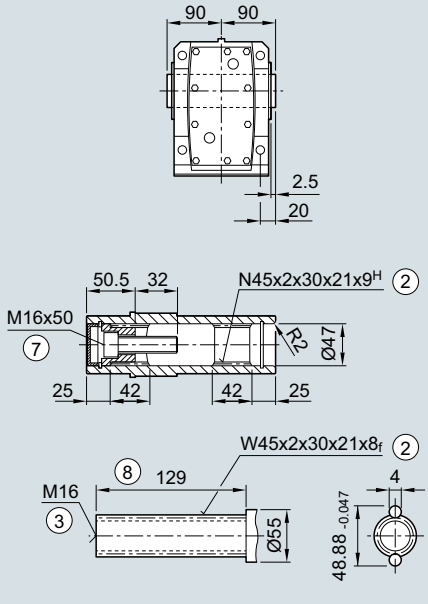

① ISO 4014 ② DIN 5480 ③ DIN 332-D ④ DIN 332
⑤ Feather key/keyway DIN 6885 ⑦ ISO 4762 ⑧ Without locating shoulder +1 mm

© Siemens 2019

Servo bevel geared motor	Motor shaft height	Motor version	Absolute encoder with brake		with brake for increased energy		without brake					Resolver with brake		with brake for increased energy		without brake					
Type			k	o1	k	o1	k	o1	o2	g1	g2	k	o1	k	o1	k	o1	o2	g1	g2	AC
1FG1...-..C2.-....	36	CT	472	139	–	–	455	122	50	104.5	78	451	144	–	–	434	127	15	80	80	72
1FG1...-..C3.-....		HD	482	149	–	–	465	132				461	154	–	–	444	137				
1FG1...-..C4.-....		CT	497	164	–	–	480	147				476	169	–	–	459	152				
1FG1...-..D0.-....	48	CT	453	121	–	–	429	97	50	104.5	90	439	121	–	–	415	97	23	90	90	96
1FG1...-..D2.-....		CT	481	148	–	–	457	124				466	148	–	–	442	124				
1FG1...-..D3.-....		HD	507	168	–	–	483	144	56			492	174	–	–	468	150				
1FG1...-..D4.-....		HD	532	193	–	–	508	169				517	199	–	–	493	175				
1FG1...-..E0.-....	63	CT	486	154	–	–	472	139	50	104.5	104	472	154	–	–	457	139	23	103	104	126
1FG1...-..E1.-....		HD	521	189	–	–	507	174				507	189	–	–	492	174				
1FG1...-..E2.-....		CT	509	176	–	–	494	161				494	176	–	–	480	161				
1FG1...-..E3.-....		CT	531	199	–	–	517	184				517	199	–	–	502	184				
1FG1...-..E4.-....		HD	585	253	–	–	571	238				571	253	–	–	556	238				
1FG1...-..F0.-....	80	CT	526	195	537	206	489	158	48	104.5	119	511	196	522	207	475	159	21	118	119	155
1FG1...-..F1.-....		CT	545	214	556	225	508	177				530	215	541	226	494	178				
1FG1...-..F3.-....		CT	564	233	575	244	527	196				549	234	560	245	513	197				
1FG1...-..F4.-....		CT	583	252	594	263	547	215				569	253	580	264	532	216				
1FG1...-..F52-....		HD	612	281	623	292	575	244				597	282	608	293	561	245				
1FG1...-..F62-....		HD	612	281	623	292	575	244				597	282	608	293	561	245				
1FG1...-..F53-....		HD	612	281	623	292	575	244			139	597	282	608	293	561	245			139	
1FG1...-..F63-....		HD	612	281	623	292	575	244				597	282	608	293	561	245				
1FG1...-..G0.-....	100	CT	556	220	583	247	521	185	53	104.5	137	542	222	569	249	507	187	26	136	137	192
1FG1...-..G1.-....		CT	582	246	609	273	547	211			158	568	248	595	275	533	213			158	
1FG1...-..G3.-....		CT	608	272	635	299	573	237				594	274	621	301	559	239				
1FG1...-..G5.-....		CT	660	324	687	351	625	289				646	326	673	353	611	291				

© Siemens 2019

Dimensional drawings

Gearbox type *K.F.79*

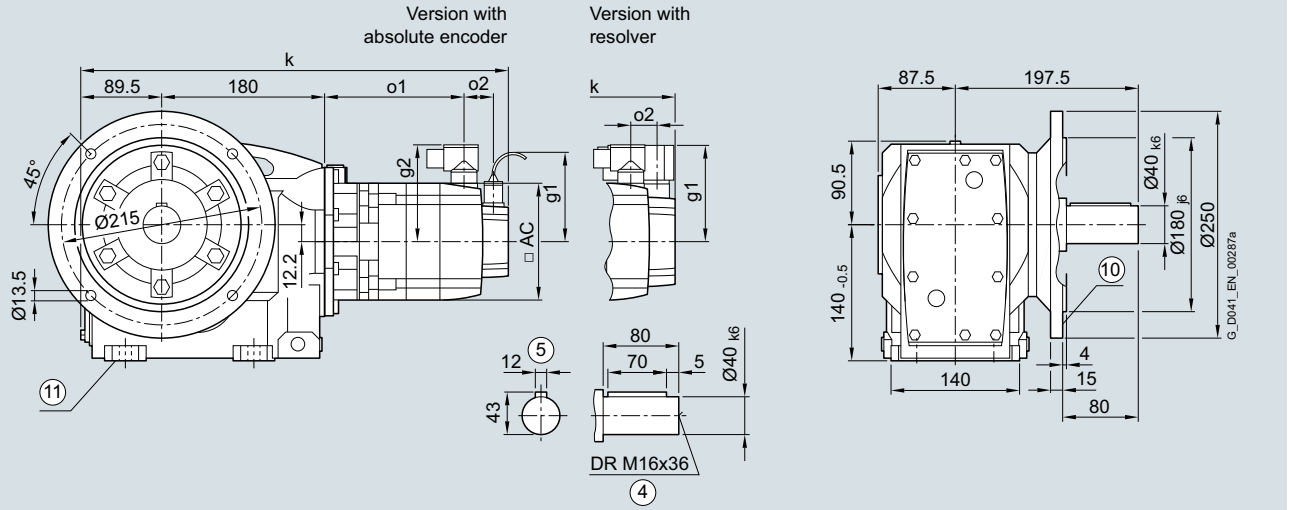

Gearbox type *KAF.79*

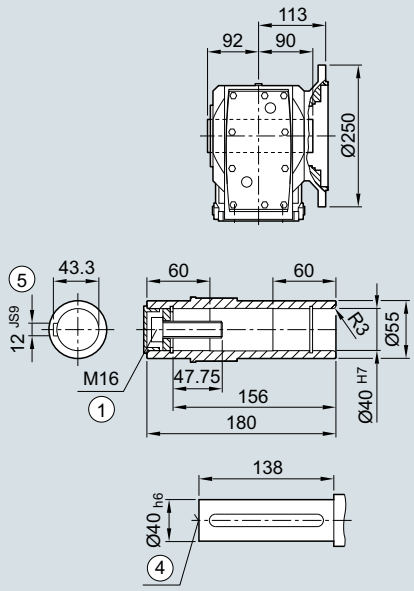

Gearbox type *KAFS79*

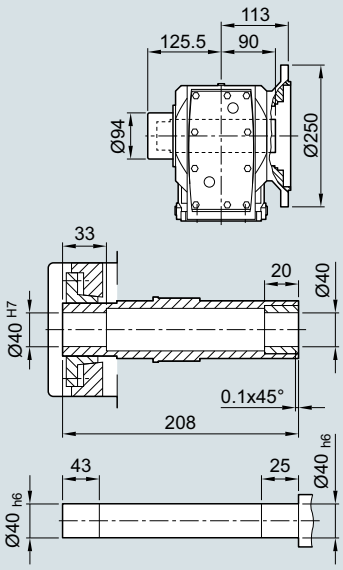

Gearbox type *KAFT79*

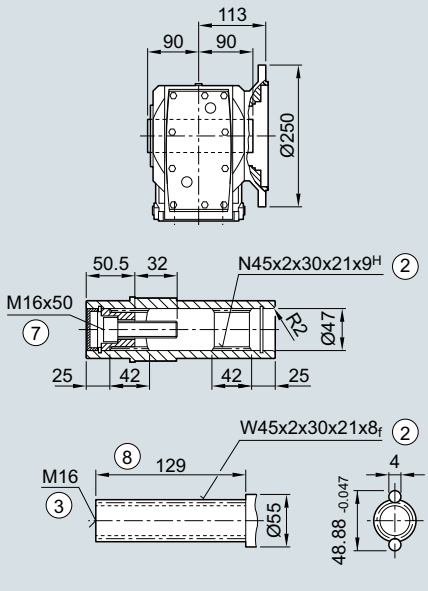

① ISO 4014 ② DIN 5480 ③ DIN 332-D ④ DIN 332
⑤ Feather key/keyway DIN 6885 ⑦ ISO 4762 ⑧ Without locating shoulder +1 mm
⑩ For inner contour of the flange design, see page 5/170 ⑪ Use bores only for foot-mounted design

© Siemens 2019

Servo bevel geared motor	Motor shaft height	Motor version	Absolute encoder with brake		with brake for increased energy		without brake					Resolver with brake		with brake for increased energy		without brake					
Type			k	o1	k	o1	k	o1	o2	g1	g2	k	o1	k	o1	k	o1	o2	g1	g2	AC
1FG1...-..C2.-....	36	CT	471	139	–	–	454	122	50	104.5	78	451	144	–	–	434	127	15	80	80	72
1FG1...-..C3.-....		HD	481	149	–	–	464	132				461	154	–	–	444	137				
1FG1...-..C4.-....		CT	496	164	–	–	479	147				476	169	–	–	459	152				
1FG1...-..D0.-....	48	CT	453	121	–	–	429	97	50	104.5	90	438	121	–	–	414	97	23	90	90	96
1FG1...-..D2.-....		CT	480	148	–	–	456	124				466	148	–	–	442	124				
1FG1...-..D3.-....		HD	506	168	–	–	482	144	56			492	174	–	–	468	150				
1FG1...-..D4.-....		HD	531	193	–	–	507	169				517	199	–	–	493	175				
1FG1...-..E0.-....	63	CT	486	154	–	–	471	139	50	104.5	104	471	154	–	–	457	139	23	103	104	126
1FG1...-..E1.-....		HD	521	189	–	–	506	174				506	189	–	–	492	174				
1FG1...-..E2.-....		CT	508	176	–	–	494	161				494	176	–	–	479	161				
1FG1...-..E3.-....		CT	531	199	–	–	516	184				516	199	–	–	502	184				
1FG1...-..E4.-....		HD	585	253	–	–	570	238				570	253	–	–	556	238				
1FG1...-..F0.-....	80	CT	525	195	536	206	489	158	48	104.5	119	511	196	522	207	474	159	21	118	119	155
1FG1...-..F1.-....		CT	544	214	555	225	508	177				530	215	541	226	493	178				
1FG1...-..F3.-....		CT	563	233	574	244	527	196				549	234	560	245	512	197				
1FG1...-..F4.-....		CT	583	252	594	263	546	215				568	253	579	264	532	216				
1FG1...-..F52-....		HD	611	281	622	292	575	244				597	282	608	293	560	245				
1FG1...-..F62-....		HD	611	281	622	292	575	244				597	282	608	293	560	245				
1FG1...-..F53-....		HD	611	281	622	292	575	244			139	597	282	608	293	560	245			139	
1FG1...-..F63-....		HD	611	281	622	292	575	244				597	282	608	293	560	245				
1FG1...-..G0.-....	100	CT	556	220	583	247	521	185	53	104.5	137	541	222	568	249	506	187	26	136	137	192
1FG1...-..G1.-....		CT	582	246	609	273	547	211			158	567	248	594	275	532	213			158	
1FG1...-..G3.-....		CT	608	272	635	299	573	237				593	274	620	301	558	239				
1FG1...-..G5.-....		CT	660	324	687	351	625	289				645	326	672	353	610	291				

© Siemens 2019

Dimensional drawings

Gearbox type *K.Z.79*

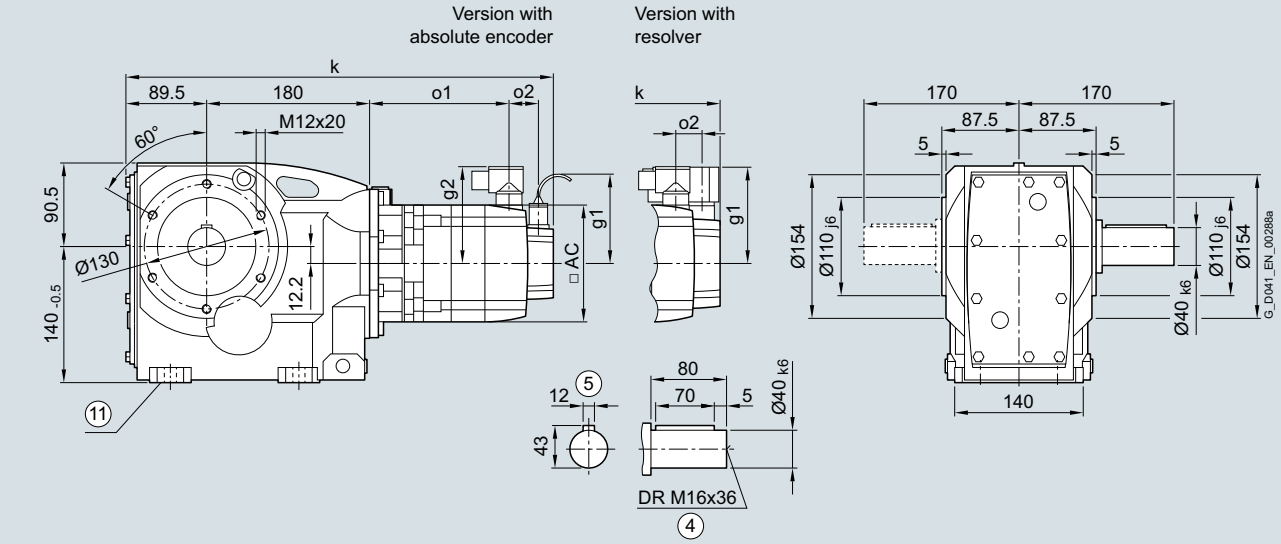

Gearbox type *KAZ.79*

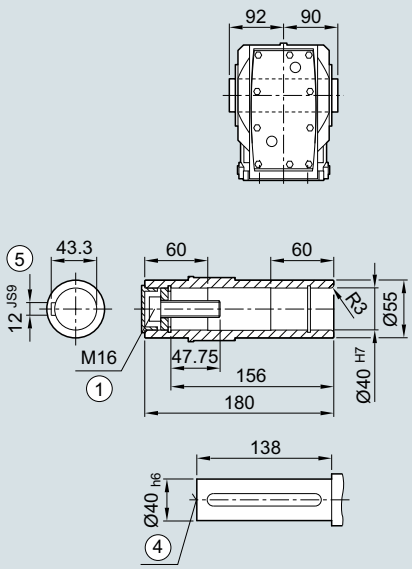

Gearbox type *KAZS79*

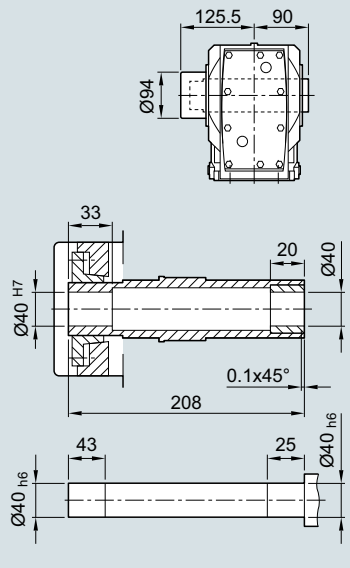

Gearbox type *KAZT79*

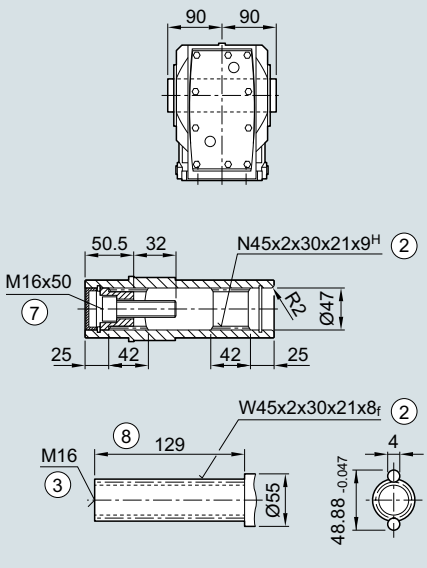

① ISO 4014 ② DIN 5480 ③ DIN 332-D ④ DIN 332
⑤ Feather key/keyway DIN 6885 ⑦ ISO 4762 ⑧ Without locating shoulder +1 mm
⑪ Use bores only for foot-mounted design

© Siemens 2019

Servo bevel geared motor	Motor shaft height	Motor version	Absolute encoder with brake		with brake for increased energy		without brake					Resolver with brake		with brake for increased energy		without brake					
Type			k	o1	k	o1	k	o1	o2	g1	g2	k	o1	k	o1	k	o1	o2	g1	g2	AC
1FG1...-..C2.-....	36	CT	471	139	–	–	454	122	50	104.5	78	451	144	–	–	434	127	15	80	80	72
1FG1...-..C3.-....		HD	481	149	–	–	464	132				461	154	–	–	444	137				
1FG1...-..C4.-....		CT	496	164	–	–	479	147				476	169	–	–	459	152				
1FG1...-..D0.-....	48	CT	453	121	–	–	429	97	50	104.5	90	438	121	–	–	414	97	23	90	90	96
1FG1...-..D2.-....		CT	480	148	–	–	456	124				466	148	–	–	442	124				
1FG1...-..D3.-....		HD	506	168	–	–	482	144	56			492	174	–	–	468	150				
1FG1...-..D4.-....		HD	531	193	–	–	507	169				517	199	–	–	493	175				
1FG1...-..E0.-....	63	CT	486	154	–	–	471	139	50	104.5	104	471	154	–	–	457	139	23	103	104	126
1FG1...-..E1.-....		HD	521	189	–	–	506	174				506	189	–	–	492	174				
1FG1...-..E2.-....		CT	508	176	–	–	494	161				494	176	–	–	479	161				
1FG1...-..E3.-....		CT	531	199	–	–	516	184				516	199	–	–	502	184				
1FG1...-..E4.-....		HD	585	253	–	–	570	238				570	253	–	–	556	238				
1FG1...-..F0.-....	80	CT	525	195	536	206	489	158	48	104.5	119	511	196	522	207	474	159	21	118	119	155
1FG1...-..F1.-....		CT	544	214	555	225	508	177				530	215	541	226	493	178				
1FG1...-..F3.-....		CT	563	233	574	244	527	196				549	234	560	245	512	197				
1FG1...-..F4.-....		CT	583	252	594	263	546	215				568	253	579	264	532	216				
1FG1...-..F52-....		HD	611	281	622	292	575	244				597	282	608	293	560	245				
1FG1...-..F62-....		HD	611	281	622	292	575	244				597	282	608	293	560	245				
1FG1...-..F53-....		HD	611	281	622	292	575	244			139	597	282	608	293	560	245			139	
1FG1...-..F63-....		HD	611	281	622	292	575	244				597	282	608	293	560	245				
1FG1...-..G0.-....	100	CT	556	220	583	247	521	185	53	104.5	137	541	222	568	249	506	187	26	136	137	192
1FG1...-..G1.-....		CT	582	246	609	273	547	211			158	567	248	594	275	532	213			158	
1FG1...-..G3.-....		CT	608	272	635	299	573	237				593	274	620	301	558	239				
1FG1...-..G5.-....		CT	660	324	687	351	625	289				645	326	672	353	610	291				

© Siemens 2019

Dimensional drawings

Gearbox type *KAD.79*

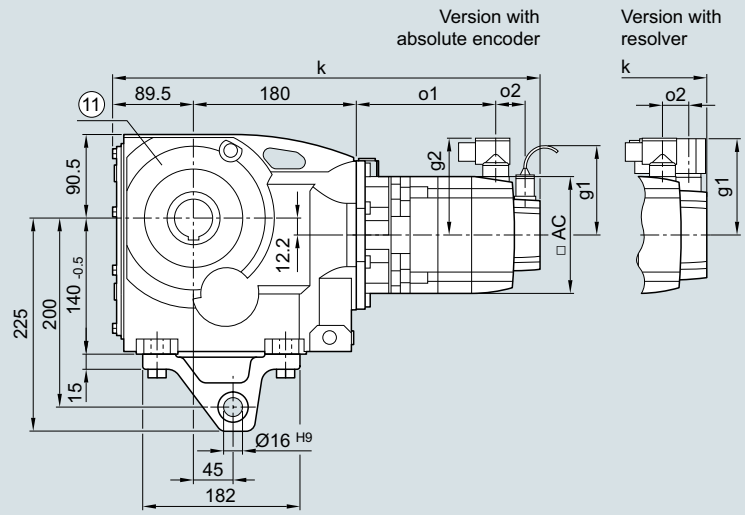

Gearbox type *KAD.79*

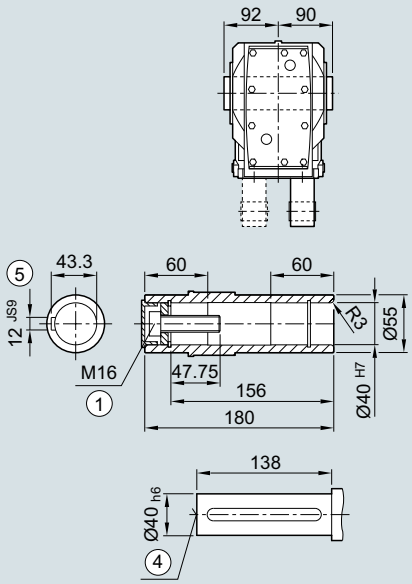

Gearbox type *KADS79*

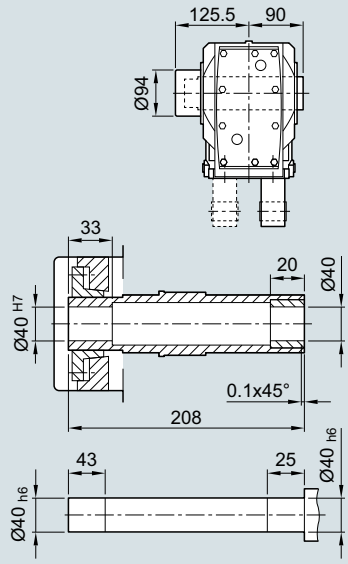

Gearbox type *KADT79*

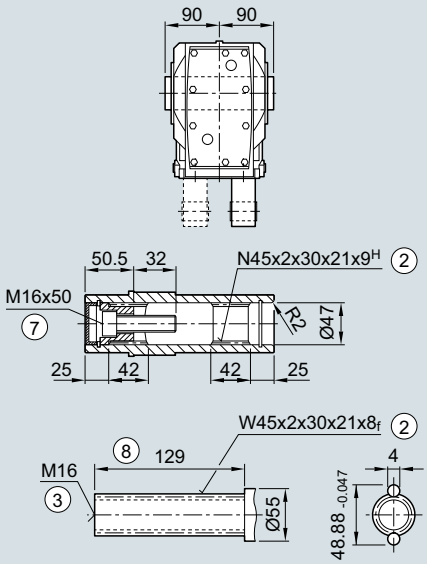

① ISO 4014 ② DIN 5480 ③ DIN 332-D ④ DIN 332
⑤ Feather key/keyway DIN 6885 ⑦ ISO 4762 ⑧ Without locating shoulder +1 mm
⑪ Use bores only for housing flange design

© Siemens 2019

Servo bevel geared motor	Motor shaft height	Motor version	Absolute encoder with brake		with brake for increased energy		without brake					Resolver with brake		with brake for increased energy		without brake					
Type			k	o1	k	o1	k	o1	o2	g1	g2	k	o1	k	o1	k	o1	o2	g1	g2	AC
1FG1...-..C2.-....	36	CT	471	139	–	–	454	122	50	104.5	78	451	144	–	–	434	127	15	80	80	72
1FG1...-..C3.-....		HD	481	149	–	–	464	132				461	154	–	–	444	137				
1FG1...-..C4.-....		CT	496	164	–	–	479	147				476	169	–	–	459	152				
1FG1...-..D0.-....	48	CT	453	121	–	–	429	97	50	104.5	90	438	121	–	–	414	97	23	90	90	96
1FG1...-..D2.-....		CT	480	148	–	–	456	124				466	148	–	–	442	124				
1FG1...-..D3.-....		HD	506	168	–	–	482	144	56			492	174	–	–	468	150				
1FG1...-..D4.-....		HD	531	193	–	–	507	169				517	199	–	–	493	175				
1FG1...-..E0.-....	63	CT	486	154	–	–	471	139	50	104.5	104	471	154	–	–	457	139	23	103	104	126
1FG1...-..E1.-....		HD	521	189	–	–	506	174				506	189	–	–	492	174				
1FG1...-..E2.-....		CT	508	176	–	–	494	161				494	176	–	–	479	161				
1FG1...-..E3.-....		CT	531	199	–	–	516	184				516	199	–	–	502	184				
1FG1...-..E4.-....		HD	585	253	–	–	570	238				570	253	–	–	556	238				
1FG1...-..F0.-....	80	CT	525	195	536	206	489	158	48	104.5	119	511	196	522	207	474	159	21	118	119	155
1FG1...-..F1.-....		CT	544	214	555	225	508	177				530	215	541	226	493	178				
1FG1...-..F3.-....		CT	563	233	574	244	527	196				549	234	560	245	512	197				
1FG1...-..F4.-....		CT	583	252	594	263	546	215				568	253	579	264	532	216				
1FG1...-..F52-....		HD	611	281	622	292	575	244				597	282	608	293	560	245				
1FG1...-..F62-....		HD	611	281	622	292	575	244				597	282	608	293	560	245				
1FG1...-..F53-....		HD	611	281	622	292	575	244			139	597	282	608	293	560	245			139	
1FG1...-..F63-....		HD	611	281	622	292	575	244				597	282	608	293	560	245				
1FG1...-..G0.-....	100	CT	556	220	583	247	521	185	53	104.5	137	541	222	568	249	506	187	26	136	137	192
1FG1...-..G1.-....		CT	582	246	609	273	547	211			158	567	248	594	275	532	213			158	
1FG1...-..G3.-....		CT	608	272	635	299	573	237				593	274	620	301	558	239				
1FG1...-..G5.-....		CT	660	324	687	351	625	289				645	326	672	353	610	291				

© Siemens 2019

Dimensional drawings

Gearbox type *K..89*

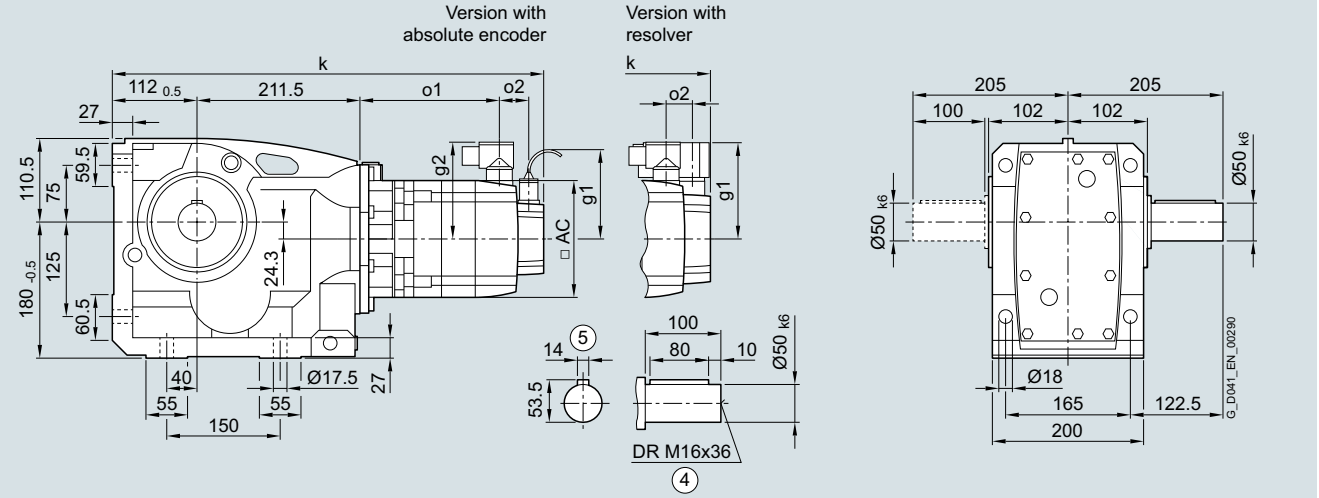

Gearbox type *KA.89*

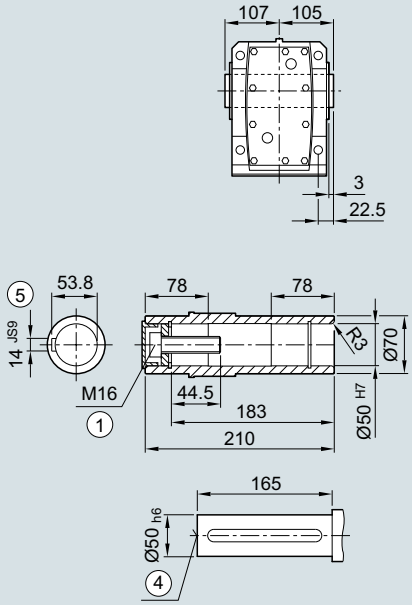

Gearbox type *KAS89*

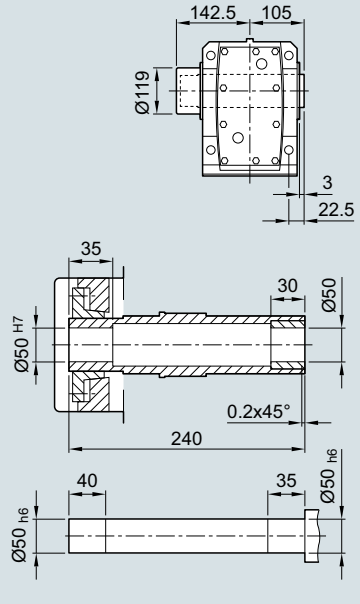

Gearbox type *KAT89*

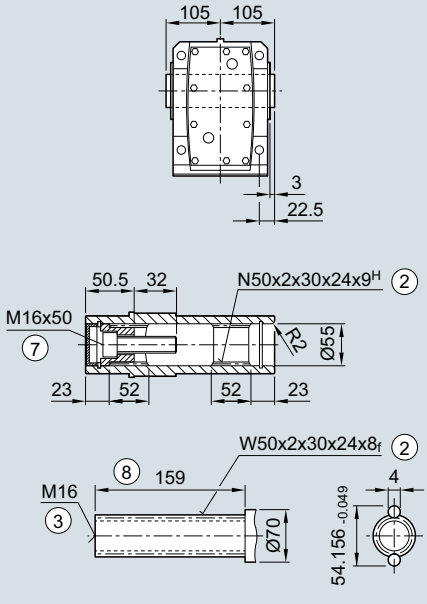

① ISO 4014 ② DIN 5480 ③ DIN 332-D ④ DIN 332
⑤ Feather key/keyway DIN 6885 ⑦ ISO 4762 ⑧ Without locating shoulder +1 mm

© Siemens 2019

Servo bevel geared motor	Motor shaft height	Motor version	Absolute encoder with brake		with brake for increased energy		without brake					Resolver with brake		with brake for increased energy		without brake					
Type			k	o1	k	o1	k	o1	o2	g1	g2	k	o1	k	o1	k	o1	o2	g1	g2	AC
1FG1...-..C2.-....	36	CT	–	–	–	–	–	–	–	–	–	–	–	–	–	–	–	–	–	–	–
1FG1...-..C3.-....		HD	–	–	–	–	–	–	–	–	–	–	–	–	–	–	–	–	–	–	–
1FG1...-..C4.-....		CT	–	–	–	–	–	–	–	–	–	–	–	–	–	–	–	–	–	–	–
1FG1...-..D0.-....	48	CT	–	–	–	–	–	–	–	–	–	–	–	–	–	–	–	–	–	–	–
1FG1...-..D2.-....		CT	–	–	–	–	–	–	–	–	–	–	–	–	–	–	–	–	–	–	–
1FG1...-..D3.-....		HD	–	–	–	–	–	–	–	–	–	–	–	–	–	–	–	–	–	–	–
1FG1...-..D4.-....		HD	–	–	–	–	–	–	–	–	–	–	–	–	–	–	–	–	–	–	–
1FG1...-..E0.-....	63	CT	534	148	–	–	519	133	50	104.5	104	519	148	–	–	505	133	23	103	104	126
1FG1...-..E1.-....		HD	569	183	–	–	554	168				554	183	–	–	540	168				
1FG1...-..E2.-....		CT	556	170	–	–	542	155				542	170	–	–	527	155				
1FG1...-..E3.-....		CT	579	193	–	–	564	178				564	193	–	–	550	178				
1FG1...-..E4.-....		HD	633	247	–	–	618	232				618	247	–	–	604	232				
1FG1...-..F0.-....	80	CT	573	189	584	200	536	152	48	104.5	119	558	190	569	201	522	153	21	118	119	155
1FG1...-..F1.-....		CT	592	208	603	219	555	171				577	209	588	220	541	172				
1FG1...-..F3.-....		CT	611	227	622	238	574	190				596	228	607	239	560	191				
1FG1...-..F4.-....		CT	630	246	641	257	594	209				616	247	627	258	579	210				
1FG1...-..F52-....		HD	659	275	670	286	622	238				644	276	655	287	608	239				
1FG1...-..F62-....		HD	659	275	670	286	622	238				644	276	655	287	608	239				
1FG1...-..F53-....		HD	659	275	670	286	622	238			139	644	276	655	287	608	239			139	
1FG1...-..F63-....		HD	659	275	670	286	622	238				644	276	655	287	608	239				
1FG1...-..G0.-....	100	CT	603	214	630	241	568	179	53	104.5	137	589	216	616	243	554	181	26	136	137	192
1FG1...-..G1.-....		CT	629	240	656	267	594	205			158	615	242	642	269	580	207			158	
1FG1...-..G3.-....		CT	655	266	682	293	620	231				641	268	668	295	606	233				
1FG1...-..G5.-....		CT	707	318	734	345	672	283				693	320	720	347	658	285				

© Siemens 2019

Dimensional drawings

Gearbox type *K.F.89*

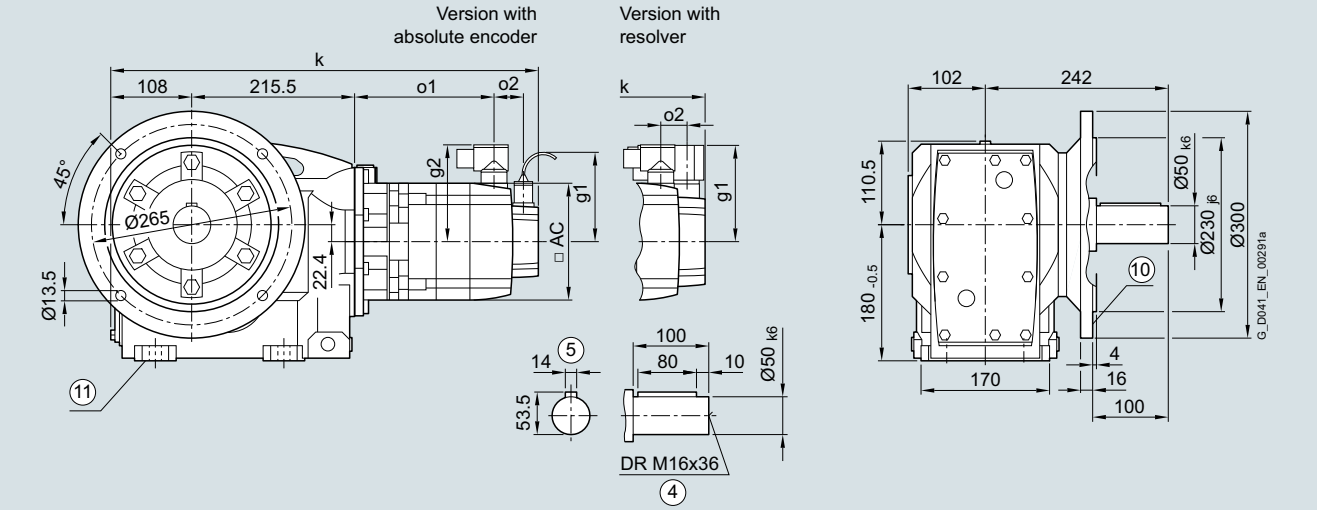

Gearbox type *KAF.89*

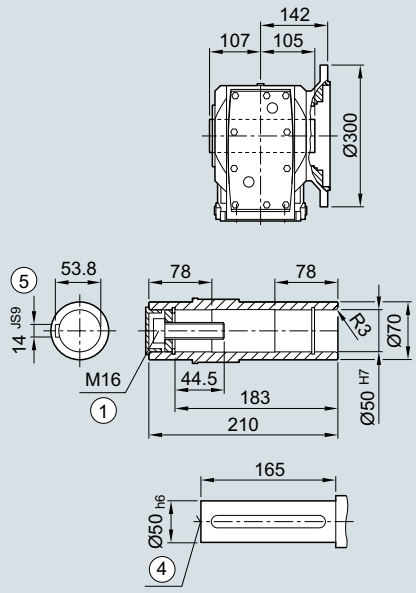

Gearbox type *KAFS89*

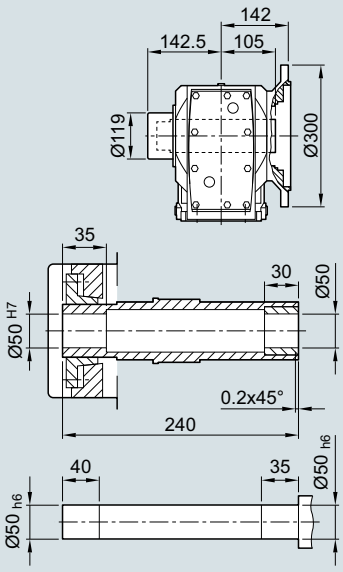

Gearbox type *KAFT89*

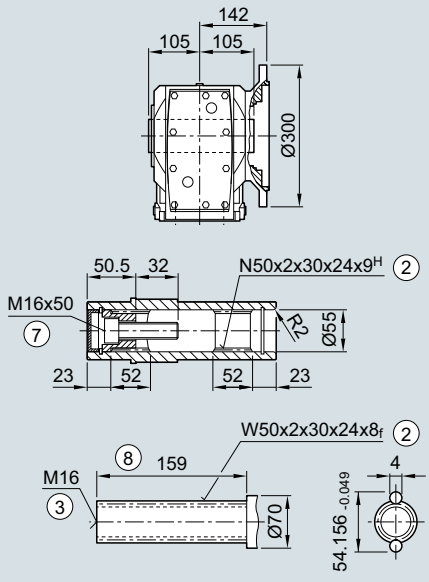

① ISO 4014 ② DIN 5480 ③ DIN 332-D ④ DIN 332
⑤ Feather key/keyway DIN 6885 ⑦ ISO 4762 ⑧ Without locating shoulder +1 mm
⑩ For inner contour of the flange design, see page 5/170 ⑪ Use bores only for foot-mounted design

© Siemens 2019

Servo bevel geared motor	Motor shaft height	Motor version	Absolute encoder									Resolver									
			with brake		with brake for increased energy		without brake					with brake		with brake for increased energy		without brake					
Type			k	o1	k	o1	k	o1	o2	g1	g2	k	o1	k	o1	k	o1	o2	g1	g2	AC
1FG1...-..C2.-....	36	CT	–	–	–	–	–	–	–	–	–	–	–	–	–	–	–	–	–	–	–
1FG1...-..C3.-....		HD	–	–	–	–	–	–	–	–	–	–	–	–	–	–	–	–	–	–	–
1FG1...-..C4.-....		CT	–	–	–	–	–	–	–	–	–	–	–	–	–	–	–	–	–	–	–
1FG1...-..D0.-....	48	CT	–	–	–	–	–	–	–	–	–	–	–	–	–	–	–	–	–	–	–
1FG1...-..D2.-....		CT	–	–	–	–	–	–	–	–	–	–	–	–	–	–	–	–	–	–	–
1FG1...-..D3.-....		HD	–	–	–	–	–	–	–	–	–	–	–	–	–	–	–	–	–	–	–
1FG1...-..D4.-....		HD	–	–	–	–	–	–	–	–	–	–	–	–	–	–	–	–	–	–	–
1FG1...-..E0.-....	63	CT	534	148	–	–	519	133	50	104.5	104	519	148	–	–	505	133	23	103	104	126
1FG1...-..E1.-....		HD	569	183	–	–	554	168				554	183	–	–	540	168				
1FG1...-..E2.-....		CT	556	170	–	–	542	155				542	170	–	–	527	155				
1FG1...-..E3.-....		CT	579	193	–	–	564	178				564	193	–	–	550	178				
1FG1...-..E4.-....		HD	633	247	–	–	618	232				618	247	–	–	604	232				
1FG1...-..F0.-....	80	CT	573	189	584	200	536	152	48	104.5	119	558	190	569	201	522	153	21	118	119	155
1FG1...-..F1.-....		CT	592	208	603	219	555	171				577	209	588	220	541	172				
1FG1...-..F3.-....		CT	611	227	622	238	574	190				596	228	607	239	560	191				
1FG1...-..F4.-....		CT	630	246	641	257	594	209				616	247	627	258	579	210				
1FG1...-..F52-....		HD	659	275	670	286	622	238				644	276	655	287	608	239				
1FG1...-..F62-....		HD	659	275	670	286	622	238				644	276	655	287	608	239				
1FG1...-..F53-....		HD	659	275	670	286	622	238			139	644	276	655	287	608	239			139	
1FG1...-..F63-....		HD	659	275	670	286	622	238				644	276	655	287	608	239				
1FG1...-..G0.-....	100	CT	603	214	630	241	568	179	53	104.5	137	589	216	616	243	554	181	26	136	137	192
1FG1...-..G1.-....		CT	629	240	656	267	594	205			158	615	242	642	269	580	207			158	
1FG1...-..G3.-....		CT	655	266	682	293	620	231				641	268	668	295	606	233				
1FG1...-..G5.-....		CT	707	318	734	345	672	283				693	320	720	347	658	285				

© Siemens 2019

Dimensional drawings

Gearbox type *K.Z.89*

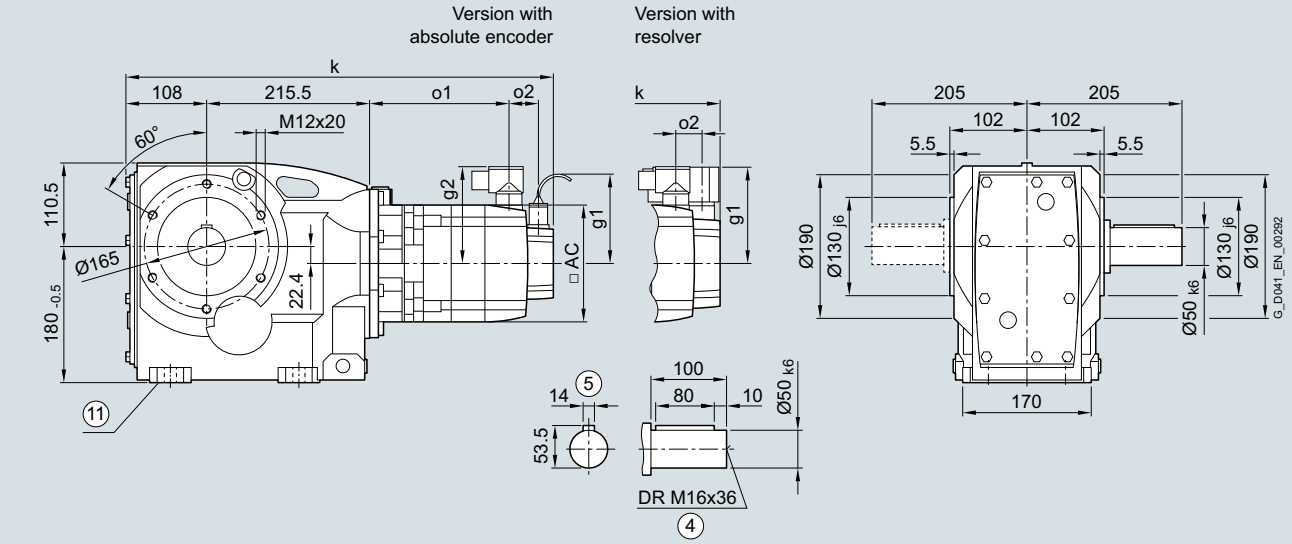

Gearbox type *KAZ.89*

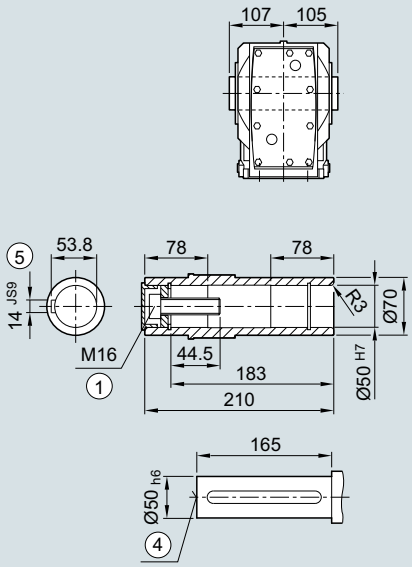

Gearbox type *KAZS89*

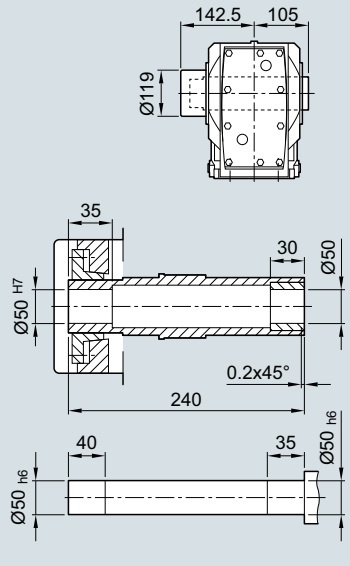

Gearbox type *KAZT89*

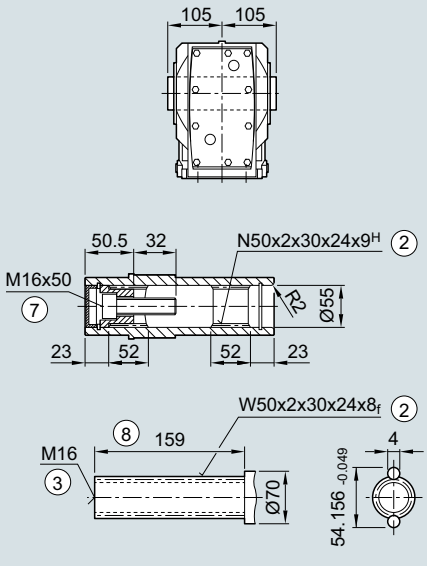

① ISO 4014 ② DIN 5480 ③ DIN 332-D ④ DIN 332
⑤ Feather key/keyway DIN 6885 ⑦ ISO 4762 ⑧ Without locating shoulder +1 mm
⑪ Use bores only for foot-mounted design

© Siemens 2019

Servo bevel geared motor	Motor shaft height	Motor version	Absolute encoder with brake		with brake for increased energy		without brake					Resolver with brake		with brake for increased energy		without brake					
Type			k	o1	k	o1	k	o1	o2	g1	g2	k	o1	k	o1	k	o1	o2	g1	g2	AC
1FG1...-..C2.-....	36	CT	–	–	–	–	–	–	–	–	–	–	–	–	–	–	–	–	–	–	–
1FG1...-..C3.-....		HD	–	–	–	–	–	–	–	–	–	–	–	–	–	–	–	–	–	–	–
1FG1...-..C4.-....		CT	–	–	–	–	–	–	–	–	–	–	–	–	–	–	–	–	–	–	–
1FG1...-..D0.-....	48	CT	–	–	–	–	–	–	–	–	–	–	–	–	–	–	–	–	–	–	–
1FG1...-..D2.-....		CT	–	–	–	–	–	–	–	–	–	–	–	–	–	–	–	–	–	–	–
1FG1...-..D3.-....		HD	–	–	–	–	–	–	–	–	–	–	–	–	–	–	–	–	–	–	–
1FG1...-..D4.-....		HD	–	–	–	–	–	–	–	–	–	–	–	–	–	–	–	–	–	–	–
1FG1...-..E0.-....	63	CT	534	148	–	–	519	133	50	104.5	104	519	148	–	–	505	133	23	103	104	126
1FG1...-..E1.-....		HD	569	183	–	–	554	168				554	183	–	–	540	168				
1FG1...-..E2.-....		CT	556	170	–	–	542	155				542	170	–	–	527	155				
1FG1...-..E3.-....		CT	579	193	–	–	564	178				564	193	–	–	550	178				
1FG1...-..E4.-....		HD	633	247	–	–	618	232				618	247	–	–	604	232				
1FG1...-..F0.-....	80	CT	573	189	584	200	536	152	48	104.5	119	558	190	569	201	522	153	21	118	119	155
1FG1...-..F1.-....		CT	592	208	603	219	555	171				577	209	588	220	541	172				
1FG1...-..F3.-....		CT	611	227	622	238	574	190				596	228	607	239	560	191				
1FG1...-..F4.-....		CT	630	246	641	257	594	209				616	247	627	258	579	210				
1FG1...-..F52-....		HD	659	275	670	286	622	238				644	276	655	287	608	239				
1FG1...-..F62-....		HD	659	275	670	286	622	238				644	276	655	287	608	239				
1FG1...-..F53-....		HD	659	275	670	286	622	238			139	644	276	655	287	608	239			139	
1FG1...-..F63-....		HD	659	275	670	286	622	238				644	276	655	287	608	239				
1FG1...-..G0.-....	100	CT	603	214	630	241	568	179	53	104.5	137	589	216	616	243	554	181	26	136	137	192
1FG1...-..G1.-....		CT	629	240	656	267	594	205			158	615	242	642	269	580	207			158	
1FG1...-..G3.-....		CT	655	266	682	293	620	231				641	268	668	295	606	233				
1FG1...-..G5.-....		CT	707	318	734	345	672	283				693	320	720	347	658	285				

© Siemens 2019

Dimensional drawings

Gearbox type *KAD.89*

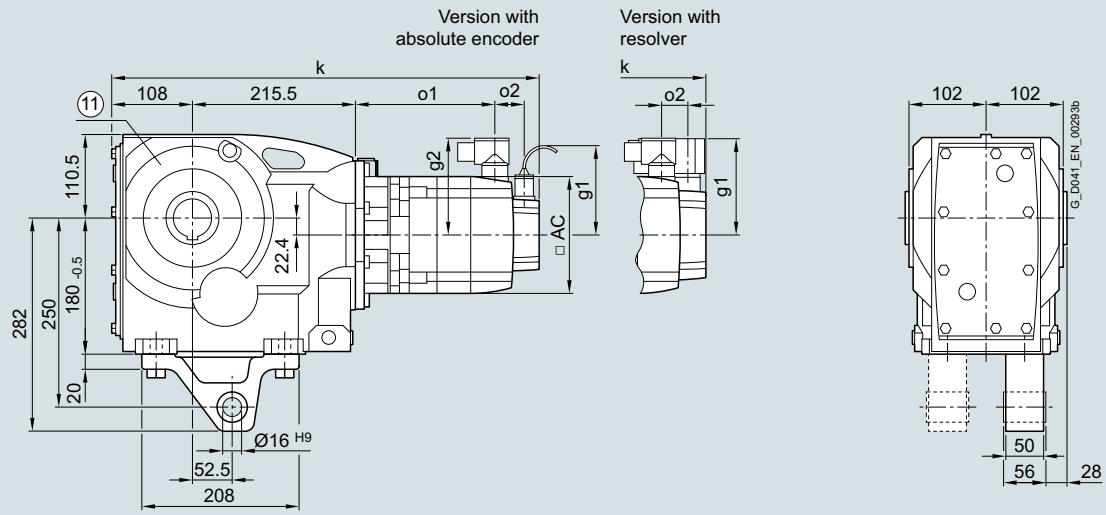

Gearbox type *KAD.89*

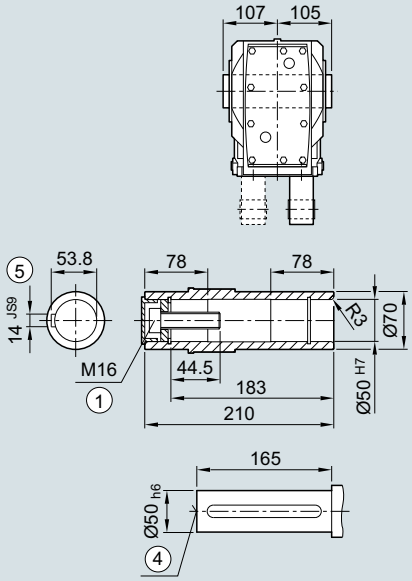

Gearbox type *KADS89*

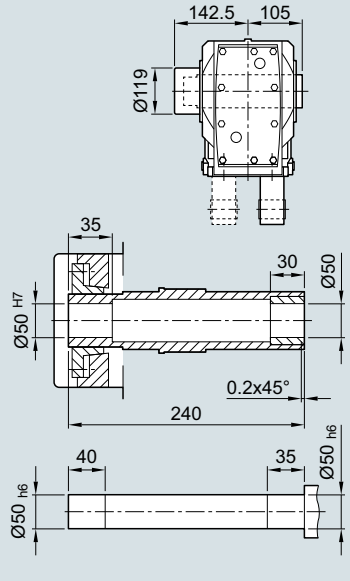

Gearbox type *KADT89*

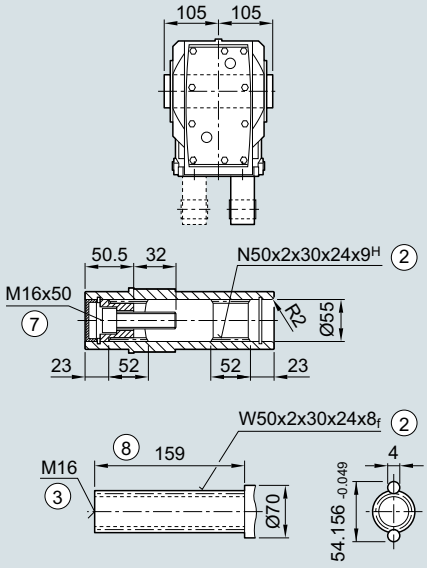

① ISO 4014 ② DIN 5480 ③ DIN 332-D ④ DIN 332
⑤ Feather key/keyway DIN 6885 ⑦ ISO 4762 ⑧ Without locating shoulder +1 mm
⑪ Use bores only for housing flange design

© Siemens 2019

Servo bevel geared motor	Motor shaft height	Motor version	Absolute encoder with brake		with brake for increased energy		without brake					Resolver with brake		with brake for increased energy		without brake					
Type			k	o1	k	o1	k	o1	o2	g1	g2	k	o1	k	o1	k	o1	o2	g1	g2	AC
1FG1...-..C2.-....	36	CT	–	–	–	–	–	–	–	–	–	–	–	–	–	–	–	–	–	–	–
1FG1...-..C3.-....		HD	–	–	–	–	–	–	–	–	–	–	–	–	–	–	–	–	–	–	–
1FG1...-..C4.-....		CT	–	–	–	–	–	–	–	–	–	–	–	–	–	–	–	–	–	–	–
1FG1...-..D0.-....	48	CT	–	–	–	–	–	–	–	–	–	–	–	–	–	–	–	–	–	–	–
1FG1...-..D2.-....		CT	–	–	–	–	–	–	–	–	–	–	–	–	–	–	–	–	–	–	–
1FG1...-..D3.-....		HD	–	–	–	–	–	–	–	–	–	–	–	–	–	–	–	–	–	–	–
1FG1...-..D4.-....		HD	–	–	–	–	–	–	–	–	–	–	–	–	–	–	–	–	–	–	–
1FG1...-..E0.-....	63	CT	534	148	–	–	519	133	50	104.5	104	519	148	–	–	505	133	23	103	104	126
1FG1...-..E1.-....		HD	569	183	–	–	554	168				554	183	–	–	540	168				
1FG1...-..E2.-....		CT	556	170	–	–	542	155				542	170	–	–	527	155				
1FG1...-..E3.-....		CT	579	193	–	–	564	178				564	193	–	–	550	178				
1FG1...-..E4.-....		HD	633	247	–	–	618	232				618	247	–	–	604	232				
1FG1...-..F0.-....	80	CT	573	189	584	200	536	152	48	104.5	119	558	190	569	201	522	153	21	118	119	155
1FG1...-..F1.-....		CT	592	208	603	219	555	171				577	209	588	220	541	172				
1FG1...-..F3.-....		CT	611	227	622	238	574	190				596	228	607	239	560	191				
1FG1...-..F4.-....		CT	630	246	641	257	594	209				616	247	627	258	579	210				
1FG1...-..F52-....		HD	659	275	670	286	622	238				644	276	655	287	608	239				
1FG1...-..F62-....		HD	659	275	670	286	622	238				644	276	655	287	608	239				
1FG1...-..F53-....		HD	659	275	670	286	622	238			139	644	276	655	287	608	239			139	
1FG1...-..F63-....		HD	659	275	670	286	622	238				644	276	655	287	608	239				
1FG1...-..G0.-....	100	CT	603	214	630	241	568	179	53	104.5	137	589	216	616	243	554	181	26	136	137	192
1FG1...-..G1.-....		CT	629	240	656	267	594	205			158	615	242	642	269	580	207			158	
1FG1...-..G3.-....		CT	655	266	682	293	620	231				641	268	668	295	606	233				
1FG1...-..G5.-....		CT	707	318	734	345	672	283				693	320	720	347	658	285				

© Siemens 2019

Dimensional drawings

Gearbox type *K..109*

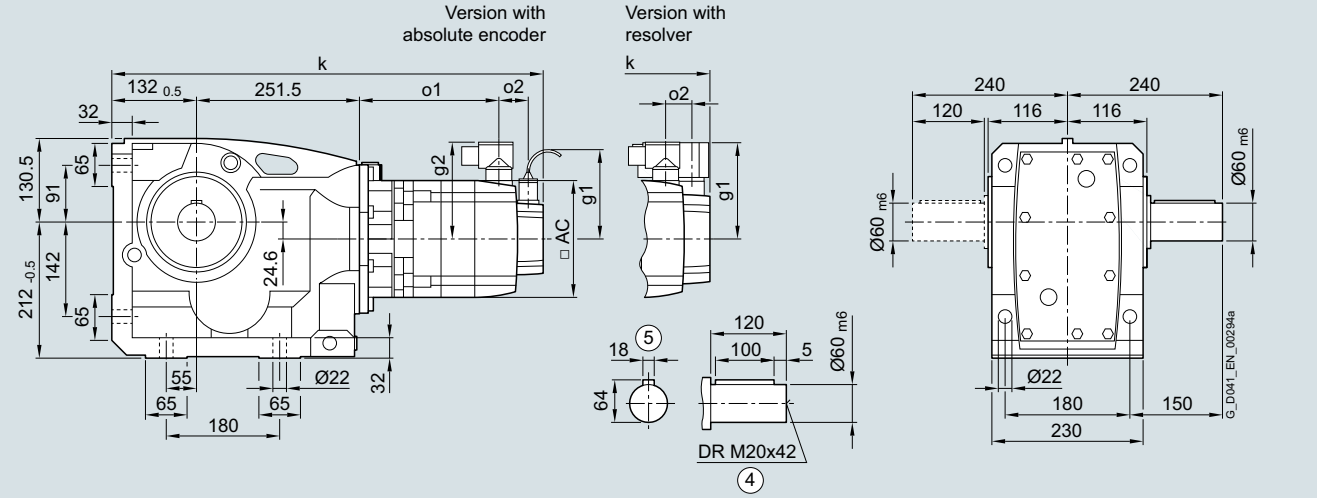

Gearbox type *KA.109*

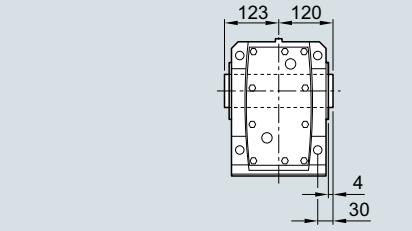

Gearbox type *KAS109*

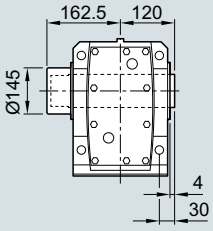

Gearbox type *KAT109*

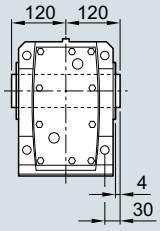

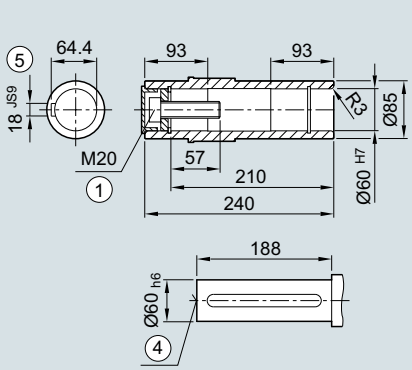

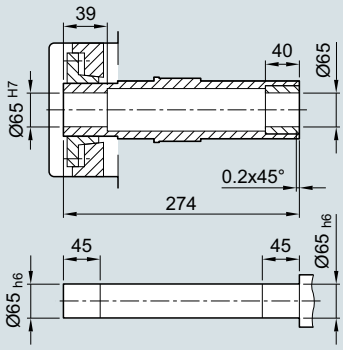

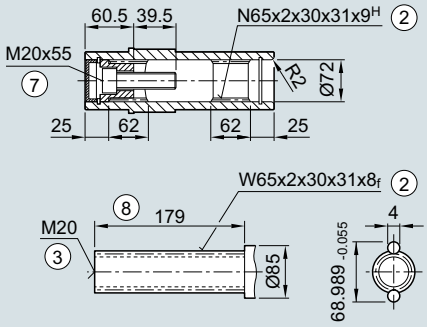

① ISO 4014 ② DIN 5480 ③ DIN 332-D ④ DIN 332
⑤ Feather key/keyway DIN 6885 ⑦ ISO 4762 ⑧ Without locating shoulder +1 mm

© Siemens 2019

Servo bevel geared motor	Motor shaft height	Motor version	Absolute encoder with brake		with brake for increased energy		without brake					Resolver with brake		with brake for increased energy		without brake					
Type			k	o1	k	o1	k	o1	o2	g1	g2	k	o1	k	o1	k	o1	o2	g1	g2	AC
1FG1...-..C2.-....	36	CT	–	–	–	–	–	–	–	–	–	–	–	–	–	–	–	–	–	–	–
1FG1...-..C3.-....		HD	–	–	–	–	–	–	–	–	–	–	–	–	–	–	–	–	–	–	–
1FG1...-..C4.-....		CT	–	–	–	–	–	–	–	–	–	–	–	–	–	–	–	–	–	–	–
1FG1...-..D0.-....	48	CT	–	–	–	–	–	–	–	–	–	–	–	–	–	–	–	–	–	–	–
1FG1...-..D2.-....		CT	–	–	–	–	–	–	–	–	–	–	–	–	–	–	–	–	–	–	–
1FG1...-..D3.-....		HD	–	–	–	–	–	–	–	–	–	–	–	–	–	–	–	–	–	–	–
1FG1...-..D4.-....		HD	–	–	–	–	–	–	–	–	–	–	–	–	–	–	–	–	–	–	–
1FG1...-..E0.-....	63	CT	581	135	–	–	566	120	50	104.5	104	566	135	–	–	552	120	23	103	104	126
1FG1...-..E1.-....		HD	616	170	–	–	601	155				601	170	–	–	587	155				
1FG1...-..E2.-....		CT	603	157	–	–	589	142				589	157	–	–	574	142				
1FG1...-..E3.-....		CT	626	180	–	–	611	165				611	180	–	–	597	165				
1FG1...-..E4.-....		HD	680	234	–	–	665	219				665	234	–	–	651	219				
1FG1...-..F0.-....	80	CT	616	172	627	183	579	135	48	104.5	119	601	173	612	184	565	136	21	118	119	155
1FG1...-..F1.-....		CT	635	191	646	202	598	154				620	192	631	203	584	155				
1FG1...-..F3.-....		CT	654	210	665	221	617	173				639	211	650	222	603	174				
1FG1...-..F4.-....		CT	673	229	684	240	637	192				659	230	670	241	622	193				
1FG1...-..F52-....		HD	702	258	713	269	665	221				687	259	698	270	651	222				
1FG1...-..F62-....		HD	702	258	713	269	665	221				687	259	698	270	651	222				
1FG1...-..F53-....		HD	702	258	713	269	665	221			139	687	259	698	270	651	222			139	
1FG1...-..F63-....		HD	702	258	713	269	665	221				687	259	698	270	651	222				
1FG1...-..G0.-....	100	CT	646	197	673	224	611	162	53	104.5	137	632	199	659	226	597	164	26	136	137	192
1FG1...-..G1.-....		CT	672	223	699	250	637	188			158	658	225	685	252	623	190			158	
1FG1...-..G3.-....		CT	698	249	725	276	663	214				684	251	711	278	649	216				
1FG1...-..G5.-....		CT	750	301	777	328	715	266				736	303	763	330	701	268				

© Siemens 2019

Dimensional drawings

Gearbox type *K.F.109*

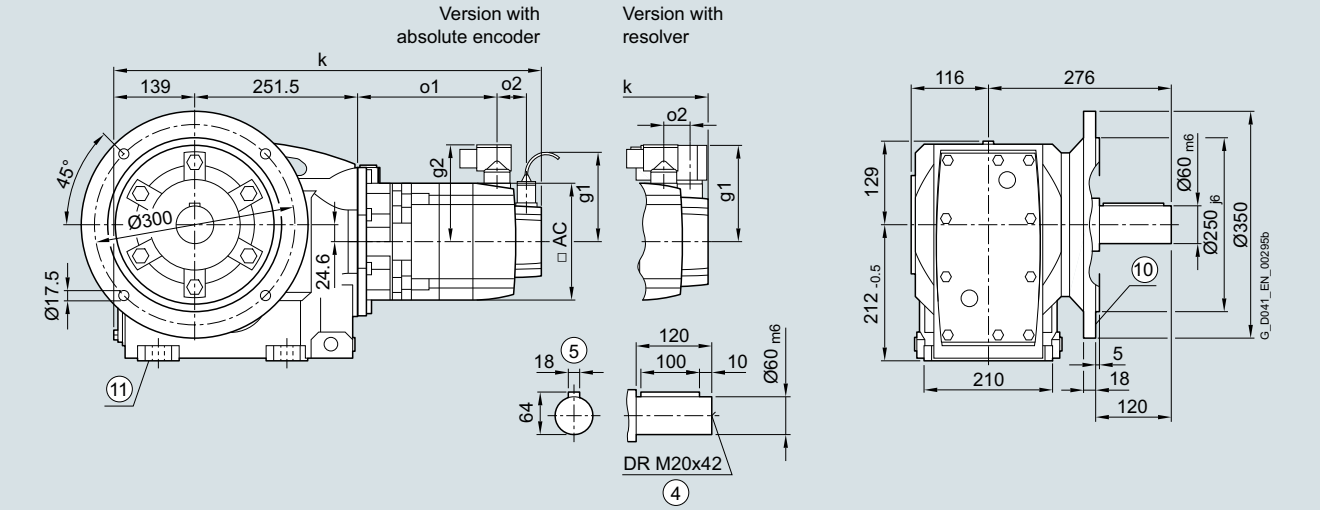

Gearbox type *KAF.109*

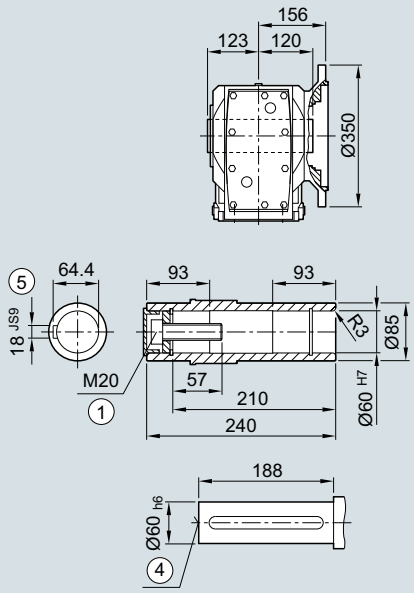

Gearbox type *KAFS109*

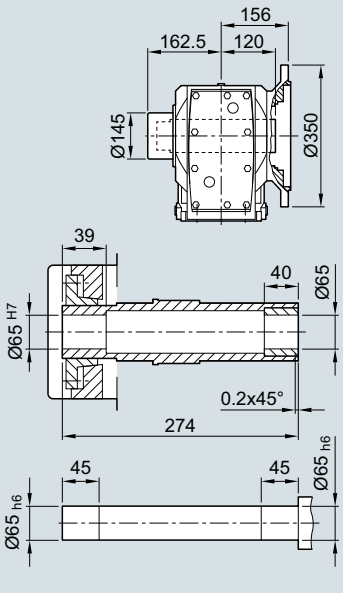

Gearbox type *KAFT109*

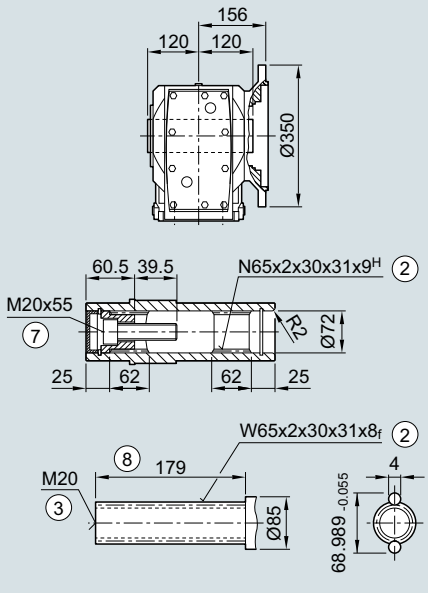

① ISO 4014 ② DIN 5480 ③ DIN 332-D ④ DIN 332
⑤ Feather key/keyway DIN 6885 ⑦ ISO 4762 ⑧ Without locating shoulder +1 mm
⑩ For inner contour of the flange design, see page 5/170 ⑪ Use bores only for foot-mounted design

© Siemens 2019

Servo bevel geared motor	Motor shaft height	Motor version	Absolute encoder with brake		with brake for increased energy		without brake					Resolver with brake		with brake for increased energy		without brake					
Type			k	o1	k	o1	k	o1	o2	g1	g2	k	o1	k	o1	k	o1	o2	g1	g2	AC
1FG1...-..C2.-....	36	CT	–	–	–	–	–	–	–	–	–	–	–	–	–	–	–	–	–	–	–
1FG1...-..C3.-....		HD	–	–	–	–	–	–	–	–	–	–	–	–	–	–	–	–	–	–	–
1FG1...-..C4.-....		CT	–	–	–	–	–	–	–	–	–	–	–	–	–	–	–	–	–	–	–
1FG1...-..D0.-....	48	CT	–	–	–	–	–	–	–	–	–	–	–	–	–	–	–	–	–	–	–
1FG1...-..D2.-....		CT	–	–	–	–	–	–	–	–	–	–	–	–	–	–	–	–	–	–	–
1FG1...-..D3.-....		HD	–	–	–	–	–	–	–	–	–	–	–	–	–	–	–	–	–	–	–
1FG1...-..D4.-....		HD	–	–	–	–	–	–	–	–	–	–	–	–	–	–	–	–	–	–	–
1FG1...-..E0.-....	63	CT	588	135	–	–	573	120	50	104.5	104	573	135	–	–	559	120	23	103	104	126
1FG1...-..E1.-....		HD	623	170	–	–	608	155				608	170	–	–	594	155				
1FG1...-..E2.-....		CT	610	157	–	–	596	142				596	157	–	–	581	142				
1FG1...-..E3.-....		CT	633	180	–	–	618	165				618	180	–	–	604	165				
1FG1...-..E4.-....		HD	687	234	–	–	672	219				672	234	–	–	658	219				
1FG1...-..F0.-....	80	CT	623	172	634	183	586	135	48	104.5	119	608	173	619	184	572	136	21	118	119	155
1FG1...-..F1.-....		CT	642	191	653	202	605	154				627	192	638	203	591	155				
1FG1...-..F3.-....		CT	661	210	672	221	624	173				646	211	657	222	610	174				
1FG1...-..F4.-....		CT	680	229	691	240	644	192				666	230	677	241	629	193				
1FG1...-..F52-....		HD	709	258	720	269	672	221				694	259	705	270	658	222				
1FG1...-..F62-....		HD	709	258	720	269	672	221				694	259	705	270	658	222				
1FG1...-..F53-....		HD	709	258	720	269	672	221			139	694	259	705	270	658	222			139	
1FG1...-..F63-....		HD	709	258	720	269	672	221				694	259	705	270	658	222				
1FG1...-..G0.-....	100	CT	653	197	680	224	618	162	53	104.5	137	639	199	666	226	604	164	26	136	137	192
1FG1...-..G1.-....		CT	679	223	706	250	644	188			158	665	225	692	252	630	190			158	
1FG1...-..G3.-....		CT	705	249	732	276	670	214				691	251	718	278	656	216				
1FG1...-..G5.-....		CT	757	301	784	328	722	266				743	303	770	330	708	268				

© Siemens 2019

Dimensional drawings

Gearbox type *K.Z.109*

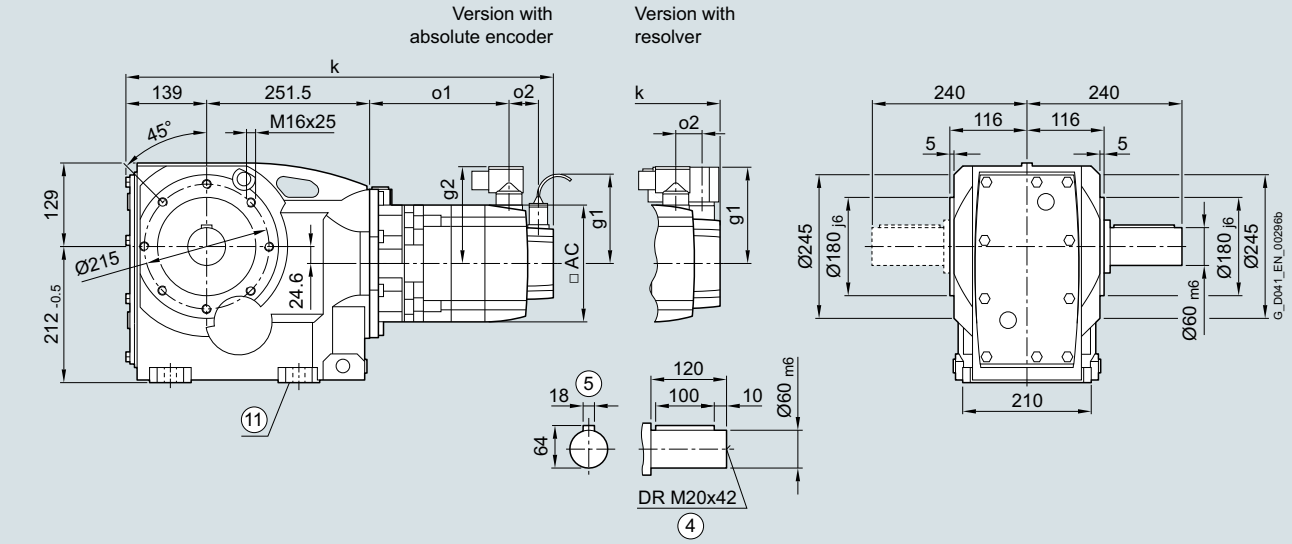

Gearbox type *KAZ.109*

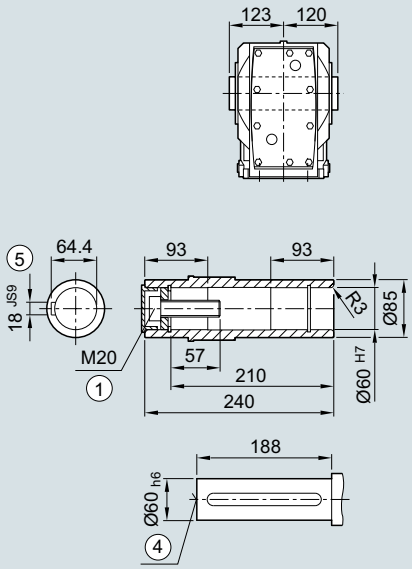

Gearbox type *KAZS109*

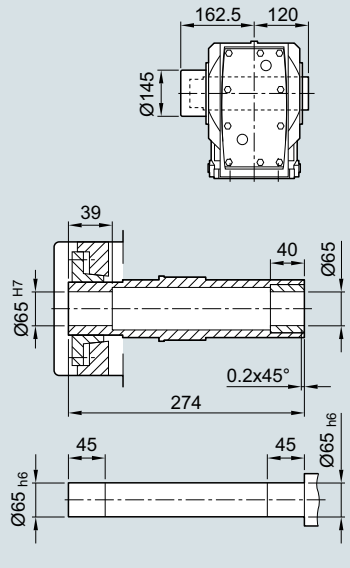

Gearbox type *KAZT109*

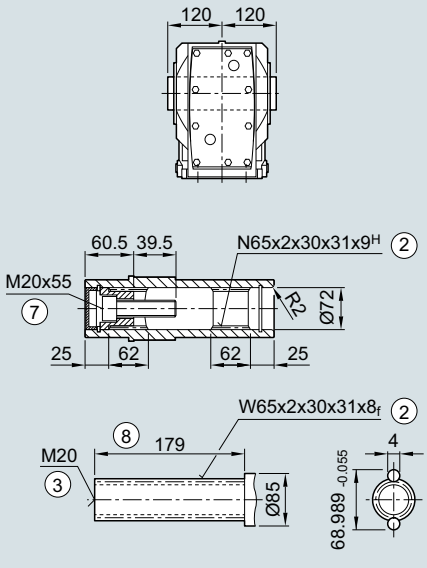

① ISO 4014 ② DIN 5480 ③ DIN 332-D ④ DIN 332
⑤ Feather key/keyway DIN 6885 ⑦ ISO 4762 ⑧ Without locating shoulder +1 mm
⑪ Use bores only for foot-mounted design

© Siemens 2019

Servo bevel geared motor	Motor shaft height	Motor version	Absolute encoder with brake		with brake for increased energy		without brake					Resolver with brake		with brake for increased energy		without brake					
Type			k	o1	k	o1	k	o1	o2	g1	g2	k	o1	k	o1	k	o1	o2	g1	g2	AC
1FG1...-..C2.-....	36	CT	–	–	–	–	–	–	–	–	–	–	–	–	–	–	–	–	–	–	–
1FG1...-..C3.-....		HD	–	–	–	–	–	–	–	–	–	–	–	–	–	–	–	–	–	–	–
1FG1...-..C4.-....		CT	–	–	–	–	–	–	–	–	–	–	–	–	–	–	–	–	–	–	–
1FG1...-..D0.-....	48	CT	–	–	–	–	–	–	–	–	–	–	–	–	–	–	–	–	–	–	–
1FG1...-..D2.-....		CT	–	–	–	–	–	–	–	–	–	–	–	–	–	–	–	–	–	–	–
1FG1...-..D3.-....		HD	–	–	–	–	–	–	–	–	–	–	–	–	–	–	–	–	–	–	–
1FG1...-..D4.-....		HD	–	–	–	–	–	–	–	–	–	–	–	–	–	–	–	–	–	–	–
1FG1...-..E0.-....	63	CT	588	135	–	–	573	120	50	104.5	104	573	135	–	–	559	120	23	103	104	126
1FG1...-..E1.-....		HD	623	170	–	–	608	155				608	170	–	–	594	155				
1FG1...-..E2.-....		CT	610	157	–	–	596	142				596	157	–	–	581	142				
1FG1...-..E3.-....		CT	633	180	–	–	618	165				618	180	–	–	604	165				
1FG1...-..E4.-....		HD	687	234	–	–	672	219				672	234	–	–	658	219				
1FG1...-..F0.-....	80	CT	623	172	634	183	586	135	48	104.5	119	608	173	619	184	572	136	21	118	119	155
1FG1...-..F1.-....		CT	642	191	653	202	605	154				627	192	638	203	591	155				
1FG1...-..F3.-....		CT	661	210	672	221	624	173				646	211	657	222	610	174				
1FG1...-..F4.-....		CT	680	229	691	240	644	192				666	230	677	241	629	193				
1FG1...-..F52-....		HD	709	258	720	269	672	221				694	259	705	270	658	222				
1FG1...-..F62-....		HD	709	258	720	269	672	221				694	259	705	270	658	222				
1FG1...-..F53-....		HD	709	258	720	269	672	221			139	694	259	705	270	658	222			139	
1FG1...-..F63-....		HD	709	258	720	269	672	221				694	259	705	270	658	222				
1FG1...-..G0.-....	100	CT	653	197	680	224	618	162	53	104.5	137	639	199	666	226	604	164	26	136	137	192
1FG1...-..G1.-....		CT	679	223	706	250	644	188			158	665	225	692	252	630	190			158	
1FG1...-..G3.-....		CT	705	249	732	276	670	214				691	251	718	278	656	216				
1FG1...-..G5.-....		CT	757	301	784	328	722	266				743	303	770	330	708	268				

© Siemens 2019

Dimensional drawings

Gearbox type *KAD.109*

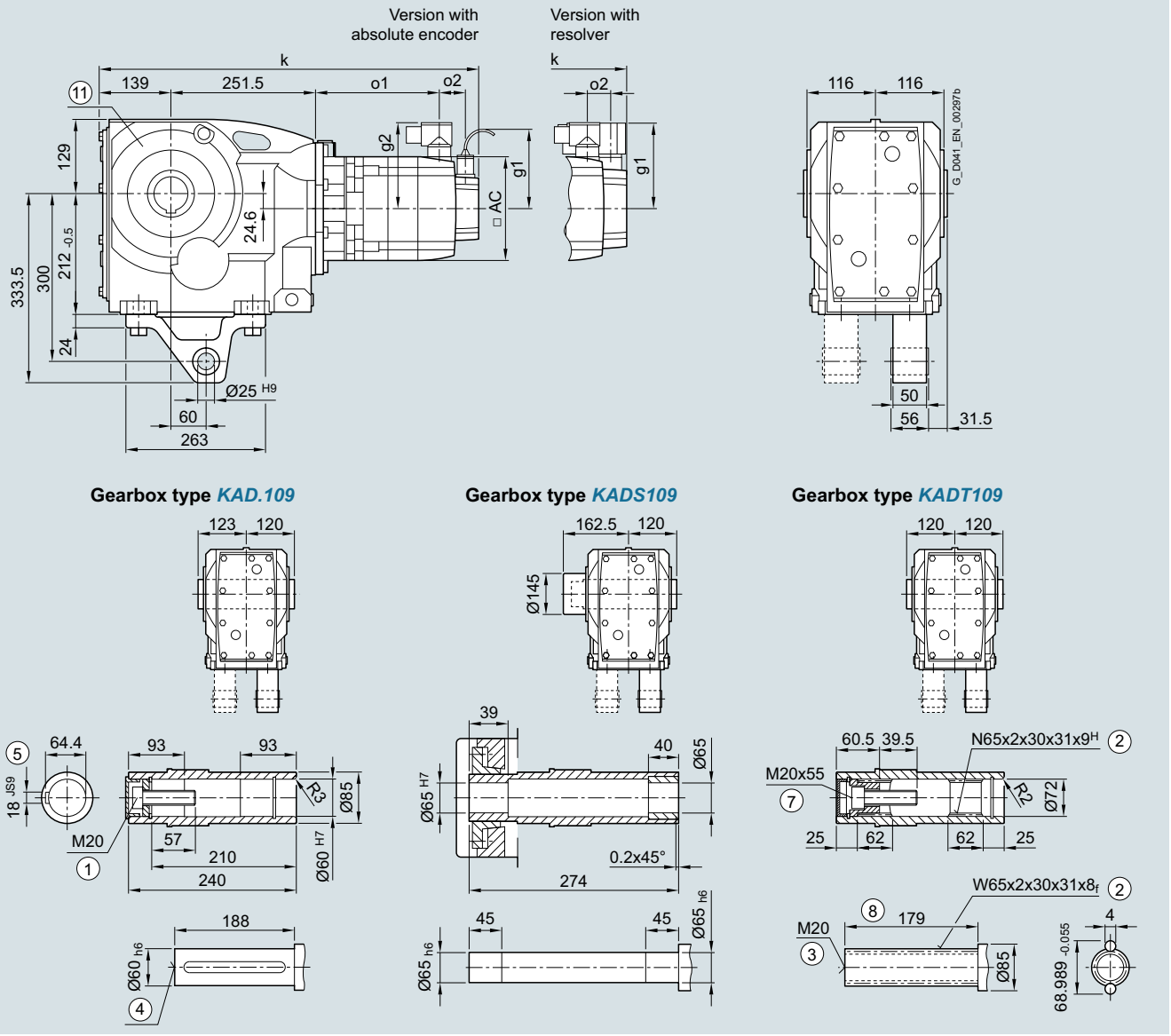

Gearbox type *KAD.109*

Gearbox type *KADS109*

Gearbox type *KADT109*

① ISO 4014 ② DIN 5480 ③ DIN 332-D ④ DIN 332
⑤ Feather key/keyway DIN 6885 ⑦ ISO 4762 ⑧ Without locating shoulder +1 mm
⑪ Use bores only for housing flange design

© Siemens 2019

Servo bevel geared motor	Motor shaft height	Motor version	Absolute encoder with brake		with brake for increased energy		without brake					Resolver with brake		with brake for increased energy		without brake					
Type			k	o1	k	o1	k	o1	o2	g1	g2	k	o1	k	o1	k	o1	o2	g1	g2	AC
1FG1...-..C2.-....	36	CT	–	–	–	–	–	–	–	–	–	–	–	–	–	–	–	–	–	–	–
1FG1...-..C3.-....		HD	–	–	–	–	–	–	–	–	–	–	–	–	–	–	–	–	–	–	–
1FG1...-..C4.-....		CT	–	–	–	–	–	–	–	–	–	–	–	–	–	–	–	–	–	–	–
1FG1...-..D0.-....	48	CT	–	–	–	–	–	–	–	–	–	–	–	–	–	–	–	–	–	–	–
1FG1...-..D2.-....		CT	–	–	–	–	–	–	–	–	–	–	–	–	–	–	–	–	–	–	–
1FG1...-..D3.-....		HD	–	–	–	–	–	–	–	–	–	–	–	–	–	–	–	–	–	–	–
1FG1...-..D4.-....		HD	–	–	–	–	–	–	–	–	–	–	–	–	–	–	–	–	–	–	–
1FG1...-..E0.-....	63	CT	588	135	–	–	573	120	50	104.5	104	573	135	–	–	559	120	23	103	104	126
1FG1...-..E1.-....		HD	623	170	–	–	608	155				608	170	–	–	594	155				
1FG1...-..E2.-....		CT	610	157	–	–	596	142				596	157	–	–	581	142				
1FG1...-..E3.-....		CT	633	180	–	–	618	165				618	180	–	–	604	165				
1FG1...-..E4.-....		HD	687	234	–	–	672	219				672	234	–	–	658	219				
1FG1...-..F0.-....	80	CT	623	172	634	183	586	135	48	104.5	119	608	173	619	184	572	136	21	118	119	155
1FG1...-..F1.-....		CT	642	191	653	202	605	154				627	192	638	203	591	155				
1FG1...-..F3.-....		CT	661	210	672	221	624	173				646	211	657	222	610	174				
1FG1...-..F4.-....		CT	680	229	691	240	644	192				666	230	677	241	629	193				
1FG1...-..F52-....		HD	709	258	720	269	672	221				694	259	705	270	658	222				
1FG1...-..F62-....		HD	709	258	720	269	672	221				694	259	705	270	658	222				
1FG1...-..F53-....		HD	709	258	720	269	672	221			139	694	259	705	270	658	222			139	
1FG1...-..F63-....		HD	709	258	720	269	672	221				694	259	705	270	658	222				
1FG1...-..G0.-....	100	CT	653	197	680	224	618	162	53	104.5	137	639	199	666	226	604	164	26	136	137	192
1FG1...-..G1.-....		CT	679	223	706	250	644	188			158	665	225	692	252	630	190			158	
1FG1...-..G3.-....		CT	705	249	732	276	670	214				691	251	718	278	656	216				
1FG1...-..G5.-....		CT	757	301	784	328	722	266				743	303	770	330	708	268				

© Siemens 2019

Dimensional drawings

Gearbox type *K..129*

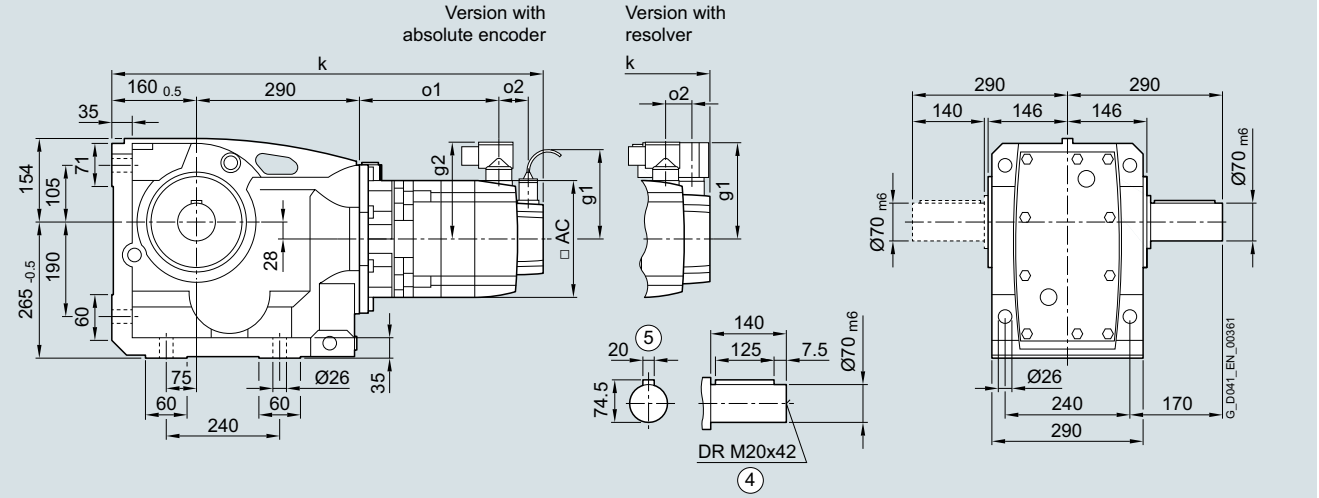

Gearbox type *KA.129*

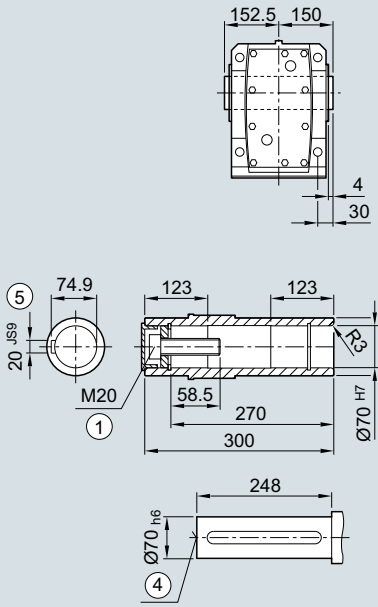

Gearbox type *KAS129*

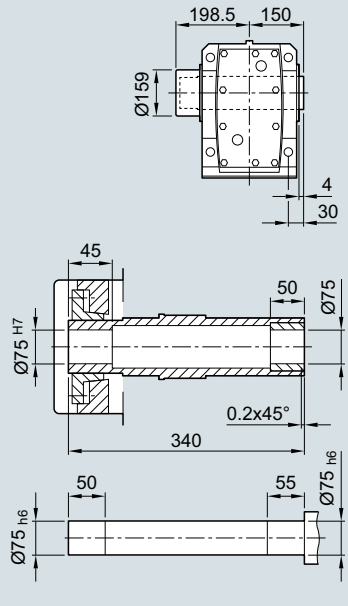

Gearbox type *KAT129*

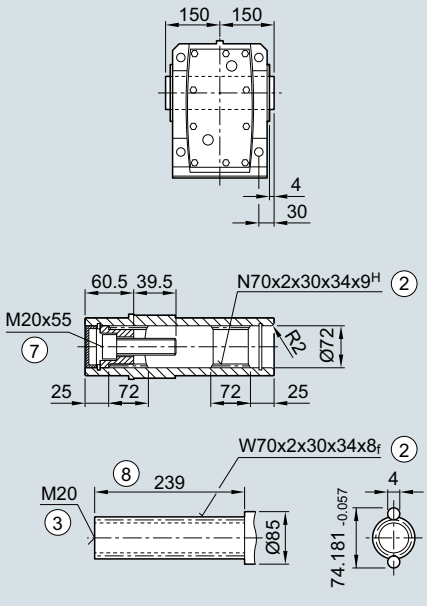

① ISO 4014 ② DIN 5480 ③ DIN 332-D ④ DIN 332
⑤ Feather key/keyway DIN 6885 ⑦ ISO 4762 ⑧ Without locating shoulder +1 mm

© Siemens 2019

Servo bevel geared motor	Motor shaft height	Motor version	Absolute encoder with brake		with brake for increased energy		without brake					Resolver with brake		with brake for increased energy		without brake					
Type			k	o1	k	o1	k	o1	o2	g1	g2	k	o1	k	o1	k	o1	o2	g1	g2	AC
1FG1...-..C2.-....	36	CT	–	–	–	–	–	–	–	–	–	–	–	–	–	–	–	–	–	–	–
1FG1...-..C3.-....		HD	–	–	–	–	–	–	–	–	–	–	–	–	–	–	–	–	–	–	–
1FG1...-..C4.-....		CT	–	–	–	–	–	–	–	–	–	–	–	–	–	–	–	–	–	–	–
1FG1...-..D0.-....	48	CT	–	–	–	–	–	–	–	–	–	–	–	–	–	–	–	–	–	–	–
1FG1...-..D2.-....		CT	–	–	–	–	–	–	–	–	–	–	–	–	–	–	–	–	–	–	–
1FG1...-..D3.-....		HD	–	–	–	–	–	–	–	–	–	–	–	–	–	–	–	–	–	–	–
1FG1...-..D4.-....		HD	–	–	–	–	–	–	–	–	–	–	–	–	–	–	–	–	–	–	–
1FG1...-..E0.-....	63	CT	–	–	–	–	–	–	–	–	–	–	–	–	–	–	–	–	–	–	–
1FG1...-..E1.-....		HD	–	–	–	–	–	–	–	–	–	–	–	–	–	–	–	–	–	–	–
1FG1...-..E2.-....		CT	–	–	–	–	–	–	–	–	–	–	–	–	–	–	–	–	–	–	–
1FG1...-..E3.-....		CT	–	–	–	–	–	–	–	–	–	–	–	–	–	–	–	–	–	–	–
1FG1...-..E4.-....		HD	–	–	–	–	–	–	–	–	–	–	–	–	–	–	–	–	–	–	–
1FG1...-..F0.-....	80	CT	673	163	684	174	637	126	48	104.5	119	659	164	670	175	622	127	21	118	119	155
1FG1...-..F1.-....		CT	692	182	703	193	656	145				678	183	689	194	641	146				
1FG1...-..F3.-....		CT	711	201	722	212	675	164				697	202	708	213	660	165				
1FG1...-..F4.-....		CT	731	220	742	231	694	183				716	221	727	232	680	184				
1FG1...-..F52-....		HD	759	249	770	260	723	212				745	250	756	261	708	213				
1FG1...-..F62-....		HD	759	249	770	260	723	212				745	250	756	261	708	213				
1FG1...-..F53-....		HD	759	249	770	260	723	212			139	745	250	756	261	708	213			139	
1FG1...-..F63-....		HD	759	249	770	260	723	212				745	250	756	261	708	213				
1FG1...-..G0.-....	100	CT	704	188	731	215	669	153	53	104.5	137	689	190	716	217	654	155	26	136	137	192
1FG1...-..G1.-....		CT	730	214	757	241	695	179			158	715	216	742	243	680	181			158	
1FG1...-..G3.-....		CT	756	240	783	267	721	205				741	242	768	269	706	207				
1FG1...-..G5.-....		CT	808	292	835	319	773	257				793	294	820	321	758	259				

© Siemens 2019

Dimensional drawings

Gearbox type *K.F.129*

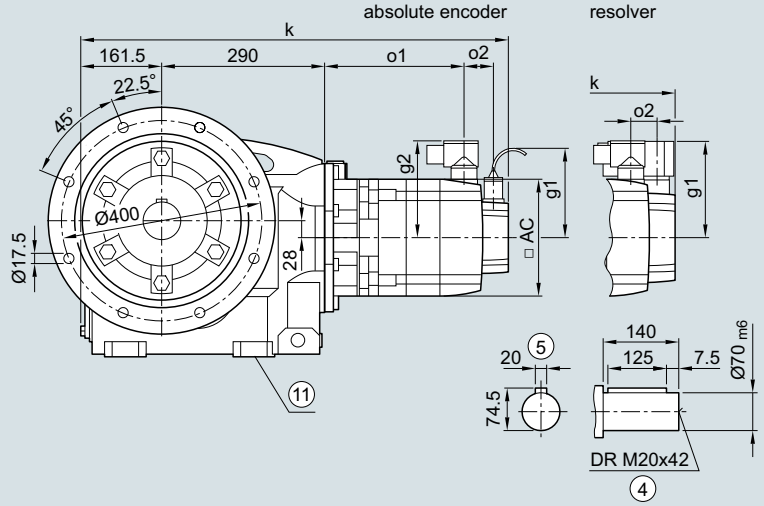

Gearbox type *KAF.129*

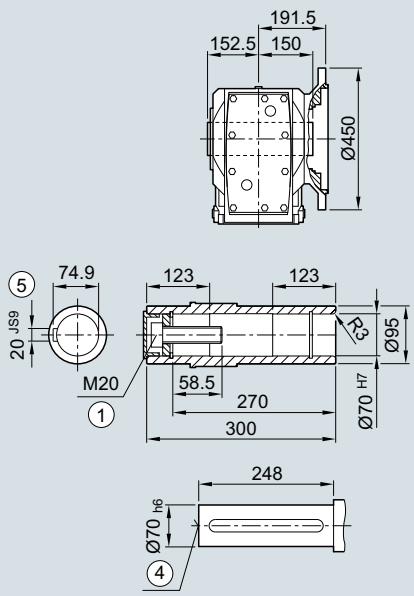

Gearbox type *KAFS129*

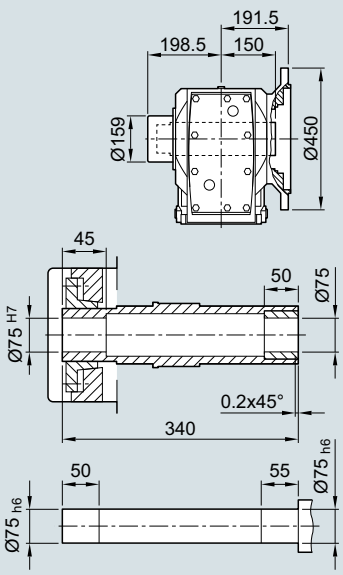

Gearbox type *KAFT129*

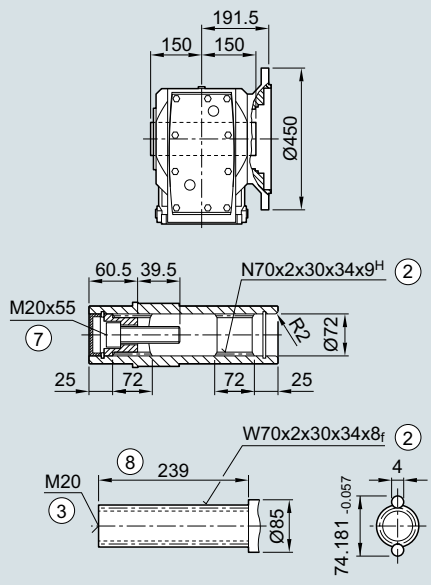

① ISO 4014 ② DIN 5480 ③ DIN 332-D ④ DIN 332
⑤ Feather key/keyway DIN 6885 ⑦ ISO 4762 ⑧ Without locating shoulder +1 mm
⑩ For inner contour of the flange design, see page 5/170 ⑪ Use bores only for foot-mounted design

© Siemens 2019

Servo bevel geared motor	Motor shaft height	Motor version	Absolute encoder with brake		with brake for increased energy		without brake					Resolver with brake		with brake for increased energy		without brake					
Type			k	o1	k	o1	k	o1	o2	g1	g2	k	o1	k	o1	k	o1	o2	g1	g2	AC
1FG1...-..C2.-....	36	CT	–	–	–	–	–	–	–	–	–	–	–	–	–	–	–	–	–	–	–
1FG1...-..C3.-....		HD	–	–	–	–	–	–	–	–	–	–	–	–	–	–	–	–	–	–	–
1FG1...-..C4.-....		CT	–	–	–	–	–	–	–	–	–	–	–	–	–	–	–	–	–	–	–
1FG1...-..D0.-....	48	CT	–	–	–	–	–	–	–	–	–	–	–	–	–	–	–	–	–	–	–
1FG1...-..D2.-....		CT	–	–	–	–	–	–	–	–	–	–	–	–	–	–	–	–	–	–	–
1FG1...-..D3.-....		HD	–	–	–	–	–	–	–	–	–	–	–	–	–	–	–	–	–	–	–
1FG1...-..D4.-....		HD	–	–	–	–	–	–	–	–	–	–	–	–	–	–	–	–	–	–	–
1FG1...-..E0.-....	63	CT	–	–	–	–	–	–	–	–	–	–	–	–	–	–	–	–	–	–	–
1FG1...-..E1.-....		HD	–	–	–	–	–	–	–	–	–	–	–	–	–	–	–	–	–	–	–
1FG1...-..E2.-....		CT	–	–	–	–	–	–	–	–	–	–	–	–	–	–	–	–	–	–	–
1FG1...-..E3.-....		CT	–	–	–	–	–	–	–	–	–	–	–	–	–	–	–	–	–	–	–
1FG1...-..E4.-....		HD	–	–	–	–	–	–	–	–	–	–	–	–	–	–	–	–	–	–	–
1FG1...-..F0.-....	80	CT	675	163	686	174	638	126	48	104.5	119	660	164	671	175	624	127	21	118	119	155
1FG1...-..F1.-....		CT	694	182	705	193	657	145				679	183	690	194	643	146				
1FG1...-..F3.-....		CT	713	201	724	212	676	164				698	202	709	213	662	165				
1FG1...-..F4.-....		CT	732	220	743	231	696	183				718	221	729	232	681	184				
1FG1...-..F52-....		HD	761	249	772	260	724	212				746	250	757	261	710	213				
1FG1...-..F62-....		HD	761	249	772	260	724	212				746	250	757	261	710	213				
1FG1...-..F53-....		HD	761	249	772	260	724	212			139	746	250	757	261	710	213			139	
1FG1...-..F63-....		HD	761	249	772	260	724	212				746	250	757	261	710	213				
1FG1...-..G0.-....	100	CT	705	188	732	215	670	153	53	104.5	137	691	190	718	217	656	155	26	136	137	192
1FG1...-..G1.-....		CT	731	214	758	241	696	179			158	717	216	744	243	682	181			158	
1FG1...-..G3.-....		CT	757	240	784	267	722	205				743	242	770	269	708	207				
1FG1...-..G5.-....		CT	809	292	836	319	774	257				795	294	822	321	760	259				

© Siemens 2019

Dimensional drawings

Gearbox type *K.Z.129*

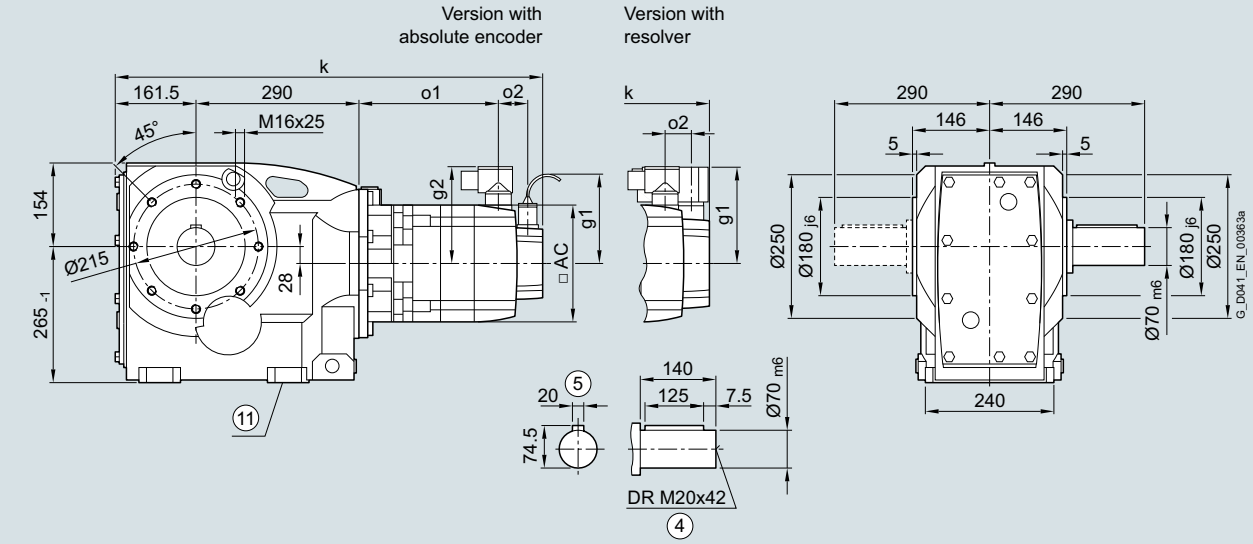

Gearbox type *KAZ.129*

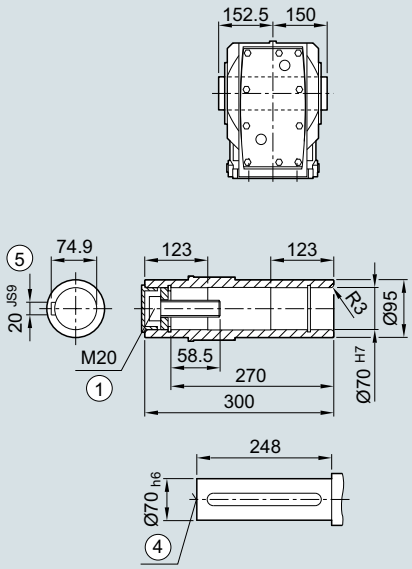

Gearbox type *KAZS129*

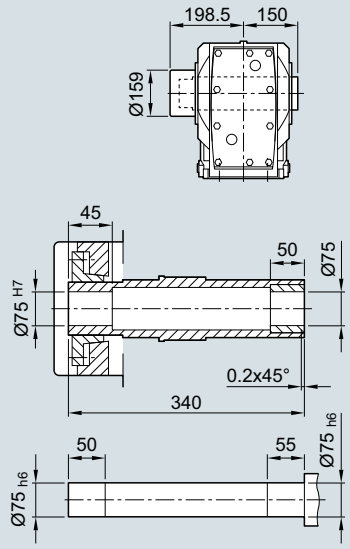

Gearbox type *KAZT129*

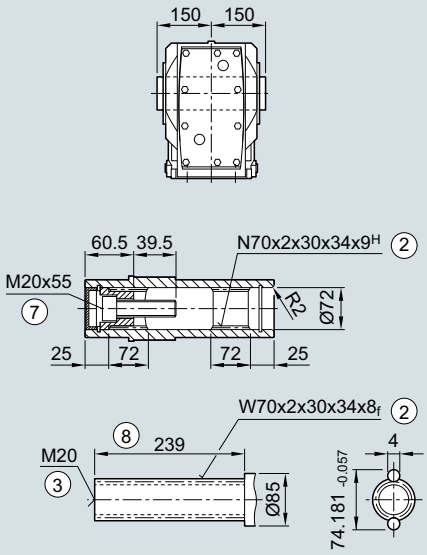

① ISO 4014 ② DIN 5480 ③ DIN 332-D ④ DIN 332
⑤ Feather key/keyway DIN 6885 ⑦ ISO 4762 ⑧ Without locating shoulder +1 mm
⑪ Use bores only for foot-mounted design

© Siemens 2019

Servo bevel geared motor	Motor shaft height	Motor version	Absolute encoder with brake		with brake for increased energy		without brake					Resolver with brake		with brake for increased energy		without brake					
Type			k	o1	k	o1	k	o1	o2	g1	g2	k	o1	k	o1	k	o1	o2	g1	g2	AC
1FG1...-..C2.-....	36	CT	–	–	–	–	–	–	–	–	–	–	–	–	–	–	–	–	–	–	–
1FG1...-..C3.-....		HD	–	–	–	–	–	–	–	–	–	–	–	–	–	–	–	–	–	–	–
1FG1...-..C4.-....		CT	–	–	–	–	–	–	–	–	–	–	–	–	–	–	–	–	–	–	–
1FG1...-..D0.-....	48	CT	–	–	–	–	–	–	–	–	–	–	–	–	–	–	–	–	–	–	–
1FG1...-..D2.-....		CT	–	–	–	–	–	–	–	–	–	–	–	–	–	–	–	–	–	–	–
1FG1...-..D3.-....		HD	–	–	–	–	–	–	–	–	–	–	–	–	–	–	–	–	–	–	–
1FG1...-..D4.-....		HD	–	–	–	–	–	–	–	–	–	–	–	–	–	–	–	–	–	–	–
1FG1...-..E0.-....	63	CT	–	–	–	–	–	–	–	–	–	–	–	–	–	–	–	–	–	–	–
1FG1...-..E1.-....		HD	–	–	–	–	–	–	–	–	–	–	–	–	–	–	–	–	–	–	–
1FG1...-..E2.-....		CT	–	–	–	–	–	–	–	–	–	–	–	–	–	–	–	–	–	–	–
1FG1...-..E3.-....		CT	–	–	–	–	–	–	–	–	–	–	–	–	–	–	–	–	–	–	–
1FG1...-..E4.-....		HD	–	–	–	–	–	–	–	–	–	–	–	–	–	–	–	–	–	–	–
1FG1...-..F0.-....	80	CT	675	163	686	174	638	126	48	104.5	119	660	164	671	175	624	127	21	118	119	155
1FG1...-..F1.-....		CT	694	182	705	193	657	145				679	183	690	194	643	146				
1FG1...-..F3.-....		CT	713	201	724	212	676	164				698	202	709	213	662	165				
1FG1...-..F4.-....		CT	732	220	743	231	696	183				718	221	729	232	681	184				
1FG1...-..F52-....		HD	761	249	772	260	724	212				746	250	757	261	710	213				
1FG1...-..F62-....		HD	761	249	772	260	724	212				746	250	757	261	710	213				
1FG1...-..F53-....		HD	761	249	772	260	724	212			139	746	250	757	261	710	213			139	
1FG1...-..F63-....		HD	761	249	772	260	724	212				746	250	757	261	710	213				
1FG1...-..G0.-....	100	CT	705	188	732	215	670	153	53	104.5	137	691	190	718	217	656	155	26	136	137	192
1FG1...-..G1.-....		CT	731	214	758	241	696	179			158	717	216	744	243	682	181			158	
1FG1...-..G3.-....		CT	757	240	784	267	722	205				743	242	770	269	708	207				
1FG1...-..G5.-....		CT	809	292	836	319	774	257				795	294	822	321	760	259				

© Siemens 2019

Dimensional drawings

Gearbox type *KAD.129*

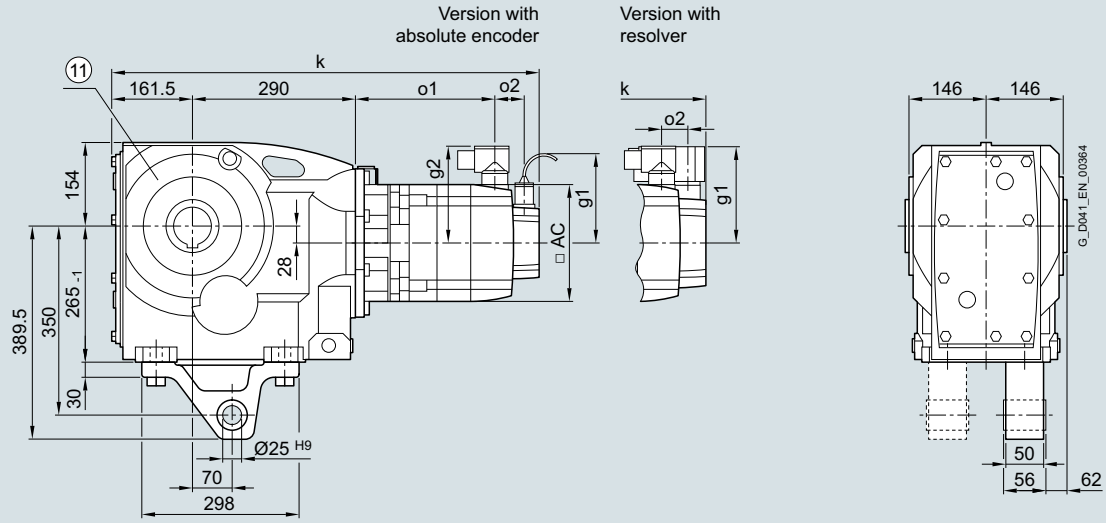

Gearbox type *KAD.109*

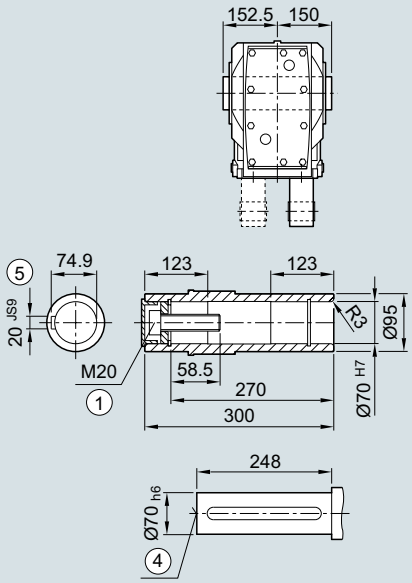

Gearbox type *KADS129*

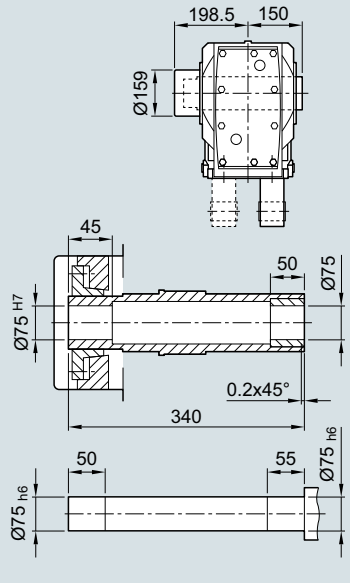

Gearbox type *KADT129*

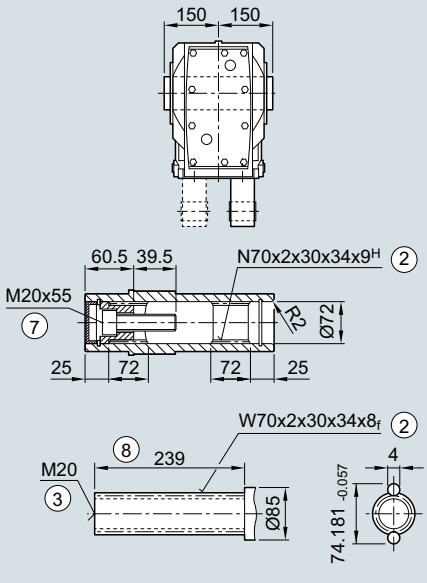

① ISO 4014 ② DIN 5480 ③ DIN 332-D ④ DIN 332
⑤ Feather key/keyway DIN 6885 ⑦ ISO 4762 ⑧ Without locating shoulder +1 mm
⑪ Use bores only for housing flange design

© Siemens 2019

Servo bevel geared motor	Motor shaft height	Motor version	Absolute encoder with brake		with brake for increased energy		without brake					Resolver with brake		with brake for increased energy		without brake					
Type			k	o1	k	o1	k	o1	o2	g1	g2	k	o1	k	o1	k	o1	o2	g1	g2	AC
1FG1...-..C2.-....	36	CT	–	–	–	–	–	–	–	–	–	–	–	–	–	–	–	–	–	–	–
1FG1...-..C3.-....		HD	–	–	–	–	–	–	–	–	–	–	–	–	–	–	–	–	–	–	–
1FG1...-..C4.-....		CT	–	–	–	–	–	–	–	–	–	–	–	–	–	–	–	–	–	–	–
1FG1...-..D0.-....	48	CT	–	–	–	–	–	–	–	–	–	–	–	–	–	–	–	–	–	–	–
1FG1...-..D2.-....		CT	–	–	–	–	–	–	–	–	–	–	–	–	–	–	–	–	–	–	–
1FG1...-..D3.-....		HD	–	–	–	–	–	–	–	–	–	–	–	–	–	–	–	–	–	–	–
1FG1...-..D4.-....		HD	–	–	–	–	–	–	–	–	–	–	–	–	–	–	–	–	–	–	–
1FG1...-..E0.-....	63	CT	–	–	–	–	–	–	–	–	–	–	–	–	–	–	–	–	–	–	–
1FG1...-..E1.-....		HD	–	–	–	–	–	–	–	–	–	–	–	–	–	–	–	–	–	–	–
1FG1...-..E2.-....		CT	–	–	–	–	–	–	–	–	–	–	–	–	–	–	–	–	–	–	–
1FG1...-..E3.-....		CT	–	–	–	–	–	–	–	–	–	–	–	–	–	–	–	–	–	–	–
1FG1...-..E4.-....		HD	–	–	–	–	–	–	–	–	–	–	–	–	–	–	–	–	–	–	–
1FG1...-..F0.-....	80	CT	675	163	686	174	638	126	48	104.5	119	660	164	671	175	624	127	21	118	119	155
1FG1...-..F1.-....		CT	694	182	705	193	657	145				679	183	690	194	643	146				
1FG1...-..F3.-....		CT	713	201	724	212	676	164				698	202	709	213	662	165				
1FG1...-..F4.-....		CT	732	220	743	231	696	183				718	221	729	232	681	184				
1FG1...-..F52-....		HD	761	249	772	260	724	212				746	250	757	261	710	213				
1FG1...-..F62-....		HD	761	249	772	260	724	212				746	250	757	261	710	213				
1FG1...-..F53-....		HD	761	249	772	260	724	212			139	746	250	757	261	710	213			139	
1FG1...-..F63-....		HD	761	249	772	260	724	212				746	250	757	261	710	213				
1FG1...-..G0.-....	100	CT	705	188	732	215	670	153	53	104.5	137	691	190	718	217	656	155	26	136	137	192
1FG1...-..G1.-....		CT	731	214	758	241	696	179			158	717	216	744	243	682	181			158	
1FG1...-..G3.-....		CT	757	240	784	267	722	205				743	242	770	269	708	207				
1FG1...-..G5.-....		CT	809	292	836	319	774	257				795	294	822	321	760	259				

© Siemens 2019

Dimensional drawings

Gearbox type *K..149*

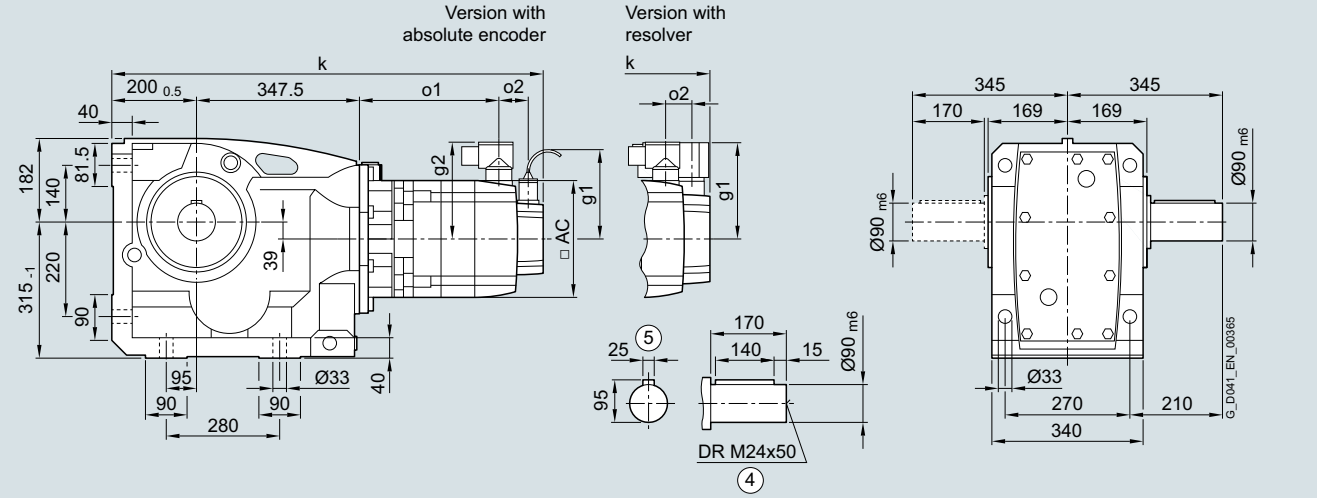

Gearbox type *KA.149*

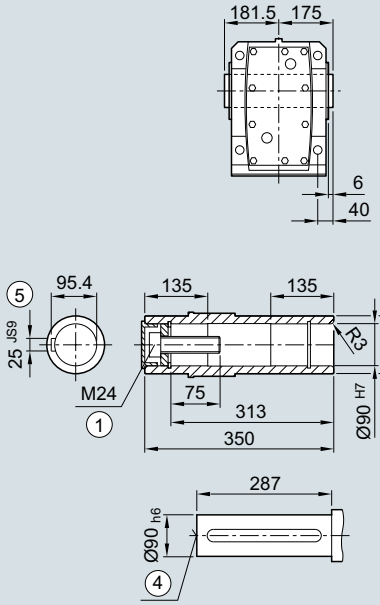

Gearbox type *KAS149*

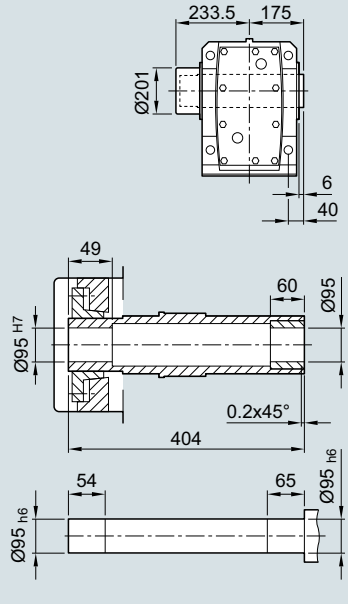

Gearbox type *KAT149*

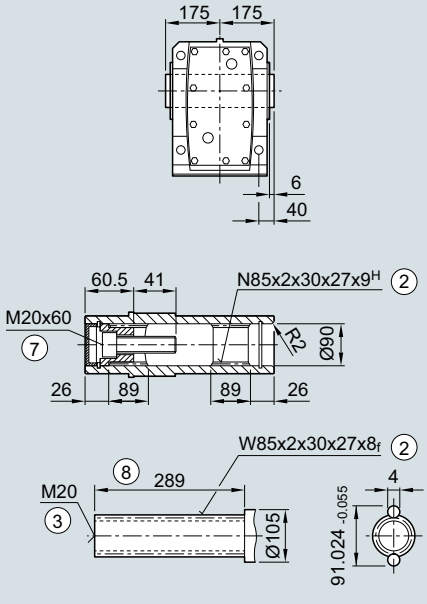

① ISO 4014 ② DIN 5480 ③ DIN 332-D ④ DIN 332
⑤ Feather key/keyway DIN 6885 ⑦ ISO 4762 ⑧ Without locating shoulder +1 mm

© Siemens 2019

Servo bevel geared motor	Motor shaft height	Motor version	Absolute encoder with brake		with brake for increased energy		without brake					Resolver with brake		with brake for increased energy		without brake					
Type			k	o1	k	o1	k	o1	o2	g1	g2	k	o1	k	o1	k	o1	o2	g1	g2	AC
1FG1...-..C2.-....	36	CT	–	–	–	–	–	–	–	–	–	–	–	–	–	–	–	–	–	–	–
1FG1...-..C3.-....		HD	–	–	–	–	–	–	–	–	–	–	–	–	–	–	–	–	–	–	–
1FG1...-..C4.-....		CT	–	–	–	–	–	–	–	–	–	–	–	–	–	–	–	–	–	–	–
1FG1...-..D0.-....	48	CT	–	–	–	–	–	–	–	–	–	–	–	–	–	–	–	–	–	–	–
1FG1...-..D2.-....		CT	–	–	–	–	–	–	–	–	–	–	–	–	–	–	–	–	–	–	–
1FG1...-..D3.-....		HD	–	–	–	–	–	–	–	–	–	–	–	–	–	–	–	–	–	–	–
1FG1...-..D4.-....		HD	–	–	–	–	–	–	–	–	–	–	–	–	–	–	–	–	–	–	–
1FG1...-..E0.-....	63	CT	–	–	–	–	–	–	–	–	–	–	–	–	–	–	–	–	–	–	–
1FG1...-..E1.-....		HD	–	–	–	–	–	–	–	–	–	–	–	–	–	–	–	–	–	–	–
1FG1...-..E2.-....		CT	–	–	–	–	–	–	–	–	–	–	–	–	–	–	–	–	–	–	–
1FG1...-..E3.-....		CT	–	–	–	–	–	–	–	–	–	–	–	–	–	–	–	–	–	–	–
1FG1...-..E4.-....		HD	–	–	–	–	–	–	–	–	–	–	–	–	–	–	–	–	–	–	–
1FG1...-..F0.-....	80	CT	–	–	–	–	–	–	–	–	–	–	–	–	–	–	–	–	–	–	–
1FG1...-..F1.-....		CT	–	–	–	–	–	–	–	–	–	–	–	–	–	–	–	–	–	–	–
1FG1...-..F3.-....		CT	–	–	–	–	–	–	–	–	–	–	–	–	–	–	–	–	–	–	–
1FG1...-..F4.-....		CT	–	–	–	–	–	–	–	–	–	–	–	–	–	–	–	–	–	–	–
1FG1...-..F52-....		HD	–	–	–	–	–	–	–	–	–	–	–	–	–	–	–	–	–	–	–
1FG1...-..F62-....		HD	–	–	–	–	–	–	–	–	–	–	–	–	–	–	–	–	–	–	–
1FG1...-..F53-....		HD	–	–	–	–	–	–	–	–	–	–	–	–	–	–	–	–	–	–	–
1FG1...-..F63-....		HD	–	–	–	–	–	–	–	–	–	–	–	–	–	–	–	–	–	–	–
1FG1...-..G0.-....	100	CT	790	177	817	204	755	142	53	104.5	137	776	179	803	206	741	144	26	136	137	192
1FG1...-..G1.-....		CT	816	203	843	230	781	168			158	802	205	829	232	767	170			158	
1FG1...-..G3.-....		CT	842	229	869	256	807	194				828	231	855	258	793	196				
1FG1...-..G5.-....		CT	894	281	921	308	859	246				880	283	907	310	845	248				

© Siemens 2019

Dimensional drawings

Gearbox type *K.F.149*

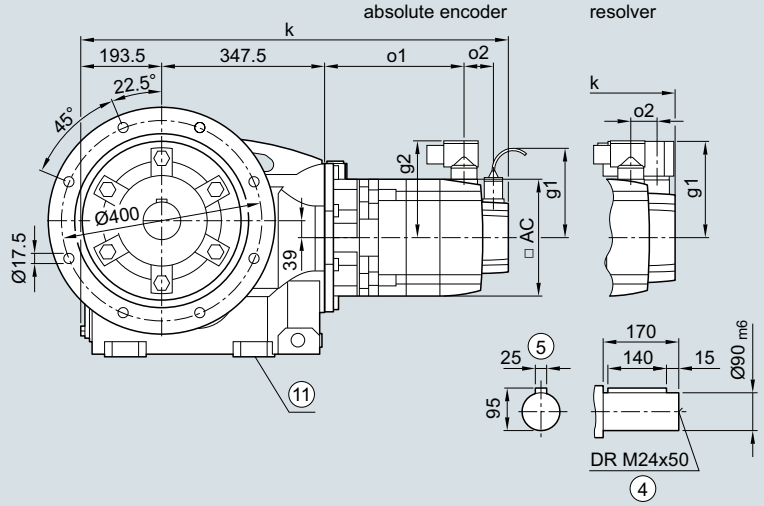

Gearbox type *KAF.149*

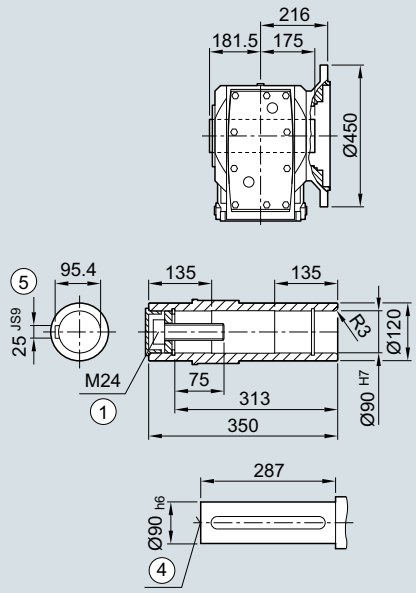

Gearbox type *KAFS149*

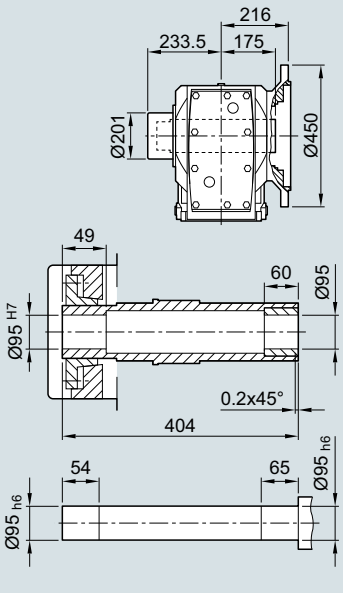

Gearbox type *KAFT149*

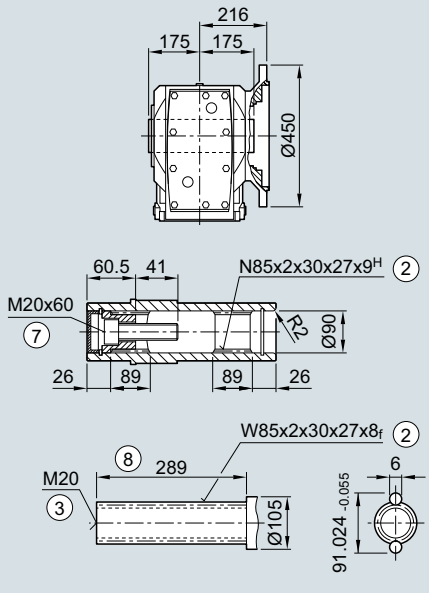

① ISO 4014 ② DIN 5480 ③ DIN 332-D ④ DIN 332
⑤ Feather key/keyway DIN 6885 ⑦ ISO 4762 ⑧ Without locating shoulder +1 mm
⑩ For inner contour of the flange design, see page 5/170 ⑪ Use bores only for foot-mounted design

© Siemens 2019

Servo bevel geared motor	Motor shaft height	Motor version	Absolute encoder with brake		with brake for increased energy		without brake					Resolver with brake		with brake for increased energy		without brake					
Type			k	o1	k	o1	k	o1	o2	g1	g2	k	o1	k	o1	k	o1	o2	g1	g2	AC
1FG1...-..C2.-....	36	CT	–	–	–	–	–	–	–	–	–	–	–	–	–	–	–	–	–	–	–
1FG1...-..C3.-....		HD	–	–	–	–	–	–	–	–	–	–	–	–	–	–	–	–	–	–	–
1FG1...-..C4.-....		CT	–	–	–	–	–	–	–	–	–	–	–	–	–	–	–	–	–	–	–
1FG1...-..D0.-....	48	CT	–	–	–	–	–	–	–	–	–	–	–	–	–	–	–	–	–	–	–
1FG1...-..D2.-....		CT	–	–	–	–	–	–	–	–	–	–	–	–	–	–	–	–	–	–	–
1FG1...-..D3.-....		HD	–	–	–	–	–	–	–	–	–	–	–	–	–	–	–	–	–	–	–
1FG1...-..D4.-....		HD	–	–	–	–	–	–	–	–	–	–	–	–	–	–	–	–	–	–	–
1FG1...-..E0.-....	63	CT	–	–	–	–	–	–	–	–	–	–	–	–	–	–	–	–	–	–	–
1FG1...-..E1.-....		HD	–	–	–	–	–	–	–	–	–	–	–	–	–	–	–	–	–	–	–
1FG1...-..E2.-....		CT	–	–	–	–	–	–	–	–	–	–	–	–	–	–	–	–	–	–	–
1FG1...-..E3.-....		CT	–	–	–	–	–	–	–	–	–	–	–	–	–	–	–	–	–	–	–
1FG1...-..E4.-....		HD	–	–	–	–	–	–	–	–	–	–	–	–	–	–	–	–	–	–	–
1FG1...-..F0.-....	80	CT	–	–	–	–	–	–	–	–	–	–	–	–	–	–	–	–	–	–	–
1FG1...-..F1.-....		CT	–	–	–	–	–	–	–	–	–	–	–	–	–	–	–	–	–	–	–
1FG1...-..F3.-....		CT	–	–	–	–	–	–	–	–	–	–	–	–	–	–	–	–	–	–	–
1FG1...-..F4.-....		CT	–	–	–	–	–	–	–	–	–	–	–	–	–	–	–	–	–	–	–
1FG1...-..F52-....		HD	–	–	–	–	–	–	–	–	–	–	–	–	–	–	–	–	–	–	–
1FG1...-..F62-....		HD	–	–	–	–	–	–	–	–	–	–	–	–	–	–	–	–	–	–	–
1FG1...-..F53-....		HD	–	–	–	–	–	–	–	–	–	–	–	–	–	–	–	–	–	–	–
1FG1...-..F63-....		HD	–	–	–	–	–	–	–	–	–	–	–	–	–	–	–	–	–	–	–
1FG1...-..G0.-....	100	CT	784	177	811	204	749	142	53	104.5	137	769	179	796	206	734	144	26	136	137	192
1FG1...-..G1.-....		CT	810	203	837	230	775	168			158	795	205	822	232	760	170			158	
1FG1...-..G3.-....		CT	836	229	863	256	801	194				821	231	848	258	786	196				
1FG1...-..G5.-....		CT	888	281	915	308	853	246				873	283	900	310	838	248				

© Siemens 2019

Dimensional drawings

Gearbox type *K.Z.149*

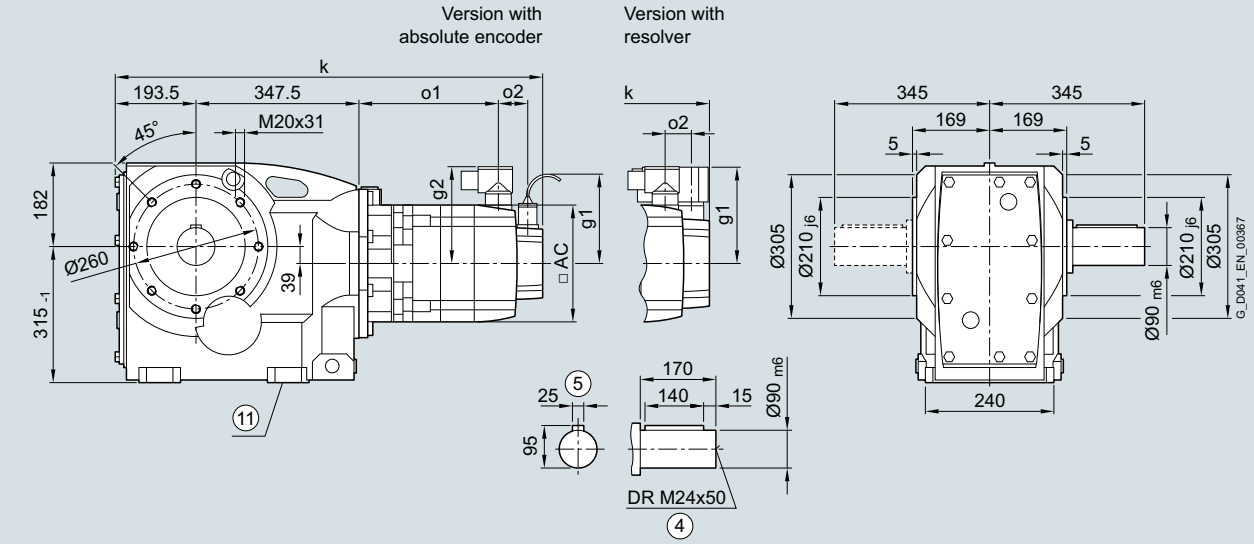

Gearbox type *KAZ.149*

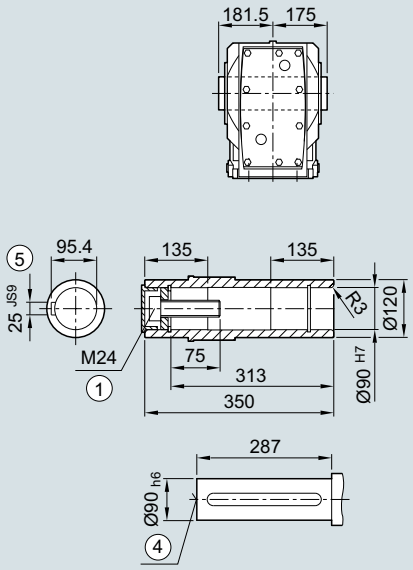

Gearbox type *KAZS149*

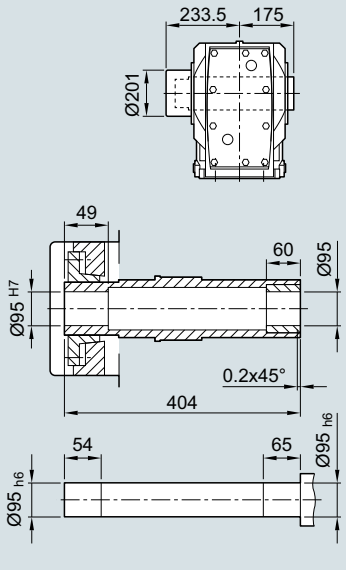

Gearbox type *KAZT149*

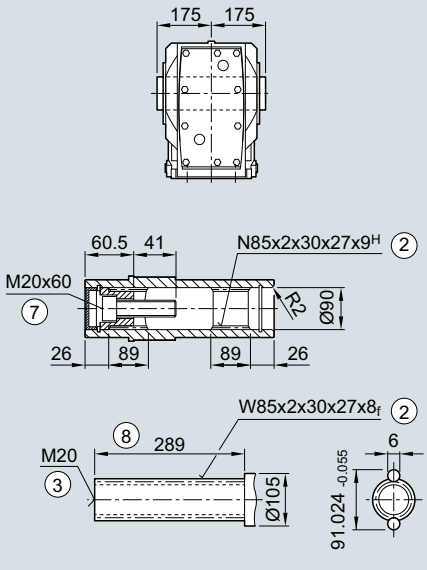

① ISO 4014 ② DIN 5480 ③ DIN 332-D ④ DIN 332
⑤ Feather key/keyway DIN 6885 ⑦ ISO 4762 ⑧ Without locating shoulder +1 mm
⑪ Use bores only for foot-mounted design

© Siemens 2019

Servo bevel geared motor	Motor shaft height	Motor version	Absolute encoder with brake		with brake for increased energy		without brake					Resolver with brake		with brake for increased energy		without brake					
Type			k	o1	k	o1	k	o1	o2	g1	g2	k	o1	k	o1	k	o1	o2	g1	g2	AC
1FG1...-..C2.-....	36	CT	–	–	–	–	–	–	–	–	–	–	–	–	–	–	–	–	–	–	–
1FG1...-..C3.-....		HD	–	–	–	–	–	–	–	–	–	–	–	–	–	–	–	–	–	–	–
1FG1...-..C4.-....		CT	–	–	–	–	–	–	–	–	–	–	–	–	–	–	–	–	–	–	–
1FG1...-..D0.-....	48	CT	–	–	–	–	–	–	–	–	–	–	–	–	–	–	–	–	–	–	–
1FG1...-..D2.-....		CT	–	–	–	–	–	–	–	–	–	–	–	–	–	–	–	–	–	–	–
1FG1...-..D3.-....		HD	–	–	–	–	–	–	–	–	–	–	–	–	–	–	–	–	–	–	–
1FG1...-..D4.-....		HD	–	–	–	–	–	–	–	–	–	–	–	–	–	–	–	–	–	–	–
1FG1...-..E0.-....	63	CT	–	–	–	–	–	–	–	–	–	–	–	–	–	–	–	–	–	–	–
1FG1...-..E1.-....		HD	–	–	–	–	–	–	–	–	–	–	–	–	–	–	–	–	–	–	–
1FG1...-..E2.-....		CT	–	–	–	–	–	–	–	–	–	–	–	–	–	–	–	–	–	–	–
1FG1...-..E3.-....		CT	–	–	–	–	–	–	–	–	–	–	–	–	–	–	–	–	–	–	–
1FG1...-..E4.-....		HD	–	–	–	–	–	–	–	–	–	–	–	–	–	–	–	–	–	–	–
1FG1...-..F0.-....	80	CT	–	–	–	–	–	–	–	–	–	–	–	–	–	–	–	–	–	–	–
1FG1...-..F1.-....		CT	–	–	–	–	–	–	–	–	–	–	–	–	–	–	–	–	–	–	–
1FG1...-..F3.-....		CT	–	–	–	–	–	–	–	–	–	–	–	–	–	–	–	–	–	–	–
1FG1...-..F4.-....		CT	–	–	–	–	–	–	–	–	–	–	–	–	–	–	–	–	–	–	–
1FG1...-..F52-....		HD	–	–	–	–	–	–	–	–	–	–	–	–	–	–	–	–	–	–	–
1FG1...-..F62-....		HD	–	–	–	–	–	–	–	–	–	–	–	–	–	–	–	–	–	–	–
1FG1...-..F53-....		HD	–	–	–	–	–	–	–	–	–	–	–	–	–	–	–	–	–	–	–
1FG1...-..F63-....		HD	–	–	–	–	–	–	–	–	–	–	–	–	–	–	–	–	–	–	–
1FG1...-..G0.-....	100	CT	784	177	811	204	749	142	53	104.5	137	769	179	796	206	734	144	26	136	137	192
1FG1...-..G1.-....		CT	810	203	837	230	775	168			158	795	205	822	232	760	170			158	
1FG1...-..G3.-....		CT	836	229	863	256	801	194				821	231	848	258	786	196				
1FG1...-..G5.-....		CT	888	281	915	308	853	246				873	283	900	310	838	248				

© Siemens 2019

Dimensional drawings

Gearbox type *KAD.149*

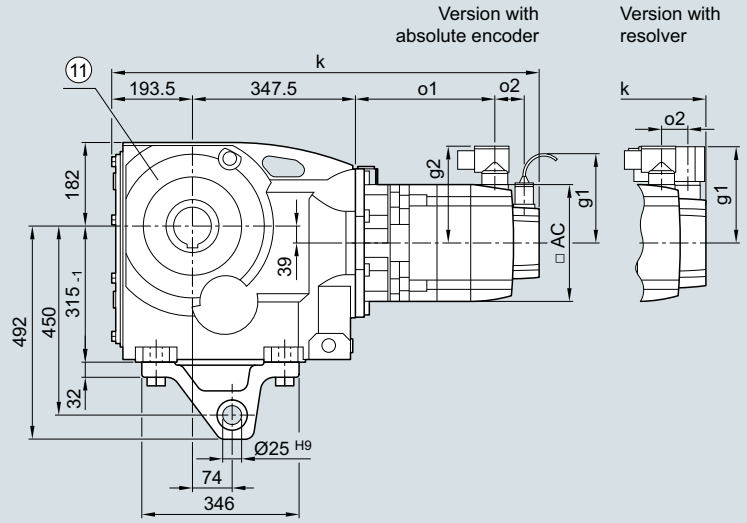

Gearbox type *KAD.149*

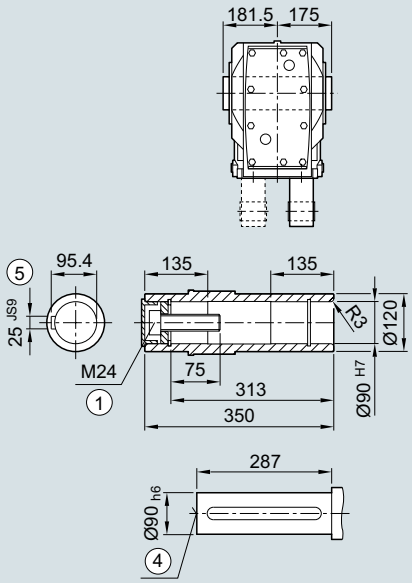

Gearbox type *KADS149*

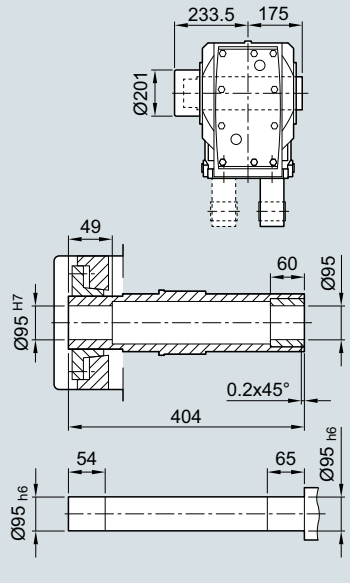

Gearbox type *KADT149*

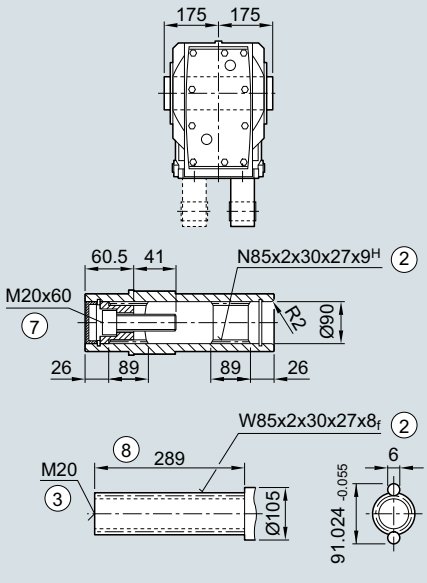

① ISO 4014 ② DIN 5480 ③ DIN 332-D ④ DIN 332
⑤ Feather key/keyway DIN 6885 ⑦ ISO 4762 ⑧ Without locating shoulder +1 mm
⑪ Use bores only for housing flange design

© Siemens 2019

Servo bevel geared motor	Motor shaft height	Motor version	Absolute encoder with brake		with brake for increased energy		without brake					Resolver with brake		with brake for increased energy		without brake					
Type			k	o1	k	o1	k	o1	o2	g1	g2	k	o1	k	o1	k	o1	o2	g1	g2	AC
1FG1...-..C2.-....	36	CT	–	–	–	–	–	–	–	–	–	–	–	–	–	–	–	–	–	–	–
1FG1...-..C3.-....		HD	–	–	–	–	–	–	–	–	–	–	–	–	–	–	–	–	–	–	–
1FG1...-..C4.-....		CT	–	–	–	–	–	–	–	–	–	–	–	–	–	–	–	–	–	–	–
1FG1...-..D0.-....	48	CT	–	–	–	–	–	–	–	–	–	–	–	–	–	–	–	–	–	–	–
1FG1...-..D2.-....		CT	–	–	–	–	–	–	–	–	–	–	–	–	–	–	–	–	–	–	–
1FG1...-..D3.-....		HD	–	–	–	–	–	–	–	–	–	–	–	–	–	–	–	–	–	–	–
1FG1...-..D4.-....		HD	–	–	–	–	–	–	–	–	–	–	–	–	–	–	–	–	–	–	–
1FG1...-..E0.-....	63	CT	–	–	–	–	–	–	–	–	–	–	–	–	–	–	–	–	–	–	–
1FG1...-..E1.-....		HD	–	–	–	–	–	–	–	–	–	–	–	–	–	–	–	–	–	–	–
1FG1...-..E2.-....		CT	–	–	–	–	–	–	–	–	–	–	–	–	–	–	–	–	–	–	–
1FG1...-..E3.-....		CT	–	–	–	–	–	–	–	–	–	–	–	–	–	–	–	–	–	–	–
1FG1...-..E4.-....		HD	–	–	–	–	–	–	–	–	–	–	–	–	–	–	–	–	–	–	–
1FG1...-..F0.-....	80	CT	–	–	–	–	–	–	–	–	–	–	–	–	–	–	–	–	–	–	–
1FG1...-..F1.-....		CT	–	–	–	–	–	–	–	–	–	–	–	–	–	–	–	–	–	–	–
1FG1...-..F3.-....		CT	–	–	–	–	–	–	–	–	–	–	–	–	–	–	–	–	–	–	–
1FG1...-..F4.-....		CT	–	–	–	–	–	–	–	–	–	–	–	–	–	–	–	–	–	–	–
1FG1...-..F52-....		HD	–	–	–	–	–	–	–	–	–	–	–	–	–	–	–	–	–	–	–
1FG1...-..F62-....		HD	–	–	–	–	–	–	–	–	–	–	–	–	–	–	–	–	–	–	–
1FG1...-..F53-....		HD	–	–	–	–	–	–	–	–	–	–	–	–	–	–	–	–	–	–	–
1FG1...-..F63-....		HD	–	–	–	–	–	–	–	–	–	–	–	–	–	–	–	–	–	–	–
1FG1...-..G0.-....	100	CT	784	177	811	204	749	142	53	104.5	137	769	179	796	206	734	144	26	136	137	192
1FG1...-..G1.-....		CT	810	203	837	230	775	168			158	795	205	822	232	760	170			158	
1FG1...-..G3.-....		CT	836	229	863	256	801	194				821	231	848	258	786	196				
1FG1...-..G5.-....		CT	888	281	915	308	853	246				873	283	900	310	838	248				

© Siemens 2019

Dimensional drawings

Gearbox type *BADR*

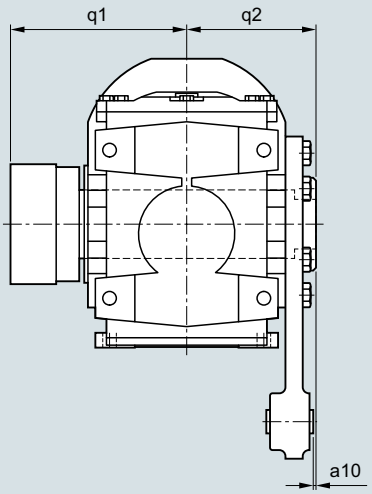

Gearbox type *KADR*

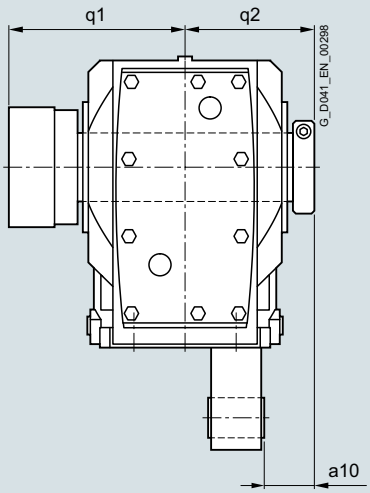

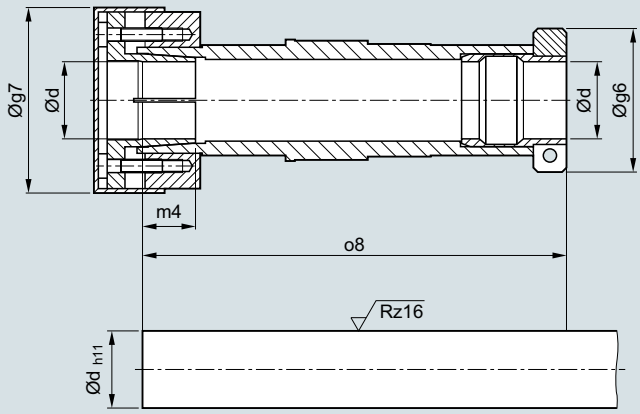

Note mounting tolerance when positioning the torque arm.

Associated dimensions see next page.

© Siemens 2019

d	g6	g7	m4	o8	q1	q2	a10
2-stage, Gearbox size *29* – Gearbox type *BADR29*							
20	58.5	56	18.5	151	102	$75^{+2.1}_{+0.6}$	$11^{+2.1}_{+0.6}$
1“							
0.75“							
2-stage, Gearbox size *39* – Gearbox type *BADR39*							
30	62.0	76	22	180.5	116	$85^{+2.2}_{+0.7}$	$2.5^{+2.2}_{+0.7}$
25							
1.25“							
1.1875“							
1“							
2-stage, Gearbox size *49* – Gearbox type *BADR49*							
35	65.0	84	24	210.0	134	$104^{+2.6}_{+0.8}$	$2.5^{+2.6}_{+0.8}$
30							
1.375“							
1.4375“							
1.25“							
1.1875“							
40	79.5	94	30	220	140	$104^{+2.6}_{+0.8}$	$1.5^{+2.6}_{+0.8}$
1.625“							
3-stage, Gearbox size *39* – Gearbox type *KADR39*							
30	62.0	76	22	160.5	106	$75^{+2.2}_{+0.7}$	$39^{+2.2}_{+0.7}$
25							
1.25“							
1.1875“							
1“							
3-stage, Gearbox size *49* – Gearbox type *KADR49*							
35	65.0	84	24	192.0	124	$90^{+2.6}_{+0.8}$	$35^{+2.6}_{+0.8}$
30							
1.375“							
1.4375“							
1.25“							
1.1875“							
3-stage, Gearbox size *69* – Gearbox type *KADR69*							
40	79.5	94	30	217.5	138	$102^{+2.5}_{+0.7}$	$39^{+2.5}_{+0.7}$
35							
1.5“							
1.625“							
1.4375“							
1.375“							
3-stage, Gearbox size *79* – Gearbox type *KADR79*							
40	79.5	94	30	232.0	150	$109^{+3.2}_{+1.4}$	$46^{+3.2}_{+1.4}$
35							
1.5“							
1.625“							
1.4375“							
1.375“							
3-stage, Gearbox size *89* – Gearbox type *KADR89*							
50	89.0	114	32	264.0	171	$124^{+3.4}_{+1.5}$	$45^{+3.4}_{+1.5}$
40							
2“							
1.9375“							
1.75“							
1.625“							

© Siemens 2019

Protection cover for hollow shaft

Dimensional drawings

Protection cover for hollow shaft

Gearbox types *BA*, *BAF*, *BAZ*, *BAD*

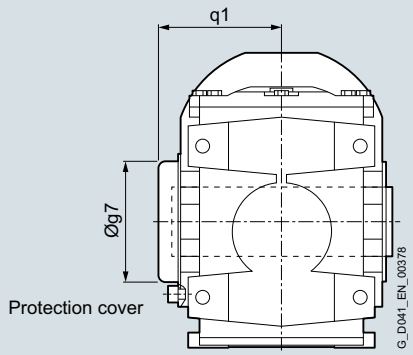

Gearbox types *KAF*, *KAZ*, *KAD*

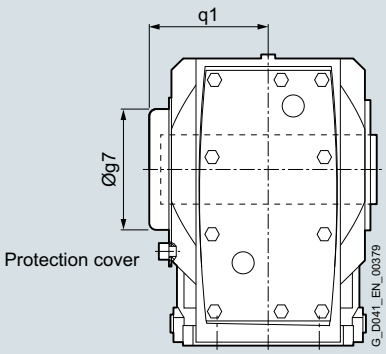

Gearbox type	*BA..* – 2-stage			*KA..* – 3-stage							
Gearbox size	***29***	***39***	***49***	***39***	***49***	***69***	***79***	***89***	***109***	***129***	***149***
Protection cover											
g7	67	80	88	82.5	80	99	99	137	187	187	218
q1	76	96	111	73	105	95	101.5	124.5	168	198	250

Protection cover for hollow shaft with shrink disk

Gearbox types *BAS*, *BAFS*, *BAZS*, *BADS*

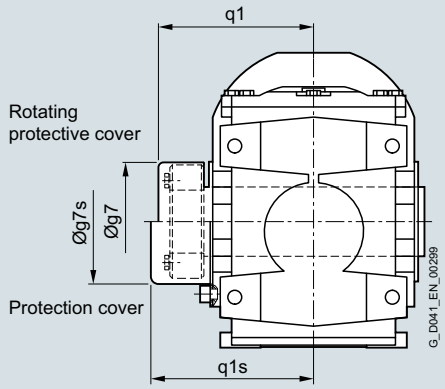

Gearbox types *KAFS*, *KAZS*, *KADS*

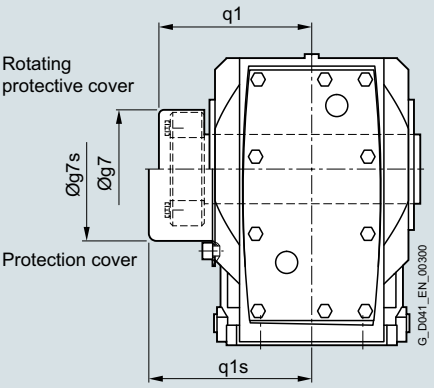

Gearbox type	*BA..* – 2-stage			*KA..* – 3-stage							
Gearbox size	***29***	***39***	***49***	***39***	***49***	***69***	***79***	***89***	***109***	***129***	***149***
Rotating protective cover with shrink disk version											
g7	55	84	84	76	84	84	94	119	142	159	201
q1	85	102	117	89.5	107	115	125.5	142.5	162.5	198.5	233.5
Protection cover with shrink disk version											
g7s	58	86	86	82.5	86	99	99	137	187	187	218
q1s	91	119	134	109	122	126	132.5	176.5	195	225	250

© Siemens 2019

Protection cover for hollow shaft with SIMOLOC assembly system for:

Gearbox type *BADR*

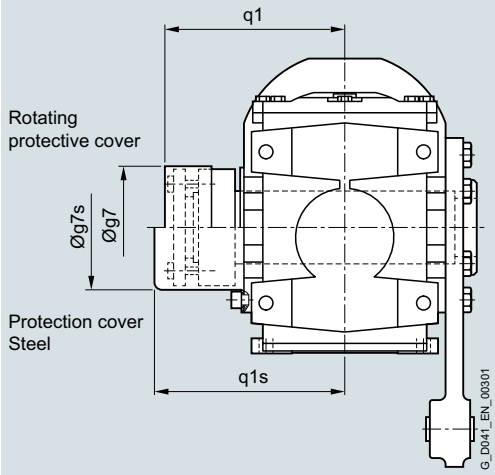

Gearbox type *KADR*

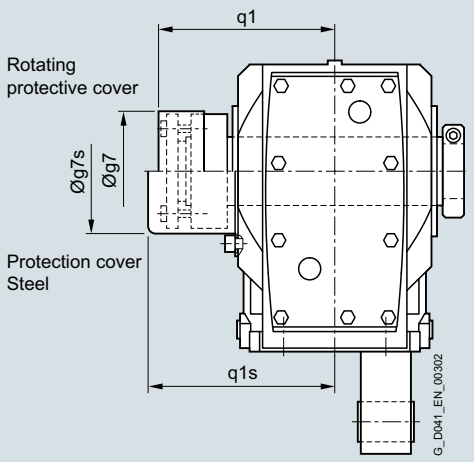

Gearbox type	***BADR*** – 2-stage			***KADR*** – 3-stage				
Gearbox size	***29***	***39***	***49***	***39***	***49***	***69***	***79***	***89***
Rotating protective cover with SIMOLOC assembly system								
g7	56	76	84 (94)	76	84	94	94	114
q1	102	116	134 (140)	106	124	138	150	171
Protection cover with SIMOLOC assembly system								
g7s	58	86	86 (99)	82.5	86	99	99	137
q1s	105	119	138 (143)	109	126	145	151,5	176,5

() Dimension in brackets for hollow shaft d = 40 and d = 1.625“

© Siemens 2019

Inner contour and dimensions of the flange-mounted design

Dimensional drawings

Notes regarding the design of the customer's interface.

Gearbox types *BF.* and *KF.*

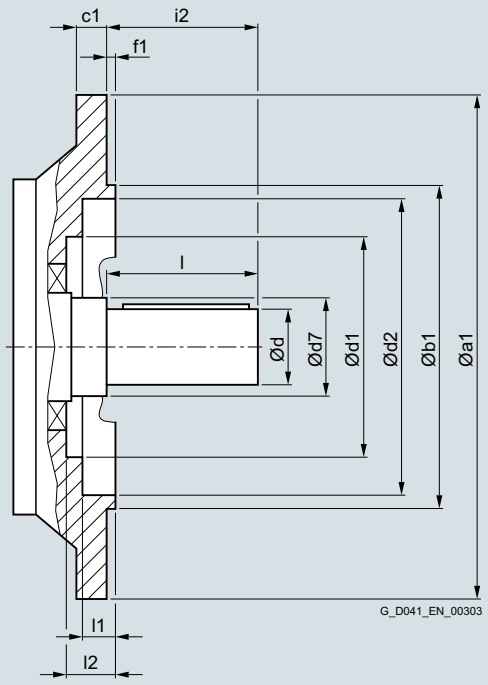

Gearbox size	a1	b1	c1	d	d7	d1	d2	f1	i2	l	l1	l2
2-stage – Gearbox type *BF.*												
19	120	80 $_{j6}$	8	20 $_{k6}$	30	60	68	3.0	40	40	23.5	29.5
29	120	80 $_{j6}$	8	20 $_{k6}$	40	–	70	3.0	40	40	24.0	–
	160	110 $_{j6}$	9	20 $_{k6}$	40	70	101	3.5	40	40	8.5	24.5
39	160	110 $_{j6}$	10	30 $_{k6}$	55	93	100	3.5	60	60	11.0	31.5
	200	130 $_{j6}$	12	30 $_{k6}$	55	93	119	3.5	60	60	16.0	31.5
49	200	130 $_{j6}$	12	35 $_{k6}$	55	93	119	3.5	70	70	16.0	31.5
3-stage – Gearbox type *KF.*												
39	160	110 $_{j6}$	10	25 $_{k6}$	30	–	100	3.5	50	50	5.0	–
	160	110 $_{j6}$	10	35 $_{k6}$	55	80	102	3.5	46	70	2.0	29.5
49	200	130 $_{j6}$	12	30 $_{k6}$	35	–	118	3.5	60	60	5.5	–
	200	130 $_{j6}$	12	40 $_{k6}$	50	90	120	3.5	55	80	5.5	30.5
69	250	180 $_{j6}$	15	35 $_{k6}$	45	–	165	4.0	70	70	6.5	–
79	250	180 $_{j6}$	15	40 $_{k6}$	55	–	165	4.0	80	80	6.5	–
	250	180 $_{j6}$	15	50 $_{k6}$	55	104	165	4.0	77	100	6.5	29.5
89	300	230 $_{j6}$	16	50 $_{k6}$	55	–	165	4.0	100	100	8.0	–
109	350	250 $_{j6}$	18	60 $_{m6}$	65	–	235	5.0	120	120	9.0	–
	350	250 $_{j6}$	18	80 $_{m6}$	85	184	210	5.0	134	170	9.0	45
129	450	350 $_{j6}$	22	70 $_{m6}$	75	–	336	5.0	140	140	9.0	–
	450	350 $_{j6}$	22	90 $_{m6}$	95	–	336	5.0	128.5	170	9.0	–
149	450	350 $_{j6}$	22	90 $_{m6}$	100	–	336	5.0	170	170	10.0	–
	450	350 $_{j6}$	22	100 $_{m6}$	120	184	330	5.0	169	210	10.0	48.5

© Siemens 2019

Notes regarding the design of the customer's interface, e.g. plug-in shaft for hollow shaft design.

Gearbox types *BAF.* and *KAF.*

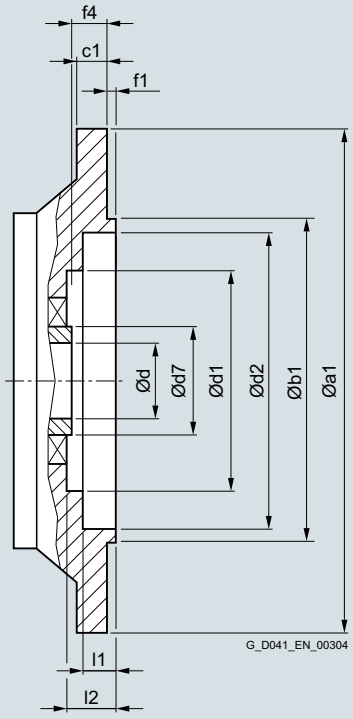

Gearbox size	a1	b1	c1	d	d7	d1	d2	f1	f4	l1	l2
2-stage – Gearbox type *BAF.*											
19	120	80 $_{j6}$	8	20 ^{H7}	30	60	68	3.0	30.0	23.5	29.5
29	120	80 $_{j6}$	8	20 ^{H7} 25 ^{H7}	40	–	70	3.0	20.0	24.0	–
	160	110 $_{j6}$	9	20 ^{H7} 25 ^{H7}	40	70	101	3.5	20.0	8.5	24.5
39	160	110 $_{j6}$	10	30 ^{H7} 35 ^{H7} 40 ^{H7}	55	93	100	3.5	27.0	11.0	31.5
39	200	130 $_{j6}$	12	30 ^{H7} 35 ^{H7} 40 ^{H7}	55	93	119	3.5	27.0	16.0	31.5
49	200	130 $_{j6}$	12	35 ^{H7} 40 ^{H7}	55	93	119	3.5	27.0	16.0	31.5
3-stage – Gearbox type *KAF.*											
39	160	110 $_{j6}$	10	25 ^{H7}	45	80	102	3.5	24.0	2.0	29.5
	160	110 $_{j6}$	10	30 ^{H7}	45	80	102	3.5	24.0	2.0	29.5
49	200	130 $_{j6}$	12	30 ^{H7}	50	90	120	3.5	25.0	4.0	30.5
	200	130 $_{j6}$	12	35 ^{H7}	50	90	120	3.5	25.0	4.0	30.5
69	250	180 $_{j6}$	15	40 ^{H7}	55	104	165	4.0	23.5	2.0	29.5
79	250	180 $_{j6}$	15	40 ^{H7}	55	104	165	4.0	23.0	2.0	29.5
89	300	230 $_{j6}$	16	50 ^{H7}	70	135	215	4.0	37.0	2.0	44.5
109	350	250 $_{j6}$	18	60 ^{H7}	85	184	210	5.0	36.0	13.0	45.0
	350	250 $_{j6}$	18	70 ^{H7}	90	184	210	5.0	36.0	13.0	45.0
129	450	350 $_{j6}$	22	70 ^{H7}	95	184	336	5.0	41.5	16.5	48.5
149	450	350 $_{j6}$	22	80 ^{H7}	120	214	330	5.0	41.0	40.0	50.0
	450	350 $_{j6}$	22	90 ^{H7}	120	214	330	5.0	41.0	40.0	50.0

© Siemens 2019

Notes

© Siemens 2019

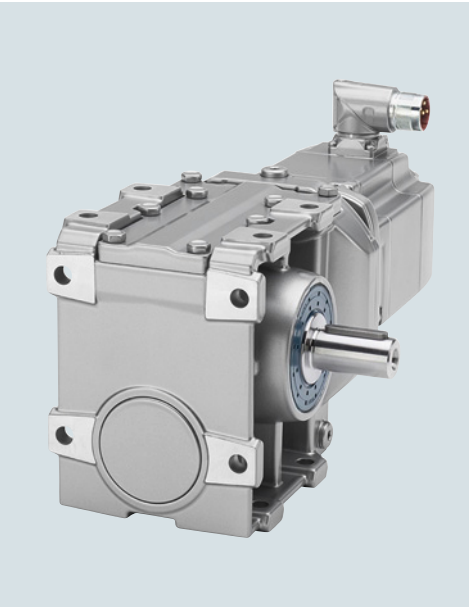

6/2 Orientation

6/3 Selecting servo geared motors
6/3 Gearbox size ***29***
6/3 • 2-stage – 1FG1601 – ***C29***
6/11 Gearbox size ***39***
6/11 • 2-stage – 1FG1602 – ***C39***
6/19 Gearbox size ***49***
6/19 • 2-stage – 1FG1603 – ***C49***
6/27 Gearbox size ***69***
6/27 • 2-stage – 1FG1604 – ***C69***
6/35 Gearbox size ***89***
6/35 • 2-stage – 1FG1605 – ***C89***

6/42 Dimensions
6/42 Gearbox size ***29***
6/42 Foot-mounted design
2-stage – ***C..29***
6/44 Flange-mounted design
2-stage – ***C.F.29***
6/46 Housing flange design
2-stage – ***C.Z.29***
6/48 Shaft-mounted design
2-stage – ***CAD.29***
6/50 Gearbox size ***39***
6/50 Foot-mounted design
2-stage – ***C..39***
6/52 Flange-mounted design
2-stage – ***C.F.39***
6/54 Housing flange design
2-stage – ***C.Z.39***
6/56 Shaft-mounted design
2-stage – ***CAD.39***
6/58 Gearbox size ***49***
6/58 Foot-mounted design
2-stage – ***C..49***
6/60 Flange-mounted design
2-stage – ***C.F.49***
6/62 Housing flange design
2-stage – ***C.Z.49***
6/64 Shaft-mounted design
2-stage – ***CAD.49***
6/66 Gearbox size ***69***
6/66 Foot-mounted design
2-stage – ***C..69***
6/68 Flange-mounted design
2-stage – ***C.F.69***
6/70 Housing flange design
2-stage – ***C.Z.69***
6/72 Shaft-mounted design
2-stage – ***CAD.69***

6/74 Gearbox size ***89***
6/74 Foot-mounted design
2-stage – ***C..89***
6/76 Flange-mounted design
2-stage – ***C.F.89***
6/78 Housing flange design
2-stage – ***C.Z.89***
6/80 Shaft-mounted design
2-stage – ***CAD.89***
6/82 SIMOLOC assembly system for shaft-mounted design 2-stage
6/84 Protection cover for hollow shaft
6/84 Protection cover for hollow shaft and hollow shaft with shrink disk for gearbox types ***CAS***, ***CAFS***, ***CAZS*** and ***CADS***
6/85 Protection cover for hollow shaft with SIMOLOC assembly system
6/86 Inner contour and dimensions of the flange-mounted design

© Siemens 2019

Overview

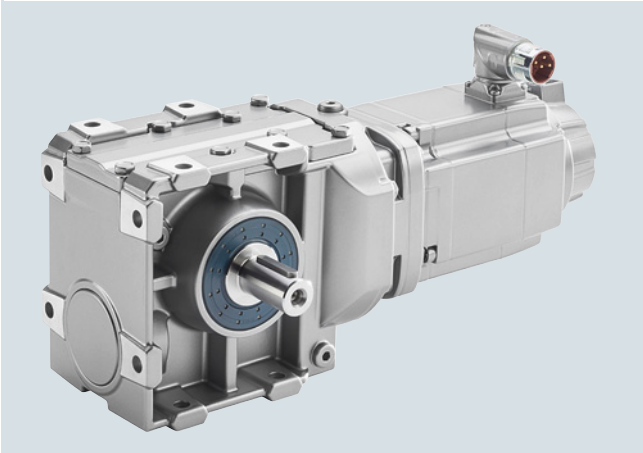

Servo helical worm geared motors SIMOTICS S-1FG1 are available in the following versions for mounting in any position:

- 2 stages
- Shaft-mounted design with torque arm *CAD*
- Flange-mounted design *CF*
- Design with integrated housing flange *CZ*
- Foot-mounted design *C*
- Hollow-shaft design with feather keyway *CA*
- Hollow-shaft design with splined shaft *CAT*
- Hollow-shaft design with shrink disk *CAS*
- Hollow-shaft design with SIMOLOC assembly system *CADR*
- Solid shaft design with or without feather keyway (at one end or both ends) *C*

For helical worm gearboxes, the torque arm is supplied loose to enable it to be mounted as required on site. The position of the torque arm can be freely selected.

© Siemens 2019

Technical specifications

Gearbox type *C29*

Servo geared motor Type	i	R_{ex}	M_{2rated} Nm	M_{2max} Nm	$M_{2Em.Off}$ Nm	n_{2max} rpm	n_{1max} rpm	φ '	F_{R2} N	F_{R2max} N	c_T Nm/ '	J_G 10^{-4} kgm^2
1FG1601-.....-..M2	265.2	1326/5	108	108	127	17	4500	–	4140	4040	–	0.05
1FG1601-.....-..L2	230.1	2301/10	108	108	127	20	4500	–	4140	4040	–	0.05
1FG1601-.....-..K2	209.18	2301/11	109	109	127	22	4500	–	4130	4040	–	0.06
1FG1601-.....-..J2	179.4	897/5	110	110	127	25	4500	–	4130	4040	–	0.08
1FG1601-.....-..H2	163.09	1794/11	110	110	127	28	4500	–	4130	4040	–	0.10
1FG1601-.....-..G2	143	143/1	110	110	127	31	4500	–	4130	4040	–	0.11
1FG1601-.....-..F2	127.64	1404/11	110	110	127	35	4500	–	4130	4040	–	0.13
1FG1601-.....-..E2	113.75	455/4	110	110	127	40	4500	–	4130	4040	–	0.16
1FG1601-.....-..D2	105	105/1	110	110	127	43	4500	–	4130	4040	–	0.19
1FG1601-.....-..C2	91.93	1287/14	110	110	127	49	4500	–	4130	4040	–	0.21
1FG1601-.....-..B2	80.6	403/5	110	110	127	56	4500	–	4130	4040	–	0.22
1FG1601-.....-..A2	73.12	585/8	110	110	127	62	4500	–	4130	4040	–	0.26
1FG1601-.....-..X1	68.82	1170/17	110	110	127	65	4500	–	4130	4040	–	0.30
1FG1601-.....-..W1	60.67	182/3	110	110	127	72	4356	–	4130	4040	–	0.33
1FG1601-.....-..V1	52.65	1053/20	110	110	127	70	3701	–	4130	4040	–	0.48
1FG1601-.....-..U1	49.87	748/15	102	126	129	90	4500	–	4170	4050	–	0.05
1FG1601-.....-..T1	43.27	649/15	103	126	129	104	4500	–	4160	4050	–	0.06
1FG1601-.....-..S1	39.33	118/3	103	126	129	114	4500	–	4160	4050	–	0.07
1FG1601-.....-..R1	33.73	506/15	104	126	129	133	4500	–	4160	4050	–	0.09
1FG1601-.....-..Q1	32.64	816/25	90	99	133	138	4500	–	4230	4180	–	0.05
1FG1601-.....-..P1	28.32	708/25	90	99	134	159	4500	–	4230	4180	–	0.06
1FG1601-.....-..N1	25.75	1416/55	91	99	133	175	4500	–	4220	4180	–	0.07
1FG1601-.....-..M1	22.08	552/25	91	99	133	204	4500	–	4220	4180	–	0.09
1FG1601-.....-..L1	20.07	1104/55	92	99	133	224	4500	–	4180	4070	–	0.11
1FG1601-.....-..K1	17.6	88/5	92	99	133	256	4500	–	3940	3840	–	0.13
1FG1601-.....-..J1	15.71	864/55	92	99	133	286	4500	–	3740	3640	–	0.15
1FG1601-.....-..H1	14	14/1	93	99	134	321	4500	–	3540	3450	–	0.18
1FG1601-.....-..G1	12.92	168/13	93	99	133	348	4500	–	3410	3320	–	0.22
1FG1601-.....-..F1	11.31	396/35	94	99	134	398	4500	–	3190	3110	–	0.25
1FG1601-.....-..E1	9.92	248/25	94	98	135	454	4500	–	2990	2930	–	0.26
1FG1601-.....-..D1	9	9/1	91	98	136	485	4363	–	2900	2790	–	0.33
1FG1601-.....-..C1	8.47	144/17	90	98	136	485	4104	–	2830	2710	–	0.38
1FG1601-.....-..B1	7.47	112/15	86	98	137	517	3860	–	2720	2540	–	0.43
1FG1601-.....-..A1	6.48	162/25	82	94	138	598	3878	–	2590	2420	–	0.57

© Siemens 2019

Gearbox size 29, 2-stage – 1FG1601

Selection and ordering data

Shaft design, encoder system, mounting type and special designs

Gearbox type *C29*								
		Servo helical worm geared motors SIMOTICS S-1FG1 Article No.						
		1FG1601- ■ ■ . . . - . ■ . .						**-Z**
Shaft design:	Solid shaft with feather keyway – Design 1		**1**					
	Hollow-shaft with feather keyway – Design 1 – H20		**5**					
Order codes and Descriptions see chapter "Options"	Special shaft design		**9**					
Encoder system for motors with DRIVE-CLiQ interface:	AS20DQI encoder			**Q**				
	AM20DQI encoder			**R**				
	R14DQ resolver			**P**				
	R15DQ resolver			**U**				
Order codes and Descriptions see chapter "Options"	Special version encoder system			**Z**				
Mounting type:	Foot-mounted design				**A**			
	Flange-mounted design				**F**			
	Housing flange design				**H**			
	Shaft-mounted design (not possible with solid shaft)				**D**			
Special designs (Options): Order codes and Descriptions see chapter "Options" The following order codes must be added to each article number: • Oil type – order codes **K08** or **K11** • Mounting position – order codes **D11** ... **D16** or **D21** ... **D26**								**-Z**
Selection of 2-stages Servo helical worm geared motors with gearbox size 29 from next page.		**1FG1601-** . . ■ ■ ■ - ■ . ■ ■						**-Z**

6

© Siemens 2019

Selection and ordering data (continued)

For line voltage 380 ... 480 V 3 AC (DC link voltage 510 ... 720 V DC) **– Gearbox type** ***C29***

Geared motor torque at 1450 rpm
Note: All values in **bold** print are maximum gearbox values.
M_{2dyn}
Nm

36	48	63	80	100	Servo helical worm geared motors SIMOTICS S-1FG1 Article No.
Max. output speed n_{2max} = 17 rpm, Transmission ratio i = 265.2					
127	**127**	**127**	–	–	**1FG1601-** . . ■ ■ **6** - ■ . **M2** -**Z**
–	**127**	**127**	**127**	–	**1FG1601-** . . ■ ■ **4** - ■ . **M2** -**Z**
–	**127**	**127**	**127**	–	**1FG1601-** . . ■ ■ **3** - ■ . **M2** -**Z**
–	–	**127**	**127**	–	**1FG1601-** . . ■ ■ **2** - ■ . **M2** -**Z**
Max. output speed n_{2max} = 20 rpm, Transmission ratio i = 230.1					
127	**127**	**127**	–	–	**1FG1601-** . . ■ ■ **6** - ■ . **L2** -**Z**
–	**127**	**127**	**127**	–	**1FG1601-** . . ■ ■ **4** - ■ . **L2** -**Z**
–	**127**	**127**	**127**	–	**1FG1601-** . . ■ ■ **3** - ■ . **L2** -**Z**
–	–	**127**	**127**	–	**1FG1601-** . . ■ ■ **2** - ■ . **L2** -**Z**
Max. output speed n_{2max} = 22 rpm, Transmission ratio i = 209.18					
127	**127**	**127**	–	–	**1FG1601-** . . ■ ■ **6** - ■ . **K2** -**Z**
–	**127**	**127**	**127**	–	**1FG1601-** . . ■ ■ **4** - ■ . **K2** -**Z**
–	**127**	**127**	**127**	–	**1FG1601-** . . ■ ■ **3** - ■ . **K2** -**Z**
–	–	**127**	**127**	–	**1FG1601-** . . ■ ■ **2** - ■ . **K2** -**Z**
Max. output speed n_{2max} = 25 rpm, Transmission ratio i = 179.4					
127	**127**	**127**	–	–	**1FG1601-** . . ■ ■ **6** - ■ . **J2** -**Z**
–	**127**	**127**	**127**	–	**1FG1601-** . . ■ ■ **4** - ■ . **J2** -**Z**
–	**127**	**127**	**127**	–	**1FG1601-** . . ■ ■ **3** - ■ . **J2** -**Z**
–	–	**127**	**127**	–	**1FG1601-** . . ■ ■ **2** - ■ . **J2** -**Z**
Max. output speed n_{2max} = 28 rpm, Transmission ratio i = 163.09					
127	**127**	**127**	–	–	**1FG1601-** . . ■ ■ **6** - ■ . **H2** -**Z**
–	**127**	**127**	**127**	–	**1FG1601-** . . ■ ■ **4** - ■ . **H2** -**Z**
–	**127**	**127**	**127**	–	**1FG1601-** . . ■ ■ **3** - ■ . **H2** -**Z**
–	–	**127**	**127**	–	**1FG1601-** . . ■ ■ **2** - ■ . **H2** -**Z**
Max. output speed n_{2max} = 31 rpm, Transmission ratio i = 143					
127	**127**	**127**	–	–	**1FG1601-** . . ■ ■ **6** - ■ . **G2** -**Z**
–	**127**	**127**	**127**	–	**1FG1601-** . . ■ ■ **4** - ■ . **G2** -**Z**
–	**127**	**127**	**127**	–	**1FG1601-** . . ■ ■ **3** - ■ . **G2** -**Z**
–	–	**127**	**127**	–	**1FG1601-** . . ■ ■ **2** - ■ . **G2** -**Z**
Max. output speed n_{2max} = 35 rpm, Transmission ratio i = 127.64					
127	**127**	**127**	–	–	**1FG1601-** . . ■ ■ **6** - ■ . **F2** -**Z**
–	**127**	**127**	**127**	–	**1FG1601-** . . ■ ■ **4** - ■ . **F2** -**Z**
–	**127**	**127**	**127**	–	**1FG1601-** . . ■ ■ **3** - ■ . **F2** -**Z**
–	–	**127**	**127**	–	**1FG1601-** . . ■ ■ **2** - ■ . **F2** -**Z**

Motor shaft height:						
36					**C**	
	48				**D**	
		63			**E**	
			80		**F**	
				100	**G**	
Motor length/motor version (**CT** = Compact, **HD** = High Dynamic)**:**						
0/CT	**0/CT**	**0/CT**	**0/CT**		**0**	**2**
		1/CT	**1/CT**		**1**	**2**
	1/HD				**1**	**4**
2/CT	**2/CT**	**2/CT**			**2**	**2**
	3/CT	**3/CT**	**3/CT**		**3**	**2**
3/HD	**3/HD**				**3**	**4**
4/CT		**4/CT**			**4**	**2**
	4/HD	**4/HD**			**4**	**4**
				5/CT	**5**	**2**
			5/HD		**5**	**4**
			6/HD		**6**	**4**

Selection of Shaft design, encoder system, mounting type and special designs on page 6/4.

1FG1601- ■ ■ . . . . - . ■ . . -**Z**

© Siemens 2019

Gearbox size 29, 2-stage – 1FG1601

For line voltage 380 ... 480 V 3 AC (DC link voltage 510 ... 720 V DC) **– Gearbox type** *C29*

Geared motor torque at 1450 rpm
Note: All values in **bold** print are maximum gearbox values.
M_{2dyn}
Nm

Servo helical worm geared motors SIMOTICS S-1FG1
Article No.

Max. output speed n_{2max} = **40 rpm**, Transmission ratio i = **113.75**																						
127	**127**	**127**	**127**	**127**	**127**	–	–	–	–	–	–	–	–	–	–	–	–	–	–	–	–	1FG1601- . . ■ ■ **6** - ■ . **E2** -Z
–	–	–	–	–	**127**	**127**	**127**	**127**	**127**	**127**	**127**	–	–	–	–	–	–	–	–	–	–	1FG1601- . . ■ ■ **4** - ■ . **E2** -Z
–	–	–	–	**127**	–	**127**	**127**	**127**	**127**	**127**	**127**	–	–	–	–	–	–	–	–	–	–	1FG1601- . . ■ ■ **3** - ■ . **E2** -Z
–	–	–	–	**127**	–	–	**127**	–	**127**	**127**	**127**	–	–	–	–	–	–	–	–	–	–	1FG1601- . . ■ ■ **2** - ■ . **E2** -Z
Max. output speed n_{2max} = **43 rpm**, Transmission ratio i = **105**																						
127	**127**	**127**	**127**	**127**	**127**	–	–	–	–	–	–	–	–	–	–	–	–	–	–	–	–	1FG1601- . . ■ ■ **6** - ■ . **D2** -Z
–	–	–	–	–	**127**	**127**	**127**	**127**	**127**	**127**	**127**	–	–	–	–	–	–	–	–	–	–	1FG1601- . . ■ ■ **4** - ■ . **D2** -Z
–	–	–	–	**127**	–	**127**	**127**	**127**	**127**	**127**	**127**	–	–	–	–	–	–	–	–	–	–	1FG1601- . . ■ ■ **3** - ■ . **D2** -Z
–	–	–	–	**127**	–	–	**127**	–	**127**	**127**	**127**	–	–	–	–	–	–	–	–	–	–	1FG1601- . . ■ ■ **2** - ■ . **D2** -Z
Max. output speed n_{2max} = **49 rpm**, Transmission ratio i = **91.93**																						
127	**127**	**127**	**127**	**127**	**127**	–	–	–	–	–	–	–	–	–	–	–	–	–	–	–	–	1FG1601- . . ■ ■ **6** - ■ . **C2** -Z
–	–	–	–	–	**127**	**127**	**127**	**127**	**127**	**127**	**127**	–	–	–	–	–	–	–	–	–	–	1FG1601- . . ■ ■ **4** - ■ . **C2** -Z
–	–	–	–	**127**	–	**127**	**127**	**127**	**127**	**127**	**127**	–	–	–	–	–	–	–	–	–	–	1FG1601- . . ■ ■ **3** - ■ . **C2** -Z
–	–	–	–	**127**	–	–	**127**	–	**127**	**127**	**127**	–	–	–	–	–	–	–	–	–	–	1FG1601- . . ■ ■ **2** - ■ . **C2** -Z
Max. output speed n_{2max} = **56 rpm**, Transmission ratio i = **80.6**																						
127	**127**	**127**	**127**	**127**	**127**	–	–	–	–	–	–	–	–	–	–	–	–	–	–	–	–	1FG1601- . . ■ ■ **6** - ■ . **B2** -Z
–	–	–	–	–	**127**	**127**	**127**	**127**	**127**	**127**	**127**	–	–	–	–	–	–	–	–	–	–	1FG1601- . . ■ ■ **4** - ■ . **B2** -Z
–	–	–	–	**127**	–	**127**	**127**	**127**	**127**	**127**	**127**	–	–	–	–	–	–	–	–	–	–	1FG1601- . . ■ ■ **3** - ■ . **B2** -Z
–	–	–	–	**127**	–	–	**127**	–	**127**	**127**	**127**	–	–	–	–	–	–	–	–	–	–	1FG1601- . . ■ ■ **2** - ■ . **B2** -Z
Max. output speed n_{2max} = **62 rpm**, Transmission ratio i = **73.12**																						
127	**127**	**127**	**127**	**127**	**127**	–	–	–	–	–	–	–	–	–	–	–	–	–	–	–	–	1FG1601- . . ■ ■ **6** - ■ . **A2** -Z
–	–	–	–	–	**127**	**127**	**127**	**127**	**127**	**127**	**127**	–	–	–	–	–	–	–	–	–	–	1FG1601- . . ■ ■ **4** - ■ . **A2** -Z
–	–	–	–	**127**	–	**127**	**127**	**127**	**127**	**127**	**127**	–	–	–	–	–	–	–	–	–	–	1FG1601- . . ■ ■ **3** - ■ . **A2** -Z
–	–	–	–	**127**	–	–	**127**	–	**127**	**127**	**127**	–	–	–	–	–	–	–	–	–	–	1FG1601- . . ■ ■ **2** - ■ . **A2** -Z
Max. output speed n_{2max} = **65 rpm**, Transmission ratio i = **68.82**																						
127	**127**	**127**	**127**	**127**	**127**	–	–	–	–	–	–	–	–	–	–	–	–	–	–	–	–	1FG1601- . . ■ ■ **6** - ■ . **X1** -Z
–	–	–	–	–	**127**	**127**	**127**	**127**	**127**	**127**	**127**	–	–	–	–	–	–	–	–	–	–	1FG1601- . . ■ ■ **4** - ■ . **X1** -Z
–	–	–	–	**127**	–	**127**	**127**	**127**	**127**	**127**	**127**	–	–	–	–	–	–	–	–	–	–	1FG1601- . . ■ ■ **3** - ■ . **X1** -Z
–	–	–	–	**127**	–	–	**127**	–	**127**	**127**	**127**	–	–	–	–	–	–	–	–	–	–	1FG1601- . . ■ ■ **2** - ■ . **X1** -Z
Max. output speed n_{2max} = **74 rpm**, Transmission ratio i = **60.67**																						
127	**127**	**127**	**127**	**127**	**127**	–	–	–	–	–	–	–	–	–	–	–	–	–	–	–	–	1FG1601- . . ■ ■ **6** - ■ . **W1** -Z
–	–	–	–	–	**127**	**127**	**127**	**127**	**127**	**127**	**127**	–	–	–	–	–	–	–	–	–	–	1FG1601- . . ■ ■ **4** - ■ . **W1** -Z
–	–	–	–	**127**	–	**127**	**127**	**127**	**127**	**127**	**127**	–	–	–	–	–	–	–	–	–	–	1FG1601- . . ■ ■ **3** - ■ . **W1** -Z
–	–	–	–	**127**	–	–	**127**	–	**127**	**127**	**127**	–	–	–	–	–	–	–	–	–	–	1FG1601- . . ■ ■ **2** - ■ . **W1** -Z
Max. output speed n_{2max} = **85 rpm**, Transmission ratio i = **52.65**																						
127	**127**	**127**	**127**	**127**	**127**	–	–	–	–	–	–	–	–	–	–	–	–	–	–	–	–	1FG1601- . . ■ ■ **6** - ■ . **V1** -Z
–	–	–	–	–	**127**	**127**	**127**	**127**	**127**	**127**	**127**	–	–	–	–	–	–	–	–	–	–	1FG1601- . . ■ ■ **4** - ■ . **V1** -Z
–	–	–	–	**127**	–	**127**	**127**	**127**	**127**	**127**	**127**	–	–	–	–	–	–	–	–	–	–	1FG1601- . . ■ ■ **3** - ■ . **V1** -Z
–	–	–	–	**127**	–	–	**127**	–	**127**	**127**	**127**	–	–	–	–	–	–	–	–	–	–	1FG1601- . . ■ ■ **2** - ■ . **V1** -Z

Motor shaft height:

36																					**C**	
			48																		**D**	
						63															**E**	
												80									**F**	
																	100				**G**	

Motor length/motor version (**CT** = Compact, **HD** = High Dynamic)**:**

			0/CT			**0/CT**					**0/CT**						**0/CT**				**0**	**2**
										1/CT								**1/CT**			**1**	**2**
							1/HD														**1**	**4**
2/CT				**2/CT**				**2/CT**													**2**	**2**
									3/CT				**3/CT**						**3/CT**		**3**	**2**
	3/HD				**3/HD**																**3**	**4**
		4/CT												**4/CT**							**4**	**2**
						4/HD					**4/HD**										**4**	**4**
																			5/CT		**5**	**2**
															5/HD						**5**	**4**
																6/HD					**6**	**4**

Selection of Shaft design, encoder system, mounting type and special designs on page 6/4.

1FG1601- ■ ■ . . . - . ■ . . -Z

© Siemens 2019

For line voltage 380 ... 480 V 3 AC (DC link voltage 510 ... 720 V DC) **– Gearbox type** ***C29***

Geared motor torque at 1450 rpm
Note: All values in **bold** print are maximum gearbox values.
M_{2dyn}
Nm

1	2	3	4	5	6	7	8	9	10	11	12	13	14	15	16	17	18	19	20	21	22	Servo helical worm geared motors SIMOTICS S-1FG1 Article No.
Max. output speed n_{2max} = **90 rpm**, Transmission ratio i = **49.87**																						
126	**126**	**126**	**126**	**126**	**126**	–	–	–	–	–	–	–	–	–	–	–	–	–	–	–	–	1FG1601- . . ■ ■ **6** - ■ . **U1** -Z
–	–	–	–	–	**126**	**126**	–	–	–	–	–	–	–	–	–	–	–	–	–	–	–	1FG1601- . . ■ ■ **4** - ■ . **U1** -Z
–	–	–	–	**126**	–	**126**	–	–	–	–	–	–	–	–	–	–	–	–	–	–	–	1FG1601- . . ■ ■ **3** - ■ . **U1** -Z
–	–	–	–	**126**	–	–	–	–	–	–	–	–	–	–	–	–	–	–	–	–	–	1FG1601- . . ■ ■ **2** - ■ . **U1** -Z
Max. output speed n_{2max} = **104 rpm**, Transmission ratio i = **43.27**																						
126	**126**	**126**	**126**	**126**	**126**	–	–	–	–	–	–	–	–	–	–	–	–	–	–	–	–	1FG1601- . . ■ ■ **6** - ■ . **T1** -Z
–	–	–	–	–	**126**	**126**	–	–	–	–	–	–	–	–	–	–	–	–	–	–	–	1FG1601- . . ■ ■ **4** - ■ . **T1** -Z
–	–	–	–	**126**	–	**126**	–	–	–	–	–	–	–	–	–	–	–	–	–	–	–	1FG1601- . . ■ ■ **3** - ■ . **T1** -Z
–	–	–	–	**126**	–	–	–	–	–	–	–	–	–	–	–	–	–	–	–	–	–	1FG1601- . . ■ ■ **2** - ■ . **T1** -Z
Max. output speed n_{2max} = **114 rpm**, Transmission ratio i = **39.33**																						
126	**126**	**126**	**126**	**126**	**126**	–	–	–	–	–	–	–	–	–	–	–	–	–	–	–	–	1FG1601- . . ■ ■ **6** - ■ . **S1** -Z
–	–	–	–	–	**126**	**126**	**126**	**126**	**126**	**126**	**126**	–	–	–	–	–	–	–	–	–	–	1FG1601- . . ■ ■ **4** - ■ . **S1** -Z
–	–	–	–	**126**	–	**126**	**126**	**126**	**126**	**126**	**126**	–	–	–	–	–	–	–	–	–	–	1FG1601- . . ■ ■ **3** - ■ . **S1** -Z
–	–	–	–	**126**	–	–	**126**	–	**126**	**126**	**126**	–	–	–	–	–	–	–	–	–	–	1FG1601- . . ■ ■ **2** - ■ . **S1** -Z
Max. output speed n_{2max} = **133 rpm**, Transmission ratio i = **33.73**																						
126	**126**	**126**	**126**	**126**	**126**	–	–	–	–	–	–	–	–	–	–	–	–	–	–	–	–	1FG1601- . . ■ ■ **6** - ■ . **R1** -Z
–	–	–	–	–	**126**	**126**	**126**	**126**	**126**	**126**	**126**	–	–	–	–	–	–	–	–	–	–	1FG1601- . . ■ ■ **4** - ■ . **R1** -Z
–	–	–	–	**126**	–	**126**	**126**	**126**	**126**	**126**	**126**	–	–	–	–	–	–	–	–	–	–	1FG1601- . . ■ ■ **3** - ■ . **R1** -Z
–	–	–	–	**126**	–	–	**126**	–	**126**	**126**	**126**	–	–	–	–	–	–	–	–	–	–	1FG1601- . . ■ ■ **2** - ■ . **R1** -Z
Max. output speed n_{2max} = **138 rpm**, Transmission ratio i = **32.64**																						
99	**99**	**99**	**99**	**99**	**99**	–	–	–	–	–	–	–	–	–	–	–	–	–	–	–	–	1FG1601- . . ■ ■ **6** - ■ . **Q1** -Z
–	–	–	–	–	**99**	**99**	**99**	**99**	**99**	**99**	**99**	–	–	–	–	–	–	–	–	–	–	1FG1601- . . ■ ■ **4** - ■ . **Q1** -Z
–	–	–	–	**99**	–	**99**	**99**	**99**	**99**	**99**	**99**	–	–	–	–	–	–	–	–	–	–	1FG1601- . . ■ ■ **3** - ■ . **Q1** -Z
–	–	–	–	**99**	–	–	**99**	–	**99**	**99**	**99**	–	–	–	–	–	–	–	–	–	–	1FG1601- . . ■ ■ **2** - ■ . **Q1** -Z
Max. output speed n_{2max} = **159 rpm**, Transmission ratio i = **28.32**																						
99	**99**	**99**	**99**	**99**	**99**	–	–	–	–	–	–	–	–	–	–	–	–	–	–	–	–	1FG1601- . . ■ ■ **6** - ■ . **P1** -Z
–	–	–	–	–	**99**	**99**	**99**	**99**	**99**	**99**	**99**	–	–	–	–	–	–	–	–	–	–	1FG1601- . . ■ ■ **4** - ■ . **P1** -Z
–	–	–	–	**99**	–	**99**	**99**	**99**	**99**	**99**	**99**	–	–	–	–	–	–	–	–	–	–	1FG1601- . . ■ ■ **3** - ■ . **P1** -Z
–	–	–	–	**99**	–	–	**99**	–	**99**	**99**	**99**	–	–	–	–	–	–	–	–	–	–	1FG1601- . . ■ ■ **2** - ■ . **P1** -Z
Max. output speed n_{2max} = **175 rpm**, Transmission ratio i = **25.75**																						
99	**99**	**99**	**99**	**99**	**99**	–	–	–	–	–	–	–	–	–	–	–	–	–	–	–	–	1FG1601- . . ■ ■ **6** - ■ . **N1** -Z
–	–	–	–	–	**99**	**99**	**99**	**99**	**99**	**99**	**99**	–	–	–	–	–	–	–	–	–	–	1FG1601- . . ■ ■ **4** - ■ . **N1** -Z
–	–	–	–	**99**	–	**99**	**99**	**99**	**99**	**99**	**99**	–	–	–	–	–	–	–	–	–	–	1FG1601- . . ■ ■ **3** - ■ . **N1** -Z
–	–	–	–	**99**	–	–	**99**	–	**99**	**99**	**99**	–	–	–	–	–	–	–	–	–	–	1FG1601- . . ■ ■ **2** - ■ . **N1** -Z

Motor shaft height:

1	2	3	4	5	6	7	8	9	10	11	12	13	14	15	16	17	18	19	20	21	22	
36																						**C**
			48																			**D**
							63															**E**
												80										**F**
																		100				**G**

Motor length/motor version (**CT** = Compact, **HD** = High Dynamic)**:**

1	2	3	4	5	6	7	8	9	10	11	12	13	14	15	16	17	18	19	20	21	22			
			0/CT				**0/CT**					**0/CT**						**0/CT**					**0**	**2**
													1/CT						**1/CT**				**1**	**2**
								1/HD															**1**	**4**
2/CT				**2/CT**					**2/CT**														**2**	**2**
										3/CT				**3/CT**						**3/CT**			**3**	**2**
	3/HD				**3/HD**																		**3**	**4**
		4/CT													**4/CT**								**4**	**2**
						4/HD					**4/HD**												**4**	**4**
																				5/CT			**5**	**2**
																5/HD							**5**	**4**
																	6/HD						**6**	**4**

Selection of Shaft design, encoder system, mounting type and special designs on page 6/4.

1FG1601- ■ ■ . . . - . ■ . . -Z

© Siemens 2019

Gearbox size 29, 2-stage – 1FG1601

For line voltage 380 ... 480 V 3 AC (DC link voltage 510 ... 720 V DC) **– Gearbox type** *C29*

Geared motor torque at 1450 rpm
Note: All values in **bold** print are maximum gearbox values.
M_{2dyn}
Nm

1	2	3	4	5	6	7	8	9	10	11	12	13	14	15	16	17	18	19	20	21	22	Servo helical worm geared motors SIMOTICS S-1FG1 Article No.
Max. output speed n_{2max} = **204 rpm**, Transmission ratio i = **22.08**																						
90	86	**99**	**99**	**99**	**99**	–	–	–	–	–	–	–	–	–	–	–	–	–	–	–	–	1FG1601- . . ■ ■ 6 - ■ . M1 -Z
–	–	–	–	–	**99**	**99**	**99**	**99**	**99**	**99**	**99**	–	–	–	–	–	–	–	–	–	–	1FG1601- . . ■ ■ 4 - ■ . M1 -Z
–	–	–	–	**99**	–	**99**	**99**	**99**	**99**	**99**	**99**	–	–	–	–	–	–	–	–	–	–	1FG1601- . . ■ ■ 3 - ■ . M1 -Z
–	–	–	–	**99**	–	–	**99**	–	**99**	**99**	**99**	–	–	–	–	–	–	–	–	–	–	1FG1601- . . ■ ■ 2 - ■ . M1 -Z
Max. output speed n_{2max} = **224 rpm**, Transmission ratio i = **20.07**																						
82	78	**99**	93	**99**	**99**	–	–	–	–	–	–	–	–	–	–	–	–	–	–	–	–	1FG1601- . . ■ ■ 6 - ■ . L1 -Z
–	–	–	–	–	**99**	**99**	**99**	**99**	**99**	**99**	**99**	–	–	–	–	–	–	–	–	–	–	1FG1601- . . ■ ■ 4 - ■ . L1 -Z
–	–	–	–	**99**	–	**99**	**99**	**99**	**99**	**99**	**99**	–	–	–	–	–	–	–	–	–	–	1FG1601- . . ■ ■ 3 - ■ . L1 -Z
–	–	–	–	**99**	–	–	**99**	–	**99**	**99**	**99**	–	–	–	–	–	–	–	–	–	–	1FG1601- . . ■ ■ 2 - ■ . L1 -Z
Max. output speed n_{2max} = **256 rpm**, Transmission ratio i = **17.6**																						
72	69	**99**	82	**99**	**99**	–	–	–	–	–	–	–	–	–	–	–	–	–	–	–	–	1FG1601- . . ■ ■ 6 - ■ . K1 -Z
–	–	–	–	–	**99**	**99**	**99**	**99**	**99**	**99**	**99**	–	–	–	–	–	–	–	–	–	–	1FG1601- . . ■ ■ 4 - ■ . K1 -Z
–	–	–	–	**99**	–	**99**	**99**	**99**	**99**	**99**	**99**	–	–	–	–	–	–	–	–	–	–	1FG1601- . . ■ ■ 3 - ■ . K1 -Z
–	–	–	–	**99**	–	–	**99**	–	**99**	**99**	**99**	–	–	–	–	–	–	–	–	–	–	1FG1601- . . ■ ■ 2 - ■ . K1 -Z
Max. output speed n_{2max} = **286 rpm**, Transmission ratio i = **15.71**																						
64	61	93	73	**99**	**99**	–	–	–	–	–	–	–	–	–	–	–	–	–	–	–	–	1FG1601- . . ■ ■ 6 - ■ . J1 -Z
–	–	–	–	–	**99**	**99**	**99**	**99**	**99**	**99**	**99**	–	–	–	–	–	–	–	–	–	–	1FG1601- . . ■ ■ 4 - ■ . J1 -Z
–	–	–	–	**99**	–	**99**	**99**	**99**	**99**	**99**	**99**	–	–	–	–	–	–	–	–	–	–	1FG1601- . . ■ ■ 3 - ■ . J1 -Z
–	–	–	–	**99**	–	–	**99**	–	**99**	**99**	**99**	–	–	–	–	–	–	–	–	–	–	1FG1601- . . ■ ■ 2 - ■ . J1 -Z
Max. output speed n_{2max} = **321 rpm**, Transmission ratio i = **14**																						
57	55	83	65	**99**	**99**	–	–	–	–	–	–	–	–	–	–	–	–	–	–	–	–	1FG1601- . . ■ ■ 6 - ■ . H1 -Z
–	–	–	–	–	**99**	**99**	**99**	**99**	**99**	**99**	**99**	–	–	–	–	–	–	–	–	–	–	1FG1601- . . ■ ■ 4 - ■ . H1 -Z
–	–	–	–	**99**	–	**99**	**99**	**99**	**99**	**99**	**99**	–	–	–	–	–	–	–	–	–	–	1FG1601- . . ■ ■ 3 - ■ . H1 -Z
–	–	–	–	**99**	–	–	**99**	–	**99**	**99**	**99**	–	–	–	–	–	–	–	–	–	–	1FG1601- . . ■ ■ 2 - ■ . H1 -Z
Max. output speed n_{2max} = **348 rpm**, Transmission ratio i = **12.92**																						
53	50	76	60	**99**	**99**	–	–	–	–	–	–	–	–	–	–	–	–	–	–	–	–	1FG1601- . . ■ ■ 6 - ■ . G1 -Z
–	–	–	–	–	**99**	**99**	**99**	**99**	**99**	**99**	**99**	–	–	–	–	–	–	–	–	–	–	1FG1601- . . ■ ■ 4 - ■ . G1 -Z
–	–	–	–	**99**	–	**99**	**99**	**99**	**99**	**99**	**99**	–	–	–	–	–	–	–	–	–	–	1FG1601- . . ■ ■ 3 - ■ . G1 -Z
–	–	–	–	**99**	–	–	**99**	–	**99**	**99**	**99**	–	–	–	–	–	–	–	–	–	–	1FG1601- . . ■ ■ 2 - ■ . G1 -Z
Max. output speed n_{2max} = **398 rpm**, Transmission ratio i = **11.31**																						
46	44	67	52	**99**	**99**	–	–	–	–	–	–	–	–	–	–	–	–	–	–	–	–	1FG1601- . . ■ ■ 6 - ■ . F1 -Z
–	–	–	–	–	**99**	**99**	**99**	**99**	**99**	**99**	**99**	–	–	–	–	–	–	–	–	–	–	1FG1601- . . ■ ■ 4 - ■ . F1 -Z
–	–	–	–	**99**	–	**99**	**99**	**99**	**99**	**99**	**99**	–	–	–	–	–	–	–	–	–	–	1FG1601- . . ■ ■ 3 - ■ . F1 -Z
–	–	–	–	**99**	–	–	**99**	–	**99**	**99**	**99**	–	–	–	–	–	–	–	–	–	–	1FG1601- . . ■ ■ 2 - ■ . F1 -Z
Max. output speed n_{2max} = **454 rpm**, Transmission ratio i = **9.92**																						
–	–	–	–	–	–	–	–	–	–	–	–	–	–	–	–	–	–	–	–	–	–	1FG1601- . . ■ ■ 6 - ■ . E1 -Z
–	–	–	–	–	–	–	**98**	**98**	**98**	**98**	**98**	–	–	–	–	–	–	–	–	–	–	1FG1601- . . ■ ■ 4 - ■ . E1 -Z
–	–	–	–	–	–	–	**98**	**98**	**98**	**98**	**98**	–	–	–	–	–	–	–	–	–	–	1FG1601- . . ■ ■ 3 - ■ . E1 -Z
–	–	–	–	–	–	–	**98**	–	**98**	**98**	**98**	–	–	–	–	–	–	–	–	–	–	1FG1601- . . ■ ■ 2 - ■ . E1 -Z

Motor shaft height:

1	2	3	4	5	6	7	8	9	10	11	12	13	14	15	16	17	18	19	20	21	22	
36																						C
			48																			D
							63															E
												80										F
																		100				G

Motor length/motor version (**CT** = Compact, **HD** = High Dynamic)**:**

1	2	3	4	5	6	7	8	9	10	11	12	13	14	15	16	17	18	19	20	21	22		
			0/CT				**0/CT**					**0/CT**						**0/CT**				0	2
													1/CT						**1/CT**			1	2
								1/HD														1	4
2/CT				**2/CT**					**2/CT**													2	2
										3/CT				**3/CT**					**3/CT**			3	2
	3/HD				**3/HD**																	3	4
		4/CT													**4/CT**							4	2
						4/HD					**4/HD**											4	4
																			5/CT			5	2
																5/HD						5	4
																	6/HD					6	4

Selection of Shaft design, encoder system, mounting type and special designs on page 6/4.

1FG1601- ■ ■ . . . - . ■ . . -Z

© Siemens 2019

For line voltage 380 ... 480 V 3 AC (DC link voltage 510 ... 720 V DC) **– Gearbox type** ***C29***

Geared motor torque at 1450 rpm
Note: All values in **bold** print are maximum gearbox values.
M_{2dyn}
Nm

Servo helical worm geared motors SIMOTICS S-1FG1
Article No.

Max. output speed n_{2max} = **485 rpm**, Transmission ratio i = **9**																						
–	–	–	–	–	–	–	–	–	–	–	–	–	–	–	–	–	–	–	–	–	–	1FG1601- . . ■ ■ 6 - ■ . D1 -Z
–	–	–	–	–	–	–	**98**	**98**	**98**	**98**	**98**	–	–	–	–	–	–	–	–	–	–	1FG1601- . . ■ ■ 4 - ■ . D1 -Z
–	–	–	–	–	–	–	**98**	**98**	**98**	**98**	**98**	–	–	–	–	–	–	–	–	–	–	1FG1601- . . ■ ■ 3 - ■ . D1 -Z
–	–	–	–	–	–	–	**98**	–	**98**	**98**	**98**	–	–	–	–	–	–	–	–	–	–	1FG1601- . . ■ ■ 2 - ■ . D1 -Z
Max. output speed n_{2max} = **485 rpm**, Transmission ratio i = **8.47**																						
–	–	–	–	–	–	–	–	–	–	–	–	–	–	–	–	–	–	–	–	–	–	1FG1601- . . ■ ■ 6 - ■ . C1 -Z
–	–	–	–	–	–	–	**98**	**98**	**98**	**98**	**98**	–	–	–	–	–	–	–	–	–	–	1FG1601- . . ■ ■ 4 - ■ . C1 -Z
–	–	–	–	–	–	–	**98**	**98**	**98**	**98**	**98**	–	–	–	–	–	–	–	–	–	–	1FG1601- . . ■ ■ 3 - ■ . C1 -Z
–	–	–	–	–	–	–	**98**	–	**98**	**98**	**98**	–	–	–	–	–	–	–	–	–	–	1FG1601- . . ■ ■ 2 - ■ . C1 -Z
Max. output speed n_{2max} = **517 rpm**, Transmission ratio i = **7.47**																						
–	–	–	–	–	–	–	–	–	–	–	–	–	–	–	–	–	–	–	–	–	–	1FG1601- . . ■ ■ 6 - ■ . B1 -Z
–	–	–	–	–	–	–	**98**	**98**	**98**	**98**	**98**	–	–	–	–	–	–	–	–	–	–	1FG1601- . . ■ ■ 4 - ■ . B1 -Z
–	–	–	–	–	–	–	**98**	**98**	**98**	**98**	**98**	–	–	–	–	–	–	–	–	–	–	1FG1601- . . ■ ■ 3 - ■ . B1 -Z
–	–	–	–	–	–	–	**98**	–	**98**	**98**	**98**	–	–	–	–	–	–	–	–	–	–	1FG1601- . . ■ ■ 2 - ■ . B1 -Z
Max. output speed n_{2max} = **598 rpm**, Transmission ratio i = **6.48**																						
–	–	–	–	–	–	–	–	–	–	–	–	–	–	–	–	–	–	–	–	–	–	1FG1601- . . ■ ■ 6 - ■ . A1 -Z
–	–	–	–	–	–	–	**94**	**94**	**94**	**94**	**94**	–	–	–	–	–	–	–	–	–	–	1FG1601- . . ■ ■ 4 - ■ . A1 -Z
–	–	–	–	–	–	–	**94**	**94**	**94**	**94**	**94**	–	–	–	–	–	–	–	–	–	–	1FG1601- . . ■ ■ 3 - ■ . A1 -Z
–	–	–	–	–	–	–	**94**	–	**94**	**94**	**94**	–	–	–	–	–	–	–	–	–	–	1FG1601- . . ■ ■ 2 - ■ . A1 -Z

Motor shaft height:

36																						**C**
			48																			**D**
							63															**E**
												80										**F**
																	100					**G**

Motor length/motor version (**CT** = Compact, **HD** = High Dynamic)**:**

			0/CT				**0/CT**					**0/CT**					**0/CT**					**0**	**2**
													1/CT					**1/CT**				**1**	**2**
								1/HD														**1**	**4**
2/CT				**2/CT**					**2/CT**													**2**	**2**
										3/CT				**3/CT**					**3/CT**			**3**	**2**
	3/HD				**3/HD**																	**3**	**4**
		4/CT														**4/CT**						**4**	**2**
						4/HD					**4/HD**											**4**	**4**
																			5/CT			**5**	**2**
															5/HD							**5**	**4**
																6/HD						**6**	**4**

Selection of Shaft design, encoder system, mounting type and special designs on page 6/4.

1FG1601- ■ ■ . . . . - . ■ . . **-Z**

© Siemens 2019

Gearbox size 29, 2-stage – 1FG1601

Selection and ordering data (continued)

For line voltage 200 ... 240 V 1 AC (DC link voltage 270 ... 330 V DC) **– Gearbox type** ***C29***

Max. output speed n_{2max} rpm	Transmission ratio i	Geared motor torque at 1450 rpm Note: All values in **bold** print are maximum gearbox values. M_{2dyn} Nm					**Servo helical worm geared motors SIMOTICS S-1FG1** Article No.
17	**265.2**	**127**	**127**	**127**	**127**	**127**	**1FG1601- . . ■ ■ 3 - ■ . M2 -Z**
20	**230.1**	**127**	**127**	**127**	**127**	**127**	**1FG1601- . . ■ ■ 3 - ■ . L2 -Z**
22	**209.18**	**127**	**127**	**127**	**127**	**127**	**1FG1601- . . ■ ■ 3 - ■ . K2 -Z**
25	**179.4**	**127**	**127**	**127**	**127**	**127**	**1FG1601- . . ■ ■ 3 - ■ . J2 -Z**
28	**163.09**	**127**	**127**	**127**	**127**	**127**	**1FG1601- . . ■ ■ 3 - ■ . H2 -Z**
31	**143**	**127**	**127**	**127**	**127**	**127**	**1FG1601- . . ■ ■ 3 - ■ . G2 -Z**
35	**127.64**	**127**	**127**	**127**	**127**	**127**	**1FG1601- . . ■ ■ 3 - ■ . F2 -Z**
40	**113.75**	**127**	**127**	**127**	**127**	**127**	**1FG1601- . . ■ ■ 3 - ■ . E2 -Z**
43	**105**	**127**	**127**	**127**	**127**	**127**	**1FG1601- . . ■ ■ 3 - ■ . D2 -Z**
49	**91.93**	**127**	**127**	**127**	**127**	**127**	**1FG1601- . . ■ ■ 3 - ■ . C2 -Z**
56	**80.6**	**127**	**127**	**127**	**127**	**127**	**1FG1601- . . ■ ■ 3 - ■ . B2 -Z**
62	**73.12**	**127**	**127**	**127**	**127**	**127**	**1FG1601- . . ■ ■ 3 - ■ . A2 -Z**
65	**68.82**	**127**	**127**	**127**	**127**	**127**	**1FG1601- . . ■ ■ 3 - ■ . X1 -Z**
72	**60.67**	**127**	**127**	**127**	**127**	**127**	**1FG1601- . . ■ ■ 3 - ■ . W1 -Z**
70	**52.65**	**127**	**127**	**127**	**127**	**127**	**1FG1601- . . ■ ■ 3 - ■ . V1 -Z**
90	**49.87**	**126**	**126**	**126**	**126**	**126**	**1FG1601- . . ■ ■ 3 - ■ . U1 -Z**
104	**43.27**	**126**	**126**	**126**	**126**	**126**	**1FG1601- . . ■ ■ 3 - ■ . T1 -Z**
114	**39.33**	**126**	**126**	**126**	**126**	**126**	**1FG1601- . . ■ ■ 3 - ■ . S1 -Z**
133	**33.73**	**126**	**126**	**126**	**126**	**126**	**1FG1601- . . ■ ■ 3 - ■ . R1 -Z**
138	**32.64**	**99**	**99**	**99**	**99**	**99**	**1FG1601- . . ■ ■ 3 - ■ . Q1 -Z**
159	**28.32**	**99**	**99**	**99**	**99**	**99**	**1FG1601- . . ■ ■ 3 - ■ . P1 -Z**
175	**25.75**	**99**	**99**	**99**	**99**	**99**	**1FG1601- . . ■ ■ 3 - ■ . N1 -Z**
204	**22.08**	90	86	**99**	**99**	**99**	**1FG1601- . . ■ ■ 3 - ■ . M1 -Z**
224	**20.07**	82	78	**99**	**99**	**99**	**1FG1601- . . ■ ■ 3 - ■ . L1 -Z**
256	**17.6**	72	69	**99**	**99**	**99**	**1FG1601- . . ■ ■ 3 - ■ . K1 -Z**
286	**15.71**	64	61	93	**99**	**99**	**1FG1601- . . ■ ■ 3 - ■ . J1 -Z**
321	**14**	57	55	83	**99**	**99**	**1FG1601- . . ■ ■ 3 - ■ . H1 -Z**
348	**12.92**	53	50	76	**99**	**99**	**1FG1601- . . ■ ■ 3 - ■ . G1 -Z**
398	**11.31**	46	44	67	**99**	**99**	**1FG1601- . . ■ ■ 3 - ■ . F1 -Z**

Motor shaft height:

	36					**C**	
				48		**D**	

Motor length/motor version (**CT** = Compact, **HD** = High Dynamic)**:**

2/CT			**2/CT**			**2**	**1**
	3/HD			**3/HD**		**3**	**3**
		4/CT				**4**	**1**

Selection of Shaft design, encoder system, mounting type and special designs on page 6/4.

1FG1601- ■ ■ . . . - . ■ . . -Z

© Siemens 2019

Technical specifications

Gearbox type *C39*

Servo geared motor Type	i	R_{ex}	M_{2rated} Nm	M_{2max} Nm	$M_{2Em.Off}$ Nm	n_{2max} rpm	n_{1max} rpm	φ '	F_{R2} N	F_{R2max} N	c_T Nm/ '	J_G 10^{-4} kgm^2
1FG1602-.....-..N2	299	299/1	192	245	275	15	4500	–	6180	5980	–	0.04
1FG1602-.....-..M2	265.2	1326/5	192	250	275	17	4500	–	6180	5970	–	0.05
1FG1602-.....-..L2	230.1	2301/10	193	250	270	20	4500	–	6180	5970	–	0.06
1FG1602-.....-..K2	209.18	2301/11	193	250	270	22	4500	–	6180	5970	–	0.07
1FG1602-.....-..J2	179.4	897/5	193	245	265	25	4500	–	6180	5980	–	0.09
1FG1602-.....-..H2	163.09	1794/11	193	250	265	28	4500	–	6180	5970	–	0.11
1FG1602-.....-..G2	143	143/1	194	250	265	31	4500	–	6170	5970	–	0.12
1FG1602-.....-..F2	127.64	1404/11	194	250	265	34	4300	–	6170	5970	–	0.15
1FG1602-.....-..E2	113.75	455/4	194	250	260	34	3825	–	6170	5970	–	0.18
1FG1602-.....-..D2	105	105/1	194	250	260	33	3516	–	6170	5970	–	0.21
1FG1602-.....-..C2	91.93	1287/14	194	230	260	37	3422	–	6170	6040	–	0.24
1FG1602-.....-..B2	80.6	403/5	194	220	255	44	3517	–	6170	6080	–	0.26
1FG1602-.....-..A2	73.12	585/8	194	210	255	49	3567	–	6170	6110	–	0.33
1FG1602-.....-..X1	68.82	1170/17	194	200	250	52	3548	–	6170	6150	–	0.38
1FG1602-.....-..W1	60.67	182/3	183	192	250	57	3446	–	6210	6180	–	0.43
1FG1602-.....-..V1	52.65	1053/20	170	180	250	66	3468	–	6260	6230	–	0.57
1FG1602-.....-..U1	49.87	748/15	198	250	250	90	4500	–	6160	5970	–	0.06
1FG1602-.....-..T1	43.27	649/15	199	250	250	104	4500	–	6150	5830	–	0.07
1FG1602-.....-..S1	39.33	118/3	200	250	250	114	4500	–	6090	5570	–	0.08
1FG1602-.....-..R1	33.73	506/15	200	250	250	133	4500	–	5690	5170	–	0.11
1FG1602-.....-..Q1	32.64	816/25	215	215	255	138	4500	–	5190	5190	–	0.07
1FG1602-.....-..P1	28.32	708/25	235	235	255	159	4500	–	4610	4610	–	0.08
1FG1602-.....-..N1	25.75	1416/55	235	255	255	175	4500	–	4380	4150	–	0.1
1FG1602-.....-..M1	22.08	552/25	235	245	255	204	4500	–	4030	3920	–	0.13
1FG1602-.....-..L1	20.07	1104/55	235	255	255	193	3878	–	3830	3600	–	0.16
1FG1602-.....-..K1	17.6	88/5	225	240	255	220	3880	–	3660	3490	–	0.19
1FG1602-.....-..J1	15.71	864/55	215	230	255	245	3850	–	3550	3380	–	0.23
1FG1602-.....-..H1	14	14/1	205	220	255	275	3846	–	3440	3270	–	0.28
1FG1602-.....-..G1	12.92	168/13	199	210	255	307	3967	–	3360	3230	–	0.34
1FG1602-.....-..F1	11.31	396/35	189	200	260	351	3973	–	3230	3100	–	0.41
1FG1602-.....-..E1	9.92	248/25	181	195	260	381	3775	–	3090	2930	–	0.44
1FG1602-.....-..D1	9	9/1	174	187	265	420	3779	–	3010	2860	–	0.59
1FG1602-.....-..C1	8.47	144/17	170	182	265	448	3792	–	2950	2820	–	0.68
1FG1602-.....-..B1	7.47	112/15	163	175	265	510	3809	–	2830	2700	–	0.81
1FG1602-.....-..A1	6.48	162/25	154	165	270	592	3834	–	2720	2600	–	1.08

© Siemens 2019

Gearbox size 39, 2-stage – 1FG1602

Selection and ordering data

Shaft design, encoder system, mounting type and special designs

Gearbox type ***C39***

			Servo helical worm geared motors SIMOTICS S-1FG1 Article No. **1FG1602-** ■■ . . . - . ■ . . **-Z**
Shaft design:	Solid shaft with feather keyway	– Design 1	**1**
		– Design 3	**3**
	Hollow-shaft with feather keyway	– Design 1 – H25	**5**
		– Design 2 – H30	**6**
Order codes and Descriptions see chapter "Options"	Special shaft design		**9**
Encoder system for motors with DRIVE-CLiQ interface:	AS20DQI encoder		**Q**
	AM20DQI encoder		**R**
	R14DQ resolver		**P**
	R15DQ resolver		**U**
Order codes and Descriptions see chapter "Options"	Special version encoder system		**Z**
Mounting type:	Foot-mounted design		**A**
	Flange-mounted design		**F**
	Housing flange design		**H**
	Shaft-mounted design (not possible with solid shaft)		**D**
Special designs (Options): Order codes and Descriptions see chapter "Options" The following order codes must be added to each article number: • Oil type – order codes **K08** or **K11** • Mounting position – order codes **D11** ... **D16** or **D21** ... **D26**			**-Z**

Selection of 2-stages Servo helical worm geared motors with gearbox size 39 from next page. **1FG1602-** . . ■■■ - ■ . ■■ **-Z**

© Siemens 2019

Selection and ordering data (continued)

For line voltage 380 ... 480 V 3 AC (DC link voltage 510 ... 720 V DC) **– Gearbox type** *C39*

Geared motor torque at 1450 rpm
Note: All values in **bold** print are maximum gearbox values.
M_{2dyn}
Nm

Servo helical worm geared motors SIMOTICS S-1FG1
Article No.

36	48	63	80	100	Article No.
Max. output speed n_{2max} = 15 rpm, Transmission ratio i = 299					
245	–	–	–	–	1FG1602- . . ■ ■ 6 - ■ . N2 -Z
–	**245**	–	–	–	1FG1602- . . ■ ■ 4 - ■ . N2 -Z
–	**245**	–	–	–	1FG1602- . . ■ ■ 3 - ■ . N2 -Z
–	**245**	–	–	–	1FG1602- . . ■ ■ 2 - ■ . N2 -Z
Max. output speed n_{2max} = 17 rpm, Transmission ratio i = 265.2					
250	–	–	–	–	1FG1602- . . ■ ■ 6 - ■ . M2 -Z
–	**250**	**250**	–	–	1FG1602- . . ■ ■ 4 - ■ . M2 -Z
–	**250**	**250**	–	–	1FG1602- . . ■ ■ 3 - ■ . M2 -Z
–	–	**250**	–	–	1FG1602- . . ■ ■ 2 - ■ . M2 -Z
Max. output speed n_{2max} = 20 rpm, Transmission ratio i = 230.1					
250	–	–	–	–	1FG1602- . . ■ ■ 6 - ■ . L2 -Z
–	**250**	**250**	–	–	1FG1602- . . ■ ■ 4 - ■ . L2 -Z
–	**250**	**250**	–	–	1FG1602- . . ■ ■ 3 - ■ . L2 -Z
–	–	**250**	–	–	1FG1602- . . ■ ■ 2 - ■ . L2 -Z
Max. output speed n_{2max} = 22 rpm, Transmission ratio i = 209.18					
250	–	–	–	–	1FG1602- . . ■ ■ 6 - ■ . K2 -Z
–	**250**	**250**	–	–	1FG1602- . . ■ ■ 4 - ■ . K2 -Z
–	**250**	**250**	–	–	1FG1602- . . ■ ■ 3 - ■ . K2 -Z
–	–	**250**	–	–	1FG1602- . . ■ ■ 2 - ■ . K2 -Z
Max. output speed n_{2max} = 25 rpm, Transmission ratio i = 179.4					
245	–	–	–	–	1FG1602- . . ■ ■ 6 - ■ . J2 -Z
–	**245**	**245**	–	–	1FG1602- . . ■ ■ 4 - ■ . J2 -Z
–	**245**	**245**	–	–	1FG1602- . . ■ ■ 3 - ■ . J2 -Z
–	–	**245**	–	–	1FG1602- . . ■ ■ 2 - ■ . J2 -Z
Max. output speed n_{2max} = 28 rpm, Transmission ratio i = 163.09					
250	–	–	–	–	1FG1602- . . ■ ■ 6 - ■ . H2 -Z
–	**250**	**250**	–	–	1FG1602- . . ■ ■ 4 - ■ . H2 -Z
–	**250**	**250**	–	–	1FG1602- . . ■ ■ 3 - ■ . H2 -Z
–	–	**250**	–	–	1FG1602- . . ■ ■ 2 - ■ . H2 -Z
Max. output speed n_{2max} = 31 rpm, Transmission ratio i = 143					
250	–	–	–	–	1FG1602- . . ■ ■ 6 - ■ . G2 -Z
–	**250**	**250**	**250**	–	1FG1602- . . ■ ■ 4 - ■ . G2 -Z
–	**250**	**250**	**250**	**250**	1FG1602- . . ■ ■ 3 - ■ . G2 -Z
–	–	**250**	**250**	**250**	1FG1602- . . ■ ■ 2 - ■ . G2 -Z

Motor shaft height:						
36					**C**	
	48				**D**	
		63			**E**	
			80		**F**	
				100	**G**	
Motor length/motor version (**CT** = Compact, **HD** = High Dynamic)**:**						
0/CT	**0/CT**	**0/CT**	**0/CT**		**0**	**2**
		1/CT		**1/CT**	**1**	**2**
	1/HD				**1**	**4**
2/CT	**2/CT**	**2/CT**			**2**	**2**
		3/CT	**3/CT**	**3/CT**	**3**	**2**
3/HD	**3/HD**				**3**	**4**
4/CT			**4/CT**		**4**	**2**
	4/HD	**4/HD**			**4**	**4**
				5/CT	**5**	**2**
			5/HD		**5**	**4**
			6/HD		**6**	**4**

Selection of Shaft design, encoder system, mounting type and special designs on page 6/12.

1FG1602- ■ ■ . . . . - . ■ . . -Z

© Siemens 2019

Gearbox size 39, 2-stage – 1FG1602

For line voltage 380 ... 480 V 3 AC (DC link voltage 510 ... 720 V DC) **– Gearbox type** *C39*

Geared motor torque at 1450 rpm
Note: All values in **bold** print are maximum gearbox values.
M_{2dyn}
Nm

Servo helical worm geared motors SIMOTICS S-1FG1
Article No.

1	2	3	4	5	6	7	8	9	10	11	12	13	14	15	16	17	18	19	20	21	22	Article No.
Max. output speed n_{2max} = **35 rpm**, Transmission ratio i = **250.64**																						
250	**250**	**250**	**250**	**250**	**250**	–	–	–	–	–	–	–	–	–	–	–	–	–	–	–	–	1FG1602- . . ■ ■ **6** - ■ . **F2** -Z
–	–	–	–	–	**250**	**250**	**250**	**250**	**250**	**250**	**250**	**250**	**250**	**250**	–	–	–	–	–	–	–	1FG1602- . . ■ ■ **4** - ■ . **F2** -Z
–	–	–	–	**250**	–	**250**	**250**	**250**	**250**	**250**	**250**	**250**	**250**	**250**	**250**	**250**	**250**	–	–	–	–	1FG1602- . . ■ ■ **3** - ■ . **F2** -Z
–	–	–	–	**250**	–	–	**250**	–	**250**	**250**	**250**	–	**250**	**250**	**250**	**250**	**250**	–	–	–	–	1FG1602- . . ■ ■ **2** - ■ . **F2** -Z
Max. output speed n_{2max} = **40 rpm**, Transmission ratio i = **113.75**																						
250	**250**	**250**	**250**	**250**	**250**	–	–	–	–	–	–	–	–	–	–	–	–	–	–	–	–	1FG1602- . . ■ ■ **6** - ■ . **E2** -Z
–	–	–	–	–	**250**	**250**	**250**	**250**	**250**	**250**	**250**	**250**	**250**	**250**	–	–	–	–	–	–	–	1FG1602- . . ■ ■ **4** - ■ . **E2** -Z
–	–	–	–	**250**	–	**250**	**250**	**250**	**250**	**250**	**250**	**250**	**250**	**250**	**250**	**250**	**250**	–	–	–	–	1FG1602- . . ■ ■ **3** - ■ . **E2** -Z
–	–	–	–	**250**	–	–	**250**	–	**250**	**250**	**250**	–	**250**	**250**	**250**	**250**	**250**	–	–	–	–	1FG1602- . . ■ ■ **2** - ■ . **E2** -Z
Max. output speed n_{2max} = **43 rpm**, Transmission ratio i = **105**																						
250	**250**	**250**	**250**	**250**	**250**	–	–	–	–	–	–	–	–	–	–	–	–	–	–	–	–	1FG1602- . . ■ ■ **6** - ■ . **D2** -Z
–	–	–	–	–	**250**	**250**	**250**	**250**	**250**	**250**	**250**	**250**	**250**	**250**	–	–	–	–	–	–	–	1FG1602- . . ■ ■ **4** - ■ . **D2** -Z
–	–	–	–	**250**	–	**250**	**250**	**250**	**250**	**250**	**250**	**250**	**250**	**250**	**250**	**250**	**250**	–	–	–	–	1FG1602- . . ■ ■ **3** - ■ . **D2** -Z
–	–	–	–	**250**	–	–	**250**	–	**250**	**250**	**250**	–	**250**	**250**	**250**	**250**	**250**	–	–	–	–	1FG1602- . . ■ ■ **2** - ■ . **D2** -Z
Max. output speed n_{2max} = **49 rpm**, Transmission ratio i = **91.93**																						
230	**230**	**230**	**230**	**230**	**230**	–	–	–	–	–	–	–	–	–	–	–	–	–	–	–	–	1FG1602- . . ■ ■ **6** - ■ . **C2** -Z
–	–	–	–	–	**230**	**230**	**230**	**230**	**230**	**230**	**230**	**230**	**230**	**230**	–	–	–	–	–	–	–	1FG1602- . . ■ ■ **4** - ■ . **C2** -Z
–	–	–	–	**230**	–	**230**	**230**	**230**	**230**	**230**	**230**	**230**	**230**	**230**	**230**	**230**	**230**	–	–	–	–	1FG1602- . . ■ ■ **3** - ■ . **C2** -Z
–	–	–	–	**230**	–	–	**230**	–	**230**	**230**	**230**	–	**230**	**230**	**230**	**230**	**230**	–	–	–	–	1FG1602- . . ■ ■ **2** - ■ . **C2** -Z
Max. output speed n_{2max} = **56 rpm**, Transmission ratio i = **80.6**																						
220	**220**	**220**	**220**	**220**	**220**	–	–	–	–	–	–	–	–	–	–	–	–	–	–	–	–	1FG1602- . . ■ ■ **6** - ■ . **B2** -Z
–	–	–	–	–	**220**	**220**	**220**	**220**	**220**	**220**	**220**	**220**	**220**	**220**	–	–	–	–	–	–	–	1FG1602- . . ■ ■ **4** - ■ . **B2** -Z
–	–	–	–	**220**	–	**220**	**220**	**220**	**220**	**220**	**220**	**220**	**220**	**220**	**220**	**220**	**220**	–	–	–	–	1FG1602- . . ■ ■ **3** - ■ . **B2** -Z
–	–	–	–	**220**	–	–	**220**	–	**220**	**220**	**220**	–	**220**	**220**	**220**	**220**	**220**	–	–	–	–	1FG1602- . . ■ ■ **2** - ■ . **B2** -Z
Max. output speed n_{2max} = **62 rpm**, Transmission ratio i = **73.12**																						
210	**210**	**210**	**210**	**210**	**210**	–	–	–	–	–	–	–	–	–	–	–	–	–	–	–	–	1FG1602- . . ■ ■ **6** - ■ . **A2** -Z
–	–	–	–	–	**210**	**210**	**210**	**210**	**210**	**210**	**210**	**210**	**210**	**210**	–	–	–	–	–	–	–	1FG1602- . . ■ ■ **4** - ■ . **A2** -Z
–	–	–	–	**210**	–	**210**	**210**	**210**	**210**	**210**	**210**	**210**	**210**	**210**	**210**	**210**	**210**	–	–	–	–	1FG1602- . . ■ ■ **3** - ■ . **A2** -Z
–	–	–	–	**210**	–	–	**210**	–	**210**	**210**	**210**	–	**210**	**210**	**210**	**210**	**210**	–	–	–	–	1FG1602- . . ■ ■ **2** - ■ . **A2** -Z
Max. output speed n_{2max} = **65 rpm**, Transmission ratio i = **68.82**																						
200	**200**	**200**	**200**	**200**	**200**	–	–	–	–	–	–	–	–	–	–	–	–	–	–	–	–	1FG1602- . . ■ ■ **6** - ■ . **X1** -Z
–	–	–	–	–	**200**	**200**	**200**	**200**	**200**	**200**	**200**	**200**	**200**	**200**	–	–	–	–	–	–	–	1FG1602- . . ■ ■ **4** - ■ . **X1** -Z
–	–	–	–	**200**	–	**200**	**200**	**200**	**200**	**200**	**200**	**200**	**200**	**200**	**200**	**200**	**200**	–	–	–	–	1FG1602- . . ■ ■ **3** - ■ . **X1** -Z
–	–	–	–	**200**	–	–	**200**	–	**200**	**200**	**200**	–	**200**	**200**	**200**	**200**	**200**	–	–	–	–	1FG1602- . . ■ ■ **2** - ■ . **X1** -Z
Max. output speed n_{2max} = **74 rpm**, Transmission ratio i = **60.67**																						
192	189	**192**	**192**	**192**	**192**	–	–	–	–	–	–	–	–	–	–	–	–	–	–	–	–	1FG1602- . . ■ ■ **6** - ■ . **W1** -Z
–	–	–	–	–	**192**	**192**	**192**	**192**	**192**	**192**	**192**	**192**	**192**	**192**				–	–	–	–	1FG1602- . . ■ ■ **4** - ■ . **W1** -Z
–	–	–	–	**192**	–	**192**	**192**	**192**	**192**	**192**	**192**	**192**	**192**	**192**	**192**	**192**	**192**	–	–	–	–	1FG1602- . . ■ ■ **3** - ■ . **W1** -Z
–	–	–	–	**192**	–	–	**192**		**192**	**192**	**192**	–	**192**	**192**	**192**	**192**	**192**	–	–	–	–	1FG1602- . . ■ ■ **2** - ■ . **W1** -Z

Motor shaft height:

1	2	3	4	5	6	7	8	9	10	11	12	13	14	15	16	17	18	19	20	21	22	
36																						**C**
			48																			**D**
							63															**E**
												80										**F**
																	100					**G**

Motor length/motor version (**CT** = Compact, **HD** = High Dynamic)**:**

1	2	3	4	5	6	7	8	9	10	11	12	13	14	15	16	17	18	19	20	21	22		
			0/CT				**0/CT**					**0/CT**						**0/CT**				**0**	**2**
													1/CT						**1/CT**			**1**	**2**
								1/HD														**1**	**4**
2/CT				**2/CT**					**2/CT**													**2**	**2**
										3/CT				**3/CT**					**3/CT**			**3**	**2**
	3/HD				**3/HD**																	**3**	**4**
		4/CT													**4/CT**							**4**	**2**
						4/HD					**4/HD**											**4**	**4**
																				5/CT		**5**	**2**
																5/HD						**5**	**4**
																	6/HD					**6**	**4**

Selection of Shaft design, encoder system, mounting type and special designs on page 6/12.

1FG1602- ■ ■ . . . - . ■ . . -Z

© Siemens 2019

For line voltage 380 ... 480 V 3 AC (DC link voltage 510 ... 720 V DC) **– Gearbox type** ***C39***

Geared motor torque at 1450 rpm
Note: All values in **bold** print are maximum gearbox values.
M_{2dyn}
Nm

																						Servo helical worm geared motors SIMOTICS S-1FG1 Article No.
Max. output speed n_{2max} = **85 rpm**, Transmission ratio i = **52.65**																						
171	164	**180**	**180**	**180**	**180**	–	–	–	–	–	–	–	–	–	–	–	–	–	–	–	–	1FG1602- . . ■ ■ 6 - ■ . V1 -Z
–	–	–	–	–	**180**	**180**	**180**	**180**	**180**	**180**	**180**	**180**	**180**	**180**	–	–	–	–	–	–	–	1FG1602- . . ■ ■ 4 - ■ . V1 -Z
–	–	–	–	**180**	–	**180**	**180**	**180**	**180**	**180**	**180**	**180**	**180**	**180**	**180**	**180**	**180**	–	–	–	–	1FG1602- . . ■ ■ 3 - ■ . V1 -Z
–	–	–	–	**180**	–	–	**180**		**180**	**180**	**180**	–	**180**	**180**	**180**	**180**	**180**	–	–	–	–	1FG1602- . . ■ ■ 2 - ■ . V1 -Z
Max. output speed n_{2max} = **90 rpm**, Transmission ratio i = **49.87**																						
199	190	**250**	225	**250**	**250**	–	–	–	–	–	–	–	–	–	–	–	–	–	–	–	–	1FG1602- . . ■ ■ 6 - ■ . U1 -Z
–	–	–	–	–	**250**	**250**	**250**	**250**	**250**	**250**	**250**	–	–	–	–	–	–	–	–	–	–	1FG1602- . . ■ ■ 4 - ■ . U1 -Z
–	–	–	–	**250**	–	**250**	**250**	**250**	**250**	**250**	**250**	–	–	–	–	–	–	–	–	–	–	1FG1602- . . ■ ■ 3 - ■ . U1 -Z
–	–	–	–	**250**	–	–	**250**	–	**250**	**250**	**250**	–	–	–	–	–	–	–	–	–	–	1FG1602- . . ■ ■ 2 - ■ . U1 -Z
Max. output speed n_{2max} = **104 rpm**, Transmission ratio i = **43.27**																						
172	165	245	195	**250**	**250**	–	–	–	–	–	–	–	–	–	–	–	–	–	–	–	–	1FG1602- . . ■ ■ 6 - ■ . T1 -Z
–	–	–	–	–	**250**	**250**	**250**	**250**	**250**	**250**	**250**	–	–	–	–	–	–	–	–	–	–	1FG1602- . . ■ ■ 4 - ■ . T1 -Z
–	–	–	–	**250**	–	**250**	**250**	**250**	**250**	**250**	**250**	–	–	–	–	–	–	–	–	–	–	1FG1602- . . ■ ■ 3 - ■ . T1 -Z
–	–	–	–	**250**	–	–	**250**	–	**250**	**250**	**250**	–	–	–	–	–	–	–	–	–	–	1FG1602- . . ■ ■ 2 - ■ . T1 -Z
Max. output speed n_{2max} = **114 rpm**, Transmission ratio i = **39.33**																						
157	150	225	177	**250**	**250**	–	–	–	–	–	–	–	–	–	–	–	–	–	–	–	–	1FG1602- . . ■ ■ 6 - ■ . S1 -Z
–	–	–	–	–	**250**	**250**	**250**	**250**	**250**	**250**	**250**	–	–	–	–	–	–	–	–	–	–	1FG1602- . . ■ ■ 4 - ■ . S1 -Z
–	–	–	–	**250**	–	**250**	**250**	**250**	**250**	**250**	**250**	–	–	–	–	–	–	–	–	–	–	1FG1602- . . ■ ■ 3 - ■ . S1 -Z
–	–	–	–	**250**	–	–	**250**	–	**250**	**250**	**250**	–	–	–	–	–	–	–	–	–	–	1FG1602- . . ■ ■ 2 - ■ . S1 -Z
Max. output speed n_{2max} = **133 rpm**, Transmission ratio i = **33.73**																						
134	128	194	152	**250**	**250**	–	–	–	–	–	–	–	–	–	–	–	–	–	–	–	–	1FG1602- . . ■ ■ 6 - ■ . R1 -Z
–	–	–	–	–	**250**	**250**	**250**	**250**	**250**	**250**	**250**	–	–	–	–	–	–	–	–	–	–	1FG1602- . . ■ ■ 4 - ■ . R1 -Z
–	–	–	–	**250**	–	**250**	**250**	**250**	**250**	**250**	**250**	–	–	–	–	–	–	–	–	–	–	1FG1602- . . ■ ■ 3 - ■ . R1 -Z
–	–	–	–	**250**	–	–	**250**	–	**250**	**250**	**250**	–	–	–	–	–	–	–	–	–	–	1FG1602- . . ■ ■ 2 - ■ . R1 -Z
Max. output speed n_{2max} = **138 rpm**, Transmission ratio i = **32.64**																						
133	127	193	151	**215**	**215**	–	–	–	–	–	–	–	–	–	–	–	–	–	–	–	–	1FG1602- . . ■ ■ 6 - ■ . Q1 -Z
–	–	–	–	–	**215**	**215**	**215**	**215**	**215**	**215**	**215**	–	–	–	–	–	–	–	–	–	–	1FG1602- . . ■ ■ 4 - ■ . Q1 -Z
–	–	–	–	**215**	–	**215**	**215**	**215**	**215**	**215**	**215**	–	–	–	–	–	–	–	–	–	–	1FG1602- . . ■ ■ 3 - ■ . Q1 -Z
–	–	–	–	**215**	–	–	**215**	–	**215**	**215**	**215**	–	–	–	–	–	–	–	–	–	–	1FG1602- . . ■ ■ 2 - ■ . Q1 -Z
Max. output speed n_{2max} = **159 rpm**, Transmission ratio i = **28.32**																						
116	111	168	131	**235**	**235**	–	–	–	–	–	–	–	–	–	–	–	–	–	–	–	–	1FG1602- . . ■ ■ 6 - ■ . P1 -Z
–	–	–	–	–	**235**	**235**	**235**	**235**	**235**	**235**	**235**	–	–	–	–	–	–	–	–	–	–	1FG1602- . . ■ ■ 4 - ■ . P1 -Z
–	–	–	–	**235**	–	**235**	**235**	**235**	**235**	**235**	**235**	–	–	–	–	–	–	–	–	–	–	1FG1602- . . ■ ■ 3 - ■ . P1 -Z
–	–	–	–	**235**	–	–	**235**	–	**235**	**235**	**235**	–	–	–	–	–	–	–	–	–	–	1FG1602- . . ■ ■ 2 - ■ . P1 -Z
Max. output speed n_{2max} = **175 rpm**, Transmission ratio i = **25.75**																						
105	101	152	119	245	235	–	–	–	–	–	–	–	–	–	–	–	–	–	–	–	–	1FG1602- . . ■ ■ 6 - ■ . N1 -Z
–	–	–	–	–	235	**255**	**255**	**255**	**255**	**255**	**255**	–	–	–	–	–	–	–	–	–	–	1FG1602- . . ■ ■ 4 - ■ . N1 -Z
–	–	–	–	245	–	**255**	**255**	**255**	**255**	**255**	**255**	–	–	–	–	–	–	–	–	–	–	1FG1602- . . ■ ■ 3 - ■ . N1 -Z
–	–	–	–	245	–	–	**255**	–	**255**	**255**	**255**	–	–	–	–	–	–	–	–	–	–	1FG1602- . . ■ ■ 2 - ■ . N1 -Z

Motor shaft height:

36																						**C**
			48																			**D**
							63															**E**
												80										**F**
																		100				**G**

Motor length/motor version (**CT** = Compact, **HD** = High Dynamic)**:**

			0/CT				**0/CT**				**0/CT**						**0/CT**					**0**	**2**
												1/CT						**1/CT**				**1**	**2**
								1/HD														**1**	**4**
2/CT				**2/CT**					**2/CT**													**2**	**2**
										3/CT				**3/CT**					**3/CT**			**3**	**2**
	3/HD				**3/HD**																	**3**	**4**
		4/CT														**4/CT**						**4**	**2**
						4/HD					**4/HD**											**4**	**4**
																				5/CT		**5**	**2**
															5/HD							**5**	**4**
																6/HD						**6**	**4**

Selection of Shaft design, encoder system, mounting type and special designs on page 6/12.

1FG1602- ■ ■ . . . - . ■ . . -Z

© Siemens 2019

Gearbox size 39, 2-stage – 1FG1602

For line voltage 380 ... 480 V 3 AC (DC link voltage 510 ... 720 V DC) **– Gearbox type** *C39*

Geared motor torque at 1450 rpm
Note: All values in **bold** print are maximum gearbox values.
M_{2dyn} Nm

1	2	3	4	5	6	7	8	9	10	11	12	13	14	15	16	17	18	19	20	21	Servo helical worm geared motors SIMOTICS S-1FG1 Article No.
Max. output speed n_{2max} = **193 rpm**, Transmission ratio i = **20.07**																					
82	78	119	93	192	183	–	–	–	–	–	–	–	–	–	–	–	–	–	–	–	1FG1602- . . ■ ■ 6 - ■ . L1 -Z
–	–	–	–	–	183	205	**255**	**255**	**255**	**255**	**255**	–	–	–	–	–	–	–	–	–	1FG1602- . . ■ ■ 4 - ■ . L1 -Z
–	–	–	–	192	–	205	**255**	**255**	**255**	**255**	**255**	–	–	–	–	–	–	–	–	–	1FG1602- . . ■ ■ 3 - ■ . L1 -Z
–	–	–	–	192	–	–	**255**	–	**255**	**255**	**255**	–	–	–	–	–	–	–	–	–	1FG1602- . . ■ ■ 2 - ■ . L1 -Z
Max. output speed n_{2max} = **204 rpm**, Transmission ratio i = **22.08**																					
90	86	131	103	210	200	–	–	–	–	–	–	–	–	–	–	–	–	–	–	–	1FG1602- . . ■ ■ 6 - ■ . M1 -Z
–	–	–	–	–	200	225	**245**	**245**	**245**	**245**	**245**	–	–	–	–	–	–	–	–	–	1FG1602- . . ■ ■ 4 - ■ . M1 -Z
–	–	–	–	210	–	225	**245**	**245**	**245**	**245**	**245**	–	–	–	–	–	–	–	–	–	1FG1602- . . ■ ■ 3 - ■ . M1 -Z
–	–	–	–	210	–	–	**245**	–	**245**	**245**	**245**	–	–	–	–	–	–	–	–	–	1FG1602- . . ■ ■ 2 - ■ . M1 -Z
Max. output speed n_{2max} = **220 rpm**, Transmission ratio i = **17.6**																					
72	69	104	82	169	161	–	–	–	–	–	–	–	–	–	–	–	–	–	–	–	1FG1602- . . ■ ■ 6 - ■ . K1 -Z
–	–	–	–	–	161	181	**240**	**240**	**240**	**240**	**240**	**240**	**240**	**240**	–	–	–	–	–	–	1FG1602- . . ■ ■ 4 - ■ . K1 -Z
–	–	–	–	169	–	181	**240**	**240**	**240**	**240**	**240**	**240**	**240**	**240**	**240**	**240**	**240**	–	–	–	1FG1602- . . ■ ■ 3 - ■ . K1 -Z
–	–	–	–	169	–	–	**240**	–	**240**	**240**	**240**	–	**240**	**240**	**240**	**240**	**240**	–	–	–	1FG1602- . . ■ ■ 2 - ■ . K1 -Z
Max. output speed n_{2max} = **245 rpm**, Transmission ratio i = **15.71**																					
64	61	93	73	150	143	–	–	–	–	–	–	–	–	–	–	–	–	–	–	–	1FG1602- . . ■ ■ 6 - ■ . J1 -Z
–	–	–	–	–	143	161	**230**	**230**	**230**	**230**	**230**	**230**	**230**	**230**	–	–	–	–	–	–	1FG1602- . . ■ ■ 4 - ■ . J1 -Z
–	–	–	–	150	–	161	**230**	**230**	**230**	**230**	**230**	**230**	**230**	**230**	**230**	**230**	**230**	–	–	–	1FG1602- . . ■ ■ 3 - ■ . J1 -Z
–	–	–	–	150	–	–	**230**	–	**230**	**230**	**230**	–	**230**	**230**	**230**	**230**	**230**	–	–	–	1FG1602- . . ■ ■ 2 - ■ . J1 -Z
Max. output speed n_{2max} = **275 rpm**, Transmission ratio i = **14**																					
57	55	83	65	134	128	–	–	–	–	–	–	–	–	–	–	–	–	–	–	–	1FG1602- . . ■ ■ 6 - ■ . H1 -Z
–	–	–	–	–	128	144	**220**	220	**220**	**220**	**220**	**220**	**220**	**220**	–	–	–	–	–	–	1FG1602- . . ■ ■ 4 - ■ . H1 -Z
–	–	–	–	134	–	144	**220**	220	**220**	**220**	**220**	**220**	**220**	**220**	**220**	**220**	**220**	–	–	–	1FG1602- . . ■ ■ 3 - ■ . H1 -Z
–	–	–	–	134	–	–	**220**	–	**220**	**220**	**220**	–	**220**	**220**	**220**	**220**	**220**	–	–	–	1FG1602- . . ■ ■ 2 - ■ . H1 -Z
Max. output speed n_{2max} = **307 rpm**, Transmission ratio i = **12.92**																					
53	50	76	60	124	118	–	–	–	–	–	–	–	–	–	–	–	–	–	–	–	1FG1602- . . ■ ■ 6 - ■ . G1 -Z
–	–	–	–	–	118	133	210	200	**210**	**210**	**210**	**210**	**210**	**210**	–	–	–	–	–	–	1FG1602- . . ■ ■ 4 - ■ . G1 -Z
–	–	–	–	124	–	133	210	200	**210**	**210**	**210**	**210**	**210**	**210**	**210**	**210**	**210**	–	–	–	1FG1602- . . ■ ■ 3 - ■ . G1 -Z
–	–	–	–	124	–	–	210	–	**210**	**210**	**210**	–	**210**	**210**	**210**	**210**	**210**	–	–	–	1FG1602- . . ■ ■ 2 - ■ . G1 -Z
Max. output speed n_{2max} = **351 rpm**, Transmission ratio i = **11.31**																					
46	44	67	52	108	103	–	–	–	–	–	–	–	–	–	–	–	–	–	–	–	1FG1602- . . ■ ■ 6 - ■ . F1 -Z
–	–	–	–	–	103	116	186	178	**200**	**200**	**200**	**200**	**200**	**200**	–	–	–	–	–	–	1FG1602- . . ■ ■ 4 - ■ . F1 -Z
–	–	–	–	108	–	116	186	178	**200**	**200**	**200**	**200**	**200**	**200**	**200**	**200**	**200**	–	–	–	1FG1602- . . ■ ■ 3 - ■ . F1 -Z
–	–	–	–	108	–	–	186	–	**200**	**200**	**200**	–	**200**	**200**	**200**	**200**	**200**	–	–	–	1FG1602- . . ■ ■ 2 - ■ . F1 -Z
Max. output speed n_{2max} = **381 rpm**, Transmission ratio i = **9.92**																					
40	39	58	46	95	90	–	–	–	–	–	–	–	–	–	–	–	–	–	–	–	1FG1602- . . ■ ■ 6 - ■ . E1 -Z
–	–	–	–	–	90	102	163	156	**195**	**195**	**195**	**195**	**195**	**195**	–	–	–	–	–	–	1FG1602- . . ■ ■ 4 - ■ . E1 -Z
–	–	–	–	95	–	102	163	156	**195**	**195**	**195**	**195**	**195**	**195**	**195**	**195**	**195**	–	–	–	1FG1602- . . ■ ■ 3 - ■ . E1 -Z
–	–	–	–	95	–	–	163	–	**195**	**195**	**195**	–	**195**	**195**	**195**	**195**	**195**	–	–	–	1FG1602- . . ■ ■ 2 - ■ . E1 -Z

Motor shaft height:

1	2	3	4	5	6	7	8	9	10	11	12	13	14	15	16	17	18	19	20	21	
36																					C
			48																		D
							63														E
												80									F
																	100				G

Motor length/motor version (**CT** = Compact, **HD** = High Dynamic)**:**

1	2	3	4	5	6	7	8	9	10	11	12	13	14	15	16	17	18	19	20	21		
			0/CT				**0/CT**					**0/CT**						**0/CT**				0		2
													1/CT						**1/CT**			1		2
								1/HD														1		4
2/CT				**2/CT**					**2/CT**													2		2
										3/CT				**3/CT**					**3/CT**			3		2
	3/HD				**3/HD**																	3		4
		4/CT													**4/CT**							4		2
						4/HD					**4/HD**											4		4
																			5/CT			5		2
																5/HD						5		4
																	6/HD					6		4

Selection of Shaft design, encoder system, mounting type and special designs on page 6/12.

1FG1602- ■ ■ . . . - . ■ . . -Z

© Siemens 2019

For line voltage 380 ... 480 V 3 AC (DC link voltage 510 ... 720 V DC) **– Gearbox type** *C39*

Geared motor torque at 1450 rpm
Note: All values in **bold** print are maximum gearbox values.
M_{2dyn}
Nm

																					Article No.
Max. output speed n_{2max} = **420 rpm**, Transmission ratio i = **9**																					
37	35	53	41	86	82	–	–	–	–	–	–	–	–	–	–	–	–	–	–	–	1FG1602- . . ■ ■ 6 - ■ . D1 -Z
–	–	–	–	–	82	92	148	142	**187**	**187**	**187**	**187**	**187**	**187**	–	–	–	–	–	–	1FG1602- . . ■ ■ 4 - ■ . D1 -Z
–	–	–	–	86	–	92	148	142	**187**	**187**	**187**	**187**	**187**	**187**	**187**	**187**	**187**	–	–	–	1FG1602- . . ■ ■ 3 - ■ . D1 -Z
–	–	–	–	86	–	–	148	–	**187**	**187**	**187**	–	**187**	**187**	**187**	**187**	**187**	–	–	–	1FG1602- . . ■ ■ 2 - ■ . D1 -Z
Max. output speed n_{2max} = **448 rpm**, Transmission ratio i = **8.47**																					
34	33	50	39	81	77	–	–	–	–	–	–	–	–	–	–	–	–	–	–	–	1FG1602- . . ■ ■ 6 - ■ . C1 -Z
–	–	–	–	–	77	87	139	134	**182**	**182**	**182**	**182**	**182**	**182**	–	–	–	–	–	–	1FG1602- . . ■ ■ 4 - ■ . C1 -Z
–	–	–	–	81	–	87	139	134	**182**	**182**	**182**	**182**	**182**	**182**	**182**	**182**	**182**	–	–	–	1FG1602- . . ■ ■ 3 - ■ . C1 -Z
–	–	–	–	81	–	–	139	–	**182**	**182**	**182**	–	**182**	**182**	**182**	**182**	**182**	–	–	–	1FG1602- . . ■ ■ 2 - ■ . C1 -Z
Max. output speed n_{2max} = **510 rpm**, Transmission ratio i = **7.47**																					
30	29	44	34	71	68	–	–	–	–	–	–	–	–	–	–	–	–	–	–	–	1FG1602- . . ■ ■ 6 - ■ . B1 -Z
–	–	–	–	–	68	76	122	118	**175**	**175**	**175**	170	**175**	**175**	–	–	–	–	–	–	1FG1602- . . ■ ■ 4 - ■ . B1 -Z
–	–	–	–	71	–	76	122	118	**175**	**175**	**175**	170	**175**	**175**	**175**	**175**	**175**	–	–	–	1FG1602- . . ■ ■ 3 - ■ . B1 -Z
–	–	–	–	71	–	–	122	–	**175**	**175**	**175**	–	**175**	**175**	**175**	**175**	**175**	–	–	–	1FG1602- . . ■ ■ 2 - ■ . B1 -Z
Max. output speed n_{2max} = **592 rpm**, Transmission ratio i = **6.48**																					
26	25	38	30	62	59	–	–	–	–	–	–	–	–	–	–	–	–	–	–	–	1FG1602- . . ■ ■ 6 - ■ . A1 -Z
–	–	–	–	–	59	66	106	102	154	**165**	**165**	148	**165**	**165**	–	–	–	–	–	–	1FG1602- . . ■ ■ 4 - ■ . A1 -Z
–	–	–	–	62	–	66	106	102	154	**165**	**165**	148	**165**	**165**	**165**	**165**	**165**	–	–	–	1FG1602- . . ■ ■ 3 - ■ . A1 -Z
–	–	–	–	62	–	–	106	–	154	**165**	**165**	–	**165**	**165**	**165**	**165**	**165**	–	–	–	1FG1602- . . ■ ■ 2 - ■ . A1 -Z

Motor shaft height:

36																					**C**	
			48																		**D**	
							63														**E**	
												80									**F**	
																		100			**G**	

Motor length/motor version (**CT** = Compact, **HD** = High Dynamic)**:**

			0/CT				**0/CT**					**0/CT**						**0/CT**				**0**	**2**
													1/CT						**1/CT**			**1**	**2**
								1/HD														**1**	**4**
2/CT				**2/CT**					**2/CT**													**2**	**2**
										3/CT				**3/CT**						**3/CT**		**3**	**2**
	3/HD				**3/HD**																	**3**	**4**
		4/CT														**4/CT**						**4**	**2**
						4/HD					**4/HD**											**4**	**4**
																				5/CT		**5**	**2**
																5/HD						**5**	**4**
																	6/HD					**6**	**4**

Selection of Shaft design, encoder system, mounting type and special designs on page 6/12.

1FG1602- ■ ■ . . . . - . ■ . . -Z

© Siemens 2019

Gearbox size 39, 2-stage – 1FG1602

Selection and ordering data (continued)

For line voltage 200 ... 240 V 1 AC (DC link voltage 270 ... 330 V DC) **– Gearbox type** *C39*

Max. output speed n_{2max} rpm	Transmission ratio i	Geared motor torque at 1450 rpm M_{2dyn} Nm					**Servo helical worm geared motors SIMOTICS S-1FG1** Article No.
Note: All values in **bold** print are maximum gearbox values.							
15	**299**	**245**	**245**	**245**	**245**	**245**	**1FG1602- . . ■ ■ 3 - ■ . N2 -Z**
17	**265.2**	**250**	**250**	**250**	**250**	**250**	**1FG1602- . . ■ ■ 3 - ■ . M2 -Z**
20	**230.1**	**250**	**250**	**250**	**250**	**250**	**1FG1602- . . ■ ■ 3 - ■ . L2 -Z**
22	**209.18**	**250**	**250**	**250**	**250**	**250**	**1FG1602- . . ■ ■ 3 - ■ . K2 -Z**
25	**179.4**	**245**	**245**	**245**	**245**	**245**	**1FG1602- . . ■ ■ 3 - ■ . J2 -Z**
28	**163.09**	**250**	**250**	**250**	**250**	**250**	**1FG1602- . . ■ ■ 3 - ■ . H2 -Z**
31	**143**	**250**	**250**	**250**	**250**	**250**	**1FG1602- . . ■ ■ 3 - ■ . G2 -Z**
34	**127.64**	**250**	**250**	**250**	**250**	**250**	**1FG1602- . . ■ ■ 3 - ■ . F2 -Z**
34	**113.75**	**250**	**250**	**250**	**250**	**250**	**1FG1602- . . ■ ■ 3 - ■ . E2 -Z**
33	**105**	**250**	**250**	**250**	**250**	**250**	**1FG1602- . . ■ ■ 3 - ■ . D2 -Z**
37	**91.93**	**230**	**230**	**230**	**230**	**230**	**1FG1602- . . ■ ■ 3 - ■ . C2 -Z**
44	**80.6**	**220**	**220**	**220**	**220**	**220**	**1FG1602- . . ■ ■ 3 - ■ . B2 -Z**
49	**73.12**	**210**	**210**	**210**	**210**	**210**	**1FG1602- . . ■ ■ 3 - ■ . A2 -Z**
52	**68.82**	**200**	**200**	**200**	**200**	**200**	**1FG1602- . . ■ ■ 3 - ■ . X1 -Z**
57	**60.67**	**192**	189	**192**	**192**	**192**	**1FG1602- . . ■ ■ 3 - ■ . W1 -Z**
66	**52.65**	171	164	**180**	**180**	**180**	**1FG1602- . . ■ ■ 3 - ■ . V1 -Z**
90	**49.87**	199	190	**250**	**250**	**250**	**1FG1602- . . ■ ■ 3 - ■ . U1 -Z**
104	**43.27**	172	165	245	**250**	**250**	**1FG1602- . . ■ ■ 3 - ■ . T1 -Z**
114	**39.33**	157	150	225	**250**	**250**	**1FG1602- . . ■ ■ 3 - ■ . S1 -Z**
133	**33.73**	134	128	194	**250**	**250**	**1FG1602- . . ■ ■ 3 - ■ . R1 -Z**
138	**32.64**	133	127	193	**215**	**215**	**1FG1602- . . ■ ■ 3 - ■ . Q1 -Z**
159	**28.32**	116	111	168	**235**	**235**	**1FG1602- . . ■ ■ 3 - ■ . P1 -Z**
175	**25.75**	105	101	152	245	235	**1FG1602- . . ■ ■ 3 - ■ . N1 -Z**
193	**20.07**	82	78	119	192	183	**1FG1602- . . ■ ■ 3 - ■ . L1 -Z**
204	**22.08**	90	86	131	210	200	**1FG1602- . . ■ ■ 3 - ■ . M1 -Z**
220	**17.6**	72	69	104	169	161	**1FG1602- . . ■ ■ 3 - ■ . K1 -Z**
245	**15.71**	64	61	93	150	143	**1FG1602- . . ■ ■ 3 - ■ . J1 -Z**
275	**14**	57	55	83	134	128	**1FG1602- . . ■ ■ 3 - ■ . H1 -Z**
307	**12.92**	53	50	76	124	118	**1FG1602- . . ■ ■ 3 - ■ . G1 -Z**
351	**11.31**	46	44	67	108	103	**1FG1602- . . ■ ■ 3 - ■ . F1 -Z**
381	**9.92**	40	39	58	95	90	**1FG1602- . . ■ ■ 3 - ■ . E1 -Z**
420	**9**	37	35	53	86	82	**1FG1602- . . ■ ■ 3 - ■ . D1 -Z**
448	**8.47**	34	33	50	81	77	**1FG1602- . . ■ ■ 3 - ■ . C1 -Z**
510	**7.47**	30	29	44	71	68	**1FG1602- . . ■ ■ 3 - ■ . B1 -Z**
592	**6.48**	26	25	38	62	59	**1FG1602- . . ■ ■ 3 - ■ . A1 -Z**

Motor shaft height:										
	36						**C**		
				48			**D**		
Motor length/motor version (**CT** = Compact, **HD** = High Dynamic)**:**										
	2/CT			**2/CT**			**2**		**1**
		3/HD			**3/HD**		**3**		**3**
			4/CT				**4**		**1**

Selection of Shaft design, encoder system, mounting type and special designs on page 6/12.

1FG1602- ■ ■ . . . - . ■ . . -Z

© Siemens 2019

Technical specifications

Gearbox type *C49*

Servo geared motor Type	i	R_{ex}	M_{2rated} Nm	M_{2max} Nm	$M_{2Em.Off}$ Nm	n_{2max} rpm	n_{1max} rpm	φ '	F_{R2} N	F_{R2max} N	c_T Nm/ '	J_G 10^{-4} kgm^2
1FG1603-....3-..N2	299	299/1	350	395	495	15	4500	-	8410	7230	-	0.04
1FG1603-....3-..M2	265.2	1326/5	350	395	495	17	4500	-	8410	7230	-	0.05
1FG1603-....3-..L2	230.1	2301/10	355	395	490	20	4500	-	8400	7240	-	0.06
1FG1603-....3-..K2	209.18	2301/11	355	395	490	22	4500	-	8400	7240	-	0.08
1FG1603-....3-..J2	179.4	897/5	355	395	485	25	4500	-	8280	7240	-	0.10
1FG1603-....3-..H2	163.09	1794/11	355	395	480	28	4500	-	7950	7250	-	0.12
1FG1603-....3-..G2	143	143/1	355	395	480	31	4500	-	7500	7170	-	0.15
1FG1603-....3-..F2	127.64	1404/11	355	395	475	35	4500	-	7130	6800	-	0.18
1FG1603-....3-..E2	113.75	455/4	355	395	475	36	4064	-	6770	6450	-	0.21
1FG1603-....3-..D2	105	105/1	355	385	475	35	3709	-	6530	6270	-	0.26
1FG1603-....3-..C2	91.93	1287/14	350	365	470	37	3402	-	6180	6030	-	0.30
1FG1603-....3-..B2	80.6	403/5	330	345	465	43	3452	-	5950	5800	-	0.32
1FG1603-....3-..A2	73.12	585/8	315	340	465	47	3437	-	5790	5580	-	0.40
1FG1603-....3-..X1	68.82	1170/17	305	325	465	50	3430	-	5700	5520	-	0.46
1FG1603-....3-..W1	60.67	182/3	285	315	460	57	3466	-	5510	5270	-	0.54
1FG1603-....3-..V1	52.65	1053/20	265	295	455	65	3447	-	5300	5070	-	0.71
1FG1603-.....-..U1	49.87	748/15	320	320	450	90	4500	–	4190	4190	–	0.08
1FG1603-.....-..T1	43.27	649/15	350	350	450	104	4500	–	3610	3610	–	0.1
1FG1603-.....-..S1	39.33	118/3	400	400	450	114	4500	–	2980	2980	–	0.12
1FG1603-.....-..R1	33.73	506/15	375	375	450	133	4500	–	2880	2880	–	0.15
1FG1603-.....-..Q1	30.67	92/3	385	400	450	132	4060	–	2600	2470	–	0.19
1FG1603-.....-..P1	26.89	242/9	360	390	450	133	3582	–	2570	2310	–	0.23
1FG1603-.....-..N1	24	24/1	345	375	450	151	3624	–	2490	2240	–	0.28
1FG1603-.....-..M1	21.39	385/18	330	365	450	167	3576	–	2410	2090	–	0.34
1FG1603-.....-..L1	19.74	770/39	315	345	450	184	3642	–	2400	2150	–	0.41
1FG1603-.....-..K1	17.29	121/7	300	335	455	208	3592	–	2310	1990	–	0.51
1FG1603-.....-..J1	15.16	682/45	285	315	455	235	3570	–	2230	1980	–	0.56
1FG1603-.....-..H1	13.75	55/4	275	305	460	267	3666	–	2170	1890	–	0.73
1FG1603-.....-..G1	12.94	220/17	270	295	460	277	3583	–	2120	1910	–	0.85
1FG1603-.....-..F1	11.41	308/27	255	285	465	320	3648	–	2070	1770	–	1.02
1FG1603-.....-..E1	9.9	99/10	245	265	450	367	3637	–	1960	1780	–	1.36
1FG1603-.....-..D1	9	9/1	255	255	430	500	4500	–	465	465	–	1.03
1FG1603-.....-..C1	8.47	144/17	255	260	440	525	4448	–	330	220	–	1.18
1FG1603-.....-..B1	7.47	112/15	240	260	440	505	3771	–	380	0	–	1.45
1FG1603-.....-..A1	6.48	162/25	230	250	425	528	3815	–	305	0	–	1.93

© Siemens 2019

Selection and ordering data

Shaft design, encoder system, mounting type and special designs

Gearbox type *C49*						
			Servo helical worm geared motors SIMOTICS S-1FG1 Article No.			
			1FG1603- ■ ■ . . . - . ■ . . -Z			
Shaft design:	Solid shaft with feather keyway	– Design 1	**1**			
		– Design 3	**3**			
	Hollow-shaft with feather keyway	– Design 1 – H30	**5**			
		– Design 2 – H35	**6**			
Order codes and Descriptions see chapter "Options"	Special shaft design		**9**			
Encoder system for motors with DRIVE-CLiQ interface:	AS20DQI encoder			**Q**		
	AM20DQI encoder			**R**		
	R14DQ resolver			**P**		
	R15DQ resolver			**U**		
Order codes and Descriptions see chapter "Options"	Special version encoder system			**Z**		
Mounting type:	Foot-mounted design				**A**	
	Flange-mounted design				**F**	
	Housing flange design				**H**	
	Shaft-mounted design (not possible with solid shaft)				**D**	
Special designs (Options): Order codes and Descriptions see chapter "Options" The following order codes must be added to each article number: • Oil type – order codes **K08** or **K11** • Mounting position – order codes **D11** ... **D16** or **D21** ... **D26**						**-Z**
Selection of 2-stages Servo helical worm geared motors with gearbox size 49 from next page.			**1FG1603-** . . ■ ■ ■ - ■ . ■ ■ -Z			

6

© Siemens 2019

Selection and ordering data (continued)

For line voltage 380 ... 480 V 3 AC (DC link voltage 510 ... 720 V DC) **– Gearbox type** ***C49***

Geared motor torque at 1450 rpm
Note: All values in **bold** print are maximum gearbox values.
M_{2dyn}
Nm

Servo helical worm geared motors SIMOTICS S-1FG1
Article No.

Max. output speed n_{2max} = **15 rpm**, Transmission ratio i = **299**																							
390	**390**	**390**	**390**	**390**	**390**	–	–	–	–	–	–	–	–	–	–	–	–	–	–	–	–	–	1FG1603- . . ■ ■ 6 - ■ . N2 -Z
–	–	–	–	–	**395**	**395**	–	–	–	–	–	–	–	–	–	–	–	–	–	–	–	–	1FG1603- . . ■ ■ 4 - ■ . N2 -Z
–	–	–	–	**395**	–	**395**	–	–	–	–	–	–	–	–	–	–	–	–	–	–	–	–	1FG1603- . . ■ ■ 3 - ■ . N2 -Z
–	–	–	–	**395**	–	–	–	–	–	–	–	–	–	–	–	–	–	–	–	–	–	–	1FG1603- . . ■ ■ 2 - ■ . N2 -Z
Max. output speed n_{2max} = **17 rpm**, Transmission ratio i = **265.2**																							
395	**395**	**395**	**395**	**395**	**395**	–	–	–	–	–	–	–	–	–	–	–	–	–	–	–	–	–	1FG1603- . . ■ ■ 6 - ■ . M2 -Z
–	–	–	–	–	**395**	**395**	**395**	**395**	**395**	**395**	**395**	–	–	–	–	–	–	–	–	–	–	–	1FG1603- . . ■ ■ 4 - ■ . M2 -Z
–	–	–	–	**395**	–	**395**	**395**	**395**	**395**	**395**	**395**	–	–	–	–	–	–	–	–	–	–	–	1FG1603- . . ■ ■ 3 - ■ . M2 -Z
–	–	–	–	**395**	–	–	**395**	–	**395**	**395**	**395**	–	–	–	–	–	–	–	–	–	–	–	1FG1603- . . ■ ■ 2 - ■ . M2 -Z
Max. output speed n_{2max} = **20 rpm**, Transmission ratio i = **230.1**																							
395	**395**	**395**	**395**	**395**	**395**	–	–	–	–	–	–	–	–	–	–	–	–	–	–	–	–	–	1FG1603- . . ■ ■ 6 - ■ . L2 -Z
–	–	–	–	–	**395**	**395**	**395**	**395**	**395**	**395**	**395**	–	–	–	–	–	–	–	–	–	–	–	1FG1603- . . ■ ■ 4 - ■ . L2 -Z
–	–	–	–	**395**	–	**395**	**395**	**395**	**395**	**395**	**395**	–	–	–	–	–	–	–	–	–	–	–	1FG1603- . . ■ ■ 3 - ■ . L2 -Z
–	–	–	–	**395**	–	–	**395**	–	**395**	**395**	**395**	–	–	–	–	–	–	–	–	–	–	–	1FG1603- . . ■ ■ 2 - ■ . L2 -Z
Max. output speed n_{2max} = **22 rpm**, Transmission ratio i = **209.18**																							
395	**395**	**395**	**395**	**395**	**395**	–	–	–	–	–	–	–	–	–	–	–	–	–	–	–	–	–	1FG1603- . . ■ ■ 6 - ■ . K2 -Z
–	–	–	–	–	**395**	**395**	**395**	**395**	**395**	**395**	**395**	–	–	–	–	–	–	–	–	–	–	–	1FG1603- . . ■ ■ 4 - ■ . K2 -Z
–	–	–	–	**395**	–	**395**	**395**	**395**	**395**	**395**	**395**	–	–	–	–	–	–	–	–	–	–	–	1FG1603- . . ■ ■ 3 - ■ . K2 -Z
–	–	–	–	**395**	–	–	**395**	–	**395**	**395**	**395**	–	–	–	–	–	–	–	–	–	–	–	1FG1603- . . ■ ■ 2 - ■ . K2 -Z
Max. output speed n_{2max} = **25 rpm**, Transmission ratio i = **179.4**																							
395	**395**	**395**	**395**	**395**	**395**	–	–	–	–	–	–	–	–	–	–	–	–	–	–	–	–	–	1FG1603- . . ■ ■ 6 - ■ . J2 -Z
–	–	–	–	–	**395**	**395**	**245**	**245**	**245**	**245**	**245**	–	–	–	–	–	–	–	–	–	–	–	1FG1603- . . ■ ■ 4 - ■ . J2 -Z
–	–	–	–	**395**	–	**395**	**245**	**245**	**245**	**245**	**245**	–	–	–	–	–	–	–	–	–	–	–	1FG1603- . . ■ ■ 3 - ■ . J2 -Z
–	–	–	–	**395**	–	–	**245**	–	**245**	**245**	**245**	–	–	–	–	–	–	–	–	–	–	–	1FG1603- . . ■ ■ 2 - ■ . J2 -Z
Max. output speed n_{2max} = **28 rpm**, Transmission ratio i = **163.09**																							
395	**395**	**395**	**395**	**395**	**395**	–	–	–	–	–	–	–	–	–	–	–	–	–	–	–	–	–	1FG1603- . . ■ ■ 6 - ■ . H2 -Z
–	–	–	–	–	**395**	**395**	**395**	**395**	**395**	**395**	**395**	–	–	–	–	–	–	–	–	–	–	–	1FG1603- . . ■ ■ 4 - ■ . H2 -Z
–	–	–	–	**395**	–	**395**	**395**	**395**	**395**	**395**	**395**	–	–	–	–	–	–	–	–	–	–	–	1FG1603- . . ■ ■ 3 - ■ . H2 -Z
–	–	–	–	**395**	–	–	**395**	–	**395**	**395**	**395**	–	–	–	–	–	–	–	–	–	–	–	1FG1603- . . ■ ■ 2 - ■ . H2 -Z
Max. output speed n_{2max} = **31 rpm**, Transmission ratio i = **143**																							
395	**395**	**395**	**395**	**395**	**395**	–	–	–	–	–	–	–	–	–	–	–	–	–	–	–	–	–	1FG1603- . . ■ ■ 6 - ■ . G2 -Z
–	–	–	–	–	**395**	**395**	**395**	**395**	**395**	**395**	**395**	**395**	**395**	**395**	–	–	–	–	–	–	–	–	1FG1603- . . ■ ■ 4 - ■ . G2 -Z
–	–	–	–	**395**	–	**395**	**395**	**395**	**395**	**395**	**395**	**395**	**395**	**395**	**395**	**395**	**395**	–	–	–	–	–	1FG1603- . . ■ ■ 3 - ■ . G2 -Z
–	–	–	–	**395**	–	–	**395**	–	**395**	**395**	**395**	–	**395**	**395**	**395**	**395**	**395**	–	–	–	–	–	1FG1603- . . ■ ■ 2 - ■ . G2 -Z

Motor shaft height:

36																							**C**
			48																				**D**
							63																**E**
												80											**F**
																		100					**G**

Motor length/motor version (**CT** = Compact, **HD** = High Dynamic)**:**

			0/CT				**0/CT**					**0/CT**						**0/CT**					**0**	**2**
													1/CT						**1/CT**				**1**	**2**
								1/HD															**1**	**4**
2/CT				**2/CT**					**2/CT**														**2**	**2**
										3/CT				**3/CT**						**3/CT**			**3**	**2**
	3/HD				**3/HD**																		**3**	**4**
		4/CT														**4/CT**							**4**	**2**
						4/HD					**4/HD**													**4**	**4**
																					5/CT		**5**	**2**
																5/HD							**5**	**4**
																	6/HD						**6**	**4**

Selection of Shaft design, encoder system, mounting type and special designs on page 6/20.

1FG1603- ■ ■ . . . . - ■ . . **-Z**

© Siemens 2019

Gearbox size 49, 2-stage – 1FG1603

For line voltage 380 ... 480 V 3 AC (DC link voltage 510 ... 720 V DC) **– Gearbox type** *C49*

Geared motor torque at 1450 rpm
Note: All values in **bold** print are maximum gearbox values.
M_{2dyn}
Nm

Servo helical worm geared motors SIMOTICS S-1FG1
Article No.

Max. output speed n_{2max} = **35 rpm**, Transmission ratio i = **127.64**																						
395	**395**	**395**	**395**	**395**	**395**	–	–	–	–	–	–	–	–	–	–	–	–	–	–	–	–	1FG1603- . . ■ ■ 6 - ■ . F2 -Z
–	–	–	–	–	**395**	**395**	**395**	**395**	**395**	**395**	**395**	**395**	**395**	**395**	–	–	–	–	–	–	–	1FG1603- . . ■ ■ 4 - ■ . F2 -Z
–	–	–	–	**395**	–	**395**	**395**	**395**	**395**	**395**	**395**	**395**	**395**	**395**	**395**	**395**	**395**	–	–	–	–	1FG1603- . . ■ ■ 3 - ■ . F2 -Z
–	–	–	–	**395**	–	–	**395**	–	**395**	**395**	**395**	–	**395**	**395**	**395**	**395**	**395**	–	–	–	–	1FG1603- . . ■ ■ 2 - ■ . F2 -Z
Max. output speed n_{2max} = **36 rpm**, Transmission ratio i = **113.75**																						
375	355	**395**	**395**	**395**	**395**	–	–	–	–	–	–	–	–	–	–	–	–	–	–	–	–	1FG1603- . . ■ ■ 6 - ■ . E2 -Z
–	–	–	–	–	**395**	**395**	**395**	**395**	**395**	**395**	**395**	**395**	**395**	**395**	–	–	–	–	–	–	–	1FG1603- . . ■ ■ 4 - ■ . E2 -Z
–	–	–	–	**395**	–	**395**	**395**	**395**	**395**	**395**	**395**	**395**	**395**	**395**	**395**	**395**	**395**	–	–	–	–	1FG1603- . . ■ ■ 3 - ■ . E2 -Z
–	–	–	–	**395**	–	–	**395**	–	**395**	**395**	**395**	–	**395**	**395**	**395**	**395**	**395**	–	–	–	–	1FG1603- . . ■ ■ 2 - ■ . E2 -Z
Max. output speed n_{2max} = **35 rpm**, Transmission ratio i = **105**																						
345	330	**385**	**385**	**385**	**385**	–	–	–	–	–	–	–	–	–	–	–	–	–	–	–	–	1FG1603- . . ■ ■ 6 - ■ . D2 -Z
–	–	–	–	–	**385**	**385**	**385**	**385**	**385**	**385**	**385**	**385**	**385**	**385**	–	–	–	–	–	–	–	1FG1603- . . ■ ■ 4 - ■ . D2 -Z
–	–	–	–	**385**	–	**385**	**385**	**385**	**385**	**385**	**385**	**385**	**385**	**385**	**385**	**385**	**385**	–	–	–	–	1FG1603- . . ■ ■ 3 - ■ . D2 -Z
–	–	–	–	**385**	–	–	**385**	–	**385**	**385**	**385**	–	**385**	**385**	**385**	**385**	**385**	–	–	–	–	1FG1603- . . ■ ■ 2 - ■ . D2 -Z
Max. output speed n_{2max} = **37 rpm**, Transmission ratio i = **91.93**																						
305	290	**365**	345	**365**	**365**	–	–	–	–	–	–	–	–	–	–	–	–	–	–	–	–	1FG1603- . . ■ ■ 6 - ■ . C2 -Z
–	–	–	–	–	**365**	**365**	**365**	**365**	**365**	**365**	**365**	**365**	**365**	**365**	–	–	–	–	–	–	–	1FG1603- . . ■ ■ 4 - ■ . C2 -Z
–	–	–	–	**365**	–	**365**	**365**	**365**	**365**	**365**	**365**	**365**	**365**	**365**	**365**	**365**	**365**	–	–	–	–	1FG1603- . . ■ ■ 3 - ■ . C2 -Z
–	–	–	–	**365**	–	–	**365**	–	**365**	**365**	**365**	–	**365**	**365**	**365**	**365**	**365**	–	–	–	–	1FG1603- . . ■ ■ 2 - ■ . C2 -Z
Max. output speed n_{2max} = **43 rpm**, Transmission ratio i = **80.6**																						
265	255	**345**	300	**345**	**345**	–	–	–	–	–	–	–	–	–	–	–	–	–	–	–	–	1FG1603- . . ■ ■ 6 - ■ . B2 -Z
–	–	–	–	–	**345**	**345**	**345**	**345**	**345**	**345**	**345**	**345**	**345**	**345**	–	–	–	–	–	–	–	1FG1603- . . ■ ■ 4 - ■ . B2 -Z
–	–	–	–	**345**	–	**345**	**345**	**345**	**345**	**345**	**345**	**345**	**345**	**345**	**345**	**345**	**345**	–	–	–	–	1FG1603- . . ■ ■ 3 - ■ . B2 -Z
–	–	–	–	**345**	–	–	**345**	–	**345**	**345**	**345**	–	**345**	**345**	**345**	**345**	**345**	–	–	–	–	1FG1603- . . ■ ■ 2 - ■ . B2 -Z
Max. output speed n_{2max} = **47 rpm**, Transmission ratio i = **73.12**																						
240	230	**340**	270	**340**	**340**	–	–	–	–	–	–	–	–	–	–	–	–	–	–	–	–	1FG1603- . . ■ ■ 6 - ■ . A2 -Z
–	–	–	–	–	**340**	**340**	**340**	**340**	**340**	**340**	**340**	**340**	**340**	**340**	–	–	–	–	–	–	–	1FG1603- . . ■ ■ 4 - ■ . A2 -Z
–	–	–	–	**340**	–	**340**	**340**	**340**	**340**	**340**	**340**	**340**	**340**	**340**	**340**	**340**	**340**	–	–	–	–	1FG1603- . . ■ ■ 3 - ■ . A2 -Z
–	–	–	–	**340**	–	–	**340**	–	**340**	**340**	**340**	–	**340**	**340**	**340**	**340**	**340**	–	–	–	–	1FG1603- . . ■ ■ 2 - ■ . A2 -Z
Max. output speed n_{2max} = **50 rpm**, Transmission ratio i = **68.82**																						
225	215	325	255	**325**	**325**	–	–	–	–	–	–	–	–	–	–	–	–	–	–	–	–	1FG1603- . . ■ ■ 6 - ■ . X1 -Z
–	–	–	–	–	**325**	**325**	**325**	**325**	**325**	**325**	**325**	**325**	**325**	**325**	–	–	–	–	–	–	–	1FG1603- . . ■ ■ 4 - ■ . X1 -Z
–	–	–	–	**325**	–	**325**	**325**	**325**	**325**	**325**	**325**	**325**	**325**	**325**	**325**	**325**	**325**	–	–	–	–	1FG1603- . . ■ ■ 3 - ■ . X1 -Z
–	–	–	–	**325**	–	–	**325**	–	**325**	**325**	**325**	–	**325**	**325**	**325**	**325**	**325**	–	–	–	–	1FG1603- . . ■ ■ 2 - ■ . X1 -Z
Max. output speed n_{2max} = **57 rpm**, Transmission ratio i = **60.67**																						
200	192	290	225	**315**	**315**	–	–	–	–	–	–	–	–	–	–	–	–	–	–	–	–	1FG1603- . . ■ ■ 6 - ■ . W1 -Z
–	–	–	–	–	**315**	**315**	**315**	**315**	**315**	**315**	**315**	**315**	**315**	**315**	–	–	–	–	–	–	–	1FG1603- . . ■ ■ 4 - ■ . W1 -Z
–	–	–	–	**315**	–	**315**	**315**	**315**	**315**	**315**	**315**	**315**	**315**	**315**	**315**	**315**	**315**	–	–	–	–	1FG1603- . . ■ ■ 3 - ■ . W1 -Z
–	–	–	–	**315**	–	–	**315**	–	**315**	**315**	**315**	–	**315**	**315**	**315**	**315**	**315**	–	–	–	–	1FG1603- . . ■ ■ 2 - ■ . W1 -Z

Motor shaft height:

36																						**C**
			48																			**D**
						63																**E**
												80										**F**
																		100				**G**

Motor length/motor version (**CT** = Compact, **HD** = High Dynamic)**:**

			0/CT				**0/CT**					**0/CT**						**0/CT**					**0**		**2**
													1/CT						**1/CT**				**1**		**2**
								1/HD															**1**		**4**
2/CT				**2/CT**					**2/CT**														**2**		**2**
										3/CT				**3/CT**						**3/CT**			**3**		**2**
	3/HD				**3/HD**											**4/CT**							**3**		**4**
		4/CT																					**4**		**2**
						4/HD					**4/HD**												**4**		**4**
																				5/CT			**5**		**2**
															5/HD								**5**		**4**
																6/HD							**6**		**4**

Selection of Shaft design, encoder system, mounting type and special designs on page 6/20.

1FG1603- ■ ■ . . . . - ■ . . -Z

© Siemens 2019

Gearbox size 49, 2-stage – 1FG1603

For line voltage 380 ... 480 V 3 AC (DC link voltage 510 ... 720 V DC) **– Gearbox type** *C49*

Geared motor torque at 1450 rpm
Note: All values in **bold** print are maximum gearbox values.
M_{2dyn}
Nm

																						Article No.
Max. output speed n_{2max} = **65 rpm**, Transmission ratio i = **52.65**																						
174	166	250	197	**295**	**295**	–	–	–	–	–	–	–	–	–	–	–	–	–	–	–	–	1FG1603- . . ■ ■ 6 - ■ . V1 -Z
–	–	–	–	–	**295**	**295**	**295**	**295**	**295**	**295**	**295**	**295**	**295**	**295**	–	–	–	–	–	–	–	1FG1603- . . ■ ■ 4 - ■ . V1 -Z
–	–	–	–	**295**	–	**295**	**295**	**295**	**295**	**295**	**295**	**295**	**295**	**295**	**295**	**295**	**295**	–	–	–	–	1FG1603- . . ■ ■ 3 - ■ . V1 -Z
–	–	–	–	**295**	–	–	**295**	–	**295**	**295**	**295**	–	**295**	**295**	**295**	**295**	**295**	–	–	–	–	1FG1603- . . ■ ■ 2 - ■ . V1 -Z
Max. output speed n_{2max} = **90 rpm**, Transmission ratio i = **49.87**																						
199	191	285	225	**320**	**320**	–	–	–	–	–	–	–	–	–	–	–	–	–	–	–	–	1FG1603- . . ■ ■ 6 - ■ . U1 -Z
–	–	–	–	–	**320**	**320**	**320**	**320**	**320**	**320**	**320**	–	–	–	–	–	–	–	–	–	–	1FG1603- . . ■ ■ 4 - ■ . U1 -Z
–	–	–	–	**320**	–	**320**	**320**	**320**	**320**	**320**	**320**	–	–	–	–	–	–	–	–	–	–	1FG1603- . . ■ ■ 3 - ■ . U1 -Z
–	–	–	–	**320**	–	–	**320**	–	**320**	**320**	**320**	–	–	–	–	–	–	–	–	–	–	1FG1603- . . ■ ■ 2 - ■ . U1 -Z
Max. output speed n_{2max} = **104 rpm**, Transmission ratio i = **43.27**																						
173	166	250	197	**350**	**350**	–	–	–	–	–	–	–	–	–	–	–	–	–	–	–	–	1FG1603- . . ■ ■ 6 - ■ . T1 -Z
–	–	–	–	–	**350**	**350**	**350**	**350**	**350**	**350**	**350**	–	–	–	–	–	–	–	–	–	–	1FG1603- . . ■ ■ 4 - ■ . T1 -Z
–	–	–	–	**350**	–	**350**	**350**	**350**	**350**	**350**	**350**	–	–	–	–	–	–	–	–	–	–	1FG1603- . . ■ ■ 3 - ■ . T1 -Z
–	–	–	–	**350**	–	–	**350**	–	**350**	**350**	**350**	–	–	–	–	–	–	–	–	–	–	1FG1603- . . ■ ■ 2 - ■ . T1 -Z
Max. output speed n_{2max} = **114 rpm**, Transmission ratio i = **39.33**																						
158	151	225	179	365	350	–	–	–	–	–	–	–	–	–	–	–	–	–	–	–	–	1FG1603- . . ■ ■ 6 - ■ . S1 -Z
–	–	–	–	–	350	395	**400**	**400**	**400**	**400**	**400**	–	–	–	–	–	–	–	–	–	–	1FG1603- . . ■ ■ 4 - ■ . S1 -Z
–	–	–	–	365	–	395	**400**	**400**	**400**	**400**	**400**	–	–	–	–	–	–	–	–	–	–	1FG1603- . . ■ ■ 3 - ■ . S1 -Z
–	–	–	–	365	–	–	**400**	–	**400**	**400**	**400**	–	–	–	–	–	–	–	–	–	–	1FG1603- . . ■ ■ 2 - ■ . S1 -Z
Max. output speed n_{2max} = **132 rpm**, Transmission ratio i = **30.67**																						
123	117	178	139	285	270	–	–	–	–	–	–	–	–	–	–	–	–	–	–	–	–	1FG1603- . . ■ ■ 6 - ■ . Q1 -Z
–	–	–	–	–	270	305	**400**	**400**	**400**	**400**	**400**	–	–	–	–	–	–	–	–	–	–	1FG1603- . . ■ ■ 4 - ■ . Q1 -Z
–	–	–	–	285	–	305	**400**	**400**	**400**	**400**	**400**	–	–	–	–	–	–	–	–	–	–	1FG1603- . . ■ ■ 3 - ■ . Q1 -Z
–	–	–	–	285	–	–	**400**	–	**400**	**400**	**400**	–	–	–	–	–	–	–	–	–	–	1FG1603- . . ■ ■ 2 - ■ . Q1 -Z
Max. output speed n_{2max} = **133 rpm**, Transmission ratio i = **33.73**																						
135	129	196	153	315	300	–	–	–	–	–	–	–	–	–	–	–	–	–	–	–	–	1FG1603- . . ■ ■ 6 - ■ . R1 -Z
–	–	–	–	–	300	340	**375**	**375**	**375**	**375**	**375**	–	–	–	–	–	–	–	–	–	–	1FG1603- . . ■ ■ 4 - ■ . R1 -Z
–	–	–	–	315	–	340	**375**	**375**	**375**	**375**	**375**	–	–	–	–	–	–	–	–	–	–	1FG1603- . . ■ ■ 3 - ■ . R1 -Z
–	–	–	–	315	–	–	**375**	–	**375**	**375**	**375**	–	–	–	–	–	–	–	–	–	–	1FG1603- . . ■ ■ 2 - ■ . R1 -Z
Max. output speed n_{2max} = **133 rpm**, Transmission ratio i = **26.89**																						
108	103	156	122	250	240	–	–	–	–	–	–	–	–	–	–	–	–	–	–	–	–	1FG1603- . . ■ ■ 6 - ■ . P1 -Z
–	–	–	–	–	240	270	**390**	**390**	**390**	**390**	**390**	**390**	**390**	**390**	–	–	–	–	–	–	–	1FG1603- . . ■ ■ 4 - ■ . P1 -Z
–	–	–	–	250	–	270	**390**	**390**	**390**	**390**	**390**	**390**	**390**	**390**	**390**	**390**	**390**	–	–	–	–	1FG1603- . . ■ ■ 3 - ■ . P1 -Z
–	–	–	–	250	–	–	**390**	–	**390**	**390**	**390**	–	**390**	**390**	**390**	**390**	**390**	–	–	–	–	1FG1603- . . ■ ■ 2 - ■ . P1 -Z
Max. output speed n_{2max} = **151 rpm**, Transmission ratio i = **24**																						
96	92	139	109	225	210	–	–	–	–	–	–	–	–	–	–	–	–	–	–	–	–	1FG1603- . . ■ ■ 6 - ■ . N1 -Z
–	–	–	–	–	210	240	**375**	370	**375**	**375**	**375**	**375**	**375**	**375**	–	–	–	–	–	–	–	1FG1603- . . ■ ■ 4 - ■ . N1 -Z
–	–	–	–	225	–	240	**375**	370	**375**	**375**	**375**	**375**	**375**	**375**	**375**	**375**	**375**	–	–	–	–	1FG1603- . . ■ ■ 3 - ■ . N1 -Z
–	–	–	–	225	–	–	**375**	–	**375**	**375**	**375**	–	**375**	**375**	**375**	**375**	**375**	–	–	–	–	1FG1603- . . ■ ■ 2 - ■ . N1 -Z

Motor shaft height:

36																						C
			48																			D
							63															E
												80										F
																		100				G

Motor length/motor version (**CT** = Compact, **HD** = High Dynamic)**:**

			0/CT				**0/CT**					**0/CT**						**0/CT**					0	2
													1/CT						**1/CT**			1	2
								1/HD														1	4
2/CT				**2/CT**					**2/CT**													2	2
										3/CT				**3/CT**					**3/CT**			3	2
	3/HD				**3/HD**																	3	4
		4/CT													**4/CT**							4	2
						4/HD					**4/HD**											4	4
																			5/CT			5	2
																5/HD						5	4
																	6/HD					6	4

Selection of Shaft design, encoder system, mounting type and special designs on page 6/20. **1FG1603-** ■ ■ . . . - . ■ . . -Z

© Siemens 2019

Servo helical worm geared motors SIMOTICS S-1FG1

Selecting servo geared motors

Gearbox size 49, 2-stage – 1FG1603

For line voltage 380 ... 480 V 3 AC (DC link voltage 510 ... 720 V DC) **– Gearbox type** *C49*

Geared motor torque at 1450 rpm
Note: All values in **bold** print are maximum gearbox values.
M_{2dyn}
Nm

1	2	3	4	5	6	7	8	9	10	11	12	13	14	15	16	17	18	19	20	21	Servo helical worm geared motors SIMOTICS S-1FG1 Article No.
Max. output speed n_{2max} = **167 rpm**, Transmission ratio i = **21.39**																					
86	82	124	97	200	191	–	–	–	–	–	–	–	–	–	–	–	–	–	–	–	1FG1603- . . ■ ■ 6 - ■ . M1 -Z
–	–	–	–	–	191	215	340	330	**365**	**365**	**365**	**365**	**365**	**365**	–	–	–	–	–	–	1FG1603- . . ■ ■ 4 - ■ . M1 -Z
–	–	–	–	200	–	215	340	330	**365**	**365**	**365**	**365**	**365**	**365**	**365**	**365**	**365**	–	–	–	1FG1603- . . ■ ■ 3 - ■ . M1 -Z
–	–	–	–	200	–	–	340	–	**365**	**365**	**365**	–	**365**	**365**	**365**	**365**	**365**	–	–	–	1FG1603- . . ■ ■ 2 - ■ . M1 -Z
Max. output speed n_{2max} = **184 rpm**, Transmission ratio i = **19.74**																					
79	75	114	90	185	176	–	–	–	–	–	–	–	–	–	–	–	–	–	–	–	1FG1603- . . ■ ■ 6 - ■ . L1 -Z
–	–	–	–	–	176	199	315	305	**345**	**345**	**345**	**345**	**345**	**345**	–	–	–	–	–	–	1FG1603- . . ■ ■ 4 - ■ . L1 -Z
–	–	–	–	185	–	199	315	305	**345**	**345**	**345**	**345**	**345**	**345**	**345**	**345**	**345**	–	–	–	1FG1603- . . ■ ■ 3 - ■ . L1 -Z
–	–	–	–	185	–	–	315	–	**345**	**345**	**345**	–	**345**	**345**	**345**	**345**	**345**	–	–	–	1FG1603- . . ■ ■ 2 - ■ . L1 -Z
Max. output speed n_{2max} = **208 rpm**, Transmission ratio i = **17.29**																					
69	66	100	78	162	154	–	–	–	–	–	–	–	–	–	–	–	–	–	–	–	1FG1603- . . ■ ■ 6 - ■ . K1 -Z
–	–	–	–	–	154	174	275	265	**335**	**335**	**335**	**335**	**335**	**335**	–	–	–	–	–	–	1FG1603- . . ■ ■ 4 - ■ . K1 -Z
–	–	–	–	162	–	174	275	265	**335**	**335**	**335**	**335**	**335**	**335**	**335**	**335**	**335**	–	–	–	1FG1603- . . ■ ■ 3 - ■ . K1 -Z
–	–	–	–	162	–	–	275	–	**335**	**335**	**335**	–	**335**	**335**	**335**	**335**	**335**	–	–	–	1FG1603- . . ■ ■ 2 - ■ . K1 -Z
Max. output speed n_{2max} = **235 rpm**, Transmission ratio i = **15.16**																					
61	58	88	69	142	135	–	–	–	–	–	–	–	–	–	–	–	–	–	–	–	1FG1603- . . ■ ■ 6 - ■ . J1 -Z
–	–	–	–	–	135	152	240	230	**315**	**315**	**315**	**315**	**315**	**315**	–	–	–	–	–	–	1FG1603- . . ■ ■ 4 - ■ . J1 -Z
–	–	–	–	142	–	152	240	230	**315**	**315**	**315**	**315**	**315**	**315**	**315**	**315**	**315**	–	–	–	1FG1603- . . ■ ■ 3 - ■ . J1 -Z
–	–	–	–	142	–	–	240	–	**315**	**315**	**315**	–	**315**	**315**	**315**	**315**	**315**	–	–	–	1FG1603- . . ■ ■ 2 - ■ . J1 -Z
Max. output speed n_{2max} = **267 rpm**, Transmission ratio i = **13.75**																					
55	52	80	62	129	123	–	–	–	–	–	–	–	–	–	–	–	–	–	–	–	1FG1603- . . ■ ■ 6 - ■ . H1 -Z
–	–	–	–	–	123	138	220	210	**305**	**305**	**305**	305	**305**	**305**	–	–	–	–	–	–	1FG1603- . . ■ ■ 4 - ■ . H1 -Z
–	–	–	–	129	–	138	220	210	**305**	**305**	**305**	305	**305**	**305**	**305**	**305**	**305**	–	–	–	1FG1603- . . ■ ■ 3 - ■ . H1 -Z
–	–	–	–	129	–	–	220	–	**305**	**305**	**305**	–	**305**	**305**	**305**	**305**	**305**	–	–	–	1FG1603- . . ■ ■ 2 - ■ . H1 -Z
Max. output speed n_{2max} = **277 rpm**, Transmission ratio i = **12.94**																					
52	49	75	59	121	115	–	–	–	–	–	–	–	–	–	–	–	–	–	–	–	1FG1603- . . ■ ■ 6 - ■ . G1 -Z
–	–	–	–	–	115	130	205	200	**295**	**295**	**295**	285	**295**	**295**	–	–	–	–	–	–	1FG1603- . . ■ ■ 4 - ■ . G1 -Z
–	–	–	–	121	–	130	205	200	**295**	**295**	**295**	285	**295**	**295**	**295**	**295**	**295**	–	–	–	1FG1603- . . ■ ■ 3 - ■ . G1 -Z
–	–	–	–	121	–	–	205	–	**295**	**295**	**295**	–	**295**	**295**	**295**	**295**	**295**	–	–	–	1FG1603- . . ■ ■ 2 - ■ . G1 -Z
Max. output speed n_{2max} = **320 rpm**, Transmission ratio i = **11.41**																					
45	43	66	52	107	102	–	–	–	–	–	–	–	–	–	–	–	–	–	–	–	1FG1603- . . ■ ■ 6 - ■ . F1 -Z
–	–	–	–	–	102	115	183	176	265	**285**	**285**	255	**285**	**285**	–	–	–	–	–	–	1FG1603- . . ■ ■ 4 - ■ . F1 -Z
–	–	–	–	107	–	115	183	176	265	**285**	**285**	255	**285**	**285**	**285**	**285**	**285**	–	–	–	1FG1603- . . ■ ■ 3 - ■ . F1 -Z
–	–	–	–	107	–	–	183	–	265	**285**	**285**	–	**285**	**285**	**285**	**285**	**285**	–	–	–	1FG1603- . . ■ ■ 2 - ■ . F1 -Z
Max. output speed n_{2max} = **367 rpm**, Transmission ratio i = **9.9**																					
39	38	57	45	92	88	–	–	–	–	–	–	–	–	–	–	–	–	–	–	–	1FG1603- . . ■ ■ 6 - ■ . E1 -Z
–	–	–	–	–	88	99	159	153	230	**265**	**265**	220	**265**	**265**	–	–	–	–	–	–	1FG1603- . . ■ ■ 4 - ■ . E1 -Z
–	–	–	–	92	–	99	159	153	230	**265**	**265**	220	**265**	**265**	**265**	**265**	**265**	–	–	–	1FG1603- . . ■ ■ 3 - ■ . E1 -Z
–	–	–	–	92	–	–	159	–	230	**265**	**265**	–	**265**	**265**	**265**	**265**	**265**	–	–	–	1FG1603- . . ■ ■ 6 - ■ . E1 -Z

Motor shaft height:

1	2	3	4	5	6	7	8	9	10	11	12	13	14	15	16	17	18	19	20	21	
36																					C
			48																		D
							63														E
												80									F
																	100				G

Motor length/motor version (**CT** = Compact, **HD** = High Dynamic)**:**

1	2	3	4	5	6	7	8	9	10	11	12	13	14	15	16	17	18	19	20	21		
			0/CT				**0/CT**					**0/CT**						**0/CT**			0	2
													1/CT						**1/CT**		1	2
								1/HD													1	4
2/CT				**2/CT**					**2/CT**												2	2
										3/CT				**3/CT**					**3/CT**		3	2
	3/HD				**3/HD**																3	4
		4/CT													**4/CT**						4	2
						4/HD					**4/HD**										4	4
																			5/CT		5	2
																5/HD					5	4
																	6/HD				6	4

Selection of Shaft design, encoder system, mounting type and special designs on page 6/20.

1FG1603- ■ ■ . . . - . ■ . . -Z

© Siemens 2019

For line voltage 380 ... 480 V 3 AC (DC link voltage 510 ... 720 V DC) **– Gearbox type** ***C49***

Geared motor torque at 1450 rpm
Note: All values in **bold** print are maximum gearbox values.
M_{2dyn}
Nm

																					Servo helical worm geared motors SIMOTICS S-1FG1 Article No.
Max. output speed n_{2max} = **500 rpm**, Transmission ratio i = **9**																					
37	35	53	42	86	82	–	–	–	–	–	–	–	–	–	–	–	–	–	–	–	1FG1603- . . ■ ■ 6 - ■ . D1 -Z
–	–	–	–	–	82	92	148	142	210	**255**	**255**	205	**255**	**255**	–	–	–	–	–	–	1FG1603- . . ■ ■ 4 - ■ . D1 -Z
–	–	–	–	86	–	92	148	142	210	**255**	**255**	205	**255**	**255**	**255**	**255**	**255**	–	–	–	1FG1603- . . ■ ■ 3 - ■ . D1 -Z
–	–	–	–	86	–	–	148	–	210	**255**	**255**	–	**255**	**255**	**255**	**255**	**255**	–	–	–	1FG1603- . . ■ ■ 2 - ■ . D1 -Z
Max. output speed n_{2max} = **505 rpm**, Transmission ratio i = **7.47**																					
30	29	44	34	71	68	–	–	–	–	–	–	–	–	–	–	–	–	–	–	–	1FG1603- . . ■ ■ 6 - ■ . B1 -Z
–	–	–	–	–	68	77	123	118	177	235	215	170	250	**260**	–	–	–	–	–	–	1FG1603- . . ■ ■ 4 - ■ . B1 -Z
–	–	–	–	71	–	77	123	118	177	235	215	170	250	**260**	**260**	**260**	**260**	–	–	–	1FG1603- . . ■ ■ 3 - ■ . B1 -Z
–	–	–	–	71	–	–	123	–	177	235	215	–	250	**260**	**260**	**260**	**260**	–	–	–	1FG1603- . . ■ ■ 2 - ■ . B1 -Z
Max. output speed n_{2max} = **525 rpm**, Transmission ratio i = **8.47**																					
34	33	50	39	81	77	–	–	–	–	–	–	–	–	–	–	–	–	–	–	–	1FG1603- . . ■ ■ 6 - ■ . C1 -Z
–	–	–	–	–	77	87	139	134	200	**260**	245	193	**260**	**260**	–	–	–	–	–	–	1FG1603- . . ■ ■ 4 - ■ . C1 -Z
–	–	–	–	81	–	87	139	134	200	**260**	245	193	**260**	**260**	**260**	**260**	**260**	–	–	–	1FG1603- . . ■ ■ 3 - ■ . C1 -Z
–	–	–	–	81	–	–	139	–	200	**260**	245	–	**260**	**260**	**260**	**260**	**260**	–	–	–	1FG1603- . . ■ ■ 2 - ■ . C1 -Z
Max. output speed n_{2max} = **589 rpm**, Transmission ratio i = **6.48**																					
26	25	38	30	62	59	–	–	–	–	–	–	–	–	–	–	–	–	–	–	–	1FG1603- . . ■ ■ 6 - ■ . A1 -Z
–	–	–	–	–	59	66	106	102	154	205	189	148	215	**250**	–	–	–	–	–	–	1FG1603- . . ■ ■ 4 - ■ . A1 -Z
–	–	–	–	62	–	66	106	102	154	205	189	148	215	**250**	**250**	**250**	**250**	–	–	–	1FG1603- . . ■ ■ 3 - ■ . A1 -Z
–	–	–	–	62	–	–	106	–	154	205	186	–	215	**250**	**250**	**250**	**250**	–	–	–	1FG1603- . . ■ ■ 6 - ■ . A1 -Z

Motor shaft height:																							
36																						**C**	
			48																			**D**	
							63															**E**	
												80										**F**	
																	100					**G**	
Motor length/motor version (**CT** = Compact, **HD** = High Dynamic)**:**																							
			0/CT				**0/CT**					**0/CT**					**0/CT**						**0**	**2**
								1/CT										**1/CT**					**1**	**2**
								1/HD															**1**	**4**
2/CT				**2/CT**					**2/CT**														**2**	**2**
										3/CT				**3/CT**					**3/CT**				**3**	**2**
	3/HD				**3/HD**											**4/CT**							**3**	**4**
		4/CT																					**4**	**2**
						4/HD					**4/HD**												**4**	**4**
																				5/CT			**5**	**2**
															5/HD								**5**	**4**
																6/HD							**6**	**4**

Selection of Shaft design, encoder system, mounting type and special designs on page 6/20.

1FG1603- ■ ■ . . . . - . ■ . . **-Z**

© Siemens 2019

Selection and ordering data (continued)

For line voltage 200 ... 240 V 1 AC (DC link voltage 270 ... 330 V DC) **– Gearbox type** ***C49***

Max. output speed n_{2max} rpm	Transmission ratio i	Geared motor torque at 1450 rpm Note: All values in **bold** print are maximum gearbox values. M_{2dyn} Nm					**Servo helical worm geared motors SIMOTICS S-1FG1** Article No.
15	**299**	**395**	**395**	**395**	**395**	**395**	**1FG1603- . . ■ ■ 3 - ■ . N2 -Z**
17	**265.2**	**395**	**395**	**395**	**395**	**395**	**1FG1603- . . ■ ■ 3 - ■ . M2 -Z**
20	**230.1**	**395**	**395**	**395**	**395**	**395**	**1FG1603- . . ■ ■ 3 - ■ . L2 -Z**
22	**209.18**	**395**	**395**	**395**	**395**	**395**	**1FG1603- . . ■ ■ 3 - ■ . K2 -Z**
25	**179.4**	**395**	**395**	**395**	**395**	**395**	**1FG1603- . . ■ ■ 3 - ■ . J2 -Z**
28	**163.09**	**395**	**395**	**395**	**395**	**395**	**1FG1603- . . ■ ■ 3 - ■ . H2 -Z**
31	**143**	**395**	**395**	**395**	**395**	**395**	**1FG1603- . . ■ ■ 3 - ■ . G2 -Z**
35	**127.64**	**395**	**395**	**395**	**395**	**395**	**1FG1603- . . ■ ■ 3 - ■ . F2 -Z**
36	**113.75**	375	355	**395**	**395**	**395**	**1FG1603- . . ■ ■ 3 - ■ . E2 -Z**
35	**105**	345	330	**385**	**385**	**385**	**1FG1603- . . ■ ■ 3 - ■ . D2 -Z**
37	**91.93**	305	290	**365**	**365**	**365**	**1FG1603- . . ■ ■ 3 - ■ . C2 -Z**
43	**80.6**	265	255	**345**	**345**	**345**	**1FG1603- . . ■ ■ 3 - ■ . B2 -Z**
47	**73.12**	240	230	**340**	**340**	**340**	**1FG1603- . . ■ ■ 3 - ■ . A2 -Z**
50	**68.82**	225	215	325	**325**	**325**	**1FG1603- . . ■ ■ 3 - ■ . X1 -Z**
57	**60.67**	200	192	290	**315**	**315**	**1FG1603- . . ■ ■ 3 - ■ . W1 -Z**
65	**52.65**	174	166	250	**295**	**295**	**1FG1603- . . ■ ■ 3 - ■ . V1 -Z**
90	**49.87**	199	191	285	**320**	**320**	**1FG1603- . . ■ ■ 3 - ■ . U1 -Z**
104	**43.27**	173	166	250	**350**	**350**	**1FG1603- . . ■ ■ 3 - ■ . T1 -Z**
114	**39.33**	158	151	225	365	350	**1FG1603- . . ■ ■ 3 - ■ . S1 -Z**
132	**30.67**	123	117	178	285	270	**1FG1603- . . ■ ■ 3 - ■ . Q1 -Z**
133	**33.73**	135	129	196	315	300	**1FG1603- . . ■ ■ 3 - ■ . R1 -Z**
133	**26.89**	108	103	156	250	240	**1FG1603- . . ■ ■ 3 - ■ . P1 -Z**
151	**24**	96	92	139	225	210	**1FG1603- . . ■ ■ 3 - ■ . N1 -Z**
167	**21.39**	86	82	124	200	191	**1FG1603- . . ■ ■ 3 - ■ . M1 -Z**
184	**19.74**	79	75	114	185	176	**1FG1603- . . ■ ■ 3 - ■ . L1 -Z**
208	**17.29**	69	66	100	162	154	**1FG1603- . . ■ ■ 3 - ■ . K1 -Z**
235	**15.16**	61	58	88	142	135	**1FG1603- . . ■ ■ 3 - ■ . J1 -Z**
267	**13.75**	55	52	80	129	123	**1FG1603- . . ■ ■ 3 - ■ . H1 -Z**
277	**12.94**	52	49	75	121	115	**1FG1603- . . ■ ■ 3 - ■ . G1 -Z**
320	**11.41**	45	43	66	107	102	**1FG1603- . . ■ ■ 3 - ■ . F1 -Z**
367	**9.9**	39	38	57	92	88	**1FG1603- . . ■ ■ 3 - ■ . E1 -Z**
500	**9**	37	35	53	86	82	**1FG1603- . . ■ ■ 3 - ■ . D1 -Z**
505	**7.47**	30	29	44	71	68	**1FG1603- . . ■ ■ 3 - ■ . B1 -Z**
525	**8.47**	34	33	50	81	77	**1FG1603- . . ■ ■ 3 - ■ . C1 -Z**
589	**6.48**	26	25	38	62	59	**1FG1603- . . ■ ■ 3 - ■ . A1 -Z**

Motor shaft height:										
	36						**C**			
				48			**D**			
Motor length/motor version (**CT** = Compact, **HD** = High Dynamic)**:**										
	2/CT			**2/CT**			**2**		**1**	
		3/HD			**3/HD**		**3**		**3**	
			4/CT				**4**		**1**	

Selection of Shaft design, encoder system, mounting type and special designs on page 6/20.

1FG1603- ■ ■ . . . - . ■ . . -Z

© Siemens 2019

Technical specifications

Gearbox type *C69*

Servo geared motor Type	i	R_{ex}	M_{2rated} Nm	M_{2max} Nm	$M_{2Em.Off}$ Nm	n_{2max} rpm	n_{1max} rpm	φ '	F_{R2} N	F_{R2max} N	c_T Nm/ '	J_G 10^{-4} kgm^2
1FG1604-.....-..M2	360	1079/3	675	690	780	13	4500	–	10600	10600	–	0.07
1FG1604-.....-..L2	319.8	1599/5	675	710	775	14	4500	–	10600	10500	–	0.09
1FG1604-.....-..K2	280.8	1404/5	675	710	770	16	4500	–	10600	10500	–	0.11
1FG1604-.....-..J2	255.27	2808/11	675	710	765	18	4500	–	10600	10500	–	0.13
1FG1604-.....-..H2	218.4	1092/5	675	710	760	21	4500	–	10600	10500	–	0.16
1FG1604-.....-..G2	198.55	2184/11	675	710	760	22	4335	–	10600	10500	–	0.19
1FG1604-.....-..F2	175.5	351/2	665	710	755	22	3778	–	10600	10500	–	0.22
1FG1604-.....-..E2	159.55	1755/11	640	710	750	21	3395	–	10700	10500	–	0.29
1FG1604-.....-..D2	139.75	559/4	590	675	750	24	3402	–	10600	10000	–	0.35
1FG1604-.....-..C2	129	129/1	565	655	745	26	3395	–	10300	9830	–	0.41
1FG1604-.....-..B2	114.21	1599/14	535	625	740	30	3411	–	10000	9460	–	0.48
1FG1604-.....-..A2	102.5	205/2	675	675	730	44	4500	–	8200	8200	–	0.1
1FG1604-.....-..X1	90	90/1	675	675	730	50	4500	–	7680	7680	–	0.12
1FG1604-.....-..W1	81.82	900/11	675	730	730	51	4183	–	7310	6970	–	0.15
1FG1604-.....-..V1	70	70/1	660	690	730	60	4216	–	6830	6650	–	0.18
1FG1604-.....-..U1	63.64	700/11	640	705	725	56	3543	–	6620	6210	–	0.22
1FG1604-.....-..T1	56.25	225/4	610	675	725	64	3599	–	6380	5980	–	0.27
1FG1604-.....-..S1	51.14	1125/22	580	655	725	70	3559	–	6250	5790	–	0.34
1FG1604-.....-..R1	44.79	1075/24	545	625	725	80	3595	–	6050	5550	–	0.41
1FG1604-.....-..Q1	41.35	1075/26	525	600	725	86	3565	–	5930	5460	–	0.49
1FG1604-.....-..P1	36.61	1025/28	500	570	725	98	3583	–	5720	5290	–	0.6
1FG1604-.....-..N1	30	30/1	545	575	710	145	4338	–	4500	4290	–	0.46
1FG1604-.....-..M1	26.28	473/18	515	575	715	149	3916	–	4350	3940	–	0.56
1FG1604-.....-..L1	24.26	946/39	500	565	715	149	3605	–	4250	3800	–	0.67
1FG1604-.....-..K1	21.48	451/21	475	540	715	168	3599	–	4110	3670	–	0.83
1FG1604-.....-..J1	17.88	143/8	440	500	720	199	3558	–	3920	3510	–	1.17
1FG1604-.....-..H1	15.88	1032/65	360	380	645	283	4500	–	3900	3750	–	0.88
1FG1604-.....-..G1	14.06	492/35	355	375	635	320	4500	–	3680	3510	–	1.11
1FG1604-.....-..F1	11.7	117/10	360	370	625	385	4500	–	3120	2940	–	1.56
1FG1604-.....-..E1	11.01	936/85	360	370	625	409	4500	–	2910	2730	–	1.79
1FG1604-.....-..D1	9.87	148/15	360	365	620	456	4500	–	2530	2440	–	2.15
1FG1604-.....-..C1	8.4	42/5	360	360	610	536	4500	–	2010	2010	–	2.92
1FG1604-.....-..B1	7.2	36/5	360	360	610	625	4500	–	1540	1540	–	3.93
1FG1604-.....-..A1	6.2	31/5	355	355	600	726	4500	–	1190	1190	–	5.23

© Siemens 2019

Selection and ordering data

Shaft design, encoder system, mounting type and special designs

Gearbox type *C69*						
			Servo helical worm geared motors SIMOTICS S-1FG1 Article No.			
			1FG1604- ■ ■ . . . - . ■ . . -Z			
Shaft design:	Solid shaft with feather keyway	– Design 1	**1**			
		– Design 2	**2**			
		– Design 3	**3**			
	Hollow-shaft with feather keyway	– Design 1 – H40	**5**			
		– Design 2 – H45	**6**			
Order codes and Descriptions see chapter "Options"	Special shaft design		**9**			
Encoder system for motors with DRIVE-CLiQ interface:	AS20DQI encoder			**Q**		
	AM20DQI encoder			**R**		
	R14DQ resolver			**P**		
	R15DQ resolver			**U**		
Order codes and Descriptions see chapter "Options"	Special version encoder system			**Z**		
Mounting type:	Foot-mounted design				**A**	
	Flange-mounted design				**F**	
	Housing flange design				**H**	
	Shaft-mounted design (not possible with solid shaft)				**D**	
Special designs (Options): Order codes and Descriptions see chapter "Options" The following order codes must be added to each article number: • Oil type – order codes **K08** or **K11** • Mounting position – order codes **D11** ... **D16** or **D21** ... **D26**						**-Z**
Selection of 2-stages Servo helical worm geared motors with gearbox size 69 from next page.			**1FG1604-** . . ■ ■ ■ - ■ . ■ ■ -Z			

6

© Siemens 2019

Selection and ordering data (continued)

For line voltage 380 ... 480 V 3 AC (DC link voltage 510 ... 720 V DC) **– Gearbox type** *C69*

Geared motor torque at 1450 rpm
Note: All values in **bold** print are maximum gearbox values.
M_{2dyn}
Nm

Servo helical worm geared motors SIMOTICS S-1FG1
Article No.

Max. output speed n_{2max} = **13 rpm**, Transmission ratio i = **360**	Article No.
690 690 690 690 690 690	1FG1604- . . ■ ■ **6** - ■ . **M2** -Z
– – – – – **690 690**	1FG1604- . . ■ ■ **4** - ■ . **M2** -Z
– – – – **690** – **690**	1FG1604- . . ■ ■ **3** - ■ . **M2** -Z
– – – – **690**	1FG1604- . . ■ ■ **2** - ■ . **M2** -Z
Max. output speed n_{2max} = 14 rpm, Transmission ratio i = 319.8	
710 710 710 710 710 710	1FG1604- . . ■ ■ **6** - ■ . **L2** -Z
– – – – – **710 710 710 710 710 710 710**	1FG1604- . . ■ ■ **4** - ■ . **L2** -Z
– – – – **710** – **710 710 710 710 710 710**	1FG1604- . . ■ ■ **3** - ■ . **L2** -Z
– – – – **710** – – **710** – **710 710 710**	1FG1604- . . ■ ■ **2** - ■ . **L2** -Z
Max. output speed n_{2max} = 16 rpm, Transmission ratio i = 280.8	
710 710 710 710 710 710	1FG1604- . . ■ ■ **6** - ■ . **K2** -Z
– – – – – **710 710 710 710 710 710 710**	1FG1604- . . ■ ■ **4** - ■ . **K2** -Z
– – – – **710** – **710 710 710 710 710 710**	1FG1604- . . ■ ■ **3** - ■ . **K2** -Z
– – – – **710** – – **710** – **710 710 710**	1FG1604- . . ■ ■ **2** - ■ . **K2** -Z
Max. output speed n_{2max} = 18 rpm, Transmission ratio i = 255.27	
710 710 710 710 710 710	1FG1604- . . ■ ■ **6** - ■ . **J2** -Z
– – – – – **710 710 710 710 710 710 710**	1FG1604- . . ■ ■ **4** - ■ . **J2** -Z
– – – – **710** – **710 710 710 710 710 710**	1FG1604- . . ■ ■ **3** - ■ . **J2** -Z
– – – – **710** – – **710** – **710 710 710**	1FG1604- . . ■ ■ **2** - ■ . **J2** -Z
Max. output speed n_{2max} = 21 rpm, Transmission ratio i = 218.4	
710 685 **710 710 710 710**	1FG1604- . . ■ ■ **6** - ■ . **H2** -Z
– – – – – **710 710 710 710 710 710 710**	1FG1604- . . ■ ■ **4** - ■ . **H2** -Z
– – – – **710** – **710 710 710 710 710 710**	1FG1604- . . ■ ■ **3** - ■ . **H2** -Z
– – – – **710** – – **710** – **710 710 710**	1FG1604- . . ■ ■ **2** - ■ . **H2** -Z
Max. output speed n_{2max} = 22 rpm, Transmission ratio i = 198.55	
650 625 **710 710 710 710**	1FG1604- . . ■ ■ **6** - ■ . **G2** -Z
– – – – – **710 710 710 710 710 710 710**	1FG1604- . . ■ ■ **4** - ■ . **G2** -Z
– – – – **710** – **710 710 710 710 710 710**	1FG1604- . . ■ ■ **3** - ■ . **G2** -Z
– – – – **710** – – **710** – **710 710 710**	1FG1604- . . ■ ■ **2** - ■ . **G2** -Z
Max. output speed n_{2max} = 22 rpm, Transmission ratio i = 175.5	
580 555 **710** 655 **710 710**	1FG1604- . . ■ ■ **6** - ■ . **F2** -Z
– – – – – **710 710 710 710 710 710 710 710 710 710**	1FG1604- . . ■ ■ **4** - ■ . **F2** -Z
– – – – **710** – **710 710 710 710 710 710 710 710 710 710 710 710**	1FG1604- . . ■ ■ **3** - ■ . **F2** -Z
– – – – **710** – – **710** – **710 710 710** – **710 710 710 710 710**	1FG1604- . . ■ ■ **2** - ■ . **F2** -Z

Motor shaft height:

36																							**C**	
			48																				**D**	
							63																**E**	
												80											**F**	
																		100					**G**	

Motor length/motor version (**CT** = Compact, **HD** = High Dynamic)**:**

			0/CT				**0/CT**					**0/CT**						**0/CT**					**0**	**2**
													1/CT						**1/CT**				**1**	**2**
								1/HD															**1**	**4**
2/CT				**2/CT**					**2/CT**														**2**	**2**
										3/CT				**3/CT**						**3/CT**			**3**	**2**
	3/HD				**3/HD**											**4/CT**							**3**	**4**
		4/CT																					**4**	**2**
						4/HD					**4/HD**												**4**	**4**
																				5/CT			**5**	**2**
																5/HD							**5**	**4**
																	6/HD						**6**	**4**

Selection of Shaft design, encoder system, mounting type and special designs on page 6/28.

1FG1604- ■ ■ . . . . - ■ . . **-Z**

© Siemens 2019

Servo helical worm geared motors SIMOTICS S-1FG1

Selecting servo geared motors

Gearbox size 69, 2-stage – 1FG1604

For line voltage 380 ... 480 V 3 AC (DC link voltage 510 ... 720 V DC) **– Gearbox type** *C69*

Geared motor torque at 1450 rpm
Note: All values in **bold** print are maximum gearbox values.
M_{2dyn}

Nm																						Article No.
Max. output speed n_{2max} = 21 rpm, Transmission ratio i = 159.55																						
525	505	**710**	600	**710**	**710**	–	–	–	–	–	–	–	–	–	–	–	–	–	–	–	–	1FG1604- . . ■ ■ 6 - ■ . E2 -Z
–	–	–	–	–	**710**	**710**	**710**	**710**	**710**	**710**	**710**	**710**	**710**	**710**	–	–	–	–	–	–	–	1FG1604- . . ■ ■ 4 - ■ . E2 -Z
–	–	–	–	**710**	–	**710**	**710**	**710**	**710**	**710**	**710**	**710**	**710**	**710**	**710**	**710**	**710**	–	–	–	–	1FG1604- . . ■ ■ 3 - ■ . E2 -Z
–	–	–	–	**710**	–	–	**710**	–	**710**	**710**	**710**	–	**710**	**710**	**710**	**710**	**710**	–	–	–	–	1FG1604- . . ■ ■ 2 - ■ . E2 -Z
Max. output speed n_{2max} = 24 rpm, Transmission ratio i = 139.75																						
460	440	670	525	**675**	**675**	–	–	–	–	–	–	–	–	–	–	–	–	–	–	–	–	1FG1604- . . ■ ■ 6 - ■ . D2 -Z
–	–	–	–	–	**675**	**675**	**675**	**675**	**675**	**675**	**675**	**675**	**675**	**675**	–	–	–	–	–	–	–	1FG1604- . . ■ ■ 4 - ■ . D2 -Z
–	–	–	–	**675**	–	**675**	**675**	**675**	**675**	**675**	**675**	**675**	**675**	**675**	**675**	**675**	**675**	–	–	–	–	1FG1604- . . ■ ■ 3 - ■ . D2 -Z
–	–	–	–	**675**	–	–	**675**	–	**675**	**675**	**675**	–	**675**	**675**	**675**	**675**	**675**	–	–	–	–	1FG1604- . . ■ ■ 2 - ■ . D2 -Z
Max. output speed n_{2max} = 26 rpm, Transmission ratio i = 129																						
425	410	620	485	**655**	**655**	–	–	–	–	–	–	–	–	–	–	–	–	–	–	–	–	1FG1604- . . ■ ■ 6 - ■ . C2 -Z
–	–	–	–	–	**655**	**655**	**655**	**655**	**655**	**655**	**655**	**655**	**655**	**655**	–	–	–	–	–	–	–	1FG1604- . . ■ ■ 4 - ■ . C2 -Z
–	–	–	–	**655**	–	**655**	**655**	**655**	**655**	**655**	**655**	**655**	**655**	**655**	**655**	**655**	**655**	–	–	–	–	1FG1604- . . ■ ■ 3 - ■ . C2 -Z
–	–	–	–	**655**	–	–	**655**	–	**655**	**655**	**655**	–	**655**	**655**	**655**	**655**	**655**	–	–	–	–	1FG1604- . . ■ ■ 2 - ■ . C2 -Z
Max. output speed n_{2max} = 30 rpm, Transmission ratio i = 114.21																						
380	360	545	430	**625**	**625**	–	–	–	–	–	–	–	–	–	–	–	–	–	–	–	–	1FG1604- . . ■ ■ 6 - ■ . B2 -Z
–	–	–	–	–	**625**	**625**	**625**	**625**	**625**	**625**	**625**	**625**	**625**	**625**	–	–	–	–	–	–	–	1FG1604- . . ■ ■ 4 - ■ . B2 -Z
–	–	–	–	**625**	–	**625**	**625**	**625**	**625**	**625**	**625**	**625**	**625**	**625**	**625**	**625**	**625**	**625**	**625**	**625**	**625**	1FG1604- . . ■ ■ 3 - ■ . B2 -Z
–	–	–	–	**625**	–	–	**625**	–	**625**	**625**	**625**	–	**625**	**625**	**625**	**625**	**625**	**625**	**625**	**625**	**625**	1FG1604- . . ■ ■ 2 - ■ . B2 -Z
Max. output speed n_{2max} = 44 rpm, Transmission ratio i = 102.5																						
395	380	570	450	**675**	**675**	–	–	–	–	–	–	–	–	–	–	–	–	–	–	–	–	1FG1604- . . ■ ■ 6 - ■ . A2 -Z
–	–	–	–	–	**675**	**675**	**675**	**675**	**675**	**675**	**675**	–	–	–	–	–	–	–	–	–	–	1FG1604- . . ■ ■ 4 - ■ . A2 -Z
–	–	–	–	**675**	–	**675**	**675**	**675**	**675**	**675**	**675**	–	–	–	–	–	–	–	–	–	–	1FG1604- . . ■ ■ 3 - ■ . A2 -Z
–	–	–	–	**675**	–	–	**675**	–	**675**	**675**	**675**	–	–	–	–	–	–	–	–	–	–	1FG1604- . . ■ ■ 2 - ■ . A2 -Z
Max. output speed n_{2max} = 50 rpm, Transmission ratio i = 90																						
350	330	505	395	**675**	**675**	–	–	–	–	–	–	–	–	–	–	–	–	–	–	–	–	1FG1604- . . ■ ■ 6 - ■ . X1 -Z
–	–	–	–	–	**675**	**675**	**675**	**675**	**675**	**675**	**675**	–	–	–	–	–	–	–	–	–	–	1FG1604- . . ■ ■ 4 - ■ . X1 -Z
–	–	–	–	**675**	–	**675**	**675**	**675**	**675**	**675**	**675**	–	–	–	–	–	–	–	–	–	–	1FG1604- . . ■ ■ 3 - ■ . X1 -Z
–	–	–	–	**675**	–	–	**675**	–	**675**	**675**	**675**	–	–	–	–	–	–	–	–	–	–	1FG1604- . . ■ ■ 2 - ■ . X1 -Z
Max. output speed n_{2max} = 51 rpm, Transmission ratio i = 81.82																						
315	305	460	360	**730**	705	–	–	–	–	–	–	–	–	–	–	–	–	–	–	–	–	1FG1604- . . ■ ■ 6 - ■ . W1 -Z
–	–	–	–	–	705	**730**	**730**	**730**	**730**	**730**	**730**	–	–	–	–	–	–	–	–	–	–	1FG1604- . . ■ ■ 4 - ■ . W1 -Z
–	–	–	–	**730**	–	**730**	**730**	**730**	**730**	**730**	**730**	–	–	–	–	–	–	–	–	–	–	1FG1604- . . ■ ■ 3 - ■ . W1 -Z
–	–	–	–	**730**	–	–	**730**	–	**730**	**730**	**730**	–	–	–	–	–	–	–	–	–	–	1FG1604- . . ■ ■ 2 - ■ . W1 -Z
Max. output speed n_{2max} = 56 rpm, Transmission ratio i = 63.64																						
245	235	360	280	580	550	–	–	–	–	–	–	–	–	–	–	–	–	–	–	–	–	1FG1604- . . ■ ■ 6 - ■ . U1 -Z
–	–	–	–	–	550	620	**705**	**705**	**705**	**705**	**705**	–	–	–	–	–	–	–	–	–	–	1FG1604- . . ■ ■ 4 - ■ . U1 -Z
–	–	–	–	580	–	620	**705**	**705**	**705**	**705**	**705**	–	–	–	–	–	–	–	–	–	–	1FG1604- . . ■ ■ 3 - ■ . U1 -Z
–	–	–	–	580	–	–	**705**	–	**705**	**705**	**705**	–	–	–	–	–	–	–	–	–	–	1FG1604- . . ■ ■ 2 - ■ . U1 -Z

Motor shaft height:

| | | | | | | | | | | | | | | | | | | |

© Siemens 2019

For line voltage 380 ... 480 V 3 AC (DC link voltage 510 ... 720 V DC) **– Gearbox type** ***C69***

Geared motor torque at 1450 rpm
Note: All values in **bold** print are maximum gearbox values.
M_{2dyn}
Nm

																						Servo helical worm geared motors SIMOTICS S-1FG1 Article No.
Max. output speed n_{2max} = **60 rpm**, Transmission ratio i = **70**																						
270	260	395	310	635	605	–	–	–	–	–	–	–	–	–	–	–	–	–	–	–	–	1FG1604- . . ■ ■ 6 - ■ . V1 -Z
–	–	–	–	–	605	685	**690**	**690**	**690**	**690**	**690**	–	–	–	–	–	–	–	–	–	–	1FG1604- . . ■ ■ 4 - ■ . V1 -Z
–	–	–	–	635	–	685	**690**	**690**	**690**	**690**	**690**	–	–	–	–	–	–	–	–	–	–	1FG1604- . . ■ ■ 3 - ■ . V1 -Z
–	–	–	–	635	–	–	**690**	–	**690**	**690**	**690**	–	–	–	–	–	–	–	–	–	–	1FG1604- . . ■ ■ 2 - ■ . V1 -Z
Max. output speed n_{2max} = **64 rpm**, Transmission ratio i = **56.25**																						
220	210	315	250	515	490	–	–	–	–	–	–	–	–	–	–	–	–	–	–	–	–	1FG1604- . . ■ ■ 6 - ■ . T1 -Z
–	–	–	–	–	490	550	**675**	**675**	**675**	**675**	**675**	**675**	**675**	**675**	–	–	–	–	–	–	–	1FG1604- . . ■ ■ 4 - ■ . T1 -Z
–	–	–	–	515	–	550	**675**	**675**	**675**	**675**	**675**	**675**	**675**	**675**	**675**	**675**	**675**	–	–	–	–	1FG1604- . . ■ ■ 3 - ■ . T1 -Z
–	–	–	–	515	–	–	**675**	–	**675**	**675**	**675**	–	**675**	**675**	**675**	**675**	**675**	–	–	–	–	1FG1604- . . ■ ■ 2 - ■ . T1 -Z
Max. output speed n_{2max} = **70 rpm**, Transmission ratio i = **51.14**																						
200	191	285	225	465	445	–	–	–	–	–	–	–	–	–	–	–	–	–	–	–	–	1FG1604- . . ■ ■ 6 - ■ . S1 -Z
–	–	–	–	–	445	500	**655**	**655**	**655**	**655**	**655**	**655**	**655**	**655**	–	–	–	–	–	–	–	1FG1604- . . ■ ■ 4 - ■ . S1 -Z
–	–	–	–	465	–	500	**655**	**655**	**655**	**655**	**655**	**655**	**655**	**655**	**655**	**655**	**655**	–	–	–	–	1FG1604- . . ■ ■ 3 - ■ . S1 -Z
–	–	–	–	465	–	–	**655**	–	**655**	**655**	**655**	–	**655**	**655**	**655**	**655**	**655**	–	–	–	–	1FG1604- . . ■ ■ 2 - ■ . S1 -Z
Max. output speed n_{2max} = **80 rpm**, Transmission ratio i = **44.79**																						
175	168	250	199	410	390	–	–	–	–	–	–	–	–	–	–	–	–	–	–	–	–	1FG1604- . . ■ ■ 6 - ■ . R1 -Z
–	–	–	–	–	390	440	**625**	**625**	**625**	**625**	**625**	**625**	**625**	**625**	–	–	–	–	–	–	–	1FG1604- . . ■ ■ 4 - ■ . R1 -Z
–	–	–	–	410	–	440	**625**	**625**	**625**	**625**	**625**	**625**	**625**	**625**	**625**	**625**	**625**	–	–	–	–	1FG1604- . . ■ ■ 3 - ■ . R1 -Z
–	–	–	–	410	–	–	**625**	–	**625**	**625**	**625**	–	**625**	**625**	**625**	**625**	**625**	–	–	–	–	1FG1604- . . ■ ■ 2 - ■ . R1 -Z
Max. output speed n_{2max} = **86 rpm**, Transmission ratio i = **41.35**																						
162	155	230	184	375	360	–	–	–	–	–	–	–	–	–	–	–	–	–	–	–	–	1FG1604- . . ■ ■ 6 - ■ . Q1 -Z
–	–	–	–	–	360	405	**600**	**600**	**600**	**600**	**600**	**600**	**600**	**600**	–	–	–	–	–	–	–	1FG1604- . . ■ ■ 4 - ■ . Q1 -Z
–	–	–	–	375	–	405	**600**	**600**	**600**	**600**	**600**	**600**	**600**	**600**	**600**	**600**	**600**	–	–	–	–	1FG1604- . . ■ ■ 3 - ■ . Q1 -Z
–	–	–	–	375	–	–	**600**	–	**600**	**600**	**600**	–	**600**	**600**	**600**	**600**	**600**	–	–	–	–	1FG1604- . . ■ ■ 2 - ■ . Q1 -Z
Max. output speed n_{2max} = **98 rpm**, Transmission ratio i = **36.61**																						
143	137	205	162	335	315	–	–	–	–	–	–	–	–	–	–	–	–	–	–	–	–	1FG1604- . . ■ ■ 6 - ■ . P1 -Z
–	–	–	–	–	315	360	**570**	550	**570**	**570**	**570**	**570**	**570**	**570**	–	–	–	–	–	–	–	1FG1604- . . ■ ■ 4 - ■ . P1 -Z
–	–	–	–	335	–	360	**570**	550	**570**	**570**	**570**	**570**	**570**	**570**	**570**	**570**	**570**	**570**	**570**	**570**	**570**	1FG1604- . . ■ ■ 3 - ■ . P1 -Z
–	–	–	–	335	–	–	**570**	–	**570**	**570**	**570**	–	**570**	**570**	**570**	**570**	**570**	**570**	**570**	**570**	**570**	1FG1604- . . ■ ■ 2 - ■ . P1 -Z
Max. output speed n_{2max} = **145 rpm**, Transmission ratio i = **30**																						
122	116	176	138	280	270	–	–	–	–	–	–	–	–	–	–	–	–	–	–	–	–	1FG1604- . . ■ ■ 6 - ■ . N1 -Z
–	–	–	–	–	270	305	485	465	**575**	**575**	**575**	**575**	**575**	**575**	–	–	–	–	–	–	–	1FG1604- . . ■ ■ 4 - ■ . N1 -Z
–	–	–	–	280	–	305	485	465	**575**	**575**	**575**	**575**	**575**	**575**	**575**	**575**	**575**	–	–	–	–	1FG1604- . . ■ ■ 3 - ■ . N1 -Z
–	–	–	–	280	–	–	485	–	**575**	**575**	**575**	–	**575**	**575**	**575**	**575**	**575**	–	–	–	–	1FG1604- . . ■ ■ 2 - ■ . N1 -Z
Max. output speed n_{2max} = **149 rpm**, Transmission ratio i = **26.28**																						
106	102	154	121	245	235	–	–	–	–	–	–	–	–	–	–	–	–	–	–	–	–	1FG1604- . . ■ ■ 6 - ■ . M1 -Z
–	–	–	–	–	235	265	425	410	**575**	**575**	**575**	**575**	**575**	**575**	–	–	–	–	–	–	–	1FG1604- . . ■ ■ 4 - ■ . M1 -Z
–	–	–	–	245	–	265	425	410	**575**	**575**	**575**	**575**	**575**	**575**	**575**	**575**	**575**	–	–	–	–	1FG1604- . . ■ ■ 3 - ■ . M1 -Z
–	–	–	–	245	–	–	425	–	**575**	**575**	**575**	–	**575**	**575**	**575**	**575**	**575**	–	–	–	–	1FG1604- . . ■ ■ 2 - ■ . M1 -Z

Motor shaft height:

36																						**C**
			48																			**D**
							63															**E**
												80										**F**
																	100					**G**

Motor length/motor version (**CT** = Compact, **HD** = High Dynamic)**:**

			0/CT				**0/CT**					**0/CT**						**0/CT**					**0**	**2**
													1/CT						**1/CT**				**1**	**2**
								1/HD															**1**	**4**
2/CT				**2/CT**					**2/CT**														**2**	**2**
										3/CT					**3/CT**					**3/CT**			**3**	**2**
	3/HD				**3/HD**																		**3**	**4**
		4/CT														**4/CT**							**4**	**2**
						4/HD					**4/HD**													**4**	**4**
																				5/CT			**5**	**2**
																	5/HD						**5**	**4**
																		6/HD					**6**	**4**

Selection of Shaft design, encoder system, mounting type and special designs on page 6/28.

1FG1604- ■ ■ . . . - . ■ . . -Z

© Siemens 2019

Gearbox size 69, 2-stage – 1FG1604

For line voltage 380 ... 480 V 3 AC (DC link voltage 510 ... 720 V DC) **– Gearbox type** *C69*

Geared motor torque at 1450 rpm
Note: All values in **bold** print are maximum gearbox values.
M_{2dyn} Nm

Servo helical worm geared motors SIMOTICS S-1FG1
Article No.

Max. output speed n_{2max} = **149 rpm**, Transmission ratio i = **24.26**																						
98	94	142	111	230	215	–	–	–	–	–	–	–	–	–	–	–	–	–	–	–	–	1FG1604- . . ■ ■ 6 - ■ . L1 -Z
–	–	–	–	–	215	245	390	375	**565**	**565**	**565**	545	**565**	**565**	–	–	–	–	–	–	–	1FG1604- . . ■ ■ 4 - ■ . L1 -Z
–	–	–	–	230	–	245	390	375	**565**	**565**	**565**	545	**565**	**565**	**565**	**565**	**565**	–	–	–	–	1FG1604- . . ■ ■ 3 - ■ . L1 -Z
–	–	–	–	230	–	–	390	–	**565**	**565**	**565**	–	**565**	**565**	**565**	**565**	**565**	–	–	–	–	1FG1604- . . ■ ■ 2 - ■ . L1 -Z
Max. output speed n_{2max} = **168 rpm**, Transmission ratio i = **21.48**																						
87	83	126	99	200	194	–	–	–	–	–	–	–	–	–	–	–	–	–	–	–	–	1FG1604- . . ■ ■ 6 - ■ . K1 -Z
–	–	–	–	–	194	215	345	335	505	**540**	**540**	485	**540**	**540**	–	–	–	–	–	–	–	1FG1604- . . ■ ■ 4 - ■ . K1 -Z
–	–	–	–	200	–	215	345	335	505	**540**	**540**	485	**540**	**540**	**540**	**540**	**540**	**540**	**540**	**540**	**540**	1FG1604- . . ■ ■ 3 - ■ . K1 -Z
–	–	–	–	200	–	–	345	–	505	**540**	**540**	–	**540**	**540**	**540**	**540**	**540**	**540**	**540**	**540**	**540**	1FG1604- . . ■ ■ 2 - ■ . K1 -Z
Max. output speed n_{2max} = **199 rpm**, Transmission ratio i = **17.88**																						
72	69	105	82	169	161	–	–	–	–	–	–	–	–	–	–	–	–	–	–	–	–	1FG1604- . . ■ ■ 6 - ■ . J1 -Z
–	–	–	–	–	161	182	290	275	420	**500**	**500**	400	**500**	**500**	–	–	–	–	–	–	–	1FG1604- . . ■ ■ 4 - ■ . J1 -Z
–	–	–	–	169	–	182	290	275	420	**500**	**500**	400	**500**	**500**	**500**	**500**	**500**	**500**	**500**	**500**	**500**	1FG1604- . . ■ ■ 3 - ■ . J1 -Z
–	–	–	–	169	–	–	290	–	420	**500**	**500**	–	**500**	**500**	**500**	**500**	**500**	**500**	**500**	**500**	**500**	1FG1604- . . ■ ■ 2 - ■ . J1 -Z
Max. output speed n_{2max} = **283 rpm**, Transmission ratio i = **15.88**																						
65	62	94	74	153	145	–	–	–	–	–	–	–	–	–	–	–	–	–	–	–	–	1FG1604- . . ■ ■ 6 - ■ . H1 -Z
–	–	–	–	–	145	164	260	250	375	**380**	**380**	360	**380**	**380**	–	–	–	–	–	–	–	1FG1604- . . ■ ■ 4 - ■ . H1 -Z
–	–	–	–	153	–	164	260	250	375	**380**	**380**	360	**380**	**380**	**380**	**380**	**380**	–	–	–	–	1FG1604- . . ■ ■ 3 - ■ . H1 -Z
–	–	–	–	153	–	–	260	–	375	**380**	**380**	–	**380**	**380**	**380**	**380**	**380**	–	–	–	–	1FG1604- . . ■ ■ 2 - ■ . H1 -Z
Max. output speed n_{2max} = **320 rpm**, Transmission ratio i = **14.06**																						
58	55	83	65	135	129	–	–	–	–	–	–	–	–	–	–	–	–	–	–	–	–	1FG1604- . . ■ ■ 6 - ■ . G1 -Z
–	–	–	–	–	129	145	230	220	335	**375**	**375**	320	**375**	**375**	–	–	–	–	–	–	–	1FG1604- . . ■ ■ 4 - ■ . G1 -Z
–	–	–	–	135	–	145	230	220	335	**375**	**375**	320	**375**	**375**	**375**	**375**	**375**	**375**	**375**	**375**	**375**	1FG1604- . . ■ ■ 3 - ■ . G1 -Z
–	–	–	–	135	–	–	230	–	335	**375**	**375**	–	**375**	**375**	**375**	**375**	**375**	**375**	**375**	**375**	**375**	1FG1604- . . ■ ■ 2 - ■ . G1 -Z
Max. output speed n_{2max} = **385 rpm**, Transmission ratio i = **11.7**																						
48	46	69	54	112	107	–	–	–	–	–	–	–	–	–	–	–	–	–	–	–	–	1FG1604- . . ■ ■ 6 - ■ . F1 -Z
–	–	–	–	–	107	121	193	185	275	**370**	340	265	**370**	**370**	–	–	–	–	–	–	–	1FG1604- . . ■ ■ 4 - ■ . F1 -Z
–	–	–	–	112	–	121	193	185	275	**370**	340	265	**370**	**370**	**370**	**370**	**370**	**370**	**370**	**370**	**370**	1FG1604- . . ■ ■ 3 - ■ . F1 -Z
–	–	–	–	112	–	–	193	–	275	**370**	340	–	**370**	**370**	**370**	**370**	**370**	**370**	**370**	**370**	**370**	1FG1604- . . ■ ■ 2 - ■ . F1 -Z
Max. output speed n_{2max} = **409 rpm**, Transmission ratio i = **11.01**																						
45	43	65	51	106	101	–	–	–	–	–	–	–	–	–	–	–	–	–	–	–	–	1FG1604- . . ■ ■ 6 - ■ . E1 -Z
–	–	–	–	–	101	113	181	174	260	350	320	250	370	**370**	–	–	–	–	–	–	–	1FG1604- . . ■ ■ 4 - ■ . E1 -Z
–	–	–	–	106	–	113	181	174	260	350	320	250	370	**370**	**370**	**370**	**370**	**370**	**370**	**370**	**370**	1FG1604- . . ■ ■ 3 - ■ . E1 -Z
–	–	–	–	106	–	–	181	–	260	350	320	–	370	**370**	**370**	**370**	**370**	**370**	**370**	**370**	**370**	1FG1604- . . ■ ■ 2 - ■ . E1 -Z
Max. output speed n_{2max} = **456 rpm**, Transmission ratio i = **9.87**																						
40	38	58	46	95	90	–	–	–	–	–	–	–	–	–	–	–	–	–	–	–	–	1FG1604- . . ■ ■ 6 - ■ . D1 -Z
–	–	–	–	–	90	102	163	156	235	315	285	225	335	**365**	–	–	–	–	–	–	–	1FG1604- . . ■ ■ 4 - ■ . D1 -Z
–	–	–	–	95	–	102	163	156	235	315	285	225	335	**365**	**365**	**365**	**365**	**365**	**365**	**365**	**365**	1FG1604- . . ■ ■ 3 - ■ . D1 -Z
–	–	–	–	95	–	–	163	–	235	315	285	–	335	**365**	**365**	**365**	**365**	**365**	**365**	**365**	**365**	1FG1604- . . ■ ■ 2 - ■ . D1 -Z

Motor shaft height:

36																						**C**
			48																			**D**
							63															**E**
												80										**F**
																	100					**G**

Motor length/motor version (**CT** = Compact, **HD** = High Dynamic)**:**

			0/CT				**0/CT**					**0/CT**						**0/CT**					**0**	**2**
													1/CT						**1/CT**				**1**	**2**
								1/HD															**1**	**4**
2/CT				**2/CT**					**2/CT**														**2**	**2**
										3/CT				**3/CT**						**3/CT**			**3**	**2**
	3/HD				**3/HD**																		**3**	**4**
		4/CT														**4/CT**							**4**	**2**
						4/HD					**4/HD**													**4**	**4**
																				5/CT			**5**	**2**
															5/HD								**5**	**4**
																6/HD							**6**	**4**

Selection of Shaft design, encoder system, mounting type and special designs on page 6/28.

1FG1604- ■ ■ . . . - . ■ . . -Z

© Siemens 2019

For line voltage 380 ... 480 V 3 AC (DC link voltage 510 ... 720 V DC) **– Gearbox type** ***C69***

Geared motor torque at 1450 rpm
Note: All values in **bold** print are maximum gearbox values.
M_{2dyn}
Nm

																						Article No.
Max. output speed n_{2max} = **536 rpm**, Transmission ratio i = **8.4**																						
34	33	50	39	80	77	–	–	–	–	–	–	–	–	–	–	–	–	–	–	–	–	1FG1604- . . ■ ■ 6 - ■ . C1 -Z
–	–	–	–	–	77	86	138	133	200	265	245	192	280	**360**	–	–	–	–	–	–	–	1FG1604- . . ■ ■ 4 - ■ . C1 -Z
–	–	–	–	80	–	86	138	133	200	265	245	192	280	**360**	**360**	**360**	**360**	**360**	**360**	**360**	**360**	1FG1604- . . ■ ■ 3 - ■ . C1 -Z
–	–	–	–	80	–	–	138	–	200	265	245	–	280	**360**	**360**	**360**	**360**	**360**	**360**	**360**	**360**	1FG1604- . . ■ ■ 2 - ■ . C1 -Z
Max. output speed n_{2max} = **625 rpm**, Transmission ratio i = **7.2**																						
–	–	–	–	–	–	–	–	–	–	–	–	–	–	–	–	–	–	–	–	–	–	1FG1604- . . ■ ■ 6 - ■ . B1 -Z
–	–	–	–	–	–	–	118	114	171	230	210	165	240	330	–	–	–	–	–	–	–	1FG1604- . . ■ ■ 4 - ■ . B1 -Z
–	–	–	–	–	–	–	118	114	171	230	210	165	240	330	**360**	**360**	**360**	360	**360**	**360**	**360**	1FG1604- . . ■ ■ 3 - ■ . B1 -Z
–	–	–	–	–	–	–	118	–	171	230	210	–	240	330	**360**	**360**	**360**	360	**360**	**360**	**360**	1FG1604- . . ■ ■ 2 - ■ . B1 -Z
Max. output speed n_{2max} = **726 rpm**, Transmission ratio i = **6.2**																						
–	–	–	–	–	–	–	–	–	–	–	–	–	–	–	–	–	–	–	–	–	–	1FG1604- . . ■ ■ 6 - ■ . A1 -Z
–	–	–	–	–	–	–	102	98	148	199	182	142	210	280	–	–	–	–	–	–	–	1FG1604- . . ■ ■ 4 - ■ . A1 -Z
–	–	–	–	–	–	–	102	98	148	199	182	142	210	280	345	**355**	**355**	310	**355**	**355**	**355**	1FG1604- . . ■ ■ 3 - ■ . A1 -Z
–	–	–	–	–	–	–	102	–	148	199	182	–	210	280	345	**355**	**355**	310	**355**	**355**	**355**	1FG1604- . . ■ ■ 2 - ■ . A1 -Z
Motor shaft height:																						
36																						C
			48																			D
							63															E
												80										F
																		100				G
Motor length/motor version (**CT** = Compact, **HD** = High Dynamic)**:**																						
			0/CT				**0/CT**					**0/CT**						**0/CT**					0	2
													1/CT						**1/CT**			1	2
								1/HD														1	4
2/CT				**2/CT**					**2/CT**													2	2
										3/CT				**3/CT**					**3/CT**			3	2
	3/HD				**3/HD**																	3	4
		4/CT													**4/CT**							4	2
						4/HD					**4/HD**											4	4
																				5/CT		5	2
																5/HD						5	4
																	6/HD					6	4

Selection of Shaft design, encoder system, mounting type and special designs on page 6/28.

1FG1604- ■ ■ . . . . - . ■ . . **-Z**

© Siemens 2019

Gearbox size 69, 2-stage – 1FG1604

Selection and ordering data (continued)

For line voltage 200 ... 240 V 1 AC (DC link voltage 270 ... 330 V DC) **– Gearbox type** *C69*

Max. output speed n_{2max} rpm	Transmission ratio i	Geared motor torque at 1450 rpm Note: All values in **bold** print are maximum gearbox values. M_{2dyn} Nm					**Servo helical worm geared motors SIMOTICS S-1FG1** Article No.
13	**360**	**690**	**690**	**690**	**690**	**690**	**1FG1604- . . ■ ■ 3 - ■ . M2 -Z**
14	**319.8**	**710**	**710**	**710**	**710**	**710**	**1FG1604- . . ■ ■ 3 - ■ . L2 -Z**
16	**280.8**	**710**	**710**	**710**	**710**	**710**	**1FG1604- . . ■ ■ 3 - ■ . K2 -Z**
18	**255.27**	**710**	**710**	**710**	**710**	**710**	**1FG1604- . . ■ ■ 3 - ■ . J2 -Z**
21	**218.4**	**710**	685	**710**	**710**	**710**	**1FG1604- . . ■ ■ 3 - ■ . H2 -Z**
22	**198.55**	650	625	**710**	**710**	**710**	**1FG1604- . . ■ ■ 3 - ■ . G2 -Z**
22	**175.5**	580	555	**710**	**710**	**710**	**1FG1604- . . ■ ■ 3 - ■ . F2 -Z**
21	**159.55**	525	505	**710**	**710**	**710**	**1FG1604- . . ■ ■ 3 - ■ . E2 -Z**
24	**139.75**	460	440	670	**675**	**675**	**1FG1604- . . ■ ■ 3 - ■ . D2 -Z**
26	**129**	425	410	620	**655**	**655**	**1FG1604- . . ■ ■ 3 - ■ . C2 -Z**
30	**114.21**	380	360	545	**625**	**625**	**1FG1604- . . ■ ■ 3 - ■ . B2 -Z**
44	**102.5**	395	380	570	**675**	**675**	**1FG1604- . . ■ ■ 3 - ■ . A2 -Z**
50	**90**	350	330	505	**675**	**675**	**1FG1604- . . ■ ■ 3 - ■ . X1 -Z**
51	**81.82**	315	305	460	**730**	705	**1FG1604- . . ■ ■ 3 - ■ . W1 -Z**
56	**63.64**	245	235	360	580	550	**1FG1604- . . ■ ■ 3 - ■ . U1 -Z**
60	**70**	270	260	395	635	605	**1FG1604- . . ■ ■ 3 - ■ . V1 -Z**
64	**56.25**	220	210	315	515	490	**1FG1604- . . ■ ■ 3 - ■ . T1 -Z**
70	**51.14**	200	191	285	465	445	**1FG1604- . . ■ ■ 3 - ■ . S1 -Z**
80	**44.79**	175	168	250	410	390	**1FG1604- . . ■ ■ 3 - ■ . R1 -Z**
86	**41.35**	162	155	230	375	360	**1FG1604- . . ■ ■ 3 - ■ . Q1 -Z**
98	**36.61**	143	137	205	335	315	**1FG1604- . . ■ ■ 3 - ■ . P1 -Z**
145	**30**	122	116	176	280	270	**1FG1604- . . ■ ■ 3 - ■ . N1 -Z**
149	**26.28**	106	102	154	245	235	**1FG1604- . . ■ ■ 3 - ■ . M1 -Z**
149	**24.26**	98	94	142	230	215	**1FG1604- . . ■ ■ 3 - ■ . L1 -Z**
168	**21.48**	87	83	126	200	194	**1FG1604- . . ■ ■ 3 - ■ . K1 -Z**
199	**17.88**	72	69	105	169	161	**1FG1604- . . ■ ■ 3 - ■ . J1 -Z**
283	**15.88**	65	62	94	153	145	**1FG1604- . . ■ ■ 3 - ■ . H1 -Z**
320	**14.06**	58	55	83	135	129	**1FG1604- . . ■ ■ 3 - ■ . G1 -Z**
385	**11.7**	48	46	69	112	107	**1FG1604- . . ■ ■ 3 - ■ . F1 -Z**
409	**11.01**	45	43	65	106	101	**1FG1604- . . ■ ■ 3 - ■ . E1 -Z**
456	**9.87**	40	38	58	95	90	**1FG1604- . . ■ ■ 3 - ■ . D1 -Z**
536	**8.4**	34	33	50	80	77	**1FG1604- . . ■ ■ 3 - ■ . C1 -Z**
Motor shaft height:							
		36					**C**
					48		**D**
Motor length/motor version (**CT** = Compact, **HD** = High Dynamic)**:**							
		2/CT			**2/CT**		**2** **1**
			3/HD			**3/HD**	**3** **3**
				4/CT			**4** **1**

Selection of Shaft design, encoder system, mounting type and special designs on page 6/28.

1FG1604- ■ ■ . . . - . ■ . . -Z

© Siemens 2019

Technical specifications

Gearbox type *C89*

Servo geared motor Type	i	R_{ex}	M_{2rated} Nm	M_{2max} Nm	$M_{2Em.Off}$ Nm	n_{2max} rpm	n_{1max} rpm	φ '	F_{R2} N	F_{R2max} N	c_T Nm/ '	J_G 10^{-4} kgm^2
1FG1605-.....-..N2	363	3627/10	1450	1450	1640	12	4500	–	16200	16200	–	0.47
1FG1605-.....-..M2	329.73	3627/11	1440	1520	1630	14	4500	–	16200	16100	–	0.57
1FG1605-.....-..L2	295.75	1183/4	1450	1520	1620	15	4500	–	16200	16100	–	0.78
1FG1605-.....-..K2	265.91	2925/11	1450	1520	1620	17	4500	–	16200	16100	–	0.89
1FG1605-.....-..J2	240.5	481/2	1440	1520	1610	19	4500	–	16200	16100	–	0.99
1FG1605-.....-..H2	222	222/1	1400	1440	1600	20	4500	–	16200	16300	–	1.17
1FG1605-.....-..G2	203.36	2847/14	1360	1440	1600	21	4235	–	16200	16300	–	1.49
1FG1605-.....-..F2	170.62	1365/8	1280	1520	1590	21	3504	–	16300	16100	–	1.65
1FG1605-.....-..E2	160.59	2730/17	1250	1520	1590	20	3277	–	16300	16100	–	1.88
1FG1605-.....-..D2	147.33	442/3	1220	1500	1580	21	3045	–	16300	16000	–	2.06
1FG1605-.....-..C2	128.7	1287/10	1140	1430	1580	23	3024	–	16300	15300	–	2.91
1FG1605-.....-..B2	115.23	2535/22	1090	1370	1570	26	3042	–	16000	14800	–	3.58
1FG1605-.....-..A2	100.75	403/4	1030	1310	1570	30	3068	–	15300	14100	–	4.21
1FG1605-.....-..X1	86.48	1989/23	970	1200	1560	36	3088	–	14600	13600	–	4.73
1FG1605-.....-..W1	76.44	1911/25	925	1130	1550	40	3062	–	14100	13200	–	5.80
1FG1605-.....-..V1	65	65/1	865	1050	1550	47	3073	–	13400	12600	–	8.12
1FG1605-.....-..U1	55.61	1001/18	1430	1480	1480	81	4500	–	8620	8350	–	0.89
1FG1605-.....-..T1	50	50/1	1410	1480	1480	83	4171	–	8160	7780	–	1.02
1FG1605-.....-..S1	45.22	407/9	1370	1480	1480	83	3771	–	7860	7260	–	1.15
1FG1605-.....-..R1	41.74	1628/39	1330	1480	1480	83	3471	–	7680	6870	–	1.35
1FG1605-.....-..Q1	38.24	803/21	1290	1450	1480	88	3382	–	7470	6600	–	1.73
1FG1605-.....-..P1	32.08	385/12	1220	1370	1480	105	3382	–	7030	6220	–	1.97
1FG1605-.....-..N1	30.2	1540/51	1180	1340	1480	112	3394	–	6980	6110	–	2.25
1FG1605-.....-..M1	27.7	748/27	1140	1300	1480	121	3351	–	6820	5950	–	2.51
1FG1605-.....-..L1	25.03	876/35	1090	1150	1600	180	4500	–	4840	4020	–	2.07
1FG1605-.....-..K1	21	21/1	1080	1080	1610	214	4500	–	3740	3740	–	2.45
1FG1605-.....-..J1	19.76	336/17	1120	1140	1610	228	4500	–	2780	2500	–	2.79
1FG1605-.....-..H1	18.13	272/15	1120	1120	1620	248	4500	–	2210	2210	–	3.15
1FG1605-.....-..G1	15.84	396/25	1120	1130	1620	284	4500	–	1340	1200	–	4.35
1FG1605-.....-..F1	14.18	156/11	1080	1130	1630	286	4060	–	1210	525	–	5.39
1FG1605-.....-..E1	12.4	62/5	1030	1110	1640	304	3764	–	1100	38	–	6.6
1FG1605-.....-..D1	10.64	1224/115	970	1050	1650	353	3752	–	1070	19	–	7.95
1FG1605-.....-..C1	9.41	1176/125	930	1000	1670	403	3789	–	965	26	–	10.15
1FG1605-.....-..B1	8	8/1	840	950	1610	469	3753	–	1390	0	–	13.51
1FG1605-.....-..A1	6.86	48/7	720	900	1530	551	3778	–	2350	0	–	18.12

© Siemens 2019

Selection and ordering data

Shaft design, encoder system, mounting type and special designs

Gearbox type ***C89***

			Servo helical worm geared motors SIMOTICS S-1FG1 Article No.			
			1FG1605- ■ ■ . . . - . ■ . .			**-Z**
Shaft design:	Solid shaft with feather keyway	– Design 1	**1**			
		– Design 2	**2**			
		– Design 3	**3**			
	Hollow-shaft with feather keyway	– Design 1 – H50	**5**			
		– Design 2 – H60	**6**			
Order codes and Descriptions see chapter "Options"	Special shaft design		**9**			
Encoder system for motors with DRIVE-CLiQ interface:	AS20DQI encoder			**Q**		
	AM20DQI encoder			**R**		
	R14DQ resolver			**P**		
	R15DQ resolver			**U**		
Order codes and Descriptions see chapter "Options"	Special version encoder system			**Z**		
Mounting type:	Foot-mounted design				**A**	
	Flange-mounted design				**F**	
	Housing flange design				**H**	
	Shaft-mounted design (not possible with solid shaft)				**D**	
Special designs (Options): Order codes and Descriptions see chapter "Options" The following order codes must be added to each article number: • Oil type – order codes **K08** or **K11** • Mounting position – order codes **D11** ... **D16** or **D21** ... **D26**						**-Z**
Selection of 2-stages Servo helical worm geared motors with gearbox size 89 from next page.			**1FG1605-** . . ■ ■ ■ - ■ . ■ ■			**-Z**

6

© Siemens 2019

Selection and ordering data (continued)

For line voltage 380 ... 480 V 3 AC (DC link voltage 510 ... 720 V DC) **– Gearbox type** ***C89***

Geared motor torque at 1450 rpm
Note: All values in **bold** print are maximum gearbox values.
M_{2dyn}
Nm

36	48	63	80	100	Servo helical worm geared motors SIMOTICS S-1FG1 Article No.
Max. output speed n_{2max} = 12 rpm, Transmission ratio i = 363					
–	–	–	–	–	1FG1605- . . ■ ■ 6 - ■ . N2 -Z
–	1450	1450	1450	–	1FG1605- . . ■ ■ 4 - ■ . N2 -Z
–	1450	1450	1450	–	1FG1605- . . ■ ■ 3 - ■ . N2 -Z
–	1450	1450	1450	–	1FG1605- . . ■ ■ 2 - ■ . N2 -Z
Max. output speed n_{2max} = 14 rpm, Transmission ratio i = 329.73					
–	–	–	–	–	1FG1605- . . ■ ■ 6 - ■ . M2 -Z
–	1520	1520	1520	–	1FG1605- . . ■ ■ 4 - ■ . M2 -Z
–	1520	1520	1520	–	1FG1605- . . ■ ■ 3 - ■ . M2 -Z
–	1520	1520	1520	–	1FG1605- . . ■ ■ 2 - ■ . M2 -Z
Max. output speed n_{2max} = 15 rpm, Transmission ratio i = 295.75					
–	–	–	–	–	1FG1605- . . ■ ■ 6 - ■ . L2 -Z
–	1520	1520	1520	–	1FG1605- . . ■ ■ 4 - ■ . L2 -Z
–	1520	1520	1520	–	1FG1605- . . ■ ■ 3 - ■ . L2 -Z
–	1520	1520	1520	–	1FG1605- . . ■ ■ 2 - ■ . L2 -Z
Max. output speed n_{2max} = 17 rpm, Transmission ratio i = 265.91					
–	–	–	–	–	1FG1605- . . ■ ■ 6 - ■ . K2 -Z
–	1520	1520	1520	–	1FG1605- . . ■ ■ 4 - ■ . K2 -Z
–	1520	1520	1520	–	1FG1605- . . ■ ■ 3 - ■ . K2 -Z
–	1520	1520	1520	–	1FG1605- . . ■ ■ 2 - ■ . K2 -Z
Max. output speed n_{2max} = 19 rpm, Transmission ratio i = 240.5					
–	–	–	–	–	1FG1605- . . ■ ■ 6 - ■ . J2 -Z
–	1520	1520	1520	–	1FG1605- . . ■ ■ 4 - ■ . J2 -Z
–	1520	1520	1520	–	1FG1605- . . ■ ■ 3 - ■ . J2 -Z
–	1520	1520	1520	–	1FG1605- . . ■ ■ 2 - ■ . J2 -Z
Max. output speed n_{2max} = 20 rpm, Transmission ratio i = 222					
–	–	–	–	–	1FG1605- . . ■ ■ 6 - ■ . H2 -Z
–	1440	1440	1440	–	1FG1605- . . ■ ■ 4 - ■ . H2 -Z
–	1440	1440	1440	–	1FG1605- . . ■ ■ 3 - ■ . H2 -Z
–	1440	1440	1440	–	1FG1605- . . ■ ■ 2 - ■ . H2 -Z
Max. output speed n_{2max} = 21 rpm, Transmission ratio i = 203.36					
–	–	–	–	–	1FG1605- . . ■ ■ 6 - ■ . G2 -Z
–	1440	1440	1440	–	1FG1605- . . ■ ■ 4 - ■ . G2 -Z
–	1440	1440	1440	1440	1FG1605- . . ■ ■ 3 - ■ . G2 -Z
–	1440	1440	1440	1440	1FG1605- . . ■ ■ 2 - ■ . G2 -Z

Motor shaft height:						
36					C	
48					D	
63					E	
80					F	
100					G	
Motor length/motor version (CT = Compact, HD = High Dynamic):						
0/CT	0/CT	0/CT	0/CT		0	2
1/CT			1/CT		1	2
1/HD					1	4
2/CT	2/CT				2	2
3/CT		3/CT	3/CT		3	2
3/HD	3/HD				3	4
4/CT		4/CT			4	2
4/HD	4/HD				4	4
			5/CT		5	2
		5/HD			5	4
		6/HD			6	4

Selection of Shaft design, encoder system, mounting type and special designs on page 6/36.

1FG1606- ■ ■ . . . . - ■ . . -Z

© Siemens 2019

Gearbox size 89, 2-stage – 1FG1605

For line voltage 380 ... 480 V 3 AC (DC link voltage 510 ... 720 V DC) **– Gearbox type** *C89*

Geared motor torque at 1450 rpm
Note: All values in **bold** print are maximum gearbox values.
M_{2dyn}
Nm

Servo helical worm geared motors SIMOTICS S-1FG1
Article No.

Max. output speed n_{2max} = **21 rpm**, Transmission ratio i = **170.62**																						
–	–	–	–	–	–	–	–	–	–	–	–	–	–	–	–	–	–	–	–	–	–	1FG1605- . . ■ ■ 6 - ■ . F2 -Z
–	–	–	–	–	–	–	**1520**	**1520**	**1520**	**1520**	**1520**	**1520**	**1520**	**1520**	–	–	–	–	–	–	–	1FG1605- . . ■ ■ 4 - ■ . F2 -Z
–	–	–	–	–	–	–	**1520**	**1520**	**1520**	**1520**	**1520**	**1520**	**1520**	**1520**	**1520**	**1520**	**1520**	**1520**	**1520**	**1520**	**1520**	1FG1605- . . ■ ■ 3 - ■ . F2 -Z
–	–	–	–	–	–	–	**1520**	–	**1520**	**1520**	**1520**	–	**1520**	**1520**	**1520**	**1520**	**1520**	**1520**	**1520**	**1520**	**1520**	1FG1605- . . ■ ■ 2 - ■ . F2 -Z
Max. output speed n_{2max} = **20 rpm**, Transmission ratio i = **160.59**																						
–	–	–	–	–	–	–	–	–	–	–	–	–	–	–	–	–	–	–	–	–	–	1FG1605- . . ■ ■ 6 - ■ . E2 -Z
–	–	–	–	–	–	–	**1520**	**1520**	**1520**	**1520**	**1520**	**1520**	**1520**	**1520**	–	–	–	–	–	–	–	1FG1605- . . ■ ■ 4 - ■ . E2 -Z
–	–	–	–	–	–	–	**1520**	**1520**	**1520**	**1520**	**1520**	**1520**	**1520**	**1520**	**1520**	**1520**	**1520**	**1520**	**1520**	**1520**	**1520**	1FG1605- . . ■ ■ 3 - ■ . E2 -Z
–	–	–	–	–	–	–	**1520**	–	**1520**	**1520**	**1520**	–	**1520**	**1520**	**1520**	**1520**	**1520**	**1520**	**1520**	**1520**	**1520**	1FG1605- . . ■ ■ 2 - ■ . E2 -Z
Max. output speed n_{2max} = **21 rpm**, Transmission ratio i = **147.33**																						
–	–	–	–	–	–	–	–	–	–	–	–	–	–	–	–	–	–	–	–	–	–	1FG1605- . . ■ ■ 6 - ■ . D2 -Z
–	–	–	–	–	–	–	**1500**	**1500**	**1500**	**1500**	**1500**	**1500**	**1500**	**1500**	–	–	–	–	–	–	–	1FG1605- . . ■ ■ 4 - ■ . D2 -Z
–	–	–	–	–	–	–	**1500**	**1500**	**1500**	**1500**	**1500**	**1500**	**1500**	**1500**	**1500**	**1500**	**1500**	**1500**	**1500**	**1500**	**1500**	1FG1605- . . ■ ■ 3 - ■ . D2 -Z
–	–	–	–	–	–	–	**1500**	–	**1500**	**1500**	**1500**	–	**1500**	**1500**	**1500**	**1500**	**1500**	**1500**	**1500**	**1500**	**1500**	1FG1605- . . ■ ■ 2 - ■ . D2 -Z
Max. output speed n_{2max} = **23 rpm**, Transmission ratio i = **128.7**																						
–	–	–	–	–	–	–	–	–	–	–	–	–	–	–	–	–	–	–	–	–	–	1FG1605- . . ■ ■ 6 - ■ . C2 -Z
–	–	–	–	–	–	–	**1430**	**1430**	**1430**	**1430**	**1430**	**1430**	**1430**	**1430**	–	–	–	–	–	–	–	1FG1605- . . ■ ■ 4 - ■ . C2 -Z
–	–	–	–	–	–	–	**1430**	**1430**	**1430**	**1430**	**1430**	**1430**	**1430**	**1430**	**1430**	**1430**	**1430**	**1430**	**1430**	**1430**	**1430**	1FG1605- . . ■ ■ 3 - ■ . C2 -Z
–	–	–	–	–	–	–	**1430**	–	**1430**	**1430**	**1430**	–	**1430**	**1430**	**1430**	**1430**	**1430**	**1430**	**1430**	**1430**	**1430**	1FG1605- . . ■ ■ 2 - ■ . C2 -Z
Max. output speed n_{2max} = **26 rpm**, Transmission ratio i = **115.23**																						
–	–	–	–	–	–	–	–	–	–	–	–	–	–	–	–	–	–	–	–	–	–	1FG1605- . . ■ ■ 6 - ■ . B2 -Z
–	–	–	–	–	–	–	**1370**	**1370**	**1370**	**1370**	**1370**	**1370**	**1370**	**1370**	–	–	–	–	–	–	–	1FG1605- . . ■ ■ 4 - ■ . B2 -Z
–	–	–	–	–	–	–	**1370**	**1370**	**1370**	**1370**	**1370**	**1370**	**1370**	**1370**	**1370**	**1370**	**1370**	**1370**	**1370**	**1370**	**1370**	1FG1605- . . ■ ■ 3 - ■ . B2 -Z
–	–	–	–	–	–	–	**1370**	–	**1370**	**1370**	**1370**	–	**1370**	**1370**	**1370**	**1370**	**1370**	**1370**	**1370**	**1370**	**1370**	1FG1605- . . ■ ■ 2 - ■ . B2 -Z
Max. output speed n_{2max} = **30 rpm**, Transmission ratio i = **100.75**																						
–	–	–	–	–	–	–	–	–	–	–	–	–	–	–	–	–	–	–	–	–	–	1FG1605- . . ■ ■ 6 - ■ . A2 -Z
–	–	–	–	–	–	–	**1310**	**1200**	**1310**	**1310**	**1310**	**1310**	**1310**	**1310**	–	–	–	–	–	–	–	1FG1605- . . ■ ■ 4 - ■ . A2 -Z
–	–	–	–	–	–	–	**1310**	**1200**	**1310**	**1310**	**1310**	**1310**	**1310**	**1310**	**1310**	**1310**	**1310**	**1310**	**1310**	**1310**	**1310**	1FG1605- . . ■ ■ 3 - ■ . A2 -Z
–	–	–	–	–	–	–	**1310**	–	**1310**	**1310**	**1310**	–	**1310**	**1310**	**1310**	**1310**	**1310**	**1310**	**1310**	**1310**	**1310**	1FG1605- . . ■ ■ 2 - ■ . A2 -Z
Max. output speed n_{2max} = **36 rpm**, Transmission ratio i = **86.48**																						
–	–	–	–	–	–	–	–	–	–	–	–	–	–	–	–	–	–	–	–	–	–	1FG1605- . . ■ ■ 6 - ■ . X1 -Z
–	–	–	–	–	–	–	**1140**	**1090**	**1200**	**1200**	**1200**	**1200**	**1200**	**1200**	–	–	–	–	–	–	–	1FG1605- . . ■ ■ 4 - ■ . X1 -Z
–	–	–	–	–	–	–	**1140**	**1090**	**1200**	**1200**	**1200**	**1200**	**1200**	**1200**	**1200**	**1200**	**1200**	**1200**	**1200**	**1200**	**1200**	1FG1605- . . ■ ■ 3 - ■ . X1 -Z
–	–	–	–	–	–	–	**1140**	–	**1200**	**1200**	**1200**	–	**1200**	**1200**	**1200**	**1200**	**1200**	**1200**	**1200**	**1200**	**1200**	1FG1605- . . ■ ■ 2 - ■ . X1 -Z
Max. output speed n_{2max} = **40 rpm**, Transmission ratio i = **76.44**																						
–	–	–	–	–	–	–	–	–	–	–	–	–	–	–	–	–	–	–	–	–	–	1FG1605- . . ■ ■ 6 - ■ . W1 -Z
–	–	–	–	–	–	–	**1010**	**970**	**1130**	**1130**	**1130**	**1130**	**1130**	**1130**	–	–	–	–	–	–	–	1FG1605- . . ■ ■ 4 - ■ . W1 -Z
–	–	–	–	–	–	–	**1010**	**970**	**1130**	**1130**	**1130**	**1130**	**1130**	**1130**	**1130**	**1130**	**1130**	**1130**	**1130**	**1130**	**1130**	1FG1605- . . ■ ■ 3 - ■ . W1 -Z
–	–	–	–	–	–	–	**1010**	–	**1130**	**1130**	**1130**	–	**1130**	**1130**	**1130**	**1130**	**1130**	**1130**	**1130**	**1130**	**1130**	1FG1605- . . ■ ■ 2 - ■ . W1 -Z

Motor shaft height:

| | | | | | | | | | | | | | | | | | | |

© Siemens 2019

Gearbox size 89, 2-stage – 1FG1605

For line voltage 380 ... 480 V 3 AC (DC link voltage 510 ... 720 V DC) **– Gearbox type** *C89*

Geared motor torque at 1450 rpm
Note: All values in **bold** print are maximum gearbox values.
M_{2dyn}
Nm

Servo helical worm geared motors SIMOTICS S-1FG1 Article No.
Max. output speed n_{2max} = **47 rpm**, Transmission ratio i = **65**
– **1FG1605- . . ■ ■ 6 - ■ . V1 -Z**
– – – – – – – – – – – – **1050 1050 1050** – – – – – – – **1FG1605- . . ■ ■ 4 - ■ . V1 -Z**
– – – – – – – – – – – – **1050 1050 1050 1050 1050 1050 1050 1050 1050 1050** **1FG1605- . . ■ ■ 3 - ■ . V1 -Z**
– – – – – – – – – – – – – **1050 1050 1050 1050 1050 1050 1050 1050 1050** **1FG1605- . . ■ ■ 2 - ■ . V1 -Z**
Max. output speed n_{2max} = **81 rpm**, Transmission ratio i = **55.61**
– **1FG1605- . . ■ ■ 6 - ■ . U1 -Z**
– – – – – – – 905 870 1300 **1480 1480** 1250 **1480 1480** – – – – – – – **1FG1605- . . ■ ■ 4 - ■ . U1 -Z**
– – – – – – – 905 870 1300 **1480 1480** 1250 **1480 1480 1480 1480 1480** – – – – **1FG1605- . . ■ ■ 3 - ■ . U1 -Z**
– – – – – – – 905 – 1300 **1480 1480** – **1480 1480 1480 1480 1480** – – – – **1FG1605- . . ■ ■ 2 - ■ . U1 -Z**
Max. output speed n_{2max} = **83 rpm**, Transmission ratio i = **50**
– **1FG1605- . . ■ ■ 6 - ■ . T1 -Z**
– – – – – – – 810 780 1170 **1480** 1440 1130 **1480 1480** – – – – – – – **1FG1605- . . ■ ■ 4 - ■ . T1 -Z**
– – – – – – – 810 780 1170 **1480** 1440 1130 **1480 1480 1480 1480 1480** – – – – **1FG1605- . . ■ ■ 3 - ■ . T1 -Z**
– – – – – – – 810 – 1170 **1480** 1440 – **1480 1480 1480 1480 1480** – – – – **1FG1605- . . ■ ■ 2 - ■ . T1 -Z**
Max. output speed n_{2max} = **83 rpm**, Transmission ratio i = **45.22**
– **1FG1605- . . ■ ■ 6 - ■ . S1 -Z**
– – – – – – – 735 705 1060 1430 1300 1020 **1480 1480** – – – – – – – **1FG1605- . . ■ ■ 4 - ■ . S1 -Z**
– – – – – – – 735 705 1060 1430 1300 1020 **1480 1480 1480 1480 1480** – – – – **1FG1605- . . ■ ■ 3 - ■ . S1 -Z**
– – – – – – – 735 – 1060 1430 1300 – **1480 1480 1480 1480 1480** – – – – **1FG1605- . . ■ ■ 2 - ■ . S1 -Z**
Max. output speed n_{2max} = **83 rpm**, Transmission ratio i = **41.74**
– **1FG1605- . . ■ ■ 6 - ■ . R1 -Z**
– – – – – – – 680 650 980 1320 1210 945 1390 **1480** – – – – – – – **1FG1605- . . ■ ■ 4 - ■ . R1 -Z**
– – – – – – – 680 650 980 1320 1210 945 1390 **1480 1480 1480 1480** – – – – **1FG1605- . . ■ ■ 3 - ■ . R1 -Z**
– – – – – – – 680 – 980 1320 1210 – 1390 **1480 1480 1480 1480** – – – – **1FG1605- . . ■ ■ 2 - ■ . R1 -Z**
Max. output speed n_{2max} = **88 rpm**, Transmission ratio i = **38.24**
– **1FG1605- . . ■ ■ 6 - ■ . Q1 -Z**
– – – – – – – 620 595 895 1210 1100 865 1280 **1450** – – – – – – – **1FG1605- . . ■ ■ 4 - ■ . Q1 -Z**
– – – – – – – 620 595 895 1210 1100 865 1280 **1450 1450 1450 1450 1450 1450 1450 1450** **1FG1605- . . ■ ■ 3 - ■ . Q1 -Z**
– – – – – – – 620 – 895 1210 1100 – 1280 **1450 1450 1450 1450 1450 1450 1450 1450** **1FG1605- . . ■ ■ 2 - ■ . Q1 -Z**
Max. output speed n_{2max} = **105 rpm**, Transmission ratio i = **32.08**
– **1FG1605- . . ■ ■ 6 - ■ . P1 -Z**
– – – – – – – 520 500 755 1010 925 725 1070 **1370** – – – – – – – **1FG1605- . . ■ ■ 4 - ■ . P1 -Z**
– – – – – – – 520 500 755 1010 925 725 1070 **1370 1370 1370 1370 1370 1370 1370 1370** **1FG1605- . . ■ ■ 3 - ■ . P1 -Z**
– – – – – – – 520 – 755 1010 925 – 1070 **1370 1370 1370 1370 1370 1370 1370 1370** **1FG1605- . . ■ ■ 2 - ■ . P1 -Z**
Max. output speed n_{2max} = **112 rpm**, Transmission ratio i = **30.2**
– **1FG1605- . . ■ ■ 6 - ■ . N1 -Z**
– – – – – – – 490 470 710 955 875 680 1010 **1340** – – – – – – – **1FG1605- . . ■ ■ 4 - ■ . N1 -Z**
– – – – – – – 490 470 710 955 875 680 1010 **1340 1340 1340 1340 1340 1340 1340 1340** **1FG1605- . . ■ ■ 3 - ■ . N1 -Z**
– – – – – – – 490 – 710 955 875 – 1010 **1340 1340 1340 1340 1340 1340 1340 1340** **1FG1605- . . ■ ■ 2 - ■ . N1 -Z**

Motor shaft height:

| | | |

© Siemens 2019

Servo helical worm geared motors SIMOTICS S-1FG1

Selecting servo geared motors

Gearbox size 89, 2-stage – 1FG1605

For line voltage 380 ... 480 V 3 AC (DC link voltage 510 ... 720 V DC) **– Gearbox type** *C89*

Geared motor torque at 1450 rpm
Note: All values in **bold** print are maximum gearbox values.
M_{2dyn}
Nm

																						Article No.
Max. output speed n_{2max} = 121 rpm, Transmission ratio i = **27.7**																						
–	–	–	–	–	–	–	–	–	–	–	–	–	–	–	–	–	–	–	–	–	–	1FG1605- . . ■ ■ 6 - ■ . M1 -Z
–	–	–	–	–	–	–	450	430	650	875	800	625	925	1250	–	–	–	–	–	–	–	1FG1605- . . ■ ■ 4 - ■ . M1 -Z
–	–	–	–	–	–	–	450	430	650	875	800	625	925	1250	**1300**	**1300**	**1300**	**1300**	**1300**	**1300**	**1300**	1FG1605- . . ■ ■ 3 - ■ . M1 -Z
–	–	–	–	–	–	–	450	–	650	875	800	–	925	1250	**1300**	**1300**	**1300**	**1300**	**1300**	**1300**	**1300**	1FG1605- . . ■ ■ 2 - ■ . M1 -Z
Max. output speed n_{2max} = 180 rpm, Transmission ratio i = **25.03**																						
–	–	–	–	–	–	–	–	–	–	–	–	–	–	–	–	–	–	–	–	–	–	1FG1605- . . ■ ■ 6 - ■ . L1 -Z
–	–	–	–	–	–	–	415	400	600	810	740	580	855	**1150**	–	–	–	–	–	–	–	1FG1605- . . ■ ■ 4 - ■ . L1 -Z
–	–	–	–	–	–	–	415	400	600	810	740	580	855	**1150**	**1150**	**1150**	**1150**	**1150**	**1150**	**1150**	**1150**	1FG1605- . . ■ ■ 3 - ■ . L1 -Z
–	–	–	–	–	–	–	415	–	600	810	740	–	855	**1150**	**1150**	**1150**	**1150**	**1150**	**1150**	**1150**	**1150**	1FG1605- . . ■ ■ 2 - ■ . L1 -Z
Max. output speed n_{2max} = 214 rpm, Transmission ratio i = **21**																						
–	–	–	–	–	–	–	–	–	–	–	–	–	–	–	–	–	–	–	–	–	–	1FG1605- . . ■ ■ 6 - ■ . K1 -Z
–	–	–	–	–	–	–	350	335	505	680	620	485	720	975	–	–	–	–	–	–	–	1FG1605- . . ■ ■ 4 - ■ . K1 -Z
–	–	–	–	–	–	–	350	335	505	680	620	485	720	975	**1080**	**1080**	**1080**	1070	**1080**	**1080**	**1080**	1FG1605- . . ■ ■ 3 - ■ . K1 -Z
–	–	–	–	–	–	–	350	–	505	680	620	–	720	975	**1080**	**1080**	**1080**	1070	**1080**	**1080**	**1080**	1FG1605- . . ■ ■ 2 - ■ . K1 -Z
Max. output speed n_{2max} = 228 rpm, Transmission ratio i = **19.76**																						
–	–	–	–	–	–	–	–	–	–	–	–	–	–	–	–	–	–	–	–	–	–	1FG1605- . . ■ ■ 6 - ■ . J1 -Z
–	–	–	–	–	–	–	330	315	475	640	585	455	675	915	–	–	–	–	–	–	–	1FG1605- . . ■ ■ 4 - ■ . J1 -Z
–	–	–	–	–	–	–	330	315	475	640	585	455	675	915	1110	**1140**	**1140**	1000	**1140**	**1140**	**1140**	1FG1605- . . ■ ■ 3 - ■ . J1 -Z
–	–	–	–	–	–	–	330	–	475	640	585	–	675	915	1110	**1140**	**1140**	1000	**1140**	**1140**	**1140**	1FG1605- . . ■ ■ 2 - ■ . J1 -Z
Max. output speed n_{2max} = 248 rpm, Transmission ratio i = **18.13**																						
–	–	–	–	–	–	–	–	–	–	–	–	–	–	–	–	–	–	–	–	–	–	1FG1605- . . ■ ■ 6 - ■ . H1 -Z
–	–	–	–	–	–	–	300	290	435	585	535	420	620	840	–	–	–	–	–	–	–	1FG1605- . . ■ ■ 4 - ■ . H1 -Z
–	–	–	–	–	–	–	300	290	435	585	535	420	620	840	1020	1090	**1120**	925	**1120**	**1120**	**1120**	1FG1605- . . ■ ■ 3 - ■ . H1 -Z
–	–	–	–	–	–	–	300	–	435	585	535	–	620	840	1020	1090	**1120**	925	**1120**	**1120**	**1120**	1FG1605- . . ■ ■ 2 - ■ . H1 -Z
Max. output speed n_{2max} = 284 rpm, Transmission ratio i = **15.84**																						
–	–	–	–	–	–	–	–	–	–	–	–	–	–	–	–	–	–	–	–	–	–	1FG1605- . . ■ ■ 6 - ■ . G1 -Z
–	–	–	–	–	–	–	260	250	380	510	470	365	540	735	–	–	–	–	–	–	–	1FG1605- . . ■ ■ 4 - ■ . G1 -Z
–	–	–	–	–	–	–	260	250	380	510	470	365	540	735	895	955	**1130**	805	**1130**	**1130**	**1130**	1FG1605- . . ■ ■ 3 - ■ . G1 -Z
–	–	–	–	–	–	–	260	–	380	510	470	–	540	735	895	955	**1130**	805	**1130**	**1130**	**1130**	1FG1605- . . ■ ■ 2 - ■ . G1 -Z
Max. output speed n_{2max} = 286 rpm, Transmission ratio i = **14.18**																						
–	–	–	–	–	–	–	–	–	–	–	–	–	–	–	–	–	–	–	–	–	–	1FG1605- . . ■ ■ 6 - ■ . F1 -Z
–	–	–	–	–	–	–	235	225	340	460	420	325	485	655	–	–	–	–	–	–	–	1FG1605- . . ■ ■ 4 - ■ . F1 -Z
–	–	–	–	–	–	–	235	225	340	460	420	325	485	655	800	855	**1130**	720	1050	**1130**	**1130**	1FG1605- . . ■ ■ 3 - ■ . F1 -Z
–	–	–	–	–	–	–	235	–	340	460	420	–	485	655	800	855	**1130**	720	1050	**1130**	**1130**	1FG1605- . . ■ ■ 2 - ■ . F1 -Z
Max. output speed n_{2max} = 304 rpm, Transmission ratio i = **12.4**																						
–	–	–	–	–	–	–	–	–	–	–	–	–	–	–	–	–	–	–	–	–	–	1FG1605- . . ■ ■ 6 - ■ . E1 -Z
–	–	–	–	–	–	–	205	199	295	400	365	285	425	575	–	–	–	–	–	–	–	1FG1605- . . ■ ■ 4 - ■ . E1 -Z
–	–	–	–	–	–	–	205	199	295	400	365	285	425	575	700	745	1080	630	920	**1110**	**1110**	1FG1605- . . ■ ■ 3 - ■ . E1 -Z
–	–	–	–	–	–	–	205	–	295	400	365	–	425	575	700	745	1080	630	920	**1110**	**1110**	1FG1605- . . ■ ■ 2 - ■ . E1 -Z

Motor shaft height:

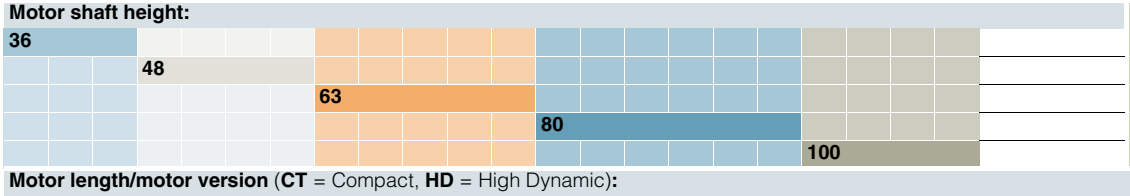

Motor length/motor version (**CT** = Compact, **HD** = High Dynamic)**:**

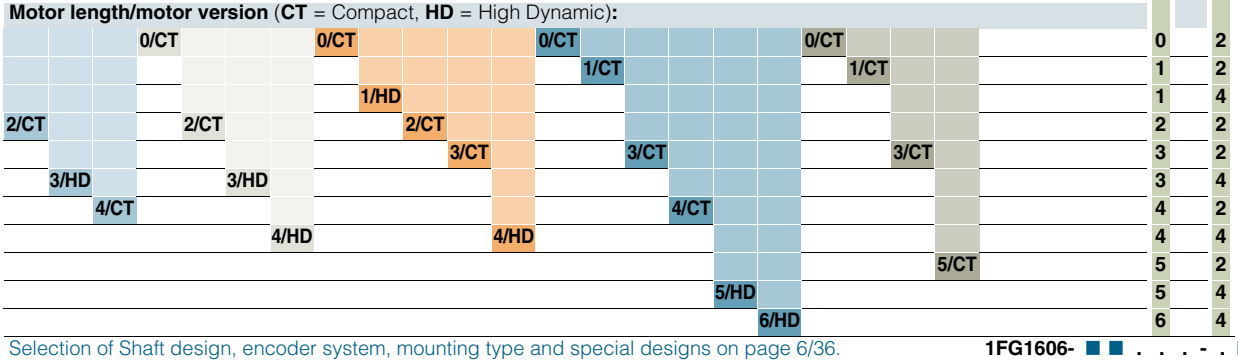

Selection of Shaft design, encoder system, mounting type and special designs on page 6/36.

1FG1606- ■ ■ . . . - . ■ . . -Z

© Siemens 2019

For line voltage 380 ... 480 V 3 AC (DC link voltage 510 ... 720 V DC) **– Gearbox type** ***C89***

Geared motor torque at 1450 rpm
Note: All values in **bold** print are maximum gearbox values.
M_{2dyn}
Nm

																							Article No.
Max. output speed n_{2max} = 353 rpm, Transmission ratio i = 10.64																							
–	–	–	–	–	–	–	–	–	–	–	–	–	–	–	–	–	–	–	–	–	–	–	1FG1605- . . ■ ■ 6 - ■ . D1 -Z
–	–	–	–	–	–	–	177	170	255	345	315	245	365	490	–	–	–	–	–	–	–	–	1FG1605- . . ■ ■ 4 - ■ . D1 -Z
–	–	–	–	–	–	–	177	170	255	345	315	245	365	490	600	640	930	540	790	**1050**	**1050**		1FG1605- . . ■ ■ 3 - ■ . D1 -Z
–	–	–	–	–	–	–	177	–	255	345	315	–	365	490	600	640	930	540	790	**1050**	**1050**		1FG1605- . . ■ ■ 2 - ■ . D1 -Z
Max. output speed n_{2max} = 403 rpm, Transmission ratio i = 9.41																							
–	–	–	–	–	–	–	–	–	–	–	–	–	–	–	–	–	–	–	–	–	–	–	1FG1605- . . ■ ■ 6 - ■ . C1 -Z
–	–	–	–	–	–	–	157	151	225	305	275	215	320	435	–	–	–	–	–	–	–	–	1FG1605- . . ■ ■ 4 - ■ . C1 -Z
–	–	–	–	–	–	–	157	151	225	305	275	215	320	435	530	565	820	480	695	940	**1000**		1FG1605- . . ■ ■ 3 - ■ . C1 -Z
–	–	–	–	–	–	–	157	–	225	305	275	–	320	435	530	565	820	480	695	940	**1000**		1FG1605- . . ■ ■ 2 - ■ . C1 -Z
Max. output speed n_{2max} = 469 rpm, Transmission ratio i = 8																							
–	–	–	–	–	–	–	–	–	–	–	–	–	–	–	–	–	–	–	–	–	–	–	1FG1605- . . ■ ■ 6 - ■ . B1 -Z
–	–	–	–	–	–	–	–	–	–	–	–	185	270	370	–	–	–	–	–	–	–	–	1FG1605- . . ■ ■ 4 - ■ . B1 -Z
–	–	–	–	–	–	–	–	–	–	–	–	185	270	370	450	480	695	405	590	800	**950**		1FG1605- . . ■ ■ 3 - ■ . B1 -Z
–	–	–	–	–	–	–	–	–	–	–	–	–	270	370	450	480	695	405	590	800	**950**		1FG1605- . . ■ ■ 2 - ■ . B1 -Z
Max. output speed n_{2max} = 551 rpm, Transmission ratio i = 6.86																							
–	–	–	–	–	–	–	–	–	–	–	–	–	–	–	–	–	–	–	–	–	–	–	1FG1605- . . ■ ■ 6 - ■ . A1 -Z
–	–	–	–	–	–	–	–	–	–	–	–	159	235	315	–	–	–	–	–	–	–	–	1FG1605- . . ■ ■ 4 - ■ . A1 -Z
–	–	–	–	–	–	–	–	–	–	–	–	159	235	315	385	410	600	350	505	685	**900**		1FG1605- . . ■ ■ 3 - ■ . A1 -Z
–	–	–	–	–	–	–	–	–	–	–	–	–	235	315	385	410	600	350	505	685	**900**		1FG1605- . . ■ ■ 3 - ■ . A1 -Z

Motor shaft height:

36																							**C**
			48																				**D**
							63																**E**
												80											**F**
																		100					**G**

Motor length/motor version (**CT** = Compact, **HD** = High Dynamic)**:**

			0/CT				**0/CT**					**0/CT**						**0/CT**					**0**	**2**
													1/CT						**1/CT**				**1**	**2**
								1/HD															**1**	**4**
2/CT				**2/CT**					**2/CT**														**2**	**2**
										3/CT				**3/CT**						**3/CT**			**3**	**2**
	3/HD				**3/HD**											**4/CT**							**3**	**4**
		4/CT																					**4**	**2**
						4/HD					**4/HD**												**4**	**4**
																				5/CT			**5**	**2**
																5/HD							**5**	**4**
																	6/HD						**6**	**4**

Selection of Shaft design, encoder system, mounting type and special designs on page 6/36.

1FG1606- ■ ■ . . . . - . ■ . . **-Z**

© Siemens 2019

Dimensional drawings

Gearbox type *C..29*

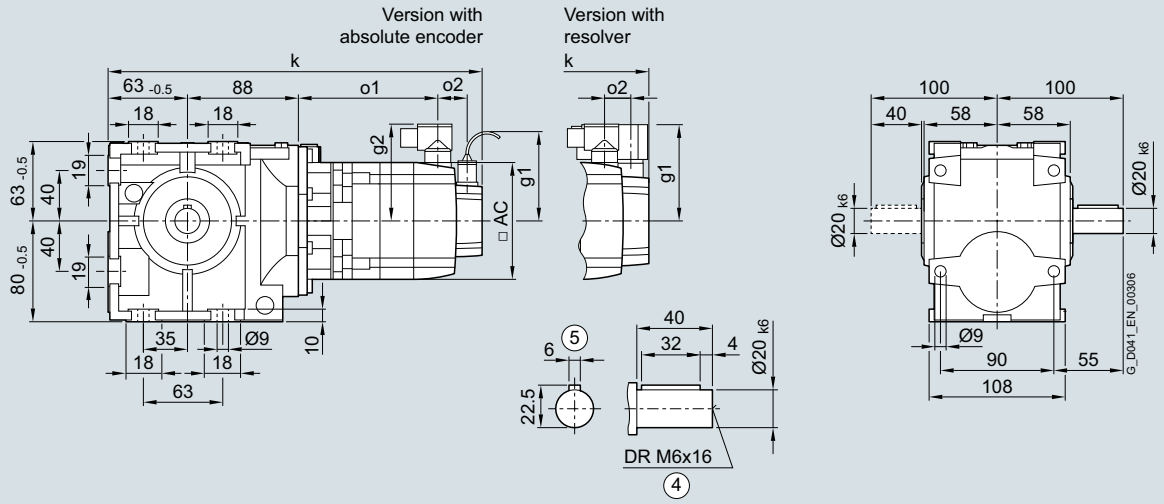

Gearbox type *CA.29*

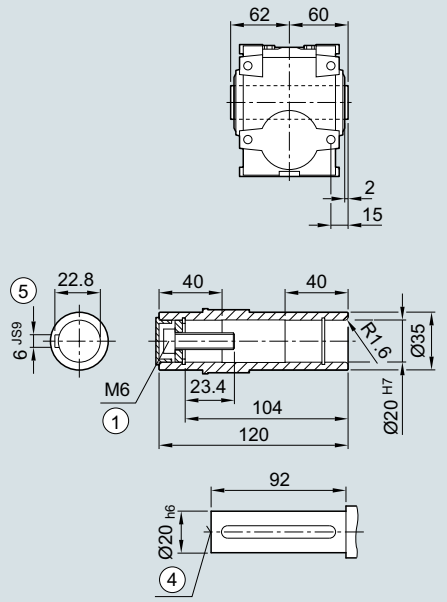

Gearbox type *CAS29*

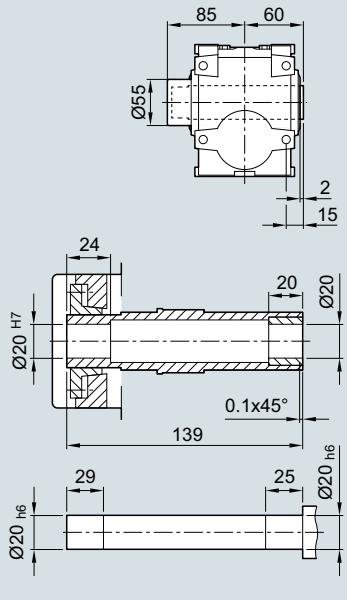

① ISO 4014 ④ DIN 332 ⑤ Feather key/keyway DIN 6885

© Siemens 2019

Servo helical worm geared motor	Motor shaft height	Motor ver-sion	Absolute encoder with brake		with brake for increased energy		without brake					Resolver with brake		with brake for increased energy		without brake					
Type			k	o1	k	o1	k	o1	o2	g1	g2	k	o1	k	o1	k	o1	o2	g1	g2	AC
1FG1...-..C2.-....	36	CT	362	148	–	–	345	131	50	104.5	78	342	154	–	–	325	137	15	80	80	72
1FG1...-..C3.-....		HD	372	158	–	–	355	141				352	164	–	–	335	147				
1FG1...-..C4.-....		CT	387	173	–	–	370	156				367	179	–	–	350	162				
1FG1...-..D0.-....	48	CT	344	130	–	–	320	106	50	104.5	90	329	130	–	–	305	106	23	90	90	96
1FG1...-..D2.-....		CT	371	158	–	–	347	134				357	158	–	–	333	134				
1FG1...-..D3.-....		HD	397	178	–	–	373	154	56			383	184	–	–	359	160				
1FG1...-..D4.-....		HD	422	203	–	–	398	179				408	209	–	–	384	185				
1FG1...-..E0.-....	63	CT	377	163	–	–	362	148	50	104.5	104	362	163	–	–	348	148	23	103	104	126
1FG1...-..E1.-....		HD	412	198	–	–	397	183				397	198	–	–	383	183				
1FG1...-..E2.-....		CT	399	186	–	–	385	171				385	186	–	–	370	171				
1FG1...-..E3.-....		CT	422	208	–	–	407	193				407	208	–	–	393	193				
1FG1...-..E4.-....		HD	476	262	–	–	461	247				461	262	–	–	447	247				
1FG1...-..F0.-....	80	CT	–	–	–	–	–	–	–	–	–	–	–	–	–	–	–	–	–	–	–
1FG1...-..F1.-....		CT	–	–	–	–	–	–	–	–	–	–	–	–	–	–	–	–	–	–	–
1FG1...-..F3.-....		CT	–	–	–	–	–	–	–	–	–	–	–	–	–	–	–	–	–	–	–
1FG1...-..F4.-....		CT	–	–	–	–	–	–	–	–	–	–	–	–	–	–	–	–	–	–	–
1FG1...-..F52-....		HD	–	–	–	–	–	–	–	–	–	–	–	–	–	–	–	–	–	–	–
1FG1...-..F62-....		HD	–	–	–	–	–	–	–	–	–	–	–	–	–	–	–	–	–	–	–
1FG1...-..F53-....		HD	–	–	–	–	–	–	–	–	–	–	–	–	–	–	–	–	–	–	–
1FG1...-..F63-....		HD	–	–	–	–	–	–	–	–	–	–	–	–	–	–	–	–	–	–	–
1FG1...-..G0.-....	100	CT	–	–	–	–	–	–	–	–	–	–	–	–	–	–	–	–	–	–	–
1FG1...-..G1.-....		CT	–	–	–	–	–	–	–	–	–	–	–	–	–	–	–	–	–	–	–
1FG1...-..G3.-....		CT	–	–	–	–	–	–	–	–	–	–	–	–	–	–	–	–	–	–	–
1FG1...-..G5.-....		CT	–	–	–	–	–	–	–	–	–	–	–	–	–	–	–	–	–	–	–

© Siemens 2019

Dimensional drawings

Gearbox type *C.F.29*

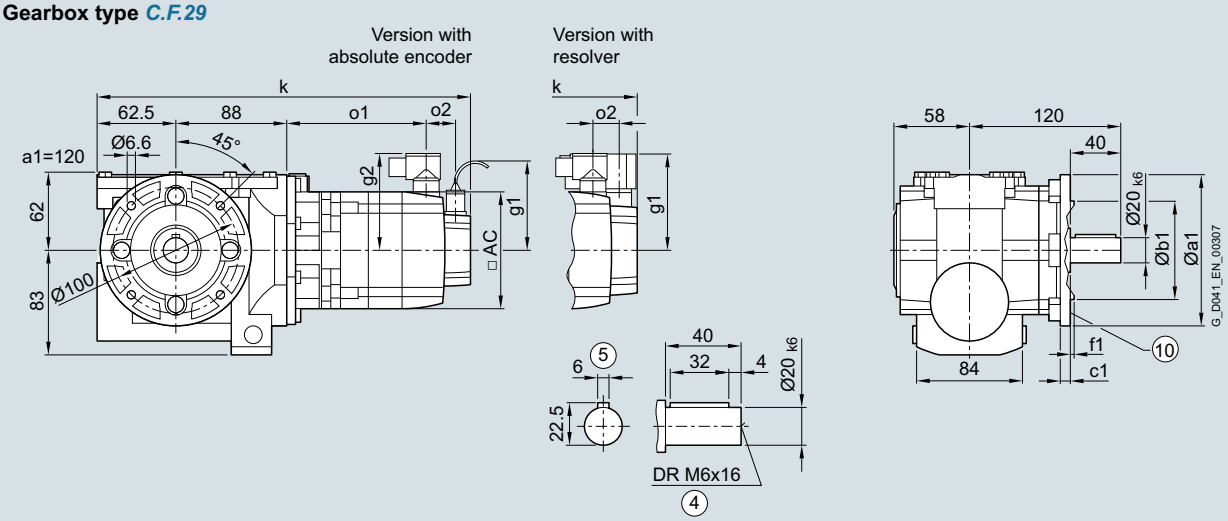

Gearbox type *CAF.29*

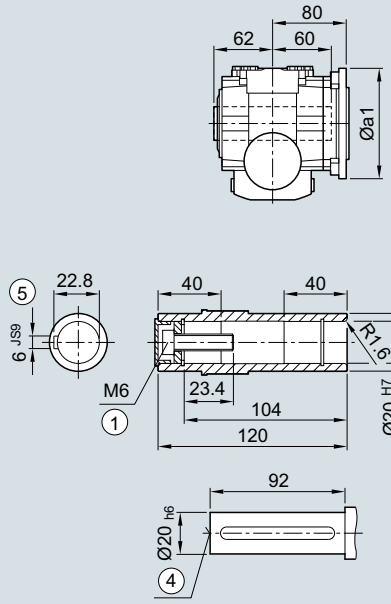

Gearbox type *CAFS29*

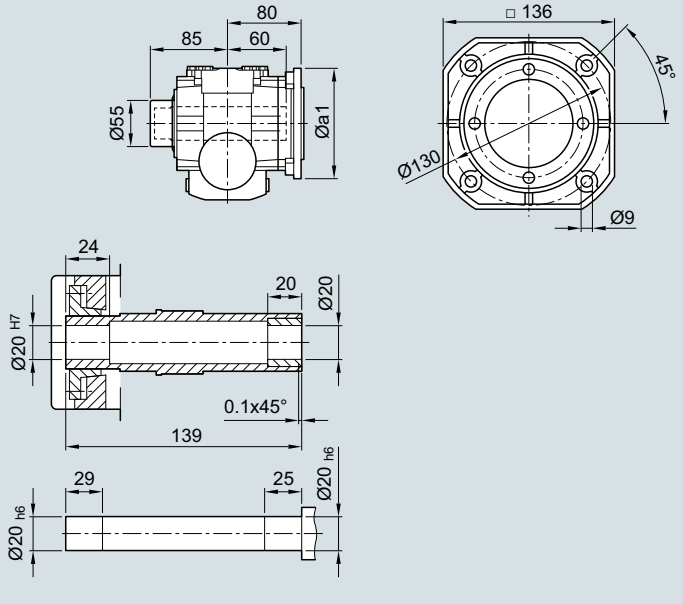

① ISO 4014 ④ DIN 332 ⑤ Feather key/keyway DIN 6885

⑩ For inner contour and dimensions of the flange design, see page 6/86

© Siemens 2019

Servo helical worm geared motor	Motor shaft height	Motor version	Absolute encoder with brake		with brake for increased energy		without brake					Resolver with brake		with brake for increased energy		without brake					
Type			k	o1	k	o1	k	o1	o2	g1	g2	k	o1	k	o1	k	o1	o2	g1	g2	AC
1FG1...-..C2.-....	36	CT	362	148	–	–	345	131	50	104.5	78	341	154	–	–	324	137	15	80	80	72
1FG1...-..C3.-....		HD	372	158	–	–	355	141				351	164	–	–	334	147				
1FG1...-..C4.-....		CT	387	173	–	–	370	156				366	179	–	–	349	162				
1FG1...-..D0.-....	48	CT	343	130	–	–	319	106	50	104.5	90	329	130	–	–	305	106	23	90	90	96
1FG1...-..D2.-....		CT	371	158	–	–	347	134				356	158	–	–	332	134				
1FG1...-..D3.-....		HD	397	178	–	–	373	154	56			382	184	–	–	358	160				
1FG1...-..D4.-....		HD	422	203	–	–	398	179				407	209	–	–	383	185				
1FG1...-..E0.-....	63	CT	376	163	–	–	362	148	50	104.5	104	362	163	–	–	347	148	23	103	104	126
1FG1...-..E1.-....		HD	411	198	–	–	397	183				397	198	–	–	382	183				
1FG1...-..E2.-....		CT	399	186	–	–	384	171				384	186	–	–	370	171				
1FG1...-..E3.-....		CT	421	208	–	–	407	193				407	208	–	–	392	193				
1FG1...-..E4.-....		HD	475	262	–	–	461	247				461	262	–	–	446	247				
1FG1...-..F0.-....	80	CT	–	–	–	–	–	–	–	–	–	–	–	–	–	–	–	–	–	–	–
1FG1...-..F1.-....		CT	–	–	–	–	–	–	–	–	–	–	–	–	–	–	–	–	–	–	–
1FG1...-..F3.-....		CT	–	–	–	–	–	–	–	–	–	–	–	–	–	–	–	–	–	–	–
1FG1...-..F4.-....		CT	–	–	–	–	–	–	–	–	–	–	–	–	–	–	–	–	–	–	–
1FG1...-..F52-....		HD	–	–	–	–	–	–	–	–	–	–	–	–	–	–	–	–	–	–	–
1FG1...-..F62-....		HD	–	–	–	–	–	–	–	–	–	–	–	–	–	–	–	–	–	–	–
1FG1...-..F53-....		HD	–	–	–	–	–	–	–	–	–	–	–	–	–	–	–	–	–	–	–
1FG1...-..F63-....		HD	–	–	–	–	–	–	–	–	–	–	–	–	–	–	–	–	–	–	–
1FG1...-..G0.-....	100	CT	–	–	–	–	–	–	–	–	–	–	–	–	–	–	–	–	–	–	–
1FG1...-..G1.-....		CT	–	–	–	–	–	–	–	–	–	–	–	–	–	–	–	–	–	–	–
1FG1...-..G3.-....		CT	–	–	–	–	–	–	–	–	–	–	–	–	–	–	–	–	–	–	–
1FG1...-..G5.-....		CT	–	–	–	–	–	–	–	–	–	–	–	–	–	–	–	–	–	–	–

© Siemens 2019

Dimensional drawings

Gearbox type *C.Z.29*

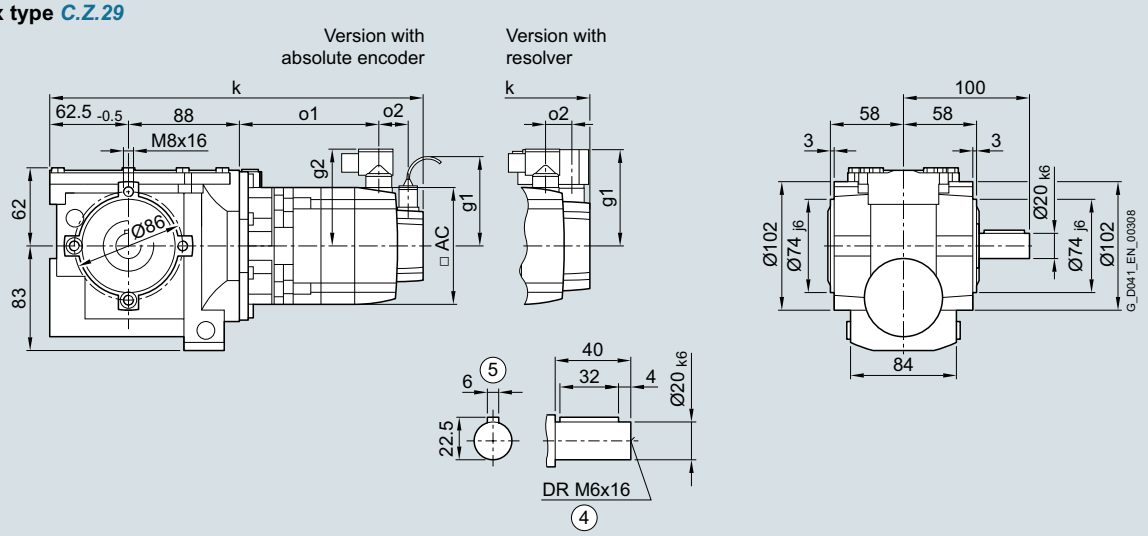

Gearbox type *CAZ.29*

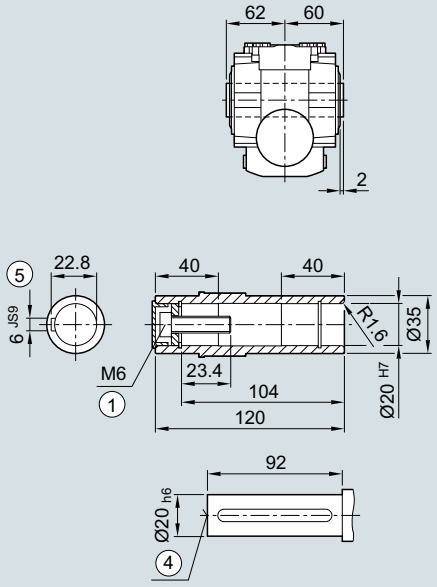

Gearbox type *CAZS29*

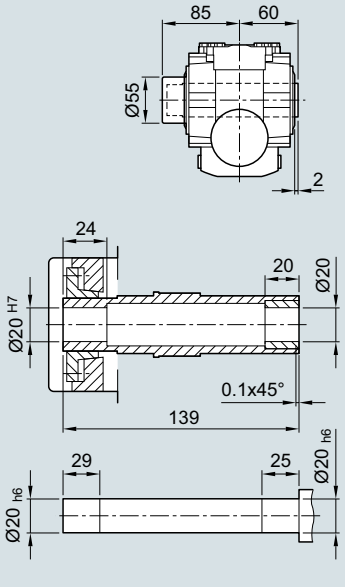

① ISO 4014 ④ DIN 332 ⑤ Feather key/keyway DIN 6885

© Siemens 2019

Servo helical worm geared motor	Motor shaft height	Motor version	Absolute encoder with brake		with brake for increased energy		without brake					Resolver with brake		with brake for increased energy		without brake					
Type			k	o1	k	o1	k	o1	o2	g1	g2	k	o1	k	o1	k	o1	o2	g1	g2	AC
1FG1...-..C2.-....	36	CT	362	148	–	–	345	131	50	104.5	78	341	154	–	–	324	137	15	80	80	72
1FG1...-..C3.-....		HD	372	158	–	–	355	141				351	164	–	–	334	147				
1FG1...-..C4.-....		CT	387	173	–	–	370	156				366	179	–	–	349	162				
1FG1...-..D0.-....	48	CT	343	130	–	–	319	106	50	104.5	90	329	130	–	–	305	106	23	90	90	96
1FG1...-..D2.-....		CT	371	158	–	–	347	134				356	158	–	–	332	134				
1FG1...-..D3.-....		HD	397	178	–	–	373	154	56			382	184	–	–	358	160				
1FG1...-..D4.-....		HD	422	203	–	–	398	179				407	209	–	–	383	185				
1FG1...-..E0.-....	63	CT	376	163	–	–	362	148	50	104.5	104	362	163	–	–	347	148	23	103	104	126
1FG1...-..E1.-....		HD	411	198	–	–	397	183				397	198	–	–	382	183				
1FG1...-..E2.-....		CT	399	186	–	–	384	171				384	186	–	–	370	171				
1FG1...-..E3.-....		CT	421	208	–	–	407	193				407	208	–	–	392	193				
1FG1...-..E4.-....		HD	475	262	–	–	461	247				461	262	–	–	446	247				
1FG1...-..F0.-....	80	CT	–	–	–	–	–	–	–	–	–	–	–	–	–	–	–	–	–	–	–
1FG1...-..F1.-....		CT	–	–	–	–	–	–	–	–	–	–	–	–	–	–	–	–	–	–	–
1FG1...-..F3.-....		CT	–	–	–	–	–	–	–	–	–	–	–	–	–	–	–	–	–	–	–
1FG1...-..F4.-....		CT	–	–	–	–	–	–	–	–	–	–	–	–	–	–	–	–	–	–	–
1FG1...-..F52-....		HD	–	–	–	–	–	–	–	–	–	–	–	–	–	–	–	–	–	–	–
1FG1...-..F62-....		HD	–	–	–	–	–	–	–	–	–	–	–	–	–	–	–	–	–	–	–
1FG1...-..F53-....		HD	–	–	–	–	–	–	–	–	–	–	–	–	–	–	–	–	–	–	–
1FG1...-..F63-....		HD	–	–	–	–	–	–	–	–	–	–	–	–	–	–	–	–	–	–	–
1FG1...-..G0.-....	100	CT	–	–	–	–	–	–	–	–	–	–	–	–	–	–	–	–	–	–	–
1FG1...-..G1.-....		CT	–	–	–	–	–	–	–	–	–	–	–	–	–	–	–	–	–	–	–
1FG1...-..G3.-....		CT	–	–	–	–	–	–	–	–	–	–	–	–	–	–	–	–	–	–	–
1FG1...-..G5.-....		CT	–	–	–	–	–	–	–	–	–	–	–	–	–	–	–	–	–	–	–

© Siemens 2019

Dimensional drawings

Gearbox type *CAD.29*

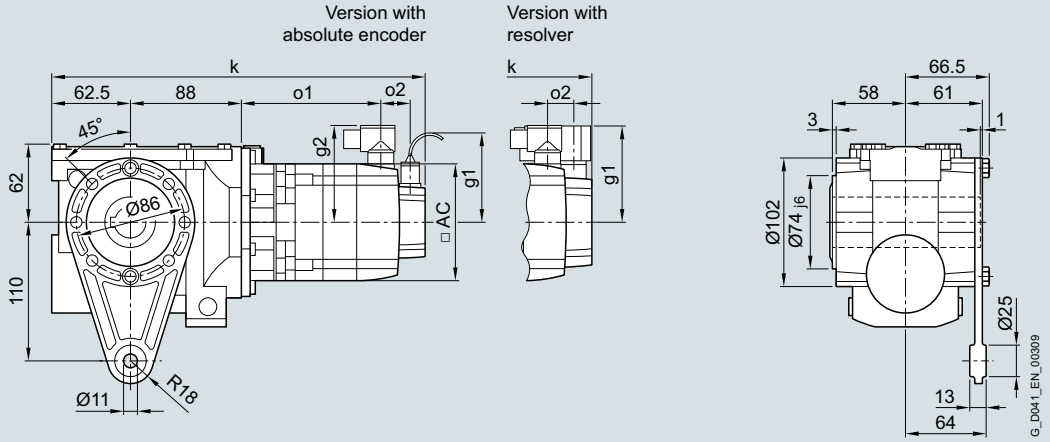

Gearbox type *CAD.29*

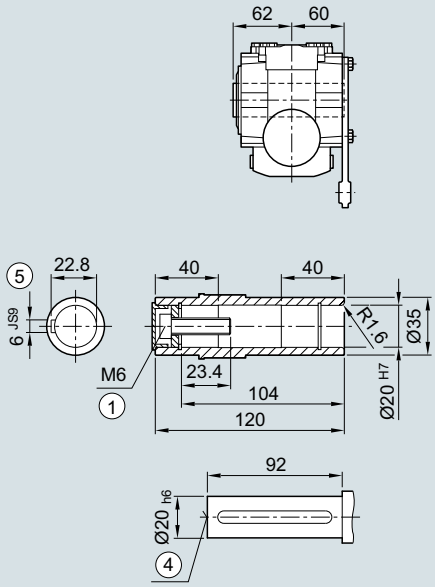

Gearbox type *CADS29*

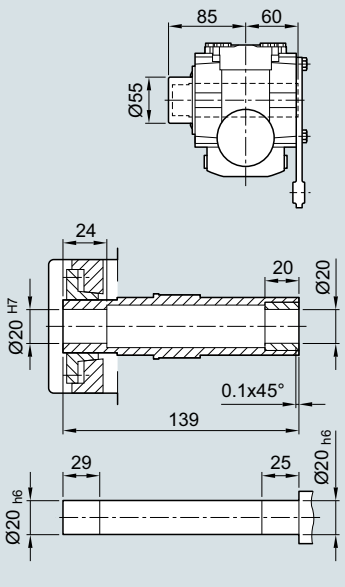

① ISO 4014 ④ DIN 332 ⑤ Feather key/keyway DIN 6885

© Siemens 2019

Servo helical worm geared motor	Motor shaft height	Motor version	Absolute encoder with brake		with brake for increased energy		without brake					Resolver with brake		with brake for increased energy		without brake					
Type			k	o1	k	o1	k	o1	o2	g1	g2	k	o1	k	o1	k	o1	o2	g1	g2	AC
1FG1...-..C2.-....	36	CT	362	148	–	–	345	131	50	104.5	78	341	154	–	–	324	137	15	80	80	72
1FG1...-..C3.-....		HD	372	158	–	–	355	141				351	164	–	–	334	147				
1FG1...-..C4.-....		CT	387	173	–	–	370	156				366	179	–	–	349	162				
1FG1...-..D0.-....	48	CT	343	130	–	–	319	106	50	104.5	90	329	130	–	–	305	106	23	90	90	96
1FG1...-..D2.-....		CT	371	158	–	–	347	134				356	158	–	–	332	134				
1FG1...-..D3.-....		HD	397	178	–	–	373	154	56			382	184	–	–	358	160				
1FG1...-..D4.-....		HD	422	203	–	–	398	179				407	209	–	–	383	185				
1FG1...-..E0.-....	63	CT	376	163	–	–	362	148	50	104.5	104	362	163	–	–	347	148	23	103	104	126
1FG1...-..E1.-....		HD	411	198	–	–	397	183				397	198	–	–	382	183				
1FG1...-..E2.-....		CT	399	186	–	–	384	171				384	186	–	–	370	171				
1FG1...-..E3.-....		CT	421	208	–	–	407	193				407	208	–	–	392	193				
1FG1...-..E4.-....		HD	475	262	–	–	461	247				461	262	–	–	446	247				
1FG1...-..F0.-....	80	CT	–	–	–	–	–	–	–	–	–	–	–	–	–	–	–	–	–	–	–
1FG1...-..F1.-....		CT	–	–	–	–	–	–	–	–	–	–	–	–	–	–	–	–	–	–	–
1FG1...-..F3.-....		CT	–	–	–	–	–	–	–	–	–	–	–	–	–	–	–	–	–	–	–
1FG1...-..F4.-....		CT	–	–	–	–	–	–	–	–	–	–	–	–	–	–	–	–	–	–	–
1FG1...-..F52-....		HD	–	–	–	–	–	–	–	–	–	–	–	–	–	–	–	–	–	–	–
1FG1...-..F62-....		HD	–	–	–	–	–	–	–	–	–	–	–	–	–	–	–	–	–	–	–
1FG1...-..F53-....		HD	–	–	–	–	–	–	–	–	–	–	–	–	–	–	–	–	–	–	–
1FG1...-..F63-....		HD	–	–	–	–	–	–	–	–	–	–	–	–	–	–	–	–	–	–	–
1FG1...-..G0.-....	100	CT	–	–	–	–	–	–	–	–	–	–	–	–	–	–	–	–	–	–	–
1FG1...-..G1.-....		CT	–	–	–	–	–	–	–	–	–	–	–	–	–	–	–	–	–	–	–
1FG1...-..G3.-....		CT	–	–	–	–	–	–	–	–	–	–	–	–	–	–	–	–	–	–	–
1FG1...-..G5.-....		CT	–	–	–	–	–	–	–	–	–	–	–	–	–	–	–	–	–	–	–

© Siemens 2019

Dimensional drawings

Gearbox type *C..39*

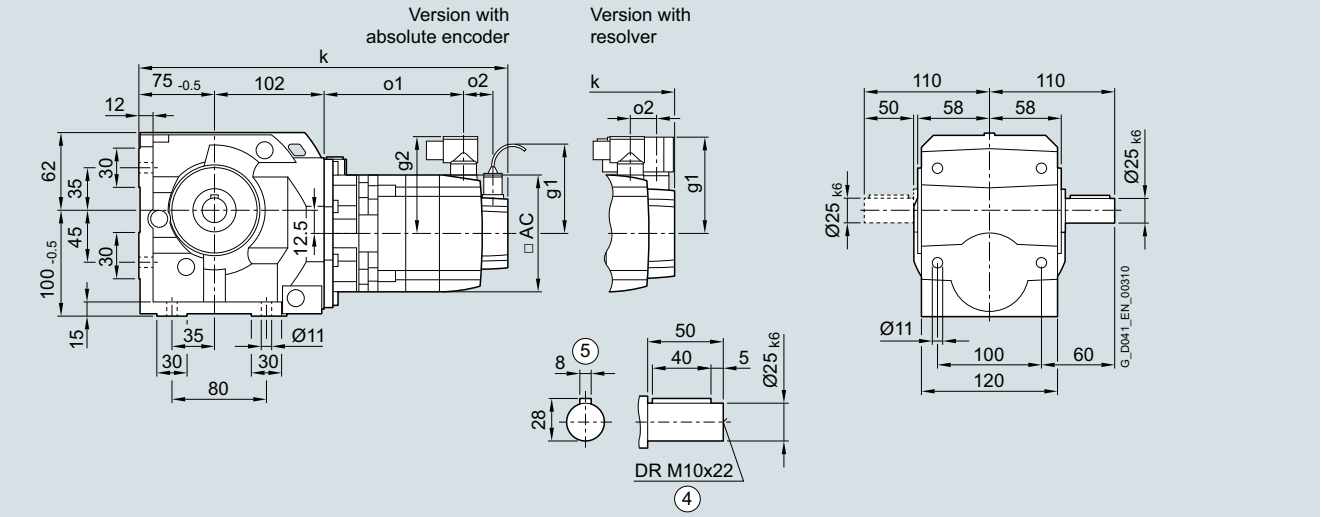

Gearbox type *CA.39*

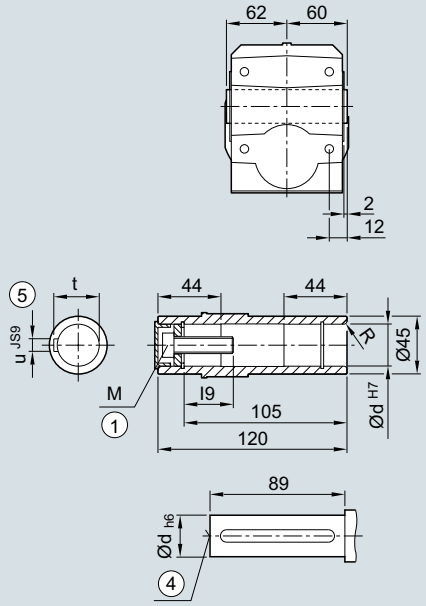

Gearbox type *CAS39*

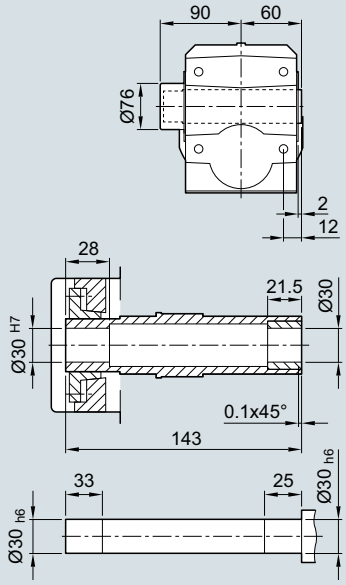

① ISO 4014 ④ DIN 332 ⑤ Feather key/keyway DIN 6885

© Siemens 2019

Servo helical worm geared motor	Motor shaft height	Motor version	Absolute encoder with brake		with brake for increased energy		without brake					Resolver with brake		with brake for increased energy		without brake					
Type			k	o1	k	o1	k	o1	o2	g1	g2	k	o1	k	o1	k	o1	o2	g1	g2	AC
1FG1...-..C2.-....	36	CT	388	148	–	–	371	131	50	104.5	78	368	154	–	–	351	137	15	80	80	72
1FG1...-..C3.-....		HD	398	158	–	–	381	141				378	164	–	–	361	147				
1FG1...-..C4.-....		CT	413	173	–	–	396	156				393	179	–	–	376	162				
1FG1...-..D0.-....	48	CT	370	130	–	–	346	106	50	104.5	90	355	130	–	–	331	106	23	90	90	96
1FG1...-..D2.-....		CT	397	158	–	–	373	134				383	158	–	–	359	134				
1FG1...-..D3.-....		HD	423	178	–	–	399	154	56			409	184	–	–	385	160				
1FG1...-..D4.-....		HD	448	203	–	–	424	179				434	209	–	–	410	185				
1FG1...-..E0.-....	63	CT	403	163	–	–	388	148	50	104.5	104	388	163	–	–	374	148	23	103	104	126
1FG1...-..E1.-....		HD	438	198	–	–	423	183				423	198	–	–	409	183				
1FG1...-..E2.-....		CT	425	186	–	–	411	171				411	186	–	–	396	171				
1FG1...-..E3.-....		CT	448	208	–	–	433	193				433	208	–	–	419	193				
1FG1...-..E4.-....		HD	502	262	–	–	487	247				487	262	–	–	473	247				
1FG1...-..F0.-....	80	CT	442	204	453	215	405	167	48	104.5	119	427	205	438	216	391	168	21	118	119	155
1FG1...-..F1.-....		CT	461	223	472	234	424	186				446	224	457	235	410	187				
1FG1...-..F3.-....		CT	480	242	491	253	443	205				465	243	476	254	429	206				
1FG1...-..F4.-....		CT	499	262	510	273	463	225				485	263	496	274	448	226				
1FG1...-..F52-....		HD	528	290	539	301	491	253				513	291	524	302	477	254				
1FG1...-..F62-....		HD	528	290	539	301	491	253				513	291	524	302	477	254				
1FG1...-..F53-....		HD	528	290	539	301	491	253			139	513	291	524	302	477	254			139	
1FG1...-..F63-....		HD	528	290	539	301	491	253				513	291	524	302	477	254				
1FG1...-..G0.-....	100	CT	–	–	–	–	–	–	–	–	–	–	–	–	–	–	–	–	–	–	–
1FG1...-..G1.-....		CT	–	–	–	–	–	–	–	–	–	–	–	–	–	–	–	–	–	–	–
1FG1...-..G3.-....		CT	–	–	–	–	–	–	–	–	–	–	–	–	–	–	–	–	–	–	–
1FG1...-..G5.-....		CT	–	–	–	–	–	–	–	–	–	–	–	–	–	–	–	–	–	–	–

Hollow-shaft					
d	l9	M	R	t	u
25	32.6	M10	1.6	28.3	8
30	32.6	M10	3.0	33.3	8

© Siemens 2019

Dimensional drawings

Gearbox type *C.F.39*

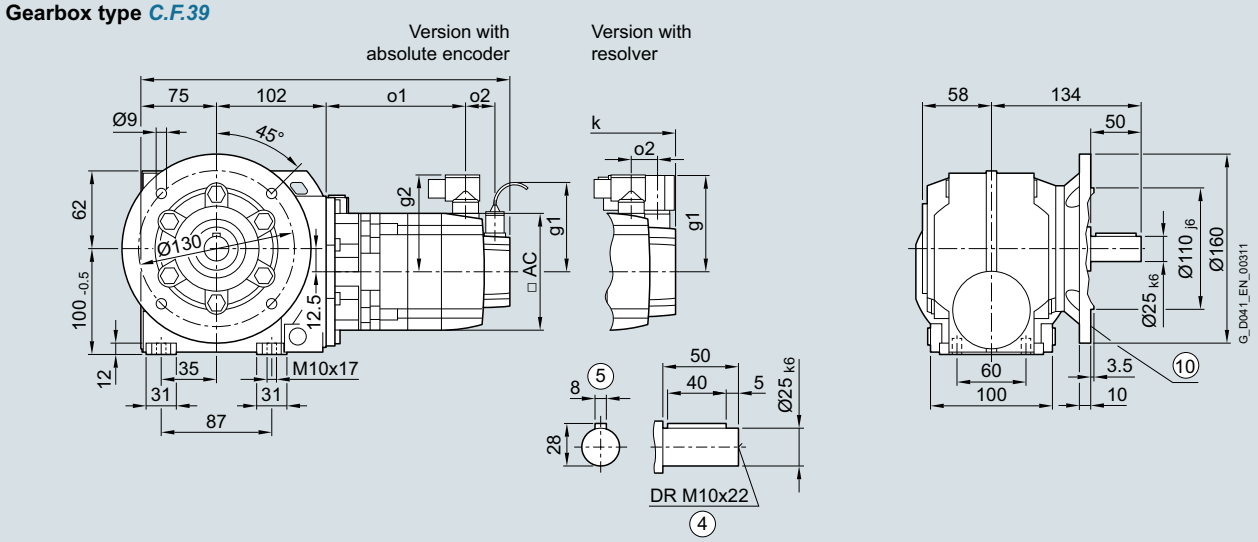

Gearbox type *CAF.39*

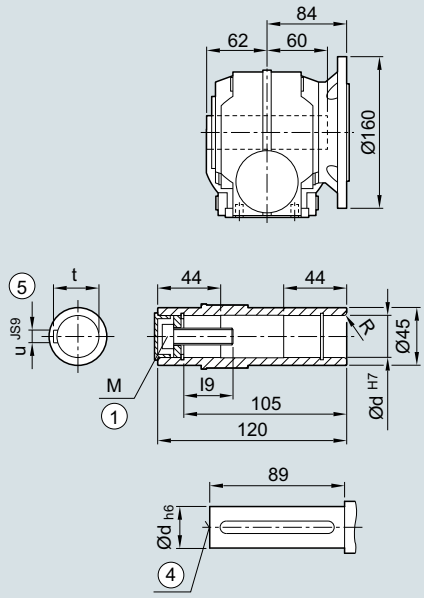

Gearbox type *CAFS39*

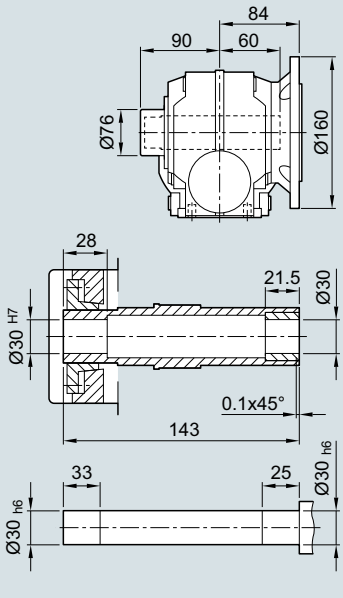

① ISO 4014 ④ DIN 332 ⑤ Feather key/keyway DIN 6885

⑩ For inner contour of the flange design, see page 6/86

© Siemens 2019

Servo helical worm geared motor	Motor shaft height	Motor version	Absolute encoder with brake		with brake for increased energy		without brake					Resolver with brake		with brake for increased energy		without brake					
Type			k	o1	k	o1	k	o1	o2	g1	g2	k	o1	k	o1	k	o1	o2	g1	g2	AC
1FG1...-..C2.-....	36	CT	388	148	–	–	371	131	50	104.5	78	368	154	–	–	351	137	15	80	80	72
1FG1...-..C3.-....		HD	398	158	–	–	381	141				378	164	–	–	361	147				
1FG1...-..C4.-....		CT	413	173	–	–	396	156				393	179	–	–	376	162				
1FG1...-..D0.-....	48	CT	370	130	–	–	346	106	50	104.5	90	355	130	–	–	331	106	23	90	90	96
1FG1...-..D2.-....		CT	397	158	–	–	373	134				383	158	–	–	359	134				
1FG1...-..D3.-....		HD	423	178	–	–	399	154	56			409	184	–	–	385	160				
1FG1...-..D4.-....		HD	448	203	–	–	424	179				434	209	–	–	410	185				
1FG1...-..E0.-....	63	CT	403	163	–	–	388	148	50	104.5	104	388	163	–	–	374	148	23	103	104	126
1FG1...-..E1.-....		HD	438	198	–	–	423	183				423	198	–	–	409	183				
1FG1...-..E2.-....		CT	425	186	–	–	411	171				411	186	–	–	396	171				
1FG1...-..E3.-....		CT	448	208	–	–	433	193				433	208	–	–	419	193				
1FG1...-..E4.-....		HD	502	262	–	–	487	247				487	262	–	–	473	247				
1FG1...-..F0.-....	80	CT	442	204	453	215	405	167	48	104.5	119	427	205	438	216	391	168	21	118	119	155
1FG1...-..F1.-....		CT	461	223	472	234	424	186				446	224	457	235	410	187				
1FG1...-..F3.-....		CT	480	242	491	253	443	205				465	243	476	254	429	206				
1FG1...-..F4.-....		CT	499	262	510	273	463	225				485	263	496	274	448	226				
1FG1...-..F52-....		HD	528	290	539	301	491	253				513	291	524	302	477	254				
1FG1...-..F62-....		HD	528	290	539	301	491	253				513	291	524	302	477	254				
1FG1...-..F53-....		HD	528	290	539	301	491	253			139	513	291	524	302	477	254			139	
1FG1...-..F63-....		HD	528	290	539	301	491	253				513	291	524	302	477	254				
1FG1...-..G0.-....	100	CT	–	–	–	–	–	–	–	–	–	–	–	–	–	–	–	–	–	–	–
1FG1...-..G1.-....		CT	–	–	–	–	–	–	–	–	–	–	–	–	–	–	–	–	–	–	–
1FG1...-..G3.-....		CT	–	–	–	–	–	–	–	–	–	–	–	–	–	–	–	–	–	–	–
1FG1...-..G5.-....		CT	–	–	–	–	–	–	–	–	–	–	–	–	–	–	–	–	–	–	–

Hollow-shaft					
d	l9	M	R	t	u
25	32.6	M10	1.6	28.3	8
30	32.6	M10	3.0	33.3	8

© Siemens 2019

Dimensional drawings

Gearbox type *C.Z.39*

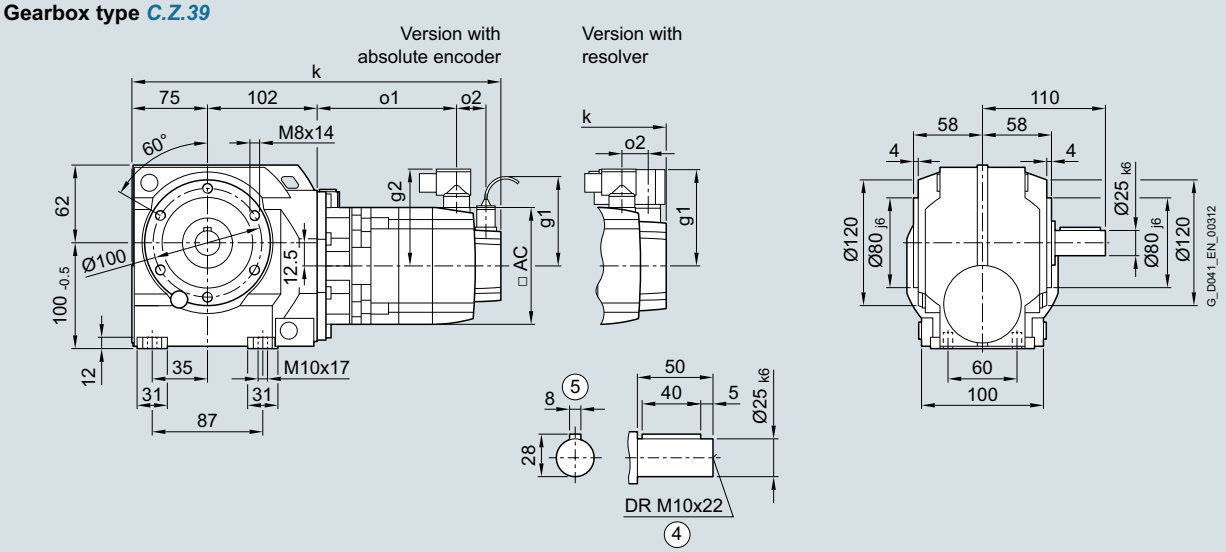

Gearbox type *CAZ.39*

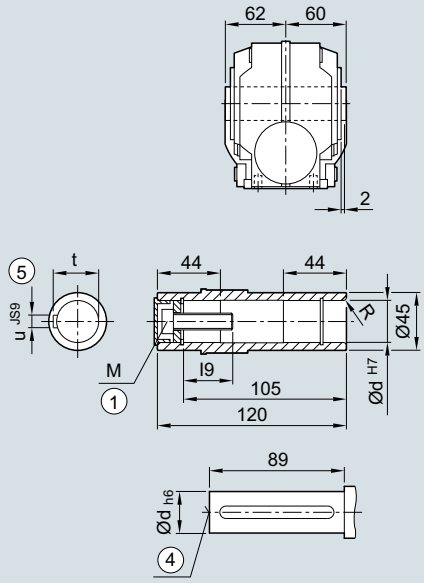

Gearbox type *CAZS39*

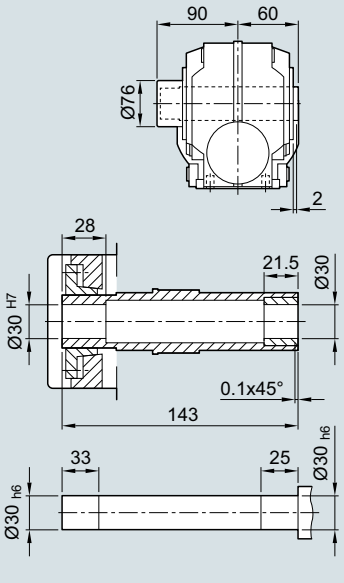

① ISO 4014 ④ DIN 332 ⑤ Feather key/keyway DIN 6885

© Siemens 2019

Servo helical worm geared motor	Motor shaft height	Motor version	Absolute encoder with brake		with brake for increased energy		without brake					Resolver with brake		with brake for increased energy		without brake					
Type			k	o1	k	o1	k	o1	o2	g1	g2	k	o1	k	o1	k	o1	o2	g1	g2	AC
1FG1...-..C2.-....	36	CT	388	148	–	–	371	131	50	104.5	78	368	154	–	–	351	137	15	80	80	72
1FG1...-..C3.-....		HD	398	158	–	–	381	141				378	164	–	–	361	147				
1FG1...-..C4.-....		CT	413	173	–	–	396	156				393	179	–	–	376	162				
1FG1...-..D0.-....	48	CT	370	130	–	–	346	106	50	104.5	90	355	130	–	–	331	106	23	90	90	96
1FG1...-..D2.-....		CT	397	158	–	–	373	134				383	158	–	–	359	134				
1FG1...-..D3.-....		HD	423	178	–	–	399	154	56			409	184	–	–	385	160				
1FG1...-..D4.-....		HD	448	203	–	–	424	179				434	209	–	–	410	185				
1FG1...-..E0.-....	63	CT	403	163	–	–	388	148	50	104.5	104	388	163	–	–	374	148	23	103	104	126
1FG1...-..E1.-....		HD	438	198	–	–	423	183				423	198	–	–	409	183				
1FG1...-..E2.-....		CT	425	186	–	–	411	171				411	186	–	–	396	171				
1FG1...-..E3.-....		CT	448	208	–	–	433	193				433	208	–	–	419	193				
1FG1...-..E4.-....		HD	502	262	–	–	487	247				487	262	–	–	473	247				
1FG1...-..F0.-....	80	CT	442	204	453	215	405	167	48	104.5	119	427	205	438	216	391	168	21	118	119	155
1FG1...-..F1.-....		CT	461	223	472	234	424	186				446	224	457	235	410	187				
1FG1...-..F3.-....		CT	480	242	491	253	443	205				465	243	476	254	429	206				
1FG1...-..F4.-....		CT	499	262	510	273	463	225				485	263	496	274	448	226				
1FG1...-..F52-....		HD	528	290	539	301	491	253				513	291	524	302	477	254				
1FG1...-..F62-....		HD	528	290	539	301	491	253				513	291	524	302	477	254				
1FG1...-..F53-....		HD	528	290	539	301	491	253			139	513	291	524	302	477	254			139	
1FG1...-..F63-....		HD	528	290	539	301	491	253				513	291	524	302	477	254				
1FG1...-..G0.-....	100	CT	–	–	–	–	–	–	–	–	–	–	–	–	–	–	–	–	–	–	–
1FG1...-..G1.-....		CT	–	–	–	–	–	–	–	–	–	–	–	–	–	–	–	–	–	–	–
1FG1...-..G3.-....		CT	–	–	–	–	–	–	–	–	–	–	–	–	–	–	–	–	–	–	–
1FG1...-..G5.-....		CT	–	–	–	–	–	–	–	–	–	–	–	–	–	–	–	–	–	–	–

Hollow-shaft					
d	l9	M	R	t	u
25	32.6	M10	1.6	28.3	8
30	32.6	M10	3.0	33.3	8

© Siemens 2019

Dimensional drawings

Gearbox type *CAD.39*

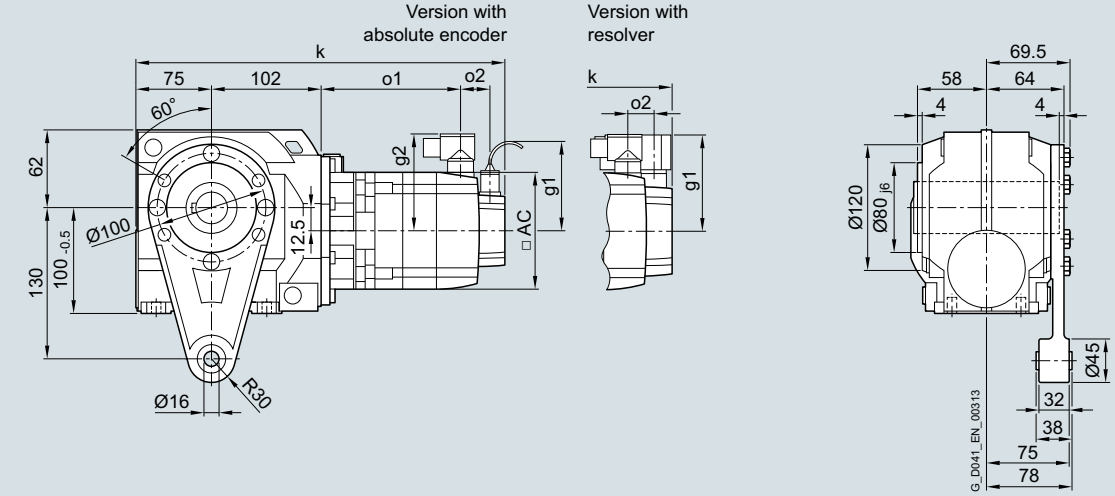

Gearbox type *CAD.39*

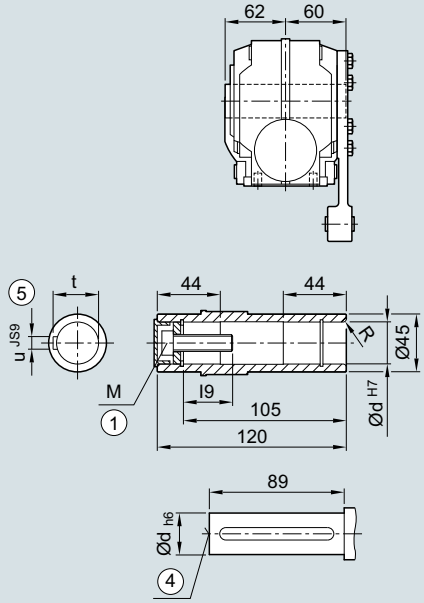

Gearbox type *CADS39*

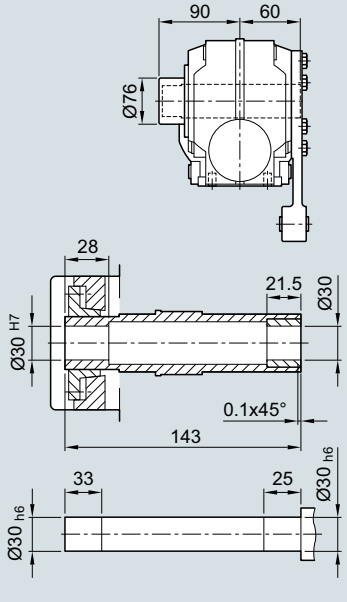

① ISO 4014 ④ DIN 332 ⑤ Feather key/keyway DIN 6885

© Siemens 2019

Servo helical worm geared motor	Motor shaft height	Motor version	Absolute encoder with brake		with brake for increased energy		without brake					Resolver with brake		with brake for increased energy		without brake					
Type			k	o1	k	o1	k	o1	o2	g1	g2	k	o1	k	o1	k	o1	o2	g1	g2	AC
1FG1...-..C2.-....	36	CT	388	148	–	–	371	131	50	104.5	78	368	154	–	–	351	137	15	80	80	72
1FG1...-..C3.-....		HD	398	158	–	–	381	141				378	164	–	–	361	147				
1FG1...-..C4.-....		CT	413	173	–	–	396	156				393	179	–	–	376	162				
1FG1...-..D0.-....	48	CT	370	130	–	–	346	106	50	104.5	90	355	130	–	–	331	106	23	90	90	96
1FG1...-..D2.-....		CT	397	158	–	–	373	134				383	158	–	–	359	134				
1FG1...-..D3.-....		HD	423	178	–	–	399	154	56			409	184	–	–	385	160				
1FG1...-..D4.-....		HD	448	203	–	–	424	179				434	209	–	–	410	185				
1FG1...-..E0.-....	63	CT	403	163	–	–	388	148	50	104.5	104	388	163	–	–	374	148	23	103	104	126
1FG1...-..E1.-....		HD	438	198	–	–	423	183				423	198	–	–	409	183				
1FG1...-..E2.-....		CT	425	186	–	–	411	171				411	186	–	–	396	171				
1FG1...-..E3.-....		CT	448	208	–	–	433	193				433	208	–	–	419	193				
1FG1...-..E4.-....		HD	502	262	–	–	487	247				487	262	–	–	473	247				
1FG1...-..F0.-....	80	CT	442	204	453	215	405	167	48	104.5	119	427	205	438	216	391	168	21	118	119	155
1FG1...-..F1.-....		CT	461	223	472	234	424	186				446	224	457	235	410	187				
1FG1...-..F3.-....		CT	480	242	491	253	443	205				465	243	476	254	429	206				
1FG1...-..F4.-....		CT	499	262	510	273	463	225				485	263	496	274	448	226				
1FG1...-..F52-....		HD	528	290	539	301	491	253				513	291	524	302	477	254				
1FG1...-..F62-....		HD	528	290	539	301	491	253				513	291	524	302	477	254				
1FG1...-..F53-....		HD	528	290	539	301	491	253			139	513	291	524	302	477	254			139	
1FG1...-..F63-....		HD	528	290	539	301	491	253				513	291	524	302	477	254				
1FG1...-..G0.-....	100	CT	–	–	–	–	–	–	–	–	–	–	–	–	–	–	–	–	–	–	–
1FG1...-..G1.-....		CT	–	–	–	–	–	–	–	–	–	–	–	–	–	–	–	–	–	–	–
1FG1...-..G3.-....		CT	–	–	–	–	–	–	–	–	–	–	–	–	–	–	–	–	–	–	–
1FG1...-..G5.-....		CT	–	–	–	–	–	–	–	–	–	–	–	–	–	–	–	–	–	–	–

Hollow-shaft					
d	l9	M	R	t	u
25	32.6	M10	1.6	28.3	8
30	32.6	M10	3.0	33.3	8

© Siemens 2019

Dimensional drawings

Gearbox type *C..49*

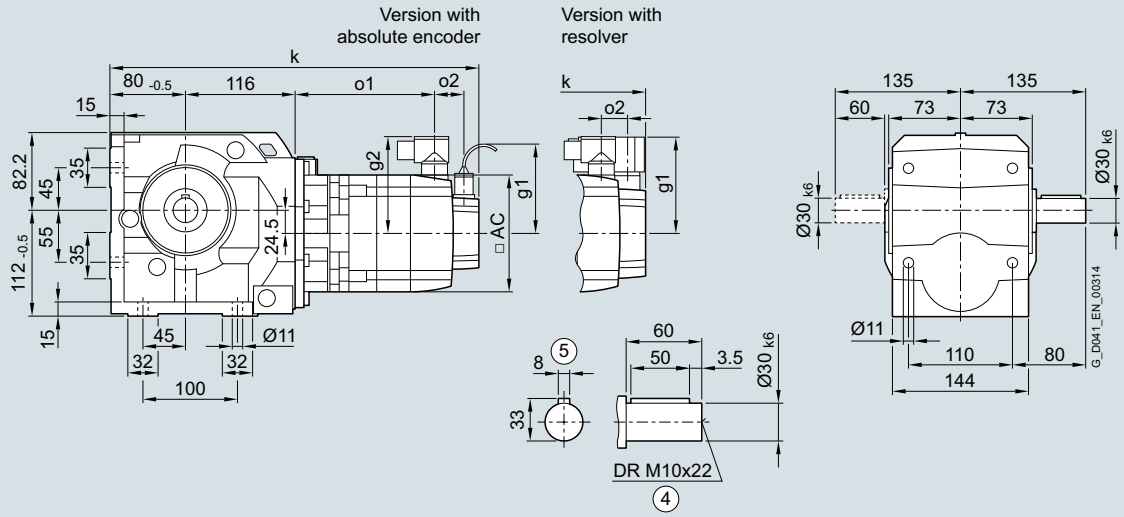

Gearbox type *CA.49*

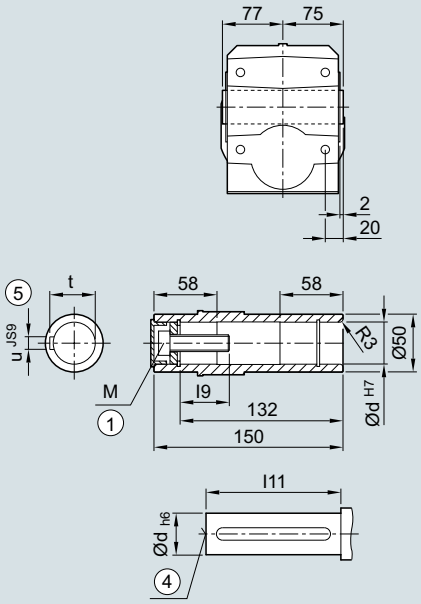

Gearbox type *CAS49*

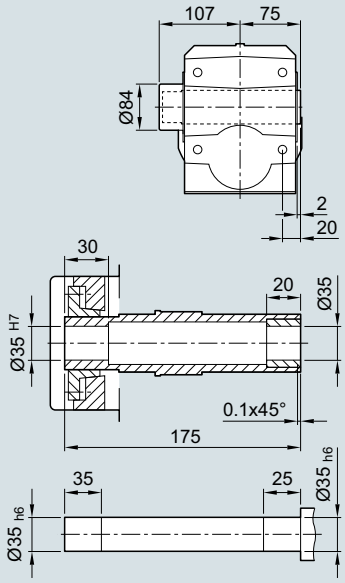

① ISO 4014 ④ DIN 332 ⑤ Feather key/keyway DIN 6885

© Siemens 2019

Servo helical worm geared motor	Motor shaft height	Motor version	Absolute encoder with brake		with brake for increased energy		without brake					Resolver with brake		with brake for increased energy		without brake					
Type			k	o1	k	o1	k	o1	o2	g1	g2	k	o1	k	o1	k	o1	o2	g1	g2	AC
1FG1...-..C2.-....	36	CT	398	139	–	–	381	122	50	104.5	78	377	144	–	–	360	127	15	80	80	72
1FG1...-..C3.-....		HD	408	149	–	–	391	132				387	154	–	–	370	137				
1FG1...-..C4.-....		CT	423	164	–	–	406	147				402	169	–	–	385	152				
1FG1...-..D0.-....	48	CT	379	121	–	–	355	97	50	104.5	90	365	121	–	–	341	97	23	90	90	96
1FG1...-..D2.-....		CT	407	148	–	–	383	124				392	148	–	–	368	124				
1FG1...-..D3.-....		HD	433	168	–	–	409	144	56			418	174	–	–	394	150				
1FG1...-..D4.-....		HD	458	193	–	–	434	169				443	199	–	–	419	175				
1FG1...-..E0.-....	63	CT	412	154	–	–	398	139	50	104.5	104	398	154	–	–	383	139	23	103	104	126
1FG1...-..E1.-....		HD	447	189	–	–	433	174				433	189	–	–	418	174				
1FG1...-..E2.-....		CT	435	176	–	–	420	161				420	176	–	–	406	161				
1FG1...-..E3.-....		CT	457	199	–	–	443	184				443	199	–	–	428	184				
1FG1...-..E4.-....		HD	511	253	–	–	497	238				497	253	–	–	482	238				
1FG1...-..F0.-....	80	CT	451	195	462	206	415	158	48	104.5	119	437	196	448	207	400	159	21	118	119	155
1FG1...-..F1.-....		CT	470	214	481	225	434	177				456	215	467	226	419	178				
1FG1...-..F3.-....		CT	489	233	500	244	453	196				475	234	486	245	438	197				
1FG1...-..F4.-....		CT	509	252	520	263	472	215				494	253	505	264	458	216				
1FG1...-..F52-....		HD	537	281	548	292	501	244				523	282	534	293	486	245				
1FG1...-..F62-....		HD	537	281	548	292	501	244				523	282	534	293	486	245				
1FG1...-..F53-....		HD	537	281	548	292	501	244			139	523	282	534	293	486	245			139	
1FG1...-..F63-....		HD	537	281	548	292	501	244				523	282	534	293	486	245				
1FG1...-..G0.-....	100	CT	–	–	–	–	–	–	–	–	–	–	–	–	–	–	–	–	–	–	–
1FG1...-..G1.-....		CT	–	–	–	–	–	–	–	–	–	–	–	–	–	–	–	–	–	–	–
1FG1...-..G3.-....		CT	–	–	–	–	–	–	–	–	–	–	–	–	–	–	–	–	–	–	–
1FG1...-..G5.-....		CT	–	–	–	–	–	–	–	–	–	–	–	–	–	–	–	–	–	–	–

Hollow-shaft					
d	l9	l11	M	t	u
30	32.6	114	M10	33.3	8
35	42	116	M12	38.3	10

© Siemens 2019

Dimensional drawings

Gearbox type *C.F.49*

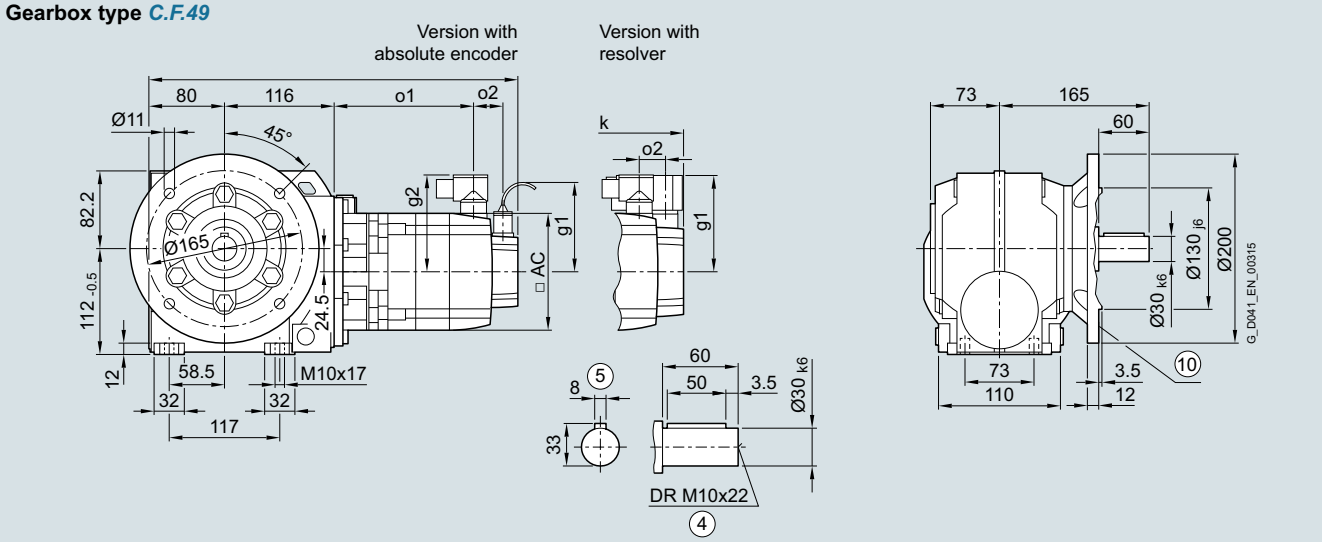

Gearbox type *CAF.49*

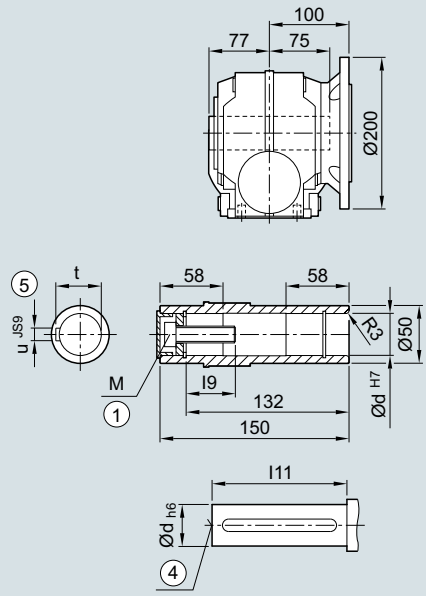

Gearbox type *CAFS49*

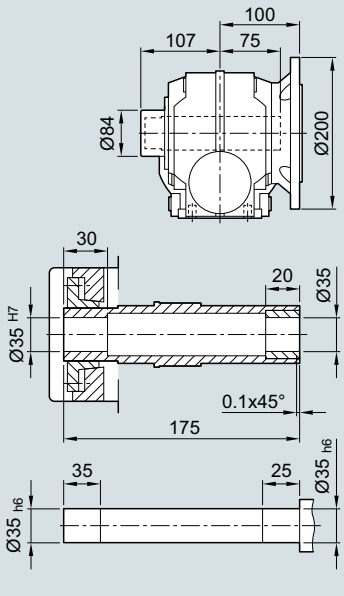

① ISO 4014 ④ DIN 332 ⑤ Feather key/keyway DIN 6885

⑩ For inner contour of the flange design, see page 6/86

© Siemens 2019

Servo helical worm geared motor	Motor shaft height	Motor version	Absolute encoder with brake		with brake for increased energy		without brake					Resolver with brake		with brake for increased energy		without brake					
Type			k	o1	k	o1	k	o1	o2	g1	g2	k	o1	k	o1	k	o1	o2	g1	g2	AC
1FG1...-..C2.-....	36	CT	398	139	–	–	381	122	50	104.5	78	377	144	–	–	360	127	15	80	80	72
1FG1...-..C3.-....		HD	408	149	–	–	391	132				387	154	–	–	370	137				
1FG1...-..C4.-....		CT	423	164	–	–	406	147				402	169	–	–	385	152				
1FG1...-..D0.-....	48	CT	379	121	–	–	355	97	50	104.5	90	365	121	–	–	341	97	23	90	90	96
1FG1...-..D2.-....		CT	407	148	–	–	383	124				392	148	–	–	368	124				
1FG1...-..D3.-....		HD	433	168	–	–	409	144	56			418	174	–	–	394	150				
1FG1...-..D4.-....		HD	458	193	–	–	434	169				443	199	–	–	419	175				
1FG1...-..E0.-....	63	CT	412	154	–	–	398	139	50	104.5	104	398	154	–	–	383	139	23	103	104	126
1FG1...-..E1.-....		HD	447	189	–	–	433	174				433	189	–	–	418	174				
1FG1...-..E2.-....		CT	435	176	–	–	420	161				420	176	–	–	406	161				
1FG1...-..E3.-....		CT	457	199	–	–	443	184				443	199	–	–	428	184				
1FG1...-..E4.-....		HD	511	253	–	–	497	238				497	253	–	–	482	238				
1FG1...-..F0.-....	80	CT	451	195	462	206	415	158	48	104.5	119	437	196	448	207	400	159	21	118	119	155
1FG1...-..F1.-....		CT	470	214	481	225	434	177				456	215	467	226	419	178				
1FG1...-..F3.-....		CT	489	233	500	244	453	196				475	234	486	245	438	197				
1FG1...-..F4.-....		CT	509	252	520	263	472	215				494	253	505	264	458	216				
1FG1...-..F52-....		HD	537	281	548	292	501	244				523	282	534	293	486	245				
1FG1...-..F62-....		HD	537	281	548	292	501	244				523	282	534	293	486	245				
1FG1...-..F53-....		HD	537	281	548	292	501	244			139	523	282	534	293	486	245			139	
1FG1...-..F63-....		HD	537	281	548	292	501	244				523	282	534	293	486	245				
1FG1...-..G0.-....	100	CT	–	–	–	–	–	–	–	–	–	–	–	–	–	–	–	–	–	–	–
1FG1...-..G1.-....		CT	–	–	–	–	–	–	–	–	–	–	–	–	–	–	–	–	–	–	–
1FG1...-..G3.-....		CT	–	–	–	–	–	–	–	–	–	–	–	–	–	–	–	–	–	–	–
1FG1...-..G5.-....		CT	–	–	–	–	–	–	–	–	–	–	–	–	–	–	–	–	–	–	–

Hollow-shaft					
d	l9	l11	M	t	u
30	32.6	114	M10	33.3	8
35	42	116	M12	38.3	10

© Siemens 2019

Dimensional drawings

Gearbox type *C.Z.49*

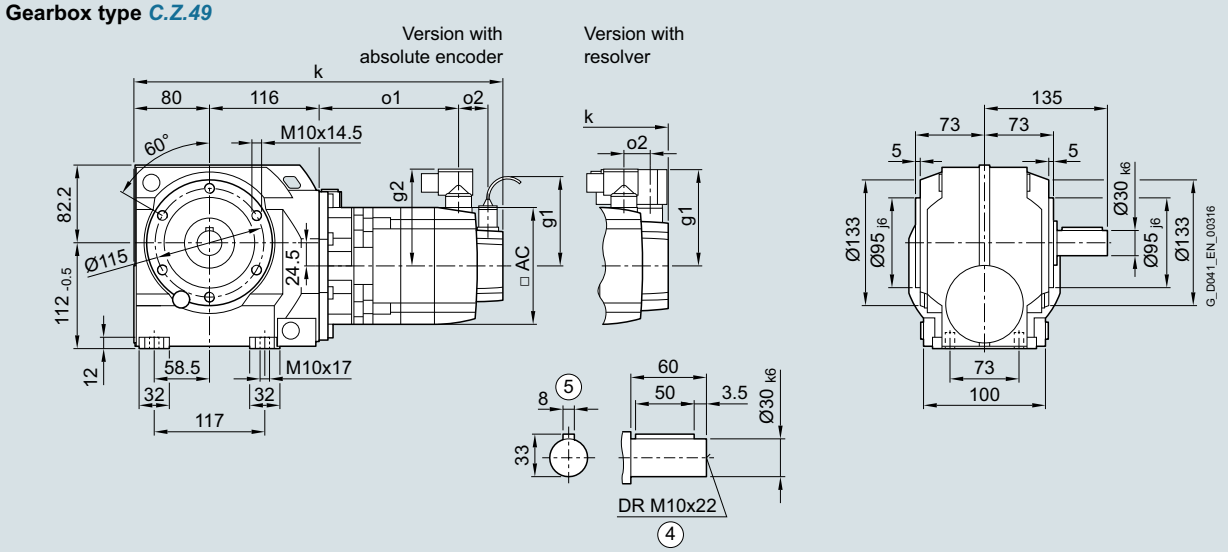

Gearbox type *CAZ.49*

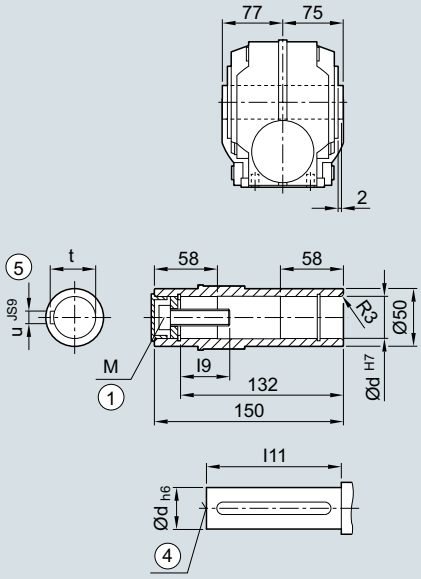

Gearbox type *CAZS49*

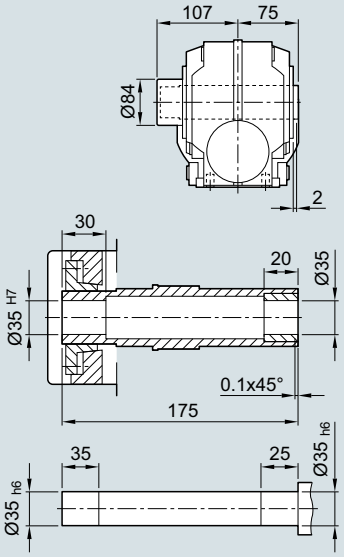

① ISO 4014 ④ DIN 332 ⑤ Feather key/keyway DIN 6885

© Siemens 2019

Servo helical worm geared motor	Motor shaft height	Motor version	Absolute encoder with brake		with brake for increased energy		without brake					Resolver with brake		with brake for increased energy		without brake					
Type			k	o1	k	o1	k	o1	o2	g1	g2	k	o1	k	o1	k	o1	o2	g1	g2	AC
1FG1...-..C2.-....	36	CT	398	139	–	–	381	122	50	104.5	78	377	144	–	–	360	127	15	80	80	72
1FG1...-..C3.-....		HD	408	149	–	–	391	132				387	154	–	–	370	137				
1FG1...-..C4.-....		CT	423	164	–	–	406	147				402	169	–	–	385	152				
1FG1...-..D0.-....	48	CT	379	121	–	–	355	97	50	104.5	90	365	121	–	–	341	97	23	90	90	96
1FG1...-..D2.-....		CT	407	148	–	–	383	124				392	148	–	–	368	124				
1FG1...-..D3.-....		HD	433	168	–	–	409	144	56			418	174	–	–	394	150				
1FG1...-..D4.-....		HD	458	193	–	–	434	169				443	199	–	–	419	175				
1FG1...-..E0.-....	63	CT	412	154	–	–	398	139	50	104.5	104	398	154	–	–	383	139	23	103	104	126
1FG1...-..E1.-....		HD	447	189	–	–	433	174				433	189	–	–	418	174				
1FG1...-..E2.-....		CT	435	176	–	–	420	161				420	176	–	–	406	161				
1FG1...-..E3.-....		CT	457	199	–	–	443	184				443	199	–	–	428	184				
1FG1...-..E4.-....		HD	511	253	–	–	497	238				497	253	–	–	482	238				
1FG1...-..F0.-....	80	CT	451	195	462	206	415	158	48	104.5	119	437	196	448	207	400	159	21	118	119	155
1FG1...-..F1.-....		CT	470	214	481	225	434	177				456	215	467	226	419	178				
1FG1...-..F3.-....		CT	489	233	500	244	453	196				475	234	486	245	438	197				
1FG1...-..F4.-....		CT	509	252	520	263	472	215				494	253	505	264	458	216				
1FG1...-..F52-....		HD	537	281	548	292	501	244				523	282	534	293	486	245				
1FG1...-..F62-....		HD	537	281	548	292	501	244				523	282	534	293	486	245				
1FG1...-..F53-....		HD	537	281	548	292	501	244			139	523	282	534	293	486	245			139	
1FG1...-..F63-....		HD	537	281	548	292	501	244				523	282	534	293	486	245				
1FG1...-..G0.-....	100	CT	–	–	–	–	–	–	–	–	–	–	–	–	–	–	–	–	–	–	–
1FG1...-..G1.-....		CT	–	–	–	–	–	–	–	–	–	–	–	–	–	–	–	–	–	–	–
1FG1...-..G3.-....		CT	–	–	–	–	–	–	–	–	–	–	–	–	–	–	–	–	–	–	–
1FG1...-..G5.-....		CT	–	–	–	–	–	–	–	–	–	–	–	–	–	–	–	–	–	–	–

Hollow-shaft					
d	l9	l11	M	t	u
30	32.6	114	M10	33.3	8
35	42	116	M12	38.3	10

© Siemens 2019

Dimensional drawings

Gearbox type *CAD.49*

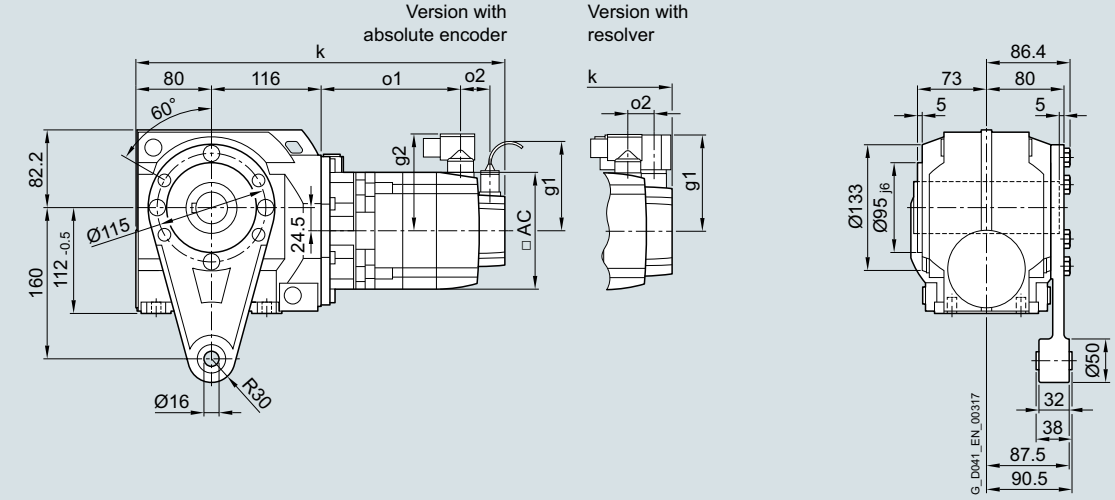

Gearbox type *CAD.49*

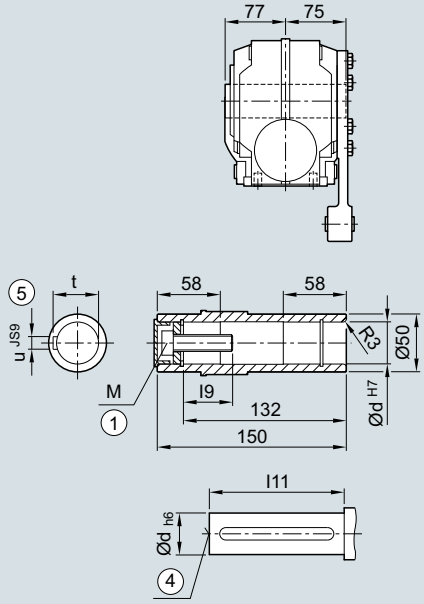

Gearbox type *CADS49*

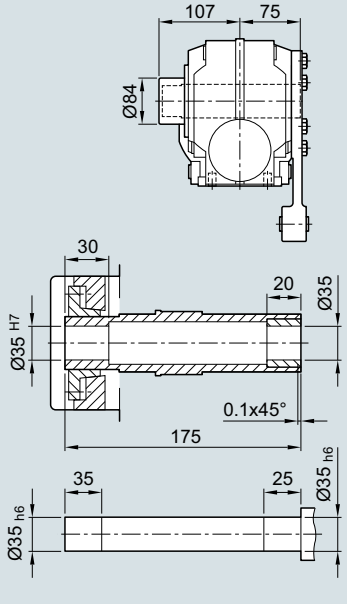

① ISO 4014 ④ DIN 332 ⑤ Feather key/keyway DIN 6885

© Siemens 2019

Servo helical worm geared motor	Motor shaft height	Motor version	Absolute encoder with brake		with brake for increased energy		without brake					Resolver with brake		with brake for increased energy		without brake					
Type			k	o1	k	o1	k	o1	o2	g1	g2	k	o1	k	o1	k	o1	o2	g1	g2	AC
1FG1...-..C2.-....	36	CT	398	139	–	–	381	122	50	104.5	78	377	144	–	–	360	127	15	80	80	72
1FG1...-..C3.-....		HD	408	149	–	–	391	132				387	154	–	–	370	137				
1FG1...-..C4.-....		CT	423	164	–	–	406	147				402	169	–	–	385	152				
1FG1...-..D0.-....	48	CT	379	121	–	–	355	97	50	104.5	90	365	121	–	–	341	97	23	90	90	96
1FG1...-..D2.-....		CT	407	148	–	–	383	124				392	148	–	–	368	124				
1FG1...-..D3.-....		HD	433	168	–	–	409	144	56			418	174	–	–	394	150				
1FG1...-..D4.-....		HD	458	193	–	–	434	169				443	199	–	–	419	175				
1FG1...-..E0.-....	63	CT	412	154	–	–	398	139	50	104.5	104	398	154	–	–	383	139	23	103	104	126
1FG1...-..E1.-....		HD	447	189	–	–	433	174				433	189	–	–	418	174				
1FG1...-..E2.-....		CT	435	176	–	–	420	161				420	176	–	–	406	161				
1FG1...-..E3.-....		CT	457	199	–	–	443	184				443	199	–	–	428	184				
1FG1...-..E4.-....		HD	511	253	–	–	497	238				497	253	–	–	482	238				
1FG1...-..F0.-....	80	CT	451	195	462	206	415	158	48	104.5	119	437	196	448	207	400	159	21	118	119	155
1FG1...-..F1.-....		CT	470	214	481	225	434	177				456	215	467	226	419	178				
1FG1...-..F3.-....		CT	489	233	500	244	453	196				475	234	486	245	438	197				
1FG1...-..F4.-....		CT	509	252	520	263	472	215				494	253	505	264	458	216				
1FG1...-..F52-....		HD	537	281	548	292	501	244				523	282	534	293	486	245				
1FG1...-..F62-....		HD	537	281	548	292	501	244				523	282	534	293	486	245				
1FG1...-..F53-....		HD	537	281	548	292	501	244			139	523	282	534	293	486	245			139	
1FG1...-..F63-....		HD	537	281	548	292	501	244				523	282	534	293	486	245				
1FG1...-..G0.-....	100	CT	–	–	–	–	–	–	–	–	–	–	–	–	–	–	–	–	–	–	–
1FG1...-..G1.-....		CT	–	–	–	–	–	–	–	–	–	–	–	–	–	–	–	–	–	–	–
1FG1...-..G3.-....		CT	–	–	–	–	–	–	–	–	–	–	–	–	–	–	–	–	–	–	–
1FG1...-..G5.-....		CT	–	–	–	–	–	–	–	–	–	–	–	–	–	–	–	–	–	–	–

Hollow-shaft					
d	l9	l11	M	t	u
30	32.6	114	M10	33.3	8
35	42	116	M12	38.3	10

© Siemens 2019

Dimensional drawings

Gearbox type *C..69*

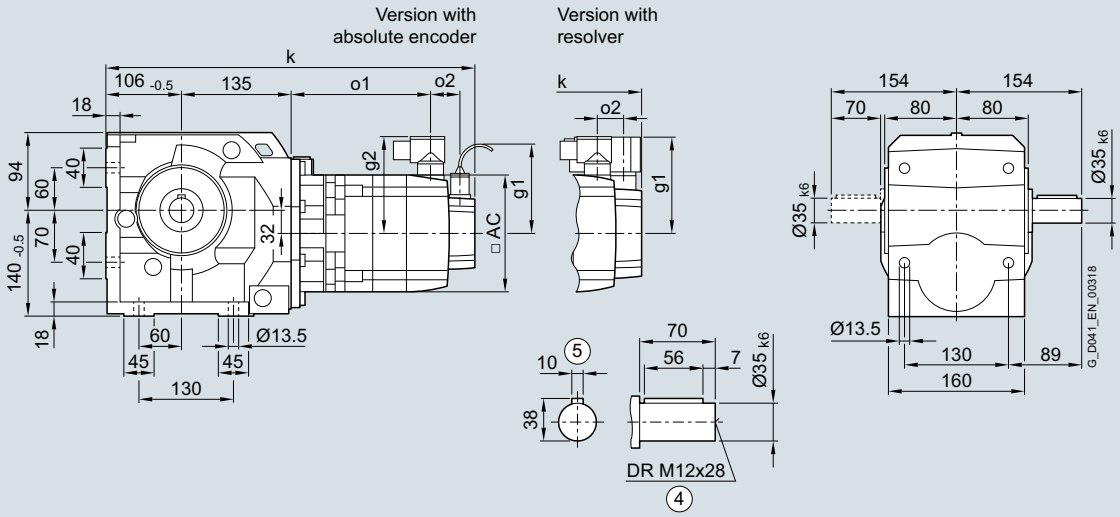

Gearbox type *CA.69*

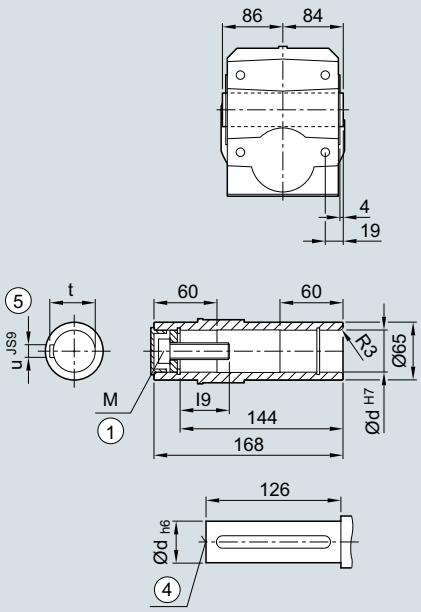

Gearbox type *CAS69*

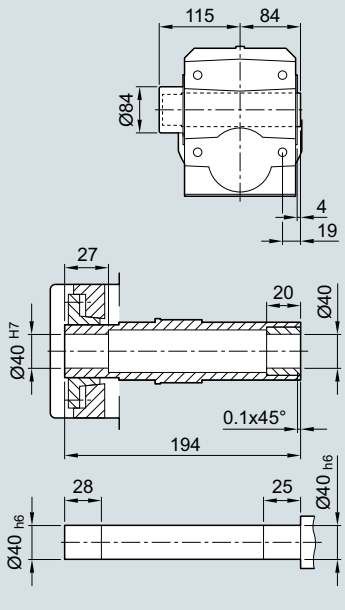

① ISO 4014 ④ DIN 332 ⑤ Feather key/keyway DIN 6885

© Siemens 2019

Servo helical worm geared motor	Motor shaft height	Motor version	Absolute encoder with brake		with brake for increased energy		without brake					Resolver with brake		with brake for increased energy		without brake					
Type			k	o1	k	o1	k	o1	o2	g1	g2	k	o1	k	o1	k	o1	o2	g1	g2	AC
1FG1...-..C2.-....	36	CT	443	139	–	–	426	122	50	104.5	78	422	144	–	–	405	127	15	80	80	72
1FG1...-..C3.-....		HD	453	149	–	–	436	132				432	154	–	–	415	137				
1FG1...-..C4.-....		CT	468	164	–	–	451	147				447	169	–	–	430	152				
1FG1...-..D0.-....	48	CT	424	121	–	–	400	97	50	104.5	90	410	121	–	–	386	97	23	90	90	96
1FG1...-..D2.-....		CT	452	148	–	–	428	124				437	148	–	–	413	124				
1FG1...-..D3.-....		HD	478	168	–	–	454	144	56			463	174	–	–	439	150				
1FG1...-..D4.-....		HD	503	193	–	–	479	169				488	199	–	–	464	175				
1FG1...-..E0.-....	63	CT	457	154	–	–	443	139	50	104.5	104	443	154	–	–	428	139	23	103	104	126
1FG1...-..E1.-....		HD	492	189	–	–	478	174				478	189	–	–	463	174				
1FG1...-..E2.-....		CT	480	176	–	–	465	161				465	176	–	–	451	161				
1FG1...-..E3.-....		CT	502	199	–	–	488	184				488	199	–	–	473	184				
1FG1...-..E4.-....		HD	556	253	–	–	542	238				542	253	–	–	527	238				
1FG1...-..F0.-....	80	CT	496	195	507	206	460	158	48	104.5	119	482	196	493	207	445	159	21	118	119	155
1FG1...-..F1.-....		CT	515	214	526	225	479	177				501	215	512	226	464	178				
1FG1...-..F3.-....		CT	534	233	545	244	498	196				520	234	531	245	483	197				
1FG1...-..F4.-....		CT	554	252	565	263	517	215				539	253	550	264	503	216				
1FG1...-..F52-....		HD	582	281	593	292	546	244				568	282	579	293	531	245				
1FG1...-..F62-....		HD	582	281	593	292	546	244				568	282	579	293	531	245				
1FG1...-..F53-....		HD	582	281	593	292	546	244			139	568	282	579	293	531	245			139	
1FG1...-..F63-....		HD	582	281	593	292	546	244				568	282	579	293	531	245				
1FG1...-..G0.-....	100	CT	527	220	554	247	492	185	53	104.5	137	512	222	539	249	477	187	26	136	137	192
1FG1...-..G1.-....		CT	553	246	580	273	518	211			158	538	248	565	275	503	213			158	
1FG1...-..G3.-....		CT	579	272	606	299	544	237				564	274	591	301	529	239				
1FG1...-..G5.-....		CT	631	324	658	351	596	289				616	326	643	353	581	291				

Hollow-shaft				
d	l9	M	t	u
40	47.75	M16	43.3	12
45	48.75	M16	48.8	14

© Siemens 2019

Dimensional drawings

Gearbox type *C.F.69*

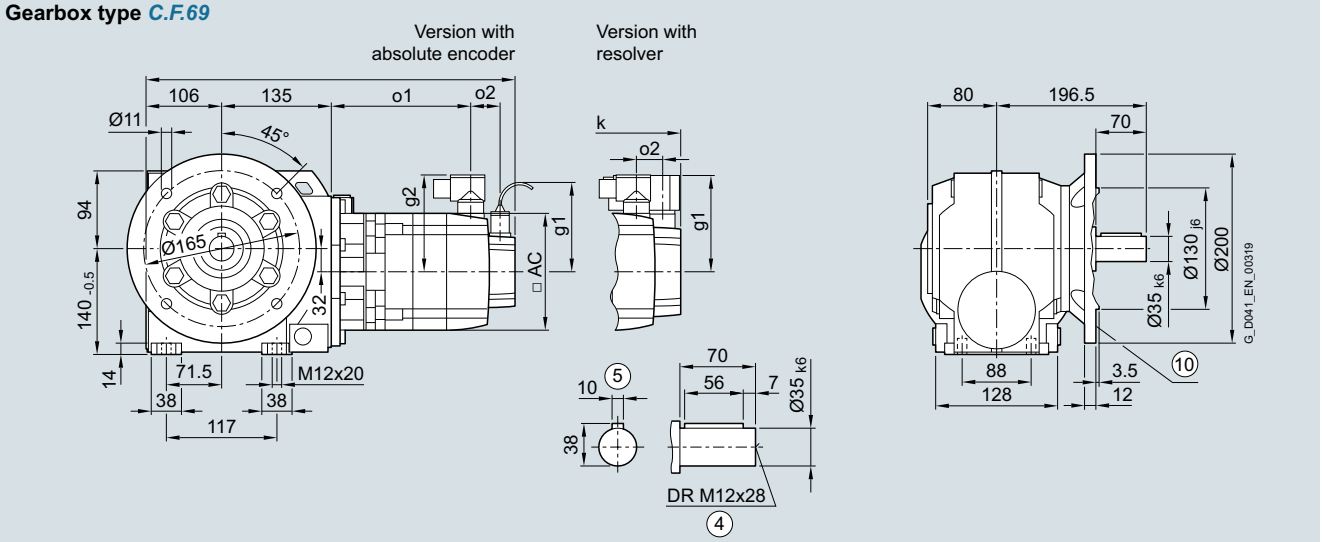

Gearbox type *CAF.69*

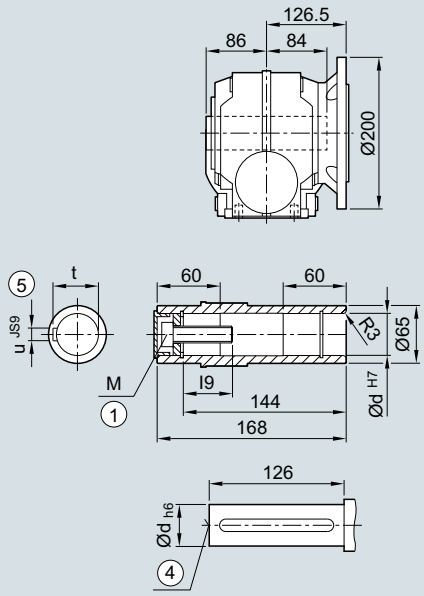

Gearbox type *CAFS69*

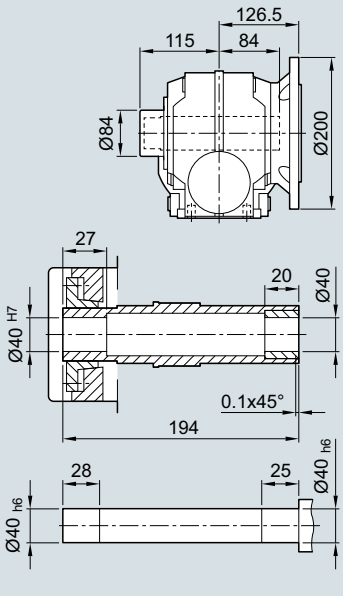

① ISO 4014 ④ DIN 332 ⑤ Feather key/keyway DIN 6885

⑩ For inner contour of the flange design, see page 6/86

© Siemens 2019

Servo helical worm geared motor	Motor shaft height	Motor version	Absolute encoder with brake		with brake for increased energy		without brake					Resolver with brake		with brake for increased energy		without brake					
Type			k	o1	k	o1	k	o1	o2	g1	g2	k	o1	k	o1	k	o1	o2	g1	g2	AC
1FG1...-..C2.-....	36	CT	443	139	–	–	426	122	50	104.5	78	422	144	–	–	405	127	15	80	80	72
1FG1...-..C3.-....		HD	453	149	–	–	436	132				432	154	–	–	415	137				
1FG1...-..C4.-....		CT	468	164	–	–	451	147				447	169	–	–	430	152				
1FG1...-..D0.-....	48	CT	424	121	–	–	400	97	50	104.5	90	410	121	–	–	386	97	23	90	90	96
1FG1...-..D2.-....		CT	452	148	–	–	428	124				437	148	–	–	413	124				
1FG1...-..D3.-....		HD	478	168	–	–	454	144	56			463	174	–	–	439	150				
1FG1...-..D4.-....		HD	503	193	–	–	479	169				488	199	–	–	464	175				
1FG1...-..E0.-....	63	CT	457	154	–	–	443	139	50	104.5	104	443	154	–	–	428	139	23	103	104	126
1FG1...-..E1.-....		HD	492	189	–	–	478	174				478	189	–	–	463	174				
1FG1...-..E2.-....		CT	480	176	–	–	465	161				465	176	–	–	451	161				
1FG1...-..E3.-....		CT	502	199	–	–	488	184				488	199	–	–	473	184				
1FG1...-..E4.-....		HD	556	253	–	–	542	238				542	253	–	–	527	238				
1FG1...-..F0.-....	80	CT	496	195	507	206	460	158	48	104.5	119	482	196	493	207	445	159	21	118	119	155
1FG1...-..F1.-....		CT	515	214	526	225	479	177				501	215	512	226	464	178				
1FG1...-..F3.-....		CT	534	233	545	244	498	196				520	234	531	245	483	197				
1FG1...-..F4.-....		CT	554	252	565	263	517	215				539	253	550	264	503	216				
1FG1...-..F52-....		HD	582	281	593	292	546	244				568	282	579	293	531	245				
1FG1...-..F62-....		HD	582	281	593	292	546	244				568	282	579	293	531	245				
1FG1...-..F53-....		HD	582	281	593	292	546	244			139	568	282	579	293	531	245			139	
1FG1...-..F63-....		HD	582	281	593	292	546	244				568	282	579	293	531	245				
1FG1...-..G0.-....	100	CT	527	220	554	247	492	185	53	104.5	137	512	222	539	249	477	187	26	136	137	192
1FG1...-..G1.-....		CT	553	246	580	273	518	211			158	538	248	565	275	503	213			158	
1FG1...-..G3.-....		CT	579	272	606	299	544	237				564	274	591	301	529	239				
1FG1...-..G5.-....		CT	631	324	658	351	596	289				616	326	643	353	581	291				

Hollow-shaft				
d	l9	M	t	u
40	47.75	M16	43.3	12
45	48.75	M16	48.8	14

© Siemens 2019

Dimensional drawings

Gearbox type *C.Z.69*

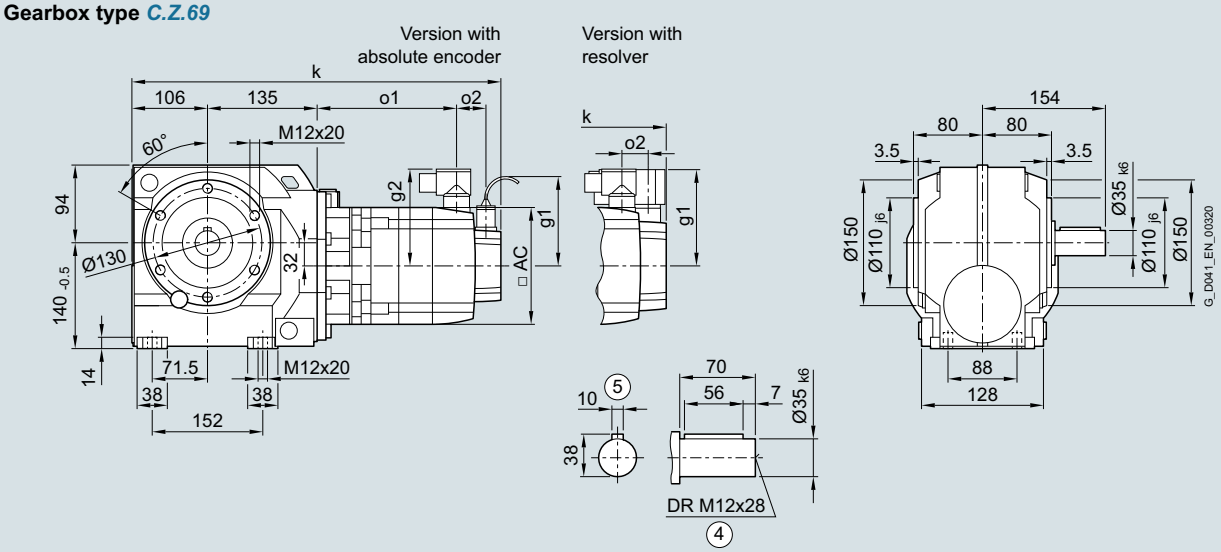

Gearbox type *CAZ.69*

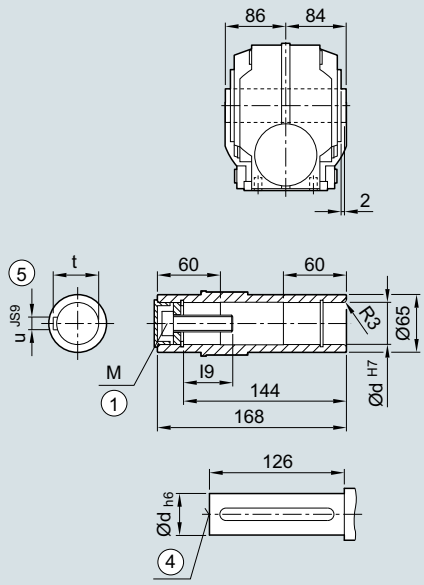

Gearbox type *CAZS69*

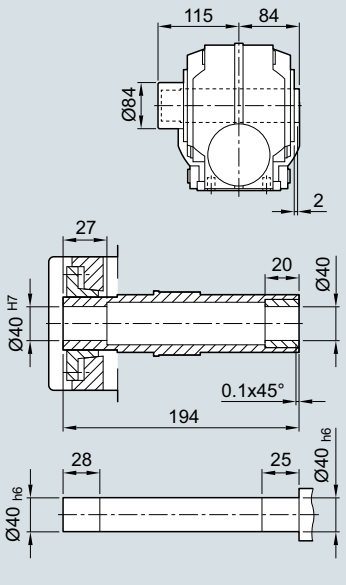

① ISO 4014 ④ DIN 332 ⑤ Feather key/keyway DIN 6885

© Siemens 2019

Servo helical worm geared motor	Motor shaft height	Motor version	Absolute encoder with brake		with brake for increased energy		without brake					Resolver with brake		with brake for increased energy		without brake					
Type			k	o1	k	o1	k	o1	o2	g1	g2	k	o1	k	o1	k	o1	o2	g1	g2	AC
1FG1...-..C2.-....	36	CT	443	139	–	–	426	122	50	104.5	78	422	144	–	–	405	127	15	80	80	72
1FG1...-..C3.-....		HD	453	149	–	–	436	132				432	154	–	–	415	137				
1FG1...-..C4.-....		CT	468	164	–	–	451	147				447	169	–	–	430	152				
1FG1...-..D0.-....	48	CT	424	121	–	–	400	97	50	104.5	90	410	121	–	–	386	97	23	90	90	96
1FG1...-..D2.-....		CT	452	148	–	–	428	124				437	148	–	–	413	124				
1FG1...-..D3.-....		HD	478	168	–	–	454	144	56			463	174	–	–	439	150				
1FG1...-..D4.-....		HD	503	193	–	–	479	169				488	199	–	–	464	175				
1FG1...-..E0.-....	63	CT	457	154	–	–	443	139	50	104.5	104	443	154	–	–	428	139	23	103	104	126
1FG1...-..E1.-....		HD	492	189	–	–	478	174				478	189	–	–	463	174				
1FG1...-..E2.-....		CT	480	176	–	–	465	161				465	176	–	–	451	161				
1FG1...-..E3.-....		CT	502	199	–	–	488	184				488	199	–	–	473	184				
1FG1...-..E4.-....		HD	556	253	–	–	542	238				542	253	–	–	527	238				
1FG1...-..F0.-....	80	CT	496	195	507	206	460	158	48	104.5	119	482	196	493	207	445	159	21	118	119	155
1FG1...-..F1.-....		CT	515	214	526	225	479	177				501	215	512	226	464	178				
1FG1...-..F3.-....		CT	534	233	545	244	498	196				520	234	531	245	483	197				
1FG1...-..F4.-....		CT	554	252	565	263	517	215				539	253	550	264	503	216				
1FG1...-..F52-....		HD	582	281	593	292	546	244				568	282	579	293	531	245				
1FG1...-..F62-....		HD	582	281	593	292	546	244				568	282	579	293	531	245				
1FG1...-..F53-....		HD	582	281	593	292	546	244			139	568	282	579	293	531	245			139	
1FG1...-..F63-....		HD	582	281	593	292	546	244				568	282	579	293	531	245				
1FG1...-..G0.-....	100	CT	527	220	554	247	492	185	53	104.5	137	512	222	539	249	477	187	26	136	137	192
1FG1...-..G1.-....		CT	553	246	580	273	518	211			158	538	248	565	275	503	213			158	
1FG1...-..G3.-....		CT	579	272	606	299	544	237				564	274	591	301	529	239				
1FG1...-..G5.-....		CT	631	324	658	351	596	289				616	326	643	353	581	291				

Hollow-shaft				
d	l9	M	t	u
40	47.75	M16	43.3	12
45	48.75	M16	48.8	14

© Siemens 2019

Dimensional drawings

Gearbox type *CAD.69*

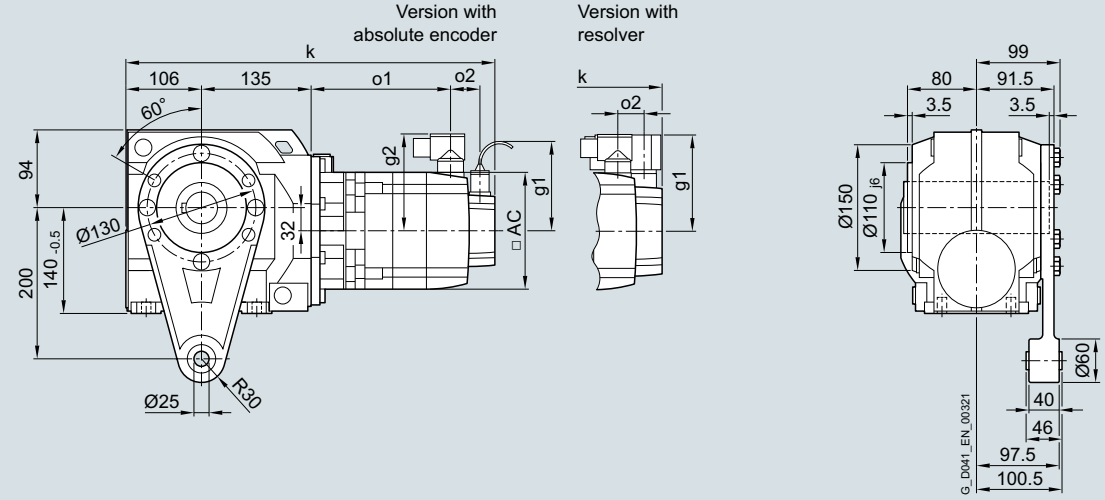

Gearbox type *CAD.69*

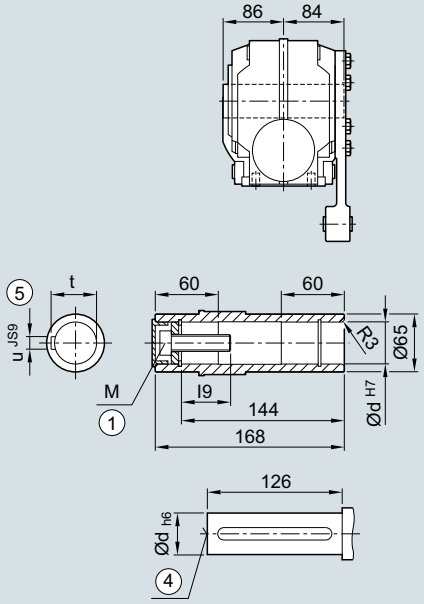

Gearbox type *CADS69*

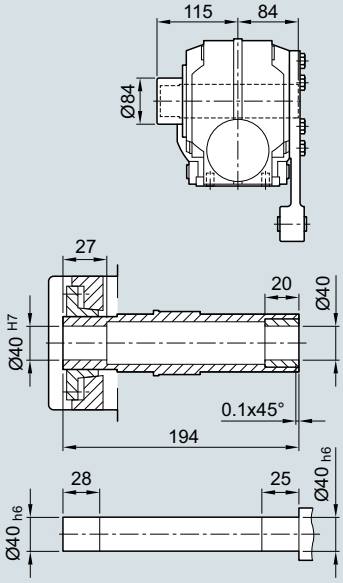

① ISO 4014 ④ DIN 332 ⑤ Feather key/keyway DIN 6885

© Siemens 2019

Servo helical worm geared motor	Motor shaft height	Motor version	Absolute encoder with brake		with brake for increased energy		without brake					Resolver with brake		with brake for increased energy		without brake					
Type			k	o1	k	o1	k	o1	o2	g1	g2	k	o1	k	o1	k	o1	o2	g1	g2	AC
1FG1...-..C2.-....	36	CT	443	139	–	–	426	122	50	104.5	78	422	144	–	–	405	127	15	80	80	72
1FG1...-..C3.-....		HD	453	149	–	–	436	132				432	154	–	–	415	137				
1FG1...-..C4.-....		CT	468	164	–	–	451	147				447	169	–	–	430	152				
1FG1...-..D0.-....	48	CT	424	121	–	–	400	97	50	104.5	90	410	121	–	–	386	97	23	90	90	96
1FG1...-..D2.-....		CT	452	148	–	–	428	124				437	148	–	–	413	124				
1FG1...-..D3.-....		HD	478	168	–	–	454	144	56			463	174	–	–	439	150				
1FG1...-..D4.-....		HD	503	193	–	–	479	169				488	199	–	–	464	175				
1FG1...-..E0.-....	63	CT	457	154	–	–	443	139	50	104.5	104	443	154	–	–	428	139	23	103	104	126
1FG1...-..E1.-....		HD	492	189	–	–	478	174				478	189	–	–	463	174				
1FG1...-..E2.-....		CT	480	176	–	–	465	161				465	176	–	–	451	161				
1FG1...-..E3.-....		CT	502	199	–	–	488	184				488	199	–	–	473	184				
1FG1...-..E4.-....		HD	556	253	–	–	542	238				542	253	–	–	527	238				
1FG1...-..F0.-....	80	CT	496	195	507	206	460	158	48	104.5	119	482	196	493	207	445	159	21	118	119	155
1FG1...-..F1.-....		CT	515	214	526	225	479	177				501	215	512	226	464	178				
1FG1...-..F3.-....		CT	534	233	545	244	498	196				520	234	531	245	483	197				
1FG1...-..F4.-....		CT	554	252	565	263	517	215				539	253	550	264	503	216				
1FG1...-..F52-....		HD	582	281	593	292	546	244				568	282	579	293	531	245				
1FG1...-..F62-....		HD	582	281	593	292	546	244				568	282	579	293	531	245				
1FG1...-..F53-....		HD	582	281	593	292	546	244			139	568	282	579	293	531	245			139	
1FG1...-..F63-....		HD	582	281	593	292	546	244				568	282	579	293	531	245				
1FG1...-..G0.-....	100	CT	527	220	554	247	492	185	53	104.5	137	512	222	539	249	477	187	26	136	137	192
1FG1...-..G1.-....		CT	553	246	580	273	518	211			158	538	248	565	275	503	213			158	
1FG1...-..G3.-....		CT	579	272	606	299	544	237				564	274	591	301	529	239				
1FG1...-..G5.-....		CT	631	324	658	351	596	289				616	326	643	353	581	291				

Hollow-shaft				
d	l9	M	t	u
40	47.75	M16	43.3	12
45	48.75	M16	48.8	14

© Siemens 2019

Dimensional drawings

Gearbox type *C..89*

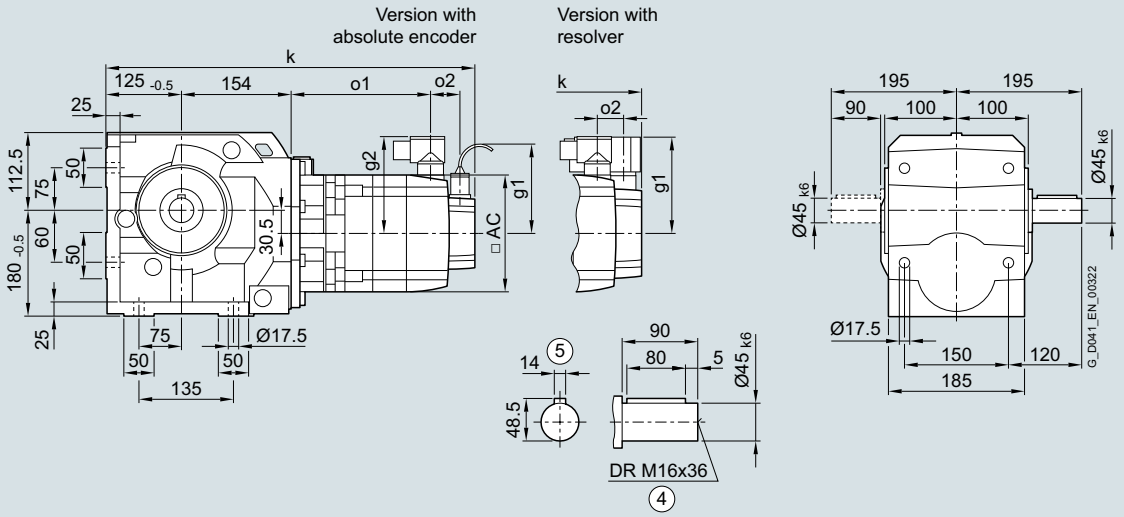

Gearbox type *CA.89*

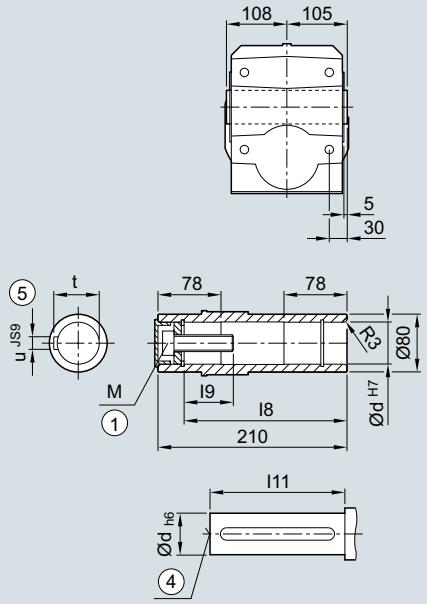

Gearbox type *CAS89*

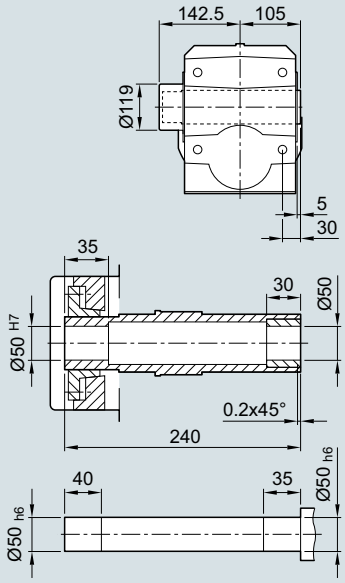

① ISO 4014 ④ DIN 332 ⑤ Feather key/keyway DIN 6885

© Siemens 2019

Servo helical worm geared motor	Motor shaft height	Motor version	Absolute encoder with brake		with brake for increased energy		without brake					Resolver with brake		with brake for increased energy		without brake					
Type			k	o1	k	o1	k	o1	o2	g1	g2	k	o1	k	o1	k	o1	o2	g1	g2	AC
1FG1...-..C2.-....	36	CT	–	–	–	–	–	–	–	–	–	–	–	–	–	–	–	–	–	–	–
1FG1...-..C3.-....		HD	–	–	–	–	–	–	–	–	–	–	–	–	–	–	–	–	–	–	–
1FG1...-..C4.-....		CT	–	–	–	–	–	–	–	–	–	–	–	–	–	–	–	–	–	–	–
1FG1...-..D0.-....	48	CT	–	–	–	–	–	–	–	–	–	–	–	–	–	–	–	–	–	–	–
1FG1...-..D2.-....		CT	–	–	–	–	–	–	–	–	–	–	–	–	–	–	–	–	–	–	–
1FG1...-..D3.-....		HD	–	–	–	–	–	–	–	–	–	–	–	–	–	–	–	–	–	–	–
1FG1...-..D4.-....		HD	–	–	–	–	–	–	–	–	–	–	–	–	–	–	–	–	–	–	–
1FG1...-..E0.-....	63	CT	489	148	–	–	475	133	50	104.5	104	475	148	–	–	460	133	23	103	104	126
1FG1...-..E1.-....		HD	524	183	–	–	510	168				510	183	–	–	495	168				
1FG1...-..E2.-....		CT	512	170	–	–	497	155				497	170	–	–	483	155				
1FG1...-..E3.-....		CT	534	193	–	–	520	178				520	193	–	–	505	178				
1FG1...-..E4.-....		HD	588	247	–	–	574	232				574	247	–	–	559	232				
1FG1...-..F0.-....	80	CT	528	189	539	200	492	152	48	104.5	119	514	190	525	201	477	153	21	118	119	155
1FG1...-..F1.-....		CT	547	208	558	219	511	171				533	209	544	220	496	172				
1FG1...-..F3.-....		CT	566	227	577	238	530	190				552	228	563	239	515	191				
1FG1...-..F4.-....		CT	586	246	597	257	549	209				571	247	582	258	535	210				
1FG1...-..F52-....		HD	614	275	625	286	578	238				600	276	611	287	563	239				
1FG1...-..F62-....		HD	614	275	625	286	578	238				600	276	611	287	563	239				
1FG1...-..F53-....		HD	614	275	625	286	578	238			139	600	276	611	287	563	239			139	
1FG1...-..F63-....		HD	614	275	625	286	578	238				600	276	611	287	563	239				
1FG1...-..G0.-....	100	CT	559	214	586	241	524	179	53	104.5	137	544	216	571	243	509	181	26	136	137	192
1FG1...-..G1.-....		CT	585	240	612	267	550	205			158	570	242	597	269	535	207			158	
1FG1...-..G3.-....		CT	611	266	638	293	576	231				596	268	623	295	561	233				
1FG1...-..G5.-....		CT	663	318	690	345	628	283				648	320	675	347	613	285				

Hollow-shaft						
d	l8	l9	l11	M	t	u
50	183	44.5	165	M16	53.8	14
60	180	57	158	M20	64.4	18

© Siemens 2019

Dimensional drawings

Gearbox type *C.F.89*

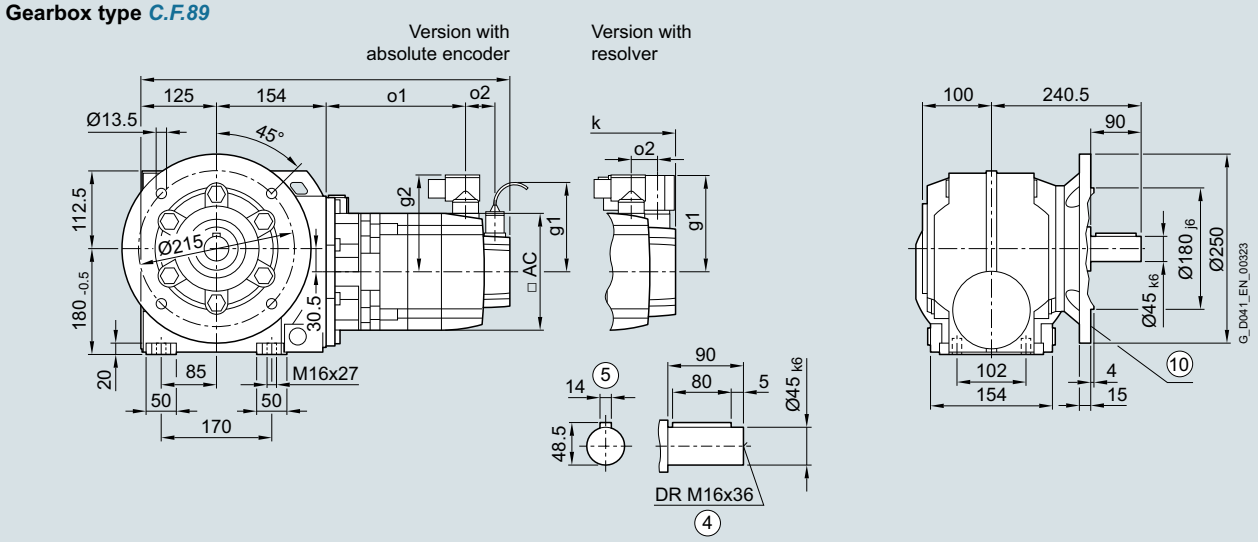

Gearbox type *CAF.89*

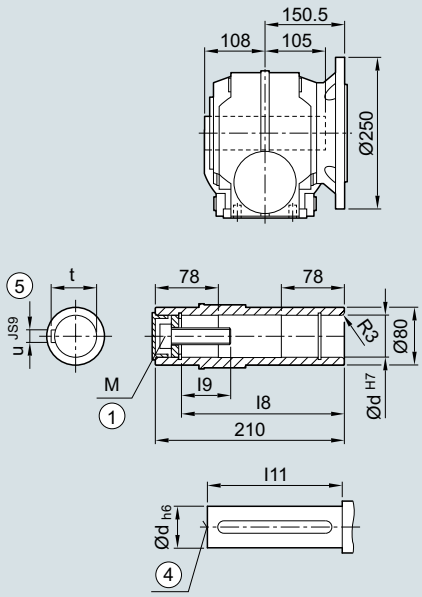

Gearbox type *CAFS89*

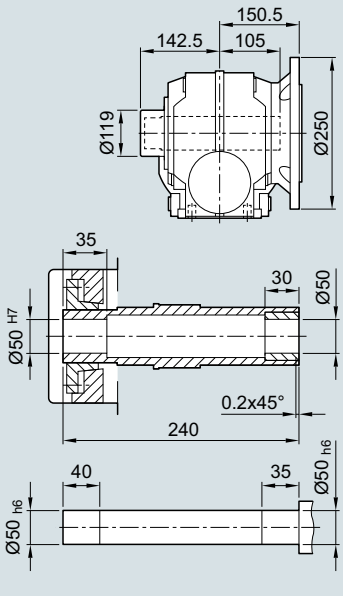

① ISO 4014 ④ DIN 332 ⑤ Feather key/keyway DIN 6885

⑩ For inner contour of the flange design, see page 6/86

© Siemens 2019

Servo helical worm geared motor	Motor shaft height	Motor version	Absolute encoder with brake		with brake for increased energy		without brake					Resolver with brake		with brake for increased energy		without brake					
Type			k	o1	k	o1	k	o1	o2	g1	g2	k	o1	k	o1	k	o1	o2	g1	g2	AC
1FG1...-..C2.-....	36	CT	–	–	–	–	–	–	–	–	–	–	–	–	–	–	–	–	–	–	–
1FG1...-..C3.-....		HD	–	–	–	–	–	–	–	–	–	–	–	–	–	–	–	–	–	–	–
1FG1...-..C4.-....		CT	–	–	–	–	–	–	–	–	–	–	–	–	–	–	–	–	–	–	–
1FG1...-..D0.-....	48	CT	–	–	–	–	–	–	–	–	–	–	–	–	–	–	–	–	–	–	–
1FG1...-..D2.-....		CT	–	–	–	–	–	–	–	–	–	–	–	–	–	–	–	–	–	–	–
1FG1...-..D3.-....		HD	–	–	–	–	–	–	–	–	–	–	–	–	–	–	–	–	–	–	–
1FG1...-..D4.-....		HD	–	–	–	–	–	–	–	–	–	–	–	–	–	–	–	–	–	–	–
1FG1...-..E0.-....	63	CT	489	148	–	–	475	133	50	104.5	104	475	148	–	–	460	133	23	103	104	126
1FG1...-..E1.-....		HD	524	183	–	–	510	168				510	183	–	–	495	168				
1FG1...-..E2.-....		CT	512	170	–	–	497	155				497	170	–	–	483	155				
1FG1...-..E3.-....		CT	534	193	–	–	520	178				520	193	–	–	505	178				
1FG1...-..E4.-....		HD	588	247	–	–	574	232				574	247	–	–	559	232				
1FG1...-..F0.-....	80	CT	528	189	539	200	492	152	48	104.5	119	514	190	525	201	477	153	21	118	119	155
1FG1...-..F1.-....		CT	547	208	558	219	511	171				533	209	544	220	496	172				
1FG1...-..F3.-....		CT	566	227	577	238	530	190				552	228	563	239	515	191				
1FG1...-..F4.-....		CT	586	246	597	257	549	209				571	247	582	258	535	210				
1FG1...-..F52-....		HD	614	275	625	286	578	238				600	276	611	287	563	239				
1FG1...-..F62-....		HD	614	275	625	286	578	238				600	276	611	287	563	239				
1FG1...-..F53-....		HD	614	275	625	286	578	238			139	600	276	611	287	563	239			139	
1FG1...-..F63-....		HD	614	275	625	286	578	238				600	276	611	287	563	239				
1FG1...-..G0.-....	100	CT	559	214	586	241	524	179	53	104.5	137	544	216	571	243	509	181	26	136	137	192
1FG1...-..G1.-....		CT	585	240	612	267	550	205			158	570	242	597	269	535	207			158	
1FG1...-..G3.-....		CT	611	266	638	293	576	231				596	268	623	295	561	233				
1FG1...-..G5.-....		CT	663	318	690	345	628	283				648	320	675	347	613	285				

Hollow-shaft						
d	l8	l9	l11	M	t	u
50	183	44.5	165	M16	53.8	14
60	180	57	158	M20	64.4	18

© Siemens 2019

Dimensional drawings

Gearbox type *C.Z.89*

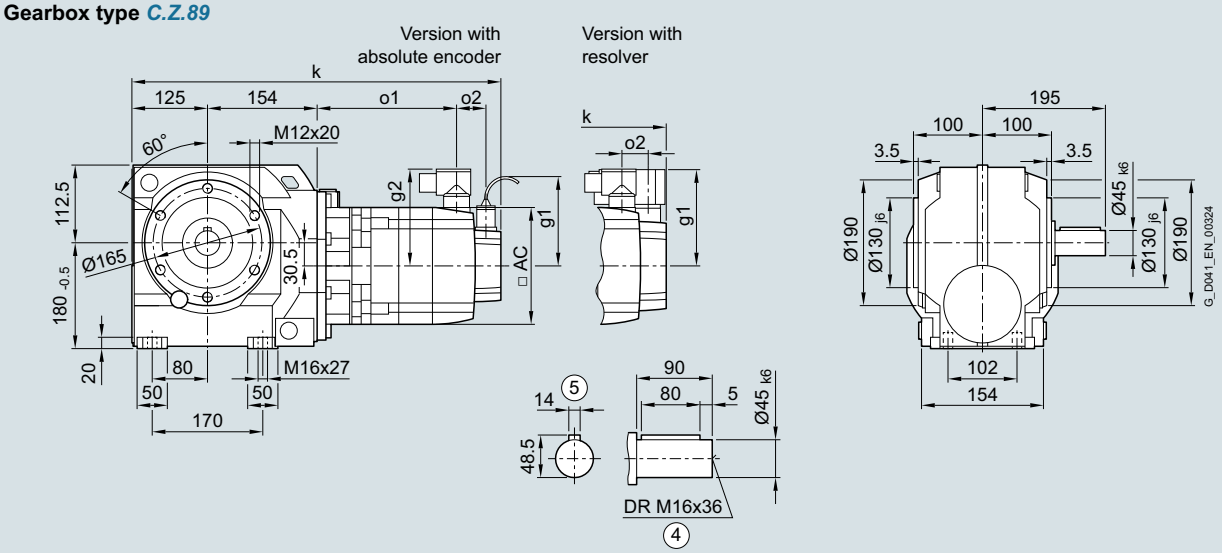

Gearbox type *CAZ.89*

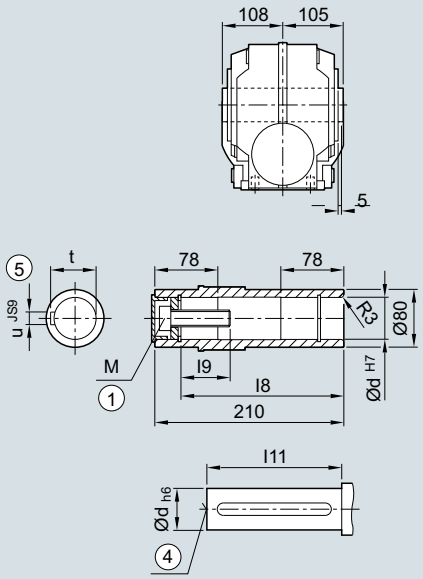

Gearbox type *CAZS89*

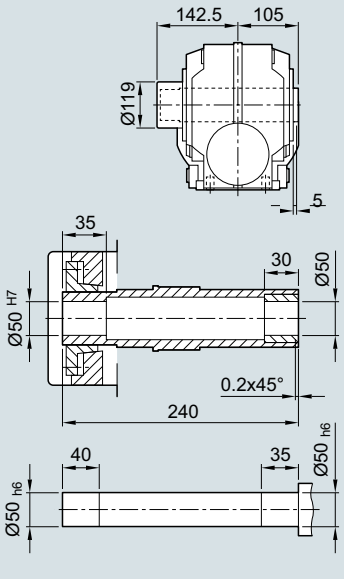

① ISO 4014 ④ DIN 332 ⑤ Feather key/keyway DIN 6885

© Siemens 2019

Servo helical worm geared motor	Motor shaft height	Motor version	Absolute encoder with brake		with brake for increased energy		without brake					Resolver with brake		with brake for increased energy		without brake					
Type			k	o1	k	o1	k	o1	o2	g1	g2	k	o1	k	o1	k	o1	o2	g1	g2	AC
1FG1...-..C2.-....	36	CT	–	–	–	–	–	–	–	–	–	–	–	–	–	–	–	–	–	–	–
1FG1...-..C3.-....		HD	–	–	–	–	–	–	–	–	–	–	–	–	–	–	–	–	–	–	–
1FG1...-..C4.-....		CT	–	–	–	–	–	–	–	–	–	–	–	–	–	–	–	–	–	–	–
1FG1...-..D0.-....	48	CT	–	–	–	–	–	–	–	–	–	–	–	–	–	–	–	–	–	–	–
1FG1...-..D2.-....		CT	–	–	–	–	–	–	–	–	–	–	–	–	–	–	–	–	–	–	–
1FG1...-..D3.-....		HD	–	–	–	–	–	–	–	–	–	–	–	–	–	–	–	–	–	–	–
1FG1...-..D4.-....		HD	–	–	–	–	–	–	–	–	–	–	–	–	–	–	–	–	–	–	–
1FG1...-..E0.-....	63	CT	489	148	–	–	475	133	50	104.5	104	475	148	–	–	460	133	23	103	104	126
1FG1...-..E1.-....		HD	524	183	–	–	510	168				510	183	–	–	495	168				
1FG1...-..E2.-....		CT	512	170	–	–	497	155				497	170	–	–	483	155				
1FG1...-..E3.-....		CT	534	193	–	–	520	178				520	193	–	–	505	178				
1FG1...-..E4.-....		HD	588	247	–	–	574	232				574	247	–	–	559	232				
1FG1...-..F0.-....	80	CT	528	189	539	200	492	152	48	104.5	119	514	190	525	201	477	153	21	118	119	155
1FG1...-..F1.-....		CT	547	208	558	219	511	171				533	209	544	220	496	172				
1FG1...-..F3.-....		CT	566	227	577	238	530	190				552	228	563	239	515	191				
1FG1...-..F4.-....		CT	586	246	597	257	549	209				571	247	582	258	535	210				
1FG1...-..F52-....		HD	614	275	625	286	578	238				600	276	611	287	563	239				
1FG1...-..F62-....		HD	614	275	625	286	578	238				600	276	611	287	563	239				
1FG1...-..F53-....		HD	614	275	625	286	578	238			139	600	276	611	287	563	239			139	
1FG1...-..F63-....		HD	614	275	625	286	578	238				600	276	611	287	563	239				
1FG1...-..G0.-....	100	CT	559	214	586	241	524	179	53	104.5	137	544	216	571	243	509	181	26	136	137	192
1FG1...-..G1.-....		CT	585	240	612	267	550	205			158	570	242	597	269	535	207			158	
1FG1...-..G3.-....		CT	611	266	638	293	576	231				596	268	623	295	561	233				
1FG1...-..G5.-....		CT	663	318	690	345	628	283				648	320	675	347	613	285				

Hollow-shaft						
d	l8	l9	l11	M	t	u
50	183	44.5	165	M16	53.8	14
60	180	57	158	M20	64.4	18

© Siemens 2019

Dimensional drawings

Gearbox type *CAD.89*

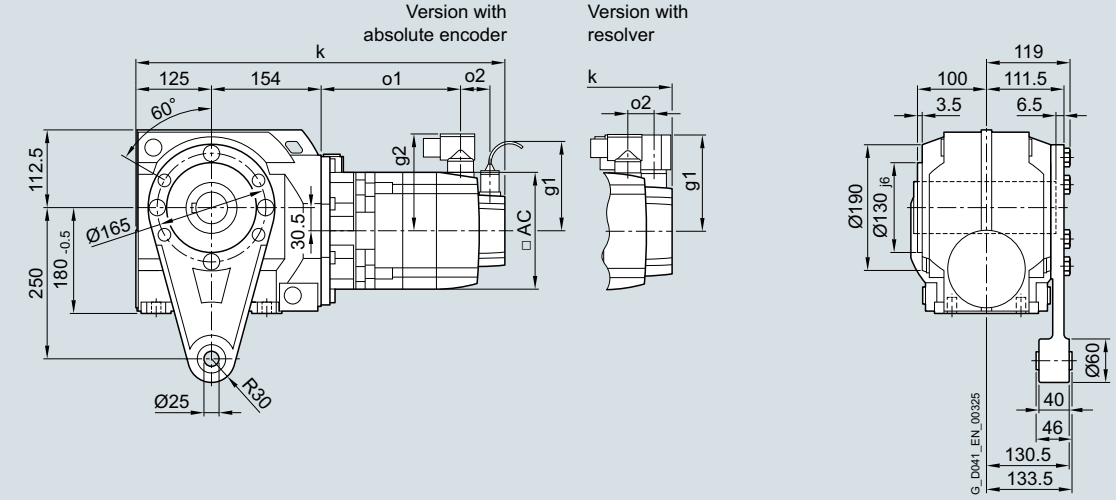

Gearbox type *CAD.89*

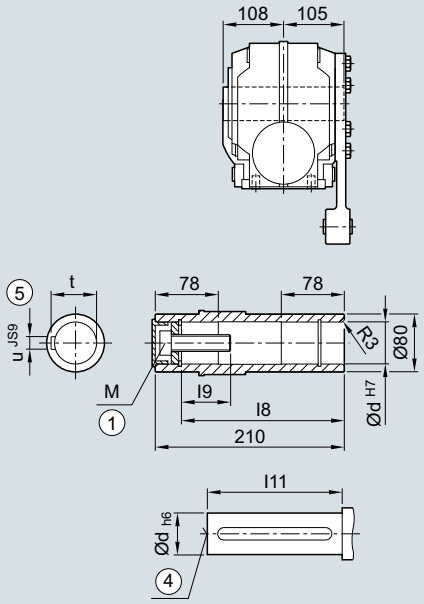

Gearbox type *CADS89*

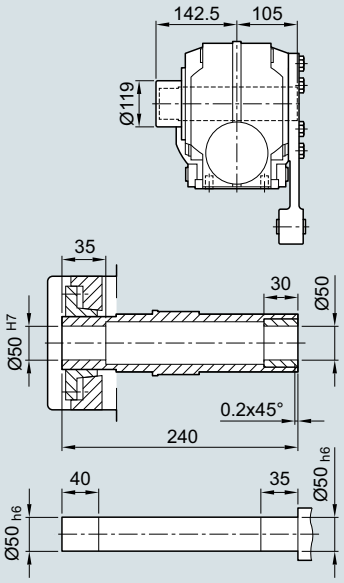

① ISO 4014 ④ DIN 332 ⑤ Feather key/keyway DIN 6885

© Siemens 2019

Servo helical worm geared motor	Motor shaft height	Motor version	Absolute encoder with brake		with brake for increased energy		without brake					Resolver with brake		with brake for increased energy		without brake					
Type			k	o1	k	o1	k	o1	o2	g1	g2	k	o1	k	o1	k	o1	o2	g1	g2	AC
1FG1...-..C2.-....	36	CT	–	–	–	–	–	–	–	–	–	–	–	–	–	–	–	–	–	–	–
1FG1...-..C3.-....		HD	–	–	–	–	–	–	–	–	–	–	–	–	–	–	–	–	–	–	–
1FG1...-..C4.-....		CT	–	–	–	–	–	–	–	–	–	–	–	–	–	–	–	–	–	–	–
1FG1...-..D0.-....	48	CT	–	–	–	–	–	–	–	–	–	–	–	–	–	–	–	–	–	–	–
1FG1...-..D2.-....		CT	–	–	–	–	–	–	–	–	–	–	–	–	–	–	–	–	–	–	–
1FG1...-..D3.-....		HD	–	–	–	–	–	–	–	–	–	–	–	–	–	–	–	–	–	–	–
1FG1...-..D4.-....		HD	–	–	–	–	–	–	–	–	–	–	–	–	–	–	–	–	–	–	–
1FG1...-..E0.-....	63	CT	489	148	–	–	475	133	50	104.5	104	475	148	–	–	460	133	23	103	104	126
1FG1...-..E1.-....		HD	524	183	–	–	510	168				510	183	–	–	495	168				
1FG1...-..E2.-....		CT	512	170	–	–	497	155				497	170	–	–	483	155				
1FG1...-..E3.-....		CT	534	193	–	–	520	178				520	193	–	–	505	178				
1FG1...-..E4.-....		HD	588	247	–	–	574	232				574	247	–	–	559	232				
1FG1...-..F0.-....	80	CT	528	189	539	200	492	152	48	104.5	119	514	190	525	201	477	153	21	118	119	155
1FG1...-..F1.-....		CT	547	208	558	219	511	171				533	209	544	220	496	172				
1FG1...-..F3.-....		CT	566	227	577	238	530	190				552	228	563	239	515	191				
1FG1...-..F4.-....		CT	586	246	597	257	549	209				571	247	582	258	535	210				
1FG1...-..F52-....		HD	614	275	625	286	578	238				600	276	611	287	563	239				
1FG1...-..F62-....		HD	614	275	625	286	578	238				600	276	611	287	563	239				
1FG1...-..F53-....		HD	614	275	625	286	578	238			139	600	276	611	287	563	239			139	
1FG1...-..F63-....		HD	614	275	625	286	578	238				600	276	611	287	563	239				
1FG1...-..G0.-....	100	CT	559	214	586	241	524	179	53	104.5	137	544	216	571	243	509	181	26	136	137	192
1FG1...-..G1.-....		CT	585	240	612	267	550	205			158	570	242	597	269	535	207			158	
1FG1...-..G3.-....		CT	611	266	638	293	576	231				596	268	623	295	561	233				
1FG1...-..G5.-....		CT	663	318	690	345	628	283				648	320	675	347	613	285				

Hollow-shaft						
d	l8	l9	l11	M	t	u
50	183	44.5	165	M16	53.8	14
60	180	57	158	M20	64.4	18

© Siemens 2019

Dimensional drawings

Gearbox type *CADR*

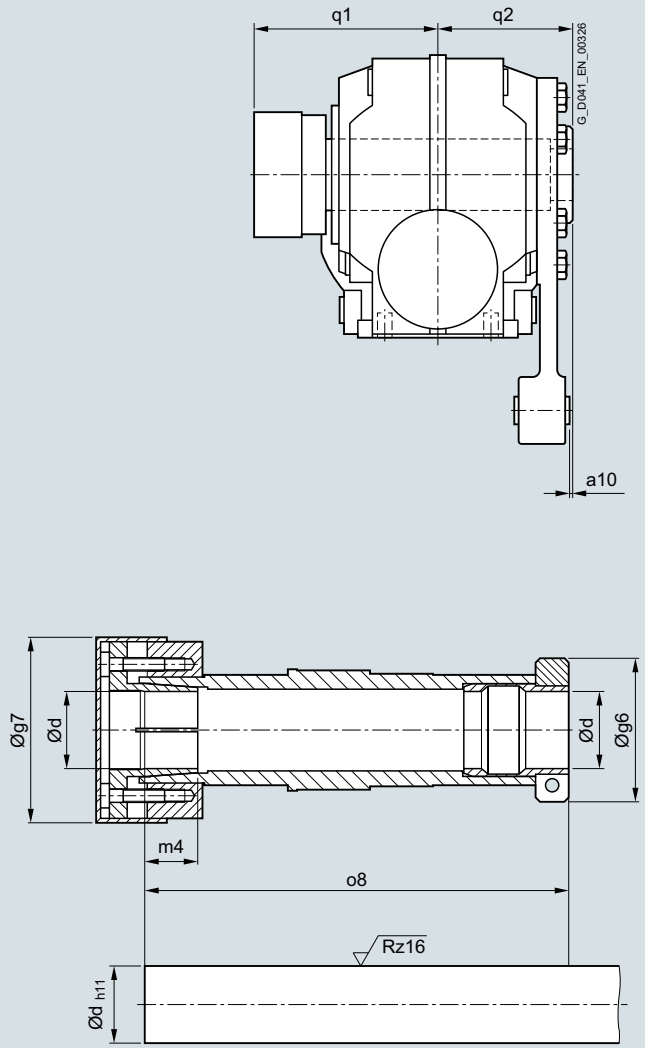

Note mounting tolerance when positioning the torque arm.

Associated dimensions see next page.

© Siemens 2019

d	g6	g7	m4	o8	q1	q2	a10
Gearbox size *29*							
25	58.5	56	18.5	151.0	102	$75^{+2.1}_{+0.6}$	$11^{+2.1}_{+0.6}$
20							
1“							
0.75“							
Gearbox size *39*							
30	62.0	76	22	160.5	106	$75^{+2.2}_{+0.7}$	$39^{+2.2}_{+0.7}$
25							
1.25“							
1.1875“							
1“							
Gearbox size *49*							
35	65.0	84	24	192.0	124	$90^{+2.6}_{+0.8}$	$35^{+2.6}_{+0.8}$
30							
1.375“							
1.4375“							
1.25“							
1.1875“							
Gearbox size *69*							
40	79.5	94	30	217.5	138	$102^{+2.5}_{+0.7}$	$39^{+2.5}_{+0.7}$
35							
1.5“							
1.625“							
1.4375“							
1.375“							
Gearbox size *89*							
50	89.0	114	32	264.0	171	$124^{+3.4}_{+1.5}$	$45^{+3.4}_{+1.5}$
40							
2“							
1.9375“							
1.75“							
1.625“							

© Siemens 2019

Protection cover for hollow shaft

Dimensional drawings

Protection cover for hollow shaft

Gearbox types *CA*, *CAF*, *CAZ*, *CAD*

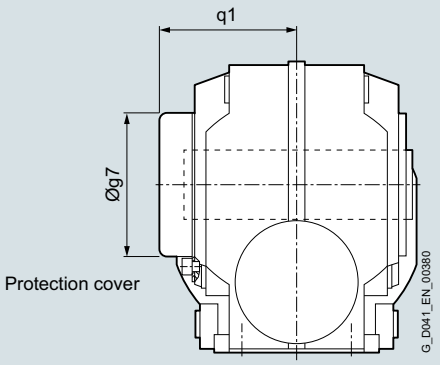

Gearbox size	*29*	*39*	*49*	*69*	*89*
Protection cover					
g7	67	82.5	80	99	137
q1	76	73	99	95.5	124.5

Protection cover for hollow shaft with shrink disk

Gearbox types *CAS*, *CAFS*, *CAZS*, *CADS*

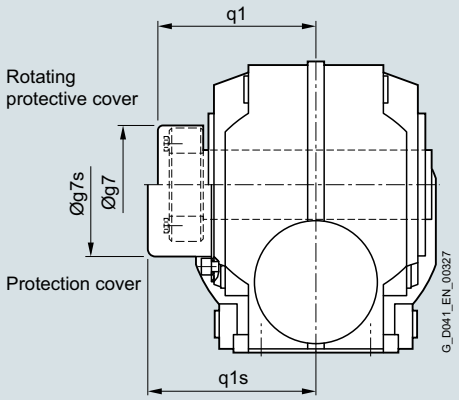

Gearbox size	*29*	*39*	*49*	*69*	*89*
Rotating protective cover with shrink disk version					
g7	55	76	84	84	94
q1	85	89.5	107	115	125.5
Protection cover with shrink disk version					
g7s	58	82.5	86	99	137
q1s	91	109	122	126.5	176.5

© Siemens 2019

Protection cover for hollow shaft with SIMOLOC assembly system

Gearbox type *CADR*

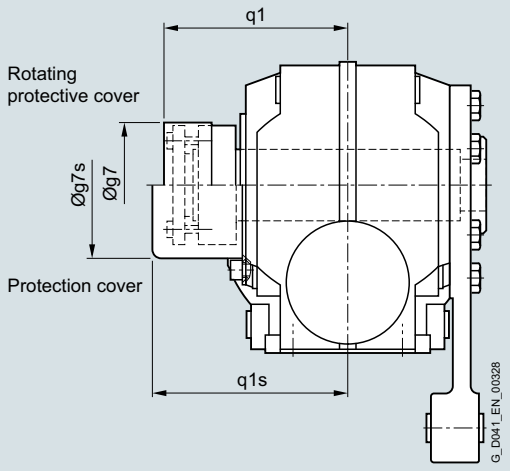

Gearbox size	*29*	*39*	*49*	*69*	*89*
Rotating protective cover					
g7	56	76	84	94	114
q1	101.5	106	124	144	171
Protection cover					
g7s	58	82.5	86	99	137
q1s	102	109	126	145.5	176.5

© Siemens 2019

Inner contour and dimensions of the flange-mounted design

Dimensional drawings

Notes regarding the design of the customer's interface.

Gearbox types *CF.*

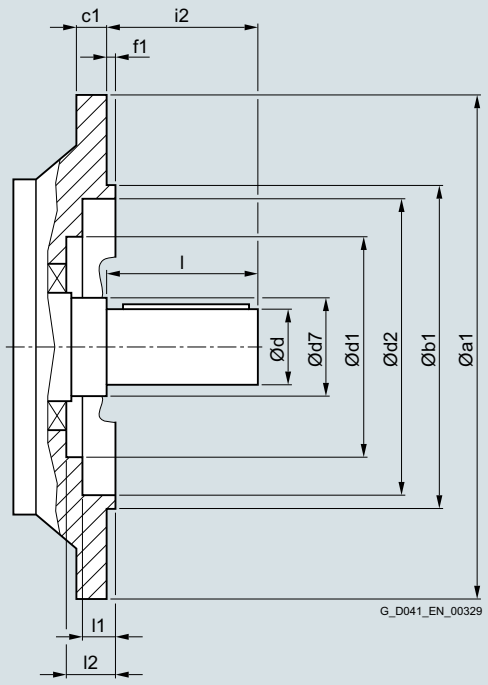

Gearbox size	a1	b1	c1	d	d7	d1	d2	f1	i2	l	l1	l2
29	120	80_{j6}	8	20_{k6}	40	–	70	3.0	40	40	24.0	–
	160	110_{j6}	9	20_{k6}	40	70	101	3.5	40	40	8.5	24.5
39	160	110_{j6}	10	25_{k6}	30	–	100	3.5	50	50	5.0	–
49	200	130_{j6}	12	30_{k6}	35	–	118	3.5	60	60	5.5	–
69	200	130_{j6}	12	35_{k6}	45	105	120	4.0	70	70	4.5	48.0
89	250	180_{j6}	15	45_{k6}	70	134	165	4.0	90	90	6.5	53.0

© Siemens 2019

Notes regarding the design of the customer's interface, e.g. plug-in shaft for hollow shaft design.

Gearbox types *CAF.*

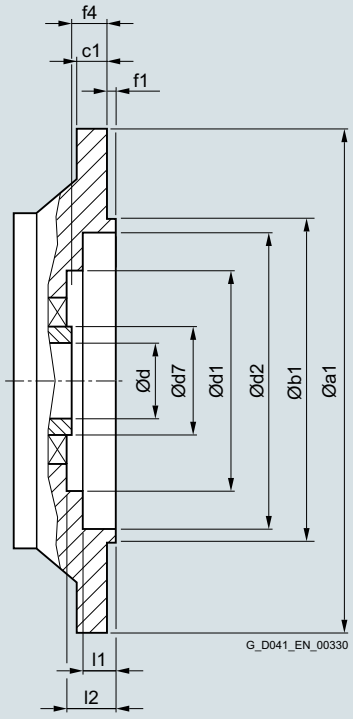

Gearbox size	a1	b1	c1	d	d7	d1	d2	f1	f4	l1	l2
29	120	80_{j6}	8	20^{H7}	35	–	70	3.0	23.0	24.0	–
	160	110_{j6}	9	20^{H7}	35	70	101	3.5	23.0	8.5	24.5
39	160	110_{j6}	10	$25^{H7}/30^{H7}$	45	80	102	3.5	24.0	2.0	29.5
49	200	130_{j6}	12	$30^{H7}/35^{H7}$	50	90	120	3.5	25.0	4.0	30.5
69	200	130_{j6}	12	$40^{H7}/45^{H7}$	65	105	120	4.0	42.0	4.5	48.0
89	250	180_{j6}	15	$50^{H7}/60^{H7}$	80	134	147	4.0	45.5	14.0	53.0

© Siemens 2019

Notes

© Siemens 2019

Technical definitions for servomotors

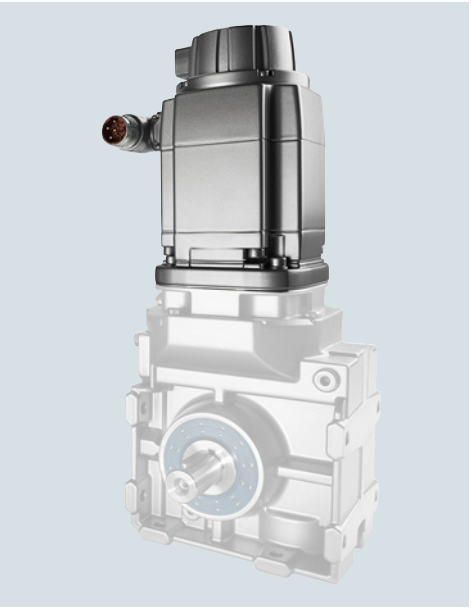

7/2 General information
7/2 Overview
7/2 Technical specifications

7/3 Encoder systems
7/3 Overview
7/3 Technical specifications

7/3 Motor protection
7/3 Overview

7/4 Overview of motor types
7/4 Technical specifications
7/4 • Servomotors for DC link voltage 510 to 720 V DC
7/4 – Motor version CT (Compact)
7/6 – Motor version HD (High Dynamic)
7/8 • Servomotors for DC link voltage 270 to 330 V DC
7/8 – Motor version CT (Compact)
7/8 – Motor version HD (High Dynamic)

For information on built-in holding brakes, refer to chapter "Configuring guide".

© Siemens 2019

General information

Overview

The servomotors deployed in SIMOTICS S-1FG1 servo geared motors are extremely compact, permanent-magnet-excited synchronous motors. With the available options and encoders, the servomotors can be combined with gearboxes to create the ideal solution for virtually any application. They therefore also satisfy the permanently increasing demands of state-of-the-art machine generations.

SIMOTICS S-1FG1 servo geared motors can be combined with the SINAMICS S120 drive system to create a powerful system with high functionality. The integrated encoder systems for speed and position control can be selected depending on the application.

The motors are designed for operation without external cooling and the heat is dissipated through the motor surface and via the flange connection to the gearbox. The servo geared motors have a high overload capability.

The motors are coded in the 9th to 13th positions of the Article No.

Ordering example:

Selection criteria	Requirements	Position of the Article No.: 1 2 3 4 5 6 7 8 9 10 11 12 13 14 15 16
SIMOTICS S-1FG1 servo geared motor		**1 F G 1** . . . - . ■ ■ ■ ■ - ■ . . .
Encoder/resolver	20-bit absolute encoder + 12-bit multi-turn (AM20DQI)	**1 F G 1** . . . - . **R** . . . .
Motor shaft height	Motor shaft height = 48	**1 F G 1** . . . - . **R D** . . . . .
Motor length	Motor length = 2	**1 F G 1** . . . - . **R D 2** . . . .
Rated motor speed	3000 rpm	**1 F G 1** . . . - . **R D 2 3** . . .
DC link voltage and motor type	600 V for SIMOTICS S-1FG1 in motor version CT (Compact)	**1 F G 1** . . . - . **R D 2 3** - **2** . . .

As this example demonstrates, the motor is characterized by the following features within the Article No.:

- Motor encoder:
  See next page for further information
- Motor shaft height and motor length:
  See overview table on page 7/4
- Rated motor speed:
  The rated motor speed should be regarded as an informative value. The rated motor speed does not necessarily reflect the speed that can be input to the gearbox. The maximum permissible short-time speed at the gearbox input n_{1max} and the maximum permissible (short-time) output torques M_{2max} can be found in the "Technical specifications" of the relevant chapters for selection of servo geared motors.
- Motor type:
  Motors can be ordered in versions Compact (CT) and High Dynamic (HD).
  The motors in the Compact class are characterized by their compact dimensions and very high power density. The motors in the High Dynamic class have an excellent dynamic response thanks to their very low moment of inertia.
- DC link voltage:
  The motors are designed for various DC link voltages ranging from 510 V to 720 V or 270 V to 360 V.

Technical specifications

SIMOTICS S-1FG1 servo geared motors in motor versions CT and HD	
Motor type	Permanent-magnet-excited synchronous motor
Magnetic material	Rare-earth magnetic material
Cooling	Natural cooling
Temperature monitoring	Temperature sensor in the stator winding
Insulation of the stator winding according to EN 60034-1 (IEC 60034-1)	Temperature class 155 (F) for a winding overtemperature of T = 100 K at an ambient temperature of 40 °C
Degree of protection according to EN 60034-5 (IEC 60034-5)	IP65 (with mounted gearbox)
Vibration severity in accordance with EN 60034-14 (IEC 60034-14)	Grade A (with mounted gearbox) is maintained up to the rated speed
Sound pressure level L_{pA} (1 m) according to DIN EN ISO 1680, max. tolerance + 3 dB	Motor shaft heights:36 and 48: 60 dB(A); 63: 70 dB(A) 80 und 100: 75 dB(A)
Connection	Connectors for signals and power
Holding brake	Zero-backlash 24 V DC
Approvals, according to:	cURus CE marking/ EC Declaration of Conformity

© Siemens 2019

Overview

Short designations for the encoder systems

The first letters of the short designation define the encoder type:

AM Multi-turn absolute encoder

AS Single-turn absolute encoder

R Resolver

This is followed by the resolution in signals per revolution in bits.

The following two places specify the type of interface:

DQ DRIVE-CLiQ interface

Built-in encoder systems with DRIVE-CLiQ interface

For motors with an integrated DRIVE-CLiQ interface, the encoder signal is internally digitized and transferred directly to the drive. Motors with a DRIVE-CLiQ interface simplify commissioning and diagnostics because, for example, the encoder system is automatically identified via the electronic rating plate.

The different encoder types, absolute or resolver, can all be connected with a MOTION-CONNECT DRIVE-CLiQ cable.

Absolute encoder, multi-turn

Multi-turn absolute encoder with DRIVE-CLiQ interface	
AM20DQI encoder	20-bit absolute encoder (resolution 1048576, internal 512 S/R) + 12-bit multi-turn (traversing range 4096 revolutions) can be used for Safety Integrated [1]

This encoder outputs an absolute angular position between 0° and 360° in the specified resolution. An internal measuring gearbox enables it to differentiate between 4096 revolutions.

So with a ball screw, for example, the absolute position of the slide can be determined over a long distance.

Absolute encoder, single-turn

Single-turn absolute encoder with DRIVE-CLiQ interface	
AS20DQI encoder	Single-turn 20-bit absolute encoder (resolution 1048576, internal 512 S/R) can be used for Safety Integrated [1]

This encoder outputs an absolute angular position between 0° and 360° in the specified resolution. In contrast to the multi-turn absolute encoder, it has no measuring gearbox and can therefore only supply the position value within one revolution. It does not have a traversing range.

Resolver

Resolvers with DRIVE-CLiQ interface	
Encoder R15DQ	15-bit resolver (resolution 32768, internal multi-pole)
Encoder R14DQ	14-bit resolver (resolution 16384, internal 2-pole)

The number of sine and cosine periods per revolution corresponds to the number of pole pairs of the resolver. In the case of a 2-pole resolver, the evaluation electronics may output an additional zero pulse per encoder revolution. This zero pulse ensures a unique assignment of the position information in relation to an encoder revolution. A 2-pole resolver can therefore be used as a single-turn encoder.

2-pole resolvers can be used for motors with any number of poles. With multi-pole resolvers, the pole pair numbers of the motor and the resolver are always identical, so that the resolution is correspondingly higher than with 2-pole resolvers.

Technical specifications

Absolute encoder with DRIVE-CLiQ interface	
Supply voltage	24 V
Absolute position via DRIVE-CLiQ	
• Resolution within one revolution	20 bits
• Traversing range of multi-turn absolute encoder (does not apply to single-turn absolute encoders AS)	4096 revolutions
Resolvers with DRIVE-CLiQ interface	
Supply voltage	24 V
Resolution	15 bit/14 bit

Overview

The SIMOTICS S-1FG1 servo geared motors are equipped with a temperature sensor. This sensor changes its resistance depending on the temperature in accordance with a defined curve.

The encoders with DRIVE-CLiQ interface or the Siemens converters determine the motor temperature by evaluating the resistance of the temperature sensor.

Appropriate temperature thresholds for alarm and trip are preset at the factory on the SINAMICS S120 drive system.

[1] The servo geared motor equipped with this encoder is suitable for use with all safety functions provided by the SINAMICS S120 drive system, such as stop functions and functions for monitoring motion and position.

For more information on Safety Integrated with the SINAMICS S120 drive system, see catalog D21.4.

© Siemens 2019

Technical specifications

Servomotors

The specifications below refer exclusively to the driving servomotor connected to the relevant gearbox.

Due to the mechanical load limits of the gearboxes, the built-on servomotors might have wider torque and speed ranges than can be fully exploited by the SIMOTICS S-1FG1 servo geared motors (as motor/gearbox units). The maximum speed of the motor is therefore limited primarily by the maximum permissible short-time speed at the gearbox input n_{1max} (see technical specifications in the relevant chapters for selecting servo geared motors).

Servo geared motors SIMOTICS S-1FG1	Rated speed	Motor shaft height	Rated power	Stall current	Rated current	No. of pole pairs	Moment of inertia of rotor		Efficiency[1]
							without brake	with brake	
	n_{1rated}	SH	P_{rated} at ΔT=100 K	I_0 at ΔT=100 K	I_{rated} at ΔT=100 K	p	J_{mot}	$J_{Mot\ Br}$	η_M
Type	rpm		kW	A	A		10^{-4} kgm^2	10^{-4} kgm^2	%
SIMOTICS S-1FG1 in motor version CT (Compact) for DC link voltage 510 ... 720 V DC									
1FG1...-..D22-2...	2000	48	0.52	1.55	1.45	4	2.9	3.2	89
1FG1...-..E02-2...		63	0.93	2.85	2.55	4	7.7	8.7	91
1FG1...-..E22-2...			1.30	2.75	2.4	4	11.2	12.2	91
1FG1...-..E32-2...			1.68	4.9	4.1	4	14.7	15.7	91
1FG1...-..F12-2...		80	1.91	4.7	4	4	20	23.5	93
1FG1...-..F32-2...			2.43	7.3	5.8	4	26	29.5	93
1FG1...-..F42-2...			2.91	8	6.3	4	32.5	35.5	93
1FG1...-..G02-2...		100	2.58	7.8	6.1	4	54	62	93
1FG1...-..G12-2...			3.77	11.1	8.6	4	79	87	93
1FG1...-..G32-2...			4.71	12.9	9.5	4	104	112	94
1FG1...-..G52-2...			7.12	19	14.8	4	154	162	95
1FG1...-..D23-2...	3000	48	0.74	2.1	1.85	4	2.9	3.2	89
1FG1...-..E03-2...		63	1.24	4.05	3.25	4	7.7	8.7	91
1FG1...-..E23-2...			1.7	4.85	3.7	4	11.2	12.2	91
1FG1...-..E33-2...			2.11	7.4	5.3	4	14.7	15.7	91
1FG1...-..F03-2...		80	1.76	4.3	3.7	4	14.2	17.5	92
1FG1...-..F13-2...			2.42	8.1	6.1	4	20	23.5	93
1FG1...-..F33-2...			2.95	9.9	6.5	4	26	29.5	93
1FG1...-..F43-2...			3.14	11.4	6.6	4	32.5	35.5	93
1FG1...-..G03-2...		100	3.08	10.3	6.6	4	54	62	93
1FG1...-..G13-2...			3.86	17.3	9.6	4	79	87	93
1FG1...-..G33-2...			4.40	23.5	11.2	4	104	112	94
1FG1...-..G53-2...			7.38	29	16	4	154	162	95
1FG1...-..E04-2...	4500	63	1.56	5.7	3.95	4	7.7	8.7	91
1FG1...-..E24-2...			1.41	7.3	3.3	4	11.2	12.2	91
1FG1...-..E34-2...			1.41	11.1	3.8	4	14.7	15.7	91
1FG1...-..F04-2...		80	1.39	6.6	3.2	4	14.2	17.5	92
1FG1...-..F14-2...			1.67	12.2	4.7	4	20	23.5	92
1FG1...-..F34-2...			0.05 (2.95*)	14.8	0.7	4	26	29.5	93
1FG1...-..C26-2...	6000	36	0.41	1.5	1.09	3	0.65	0.75	87
1FG1...-..C46-2...			0.48	1.69	1.08	3	0.9	1	87
1FG1...-..D06-2...		48	0.60	2.25	1.63	4	1.6	1.92	87
1FG1...-..D26-2...			0.77	4.25	2.15	4	2.9	3.2	88

* Power at 3000 rpm

Footnotes see next page.

© Siemens 2019

Motor type (repeated)	Maximum torque	Static torque	Rated torque	SINAMICS S120 Motor Module Booksize format Internal air cooling		Power cable with complete shield Motor connection (and brake connection) via power connector		
				Rated output current[2]		Power connector	Cable cross-section[3]	Pre-assembled cable
	M_{max}	M_0 at ΔT=100 K	M_{rated} at ΔT=100 K	I_{rated}				
	Nm	Nm	Nm	A	Type	Size	mm²	Type
				Line voltage 380 ... 480 V 3 AC				
1FG1...-..D22-2...	10.5	2.85	2.5	3	**6SL3120-■TE13-0AD0**	1	4 × 1.5	**6FX■002-5■N06-....**
1FG1...-..E02-2...	18	5.3	4.45	3	**6SL3120-■TE13-0AD0**	1	4 × 1.5	**6FX■002-5■N06-....**
1FG1...-..E22-2...	26	7.5	6.2	3	**6SL3120-■TE13-0AD0**	1	4 × 1.5	**6FX■002-5■N06-....**
1FG1...-..E32-2...	35	10.1	8	5	**6SL3120-■TE15-0AD0**	1	4 × 1.5	**6FX■002-5■N06-....**
1FG1...-..F12-2...	37	11	9.1	5	**6SL3120-■TE15-0AD0**	1	4 × 1.5	**6FX■002-5■N06-....**
1FG1...-..F32-2...	50	15.5	11.6	9	**6SL3120-■TE21-0AD0**	1	4 × 1.5	**6FX■002-5■N06-....**
1FG1...-..F42-2...	61	18.7	13.9	9	**6SL3120-■TE21-0AD0**	1	4 × 1.5	**6FX■002-5■N06-....**
1FG1...-..G02-2...	55	16.2	12.3	9	**6SL3120-■TE21-0AD0**	1	4 × 1.5	**6FX■002-5■N06-....**
1FG1...-..G12-2...	80	24.5	18	18	**6SL3120-■TE21-8AD0**	1.5	4 × 1.5	**6FX■002-5■N26-....**
1FG1...-..G32-2...	108	31.5	22.5	18	**6SL3120-■TE21-8AD0**	1.5	4 × 1.5	**6FX■002-5■N26-....**
1FG1...-..G52-2...	150	45	34	24	**6SL3120-1TE22-4AD0**	1.5	4 × 2.5	**6FX■002-5■N36-....**
1FG1...-..D23-2...	10.5	2.85	2.35	3	**6SL3120-■TE13-0AD0**	1	4 × 1.5	**6FX■002-5■N06-....**
1FG1...-..E03-2...	18	5.3	3.95	5	**6SL3120-■TE15-0AD0**	1	4 × 1.5	**6FX■002-5■N06-....**
1FG1...-..E23-2...	26	7.5	5.4	5	**6SL3120-■TE15-0AD0**	1	4 × 1.5	**6FX■002-5■N06-....**
1FG1...-..E33-2...	35	10.1	6.7	9	**6SL3120-■TE21-0AD0**	1	4 × 1.5	**6FX■002-5■N06-....**
1FG1...-..F03-2...	25	7	5.6	5	**6SL3120-■TE15-0AD0**	1	4 × 1.5	**6FX■002-5■N06-....**
1FG1...-..F13-2...	37	11	7.7	9	**6SL3120-■TE21-0AD0**	1	4 × 1.5	**6FX■002-5■N06-....**
1FG1...-..F33-2...	50	15.5	9.4	18	**6SL3120-■TE21-8AD0**	1	4 × 1.5	**6FX■002-5■N06-....**
1FG1...-..F43-2...	61	18.7	10	18	**6SL3120-■TE21-8AD0**	1	4 × 1.5	**6FX■002-5■N06-....**
1FG1...-..G03-2...	55	16.2	9.8	18	**6SL3120-■TE21-8AD0**	1	4 × 1.5	**6FX■002-5■N06-....**
1FG1...-..G13-2...	80	24.5	12.3	18	**6SL3120-■TE21-8AD0**	1.5	4 × 2.5	**6FX■002-5■N36-....**
1FG1...-..G33-2...	108	31.5	14	30	**6SL3120-1TE23-0AD0**	1.5	4 × 4	**6FX■002-5■N46-....**
1FG1...-..G53-2...	150	45	23.5	30	**6SL3120-1TE23-0AD0**	1.5	4 × 6	**6FX■002-5■N56-....**
1FG1...-..E04-2...	18	5.3	3.3	9	**6SL3120-■TE21-0AD0**	1	4 × 1.5	**6FX■002-5■N06-....**
1FG1...-..E24-2...	26	7.5	3	9	**6SL3120-■TE21-0AD0**	1	4 × 1.5	**6FX■002-5■N06-....**
1FG1...-..E34-2...	35	10.1	3	18	**6SL3120-■TE21-8AD0**	1	4 × 1.5	**6FX■002-5■N06-....**
1FG1...-..F04-2...	25	7	2.95	9	**6SL3120-■TE21-0AD0**	1	4 × 1.5	**6FX■002-5■N06-....**
1FG1...-..F14-2...	37	11	3.55	18	**6SL3120-■TE21-8AD0**	1	4 × 1.5	**6FX■002-5■N06-....**
1FG1...-..F34-2...	50	15.5	0.1	18	**6SL3120-■TE21-8AD0**	1	4 × 1.5	**6FX■002-5■N06-....**
1FG1...-..C26-2...	4.5	1.01	0.65	3	**6SL3120-■TE13-0AD0**	1	4 × 1.5	**6FX■002-5■N06-....**
1FG1...-..C46-2...	6.5	1.4	0.77	3	**6SL3120-■TE13-0AD0**	1	4 × 1.5	**6FX■002-5■N06-....**
1FG1...-..D06-2...	5.1	1.47	0.96	3	**6SL3120-■TE13-0AD0**	1	4 × 1.5	**6FX■002-5■N06-....**
1FG1...-..D26-2...	10.5	2.85	1.23	5	**6SL3120-■TE15-0AD0**	1	4 × 1.5	**6FX■002-5■N06-....**

Motor Module:	
Single Motor Module	**1**
Double Motor Module	**2**

Power cable:	
MOTION-CONNECT 800 PLUS	**8**
MOTION-CONNECT 500	**5**
Without brake cores	**C**
With brake cores	**D**
Length code	**....**

For information on the cables refer to MOTION-CONNECT connection systems in Catalog D 21.4

1) Optimum efficiency in continuous duty.

2) With default setting of the pulse frequency.

3) The current carrying capacity of the power cables complies with EN 60204-1 for installation type C, for continuous duty at an ambient air temperature of 40 °C. Cable cross-section for brake connection 2 × 1.5 mm².

© Siemens 2019

Technical specifications (continued)

Servo geared motors SIMOTICS S-1FG1	Rated speed	Motor shaft height	Rated power	Stall current	Rated current	No. of pole pairs	Moment of inertia of rotor		Efficiency[1]
							without brake	with brake	
	n_{1rated}	SH	P_{rated} at ΔT=100 K	I_0 at ΔT=100 K	I_{rated} at ΔT=100 K	p	J_{mot}	$J_{Mot\ Br}$	η_M
Type	rpm		kW	A	A		10^{-4} kgm^2	10^{-4} kgm^2	%
SIMOTICS S-1FG1 in motor version HD (High Dynamic) for DC link voltage 510 ... 720 V DC									
1FG1...-..E42-4...	2000	63	1.84	7.4	6.4	3	7.5	8.5	92
1FG1...-..F52-4...		80	3.10	12.5	9.8	4	22	25.5	93
1FG1...-..F62-4...			3.20	12.1	7.8	4	22	25.5	93
1FG1...-..D43-4...	3000	48	1.01	3.8	3.15	3	1.26	1.62	91
1FG1...-..E13-4...		63	1.45	6	4.75	3	4.05	5.1	91
1FG1...-..E43-4...			2.36	9.9	7.5	3	7.5	8.5	92
1FG1...-..F53-4...		80	1.92	20.5	7	4	22	25.5	93
1FG1...-..F63-4...			1.82	19.8	5.4	4	22	25.5	93
1FG1...-..D34-4...	4500	48	1.04	4.1	3	3	1	1.36	91
1FG1...-..D44-4...			1.18	5.1	3.45	3	1.26	1.62	91
1FG1...-..E14-4...		63	1.63	8.6	5.4	3	4.05	5.1	91
1FG1...-..E44-4...			1.60	13.7	5.1	3	7.5	8.5	92
1FG1...-..C36-4...	6000	36	0.48	1.92	1.43	3	0.25	0.35	88
1FG1...-..D36-4...		48	0.98	5.6	2.95	3	1	1.36	91

Footnotes see next page.

© Siemens 2019

Motor type (repeated)	Maximum torque	Static torque	Rated torque	SINAMICS S120 Motor Module Booksize format Internal air cooling		Power cable with complete shield Motor connection (and brake connection) via power connector		
				Rated output current[2]		Power connector	Cable cross-section[3]	Pre-assembled cable
	M_{max}	M_0 at ΔT=100 K	M_{rated} at ΔT=100 K	I_{rated}				
	Nm	Nm	Nm	A	Type	Size	mm²	Type
				Line voltage 380 ... 480 V 3 AC				
1FG1...-..E42-4...	32	10.7	8.8	9	**6SL3120-■TE21-0AD0**	1	4 × 1.5	**6FX■002-5■N06-....**
1FG1...-..F52-4...	65	20	14.8	18	**6SL3120-■TE21-8AD0**	1	4 × 1.5	**6FX■002-5■N06-....**
1FG1...-..F62-4...	94	25.5	15.3	18	**6SL3120-■TE21-8AD0**	1	4 × 1.5	**6FX■002-5■N06-....**
1FG1...-..D43-4...	11.3	4.05	3.2	5	**6SL3120-■TE15-0AD0**	1	4 × 1.5	**6FX■002-5■N06-....**
1FG1...-..E13-4...	17.3	6.2	4.6	9	**6SL3120-■TE21-0AD0**	1	4 × 1.5	**6FX■002-5■N06-....**
1FG1...-..E43-4...	32	10.7	7.5	18	**6SL3120-■TE21-8AD0**	1	4 × 1.5	**6FX■002-5■N06-....**
1FG1...-..F53-4...	65	20	6.1	24	**6SL3120-1TE22-4AD0**	1.5	4 × 4	**6FX■002-5■N46-....**
1FG1...-..F63-4...	94	25.5	5.8	24	**6SL3120-1TE22-4AD0**	1.5	4 × 4	**6FX■002-5■N46-....**
1FG1...-..D34-4...	10	3.3	2.2	5	**6SL3120-■TE15-0AD0**	1	4 × 1.5	**6FX■002-5■N06-....**
1FG1...-..D44-4...	11.3	4.05	2.5	9	**6SL3120-■TE21-0AD0**	1	4 × 1.5	**6FX■002-5■N06-....**
1FG1...-..E14-4...	17.3	6.2	3.45	9	**6SL3120-■TE21-0AD0**	1	4 × 1.5	**6FX■002-5■N06-....**
1FG1...-..E44-4...	32	10.7	3.4	18	**6SL3120-■TE21-8AD0**	1	4 × 1.5	**6FX■002-5■N06-....**
1FG1...-..C36-4...	4.3	1.13	0.77	3	**6SL3120-■TE13-0AD0**	1	4 × 1.5	**6FX■002-5■N06-....**
1FG1...-..D36-4...	10	3.3	1.56	9	**6SL3120-■TE21-0AD0**	1	4 × 1.5	**6FX■002-5■N06-....**

Motor Module:
Single Motor Module **1**
Double Motor Module **2**

Power cable:
MOTION-CONNECT 800 PLUS **8**
MOTION-CONNECT 500 **5**

Without brake cores **C**
With brake cores **D**

Length code **....**

For information on the cables refer to MOTION-CONNECT connection systems in Catalog D 21.4

7

[1] Optimum efficiency in continuous duty.

[2] With default setting of the pulse frequency.

[3] The current carrying capacity of the power cables complies with EN 60204-1 for installation type C, for continuous duty at an ambient air temperature of 40 °C. Cable cross-section for brake connection 2 × 1.5 mm².

© Siemens 2019

Technical specifications (continued)

Servo geared motors SIMOTICS S-1FG1	Rated speed	Motor shaft height	Rated power	Stall current	Rated current	No. of pole pairs	Moment of inertia of rotor		Efficiency[1]
							without brake	with brake	
	n_{1rated}	SH	P_{rated} at ΔT=100 K	I_0 at ΔT=100 K	I_{rated} at ΔT=100 K	p	J_{mot}	$J_{Mot\ Br}$	η_M
Type	rpm		kW	A	A		10^{-4} kgm^2	10^{-4} kgm^2	%
SIMOTICS S-1FG1 in motor version CT (Compact) for DC link voltage 270 ... 330 V DC									
1FG1...-..C23-1...	3000	36	0.27	1.5	1.37	3	0.65	0.75	86
1FG1...-..C43-1...			0.36	1.69	1.5	3	0.9	1	87
1FG1...-..D23-1...		48	0.74	3.85	3.35	4	2.9	3.2	89
SIMOTICS S-1FG1 in motor version HD (High Dynamic) for DC link voltage 270 ... 330 V DC									
1FG1...-..C33-3...	3000	36	0.31	1.92	1.77	3	0.25	0.35	88
1FG1...-..D33-3...		48	0.83	3.9	3.5	3	1	1.36	91

Footnotes see next page.

© Siemens 2019

Motor type (repeated)	Maximum torque	Static torque	Rated torque	SINAMICS S120 blocksize format Rated output current[2]	PM240-2 Power Module Air cooling	Power cable with complete shield Motor connection (and brake connection) via power connector		
	M_{max}	M_0 at ΔT=100 K	M_{rated} at ΔT=100 K	I_{rated}		Power connector	Cable cross-section[3]	Pre-assembled cable
	Nm	Nm	Nm	A	Type	Size	mm²	Type
				Line voltage 200 ... 240 V 1 AC				
1FG1...-..C23-1...	4.5	1.01	0.87	3	**6SL3210-1PB13-0■L0**	1	4 × 1.5	**6FX■002-5■G10-....**
1FG1...-..C43-1...	6.5	1.4	1.16	3	**6SL3210-1PB13-0■L0**	1	4 × 1.5	**6FX■002-5■G10-....**
1FG1...-..D23-1...	10.5	2.85	2.35	3.9	**6SL3210-1PB13-8■L0**	1	4 × 1.5	**6FX■002-5■G10-....**
				Line voltage 200 ... 240 V 1 AC				
1FG1...-..C33-3...	4.3	1.13	0.99	3	**6SL3210-1PB13-0■L0**	1	4 × 1.5	**6FX■002-5■G10-....**
1FG1...-..D33-3...	10	3.1	2.65	3.9	**6SL3210-1PB13-8■L0**	1	4 × 1.5	**6FX■002-5■G10-....**

Line filter:	
None	**U**
Integrated	**A**

Power cable:	
MOTION-CONNECT 800 PLUS	**8**
MOTION-CONNECT 500	**5**
Without brake cores	**C**
With brake cores	**D**
Length code	**....**

For information on the cables refer to MOTION-CONNECT connection systems in Catalog D 21.4

7

1) Optimum efficiency in continuous duty.

2) With default setting of the pulse frequency.

3) The current carrying capacity of the power cables complies with EN 60204-1 for installation type C, for continuous duty at an ambient air temperature of 40 °C. Cable cross-section for brake connection 2 × 1.5 mm².

© Siemens 2019

Notes

© Siemens 2019



8/2	**Article No. supplements**
8/2	Shaft designs
8/2	Servo helical geared motors 2-stage, 3-stage
8/3	Servo parallel shaft geared motors 2-stage, 3-stage
8/4	Servo bevel geared motors 2-stage
8/5	Servo bevel geared motors 3-stage
8/6	Servo helical worm geared motors 2-stage
8/6	Increased chemical resistance
8/6	AM20DQI encoder with Drive-CliQ and a nickel-plated connector M17
8/7	Mounting types
8/7	Foot-mounted design
8/7	Foot/flange-mounted design
8/7	Flange-mounted design (A type)
8/7	Housing flange design (C type)
8/7	Shaft-mounted design (torque arm)

8/8	**Special designs**
8/8	Mounting position
8/9	Position of the connector
8/9	Position of pressure breather valve, oil screw plug and oil sight glass
8/10	Servo helical geared motors
8/10	• Foot-mounted design, 2-stage, 3-stage
8/12	• Foot/flange-mounted design, 2-stage, 3-stage
8/14	• Flange-mounted design or with housing flange, 2-stage, 3-stage
8/17	Servo parallel shaft geared motors
8/17	• Shaft-mounted design, 2-stage, 3-stage
8/19	• Flange-mounted design or with housing flange, 2-stage, 3-stage
8/21	• Foot-mounted design, 2-stage, 3-stage
8/23	Servo bevel geared motors
8/23	• Foot-mounted design, 2-stage
8/25	• Housing flange and flange-mounted design, 2-stage
8/27	• Shaft-mounted design, 2-stage
8/29	• Foot-mounted design, 3-stage
8/30	• Housing flange and flange-mounted design, 3-stage
8/31	• Shaft-mounted design, 3-stage
8/32	Servo helical worm geared motors
8/32	• Shaft-mounted design, 2-stage
8/34	• Housing flange and flange-mounted design, 2-stage
8/36	• Foot-mounted design, 2-stage
8/38	Angled mounting positions
8/39	Shaft-mounted design (torque arm)
8/41	Protection cover
8/42	Flange-mounted designs
8/43	Radially reinforced output shaft bearings
8/43	Reduced-backlash version
8/43	Shrink-glued output gearwheel
8/44	Sealing and lubrication
8/44	Sealing system
8/45	Lubricant
8/46	Pressure breather valve
8/46	Oil expansion tank
8/46	Oil level check
8/47	Colors and paint finish, chemical resistance, holding brake and rating plate
8/47	Colors
8/47	Increased chemical resistance
8/47	Holding brakes
8/47	• Permanent-magnet brake
8/47	• Spring-operated brake
8/47	Customer data on the rating plate
8/47	Test certificates
8/48	Fast lane
8/48	Overview

© Siemens 2019

Shaft design

Selection and ordering data

Shaft design	Dimensions mm				8th position of the Article No. An order code is required when **9** appears in the 8th position of the Article No.		
Servo helical geared motors 2-stage, 3-stage			**Helical gearboxes *Z*, *D***		1FG11 . . - ■ . . . . -		
Gearbox size	***19***	***29***	***39***	***49***	1FG12 . . - ■ . . . . -		Order code
Solid shaft with feather keyway • Design 1	V20 × 40	V25 × 50	V25 × 50	V30 × 60	**1**		**–**
• Design 2	V16 × 28	–	–	–	**2**		**–**
• Design 3	V16 × 40	–	V30 × 60	–	**3**		**–**
Smooth solid shaft	VG20 × 40	VG25 × 50	VG25 × 50	VG30 × 60	**9**		**H1G**
Solid shaft, inches, with feather keyway	V0.75" × 1.57"	V1" × 1.97"	V1" × 1.97"	V1.25" × 2.36"	**9**		**H6A**
Gearbox size	***59***	***69***	***79***	***89***			
Solid shaft with feather keyway • Design 1	V35 × 70	V35 × 70	V40 × 80	V50 × 100	**1**		**–**
• Design 2	V30 × 60	–	V35 × 70	–	**2**		**–**
• Design 3	V40 × 80	–	V50 × 100	V60 × 120	**3**		**–**
Smooth solid shaft	VG35 × 70	VG35 × 70	VG40 × 80	VG50 × 100	**9**		**H1G**
Solid shaft, inches, with feather keyway	V1.375" × 2.76"	V1.375" × 2.76"	V1.625" × 3.15"	V2.125" × 3.94"	**9**		**H6A**
Gearbox size	***109***	***129***					
Solid shaft with feather keyway • Design 1	V60 × 120	V70 × 140			**1**		**–**
• Design 2	–	–			**2**		**–**
• Design 3	–	–			**3**		**–**
Smooth solid shaft	–	–			**9**		**H1G**
Solid shaft, inches, with feather keyway	V2.375" × 4.72"	V2.875" × 5.51"			**9**		**H6A**

© Siemens 2019

Selection and ordering data (continued)

Shaft design	Dimensions mm				8th position of the Article No. An order code is required when **9** appears in the 8th position of the Article No.		
Servo parallel shaft geared motors 2-stage, 3-stage			**Parallel shaft gearboxes *FZ*, *FD***		1FG13 . . - ■ . . . . -		
Gearbox size	***29***	***39***	***49***	***69***	1FG14 . . - ■ . . . . -		Order code
Solid shaft with feather keyway • Design 1	V25 × 50	V25 × 50	V30 × 60	V35 × 70	**1**		**–**
• Design 3	–	V30 × 70	V40 × 80	–	**3**		**–**
Smooth solid shaft	VG25 × 50	VG25 × 50	VG30 × 60	VG35 × 70	**9**		**H1G**
Solid shaft, inches, with feather keyway	V1" × 1.97"	V1" × 1.97"	V1.25" × 2.36"	V1.375" × 2.76"	**9**		**H6A**
Hollow shaft with feather keyway • Design 1	H25	H30	H35	H40	**5**		**–**
• Design 2	–	H25	H30	–	**6**		**–**
• Design 3	–	–	–	–	**7**		**–**
Hollow shaft with shrink disk	HS25	HS30	HS35	HS40	**9**		**H3A**
	–	–	–	–	**9**		**H3C**
Hollow shaft with SIMOLOC assembly system [1], metric design	HF25	HF30	HF35	HF40	**9**		**H3G**
	HF20	HF25	HF30	HF35	**9**		**H3H**
Hollow shaft with SIMOLOC assembly system [1], inch design	HF1"	HF1.25"	HF1.375"	HF1.5"	**9**		**H3J**
	HF0.75"	HF1.1875"	HF1.4375"	HF1.625"	**9**		**H3K**
	–	HF1"	HF1.25"	HF1.4375"	**9**		**H3L**
	–	–	HF1.1875"	HF1.375"	**9**		**H3M**
Splined hollow shaft	–	N30	N35	N35	**9**		**H4A**
Hollow shaft, inches, with feather keyway	H1"	H1.25"	H1.375"	H1.5"	**9**		**H7A**
Gearbox size	***79***	***89***	***109***	***129***			
Solid shaft with feather keyway • Design 1	V40 × 80	V50 × 100	V60 × 120	V70 × 140	**1**		**–**
• Design 3	V50 × 100	–	V80 × 170	V90 × 170	**3**		**–**
Smooth solid shaft	VG40 × 80	VG50 × 100	–	–	**9**		**H1G**
Solid shaft, inches, with feather keyway	V1.625" × 3.15"	V2" × 3.94"	V2.375" × 4.72"	V2.875" × 5.51"	**9**		**H6A**
Hollow shaft with feather keyway • Design 1	H40	H50	H60	H70	**5**		**–**
• Design 2	–	–	–	–	**6**		**–**
• Design 3	–	–	H70	–	**7**		**–**
Hollow shaft with shrink disk	HS40	HS50	HS65	HS75	**9**		**H3A**
	–	–	HS70	–	**9**		**H3C**
Hollow shaft with SIMOLOC assembly system [1], metric design	HF40	HF50	–	–	**9**		**H3G**
	HF35	HF40	–	–	**9**		**H3H**
Hollow shaft with SIMOLOC assembly system [1], inch design	HF1.5"	HF2"	–	–	**9**		**H3J**
	HF1.625"	HF1.9375"	–	–	**9**		**H3K**
	HF1.4375"	HF1.75"	–	–	**9**		**H3L**
	HF1.375"	HF1.625"	–	–	**9**		**H3M**
Splined hollow shaft	N45	N50	N65	N70	**9**		**H4A**
Hollow shaft, inches, with feather keyway	H1.5"	H2"	H2.375"	H2.75"	**9**		**H7A**

[1] Only possible for shaft-mounted design.

© Siemens 2019

Selection and ordering data (continued)

Shaft design	Dimensions mm				8th position of the Article No. An order code is required when **9** appears in the 8th position of the Article No.	
Servo bevel geared motors 2-stage			**Bevel gearbox *B***		1FG15 . . - ■ . . . . -	
Gearbox size	***19***	***29***	***39***	***49***		Order code
Solid shaft with feather keyway	V20 × 40	V20 × 40	V30 × 60	V35 × 70	**1**	**–**
Smooth solid shaft	VG20 × 40	VG20 × 40	VG30 × 60	VG35 × 70	**9**	**H1G**
Solid shaft with feather keyway, both ends [2]	VD20 × 40	VD20 × 40	VD30 × 60	VD35 × 70	**9**	**H5A**
Solid shaft, inches, with feather keyway	V0.75" × 1.57"	V0.75" × 1.57"	V1" × 1.97"	V1.375" × 2.76"	**9**	**H6A**
Hollow shaft with feather keyway:						
• Design 1	H20	H20	H30	H40	**5**	**–**
• Design 2	–	H25	H35	H35	**6**	**–**
• Design 3	–	–	H40	–	**7**	**–**
Hollow shaft with shrink disk	HS20	HS20	HS35	HS40	**9**	**H3A**
Hollow shaft with SIMOLOC assembly system [1], metric design	–	HF25	HF30	HF35	**9**	**H3G**
	–	HF20	HF25	HF30	**9**	**H3H**
	–	–	–	HF40	**9**	**H3P**
Hollow shaft with SIMOLOC assembly system [1], inch design	–	HF1"	HF1.25"	HF1.375"	**9**	**H3J**
	–	HF0.75"	HF1.1875"	HF1.4375"	**9**	**H3K**
	–	–	HF1"	HF1.25"	**9**	**H3L**
	–	–	–	HF1.1875"	**9**	**H3M**
	–	–	–	HF1.625"	**9**	**H3N**
Hollow shaft, inches, with feather keyway	H0.75"	H0.75"	H1.25"	H1.5"	**9**	**H7A**

[1] Only possible for shaft-mounted design.

[2] Only possible for foot-mounted design.

© Siemens 2019

Selection and ordering data (continued)

Shaft design	Dimensions mm				8th position of the Article No. An order code is required when **9** appears in the 8th position of the Article No.		
Servo bevel geared motors 3-stage			**Bevel gearbox *K***		1FG15 . . - ■ . . . . -		
Gearbox size	***39***	***49***	***69***	***79***			Order code
Solid shaft with feather keyway • Design 1	V25 × 50	V30 × 60	V35 × 70	V40 × 80	**1**		**–**
• Design 3	V35 × 70	V40 × 80	–	V50 × 100	**3**		**–**
Smooth solid shaft	VG25 × 50	VG30 × 60	VG35 × 70	VG40 × 80	**9**		**H1G**
Solid shaft with feather keyway, both ends [2]	VD25 × 50	VD30 × 60	VD35 × 70	VD40 × 80	**9**		**H5A**
Solid shaft, inches, with feather keyway	V1" × 1.97"	V1.25" × 2.36"	V1.375" × 2.76"	V1.625" × 3.15"	**9**		**H6A**
Hollow shaft with feather keyway: • Design 1	H30	H35	H40	H40	**5**		**–**
• Design 2	H25	H30	–	–	**6**		**–**
• Design 3	–	–	–	–	**7**		**–**
Hollow shaft with shrink disk	HS30	HS35	HS40	HS40	**9**		**H3A**
	–	–	–	–	**9**		**H3B**
	–	–	–	–	**9**		**H3C**
Hollow shaft with SIMOLOC assembly system [1], metric design	HF30	HF35	HF40	HF40	**9**		**H3G**
	HF25	HF30	HF35	HF35	**9**		**H3H**
Hollow shaft with SIMOLOC assembly system [1], inch design	HF1.25"	HF1.375"	HF1.5"	HF1.5"	**9**		**H3J**
	HF1.1875"	HF1.4375"	HF1.625"	HF1.625"	**9**		**H3K**
	HF1"	HF1.25"	HF1.4375"	HF1.4375"	**9**		**H3L**
	–	HF1.1875"	HF1.375"	HF1.375"	**9**		**H3M**
Splined hollow shaft	N30	N35	N35	N45	**9**		**H4A**
Hollow shaft, inches, with feather keyway	H1.25"	H1.375"	H1.5"	H1.5"	**9**		**H7A**
Gearbox size	***89***	***109***	***129***	***149***			Order code
Solid shaft with feather keyway • Design 1	V50 × 100	V60 × 120	V70 × 140	V90 × 170	**1**		**–**
• Design 3	–	V80 × 170	V90 × 170	V100 × 210	**3**		**–**
Smooth solid shaft	VG50 × 100	–			**9**		**H1G**
Solid shaft with feather keyway, both ends	VD50 × 100	VD60 × 120	VD70 × 140	VD90 × 170	**9**		**H5A**
Solid shaft, inches, with feather keyway	V2" × 3.94"	V2.375" × 4.72"	V2.875" × 5.51"	V3.625" × 6.69"	**9**		**H6A**
Hollow shaft with feather keyway: • Design 1	H50	H60	H70	H90	**5**		**–**
• Design 2	–	–	–	H80	**6**		**–**
• Design 3	–	H70	–	–	**7**		**–**
Hollow shaft with shrink disk	HS50	HS65	HS75	HS95	**9**		**H3A**
	–	–	–	HS90	**9**		**H3B**
	–	HS70	–	–	**9**		**H3C**
Hollow shaft with SIMOLOC assembly system [1], metric design	HF50	–	–	–	**9**		**H3G**
	HF40	–	–	–	**9**		**H3H**
Hollow shaft with SIMOLOC assembly system [1], inch design	HF2"	–	–	–	**9**		**H3J**
	HF1.9375"	–	–	–	**9**		**H3K**
	HF1.75"	–	–	–	**9**		**H3L**
	HF1.625"	–	–	–	**9**		**H3M**
Splined hollow shaft	N50	N65	N70	N85	**9**		**H4A**
Hollow shaft, inches, with feather keyway	H2"	H2.375"	H2.75"	H3.625"	**9**		**H7A**

[1] Only possible for shaft-mounted design.

[2] Only possible for foot-mounted design.

© Siemens 2019

Shaft design

Selection and ordering data (continued)

Shaft design	Dimensions mm					8th position of the Article No. An order code is required when **9** appears in the 8th position of the Article No.		
Servo helical worm geared motors 2-stage				**Helical worm gearbox *C***		1FG16 . . - ■ . . . . -		
Gearbox size	***29***	***39***	***49***	***69***	***89***			Order code
Solid shaft with feather keyway • Design 1	V20 × 40	V25 × 50	V30 × 60	V35 × 70	V45 × 90		**1**	**–**
• Design 2	–	–	–	V40 × 80 [2]	V50 × 100 [2]		**2**	**–**
• Design 3	–	V35 × 70 [2]	V40 × 80 [2]	V50 × 100 [2]	V70 × 140 [2]		**3**	**–**
Smooth solid shaft	VG20 × 40	VG25 × 50	VG30 × 60	VG35 × 70	VG45 × 90		**9**	**H1G**
Solid shaft with feather keyway, both ends	VD20 × 40	VD25 × 50	VD30 × 60	VD35 × 70	VD45 × 90		**9**	**H5A**
Solid shaft, inches, with feather keyway	V0.75" × 1.57"	V1"× 1.97"	V1.25" × 2.36"	V1.375" × 2.76"	V1.75" × 3.54"		**9**	**H6A**
Hollow shaft with feather keyway: • Design 1	H20	H25	H30	H40	H50		**5**	**–**
• Design 2	–	H30	H35	H45	H60		**6**	**–**
Hollow shaft with shrink disk	HS20	HS30	HS35	HS40	HS50		**9**	**H3A**
	–	–	–	HS50	HS60		**9**	**H3C**
Hollow shaft with SIMOLOC assembly system [1], metric design	HF25	HF30	HF35	HF40	HF50		**9**	**H3G**
	HF20	HF25	HF30	HF35	HF40		**9**	**H3H**
Hollow shaft with SIMOLOC assembly system [1], inch design	HF1"	HF1.25"	HF1.375"	HF1.5"	HF2"		**9**	**H3J**
	HF0.75"	HF1.1875"	HF1.4375"	HF1.625"	HF1.9375"		**9**	**H3K**
	–	HF1"	HF1.25"	HF1.4375"	HF1.75"		**9**	**H3L**
	–	–	HF1.1875"	HF1.375"	HF1.625"		**9**	**H3M**
Hollow shaft, inches, with feather keyway	H0.75"	H1.25"	H1.375"	H1.5"	H2"		**9**	**H7A**

Increased chemical resistance

Selection and ordering data

Encoder version	9th position of the Article No. An order code is required when **Z** appears in the 9th position of the Article No.			
	1FG1 . . . - . ■ . . . -			Order code
AM20DQI encoder with Drive-CliQ and a nickel-plated connector M17		**Z**		**J4R**

[1] Only possible for shaft-mounted design.

[2] Only possible for foot-mounted design.

© Siemens 2019

Selection and ordering data

Mounting type	Possible for the following servo geared motors	Gearbox type	14th position of the Article No. 1FG1 . . . - . . . . . - . ■ . .	Example
Foot-mounted design	Servo helical geared motor 2-stage	***Z***	1FG11 . . - . . . . . - . **A** . .	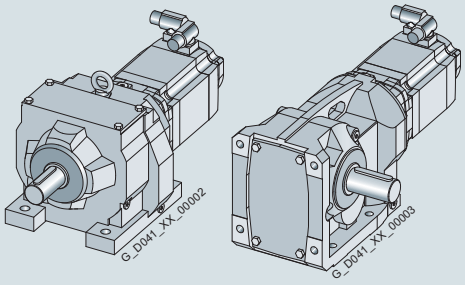
	Servo helical geared motor 3-stage	***D***	1FG12 . . - . . . . . - . **A** . .	
	Servo parallel shaft geared motor 2-stage	***FZ***	1FG13 . . - . . . . . - . **A** . .	
	Servo parallel shaft geared motor 3-stage	***FD***	1FG14 . . - . . . . . - . **A** . .	
	Servo bevel geared motor 2-stage	***B***	1FG15 . . - . . . . . - . **A** . .	
	Servo bevel geared motor 3-stage	***K***	1FG15 . . - . . . . . - . **A** . .	
	Servo helical worm geared motor 2-stage	***C***	1FG16 . . - . . . . . - . **A** . .	
Foot-mounted/ flange-mounted design For selection of flange diameters, see section "Flange-mounted designs" on page 8/42.	Servo helical geared motor 2-stage – only possible for sizes 29 to 89	***ZB***	1FG11 . . - . . . . . - . **B** . .	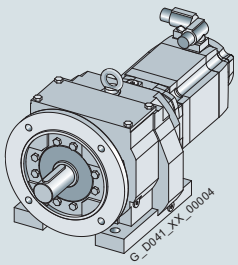
	Servo helical geared motor 3-stage – only possible for sizes 29 to 89	***DB***	1FG12 . . - . . . . . - . **B** . .	
Flange-mounted design (A type) For selection of flange diameters, see section "Flange-mounted designs" on page 8/42.	Servo helical geared motor 2-stage	***ZF***	1FG11 . . - . . . . . - . **F** . .	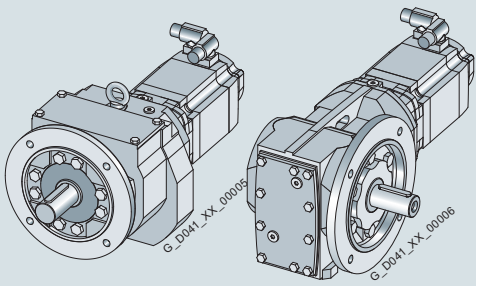
	Servo helical geared motor 3-stage	***DF***	1FG12 . . - . . . . . - . **F** . .	
	Servo parallel shaft geared motor 2-stage	***FZF***	1FG13 . . - . . . . . - . **F** . .	
	Servo parallel shaft geared motor 3-stage	***FDF***	1FG14 . . - . . . . . - . **F** . .	
	Servo bevel geared motor 2-stage	***BF***	1FG15 . . - . . . . . - . **F** . .	
	Servo bevel geared motor 3-stage	***KF***	1FG15 . . - . . . . . - . **F** . .	
	Servo helical worm geared motor 2-stage	***CF***	1FG16 . . - . . . . . - . **F** . .	
Housing flange design (C type) For selection of flange diameters, see section "Flange-mounted designs" on page 8/42.	Servo helical geared motor 2-stage	***ZZ***	1FG11 . . - . . . . . - . **H** . .	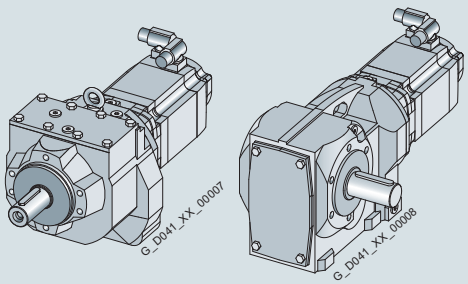
	Servo helical geared motor 3-stage	***DZ***	1FG12 . . - . . . . . - . **H** . .	
	Servo parallel shaft geared motor 2-stage	***FZZ***	1FG13 . . - . . . . . - . **H** . .	
	Servo parallel shaft geared motor 3-stage	***FDZ***	1FG14 . . - . . . . . - . **H** . .	
	Servo bevel geared motor 2-stage	***BZ***	1FG15 . . - . . . . . - . **H** . .	
	Servo bevel geared motor 3-stage	***KZ***	1FG15 . . - . . . . . - . **H** . .	
	Servo helical worm geared motor 2-stage	***CZ***	1FG16 . . - . . . . . - . **H** . .	
Shaft-mounted design (torque arm)	Servo parallel shaft geared motor 2-stage	***FZAD***	1FG13 . . - . . . . . - . **D** . .	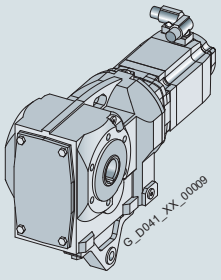
	Servo parallel shaft geared motor 3-stage	***FDAD***	1FG14 . . - . . . . . - . **D** . .	
	Servo bevel geared motor 2-stage	***BAD***	1FG15 . . - . . . . . - . **D** . .	
	Servo bevel geared motor 3-stage	***KAD***	1FG15 . . - . . . . . - . **C** . .	
	Servo helical worm geared motor 2-stage	***CAD***	1FG16 . . - . . . . . - . **D** . .	

© Siemens 2019

Mounting position

Overview

It is essential to specify the mounting position when you place your order (order code) to ensure that the gearbox is delivered with the correct quantity of oil.

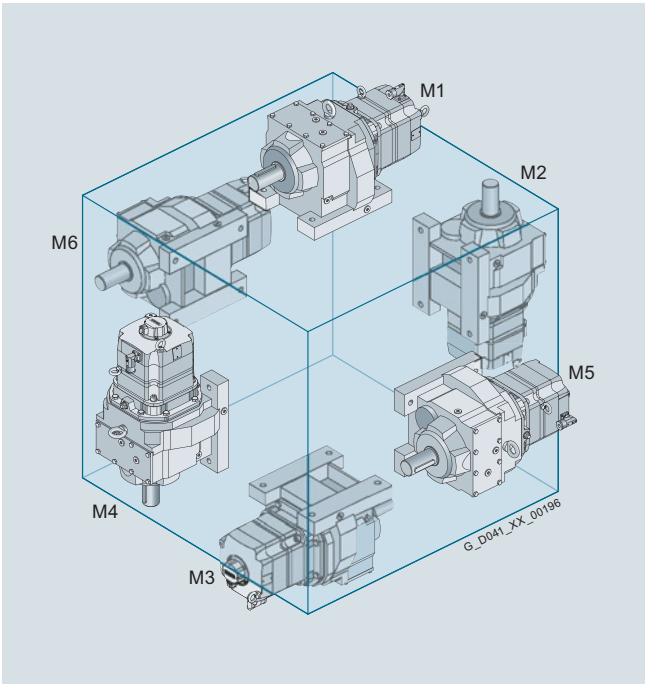

Helical geared motors

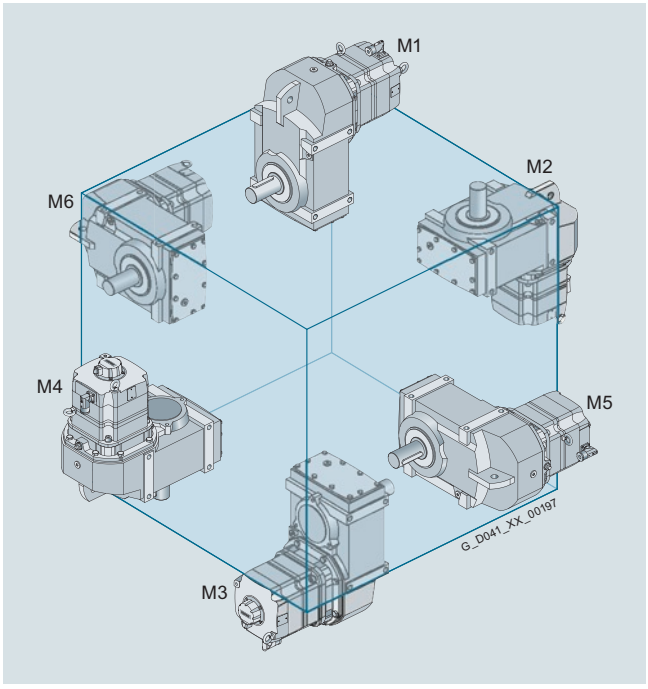

Parallel shaft geared motors

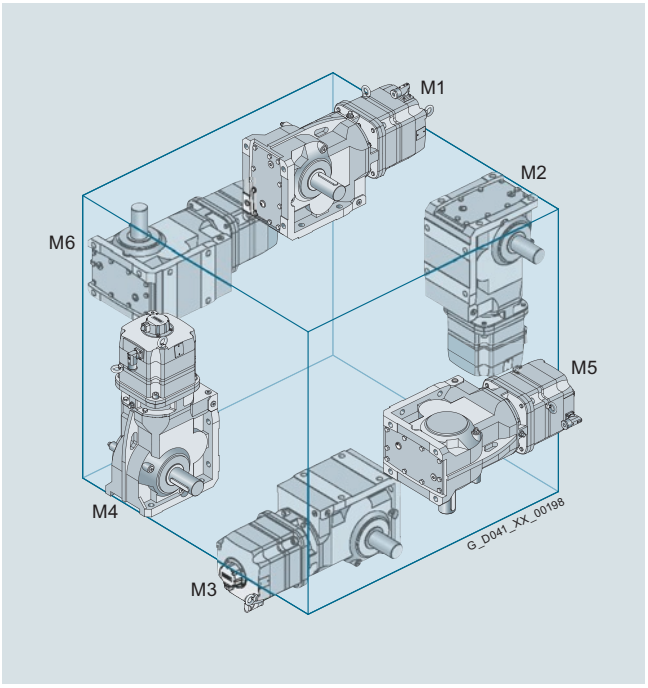

Bevel geared motors

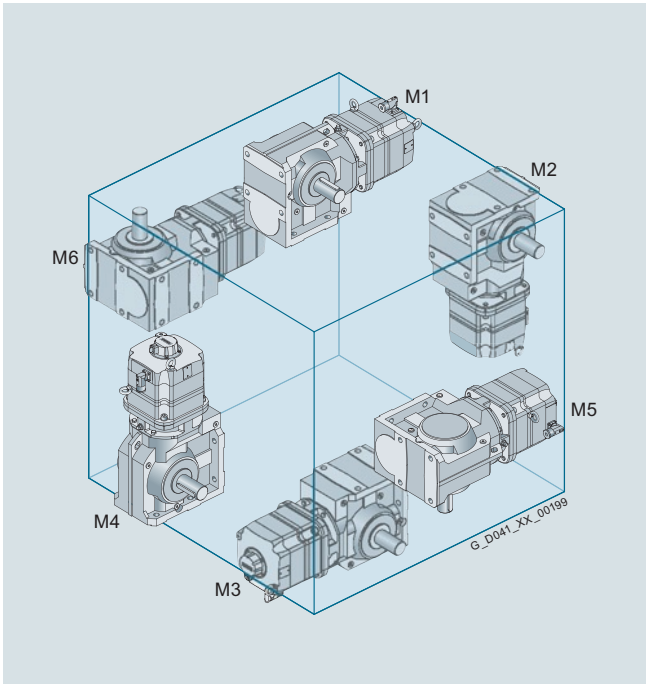

Helical worm geared motors

© Siemens 2019

Overview (continued)

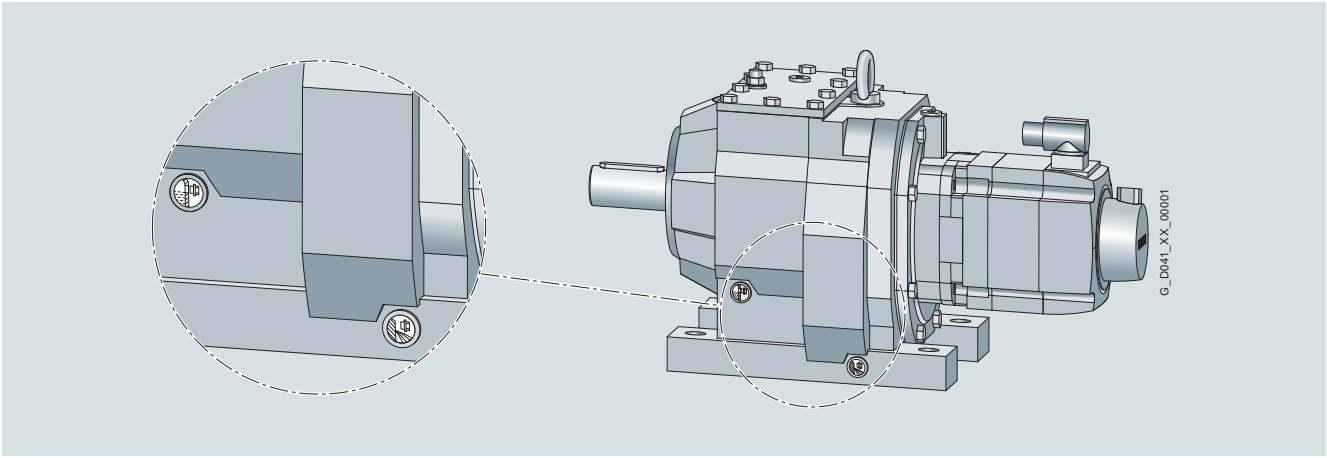

Detailed 3D image

Note:

The DT Configurator can be used to configure SIMOTICS S-1FG1 servo geared motors.
The Drive Technology Configurator is integrated as a selection tool into the Interactive Catalog CA 01.
In addition, the DT Configurator can be used on the Internet without requiring any installation.
The DT Configurator can be found in the Siemens Mall at the following address:
www.siemens.com/dt-configurator

For the selected mounting position, the 3D images show the exact position of the oil valves.

An explanation of the symbols used to represent mounting positions can be found on the following pages

Symbol	
Oil valves	
	Pressure breather valve
	Pressure breather valve opposite end
	Magnetic oil drain screw
	Magnetic oil drain screw opposite end
	Oil sight glass (oil level plug)
	Oil sight glass (oil level plug) opposite end

Symbol	
Supplements	
A, B	Output side A, output side B
②	2-stage gearbox
③	3-stage gearbox
① ... ④	Position of the connector

Options

Position of the connector

Symbol for position of connector relative to mounting position	This is the connector position when facing the drive end (DE) of the motor	Add. identification code **-Z** with order code (if no order code is stated, then Article No. without **-Z**) 1FG1 . . . - . . . . . - . . . . **-Z** Order code
①	Right	**Q91**
②	Top	Standard **–**
③	Left	**Q93**
④	Bottom	**Q92**

The position of the connector is represented by the symbols ① to ④ in the diagrams of individual mounting positions on the following pages.

Position of pressure breather valve, oil screw plug and oil sight glass

The position of the pressure breather valve, oil screw plug and oil sight glass is represented by symbols in the diagrams of individual mounting positions on the following pages.
For further details see "Explanation of symbols".

© Siemens 2019

Options

Gearbox sizes 19, 29 – Gearbox types Z19, Z29 and D19, D29

Mounting positions, position of oil valves and connector

Gearbox sizes 19 and 29 are lubricated for life.

Mounting position 1FG11 . . - . . . . . - . A . . **-Z** 1FG12 . . - . . . . . - . A . . **-Z**	Add. identification code **-Z** with order code Order code
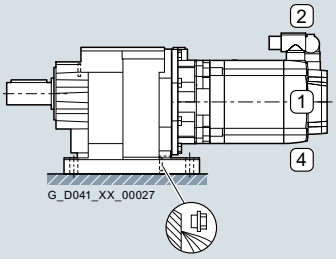 **M1**	**D01**
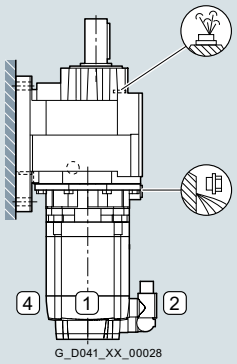 **M2**	**D02**
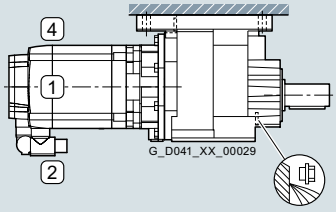 **M3**	**D03**
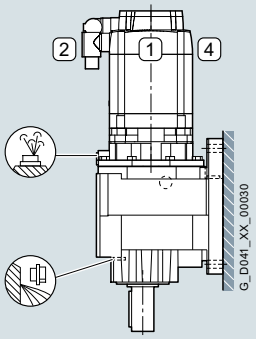 **M4**	**D04**
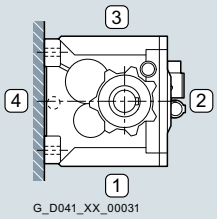 **M5**	**D05**
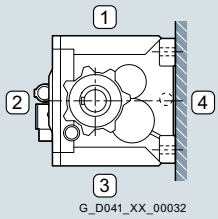 **M6**	**D06**

© Siemens 2019

Options (continued)

Gearbox sizes 39 to 129 – Gearbox types Z39 to Z129 and D39 to D129

Mounting positions, position of oil valves and connector

Mounting position	Add. identification code **-Z** with order code 1FG11 . . - . . . . . - . A . . **-Z** 1FG12 . . - . . . . . - . A . . **-Z** Order code
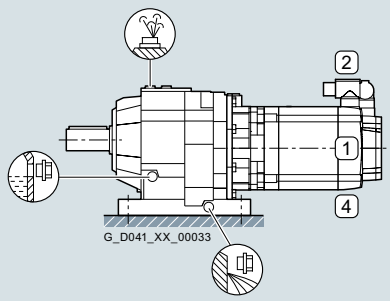	
M1	**D01**
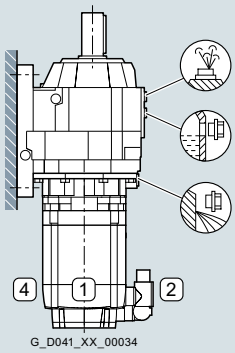	
M2	**D02**
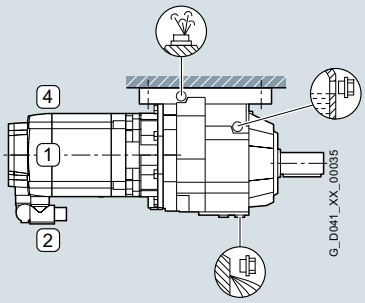	
M3	**D03**
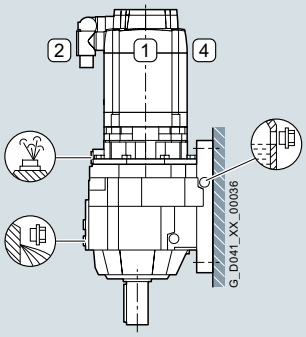	
M4	**D04**
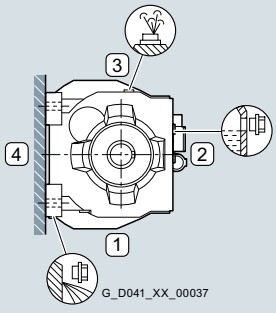	
M5	**D05**
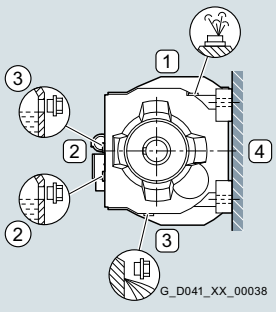	
M6	**D06**

8

© Siemens 2019

Options

Gearbox size 29 – Gearbox types ZB29 and DB29

Mounting positions, position of oil valves and connector

Gearbox size 29 is lubricated for life.

Mounting position	Add. identification code **-Z** with order code 1FG11 . . - . . . . . - . B . . **-Z** 1FG12 . . - . . . . . - . B . . **-Z** Order code
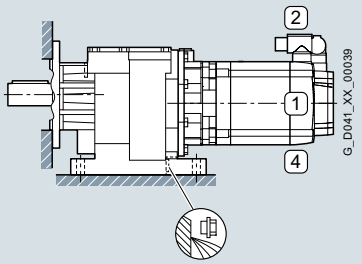 **M1**	**D01**
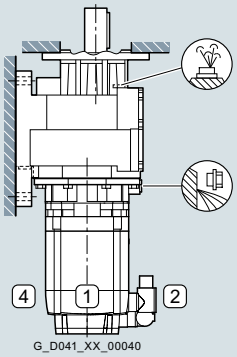 **M2**	**D02**
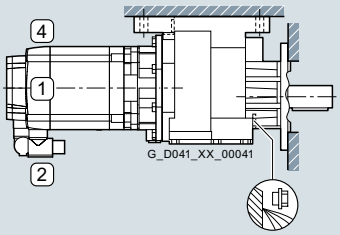 **M3**	**D03**
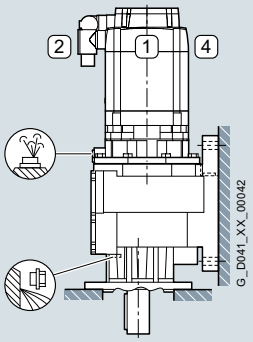 **M4**	**D04**
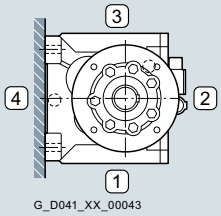 **M5**	**D05**
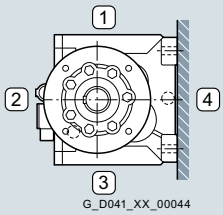 **M6**	**D06**

© Siemens 2019

Options (continued)

Gearbox sizes 39 to 89 – Gearbox types ZB39 to ZB89 and DB39 to DB89

Mounting positions, position of oil valves and connector

Mounting position	Add. identification code **-Z** with order code 1FG11 . . - . . . . . - . B . . **-Z** 1FG12 . . - . . . . . - . B . . **-Z** Order code
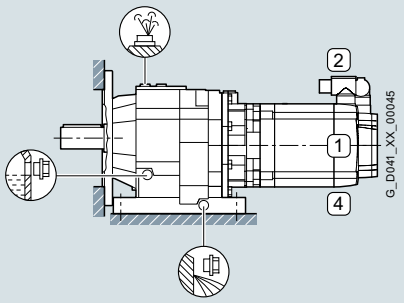	
M1	**D01**

Mounting position	Add. identification code **-Z** with order code 1FG11 . . - . . . . . - . B . . **-Z** 1FG12 . . - . . . . . - . B . . **-Z** Order code
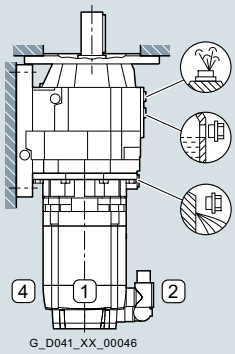	
M2	**D02**

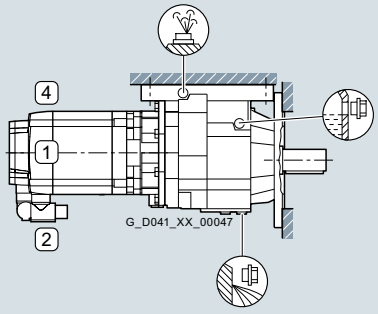	
M3	**D03**

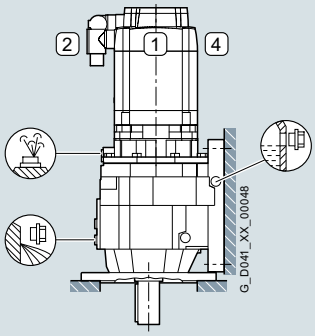	
M4	**D04**

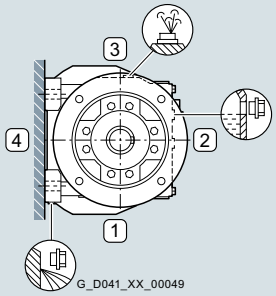	
M5	**D05**

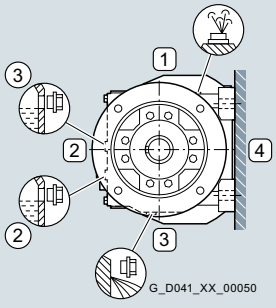	
M6	**D06**

8

© Siemens 2019

Options

Gearbox sizes 19, 29 – Gearbox types ZF19, ZF29 and DF19, DF29 or ZZ19, ZZ29 and DZ19, DZ29

Mounting positions, position of oil valves and connector

Gearbox sizes 19 and 29 are lubricated for life.

Mounting position	Add. identification code **-Z** with order code
1FG11 . . - . . . . . - . F . . **-Z**, 1FG11 . . - . . . . . - . H . . **-Z** 1FG12 . . - . . . . . - . F . . **-Z**, 1FG12 . . - . . . . . - . H . . **-Z**	Order code
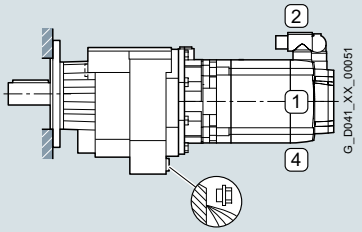	
M1	**D01**
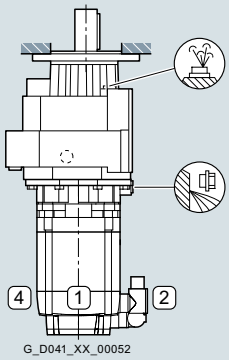	
M2	**D02**
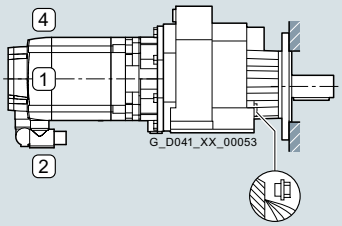	
M3	**D03**
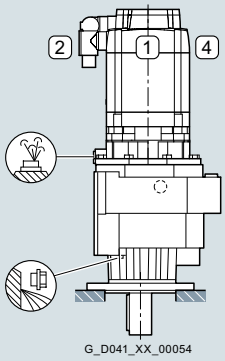	
M4	**D04**
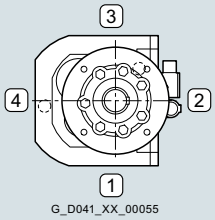	
M5	**D05**
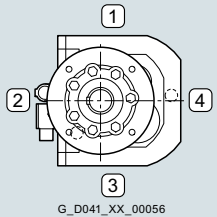	
M6	**D06**

© Siemens 2019

Options (continued)

Gearbox size 39 – Gearbox types ZF39 and DF39 or ZZ39 and DZ39

Mounting positions, position of oil valves and connector

Mounting position 1FG11 . . - . . . . . - . F . . **-Z**, 1FG11 . . - . . . . . - . H . . **-Z** 1FG12 . . - . . . . . - . F . . **-Z**, 1FG12 . . - . . . . . - . H . . **-Z**	Add. identification code **-Z** with order code Order code
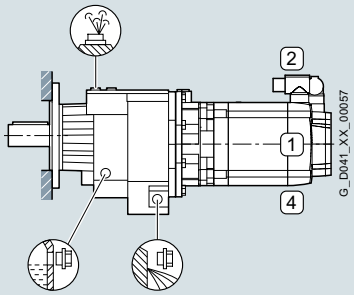 **M1**	**D01**
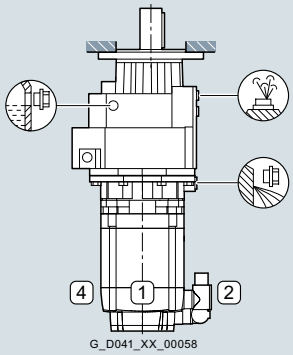 **M2**	**D02**
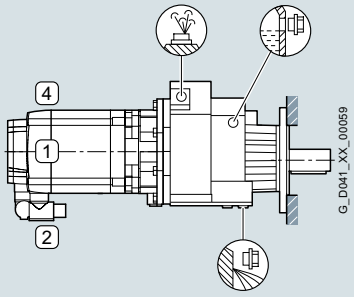 **M3**	**D03**
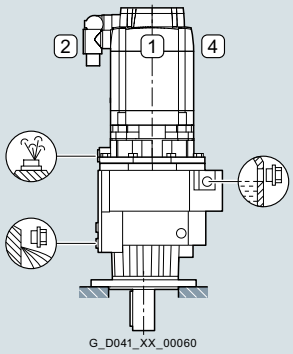 **M4**	**D04**
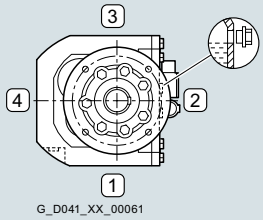 **M5**	**D05**
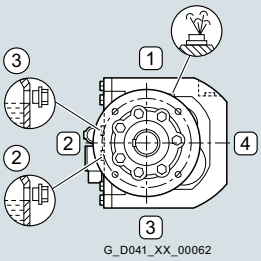 **M6**	**D06**

8

© Siemens 2019

Options (continued)

Gearbox sizes 49 to 129 – Gearbox types ZF49 to ZF129 and DF49 to DF129 or ZZ49 to ZZ129 and DZ49 to DZ129

Mounting positions, position of oil valves and connector

Mounting position 1FG11 . . - . . . . . - . F . . **-Z**, 1FG11 . . - . . . . . - . H . . **-Z** 1FG12 . . - . . . . . - . F . . **-Z**, 1FG12 . . - . . . . . - . H . . **-Z**	Add. identification code **-Z** with order code Order code
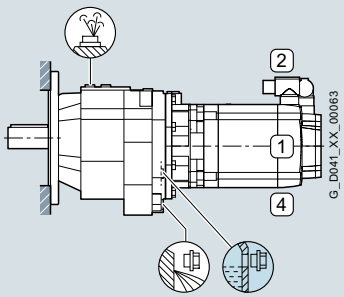 **M1**	**D01**
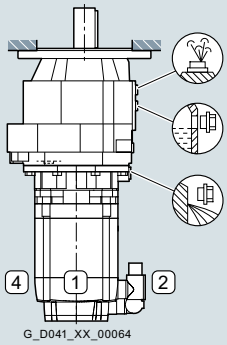 **M2**	**D02**
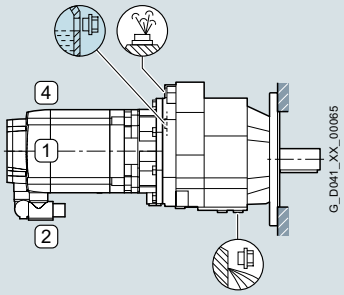 **M3**	**D03**
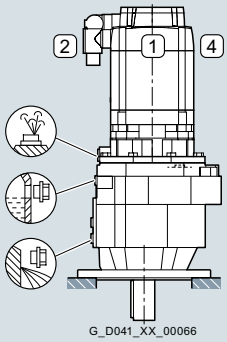 **M4**	**D04**
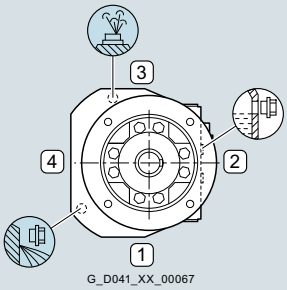 **M5**	**D05**
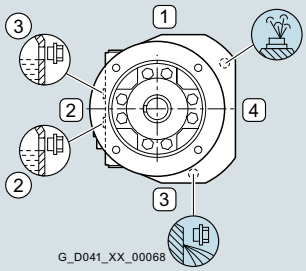 **M6**	**D06**

8

© Siemens 2019

Options

Gearbox size 29 – Gearbox types FZAD29 and FDAD29

Mounting positions, position of oil valves and connector

Gearbox size 29 is lubricated for life.

Mounting position 1FG13 . . - 5 . . . . - . D . . **-Z** 1FG14 . . - 5 . . . . - . D . . **-Z**	Add. identification code **-Z** with order code Order code
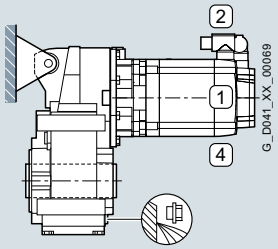 **M1**	**D01**
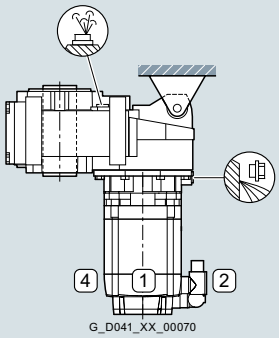 **M2**	**D02**
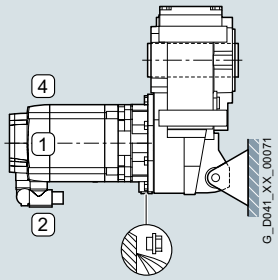 **M3**	**D03**
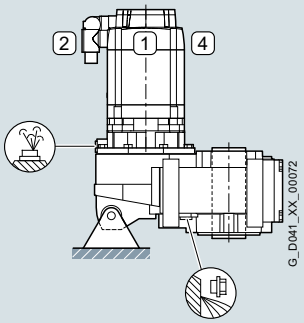 **M4**	**D04**
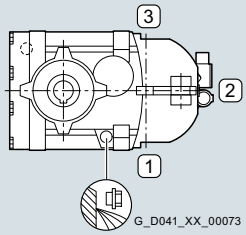 **M5**	**D05**
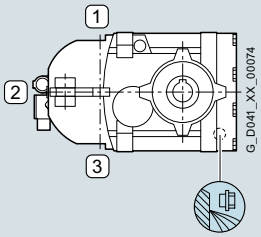 **M6**	**D06**

© Siemens 2019

Options (continued)

Gearbox sizes 39 to 129 – Gearbox types FZAD39 to FZAD129 and FDAD39 to FDAD129

Mounting positions, position of oil valves and connector

Mounting position	Add. identification code **-Z** with order code 1FG13 . . - 5 . . . . - . D . . **-Z** 1FG14 . . - 5 . . . . - . D . . **-Z** Order code
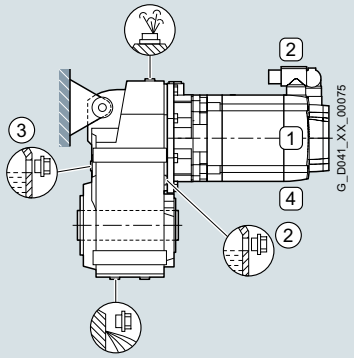 **M1**	**D01**
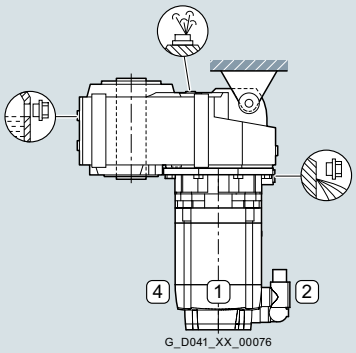 **M2**	**D02**
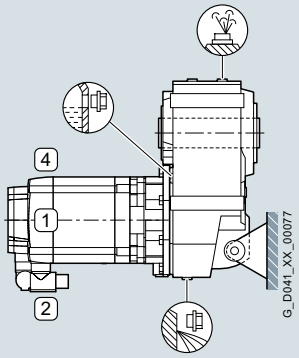 **M3**	**D03**
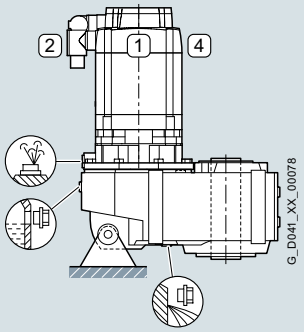 **M4**	**D04**
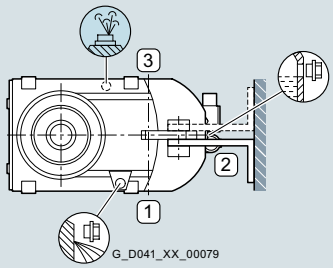 **M5**	**D05**
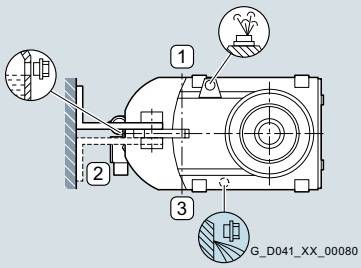 **M6**	**D06**

8

© Siemens 2019

Options

Gearbox size 29 – Gearbox types FZ.F29, FZ.Z29, FD.F29 and FD.Z29

Mounting positions, position of oil valves and connector

Gearbox size 29 is lubricated for life.

Mounting position 1FG13 . . - . . . . . - . F . . **-Z**, 1FG11 . . - . . . . . - . H . . **-Z** 1FG14 . . - . . . . . - . F . . **-Z**, 1FG12 . . - . . . . . - . H . . **-Z**	Add. identification code **-Z** with order code Order code
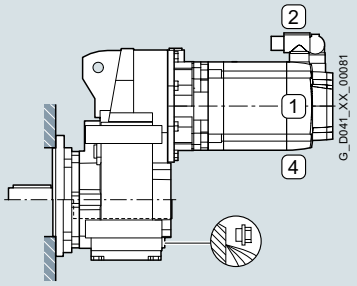 **M1**	**D01**
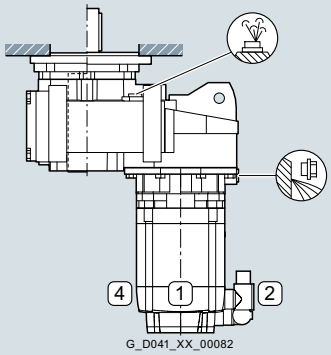 **M2**	**D02**
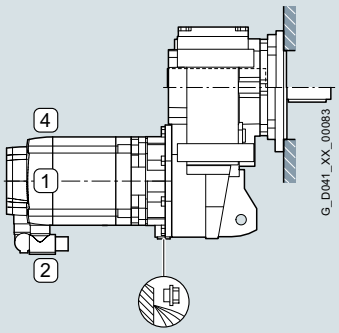 **M3**	**D03**
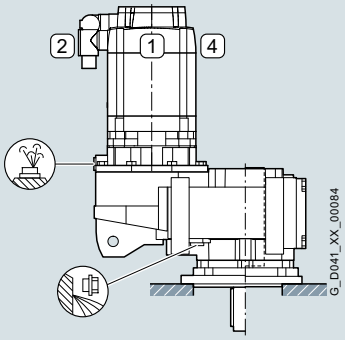 **M4**	**D04**
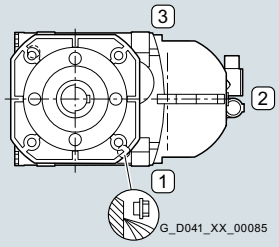 **M5**	**D05**
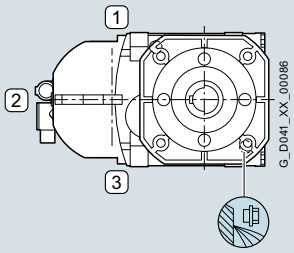 **M6**	**D06**

© Siemens 2019

Options (continued)

Gearbox sizes 39 to 129 – Gearbox types FZ.F39 to FZ.F129, FD.F39 to FD.F129 and FZ.Z39 to FZ.Z129, FD.Z39 to FD.Z129

Mounting positions, position of oil valves and connector

Mounting position 1FG13 . . - . . . . . - . F . . **-Z**, 1FG11 . . - . . . . . - . H . . **-Z** 1FG14 . . - . . . . . - . F . . **-Z**, 1FG12 . . - . . . . . - . H . . **-Z**	Add. identification code **-Z** with order code Order code
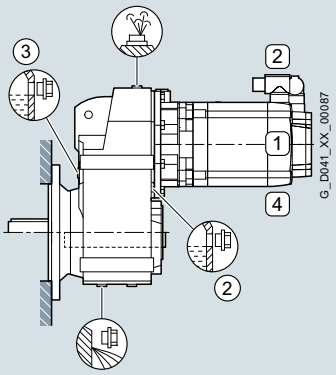 **M1**	**D01**
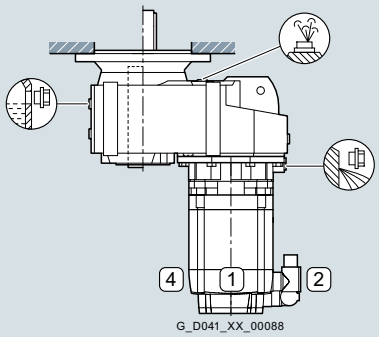 **M2**	**D02**
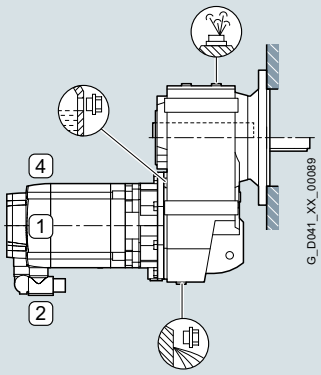 **M3**	**D03**
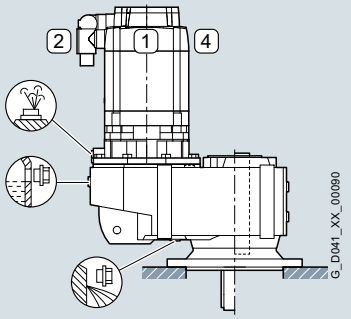 **M4**	**D04**
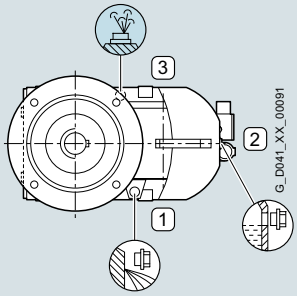 **M5**	**D05**
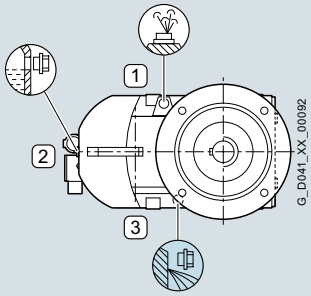 **M6**	**D06**

8

© Siemens 2019

Options

Gearbox size 29 – Gearbox types FZ.29 and FD.29

Mounting positions, position of oil valves and connector

Gearbox size 29 is lubricated for life.

Mounting position	Add. identification code **-Z** with order code 1FG13 . . - . . . . . - . A . . **-Z** 1FG14 . . - . . . . . - . A . . **-Z** Order code
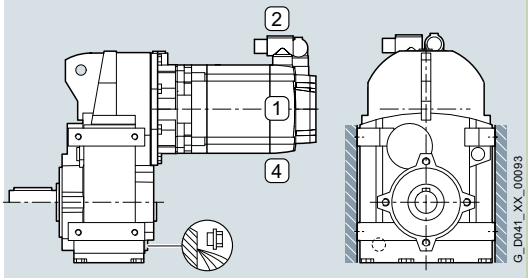 **M1**	**D01**
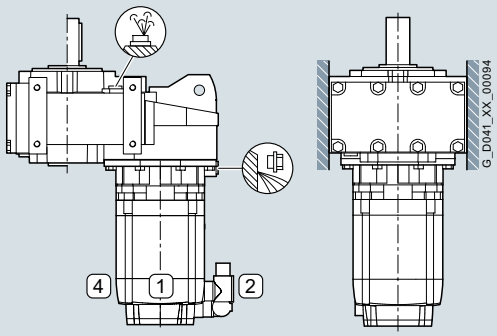 **M2**	**D02**
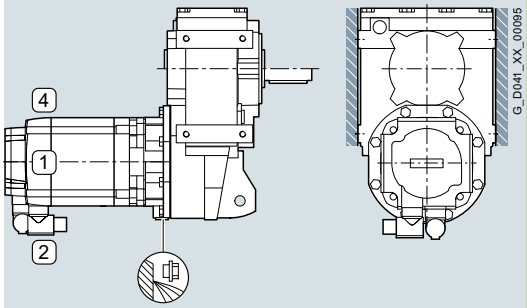 **M3**	**D03**
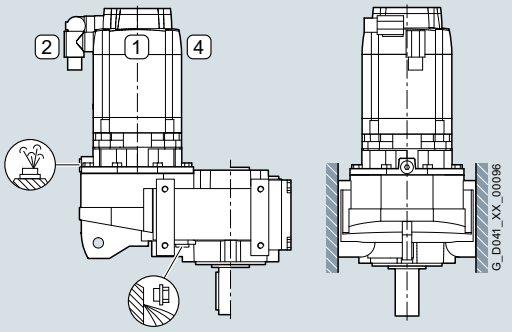 **M4**	**D04**
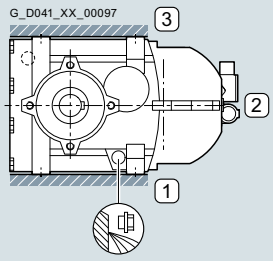 **M5**	**D05**
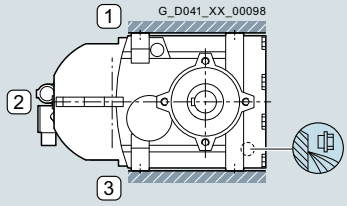 **M6**	**D06**

8

© Siemens 2019

Options (continued)

Gearbox sizes 39 to 129 – Gearbox types FZ.39 to FZ.129 and FD.39 to FD.129

Mounting positions, position of oil valves and connector

Mounting position	Add. identification code **-Z** with order code 1FG13 . . - . . . . . - . A . . **-Z** 1FG14 . . - . . . . . - . A . . **-Z** Order code
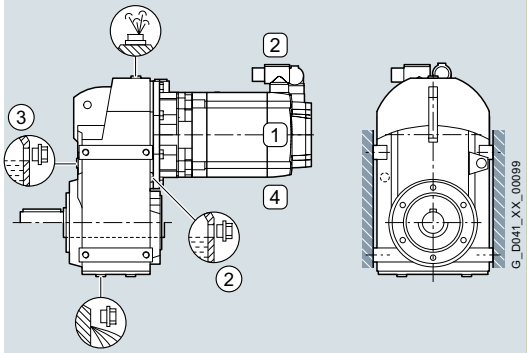 **M1**	**D01**
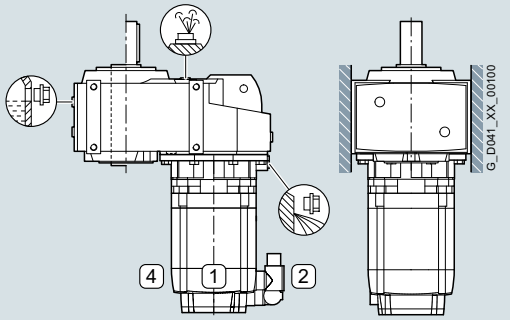 **M2**	**D02**
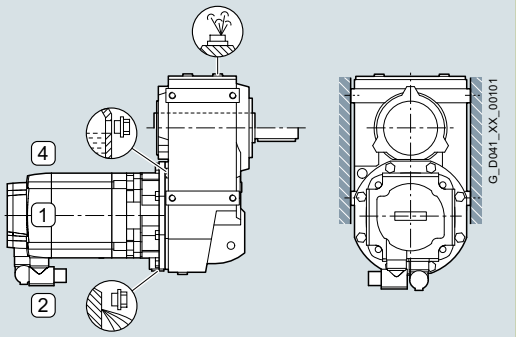 **M3**	**D03**
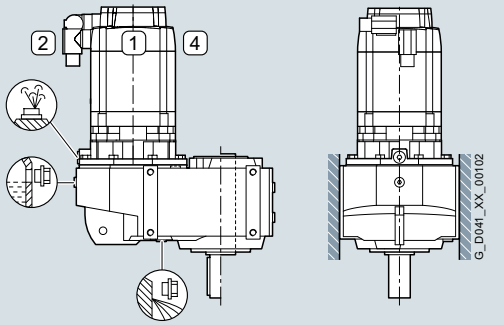 **M4**	**D04**
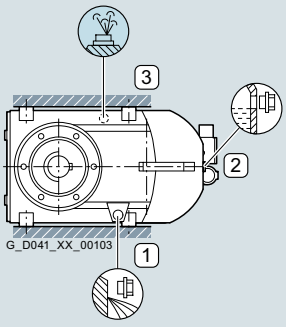 **M5**	**D05**
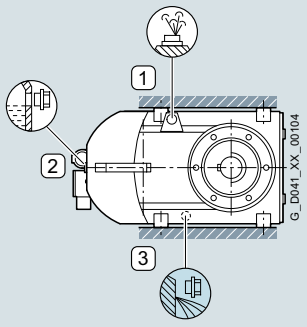 **M6**	**D06**

8

© Siemens 2019

Options

Gearbox sizes 19, 29 – Gearbox type B19, B29

Mounting positions, position of oil valves and connector

Gearbox sizes 19 and 29 are lubricated for life.

Mounting position	Add. identification code **-Z** with order code
1FG15 . . - . . . . . - . A . . **-Z**	Order code
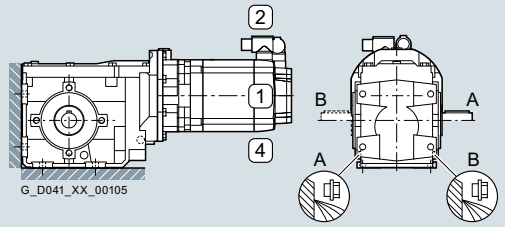 G_D041_XX_00105	
M1-A (output side A)	**D11**
M1-B (output side B)	**D21**
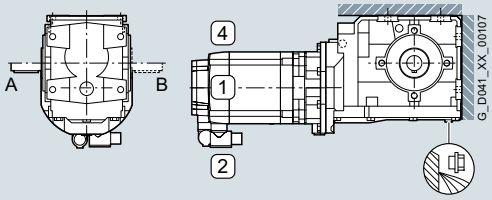 G_D041_XX_00107	
M3-A (output side A)	**D13**
M3-B (output side B)	**D23**
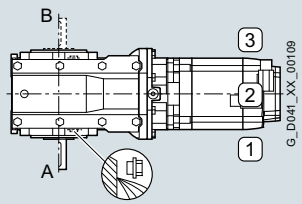 G_D041_XX_00109	
M5-A (output side A)	**D15**
M5-B (output side B)	**D25**

Mounting position	Add. identification code **-Z** with order code
1FG15 . . - . . . . . - . A . . **-Z**	Order code
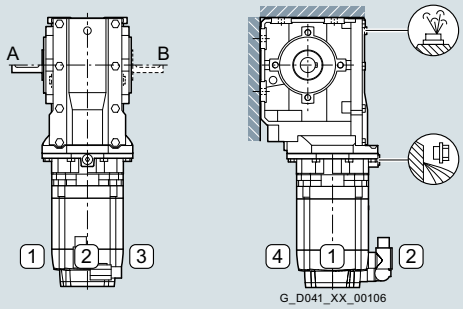 G_D041_XX_00106	
M2-A (output side A)	**D12**
M2-B (output side B)	**D22**
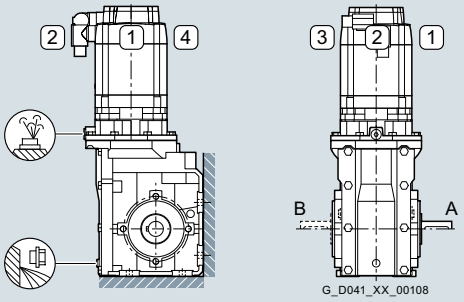 G_D041_XX_00108	
M4-A (output side A)	**D14**
M4-B (output side B)	**D24**
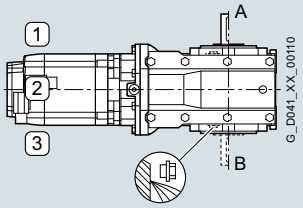 G_D041_XX_00110	
M6-A (output side A)	**D16**
M6-B (output side B)	**D26**

8

© Siemens 2019

Options (continued)

Gearbox sizes 39, 49 – Gearbox types B39 and B49

Mounting positions, position of oil valves and connector

Mounting position	Add. identification code **-Z** with order code
1FG15 . . - . . . . . - . A . . **-Z**	Order code
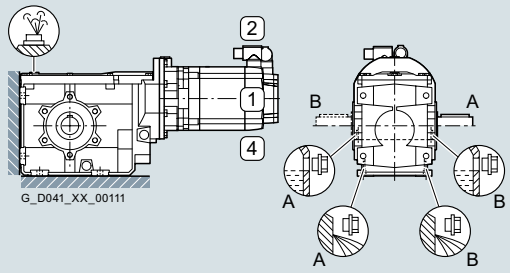	
M1-A (output side A)	**D11**
M1-B (output side B)	**D21**
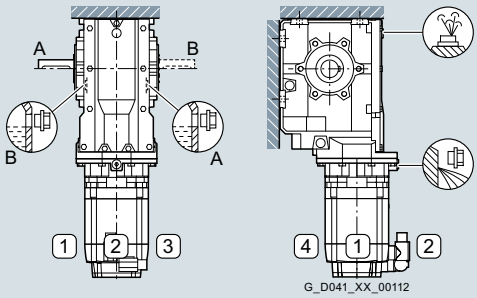	
M2-A (output side A)	**D12**
M2-B (output side B)	**D22**
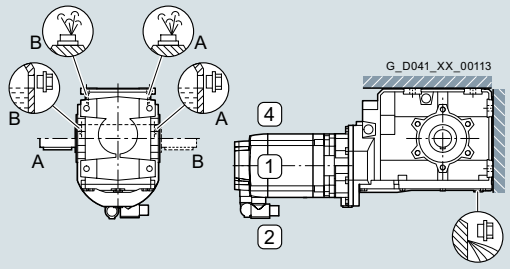	
M3-A (output side A)	**D13**
M3-B (output side B)	**D23**
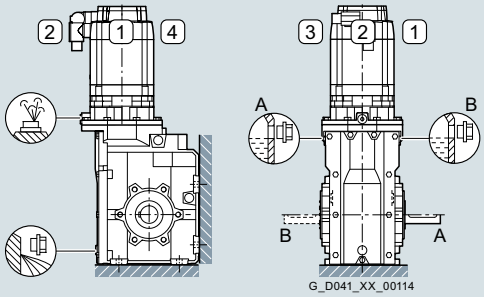	
M4-A (output side A)	**D14**
M4-B (output side B)	**D24**
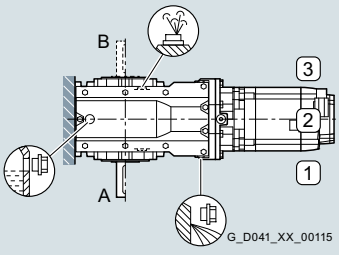	
M5-A (output side A)	**D15**
M5-B (output side B)	**D25**
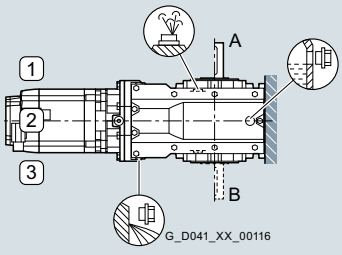	
M6-A (output side A)	**D16**
M6-B (output side B)	**D26**

© Siemens 2019

Options

Gearbox sizes 19, 29 – Gearbox types B.Z19, B.Z29 and B.F19, B.F29

Mounting positions, position of oil valves and connector

Gearbox sizes 19 and 29 are lubricated for life.

Mounting position 1FG15 . . - . . . . . - . F . . **-Z**, 1FG15 . . - . . . . . - . H . . **-Z**	Add. identification code **-Z** with order code Order code
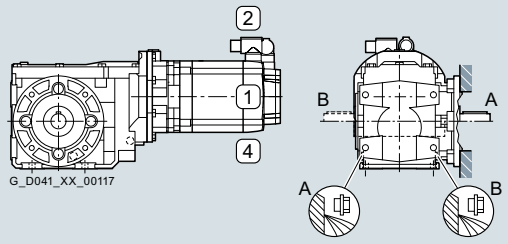	
M1-A (output side A)	**D11**
M1-B (output side B)	**D21**
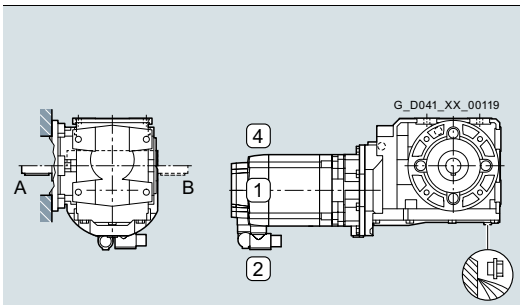	
M3-A (output side A)	**D13**
M3-B (output side B)	**D23**
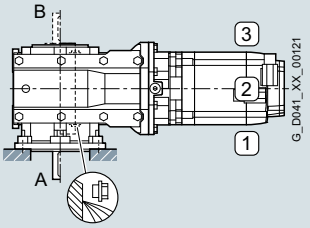	
M5-A (output side A)	**D15**
M5-B (output side B)	**D25**

Mounting position 1FG15 . . - . . . . . - . F . . **-Z**, 1FG15 . . - . . . . . - . H . . **-Z**	Add. identification code **-Z** with order code Order code
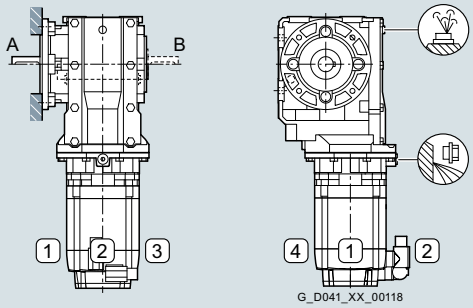	
M2-A (output side A)	**D12**
M2-B (output side B)	**D22**
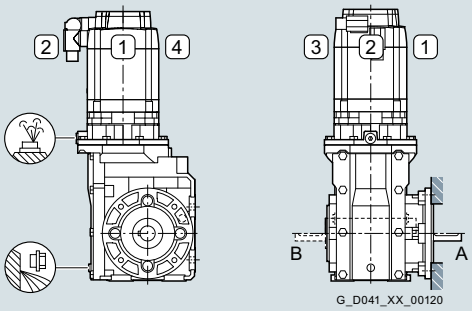	
M4-A (output side A)	**D14**
M4-B (output side B)	**D24**
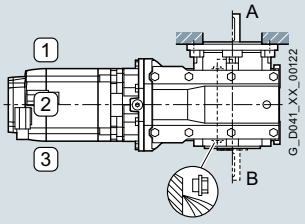	
M6-A (output side A)	**D16**
M6-B (output side B)	**D26**

© Siemens 2019

Options (continued)

Gearbox sizes 39, 49 – Gearbox types B.Z39 and B.Z49 or B.F39 and B.F49

Mounting positions, position of oil valves and connector

Mounting position	Add. identification code **-Z** with order code
1FG15 . . - . . . . . - . F . . **-Z**, 1FG15 . . - . . . . . - . H . . **-Z**	Order code
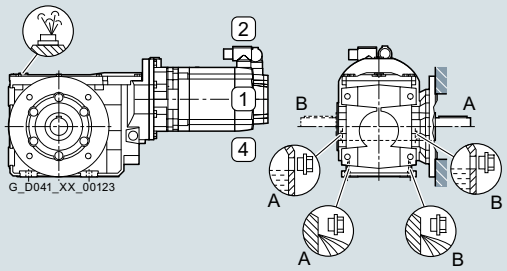	
M1-A (output side A)	**D11**
M1-B (output side B)	**D21**
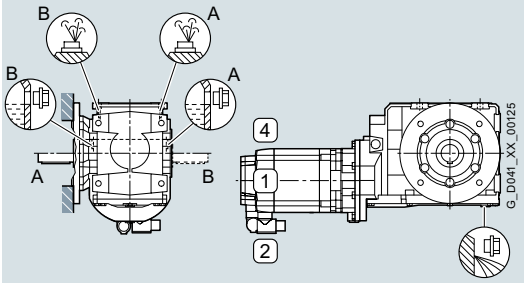	
M3-A (output side A)	**D13**
M3-B (output side B)	**D23**
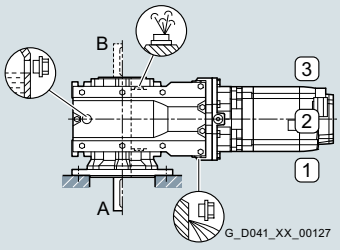	
M5-A (output side A)	**D15**
M5-B (output side B)	**D25**

Mounting position	Add. identification code **-Z** with order code
1FG15 . . - . . . . . - . F . . **-Z**, 1FG15 . . - . . . . . - . H . . **-Z**	Order code
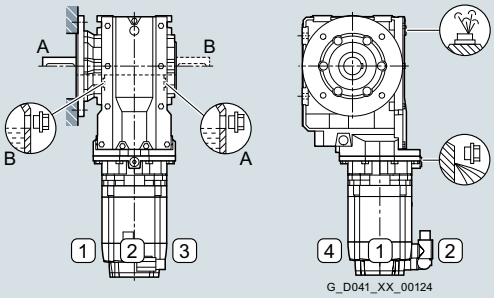	
M2-A (output side A)	**D12**
M2-B (output side B)	**D22**
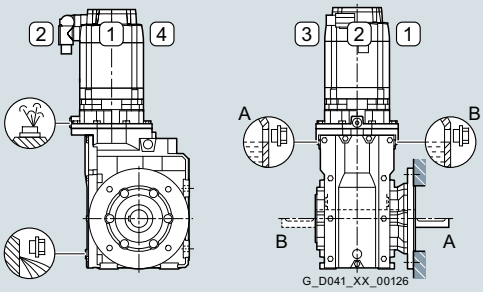	
M4-A (output side A)	**D14**
M4-B (output side B)	**D24**
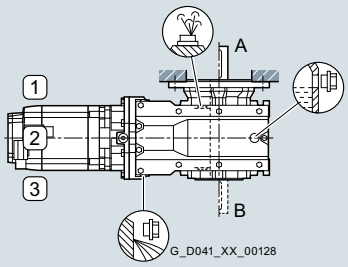	
M6-A (output side A)	**D16**
M6-B (output side B)	**D26**

8

© Siemens 2019

Options

Gearbox sizes 19, 29 – Gearbox types BAD19, BAD29

Mounting positions, position of oil valves and connector

Gearbox sizes 19 and 29 are lubricated for life.

Mounting position	Add. identification code **-Z** with order code
1FG15 . . - 5 . . . . - . D . . **-Z**	Order code
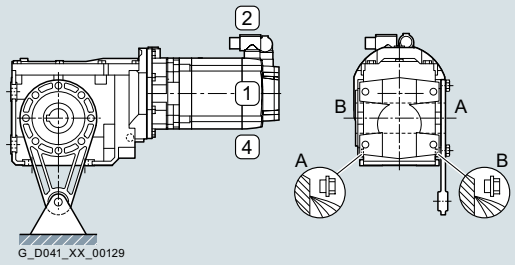 G_D041_XX_00129	
M1-A (output side A)	**D11**
M1-B (output side B)	**D21**
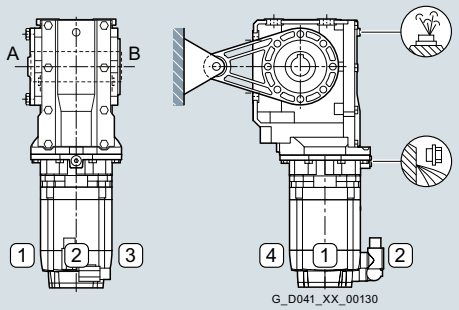 G_D041_XX_00130	
M2-A (output side A)	**D12**
M2-B (output side B)	**D22**
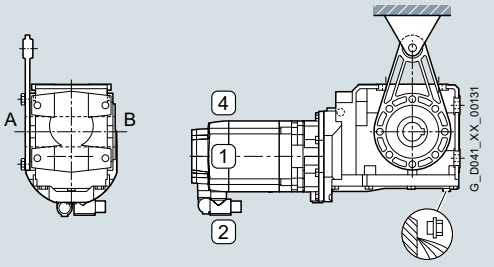 G_D041_XX_00131	
M3-A (output side A)	**D13**
M3-B (output side B)	**D23**
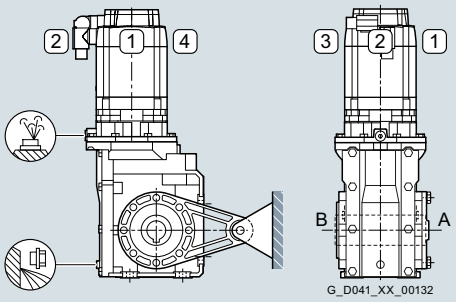 G_D041_XX_00132	
M4-A (output side A)	**D14**
M4-B (output side B)	**D24**
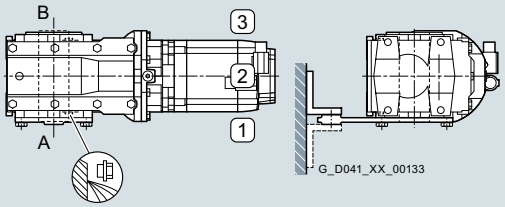 G_D041_XX_00133	
M5-A (output side A)	**D15**
M5-B (output side B)	**D25**
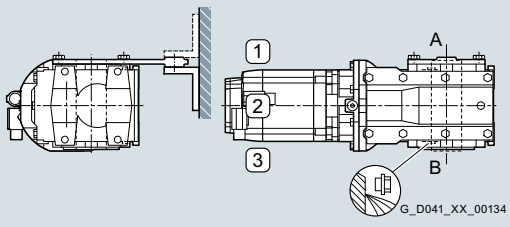 G_D041_XX_00134	
M6-A (output side A)	**D16**
M6-B (output side B)	**D26**

© Siemens 2019

Options (continued)

Gearbox sizes 39, 49 – Gearbox types BAD39 and BAD49

Mounting positions, position of oil valves and connector

Mounting position	Add. identification code **-Z** with order code
1FG15 . . - 5 . . . . - . D . . **-Z**	Order code
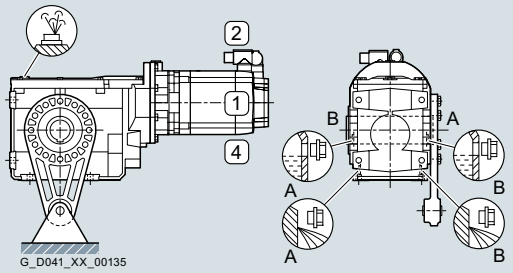	
M1-A (output side A)	**D11**
M1-B (output side B)	**D21**
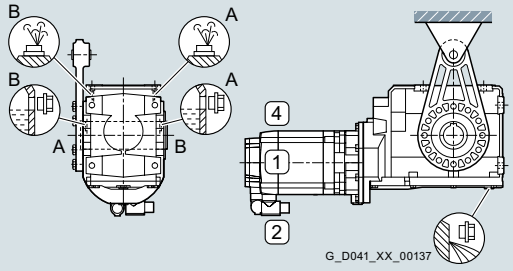	
M3-A (output side A)	**D13**
M3-B (output side B)	**D23**
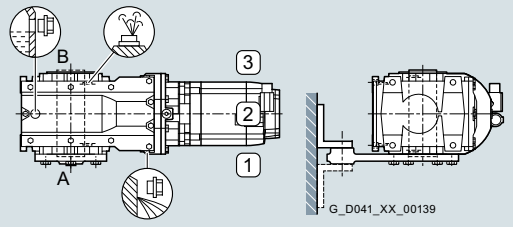	
M5-A (output side A)	**D15**
M5-B (output side B)	**D25**

Mounting position	Add. identification code **-Z** with order code
1FG15 . . - 5 . . . . - . D . . **-Z**	Order code
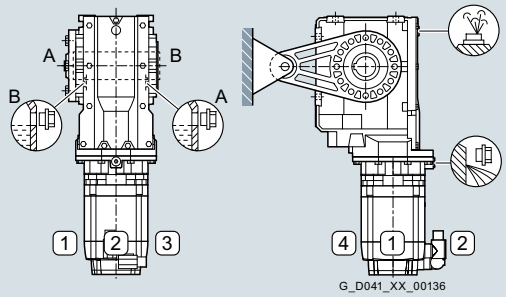	
M2-A (output side A)	**D12**
M2-B (output side B)	**D22**
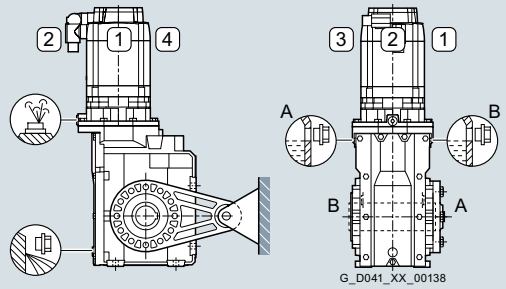	
M4-A (output side A)	**D14**
M4-B (output side B)	**D24**
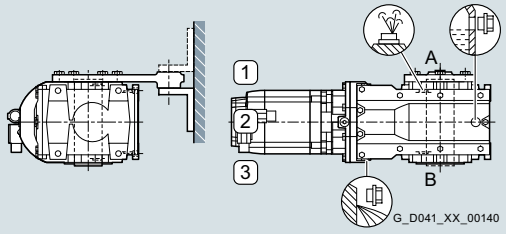	
M6-A (output side A)	**D16**
M6-B (output side B)	**D26**

© Siemens 2019

Options

Gearbox sizes 39 to 149 – Gearbox types K39 to K149

Mounting positions, position of oil valves and connector

Mounting position	Add. identification code **-Z** with order code
1FG15 . . - . . . . . - . A . . **-Z**	Order code
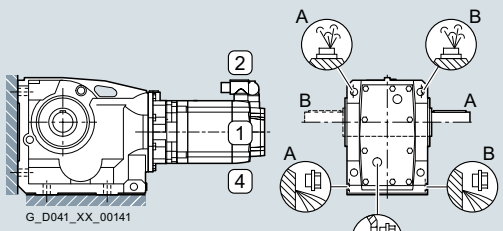 G_D041_XX_00141	
M1-A (output side A)	**D11**
M1-B (output side B)	**D21**
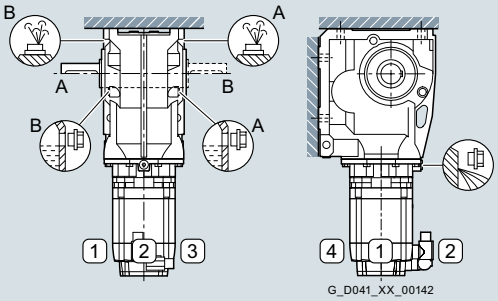 G_D041_XX_00142	
M2-A (output side A)	**D12**
M2-B (output side B)	**D22**
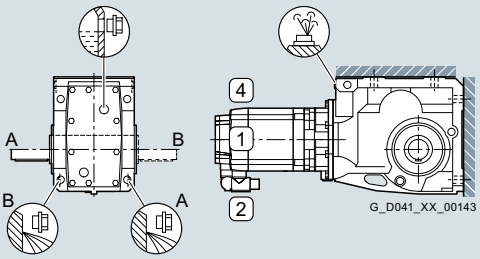 G_D041_XX_00143	
M3-A (output side A)	**D13**
M3-B (output side B)	**D23**
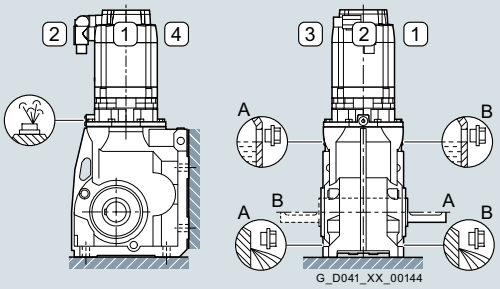 G_D041_XX_00144	
M4-A (output side A)	**D14**
M4-B (output side B)	**D24**
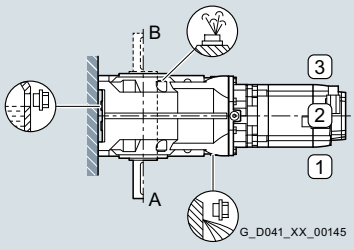 G_D041_XX_00145	
M5-A (output side A)	**D15**
M5-B (output side B)	**D25**
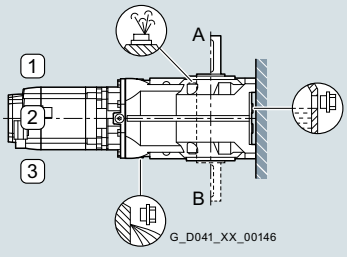 G_D041_XX_00146	
M6-A (output side A)	**D16**
M6-B (output side B)	**D26**

© Siemens 2019

Options

Gearbox sizes 39 to 149 – Gearbox types K.Z39 to K.Z149 or K.F39 to K.F149

Mounting positions, position of oil valves and connector

Mounting position	Add. identification code **-Z** with order code
1FG15 . . - . . . . . - . F . . **-Z**, 1FG15 . . - . . . . . - . H . . **-Z**	Order code
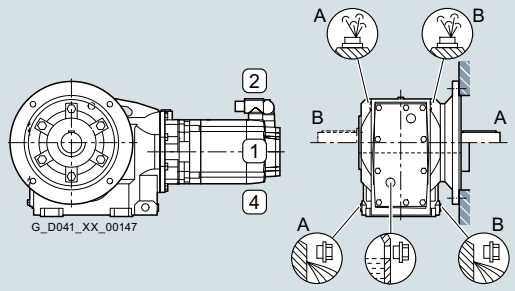	
M1-A (output side A)	**D11**
M1-B (output side B)	**D21**
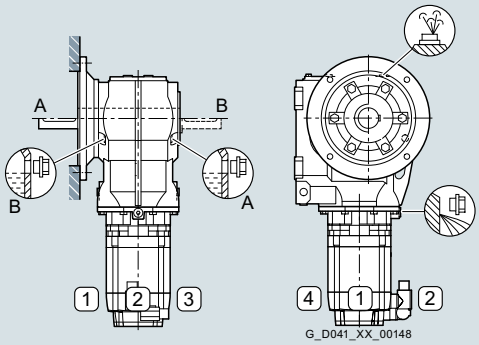	
M2-A (output side A)	**D12**
M2-B (output side B)	**D22**
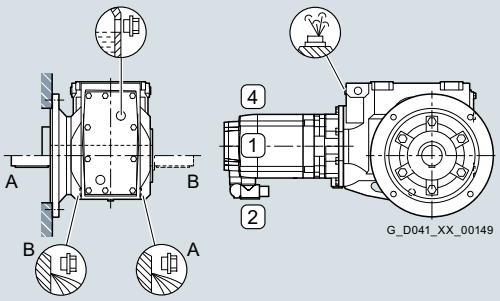	
M3-A (output side A)	**D13**
M3-B (output side B)	**D23**
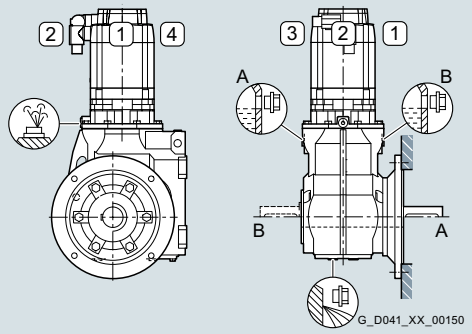	
M4-A (output side A)	**D14**
M4-B (output side B)	**D24**
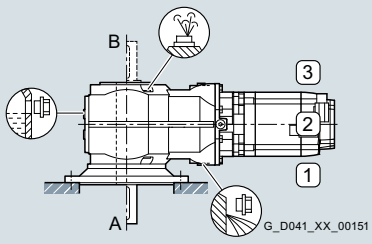	
M5-A (output side A)	**D15**
M5-B (output side B)	**D25**
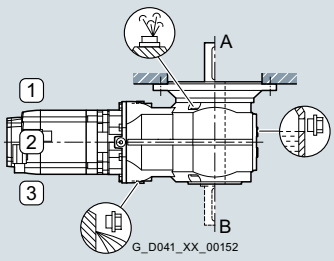	
M6-A (output side A)	**D16**
M6-B (output side B)	**D26**

© Siemens 2019

Options

Gearbox sizes 39 to 149 – Gearbox types KAD39 to KAD149

Mounting positions, position of oil valves and connector

Mounting position	Add. identification code **-Z** with order code
1FG15 . . - 5 . . . . - . C. . **-Z**	Order code
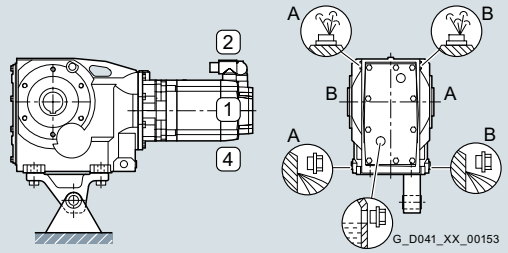	
M1-A (output side A)	**D11**
M1-B (output side B)	**D21**
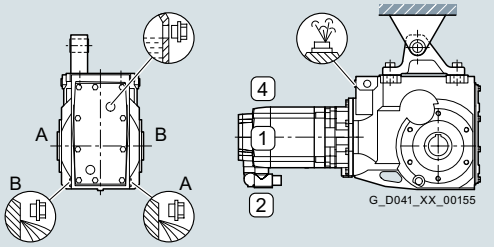	
M3-A (output side A)	**D13**
M3-B (output side B)	**D23**
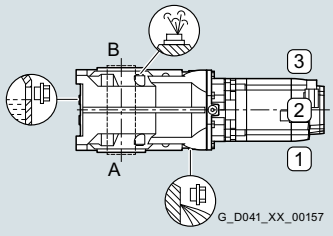	
M5-A (output side A)	**D15**
M5-B (output side B)	**D25**

Mounting position	Add. identification code **-Z** with order code
1FG15 . . - 5 . . . . - . C . . **-Z**	Order code
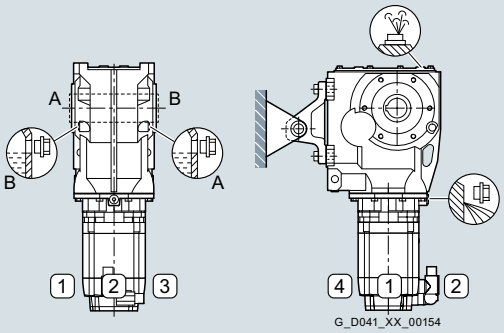	
M2-A (output side A)	**D12**
M2-B (output side B)	**D22**
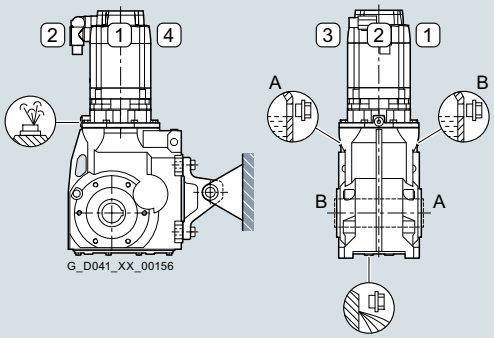	
M4-A (output side A)	**D14**
M4-B (output side B)	**D24**
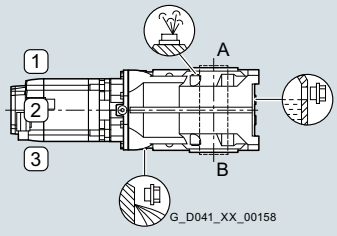	
M6-A (output side A)	**D16**
M6-B (output side B)	**D26**

© Siemens 2019

Options

Gearbox size 29 – Gearbox type CAD29

Mounting positions, position of oil valves and connector

Gearbox size 29 is lubricated for life.

Mounting position	Add. identification code **-Z** with order code
1FG16 . . - 5 . . . . - . D . . **-Z**	Order code
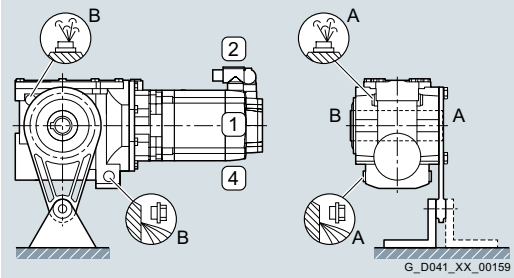	
M1-A (output side A)	**D11**
M1-B (output side B)	**D21**

Mounting position	Add. identification code **-Z** with order code
1FG16 . . - 5 . . . . - . D . . **-Z**	Order code
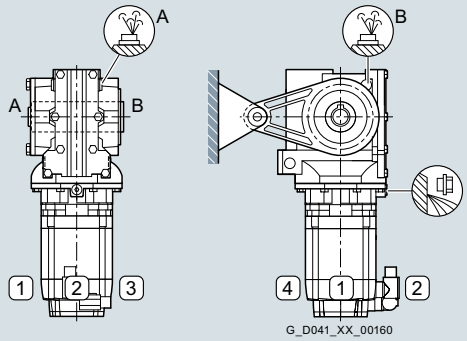	
M2-A (output side A)	**D12**
M2-B (output side B)	**D22**

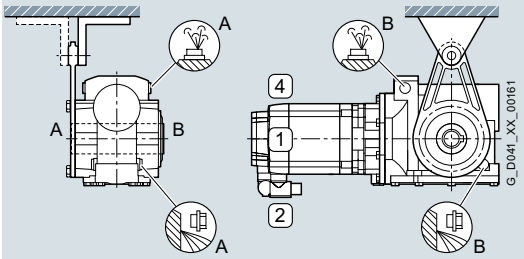	
M3-A (output side A)	**D13**
M3-B (output side B)	**D23**

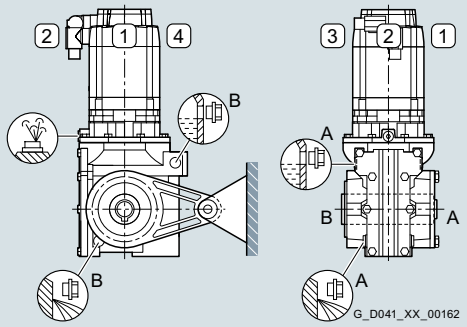	
M4-A (output side A)	**D14**
M4-B (output side B)	**D24**

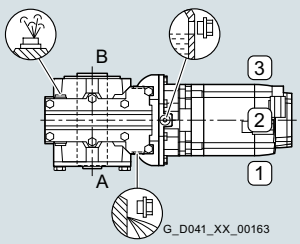	
M5-A (output side A)	**D15**
M5-B (output side B)	**D25**

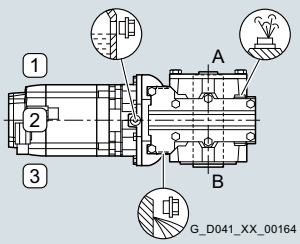	
M6-A (output side A)	**D16**
M6-B (output side B)	**D26**

© Siemens 2019

Options (continued)

Gearbox sizes 39 to 89 – Gearbox types CAD39 to CAD89

Mounting positions, position of oil valves and connector

Mounting position	Add. identification code **-Z** with order code
1FG16 . . - 5 . . . . - . D . . **-Z**	Order code
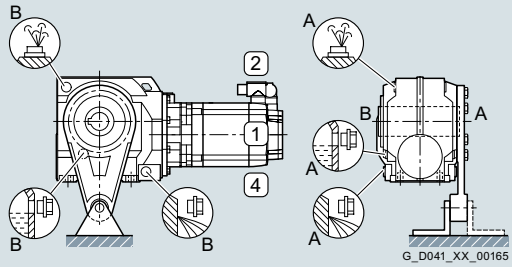	
M1-A (output side A)	**D11**
M1-B (output side B)	**D21**
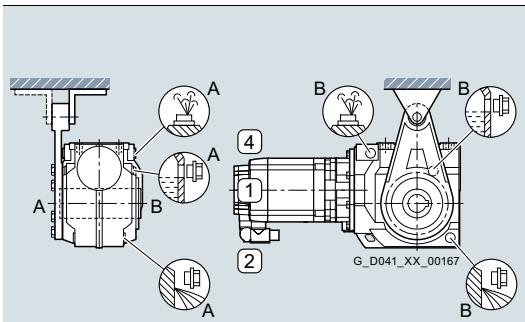	
M3-A (output side A)	**D13**
M3-B (output side B)	**D23**
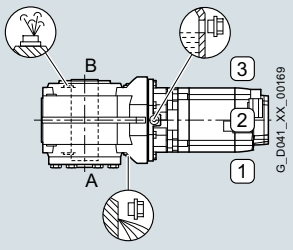	
M5-A (output side A)	**D15**
M5-B (output side B)	**D25**

Mounting position	Add. identification code **-Z** with order code
1FG16 . . - 5 . . . . - . D . . **-Z**	Order code
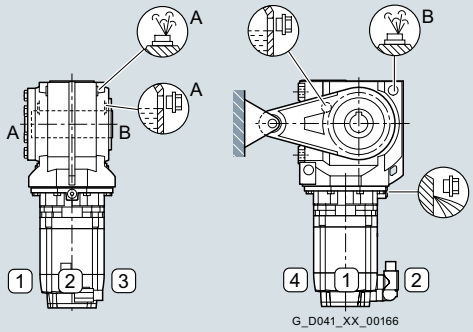	
M2-A (output side A)	**D12**
M2-B (output side B)	**D22**
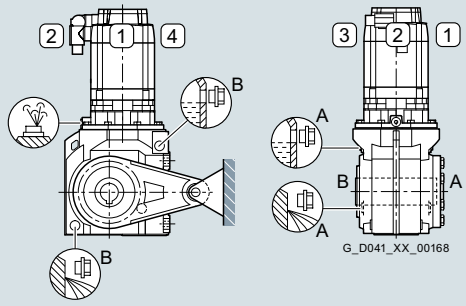	
M4-A (output side A)	**D14**
M4-B (output side B)	**D24**
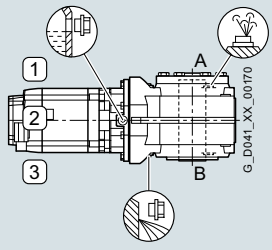	
M6-A (output side A)	**D16**
M6-B (output side B)	**D26**

8

© Siemens 2019

Options

Gearbox size 29 – Gearbox types C.Z29 and C.F29

Mounting positions, position of oil valves and connector

Gearbox size 29 is lubricated for life.

Mounting position	Add. identification code **-Z** with order code
1FG16 . . - . . . . . - . F . . **-Z**, 1FG16 . . - . . . . . - . H . . **-Z**	Order code
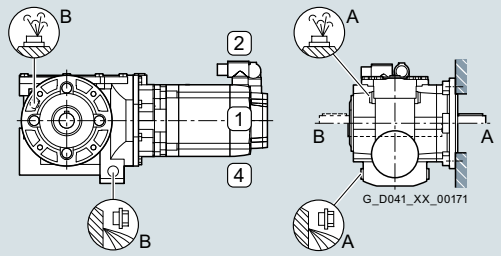	
M1-A (output side A)	**D11**
M1-B (output side B)	**D21**
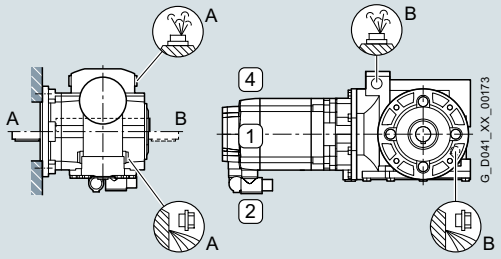	
M3-A (output side A)	**D13**
M3-B (output side B)	**D23**
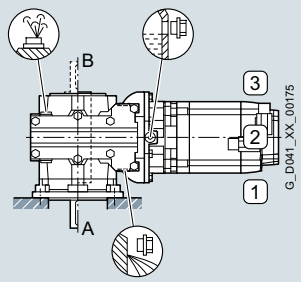	
M5-A (output side A)	**D15**
M5-B (output side B)	**D25**

Mounting position	Add. identification code **-Z** with order code
1FG16 . . - . . . . . - . F . . **-Z**, 1FG16 . . - . . . . . - . H . . **-Z**	Order code
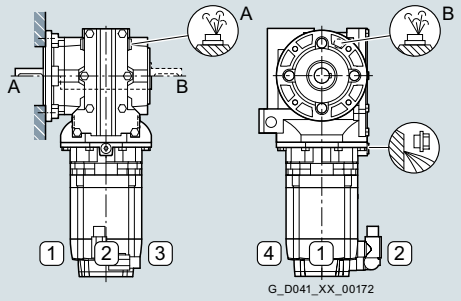	
M2-A (output side A)	**D12**
M2-B (output side B)	**D22**
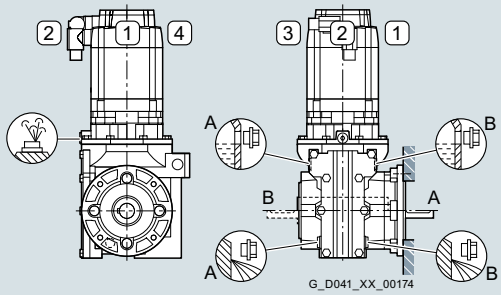	
M4-A (output side A)	**D14**
M4-B (output side B)	**D24**
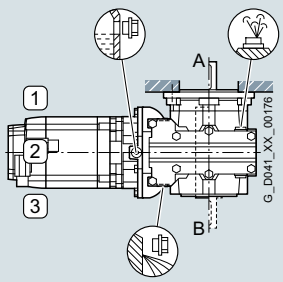	
M6-A (output side A)	**D16**
M6-B (output side B)	**D26**

© Siemens 2019

Options (continued)

Gearbox sizes 39 to 89 – Gearbox types CAZ39 to CAZ89 or C.F39 to C.F89

Mounting positions, position of oil valves and connector

Mounting position	Add. identification code **-Z** with order code
1FG16 . . - . . . . . - . F . . **-Z**, 1FG16 . . - . . . . . - . H . . **-Z**	Order code
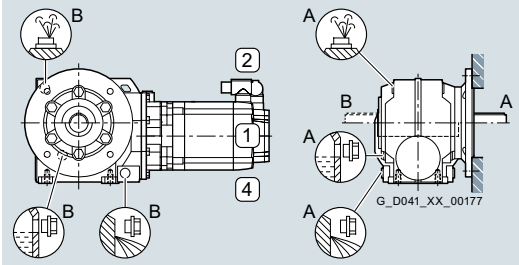	
M1-A (output side A)	**D11**
M1-B (output side B)	**D21**
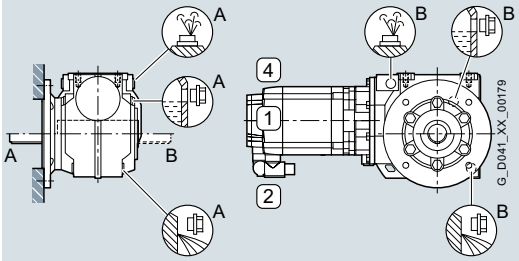	
M3-A (output side A)	**D13**
M3-B (output side B)	**D23**
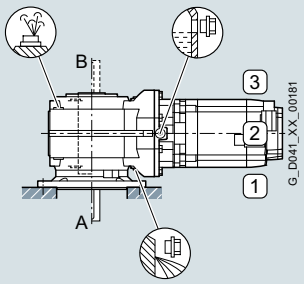	
M5-A (output side A)	**D15**
M5-B (output side B)	**D25**

Mounting position	Add. identification code **-Z** with order code
1FG16 . . - . . . . . - . F . . **-Z**, 1FG16 . . - . . . . . - . H . . **-Z**	Order code
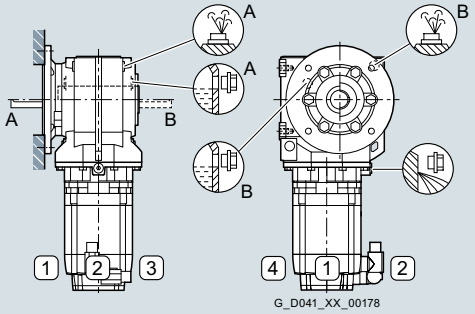	
M2-A (output side A)	**D12**
M2-B (output side B)	**D22**
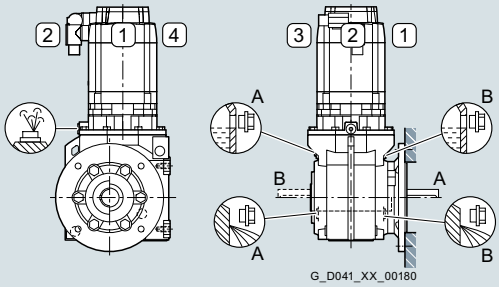	
M4-A (output side A)	**D14**
M4-B (output side B)	**D24**
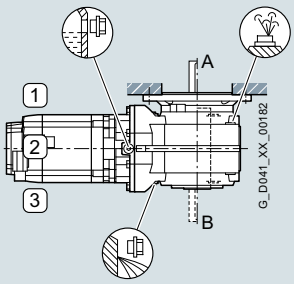	
M6-A (output side A)	**D16**
M6-B (output side B)	**D26**

8

© Siemens 2019

Options

Gearbox size 29 – Gearbox type C29

Mounting positions, position of oil valves and connector

Gearbox size 29 is lubricated for life.

Mounting position	Add. identification code **-Z** with order code
1FG16 . . - . . . . . - . A . . **-Z**	Order code
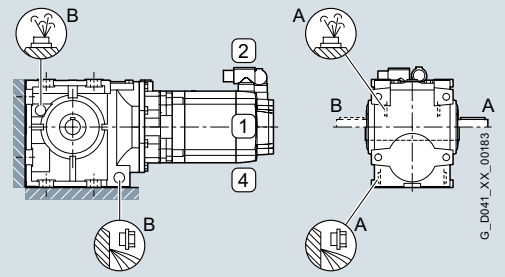	
M1-A (output side A)	**D11**
M1-B (output side B)	**D21**
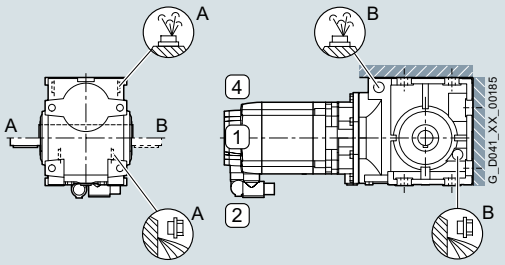	
M3-A (output side A)	**D13**
M3-B (output side B)	**D23**
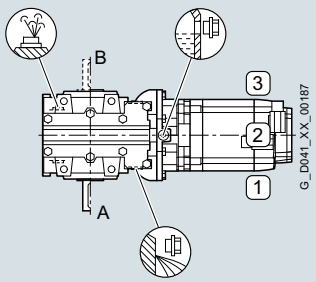	
M5-A (output side A)	**D15**
M5-B (output side B)	**D25**

Mounting position	Add. identification code **-Z** with order code
1FG16 . . - . . . . . - . A . . **-Z**	Order code
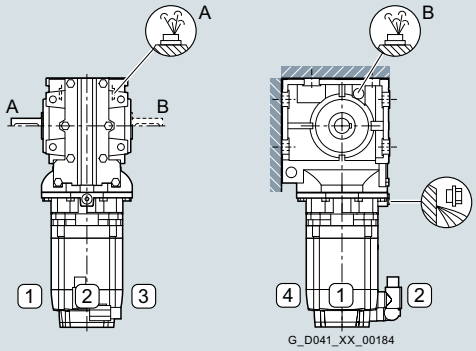	
M2-A (output side A)	**D12**
M2-B (output side B)	**D22**
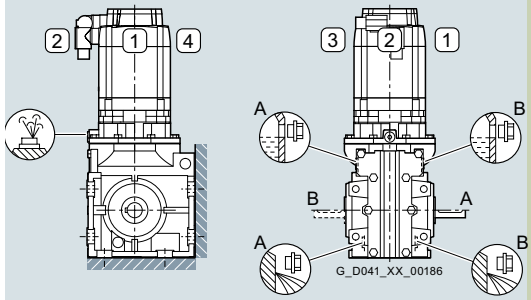	
M4-A (output side A)	**D14**
M4-B (output side B)	**D24**
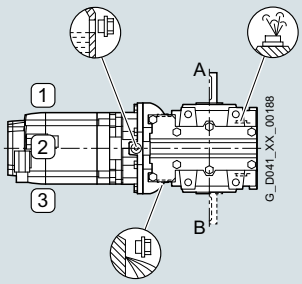	
M6-A (output side A)	**D16**
M6-B (output side B)	**D26**

8

© Siemens 2019

Options (continued)

Gearbox sizes 39 to 89 – Gearbox types C39 to C89

Mounting positions, position of oil valves and connector

Mounting position	Add. identification code **-Z** with order code
1FG16 . . - . . . . . - . A . . **-Z**	Order code
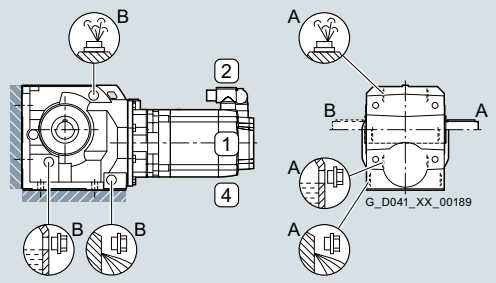	
M1-A (output side A)	**D11**
M1-B (output side B)	**D21**
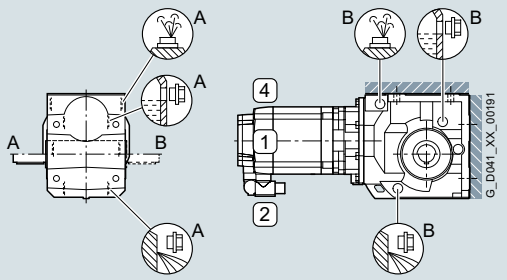	
M3-A (output side A)	**D13**
M3-B (output side B)	**D23**
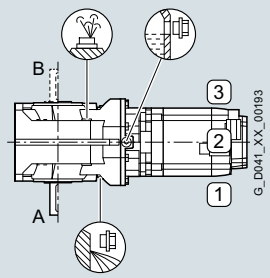	
M5-A (output side A)	**D15**
M5-B (output side B)	**D25**

Mounting position	Add. identification code **-Z** with order code
1FG16 . . - . . . . . - . A . . **-Z**	Order code
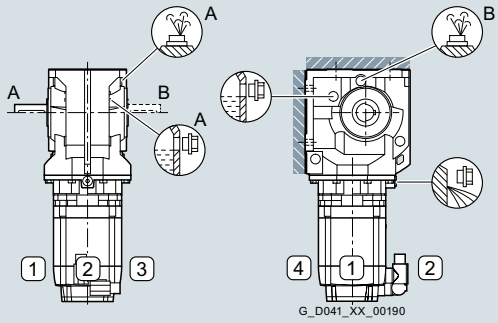	
M2-A (output side A)	**D12**
M2-B (output side B)	**D22**
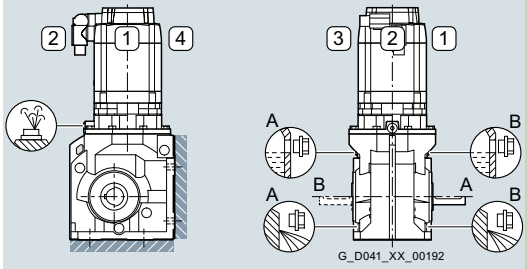	
M4-A (output side A)	**D14**
M4-B (output side B)	**D24**
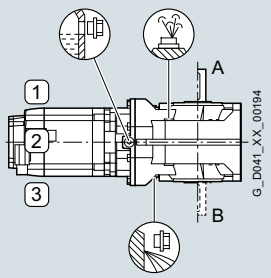	
M6-A (output side A)	**D16**
M6-B (output side B)	**D26**

8

© Siemens 2019

Options

Apart from the standard types of construction, geared motors can also be supplied in different angled positions.

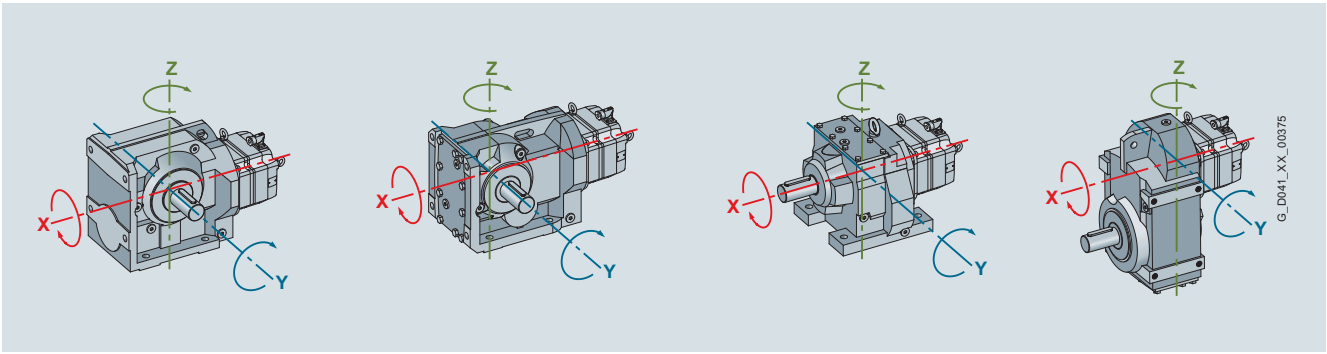

Axes of rotation of the geared motors

Y axis		X axis		Z axis	
Add. identification code **-Z** with order code		Add. identification code **-Z** with order code		Add. identification code **-Z** with order code	
1FG1 . . . - . . . . . - . . . . **-Z**	Order code	1FG1 . . . - . . . . . - . . . . **-Z**	Order code	1FG1 . . . - . . . . . - . . . . **-Z**	Order code
Rotation angle 5°	**E01**	Rotation angle 5°	**E21**	Rotation angle 5°	**E41**
Rotation angle 10°	**E02**	Rotation angle 10°	**E22**	Rotation angle 10°	**E42**
Rotation angle 15°	**E03**	Rotation angle 15°	**E23**	Rotation angle 15°	**E43**
Rotation angle 20°	**E04**	Rotation angle 20°	**E24**	Rotation angle 20°	**E44**
Rotation angle 25°	**E05**	Rotation angle 25°	**E25**	Rotation angle 25°	**E45**
Rotation angle 30°	**E06**	Rotation angle 30°	**E26**	Rotation angle 30°	**E46**
Rotation angle 35°	**E07**	Rotation angle 35°	**E27**	Rotation angle 35°	**E47**
Rotation angle 40°	**E08**	Rotation angle 40°	**E28**	Rotation angle 40°	**E48**
Rotation angle 45°	**E09**	Rotation angle 45°	**E29**	Rotation angle 45°	**E49**
Rotation angle 50°	**E10**	Rotation angle 50°	**E30**	Rotation angle 50°	**E50**
Rotation angle 55°	**E11**	Rotation angle 55°	**E31**	Rotation angle 55°	**E51**
Rotation angle 60°	**E12**	Rotation angle 60°	**E32**	Rotation angle 60°	**E52**
Rotation angle 65°	**E13**	Rotation angle 65°	**E33**	Rotation angle 65°	**E53**
Rotation angle 70°	**E14**	Rotation angle 70°	**E34**	Rotation angle 70°	**E54**
Rotation angle 75°	**E15**	Rotation angle 75°	**E35**	Rotation angle 75°	**E55**
Rotation angle 80°	**E16**	Rotation angle 80°	**E36**	Rotation angle 80°	**E56**
Rotation angle 85°	**E17**	Rotation angle 85°	**E37**	Rotation angle 85°	**E57**

© Siemens 2019

Options

The torque arm for the shaft-mounted design can be screwed to the gearbox housing at various positions.

Design					Add. identification code **-Z** with order code	
Servo bevel geared motors 2-stage – hollow shaft design						
Bevel gearbox *BAD.* (2-stage)					1FG15 . . - . . . . . - . D . . **-Z**	
Gearbox size	***19***	***29***	***39***	***49***		Order code
Torque arm	□	□	–	–		–
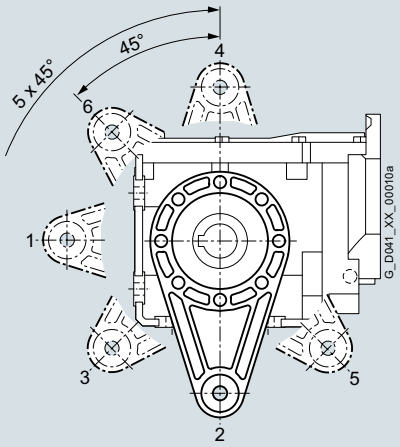						
Torque arm with altered hole circle	–	–	□	□		–
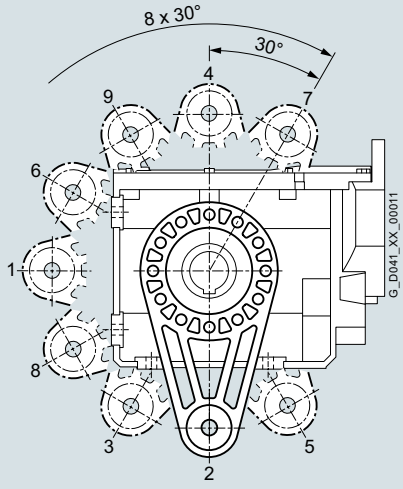						

□ Standard version

© Siemens 2019

Options (continued)

Design						Add. identification code **-Z** with order code	
Servo helical worm geared motors 2-stage – hollow shaft design							
Helical worm gearbox *CAD*						1FG16 . . - . . . . . - . D . . **-Z**	
Gearbox size	***29***	***39***	***49***	***69***	***89***		Order code
Torque arm	□	□	□	□	□		**–**
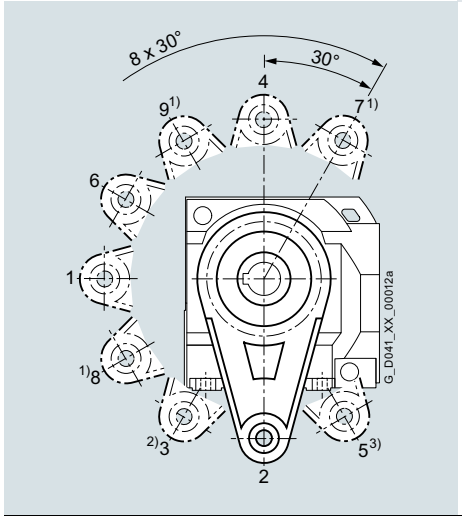							
Torque arm with altered hole circle	–	✓	✓	✓	✓		**G10**
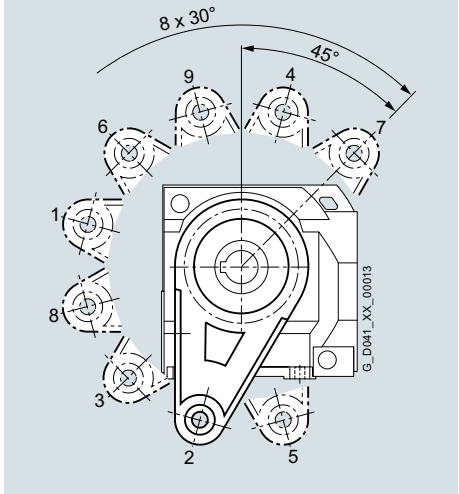							

□ Standard version

[1] Position not possible with gearbox size 29/type *CAD.29*.

[2] Position not possible with gearbox sizes 39 and 69/types *CAD.39* and *CAD.69*.

[3] Position not possible with gearbox size 29/type *CAD.29*. and 39/type *CAD.39*.

© Siemens 2019

Options

Design											Add. identification code **-Z** with Order code	
Servo parallel shaft geared motors 2-stage, 3-stage – hollow shaft design												
Parallel shaft gearboxes *FZA* and *FDA*											1FG13 . . - 5 . . . . - . . . . **-Z** 1FG14 . . - 5 . . . . - . . . . **-Z**	
Gearbox size	**–**	***29***	***39***	***49***	***69***	***79***	***89***	***109***	***129***	**–**		Order code
Fixed protection cover	–	✓	✓	✓	✓	✓	✓	✓	✓	–		**G60**
Servo parallel shaft geared motors 2-stage, 3-stage – hollow shaft design with shrink disk												
Parallel shaft gearboxes *FZA.S* and *FDA.S*											1FG13 . . - 9 . . . . - . . . . **-Z** H3A 1FG14 . . - 9 . . . . - . . . . **-Z** H3A	
Gearbox size	**–**	***29***	***39***	***49***	***69***	***79***	***89***	***109***	***129***	**–**		Order code
Fixed protection cover	–	✓	✓	✓	✓	✓	✓	✓	✓	–		**G60**
Servo bevel geared motors 2-stage, 3-stage – hollow shaft design												
Bevel gearbox *B* (2-stage)											1FG15 . . - 5 . . . . - . . . . **-Z**	
Gearbox size	***19***	***29***	***39***	***49***	**–**	**–**	**–**	**–**	**–**	**–**		Order code
Fixed protection cover	–	✓	✓	✓	–	–	–	–	–	–		**G60**
Bevel gearbox *K* (3-stage)											1FG15 . . - 5 . . . . - . . . . **-Z**	
Gearbox size	**–**	**–**	***39***	***49***	***69***	***79***	***89***	***109***	***129***	***149***		Order code
Fixed protection cover	–	–	✓	✓	✓	✓	✓	✓	✓	✓		**G60**
Servo bevel geared motors 2-stage, 3-stage – hollow shaft design with shrink disk												
Bevel gearbox *B* (2-stage)											1FG15 . . - 9 . . . . - . . . . **-Z** H3A	
Gearbox size	***19***	***29***	***39***	***49***	**–**	**–**	**–**	**–**	**–**	**–**		Order code
Fixed protection cover	–	✓	✓	✓	–	–	–	–	–	–		**G60**
Bevel gearbox *K* (3-stage)											1FG15 . . - 9 . . . . - . . . . **-Z** H3A	
Gearbox size	**–**	**–**	***39***	***49***	***69***	***79***	***89***	***109***	***129***	***149***		Order code
Fixed protection cover [1]	–	–	✓	✓	✓	✓	✓	✓	✓	✓		**G60**
Servo helical worm geared motors 2-stage – hollow shaft design												
Helical worm gearbox *C*											1FG16 . . - 5 . . . . - . . . . **-Z**	
Gearbox size	**–**	***29***	***39***	***49***	***69***	***89***	**–**	**–**	**–**	**–**		Order code
Fixed protection cover	–	✓	✓	✓	✓	✓	–	–	–	–		**G60**
Servo helical worm geared motors 2-stage – hollow shaft design with shrink disk												
Helical worm gearbox *C*											1FG16 . . - 9 . . . . - . . . . **-Z** H3A	
Gearbox size	**–**	***29***	***39***	***49***	***69***	***89***	**–**	**–**	**–**	**–**		Order code
Fixed protection cover [1]	–	✓	✓	✓	✓	✓	–	–	–	–		**G60**

[1] Not possible with foot-mounted design (14th position of the Article no. **A**).

© Siemens 2019

Flange-mounted designs

Options

Gearbox type	Flange diameter mm											Add. identification code **-Z** with Order code
Servo helical geared motors 2-stage, 3-stage, in flange-mounted design												
Helical gearboxes *ZF* and *DF*												1FG11 . . - . . . . . - . F . . **-Z** 1FG12 . . - . . . . . - . F . . **-Z**
Gearbox size	***19***	***29***	***39***	***49***	***59***	***69***	***79***	***89***	***109***	***129***	***–***	Order code
Standard version	120[1]	120[1]	120[1]	140[1]	160[1]	200[1]	250[1]	300[1]	350	350	–	**–**
	140	140	–	–	–	–	–	–	–	–	–	**H03**
	160	160	160	160	–	–	–	–	–	–	–	**H04**
	–	–	200	200	200	–	–	–	–	–	–	**H05**
	–	–	–	–	250	250	–	–	–	–	–	**H06**
	–	–	–	–	–	–	300	–	–	–	–	**H07**
	–	–	–	–	–	–	–	350	–	–	–	**H08**
	–	–	–	–	–	–	–	–	450	450	–	**H09**
Servo helical geared motors 2-stage, 3-stage, in foot-mounted/flange-mounted design [2]												
Helical gearboxes *ZB* and *DB*												1FG11 . . - . . . . . - . B . . **-Z** 1FG12 . . - . . . . . - . B . . **-Z**
Gearbox size	***–***	***29***	***39***	***49***	***59***	***69***	***79***	***89***	***–***	***–***	***–***	Order code
Standard version	–	120[1]	120[1]	140[1]	160[1]	200[1]	250[1]	300[1]	–	–	–	**–**
Servo parallel shaft geared motors 2-stage, 3-stage, in flange-mounted design												
Parallel shaft gearboxes *FZ.F* and *FD.F*												1FG13 . . - . . . . . - . F . . **-Z** 1FG14 . . - . . . . . - . F . . **-Z**
Gearbox size	***–***	***29***	***39***	***49***	***–***	***69***	***79***	***89***	***109***	***129***	***–***	Order code
Standard version	–	120	160	200	–	250	250	300	350	450	–	**–**
	–	160	–	–	–	–	–	–	–	–	–	**H04**
Servo bevel geared motors 2-stage, in flange-mounted design												
Bevel gearbox *B.F* (2-stage)												1FG15 . . - . . . . . - . F . . **-Z**
Gearbox size	***19***	***29***	***39***	***49***	***–***	***–***	***–***	***–***	***–***	***–***	***–***	Order code
Standard version	120	120	160	200	–	–	–	–	–	–	–	**–**
	–	160	–	–	–	–	–	–	–	–	–	**H04**
	–	–	200	–	–	–	–	–	–	–	–	**H05**
Servo bevel geared motors 3-stage, in flange-mounted design												
Bevel gearbox *K.F* (3-stage)												1FG15 . . - . . . . . - . F . . **-Z**
Gearbox size	***–***	***–***	***39***	***49***	***–***	***69***	***79***	***89***	***109***	***129***	***149***	Order code
Standard version	–	–	160	200	–	250	250	300	350	450	450	**–**
Servo helical worm geared motors 2-stage, in flange-mounted design												
Helical worm gearbox *C.F*												1FG16 . . - . . . . . - . F . . **-Z**
Gearbox size	***–***	***29***	***39***	***49***	***–***	***69***	***–***	***89***	***–***	***–***	***–***	Order code
Standard version	–	120	160	200	–	200	–	250	–	–	–	**–**
	–	160	–	–	–	–	–	–	–	–	–	**H04**

[1] Helical gearboxes, 2-stage and 3-stage, in a foot/flange-mounted design and in gearbox sizes *19* to *89* are only available with small flange.

[2] Helical gearboxes, 2-stage and 3-stage, in gearbox sizes 109 and 129 are not available in foot/flange-mounted versions.

© Siemens 2019

Options

Radially reinforced output shaft bearings

Design												Add. identification code **-Z** with Order code	
Servo helical geared motors 2-stage, 3-stage													
Helical gearboxes *Z* and *D*												1FG11 . . - . . . . . - . . . . **-Z** 1FG12 . . - . . . . . - . . . . **-Z**	
Gearbox size	***19***	***29***	***39***	***49***	***59***	***69***	***79***	***89***	***109***	***129***	**–**		Order code
	–	–	–	–	–	✓	✓	✓	✓	✓	–		**G20**
Servo parallel shaft geared motors 2-stage, 3-stage													
Parallel shaft gearboxes *FZ* and *FD*												1FG13 . . - . . . . . - . . . . **-Z** 1FG14 . . - . . . . . - . . . . **-Z**	
Gearbox size	**–**	***29***	***39***	***49***	**–**	***69***	***79***	***89***	***109***	***129***	**–**		Order code
	–	–	–	✓ [1]	–	✓	✓	✓	✓	✓	–		**G20**
Servo bevel geared motors 3-stage													
Bevel gearbox *K* (3-stage)												1FG15 . . - . . . . . - . . . . **-Z**	
Gearbox size	**–**	**–**	***39***	***49***	**–**	***69***	***79***	***89***	***109***	***129***	***149***		Order code
	–	–	–	✓ [1]	–	✓	✓	✓	✓	✓	✓		**G20**

Reduced-backlash version

Applies to all gearbox designs with specified torsional backlash. For values, see technical specifications in chapters for selection of servo geared motors.

	1FG1 . . . - . . . . . - . . . . **-Z**	Add. identification code **-Z** with order code
Reduced-backlash version		**G99**

Shrink-glued output gearwheel

The gearbox output stage is subjected to particular high levels of mechanical stress during rigorous reversing duty or acceleration of high mass moments of inertia. The strength of the shaft/hub connection can be further increased by the option "shrink-glued output gearwheel".

	1FG1 . . . - . . . . . - . . . . **-Z**	Add. identification code **-Z** with order code
Shrink-glued output gearwheel		**G97**

[1] Not possible for flange-mounted design with solid shaft (**1FG15..-1....-.F..** – Gearbox type ***KF***, **1FG13..-1....-.F..** – Gearbox type ***FZF*** and **1FG14..-1....-.F..** – Gearbox type ***FDF***.

© Siemens 2019

Options

Sealing system

Output shaft sealing	Description	Ambient condition	Add. identification code **-Z** with order code	
			1FG1 . . . - . . . . . - . . . . **-Z**	Order code
Normal environmental stress				
Standard seal	High-quality NBR radial shaft sealing ring with dust protection lip.	Environment with low dust and pollution levels with low moisture.		**–**
Longer service life and normal environmental stress				
Sealing system with longer service life	Towards the inside of the gearbox, the radial shaft sealing ring with dust protection lip has an additional axial seal. This sealing system has a high degree of reliability as a result of its resistance to oil impurities. Note: Not possible for 2-stages servo bevel geared motors ***B19***.	Environment with low dust and pollution levels with low moisture.		**G23**
Longer service life and increased environmental stress				
Sealing system for increased environmental stress	This seal is equipped with an additional fiber disk. In addition to the longer service life, it also provides increased protection against higher environmental stress as a result of dust and dirt deposits. As a consequence, the sealing system has a high degree of reliability. For additional environmental stress, e.g. water jets or significant levels of pollution as a result of production materials, please consult your local Siemens office. Note: Not possible for 2-stages servo bevel geared motors ***B19***.	Environment with increased pollution and dust levels as well as low moisture. Typical applications: Production areas with increased pollution and dust, such as wood chips, dust or granulate as well as occasional water spray		**G24**

© Siemens 2019

Options (continued)

Lubricant

It is essential to specify the oil type when you place your order (order code).

Area of application	Ambient temperature °C	Oil type Marking acc. to DIN 51502		Add. identification code **-Z** with order code Order code	Possible with sealing system for: Environmental stress / Service life Standard / Standard	Standard / Longer	Increased / Longer
					–	**G23**	**G24**
Servo helical geared motors 2-stage, 3-stage							
Helical gearboxes *Z* and *D*,			1FG11 . . - . . . . . - . . . . **-Z** 1FG12 . . - . . . . . - . . . . **-Z**				
Standard	-10 … +40	CLP ISO VG 220		**K06**	✓	✓	✓
	-20 … +50	CLP ISO PG VG 220		**K07**	✓	✓	✓
	0 … +80	CLP ISO PG VG 460		**K08**	✓	✓	✓
Foodstuff area	0 … +40	CLP H1 ISO VG 460		**K11**	✓	✓	–
Servo parallel shaft geared motors 2-stage, 3-stage							
Parallel shaft gearboxes *FZ* and *FD*			1FG13 . . - . . . . . - . . . . **-Z** 1FG14 . . - . . . . . - . . . . **-Z**				
Standard	-10 … +40	CLP ISO VG 220		**K06**	✓	✓	✓
	-20 … +50	CLP ISO PG VG 220		**K07**	✓	✓	✓
	0 … +80	CLP ISO PG VG 460		**K08**	✓	✓	✓
Foodstuff area	0 … +40	CLP H1 ISO VG 460		**K11**	✓	✓	–
Servo bevel geared motors 2-stage							
Bevel gearbox *B*			1FG15 . . - . . . . . - . . . . **-Z**				
Standard	-10 … +40	CLP PG ISO VG 220		**K07**	✓	✓ [1]	✓ [1]
	0 … +80	CLP ISO PG VG 460		**K08**	✓	✓ [1]	✓ [1]
Foodstuff area	0 … +40	CLP H1 ISO VG 460		**K11**	✓	✓ [1]	–
Servo bevel geared motors 3-stage							
Bevel gearbox *K*			1FG15 . . - . . . . . - . . . . **-Z**				
Standard	-10 … +40	CLP ISO VG 220		**K06**	✓	✓	✓
	-20 … +50	CLP ISO PG VG 220		**K07**	✓	✓	✓
	0 … +80	CLP ISO PG VG 460		**K08**	✓	✓	✓
Foodstuff area	0 … +40	CLP H1 ISO VG 460		**K11**	✓	✓	–
Servo helical worm geared motors 2-stage							
Helical worm gearbox *C*			1FG16 . . - . . . . . - . . . . **-Z**				
Standard	-10 … +60	CLP ISO PG VG 460		**K08**	✓	✓	✓
Foodstuff area	0 … +40	CLP H1 ISO VG 460		**K11**	✓	✓	–

CLP = mineral oil
CLP PG = polyglycol oil
CLP H1 = physiological safe oil (USDA-H1 approval)

Note:

The maintenance intervals can be increased to twice the specified time when synthetic oils are used (order codes **K07** and **K08**).
The data specified is valid for an oil temperature of +80° C.

[1] Not possible with gearbox size *19*.

© Siemens 2019

Sealing and lubrication

Options (continued)

Pressure breather valve, oil expansion tank, oil level plug

Design	Motor shaft height	Gearbox size											Add. identification code **-Z** with order code
Servo helical geared motors 2-stage, 3-stage													
Helical gearboxes *Z* and *D*		***19***	***29***	***39***	***49***	***59***	***69***	***79***	***89***	***109***	***129***	**–**	1FG11 . . - . . . . . - . . . . **-Z** 1FG12 . . - . . . . . - . . . . **-Z** Order code
Lubricated for life		✓	✓	–	–	–	–	–	–	–	–		**–**
Oil sight glass [1]		–	–	–	✓	✓	✓	✓	✓	✓	✓		**G34**
Magnetic oil drain screw		–	–	✓	✓	✓	✓	✓	✓	✓	✓		**G53**
Servo parallel shaft geared motors 2-stage, 3-stage													
Parallel shaft gearboxes *FZ* and *FD*		**–**	***29***	***39***	***49***	**–**	***69***	***79***	***89***	***109***	***129***	**–**	1FG13 . . - . . . . . - . . . . **-Z** 1FG14 . . - . . . . . - . . . . **-Z** Order code
Lubricated for life			✓	–	–		–	–	–				**–**
Oil expansion tank	Motor shaft height 36		–	✓	–		–	–	–	–	–		**G47**
	Motor shaft height 48		–	✓	–		–	–	–	–	–		
	Motor shaft height 63		–	✓	✓		–	–	–	–	–		
	Motor shaft height 80			✓	✓		✓	–	–	–	–		
	Motor shaft height 100			–	–		✓	✓	✓	–	✓		
Oil sight glass [1]			–	–	✓		✓	✓	✓	✓	✓		**G34**
Magnetic oil drain screw			–	✓	✓		✓	✓	✓	✓	✓		**G53**
Servo bevel geared motors 2-stage													
Bevel gearbox *B*		***19***	***29***	***39***	***49***	**–**	**–**	**–**	**–**	**–**	**–**	**–**	1FG15 . . - . . . . . - . . . . **-Z** Order code
Lubricated for life		✓	✓	–	–								**–**
Oil expansion tank	Motor shaft height 36	–	✓	✓	–								**G47**
	Motor shaft height 48	–	✓	✓	–								
	Motor shaft height 63	–	✓	✓	✓								
	Motor shaft height 80	–	✓	✓	✓								
	Motor shaft height 100	–	–	–	✓								
Oil sight glass [1]		–	–	–	✓								**G34**
Magnetic oil drain screw		–	–	✓	✓								**G53**
Servo bevel geared motors 3-stage													
Bevel gearbox *K*		**–**	**–**	***39***	***49***	**–**	***69***	***79***	***89***	***109***	***129***	***149***	1FG15 . . - . . . . . - . . . . **-Z** Order code
Oil expansion tank	Motor shaft height 36			✓	–		–	–	–	–	–	–	**G47**
	Motor shaft height 48			✓	–		–	–	–	–	–	–	
	Motor shaft height 63			✓	–		–	✓	✓	–	–	–	
	Motor shaft height 80			✓	–		✓	✓	✓	–	✓	–	
	Motor shaft height 100			–	–		✓	✓	✓	✓	✓	✓	
Oil sight glass [1]				–	✓		✓	✓	✓	✓	✓	✓	**G34**
Magnetic oil drain screw				✓	✓		✓	✓	✓	✓	✓	✓	**G53**
Servo helical worm geared motors 2-stage													
Helical worm gearbox *C*		**–**	***29***	***39***	***49***	**–**	***69***	**–**	***89***	**–**	**–**	**–**	1FG16 . . - . . . . . - . . . . **-Z** Order code
Lubricated for life			✓	–	–		–		–				**–**
Oil expansion tank	Motor shaft height 63		–	–	–		✓		–				**G47**
	Motor shaft height 80		–	–	–		✓		–				
	Motor shaft height 100		–	–	–		✓		✓				
Oil sight glass [1]			–	–	✓		✓		✓				**G34**
Magnetic oil drain screw			–	✓	✓		✓		✓				**G53**

Notes:

- Gearboxes from size *39* for standard mounting positions are supplied as standard with pressure breather valve, oil level plug and screw plug.
- Gearbox sizes *19* and *29* are supplied ready for operation, lubricated for life and can be operated in mounting positions M1, M3, M5 and M6 without requiring a pressure breather valve. For mounting positions M2 and M4, they are equipped with a vent valve.
- When the oil expansion tank is selected, the range of connector position options is limited, i.e. the order code **Q91** "Position of connector on right", **Q92** "Position of connector at bottom" or **Q93** "Position of connector on left" must also be selected.

[1] The option "Oil sight glass" with order code **G34** is not possible for angled mounting positions (order codes **E01** to **E17**, **E21** to **E37** and **E41** to **E57**).

© Siemens 2019

Options

Colors

		Add. identification code **-Z** with order code	
		1FG1 . . . - . . . . . - . . . . **-Z**	
RAL No.	Color name	Paint finish	Order code
–	Anthracite gray	Standard, color similar to RAL 7016	–
–	Anthracite gray	Primer + top coat in color similar to RAL 7016	**K23**
–	–	Primer + top coat selectable from RAL 9005 to RAL 7011 (Order codes X01 ... X91) corresponds to the paint classification C3-L	**K23 + X..**
–	–	Primer without top coat	**K24**
9005	Jet black	Optional color	**X01**
9001	Cream	Optional color	**X02**
6011	Reseda green	Optional color	**X03**
7032	Pebble gray	Optional color	**X04**
5015	Sky blue	Optional color	**X05**
1015	Light ivory	Optional color	**X06**
7000	Squirrel gray	Optional color	**X07**
9006	White aluminum	Optional color	**X08**
5002	Ultramarine blue	Optional color	**X10**
6019	Pastel green	Optional color	**X11**
5010	Gentian blue	Optional color	**X12**
9010	Pure white	Optional color	**X15**
6018	Yellow green	Optional color	**X16**
2004	Pure orange	Optional color	**X19**
7001	Silver gray	Optional color	**X24**
5009	Azure blue	Optional color	**X28**
5007	Brilliant blue	Optional color	**X31**
9016	Traffic white	Optional color	**X36**
2003	Yellow orange	Optional color	**X51**
3000	Flame red	Optional color	**X52**
7035	Light gray	Optional color	**X53**
5012	Light blue	Optional color	**X57**
7030	Stone gray	Optional color	**X59**
7031	Blue gray	Optional color	**X60**
7011	Iron gray	Optional color	**X91**

Increased chemical resistance

	Add. identification code **-Z** with order code
	1FG1 . . . - . . . . . - . . . . **-Z** Order code
Increased chemical resistance (corresponds to the paint classification C4-L) • Four-coat paint system • Nickel-plated connectors • Stainless steel pressure breather valve	**N16**

Test certificates

	Add. identification code **-Z** with order code
	1FG1 . . . - . . . . . - . . . . **-Z** Order code
Acceptance test certificate 3.1 according to EN 10204	**B02**

Holding brakes

Permanent-magnet brake

Brake type	Add. identification code **-Z** with order code
	1FG1 . . . - . . . . . - . . . . **-Z** Order code
Standard holding brake	**N23**
Holding brake with increased braking torque	**N24**

Spring-operated brake

Motor shaft height	Rated braking torque M_{2Br}	Add. identification code **-Z** with order code
80		1FG1 . . . - . . F . . - . . . . **-Z** Order code
	11	**N30**
	15	**N31**
	22	**N32**
	30	**N33**
	40	**N34**
100		1FG1 . . . - . . G. . - . . . . **-Z** Order code
	25	**N30**
	32	**N31**
	50	**N32**
	62	**N33**
	80	**N34**

Manual brake release, air gap check for spring-operated brake:

Identification	Add. identification code **-Z** with order code
	1FG1 . . . - . . F. . - . . . . **-Z** 1FG1 . . . - . . G. . - . . . . **-Z** Order code
Manual brake release	**K82**
Manual brake release lever on the right	**G94**
Manual brake release lever at the bottom	**G95**
Manual brake release lever on the left	**G96**

With the manual brake release option (**K82**), the servo geared motor is automatically equipped with an opening for mechanical air gap check.

Possible position combinations of connectors and manual brake release lever:

			Position of the connector			
			Top	Right	Bottom	Left
		Order code	Standard	**Q91**	**Q92**	**Q93**
Position of the manual brake release lever	Top	Standard	✓	■	✓	–
	Right	**Q94**	–	✓	■	✓
	Bottom	**Q95**	✓	–	✓	■
	Left	**Q96**	■	✓	–	✓

✓ Motor shaft heights 80, 100 ■ Only for Motor shaft height 100

Customer data on the rating plate

The rating plate can be optionally inscribed with customer-specific text. This text can be a maximum of 20 characters in length.

	Add. identification code **-Z** with order code
	1FG1 . . . - . . . . . - . . . . **-Z** Order code
Customer data on the rating plate	**Y84** and customer specifications

8

© Siemens 2019

Fast lane

Overview

For a faster delivery outside the standard delivery times the SIMOTICS S-1FG1 servo geared motors can be ordered with the "Fast Lane" option – order code **W50**.

When ordered with the "Fast Lane" option, the SIMOTICS S-1FG1 servo geared motors can be delivered within 13 working days.

The maximum order quantity is 5 units/order.
The order must reach the Siemens sales region responsible by 12 o'clock midday (German local time) at the latest.

The following SIMOTICS S-1FG1 servo geared motors are **not** available for the "Fast Lane" option:

- 1FG1...-9....-....-Z - versions with special shaft – with order codes H1G, H3G, H3H, H3J, H3K, H3L, H3M, H3P, H4A, H6A, H7A
- 1FG1...-.....-.B..-Z - foot/flange-mounted designs

© Siemens 2019

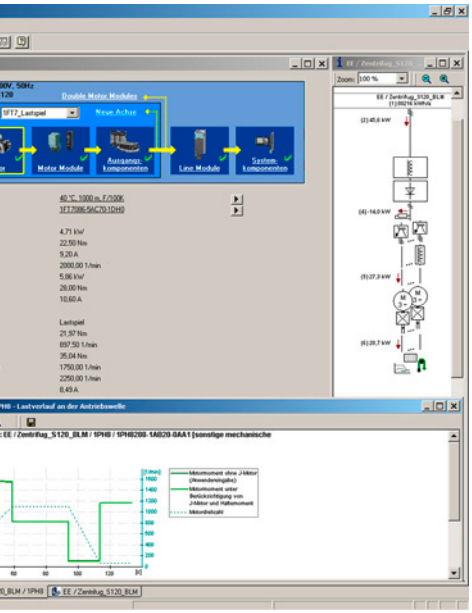

Security information

Siemens provides products and solutions with industrial security functions that support the secure operation of plants, systems, machines and networks.

In order to protect plants, systems, machines and networks against cyber threats, it is necessary to implement – and continuously maintain – a holistic, state-of-the-art industrial security concept. Siemens' products and solutions constitute one element of such a concept.

Customers are responsible for preventing unauthorized access to its plants, systems, machines and networks. Such systems, machines and components should only be connected to an enterprise network or the internet if and to the extent such a connection is necessary and only when appropriate security measures (e.g. firewalls and/or network segmentation) are in place.

For additional information on industrial security measures that may be implemented, please visit
https://www.siemens.com/industrialsecurity

Siemens' products and solutions undergo continuous development to make them more secure. Siemens strongly recommends that product updates are applied as soon as they are available and that the latest product versions are used. Use of product versions that are no longer supported, and failure to apply latest updates may increase customer's exposure to cyber threats.

To stay informed about product updates, subscribe to the Siemens Industrial Security RSS Feed under
https://www.siemens.com/industrialsecurity

9/2	**SinaSave Energy Efficiency Tool**
9/3	**Drive Technology Configurator**
9/4	**SIZER for Siemens Drives Engineering Tool**
9/5	**STARTER commissioning tool**
9/7	**SINAMICS Drive Control Chart (SINAMICS DCC)**
9/8	**Commissioning SINAMICS S120 in the TIA Portal**
9/9	**SINAMICS Web server for SINAMICS S120**
9/10	**Drive ES Engineering Software**

© Siemens 2019

SinaSave Energy Efficiency Tool

Overview

The SinaSave Energy Efficiency Tool calculates potential savings and payback periods on the basis of your specific operating conditions, providing valuable decision guidance with respect to investment in energy-efficient technologies.

The drive systems to be compared and the relevant parameters of the drive components are displayed graphically with SinaSave version 6.0 and higher. The wide range of options for comparing different control modes and comprehensive product combinations for drive solutions for pump and fan applications are useful additions. The portfolio of products includes SIMOTICS motors and SINAMICS converters as well as SIRIUS switching devices, offering a wide spectrum of possibilities for comparison according to your requirements.



SinaSave offers numerous comparison scenarios:

- Comparison of drive systems for pump and fan applications in the output range from 0.55 kW (low voltage) to 5.5 MW (medium voltage) for
  - Throttle control (fixed speed; motor and switching device)
  - Bypass control (fixed speed; motor and switching device)
  - Speed control (variable speed; motor and inverter)
- Comparison and evaluation of standard motors (incl. ignition protection motors) in different energy efficiency classes

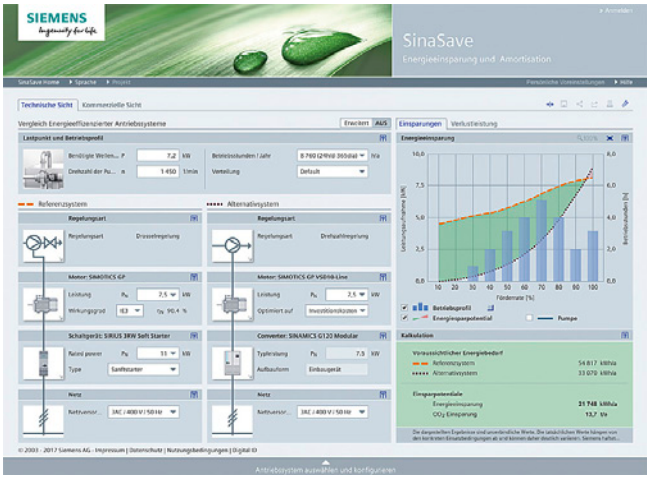

SinaSave supports the evaluation of different product and system comparisons by

- Displaying the potential savings for energy and energy costs as well as CO_2 emissions
- Estimation of the amortization time
- Estimation of the individual total lifecycle costs
- Representation of the system power losses according to EN 50598-2 for full load and partial load
- Direct comparison of Siemens drives with the reference Power Drive System (PDS) of EN 50598-2



Access to the SinaSave Energy Efficiency Tool

SinaSave can be used without registration and without login:
www.automation.siemens.com/sinasave

More information

For more information about the amortization calculator for energy-efficient drive systems, visit
www.siemens.com/sinasave

More information about services for energy saving is available on the Internet at
www.siemens.com/energysaving

© Siemens 2019

Overview

The Drive Technology Configurator (DT Configurator) helps you to configure the optimum drive technology products for your application – starting with gear units, motors, inverters and the associated options and components and ending with controllers, software licenses and connection technology. Whether with little or detailed knowledge of products: You can easily, quickly and efficiently configure your particular drive using product group preselectors, targeted navigation through selection menus or by entering article numbers directly to select the products.

In addition to all this, comprehensive documentation comprising technical data sheets, 2D/3D dimensional drawings, operating instructions, certificates etc. can be selected in the DT Configurator. The products that you select can be directly ordered by transferring a parts lists to the shopping cart of the Industry Mall.

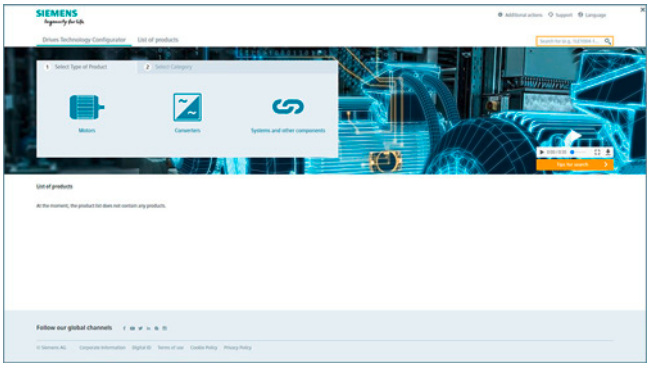

Drive Technology Configurator for efficient drive configuration with the following functions:

- Quick, efficient configuration of drive products and associated components – gear units, motors, inverters, controllers, connection technology
- Configuration of drive systems for pump, fan and compressor applications from 1 kW to 2.6 MW
- Retrievable documentation for configured products and components, such as
  - Data sheets in up to 9 languages in PDF or RTF formats
  - 2D/3D dimensional drawings in various formats
  - Terminal box diagram and terminal connection diagram
  - Operating instructions
  - Certificates
  - Starting calculation for SIMOTICS motors
  - EPLAN macros
- Support for retrofit projects in conjunction with Spares On Web (www.siemens.com/sow)
- Products can be ordered directly through the Siemens Industry Mall

Access to the Drive Technology Configurator

The Drive Technology Configurator can be accessed without registration and login:

www.siemens.com/dt-configurator

Selection and ordering data

Description	Article No.
Interactive Catalog CA 01 including Drive Technology Configurator • German (DVD-ROM – Edition Germany) • German, English, French, Spanish (Download – without prices) www.siemens.com/automation/ca01	**E86060-D4001-A500-D9**

More information

Online access to the Drive Technology Configurator

More information about the Drive Technology Configurator is available on the Internet at
www.siemens.com/dtconfigurator

Offline access to the Drive Technology Configurator in the Interactive Catalog CA 01

In addition, the Drive Technology Configurator is also included in the Interactive Catalog CA 01 – the offline version of the Siemens Industry Mall.
The Interactive Catalog CA 01 can be ordered from the relevant Siemens sales office or via the Internet:
www.siemens.com/automation/CA01

© Siemens 2019

SIZER for Siemens Drives Engineering Tool

Overview

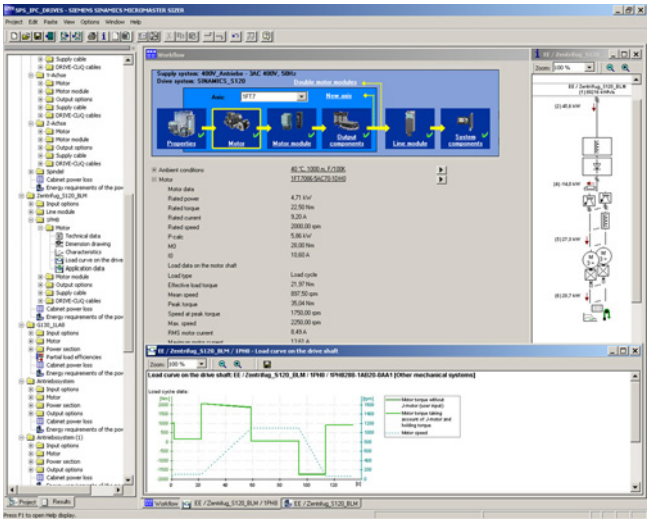

The following drives and controls can be engineered in a user-friendly way using the SIZER for Siemens Drives engineering tool:

- SIMOTICS low-voltage motors, including servo geared motors
- SIMOGEAR geared motors
- SINAMICS low-voltage drive systems
- Motor starters
- SINUMERIK CNC
- SIMOTION motion control controller
- SIMATIC Technology

It provides support when selecting the technologies involved in the hardware and firmware components required for a drive task. SIZER for Siemens Drives supports the complete configuration of the drive system, from basic single drives to demanding multi-axis applications.

SIZER for Siemens Drives supports all of the configuring steps in a workflow:

- Configuring the power supply
- Designing the motor and gearbox, including calculation of mechanical transmission elements
- Configuring the drive components
- Compiling the required accessories
- Selecting the line-side and motor-side power options, e.g. cables, filters, and reactors

When SIZER for Siemens Drives was being designed, particular importance was placed on a high degree of usability and a universal, function-based approach to the drive application.
The extensive user guidance makes using the tool easy. Status information keeps you continually informed about the progress of the configuration process.

The drive configuration is saved in a project. In the project, the components and functions used are displayed in a hierarchical tree structure.

The project view permits the configuration of drive systems and the copying/inserting/modifying of drives already configured.

The configuration process produces the following results:

- A parts list of the required components (export to Excel, use of the Excel data sheet for import to SAP)
- Technical specifications of the system
- Characteristic curves
- Comments on system reactions
- Mounting arrangement of drive and control components and dimension drawings of motors
- Energy requirements of the configured application

These results are displayed in a results tree and can be reused for documentation purposes.

Technological online help is available:

- Detailed technical specifications
- Information about the drive systems and their components
- Decision-making criteria for the selection of components
- Online help in English, French, German, Italian, Chinese and Japanese

System requirements

- PG or PC with Pentium III min. 800 MHz (recommended > 1 GHz)
- 512 MB RAM (1 GB RAM recommended)
- At least 4.1 GB of free hard disk space
- An additional 100 MB of free hard disk space on Windows system drive
- Screen resolution 1024 × 768 pixels (1280 × 1024 pixels recommended)
- Operating system:
  - Windows 7 Professional (32/64 bit)
  - Windows 7 Enterprise (32/64 bit)
  - Windows 7 Ultimate (32/64 bit)
  - Windows 7 Home (32/64 bit)
  - Windows 8.1 Professional (32/64 bit)
  - Windows 8.1 Enterprise (32/64 bit)
  - Windows 10
- Microsoft Internet Explorer from V5.5 SP2

Selection and ordering data

Description	Article No.
SIZER for Siemens Drives engineering tool on DVD-ROM English, French, German, Italian	**6SL3070-0AA00-0AG0**

More information

The SIZER for Siemens Drives engineering tool is available free on the Internet at
www.siemens.com/sizer

© Siemens 2019

Overview

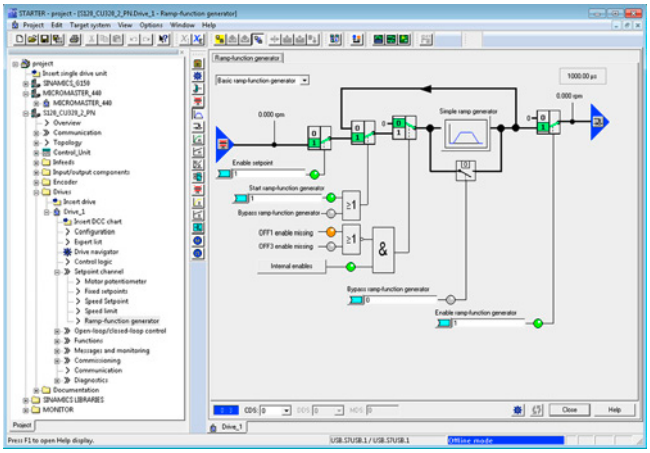

The user-friendly STARTER commissioning tool can be used for:

- Commissioning
- Optimization
- Diagnostics

This software can be operated as a standalone PC application, or integrated as a TIA-compatible program in SIMATIC STEP 7, or highly integrated into the SCOUT Engineering System (for SIMOTION). The basic functions and handling are the same in both cases.

In addition to the SINAMICS drives, STARTER also supports MICROMASTER 4 devices.

The project wizards can be used to create the drives within the structure of the project tree.

Beginners are supported by solution-based dialog guidance, whereby a standard graphics-based display maximizes clarity when setting the drive parameters.

First commissioning is guided by a wizard which makes all the basic settings in the drive. Therefore, getting a motor up and running is merely a question of setting a few of the drive parameters as part of the drive configuration process.

The individual settings required are made using graphics-based parameterization screens, which also precisely visualize the principle of operation of the drive.

Examples of individual settings that can be made include:

- How terminals are used
- Bus interface
- Setpoint channel (e.g., fixed setpoints)
- Closed-loop speed control (e.g., ramp-function generator, limits)
- BICO interconnections
- Diagnostics

For experts, the expert list can be used to specifically and quickly access individual parameters at any time. An individual compilation of frequently used parameters can be saved in dedicated user lists and watch tables.

In addition, the following functions are available for optimization purposes:

- Self-optimization of the controller settings (depending on drive unit)
- Setup and evaluation of trace recordings [1)]
  Tool function for recording 2 × 8 signals with
  - Measuring cursor function
  - Extensive trigger functions
  - Several Y scales
  - Sampling times in the current controller cycle clock

Diagnostics functions provide information about:

- Control/status words
- Parameter status
- Operating conditions
- Communication states

Performance features

- User-friendly: Only a small number of settings need to be made for successful first commissioning: The motor starts to rotate
- Solution-oriented dialog-based user guidance simplifies commissioning
- Self-optimization functions reduce manual effort for optimization.

System requirements

The following minimum requirements must be complied with:

- Hardware
  - PG or PC with Pentium III min. 1 GHz (recommended >1 GHz)
  - Work memory 2 GB (4 GB recommended)
  - Screen resolution 1024 × 768 pixels, 16-bit color depth
  - Free hard disk memory: min. 5 GB
- Software
  - Microsoft Internet Explorer V6.0 or higher
  - 64-bit operating systems:
    Microsoft Windows 7 Professional SP1
    Microsoft Windows 7 Ultimate SP1
    Microsoft Windows 7 Enterprise SP1 (standard installation)
    Microsoft Windows Server 2016
    Microsoft Windows 10 Pro
    Microsoft Windows 10 Enterprise

Supported virtualization platforms

STARTER (V5.1 SP1 and higher) can be installed in a virtual machine. For this purpose, one of the following virtualization platforms in the specified version or a newer version can be used:

- VMware vSphere Hypervisor (ESXi) 6.5
- VMware workstation 11 V12.5.5
- VMware player Pro 7.0 V12.5.2
- Microsoft Windows Server 2016 Hyper-V

You can use the following guest operating systems to install STARTER within the selected virtualization platform:

- Windows 7 Professional/Ultimate/ Enterprise (64-bit)
- Windows 10 Professional/Enterprise (64-bit)

1) Depending on drive unit.
Not supported for MICROMASTER 4, SINAMICS G110, SINAMICS G120 <firmware V4.4, SINAMICS G110D and SINAMICS G120D <firmware V4.5.

© Siemens 2019

Integration

Data can be exchanged (depending on the version) via PROFIBUS or PROFINET/Ethernet or via a serial interface.

For commissioning and service, a PG/PC can be connected to the CU320-2 Control Unit via PROFIBUS. A PROFIBUS connection must be available with a connecting cable at the PG/PC.

Further, communication between a CU320-2 Control Unit and PG/PC can also be established via Ethernet, either via an (optional) CBE20 Communication Board or the Ethernet interface -X127 on the CU320-2 Control Unit.

Note:

The terminal strip -X127 is suitable as a communication link to the PG/PC only for the purposes of servicing and commissioning.

Selection and ordering data

Description	Article No.
STARTER commissioning tool for SINAMICS and MICROMASTER English, French, German, Italian, Spanish	**6SL3072-0AA00-0AG0**

Note:

In addition to the STARTER commissioning tool, SINAMICS Drive Control Chart (SINAMICS DCC) can be installed. This allows the device functionality in the SINAMICS drive system to be expanded with own technology functions as required.

More information about SINAMICS DCC can be found in section "SINAMICS Drive Control Chart (SINAMICS DCC)".

Accessories

Depending on the version of the Control Unit (CU), the Control Unit of the drive unit can communicate with the programming device (PG) or PC via PROFIBUS or PROFINET/Ethernet or via a serial interface. The following accessories are available for the particular drive system as listed in the following table.

Description		**Recommended accessories** For communication between the drive unit and the programming device or PC Article No.
SINAMICS S110		
• RS232	**SIMATIC S7 connecting cable** Null modem cable, 6 m (19.69 ft)	**6ES7901-1BF00-0XA0**
• PROFIBUS	**CP 5711 communication module** USB adapter for connecting a PG or notebook to PROFIBUS or MPI USB cable (2 m (6.56 ft)) included in scope of supply	**6GK1571-1AA00**
	SIMATIC DP plug-in cable 12 MBaud, for PG connection, pre-assembled with 2 × 9-pin SUB D connector, 3 m (9.84 ft)	**6ES7901-4BD00-0XA0**
• PROFINET/ Ethernet	Standard CAT5 Ethernet cable or PROFINET cable	–
SINAMICS S120		
• RS232	**SIMATIC S7 connecting cable** Null modem cable, 6 m (19.69 ft)	**6ES7901-1BF00-0XA0**
• PROFIBUS	**CP 5711 communication module** USB adapter for connecting a PG or notebook to PROFIBUS or MPI USB cable (2 m (6.56 ft)) included in scope of supply	**6GK1571-1AA00**
	SIMATIC DP plug-in cable 12 MBaud, for PG connection, pre-assembled with 2 × 9-pin SUB D connector, 3 m (9.84 ft)	**6ES7901-4BD00-0XA0**
• PROFINET/ Ethernet	Standard CAT5 Ethernet cable or PROFINET cable	–

More information

The STARTER commissioning tool is also available on the Internet at
www.siemens.com/starter

© Siemens 2019

Overview

SINAMICS Drive Control Chart (SINAMICS DCC) expands the scope of device functions by means of freely available closed-loop control, arithmetic and logic blocks and offers a means by which technological functions can be graphically configured in the SINAMICS drive system. In addition, local data processing in the drive supports the implementation of modular machine concepts and results in an increase in the overall machine performance. SINAMICS DCC is a part of the Advanced Technology Function and is installed as an add-on to the STARTER commissioning tool.

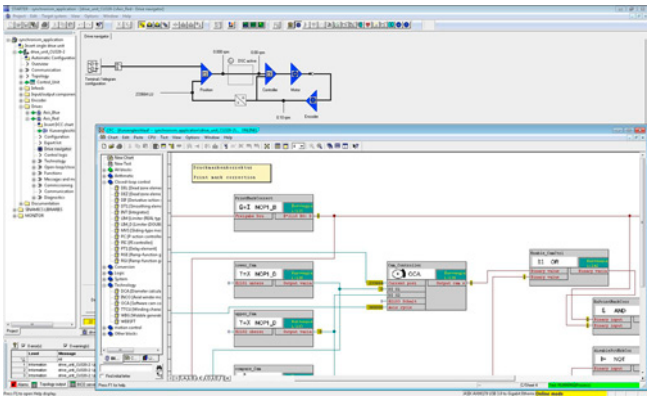

SINAMICS DCC provides users with greater integral scope to adapt these systems to the specific functions of their machines. SINAMICS DCC does not limit the number of functions that can be used. The number of functions is limited only by the performance capability of the Control Unit.

SINAMICS DCC is available for the following SINAMICS drive systems:

- SINAMICS G130 and SINAMICS G150
- SINAMICS S120 and SINAMICS S150
- SINAMICS DCM and SINAMICS DCP
- SINAMICS GM150 and SINAMICS SM150
- SINAMICS GL150 and SINAMICS SL150

The user-friendly DCC editor enables easy graphics-based configuration, allows control loop structures to be clearly represented and provides a high degree of reusability of diagrams that have already been created.

The open-loop and closed-loop control functions are defined by using multi-instance-capable blocks (Drive Control Blocks (DCBs)) from a library (DCB library) that are selected and graphically linked with one another by dragging and dropping. Test and diagnostic functions allow the program behavior to be verified and, in the case of a fault, the cause identified.

Two types of DCB library are available, i.e. DCB Standard and DCB Extension. The DCB Standard library supplied with SINAMICS DCC contains a large selection of closed-loop, arithmetic and logic blocks, as well as comprehensive open-loop and closed-loop control functions.

For logically combining, evaluating and acquiring binary signals, all commonly used logic functions are available for selection (AND, XOR, on/off delay, RS flipflop, counter, etc.). A wide range of arithmetic functions, such as absolute value generation, dividers and minimum/maximum evaluation are available to monitor and evaluate numerical quantities. In addition to the closed-loop drive control, axial winder functions, PI controllers, ramp-function generators or wobble generators are simple to configure.

SINAMICS DCC also offers the DCB Extension library from firmware version V4.6 and higher. This contains an extended range of blocks that is used as an additional, independent library in the DCC Editor. It includes the GMC and Math Extended library.
The GMC contains Motion Control blocks (GEAR, POSMC, CAMD, etc.).
With Math Extended, supplementary mathematical and logical function blocks (ASIN, ACOS, ATAN, LOG, etc.) are made available.
These libraries are ready for downloading along with application examples from the Siemens Application Support website.

Further information can be found on the Internet at www.siemens.com/sinamics-applications

As well as the option of using the libraries made available by DCB Extension, DCB Extension proprietary libraries can also be created with custom-programmed blocks. These blocks and libraries are programmed with the separate SINAMICS DCB Studio development tool in the C/C++ high-level language and can be used as your own DCB Extension Library in the DCC editor. Use of these blocks as DCB extensions requires a runtime license.

The separate SINAMICS DCB Studio development tool is required for programming the blocks and generating the library as a DCB Extension.

Minimum hardware and software requirements

See STARTER commissioning tool.

Selection and ordering data

SINAMICS DCC comprises the graphical configuring tool (DCC Editor) and the DCB standard library. SINAMICS DCC is installed as an add-on to the STARTER commissioning tool.

The necessary engineering license for each PC (floating) for SINAMICS DCC is acquired at the same time the order is placed. No runtime license is required for the DCB standard library included in the scope of supply.

Existing licenses for SINAMICS DCC V2.1 and V2.2 SP1 and V2.3 SPx are also valid for SINAMICS DCC V2.4 SP1.
An upgrade version including an engineering license for applications with STARTER V4.5 SP1 is available for existing SINAMICS DCC V2.0 SPx.

Description	Article No.
SINAMICS DCC V2.4 SP1 for STARTER V4.5 SP1	
Graphic configuring with SINAMICS DCC	
DCC Editor + DCB standard library	
• Single-user engineering license, with data carrier	**6AU1810-1HA24-1XA0**
• Upgrade engineering license, with data carrier	**6AU1810-1HA24-1XE0**
DCB Extension license Runtime license for license upgrading with firmware version V4.6 or later (can also be ordered in conjunction with the CompactFlash card, see CompactFlash card for CU310-2 and CU320-2 Control Units)	**6SL3077-0AA00-0AB0**
SINAMICS DCB Studio V1.2 Development tool for programming blocks and DCB Extension libraries as from Firmware V4.6	On request

© Siemens 2019

Overview

Hardware configuration from generic station description file (GSD/GSDML)

The following functionalities are available with the GSD/GSDML configuration in the TIA Portal:

- Control
  - SIMATIC technology objects and blocks for controlling the drives are already integrated
  - Synchronization of SIMATIC technology objects and the SINAMICS drives
  - Support of application-specific drive control through user-defined PLC data types (UDTs)
- Safety Control
  - Fail-safe control through an intuitive block
  - Support of customer-specific, fail-safe control through user-defined fail-safe PLC data types (F-UDTs)
- Message classes are available throughout the system without engineering effort (SIMATIC PLC Web server, HMI, S7 controller, TIA Portal)
- Parameters downloaded in above data block (block is generated in STARTER)
- Routing across network boundaries for remote maintenance
- Generating a device-specific GSDML file by means of a STARTER-integrated script

Commissioning tools

STARTER

For further information, refer to section “STARTER commissioning tool”

SINAMICS Startdrive:

In future, SINAMICS Startdrive will be a tool integrated into the TIA Portal for configuring, commissioning, and diagnosing the entire SINAMICS drive family. The SINAMICS Startdrive commissioning tool has been optimized for user friendliness and consistent use of the advantages of a common working environment for PLC, HMI and drives provided by the TIA Portal.

For further information see
www.siemens.com/startdrive

© Siemens 2019

Overview

Web server for efficient diagnostics and maintenance – available everywhere at all times

The SINAMICS drive system can be extended with the Web server to provide an efficient diagnostic and maintenance option. The Web server provides access to multi-faceted new options for drive diagnostics and remote maintenance for every network-compatible PC with a Web browser. For example:

- Downloading a configuration
- Updating firmware
- Providing a status overview of the drive
- Evaluating warnings and fault messages
- Monitoring and adapting parameter settings
- Saving machine documentation, including notes
- Setting up of a user administration to provide access protection

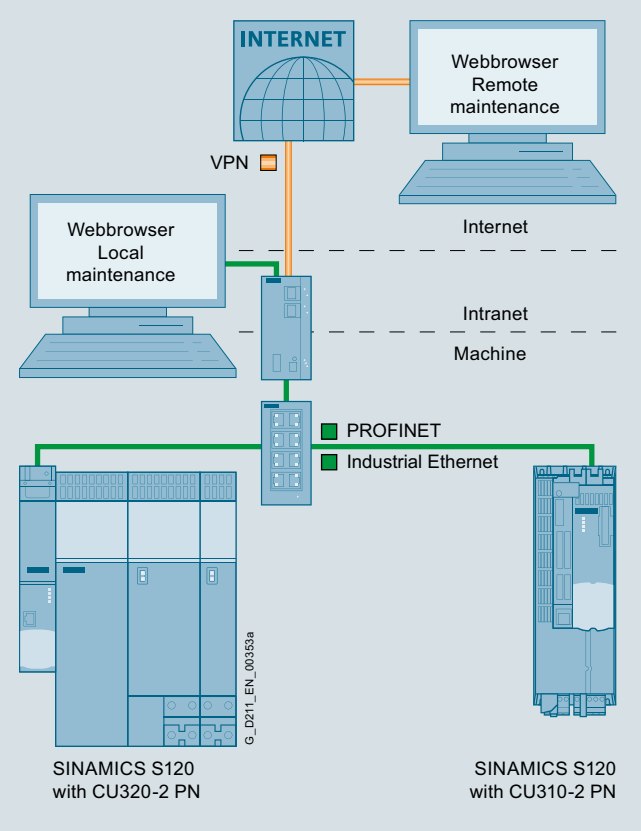

Integration of the SINAMICS Web server as shown by the example of the SINAMICS S120 and PROFINET communication

The SINAMICS Web server is a component of the SINAMICS firmware as from V4.7 on the CompactFlash card for the Control Units

- CU310-2 DP
- CU310-2 PN
- CU320-2 DP
- CU320-2 PN

For further information, refer to “Control Units CU310-2 and CU320-2”.

Benefits

Shorter machine downtimes

- Efficient diagnostics and maintenance

Direct language selection

- English, German, Chinese, Italian, French, Spanish

Accessibility

- Via all LAN or PROFINET interfaces

Two users with different rights can be configured

- e. g. for operators and service personnel

Diagnostic functions

- Quick overview of the current configuration and the state of the drive
- Understandable diagnostic information and messages are displayed in plain text in multiple languages

Freely configurable parameter lists

- Monitoring parameters for diagnostic purposes, for example for operating personnel
- Adapting/optimizing existing projects, for example for service personnel

Updating functions

- The device functionality can be updated from any network-compatible PC (locally or by remote access)
- Series commissioning is possible without the STARTER commissioning tool

Archiving machine documentation

- Appropriate documentation and the state of the service and maintenance work are available on site to the operating and service personnel

Access security

- Protection against unauthorized access to the drive information

Integration of customer-specific websites

- Integrating customer know-how into the websites enables the quick, purposeful diagnostics of the customer application

Application

The Web server is ideal for applications not requiring any special software (STARTER) or version dependencies. Easy diagnostics and maintenance are possible both locally and remotely, provided appropriate security measures are applied.

More information

Further information about the SINAMICS Web server is available on the Internet at
www.siemens.com/sinamics-webserver

© Siemens 2019

Overview

SIMATIC Programs	Configuration / Commissioning
Drive ES PCS 7	Drive ES Basic Maintenance

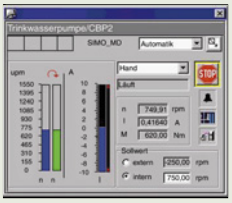

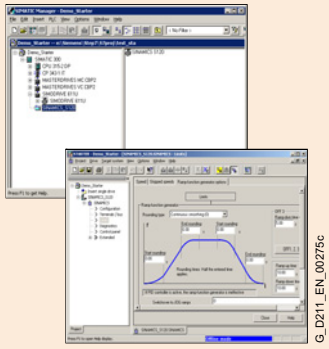

G_D211_EN_00275c

Drive ES is the engineering system used to integrate the communication, configuration and data management functions of Siemens drive technology into the SIMATIC automation world easily, efficiently and cost-effectively.

The following software packages are available for selection:

- Drive ES Basic Maintenance
- Drive ES PCS 7

Drive ES (**D**rive **E**ngineering **S**oftware) fully integrates drives from Siemens into the world of Totally Integrated Automation.

Design

The following software packages are available for selection:

- **Drive ES Basic Maintenance**
- **Drive ES PCS 7** (APL Style or Classic Style)

Drive ES Basic Maintenance

This software product will ensure TIA functionality for the previous drive systems not supported by STARTER.

Drive ES Basic Maintenance is for first-time users of the world of Totally Integrated Automation and the basic software for setting the parameters of all drives online and offline in this environment. Drive ES Basic Maintenance enables both the automation system and the drives to be handled using the SIMATIC Manager software. Drive ES Basic Maintenance is the starting point for common data archiving for complete projects and for extending the use of the SIMATIC teleservice to drives. Drive ES Basic Maintenance provides the configuration tools for the new Motion Control functions – slave-to-slave communication, equidistance and isochronous operation with PROFIBUS DP and ensures that drives with PROFINET IO are simply integrated into the SIMATIC environment.

Note:

For SINAMICS and MICROMASTER 4 drives, this TIA functionality is provided with the STARTER commissioning tool (V4.3.2 and higher).

Drive ES PCS 7 (APL Style or Classic Style)

Drive ES PCS 7 links the drives with a PROFIBUS DP interface into the SIMATIC PCS 7 process control system, and it requires that SIMATIC PCS 7, V6.1 and higher has first been installed. Drive ES PCS 7 provides a block library with blocks for the drives and the corresponding faceplates for the operator station, which enables the drives to be operated from the PCS 7 process control system. From V6.1 and higher, drives will also be able to be represented in the PCS 7 Maintenance Station.

From Drive ES PCS 7 V8.0 and higher, two versions of the library are available: The APL (Advanced Process Library) variant and the previous version in the so-called Classic Style.

Detailed contents of the Drive ES PCS 7 (APL Style or Classic Style)

- **Block library for SIMATIC PCS 7** Faceplates and control blocks for SIMOVERT MASTERDRIVES VC and MC, as well as MICROMASTER/MIDIMASTER of the third and fourth generation and SIMOREG DC MASTER and SINAMICS
- **STEP 7 slave object manager** for convenient configuration of drives and non-cyclic PROFIBUS DP communication with the drives
- **STEP 7 device object manager** for easy configuration of drives with PROFINET-IO interfaces (V8.0 SP1 and higher)
- **SETUP program** for installing the software in the PCS 7 environment

© Siemens 2019

Selection and ordering data

Description	Article No.
Drive ES Basic Maintenance V5.6 SPx *)	
Configuration software for the integration of drives into TIA (Totally Integrated Automation)	
Requirement: STEP 7 V5.4 SP4 or higher	
Type of delivery: on DVD-ROM Languages: Eng, Fr, Ger, It, Sp with electronic documentation	
• Floating license, 1 user	**6SW1700-5JA00-6AA0**
Drive ES PCS 7 V8.2 SPx *)	
Block library for PCS 7 for the integration of drives in Classic Style (as predecessor)	
Requirement: PCS 7 V8.2 and higher	
Type of delivery: CD-ROM Languages: Eng, Fr, Ger, It, Sp with electronic documentation	
• Single-user license incl. 1 runtime license	**6SW1700-8JD00-2AA0**
• Runtime license (without data carrier)	**6SW1700-5JD00-1AC0**
• Update service for single-user license	**6SW1700-0JD00-0AB2**
• Upgrade from V6.x/V7.x/V8.x to V8.2 SPx *)	**6SW1700-8JD00-2AA4**
Drive ES PCS 7 APL V8.2 SPx *)	
Block library for PCS 7 for the integration of drives in APL Style (Advanced Process Library)	
Requirement: PCS 7 V8.2 and higher	
Type of delivery: CD-ROM Languages: Eng, Fr, Ger, It, Sp with electronic documentation	
• Single-user license incl. 1 runtime license	**6SW1700-8JD01-2AA0**
• Runtime license (without data carrier)	**6SW1700-5JD00-1AC0**
• Update service for single-user license	**6SW1700-0JD01-0AB2**
• Upgrade of APL V8.x to V8.2 SPx *) or Drive ES PCS 7 V6.x, V7.x, V8.x classic to Drive ES PCS 7 APL V8.2 SPx *)	**6SW1700-8JD01-2AA4**
Drive ES PCS 7 V9.0 SPx *)	
Block library for PCS 7 for the integration of drives in Classic Style (as predecessor)	
Requirement: PCS 7 V9.0 and higher	
Type of delivery: CD-ROM Languages: Eng, Fr, Ger, It, Sp with electronic documentation	
• Single-user license incl. 1 runtime license	**6SW1700-1JD00-0AA0**
• "Runtime license (without data carrier)	**6SW1700-5JD00-1AC0**
• Update service for single-user license	**6SW1700-0JD00-0AB2**
• Upgrade from V6.x/V7.x/V8.x/V9.x to V9.0 SPx *)	**6SW1700-1JD00-0AA4**
Drive ES PCS 7 APL V9.0 SPx *)	
Block library for PCS 7 for the integration of drives in APL Style (Advanced Process Library)	
Requirement: PCS 7 V9.0 and higher	
Type of delivery: CD-ROM Languages: Eng, Fr, Ger, It, Sp with electronic documentation	
• Single-user license incl. 1 runtime license	**6SW1700-1JD01-0AA0**
• Runtime license (without data carrier)	**6SW1700-5JD00-1AC0**
• Update service for single-user license	**6SW1700-0JD01-0AB2**
• Upgrade of APL V8.x/V9.x to V9.0 SPx *) or Drive ES PCS 7 V6.x, V7.x, V8.x/V9.x classic to Drive ES PCS 7 APL V9.0 SPx *)	**6SW1700-1JD01-0AA4**

*) Orders are automatically supplied with the latest Service Pack (SP).

Options

Drive ES software update service

A software update service can also be purchased for the Drive ES software. The user will automatically receive the latest software, service packs and full versions for one year after ordering.

The update service can only be ordered in addition to an existing (i.e. previously ordered) full version.

- Period of update service: 1 year

The update service is automatically extended by 1 further year unless canceled up to 6 weeks prior to expiration.

Description	Article No.
Drive ES PCS 7	
• Update service for single-user license	**6SW1700-0JD00-0AB2**
Drive ES PCS 7 APL	
• Update service for single-user license	**6SW1700-0JD01-0AB2**

More information

Additional information is available on the Internet at www.siemens.com/drive-es

© Siemens 2019

Notes

© Siemens 2019

Appendix



10/2 Glossary

10/3 Partner at Siemens

10/4 Industry Services
10/5 Industry Services – Portfolio overview
10/5 Digital Services
10/5 Training Services
10/5 Support and Consulting Services
10/5 Spare Parts Services
10/5 Repair Services
10/5 Field and Maintenance Services
10/5 Retrofit and Modernization Services
10/5 Service Programs and Agreements
10/6 Online Support

10/7 Indexes
10/7 Subject index
10/11 Article number index

10/12 Metal surcharges
10/12 Explanation of the raw material/metal surcharges
10/12 Surcharge calculation
10/12 Structure of the metal factor
10/12 Weight method
10/12 Percentage method
10/12 Metal factor examples
10/13 Explanation of the raw material/metal surcharges for dysprosium and neodym (rare earths)
10/13 Surcharge calculation
10/13 Three-month average price
10/13 Structure of the metal factor
10/13 Weight method
10/13 Metal factor examples
10/14 Values of the metal factor

10/15 Conditions of sale and delivery
10/15 General Provisions
10/15 Prices
10/15 Additional Terms and Conditions
10/16 Export regulations

© Siemens 2019

Overview

Characteristic values

Formula symbol/ Short designation	Unit	Designation
i	–	Gear ratio
R_{ex}	–	Ratio, number of teeth (exact gear ratio represented as fraction)
M_{2rated}	Nm	Rated torque of the gearbox at the n_1 = 1450 rpm (range of fatigue strength of Wöhler curve)
M_{2max}	Nm	The maximum permissible output torque of the gearbox that can be sustained at n_{1max} for brief periods*) (range of endurance limit of Wöhler curve)
M_{1max}	Nm	The maximum permissible input torque of the gearbox that can be sustained for brief periods*): $M_{1max} = M_{2max} / (i \cdot \eta_G)$
M_{2dyn}	Nm	The maximum permissible output torque of the geared motor that can be sustained for brief periods*). The following generally applies $M_{2dyn} = M_{max} \cdot i \cdot \eta_G$; where $M_{2dyn} < M_{2max}$. For the servo geared motors printed in bold in the servo geared motor selection tables, M_{2dyn} is limited to the maximum permissible torque in short-time duty M_{2max} as the motor could otherwise overload the gearbox. The motor current I_{max} must be limited during commissioning.
M_{max}	Nm	Maximum possible torque of servomotor. In order to protect the gearbox against damage, the following generally applies: $M_{max} < M_{1max}$
I_{max}	A	Motor current at M_{max}
$M_{2Em.Off}$	Nm	The emergency off torque is limited to 1000 cycles.
n_{1max}	rpm	Maximum permissible speed at gearbox input for brief periods*)
n_{2max}	rpm	Maximum permissible output speed for brief periods*) (= n_{1max} / i)
n_{1rated}	rpm	Rated motor speed (not rated speed of gearbox!)
n_1	rpm	Speed at gearbox input
η_G	–	Gearbox efficiency
η_M	–	Motor efficiency
φ	‘	Torsional backlash in minutes of the angle (applies only to reduced-backlash gearboxes)
F_{R2}	N	Maximum permissible cantilever force in continuous operation
F_{R2max}	N	Maximum permissible cantilever force at M_{2max}
c_T	Nm/‘	Torsional stiffness
J_G	kgm^2	Gearbox moment of inertia
SH	–	Motor shaft height
CT	–	Motor version Compact
HD	–	Motor version High Dynamic
P_{rated}	kW	Rated motor power
M_{rated}	Nm	Rated motor torque at n_{1rated}
I_{rated}	A	Rated current
U_{rated}	V	Rated voltage
M_0	Nm	Static torque
I_0	A	Stall current
J_{mot}	kgm^2	Rotor moment of inertia of motor
$J_{Mot\ Br}$	kgm^2	Rotor moment of inertia of motor with holding brake
M_{1Br}	Nm	Dynamic braking torque Lowest averaged dynamic braking torque that can occur in emergency stop operation
M_{2Br}	Nm	Rated braking torque of the brake (dynamic) in accordance with DIN VDE 0580 Averaged value of at least 3 measurements of the maximum occurring switching torque
M_{4Br}	Nm	Holding torque of the brake Permissible torque for closed brake in steady-state operation without slip
W	J	Maximum switched energy per brake operation – switched energy for up to 2000 brake operations from a speed of 3000 rpm. Calculation: W [J] = J [kgm^2] × n^2 [rpm] / 182.4

*) For brief periods:

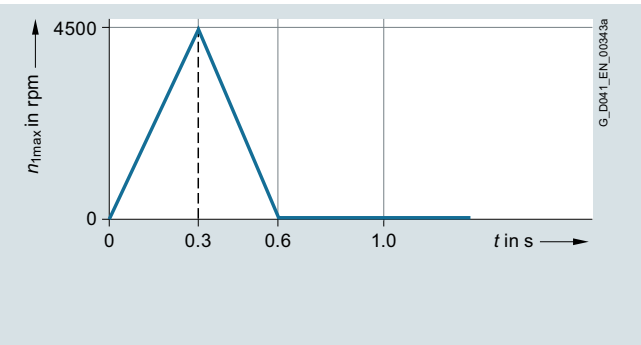

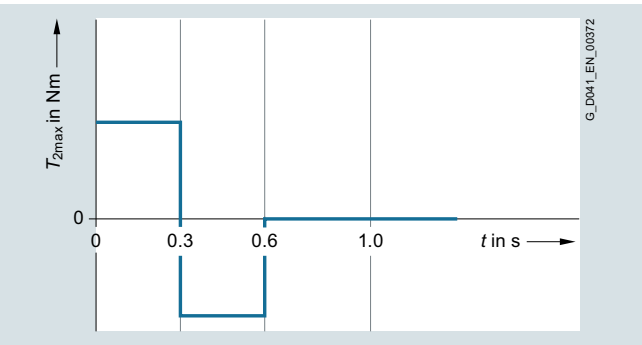

© Siemens 2019

Partner at Siemens

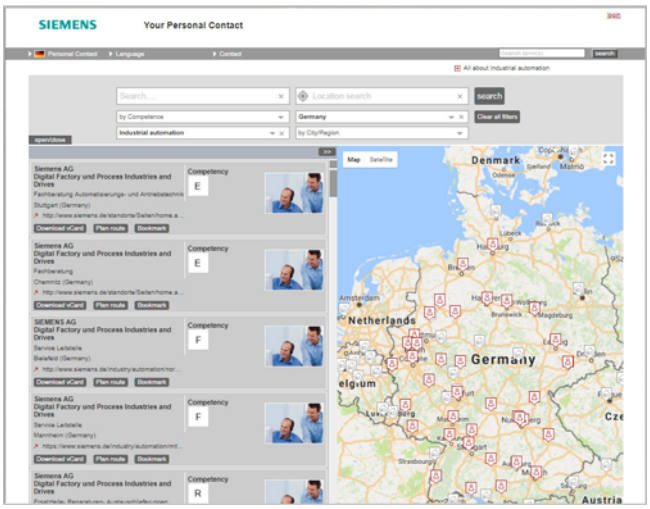

At your service locally, around the globe for consulting, sales, training, service, support, spare parts on the entire portfolio of Digital Industries.

Your partner can be found in our Personal Contacts Database at:
www.siemens.com/automation-contact

You start by selecting

- the required competence,
- products and branches,
- a country and a city

or by a

- location search or free text search.

© Siemens 2019

Overview

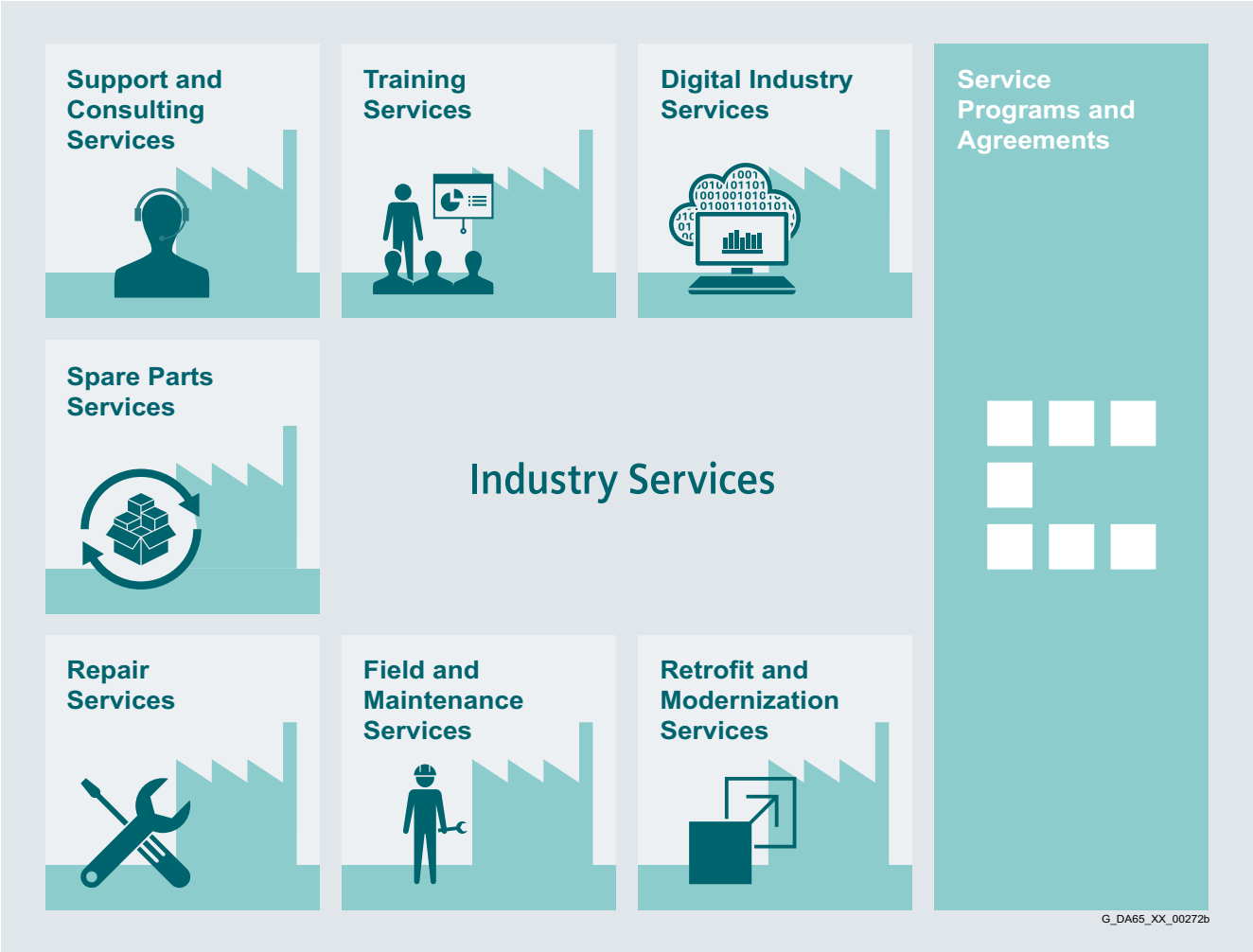

Keep your business running and shaping your digital future – with Industry ServAppendixices

Optimizing the productivity of your equipment and operations can be a challenge, especially with constantly changing market conditions. Working with our service experts makes it easier. We understand your industry's unique processes and provide the services needed so that you can better achieve your business goals.

You can count on us to maximize your uptime and minimize your downtime, increasing your operations' productivity and reliability. When your operations have to be changed quickly to meet a new demand or business opportunity, our services give you the flexibility to adapt. Of course, we take care that your production is protected against cyber threats. We assist in keeping your operations as energy and resource efficient as possible and reducing your total cost of ownership. As a trendsetter, we ensure that you can capitalize on the opportunities of digitalization and by applying data analytics to enhance decision making: You can be sure that your plant reaches its full potential and retains this over the longer lifespan.

You can rely on our highly dedicated team of engineers, technicians and specialists to deliver the services you need – safely, professionally and in compliance with all regulations. We are there for you, where you need us, when you need us.

www.siemens.com/industryservices

© Siemens 2019

Overview



Digital Industry Services

Digital Industry Services make your industrial processes transparent to gain improvements in productivity, asset availability, and energy efficiency.

Production data is generated, filtered and translated with intelligent analytics to enhance decision-making.

This is done whilst taking data security into consideration and with continuous protection against cyber-attack threats.
https://www.siemens.com/global/en/home/products/services/industry/digital-services.html



Training Services

From the basics and advanced to specialist skills, SITRAIN courses provide expertise right from the manufacturer – and encompass the entire spectrum of Siemens products and systems for the industry.

Worldwide, SITRAIN courses are available wherever you need a training course in more than 170 locations in over 60 countries.
https://support.industry.siemens.com/cs/ww/en/sc/2226



Support and Consulting Services

Industry Online Support site for comprehensive information, application examples, FAQs and support requests.

Technical and Engineering Support for advice and answers for all inquiries about functionality, handling, and fault clearance. The Service Card as prepaid support for value added services such as Priority Call Back or Extended Support offers the clear advantage of quick and easy purchasing.

Information & Consulting Services, e.g. SIMATIC System Audit; clarity about the state and service capability of your automation system or Lifecycle Information Services; transparency on the lifecycle of the products in your plants.
https://support.industry.siemens.com/cs/ww/en/sc/2235

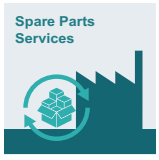

Spare Parts

Spare Parts Services are available worldwide for smooth and fast supply of spare parts – and thus optimal plant availability. Genuine spare parts are available for up to ten years. Logistic experts take care of procurement, transport, custom clearance, storage and order management. Reliable logistics processes ensure that components reach their destination as needed.

Since not all spare parts can be kept in stock at all times, Siemens offers a preventive measure for spare parts provisioning on the customer's premises with optimized **Spare Parts Packages** for individual products, custom-assembled drive components and entire integrated drive trains – including risk consulting.

Asset Optimization Services help you design a strategy for parts supply where your investment and carrying costs are reduced and the risk of obsolescence is avoided.
https://support.industry.siemens.com/cs/ww/en/sc/2110



Repair Services

Repair Services are offered on-site and in regional repair centers for fast restoration of faulty devices' functionality.

Also available are extended repair services, which include additional diagnostic and repair measures, as well as emergency services.
https://support.industry.siemens.com/cs/ww/en/sc/2154



Field and Maintenance Services

Siemens specialists are available globally to provide expert field and maintenance services, including commissioning, functional testing, preventive maintenance and fault clearance.

All services can be included in customized service agreements with defined reaction times or fixed maintenance intervals.
https://support.industry.siemens.com/cs/ww/en/sc/2265



Retrofit and Modernization Services

Provide a cost-effective solution for the expansion of entire plants, optimization of systems or upgrading existing products to the latest technology and software, e.g. migration services for automation systems.

Service experts support projects from planning through commissioning and, if desired over the entire extended lifespan, e.g. Retrofit for Integrated Drive Systems for an extended lifetime of your machines and plants.
https://support.industry.siemens.com/cs/ww/en/sc/2286



Service Programs and Agreements

A technical Service Program or Agreement enables you to easily bundle a wide range of services into a single annual or multi-year agreement.

You pick the services you need to match your unique requirements or fill gaps in your organization's maintenance capabilities.

Programs and agreements can be customized as KPI-based and/or performance-based contracts.
https://support.industry.siemens.com/cs/ww/en/sc/2275

© Siemens 2019

Overview



Siemens Industry and Online Support with some 1.7 million visitors per month is one of the most popular web services provided by Siemens. It is the central access point for comprehensive technical know-how about products, systems and services for automation and drives applications as well as for process industries.

In connection with the challenges and opportunities related to digitalization you can look forward to continued support with innovative offerings.

© Siemens 2019

A

Additional Terms and Conditions ... 10/15
Additional factor C for the transmission element type ... 2/6
Ambient temperature ... 2/10
Ambient temperature and installation altitude ... 2/4
Angled mounting position ... 8/36
Appendix ... 10/1
Article No., structure ... 1/13
Article No. supplements ... 8/2
Article number code ... 1/13
Article No. index ... 10/11
Axial force, permissible ... 2/7

B

Benefits ... 1/5

C

Checklist ... 2/3
Chemical resistance ... 2/20, 8/45
Colors ... 8/45
Components of the SIMOLOC assembly system ... 2/15
Commissioning SINAMICS S120 in the TIA Portal ... 9/8
Conditions of sale and delivery ... 10/15
Configuring ... 1/12
Configuring guide ... 2/1
Configuring procedure ... 2/2
Configuring with the SIZER for Siemens Drives engineering tool ... 2/4
Converter types ... 2/4
Cooling ... 2/10
Customer data on the rating plate ... 8/45

D

Definition of the point of application of radial and axial forces ... 2/7
Degrees of protection ... 2/13
Degrees of protection for AC motors ... 1/19
Design ... 1/6
Design of servo bevel geared motors ... 1/8
Design of servo helical geared motors ... 1/6
Design of servo helical worm geared motors ... 1/10
Design of servo parallel shaft geared motors ... 1/7
Determining the drive data ... 2/2
Digital Services ... 10/5
Dimensioning methods ... 2/4
Dimensions of servo bevel geared motors ... 5/66
- Gearbox size 19 ... 5/66
  - Flange-mounted design 2-stage – B.F.19 ... 5/68
  - Foot-mounted design 2-stage – B..19 ... 5/66
  - Housing flange design 2-stage – B.Z.19 ... 5/70
  - Shaft-mounted design 2-stage – BAD.19 ... 5/72
- Gearbox size 29 ... 5/66
  - Flange-mounted design 2-stage – B.F.29 ... 5/68
  - Foot-mounted design 2-stage – B..29 ... 5/66
  - Housing flange design 2-stage – B.Z.29 ... 5/70
  - Shaft-mounted design 2-stage – BAD.29 ... 5/72
- Gearbox size 39 ... 5/74, 5/90
  - Flange-mounted design 2-stage – B.F.39 ... 5/76
  - Flange-mounted design 3-stage – K.F.39 ... 5/92
  - Foot-mounted design 2-stage – B..39 ... 5/74
  - Foot-mounted design 3-stage – K..39 ... 5/90
  - Housing flange design 2-stage – B.Z.39 ... 5/78
  - Housing flange design 3-stage – K.Z.39 ... 5/94
  - Shaft-mounted design 2-stage – BAD.39 ... 5/80
  - Shaft-mounted design 3-stage – KAD.39 ... 5/96
- Gearbox size 49 ... 5/82, 5/98
  - Flange-mounted design 2-stage – B.F.49 ... 5/84
  - Flange-mounted design 3-stage – K.F.49 ... 5/100
  - Foot-mounted design 2-stage – B..49 ... 5/82
  - Foot-mounted design 3-stage – K..49 ... 5/98
  - Housing flange design 2-stage – B.Z.49 ... 5/86
  - Housing flange design 3-stage – K.Z.49 ... 5/102
  - Shaft-mounted design 2-stage – BAD.49 ... 5/88
  - Shaft-mounted design 3-stage – KAD.49 ... 5/104
- Gearbox size 69 ... 5/106
  - Flange-mounted design 3-stage – K.F.69 ... 5/108
  - Foot-mounted design 3-stage – K..69 ... 5/106
  - Housing flange design 3-stage – K.Z.69 ... 5/110
  - Shaft-mounted design 3-stage – KAD.69 ... 5/112
- Gearbox size 79 ... 5/114
  - Flange-mounted design 3-stage – K.F.79 ... 5/116
  - Foot-mounted design 3-stage – K..79 ... 5/114
  - Housing flange design 3-stage – K.Z.79 ... 5/118
  - Shaft-mounted design 3-stage – KAD.79 ... 5/120
- Gearbox size 89 ... 5/122
  - Flange-mounted design 3-stage – K.F.89 ... 5/124
  - Foot-mounted design 3-stage – K..89 ... 5/122
  - Housing flange design 3-stage – K.Z.89 ... 5/126
  - Shaft-mounted design 3-stage – KAD.89 ... 5/128
- Gearbox size 109 ... 5/130
  - Flange-mounted design 3-stage – K.F.109 ... 5/132
  - Foot-mounted design 3-stage – K..109 ... 5/130
  - Housing flange design 3-stage – K.Z.109 ... 5/134
  - Shaft-mounted design 3-stage – KAD.109 ... 5/136
- Gearbox size 129 ... 5/138
  - Flange-mounted design 3-stage – K.F.129 ... 5/140
  - Foot-mounted design 3-stage – K..129 ... 5/138
  - Housing flange design 3-stage – K.Z.129 ... 5/142
  - Shaft-mounted design 3-stage – KAD.129 ... 5/144
- Gearbox size 149 ... 5/146
  - Flange-mounted design 3-stage – K.F.149 ... 5/148
  - Foot-mounted design 3-stage – K..149 ... 5/146
  - Housing flange design 3-stage – K.Z.149 ... 5/150
  - Shaft-mounted design 3-stage – KAD.149 ... 5/152
- Inside contour and dimensions of the flange-mounted design ... 5/158
- Protection cover for hollow shaft ... 5/156
- Protection cover for hollow shaft with SIMOLOC assembly system ... 5/157
- Protection cover for hollow shaft and hollow shaft with shrink disk ... 5/156
- SIMOLOC assembly system for shaft-mounted design 2-stage and 3-stage ... 5/154

Dimensions of servo helical geared motors ... 3/84
- Gearbox size 19 ... 3/84
  - Flange-mounted design 2-stage and 3-stage – ZF19 and DF19 ... 3/88
  - Foot-mounted design 2-stage and 3-stage – Z19 and D19 ... 3/84
  - Housing flange design 2-stage and 3-stage – ZZ19 and DZ19 ... 3/90
- Gearbox size 29 ... 3/84
  - Flange-mounted design 2-stage and 3-stage – ZF29 and DF29 ... 3/88
  - Foot/flange-mounted design 2-stage and 3-stage – ZB29 and DB29 ... 3/86
  - Foot-mounted design 2-stage and 3-stage – Z29 and D29 ... 3/84
  - Housing flange design 2-stage and 3-stage – ZZ29 and DZ29 ... 3/90
- Gearbox size 39 ... 3/92
  - Flange-mounted design 2-stage and 3-stage – ZF39 and DF39 ... 3/96
  - Foot/flange-mounted design 2-stage and 3-stage – ZB39 and DB39 ... 3/94
  - Foot-mounted design 2-stage and 3-stage – Z39 and D39 ... 3/92
  - Housing flange design 2-stage and 3-stage – ZZ39 and DZ39 ... 3/98
- Gearbox size 49 ... 3/100
  - Flange-mounted design 2-stage and 3-stage – ZF49 and DF49 ... 3/102
  - Foot-mounted design and foot/flange-mounted design 2-stage and 3-stage – Z49, D49, ZB49 and DB49 ... 3/100
  - Housing flange design 2-stage and 3-stage – ZZ49 and DZ49 ... 3/104
- Gearbox size 59 ... 3/106
  - Flange-mounted design 2-stage and 3-stage – ZF59 and DF59 ... 3/108
  - Foot-mounted design and foot/flange-mounted design 2-stage and 3-stage – Z59, D59, ZB59 ... 3/106
  - Housing flange design 2-stage and 3-stage – ZZ59 and DZ59 ... 3/110
- Gearbox size 69 ... 3/112
  - Flange-mounted design 2-stage and 3-stage – ZF69 and DF69 ... 3/114
  - Foot-mounted design and foot/flange-mounted design 2-stage and 3-stage – Z69, D69, ZB69 ... 3/112
  - Housing flange design 2-stage and 3-stage – ZZ69 and DZ69 ... 3/116
- Gearbox size 79 ... 3/118
  - Flange-mounted design 2-stage and 3-stage – ZF79 and DF79 ... 3/120
  - Foot-mounted design and foot/flange-mounted design 2-stage and 3-stage – Z79, D79, ZB79 ... 3/118
  - Housing flange design 2-stage and 3-stage – ZZ79 and DZ79 ... 3/122
- Gearbox size 89 ... 3/124
  - Flange-mounted design 2-stage and 3-stage – ZF89 and DF89 ... 3/126
  - Foot-mounted design and foot/flange-mounted design 2-stage and 3-stage – Z89, D89, ZB89 ... 3/124
  - Housing flange design 2-stage and 3-stage – ZZ89 and DZ89 ... 3/128

© Siemens 2019

Subject index

- Gearbox size 109 ... 3/130
  - Flange-mounted design 2-stage and 3-stage – ZF109 and DF109 ... 3/132
  - Foot-mounted design 2-stage and 3-stage – Z109, D109, ZB109 and DB109 ... 3/130
  - Housing flange design 2-stage and 3-stage – ZZ109 and DZ109 ... 3/134
- Gearbox size 129 ... 3/136
  - Flange-mounted design 2-stage and 3-stage – ZF129 and DF129 ... 3/138
  - Foot-mounted design 2-stage and 3-stage – Z129, D129, ZB129 and DB129 ... 3/136
  - Housing flange design 2-stage and 3-stage – ZZ129 and DZ129 ... 3/140
- Inside contour and dimensions of the flange-mounted design ... 3/142

Dimensions of servo helical worm geared motors ... 6/28
- Gearbox size 29 ... 6/28
  - Flange-mounted design 2-stage – C.F.29 ... 6/30
  - Foot-mounted design 2-stage – C..29 ... 6/28
  - Housing flange design 2-stage – C.Z.29 ... 6/32
  - Shaft-mounted design 2-stage – CAD.29 ... 6/34
- Gearbox size 39 ... 6/36
  - Flange-mounted design 2-stage – C.F.39 ... 6/38
  - Foot-mounted design 2-stage – C..39 ... 6/36
  - Housing flange design 2-stage – C.Z.39 ... 6/40
  - Shaft-mounted design 2-stage – CAD.39 ... 6/42
- Gearbox size 49 ... 6/44
  - Flange-mounted design 2-stage – C.F.49 ... 6/46
  - Foot-mounted design 2-stage – C..49 ... 6/44
  - Housing flange design 2-stage – C.Z.49 ... 6/48
  - Shaft-mounted design 2-stage – CAD.49 ... 6/50
- Gearbox size 69 ... 6/52
  - Flange-mounted design 2-stage – C.F.69 ... 6/54
  - Foot-mounted design 2-stage – C..69 ... 6/52
  - Housing flange design 2-stage – C.Z.69 ... 6/56
  - Shaft-mounted design 2-stage – CAD.69 ... 6/58
- Gearbox size 89 ... 6/60
  - Flange-mounted design 2-stage – C.F.89 ... 6/62
  - Foot-mounted design 2-stage – C..89 ... 6/60
  - Housing flange design 2-stage – C.Z.89 ... 6/64
  - Shaft-mounted design 2-stage – CAD.89 ... 6/66
- Inside contour and dimensions of the flange-mounted design ... 6/72
- Protection cover for hollow shaft ... 6/70
- Protection cover for hollow shaft with SIMOLOC assembly system ... 6/71
- Protection cover for hollow shaft and hollow shaft with shrink disk for gearbox types CAS, CAFS, CAZS and CADS ... 6/70
- SIMOLOC assembly system for shaft-mounted design 2-stage ... 6/68

Dimensions of servo parallel shaft geared motors ... 4/78
- Gearbox size 29 ... 4/78
  - Flange-mounted design 2-stage and 3-stage – FZ.F.29 and FD.F.29 ... 4/82
  - Foot-mounted design 2-stage and 3-stage – FZ..29 and FD..29 ... 4/84
  - Housing flange design 2-stage and 3-stage – FZ.Z.29 and FD.Z.29 ... 4/80
  - Shaft-mounted design 2-stage and 3-stage – FZAD29 and FDAD29 ... 4/78
- Gearbox size 39 ... 4/86
  - Flange-mounted design 2-stage and 3-stage – FZ.F.39 and FD.F.39 ... 4/90
  - Foot-mounted design 2-stage and 3-stage – FZ..39 and FD..39 ... 4/92
  - Housing flange design 2-stage and 3-stage – FZ.Z.39 and FD.Z.39 ... 4/88
  - Shaft-mounted design 2-stage and 3-stage – FZAD39 and FDAD39 ... 4/86
- Gearbox size 49 ... 4/94
  - Flange-mounted design 2-stage and 3-stage – FZ.F.49 and FD.F.49 ... 4/98
  - Foot-mounted design 2-stage and 3-stage – FZ..49 and FD..49 ... 4/100
  - Housing flange design 2-stage and 3-stage – FZ.Z.49 and FD.Z.49 ... 4/96
  - Shaft-mounted design 2-stage and 3-stage – FZAD49 and FDAD49 ... 4/94
- Gearbox size 69 ... 4/102
  - Flange-mounted design 2-stage and 3-stage – FZ.F.69 and FD.F.69 ... 4/106
  - Foot-mounted design 2-stage and 3-stage – FZ..69 and FD..69 ... 4/108
  - Housing flange design 2-stage and 3-stage – FZ.Z.69 and FD.Z.69 ... 4/104
  - Shaft-mounted design 2-stage and 3-stage – FZAD69 and FDAD69 ... 4/102
- Gearbox size 79 ... 4/110
  - Flange-mounted design 2-stage and 3-stage – FZ.F.79 and FD.F.79 ... 4/114
  - Foot-mounted design 2-stage and 3-stage – FZ..79 and FD..79 ... 4/116
  - Housing flange design 2-stage and 3-stage – FZ.Z.79 and FD.Z.79 ... 4/112
  - Shaft-mounted design 2-stage and 3-stage – FZAD79 and FDAD79 ... 4/110
- Gearbox size 89 ... 4/118
  - Flange-mounted design 2-stage and 3-stage – FZ.F.89 and FD.F.89 ... 4/122
  - Foot-mounted design 2-stage and 3-stage – FZ..89 and FD..89 ... 4/124
  - Housing flange design 2-stage and 3-stage – FZ.Z.89 and FD.Z.89 ... 4/120
  - Shaft-mounted design 2-stage and 3-stage – FZAD89 and FDAD89 ... 4/118
- Gearbox size 109 ... 4/126
  - Flange-mounted design 2-stage and 3-stage – FZ.F.109 and FD.F.109 ... 4/130
  - Foot-mounted design 2-stage and 3-stage – FZ..109 and FD..109 ... 4/132
  - Housing flange design 2-stage and 3-stage – FZ.Z.109 and FD.Z.109 ... 4/128
  - Shaft-mounted design 2-stage and 3-stage – FZAD109 and FDAD109 ... 4/126
- Gearbox size 129 ... 4/134
  - Flange-mounted design 2-stage and 3-stage – FZ.F.129 and FD.F.129 ... 4/138
  - Foot-mounted design 2-stage and 3-stage – FZ..129 and FD..129 ... 4/140
  - Housing flange design 2-stage and 3-stage – FZ.Z.129 and FD.Z.129 ... 4/136
  - Shaft-mounted design 2-stage and 3-stage – FZAD129 and FDAD129 ... 4/134
- Inside contour and dimensions of the flange-mounted design ... 4/146
- Protection cover for hollow shaft ... 4/144
- Protection cover for hollow shaft and hollow shaft with shrink disk ... 4/144
- Protection cover for hollow shaft with SIMOLOC assembly system ... 4/145
- SIMOLOC assembly system for shaft-mounted design 2-stage and 3-stage ... 4/142

Drive data, determining ... 2/2
Drive ES Engineering Software ... 9/10
Drive Technology Configurator (DT Configurator) ... 9/3

E

Efficiency optimization ... 2/5
Encoders ... 2/10
Encoder systems ... 7/3
Engineering tools ... 9/1
Example of how to compile an Article No. correctly ... 1/14
Existing radial force ... 2/6
Explanation of the raw material/metal surcharges ... 10/12
Explanation of the raw material/metal surcharges for dysprosium and neodymium (rare earths) ... 10/13
Export regulations ... 10/16

F

Field and Maintenance Services ... 10/5
Flanges ... 1/18
Flange-mounted designs ... 8/40

G

Gearboxes ... 2/5
Gearbox efficiency ... 2/5
Gearbox as speed and torque converter ... 2/5
Gearbox size 19 ... 3/3, 5/3
- 2-stage – 1FG1101 – Z19 ... 3/3
- 2-stage – 1FG1500 – B19 ... 5/3
- 3-stage – 1FG1201 – D19 ... 3/8

© Siemens 2019

Gearbox size 29 ... 3/3, 4/3, 5/3, 6/3
- 2-stage – 1FG1102 – Z29 ... 3/3
- 2-stage – 1FG1301 – FZ29 ... 4/3
- 2-stage – 1FG1501 – B29 ... 5/3
- 2-stage – 1FG1601 – C29 ... 6/3
- 3-stage – 1FG1202 – D29 ... 3/8
- 3-stage – 1FG1401 – FD29 ... 4/9

Gearbox size 39 ... 3/12, 4/13, 5/9, 5/20, 6/8
- 2-stage – 1FG1103 – Z39 ... 3/12
- 2-stage – 1FG1302 – FZ39 ... 4/13
- 2-stage – 1FG1502 – B39 ... 5/9
- 2-stage – 1FG1602 – C39 ... 6/8
- 3-stage – 1FG1203 – D39 ... 3/17
- 3-stage – 1FG1402 – FD39 ... 4/19
- 3-stage – 1FG1504 – K39 ... 5/20

Gearbox size 49 ... 4/22, 4/24, 5/14, 5/26, 6/13
- 2-stage – 1FG1104 – Z49 ... 3/22
- 2-stage – 1FG1303 – FZ49 ... 4/24
- 2-stage – 1FG1503 – B49 ... 5/14
- 2-stage – 1FG1603 – C49 ... 6/13
- 3-stage – 1FG1204 – D49 ... 3/28
- 3-stage – 1FG1403 – FD49 ... 4/29
- 3-stage – 1FG1505 – K49 ... 5/26

Gearbox size 59 ... 3/33
- 2-stage – 1FG1105 – Z59 ... 3/33
- 3-stage – 1FG1205 – D59 ... 3/38

Gearbox size 69 ... 3/43, 4/34, 5/32, 6/18
- 2-stage – 1FG1106 – Z69 ... 3/43
- 2-stage – 1FG1304 – FZ69 ... 4/34
- 2-stage – 1FG1604 – C69 ... 6/18
- 3-stage – 1FG1206 – D69 ... 3/48
- 3-stage – 1FG1404 – FD69 ... 4/39
- 3-stage – 1FG1507 – K69 ... 5/32

Gearbox size 79 ... 3/53, 4/44, 5/38
- 2-stage – 1FG1107 – Z79 ... 3/53
- 2-stage – 1FG1305 – FZ79 ... 4/44
- 3-stage – 1FG1207 – D79 ... 3/57
- 3-stage – 1FG1405 – FD79 ... 4/48
- 3-stage – 1FG1508 – K79 ... 5/38

Gearbox size 89 ... 3/61, 4/52, 5/44, 6/23
- 2-stage – 1FG1108 – Z89 ... 3/61
- 2-stage – 1FG1306 – FZ89 ... 4/52
- 2-stage – 1FG1605 – C89 ... 6/23
- 3-stage – 1FG1208 – D89 ... 3/65
- 3-stage – 1FG1406 – FD89 ... 4/57
- 3-stage – 1FG1510 – K89 ... 5/44

Gearbox size 109 ... 3/69, 4/61, 5/50
- 3-stage – 1FG1511 – K109 ... 5/50
- 2-stage – 1FG1110 – Z109 ... 3/69
- 2-stage – 1FG1307 – FZ109 ... 4/61
- 3-stage – 1FG1210 – D109 ... 3/73
- 3-stage – 1FG1407 – FD109 ... 4/66

Gearbox size 129 ... 3/77, 4/70, 5/55
- 2-stage – 1FG1111 – Z129 ... 3/77
- 2-stage – 1FG1308 – FZ129 ... 4/70
- 3-stage – 1FG1211 – D129 ... 3/81
- 3-stage – 1FG1406 – FD129 ... 4/74
- 3-stage – 1FG1512 – K129 ... 5/55

Gearbox size 149 ... 5/60
- 3-stage – 1FG1513 – K149 ... 5/60

General ... 2/10
General information ... 7/2
General Provisions ... 10/15
General technical specifications ... 1/19
Glossary ... 10/2
Guidelines for selection and ordering ... 1/13

H

Higher permissible radial and axial force ... 2/7
Holding brakes ... 2/11, 8/45
Hollow shafts ... 1/18
Hollow shaft cover ... 2/16

I

Increased chemical resistance ... 2/20, 8/45
Industry Services ... 10/4
Industry Services – portfolio ... 10/5
Input speed ... 2/6
Installation altitude ... 2/10
Installation altitude and ambient temperature ... 2/4
Integration ... 1/11
Introduction ... 1/1

L

Losses that occur in gearboxes ... 2/5
Lubricant ... 8/43
Lubrication ... 2/16, 8/42

M

Magnetic oil drain screw ... 2/19
Metal factor examples ... 10/12, 10/13
Metal surcharges ... 10/12
Motor protection ... 7/3
Mounting position ... 8/6
- Angled mounting position ... 8/36
- Servo bevel geared motors ... 8/21
  - Foot-mounted design, 2-stage ... 8/21
  - Foot-mounted design, 3-stage ... 8/27
  - Housing flange and flange-mounted design, 2-stage ... 8/23
  - Housing flange and flange-mounted design, 3-stage ... 8/28
  - Shaft-mounted design, 2-stage ... 8/25
  - Shaft-mounted design, 3-stage ... 8/29
- Servo helical geared motors ... 8/8
  - Flange-mounted design or with housing flange, 2-stage, 3-stage ... 8/12
  - Foot/flange-mounted design, 2-stage, 3-stage ... 8/10
  - Foot-mounted design, 2-stage, 3-stage ... 8/8
- Servo helical worm geared motors ... 8/30
  - Foot-mounted design, 2-stage ... 8/34
  - Housing flange and flange-mounted design, 2-stage ... 8/32
  - Shaft-mounted design, 2-stage ... 8/30
- Servo parallel shaft geared motors ... 8/15
  - Flange-mounted design or with housing flange, 2-stage, 3-stage ... 8/17
  - Foot-mounted design, 2-stage, 3-stage ... 8/19
  - Shaft-mounted design, 2-stage, 3-stage ... 8/15

Motor shaft heights ... 1/18
Mounting types ... 8/5
Mounting types for flange-mounted design (A type) ... 8/5
Mounting types for foot/flange-mounted design ... 8/5
Mounting types for foot-mounted design ... 8/5
Mounting types for housing flange design (C type) ... 8/5
Mounting types for shaft-mounted design (torque arm) ... 8/5

N

Noise emission ... 2/13
Notes on dimensional drawings ... 1/18
Notes on the tables in chapters for selection of servo geared motors ... 1/16

O

Oil drain ... 2/19
Oil expansion unit ... 2/18, 8/44
Oil level control ... 8/44
Oil quantities ... 2/16
Oil sight glass ... 2/19
Online Support ... 10/6
Operating range ... 2/4
Options ... 8/1
Ordering data ... 1/13
Orientation ... 1/2
Orientation
- SIMOTICS S-1FG1 servo parallel shaft geared motors ... 4/2
- SIMOTICS S-1FG1 servo bevel geared motors ... 5/2
- SIMOTICS S-1FG1 servo helical geared motors ... 3/2
- SIMOTICS S-1FG1 servo helical worm geared motors ... 6/2

Output shaft bearings, radially reinforced ... 8/41
Overview ... 1/2

© Siemens 2019

Appendix
Indexes

Subject index

Overview of motor types – technical specifications
- Servomotors for a 270 to 330 V DC link voltage 7/8
  - Motor version CT (Compact) 7/8
  - Motor version HD (High Dynamic) 7/8
- Servomotors for a 510 to 720 V DC link voltage 7/4
  - Motor version CT (Compact) 7/4
  - Motor version HD (High Dynamic) 7/4

P

Paint finish 8/45
Partners at Siemens 10/3
Percentage method 10/12
Permanent-magnet brake 8/45
Permissible axial force 2/7
Permissible radial force 2/7
Permissible torque for SIMOLOC assembly system 2/9
Position of pressure breather valve, oil drain and oil sight glass 8/7
Position of the connector 8/7
Pressure breather valve 2/17, 8/44
Prices 10/15
Protection cover 2/16, 8/39

R

Radial force conversion for out of center force application point 2/8
Radial force, existing 2/6
Radial force for out of center force application point, conversion 2/8
Radial force, permissible 2/7
Radially reinforced output shaft bearings 8/41
Rating plate 8/45
Rating plate data (type plate) 2/10
Recommended bolt grade for helical gearboxes 2/6
Recommended bolt grade for parallel shaft gearboxes and bevel gearboxes 2/6
Reduced-backlash version 2/19, 8/41
Regulations 1/19
Repair Services 10/5
Required torque 2/6
Retrofit and Modernization Services 10/5
Roller bearing greases for gearboxes and motors 2/16

S

Sealing 2/16, 8/42
Sealing cap 2/16
Sealing system 8/42
Selection and ordering data – structure of tables 1/17
Selection and ordering example 1/14
Service Programs and Agreements 10/5
Servo bevel and servo helical worm geared motors 2-stage 2/14
Servo bevel geared motors – design 1/8
Servo bevel geared motors 3-stage 2/14
Servo geared motor fastening 2/6
Servo geared motor selection
- Servo bevel geared motors 5/3
- Servo helical geared motors 3/3
- Servo helical worm geared motors 6/3
- Servo parallel shaft geared motors 4/3

Servo geared motors 1/2
Servo geared motors with hollow shaft in shaft-mounted design (torque arm) 2/14
Servo helical geared motors – design 1/6
Servo helical worm geared motors – design 1/10
Servo parallel shaft geared motors – design 1/7
Servo parallel shaft geared motors 2-stage/3-stage 2/14
Shaft designs 8/2
- Servo parallel shaft geared motors 2-stage, 3-stage 8/2
- Servo bevel geared motors 2-stage 8/3
- Servo bevel geared motors 3-stage 8/3
- Servo helical geared motors 2-stage, 3-stage 8/2
- Servo helical worm geared motors 2-stage 8/4

Shaft extensions 1/18
Shaft load and bearing service life 2/6
Shaft-mounted design (torque arm) 8/37
SIMOLOC assembly system 2/15
SIMOLOC assembly system, permissible torque 2/9
SIMOTICS S-1FG1 servo bevel geared motors 5/1
SIMOTICS S-1FG1 servo helical geared motors 3/1
SIMOTICS S-1FG1 servo helical worm geared motors 6/1
SIMOTICS S-1FG1 servo parallel shaft geared motors 4/1
SINAMICS Drive Control Chart (SINAMICS DCC) 9/7
SINAMICS Startdrive – commissioning tool 9/8
SINAMICS Web server for SINAMICS S120 ..... 9/9
SinaSave energy efficiency tool 9/2
SIZER for Siemens Drives engineering tool 9/4
SIZER for Siemens Drives 2/4, 9/4
Spare Parts Services 10/5
Special versions 8/6
Spring-operated brake 8/45
Standards 1/19, 2/5
STARTER commissioning tool 9/5
Structure of the Article No. 1/13
Structure of the metal factor 10/12, 10/13
Structure of the selection and ordering data tables 1/17
Structure of the technical specifications tables 1/16
Support and Consulting Services 10/5
Surcharge calculation 10/12, 10/13

T

Three-months average price 10/13
Technical definitions for servomotors 7/1
Technical definitions for servomotors – General information 7/2
Technical specifications – overview of motor types 7/4
Technical specifications – structure of tables 1/16
Test certificates 8/45
Training Services 10/5
Type designation of gearboxes 1/15

V

Values of the metal factor 10/14
Ventilation 2/10
Vent valves 1/18
Vibratory load 2/13

W

Weight method 10/12, 10/13

© Siemens 2019

1FG11
1FG1101 ... 3/3 ... 3/7
1FG1102 ... 3/3 ... 3/7
1FG1103 ... 3/12 ... 3/16
1FG1104 ... 3/22 ... 3/27
1FG1105 ... 3/33 ... 3/37
1FG1106 ... 3/43 ... 3/47
1FG1107 ... 3/53 ... 3/56
1FG1108 ... 3/61 ... 3/64
1FG1110 ... 3/69 ... 3/72
1FG1111 ... 3/77 ... 3/80

1FG12
1FG1201 ... 3/8 ... 3/11
1FG1202 ... 3/8 ... 3/11
1FG1203 ... 3/17 ... 3/21
1FG1204 ... 3/28 ... 3/32
1FG1205 ... 3/38 ... 3/42
1FG1206 ... 3/48 ... 3/52
1FG1207 ... 3/57 ... 3/60
1FG1208 ... 3/65 ... 3/68
1FG1210 ... 3/73 ... 3/76
1FG1211 ... 3/81 ... 3/83

1FG13
1FG1301 ... 4/3 ... 4/8
1FG1302 ... 4/13 ... 4/18
1FG1303 ... 4/24 ... 4/28
1FG1304 ... 4/34 ... 4/38
1FG1305 ... 4/44 ... 4/47
1FG1306 ... 4/52 ... 4/56
1FG1307 ... 4/61 ... 4/65
1FG1308 ... 4/70 ... 4/73

1FG14
1FG1401 ... 4/9 ... 4/12
1FG1402 ... 4/19 ... 4/23
1FG1403 ... 4/29 ... 4/33
1FG1404 ... 4/39 ... 4/43
1FG1405 ... 4/48 ... 4/51
1FG1406 ... 4/57 ... 4/60
1FG1407 ... 4/66 ... 4/69
1FG1408 ... 4/74 ... 4/77

1FG15
1FG1500 ... 5/3 ... 5/8
1FG1501 ... 5/3 ... 5/8
1FG1502 ... 5/9 ... 5/13
1FG1503 ... 5/14 ... 5/19
1FG1504 ... 5/20 ... 5/25
1FG1505 ... 5/26 ... 5/31
1FG1507 ... 5/32 ... 5/37
1FG1508 ... 5/38 ... 5/43
1FG1510 ... 5/44 ... 5/49
1FG1511 ... 5/50 ... 5/54
1FG1512 ... 5/55 ... 5/59
1FG1513 ... 5/60 ... 5/64

1FG16
1FG1601 ... 6/3 ... 6/7
1FG1602 ... 6/8 ... 6/12
1FG1603 ... 6/13 ... 6/17
1FG1604 ... 6/18 ... 6/22
1FG1605 ... 6/23 ... 6/26

6AU18
6AU1810-1HA24-1XA0 ... 9/7
6AU1810-1HA24-1XE0 ... 9/7

6ES79
6ES7901-1BF00-0XA0 ... 9/6
6ES7901-4BD00-0XA0 ... 9/6

6GK15
6GK1571-1AA00 ... 9/6

6SL30
6SL3070-0AA00-0AG0 ... 9/4
6SL3072-0AA00-0AG0 ... 9/6
6SL3077-0AA00-0AB0 ... 9/7

6SW17
6SW1700-0JD00-0AB2 ... 9/11, 9/12
6SW1700-0JD01-0AB2 ... 9/11, 9/12
6SW1700-1JD00-0AA0 ... 9/11
6SW1700-1JD00-0AB2 ... 9/11
6SW1700-1JD01-0AA0 ... 9/11
6SW1700-1JD01-0AB2 ... 9/11
6SW1700-5JA00-6AA0 ... 9/10
6SW1700-5JD00-1AC0 ... 9/11
6SW1700-8JD00-0AA0 ... 9/11
6SW1700-8JD00-0AA4 ... 9/11
6SW1700-8JD00-1AA0 ... 9/11
6SW1700-8JD00-1AA4 ... 9/11
6SW1700-8JD00-2AA0 ... 9/11
6SW1700-8JD00-2AA4 ... 9/11
6SW1700-8JD01-0AA0 ... 9/11
6SW1700-8JD01-0AA4 ... 9/11
6SW1700-8JD01-1AA0 ... 9/11
6SW1700-8JD01-1AA4 ... 9/11
6SW1700-8JD01-2AA0 ... 9/11
6SW1700-8JD01-2AA4 ... 9/11

E86060
E86060-D4001-A510-D8-7600 ... 1, 9/3

© Siemens 2019

Explanation of the raw material/metal surcharges

Overview[1)]

Surcharge calculation

To compensate for variations in the price of the raw materials silver, copper, aluminum, lead, gold, dysprosium[2)] and/or neodym[2)], surcharges are calculated on a daily basis using the so-called metal factor for products containing these raw materials. A surcharge for the respective raw material is calculated as a supplement to the price of a product if the basic official price of the raw material in question is exceeded.

The surcharges are calculated in accordance with the following criteria:

- Basic official price of the raw material
  Basic official price from the day prior to receipt of the order or prior to release order (daily price) for[3)]
  - Silver (sales price, processed)
  - Gold (sales price, processed)

  and for[4)]
  - Copper (lower DEL notation + 1 %)
  - Aluminum (aluminum in cables)
  - Lead (lead in cables)
- Metal factor of the products
  Certain products are displayed with a metal factor. The metal factor determines the official price (for those raw materials concerned) as of which the metal surcharges are applied and the calculation method used (weight or percentage method). An exact explanation is given below.

Structure of the metal factor

The metal factor consists of several digits; the first digit indicates whether the percentage method of calculation refers to the list price or a possible discounted price (customer net price) (L = list price / N = customer net price).

The remaining digits indicate the method of calculation used for the respective raw material. If no surcharge is added for a raw material, a "-" is used.

1st digit	List or customer net price using the percentage method
2nd digit	for silver (AG)
3rd digit	for copper (CU)
4th digit	for aluminum (AL)
5th digit	for lead (PB)
6th digit	for gold (AU)
7th digit	for dysprosium (Dy)[2)]
8th digit	for neodym (Nd)[2)]

Weight method

The weight method uses the basic official price, the daily price and the raw material weight. In order to calculate the surcharge, the basic official price must be subtracted from the daily price. The difference is then multiplied by the raw material weight.

The basic official price can be found in the table below using the number (1 to 9) of the respective digit of the metal factor. The raw material weight can be found in the respective product descriptions.

Percentage method

Use of the percentage method is indicated by the letters A-Z at the respective digit of the metal factor.

The surcharge is increased - dependent on the deviation of the daily price compared with the basic official price - using the percentage method in "steps" and consequently offers surcharges that remain constant within the framework of this "step range". A higher percentage rate is charged for each new step. The respective percentage level can be found in the table below.

Metal factor examples

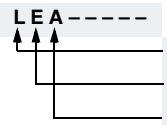

Basis for % surcharge: List price
Silver Basis 150 €, Step 50 €, 0.5 %
Copper Basis 150 €, Step 50 €, 0.1 %
No surcharge for aluminum
No surcharge for lead
No surcharge for gold
No surcharge for dysprosium
No surcharge for neodym

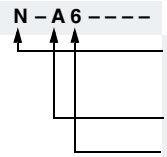

Basis for % surcharge: Customer net price
No surcharge for silver
Copper Basis 150 €, Step 50 €, 0.1 %
Aluminum acc. to weight, basic offic. price 225 €
No surcharge for lead
No surcharge for gold
No surcharge for dysprosium
No surcharge for neodym

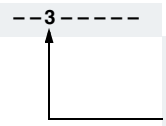

No basis necessary
No surcharge for silver
Copper acc. to weight, basic official price 150 €
No surcharge for aluminum
No surcharge for lead
No surcharge for gold
No surcharge for dysprosium
No surcharge for neodym

1) Refer to the separate explanation on the next page regarding the raw materials dysprosium and neodym (= rare earths).
2) For a different method of calculation, refer to the separate explanation for these raw materials on the next page.
3) Source: Umicore, Hanau (www.metalsmanagement.umicore.com).
4) Source: Schutzvereinigung DEL-Notiz e.V. (www.del-notiz.org).

© Siemens 2019

Explanation of the raw material/metal surcharges for dysprosium and neodym (rare earths)

Overview

Surcharge calculation

To compensate for variations in the price of the raw materials silver[1)], copper[1)], aluminum[1)], lead[1)], gold[1)], dysprosium and/or neodym, surcharges are calculated on a daily basis using the so-called metal factor for products containing these raw materials. The surcharge for dysprosium and neodym is calculated as a supplement to the price of a product if the basic official price of the raw material in question is exceeded.

The surcharge is calculated in accordance with the following criteria:

- Basic official price of the raw material[2)]
  Three-month basic average price (see below) in the period before the quarter in which the order was received or the release order took place (= average official price) for
  - dysprosium (Dy metal, 99 % min. FOB China; USD/kg)
  - neodym (Nd metal, 99 % min. FOB China; USD/kg)
- Metal factor of the products
  Certain products are displayed with a metal factor. The metal factor indicates (for those raw materials concerned) the basic official price as of which the surcharges for dysprosium and neodym are calculated using the weight method. An exact explanation of the metal factor is given below.

Three-month average price

The prices of rare earths vary according to the foreign currency, and there is no freely accessible stock exchange listing. This makes it more difficult for all parties involved to monitor changes in price. In order to avoid continuous adjustment of the surcharges, but to still ensure fair, transparent pricing, an average price is calculated over a three-month period using the average monthly foreign exchange rate from USD to EUR (source: European Central Bank). Since not all facts are immediately available at the start of each month, a one-month buffer is allowed before the new average price applies.

Examples of calculation of the average official price:

Period for calculation of the average price:	Period during which the order/release order is effected and the average price applies:
Sep 2012 - Nov 2012	Q1 in 2013 (Jan - Mar)
Dec 2012 - Feb 2013	Q2 in 2013 (Apr - Jun)
Mar 2013 - May 2013	Q3 in 2013 (Jul - Sep)
Jun 2013 - Aug 2013	Q4 in 2013 (Oct - Dec)

Structure of the metal factor

The metal factor consists of several digits; the first digit is not relevant to the calculation of dysprosium and neodym.

The remaining digits indicate the method of calculation used for the respective raw material. If no surcharge is added for a raw material, a "-" is used.

1st digit	List or customer net price using the percentage method
2nd digit	for silver (AG)[1)]
3rd digit	for copper (CU)[1)]
4th digit	for aluminum (AL)[1)]
5th digit	for lead (PB)[1)]
6th digit	for gold (AU)[1)]
7th digit	for dysprosium (Dy)
8th digit	for neodym (Nd)

Weight method

The weight method uses the basic official price, the average price and the raw material weight. In order to calculate the surcharge, the basic official price must be subtracted from the average price. The difference is then multiplied by the raw material weight.

The basic official price can be found in the table below using the number (1 to 9) of the respective digit of the metal factor. Your Sales contact can inform you of the raw material weight.

Metal factor examples

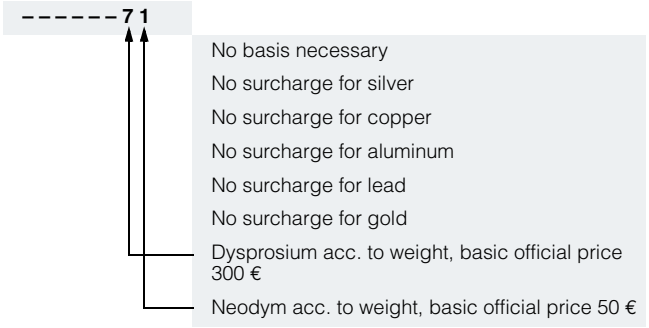

© Siemens 2019

Values of the metal factor

Overview

Percentage method	Basic official price in €	Step range in €	% surcharge 1st step	% surcharge 2nd step	% surcharge 3rd step	% surcharge 4th step	% surcharge per additional step
			Price in €	Price in €	Price in €	Price in €	
			150.01 - 200.00	200.01 - 250.00	250.01 - 300.00	300.01 - 350.00	
A	150	50	0.1	0.2	0.3	0.4	0.1
B	150	50	0.2	0.4	0.6	0.8	0.2
C	150	50	0.3	0.6	0.9	1.2	0.3
D	150	50	0.4	0.8	1.2	1.6	0.4
E	150	50	0.5	1.0	1.5	2.0	0.5
F	150	50	0.6	1.2	1.8	2.4	0.6
G	150	50	1.0	2.0	3.0	4.0	1.0
H	150	50	1.2	2.4	3.6	4.8	1.2
I	150	50	1.6	3.2	4.8	6.4	1.6
J	150	50	1.8	3.6	5.4	7.2	1.8
			175.01 - 225.00	225.01 - 275.00	275.01 - 325.00	325.01 - 375.00	
O	175	50	0.1	0.2	0.3	0.4	0.1
P	175	50	0.2	0.4	0.6	0.8	0.2
R	175	50	0.5	1.0	1.5	2.0	0.5
			225.01 - 275.00	275.01 - 325.00	325.01 - 375.00	375.01 - 425.00	
S	225	50	0.2	0.4	0.6	0.8	0.2
U	225	50	1.0	2.0	3.0	4.0	1.0
V	225	50	1.0	1.5	2.0	3.0	1.0
W	225	50	1.2	2.5	3.5	4.5	1.0
			150.01 - 175.00	175.01 - 200.00	200.01 - 225.00	225.01 - 250.00	
Y	150	25	0.3	0.6	0.9	1.2	0.3
			400.01 - 425.00	425.01 - 450.00	450.01 - 475.00	475.01 - 500.00	
Z	400	25	0.1	0.2	0.3	0.4	0.1
	Price basis (1st digit)						
L	Calculation based on the list price						
N	Calculation based on the customer net price (discounted list price)						
Weight method	**Basic official price in €**						
1	50	Calculation based on raw material weight					
2	100						
3	150						
4	175						
5	200						
6	225						
7	300						
8	400						
9	555						
Miscellaneous							
–	No metal surcharge						

© Siemens 2019

1. General Provisions

By using this catalog you can acquire hardware and software products described therein from Siemens AG subject to the following Terms and Conditions of Sale and Delivery (hereinafter referred to as "T&C"). Please note that the scope, the quality and the conditions for supplies and services, including software products, by any Siemens entity having a registered office outside Germany, shall be subject exclusively to the General Terms and Conditions of the respective Siemens entity. The following T&C apply exclusively for orders placed with Siemens Aktiengesellschaft, Germany.

1.1 For customers with a seat or registered office in Germany

For customers with a seat or registered office in Germany, the following applies subordinate to the T&C:

- for installation work the "General Conditions for Erection Works – Germany"[1)] ("Allgemeine Montagebedingungen – Deutschland" (only available in German at the moment)) and/or
- for Plant Analytics Services the "Standard Terms and Conditions for Plant Analytics Services – for Customer in Germany"[1)] ("Allgemeine Geschäftsbedingungen für das Plant Analytics Services – für Kunden in Deutschland" (only available in German at the moment)) and/or
- for stand-alone software products and software products forming a part of a product or project, the "General License Conditions for Software Products for Automation and Drives for Customers with a Seat or registered Office in Germany"[1)] and/or
- for other supplies and/or services the "General Conditions for the Supply of Products and Services of the Electrical and Electronics Industry"[1)].
  In case such supplies and/or services should contain Open Source Software, the conditions of which shall prevail over the " General Conditions for the Supply of Products and Services of the Electrical and Electronics Industry "[1)]. A notice will be contained in the scope of delivery in which the applicable conditions for Open Source Software are specified. This shall apply mutatis mutandis for notices referring to other third party software components.

1.2 For customers with a seat or registered office outside Germany

For customers with a seat or registered office outside Germany, the following applies subordinate to the T&C:

- for Plant Analytics Services the "Standard Terms and Conditions for Plant Analytics Services"[1)] and/or
- for services the "International Terms & Conditions for Services"[1)] supplemented by "Software Licensing Conditions"[1)] and/or
- for other supplies of hard- and/or software the "International Terms & Conditions for Products"[1)] supplemented by "Software Licensing Conditions" [1)]

1.3 For customers with master or framework agreement

To the extent our supplies and/or services offered are covered by an existing master or framework agreement, the terms and conditions of that agreement shall apply instead of T&C.

2. Prices

The prices are in € (Euro) ex point of delivery, exclusive of packaging.

The sales tax (value added tax) is not included in the prices. It shall be charged separately at the respective rate according to the applicable statutory legal regulations.

Prices are subject to change without prior notice. We will charget the prices valid at the time of delivery.

To compensate for variations in the price of raw materials (e.g. silver, copper, aluminum, lead, gold, dysprosium and neodym), surcharges are calculated on a daily basis using the so-called metal factor for products containing these raw materials. A surcharge for the respective raw material is calculated as a supplement to the price of a product if the basic official price of the raw material in question is exceeded.

The metal factor of a product indicates the basic official price (for those raw materials concerned) as of which the surcharges on the price of the product are applied, and with what method of calculation.

You will find a detailed explanation of the metal factor on the page headed "Metal surcharges".

To calculate the surcharge (except in the cases of dysprosium and neodym), the official price from the day prior to that on which the order was received or the release order was effected is used.

To calculate the surcharge applicable to dysprosium and neodym ("rare earths"), the corresponding three-month basic average price in the quarter prior to that in which the order was received or the release order was effected is used with a one-month buffer (details on the calculation can be found in the explanation of the metal factor).

3. Additional Terms and Conditions

The dimensions are in mm. In Germany, according to the German law on units in measuring technology, data in inches apply only to devices for export.

Illustrations are not binding.

Insofar as there are no remarks on the individual pages of this catalog - especially with regard to data, dimensions and weights given - these are subject to change without prior notice.

[1)] The text of the Terms and Conditions of Siemens AG can be downloaded at
www.siemens.com/automation/salesmaterial-as/catalog/en/terms_of_trade_en.pdf

© Siemens 2019

4. Export regulations

We shall not be obligated to fulfill any agreement if such fulfillment is prevented by any impediments arising out of national or international foreign trade or customs requirements or any embargoes and/or other sanctions.

Export may be subject to license. We shall indicate in the delivery details whether licenses are required under German, European and US export lists.

Our products are controlled by the U.S. Government (when labeled with "ECCN" unequal "N") and authorized for export only to the country of ultimate destination for use by the ultimate consignee or end-user(s) herein identified. They may not be resold, transferred, or otherwise disposed of, to any other country or to any person other than the authorized ultimate consignee or end-user(s), either in their original form or after being incorporated into other items, without first obtaining approval from the U.S. Government or as otherwise authorized by U.S. law and regulations.

The export indications can be viewed in advance in the description of the respective goods on the Industry Mall, our online catalog system. Only the export labels "AL" and "ECCN" indicated on order confirmations, delivery notes and invoices are authoritative.

Products labeled with "AL" unequal "N" are subject to European / national export authorization. Products without label, with label "AL:N" / "ECCN:N", or label "AL:9X9999" / "ECCN: 9X9999" may require authorization from responsible authorities depending on the final end-use, or the destination.

If you transfer goods (hardware and/or software and/or technology as well as corresponding documentation, regardless of the mode of provision) delivered by us or works and services (including all kinds of technical support) performed by us to a third party worldwide, you must comply with all applicable national and international (re-)export control regulations.

If required for the purpose of conducting export control checks, you (upon request by us) shall promptly provide us with all information pertaining to the particular end customer, final disposition and intended use of goods delivered by us respectively works and services provided by us, as well as to any export control restrictions existing in this relation.

The products listed in this catalog may be subject to European/German and/or US export regulations. Any export requiring approval is therefore subject to authorization by the relevant authorities.

Errors excepted and subject to change without prior notice.

© Siemens 2019

Easy product selection and ordering: Industry Mall and Interactive Catalog CA 01

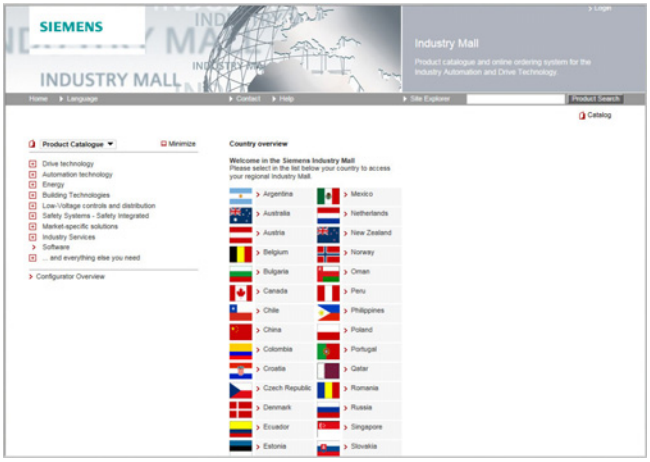

Industry Mall

The Industry Mall is a Siemens AG Internet ordering platform. It provides you with online access to a comprehensive product spectrum that is presented in an informative, well-organized way.

Powerful search functions help you select the required products, while configurators enable you to configure complex product and system components quickly and easily. CAx data are also available for you to use.

Data transfer allows the entire procedure, from selection through ordering to tracking and tracing, to be carried out online. Availability checks, individual customer discounting, and quotation preparation are also possible.

www.siemens.com/industrymall



Interactive Catalog CA 01 – Products for automation and drives

The Interactive Catalog CA 01 combined with the Siemens Industry Mall unites the benefits of offline and online media in one application – the performance of an offline catalog with the availability of a wide range of up-to-date information on the Internet.
Select products and assemble orders using the CA 01, determine the availability of the selected products, and track and trace them via the Industry Mall.

Information and download:
www.siemens.com/automation/ca01

Downloading catalogs

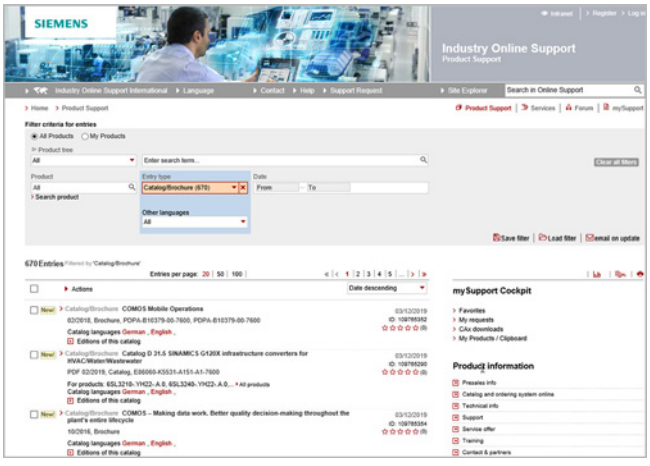

Siemens Industry Online Support

You can download catalogs and brochures in PDF format from Siemens Industry Online Support without having to register.

The filter box makes it possible to perform targeted searches.

www.siemens.com/industry-catalogs

Ordering printed catalogs



Please contact your local Siemens branch if you are interested in ordering printed catalogs.
Addresses can be found at
www.siemens.com/automation-contact

© Siemens 2019

Get more information

Servo geared motors:
www.siemens.com/servo-geared-motors

Local partners worldwide:
www.siemens.com/automation-contact

Siemens AG
Digital Industries
Motion Control
Postfach 31 80
91050 Erlangen
Germany

© Siemens AG 2019
Subject to change without prior notice
PDF (Article No. E86060-K5541-A101-A4-7600)
V6.MKKATA.GMC.121
KG 0519 698 En
Produced in Germany

The information provided in this catalog contains merely general descriptions or characteristics of performance which in case of actual use do not always apply as described or which may change as a result of further development of the products. An obligation to provide the respective characteristics shall only exist if expressly agreed in the terms of contract. Availability and technical specifications are subject to change without notice.

All product designations may be trademarks or product names of Siemens AG or supplier companies whose use by third parties for their own purposes could violate the rights of the owners.

Security information

Siemens provides products and solutions with industrial security functions that support the secure operation of plants, systems, machines and networks.

In order to protect plants, systems, machines and networks against cyber threats, it is necessary to implement – and continuously maintain – a holistic, state-of-the-art industrial security concept. Siemens' products and solutions constitute one element of such a concept.

Customers are responsible for preventing unauthorized access to its plants, systems, machines and networks. Such systems, machines and components should only be connected to an enterprise network or the internet if and to the extent such a connection is necessary and only when appropriate security measures (e.g. firewalls and/or network segmentation) are in place.

For additional information on industrial security measures that may be implemented, please visit **https://www.siemens.com/industrialsecurity.**

Siemens' products and solutions undergo continuous development to make them more secure. Siemens strongly recommends that product updates are applied as soon as they are available and that the latest product versions are used. Use of product versions that are no longer supported, and failure to apply latest updates may increase customer's exposure to cyber threats.

To stay informed about product updates, subscribe to the Siemens Industrial Security RSS Feed under **https://www.siemens.com/industrialsecurity.**

Please scan the QR code for more information on Siemens Motors.