SIEMENS

Medium-Voltage Switchgear

Circuit-Breaker Switchgear Type NXAIR: Factory-Assembled, Type-Tested and Metal-Enclosed Switchgear for Indoor Installation, Air-Insulated

Loss of Service Continuity Category: LSC 2B (Metal-Clad)
Partition Class PM (Metallic Partition)
Internal Arc Classification: IAC A FLR, Ik ≤ 40 kA, t = 1 s Arc Duration

Mittelspannungsschaltanlagen

Leistungsschalteranlage Typ NXAIR: Fabrikgefertigte, typgeprüfte und metallgekapselte Schaltanlage für Innenraumaufstellung, luftisoliert

Kategorie der Betriebsverfügbarkeit: LSC 2B (Metal-Clad)
Schottungsklasse PM (Metallic Partition)
Störlichtbogenqualifikation: IAC A FLR, Ik ≤ 40 kA, t = 1 s Lichtbogendauer



Supplement drawings for Installation instructions

Informationszeichnungen zur Montageanleitung

Order number / Bestellnummer:	110-2300.9 8BX3300-0LA00-0AE0
Revision / Änderungsstand:	02
Issue / Ausgabe:	26.01.2017

Content / Inhalt

	Content	Inhalt	Zeichnung Drawing
1.	Dimension drawing <=17,5kV / <=31,5kA	Maßbild <=17,5kV / <=31,5kA	110-0250.9
2.	Dimension drawing <=17,5kV / 40kA	Maßbild <=17,5kV / 40kA	110-0262.9
3.	Use of crane devices panel width 600/800mm	Verwendung Kranwinkel Feldbreite 600/800mm	110-0394.9
4.	Use of crane devices panel width 600/800mm panel version with rear duct	Verwendung Kranwinkel Feldbreite 600/800mm Feldausführung mit rückseitigem Kanal	110-0395.9
5.	Use of crane devices panel width 435mm	Verwendung Kranwinkel Feldbreite 435mm	110-0396.9
6.	Use of crane devices panel width 1000mm	Verwendung Kranwinkel Feldbreite 1000mm	110-0397.9
7.	Use of crane devices panel width 1000mm panel version with rear duct	Verwendung Kranwinkel Feldbreite 1000mm Feldausführung mit rückseitigem Kanal	110-0398.9
8.	Pressure relief duct with Exit	Druckentlastungskanal mit Auslass	110-0324.9
9.	Pressure relief duct: Exit at side	Druckentlastungskanal: Auslass seitlich	110-0179.9
10.	Pressure relief duct: Exit at rear	Druckentlastungskanal: Auslass rückseitig	110-0231.9 110-0234.9
11.	Installation absorber 31,5kA	Einbau Absorber 31,5kA	110-0233.9
12.	Pressure relief duct assembly	Anbau Druckentlastungskanal	110-0490.9
13.	Installation withdrawable PT’s unit	Einbau trennbare Spannungswandler	110-0261.9
14.	Panel Protection IP4X	Ertüchtigung zu Schutzgrad IP4X	110-0051.9
15.	Bar connection from bottom 1250A / <=31,5kA	Schienenanschluss von unten 1250A / <=31,5kA	110-0117.9
16.	Bar connection from bottom 2500A / <=31,5kA	Schienenanschluss von unten 2500A / <=31,5kA	110-0118.9 110-0237.9
17.	Bar connection from bottom 40kA	Schienenanschluss von unten 40kA	110-0321.9
18.	Deep bottom pan Vacuum contactor panel	Vertiefte Bodenwanne Schützfeld	110-0297.9 110-4003.3
19.	Bottom pan for panel width 600mm: 12kV	Bodenwanne Feldbreite 600mm: 12kV	110-0295.9
20.	Bottom pan for panel width 600mm: 17,5kV	Bodenwanne Feldbreite 600mm: 17,5kV	110-0298.9
21.	Deep bottom pan for panel width 600mm	Vertiefte Bodenwanne Feldbreite 600mm	110-0310.9 110-3999.3
22.	Bottom pan for panel width 800mm: 12kV	Bodenwanne Feldbreite 800mm: 12kV	110-0296.9
23.	Bottom pan for panel width 800mm: 17,5kV	Bodenwanne Feldbreite 800mm: 17,5kV	110-0299.9
24.	Deep bottom pan for panel width 800mm	Vertiefte Bodenwanne Feldbreite 800mm	110-0311.9 110-4001.3

25.	Bottom pan for panel width 1000mm: <=17,5kV	Bodenwanne Feldbreite 1000mm: <=17,5kV	110-0225.9
26.	Deep bottom pan for panel width 1000mm	Vertiefte Bodenwanne Feldbreite 1000mm	110-0225.9 110-3550.3
27.	Bar connection from top: 600mm / 12kV	Schienenanschluss von oben: 600mm / 12kV	110-2136.9
28.	Bar connection from top: 600mm / 17,5kV	Schienenanschluss von oben: 600mm / 17,5kV	110-2137.9
29.	Cable connection from top: 600mm / 12kV	Kabelanschluss von oben: 600mm / 12kV	110-2138.9
30.	Cable connection from top: 600mm / 17,5kV	Kabelanschluss von oben: 600mm / 17,5kV	110-2139.9
31.	Bar connection from top: 600mm / <=17,5kV	Schienenanschluss von oben: 600mm / <=17,5kV	110-2201.9
32.	Cable connection from top: 800mm / <=17,5kV	Kabelanschluss von oben: 800mm / <=17,5kV	110-2202.9
33.	Installation bus bars system at Vacuum contactor panel together with Circuit breaker panel not insulated bus bars system 1250A centre panel	Einbau Sammelschiene Schützfeld nicht isoliertes Sammelschienensystem 1250A Mittelfeld	894-5437.9
34.	Installation bus bars system at Vacuum contactor panel together with Circuit breaker panel not insulated bus bars system 1250A end panel right	Einbau Sammelschiene Schützfeld nicht isoliertes Sammelschienensystem 1250A Endfeld rechts	894-5438.9
35.	Installation bus bars system at Vacuum contactor panel together with Circuit breaker panel not insulated bus bars system 1250A end panel left	Einbau Sammelschiene Schützfeld nicht isoliertes Sammelschienensystem 1250A Endfeld links	894-5439.9
36.	Installation bus bars system at Vacuum contactor panel together with Circuit breaker panel not insulated bus bars system 2500A centre panel	Einbau Sammelschiene Schützfeld nicht isoliertes Sammelschienensystem 2500A Mittelfeld	894-5440.9
37.	Installation bus bars system at Vacuum contactor panel together with Circuit breaker panel not insulated bus bars system 2500A end panel right	Einbau Sammelschiene Schützfeld nicht isoliertes Sammelschienensystem 2500A Endfeld rechts	894-5441.9
38.	Installation bus bars system at Vacuum contactor panel together with Circuit breaker panel not insulated bus bars system 2500A end panel left	Einbau Sammelschiene Schützfeld nicht isoliertes Sammelschienensystem 2500A Endfeld links	894-5442.9
39.	Panel connection at rear Vacuum contactor panel	Feldverbindung rückseitig Schützeinschubfeld	110-0281.9
40.	Pressure relief duct assembly Vacuum contactor panel	Anbau Druckentlastungskanal Schützeinschubfeld	894-5450.9
41.	Installation busbar system at Vacuum Contactor panel Ik <=31,5 kA	Einbau Sammelschiene Schützfeld Ik <=31,5 kA (Ausführung ab 2. Halbjahr 2013)	110-0432.9
42.	Installation bus bar system at Vacuum contactor panel Ik =40 kA	Einbau Sammelschiene Schützfeld Ik =40 kA (Ausführung ab 2. Halbjahr 2013)	110-0433.9

Impressum

Siemens AG

Energy Management Division

Medium Voltage & Systems

Schaltanlagenwerk Frankfurt

Carl-Benz-Str. 22

D-60386 Frankfurt

© Siemens AG 2017

Bemessungsgröße / Rated values

Bemessungs-Spannung rated voltage	12kV	17.5kV
Bemessungs-Frequenz rated frequency	50/60Hz	50/60Hz
Bemessungs-Kurzzeit-Stehwechselspannung rated schort-duration power-frequency withstand voltage	28/42kV	38/42kV
Bemessungs-Stehblitzstoßspannung rated lightning impulse withstand voltage	75kV	95kV
Bemessungs-Kurzschlußausschaltstrom max. rated schort-circuit breaking current max.	≤31.5kA	≤31.5kA
Bemessungs-Kurzzeitstrom max. rated schort-time withstand current max.	≤31.5kA	≤31.5kA
Bemessungs-Kurzschlußdauer rated schort-circuit time	3s	3s
Bemessungs-Kurzschlußeinschaltstrom max. rated schort-circuit making current max.	80/82kA	80/82kA
Bemessungs-Stoßstrom max. rated peak withstand current max.	80/82kA	80/82kA
Bemessungs-Strom Sammelschiene max. rated normal current of busbar max.	2500A	2500A
Betriebsstrom der Abzweige normal current of feeders		
mit Leistungsschalter / Circuit-breaker panel	2500A	2500A
mit Schützeinschub / Contactor panel	400A	-
mit Trenneinschub / Disconnecting panel	2500A	2500A
Längskupplung / Bus sectionalizer	2500A	2500A
Samelschienenanschlußfeld / Busbar connecting panel	2500A	2500A

Maße / Dimension

Breite Width	Leistungsschalterfeld Circuit-breaker panel	≤1000A ≤1250A ≤2000A ≤2500A	600mm 800mm 800mm 1000mm
	Schützeinschubfeld Contactor panel	≤400A	435/600mm
	Trenneinschubfeld Disconnecting panel	≤1250A ≤2500A	800mm 1000mm
	Längskupplung Bus sectionalizer	≤1250A ≤2500A ≤2500A	2 x 800mm 1000 + 800mm 2 x 1000mm
	Messfeld Metering panel		800mm
	Sammelschienenanschlussfeld Busbar connection panel		800mm
Höhe Height	mit Standart-Niederspannungsschrank with standard low-voltage compartment		2300mm
	bei erhöhtem Niederspannungsschrank oder Sammelschienen-Erder oder Sammelschienen Spannungswandler with high low-voltage compartment or busbar earthing switch or busbar voltage transformer		2350mm
	mit Absorber with absorber 31.5kA		2500mm
Tiefe Depth	Einfachsammelschiene, alle Feldarten Single Busbar, allpanel types		1350mm
	Schützeinschubfeld Contactor panel		1350/1400mm
	Einfachsammelschiene, CBP and DP Single Busbar, CBP and DP		1500mm

Gewicht / Weight

Feldbreite / Panel widh	435 mm	600 mm	800 mm	1000 mm
Gewicht / Weight	700 - 770 kg	800 - 950 kg	1020 - 1320 kg	1230 - 1650 kg
Inlandverpackung / Inland package	29 kg	32 kg	34 kg	37 kg
Seeverpackung / Seaworthy package	130 kg	138 kg	144 kg	155 kg

Feld mit Rucksack / Panel with Rear box			
Feldbreite / Panel widh	600 mm	800 mm	1000 mm
Gewicht / Weight	950 - 1100 kg	1280 - 1480 kg	1420 - 1890 kg
Inlandverpackung / Inland package	46 kg	49 kg	53 kg
Seeverpackung / Seaworthy package	172 kg	183 kg	196 kg

Confié a titre de secret d'enterprise. Tous droits reserves.
Comunicado como segredo empresarial. Reservados todos os direitos.
Confiado como secreto industrial. Todos los derechos reservados.

Alle Betriebsgeheimnis anvertraut. Alle Rechte vorbehalten.
Proprietary data, company confidential. All rights reserved.

Tolerance Toleranz (ISO): DIN ISO 2768 medium
Material;Werkstoff: -
Mass ; Masse: -
Unit;Einheit: mm
Papersize Format: C/A2
Scale Massstab: W/O SC.
Material No./Nr. 1: SWF:(-)
Material No./Nr. 2:
Released Freigabe: Frei

06-11-2014	BAO	Date Datum	09-08-2010	Designation Benennung	Dimension drawing NXAIR
Date Datum	Name Name	Name Name	DREISBACH		
14/7119	09	Department Abteilung	E_D_MV_1_R&D		
Mod./Ref-No. Aend.-Vorg.-Nr.	Revision Revision	Location Standort	FFMCB	Itemnumber Sachnummer	110-0250.9

SIEMENS

ISO-Projection

Page Blatt 1+

Bemessungsgrößen und Maße
Rated values and dimension

HPD

printed by oprtcual, 11/07/14-03:22:05

Confiè a titre de secret d'enterprise. Tous droits reserves.
Comunicado como segredo empresarial. Reservados todos os direitos.
Confiado como secreto industrial. Todos los derechos reservados.

Als Betriebsgeheimnis anvertraut. Alle Rechte vorbehalten.
Proprietary data, company confidential. All rights reserved.

Inhaltsverzeichnis / Contents

Bemessungsgrößen und Maße	Rated values and dimension	Page 1
Inhaltsverzeichnis	Contents	Page 2
Frontansichten	Front views	Page 3 - 5
Schaltgeräteraum	Switching device compartment	Page 6 ; 39
Sammelschienenraum	Busbar compartment	Page 7 - 8
Anschlussraum	Connection compatment	Page 9 - 13
Anschlussraum mit tiefer Wanne	Connection compatment with deep pan	Page 14 - 17
Rucksack	Rear box	Page 18
Niederspannungsschrank	Low-voltage compartment	Page 19
Druckentlastungskanal	Pressure relief duct	Page 20 - 22
Druckentlastungskanal mit Absorber	Pressure relief duct with absorber	Page 23
Bodendurchbrüche	Floor cut outs	Page 24 - 25
Lage Fundamentschienen	Lacation foundation rails	Page 26 - 27
Allgemeine Hinweise	General information	Page 28
Kernbohrungen für Einleiterkabel	Tapping drill holes for single case cables	Page 29 - 30
Rucksack, Lage der Kabel	Rear box, lacation of cables	Page 31
Erdbeben Befestigung	Seism fixation	Page 32-38;40

Tolerance Toleranz (ISO) DIN ISO 2768 medium -	Material;Werkstoff - -	Mass ; Masse - -	Papersize Format C/A2	06-11-2014	BAO	Date Datum	09-08-2010	Designation Benennung: Inhaltsverzeichnis Contents
		Unit;Einheit mm	Scale Massstab W/O SC.	Date Datum	Name Name	Name	DREISBACH	
	Material No./Nr. 1 SWF:(-)	Material No./Nr. 2	Released Freigabe Frei	14/7119	09	Department Abteilung	E_D_MV_1_R&D	Dimension drawing NXAIR
				Mod./Ref-No. Aend.-Vorg.-Nr.	Revision Revision	Location Standort	FFMCB	ISO-Projection
						SIEMENS		Itemnumber Sachnummer 110-0250.9
								Page Blatt 2+

printed by oprtcual, 11/07/14-03:54:18

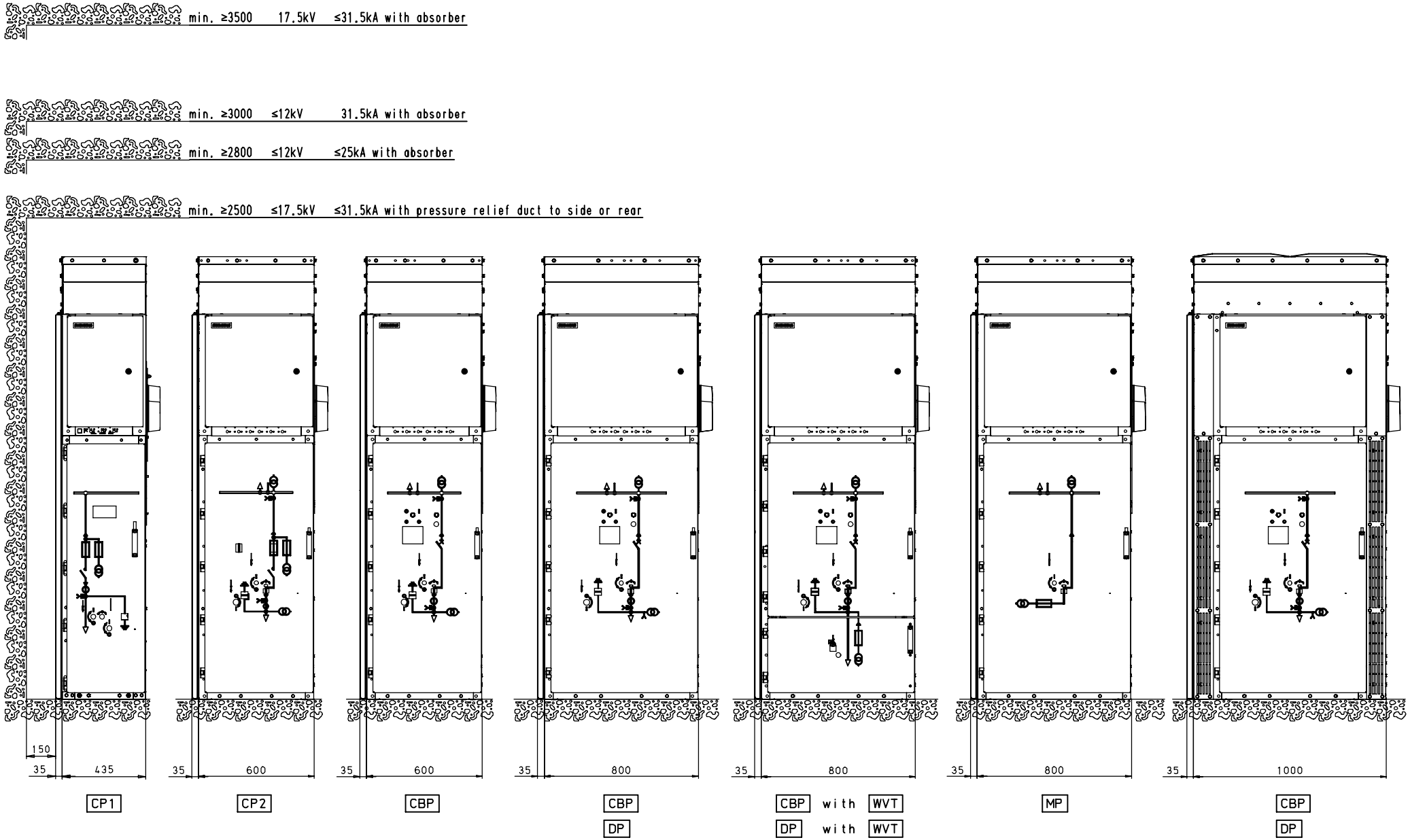

CP1/2 Schützfeld
Contactor panel

CBP Leistungsschalterfeld
Circuit-breaker panel

WVT Ausziehbarer Spannungswandler
Withdrawable voltage transformer

DP Trennfeld
Disconnecting panel

MP Messfeld
Metering panel

Confié a titre de secret d'enterprise. Tous droits reserves.
Comunicado como segredo empresarial. Reservados todos os direitos.
Confiado como secreto industrial. Todos los derechos reservados.

Als Betriebsgeheimnis anvertraut. Alle Rechte vorbehalten.
Proprietary data, company confidential. All rights reserved.

Frontansichten
Front view

Tolerance Toleranz (ISO) DIN ISO 2768 medium -	Material;Werkstoff - -	Mass ; Masse - -	Papersize Format C/A2	06-11-2014	BAO	Date Datum 09-08-2010	Designation Benennung: Dimension drawing NXAIR
		Unit;Einheit mm	Scale Massstab w/o sc.	Date Datum	Name Name	Name Name DREISBACH	ISO-Projection
	Material No./Nr. 1 SWF:(-)	Material No./Nr. 2	Released Freigabe Frei	14/7119	09	Department Abteilung E_D_MV_1_R&D	Page Blatt 3+
				Mod./Ref-No. Aend.-Vorg.-Nr.	Revision Revision	Location Standort FFMCB	Itemnumber Sachnummer 110-0250.9

SIEMENS

HPD

printed by oprtcual, 11/07/14-04:12:12

Confié a titre de secret d'enterprise. Tous droits reserves.
Comunicado como segredo empresarial. Reservados todos os direitos.
Confiado como secreto industrial. Todos los derechos reservados.

Alle Betriebsgeheimnis anvertraut. Alle Rechte vorbehalten.
Proprietary data, company confidential. All rights reserved.

min. ≥3500 17.5kV ≤31.5kA with absorber

min. ≥3000 ≤12kV 31.5kA with absorber

min. ≥2800 ≤12kV ≤25kA with absorber

min. ≥2500 ≤17.5kV ≤31.5kA with pressure relief duct to side or rear

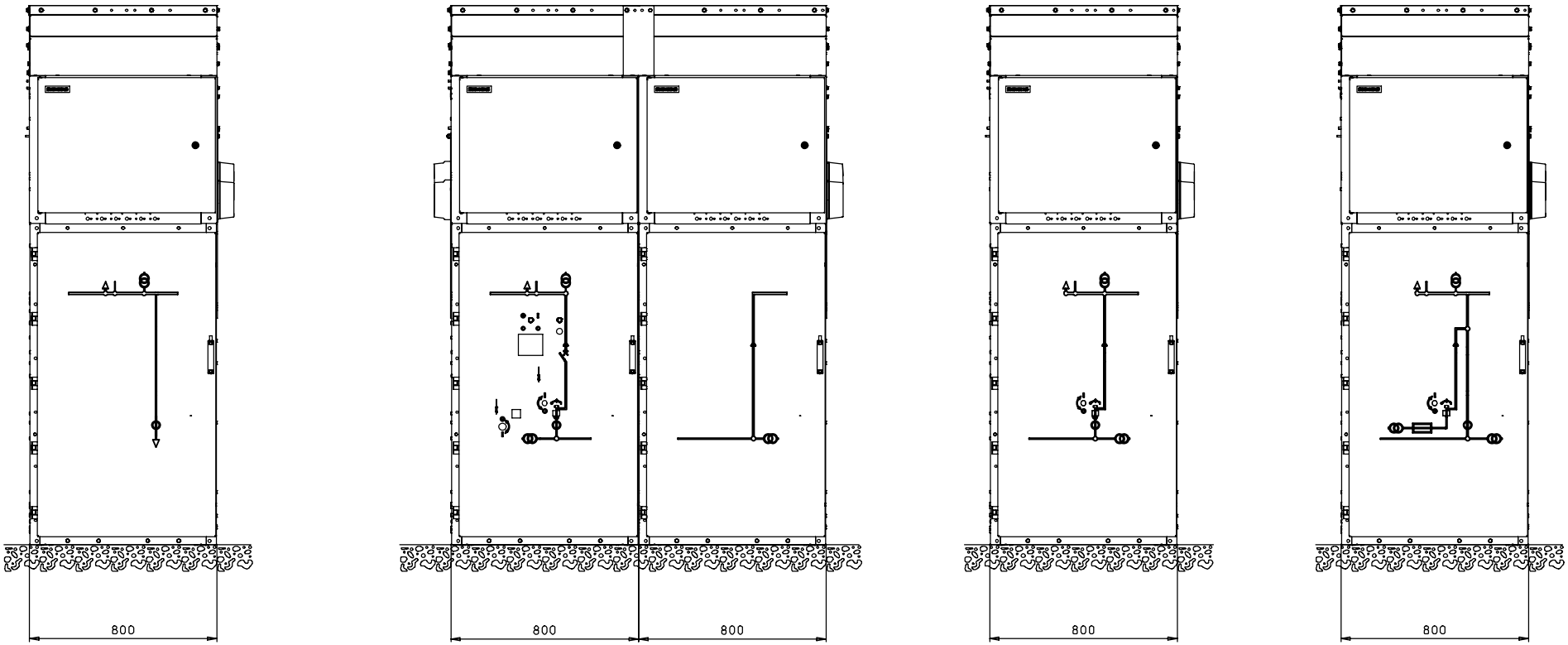

BCP | WP | BRP | BRP 1 | BRP 2

BS

BCP Sammelschienenanschlussfeld
Busbar connection panel

1250A

BS Längskupplung
Bus sectionaliser

WP Einschubfeld
Withdrawable penal

BRP Hochführungsfeld
Bus riser panel

BRP 1 Hochführungsfeld
mit Trenneinschub
Bus riser panel with
disconnecting cassette

BRP 2 Hochführungsfeld
mit Meßeinschub
Bus riser panel with
metering cassette

auch spiegelbildliche Ausführung möglich
mirror-image installation also possible

Tolerance Toleranz (ISO) DIN ISO 2768 medium -	Material;Werkstoff - -	Mass ; Masse - -	Papersize Format C/A2	06-11-2014	BAO	Date Datum	09-08-2010	Designation Benennung	ISO-Projection
		Unit;Einheit mm	Scale Massstab W/O SC.	Date Datum	Name Name	Name	DREISBACH	Dimension drawing NXAIR	
	Material No./Nr. 1 SWF:(-)	Material No./Nr. 2	Released Freigabe Frei	14/7119	09	Department Abteilung	E_D_MV_1_R&D		Page Blatt 4+
				Mod./Ref-No. Aend.-Vorg.-Nr.	Revision Revision	Location Standort	FFMCB	Itemnumber Sachnummer 110-0250.9	

SIEMENS

Frontansichten
Front view

HPD

printed by oprtcual, 11/07/14-04:27:14

min. ≥3500 17.5kV ≤31.5kA with absorber

min. ≥3000 ≤12kV 31.5kA with absorber

min. ≥2800 ≤12kV ≤25kA with absorber

min. ≥2500 ≤17.5kV ≤31.5kA with pressure relief duct to side or rear

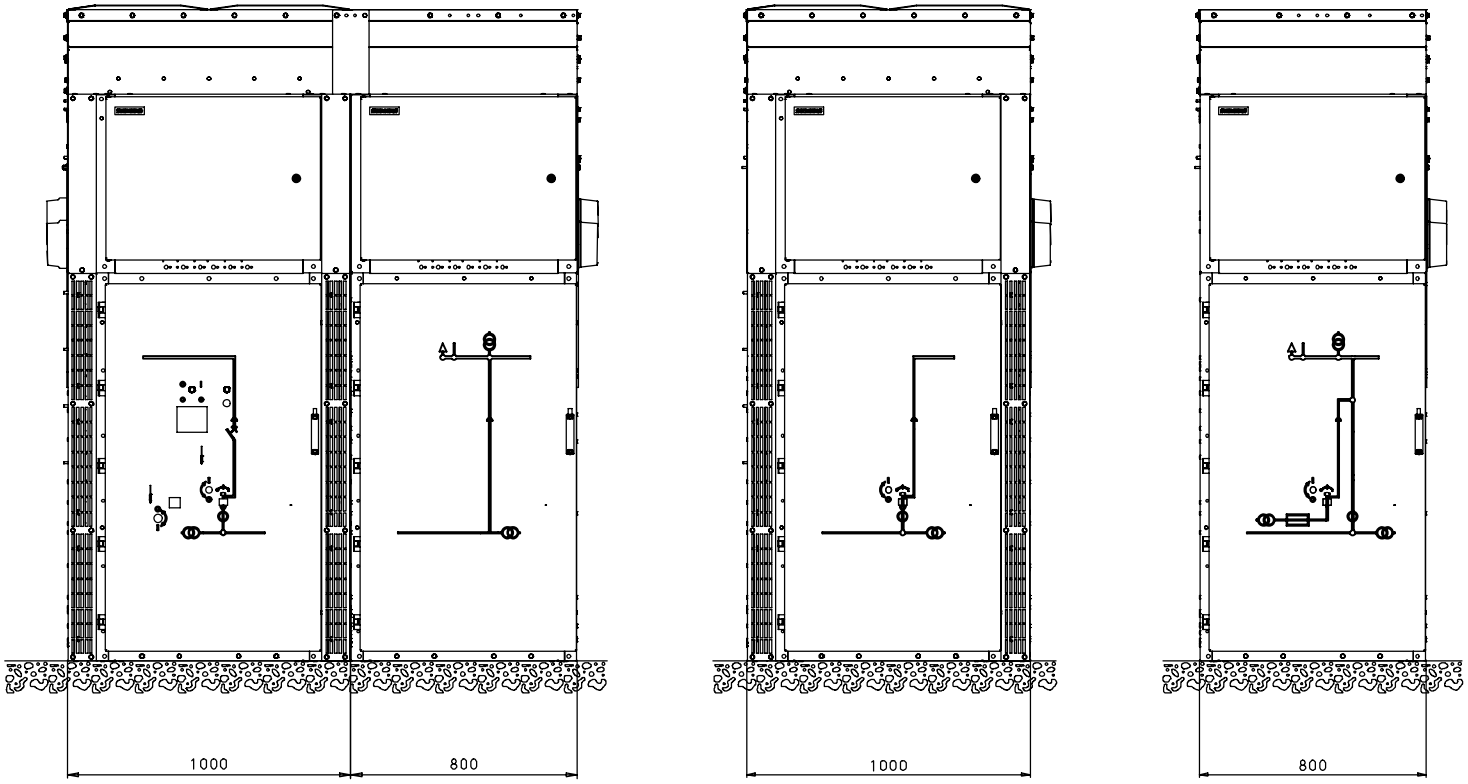

WP BRP BRP 1 BRP 2

BS

2500A

BS Längskupplung
Bus sectionaliser

WP Einschubfeld
Withdrawable penal

BRP Hochführungsfeld
Bus riser panel

BRP 1 Hochführungsfeld
mit Trenneinschub
Bus riser panel with
disconnecting cassette

BRP 2 Hochführungsfeld
mit Meßeinschub
Bus riser panel with
metering cassette

auch spiegelbildliche Ausführung möglich
mirror-image installation also possible

Tolerance Toleranz (ISO) DIN ISO 2768 medium -	Material;Werkstoff - -	Mass ; Masse - -	Papersize Format C/A2	06-11-2014	BAO	Date Datum	09-08-2010	Designation Benennung	Frontansichten Front view	ISO-Projection
		Unit;Einheit mm	Scale Massstab W/O SC.	Date Datum	Name Name	Name	DREISBACH			
	Material No./Nr. 1 SWF:(-)	Material No./Nr. 2	Released Freigabe Frei	14/7119	09	Department Abteilung	E_D_MV_1_R&D	Dimension drawing NXAIR		Page Blatt 5+
				Mod./Ref-No. Aend.-Vorg.-Nr.	Revision Revision	Location Standort	FFMCB	Itemnumber Sachnummer	110-0250.9	

SIEMENS

Confié a titre de secret d'enterprise. Tous droits reserves.
Comunicado como segredo empresarial. Reservados todos os direitos.
Confiado como secreto industrial. Todos los derechos reservados.

Als Betriebsgeheimnis anvertraut. Alle Rechte vorbehalten.
Proprietary data, company confidential. All rights reserved.

HPD

printed by oprtcual, 11/07/14-04:49:19

Confié a titre de secret d'enterprise. Tous droits reserves.
Comunicado como segredo empresarial. Reservados todos os direitos.
Confiado como secreto industrial. Todos los derechos reservados.

Als Betriebsgeheimnis anvertraut. Alle Rechte vorbehalten.
Proprietary data, company confidential. All rights reserved.

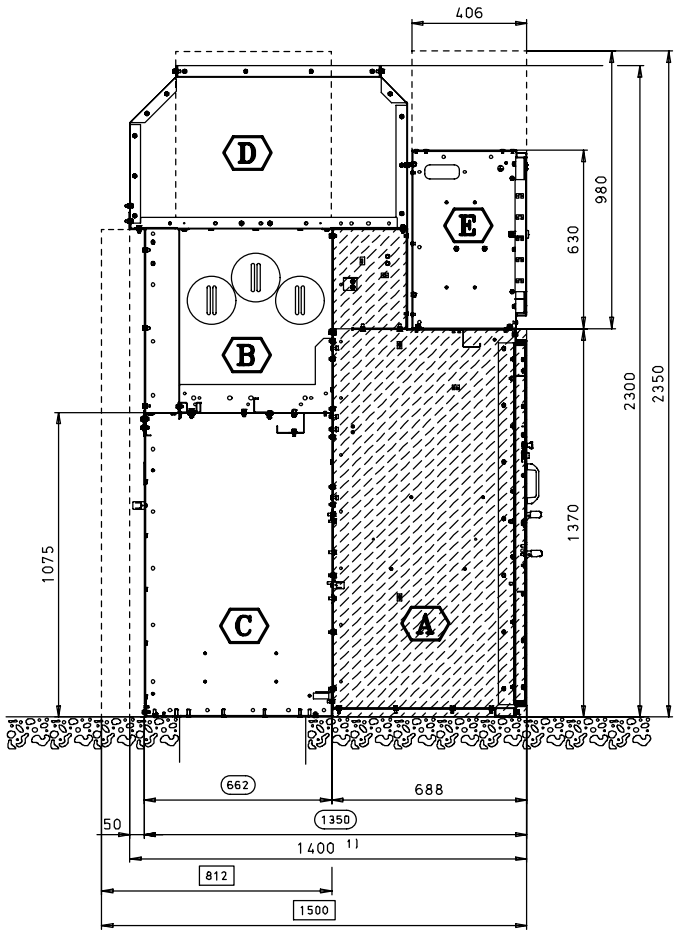

A	Schaltgeräteraum Switching device compartment
B	Sammelschienenraum Busbar compartment
C	Anschlussraum Connection compartment
D	Druckentlastungskanal Pressure relief duct
E	Niederspannungsschrank Low-voltage compartment
CP1	Schützfeld 1) 435mm Contactor panel 1) 435mm
CP2	Schützfeld 600/1350mm Contactor panel 600/1350mm
CBP	Leistungsschalterfeld Circuit-breaker panel
WVT	Ausziehbarer Spannungswandler Withdrawable voltage transformer
DP	Trennfeld Disconnecting panel
MP	Messfeld Metering panel

600 / 800 / 1000 mm

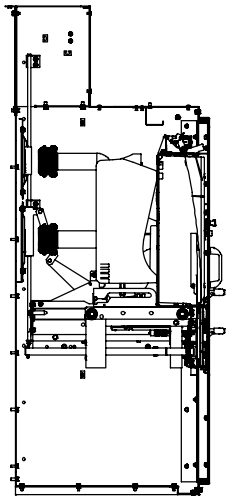

CBP

800 / 1000 mm

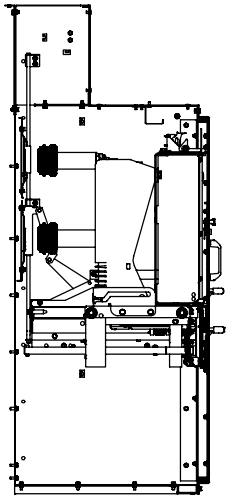

DP

600 / 800 / 1000 mm
Truck type

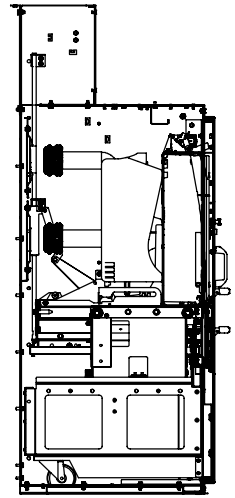

CBP

800 / 1000 mm
Truck type

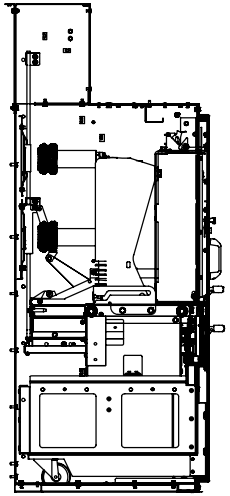

DP

800 / 1000 mm

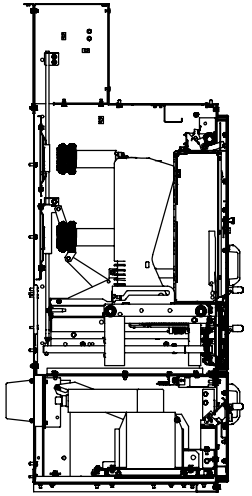

DP with WVT

800 / 1000 mm

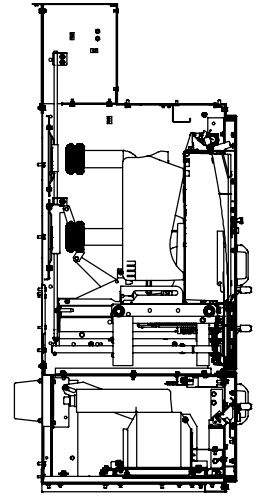

CBP with WVT

Für MP und CP siehe Seite 39
For MP and CP see page 39

Schaltgeräteraum
Switching device compartment

Tolerance Toleranz (ISO)	Material;Werkstoff	Mass ; Masse	Papersize Format	06-11-2014	BAO
DIN ISO 2768 medium	-	-	C/A2	Date Datum	Name Name
-	-	-	Scale Massstab	14/7119	09
		Unit;Einheit mm	W/O SC.	Mod./Ref-No. Aend.-Vorg.-Nr.	Revision Revision
	Material No./Nr. 1	Material No./Nr. 2	Released Freigabe		
	SWF:(-)		Frei		

Date Datum	09-08-2010
Name Name	DREISBACH
Department Abteilung	E_D_MV_1_R&D
Location Standort	FFMCB

SIEMENS

Designation Benennung: Dimension drawing NXAIR

Itemnumber Sachnummer: 110-0250.9

ISO-Projection

Page Blatt: 6+

HPD

printed by oprtcual, 11/07/14-04:47:44

Confié a titre de secret d'enterprise. Tous droits reserves.
Comunicado como segredo empresarial. Reservados todos os direitos.
Confiado como secreto industrial. Todos los derechos reservados.

Als Betriebsgeheimnis anvertraut. Alle Rechte vorbehalten.
Proprietary data, company confidential. All rights reserved.

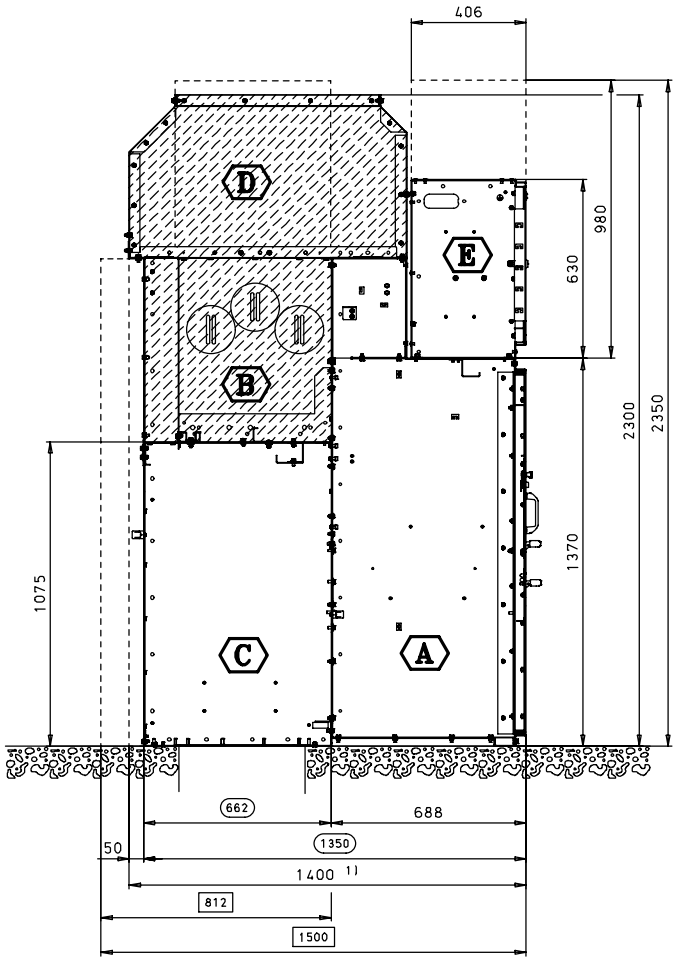

Ⓐ Schaltgeräteraum
Switching device compartment

Ⓑ Sammelschienenraum
Busbar compartment

Ⓒ Anschlussraum
Connection compartment

Ⓓ Druckentlastungskanal
Pressure relief duct

Ⓔ Niederspannungsschrank
Low-voltage compartment

VT Spannungswandler
Voltage Transformer

ES Erdungsschalter
Earthing switch

CC Kabelanschluss
Cable connection

BC Schienenanschluss
Bar connection

600 / 800 / 1000 mm

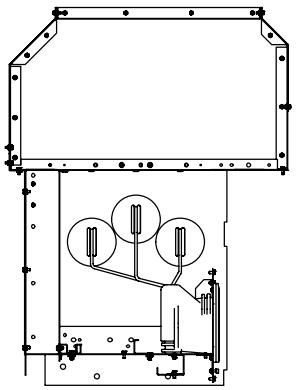

VT

600 / 800 mm

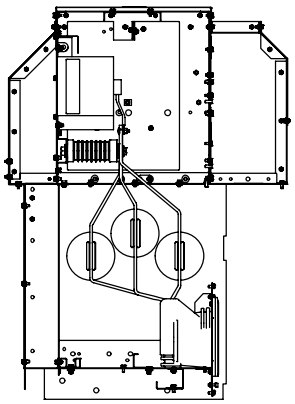

ES

600 / 800 mm

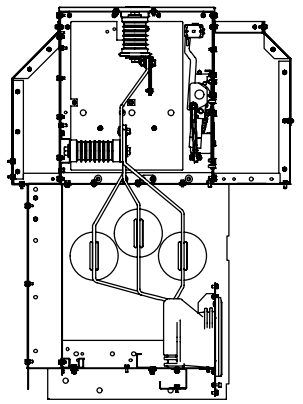

CC

600mm / 800 mm

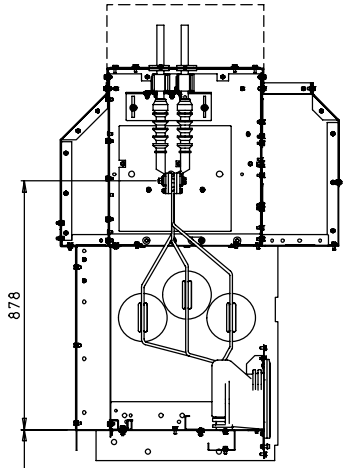

Unterseite Feld
underside panel

BC

600mm / 800 mm

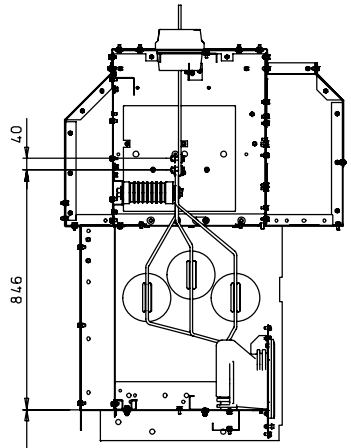

Unterseite Feld
underside panel

435 mm

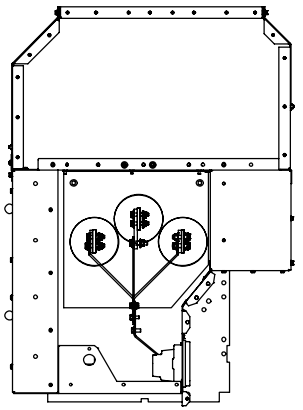

CP1

Tolerance Toleranz (ISO)	Material;Werkstoff	Mass ; Masse	Papersize Format	06-11-2014	BAO	Date Datum	09-08-2010	Designation Benennung
DIN ISO 2768 medium	-	-	C/A2	Date Datum	Name Name	Name	DREISBACH	Sammelschienenraum Busbar compartment
-	-	Unit:Einheit mm	Scale Massstab W/O SC.			Department Abteilung	E_D_MV_1_R&D	ISO-Projection
	Material No./Nr. 1 SWF:(-)	Material No./Nr. 2	Released Freigabe Frei	14/7119	09	Location Standort	FFMCB	Dimension drawing NXAIR
				Mod./Ref-No. Aend.-Vorg.-Nr.	Revision Revision	SIEMENS		Page Blatt 7+
							Itemnumber Sachnummer	110-0250.9

HPD

printed by oprtcual, 11/07/14-04:58:57

Confiè a titre de secret d'enterprise. Tous droits reserves.
Comunicado como segredo empresarial. Reservados todos os direitos.
Confiado como secreto industrial. Todos los derechos reservados.

Als Betriebsgeheimnis anvertraut. Alle Rechte vorbehalten.
Proprietary data, company confidential. All rights reserved.

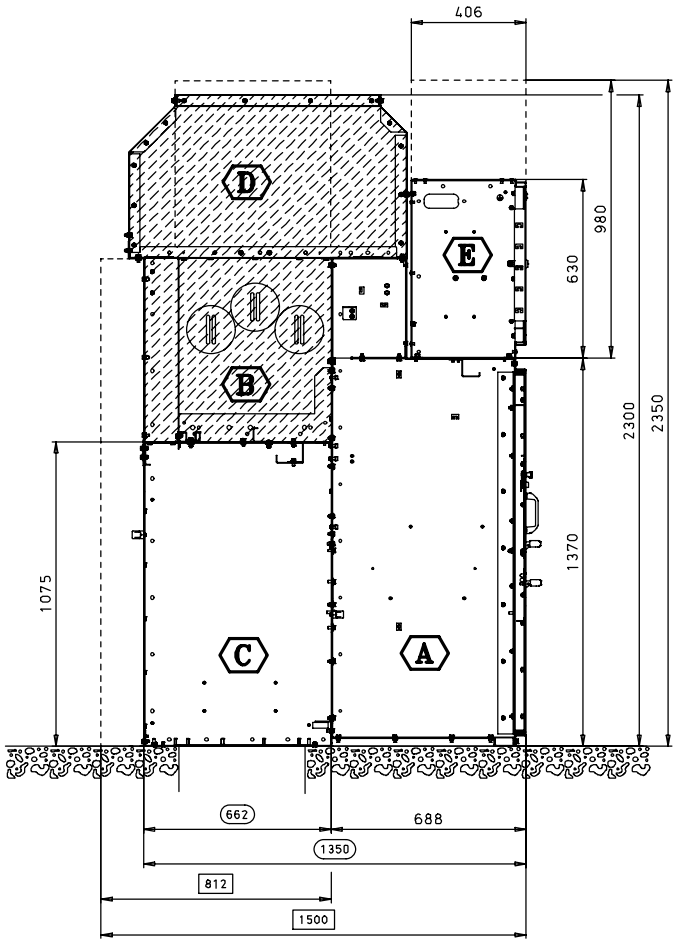

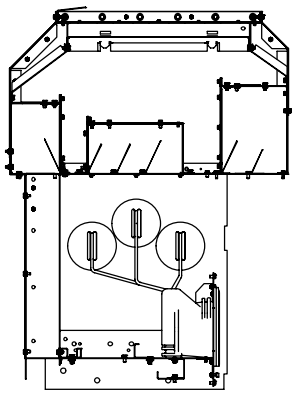

Ⓐ Schaltgeräteraum
Switching device compartment

Ⓑ Sammelschienenraum
Busbar compartment

Ⓒ Anschlussraum
Connection compartment

Ⓓ Druckentlastungskanal
Pressure relief duct

Ⓔ Niederspannungsschrank
Low-voltage compartment

Tolerance Toleranz (ISO)	Material;Werkstoff	Mass ; Masse	Papersize Format	06-11-2014	BAO	Date Datum	09-08-2010	Designation Benennung	ISO-Projection
DIN ISO 2768 medium	-	-	C/A2	Date Datum	Name Name	Name	DREISBACH	Sammelschienenraum Busbar compartment	
-	-	-	Scale Massstab			Department Abteilung	E_D_MV_1_R&D	Dimension drawing NXAIR	
		Unit;Einheit mm	W/O SC.	14/7119	09	Location Standort	FFMCB		Page Blatt
	Material No./Nr. 1 SWF:(-)	Material No./Nr. 2	Released Freigabe Frei	Mod./Ref-No. Aend.-Vorg.-Nr.	Revision Revision	SIEMENS		Itemnumber Sachnummer 110-0250.9	8+

printed by oprtcual, 11/07/14-04:58:28

Confié a titre de secret d'enterprise. Tous droits reserves.
Comunicado como segredo empresarial. Reservados todos os direitos.
Confiado como secreto industrial. Todos los derechos reservados.

Alle Betriebsgeheimnis anvertraut. Alle Rechte vorbehalten.
Proprietary data, company confidential. All rights reserved.

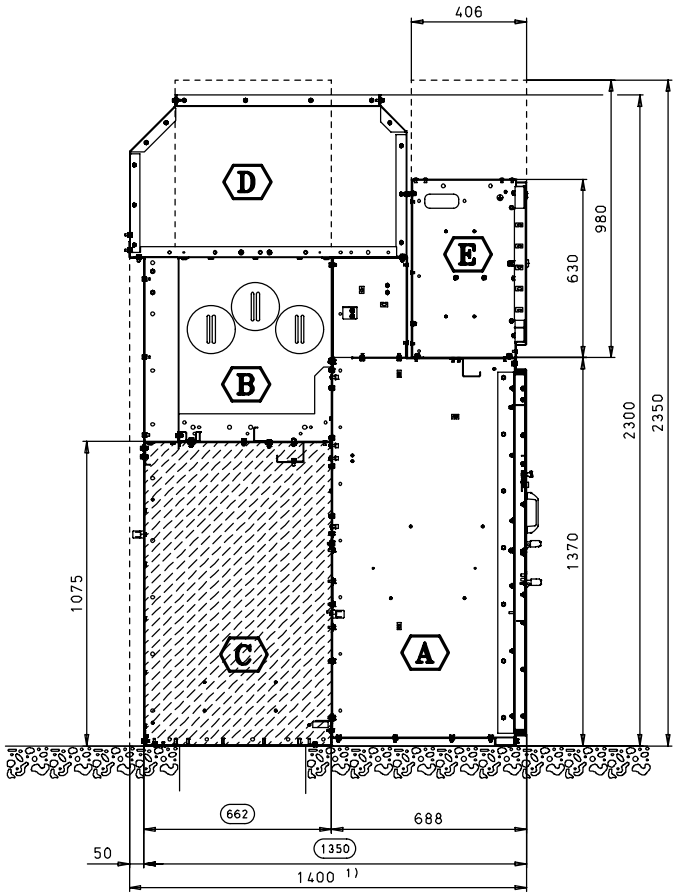

1 / 2 / 3 Cable

600 mm

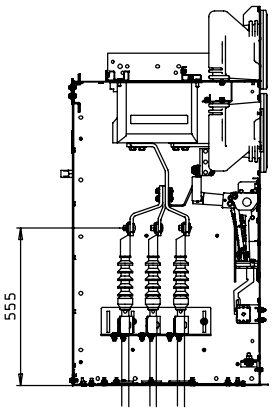

Voltage Transformer

1/2 Cable

600 mm

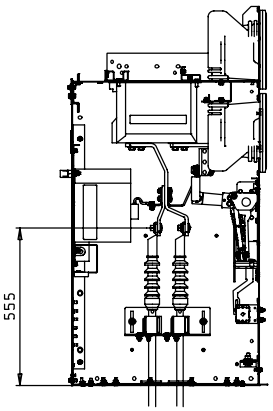

Arrestor

1/2 Cable

600 mm

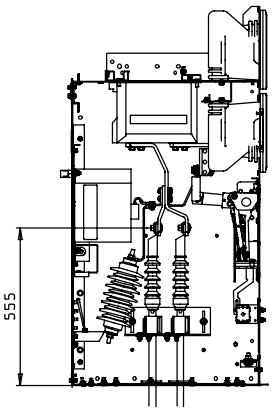

Surge limiter

1/2 Cable

600 mm

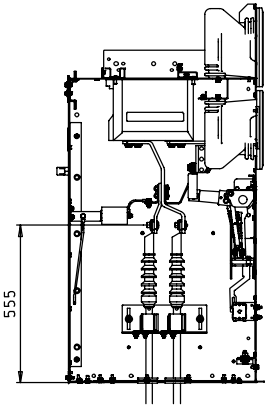

Surge limiter

1/2 Cable

600 mm

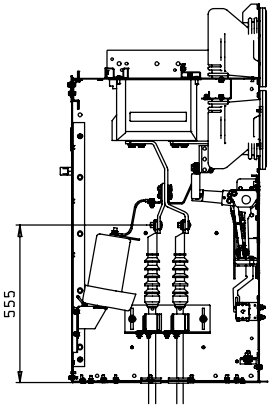

A	Schaltgeräteraum Switching device compartment
B	Sammelschienenraum Busbar compartment
C	Anschlussraum Connection compartment
D	Druckentlastungskanal Pressure relief duct
E	Niederspannungsschrank Low-voltage compartment
CP1	Schützfeld 1) 435mm Contactor panel 1) 435mm
CP2	Schützfeld 600/1350mm Contactor panel 600/1350mm

Anschlussraum
Connection compartment

Tolerance Toleranz (ISO)	Material;Werkstoff	Mass ; Masse	Papersize Format	06-11-2014	BAO
DIN ISO 2768 medium	-	-	C/A2	Date Datum	Name Name
-	-	-	Scale Massstab	14/7119	09
		Unit;Einheit mm	W/O SC.	Mod./Ref-No. Aend.-Vorg.-Nr.	Revision Revision
	Material No./Nr. 1	Material No./Nr. 2	Released Freigabe		
	SWF:(-)		Frei		

Date Datum	09-08-2010
Name Name	DREISBACH
Department Abteilung	E_D_MV_1_R&D
Location Standort	FFMCB
SIEMENS	

Designation Benennung: Dimension drawing NXAIR

Itemnumber Sachnummer: 110-0250.9

ISO-Projection

Page Blatt: 9+

HPD

printed by oprtcual, 11/07/14-04:49:47

Confié a titre de secret d'enterprise. Tous droits reserves.
Comunicado como segredo empresarial. Reservados todos os direitos.
Confiado como secreto industrial. Todos los derechos reservados.

Als Betriebsgeheimnis anvertraut. Alle Rechte vorbehalten.
Proprietary data, company confidential. All rights reserved.

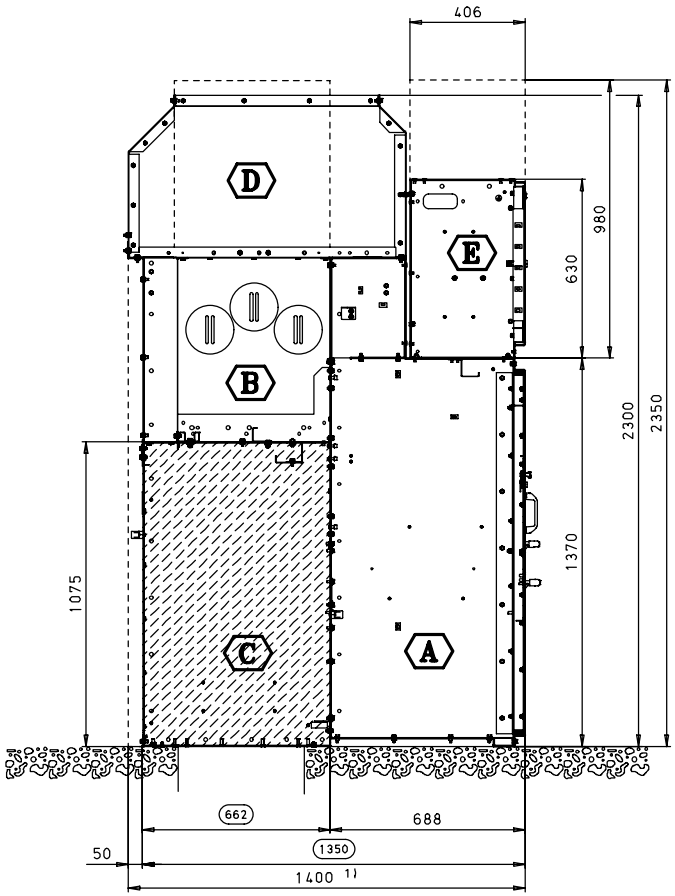

1/2 Cable or 3/4 Cable
800 / 1000 mm

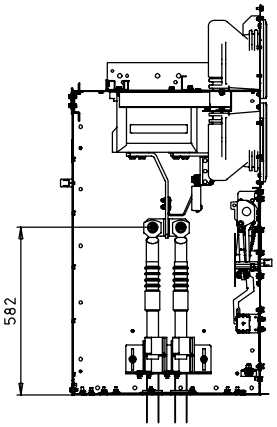

Arrestor
1/2 Cable or 3/4 Cable
800 / 1000 mm

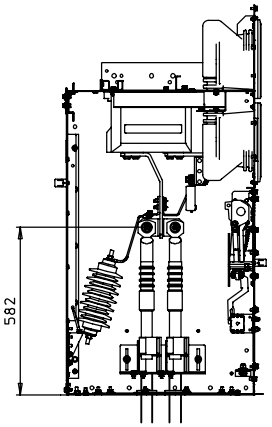

Surge limiter
1/2 Cable or 3/4 Cable
800 / 1000 mm

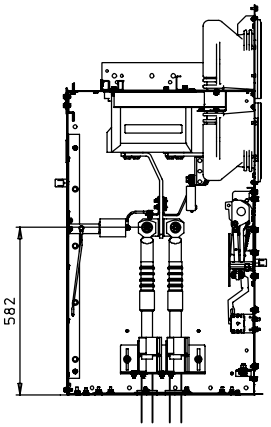

Voltage Transformer
1/2 Cable or 3/4 Cable
800 / 1000 mm

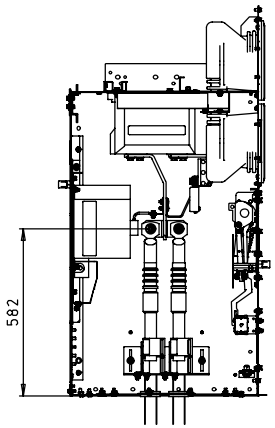

Arrestor
1/2 Cable
800 / 1000 mm

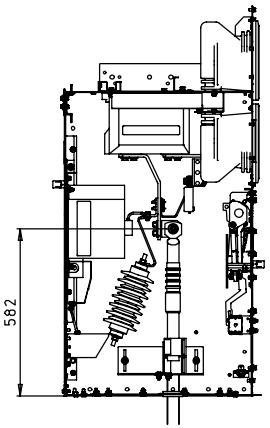

Surge limiter
1/2 Cable
800 / 1000 mm

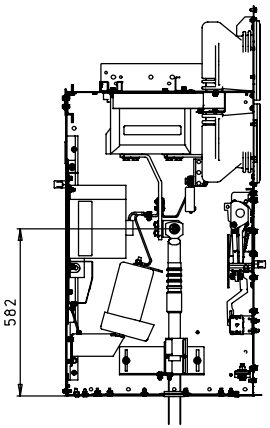

(A) Schaltgeräteraum
Switching device compartment

(B) Sammelschienenraum
Busbar compartment

(C) Anschlussraum
Connection compartment

(D) Druckentlastungskanal
Pressure relief duct

(E) Niederspannungsschrank
Low-voltage compartment

CP1 Schützfeld 1) 435mm
Contactor panel 1) 435mm

CP2 Schützfeld 600/1350mm
Contactor panel 600/1350mm

Tolerance Toleranz (ISO) DIN ISO 2768 medium -	Material;Werkstoff - -	Mass ; Masse - -	Papersize Format C/A2	06-11-2014	BAO	Date Datum 09-08-2010	Designation Benennung Anschlussraum Connection compartment
		Unit;Einheit mm	Scale Massstab W/O SC.	Date Datum	Name Name	Name DREISBACH	
	Material No./Nr. 1 SWF:(-)	Material No./Nr. 2	Released Freigabe Frei	14/7119	09	Department Abteilung E_D_MV_1_R&D	Dimension drawing NXAIR
				Mod./Ref-No. Aend.-Vorg.-Nr.	Revision Revision	Location Standort FFMCB	ISO-Projection
				SIEMENS		Itemnumber Sachnummer 110-0250.9	Page Blatt 10+

HPD

printed by eprtcual, 11/07/14-03:22:24

Confié a titre de secret d'enterprise. Tous droits reserves.
Comunicado como segredo empresarial. Reservados todos os direitos.
Confiado como secreto industrial. Todos los derechos reservados.

Als Betriebsgeheimnis anvertraut. Alle Rechte vorbehalten.
Proprietary data, company confidential. All rights reserved.

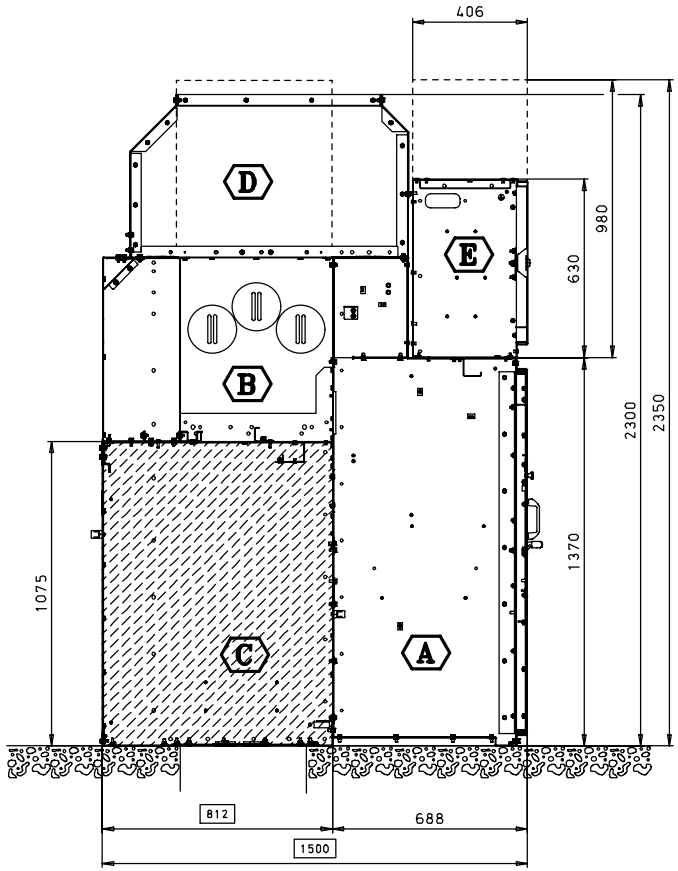

1 / 2 / 3 Cable
600 mm ext

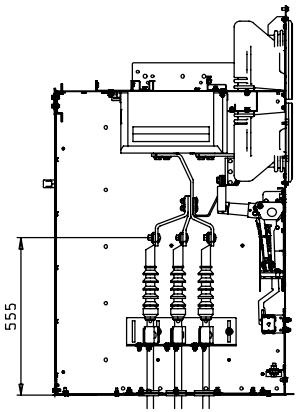

Voltage Transformer
1/2 Cable
600 mm ext

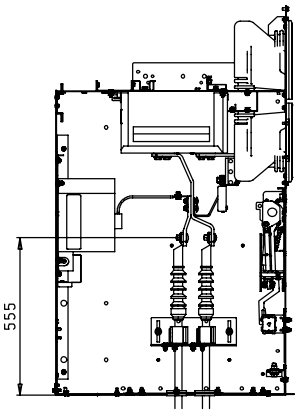

Arrestor
1/2 Cable
600 mm ext

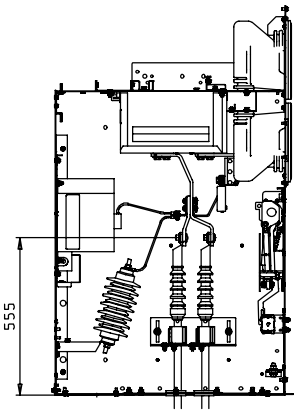

Surge limiter
1/2 Cable
600 mm ext

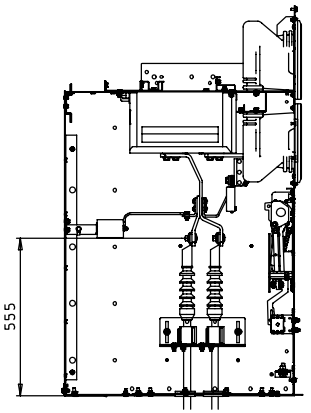

Surge limiter
1/2 Cable
600 mm ext

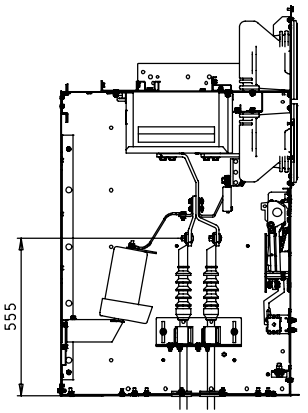

Ⓐ Schaltgeräteraum
Switching device compartment

Ⓑ Sammelschienenraum
Busbar compartment

Ⓒ Anschlussraum
Connection compartment

Ⓓ Druckentlastungskanal
Pressure relief duct

Ⓔ Niederspannungsschrank
Low-voltage compartment

Anschlussraum
Connection compartment

Tolerance Toleranz (ISO)	Material;Werkstoff	Mass ; Masse	Papersize Format	06-11-2014	BAO	Date Datum	09-08-2010
DIN ISO 2768 medium	-	-	C/A2			Name Name	DREISBACH
-	-	-	Scale Massstab	Date Datum	Name Name	Department Abteilung	E_D_MV_1_R&D
		Unit:Einheit mm	W/O SC.	14/7119	09	Location Standort	FFMCB
	Material No./Nr. 1 SWF:(-)	Material No./Nr. 2	Released Freigabe Frei	Mod./Ref-No. Aend.-Vorg.-Nr.	Revision Revision	SIEMENS	

Designation Benennung: Dimension drawing NXAIR

Itemnumber Sachnummer: 110-0250.9

ISO-Projection

Page Blatt: 11+

HPD

printed by oprtcual, 11/07/14-03:26:16

Confié a titre de secret d'enterprise. Tous droits reserves.
Comunicado como segredo empresarial. Reservados todos os direitos.
Confiado como secreto industrial. Todos los derechos reservados.

Alle Betriebsgeheimnis anvertraut. Alle Rechte vorbehalten.
Proprietary data, company confidential. All rights reserved.

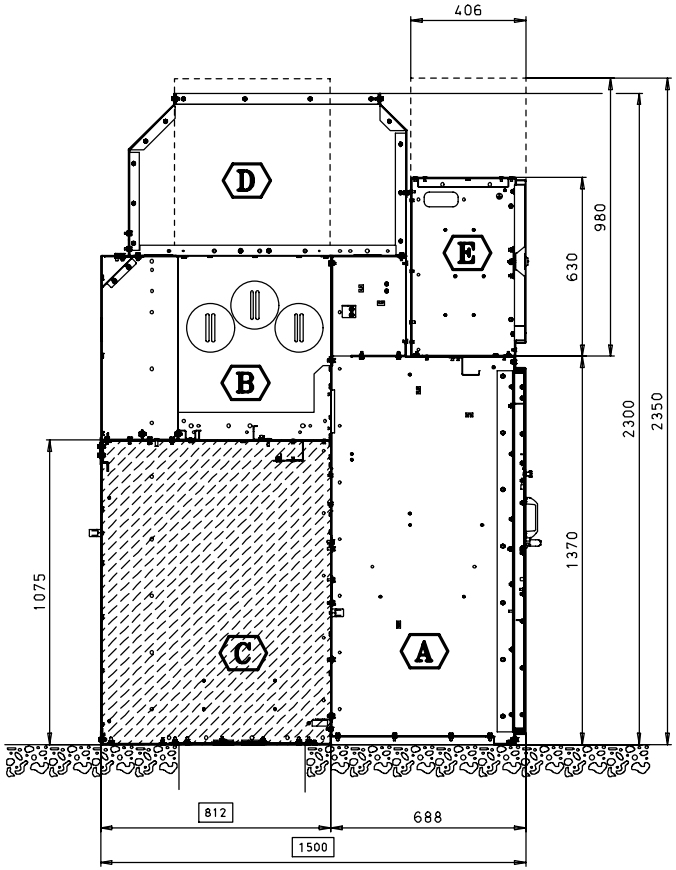

1/2 Cable or 3/4 Cable
800 / 1000 mm ext

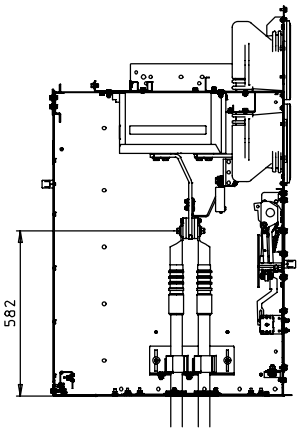

Voltage Transformer
1/2 Cable or 3/4 Cable
800 / 1000 mm ext

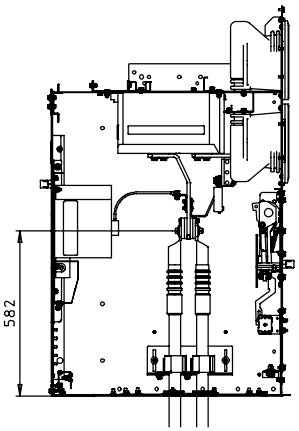

Arrestor
1/2 Cable or 3/4 Cable
800 / 1000 mm ext

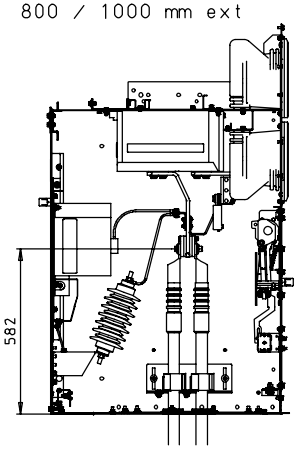

Surge limiter
1/2 Cable or 3/4 Cable
800 / 1000 mm ext

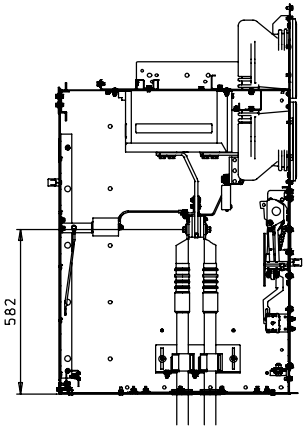

Surge limiter
1/2 Cable or 3/4 Cable
800 / 1000 mm ext

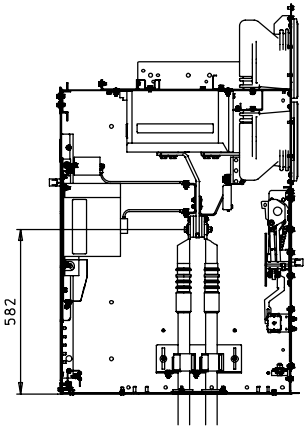

Surge limiter
1/2 Cable or 3/4 Cable
800 / 1000 mm ext

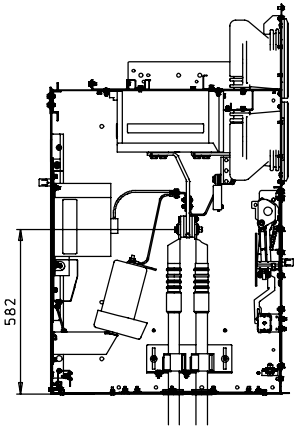

Ⓐ Schaltgeräteraum
Switching device compartment

Ⓑ Sammelschienenraum
Busbar compartment

Ⓒ Anschlussraum
Connection compartment

Ⓓ Druckentlastungskanal
Pressure relief duct

Ⓔ Niederspannungsschrank
Low-voltage compartment

Tolerance Toleranz (ISO)	Material;Werkstoff	Mass ; Masse	Papersize Format	06-11-2014	BAO	Date Datum	09-08-2010	Designation Benennung	ISO-Projection
DIN ISO 2768 medium	-	-	C/A2	Date Datum	Name Name	Name	DREISBACH	Anschlussraum Connection compartment	
-	-	-	Scale Massstab			Department Abteilung	E_D_MV_1_R&D	Dimension drawing NXAIR	
		Unit;Einheit mm	W/O SC.	14/7119	09	Location Standort	FFMCB		Page Blatt 12+
	Material No./Nr. 1 SWF:(-)	Material No./Nr. 2	Released Freigabe Frei	Mod./Ref-No. Aend.-Vorg.-Nr.	Revision Revision	SIEMENS		Itemnumber Sachnummer 110-0250.9	

HPD

printed by oprtcual, 11/07/14-03:23:37

Confié a titre de secret d'enterprise. Tous droits reserves.
Comunicado como segredo empresarial. Reservados todos os direitos.
Confiado como secreto industrial. Todos los derechos reservados.

Als Betriebsgeheimnis anvertraut. Alle Rechte vorbehalten.
Proprietary data, company confidential. All rights reserved.

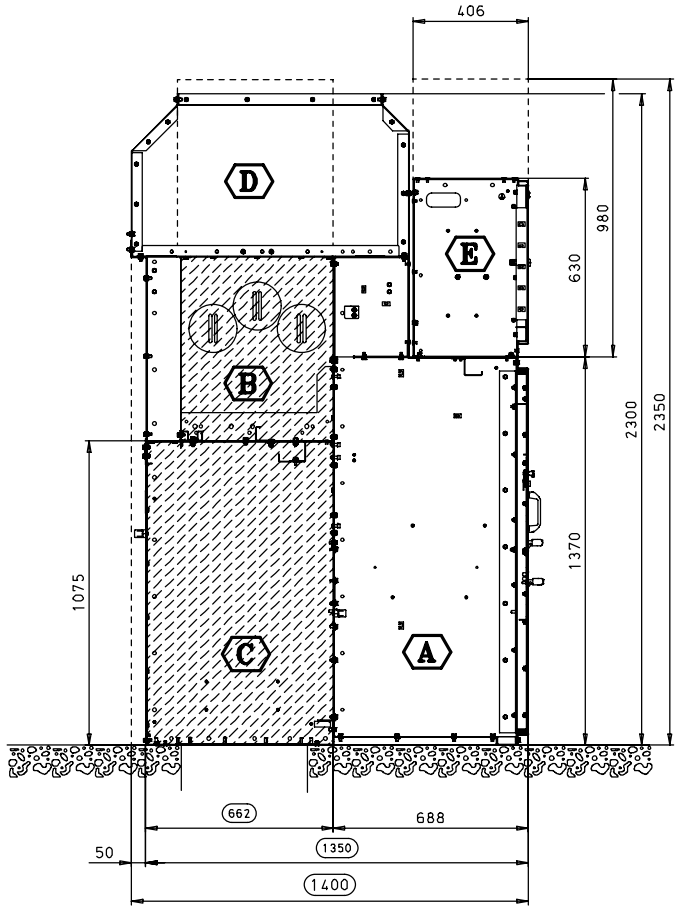

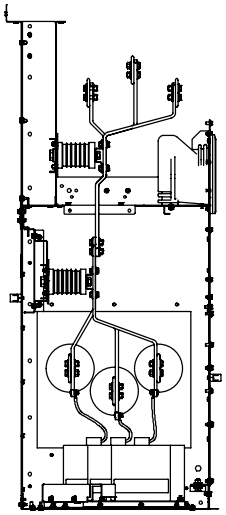

BRP

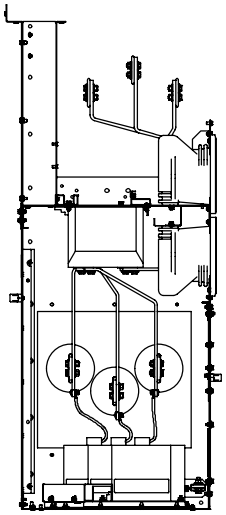

WP

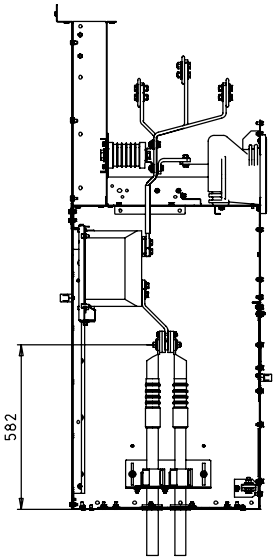

BCP

1/2 Cable

435 mm

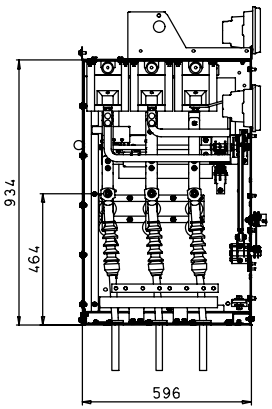

CP1

1/2 Cable

435 mm

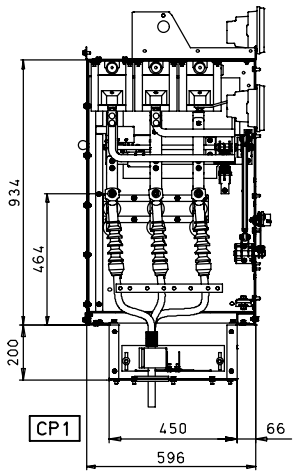

CP1

Bar connection

800 / 1000 mm

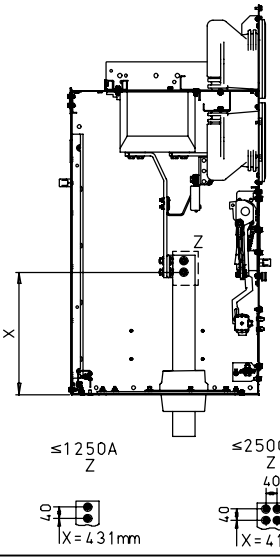

A	Schaltgeräteraum Switching device compartment
B	Sammelschienenraum Busbar compartment
C	Anschlussraum Connection compartment
D	Druckentlastungskanal Pressure relief duct
E	Niederspannungsschrank Low-voltage compartment
BRP	Hochführungsfeld der Längskupplung, optional für Messeinschub Bus riser panel of bus sectionaliser, optionally with metering unit
WP	Hochführungsfeld der Längskupplung, optional mit Trenn- oder Leistungsschaltereinschub Bus ricer panel of bus sectionaliser, optionally with disconnecting- or circuit breaker panel
BCP	Sammelschienenanschlussfeld, optional mit Messeinschub Busbar connecting panel, optionally with metering unit

Tolerance Toleranz (ISO)	Material;Werkstoff	Mass ; Masse	Papersize Format	06-11-2014	BAO	Date Datum	09-08-2010
DIN ISO 2768 medium	-	-	C/A2			Name Name	DREISBACH
-	-	-	Scale Massstab	Date Datum	Name Name	Department Abteilung	E_D_MV_1_R&D
		Unit:Einheit mm	W/O SC.	14/7119	09	Location Standort	FFMCB
	Material No./Nr. 1	Material No./Nr. 2	Released Freigabe	Mod./Ref-No. Aend.-Vorg.-Nr.	Revision Revision	SIEMENS	
	SWF:(-)		Frei				

Anschlussraum
Connection compartment

Designation Benennung: Dimension drawing NXAIR

Itemnumber Sachnummer: 110-0250.9

ISO-Projection

Page Blatt: 13+

HPD

printed by oprtcual, 11/07/14-03:28:29

Confié a titre de secret d'enterprise. Tous droits reserves.
Comunicado como segredo empresarial. Reservados todos os direitos.
Confiado como secreto industrial. Todos los derechos reservados.

Als Betriebsgeheimnis anvertraut. Alle Rechte vorbehalten.
Proprietary data, company confidential. All rights reserved.

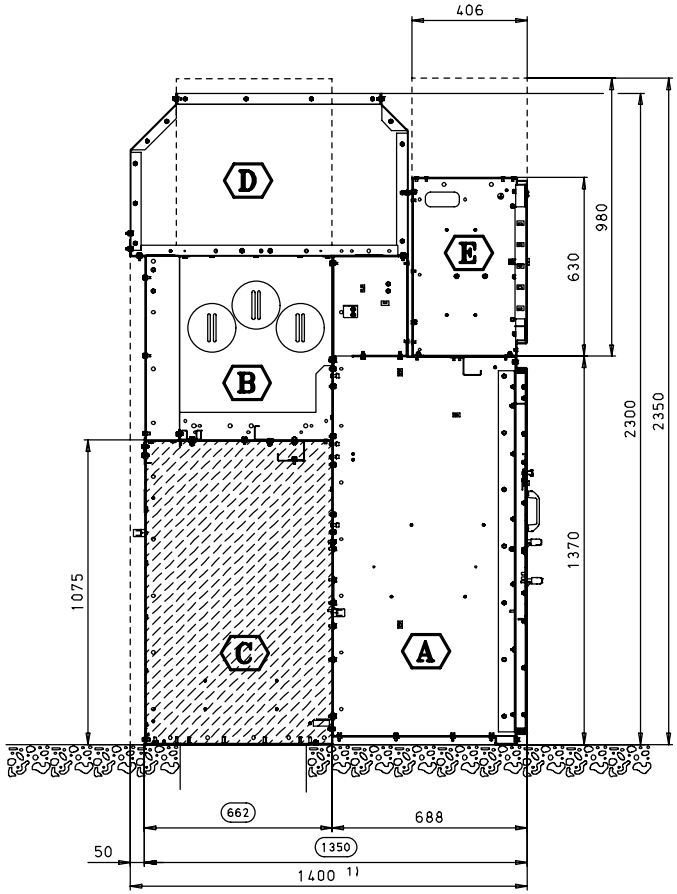

1 / 2 / 3 Cable
600 mm

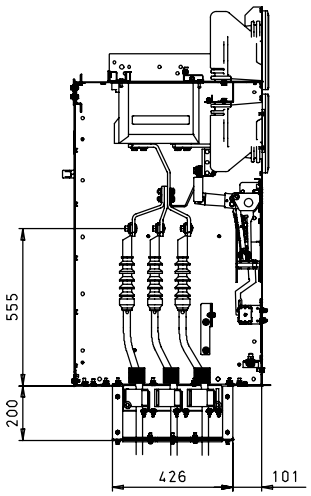

Voltage Transformer
1/2 Cable
600 mm

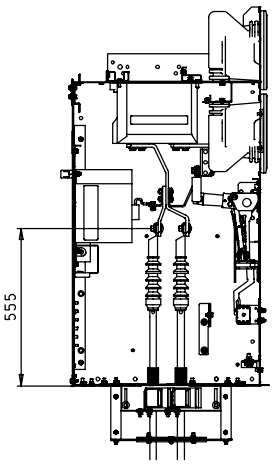

Arrestor
1/2 Cable
600 mm

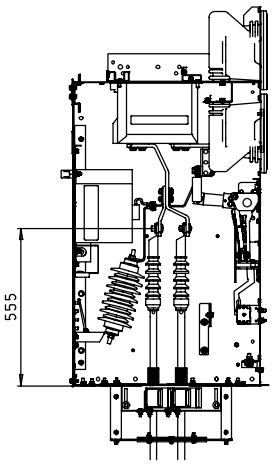

Surge limiter
1/2 Cable
600 mm

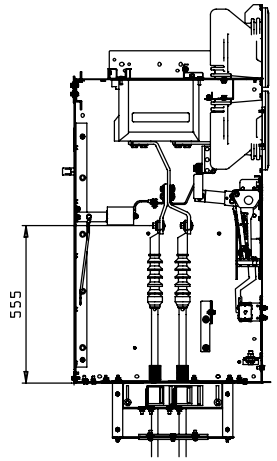

Surge limiter
1/2 Cable
600 mm

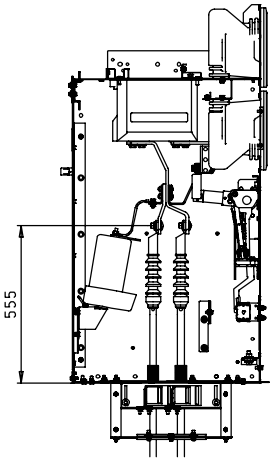

Ⓐ Schaltgeräteraum
Switching device compartment

Ⓑ Sammelschienenraum
Busbar compartment

Ⓒ Anschlussraum
Connection compartment

Ⓓ Druckentlastungskanal
Pressure relief duct

Ⓔ Niederspannungsschrank
Low-voltage compartment

CP1 Schützfeld 1) 435mm
Contactor panel 1) 435mm

CP2 Schützfeld 600/1350mm
Contactor panel 600/1350mm

Anschlussraum mit tiefer Wanne
Connection compartment with deep pan

Tolerance Toleranz (ISO)	Material;Werkstoff	Mass ; Masse	Papersize Format	06-11-2014	BAO	Date Datum	09-08-2010
DIN ISO 2768 medium	-	-	C/A2	Date Datum	Name Name	Name	DREISBACH
-	-	Unit;Einheit mm	Scale Massstab W/O SC.			Department Abteilung	E_D_MV_1_R&D
	Material No./Nr. 1	Material No./Nr. 2	Released Freigabe Frei	14/7119	09	Location Standort	FFMCB
	SWF:(-)			Mod./Ref-No. Aend.-Vorg.-Nr.	Revision Revision	SIEMENS	

Designation Benennung: Dimension drawing NXAIR

Itemnumber Sachnummer: 110-0250.9

ISO-Projection

Page Blatt 14+

HPD

printed by oprtcual, 11/07/14-03:27:03

Confié a titre de secret d'enterprise. Tous droits reserves.
Comunicado como segredo empresarial. Reservados todos os direitos.
Confiado como secreto industrial. Todos los derechos reservados.

Als Betriebsgeheimnis anvertraut. Alle Rechte vorbehalten.
Proprietary data, company confidential. All rights reserved.

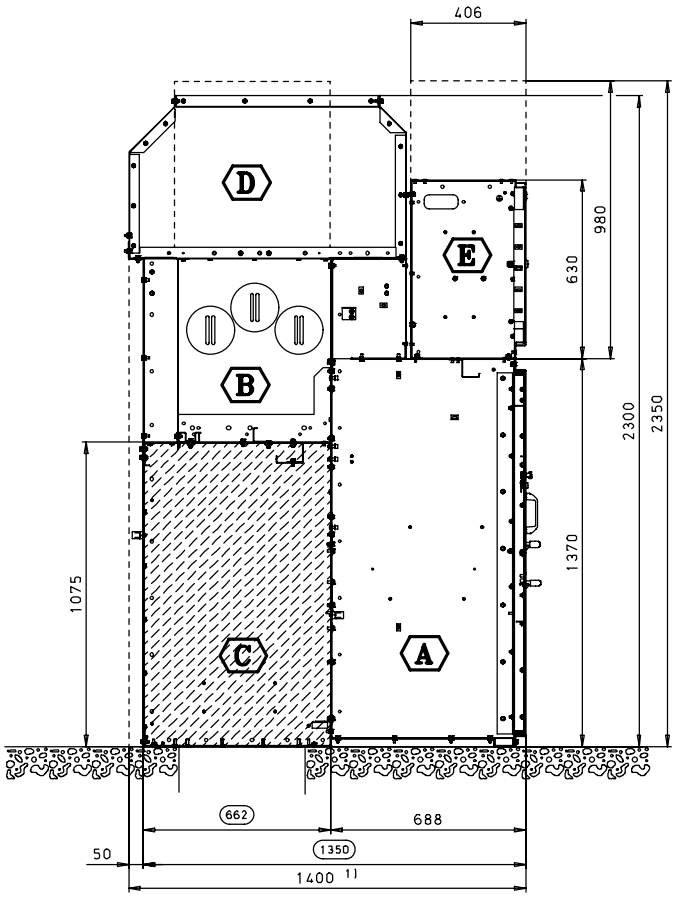

1/2 Cable or 3/4 Cable
800 / 1000 mm

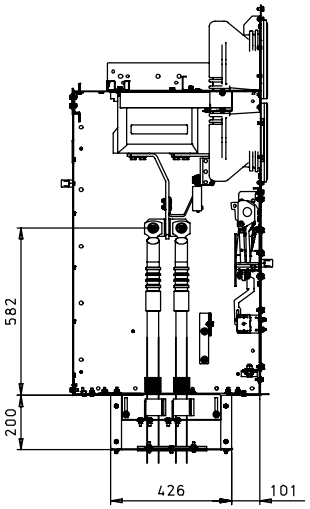

Arrestor
1/2 Cable or 3/4 Cable
800 / 1000 mm

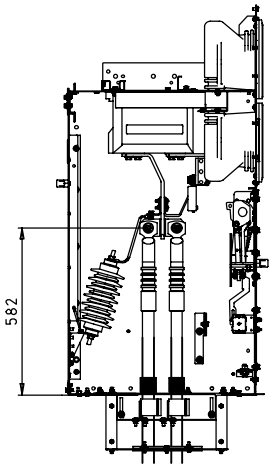

Surge limiter
1/2 Cable or 3/4 Cable
800 / 1000 mm

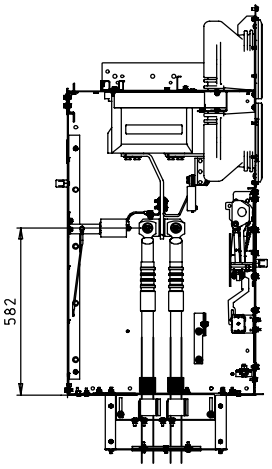

Voltage Transformer
1/2 Cable or 3/4 Cable
800 / 1000 mm

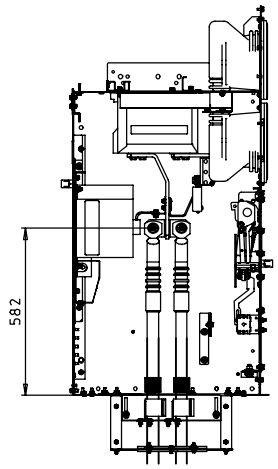

Arrestor
1/2 Cable
800 / 1000 mm

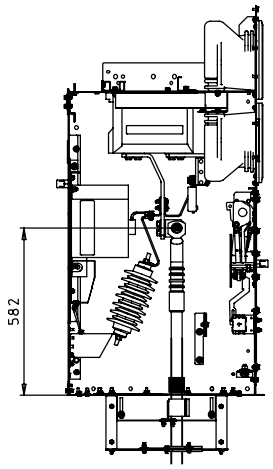

Surge limiter
1/2 Cable
800 / 1000 mm

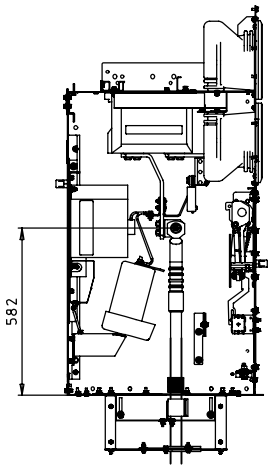

A	Schaltgeräteraum Switching device compartment
B	Sammelschienenraum Busbar compartment
C	Anschlussraum Connection compartment
D	Druckentlastungskanal Pressure relief duct
E	Niederspannungsschrank Low-voltage compartment
CP1	Schützfeld 1) 435mm Contactor panel 1) 435mm

Anschlussraum mit tiefer Wanne
Connection compartment with deep pan

Tolerance Toleranz (ISO)	Material;Werkstoff	Mass ; Masse	Papersize Format	06-11-2014	BAO	Date Datum	09-08-2010
DIN ISO 2768 medium	-	-	C/A2	Date Datum	Name Name	Name	DREISBACH
-	-	-	Scale Massstab			Department Abteilung	E_D_MV_1_R&D
		Unit:Einheit mm	W/O SC.	14/7119	09	Location Standort	FFMCB
	Material No./Nr. 1	Material No./Nr. 2	Released Freigabe				
	SWF:(-)		Frei	Mod./Ref-No. Aend.-Vorg.-Nr.	Revision Revision	SIEMENS	

Designation Benennung: Dimension drawing NXAIR

Itemnumber Sachnummer: 110-0250.9

ISO-Projection

Page Blatt: 15+

HPD

printed by oprtcual, 11/07/14-03:24:58

Confié a titre de secret d'enterprise. Tous droits reserves.
Comunicado como segredo empresarial. Reservados todos os direitos.
Confiado como secreto industrial. Todos los derechos reservados.

Als Betriebsgeheimnis anvertraut. Alle Rechte vorbehalten.
Proprietary data, company confidential. All rights reserved.

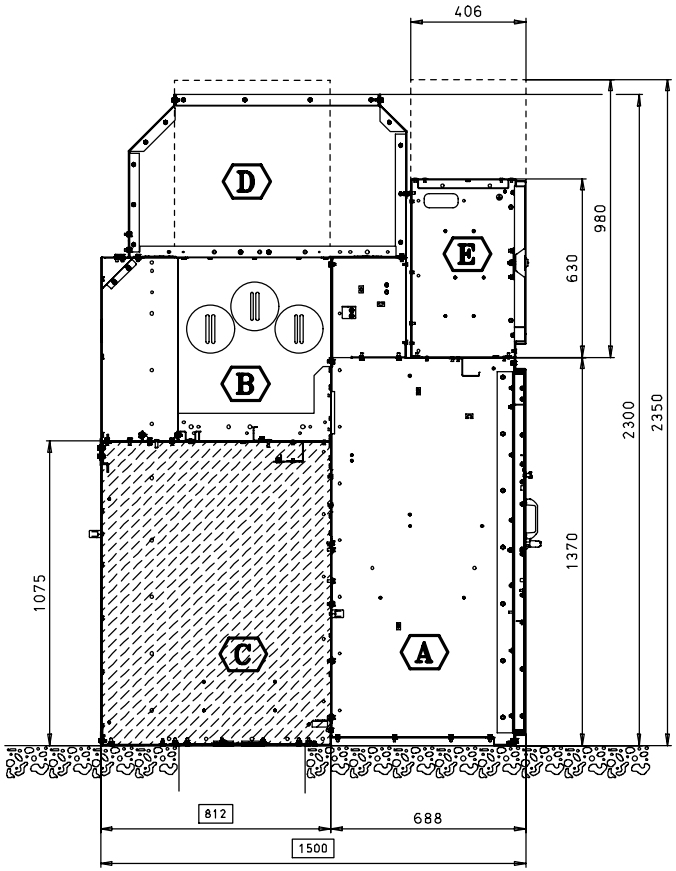

1 / 2 / 3 Cable
600 mm ext

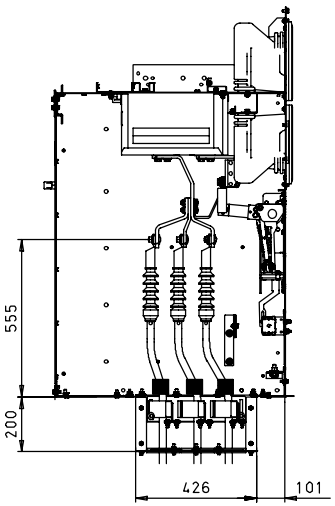

Voltage Transformer
1/2 Cable
600 mm ext

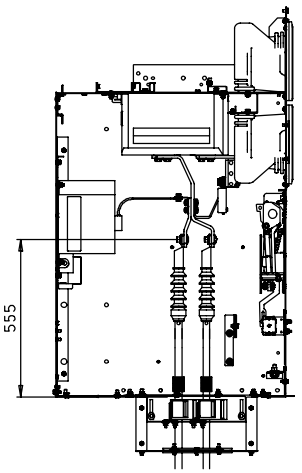

Arrestor
1/2 Cable
600 mm ext

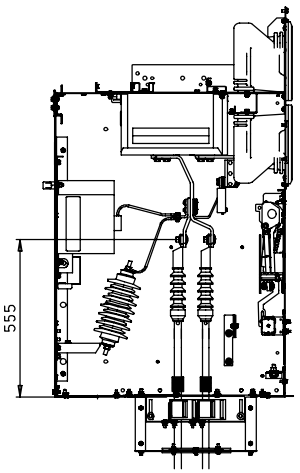

Surge limiter
1/2 Cable
600 mm ext

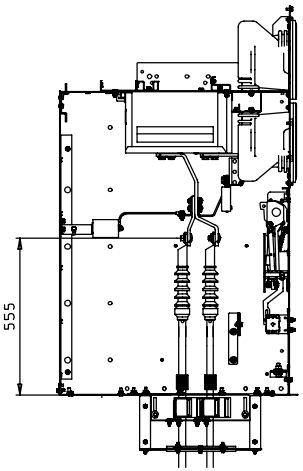

Surge limiter
1/2 Cable
600 mm ext

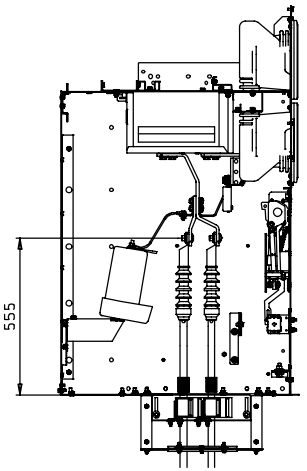

Ⓐ Schaltgeräteraum
Switching device compartment

Ⓑ Sammelschienenraum
Busbar compartment

Ⓒ Anschlussraum
Connection compartment

Ⓓ Druckentlastungskanal
Pressure relief duct

Ⓔ Niederspannungsschrank
Low-voltage compartment

Anschlussraum mit tiefer Wanne
Connection compartment with deep pan

Tolerance Toleranz (ISO)	Material;Werkstoff	Mass ; Masse	Papersize Format	06-11-2014	BAO	Date Datum	09-08-2010	Designation Benennung	ISO-Projection
DIN ISO 2768 medium	-	-	C/A2	Date Datum	Name Name	Name	DREISBACH	Dimension drawing NXAIR	
-	-	-	Scale Massstab			Department Abteilung	E_D_MV_1_R&D		
		Unit;Einheit mm	W/O SC.	14/7119	09	Location Standort	FFMCB		Page Blatt
	Material No./Nr. 1 SWF:(-)	Material No./Nr. 2	Released Freigabe Frei	Mod./Ref-No. Aend.-Vorg.-Nr.	Revision Revision	SIEMENS		Itemnumber Sachnummer	16+
								110-0250.9	

HPD

printed by oprtcual, 11/07/14-03:27:44

Confié a titre de secret d'enterprise. Tous droits reserves.
Comunicado como segredo empresarial. Reservados todos os direitos.
Confiado como secreto industrial. Todos los derechos reservados.

Alle Betriebsgeheimnis anvertraut. Alle Rechte vorbehalten.
Proprietary data, company confidential. All rights reserved.

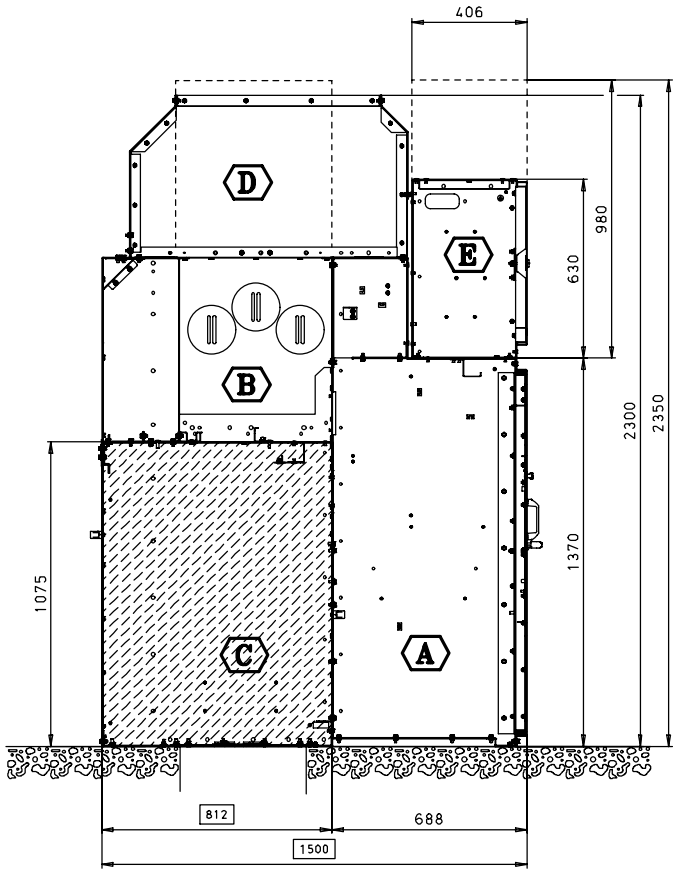

Ⓐ Schaltgeräteraum
Switching device compartment

Ⓑ Sammelschienenraum
Busbar compartment

Ⓒ Anschlussraum
Connection compartment

Ⓓ Druckentlastungskanal
Pressure relief duct

Ⓔ Niederspannungsschrank
Low-voltage compartment

1/2 Cable or 3/4 Cable
800 / 1000 mm ext

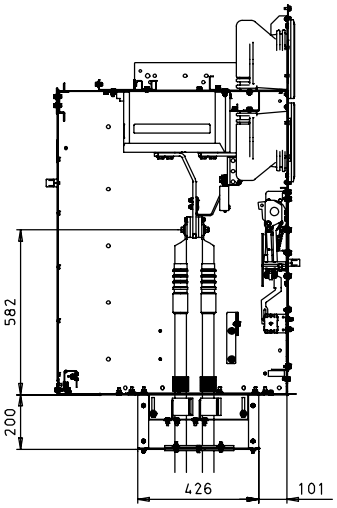

Voltage Transformer
1/2 Cable or 3/4 Cable
800 / 1000 mm ext

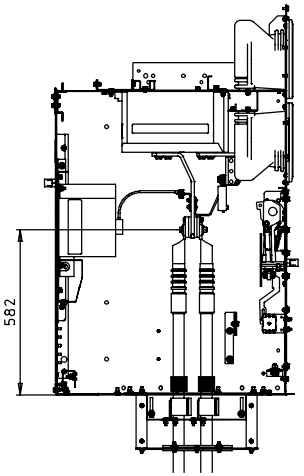

Arrestor
1/2 Cable or 3/4 Cable
800 / 1000 mm ext

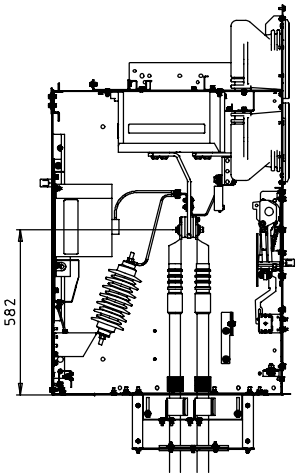

Surge limiter
1/2 Cable or 3/4 Cable
800 / 1000 mm ext

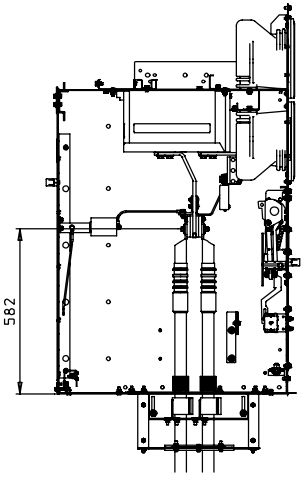

Surge limiter
1/2 Cable or 3/4 Cable
800 / 1000 mm ext

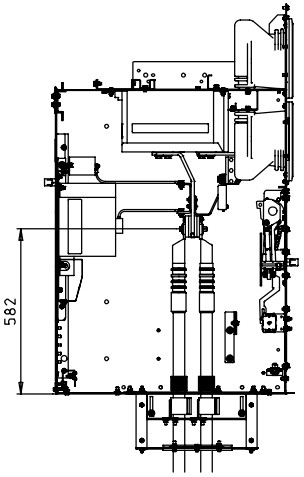

Surge limiter
1/2 Cable or 3/4 Cable
800 / 1000 mm ext

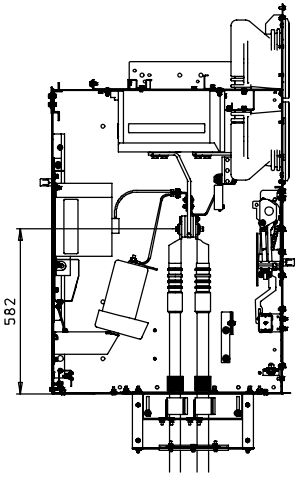

Anschlussraum mit tiefer Wanne
Connection compartment with deep pan

Tolerance Toleranz (ISO)	Material;Werkstoff	Mass ; Masse	Papersize Format	06-11-2014	BAO	Date Datum	09-08-2010
DIN ISO 2768 medium	-	-	C/A2			Name Name	DREISBACH
-	-	-	Scale Massstab	Date Datum	Name Name	Department Abteilung	E_D_MV_1_R&D
		Unit:Einheit mm	W/O SC.	14/7119	09	Location Standort	FFMCB
	Material No./Nr. 1 SWF:(-)	Material No./Nr. 2	Released Freigabe Frei	Mod./Ref-No. Aend.-Vorg.-Nr.	Revision Revision	SIEMENS	

Designation Benennung: Dimension drawing NXAIR

Itemnumber Sachnummer: 110-0250.9

ISO-Projection

Page Blatt: 17+

HPD

printed by oprtcual, 11/07/14-03:25:30

Confié à titre de secret d'enterprise. Tous droits reservés.
Comunicado como segredo empresarial. Reservados todos os direitos.
Confiado como secreto industrial. Todos los derechos reservados.

Als Betriebsgeheimnis anvertraut. Alle Rechte vorbehalten.
Proprietary data, company confidential. All rights reserved.

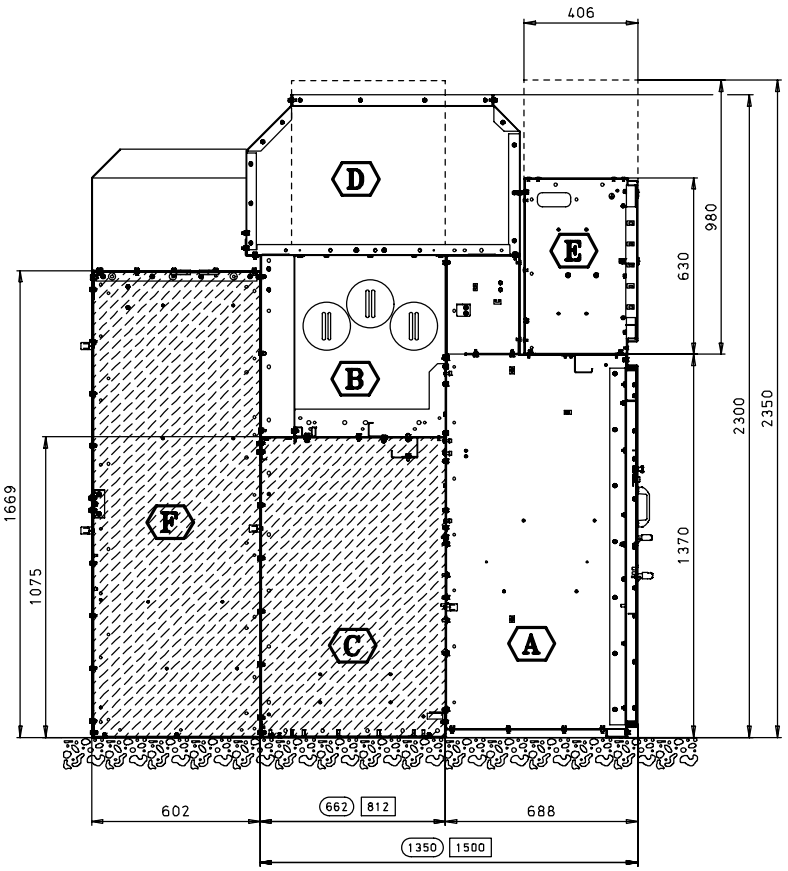

1 / 2 Cable or
3 / 4 Cable

600 / 800 / 1000 mm

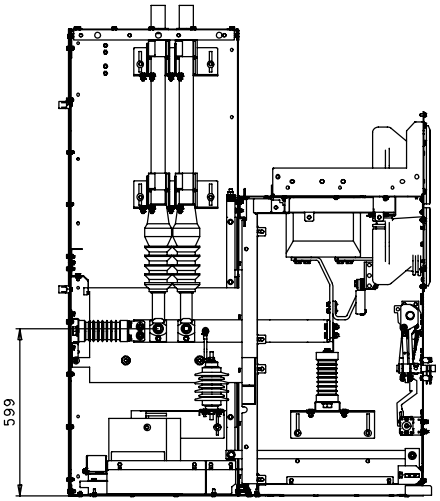

Ⓐ Schaltgeräteraum
Switching device compartment

Ⓑ Sammelschienenraum
Busbar compartment

Ⓒ Anschlussraum
Connection compartment

Ⓓ Druckentlastungskanal
Pressure relief duct

Ⓔ Niederspannungsschrank
Low-voltage compartment

Ⓕ Rucksack
Rear box

CP2 Schützfeld 600/1350mm
Contactor panel 600/1350mm

Tolerance Toleranz (ISO)	Material;Werkstoff	Mass ; Masse	Papersize Format	06-11-2014	BAO	Date Datum	09-08-2010	Designation Benennung	ISO-Projection
DIN ISO 2768 medium	-	-	C/A2			Name Name	DREISBACH	**Rucksack Rear box**	
-	-	-	Scale Massstab	Date Datum	Name Name	Department Abteilung	E_D_MV_1_R&D	Dimension drawing NXAIR	
		Unit;Einheit mm	W/O SC.	14/7119	09	Location Standort	FFMCB		Page Blatt
	Material No./Nr. 1 SWF:(-)	Material No./Nr. 2	Released Freigabe Frei	Mod./Ref-No. Aend.-Vorg.-Nr.	Revision Revision	SIEMENS		Itemnumber Sachnummer 110-0250.9	18+

HPD

printed by eprtcual, 11/07/14-03:23:06

Confié a titre de secret d'enterprise. Tous droits reserves.
Comunicado como segredo empresarial. Reservados todos os direitos.
Confiado como secreto industrial. Todos los derechos reservados.

Als Betriebsgeheimnis anvertraut. Alle Rechte vorbehalten.
Proprietary data, company confidential. All rights reserved.

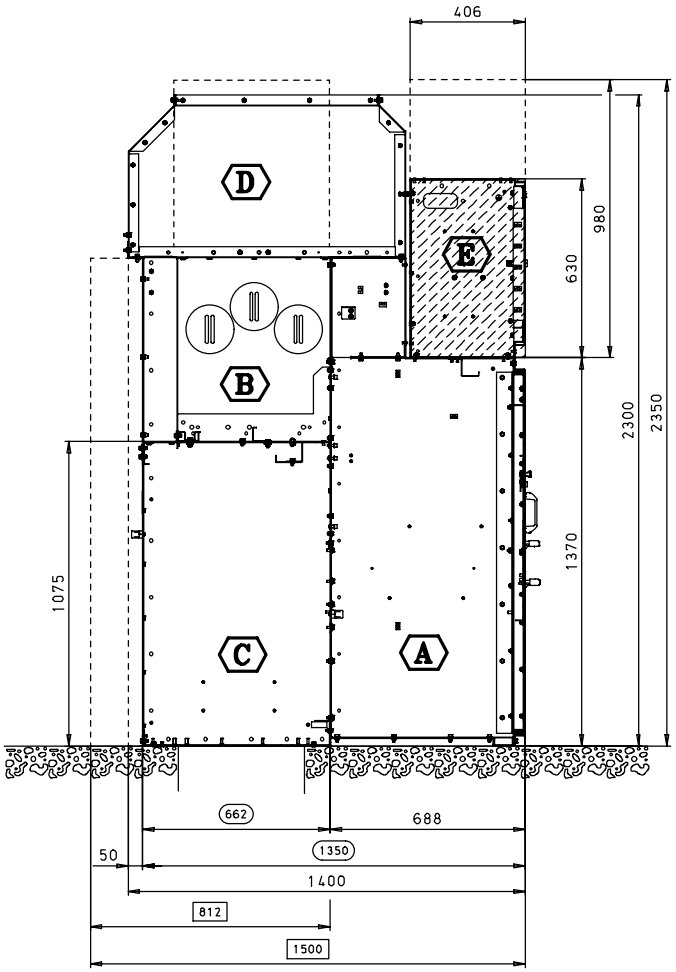

Ⓐ Schaltgeräteraum
Switching device compartment

Ⓑ Sammelschienenraum
Busbar compartment

Ⓒ Anschlussraum
Connection compartment

Ⓓ Druckentlastungskanal
Pressure relief duct

Ⓔ Niederspannungsschrank
Low-voltage compartment

435 / 600 / 800 / 1000 mm

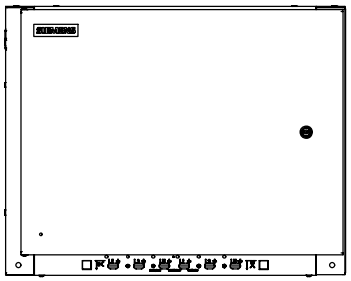

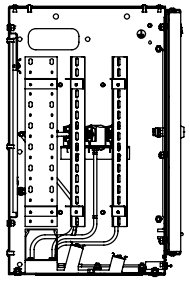

435 / 600 / 800 / 1000 mm

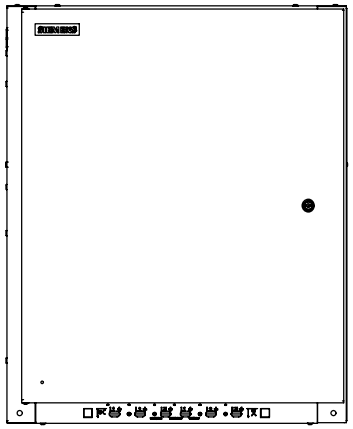

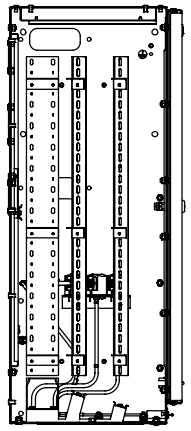

600 / 800 mm

mit Sammelschienen-Erder
with busbar earthing switch

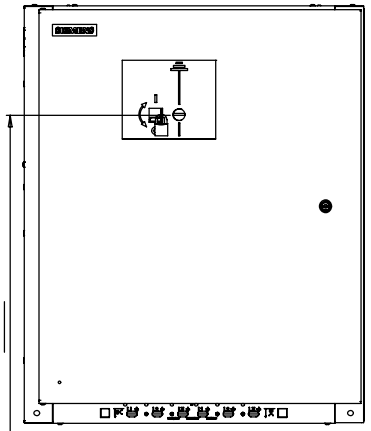

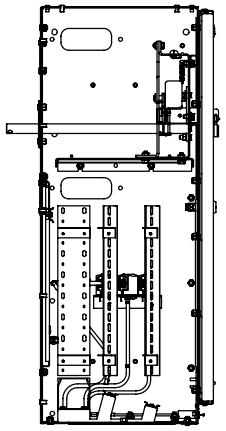

Tolerance Toleranz (ISO)	Material;Werkstoff	Mass ; Masse	Papersize Format	06-11-2014	BAO	Date Datum	09-08-2010	Designation Benennung
DIN ISO 2768 medium	-	-	C/A2	Date Datum	Name Name	Name	DREISBACH	**Niederspannungsschrank Low-voltage compartment**
-	-	-	Scale Massstab			Department Abteilung	E_D_MV_1_R&D	ISO-Projection
		Unit:Einheit mm	W/O SC.	14/7119	09	Location Standort	FFMCB	Dimension drawing NXAIR
	Material No./Nr. 1	Material No./Nr. 2	Released Freigabe	Mod./Ref-No. Aend.-Vorg.-Nr.	Revision Revision	SIEMENS		Page Blatt 19+
	SWF:(-)		Frei					Itemnumber Sachnummer 110-0250.9

HPD

printed by oprtcual, 11/07/14-03:24:17

Confià a títre de secret d'enterprise. Tous droits reserves.
Comunicado como segredo empresarial. Reservados todos os direitos.
Confiado como secreto industrial. Todos los derechos reservados.

Als Betriebsgeheimnis anvertraut. Alle Rechte vorbehalten.
Proprietary data, company confidential. All rights reserved.

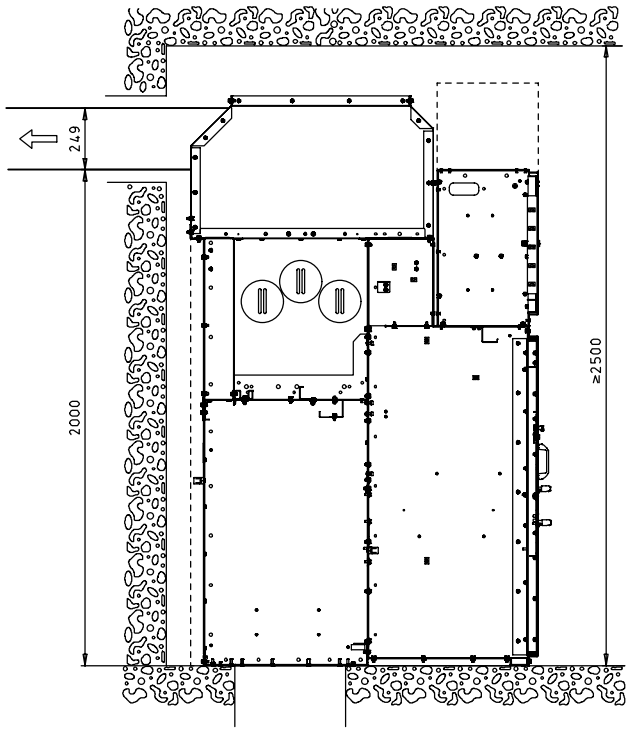

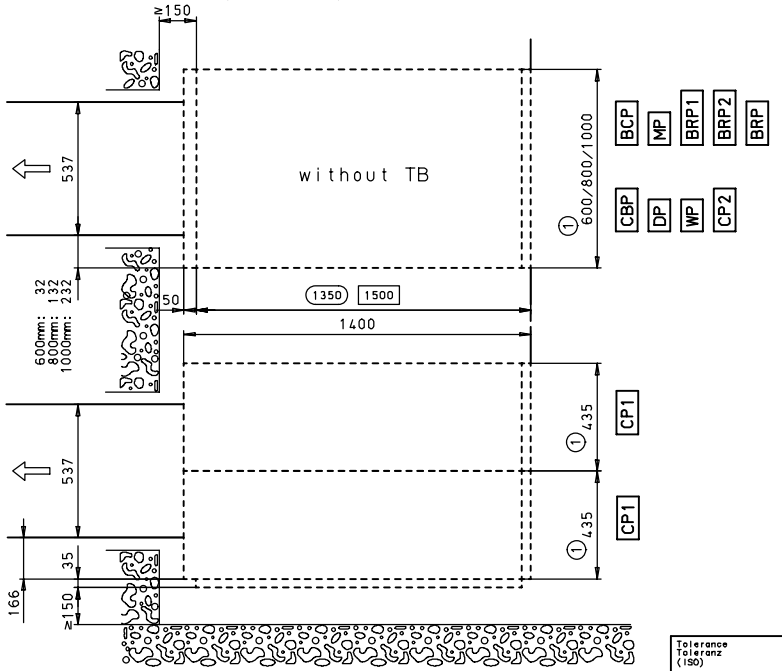

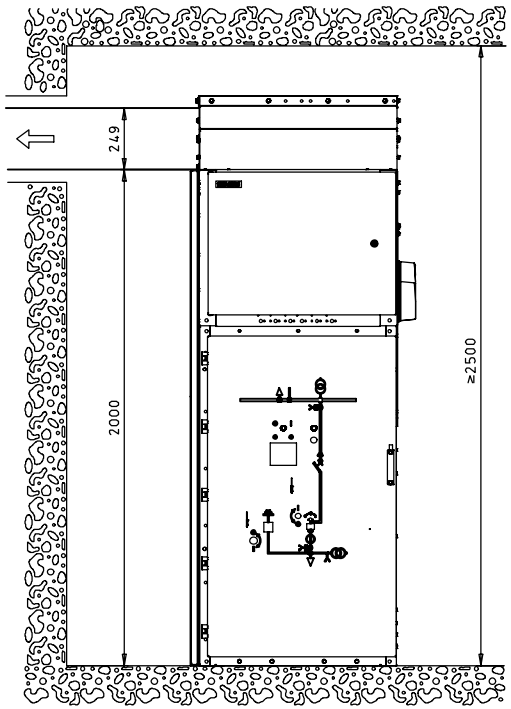

linke oder rechte Ausführung möglich
left or right installation also possible

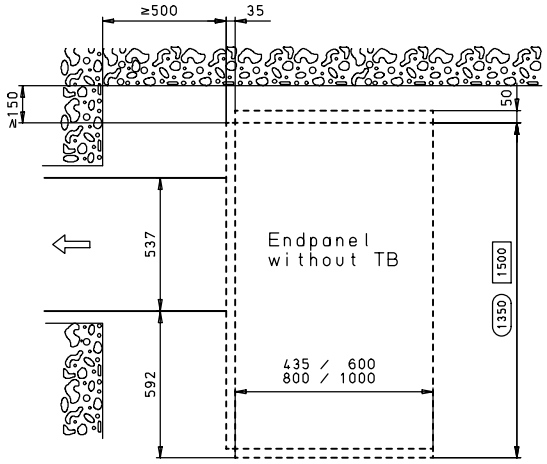

CBP BCP CP1/2
DP MP

Tolerance Toleranz (ISO) DIN ISO 2768 medium -	Material;Werkstoff - -	Mass ; Masse - -	Papersize Format C/A2	06-11-2014	BAO	Date Datum	09-08-2010	Designation Benennung: Druckentlastungskanal Pressure relief duct
		Unit;Einheit mm	Scale Massstab W/O SC.	Date Datum	Name Name	Name	DREISBACH	ISO-Projection
	Material No./Nr. 1 SWF:(-)	Material No./Nr. 2	Released Freigabe Frei	14/7119	09	Department Abteilung	E_D_MV_1_R&D	Dimension drawing NXAIR
				Mod./Ref-No. Aend.-Vorg.-Nr.	Revision Revision	Location Standort	FFMCB	Page Blatt 20+
						SIEMENS		Itemnumber Sachnummer 110-0250.9

HPD

printed by eprtcual, 11/07/14-03:55:16

Draufsicht / Top view

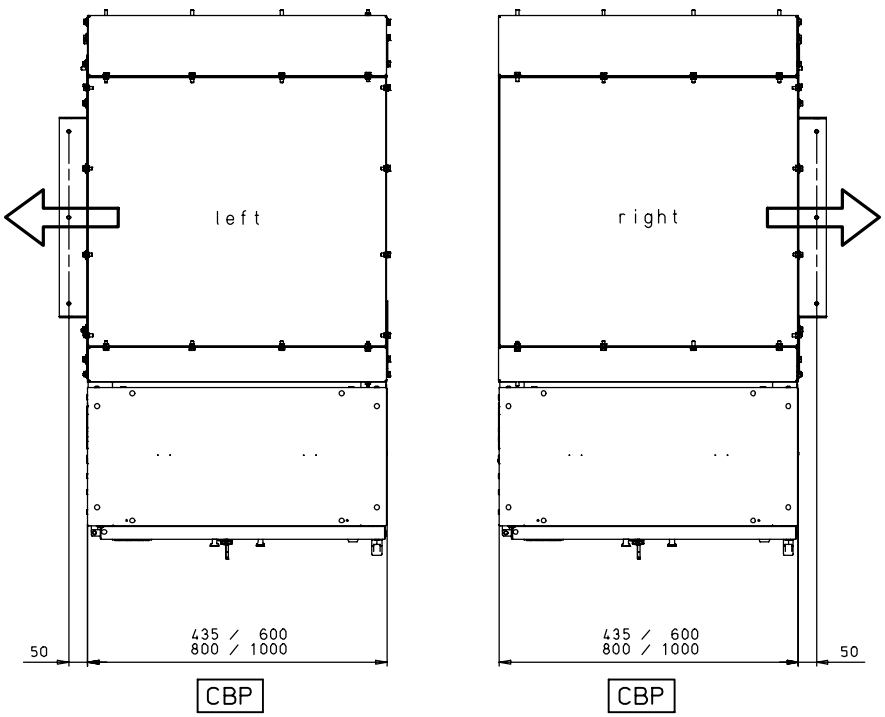

Ausgang nach der Seite
Output of side

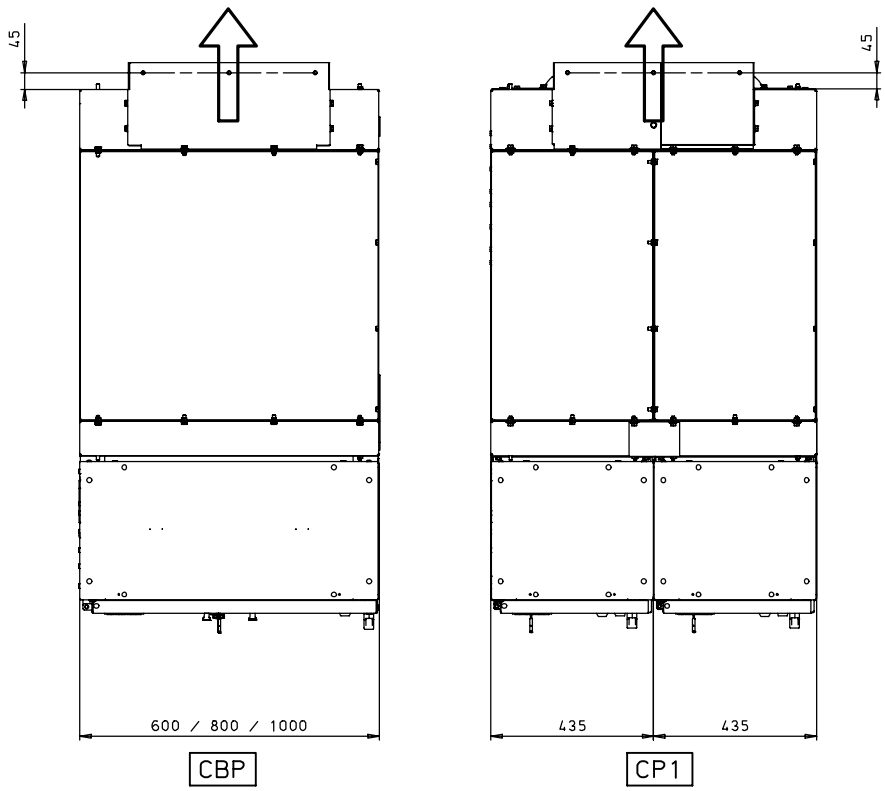

Ausgang nach hinten
Output back

CBP Leistungsschalterfeld
Circuit-breaker panel

CP1 Schützfeld 435mm
Contactor panel 435mm

CP2 Schützfeld 600mm
Contactor panel 600mm

Confié a titre de secret d'enterprise. Tous droits reserves.
Comunicado como segredo empresarial. Reservados todos os direitos.
Confiado como secreto industrial. Todos los derechos reservados.

Als Betriebsgeheimnis anvertraut. Alle Rechte vorbehalten.
Proprietary data, company confidential. All rights reserved.

Tolerance Toleranz (ISO) DIN ISO 2768 medium -	Material;Werkstoff - -	Mass ; Masse - -	Papersize Format C/A2	06-11-2014	BAO	Date Datum	09-08-2010
		Unit;Einheit mm	Scale Massstab W/O SC.	Date Datum	Name Name	Name Name	DREISBACH
	Material No./Nr. 1 SWF:(-)	Material No./Nr. 2	Released Freigabe Frei	14/7119	09	Department Abteilung	E_D_MV_1_R&D
				Mod./Ref-No. Aend.-Vorg.-Nr.	Revision Revision	Location Standort	FFMCB

SIEMENS

Druckentlastungskanal
Pressure relief duct

Designation Benennung: Dimension drawing NXAIR

Itemnumber Sachnummer: 110-0250.9

ISO-Projection

Page Blatt 21+

HPD

printed by oprtcual, 11/07/14-03:56:22

Confié a titre de secret d'enterprise. Tous droits reserves.
Comunicado como segredo empresarial. Reservados todos os direitos.
Confiado como secreto industrial. Todos los derechos reservados.

Als Betriebsgeheimnis anvertraut. Alle Rechte vorbehalten.
Proprietary data, company confidential. All rights reserved.

IP3X protection
IP4X protection

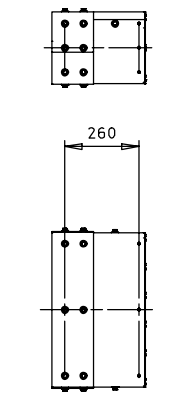

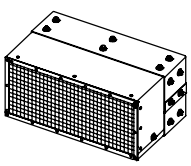

110-0539.3

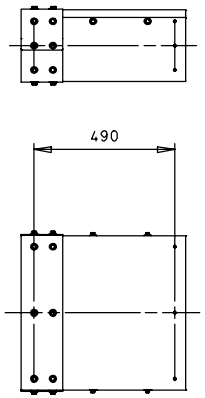

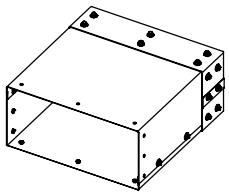

110-0540.3

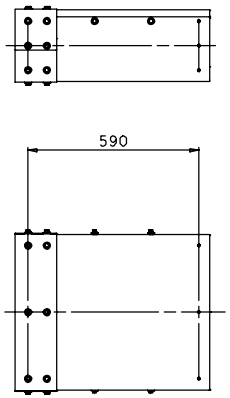

119-0936.3

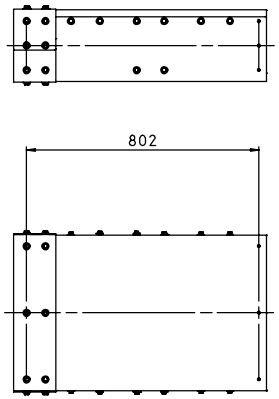

119-0935.3

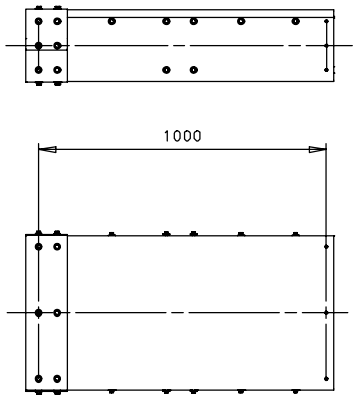

110-0523.3

Movable box

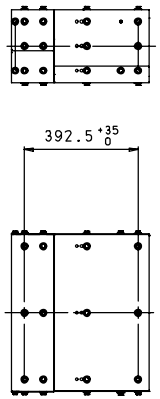

119-0937.3

Movable box

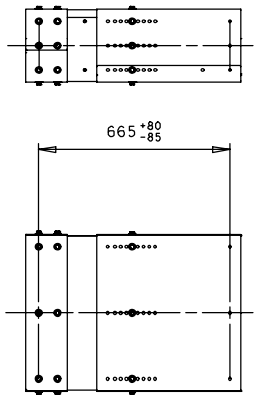

110-0541.3

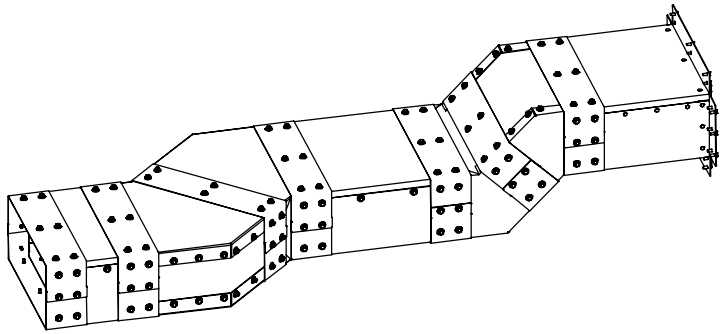

Wall outgoing box

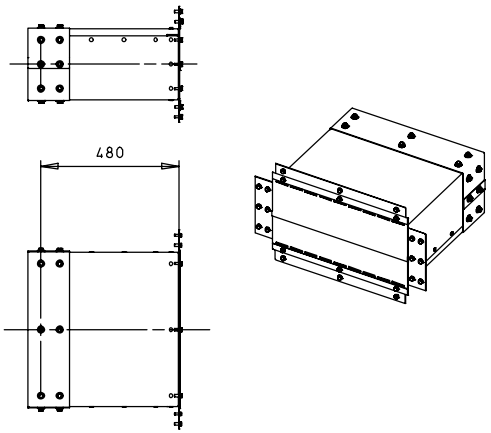

110-0537.3

45°vertical

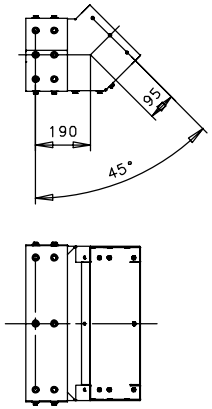

110-0533.3

45°horizontal

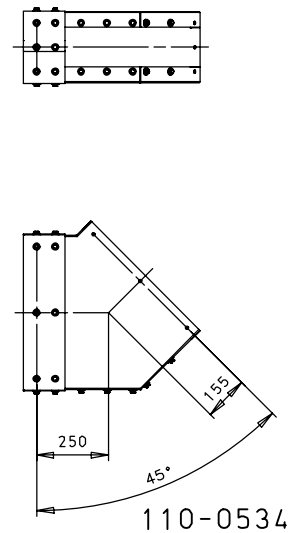

110-0534.3

Druckentlastungskanal
Pressure relief duct

Tolerance Toleranz (ISO)	Material;Werkstoff	Mass ; Masse	Papersize Format	06-11-2014	BAO	Date Datum	09-08-2010
DIN ISO 2768 medium	-	-	C/A2			Name Name	DREISBACH
-	-	-	Scale Massstab	Date Datum	Name Name	Department Abteilung	E_D_MV_1_R&D
		Unit;Einheit mm	W/O SC.	14/7119	09	Location Standort	FFMCB
	Material No./Nr. 1	Material No./Nr. 2	Released Freigabe	Mod./Ref-No. Aend.-Vorg.-Nr.	Revision Revision	SIEMENS	
	SWF:(-)		Frei				

Designation Benennung: Dimension drawing NXAIR

Itemnumber Sachnummer: 110-0250.9

ISO-Projection

Page Blatt: 22+

HPD

printed by eprtcual, 11/07/14-03:53:44

Confié a titre de secret d'enterprise. Tous droits reserves.
Comunicado como segredo empresarial. Reservados todos os direitos.
Confiado como secreto industrial. Todos los derechos reservados.

Als Betriebsgeheimnis anvertraut. Alle Rechte vorbehalten.
Proprietary data, company confidential. All rights reserved.

min. ≥3500 17.5kV ≤31.5kA with absorber

min. ≥2800 ≤12kV ≤25kA with absorber

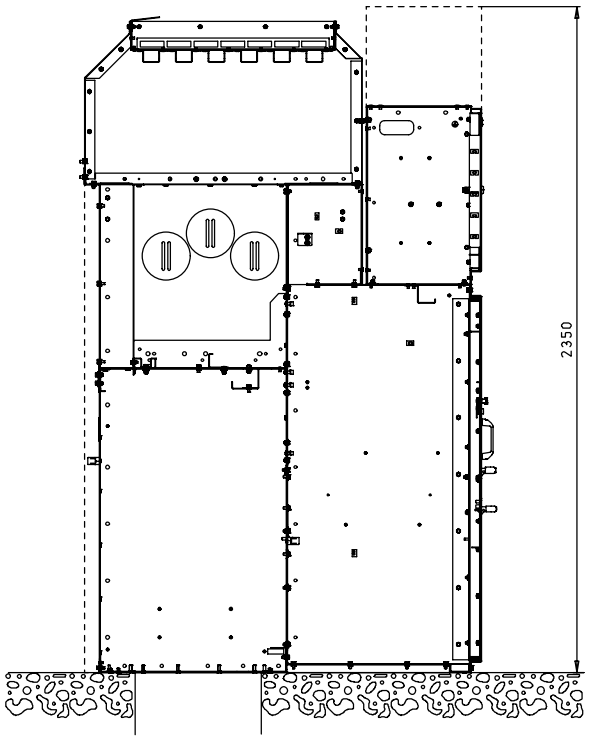

min. ≥3000 ≤12kV 31.5kA with absorber

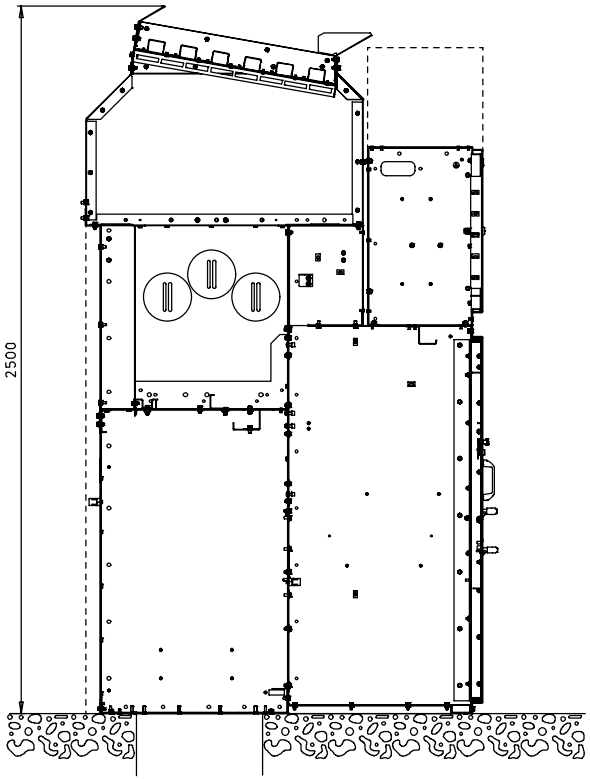

Tolerance Toleranz (ISO)	Material;Werkstoff	Mass ; Masse	Papersize Format	06-11-2014	BAO	Date Datum	09-08-2010	Designation Benennung	ISO-Projection
DIN ISO 2768 medium	-	-	C/A2	Date Datum	Name Name	Name	DREISBACH	Dimension drawing NXAIR	
-	-	Unit;Einheit mm	Scale Massstab W/O SC.	14/7119	09	Department Abteilung	E_D_MV_1_R&D		Page Blatt 23+
	Material No./Nr. 1 SWF:(-)	Material No./Nr. 2	Released Freigabe Frei	Mod./Ref-No. Aend.-Vorg.-Nr.	Revision Revision	Location Standort	FFMCB	Itemnumber Sachnummer 110-0250.9	

Druckentlastungskanal mit Absorber
Pressure relief duct with absorber

SIEMENS

HPD

printed by oprtcual, 11/07/14-03:54:38

Confiè a titre de secret d'enterprise. Tous droits reserves.
Comunicado como segredo empresarial. Reservados todos os direitos.
Confiado como secreto industrial. Todos los derechos reservados.

Als Betriebsgeheimnis anvertraut. Alle Rechte vorbehalten.
Proprietary data, company confidential. All rights reserved.

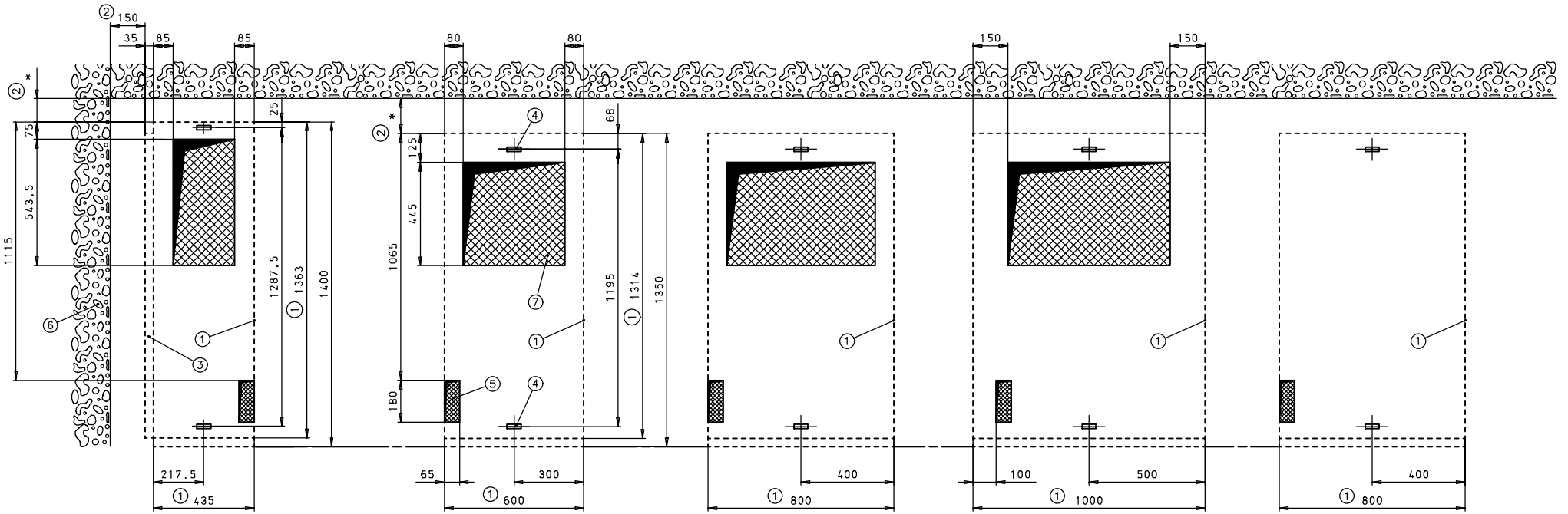

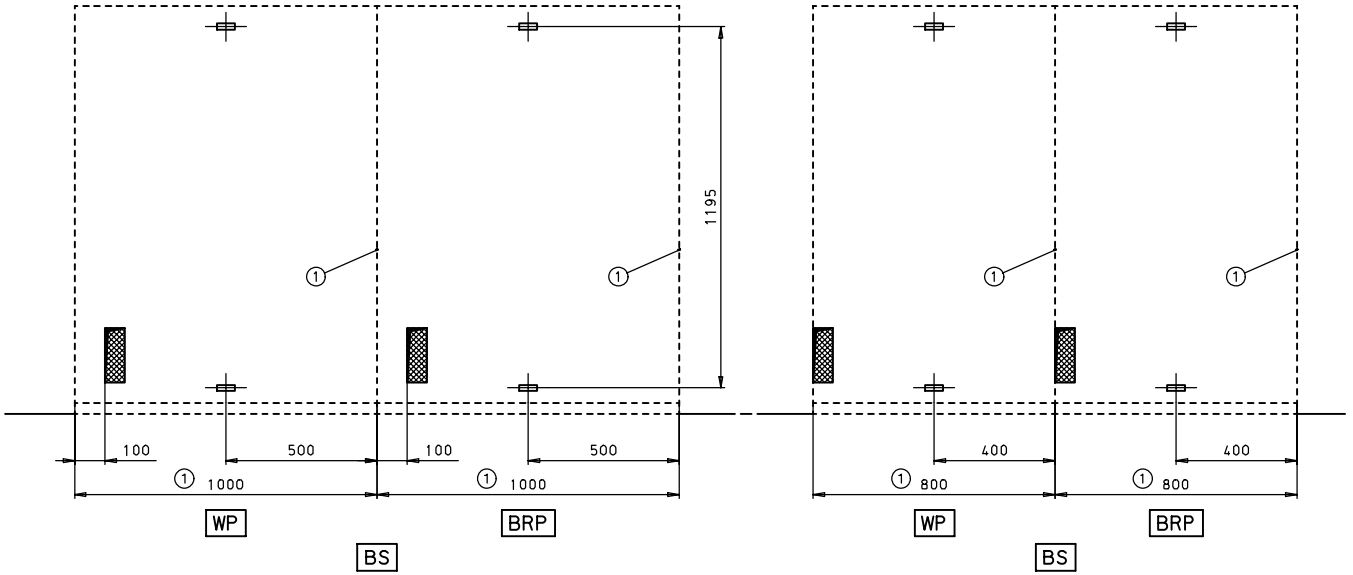

* ≥ 100mm Schützfeld
Contactor panel

* ≥ 150mm alle anderen Feld varianten
all other panel versions

Tolerance Toleranz (ISO)	Material;Werkstoff	Mass ; Masse	Papersize Format	06-11-2014	BAO	Date Datum	09-08-2010	Designation Benennung	ISO-Projection
DIN ISO 2768 medium	-	-	C/A2	Date Datum	Name Name	Name	DREISBACH	Dimension drawing NXAIR	
-	-	Unit;Einheit mm	Scale Massstab W/O SC.	14/7119	09	Department Abteilung	E_D_MV_1_R&D		Page Blatt 24+
	Material No./Nr. 1 SWF:(-)	Material No./Nr. 2	Released Freigabe Frei	Mod./Ref-No. Aend.-Vorg.-Nr.	Revision Revision	Location Standort	FFMCB	Itemnumber Sachnummer 110-0250.9	

Bodendurchbrüche
Floor cut out

SIEMENS

HPD

printed by eprtcual, 11/07/14-03:54:23

Confié a titre de secret d'enterprise. Tous droits reserves.
Comunicado como segredo empresarial. Reservados todos os direitos.
Confiado como secreto industrial. Todos los derechos reservados.

Als Betriebsgeheimnis anvertraut. Alle Rechte vorbehalten.
Proprietary data, company confidential. All rights reserved.

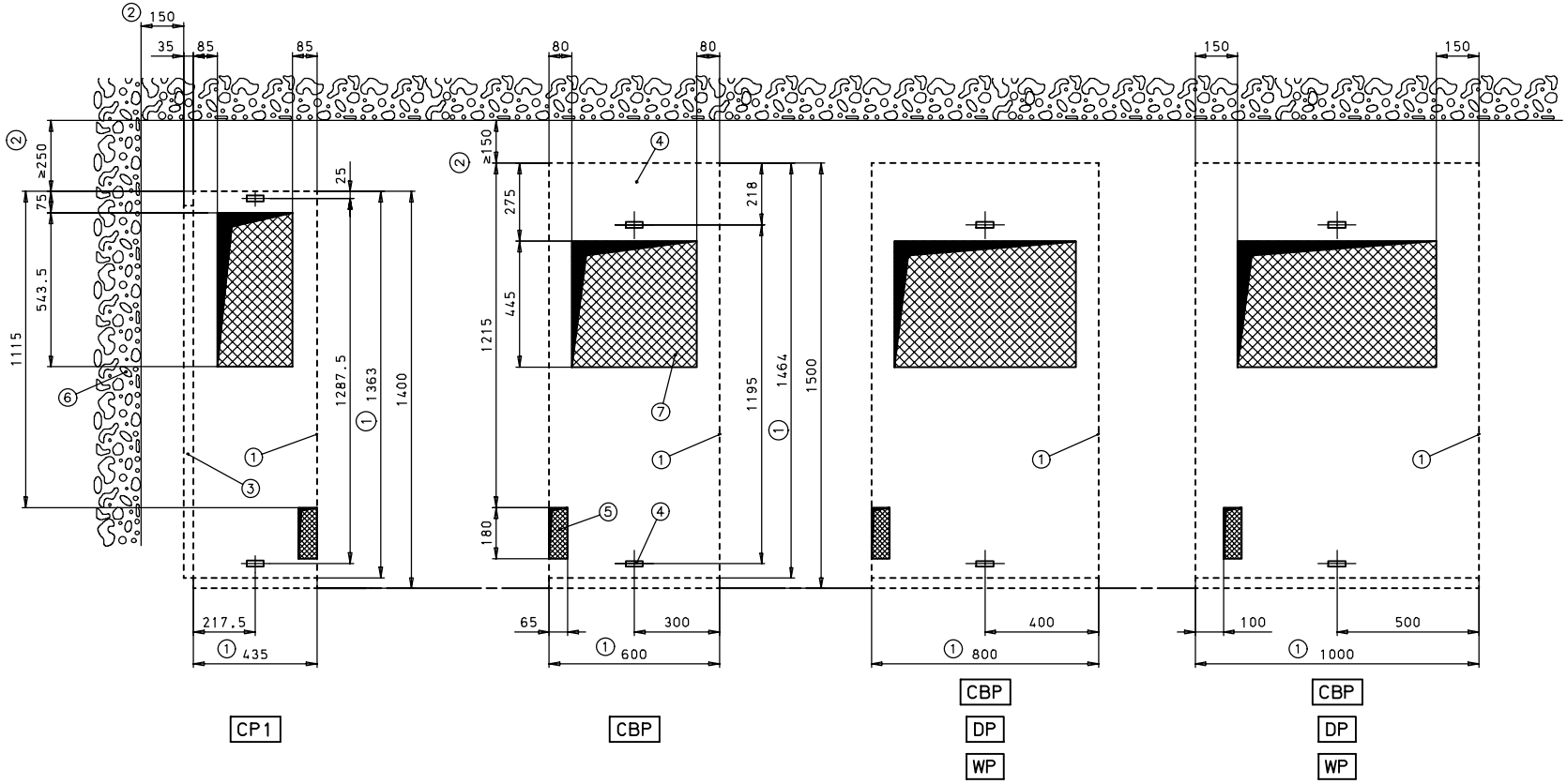

Note: - a mix between panel length 1350mm and panel length 1500mm is possible

- panel version: metering panel, bus bar connecting panel and bus riser panel are not available with panel lengt of 1500mm

Tolerance Toleranz (ISO)	Material;Werkstoff	Mass ; Masse	Papersize Format	06-11-2014	BAO	Date Datum	09-08-2010	Designation Benennung	ISO-Projection
DIN ISO 2768 medium	-	-	C/A2	Date Datum	Name Name	Name	DREISBACH	Bodendurchbrüche Floor cut out	
-	-	-	Scale Massstab			Department Abteilung	E_D_MV_1_R&D	Dimension drawing NXAIR	
		Unit;Einheit mm	W/O SC.	14/7119	09	Location Standort	FFMCB		Page Blatt
	Material No./Nr. 1	Material No./Nr. 2	Released Freigabe	Mod./Ref-No. Aend.-Vorg.-Nr.	Revision Revision	SIEMENS		Itemnumber Sachnummer	25+
	SWF:(-)		Frei					110-0250.9	

printed by oprtcual, 11/07/14-03:53:14

Confiè a titre de secret d'enterprise. Tous droits reserves.
Comunicado como segredo empresarial. Reservados todos os direitos.
Confiado como secreto industrial. Todos los derechos reservados.

Als Betriebsgeheimnis anvertraut. Alle Rechte vorbehalten.
Proprietary data, company confidential. All rights reserved.

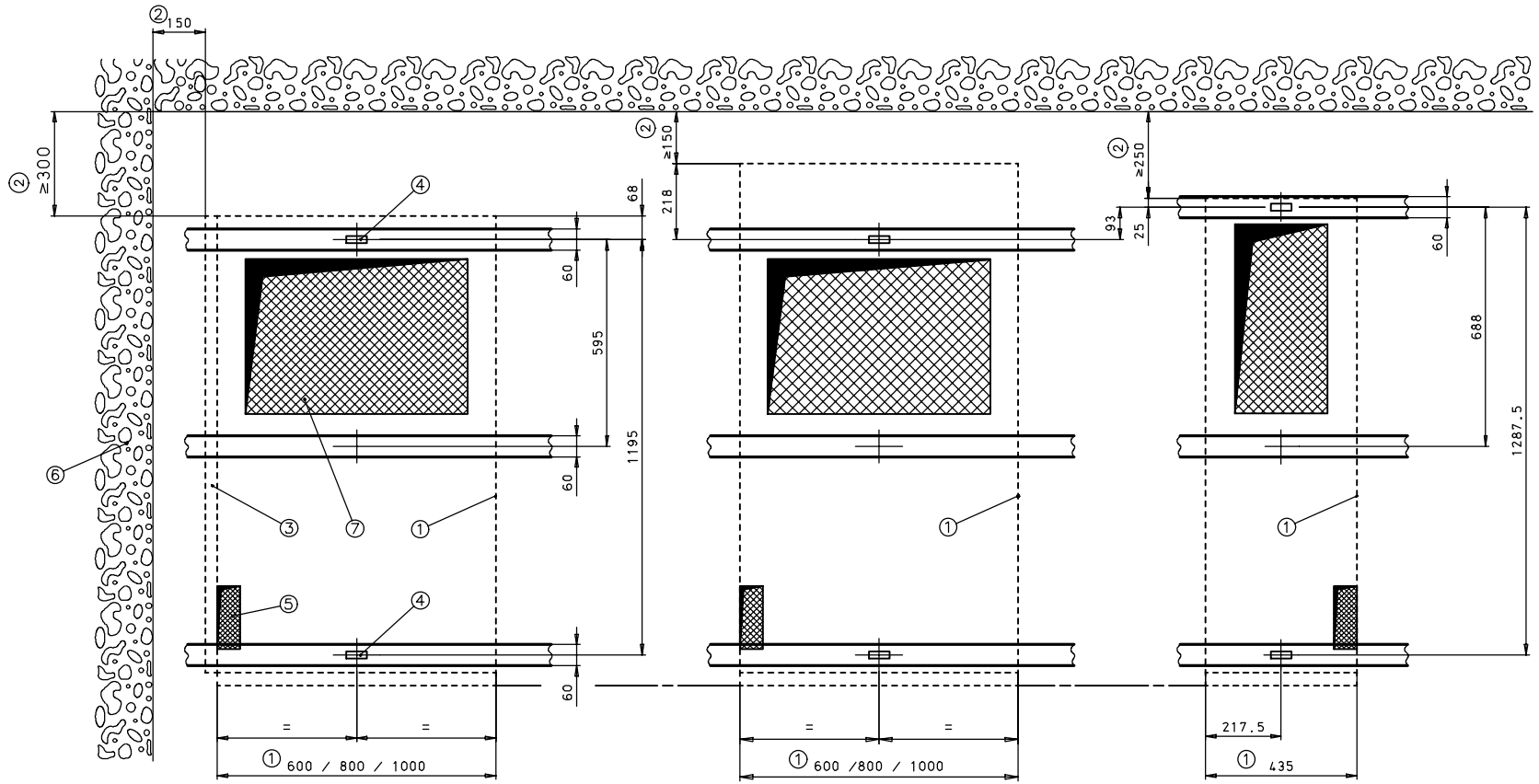

① Standflaeche
Base frame

② Wandabstand
Distance to the wall

③ Endwand links
Endwall left

④ Befestigungspunkte / Langloch 60x20mm
Fixing points / oblong hole 60x20mm

⑤ Bodenoeffnung fuer Steuerleitungen
Cutout for control cable

⑥ Gebaeudewand
Buildingwall

⑦ Bodenöffnung für Hochspannungskabel
Cutout for high volatge cables

CP1 Schützfeld 435mm
Contactor panel 435mm

CP2 Schützfeld 600mm
Contactor panel 600mm

CBP Leistungsschalterfeld
Circuit-breaker panel

DP Trennfeld
Disconnecting panel

BCP Sammelschienenanschlussfeld
Busbar connection panel

BRP Hochführungsfeld
Bus riser panel

MP Messfeld
Metering panel

WP Einschubfeld
Withdrawable panel

Lage Fundamentschienen
Location foundation rails

Tolerance Toleranz (ISO)	Material;Werkstoff	Mass ; Masse	Papersize Format	Date Datum	Name Name
DIN ISO 2768 medium	-	-	C/A2	06-11-2014	BAO
-	-	-	Scale Massstab	Date Datum	Name Name
		Unit;Einheit mm	W/O Sc.	14/7119	09
	Material No./Nr. 1	Material No./Nr. 2	Released Freigabe	Mod./Ref-No. Aend.-Vorg.-Nr.	Revision Revision
	SWF:(-)		frei		

Date Datum	09-08-2010
Name Name	DREISBACH
Department Abteilung	E_D_MV_1_R&D
Location Standort	FFMCB

SIEMENS

Designation Benennung: Dimension drawing NXAIR

Itemnumber Sachnummer: 110-0250.9

ISO-Projection

Page Blatt: 26+

HPD

printed by oprtcual, 11/07/14-03:55:01

Confié a titre de secret d'enterprise. Tous droits reserves.
Comunicado como segredo empresarial. Reservados todos os direitos.
Confiado como secreto industrial. Todos los derechos reservados.

Alle Betriebsgeheimnis anvertraut. Alle Rechte vorbehalten.
Proprietary data, company confidential. All rights reserved.

X
1 : 3

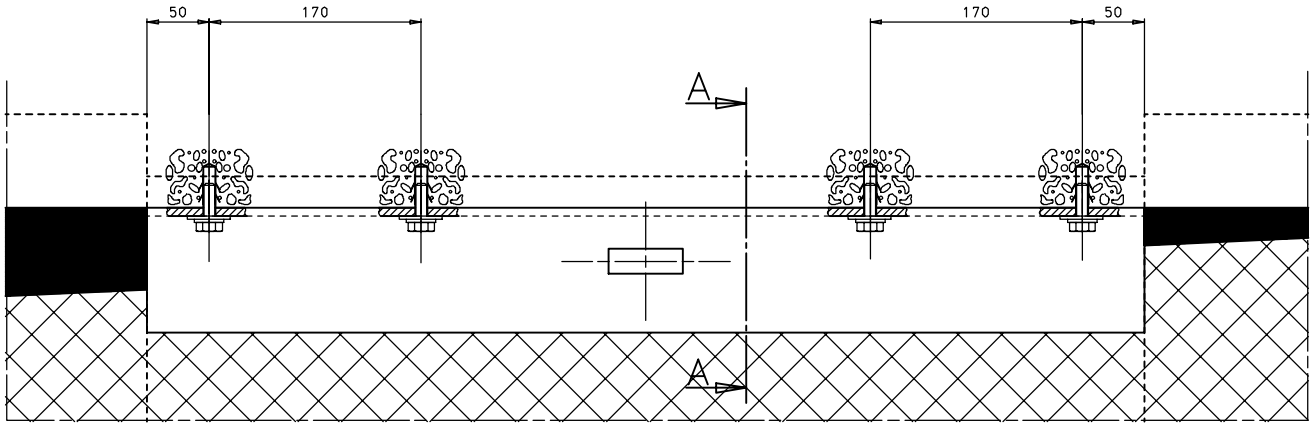

A - A

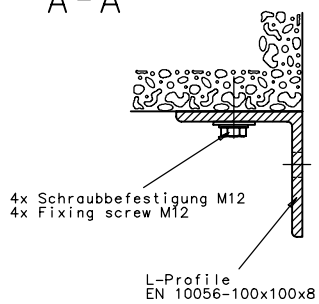

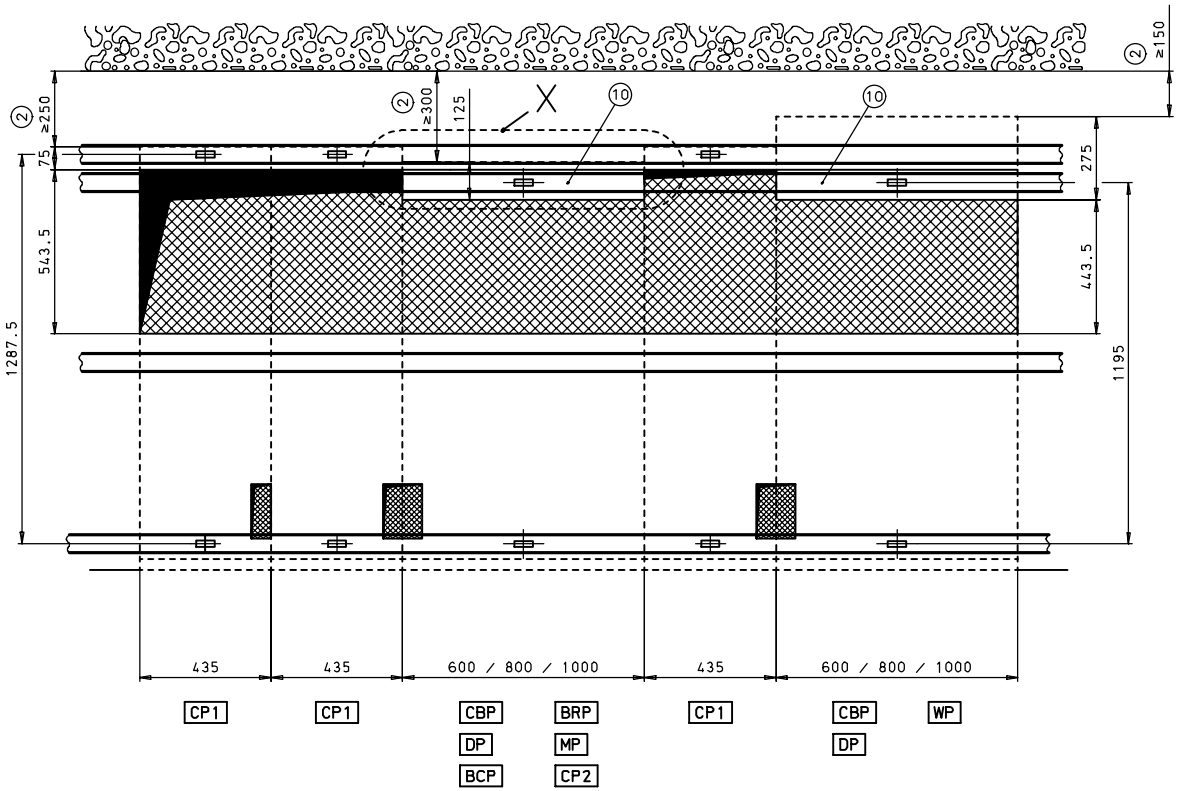

(10) Zusätzliche Fundamentabstützung für Leistungsschalter, Messfelder, Trenneinschubfelder und Längskupplungen mit Feldbreite 600 / 800 / 1000 mm.

Additional support for circuit breaker, metering, disconnector and bus riser panels version with width 600 / 800 / 1000 mm.

Ausführung für Bodendurchbrüche bei Aufstellung von Schützfelder in Kombination mit Leistungsschalterfeldern.

Floor cutout arrangement according combination contactor panels together with circuit breaker panels.

Lage Fundamentschienen
Location foundation rails

Tolerance Toleranz (ISO)	Material;Werkstoff	Mass ; Masse	Papersize Format	06-11-2014	BAO	Date Datum	09-08-2010
DIN ISO 2768 medium	-	-	C/A2	Date Datum	Name Name	Name	DREISBACH
-	-	Unit;Einheit mm	Scale Massstab W/O SC.	14/7119	09	Department Abteilung	E_D_MV_1_R&D
	Material No./Nr. 1 SWF:(-)	Material No./Nr. 2	Released Freigabe Frei	Mod./Ref-No. Aend.-Vorg.-Nr.	Revision Revision	Location Standort	FFMCB

SIEMENS

Designation Benennung: Dimension drawing NXAIR

Itemnumber Sachnummer: 110-0250.9

ISO-Projection

Page Blatt: 27+

HPD

printed by oprtcual, 11/07/14-03:53:27

Confié a titre de secret d'enterprise. Tous droits reserves.
Comunicado como segredo empresarial. Reservados todos os direitos.
Confiado como secreto industrial. Todos los derechos reservados.

Als Betriebsgeheimnis anvertraut. Alle Rechte vorbehalten.
Proprietary data, company confidential. All rights reserved.

Hinweis zum Kabelanschluss / Note for panel connection

Feldanschluss mit konventionellen Endverschlüssen bis max. 4 x 500 mm² Einleiter oder 3 x 240 mm² Dreileiter je Phase.

Panel connection with conventional cable terminal up to max. 4 x 500 mm² single case or 3 x 240 mm² three core per phase.

Hinweis zum Fundament / Note for foundation construction

Als Fundament eignet sich ein Stelzenboden, Doppelboden oder ein Stahlbetonfundament. Der Stahlbetonboden muss mit Fundamentschienen ausgerüstet werden, auf denen die Schaltfelder stehen müssen.
Toleranz des Fundament nach DIN 43661: Geradheit 1 mm pro 1 m Länge und 2 mm für die Gesamtlänge
Ebenheit 1 mm innerhalb von 1 m Messlänge.

The foudation construction must be done as a false floor, double floor or a concrete foundation.
The concrete foundation must have foundation rails, on witch the switchgear are based.
Tolerance band like DIN 43661: Straightness 1 mm to 1 m lenght and 2 mm at overall length
Evenness 1 mm to 1 m measuring length.

see Installation instructions:

110-0084.9 english
or 110-0144.9 german

Tolerance Toleranz (ISO) DIN ISO 2768 medium -	Material;Werkstoff - -	Mass ; Masse - -	Papersize Format C/A2	06-11-2014	BAO	Date Datum	09-08-2010	Designation Benennung	ISO-Projection
		Unit;Einheit mm	Scale Massstab w/o sc.	Date Datum	Name Name	Name	DREISBACH	Allgemeine Hinweise General information	
	Material No./Nr. 1 SWF:(-)	Material No./Nr. 2	Released Freigabe Frei	14/7119	09	Department Abteilung	E_D_MV_1_R&D		
				Mod./Ref-No. Aend.-Vorg.-Nr.	Revision Revision	Location Standort	FFMCB	Dimension drawing NXAIR	Page Blatt 28+
						SIEMENS		Itemnumber Sachnummer 110-0250.9	

printed by oprtcual, 11/07/14-03:56:02

Confié a titre de secret d'enterprise. Tous droits reserves.
Comunicado como segredo empresarial. Reservados todos os direitos.
Confiado como secreto industrial. Todos los derechos reservados.

Alle Betriebsgeheimnis anvertraut. Alle Rechte vorbehalten.
Proprietary data, company confidential. All rights reserved.

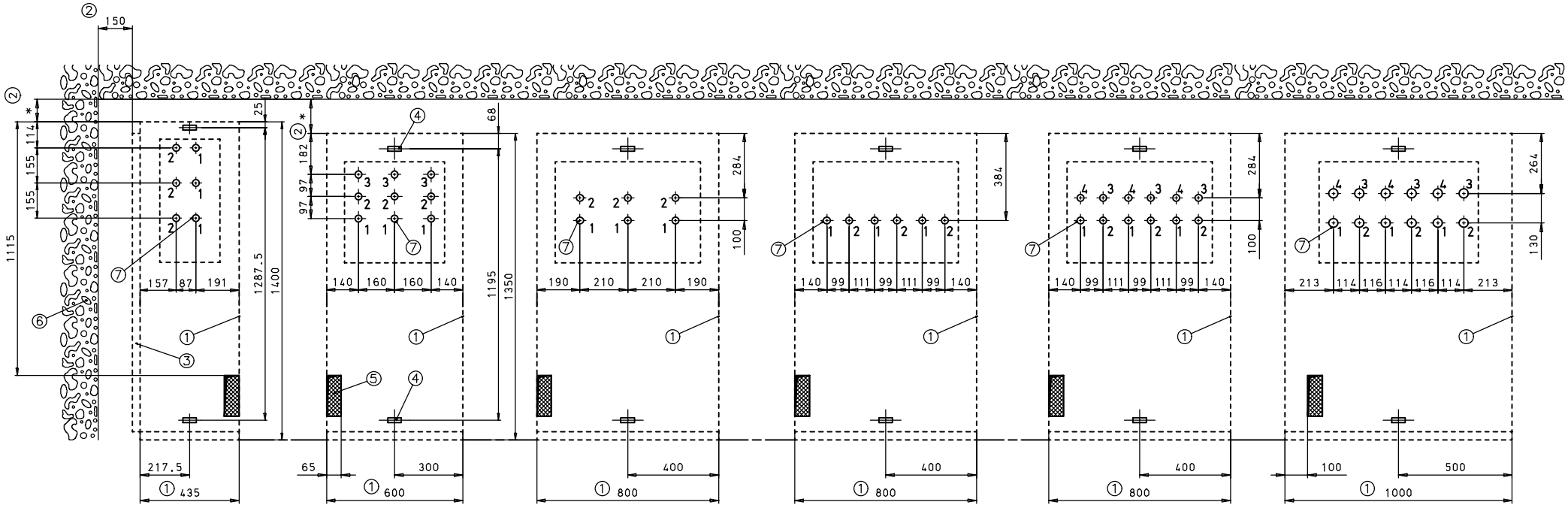

Durchmesser Kernbohrung
entsprechend Kabeldurchmesser

Cross section tapping drill hole
corresponding to cross section cable

* ≥ 100mm Schützfeld CP1
Contactor panel CP1

* ≥ 150mm alle anderen Feld varianten
all other panel versions

Kernbohrungen für Einleiterkabel
Tapping drill hole for single case cables

Tolerance Toleranz (ISO)	Material;Werkstoff	Mass ; Masse	Papersize Format	06-11-2014	BAO	Date Datum	09-08-2010	Designation Benennung	ISO-Projection
DIN ISO 2768 medium	-	-	C/A2	Date Datum	Name Name	Name	DREISBACH	Dimension drawing NXAIR	
-	-	Unit;Einheit mm	Scale Massstab W/O SC.	14/7119	09	Department Abteilung	E_D_MV_1_R&D		Page Blatt 29+
	Material No./Nr. 1 SWF:(-)	Material No./Nr. 2	Released Freigabe Frei	Mod./Ref-No. Aend.-Vorg.-Nr.	Revision Revision	Location Standort	FFMCB	Itemnumber Sachnummer 110-0250.9	

SIEMENS

HPD

printed by oprtcual, 11/07/14-03:55:42

Confié a titre de secret d'enterprise. Tous droits reserves.
Comunicado como segredo empresarial. Reservados todos os direitos.
Confiado como secreto industrial. Todos los derechos reservados.

Alle Betriebsgeheimnis anvertraut. Alle Rechte vorbehalten.
Proprietary data, company confidential. All rights reserved.

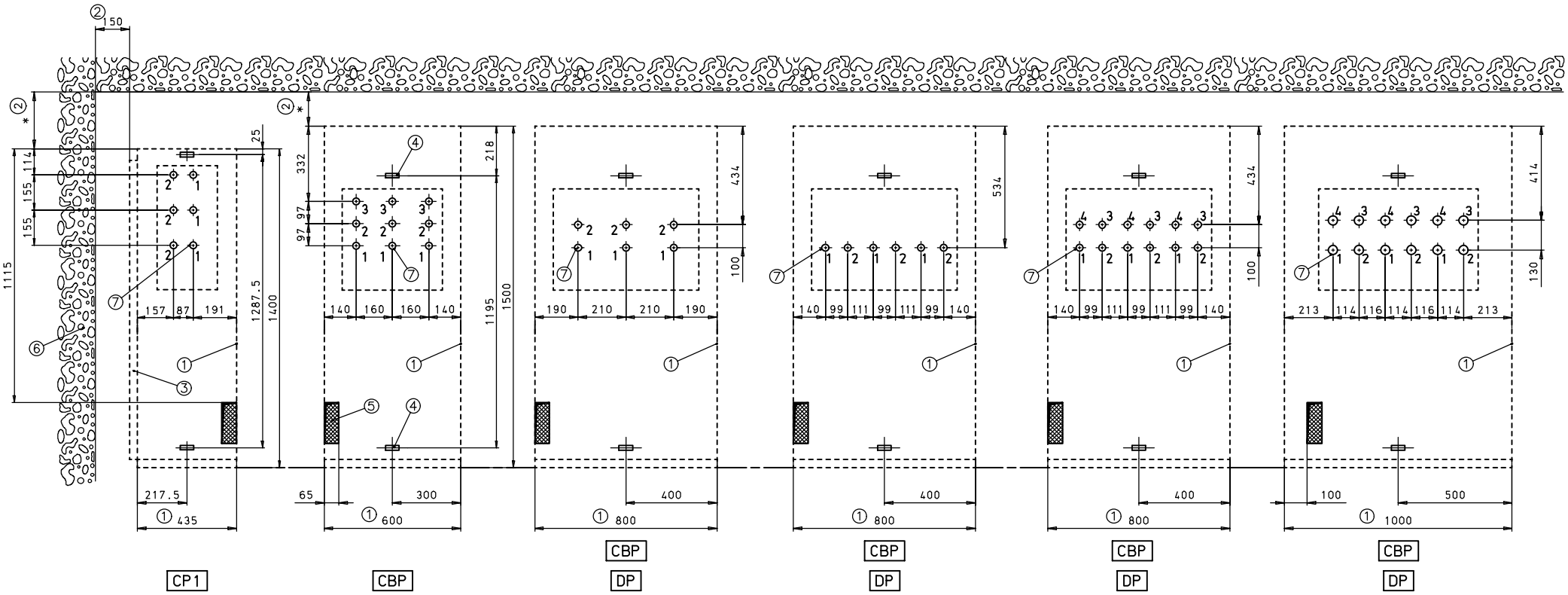

Durchmesser Kernbohrung
entsprechend Kabeldurchmesser

Cross section tapping drill hole
corresponding to cross section cable

* ≥ 250mm Schützfeld CP1
Contactor panel CP1

* ≥ 150mm alle anderen Feld varianten
all other panel versions

Kernbohrungen für Einleiterkabel
Tapping drill hole for single case cables

Tolerance Toleranz (ISO)	Material;Werkstoff	Mass ; Masse	Papersize Format	06-11-2014	BAO	Date Datum	09-08-2010	Designation Benennung	ISO-Projection
DIN ISO 2768 medium	-	-	C/A2	Date Datum	Name Name	Name	DREISBACH	Dimension drawing NXAIR	
-	-	Unit;Einheit mm	Scale Massstab W/O SC.	14/7119	09	Department Abteilung	E_D_MV_1_R&D		Page Blatt 30+
	Material No./Nr. 1 SWF:(-)	Material No./Nr. 2	Released Freigabe Frei	Mod./Ref-No. Aend.-Vorg.-Nr.	Revision Revision	Location Standort	FFMCB	Itemnumber Sachnummer 110-0250.9	

SIEMENS

HPD

printed by oprtcual, 11/07/14-04:11:42

Confié a titre de secret d'enterprise. Tous droits reserves.
Comunicado como segredo empresarial. Reservados todos os direitos.
Confiado como secreto industrial. Todos los derechos reservados.

Als Betriebsgeheimnis anvertraut. Alle Rechte vorbehalten.
Proprietary data, company confidential. All rights reserved.

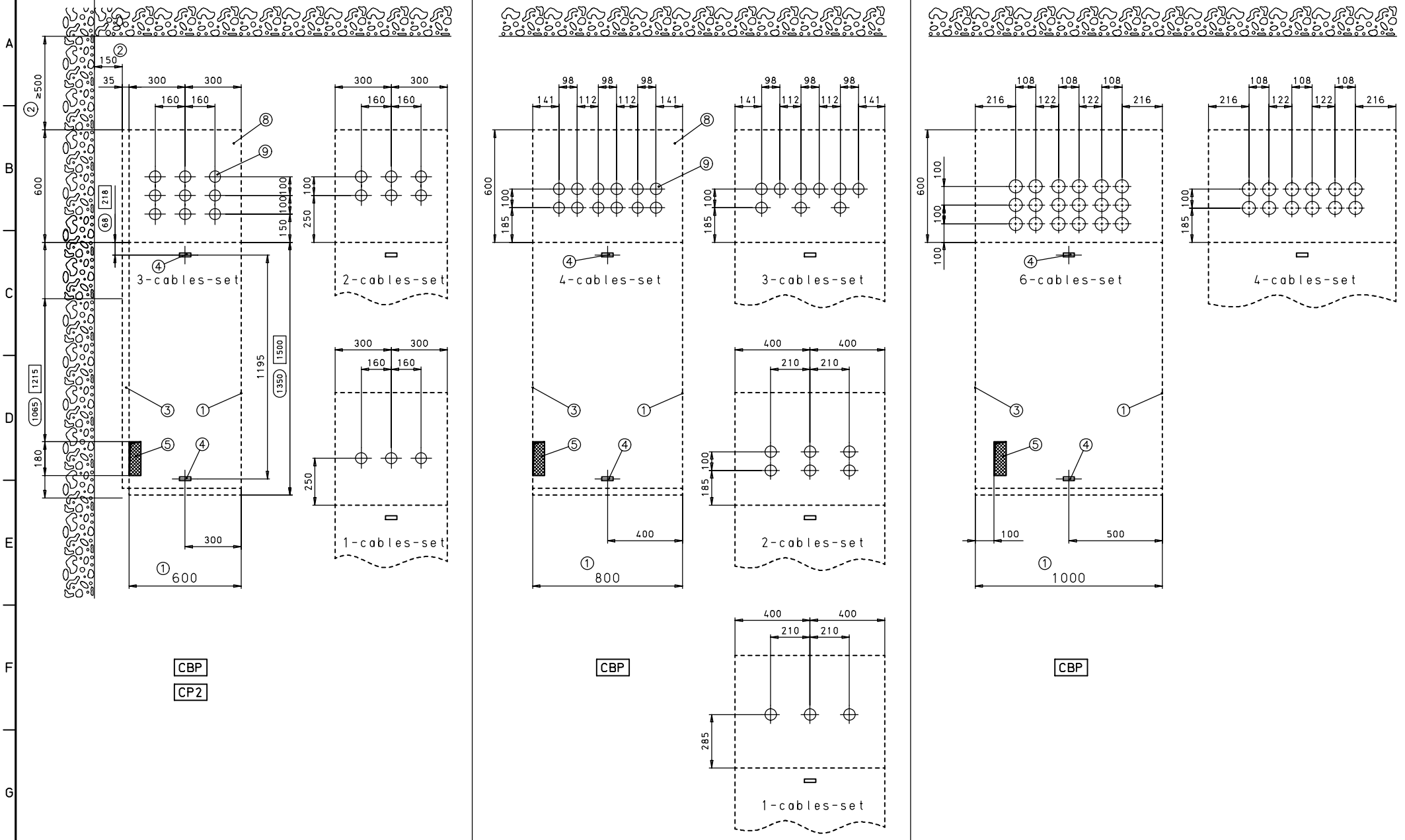

Rucksack, Lage der Kabel
Rear box, location of cables

Tolerance Toleranz (ISO)	Material;Werkstoff	Mass ; Masse	Papersize Format	06-11-2014	BAO
DIN ISO 2768 medium	-	-	C/A2	Date Datum	Name Name
-	-	-	Scale Massstab	14/7119	09
		Unit;Einheit mm	W/O SC.	Mod./Ref-No. Aend.-Varg.-Nr.	Revision Revision
	Material No./Nr. 1 SWF:(-)	Material No./Nr. 2	Released Freigabe Frei		

Date Datum: 09-08-2010
Name Name: DREISBACH
Department Abteilung: E_D_MV_1_R&D
Location Standort: FFMCB

SIEMENS

Designation Benennung: Dimension drawing NXAIR

Itemnumber Sachnummer: 110-0250.9

ISO-Projection

Page Blatt: 31+

HPD

printed by oprtcual, 11/07/14-04:12:49

Assignment for panel fixation seism fixation

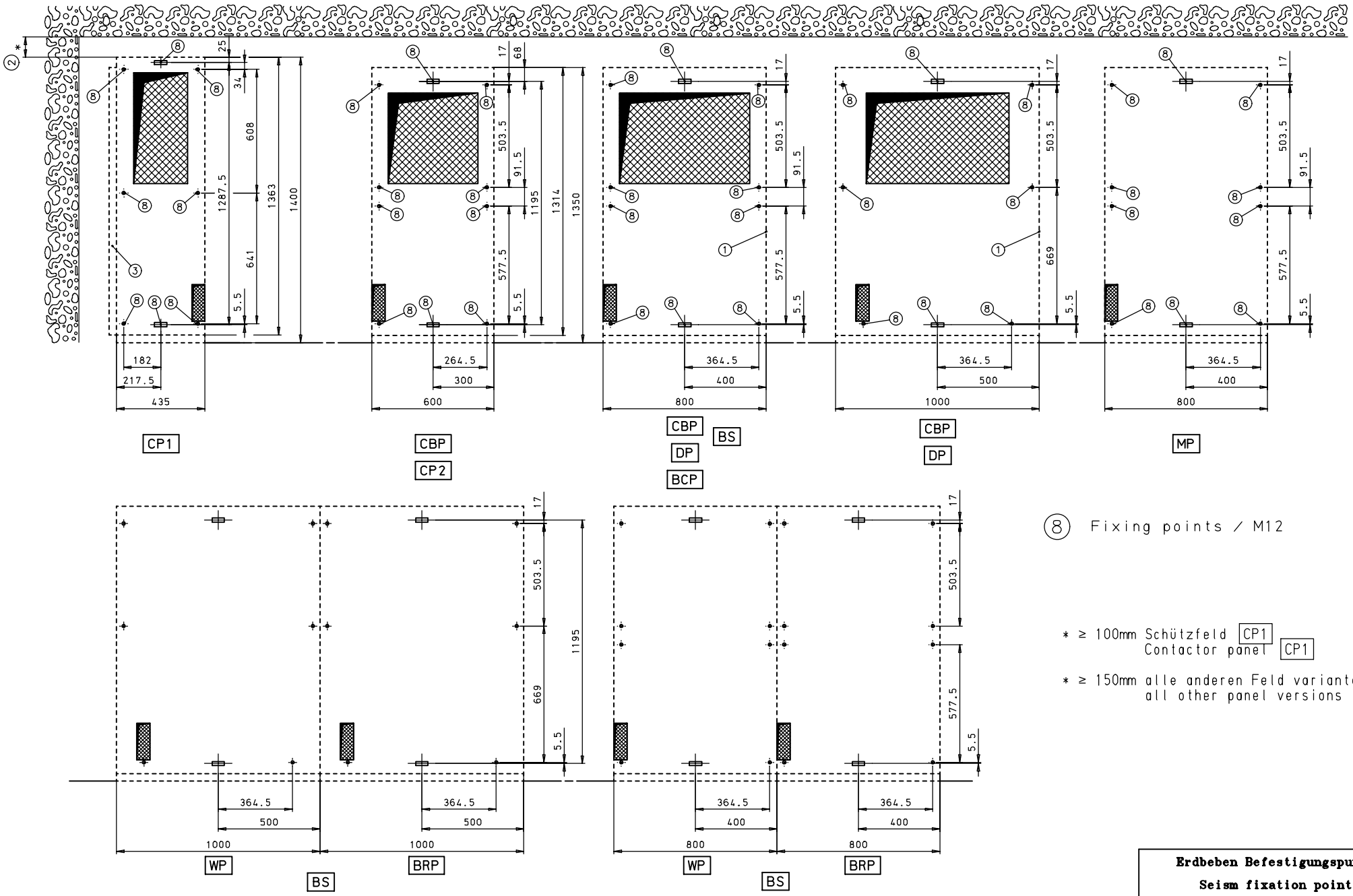

⑧ Fixing points / M12

* ≥ 100mm Schützfeld CP1
Contactor panel CP1

* ≥ 150mm alle anderen Feld varianten
all other panel versions

Confié a titre de secret d'enterprise. Tous droits reserves.
Comunicado como segredo empresarial. Reservados todos os direitos.
Confiado como secreto industrial. Todos los derechos reservados.

Als Betriebsgeheimnis anvertraut. Alle Rechte vorbehalten.
Proprietary data, company confidential. All rights reserved.

Tolerance Toleranz (ISO)	Material;Werkstoff	Mass ; Masse	Papersize Format	06-11-2014	BAO	Date Datum	09-08-2010
DIN ISO 2768 medium	-	-	C/A2			Name Name	DREISBACH
-	-	-	Scale Massstab	Date Datum	Name Name	Department Abteilung	E_D_MV_1_R&D
		Unit:Einheit mm	W/O SC.	14/7119	09	Location Standort	FFMCB
	Material No./Nr. 1 SWF:(-)	Material No./Nr. 2	Released Freigabe Frei	Mod./Ref-No. Aend.-Vorg.-Nr.	Revision Revision	SIEMENS	

Erdbeben Befestigungspungte
Seism fixation points

Designation Benennung: Dimension drawing NXAIR

Itemnumber Sachnummer: 110-0250.9

ISO-Projection

Page Blatt: 32+

HPD

printed by oprtcual, 11/07/14-04:13:13

Assignment for panel fixation
seism fixation

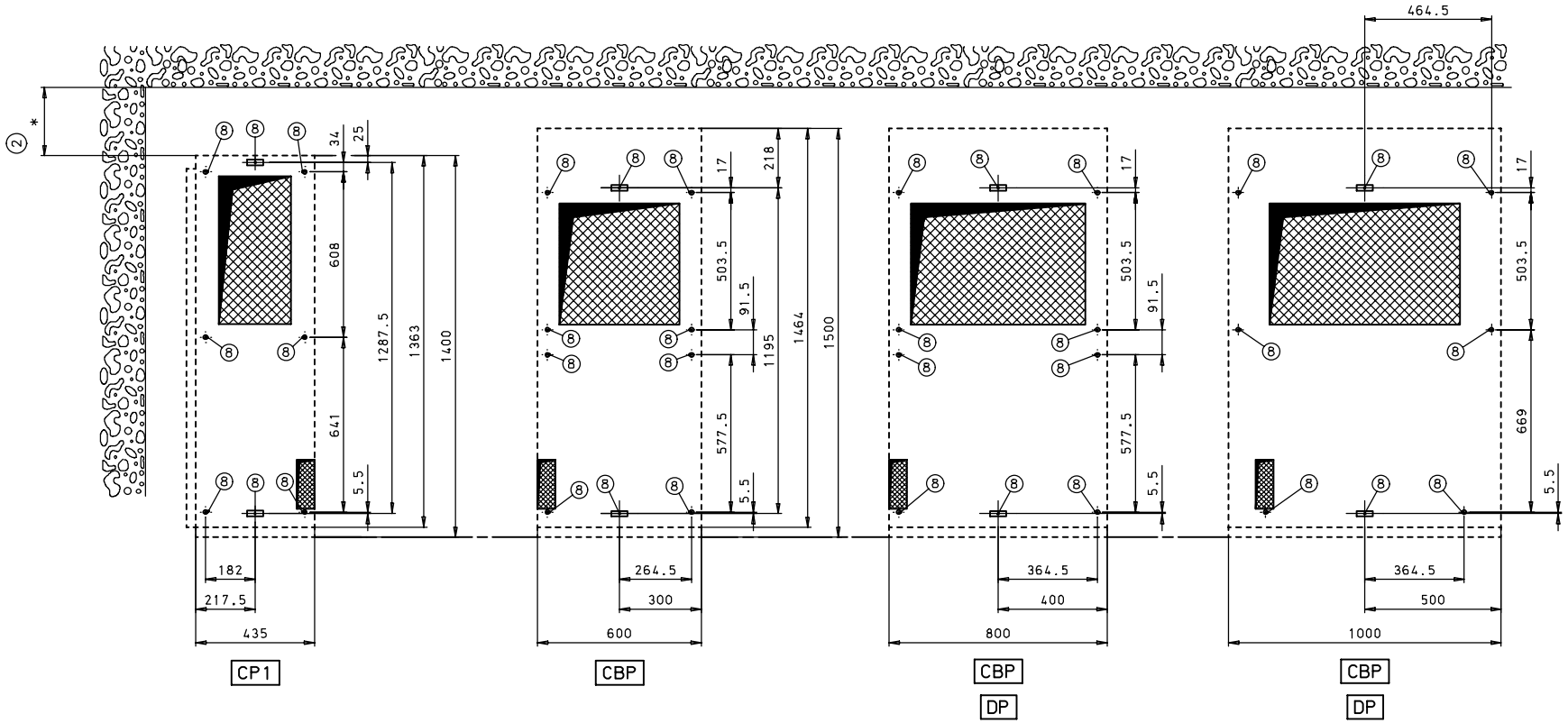

* ≥ 250mm Schützfeld CP1
Contactor panel CP1

* ≥ 150mm alle anderen Feld varianten
all other panel versions

Note: - a mix between panel length 1350mm and panel length 1500mm is possible

- panel version: metering panel, bus bar connecting panel and bus riser panel are not available with panel lengt of 1500mm

⑧ Fixing points / M12

Note:
to use drilling jigs
see page 37-38

Confié a titre de secret d'enterprise. Tous droits reserves.
Comunicado como segredo empresarial. Reservados todos os direitos.
Confiado como secreto industrial. Todos los derechos reservados.

Als Betriebsgeheimnis anvertraut. Alle Rechte vorbehalten.
Proprietary data, company confidential. All rights reserved.

Tolerance Toleranz (ISO)	Material;Werkstoff	Mass ; Masse	Papersize Format	06-11-2014	BAO	Date Datum	09-08-2010	Designation Benennung	ISO-Projection
DIN ISO 2768 medium	-	-	C/A2	Date Datum	Name Name	Name	DREISBACH	Erdbeben Befestigungspungte Seism fixation points	
-	-	Unit;Einheit mm	Scale Massstab W/O SC.			Department Abteilung	E_D_MV_1_R&D	Dimension drawing NXAIR	Page Blatt 33+
	Material No./Nr. 1 SWF:(-)	Material No./Nr. 2	Released Freigabe Frei	14/7119	09	Location Standort	FFMCB	Itemnumber Sachnummer 110-0250.9	
				Mod./Ref-No. Aend.-Vorg.-Nr.	Revision Revision	SIEMENS			

printed by oprtcual, 11/07/14-04:11:23

Assignment for panel fixation
seism fixation

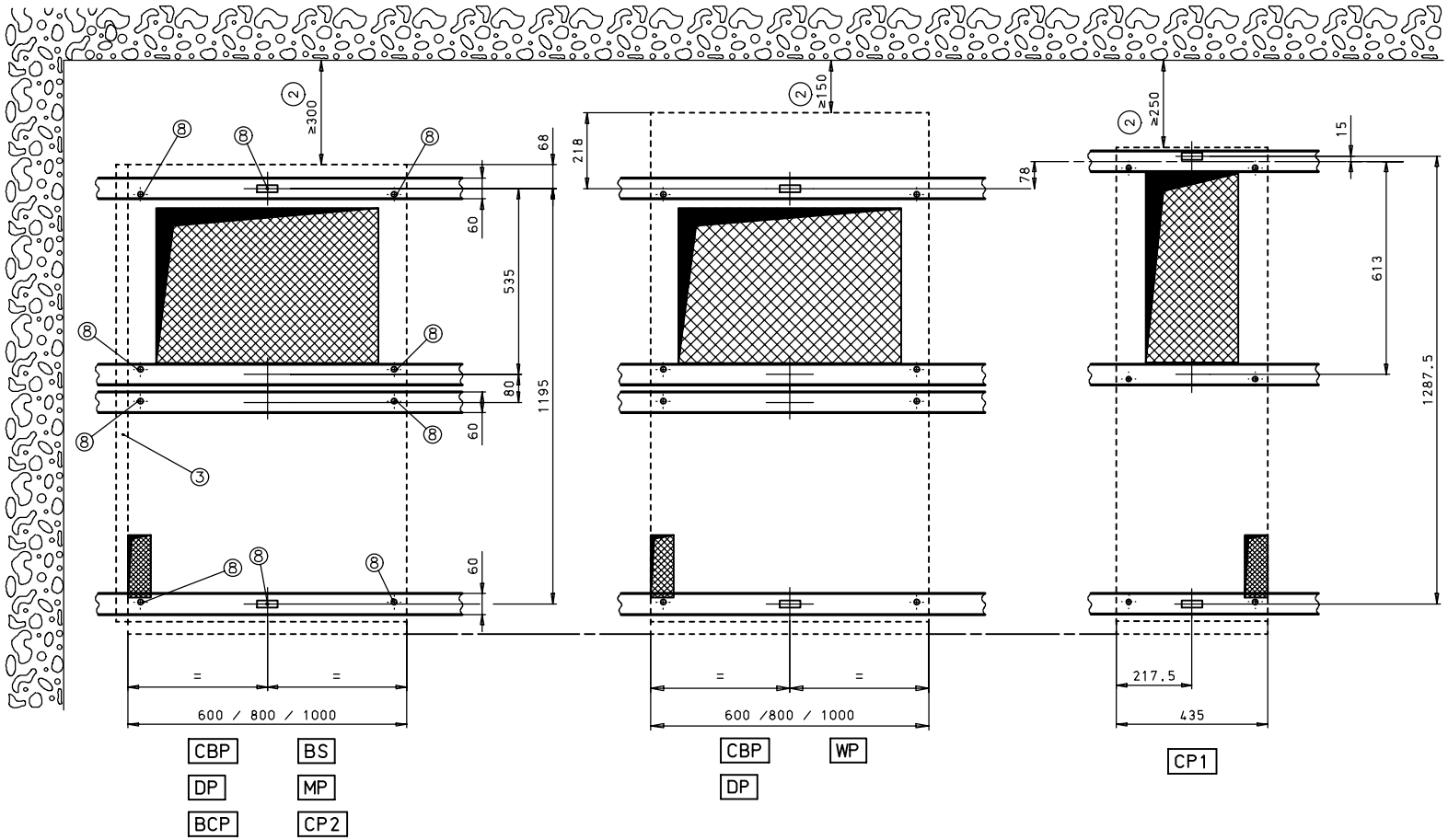

CP1/2 Schützfeld
Contactor panel

CBP Leistungsschalterfeld
Circuit-breaker panel

DP Trennfeld
Disconnecting panel

BCP Sammelschienenanschlussfeld
Busbar connection panel

BS Längskupplung
Bus sectionalizer

MP Messfeld
Metering panel

WP Einschubfeld
Withdrawable panel

⑧ Fixing points / M12

Note:
to use drilling jigs
see page 37-38

Lage Fundamentschienen für Erdbeben Befestigung

Location foundation rails for seism reinforcement

Tolerance Toleranz (ISO)	Material;Werkstoff	Mass ; Masse	Papersize Format	06-11-2014	BAO
DIN ISO 2768 medium	-	-	C/A2	Date Datum	Name Name
-	-	-	Scale Massstab	14/7119	09
		Unit;Einheit mm	W/O SC.	Mod./Ref-No. Aend.-Varg.-Nr.	Revision Revision
	Material No./Nr. 1 SWF:(-)	Material No./Nr. 2	Released Freigabe Frei		

Date Datum 09-08-2010
Name Name DREISBACH
Department Abteilung E_D_MV_1_R&D
Location Standort FFMCB

SIEMENS

Designation Benennung: Dimension drawing NXAIR

Itemnumber Sachnummer: 110-0250.9

ISO-Projection

Page Blatt 34+

Confié a titre de secret d'enterprise. Tous droits reserves.
Comunicado como segredo empresarial. Reservados todos os direitos.
Confiado como secreto industrial. Todos los derechos reservados.

Als Betriebsgeheimnis anvertraut. Alle Rechte vorbehalten.
Proprietary data, company confidential. All rights reserved.

HPD

printed by oprtcual, 11/07/14-04:13:34

Assignment for panel fixation
seism fixation

X
1 : 3

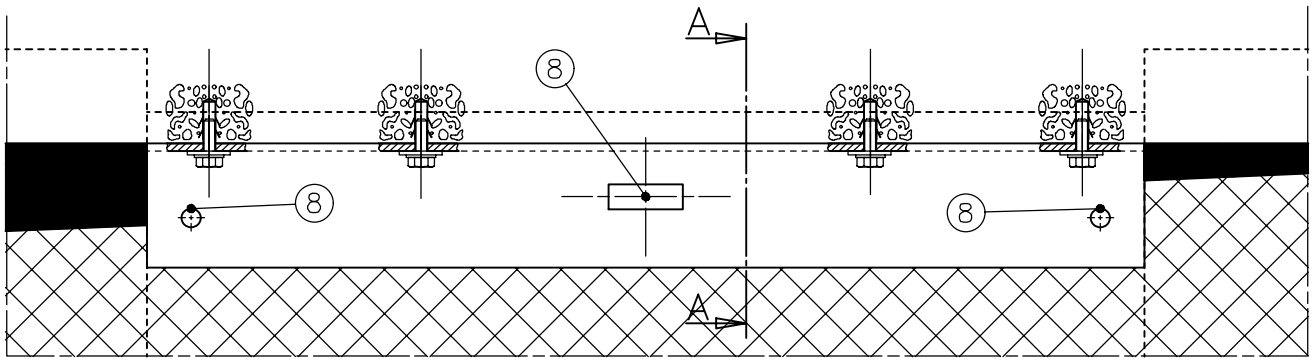

A-A

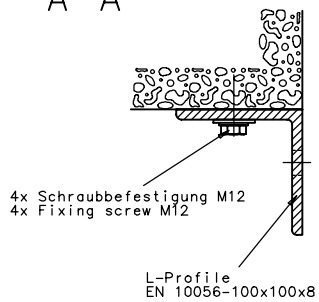

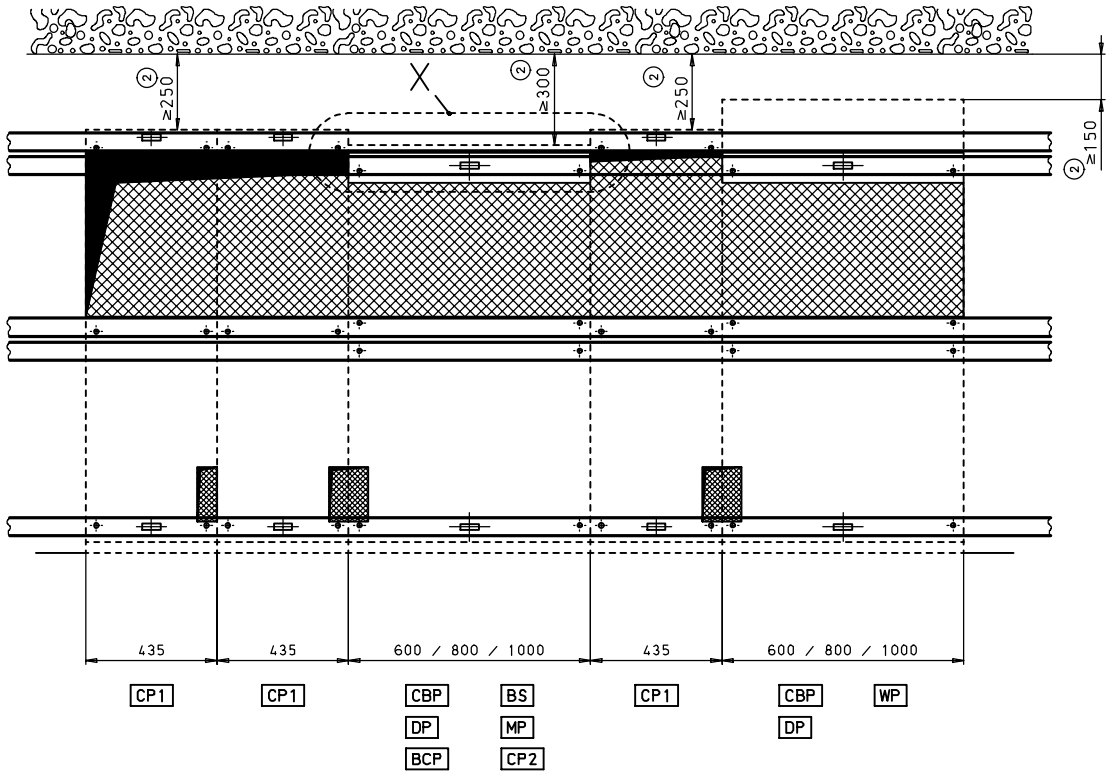

⑧ Fixing points / M12

Lage Fundamentschienen für Erdbeben Befestigung

Location foundation rails for seism reinforcement

Tolerance Toleranz (ISO)	Material;Werkstoff	Mass ; Masse	Papersize Format	06-11-2014	BAO
DIN ISO 2768 medium	-	-	C/A2	Date Datum	Name Name
-	-	-	Scale Massstab	14/7119	09
		Unit;Einheit mm	W/O SC.	Mod./Ref-No. Aend.-Vorg.-Nr.	Revision Revision
	Material No./Nr. 1 SWF:(-)	Material No./Nr. 2	Released Freigabe Frei		

Date Datum	09-08-2010
Name Name	DREISBACH
Department Abteilung	E_D_MV_1_R&D
Location Standort	FFMCB

SIEMENS

Designation Benennung: Dimension drawing NXAIR

Itemnumber Sachnummer: 110-0250.9

ISO-Projection

Page Blatt: 35+

Confié a titre de secret d'enterprise. Tous droits reserves.
Comunicado como segredo empresarial. Reservados todos os direitos.
Confiado como secreto industrial. Todos los derechos reservados.

Als Betriebsgeheimnis anvertraut. Alle Rechte vorbehalten.
Proprietary data, company confidential. All rights reserved.

HPD

printed by oprtcual, 11/07/14-04:13:55

Assignment for panel fixation
seism fixation

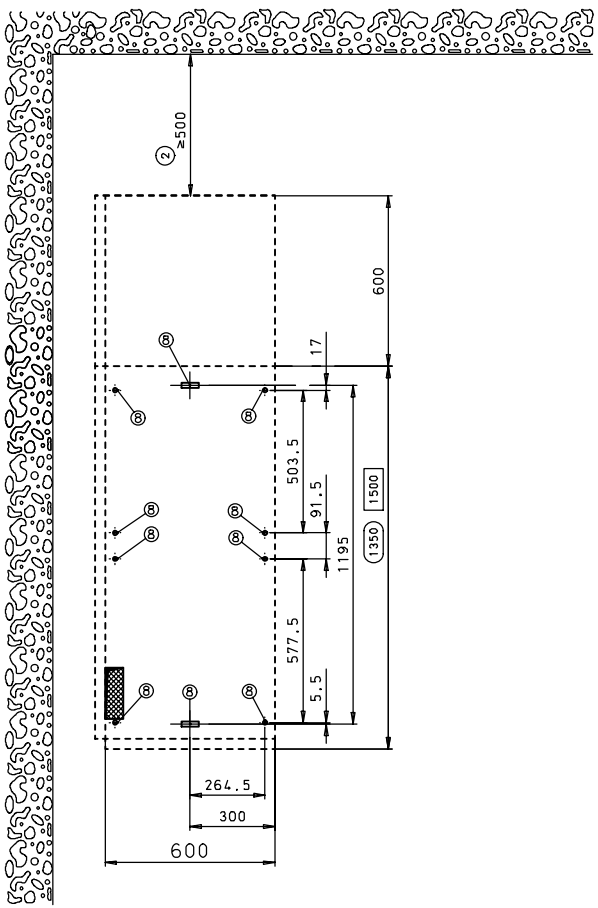

CBP

CP2

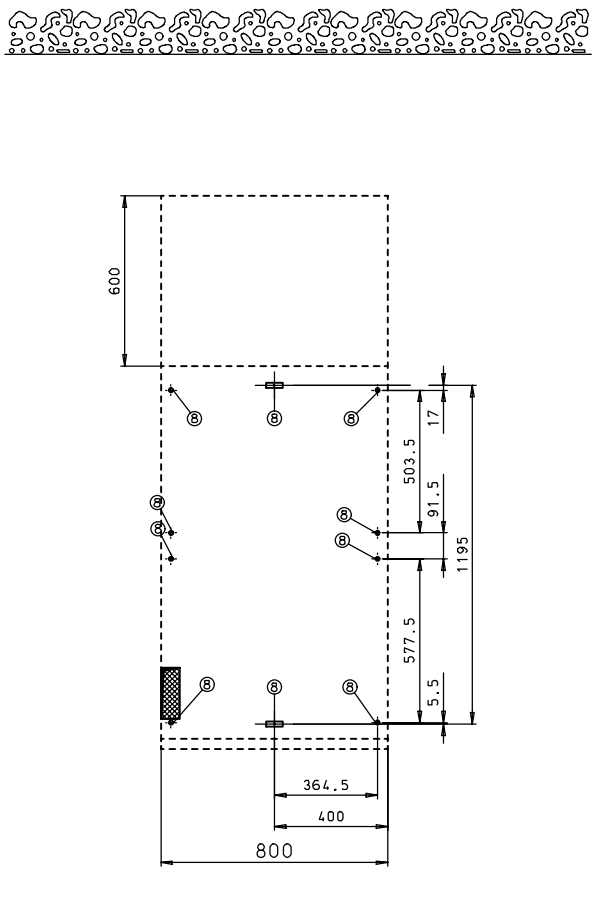

CBP

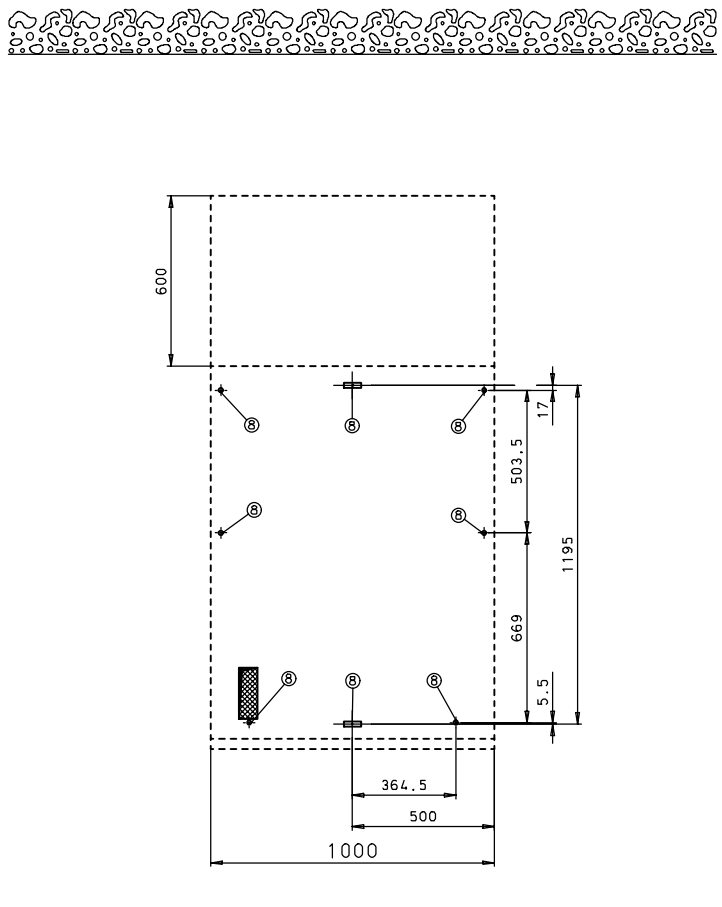

CBP

⑧ Fixing points / M12

Note:
to use drilling jigs
see page 37-38

Erdbeben befestigungs Punkte – Rucksack

Seism fixation points – Rear box

Tolerance Toleranz (ISO)	Material;Werkstoff	Mass ; Masse	Papersize Format	06-11-2014	BAO	Date Datum	09-08-2010	Designation Benennung	ISO-Projection
DIN ISO 2768 medium	-	-	C/A2	Date Datum	Name Name	Name	DREISBACH	Dimension drawing NXAIR	
-	-	-	Scale Massstab			Department Abteilung	E_D_MV_1_R&D		
		Unit:Einheit mm	W/O SC.	14/7119	09	Location Standort	FFMCB		Page Blatt
	Material No./Nr. 1 SWF:(-)	Material No./Nr. 2	Released Freigabe Frei	Mod./Ref-No. Aend.-Vorg.-Nr.	Revision Revision	SIEMENS		Itemnumber Sachnummer	36+
								110-0250.9	

Confié a titre de secret d'enterprise. Tous droits reserves.
Comunicado como segredo empresarial. Reservados todos os direitos.
Confiado como secreto industrial. Todos los derechos reservados.

Als Betriebsgeheimnis anvertraut. Alle Rechte vorbehalten.
Proprietary data, company confidential. All rights reserved.

printed by oprtcual, 11/07/14-04:11:56

Assignment for panel fixation
seism fixation

1. Step

2. Step

3. Step

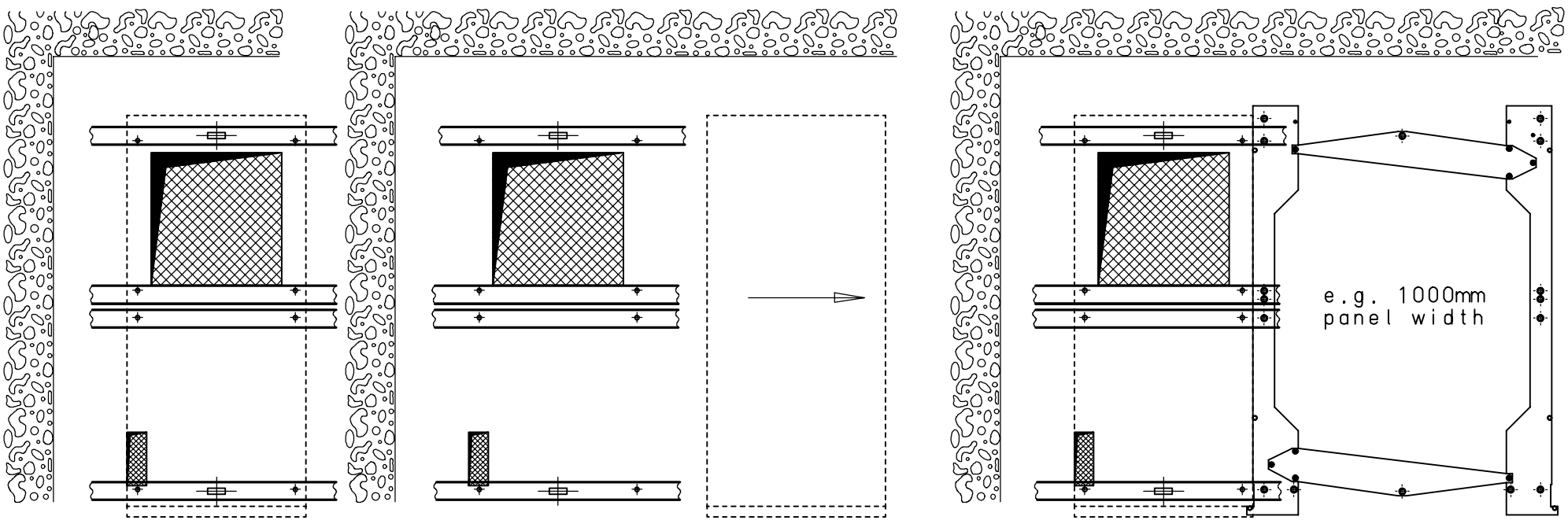

1. Step: - Adjust the first panel at the right place inside the room.
- Mark the connection points at the foundation for the seism fixation, number of holes at switching divice and connection compartment see page 32-36, 37-38.

2. Step: - Move the panel away from the marks.
- At the Marks drill first with a drill bit Ø6mm, second with a drill bit Ø10,2mm. After that, make the thread M12 at the foundation rails for the seism fixation.

3. Step: - Move the panel to the foundation connection points and fix it with screws.
- Place the drilling jig at the side of the panel and the foundation floor.
- Mark the connection points first with a drill bit Ø6mm, second with a drill bit Ø10,2mm. After that, make the thread M12 at the foundation rails for the seism fixation. Number of holes at switching divice and connection compartment see page 32-36, 38.
- Move the panel to the foundation connection points and fix it with screws.
- Take the next panel.
- Start step 3 again.

Confià a titre de secret d'enterprise. Tous droits reserves.
Comunicado como segredo empresarial. Reservados todos os direitos.
Confiado como secreto industrial. Todos los derechos reservados.

Als Betriebsgeheimnis anvertraut. Alle Rechte vorbehalten.
Proprietary data, company confidential. All rights reserved.

Tolerance Toleranz (ISO) DIN ISO 2768 medium -	Material;Werkstoff - -	Mass ; Masse - -	Papersize Format C/A2	06-11-2014	BAO	Date Datum 09-08-2010	Designation Benennung: Erdbeben Verstärkung mit langen Fundamentschienen Seism fixation with location foundation rails
		Unit;Einheit mm	Scale Massstab W/O SC.	Date Datum	Name Name	Name DREISBACH	
	Material No./Nr. 1 SWF:(-)	Material No./Nr. 2	Released Freigabe Frei	14/7119	09	Department Abteilung E_D_MV_1_R&D	ISO-Projection
				Mod./Ref-No. Aend.-Vorg.-Nr.	Revision Revision	Location Standort FFMCB	Page Blatt 37+
						SIEMENS	Itemnumber Sachnummer 110-0250.9

HPD

printed by oprtcual, 11/07/14-04:12:35

Assignment for panel fixation
seism fixation

435mm Panel

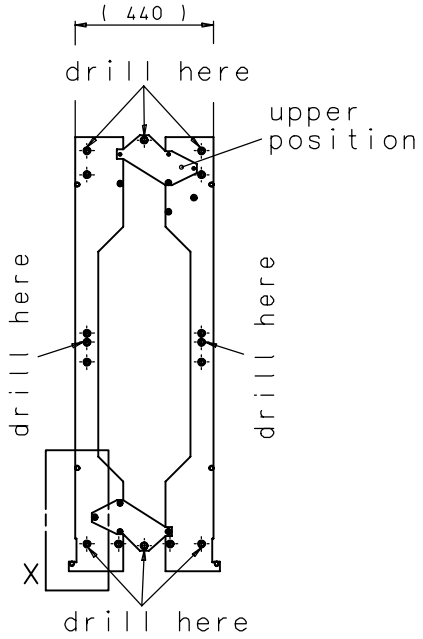

600mm Panel

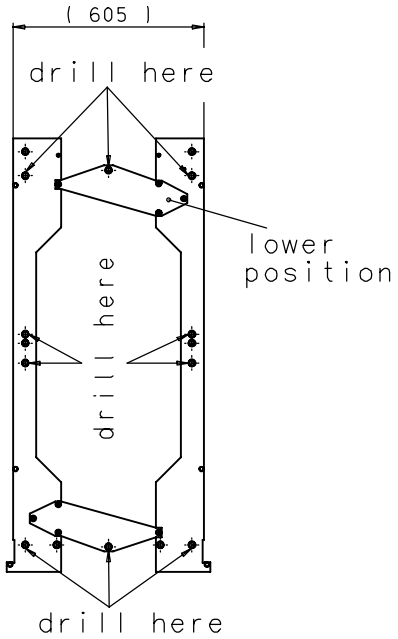

800mm Panel

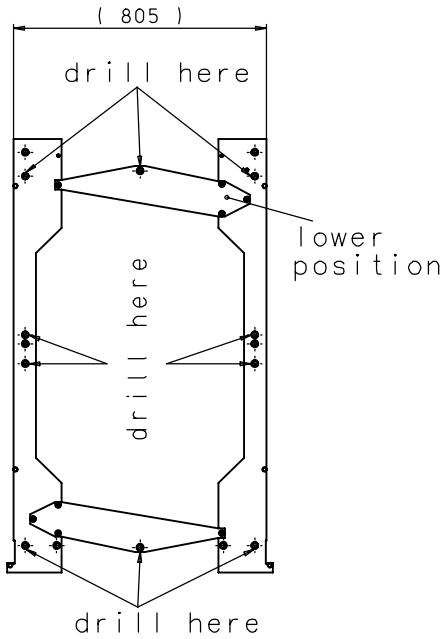

1000mm Panel

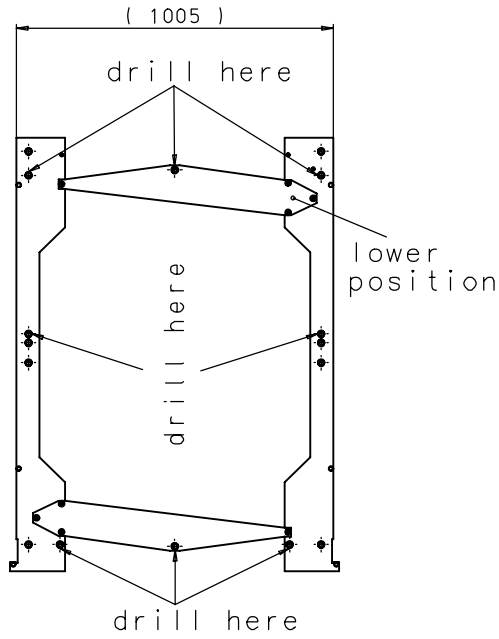

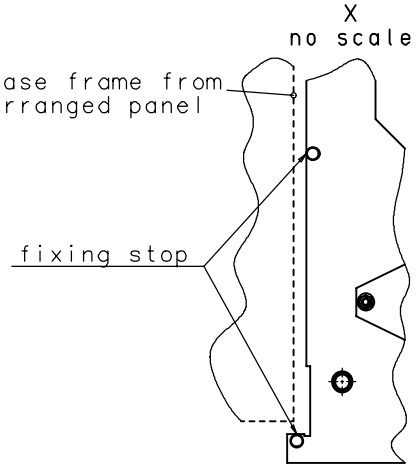

Confié à titre de secret d'enterprise. Tous droits reserves.
Comunicado como segredo empresarial. Reservados todos os direitos.
Confiado como secreto industrial. Todos los derechos reservados.

Alle Betriebsgeheimnis anvertraut. Alle Rechte vorbehalten.
Proprietary data, company confidential. All rights reserved.

Tolerance Toleranz (ISO) DIN ISO 2768 medium -	Material;Werkstoff - -	Mass ; Masse - -	Papersize Format C/A2	06-11-2014	BAO	Date Datum	09-08-2010	Designation Benennung	ISO-Projection
		Unit;Einheit mm	Scale Massstab W/O SC.	Date Datum	Name Name	Name	DREISBACH	Dimension drawing NXAIR	
	Material No./Nr. 1 SWF:(-)	Material No./Nr. 2	Released Freigabe Frei	14/7119	09	Department Abteilung	E_D_MV_1_R&D		Page Blatt 38+
				Mod./Ref-No. Aend.-Varg.-Nr.	Revision Revision	Location Standort	FFMCB	Itemnumber Sachnummer 110-0250.9	

Bohrschablone für Erdbeben Befestigungspungte

Drilling jig for Seism fixation points

SIEMENS

HPD

printed by eprtcual, 11/07/14-04:13:01

Confié a titre de secret d'enterprise. Tous droits reserves.
Comunicado como segredo empresarial. Reservados todos os direitos.
Confiado como secreto industrial. Todos los derechos reservados.

Als Betriebsgeheimnis anvertraut. Alle Rechte vorbehalten.
Proprietary data, company confidential. All rights reserved.

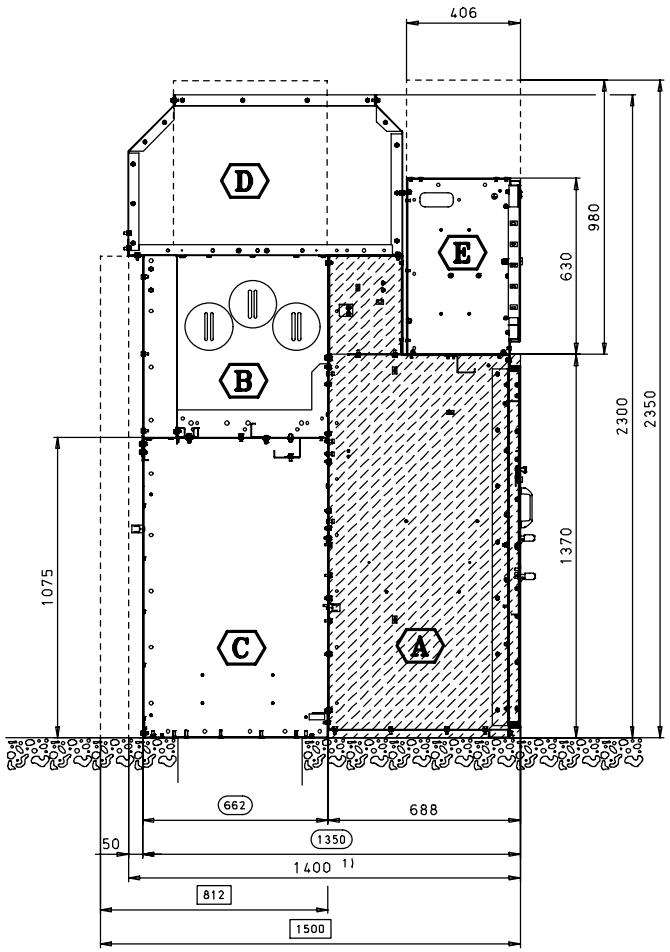

A	Schaltgeräteraum Switching device compartment
B	Sammelschienenraum Busbar compartment
C	Anschlussraum Connection compartment
D	Druckentlastungskanal Pressure relief duct
E	Niederspannungsschrank Low-voltage compartment
CP1	Schützfeld 1) 435mm Contactor panel 1) 435mm
CP2	Schützfeld 600mm/1350mm Contactor panel 600mm/1350mm
MP	Messfeld Metering panel

800mm

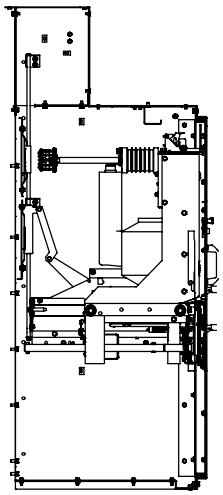

MP

800mm Truck type

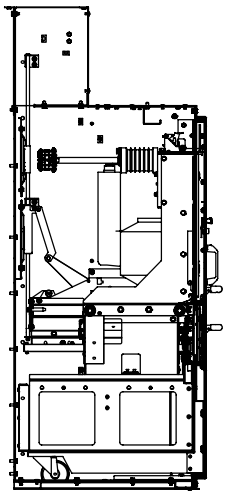

MP

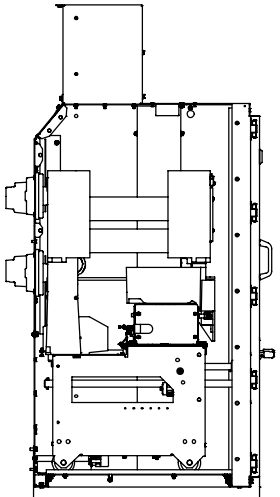

CP1

806

600mm truck type

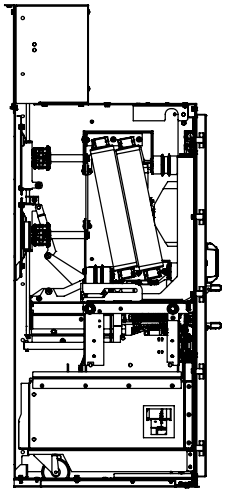

CP2

Schaltgeräteraum
Switching device compartment

Tolerance Toleranz (ISO)	Material;Werkstoff	Mass ; Masse	Papersize Format	06-11-2014	BAO	Date Datum	09-08-2010
DIN ISO 2768 medium	-	-	C/A2			Name Name	DREISBACH
-	-	-	Scale Massstab	Date Datum	Name Name	Department Abteilung	E_D_MV_1_R&D
		Unit:Einheit mm	W/O SC.	14/7119	09	Location Standort	FFMCB
	Material No./Nr. 1 SWF:(-)	Material No./Nr. 2	Released Freigabe Frei	Mod./Ref-No. Aend.-Vorg.-Nr.	Revision Revision	SIEMENS	

Designation Benennung: Dimension drawing NXAIR

Itemnumber Sachnummer: 110-0250.9

ISO-Projection

Page Blatt: 39+

HPD

printed by oprtcual, 11/07/14-04:14:24

Assignment for panel fixation
seism fixation

600mm with Rear Box

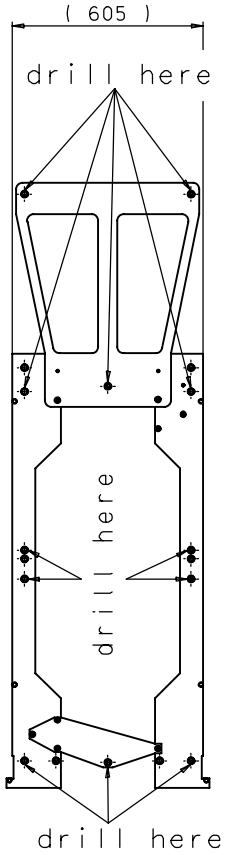

800mm with Rear Box

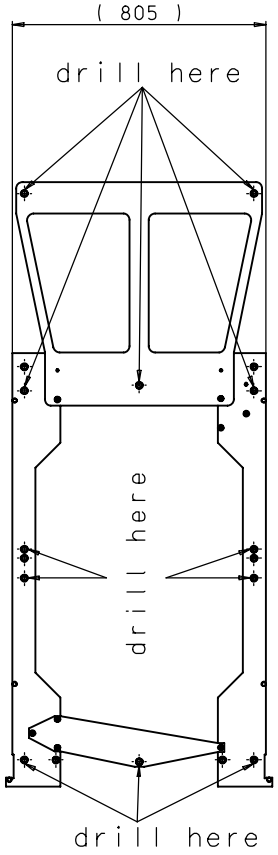

1000mm with Rear Box

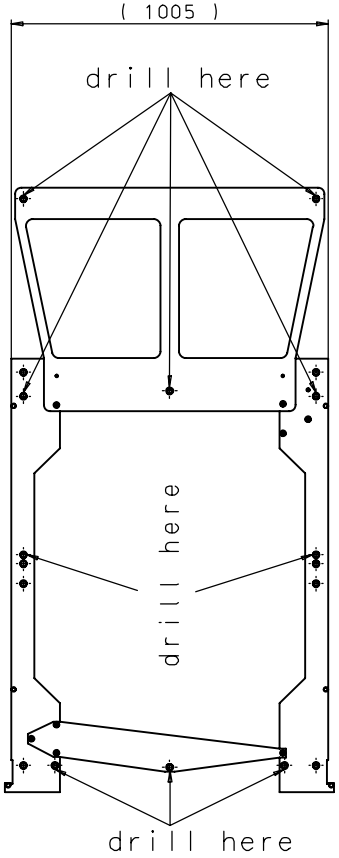

Confié a titre de secret d'enterprise. Tous droits reserves.
Comunicado como segredo empresarial. Reservados todos os direitos.
Confiado como secreto industrial. Todos los derechos reservados.

Als Betriebsgeheimnis anvertraut. Alle Rechte vorbehalten.
Proprietary data, company confidential. All rights reserved.

Tolerance Toleranz (ISO) DIN ISO 2768 medium -	Material;Werkstoff - -	Mass ; Masse - -	Papersize Format C/A2	06-11-2014	BAO	Date Datum	09-08-2010	Designation Benennung	ISO-Projection
		Unit;Einheit mm	Scale Massstab W/O SC.	Date Datum	Name Name	Name	DREISBACH	Dimension drawing NXAIR	
	Material No./Nr. 1 SWF:(-)	Material No./Nr. 2	Released Freigabe Frei	14/7119	09	Department Abteilung	E_D_MV_1_R&D		Page Blatt 40-
				Mod./Ref-No. Aend.-Vorg.-Nr.	Revision Revision	Location Standort	FFMCB	Itemnumber Sachnummer 110-0250.9	

Bohrschablone für Erdbeben Befestigungspungte

Drilling jig for Seism fixation points

SIEMENS

HPD

printed by oprtcual, 11/07/14-04:26:53

Confié a titre de secret d'enterprise. Tous droits reserves.
Comunicado como segredo empresarial. Reservados todos os direitos.
Confiado como secreto industrial. Nos reservamos todos los derechos.

Als Betriebsgeheimnis anvertraut. Alle Rechte vorbehalten.
Proprietary data, company confidential. All rights reserved.

Bemessungsgröße / Rated values

Bemessungs-Spannung rated voltage	7.2kV		12kV		17.5kV	
Bemessungs-Frequenz rated frequency	50/60HZ		50/60Hz		50/60Hz	
Bemessungs-Kurzzeit-Stehwechselspannung rated schort-duration power-frequency withstand voltage	20/32kV		28/42kV		38/42kV	
Bemessungs-Stehblitzstoßspannung rated lightning impulse withstand voltage	60kV		75kV		95kV	
Bemessungs-Kurzschlußausschaltstrom max. rated schort-circuit breaking current max.	≤31.5kA	40kA	≤31.5kA	40kA	≤31.5kA	40kA
Bemessungs-Kurzzeitstrom max. rated schort-time withstand current max.	≤31.5kA	40kA	≤31.5kA	40kA	≤31.5kA	40kA
Bemessungs-Kurzschlußdauer rated schort-circuit time	3s	3s	3s	3s	3s	3s
Bemessungs-Kurzschlußeinschaltstrom rated schort-circuit making current	≤ 80/82 kA	100/104 kA	≤ 80/82 kA	100/104 kA	≤ 80/82 kA	100/104 kA
Bemessungs-Stoßstrom rated peak withstand current	≤ 80/82 kA	100/104 kA	≤80/82 kA	100/104 kA	≤80/82 kA	100/104 kA
Bemessungs-Strom Sammelschiene rated normal current of busbar	≤ 2500A	≤ 4000A	3150A 4000A	≤ 4000A	3150A 4000A	≤ 4000A
Betriebsstrom der Abzweige max. normal current of feeders max. mit Leistungsschalter / Circuit-breaker panel mit Schützeinschub / Contactor panel mit Trenneinschub / Disconnecting panel Längskupplung / Bus sectionalizer Sammelschienenanschlußfeld / BB connecting panel	4000A 400A 4000A 4000A 4000A		4000A 400A 4000A 4000A 4000A		4000A - 4000A 4000A 4000A	

Gewicht / Weight

Feldbreite / Panel width	**435 mm**	**600mm**	**800 mm**	**1000 mm**	**1000 mm***
Gewicht / Weight	**700–770 kg**	**970–1040 kg**	**1020–1320 kg**	**1230–1650 kg**	**1625–1700 kg**
Inlandverpackung / Inland package	**29 kg**	**29 kg**	**34 kg**	**37 kg**	**41 kg**
Seeverpackung / Seaworthy package	**130 kg**	**130 kg**	**144 kg**	**155 kg**	**165 kg**

Feld mit Rucksack / Panel with rear box		
Feldbreite / Panel width	800 mm	1000 mm
Gewicht / Weight	1280 - 1480 kg	1420 - 1890 kg
Inlandverpackung / Inland package	49 kg	53 kg
Seeverpackung / Seaworthy package	183 kg	196 kg

(*): Panel with extended current transformer

Maße / Dimension

Breite Width	Leistungsschalterfeld Circuit-breaker panel	≤ 2000A	800mm
		≤ 4000A	1000mm
	Schützeinschubfeld Contactor panel	≤ 400A	435/600mm
	Trenneinschubfeld Disconnecting panel	≤2000A	800mm
		≤4000A	1000mm
	Längskupplung Bus sectionalizer	≤2000A ≤2500A ≤4000A	2 x 800mm 1000 + 800mm 2 x 1000mm
	Messfeld Metering panel		800mm
	Sammelschienenanschlussfeld Busbar connection panel	≤2500A ≤4000A	800mm 1000mm
	Sammelschienen-Stromwandler Feld Panel with current transformer on BB	≤4000A	800mm
Höhe Height	mit Standart-Niederspannungsschrank with standard low-voltage compartment		2300mm
	bei erhöhtem Niederspannungsschrank oder Sammelschienen-Erder oder Sammelschienen Spannungswandler with high low-voltage compartment or busbar earthing switch or busbar voltage transformer		2350mm
	mit zwangsbelüftung with forced ventilation		2450mm
	mit Absorber with absorber 31.5kA/40kA		2500mm
Tiefe Depth	Einfachsammelschiene, alle Feldarten Single Busbar, all panel types	≤2500A	1500mm
	Einfachsammelschiene, CBP und DP Single Busbar, CBP and DP	≥3150A	1540mm
	Einfachsammelschiene, vergrößerter Stromwandler Single Busbar, extended CT	≥3150A	1650mm
	Feld mit Rucksack Panel with rear box		2100mm

Bemessungsgrößen und Maße
Rated values and dimension

Toleranz (ISO) DIN ISO 2768-m	Material:Werkstoff	Mass Masse kg: lb:	Papersize Format A2	17-01-2017 Date Datum	Coelho Name Name	Date Datum 12-04-2011	Name A. TENGER	Designation Benennung Dimension_drawing_NXAIR	ISO-Proj.
		Unit;Einheit Millimeters	Scale Massstab w/o			Department Abteilung E_D_MV_1_R&D			
	Material No,1/Nr,1 / Material No,2/Nr,2		Released Freigabe	20170688 Mod.;Ref-No. Aend.-/Vorg.;Nr.	04 Revision Revision	Location Standort GEBZE	SIEMENS	Itemnumber;Sachnummer 110_0262_9	Page Blatt 1+

Confià a titre de secret d'enterprise. Tous droits reserves.
Comunicado como segredo empresarial. Reservados todos os direitos.
Confiado como secreto industrial. Nos reservamos todos los derechos.

Als Betriebsgeheimnis anvertraut. Alle Rechte vorbehalten.
Proprietary data, company confidential. All rights reserved.

Inhaltsverzeichnis / Contents

Bemessungsgrößen und Maße	Rated values and dimension	Page 1
Inhaltsverzeichnis	Contents	Page 2
Frontansichten	Front views	Page 3 - 9
Schaltgeräteraum	Switching device compartment	Page 10 - 11
Sammelschienenraum	Busbar compartment	Page 12 - 13
Anschlussraum	Connection compatment	Page 14 - 16
Anschlussraum mit tiefer Wanne	Connection compatment with deep pan	Page 14 - 17
Rucksack	Rear box	Page 19
Niederspannungsschrank	Low-voltage compartment	Page 20
Druckentlastungskanal	Pressure relief duct	Page 21 - 24
Druckentlastungskanal mit Absorber	Pressure relief duct with absorber	Page 25
Bodendurchbrüche	Floor cut outs	Page 26 - 27
Lage Fundamentschienen	Lacation foundation rails	Page 28
Allgemeine Hinweise	General information	Page 29
Kernbohrungen für Einleiterkabel	Tapping drill holes for single case cables	Page 30
BB Hochführung, Lage der Kabel	Conn. to BB from top, location of cables	Page 31
Rucksack, Lage der Kabel	Rear box, lacation of cables	Page 32
Erdbeben Befestigung	Seism fixation	Page 33-38

Inhaltsverzeichnis
Contents

Tolerance Toleranz (ISO) DIN ISO 2768-m	Material:Werkstoff . .	Mass Masse kg: lb:	Papersize Format A2	17-01-2017 Date Datum	Coelho Name Name	Date Datum 12-04-2011	Name Name A. TENGER	Designation Benennung Dimension_drawing_NXAIR	ISO-Proj.
		Unit;Einheit Millimeters	Scale Massstab -			Department Abteilung E_D_MV_1_R&D			
	Material No,1/Nr,1	Material No,2/Nr,2	Released Freigabe	20170688 Mod,/Ref-No, Aend,-/Vorg,-Nr,	04 Revision Revision	Location Standort GEBZE		Itemnumber;Sachnummer 110_0262_9	Page Blatt 2+
						SIEMENS			

Confià a titre de secret d'enterprise. Tous droits reserves.
Comunicado como segredo empresarial. Reservados todos os direitos.
Confiado como secreto industrial. Nos reservamos todos los derechos.

Als Betriebsgeheimnis anvertraut. Alle Rechte vorbehalten.
Proprietary data, company confidential. All rights reserved.

min. ≥3500mm ≤17.5kV ≤31.5kA with absorber / ≤17.5kV 40kA with absorber

min. ≥3000mm ≤12kV 31.5kA with absorber

min. ≥2800mm ≤12kV ≤25kA with absorber

min. ≥2500mm ≤17.5kV ≤40kA with pressure relief duct to side or rear

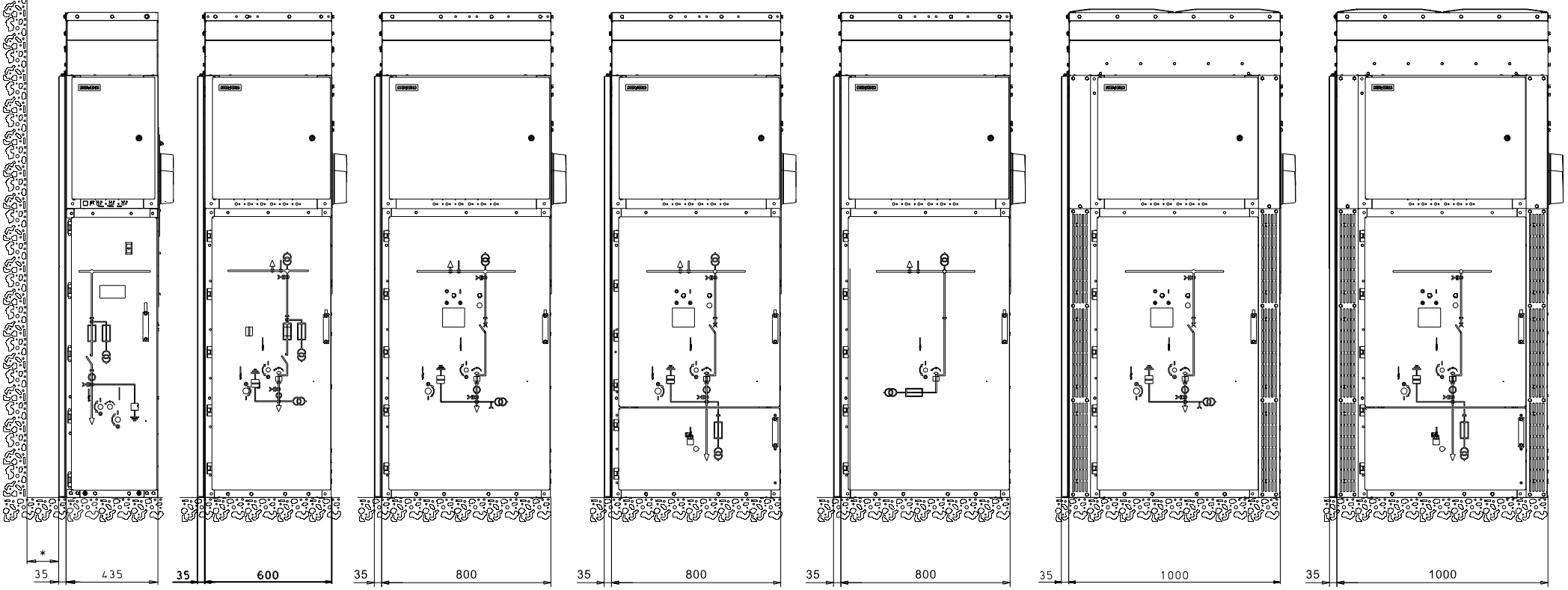

CP1

CP2

CBP
DP
1000A/1250A/2000A

CBP with WVT
DP with WVT
1000A/1250A/2000A

MP

CBP
DP
2500A

CBP with WVT
DP with WVT
2500A

CP1 Schützfeld 435mm
Contactor panel 435mm

CP2 Schützfeld 600mm
Contactor panel 600mm

CBP Leistungsschalterfeld
Circuit-breaker panel

WVT Ausziehbarer Spannungswandler
Withdrawable voltage transformer

DP Trennfeld
Disconnecting panel

MP Messfeld
Metering panel

* siehe Blatt 16
see page 16

Tolerance Toleranz (ISO) DIN ISO 2768-m	Material:Werkstoff - -	Mass Masse kg: lb:	Papersize Format A2	17-01-2017	Coelho	Date Datum 12-04-2011		Designation Benennung Dimension_drawing_NXAIR	ISO-Proj.
		Unit:Einheit Millimeters	Scale Massstab -	Date Datum	Name Name	Name Name A. TENGER			
	Material No.1/Nr.1 / Material No.2/Nr.2		Released Freigabe	20170688	04	Department Abteilung E_D_MV_1_R&D			Page Blatt 3+
				Mod./Ref-No. Aend.-/Vorg.-Nr.	Revision Revision	Location Standort GEBZE	SIEMENS	Itemnumber;Sachnummer 110_0262_9	

Confid a titre de secret d'enterprise. Tous droits reserves.
Comunicado como segredo empresarial. Reservados todos os direitos.
Confiado como secreto industrial. Nos reservamos todos los derechos.

Als Betriebsgeheimnis anvertraut. Alle Rechte vorbehalten.
Proprietary data, company confidential. All rights reserved.

min. ≥3500mm ≤17.5kV ≤31.5kA with absorber / ≤17.5kV 40kA with absorber

min. ≥3000mm ≤12kV 31.5kA with absorber

min. ≥2800mm ≤12kV ≤25kA with absorber

min. ≥2500mm ≤17.5kV ≤40kA with pressure relief duct to side or rear

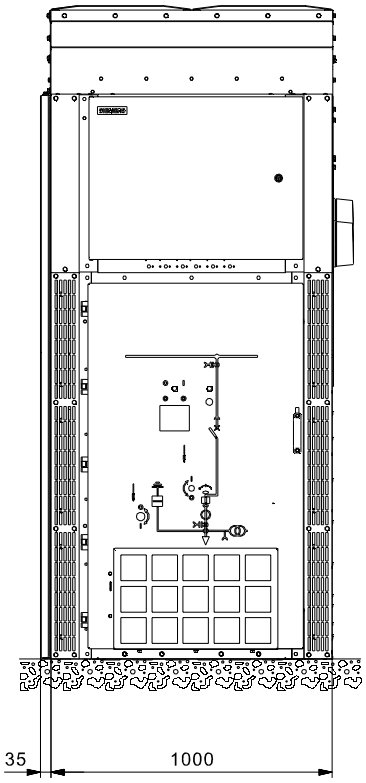

CBP
DP
3150A

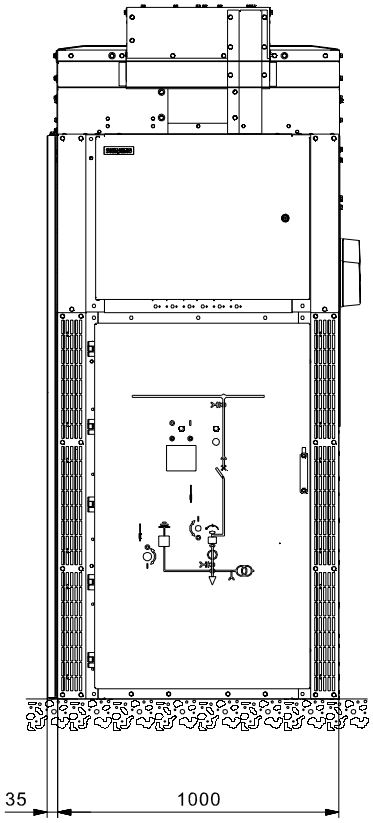

CBP
DP
4000A

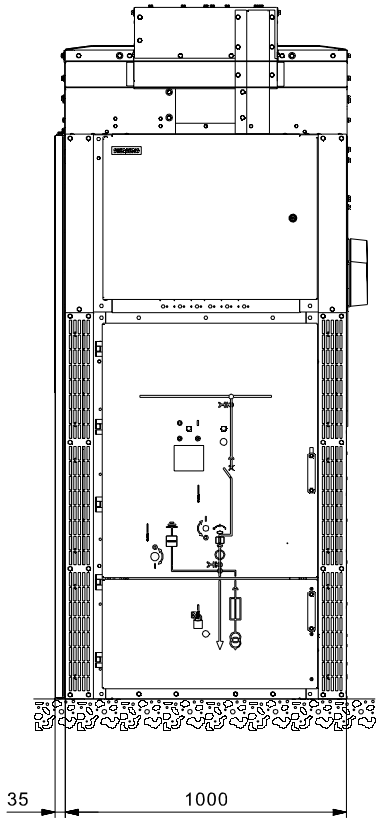

CBP with WVT
DP with WVT
4000A

CBP Leistungsschalterfeld
Circuit-breaker panel

WVT Ausziehbarer Spannungswandler
Withdrawable voltage transformer

DP Trennfeld
Disconnecting panel

Tolerance Toleranz (ISO) DIN ISO 2768-m	Material:Werkstoff	Mass Masse kg: lb:	Papersize Format A2	17-01-2017 Date Datum	Coelho Name Name	Date Datum 12-04-2011	Name Name A. TENGER	Frontansichten Front view	
		Unit:Einheit Millimeters	Scale Massstab w/o			Department Abteilung E_D_MV_1_R&D		Designation Benennung Dimension_drawing_NXAIR	ISO-Proj.
	Material No.1/Nr.1 / Material No.2/Nr.2	Released Freigabe		20170688 Mod./Ref-No. Aend.-/Vorg.-Nr.	04 Revision Revision	Location Standort GEBZE	SIEMENS	Itemnumber;Sachnummer 110_0262_9	Page Blatt 4+

Confid a titre de secret d'enterprise. Tous droits reserves.
Comunicado como segredo empresarial. Reservados todos os direitos.
Confiado como secreto industrial. Nos reservamos todos los derechos.

Als Betriebsgeheimnis anvertraut. Alle Rechte vorbehalten.
Proprietary data, company confidential. All rights reserved.

min. ≥3500mm ≤17.5kV ≤31.5kA with absorber / ≤17.5kV 40kA with absorber

min. ≥3000mm ≤12kV 31.5kA with absorber

min. ≥2800mm ≤12kV ≤25kA with absorber

min. ≥2500mm ≤17.5kV ≤40kA with pressure relief duct to side or rear

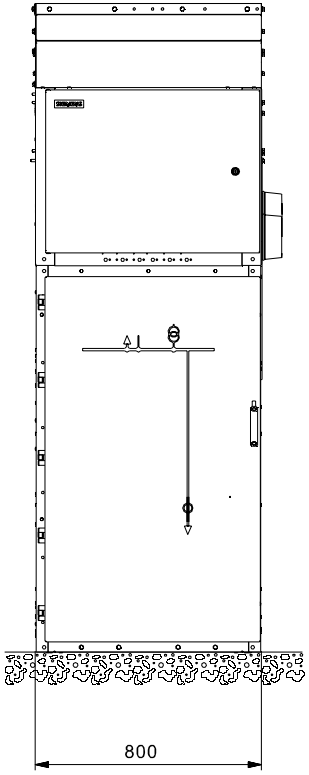

BCP

1250A/2000A/2500A

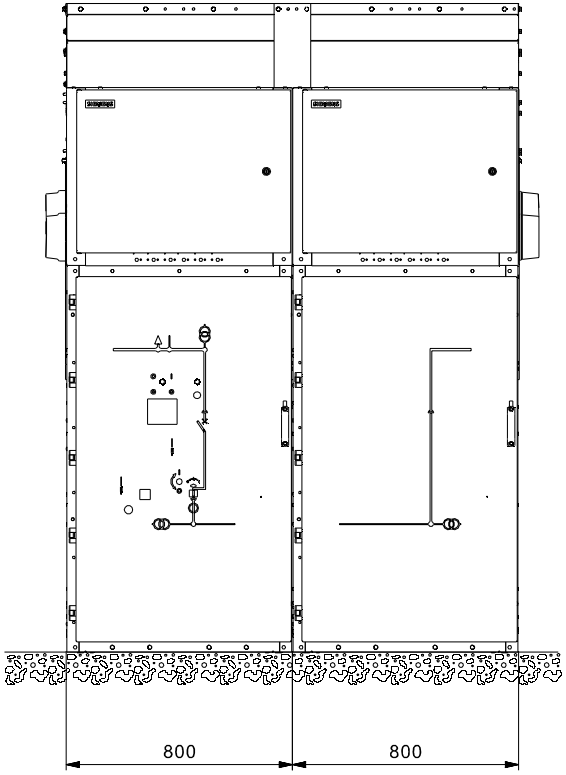

WP BRP

BS

1250A/2000A

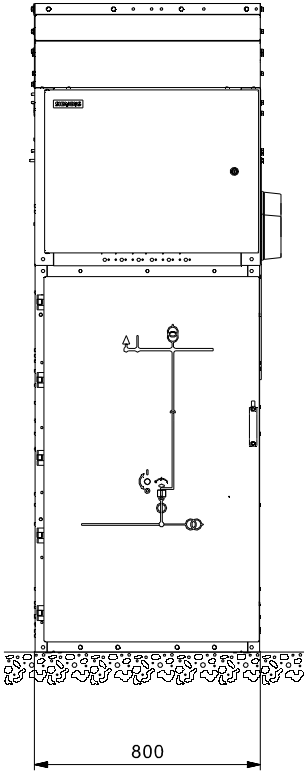

BRP1

1250A/2000A

BCP Sammelschienenanschlussfeld
Busbar connection panel

BS Längskupplung
Bus sectionalizer

WP Withdrawable panel
Einschubfeld

BRP Hochführungsfeld
Bus riser panel

BRP1 Hochführungsfeld
mit Trenneinschub
Bus riser panel with
disconnecting cassette

auch spiegelbildliche Ausführung möglich
mirror-image installation also possible

Tolerance Toleranz (ISO) DIN ISO 2768-m	Material:Werkstoff	Mass Masse kg: lb:	Papersize Format A2	17-01-2017 Date Datum	Coelho Name Name	Date Datum 12-04-2011	Name Name A. TENGER	Frontansichten Front view	
		Unit:Einheit Millimeters	Scale Massstab w/o			Department Abteilung E_D_MV_1_R&D		Designation Benennung Dimension_drawing_NXAIR	ISO-Proj.
	Material No.1/Nr.1 Material No.2/Nr.2		Released Freigabe	20170688 Mod./Ref-No. Aend.-/Vorg.-Nr.	04 Revision Revision	Location Standort GEBZE	SIEMENS	Itemnumber;Sachnummer 110_0262_9	Page Blatt 5+

Confià a títre de secret d'enterprise. Tous droits reserves.
Comunicado como segredo empresarial. Reservados todos os direitos.
Confiado como secreto industrial. Nos reservamos todos los derechos.

Als Betriebsgeheimnis anvertraut. Alle Rechte vorbehalten.
Proprietary data, company confidential. All rights reserved.

min. ≥3500mm ≤17.5kV ≤31.5kA with absorber / ≤17.5kV 40kA with absorber

min. ≥3000mm ≤12kV 31.5kA with absorber

min. ≥2800mm ≤12kV ≤25kA with absorber

min. ≥2500mm ≤17.5kV ≤40kA with pressure relief duct to side or rear

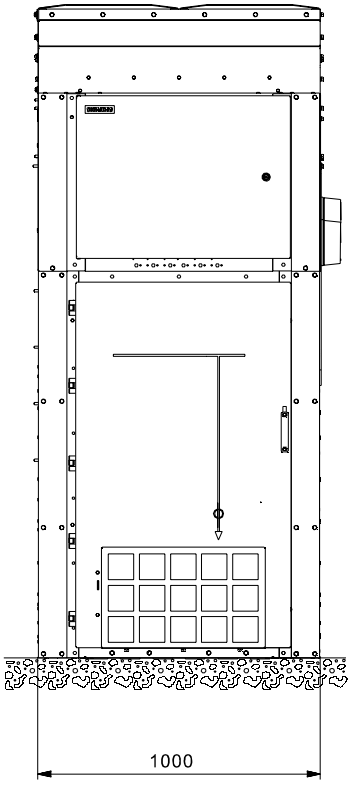

BCP

3150A/4000A

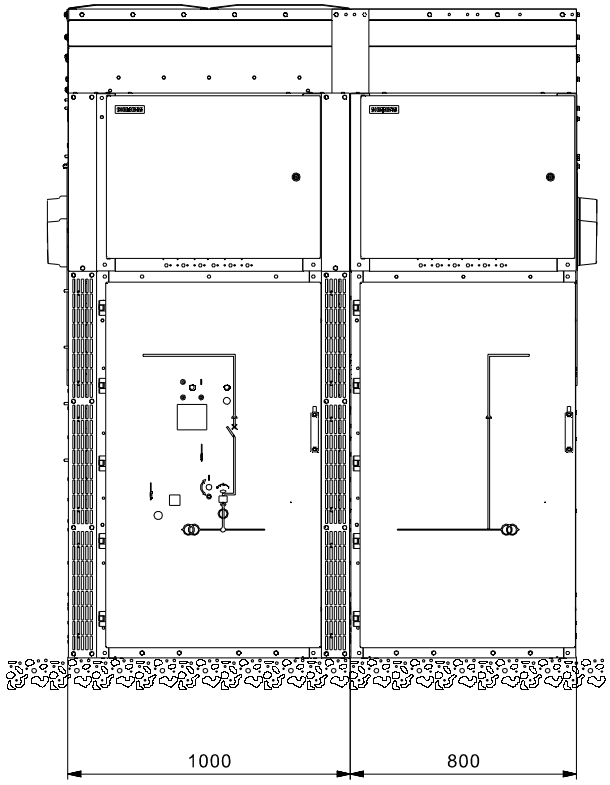

WP BRP

BS

2500A

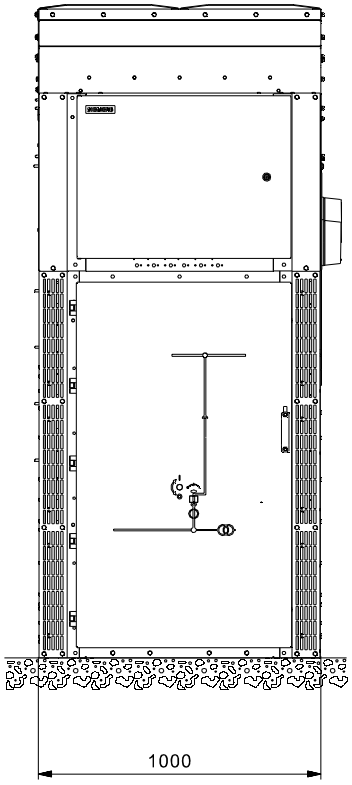

BRP1

2500A

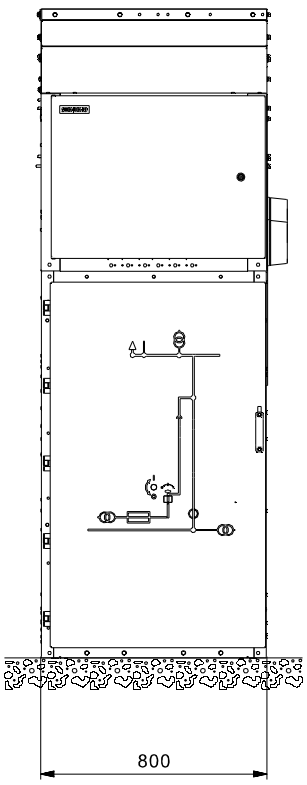

BRP2

1250A/2000A/2500A

BCP Sammelschienenanschlussfeld
Busbar connection panel

BS Längskupplung
Bus sectionalizer

WP Withdrawable panel
Einschubfeld

BRP Hochführungsfeld
Bus riser panel

BRP1 Hochführungsfeld
mit Trenneinschub
Bus riser panel with
disconnecting cassette

auch spiegelbildliche Ausführung möglich
mirror-image installation also possible

Tolerance Toleranz (ISO) DIN ISO 2768-m	Material:Werkstoff	Mass Masse kg: lb:	Papersize Format A2	17-01-2017	Coelho	Date Datum 12-04-2011		Frontansichten Front view	
		Unit:Einheit Millimeters	Scale Massstab w/o	Date Datum	Name Name	Name Name A. TENGER			
	Material No.1/Nr.1 / Material No.2/Nr.2		Released Freigabe	20170688	04	Department Abteilung E_D_MV_1_R&D		Designation Benennung Dimension_drawing_NXAIR	ISO-Proj.
				Mod./Ref-No. Aend.-/Varg.-Nr.	Revision Revision	Location Standort GEBZE			Page Blatt 6+
						SIEMENS		Itemnumber;Sachnummer 110_0262_9	

Confiè a titre de secret d'enterprise. Tous droits reserves.
Comunicado como segredo empresarial. Reservados todos os direitos.
Confiado como secreto industrial. Nos reservamos todos los derechos.

Als Betriebsgeheimnis anvertraut. Alle Rechte vorbehalten.
Proprietary data, company confidential. All rights reserved.

min. ≥3500mm 17.5kV ≤31.5kA with absorber / ≤17.5kV 40kA with absorber

min. ≥3000mm ≤12kV 31.5kA with absorber

min. ≥2800mm ≤12kV ≤25kA with absorber

min. ≥2500mm ≤17.5kV ≤40kA with pressure relief duct to side or rear

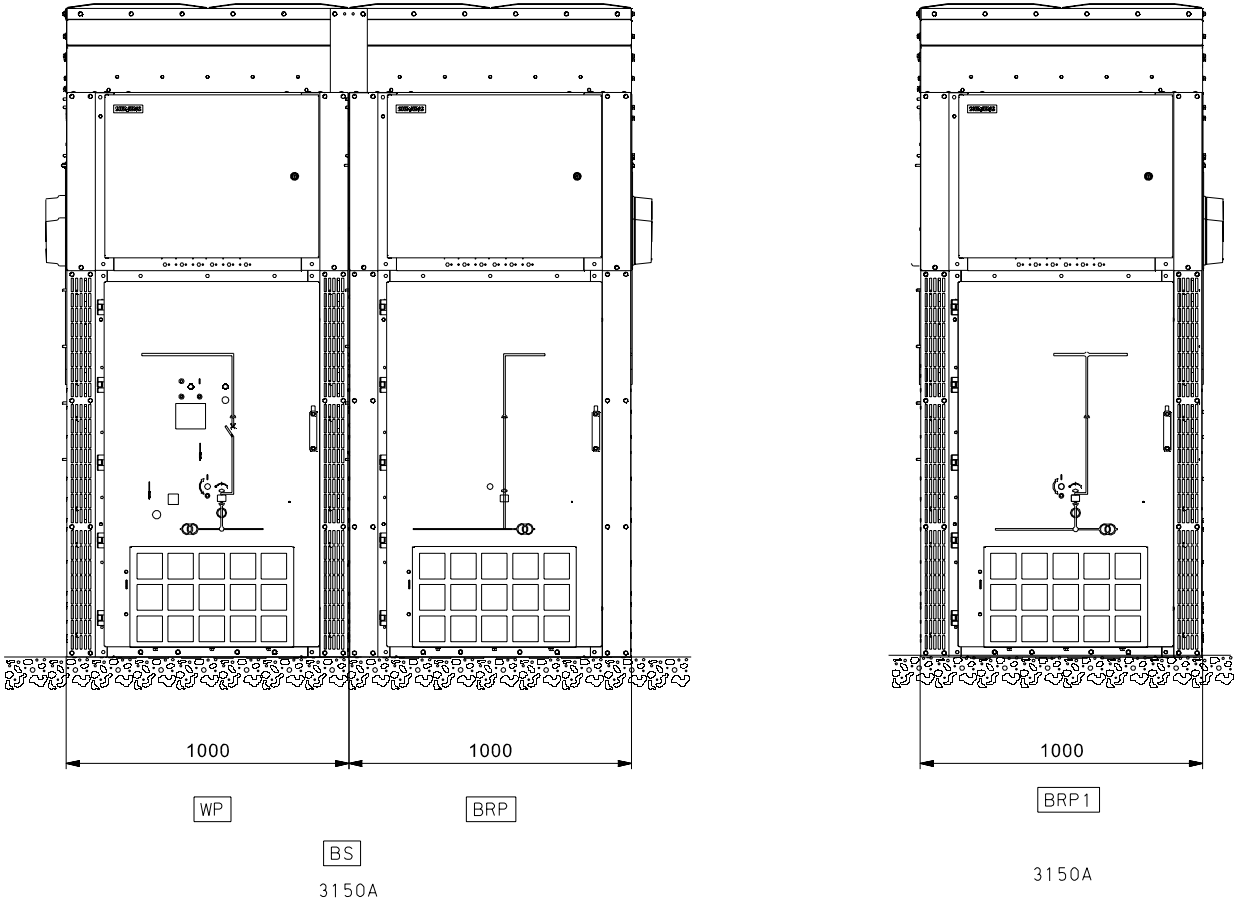

WP Einschubfeld
Withdrawable panel

BS Längskupplung
Bus sectionalizer

BRP Hochführungsfeld
Bus riser panel

BRP1 Hochführungsfeld
mit Trenneinschub
Bus riser panel with
disconnecting cassette

auch spiegelbildliche Ausführung möglich
mirror-image installation also possible

Frontansichten
Front view

Tolerance Toleranz (ISO) DIN ISO 2768-m	Material:Werkstoff	Mass Masse kg: lb:	Papersize Format A2	17-01-2017	Coelho	Date Datum 12-04-2011	Designation Benennung Dimension_drawing_NXAIR
		Unit:Einheit Millimeters	Scale Massstab w/o	Date Datum	Name Name	Name Name A. TENGER	ISO-Proj.
	Material No.1/Nr.1	Material No.2/Nr.2	Released Freigabe	20170688	04	Department Abteilung E_D_MV_1_R&D	Page Blatt 7+
				Mod./Ref-No. Aend.-Vorg.-Nr.	Revision Revision	Location Standort GEBZE	Itemnumber:Sachnummer 110_0262_9
						SIEMENS	

Confià a titre de secret d'enterprise. Tous droits reserves.
Comunicado como segredo empresarial. Reservados todos os direitos.
Confiado como secreto industrial. Nos reservamos todos los derechos.

Als Betriebsgeheimnis anvertraut. Alle Rechte vorbehalten.
Proprietary data, company confidential. All rights reserved.

min. ≥3500mm ≤17.5kV ≤31.5kA with absorber / ≤17.5kV 40kA with absorber

min. ≥3000mm ≤12kV 31.5kA with absorber

min. ≥2800mm ≤12kV ≤25kA with absorber

min. ≥2500mm ≤17,5kV ≤40kA with pressure relief duct to side or rear

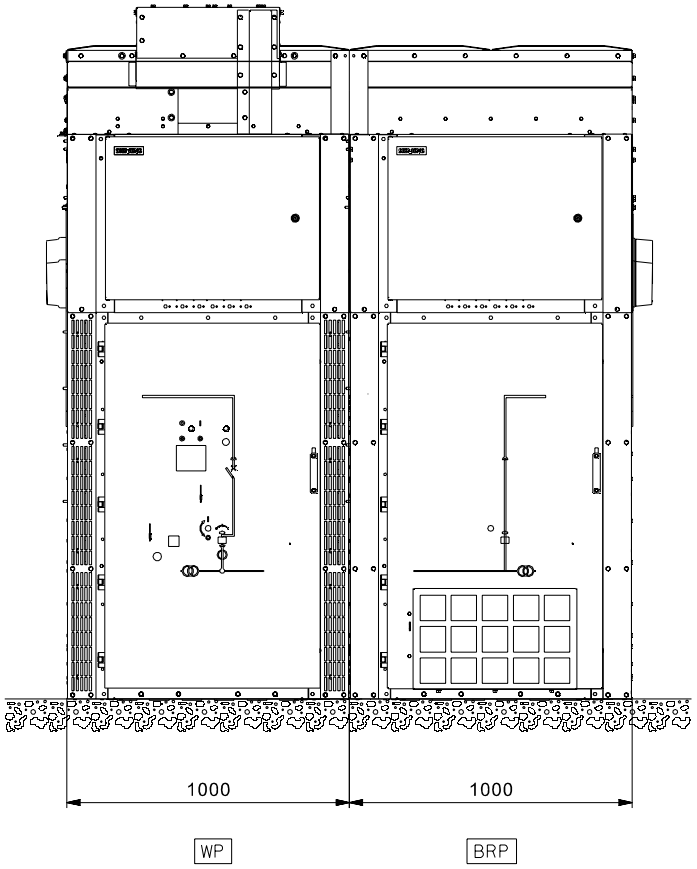

4000A

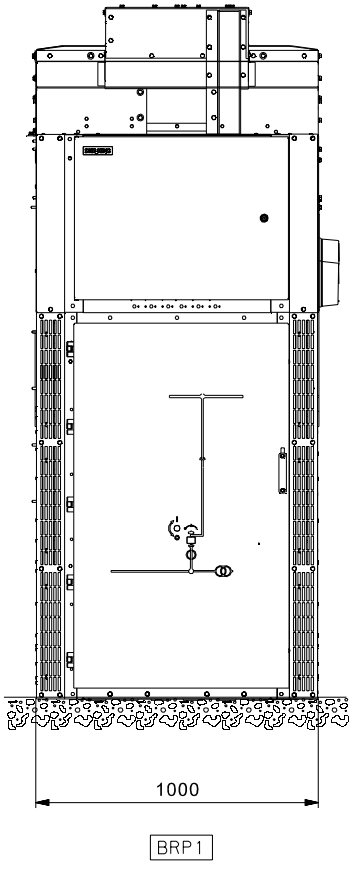

4000A

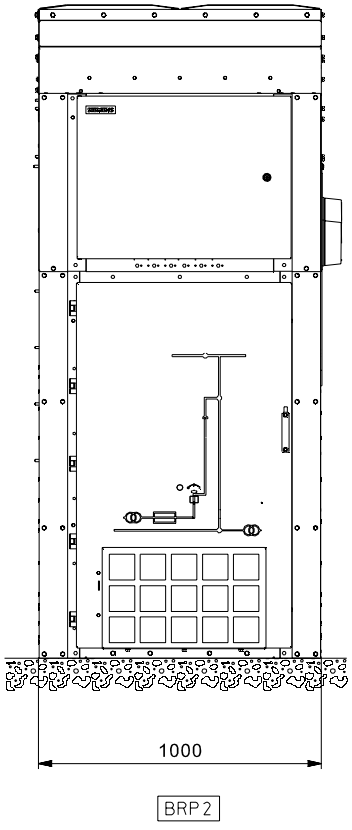

3150A/4000A

BS Längskupplung
Bus sectionalizer

WP Withdrawable panel
Einschubfeld

BRP Hochführungsfeld
Bus riser panel

BRP1 Hochführungsfeld
mit Trenneinschub
Bus riser panel with
disconnecting cassette

BRP2 Hochführungsfeld
mit Meßeinschub
Bus riser panel with
metering cassette

auch spiegelbildliche Ausführung möglich
mirror-image installation also possible

Tolerance Toleranz (ISO) DIN ISO 2768-m	Material;Werkstoff	Mass Masse kg: lb:	Papersize Format A2	17-01-2017	Coelho	Date Datum	12-04-2011	Frontansichten Front view	ISO-Proj.
		Unit;Einheit Millimeters	Scale Massstab w/o	Date Datum	Name Name	Name Name	A. TENGER		
	Material No.1/Nr.1 / Material No.2/Nr.2		Released Freigabe	20170688	04	Department Abteilung	E_D_MV_1_R&D	Designation Benennung Dimension_drawing_NXAIR	Page Blatt 8+
				Mod./Ref-No. Aend.-/Vorg.-Nr.	Revision Revision	Location Standort	GEBZE		
						SIEMENS		Itemnumber;Sachnummer 110_0262_9	

Confié a titre de secret d'enterprise. Tous droits reserves.
Comunicado como segredo empresarial. Reservados todos os direitos.
Confiado como secreto industrial. Nos reservamos todos los derechos.

Als Betriebsgeheimnis anvertraut. Alle Rechte vorbehalten.
Proprietary data, company confidential. All rights reserved.

min. ≥3500mm ≤17.5kV ≤31.5kA with absorber / ≤17.5kV 40kA with absorber

min. ≥3000mm ≤12kV 31.5kA with absorber

min. ≥2800mm ≤12kV ≤25kA with absorber

min. ≥2500mm ≤17.5kV ≤40kA with pressure relief duct to side or rear

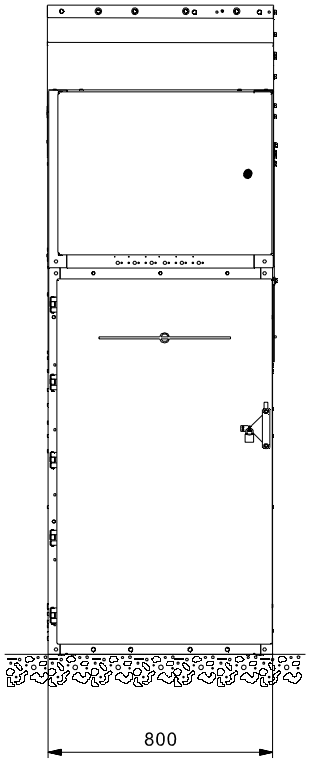

1250A / 2500A

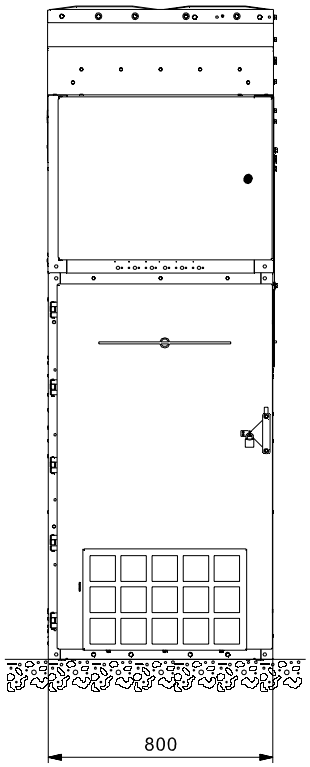

3150A / 4000A

CTP Sammelschienen-Stromwandler Feld
Panel with Current Transformer on Busbar

Frontansichten
Front view

Tolerance / Toleranz (ISO): DIN ISO 2768-m	Material:Werkstoff	Mass / Masse kg: lb:	Papersize / Format: A2	17-01-2017	Coelho	Date / Datum: 12-04-2011		Designation / Benennung: Dimension_drawing_NXAIR	ISO-Proj.
		Unit:Einheit: Millimeters	Scale / Massstab: w/o	Date / Datum	Name / Name	Name: A. TENGER			
	Material No.1/Nr.1 / Material No.2/Nr.2		Released / Freigabe	20170688	04	Department / Abteilung: E_D_MV_1_R&D			Page / Blatt: 9+
				Mod./Ref-No. Aend.-/Vorg.-Nr.	Revision / Revision	Location / Standort: GEBZE	SIEMENS	Itemnumber;Sachnummer: 110_0262_9	

Als Betriebsgeheimnis anvertraut. Alle Rechte vorbehalten.
Proprietary data, company confidential. All rights reserved.

Confià a títre de secret d'enterprise. Tous droits reserves.
Comunicado como segredo empresarial. Reservados todos os direitos.
Confiado como secreto industrial. Nos reservamos todos los derechos.

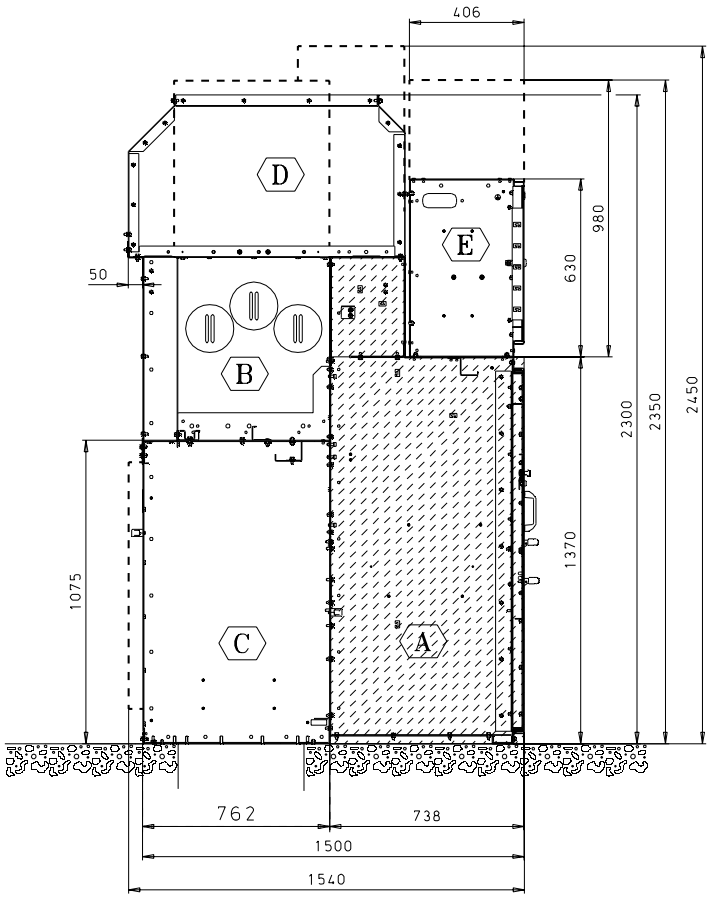

A Schaltgeräteraum
Switching device compartment

B Sammelschienenraum
Busbar compartment

C Anschlussraum
Connection compartment

D Druckentlastungskanal
Pressure relief duct

E Niederspannungsschrank
Low-voltage compartment

CP1 Schützfeld435mm
Contactor panel435mm

CBP Leistungsschalterfeld
Circuit-breaker panel

WVT Ausziehbarer Spannungswandler
Withdrawable voltage transformer

DP Trennfeld
Disconnecting panel

MP Messfeld
Metering panel

800 mm

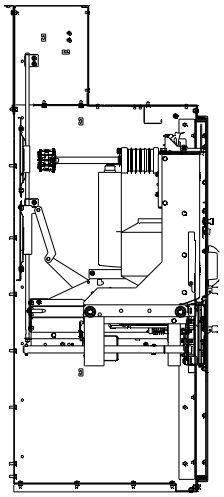

MP

800 / 1000 mm

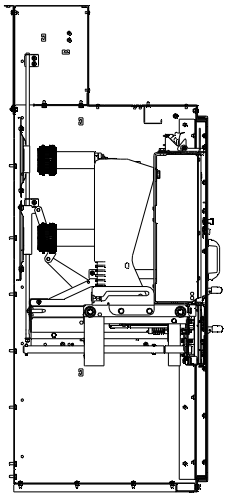

DP

800 / 1000 mm

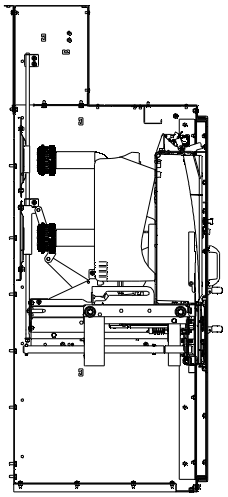

CBP

435 mm

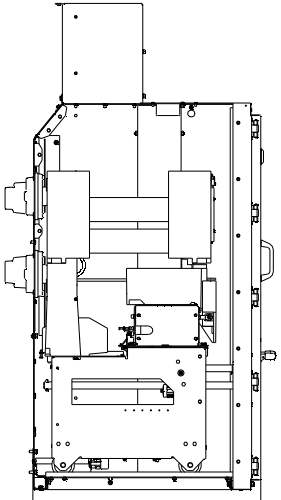

CP1

806

800 / 1000 mm

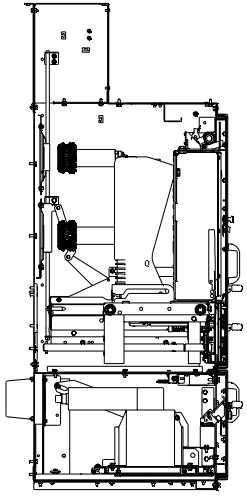

DP with WVT

800 / 1000 mm

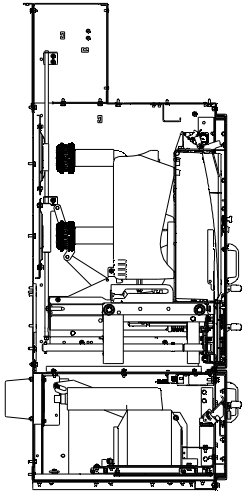

CBP with WVT

Schaltgeräteraum
Switching device compartment

Tolerance Toleranz (ISO) DIN ISO 2768-m	Material:Werkstoff	Mass Masse kg: lb:	Papersize Format A2	17-01-2017 Date Datum	Coelho Name	Date Datum 12-04-2011		Designation Benennung Dimension_drawing_NXAIR	ISO-Proj.
		Unit;Einheit Millimeters	Scale Massstab w/o			Name Name A. TENGER			
	Material No.1/Nr.1	Material No.2/Nr.2	Released Freigabe	20170688	04	Department Abteilung E_D_MV_1_R&D			Page Blatt 10+
				Mod./Ref-No. Aend.-/Vorg.-Nr.	Revision Revision	Location Standort GEBZE	SIEMENS	Itemnumber;Sachnummer 110_0262_9	

Confià a titre de secret d'enterprise. Tous droits reserves.
Comunicado como segredo empresarial. Reservados todos os direitos.
Confiado como secreto industrial. Nos reservamos todos los derechos.

Als Betriebsgeheimnis anvertraut. Alle Rechte vorbehalten.
Proprietary data, company confidential. All rights reserved.

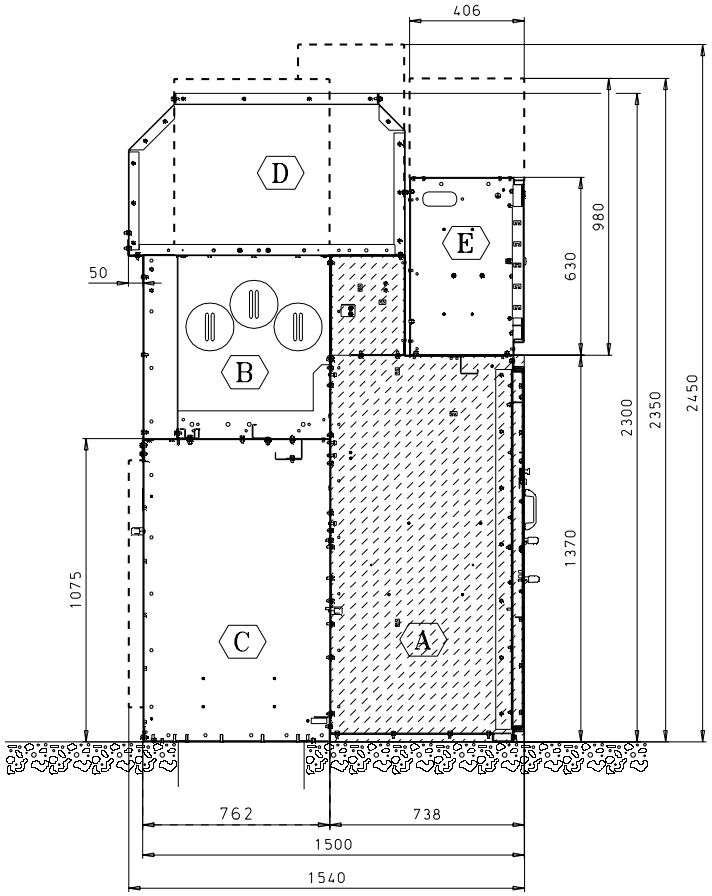

800 / 1000 mm
Truck type

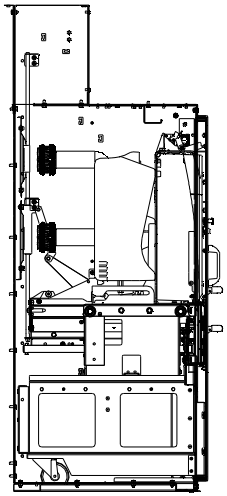

CBP

800 / 1000 mm
Truck type

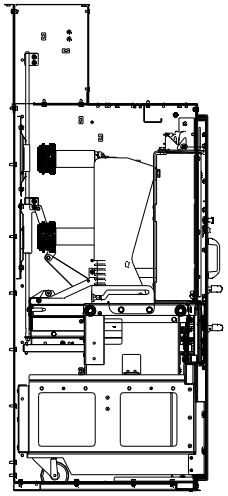

DP

800mm
Truck type

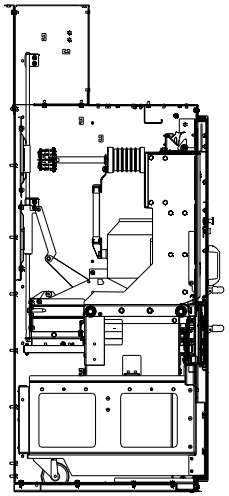

MP

600 mm
Truck type

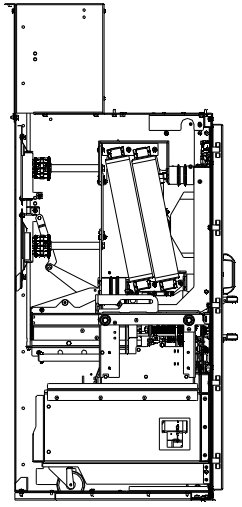

CP2

- A Schaltgeräteraum / Switching device compartment
- B Sammelschienenraum / Busbar compartment
- C Anschlussraum / Connection compartment
- D Druckentlastungskanal / Pressure relief duct
- E Niederspannungsschrank / Low-voltage compartment
- CBP Leistungsschalterfeld / Circuit-breaker panel
- DP Trennfeld / Disconnecting panel
- MP Messfeld / Metering panel
- CP2 Schützfeld 600mm / Contactor panel 600mm

Schaltgeräteraum
Switching device compartment

Tolerance / Toleranz (ISO): DIN ISO 2768-m	Material:Werkstoff	Mass / Masse kg: lb:	Papersize / Format A2	17-01-2017	Coelho	Date / Datum 12-04-2011	Designation / Benennung: Dimension_drawing_NXAIR
		Unit:Einheit: Millimeters	Scale / Massstab w/o	Date / Datum	Name / Name	Name / Name A. TENGER	ISO-Proj.
	Material No.1/Nr.1 / Material No.2/Nr.2		Released / Freigabe	20170688	04	Department / Abteilung E_D_MV_1_R&D	Page / Blatt 11+
				Mod./Ref-No. Aend.-/Vorg.-Nr.	Revision / Revision	Location / Standort GEBZE	Itemnumber;Sachnummer 110_0262_9
						SIEMENS	

Confià a titre de secret d'enterprise. Tous droits reserves.
Comunicado como segredo empresarial. Reservados todos os direitos.
Confiado como secreto industrial. Nos reservamos todos los derechos.

Als Betriebsgeheimnis anvertraut. Alle Rechte vorbehalten.
Proprietary data, company confidential. All rights reserved.

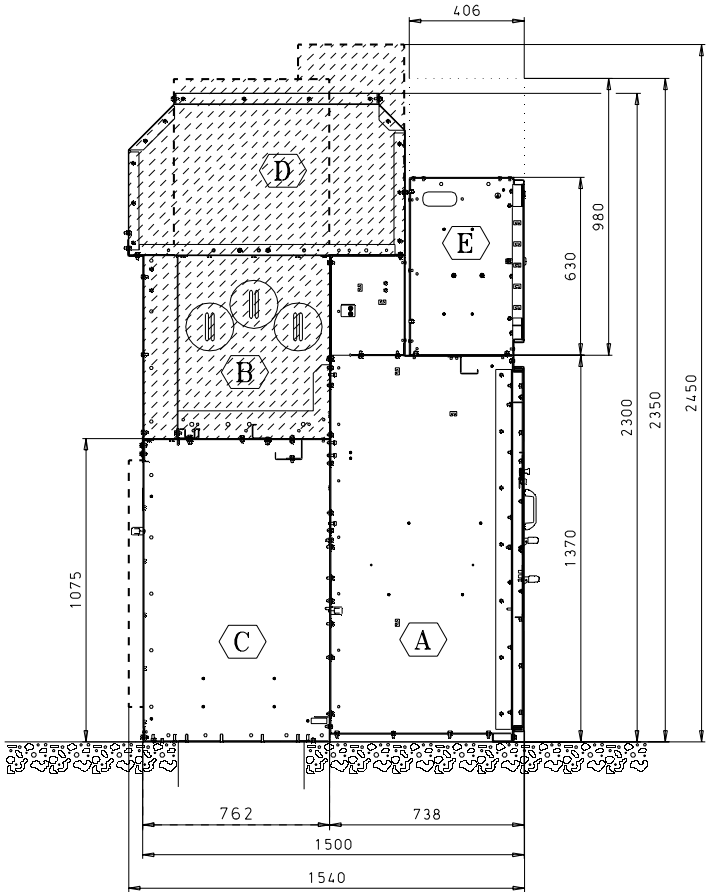

600 / 800 / 1000 mm

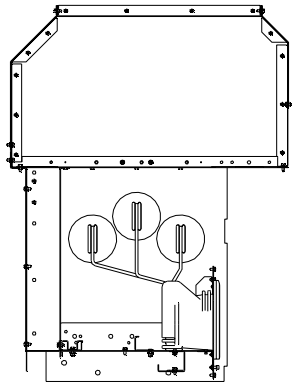

VT

800 mm

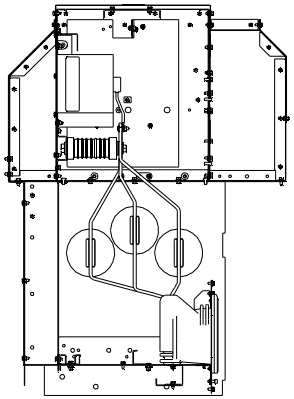

ES

800 mm

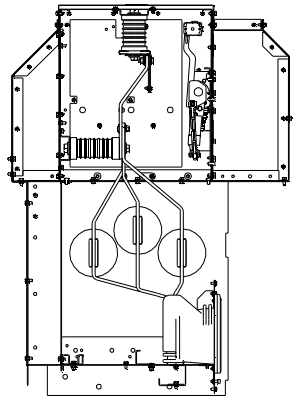

CC

800 mm

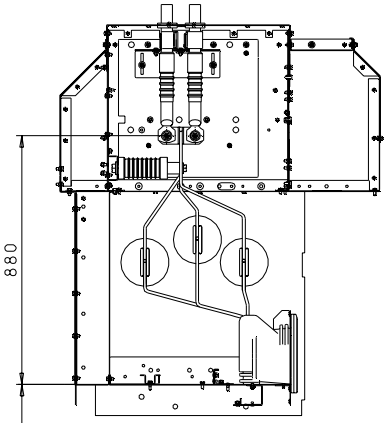

Unterseite Feld
underside panel

BC 800 mm

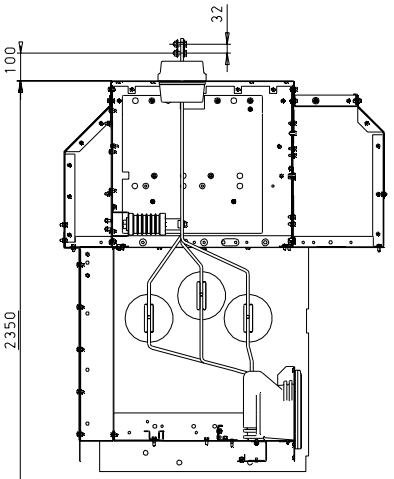

Unterseite Feld
underside panel

435 mm

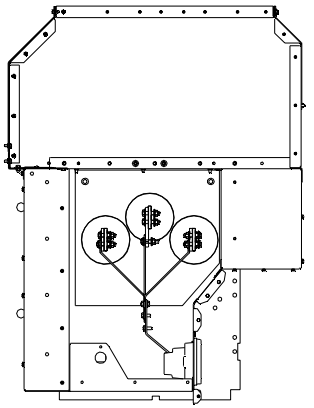

CP1

- A — Schaltgeräteraum / Switching device compartment
- B — Sammelschienenraum / Busbar compartment
- C — Anschlussraum / Connection compartment
- D — Druckentlastungskanal / Pressure relief duct
- E — Niederspannungsschrank / Low-voltage compartment
- VT — Spannungswandler / Voltage transformer
- ES — Erdungsschalter / Earthing switch
- CC — Kabelanschluss / Cable connection
- BC — Schienenanschluss / Bar connection
- CP1 — Schützfeld 435mm / Contactor panel 435mm

Sammelschienenraum
Busbar compartment

Tolerance / Toleranz (ISO): DIN ISO 2768-m	Material:/Werkstoff	Mass / Masse kg: lb:	Papersize / Format A2	17-01-2017	Coelho	Date / Datum 12-04-2011	Designation / Benennung: Dimension_drawing_NXAIR
		Unit/Einheit: Millimeters	Scale / Massstab w/o	Date / Datum	Name / Name	Name / Name A. TENGER	ISO-Proj.
	Material No.1/Nr.1 / Material No.2/Nr.2		Released / Freigabe	20170688	04	Department / Abteilung E_D_MV_1_R&D	Page / Blatt 12+
				Mod./Ref-No. Aend.-/Vorg.-Nr.	Revision / Revision	Location / Standort GEBZE	Itemnumber;Sachnummer 110_0262_9
						SIEMENS	

Confià a titre de secret d'enterprise. Tous droits reserves.
Comunicado como segredo empresarial. Reservados todos os direitos.
Confiado como secreto industrial. Nos reservamos todos los derechos.

Als Betriebsgeheimnis anvertraut. Alle Rechte vorbehalten.
Proprietary data, company confidential. All rights reserved.

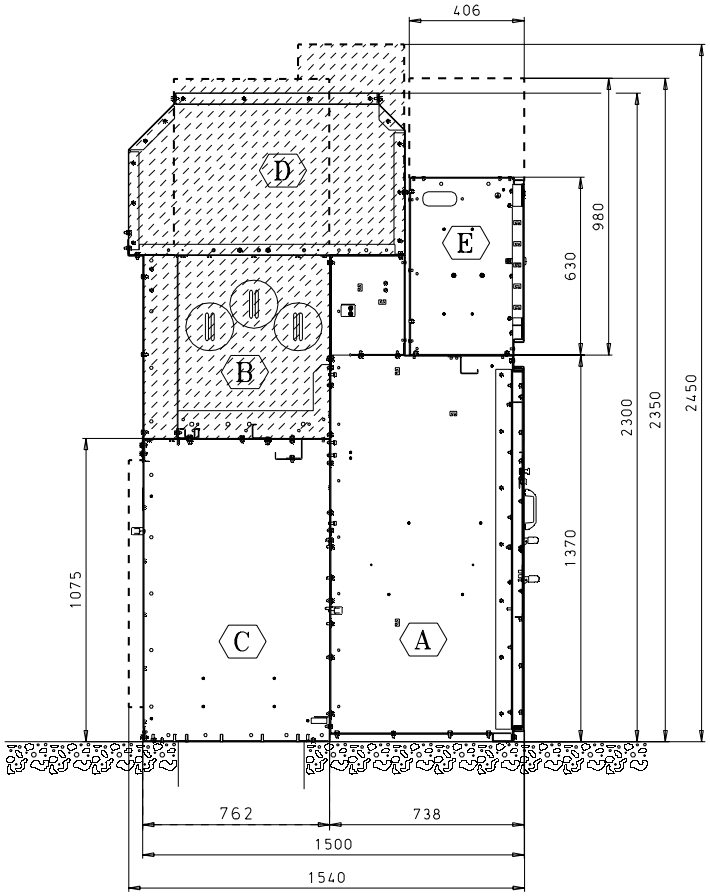

NV
1000 mm

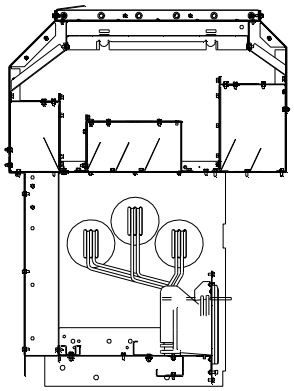

FV
1000 mm

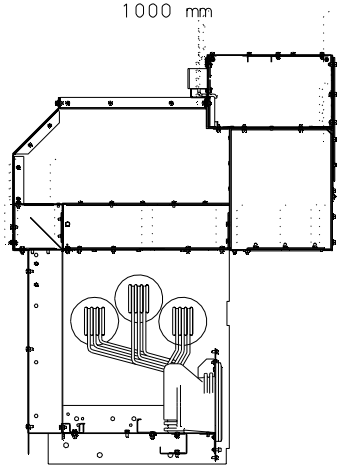

800 mm

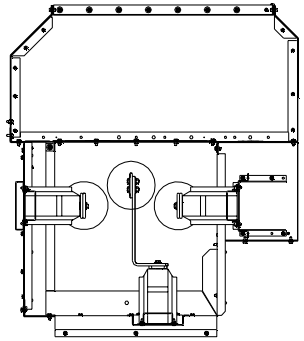

CTP

1250A / 2500A

NV
800 mm

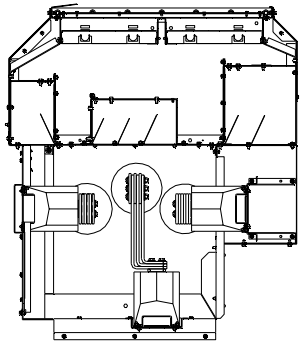

CTP

3150A / 4000A

- A Schaltgeräteraum / Switching device compartment
- B Sammelschienenraum / Busbar compartment
- C Anschlussraum / Connection compartment
- D Druckentlastungskanal / Pressure relief duct
- E Niederspannungsschrank / Low-voltage compartment
- NV Durchsugsbelüftung / Natural ventilation
- FV Ywangsbelüftung / Forced ventilation
- CTP Sammelschienen-Stromwandler Feld / Panel with current transformers on Busbar

Tolerance / Toleranz (ISO): DIN ISO 2768-m	Material:Werkstoff	Mass / Masse kg: lb:	Papersize / Format: A2	17-01-2017	Coelho	Date / Datum: 12-04-2011		Sammelschienenraum Busbar compartment	
		Unit:Einheit: Millimeters	Scale / Massstab: w/o	Date / Datum	Name / Name	Name: A. TENGER			
	Material No.1/Nr.1 / Material No.2/Nr.2		Released / Freigabe	20170688	04	Department / Abteilung: E_D_MV_1_R&D		Designation / Benennung: Dimension_drawing_NXAIR	ISO-Proj.
				Mod./Ref-No. Aend.-/Vorg.-Nr.	Revision / Revision	Location / Standort: GEBZE			Page / Blatt: 13+
						SIEMENS		Itemnumber;Sachnummer: 110_0262_9	

Confià a titre de secret d'enterprise. Tous droits reserves.
Comunicado como segredo empresarial. Reservados todos os direitos.
Confiado como secreto industrial. Nos reservamos todos los derechos.

Als Betriebsgeheimnis anvertraut. Alle Rechte vorbehalten.
Proprietary data, company confidential. All rights reserved.

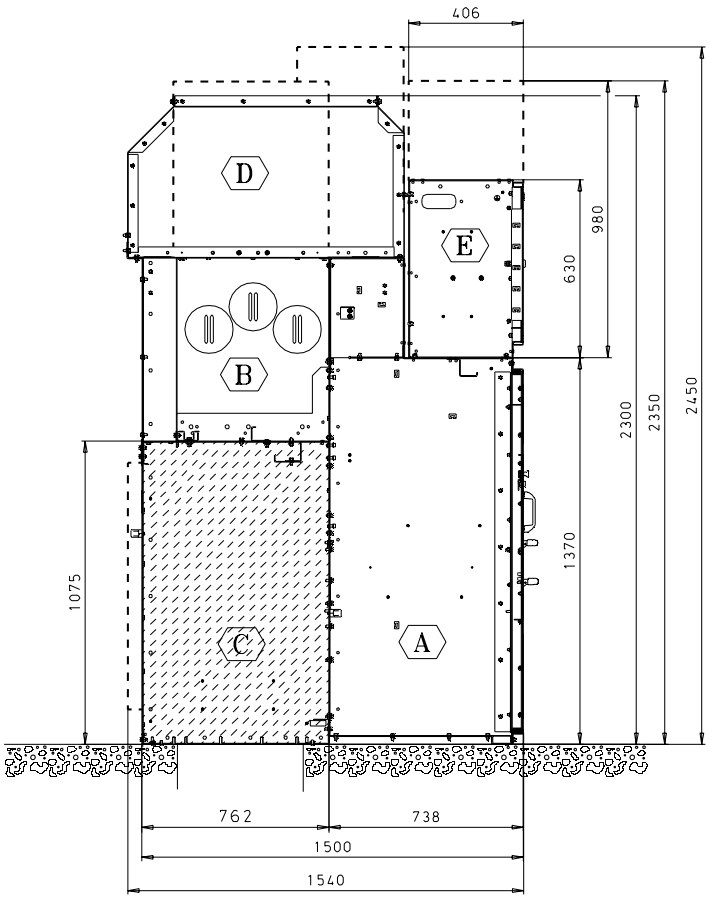

A Schaltgeräteraum
Switching device compartment

B Sammelschienenraum
Busbar compartment

C Anschlussraum
Connection compartment

D Druckentlastungskanal
Pressure relief duct

E Niederspannungsschrank
Low-voltage compartment

CP1 Schützfeld 435mm
Contactor panel 435mm

1 / 2 Cable(s) or
3 / 4 Cables

600 / 800 / 1000 mm

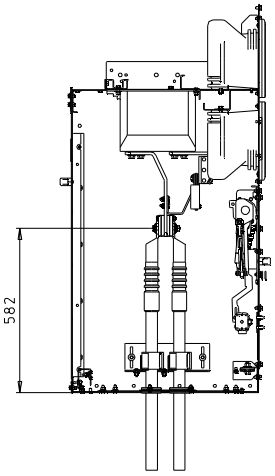

6 Cables

1000 mm

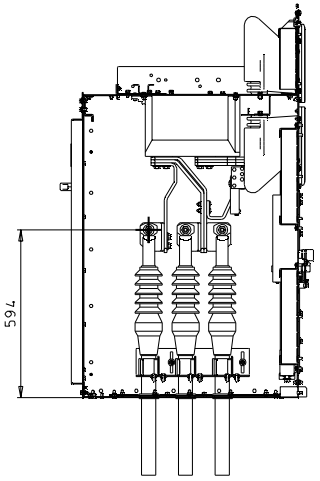

Voltage Transformer

600 / 800 / 1000 mm

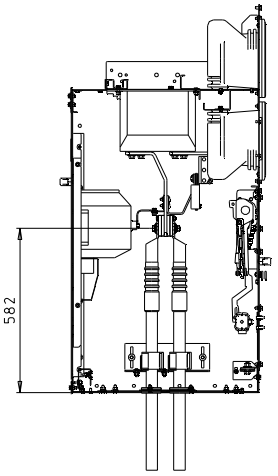

Surge Arrestor / limiter

600 / 800 / 1000 mm

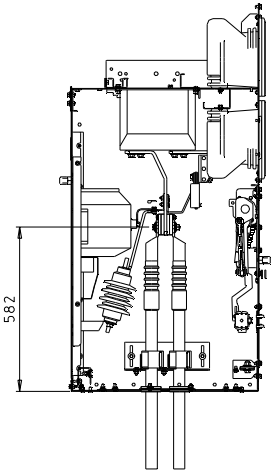

Bar connection

800 / 1000 mm

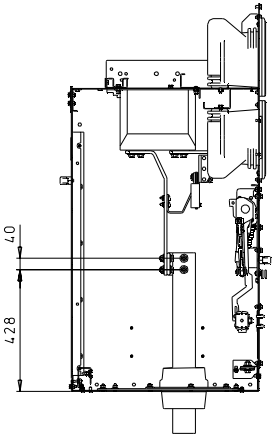

1 / 2 Cable(s)

435 mm

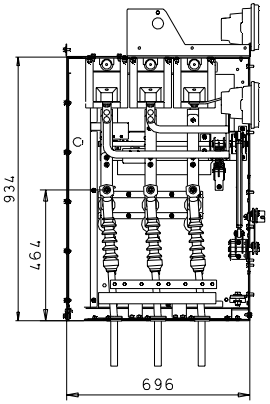

CP1

Anschlussraum
Connection compartment

Tolerance / Toleranz (ISO): DIN ISO 2768-m	Material:Werkstoff	Mass / Masse kg: lb:	Papersize / Format: A2	17-01-2017 Date / Datum	Coelho Name	Date / Datum: 12-04-2011	Designation / Benennung: Dimension_drawing_NXAIR
		Unit:Einheit: Millimeters	Scale / Massstab: w/o			Name: A. TENGER	ISO-Proj.
	Material No.1/Nr.1	Material No.2/Nr.2	Released / Freigabe	20170688 Mod./Ref-No., Aend.-/Vorg.-Nr.	04 Revision / Revision	Department / Abteilung: E_D_MV_1_R&D	Page / Blatt: 14+
						Location / Standort: GEBZE	Itemnumber;Sachnummer: 110_0262_9
						SIEMENS	

Confià a titre de secret d'enterprise. Tous droits reserves.
Comunicado como segredo empresarial. Reservados todos os direitos.
Confiado como secreto industrial. Nos reservamos todos los derechos.

Als Betriebsgeheimnis anvertraut. Alle Rechte vorbehalten.
Proprietary data, company confidential. All rights reserved.

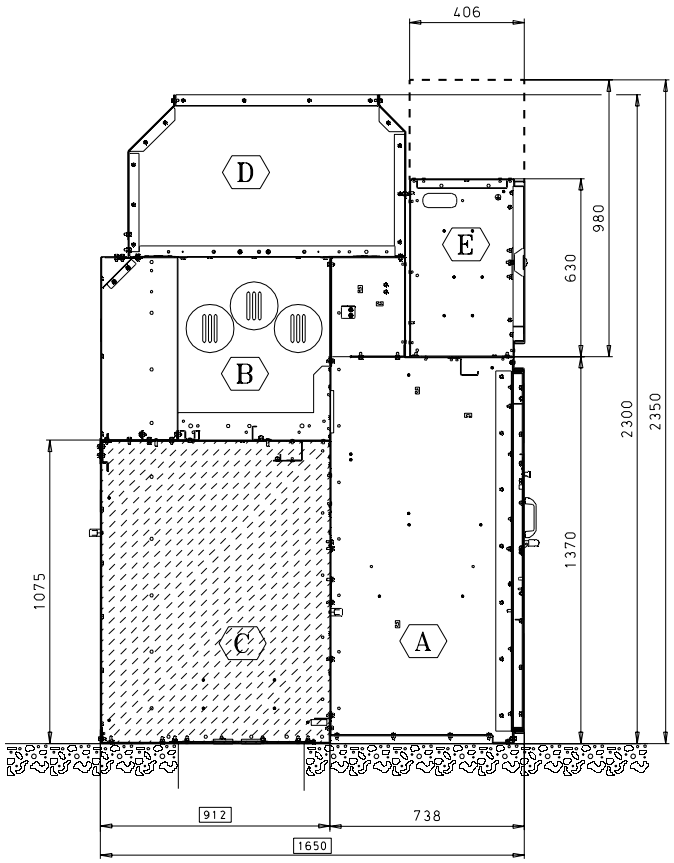

6 Cables

1000 mm extended

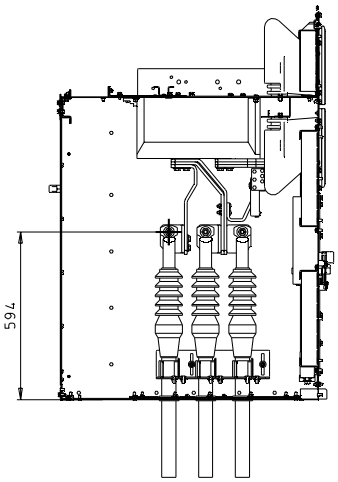

Voltge transformer

1000 mm extended

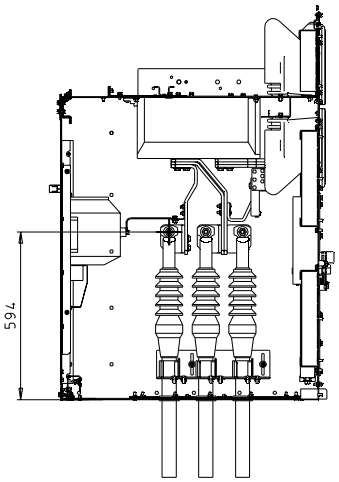

Surge Arrestor / Limiter

1000 mm extended

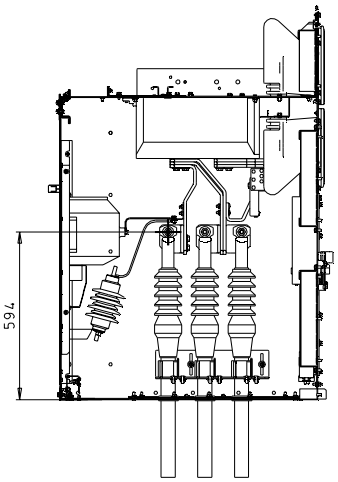

Bar connection

1000 mm extended

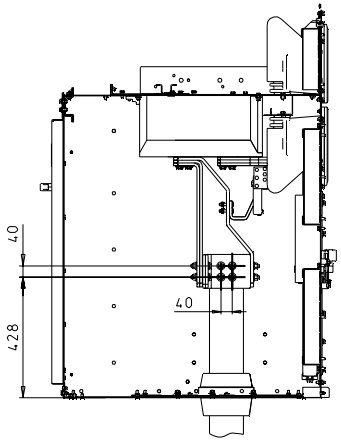

A Schaltgeräteraum
Switching device compartment

B Sammelschienenraum
Busbar compartment

C Anschlussraum
Connection compartment

D Druckentlastungskanal
Pressure relief duct

E Niederspannungsschrank
Low-voltage compartment

Tolerance / Toleranz (ISO): DIN ISO 2768-m	Material:Werkstoff	Mass / Masse kg: lb:	Papersize / Format A2	17-01-2017	Coelho	Date / Datum 12-04-2011	Anschlussraum Connection compartment		
		Unit:Einheit Millimeters	Scale / Massstab w/o	Date / Datum	Name / Name	Name / Name A. TENGER			
	Material No.1/Nr.1 / Material No.2/Nr.2		Released / Freigabe	20170688	04	Department / Abteilung E_D_MV_1_R&D	Designation / Benennung Dimension_drawing_NXAIR	ISO-Proj.	
				Mod./Ref-No. Aend.-/Varg.-Nr.	Revision / Revision	Location / Standort GEBZE	Itemnumber;Sachnummer 110_0262_9	Page / Blatt 15+	
						SIEMENS			

Confià a titre de secret d'enterprise. Tous droits reserves.
Comunicado como segredo empresarial. Reservados todos os direitos.
Confiado como secreto industrial. Nos reservamos todos los derechos.

Als Betriebsgeheimnis anvertraut. Alle Rechte vorbehalten.
Proprietary data, company confidential. All rights reserved.

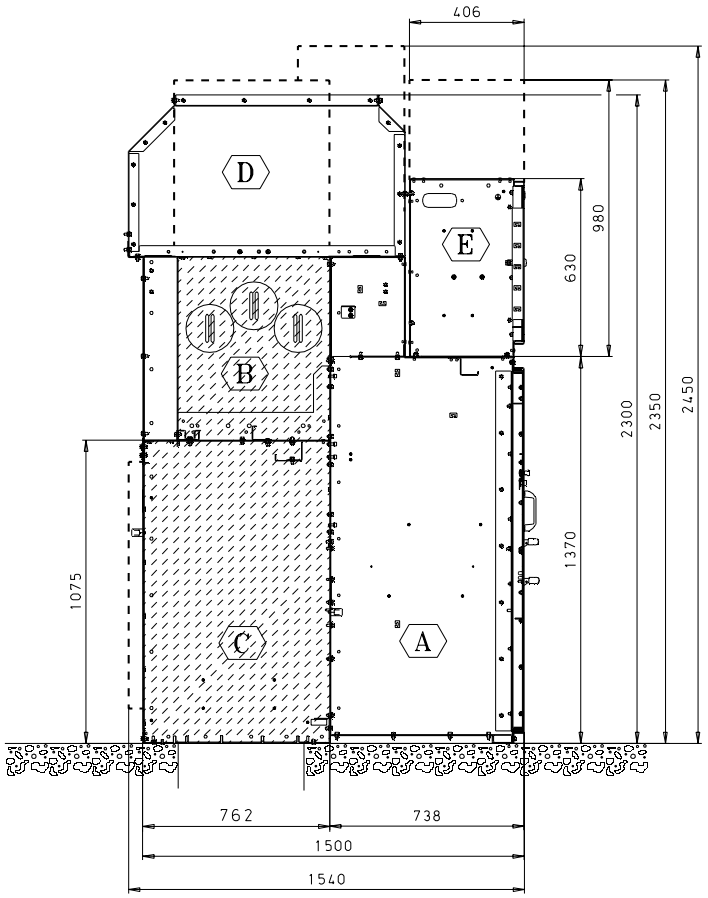

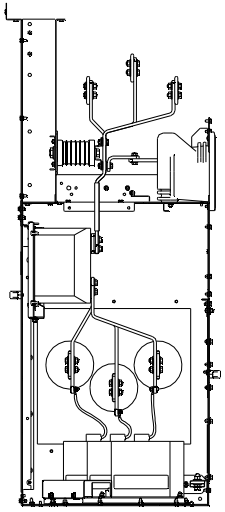

BRP

1250A / 2000A / 2500A

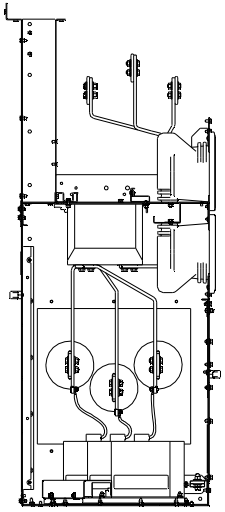

WP

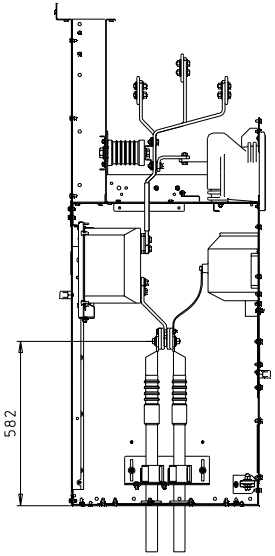

BCP

1250A / 2500A

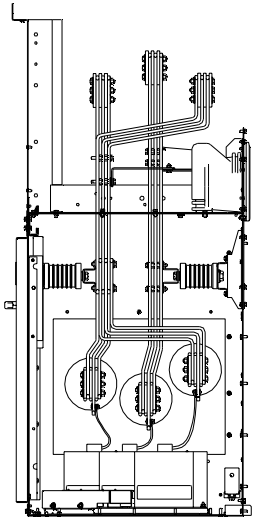

BRP

3150A / 4000A

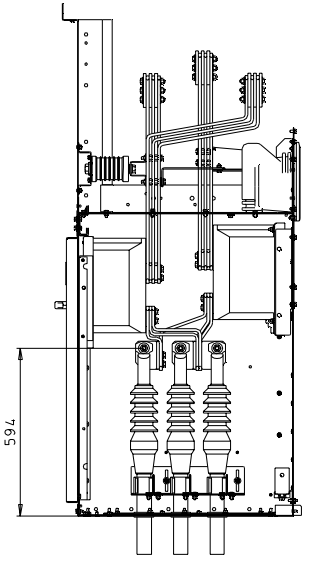

BCP

3150A / 4000A

- A — Schaltgeräteraum / Switching device compartment
- B — Sammelschienenraum / Busbar compartment
- C — Anschlussraum / Connection compartment
- D — Druckentlastungskanal / Pressure relief duct
- E — Niederspannungsschrank / Low-voltage compartment
- BRP — Hochführungsfeld der Längskupplung, optional für Messeinschub / Bus riser panel of bus sectionalizer, optionally with metering unit
- WP — Leistungsschaltereinschub der Längskupplung oder Hochführungsfeld der Längskupplung mit ausziehbarer Trennschalter / Circuit-breaker panel of bus sectionalizer or bus riser panel of bus sectionalizer with withdrawable disconnector
- BCP — Sammelschienenanschlussfeld, optional mit Messeninschub / Busbar connecting panel, optionally with metering unit

Anschlussraum
Connection compartment

Tolerance / Toleranz (ISO): DIN ISO 2768-m	Material:Werkstoff	Mass / Masse kg: lb:	Papersize / Format: A2	17-01-2017	Coelho	Date / Datum: 12-04-2011	Designation / Benennung: Dimension_drawing_NXAIR
		Unit:Einheit: Millimeters	Scale / Massstab: w/o	Date / Datum	Name / Name	Name: A. TENGER	ISO-Proj.
	Material No.1/Nr.1	Material No.2/Nr.2	Released / Freigabe	20170688	04	Department / Abteilung: E_D_MV_1_R&D	Page / Blatt: 16+
				Mod./Ref-No. Aend.-/Vorg.-Nr.	Revision / Revision	Location / Standort: GEBZE	Itemnumber;Sachnummer: 110_0262_9

SIEMENS

Confià a titre de secret d'enterprise. Tous droits reserves.
Comunicado como segredo empresarial. Reservados todos os direitos.
Confiado como secreto industrial. Nos reservamos todos los derechos.

Als Betriebsgeheimnis anvertraut. Alle Rechte vorbehalten.
Proprietary data, company confidential. All rights reserved.

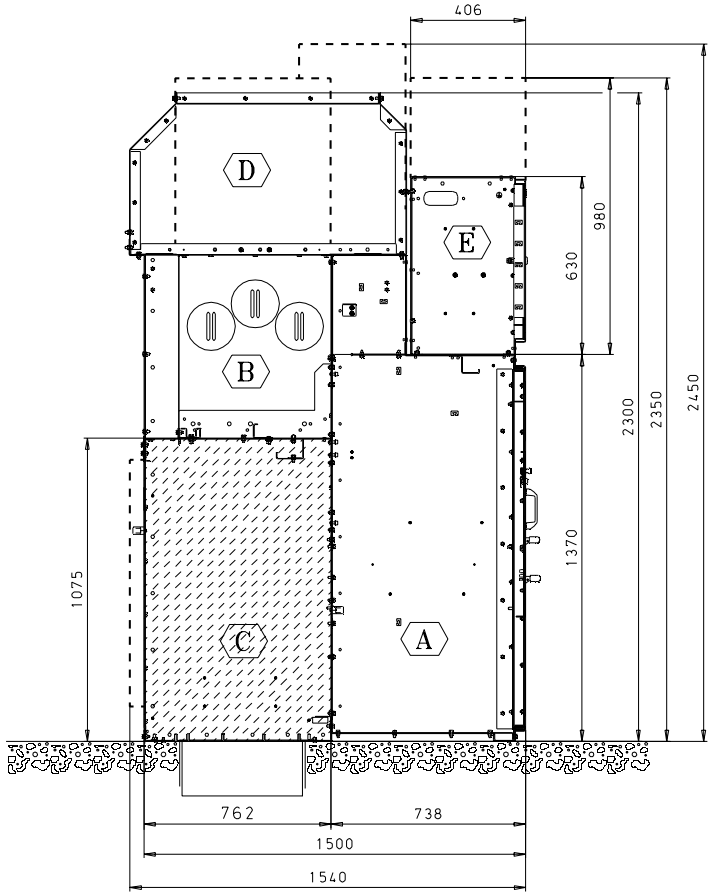

1 / 2 Cable(s) or
3 / 4 Cables

600 / 800 / 1000 mm

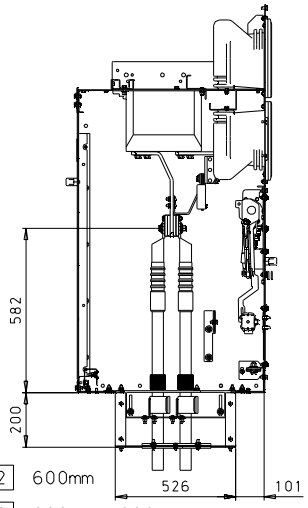

CP2 600mm

CBP 800 / 1000mm

6 Cables

1000 mm

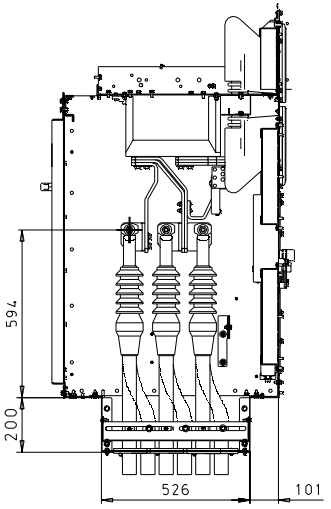

Voltage Transformer

800 / 1000 mm

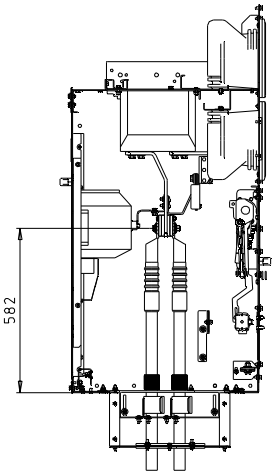

Surge Arrestor / Limiter

600 / 800 / 1000 mm

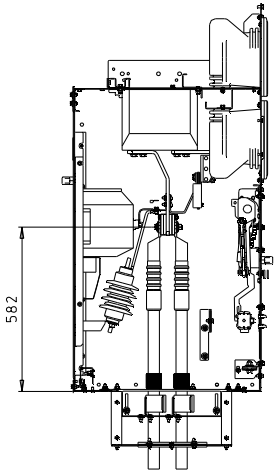

CP2 600mm

CBP 800 / 1000mm

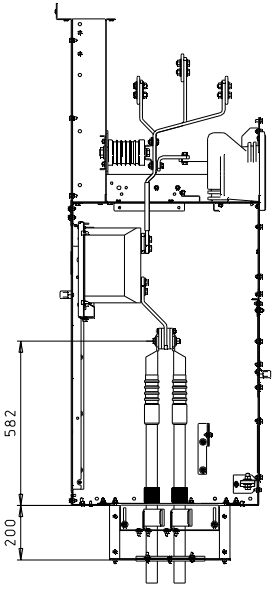

BCP

1 / 2 Cable

435 mm

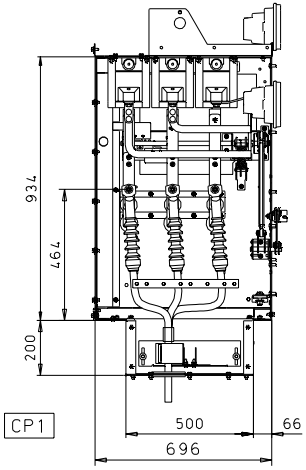

CP1

- A Schaltgeräteraum / Switching device compartment
- B Sammelschienenraum / Busbar compartment
- C Anschlussraum / Connection compartment
- D Druckentlastungskanal / Pressure relief duct
- E Niederspannungsschrank / Low-voltage compartment
- CP1 Schützfeld 435mm / Contactor panel 435mm
- CP2 Schützfeld 600mm / Contactor panel 600mm
- CBP Leistungsschalterfeld / Circuit-breaker panel

Anschlussraum mit tiefer Wanne
Connection compartment with deep pan

Tolerance / Toleranz (ISO): DIN ISO 2768-m	Material:Werkstoff	Mass / Masse kg: lb:	Papersize / Format: A2	17-01-2017	Coelho	Date / Datum: 12-04-2011	Designation / Benennung: Dimension_drawing_NXAIR
		Unit:Einheit: Millimeters	Scale / Massstab: w/o	Date / Datum	Name	Name: A. TENGER	ISO-Proj.
	Material No.1/Nr.1	Material No.2/Nr.2	Released / Freigabe	20170688	04	Department / Abteilung: E_D_MV_1_R&D	Page / Blatt: 17+
				Mod./Ref-No. Aend.-/Vorg.-Nr.	Revision / Revision	Location / Standort: GEBZE	Itemnumber;Sachnummer: 110_0262_9
						SIEMENS	

Confià a titre de secret d'enterprise. Tous droits reserves.
Comunicado como segredo empresarial. Reservados todos os direitos.
Confiado como secreto industrial. Nos reservamos todos los derechos.

Als Betriebsgeheimnis anvertraut. Alle Rechte vorbehalten.
Proprietary data, company confidential. All rights reserved.

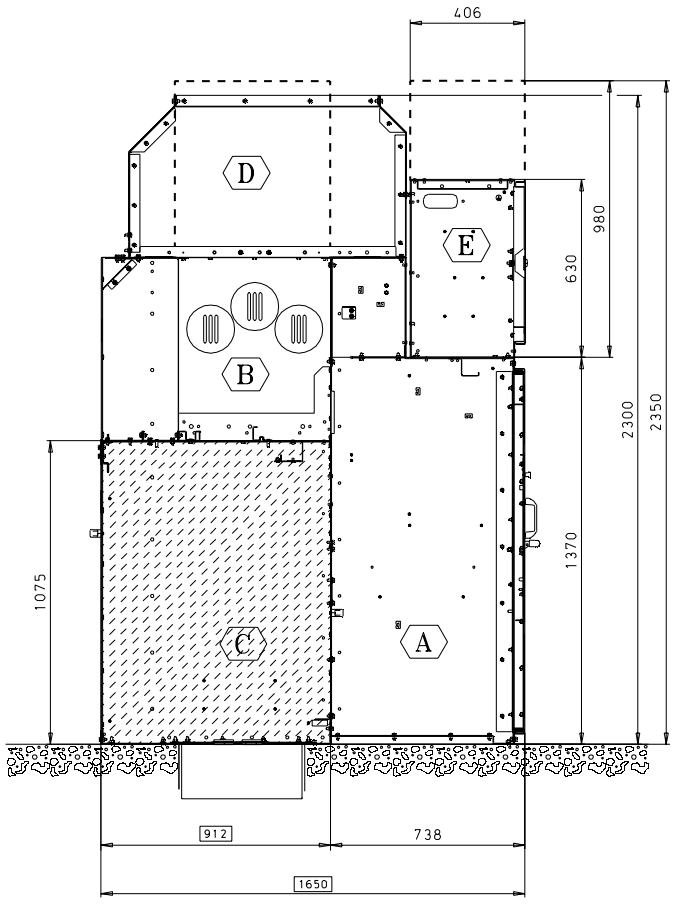

6 Cables
1000 mm extended

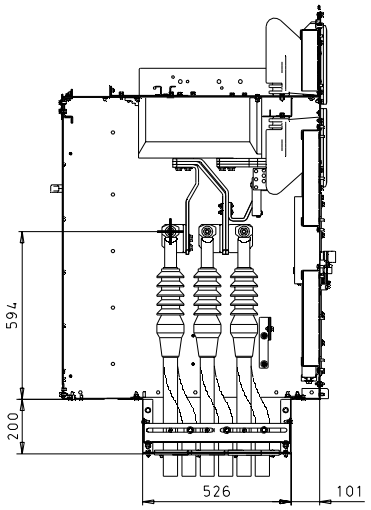

Voltge transformer
1000 mm extended

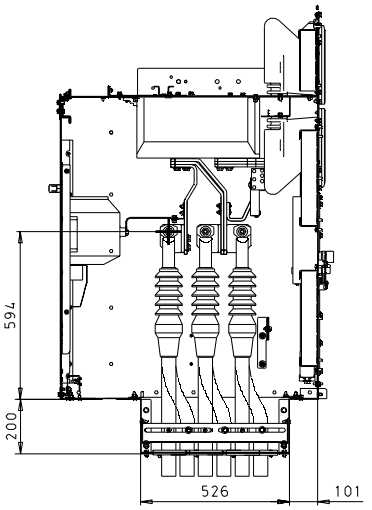

Surge Arrestor / Limiter
1000 mm extended

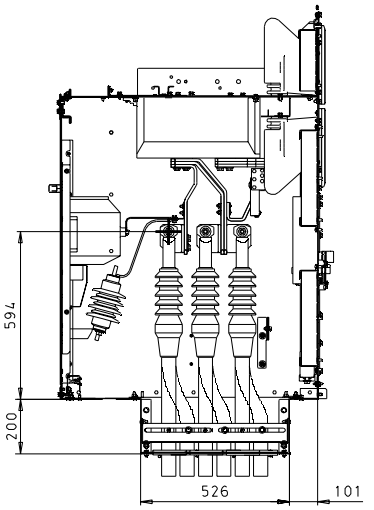

- A Schaltgeräteraum / Switching device compartment
- B Sammelschienenraum / Busbar compartment
- C Anschlussraum / Connection compartment
- D Druckentlastungskanal / Pressure relief duct
- E Niederspannungsschrank / Low-voltage compartment

Anschlussraum mit tiefer Wanne
Connection compartment with deep pan

Tolerance / Toleranz (ISO): DIN ISO 2768-m	Material:Werkstoff	Mass / Masse kg: lb:	Papersize / Format: A2	17-01-2017	Coelho	Date / Datum: 12-04-2011		Designation / Benennung: Dimension_drawing_NXAIR	ISO-Proj.
		Unit:Einheit: Millimeters	Scale / Massstab: w/o	Date / Datum	Name / Name	Name: A. TENGER			
	Material No.1/Nr.1 / Material No.2/Nr.2		Released / Freigabe	20170688	04	Department / Abteilung: E_D_MV_1_R&D			Page / Blatt: 18+
				Mod./Ref-No. Aend.-/Vorg.-Nr.	Revision / Revision	Location / Standort: GEBZE	SIEMENS	Itemnumber;Sachnummer: 110_0262_9	

Confià a titre de secret d'enterprise. Tous droits reserves.
Comunicado como segredo empresarial. Reservados todos os direitos.
Confiado como secreto industrial. Nos reservamos todos los derechos.

Als Betriebsgeheimnis anvertraut. Alle Rechte vorbehalten.
Proprietary data, company confidential. All rights reserved.

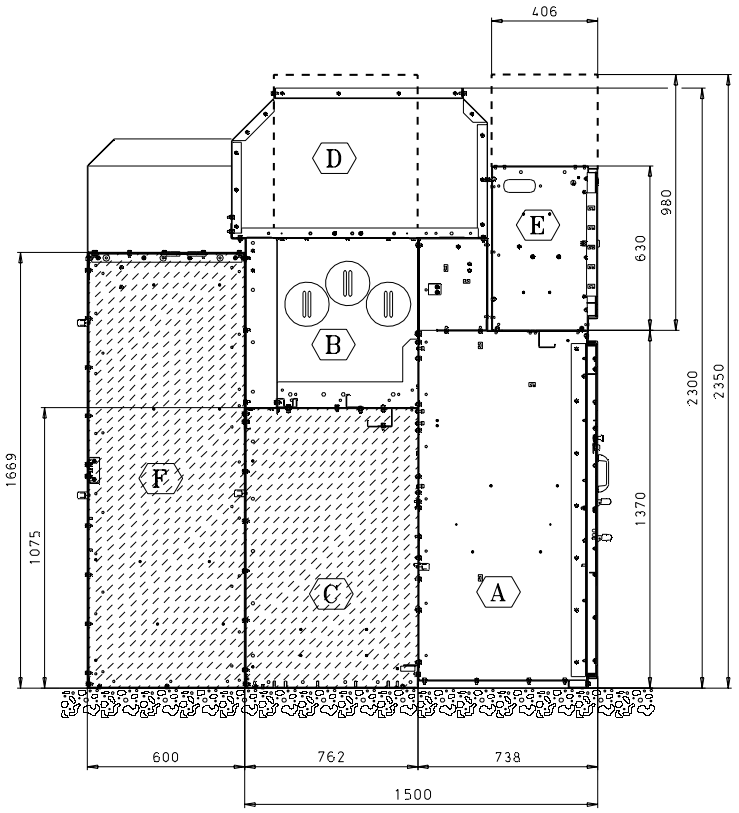

1 / 2 Cable(s) or
3 / 4 Cables or 6 Cables

800 / 1000 mm

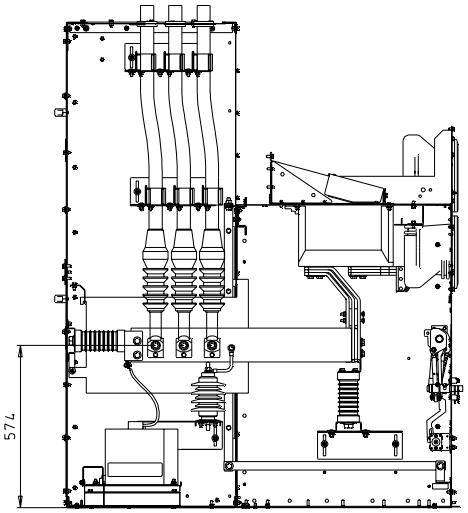

- A Schaltgeräteraum / Switching device compartment
- B Sammelschienenraum / Busbar compartment
- C Anschlussraum / Connection compartment
- D Druckentlastungskanal / Pressure relief duct
- E Niederspannungsschrank / Low-voltage compartment
- F Rucksack / Rear box

Rucksack
Rear box

Tolerance / Toleranz (ISO): DIN ISO 2768-m	Material:Werkstoff	Mass / Masse kg: lb:	Papersize / Format: A2	17-01-2017	Coelho	Date / Datum: 12-04-2011		Designation / Benennung: Dimension_drawing_NXAIR	ISO-Proj.
		Unit:Einheit: Millimeters	Scale / Massstab: w/o	Date / Datum	Name / Name	Name: A. TENGER			
	Material No.1/Nr.1 / Material No.2/Nr.2		Released / Freigabe	20170688	04	Department / Abteilung: E_D_MV_1_R&D			Page / Blatt: 19+
				Mod./Ref-No. Aend.-/Vorg.-Nr.	Revision / Revision	Location / Standort: GEBZE	SIEMENS	Itemnumber;Sachnummer: 110_0262_9	

Confià a titre de secret d'enterprise. Tous droits reserves.
Comunicado como segredo empresarial. Reservados todos os direitos.
Confiado como secreto industrial. Nos reservamos todos los derechos.

Als Betriebsgeheimnis anvertraut. Alle Rechte vorbehalten.
Proprietary data, company confidential. All rights reserved.

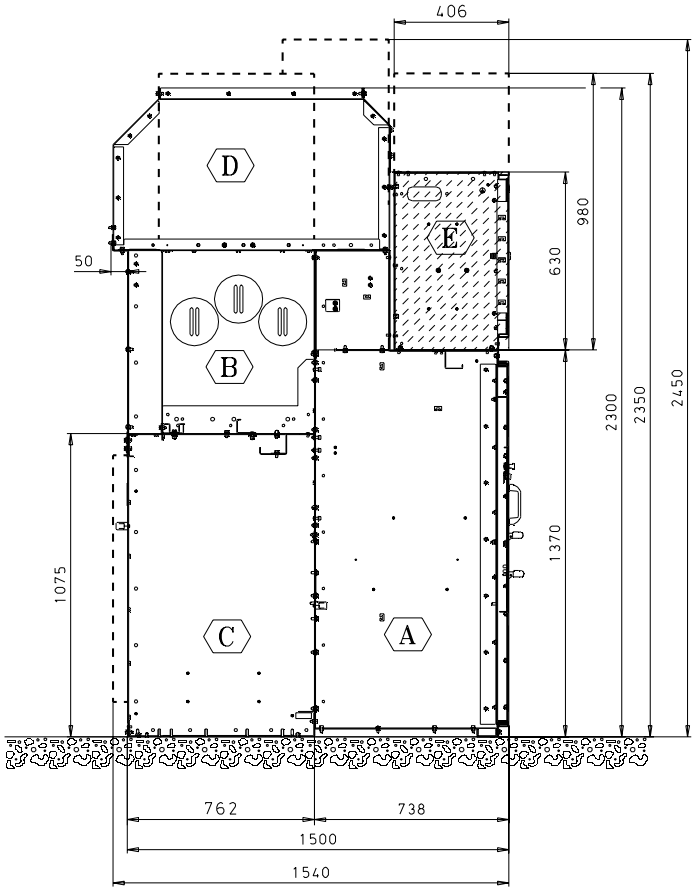

A Schaltgeräteraum
Switching device compartment

B Sammelschienenraum
Busbar compartment

C Anschlussraum
Connection compartment

D Druckentlastungskanal
Pressure relief duct

E Niederspannungsschrank
Low-voltage compartment

435 / 600 / 800 / 1000 mm

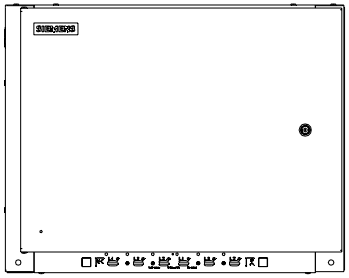

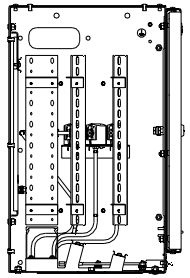

435 / 600 / 800 / 1000 mm

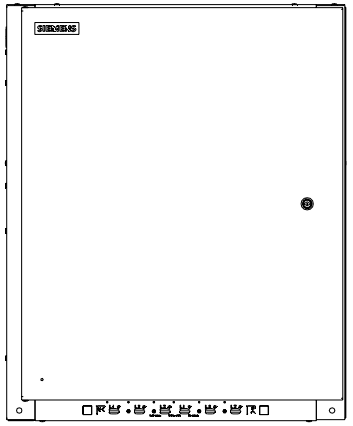

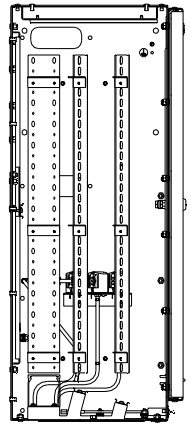

800 mm

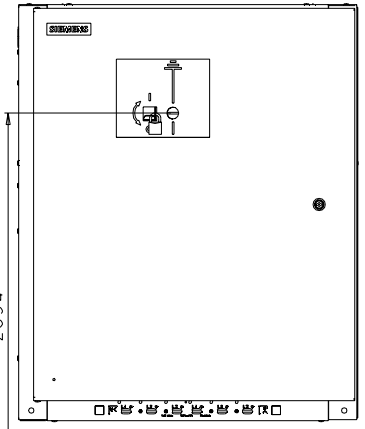

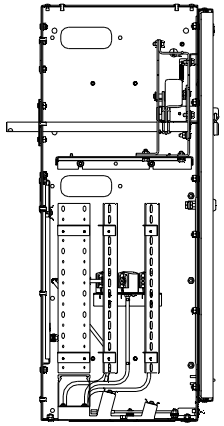

Niederspannungsschrank
Low-voltage compartment

Tolerance / Toleranz (ISO): DIN ISO 2768-m	Material:Werkstoff	Mass / Masse kg: lb:	Papersize / Format: A2	17-01-2017	Coelho	Date / Datum: 12-04-2011	Designation / Benennung: Dimension_drawing_NXAIR	ISO-Proj.
		Unit:Einheit: Millimeters	Scale / Massstab: w/o	Date / Datum	Name	Name: A. TENGER		
	Material No.1/Nr.1 / Material No.2/Nr.2		Released / Freigabe	20170688	04	Department / Abteilung: E_D_MV_1_R&D		Page / Blatt: 20+
				Mod./Ref-No. Aend.-/Vorg.-Nr.	Revision / Revision	Location / Standort: GEBZE	Itemnumber;Sachnummer: 110_0262_9	
						SIEMENS		

Contiè a titre de secret d'enterprise. Tous droits reserves.
Comunicado como segredo empresarial. Reservados todos os direitos.
Confiado como secreto industrial. Nos reservamos todos los derechos.

Als Betriebsgeheimnis anvertraut. Alle Rechte vorbehalten.
Proprietary data, company confidential. All rights reserved.

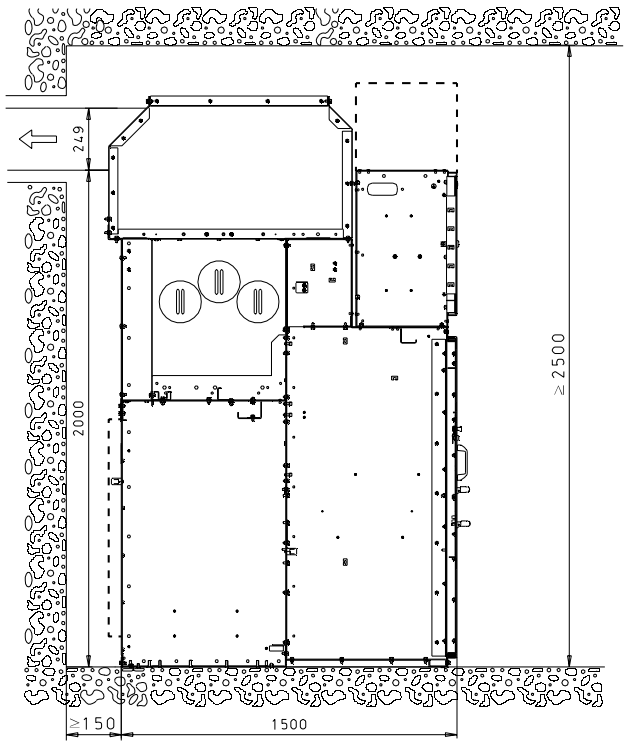

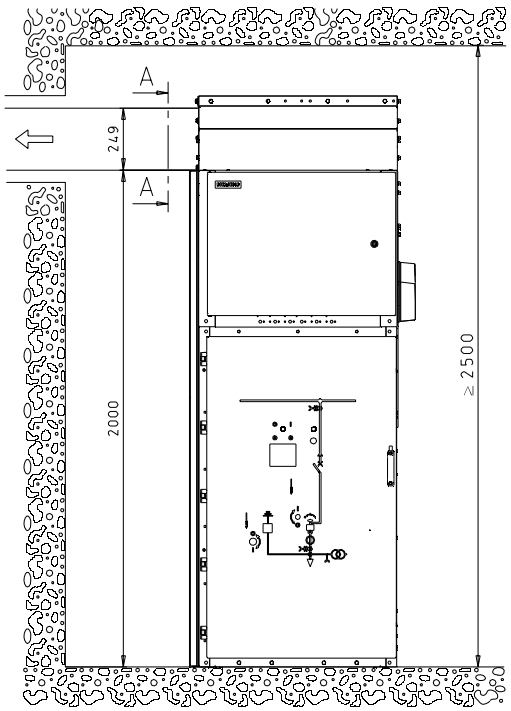

A - A

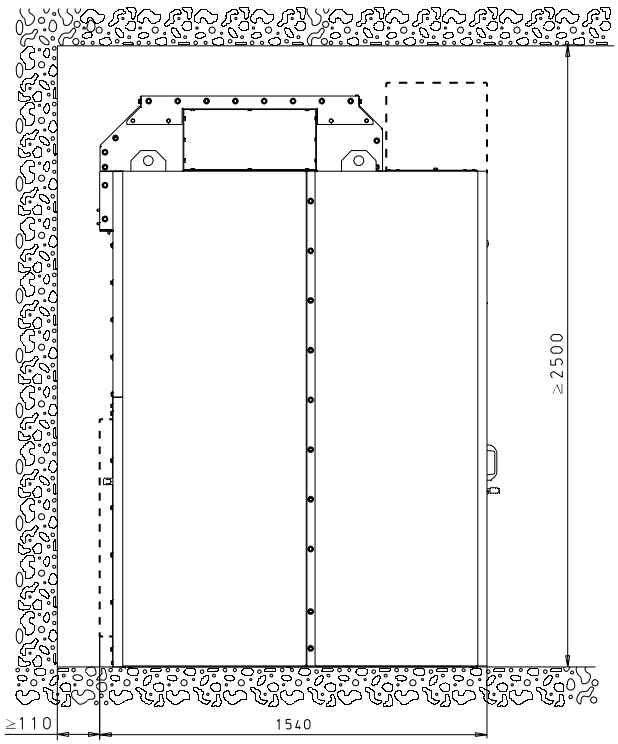

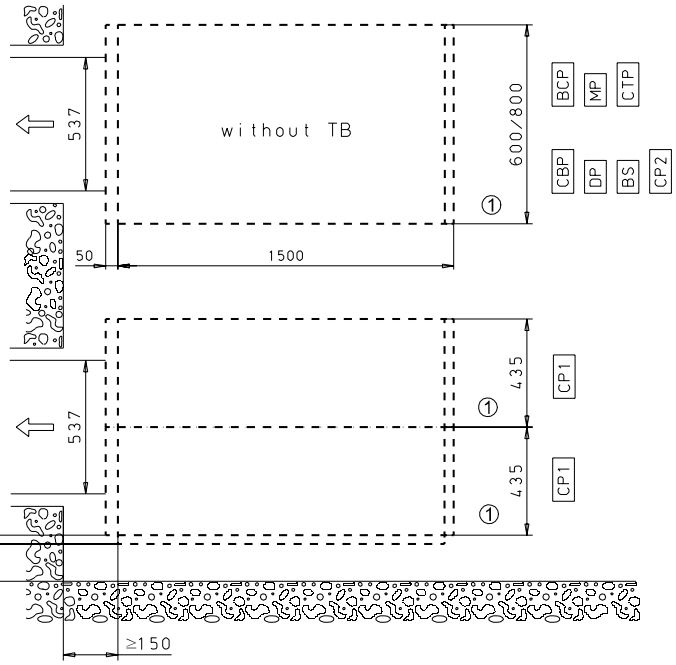

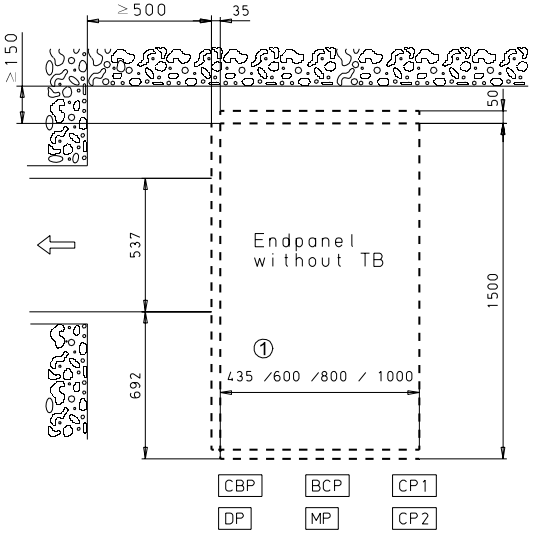

linke oder rechte Ausführung möglich
left or right installation also possible

Tolerance Toleranz (ISO) DIN ISO 2768-m	Material:Werkstoff	Mass Masse kg: lb:	Papersize Format A2	17-01-2017	Coelho	Date Datum 12-04-2011		Designation Benennung Dimension_drawing_NXAIR	ISO-Proj.
		Unit;Einheit Millimeters	Scale Massstab w/o	Date Datum	Name Name	Name A. TENGER			
				20170688	04	Department Abteilung E_D_MV_1_R&D			Page Blatt 21+
	Material No.1/Nr.1 Material No.2/Nr.2		Released Freigabe	Mod./Ref-No. Aend.-/Vorg.-Nr.	Revision Revision	Location Standort GEBZE	SIEMENS	Itemnumber;Sachnummer 110_0262_9	

Confià a titre de secret d'enterprise. Tous droits reserves.
Comunicado como segredo empresarial. Reservados todos os direitos.
Confiado como secreto industrial. Nos reservamos todos los derechos.

Als Betriebsgeheimnis anvertraut. Alle Rechte vorbehalten.
Proprietary data, company confidential. All rights reserved.

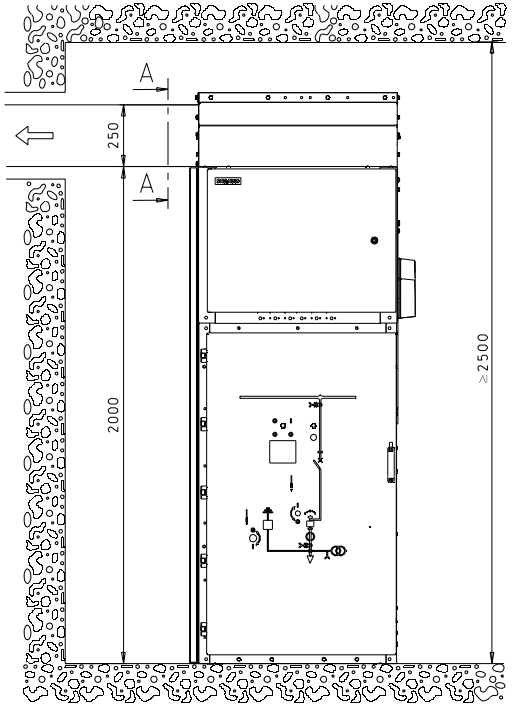

linke oder rechte
Ausführung möglich

left or right
installation also possible

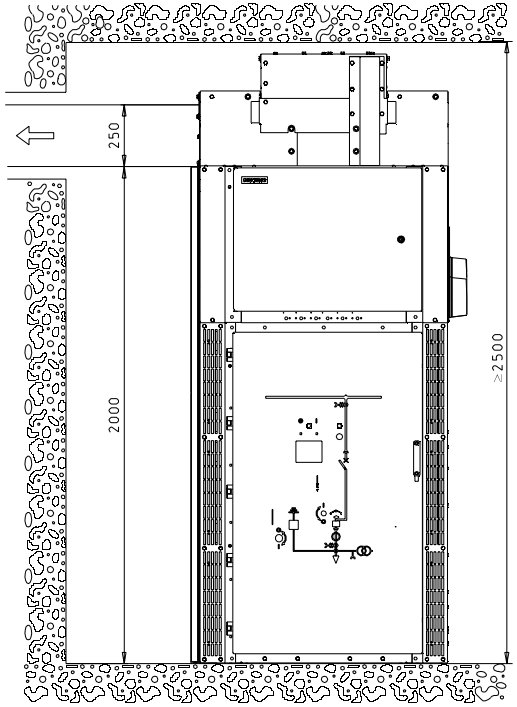

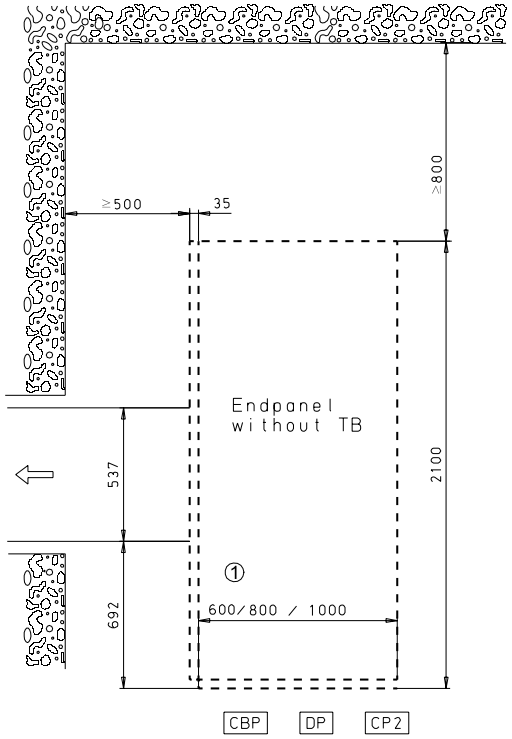

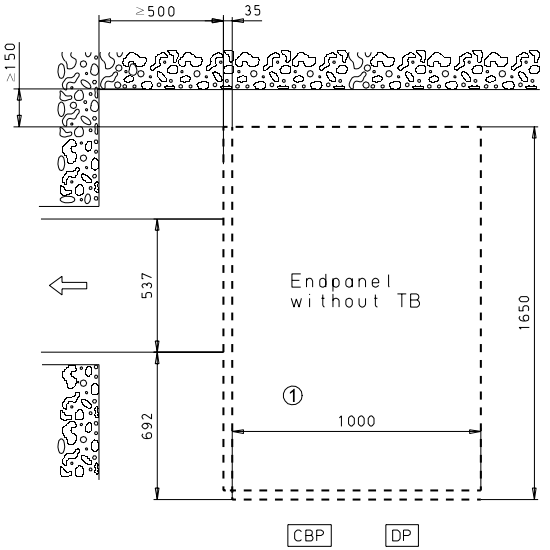

Druckentlastungskanal
Pressure relief duct

Tolerance / Toleranz (ISO): DIN ISO 2768-m	Material:/Werkstoff	Mass / Masse kg: lb:	Papersize / Format: A2	17-01-2017 Date / Datum	Coelho Name	Date / Datum: 12-04-2011	Designation / Benennung: Dimension_drawing_NXAIR
		Unit/Einheit: Millimeters	Scale / Massstab: w/o			Name: A. TENGER	
	Material No,1/Nr,1 / Material No,2/Nr,2		Released / Freigabe	20170688	04	Department / Abteilung: E_D_MV_1_R&D	ISO-Proj.
				Mod./Ref-No. Aend.-/Vorg.-Nr.	Revision / Revision	Location / Standort: GEBZE	Page / Blatt: 22+
						SIEMENS	Itemnumber;Sachnummer: 110_0262_9

Als Betriebsgeheimnis anvertraut. Alle Rechte vorbehalten.
Proprietary data, company confidential. All rights reserved.

Confié a titre de secret d'enterprise. Tous droits reserves.
Comunicado como segredo empresarial. Reservados todos os direitos.
Confiado como secreto industrial. Nos reservamos todos los derechos.

Draufsicht / Top view

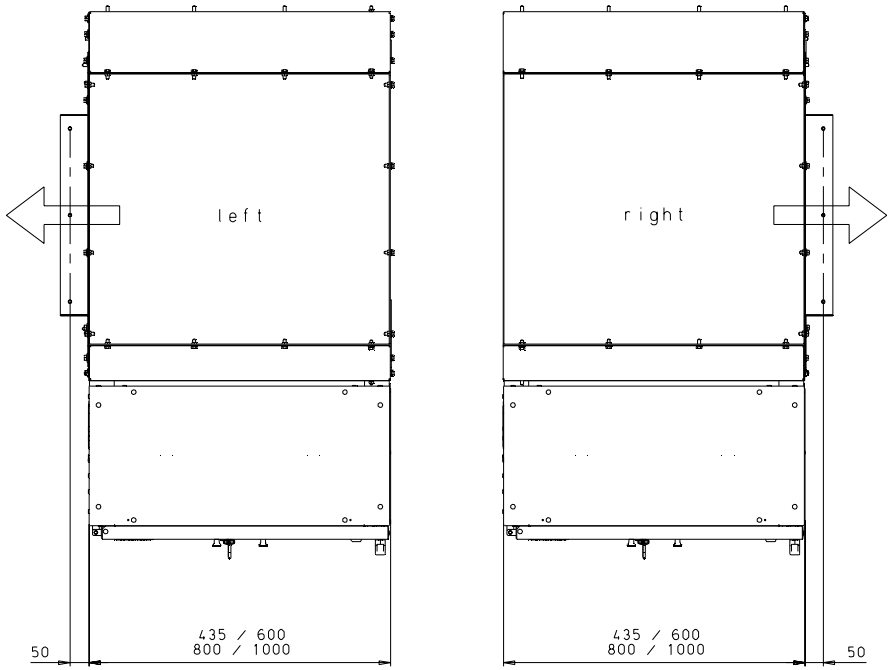

CBP
CP1
CP2

Ausgang nach der Seite
Outlet to side

CBP
CP1
CP2

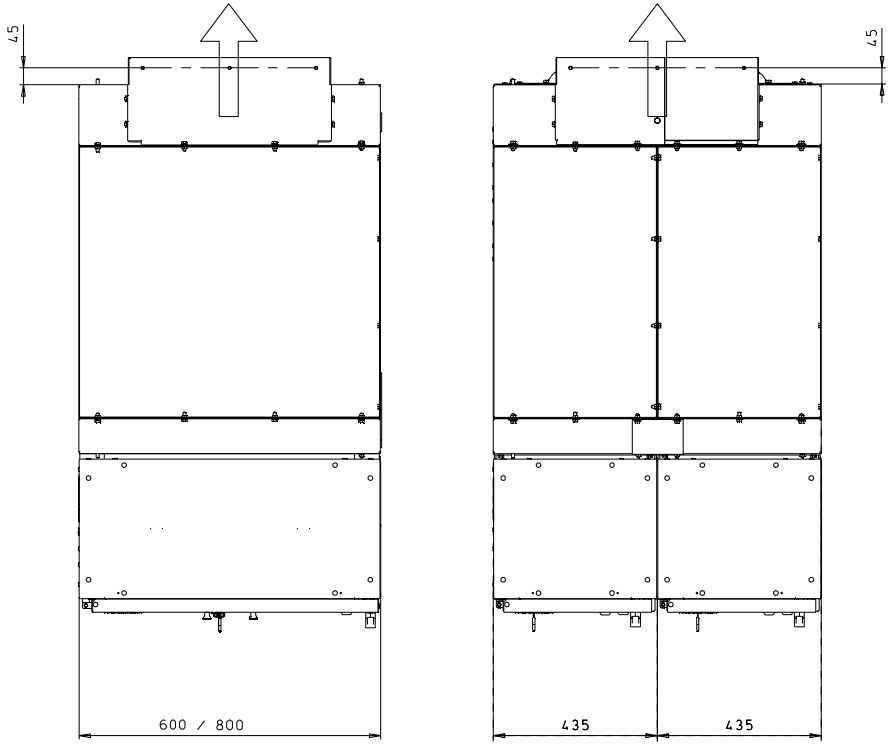

Ausgang nach hinten
Outlet to rear

CP1

CBP Leistungsschalterfeld
Circuit-breaker panel

CP1 Schützfeld 435mm
Contactor panel 435mm

CP2 Schützfeld 600mm
Contactor panel 600mm

Tolerance Toleranz (ISO) DIN ISO 2768-m	Material:Werkstoff	Mass Masse kg: lb:	Papersize Format A2	17-01-2017 Date Datum	Coelho Name Name	Date Datum 12-04-2011	Name Name A. TENGER	Druckentlastungkanal Pressure relief duct	ISO-Proj.
		Unit;Einheit Millimeters	Scale Massstab w/o			Department Abteilung E_D_MV_1_R&D		Designation Benennung Dimension_drawing_NXAIR	
	Material No,1/Nr,1 / Material No,2/Nr,2		Released Freigabe	20170688 Mod,/Ref-No, Aend,-/Vorg,Nr,	04 Revision Revision	Location Standort GEBZE	SIEMENS	Itemnumber;Sachnummer 110_0262_9	Page Blatt 23+

Confié a titre de secret d'enterprise. Tous droits reserves.
Comunicado como segredo empresarial. Reservados todos os direitos.
Confiado como secreto industrial. Nos reservamos todos los derechos.

Als Betriebsgeheimnis anvertraut. Alle Rechte vorbehalten.
Proprietary data, company confidential. All rights reserved.

IP3X protection
IP4X protection

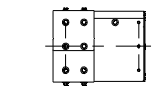

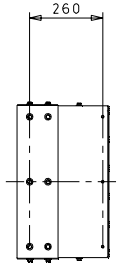

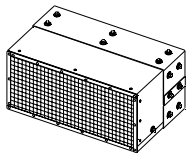

110-0539.3

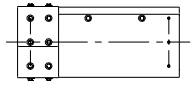

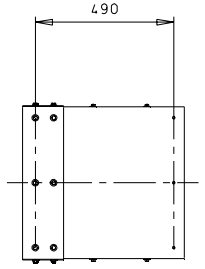

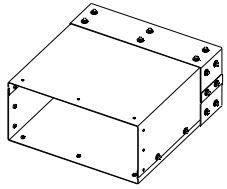

110-0540.3

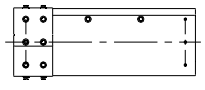

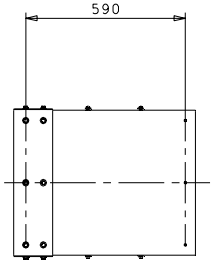

119-0936.3

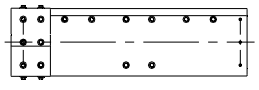

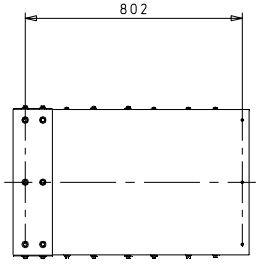

119-0935.3

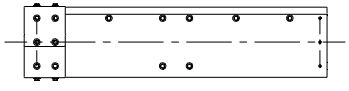

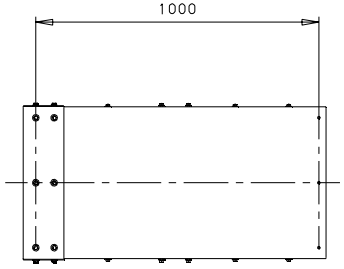

110-0523.3

Adjustable box

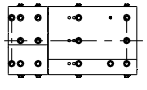

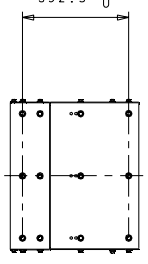

119-0937.3

Adjustable box

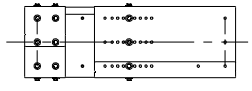

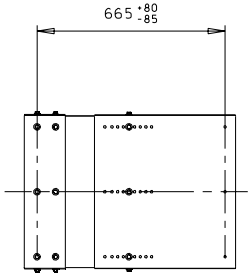

110-0541.3

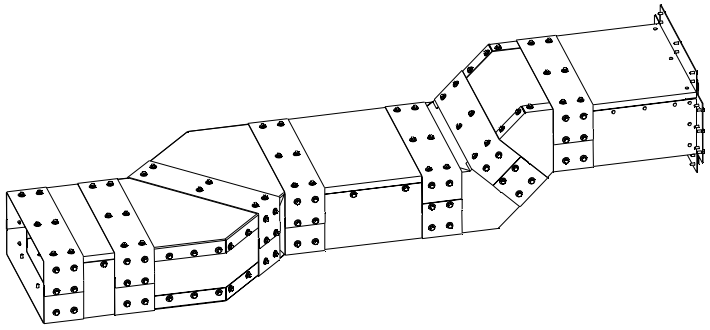

Wall outgoing box

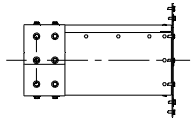

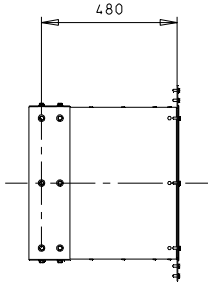

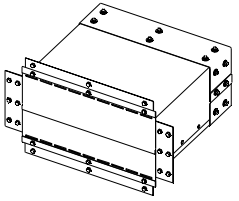

110-0537.3

45°vertical

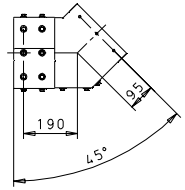

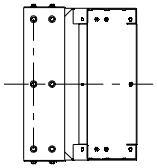

110-0533.3

45°horizontal

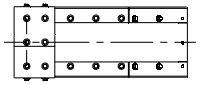

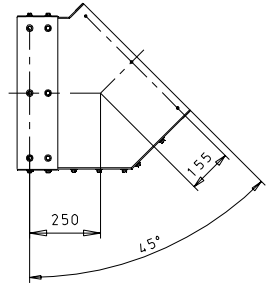

110-0534.3

Druckentlastungskanal
Pressure relief duct

Tolerance Toleranz (ISO) DIN ISO 2768-m	Material:Werkstoff	Mass Masse kg: lb:	Papersize Format A2	17-01-2017 Date Datum	Coelho Name Name	Date Datum 12-04-2011	Name Name A. TENGER	Designation Benennung Dimension_drawing_NXAIR	ISO-Proj.
		Unit;Einheit Millimeters	Scale Massstab w/o			Department Abteilung E_D_MV_1_R&D			
	Material No,1/Nr,1 Material No,2/Nr,2		Released Freigabe	20170688 Mod,/Ref-No, Aend,-/Vorg,-Nr,	04 Revision Revision	Location Standort GEBZE	SIEMENS	Itemnumber;Sachnummer 110_0262_9	Page Blatt 24+

Confid a titre de secret d'enterprise. Tous droits reserves.
Comunicado como segredo empresarial. Reservados todos os direitos.
Confiado como secreto industrial. Nos reservamos todos los derechos.

Als Betriebsgeheimnis anvertraut. Alle Rechte vorbehalten.
Proprietary data, company confidential. All rights reserved.

min. ≥3500mm ≤12kV ≤31.5kA with absorber

min. ≥3500mm ≤17.5kV 40kA with absorber

min. ≥3000mm ≤12kV 31.5kA with absorber

min. ≥2800mm ≤12kV ≤25kA with absorber

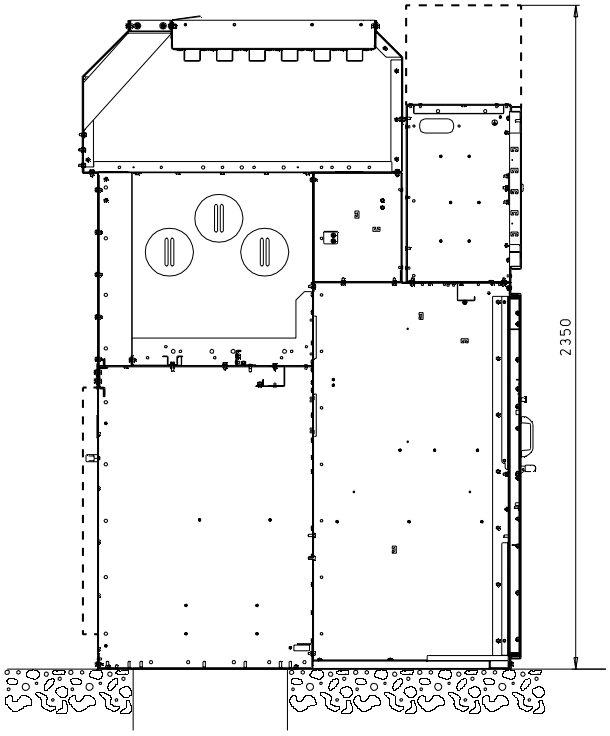

≤12kV, ≤25kA with absorber

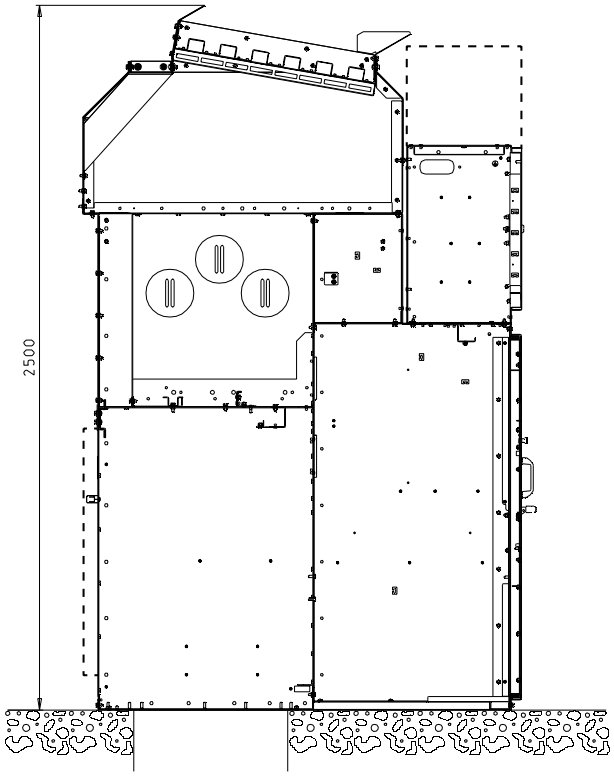

≤17.5kV, 31,5kA with absorber

17.5kV, 25kA with absorber

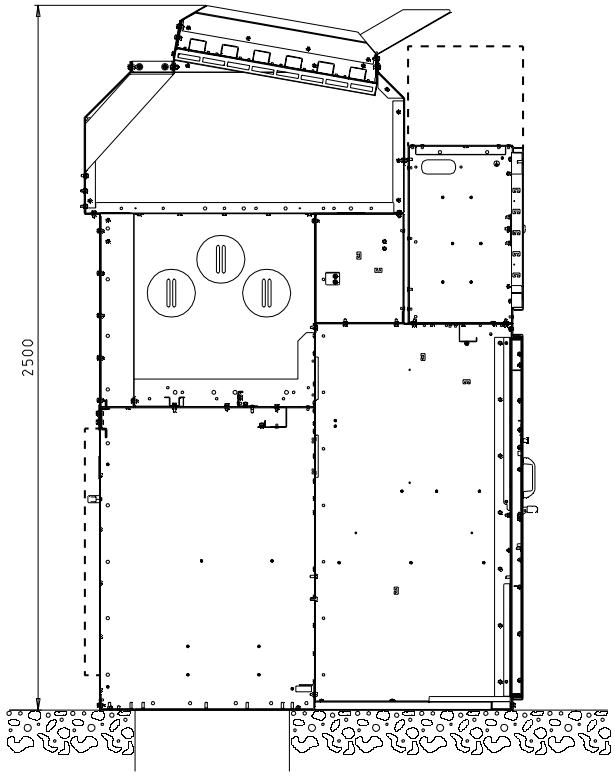

≤17.5kV, 40kA with absorber

Druckentlastungskanal mit Absorber
Pressure relief duct with absorber

Tolerance Toleranz (ISO) DIN ISO 2768-m	Material;Werkstoff	Mass Masse kg: lb:	Papersize Format A2	17-01-2017	Coelho	Date Datum	12-04-2011	Designation Benennung	ISO-Proj.
		Unit;Einheit Millimeters	Scale Massstab w/o	Date Datum	Name Name	Name Name	A. TENGER	Dimension_drawing_NXAIR	
	Material No.1/Nr.1 / Material No.2/Nr.2		Released Freigabe	20170688	04	Department Abteilung	E_D_MV_1_R&D		Page Blatt 25+
				Mod.;Ref-No. Aend.-/Vorg.-Nr.	Revision Revision	Location Standort	GEBZE	Itemnumber;Sachnummer 110_0262_9	
						SIEMENS			

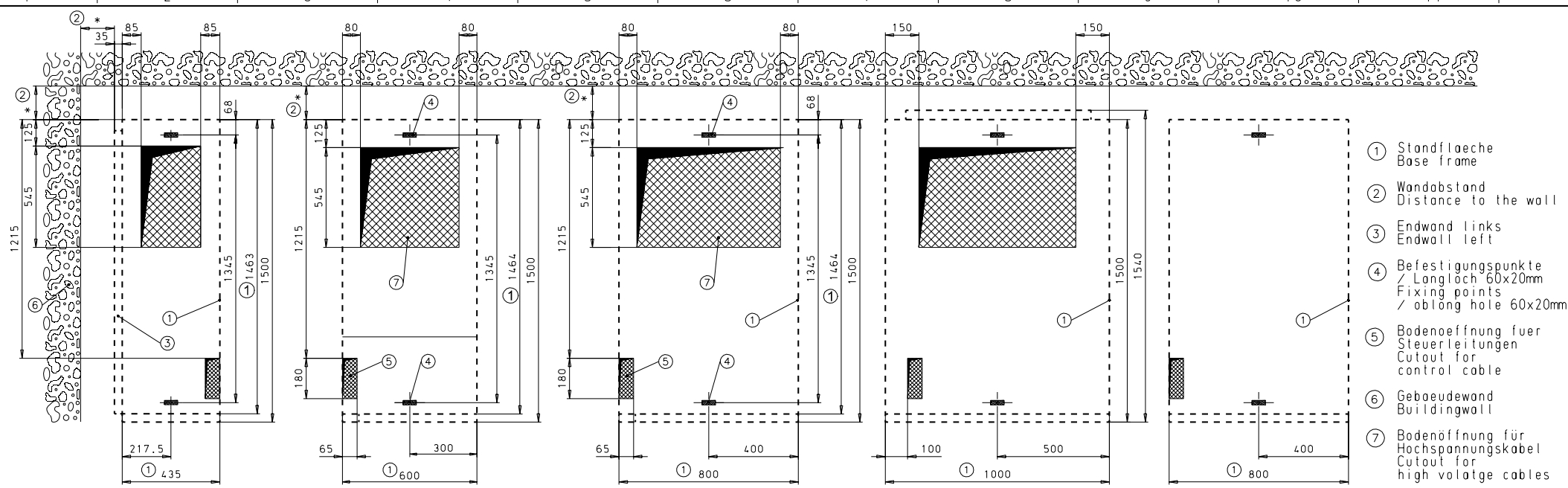

1 Standfläche
Base frame

2 Wandabstand
Distance to the wall

3 Endwand links
Endwall left

4 Befestigungspunkte
/ Langloch 60x20mm
Fixing points
/ oblong hole 60x20mm

5 Bodenoeffnung fuer
Steuerleitungen
Cutout for
control cable

6 Gebaeudewand
Buildingwall

7 Bodenöffnung für
Hochspannungskabel
Cutout for
high volatge cables

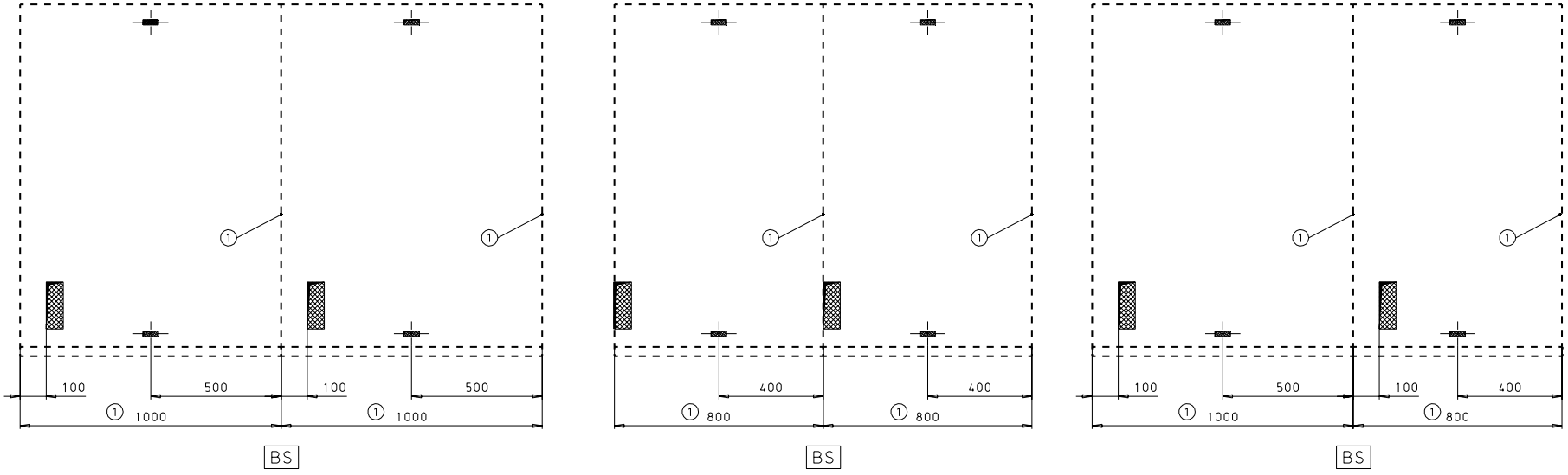

CP1 Schützfeld 435mm
Contactor panel 435mm

CP2 Schützfeld 600mm
Contactor panel 600mm

CBP Leistungsschalterfeld
Circuit-breaker panel

BCP Sammelschienenanschlussfeld
Busbar connection panel

DP Trennfeld
Disconnecting panel

BS Längskupplung
Bus sectionalizer

MP Messfeld
Metering panel

BCP Sammelschienen-Stromwandler Feld
Panel with CT on Busbar

* Siehe Blätter 21 und 22
See pages 21 and 22

Bodendurchbrüche
Floor cut out

Tolerance / Toleranz (ISO): DIN ISO 2768-m	Material:Werkstoff	Mass / Masse kg: lb:	Papersize / Format: A2	17-01-2017	Coelho	Date / Datum: 12-04-2011		Designation / Benennung: Dimension_drawing_NXAIR	ISO-Proj.
		Unit:Einheit: Millimeters	Scale / Massstab: w/o	Date / Datum	Name / Name	Name: A. TENGER			
	Material No.1/Nr.1	Material No.2/Nr.2	Released / Freigabe	20170688	04	Department / Abteilung: E_D_MV_1_R&D			Page / Blatt: 26+
				Mod./Ref-No. Aend.-/Vorg.-Nr.	Revision / Revision	Location / Standort: GEBZE	SIEMENS	Itemnumber;Sachnummer: 110_0262_9	

Confià a títre de secret d'enterprise. Tous droits reserves.
Comunicado como segredo empresarial. Reservados todos os direitos.
Confiado como secreto industrial. Nos reservamos todos los derechos.

Als Betriebsgeheimnis anvertraut. Alle Rechte vorbehalten.
Proprietary data, company confidential. All rights reserved.

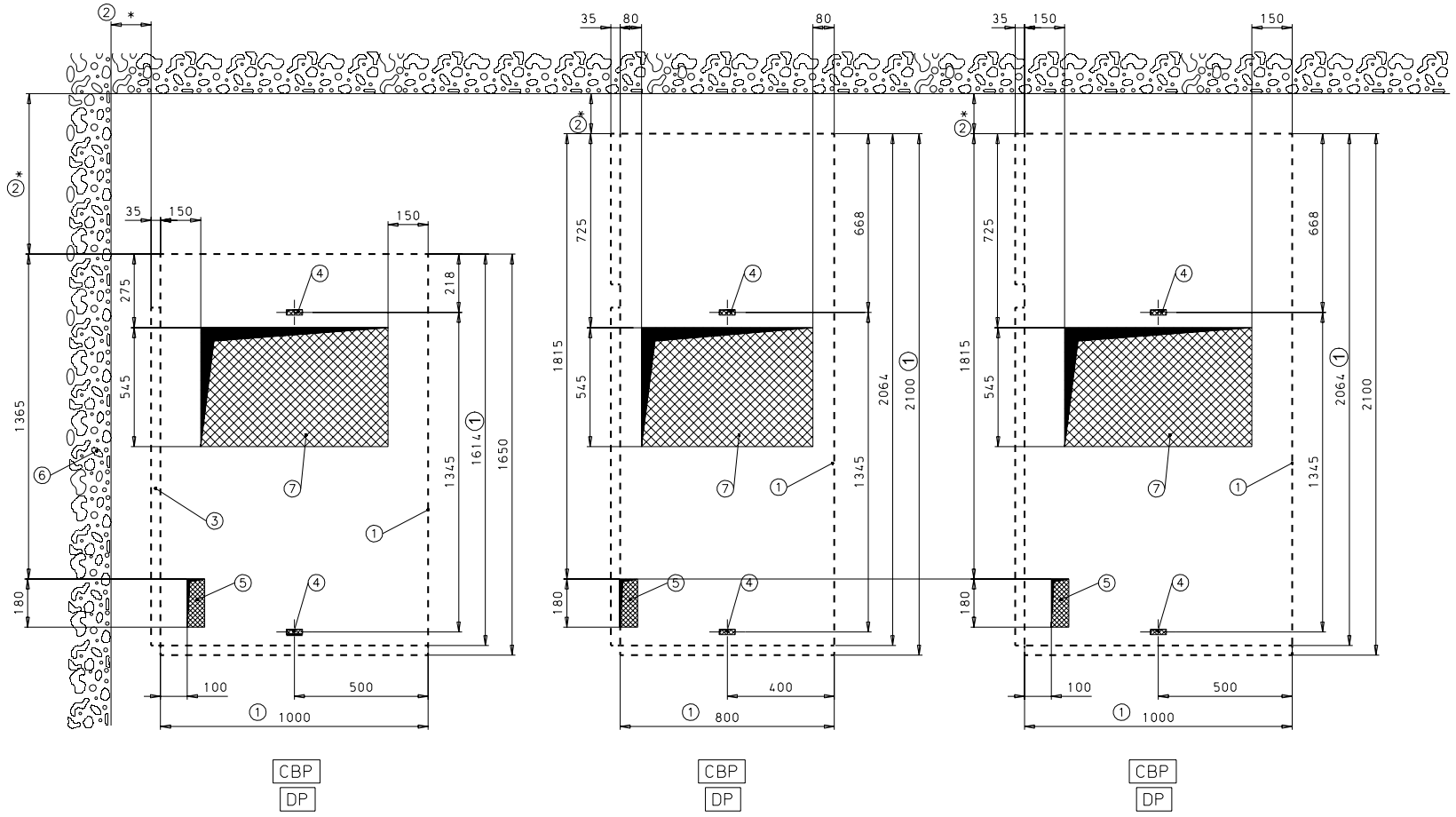

Note: - A mix between panel depths 1500mm, 1540mm, 1650mm and 2100mm is possible.
Distance to the wall will be determined according to the deepest panel.
- Depth of following panels is always 1500mm/1540mm:
Metering panels, busbar connecting panels, bus sectionalizer panels,
contactor panels and panels with CT on busbar.

* Siehe Blätter 21 und 22
See Pages 21 and 22

Bodendurchbrüche
Floor cut out

Tolerance / Toleranz (ISO): DIN ISO 2768-m	Material:Werkstoff	Mass / Masse kg: lb:	Papersize / Format A2	17-01-2017	Coelho	Date / Datum 12-04-2011	Designation / Benennung: Dimension_drawing_NXAIR
		Unit:Einheit Millimeters	Scale / Massstab w/o	Date / Datum	Name / Name	Name / Name A. TENGER	ISO-Proj.
	Material No.1/Nr.1	Material No.2/Nr.2	Released / Freigabe	20170688	04	Department / Abteilung E_D_MV_1_R&D	Page / Blatt 27+
				Mod./Ref-No. / Aend.-Vorg.-Nr.	Revision / Revision	Location / Standort GEBZE	Itemnumber:Sachnummer 110_0262_9

SIEMENS

Confiè a titre de secret d'enterprise. Tous droits reserves.
Comunicado como segredo empresarial. Reservados todos os direitos.
Confiado como secreto industrial. Nos reservamos todos los derechos.

Als Betriebsgeheimnis anvertraut. Alle Rechte vorbehalten.
Proprietary data, company confidential. All rights reserved.

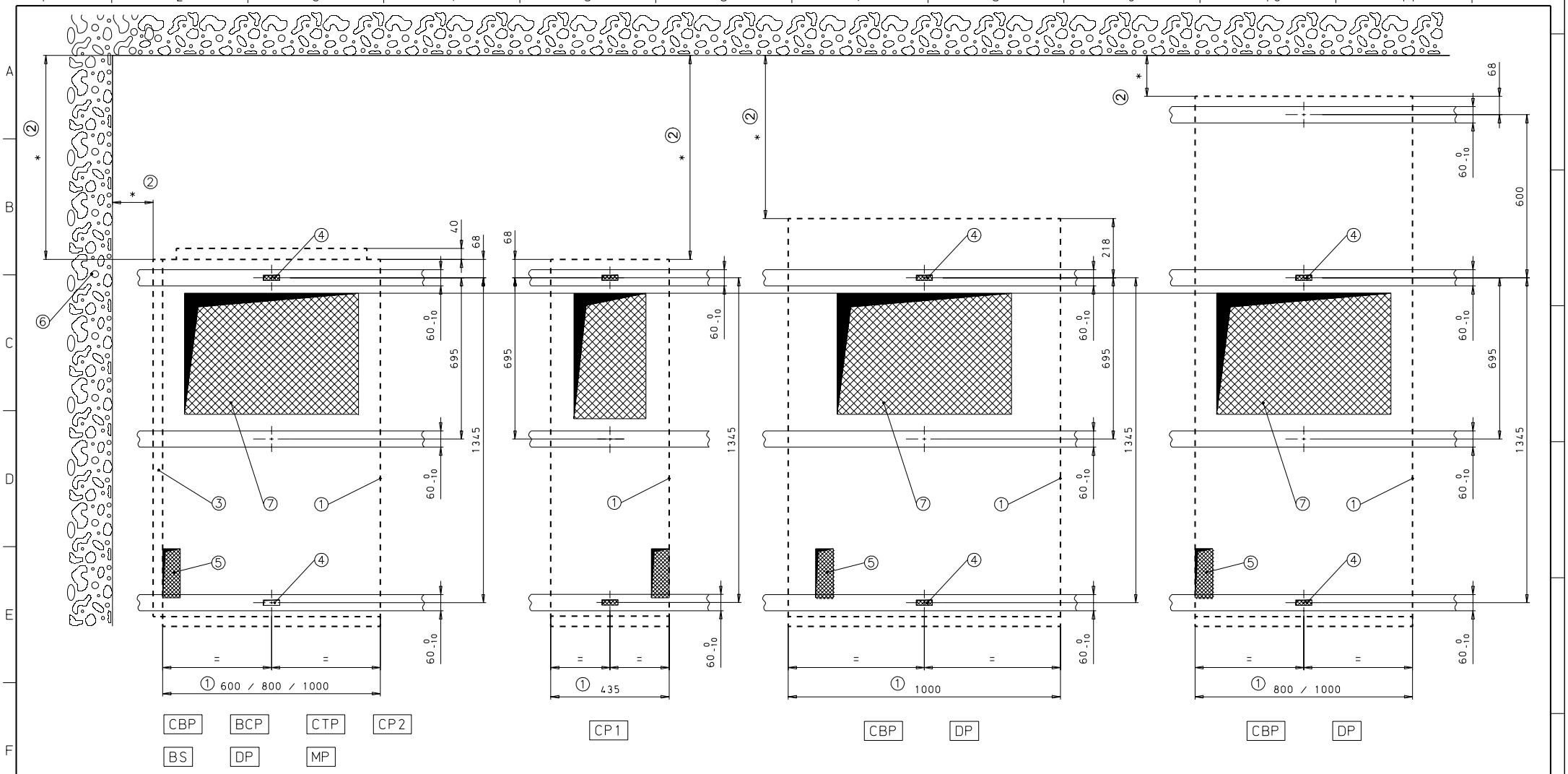

* siehe Blätter 21 und 22
see pages 21 and 22

Lage Fundamentschienen
Location foundation rails

Tolerance Toleranz (ISO) DIN ISO 2768-m	Material:Werkstoff	Mass Masse kg: lb:	Papersize Format A2	17-01-2017	Coelho	Date Datum 12-04-2011		Designation Benennung Dimension_drawing_NXAIR	ISO-Proj.
		Unit;Einheit Millimeters	Scale Massstab w/o	Date Datum	Name Name	Name A. TENGER			
	Material No,1/Nr,1 / Material No,2/Nr,2		Released Freigabe	20170688	04	Department Abteilung E_D_MV_1_R&D			Page Blatt 28+
				Mod,/Ref-No, Aend,-/Vorg,-Nr,	Revision Revision	Location Standort GEBZE	SIEMENS	Itemnumber;Sachnummer 110_0262_9	

Als Betriebsgeheimnis anvertraut. Alle Rechte vorbehalten.
Proprietary data, company confidential. All rights reserved.

Confià a títre de secret d'enterprise. Tous droits reserves.
Comunicado como segredo empresarial. Reservados todos os direitos.
Confiado como secreto industrial. Nos reservamos todos los derechos.

Confià a titre de secret d'enterprise. Tous droits reserves.
Comunicado como segredo empresarial. Reservados todos os direitos.
Confiado como secreto industrial. Nos reservamos todos los derechos.

Als Betriebsgeheimnis anvertraut. Alle Rechte vorbehalten.
Proprietary data, company confidential. All rights reserved.

Hinweis zum Kabelanschluss / Note for panel connection

Feldanschluss mit konventionellen Endverschlüssen bis max. 6 x 500 mm^2 Einleiter oder 6 x 240 mm^2 Dreileiter je Phase.

Panel connection with conventional cable terminal up to max. 6 x 500 mm^2 single case or 6 x 240 mm^2 three core per phase.

Hinweis zum Fundament / Note for foundation construction

Als Fundament eignet sich ein Stelzenboden, Doppelboden oder ein Stahlbetonfundament. Der Stahlbetonboden muss mit Fundamentschienen ausgerüstet werden, auf denen die Schaltfelder stehen müssen.
Toleranz des Fundament nach DIN 43661: Geradheit 1 mm pro 1 m Länge und 2 mm für die Gesamtlänge
Ebenheit 1 mm innerhalb von 1 m Messlänge.

The foudation construction must be done as a false floor, double floor or a concrete foundation.
The concrete foundation must have foundation rails, on witch the switchgear are based.
Tolerance band like DIN 43661: Straightness 1 mm to 1 m lenght and 2 mm at overall length
Evenness 1 mm to 1 m measuring length.

Fastening the switchgear to the foundation
Befestigung der Anlage am Fundament

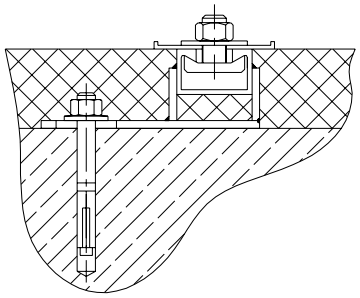

Bolted fixing

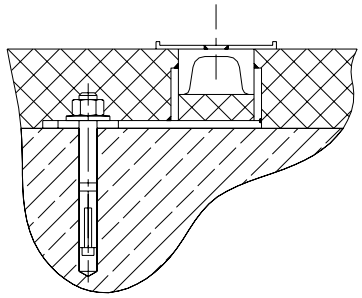

Welded floor fixing

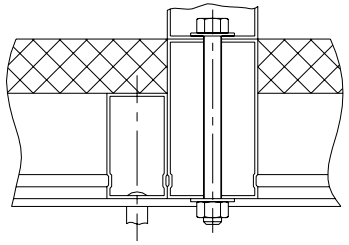

Fixing on double floor

Allgemeine Hinweise
General information

Tolerance Toleranz (ISO) DIN ISO 2768-m	Material;Werkstoff	Mass Masse kg: lb:	Papersize Format A2	17-01-2017	Coelho	Date Datum	12-04-2011	Designation Benennung Dimension_drawing_NXAIR	ISO-Proj.
		Unit;Einheit Millimeters	Scale Massstab w/o	Date Datum	Name Name	Name Name	A. TENGER		
	Material No.1/Nr.1 / Material No.2/Nr.2		Released Freigabe	20170688	04	Department Abteilung	E_D_MV_1_R&D		Page Blatt 29+
				Mod./Ref-No. Aend.-/Vorg.-Nr.	Revision Revision	Location Standort	GEBZE	Itemnumber;Sachnummer 110_0262_9	
						SIEMENS			

Confià a titre de secret d'enterprise. Tous droits reserves.
Comunicado como segredo empresarial. Reservados todos os direitos.
Confiado como secreto industrial. Nos reservamos todos los derechos.

Als Betriebsgeheimnis anvertraut. Alle Rechte vorbehalten.
Proprietary data, company confidential. All rights reserved.

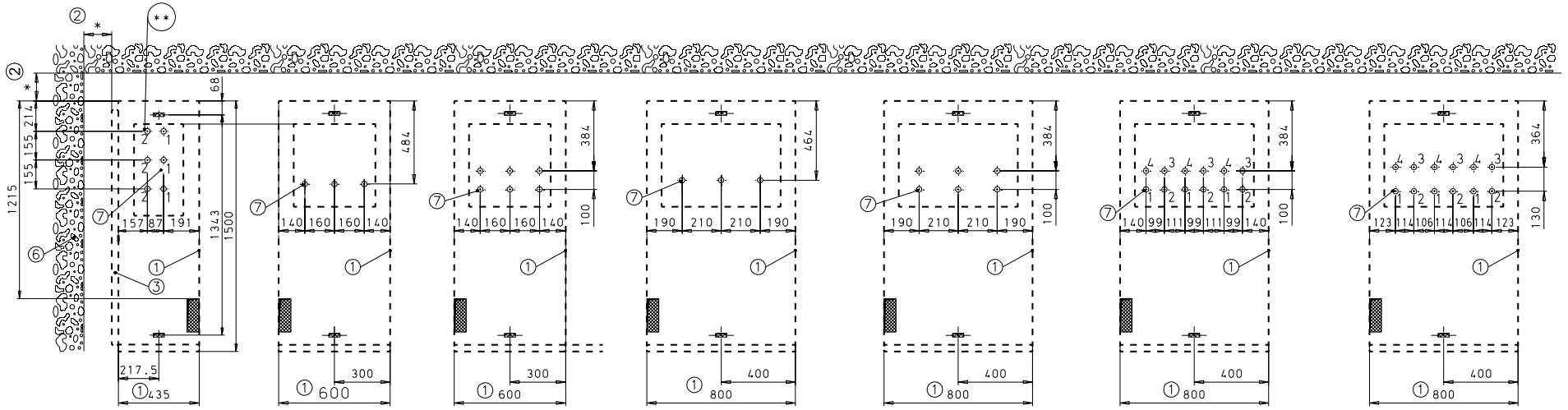

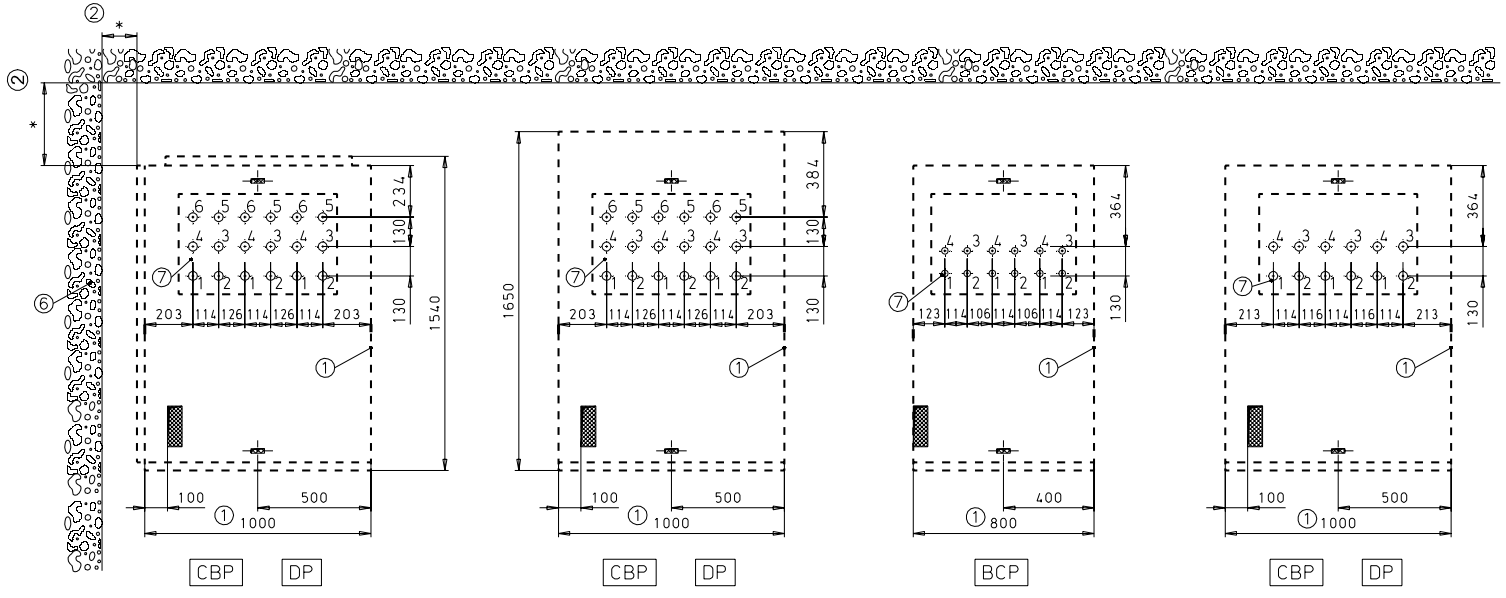

Durchmesser Kernbohrung
entsprechend Kabeldurchmesser

Cross section tapping drill hole
corresponding to cross section cable

* siehe Blätter 21 und 22
see pages 21 and 22

** In case of 3EF3 surge limiter installation, only second cable (2) row avaliable

Kernbohrungen für Einleiterkabel
Tapping drill hole for single case cables

Tolerance Toleranz (ISO) DIN ISO 2768-m	Material:Werkstoff	Mass Masse kg: lb:	Papersize Format A2	17-01-2017 Date Datum	Coelho Name Name	Date Datum 12-04-2011	Designation Benennung Dimension_drawing_NXAIR
		Unit;Einheit Millimeters	Scale Massstab w/o			Name Name A. TENGER	
	Material No.1/Nr.1 / Material No.2/Nr.2		Released Freigabe	20170688 Mod.;Ref-No. Aend.-/Vorg.;Nr.	04 Revision Revision	Department Abteilung E_D_MV_1_R&D	Itemnumber;Sachnummer 110_0262_9
						Location Standort GEBZE	
						SIEMENS	ISO-Proj. Page Blatt 30+

Confià a titre de secret d'enterprise. Tous droits reserves.
Comunicado como segredo empresarial. Reservados todos os direitos.
Confiado como secreto industrial. Nos reservamos todos los derechos.

Als Betriebsgeheimnis anvertraut. Alle Rechte vorbehalten.
Proprietary data, company confidential. All rights reserved.

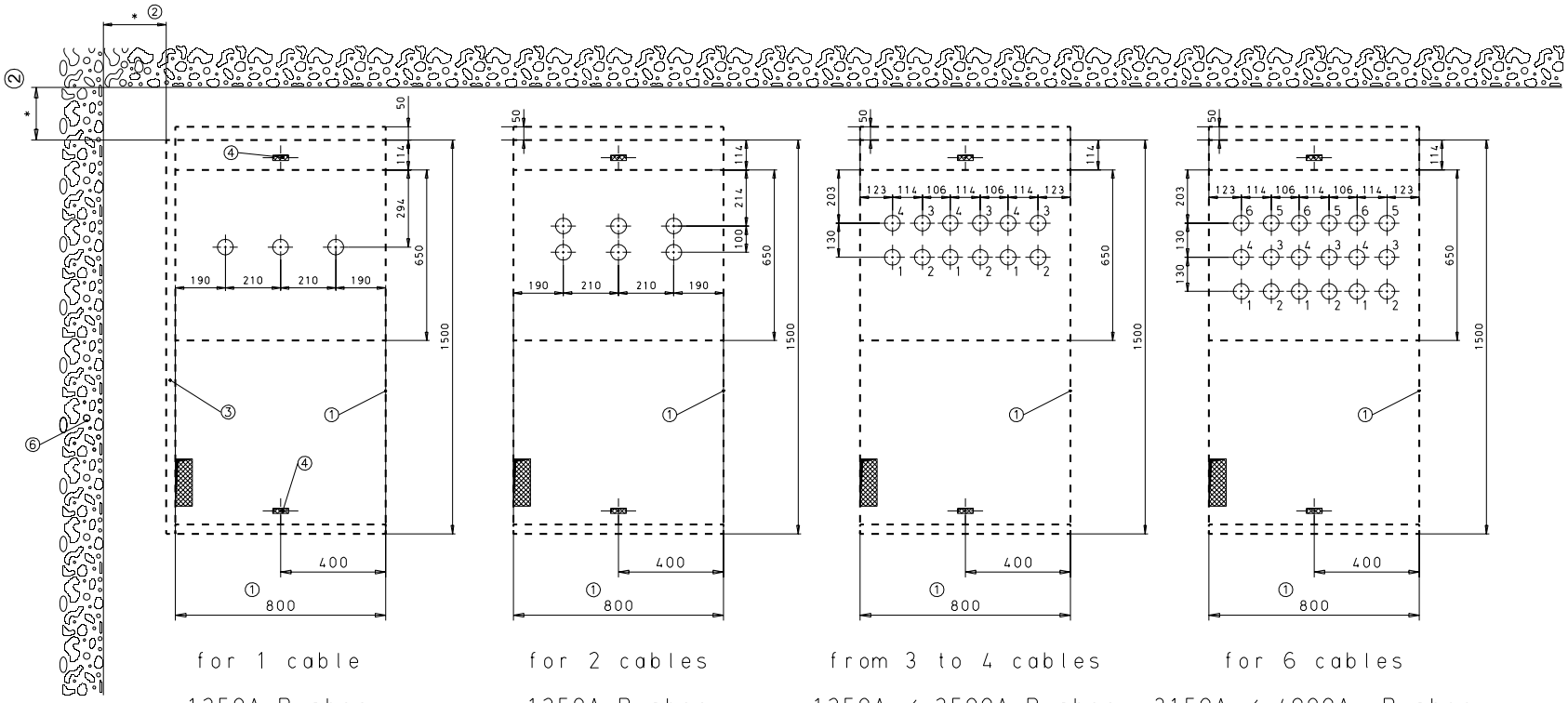

* siehe Blätter 21 und 22
see pages 21 and 22

Sammelschienenhochführung, Lage der Kabel
Connection to BB from top via top box,
Location of cables

Tolerance Toleranz (ISO) DIN ISO 2768-m	Material;Werkstoff	Mass Masse kg: lb:	Papersize Format A2	17-01-2017	Coelho	Date Datum 12-04-2011		Designation Benennung Dimension_drawing_NXAIR	ISO-Proj.
		Unit;Einheit Millimeters	Scale Massstab w/o	Date Datum	Name Name	Name Name A. TENGER			
	Material No,1/Nr,1 / Material No,2/Nr,2		Released Freigabe	20170688	04	Department Abteilung E_D_MV_1_R&D			Page Blatt 31+
				Mod,/Ref-No, Aend,-/Vorg,-Nr,	Revision Revision	Location Standort GEBZE	SIEMENS	Itemnumber;Sachnummer 110_0262_9	

Als Betriebsgeheimnis anvertraut. Alle Rechte vorbehalten.
Proprietary data, company confidential. All rights reserved.

Confié a titre de secret d'enterprise. Tous droits reserves.
Comunicado como segredo empresarial. Reservados todos os direitos.
Confiado como secreto industrial. Nos reservamos todos los derechos.

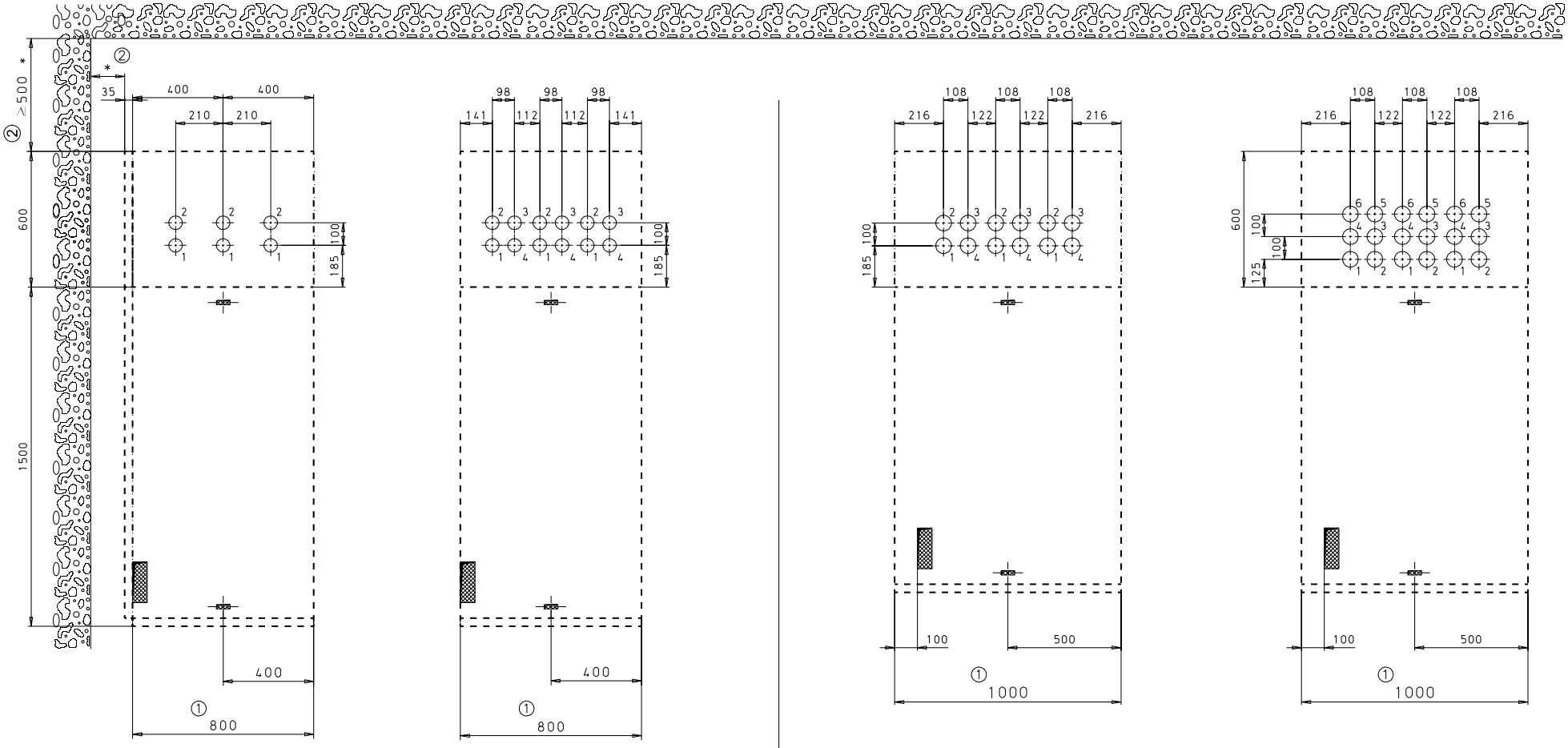

CBP DP

from 1 to 2 cables

1000A / 1250A

CBP DP

from 3 to 4 cables

1000A / 1250A / 2000A

CBP DP

from 3 to 4 cables

2500A

CBP DP

for 6 cables

3150A / 4000A

* siehe Blätter 21 und 22
see pages 21 and 22

Rucksack, Lage der Kabel
Rear box / connection from top,
Location of cables

Tolerance Toleranz (ISO) DIN ISO 2768-m	Material:Werkstoff	Mass Masse kg: lb:	Papersize Format A2	17-01-2017	Coelho	Date Datum 12-04-2011		Designation Benennung Dimension_drawing_NXAIR	ISO-Proj.
		Unit:Einheit Millimeters	Scale Massstab w/o	Date Datum	Name Name	Name A. TENGER			
				20170688	04	Department Abteilung E_D_MV_1_R&D			Page Blatt 32+
	Material No.1/Nr.1 / Material No.2/Nr.2		Released Freigabe	Mod./Ref-No. Aend./Vorg.-Nr.	Revision Revision	Location Standort GEBZE	SIEMENS	Itemnumber;Sachnummer 110_0262_9	

Confià a titre de secret d'enterprise. Tous droits reserves.
Comunicado como segredo empresarial. Reservados todos os direitos.
Confiado como secreto industrial. Nos reservamos todos los derechos.

Als Betriebsgeheimnis anvertraut. Alle Rechte vorbehalten.
Proprietary data, company confidential. All rights reserved.

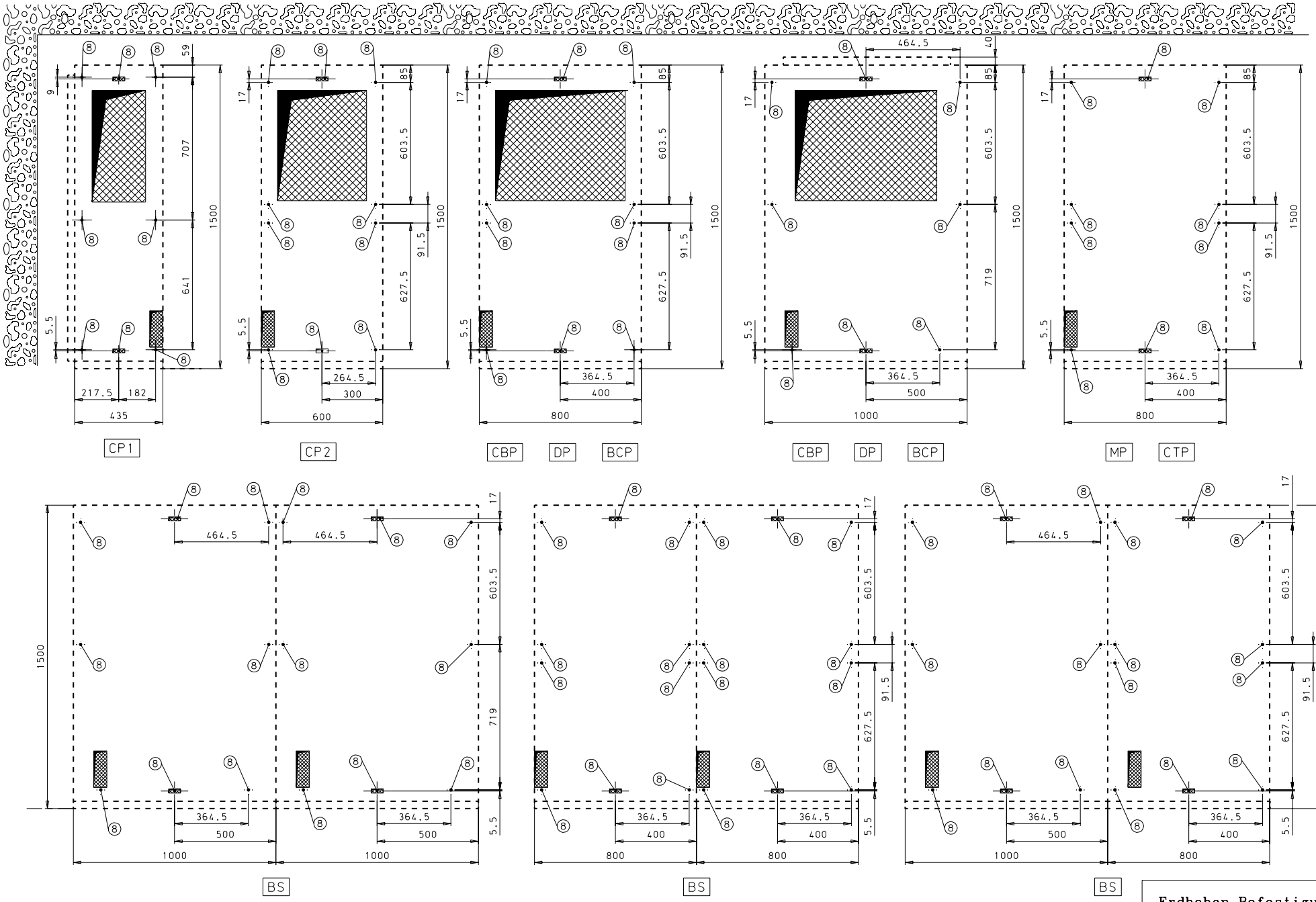

⑧ Befestigunkspunkte / Fixing points

Note: to use drilling jigs see page 36-38

Erdbeben Befestigungspungte
Seism fixation points

Tolerance / Toleranz (ISO): DIN ISO 2768-m	Material:Werkstoff	Mass / Masse kg: lb:	Papersize / Format: A2	17-01-2017	Coelho	Date / Datum: 12-04-2011		Designation / Benennung: Dimension_drawing_NXAIR	ISO-Proj.
		Unit/Einheit: Millimeters	Scale / Massstab: w/o	Date / Datum	Name / Name	Name: A. TENGER			
	Material No,1/Nr,1	Material No,2/Nr,2	Released / Freigabe	20170688	04	Department / Abteilung: E_D_MV_1_R&D			Page / Blatt: 33+
				Mod,/Ref-No, Aend,-/Varg,-Nr,	Revision / Revision	Location / Standort: GEBZE	SIEMENS	Itemnumber,Sachnummer: 110_0262_9	

Confià a titre de secret d'enterprise. Tous droits reserves.
Comunicado como segredo empresarial. Reservados todos os direitos.
Confiado como secreto industrial. Nos reservamos todos los derechos.

Als Betriebsgeheimnis anvertraut. Alle Rechte vorbehalten.
Proprietary data, company confidential. All rights reserved.

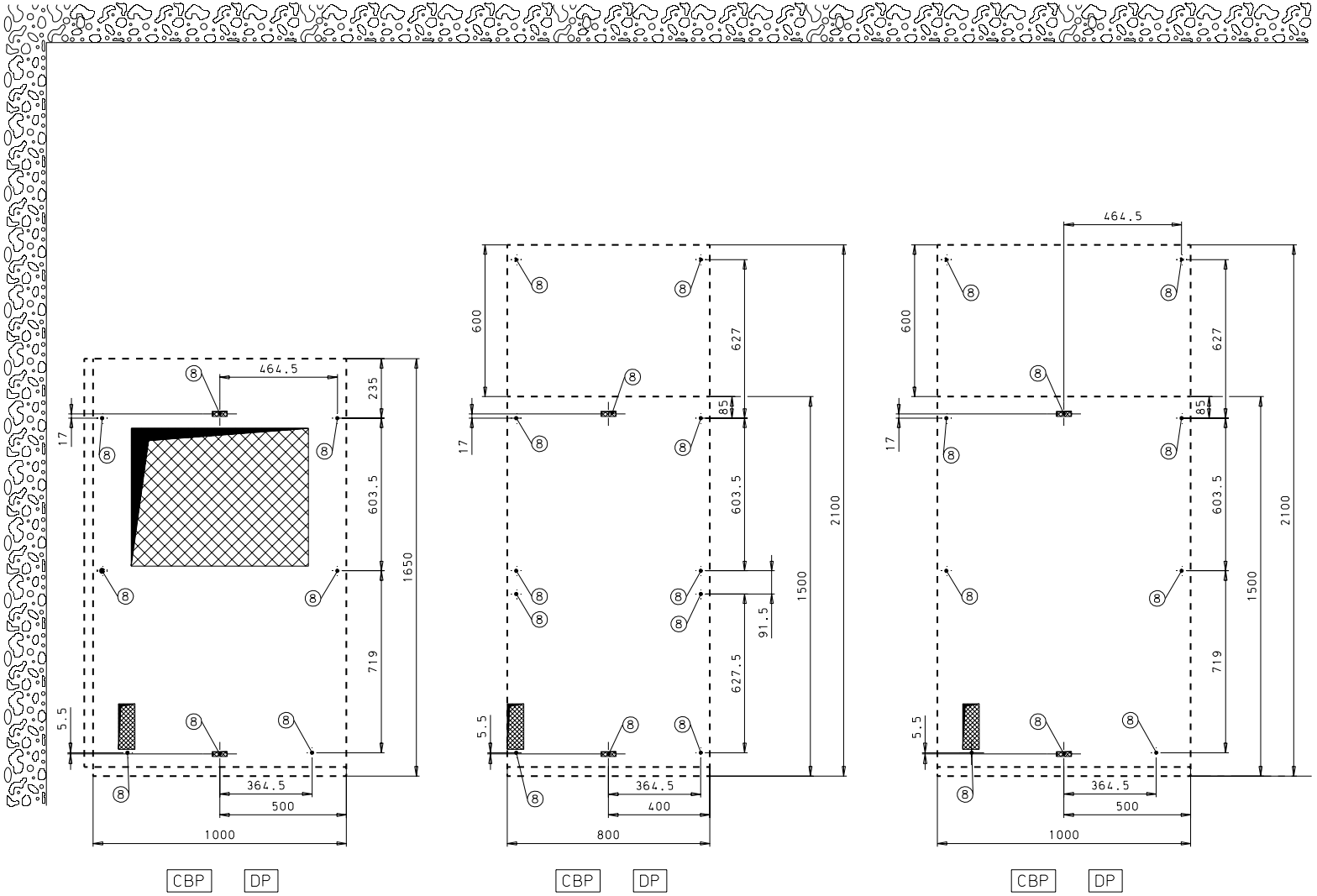

⑧ Befestigunkspunkte / Fixing points

Note: to use drilling jigs see page 36-38

Erdbeben Befestigungspunte
Seism fixation points

Tolerance / Toleranz (ISO): DIN ISO 2768-m	Material:Werkstoff	Mass / Masse kg: lb:	Papersize / Format: A2	17-01-2017	Coelho	Date / Datum: 12-04-2011		Designation / Benennung: Dimension_drawing_NXAIR	ISO-Proj.
		Unit:Einheit: Millimeters	Scale / Massstab: w/o	Date / Datum	Name / Name	Name: A. TENGER			
	Material No.1/Nr.1 / Material No.2/Nr.2		Released / Freigabe	20170688	04	Department / Abteilung: E_D_MV_1_R&D			Page / Blatt: 34+
				Mod./Ref-No. Aend.-/Varg.-Nr.	Revision / Revision	Location / Standort: GEBZE	SIEMENS	Itemnumber;Sachnummer: 110_0262_9	

Confià a titre de secret d'enterprise. Tous droits reserves.
Comunicado como segredo empresarial. Reservados todos os direitos.
Confiado como secreto industrial. Nos reservamos todos los derechos.

Als Betriebsgeheimnis anvertraut. Alle Rechte vorbehalten.
Proprietary data, company confidential. All rights reserved.

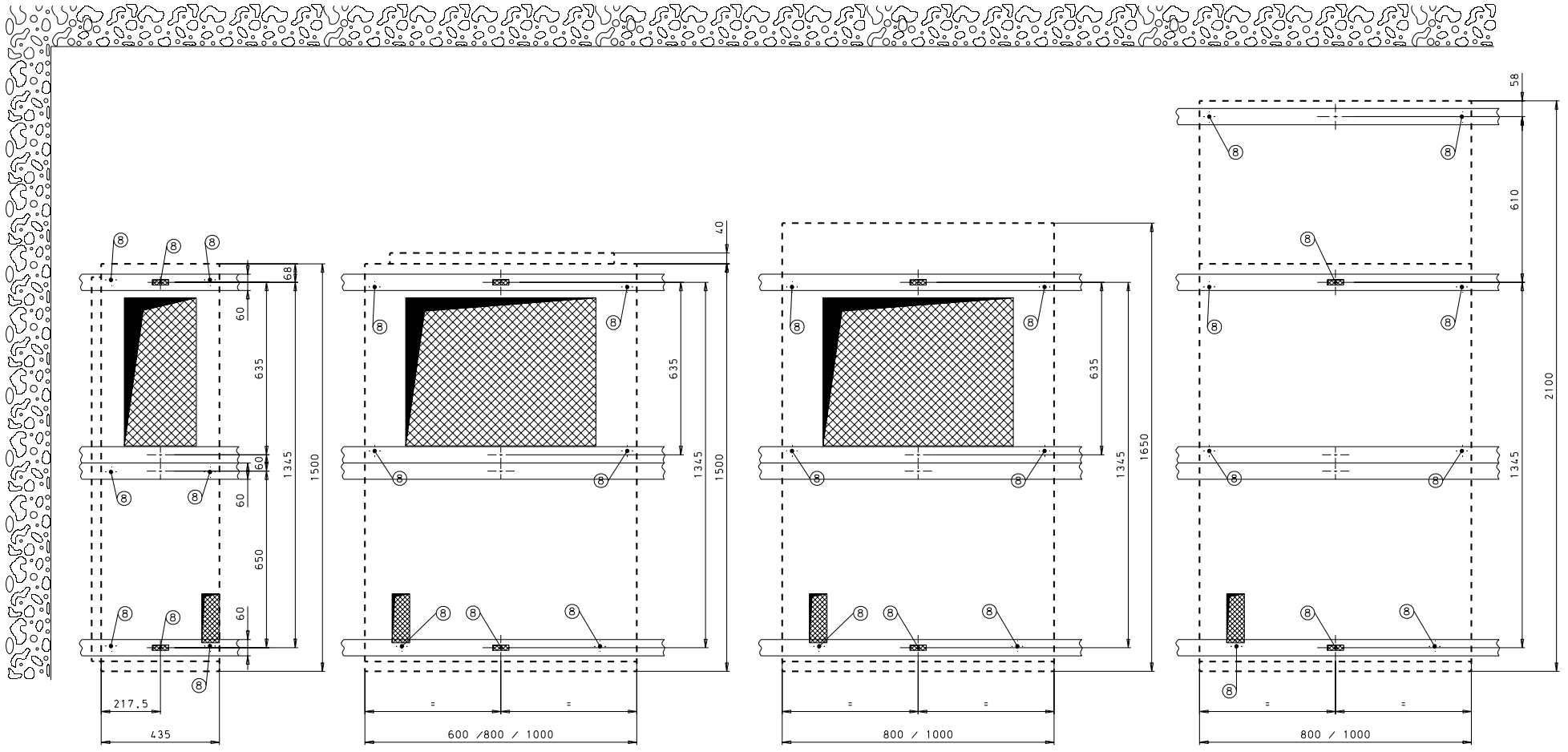

Lage Fundamentschienen für Erdbeben Befestigung
Location foundation rails for seism feinforcement

Tolerance / Toleranz (ISO): DIN ISO 2768-m	Material:Werkstoff	Mass / Masse kg: lb:	Papersize / Format: A2	17-01-2017	Coelho	Date / Datum: 12-04-2011	Designation / Benennung: Dimension_drawing_NXAIR
		Unit:Einheit: Millimeters	Scale / Massstab: w/o	Date / Datum	Name / Name	Name: A. TENGER	ISO-Proj.
	Material No.1/Nr.1 / Material No.2/Nr.2		Released / Freigabe	20170688	04	Department / Abteilung: E_D_MV_1_R&D	Page / Blatt: 35+
				Mod./Ref-No. Aend.-/Vorg.-Nr.	Revision / Revision	Location / Standort: GEBZE	Itemnumber;Sachnummer: 110_0262_9
						SIEMENS	

Confià a titre de secret d'enterprise. Tous droits reserves.
Comunicado como segredo empresarial. Reservados todos os direitos.
Confiado como secreto industrial. Nos reservamos todos los derechos.

Als Betriebsgeheimnis anvertraut. Alle Rechte vorbehalten.
Proprietary data, company confidential. All rights reserved.

1. Step

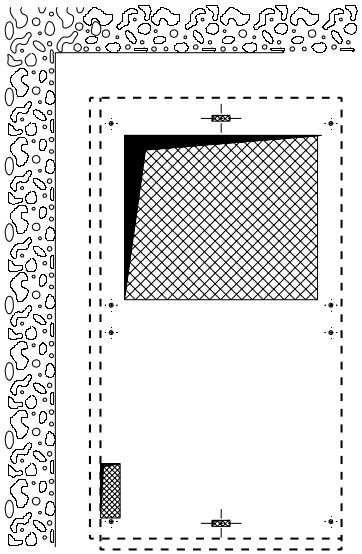

2. Step

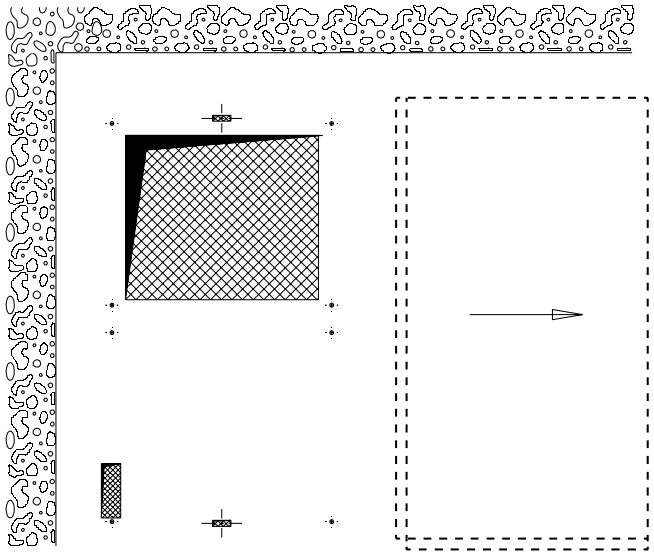

3. Step

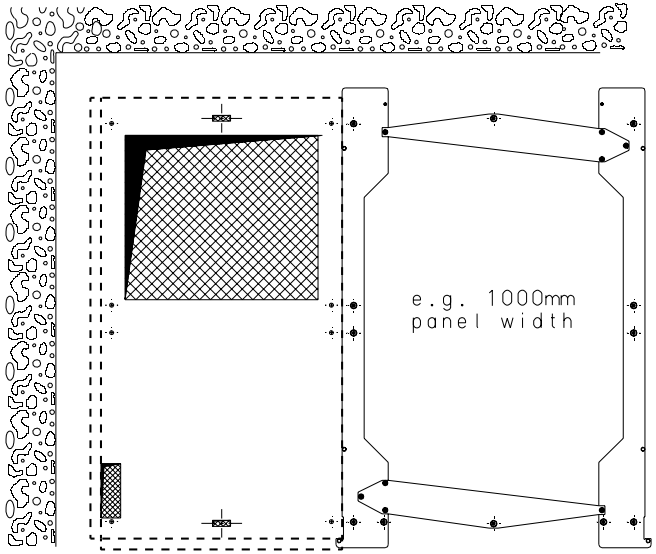

Fixing to concrete ground via drilling jig:

1. Step: - Adjust the first panel at the right place inside the room.
- Mark the connection points at the foundation for the seism fixation, number of holes at switching device and connection compartment see page 33-35, 38.

2. Step: - Move the panel away from the marks.
- At the Marks drill first with a drill bit Ø6mm, second with a drill bit Ø10mm. After that, drill the holes Ø15mm at the marks, for the anchor bolts, see page 33-35, 38.
- Put the anchor bolts into the holes and fix them with the tool 110-9397.3.

3. Step: - Move the panel to the foundation connection points and fix it with screws.
- Place the drilling jig at the side of the panel and the foundation floor.
- Mark the connection points first with a drill bit Ø6mm, second with a drill bit Ø10mm. After that, drill the holes with a drill bit Ø15mm at the foundation for the seism fixation. Number of holes at switching divice and connection compartment see page 33-35, 38.
- Put the anchor bolts into the holes and fix them with the tool 110-9397.3.
- Move the panel to the foundation connection points and fix it with screws.
- Take the next panel.
- Start step 3 again.

Tolerance Toleranz (ISO) DIN ISO 2768-m	Material;Werkstoff	Mass Masse kg: lb:	Papersize Format A2	17-01-2017	Coelho	Date Datum 12-04-2011		Erdbeben Verstärkung mit Schwerlastdübel Seism fixation with anchor bolts	
		Unit;Einheit Millimeters	Scale Massstab w/o	Date Datum	Name Name	Name Name A. TENGER		Designation Benennung Dimension_drawing_NXAIR	ISO-Proj.
	Material No,1/Nr,1 / Material No,2/Nr,2		Released Freigabe	20170688	04	Department Abteilung E_D_MV_1_R&D			Page Blatt 36+
				Mod,/Ref-No. Aend,-/Vorg,-Nr.	Revision Revision	Location Standort GEBZE	SIEMENS	Itemnumber;Sachnummer 110_0262_9	

Confià a titre de secret d'enterprise. Tous droits reserves.
Comunicado como segredo empresarial. Reservados todos os direitos.
Confiado como secreto industrial. Nos reservamos todos los derechos.

Als Betriebsgeheimnis anvertraut. Alle Rechte vorbehalten.
Proprietary data, company confidential. All rights reserved.

1. Step

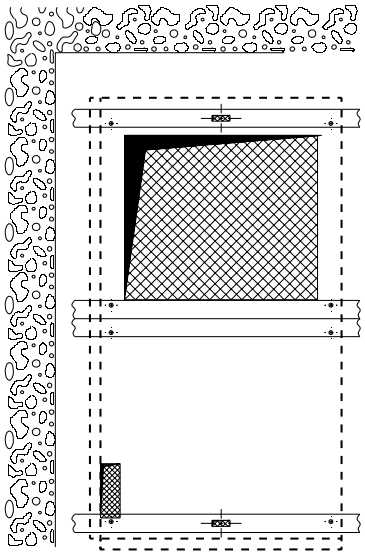

2. Step

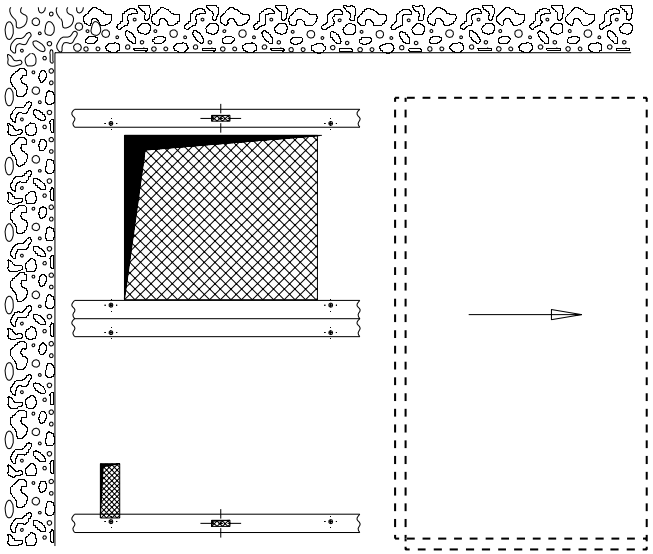

3. Step

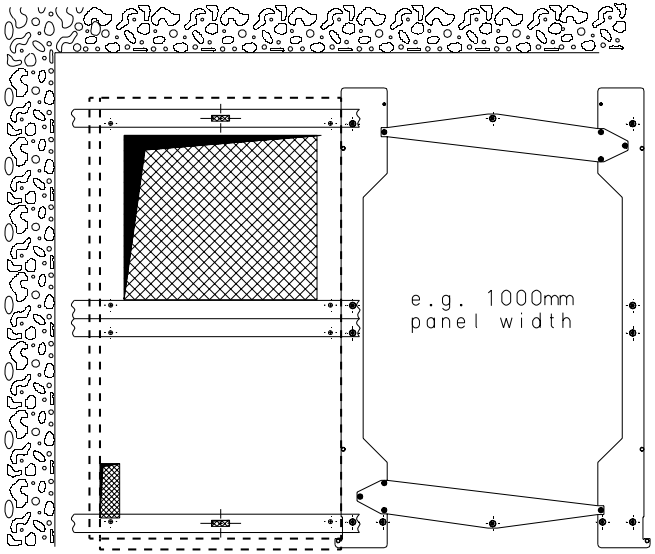

Fixing to foundation rails via drilling jig:

1. Step: - Adjust the first panel at the right place inside the room.
- Mark the connection points at the foundation for the seism fixation, number of holes at switching device and connection compartment see page 33-35, 38.

2. Step: - Move the panel away from the marks.
- At the Marks drill first with a drill bit Ø6mm, second with a drill bit Ø10,2mm. After that, make the thread M12 at the foundation rails for the seism fixation.

3. Step: - Move the panel to the foundation connection points and fix it with screws.
- Place the drilling jig at the side of the panel and the foundation floor.
- Mark the connection points first with a drill bit Ø6mm, second with a drill bit Ø10,2mm. After that, make the thread M12 at the foundation rails for the seism fixation. Number of holes at switching divice and connection compartment see page 33-35, 38.
- Move the panel to the foundation connection points and fix it with screws.
- Take the next panel.
- Start step 3 again.

Tolerance Toleranz (ISO) DIN ISO 2768-m	Material:Werkstoff	Mass Masse kg: lb:	Papersize Format A2	17-01-2017	Coelho	Date Datum	12-04-2011	Erdbeben Verstärkung mit langen Fundamentschienen Seism fixation with location foundation rails	
		Unit:Einheit Millimeters	Scale Massstab w/o	Date Datum	Name Name	Name Name	A. TENGER		
				20170688	04	Department Abteilung	E_D_MV_1_R&D	Designation Benennung Dimension_drawing_NXAIR	ISO-Proj.
	Material No.1/Nr.1 / Material No.2/Nr.2		Released Freigabe	Mod./Ref-No. Aend.-/Vorg.-Nr.	Revision Revision	Location Standort	GEBZE		Page Blatt 37+
						SIEMENS		Itemnumber;Sachnummer 110_0262_9	

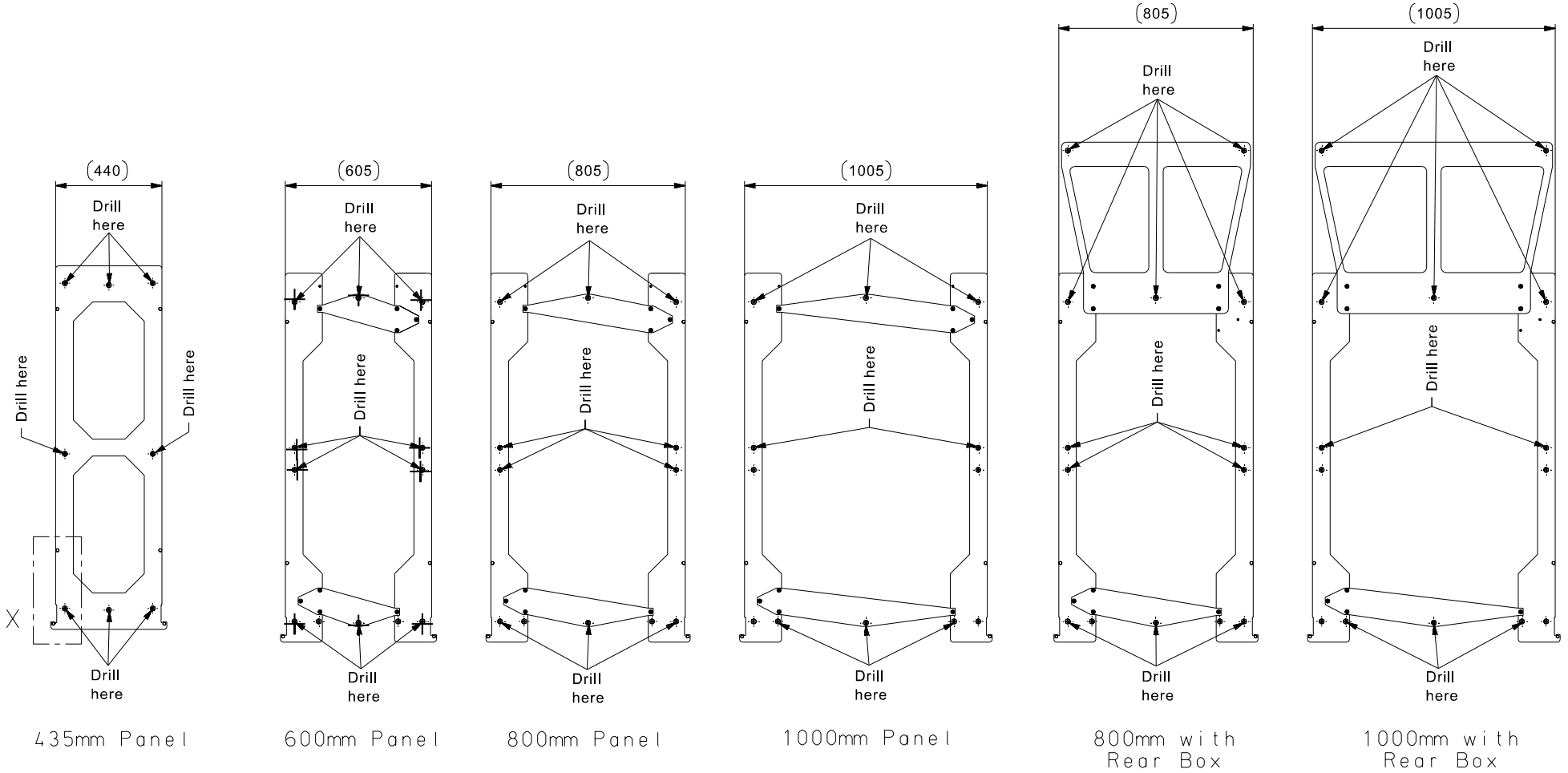

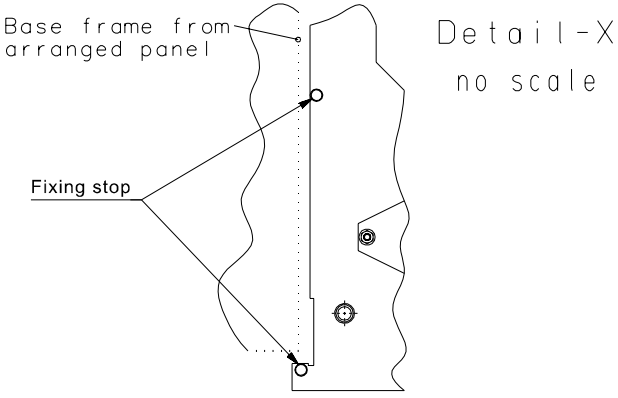

Confiè a titre de secret d'enterprise. Tous droits reserves.
Comunicado como segredo empresarial. Reservados todos os direitos.
Confiado como secreto industrial. Nos reservamos todos los derechos.

Als Betriebsgeheimnis anvertraut. Alle Rechte vorbehalten.
Proprietary data, company confidential. All rights reserved.

Bohrschablone für Erdbeben Befestigungspungte
Drilling jig for Seism fixation points

Tolerance / Toleranz (ISO): DIN ISO 2768-m	Material:Werkstoff	Mass / Masse kg: lb:	Papersize / Format: A2	17-01-2017	Coelho	Date / Datum: 12-04-2011	Designation / Benennung: Dimension_drawing_NXAIR
		Unit:Einheit: Millimeters	Scale / Massstab: w/o	Date / Datum	Name / Name	Name / Name: A. TENGER	ISO-Proj.
	Material No.1/Nr.1	Material No.2/Nr.2	Released / Freigabe	20170688	04	Department / Abteilung: E_D_MV_1_R&D	Page / Blatt: 38-
				Mod./Ref-No. / Aend.-Vorg.-Nr.	Revision / Revision	Location / Standort: GEBZE	Itemnumber:Sachnummer: 110_0262_9
						SIEMENS	

Confié à titre de secret d'enterprise. Tous droits reserves.
Comunicado como segredo empresarial. Reservados todos os direitos.
Confiado como secreto industrial. Todos los derechos reservados.

Als Betriebsgeheimnis anvertraut. Alle Rechte vorbehalten.
Proprietary data, company confidential. All rights reserved.

≤40kA, BB≤4000A

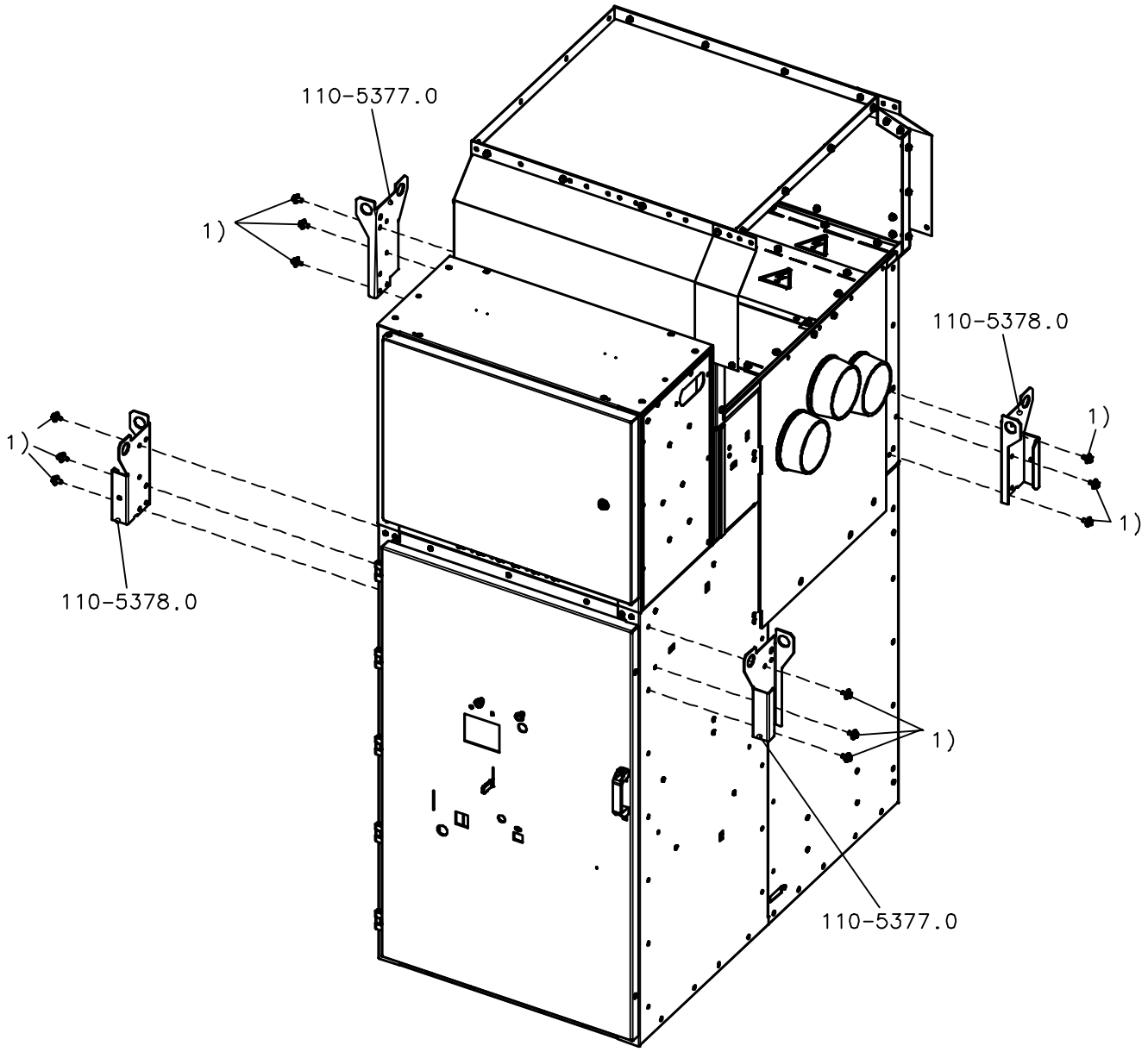

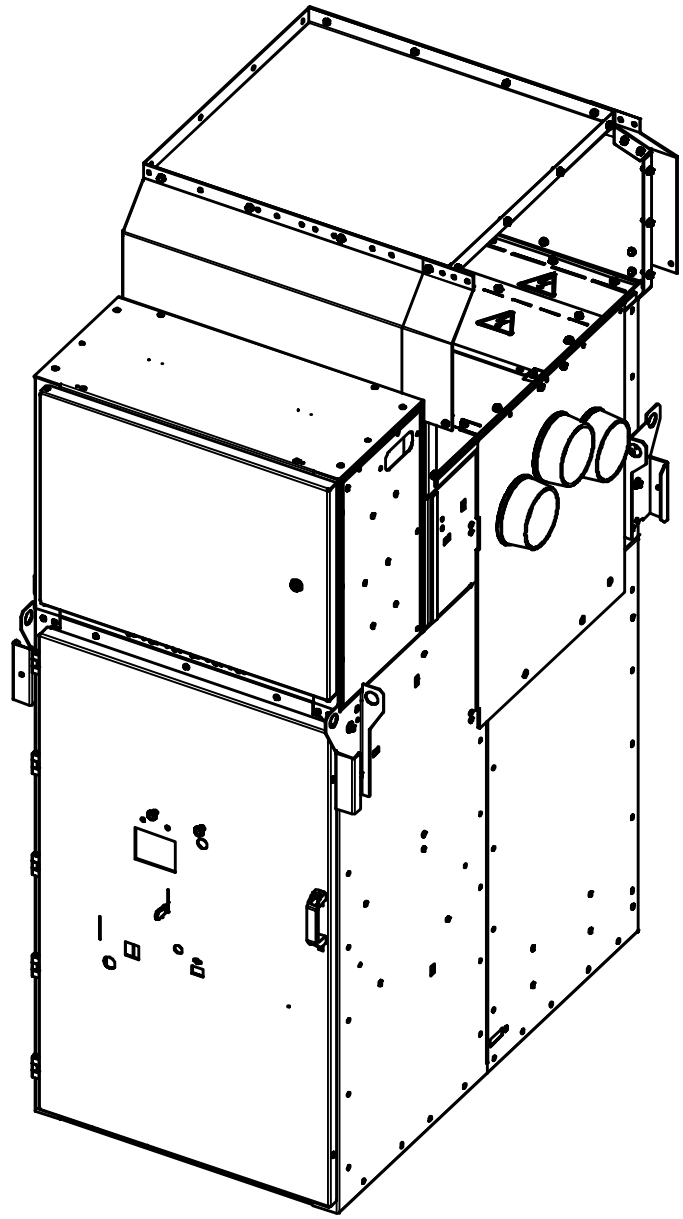

1) Combination screw M8x20 SN65480 +
Washer ISO7093-1-8-200 HV-A3L

Tolerance Toleranz (ISO)	Material;Werkstoff	Mass ; Masse	Papersize Format	16-10-2012	KAVAL	Date Datum	15-05-2012	Designation Benennung	ISO-Projection
-	-	-	B/A3	Date Datum	Name Name	Name Name	AYKOC	Transport materials 600/800mm	
--	-	Unit;Einheit mm	Scale Massstab 1:12	12/6641	01	Department Abteilung	IC_LMV_MV_1_R&D		Page Blatt 1+
	Material No./Nr. 1 SWF:(-)	Material No./Nr. 2	Released Freigabe Frei	Mod./Ref-No. Aend.-Vorg.-Nr.	Revision Revision	Location Standort	FFMCB	Itemnumber Sachnummer 110-0394.9	
						SIEMENS			

HPD

printed by oprtcual, 12/06/12-15:10:30

Confié a titre de secret d'enterprise. Tous droits reserves.
Comunicado como segredo empresarial. Reservados todos os direitos.
Confiado como secreto industrial. Todos los derechos reservados.

Als Betriebsgeheimnis anvertraut. Alle Rechte vorbehalten.
Proprietary data, company confidential. All rights reserved.

≤31.5kA, BB≤2500A

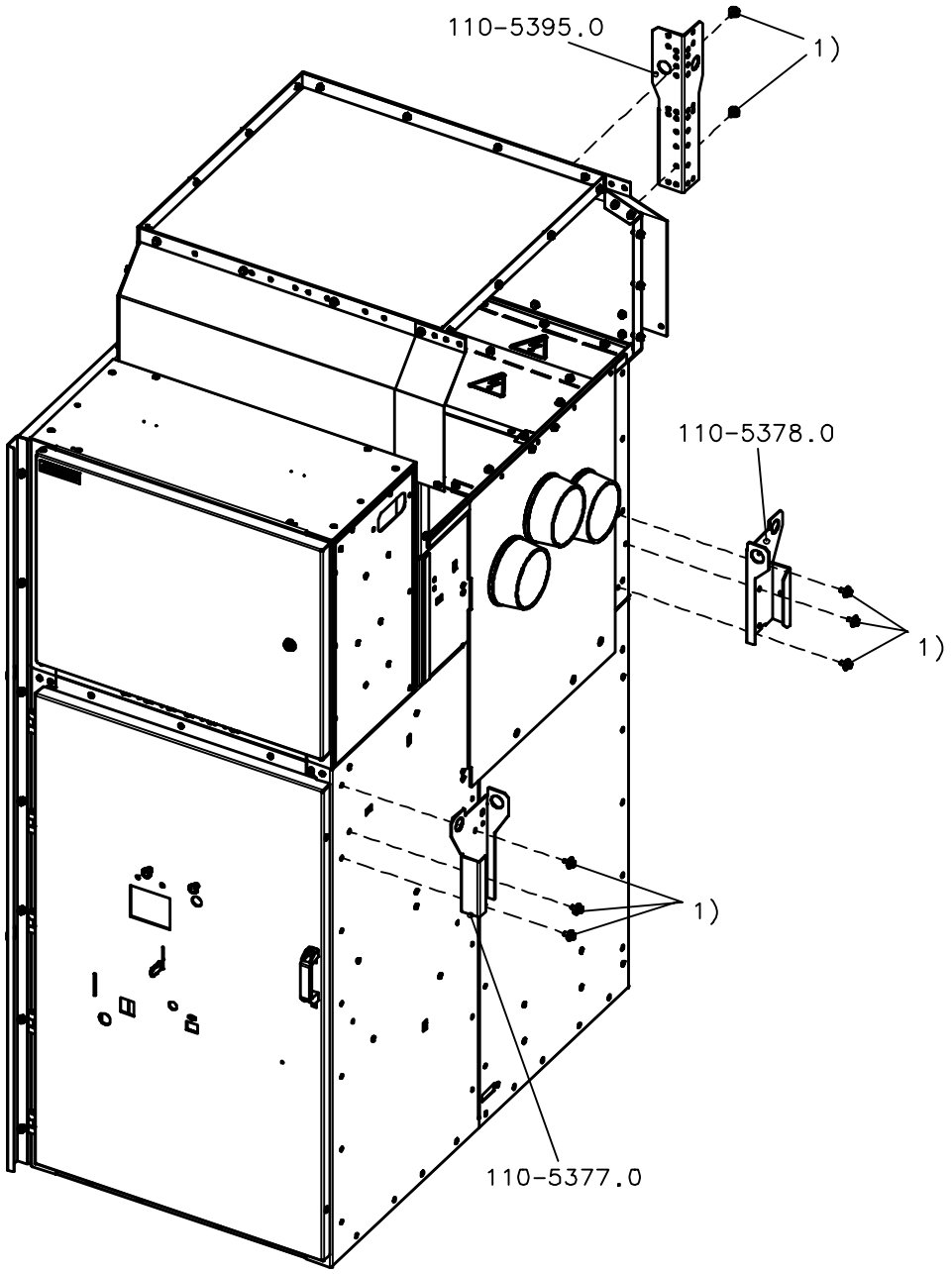

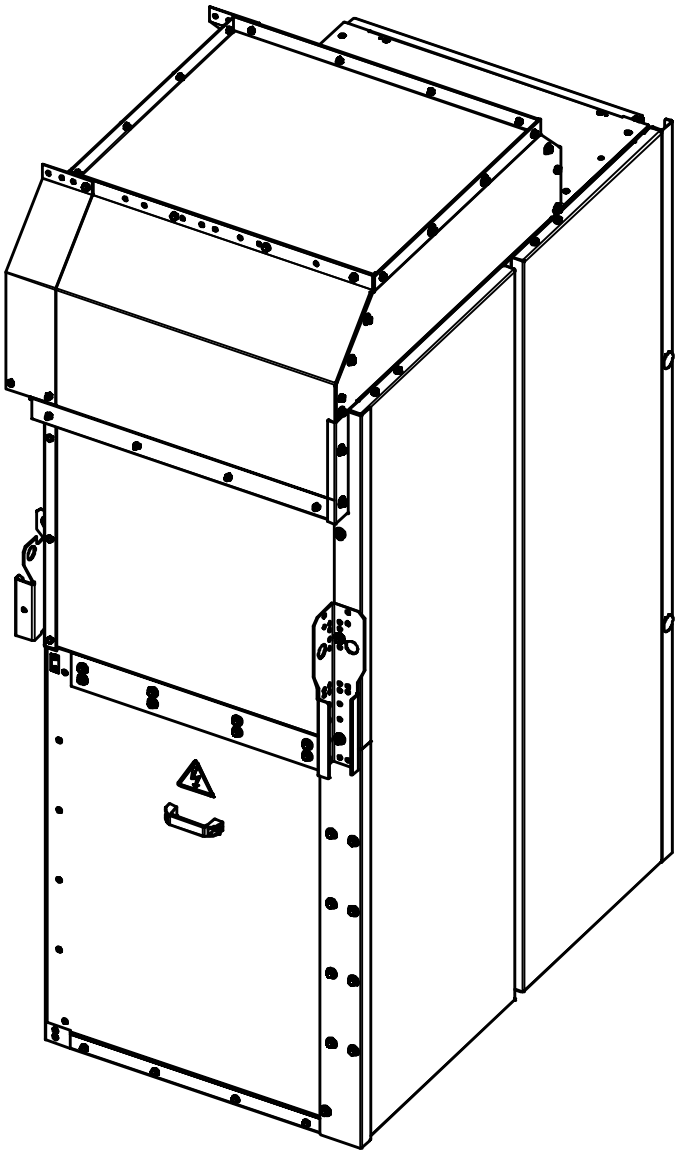

1) Combination screw M8x20 SN65480 +
Washer ISO7093-1-8-200 HV-A3L

Tolerance Toleranz (ISO)	Material;Werkstoff	Mass ; Masse	Papersize Format	16-10-2012	KAVAL	Date Datum	15-05-2012	Designation Benennung	ISO-Projection
-	-	-	B/A3			Name Name	AYKOC	Transport materials 600/800mm	
--	-	Unit;Einheit mm	Scale Massstab 1:12	Date Datum	Name Name	Department Abteilung	IC_LMV_MV_1_R&D		Page Blatt
	Material No./Nr. 1 SWF:(-)	Material No./Nr. 2	Released Freigabe Frei	12/6641	01	Location Standort	FFMCB	Itemnumber Sachnummer 110-0394.9	2+
				Mod./Ref-No. Aend.-Vorg.-Nr	Revision Revision	SIEMENS			

HPD

printed by oprtcual, 12/06/12-15:12:13

Confié à titre de secret d'enterprise. Tous droits reserves.
Comunicado como segredo empresarial. Reservados todos os direitos.
Confiado como secreto industrial. Todos los derechos reservados.

Als Betriebsgeheimnis anvertraut. Alle Rechte vorbehalten.
Proprietary data, company confidential. All rights reserved.

≤31.5kA, BB≤2500A

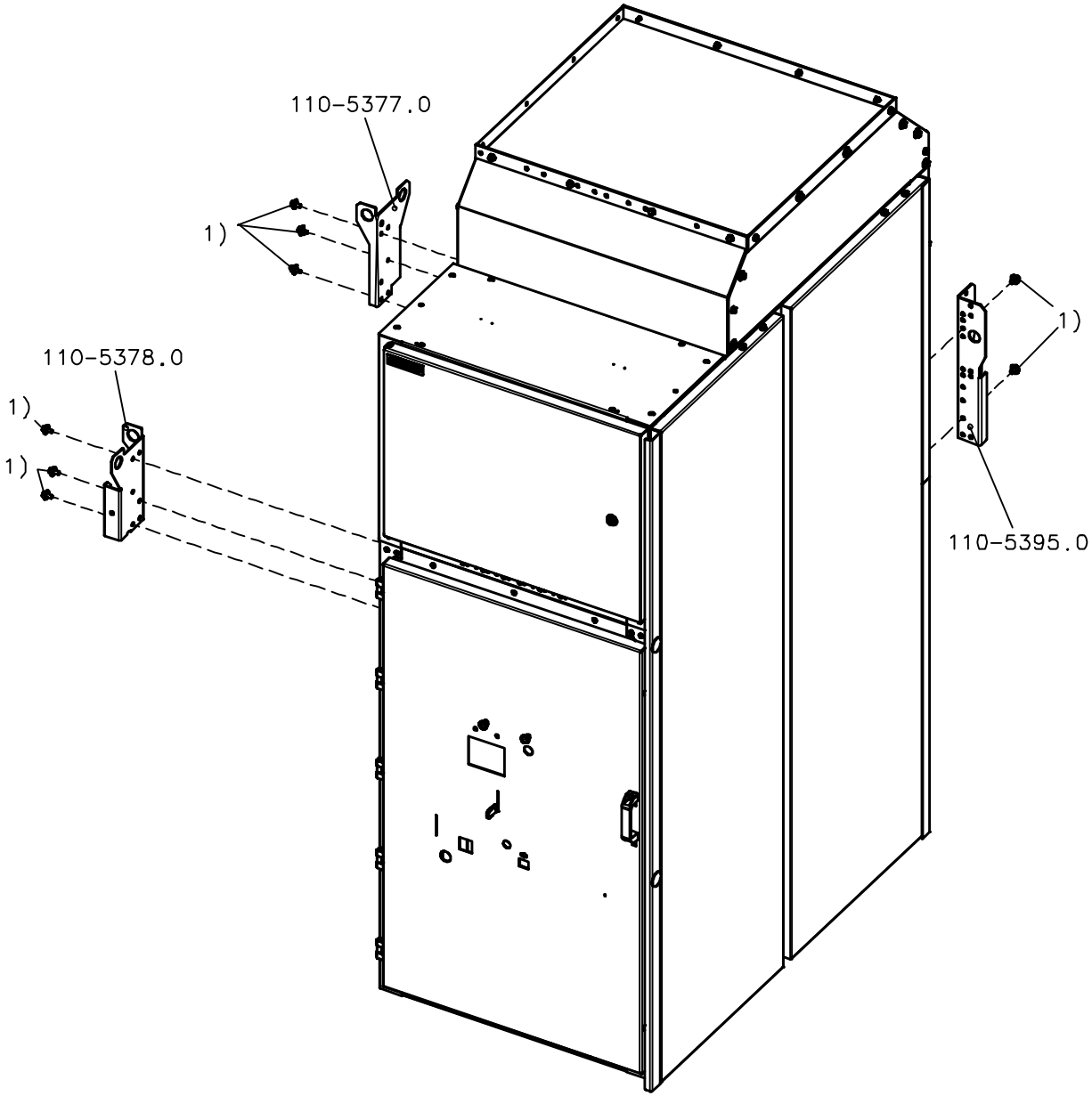

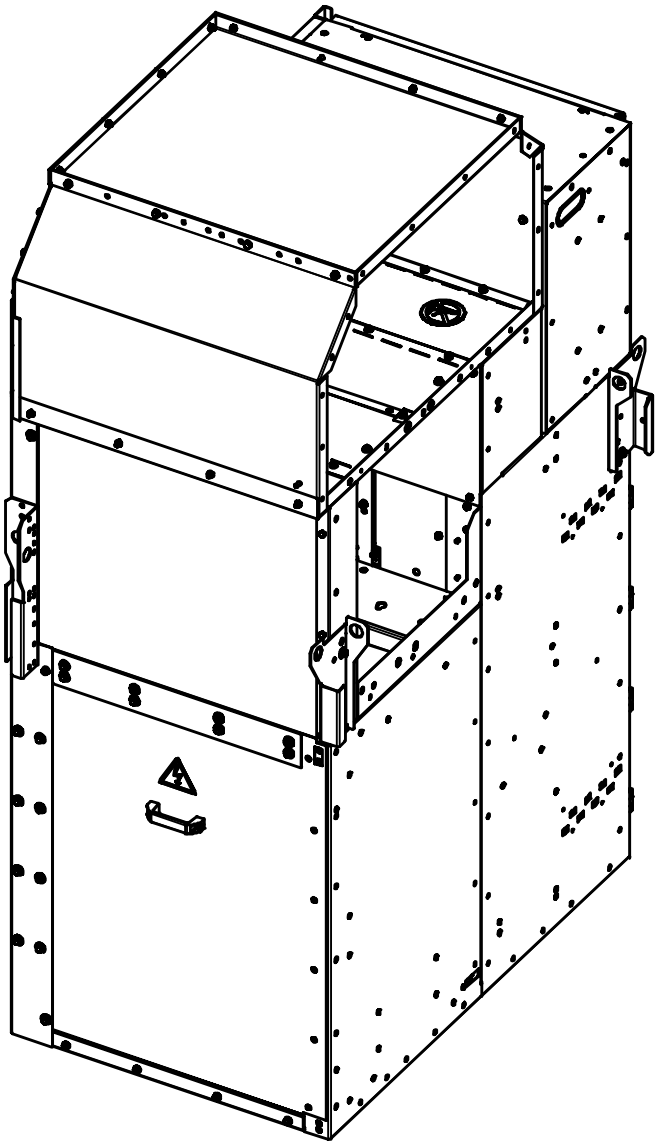

1) Combination screw M8x20 SN65480 +
Washer ISO7093-1-8-200 HV-A3L

Tolerance Toleranz (ISO) - --	Material;Werkstoff - -	Mass ; Masse - -	Papersize Format B/A3	16-10-2012	KAVAL	Date Datum	15-05-2012	Designation Benennung	ISO-Projection
		Unit;Einheit mm	Scale Massstab 1:12	Date Datum	Name Name	Name Name	AYKOC	Transport materials 600/800mm	
	Material No./Nr. 1 SWF:(-)	Material No./Nr. 2	Released Freigabe Frei	12/6641	01	Department Abteilung	IC_LMV_MV_1_R&D		Page Blatt 3+
				Mod./Ref-No. Aend.-Vorg.-Nr	Revision Revision	Location Standort	FFMCB	Itemnumber Sachnummer 110-0394.9	
						SIEMENS			

HPD

Confié à titre de secret d'enterprise. Tous droits reserves.
Comunicado como segredo empresarial. Reservados todos os direitos.
Confiado como secreto industrial. Todos los derechos reservados.

Als Betriebsgeheimnis anvertraut. Alle Rechte vorbehalten.
Proprietary data, company confidential. All rights reserved.

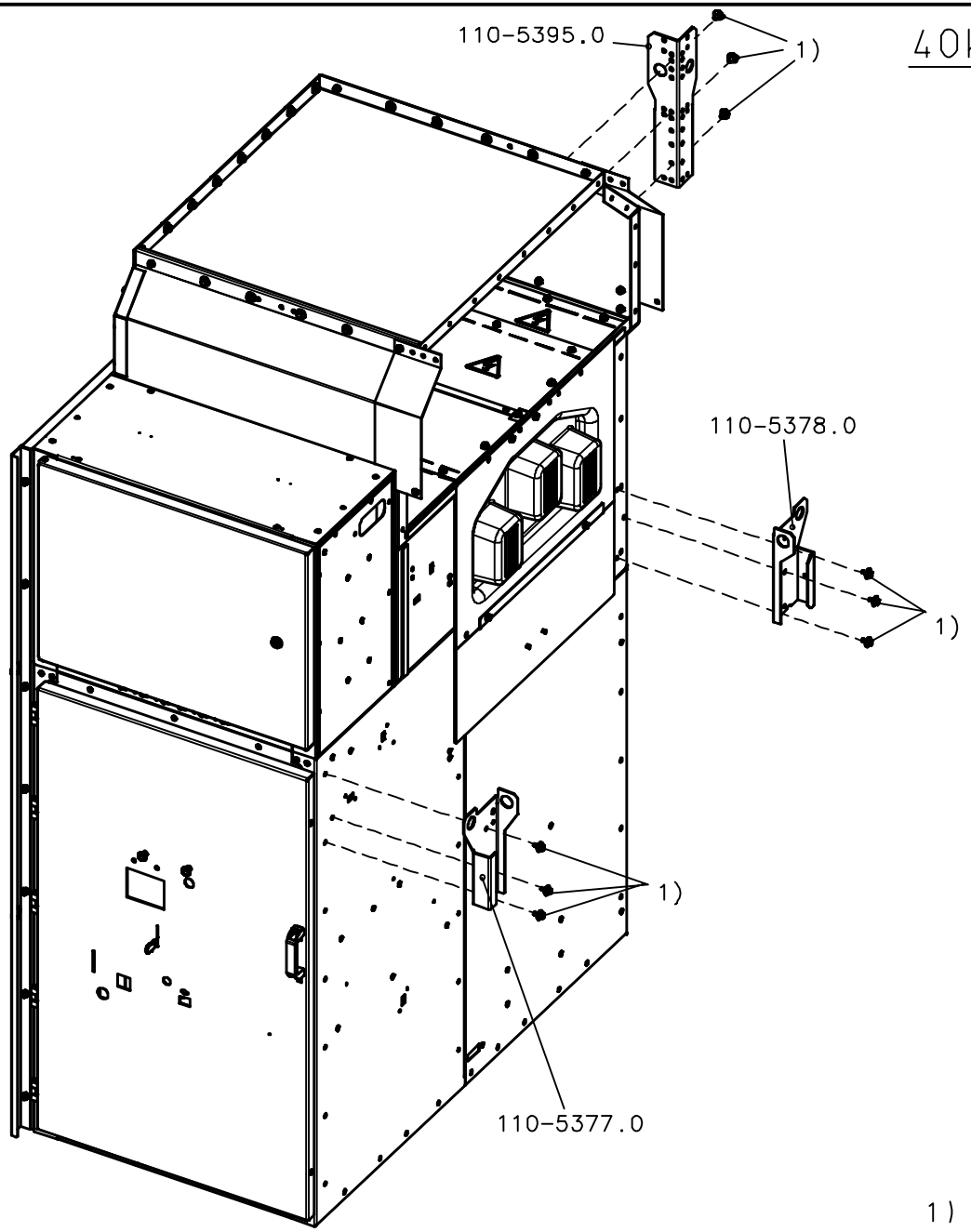

40kA,BB≤4000A or ≤31.5kA,BB≥3150A

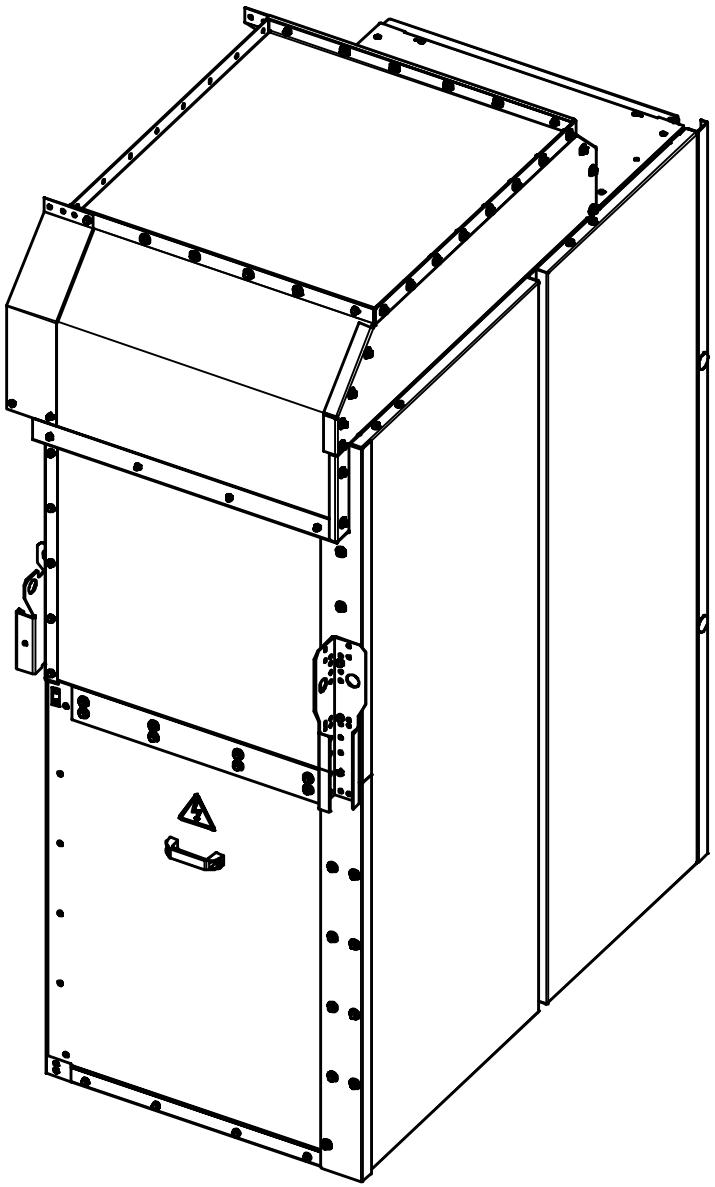

1) Combination screw M8x20 SN65480 +
Washer ISO7093-1-8-200 HV-A3L

Tolerance Toleranz (ISO)	Material;Werkstoff	Mass ; Masse	Papersize Format	16-10-2012	KAVAL	Date Datum	15-05-2012	Designation Benennung	ISO-Projection
-	-	-	B/A3	Date Datum	Name Name	Name Name	AYKOC	Transport materials 600/800mm	
--	-	Unit;Einheit mm	Scale Massstab 1:12	12/6641	01	Department Abteilung	IC_LMV_MV_1_R&D		Page Blatt
	Material No./Nr. 1 SWF:(-)	Material No./Nr. 2	Released Freigabe Frei	Mod./Ref-No. Aend.-Vorg.-Nr.	Revision Revision	Location Standort	FFMCB	Itemnumber Sachnummer 110-0394.9	4+

SIEMENS

HPD

printed by oprtcual, 12/06/12-15:11:38

Confié à titre de secret d'enterprise. Tous droits reserves.
Comunicado como segredo empresarial. Reservados todos os direitos.
Confiado como secreto industrial. Todos los derechos reservados.

Als Betriebsgeheimnis anvertraut. Alle Rechte vorbehalten.
Proprietary data, company confidential. All rights reserved.

40kA, BB≤4000A or ≤31.5kA, BB≥3150A

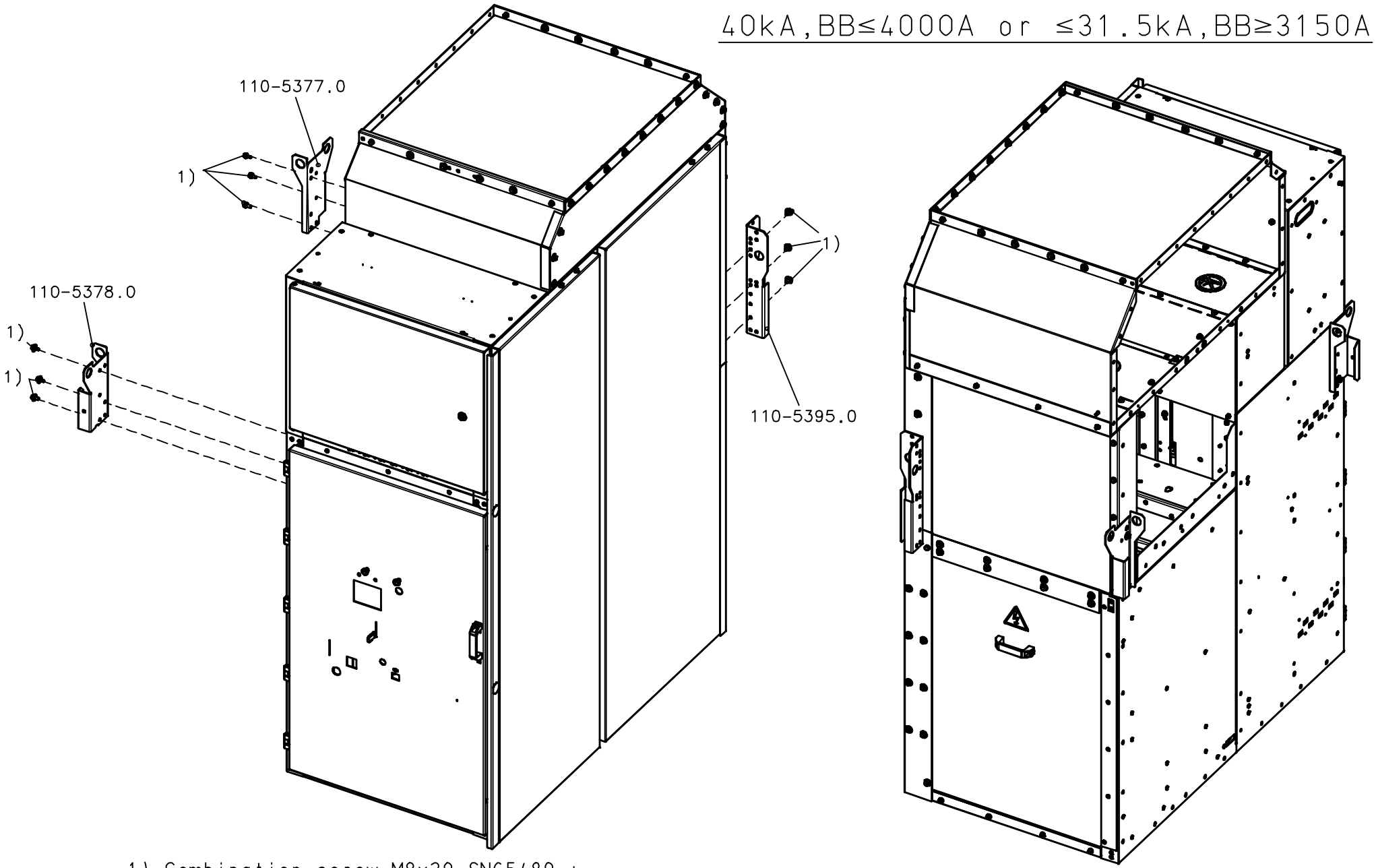

1) Combination screw M8x20 SN65480 +
Washer ISO7093-1-8-200 HV-A3L

Tolerance Toleranz (ISO)	Material;Werkstoff	Mass ; Masse	Papersize Format	16-10-2012	KAVAL	Date Datum	15-05-2012	Designation Benennung	ISO-Projection
-	-	-	B/A3	Date Datum	Name Name	Name Name	AYKOC	Transport materials 600/800mm	
--	-	-	Scale Massstab	12/6641	01	Department Abteilung	IC_LMV_MV_1_R&D		Page Blatt
	Material No./Nr. 1 SWF:(-)	Material No.2	Unit;Einheit mm			Location Standort	FFMCB		5-
			1:12	Mod./Ref-No. Aend.-Vorg.-Nr	Revision Revision	SIEMENS		Itemnumber Sachnummer 110-0394.9	
			Released Freigabe Frei						

HPD

Confié à titre de secret d'enterprise. Tous droits reserves.
Comunicado como segredo empresarial. Reservados todos os direitos.
Confiado como secreto industrial. Todos los derechos reservados.

Als Betriebsgeheimnis anvertraut. Alle Rechte vorbehalten.
Proprietary data, company confidential. All rights reserved.

≤40kA, BB≤4000A

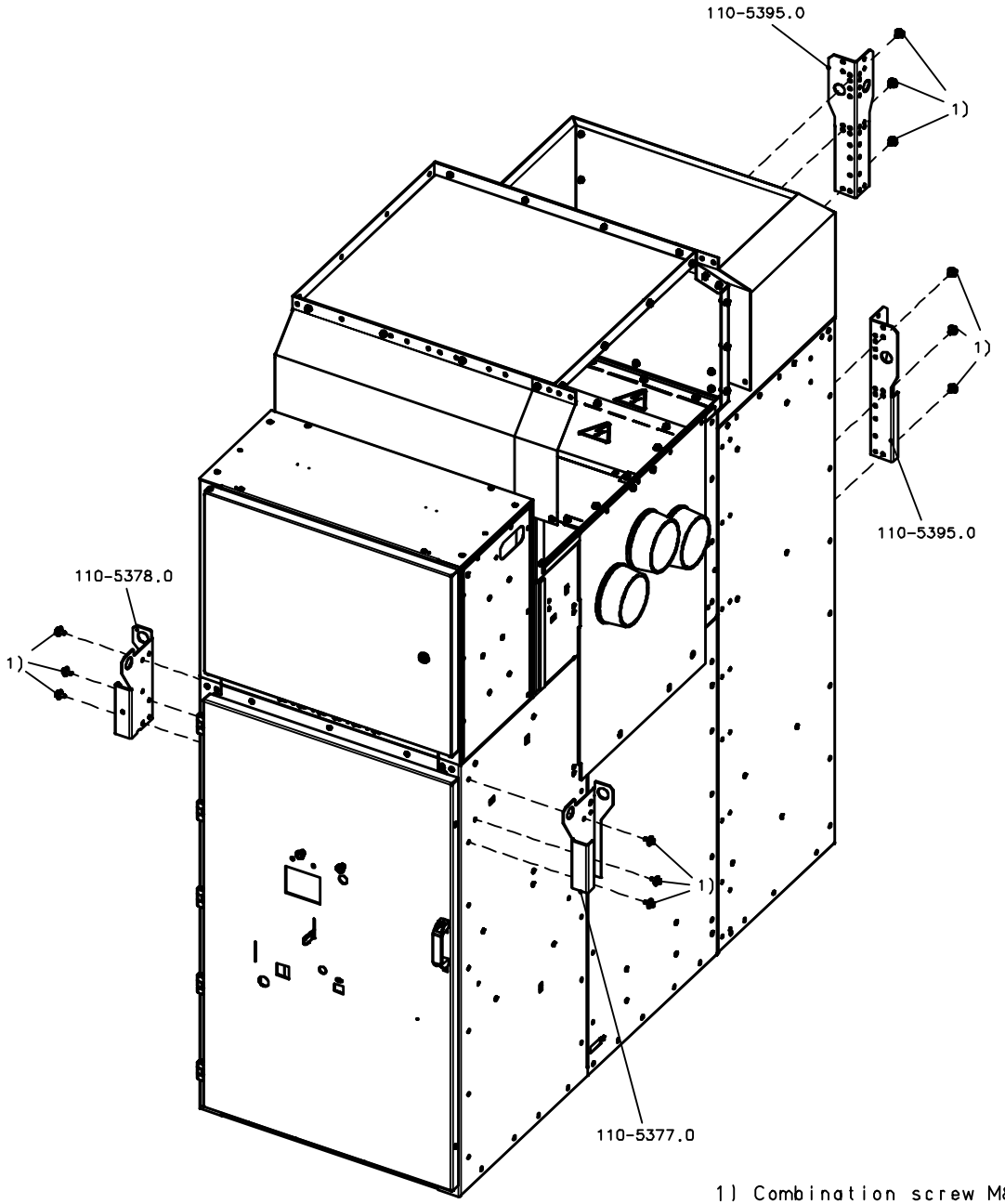

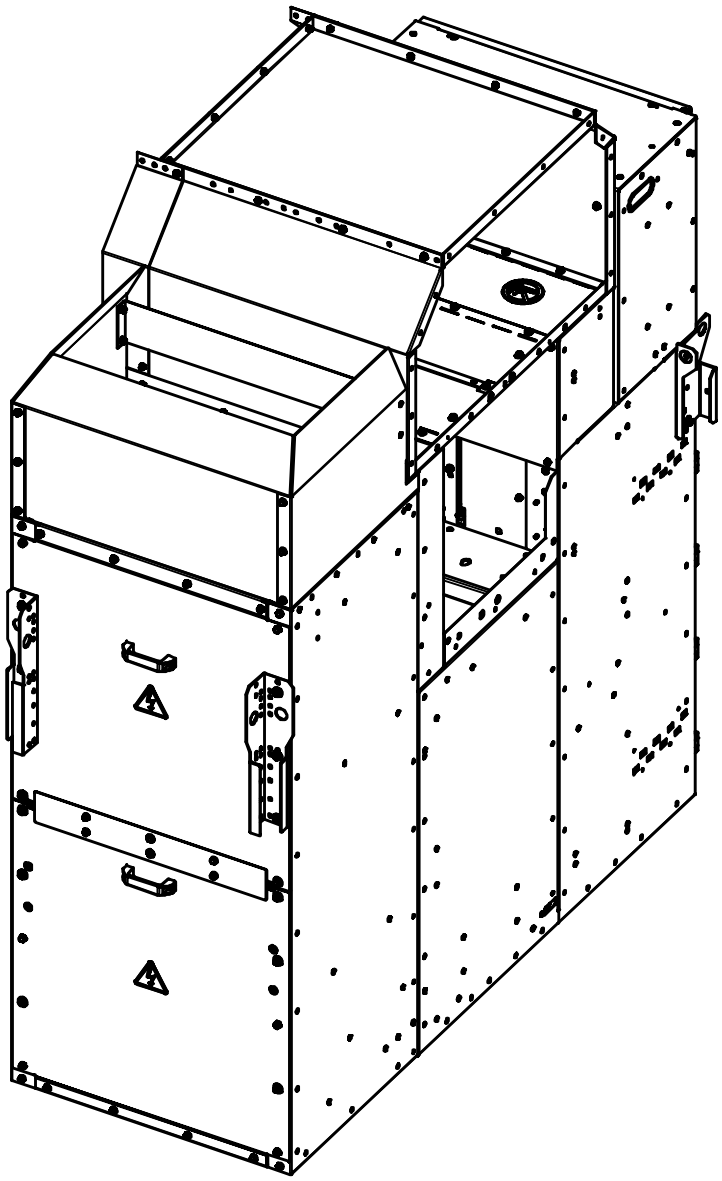

1) Combination screw M8x20 SN65480 +
Washer ISO7093-1-8-200 HV-A3L

Tolerance Toleranz (ISO)	Material;Werkstoff	Mass ; Masse	Papersize Format	18-10-2012	KAVAL	Date Datum	15-05-2012	Designation Benennung	ISO-Projection
-	-	-	B/A3	Date Datum	Name Name	Name Name	AYKOC	Transport materials 600/800mm with rear box	
--	-	Unit;Einheit mm	Scale Massstab 1:13	12/6641	01	Department Abteilung	IC_LMV_MV_1_R&D		Page Blatt 1+
	Material No./Nr. 1 SWF:(-)	Material No./Nr. 2	Released Freigabe Frei	Mod./Ref-No. Aend.-Vorg.-Nr	Revision Revision	Location Standort	FFMCB	Itemnumber Sachnummer 110-0395.9	
HPD						SIEMENS			

printed by oprtcual, 12/06/12-15:39:41

Confié à titre de secret d'enterprise. Tous droits reserves.
Comunicado como segredo empresarial. Reservados todos os direitos.
Confiado como secreto industrial. Todos los derechos reservados.

Als Betriebsgeheimnis anvertraut. Alle Rechte vorbehalten.
Proprietary data, company confidential. All rights reserved.

≤31.5kA, BB≤2500A

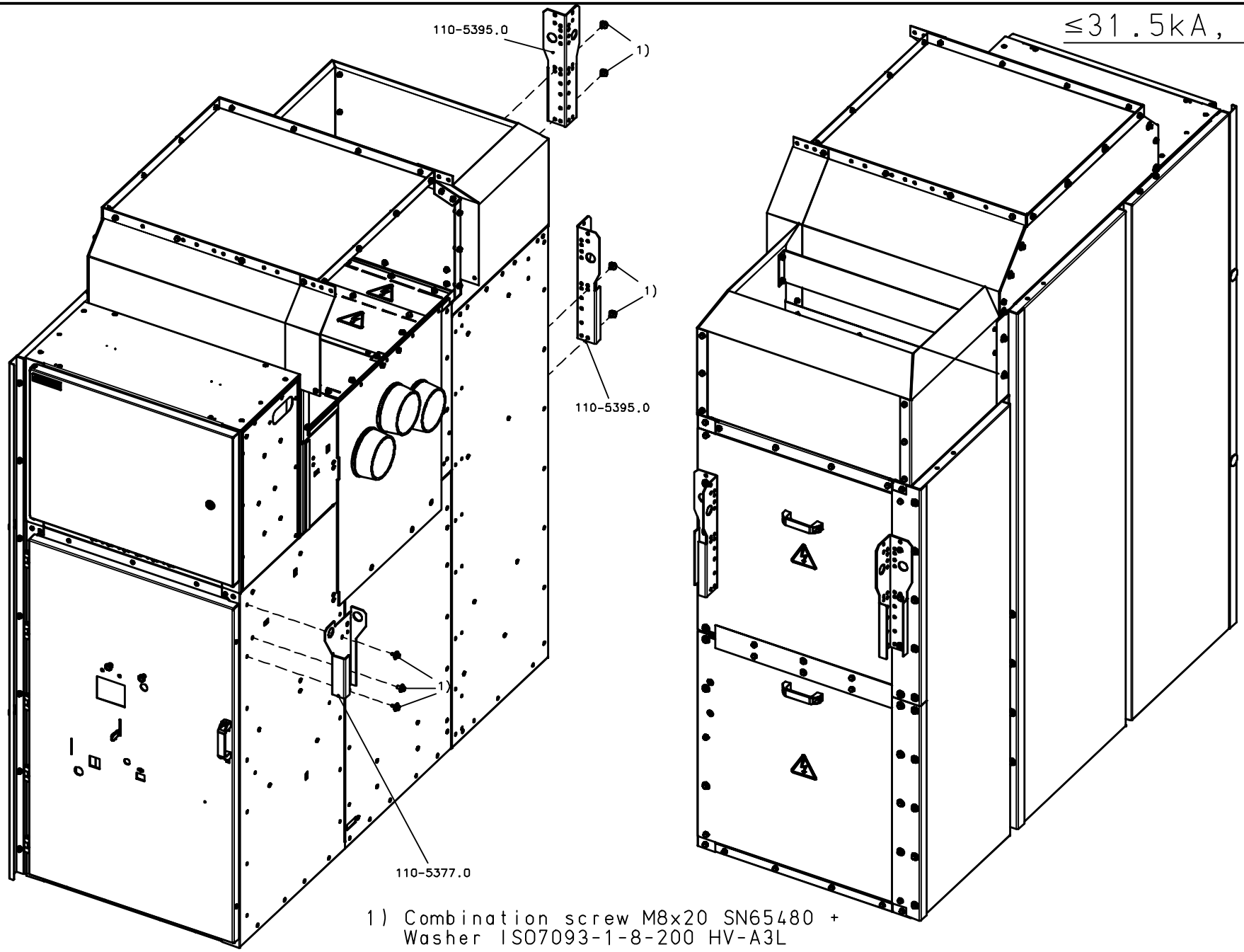

1) Combination screw M8x20 SN65480 +
Washer ISO7093-1-8-200 HV-A3L

Tolerance Toleranz (ISO)	Material;Werkstoff	Mass ; Masse	Papersize Format	18-10-2012	KAVAL	Date Datum	15-05-2012
-	-	-	B/A3	Date Datum	Name Name	Name Name	AYKOC
--	-	Unit;Einheit	Scale Massstab			Department Abteilung	IC_LMV_MV_1_R&D
	Material No./Nr. 1	Material No./Nr. 2	1:12	12/6641	01	Location Standort	FFMCB
	SWF:(-)		Released Freigabe Frei	Mod./Ref-No. Aend.-Vorg.-Nr.	Revision Revision	SIEMENS	

Designation Benennung: Transport materials 600/800mm with rear box

Itemnumber Sachnummer: 110-0395.9

ISO-Projection

Page Blatt: 2+

HPD

Confié à titre de secret d'enterprise. Tous droits reserves.
Comunicado como segredo empresarial. Reservados todos os direitos.
Confiado como secreto industrial. Todos los derechos reservados.

Als Betriebsgeheimnis anvertraut. Alle Rechte vorbehalten.
Proprietary data, company confidential. All rights reserved.

≤31.5kA, BB≤2500A

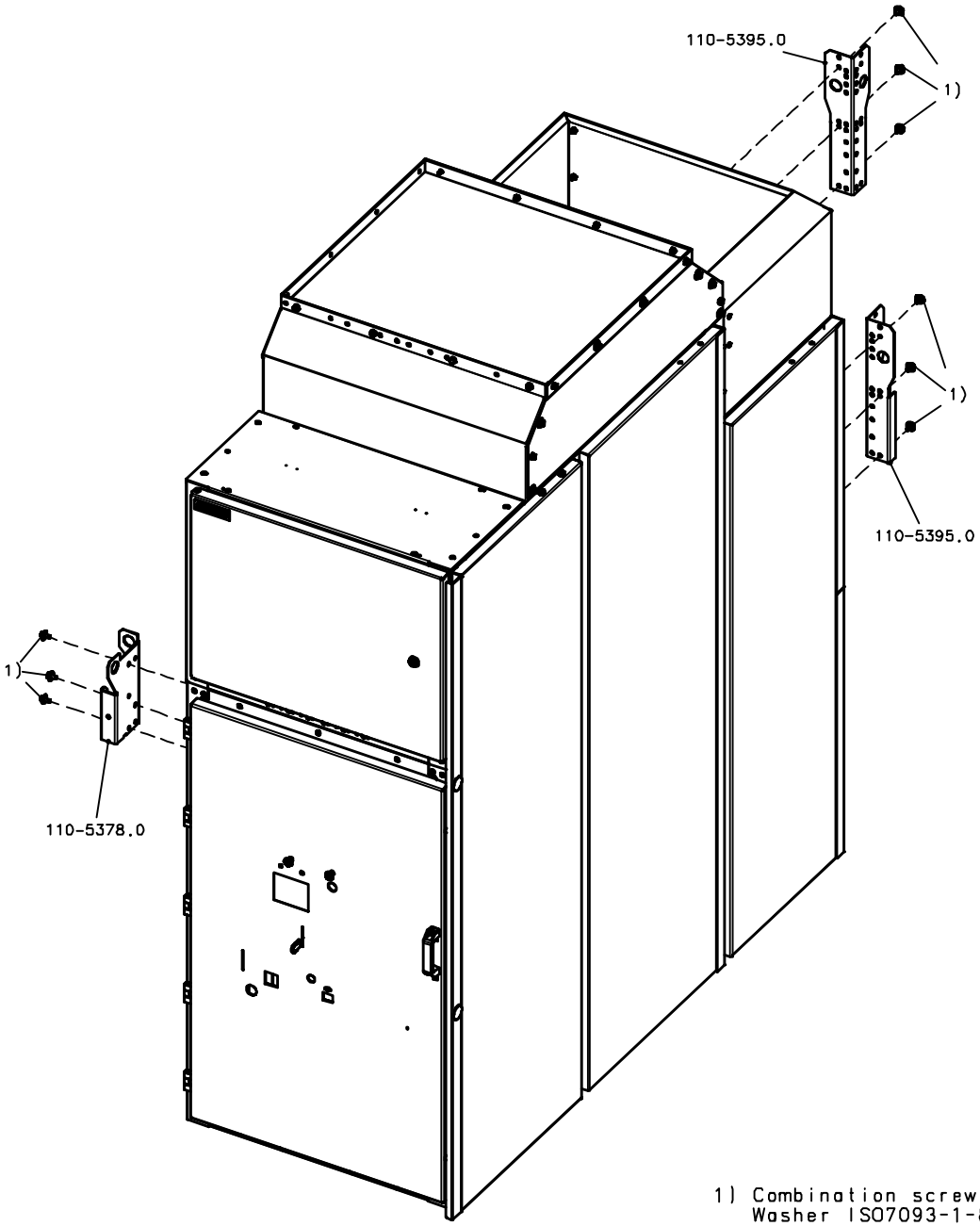

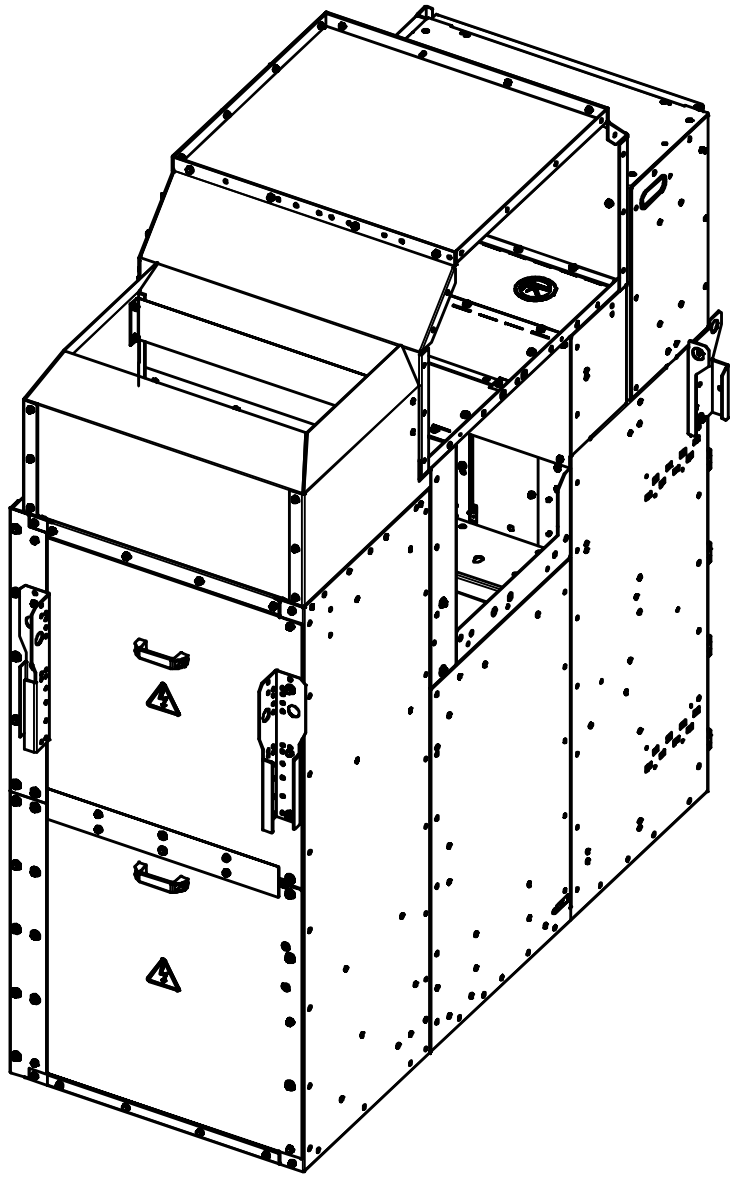

1) Combination screw M8x20 SN65480 +
Washer ISO7093-1-8-200 HV-A3L

Tolerance Toleranz (ISO)	Material;Werkstoff	Mass ; Masse	Papersize Format	18-10-2012	KAVAL	Date Datum	15-05-2012
-	-	-	B/A3	Date Datum	Name Name	Name Name	AYKOC
--	-	Unit;Einheit	Scale Massstab			Department Abteilung	IC_LMV_MV_1_R&D
	Material No./Nr. 1	Material No./Nr. 2	1:13	12/6641	01	Location Standort	FFMCB
	SWF:(-)		Released Freigabe Frei	Mod./Ref-No. Aend.-Vorg.-Nr.	Revision Revision	SIEMENS	

Designation Benennung: Transport materials 600/800mm with rear box

Itemnumber Sachnummer: 110-0395.9

ISO-Projection

Page Blatt: 3+

HPD

printed by oprtcual, 12/06/12-15:29:27

Confié a titre de secret d'enterprise. Tous droits reserves.
Comunicado como segredo empresarial. Reservados todos os direitos.
Confiado como secreto industrial. Todos los derechos reservados.

Als Betriebsgeheimnis anvertraut. Alle Rechte vorbehalten.
Proprietary data, company confidential. All rights reserved.

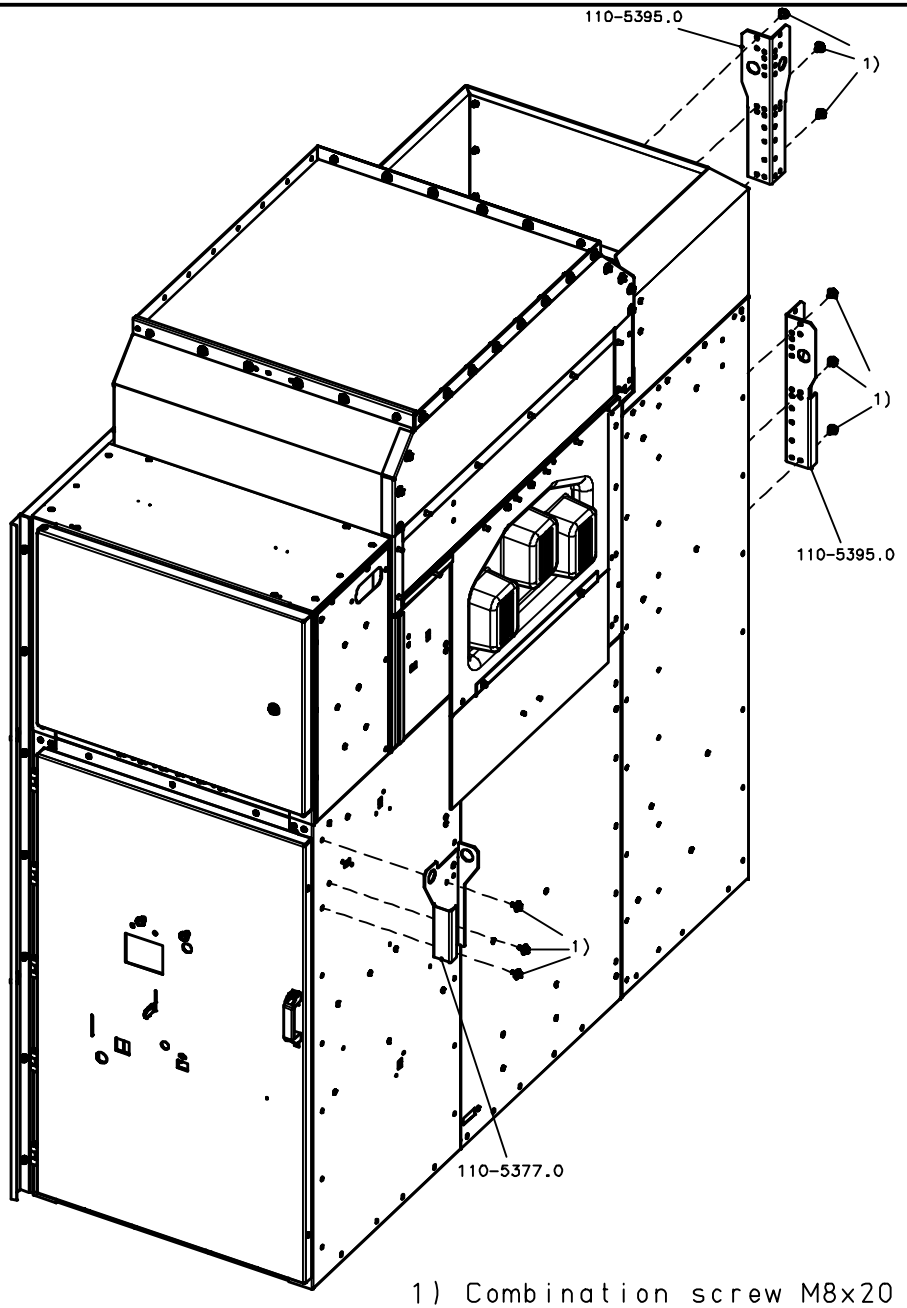

40kA, BB≤4000A or ≤31.5kA, BB≥3150A

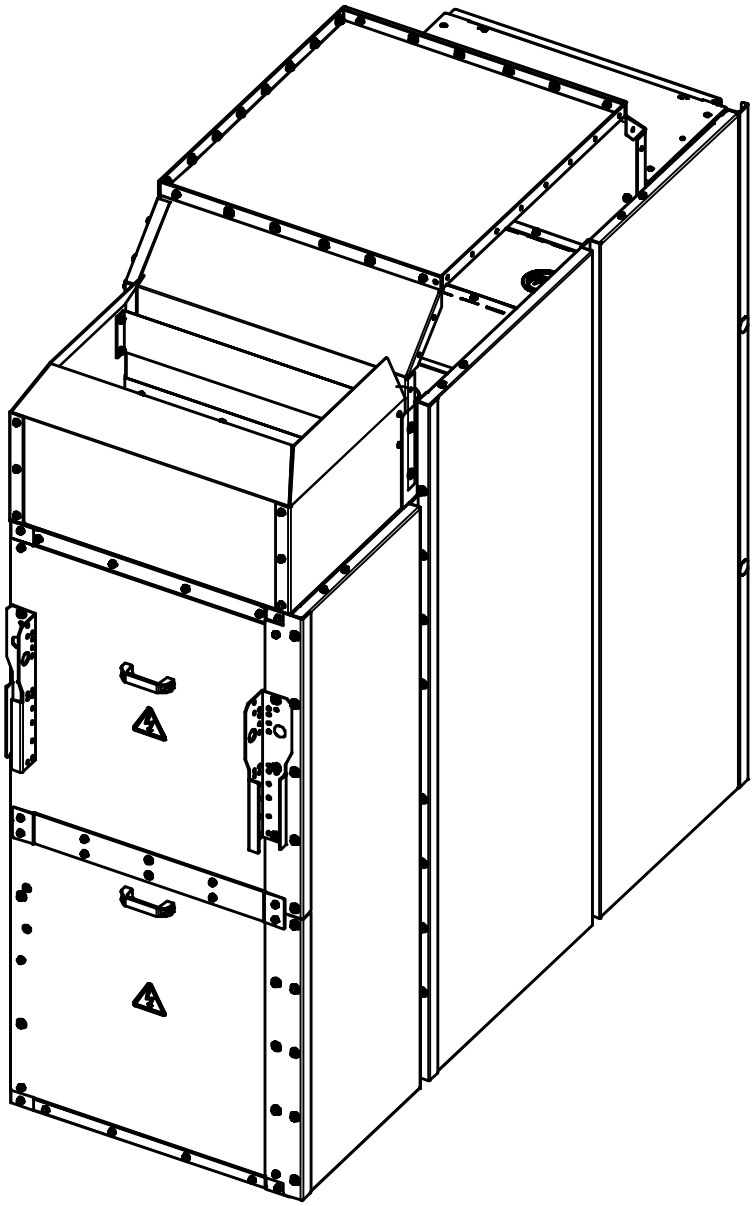

1) Combination screw M8x20 SN65480 +
Washer ISO7093-1-8-200 HV-A3L

Tolerance Toleranz (ISO)	Material;Werkstoff	Mass ; Masse	Papersize Format	18-10-2012	KAVAL	Date Datum	15-05-2012	Designation Benennung	ISO-Projection
-	-	-	B/A3	Date Datum	Name Name	Name Name	AYKOC	Transport materials 600/800mm with rear box	
--	-	Unit;Einheit mm	Scale Massstab 1:13	12/6641	01	Department Abteilung	IC_LMV_MV_1_R&D		Page Blatt 4+
	Material No./Nr. 1 SWF:(-)	Material No./Nr. 2	Released Freigabe Frei	Mod./Ref-No. Aend.-Vorg.-Nr	Revision Revision	Location Standort	FFMCB	Itemnumber Sachnummer 110-0395.9	
HPD						SIEMENS			

Confié à titre de secret d'enterprise. Tous droits reserves.
Comunicado como segredo empresarial. Reservados todos os direitos.
Confiado como secreto industrial. Todos los derechos reservados.

Als Betriebsgeheimnis anvertraut. Alle Rechte vorbehalten.
Proprietary data, company confidential. All rights reserved.

40kA, BB≤4000A or ≤31.5kA, BB≥3150A

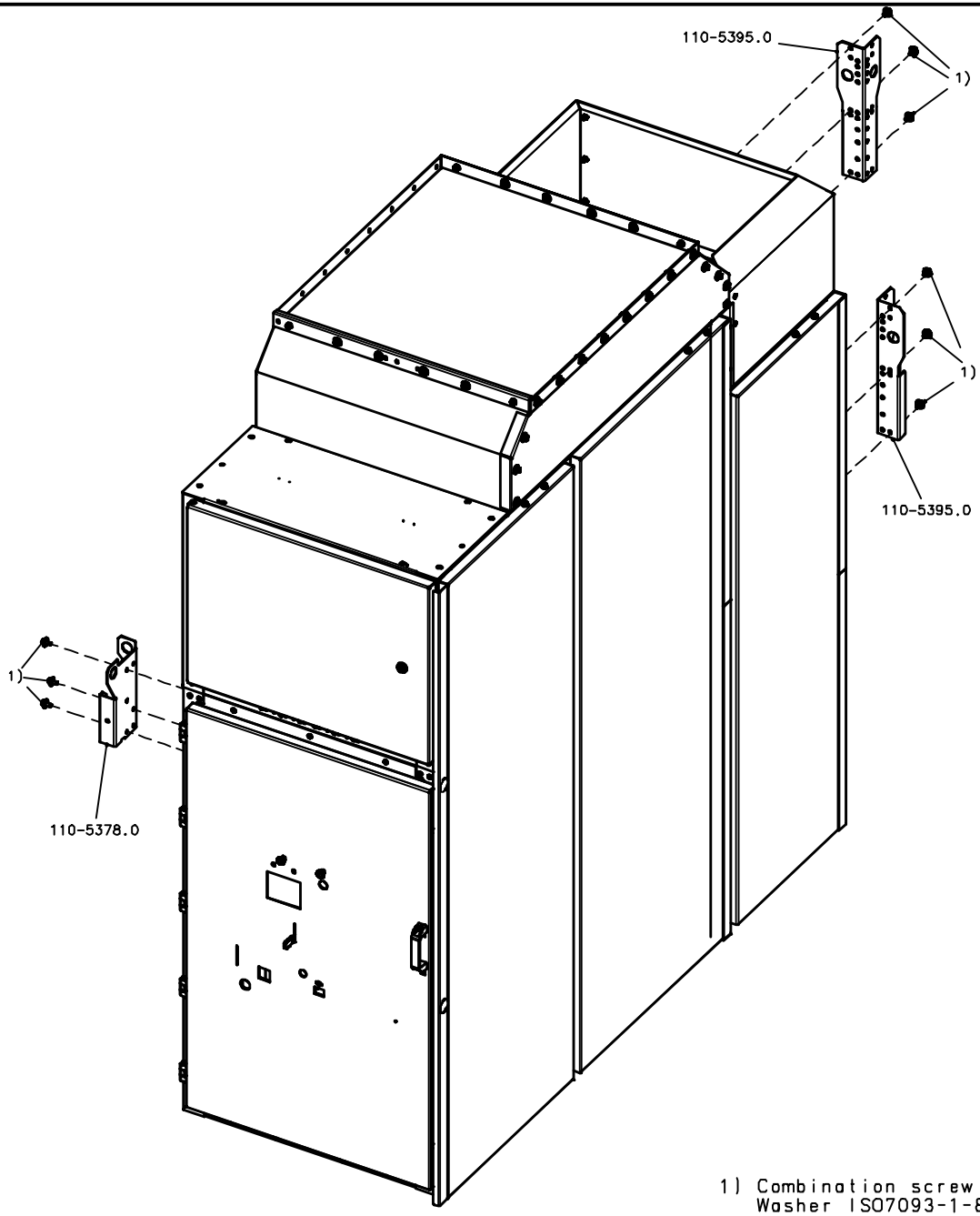

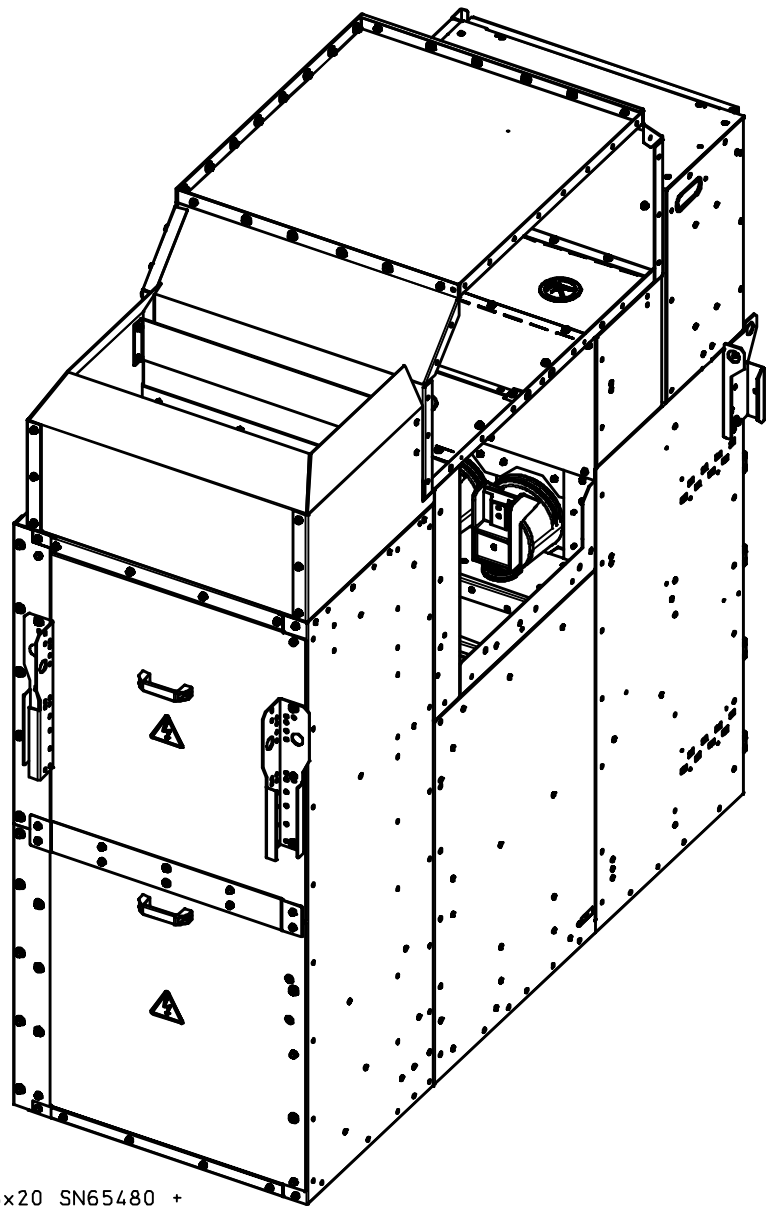

1) Combination screw M8x20 SN65480 +
Washer ISO7093-1-8-200 HV-A3L

Tolerance Toleranz (ISO)	Material;Werkstoff	Mass ; Masse	Papersize Format	18-10-2012	KAVAL	Date Datum	15-05-2012
-	-	-	B/A3	Date Datum	Name Name	Name Name	AYKOC
--	-	Unit;Einheit mm	Scale Massstab 1:13	12/6641	01	Department Abteilung	IC_LMV_MV_1_R&D
	Material No./Nr. 1 SWF:(-)	Material No./Nr. 2	Released Freigabe Frei	Mod./Ref-No. Aend.-Vorg.-Nr	Revision Revision	Location Standort	FFMCB
						SIEMENS	Itemnumber Sachnummer 110-0395.9

Designation Benennung: Transport materials 600/800mm with rear box

ISO-Projection

Page Blatt 5-

HPD

Confié a titre de secret d'enterprise. Tous droits reserves.
Comunicado como segredo empresarial. Reservados todos os direitos.
Confiado como secreto industrial. Todos los derechos reservados.

Als Betriebsgeheimnis anvertraut. Alle Rechte vorbehalten.
Proprietary data, company confidential. All rights reserved.

≤40kA, BB≤4000A

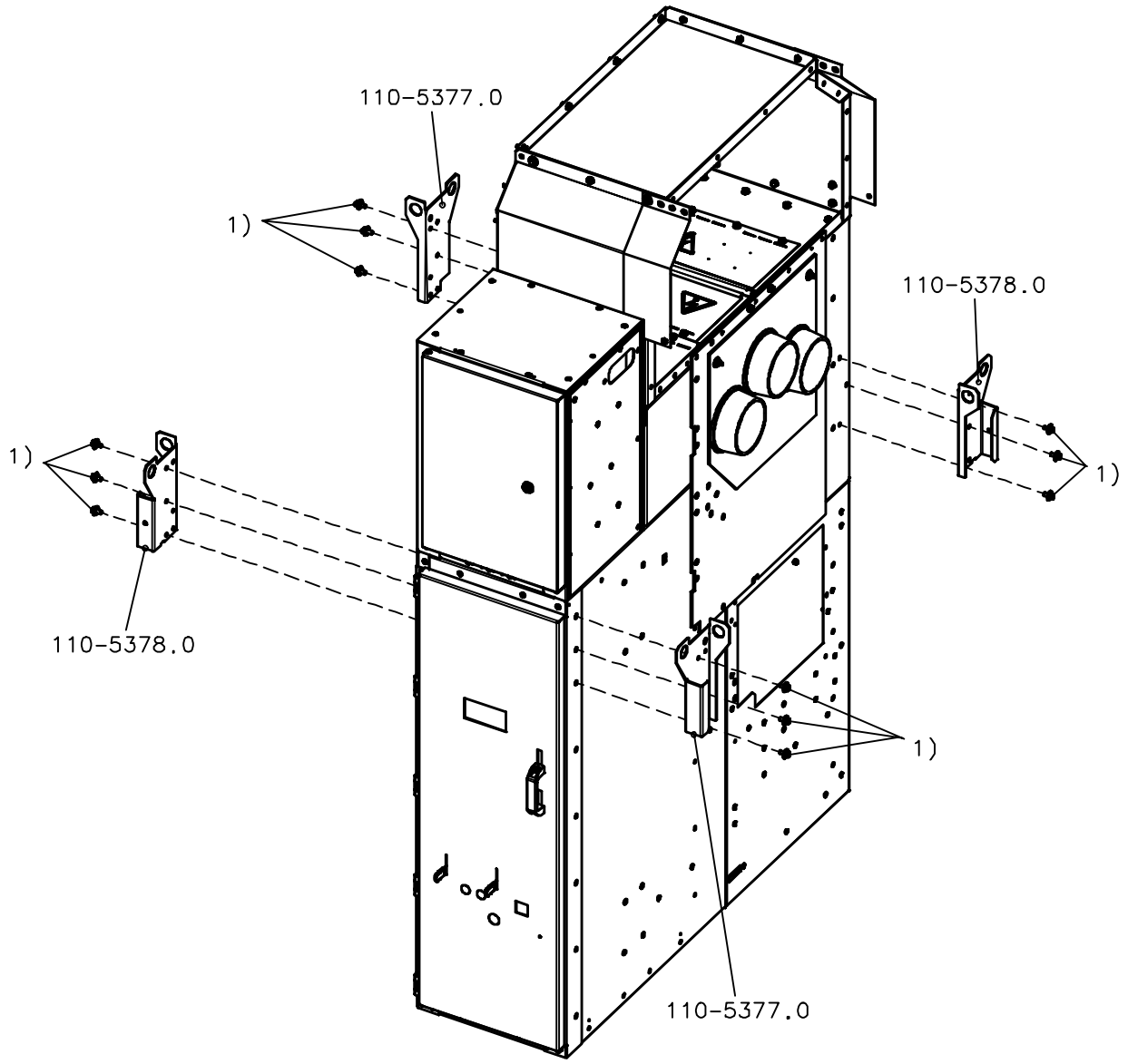

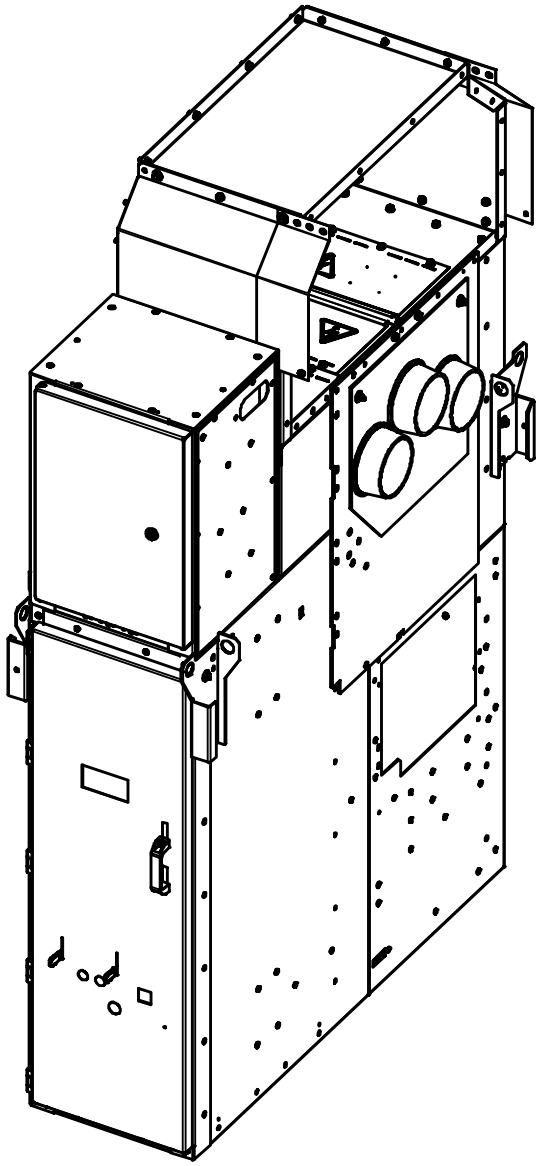

1) Combination Screw M8x20 SBN65480 +
Washer ISO7093-1-8-200 HV-A3L

Tolerance Toleranz (ISO)	Material;Werkstoff	Mass ; Masse	Papersize Format	31-10-2012	KAVAL	Date Datum	15-05-2012	Designation Benennung	ISO-Projection
-	-	-	B/A3	Date Datum	Name Name	Name Name	AYKOC	Transport materials 435mm	
--	-	Unit;Einheit mm	Scale Massstab 1:12	12/6641	01	Department Abteilung	IC_LMV_MV_1_R&D		Page Blatt 1+
	Material No./Nr. 1 SWF:(-)	Material No./Nr. 2	Released Freigabe Frei	Mod./Ref-No. Aend.-Vorg.-Nr	Revision Revision	Location Standort	FFMCB	Itemnumber Sachnummer 110-0396.9	

HPD

printed by oprtcual, 12/06/12-16:37:52

Confié à titre de secret d'enterprise. Tous droits reserves.
Comunicado como segredo empresarial. Reservados todos os direitos.
Confiado como secreto industrial. Todos los derechos reservados.

Als Betriebsgeheimnis anvertraut. Alle Rechte vorbehalten.
Proprietary data, company confidential. All rights reserved.

≤40kA, BB≤4000A

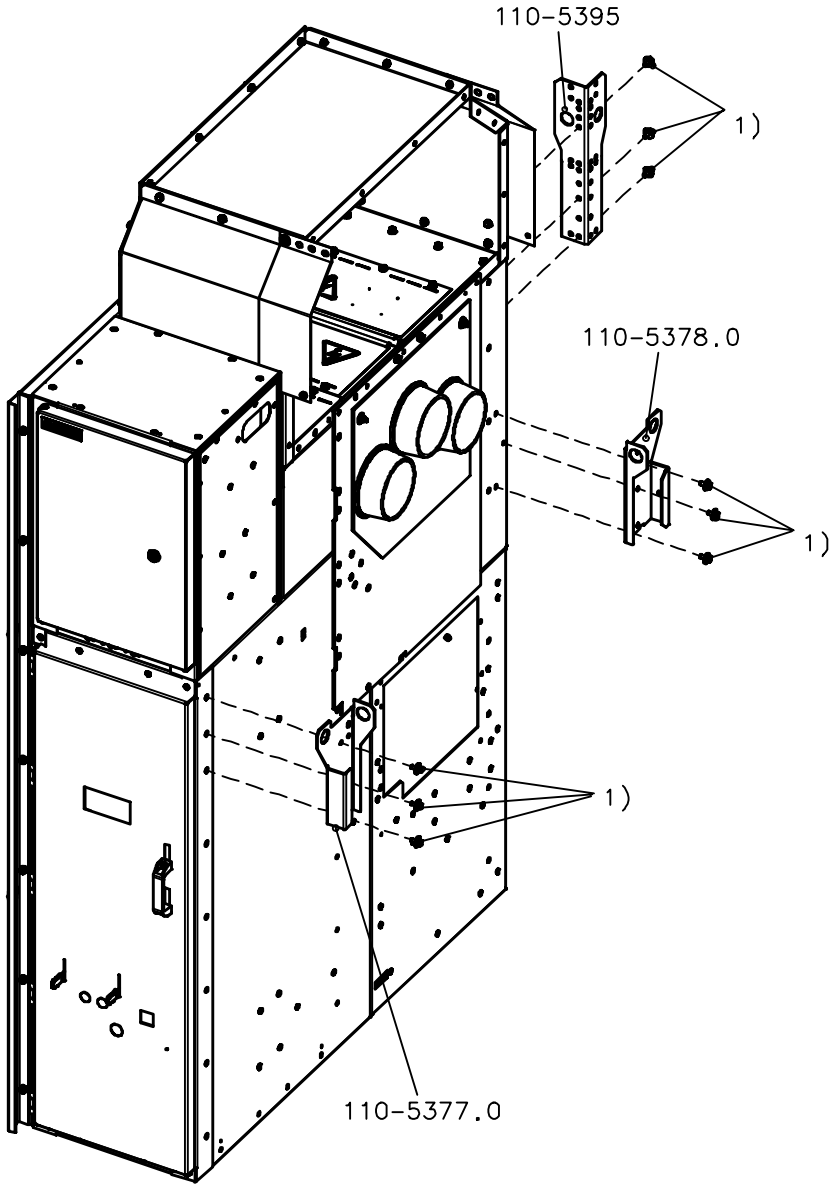

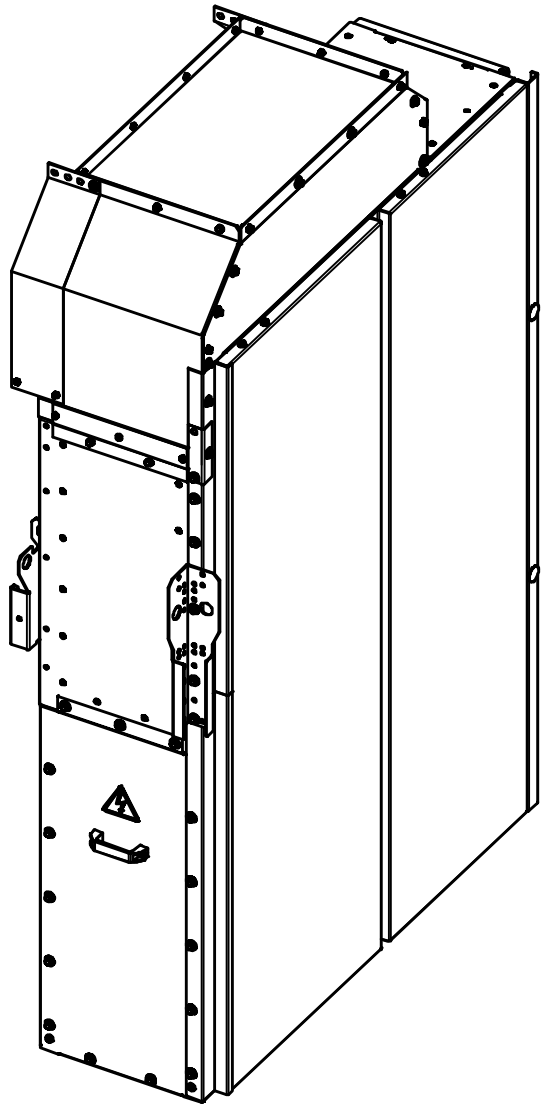

1) Combination screw M8x20 SN 65480 +
Washer ISO7093-1-8-200 HV-A3L

Tolerance Toleranz (ISO)	Material;Werkstoff	Mass ; Masse	Papersize Format	31-10-2012	KAVAL	Date Datum	15-05-2012	Designation Benennung	ISO-Projection
-	-	-	B/A3	Date Datum	Name Name	Name Name	AYKOC	Transport materials 435mm	
--	-	Unit;Einheit mm	Scale Massstab 1:12	12/6641	01	Department Abteilung	IC_LMV_MV_1_R&D		Page Blatt
	Material No./Nr. 1 SWF:(-)	Material No./Nr. 2	Released Freigabe Frei	Mod./Ref-No. Aend.-Vorg.-Nr.	Revision Revision	Location Standort	FFMCB	Itemnumber Sachnummer 110-0396.9	2+
						SIEMENS			

HPD

printed by oprtcual, 12/06/12-16:38:22

Confié à titre de secret d'enterprise. Tous droits reserves.
Comunicado como segredo empresarial. Reservados todos os direitos.
Confiado como secreto industrial. Todos los derechos reservados.

Als Betriebsgeheimnis anvertraut. Alle Rechte vorbehalten.
Proprietary data, company confidential. All rights reserved.

≤40kA, BB≤4000A

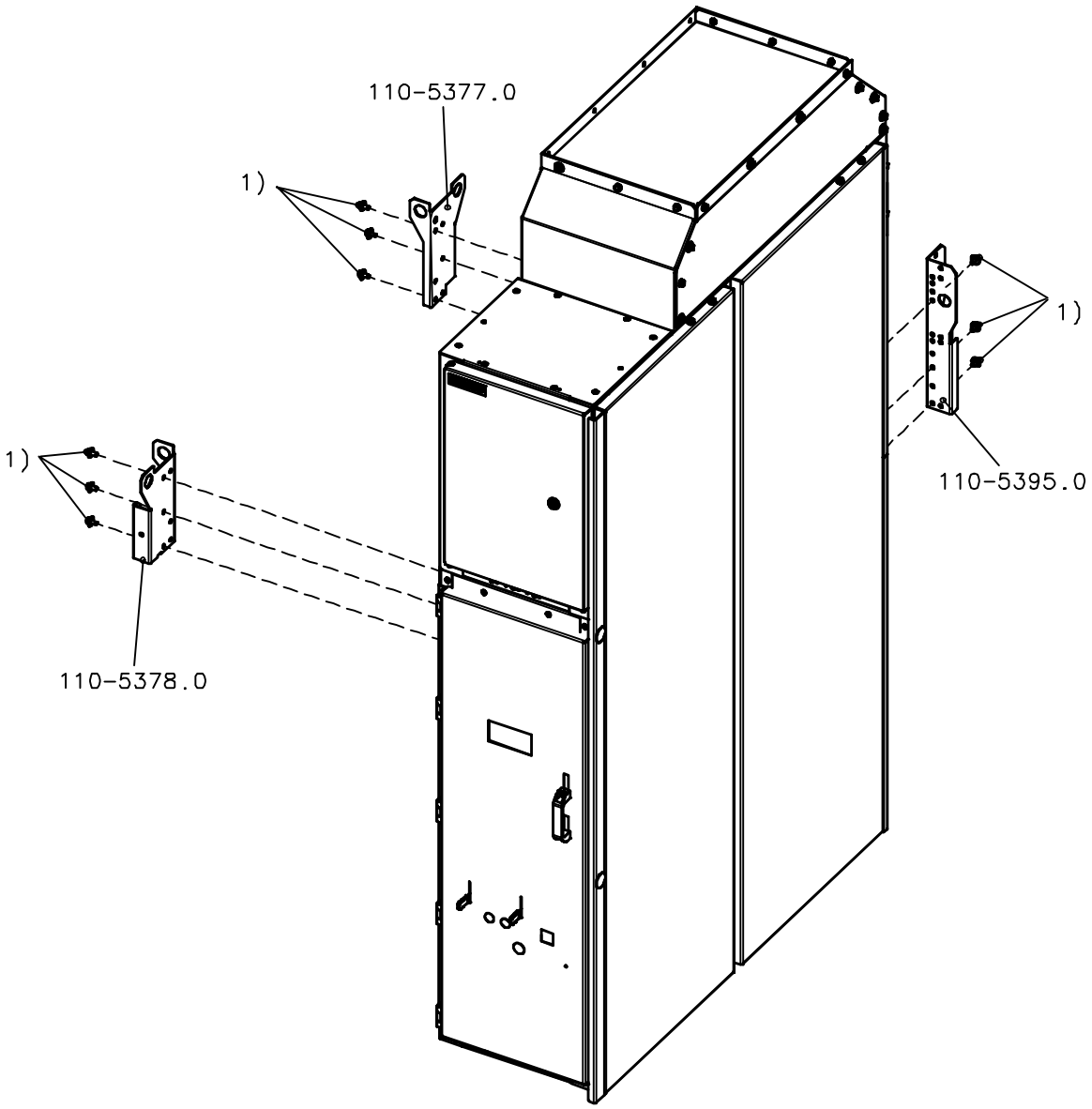

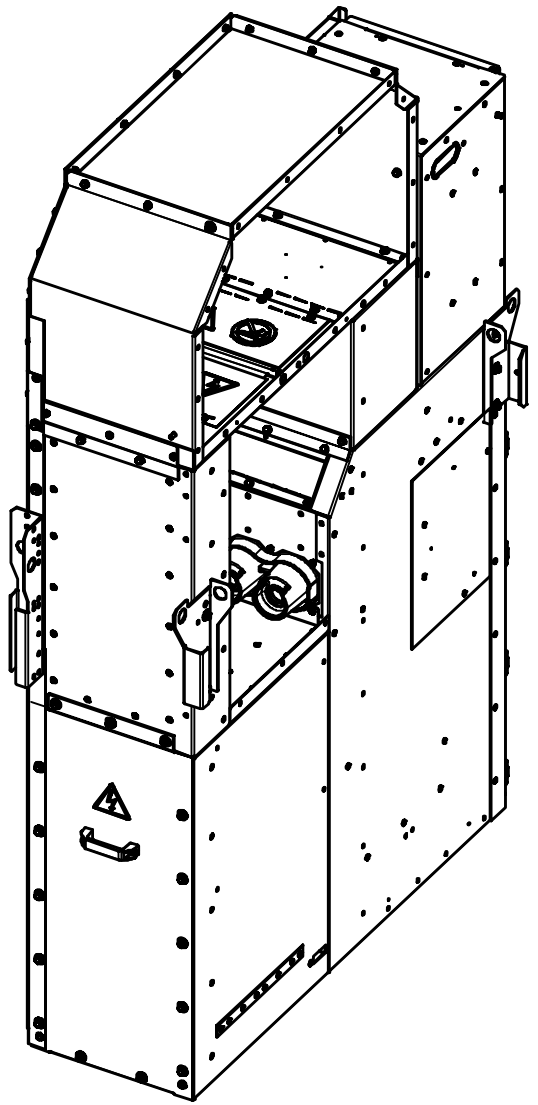

1) Combination screw M8x20 SN65480 +
Washer ISO7093-1-8-200 HV-A3L

Tolerance Toleranz (ISO)	Material;Werkstoff	Mass ; Masse	Papersize Format	31-10-2012	KAVAL	Date Datum	15-05-2012	Designation Benennung	ISO-Projection
-	-	-	B/A3	Date Datum	Name Name	Name Name	AYKOC	Transport materials 435mm	
--	-	Unit;Einheit mm	Scale Massstab 1:12	12/6641	01	Department Abteilung	IC_LMV_MV_1_R&D		Page Blatt 3+
	Material No./Nr. 1 SWF:(-)	Material No./Nr. 2	Released Freigabe Frei	Mod./Ref-No. Aend.-Vorg.-Nr	Revision Revision	Location Standort	FFMCB	Itemnumber Sachnummer 110-0396.9	

HPD

printed by oprtcual, 12/06/12-16:35:07

Confié à titre de secret d'enterprise. Tous droits reserves.
Comunicado como segredo empresarial. Reservados todos os direitos.
Confiado como secreto industrial. Todos los derechos reservados.

Als Betriebsgeheimnis anvertraut. Alle Rechte vorbehalten.
Proprietary data, company confidential. All rights reserved.

40kA, BB≤4000A or ≤31.5kA,BB≥3150A

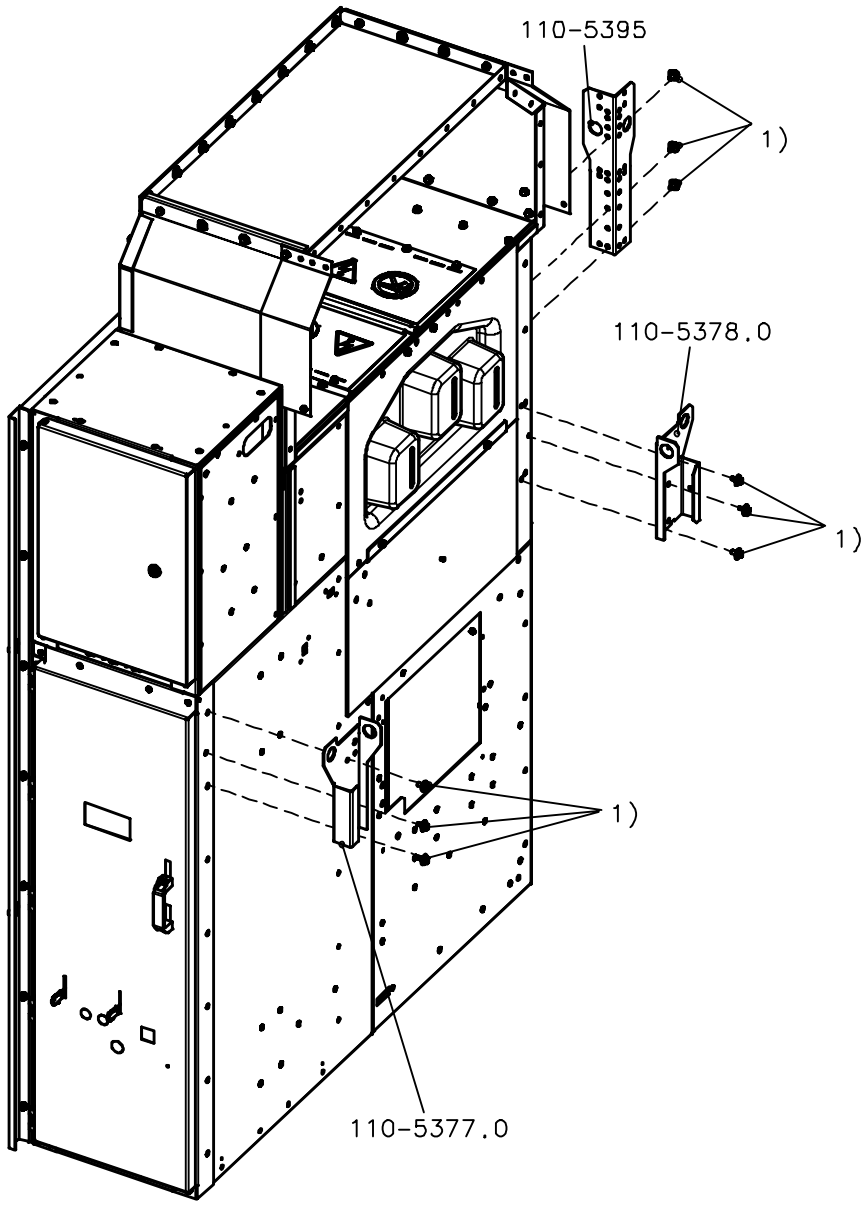

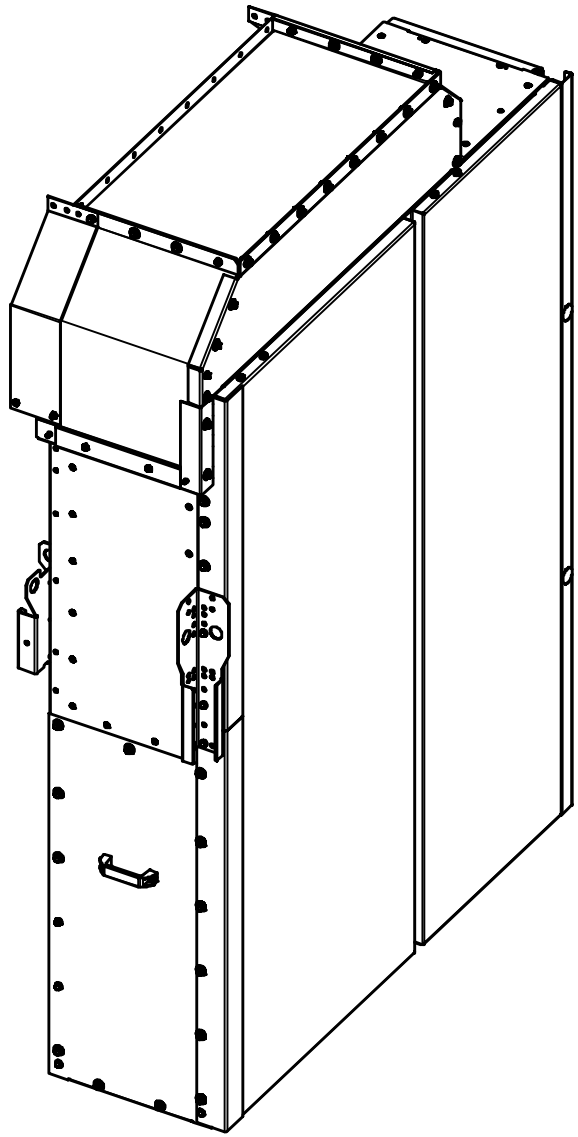

1) Combination screw M8x20 SN 65480 +
Washer ISO7093-1-8-200 HV-A3L

Tolerance Toleranz (ISO)	Material;Werkstoff	Mass ; Masse	Papersize Format	30-10-2012	KAVAL	Date Datum	15-05-2012	Designation Benennung	ISO-Projection
-	-	-	B/A3	Date Datum	Name Name	Name Name	AYKOC	Transport materials 435mm	
--	-	Unit;Einheit mm	Scale Massstab 1:12	12/6641	01	Department Abteilung	IC_LMV_MV_1_R&D		Page Blatt 4+
	Material No./Nr. 1 SWF:(-)	Material No./Nr. 2	Released Freigabe Frei	Mod./Ref-No. Aend.-Vorg.-Nr	Revision Revision	Location Standort	FFMCB	Itemnumber Sachnummer 110-0396.9	
HPD						SIEMENS			

Confié à titre de secret d'enterprise. Tous droits reserves.
Comunicado como segredo empresarial. Reservados todos os direitos.
Confiado como secreto industrial. Todos los derechos reservados.

Als Betriebsgeheimnis anvertraut. Alle Rechte vorbehalten.
Proprietary data, company confidential. All rights reserved.

40kA, BB≤4000A or ≤31.5kA,BB≥3150A

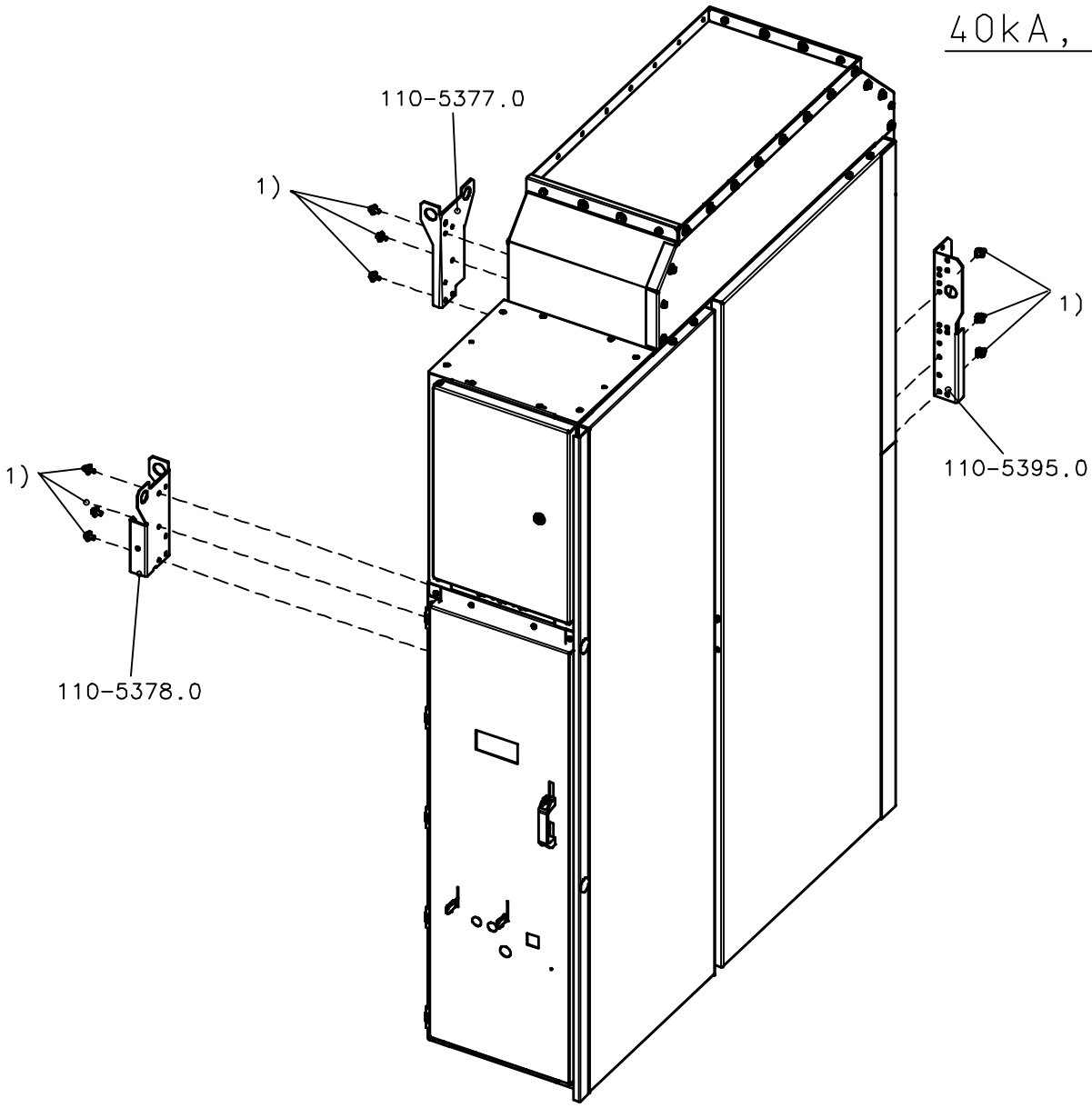

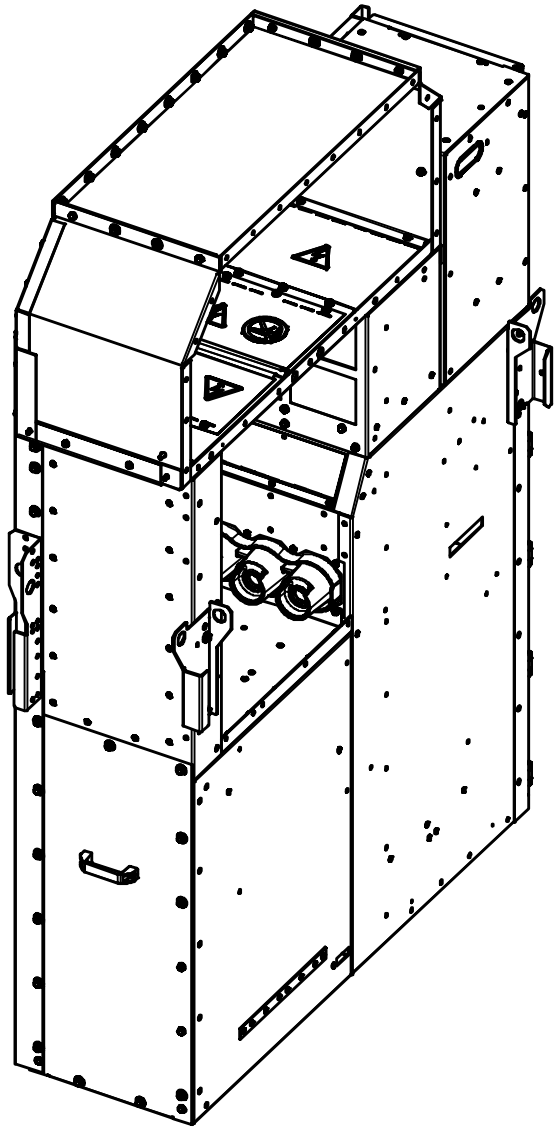

1) Combination screw M8x20 SN65480 +
Washer ISO7093-1-8-200 HV-A3L

Tolerance Toleranz (ISO)	Material;Werkstoff	Mass ; Masse	Papersize Format	31-10-2012	KAVAL	Date Datum	15-05-2012	Designation Benennung	ISO-Projection
-	-	-	B/A3	Date Datum	Name Name	Name Name	AYKOC	Transport materials 435mm	
--	-	Unit;Einheit mm	Scale Massstab 1:12	12/6641	01	Department Abteilung	IC_LMV_MV_1_R&D		Page Blatt 5-
	Material No./Nr. 1 SWF:(-)	Material No./Nr. 2	Released Freigabe Frei	Mod./Ref-No. Aend.-Vorg.-Nr	Revision Revision	Location Standort	FFMCB	Itemnumber Sachnummer 110-0396.9	

HPD

printed by oprtcual, 12/06/12-16:37:28

Confié à titre de secret d'enterprise. Tous droits reserves.
Comunicado como segredo empresarial. Reservados todos os direitos.
Confiado como secreto industrial. Todos los derechos reservados.

Als Betriebsgeheimnis anvertraut. Alle Rechte vorbehalten.
Proprietary data, company confidential. All rights reserved.

≤40kA, BB≤4000A

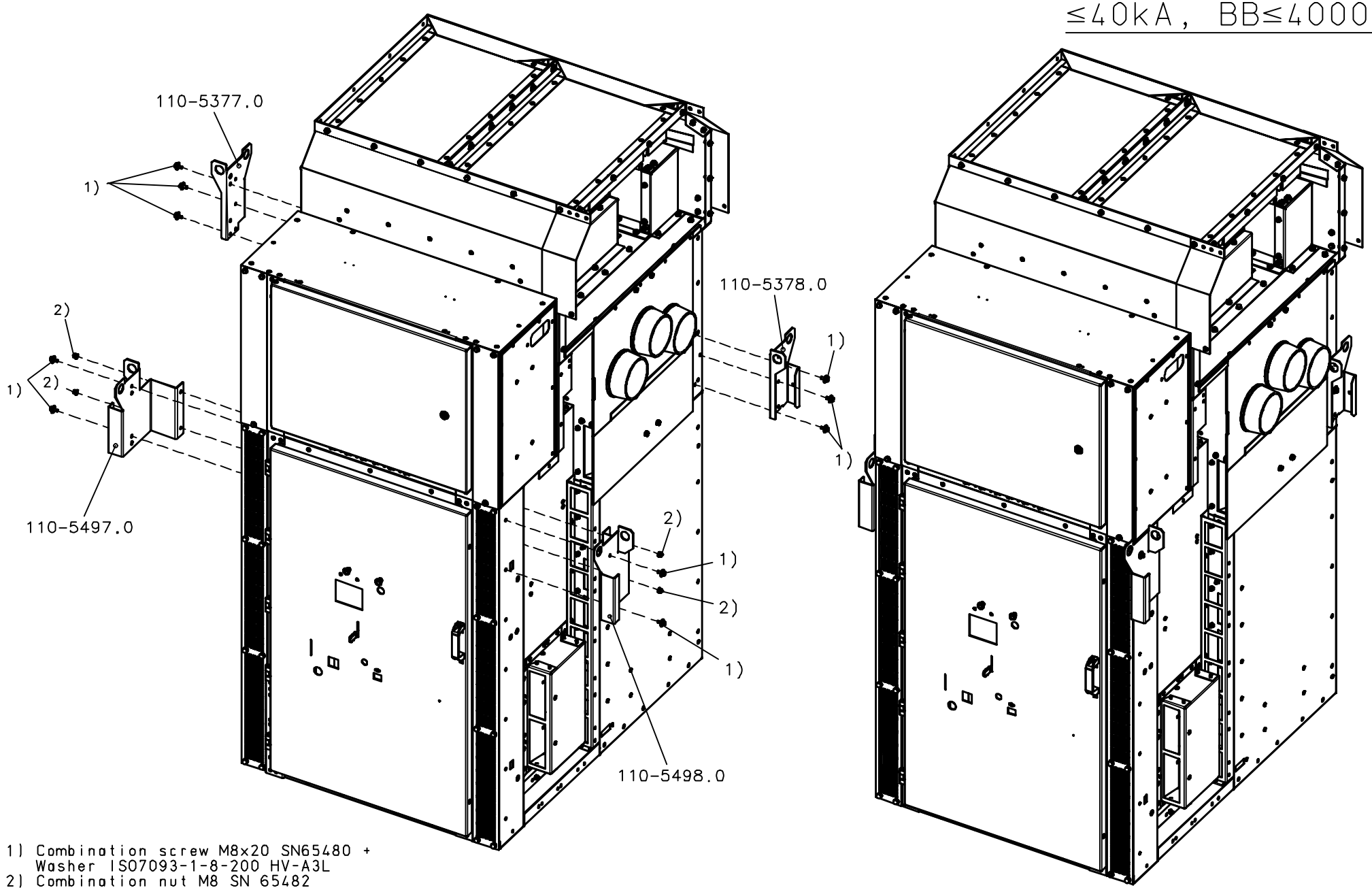

1) Combination screw M8x20 SN65480 +
   Washer ISO7093-1-8-200 HV-A3L
2) Combination nut M8 SN 65482

Tolerance Toleranz (ISO)	Material;Werkstoff	Mass ; Masse	Papersize Format	01-11-2012	KAVAL	Date Datum	16-05-2012	Designation Benennung	ISO-Projection
-	-	-	B/A3	Date Datum	Name Name	Name Name	AYKOC	Transport materials 1000mm	
--	-	Unit;Einheit mm	Scale Massstab 1:12	12/6641	01	Department Abteilung	IC_LMV_MV_1_R&D		Page Blatt 1+
	Material No./Nr. 1 SWF:(-)	Material No./Nr. 2	Released Freigabe Frei	Mod./Ref-No. Aend.-Vorg.-Nr.	Revision Revision	Location Standort	FFMCB	Itemnumber Sachnummer 110-0397.9	
HPD						SIEMENS			

printed by oprtcual, 12/07/12-07:38:51

Confié a titre de secret d'enterprise. Tous droits reserves.
Comunicado como segredo empresarial. Reservados todos os direitos.
Confiado como secreto industrial. Todos los derechos reservados.

Als Betriebsgeheimnis anvertraut. Alle Rechte vorbehalten.
Proprietary data, company confidential. All rights reserved.

≤31.5kA, BB≤2500A

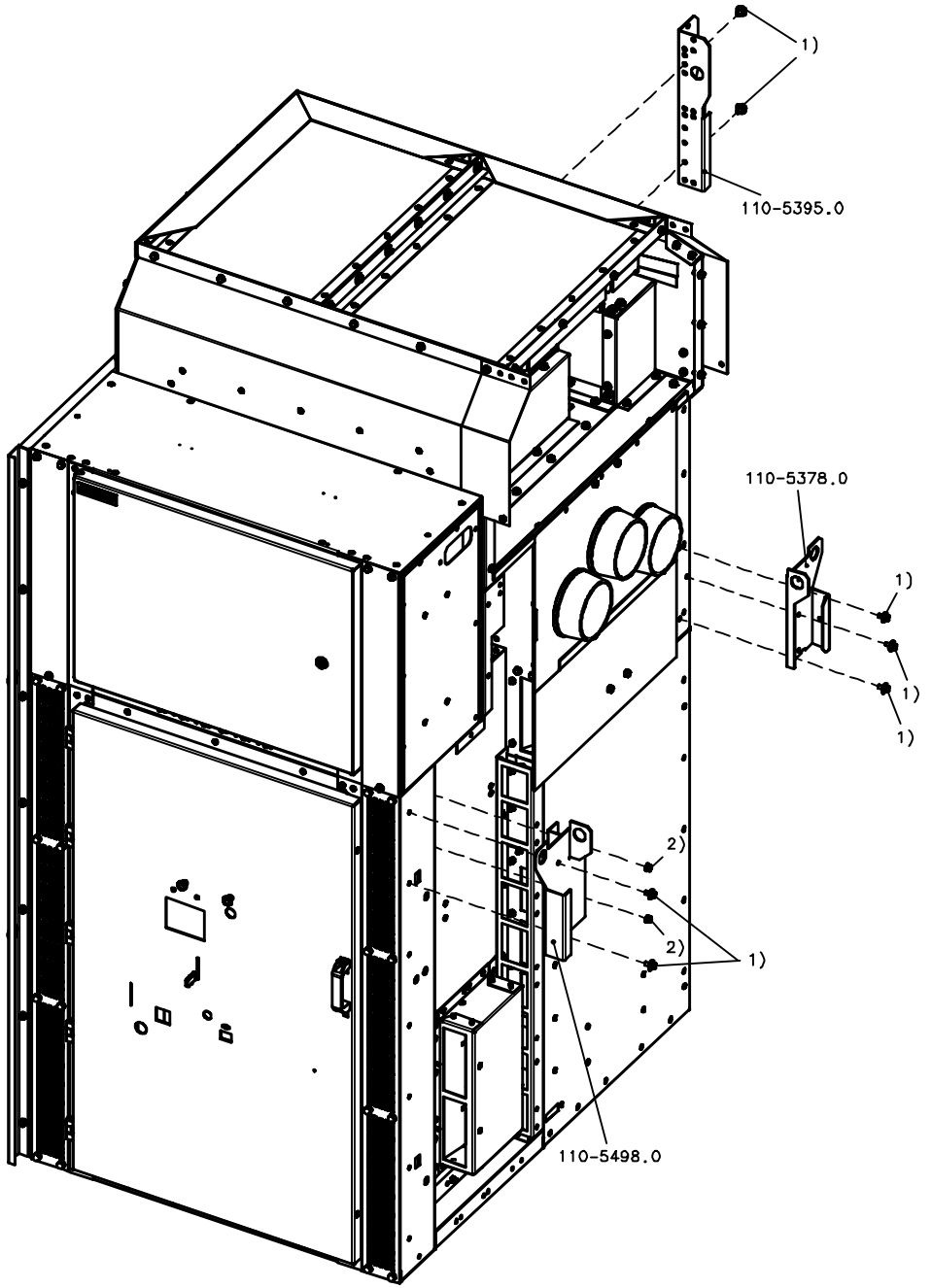

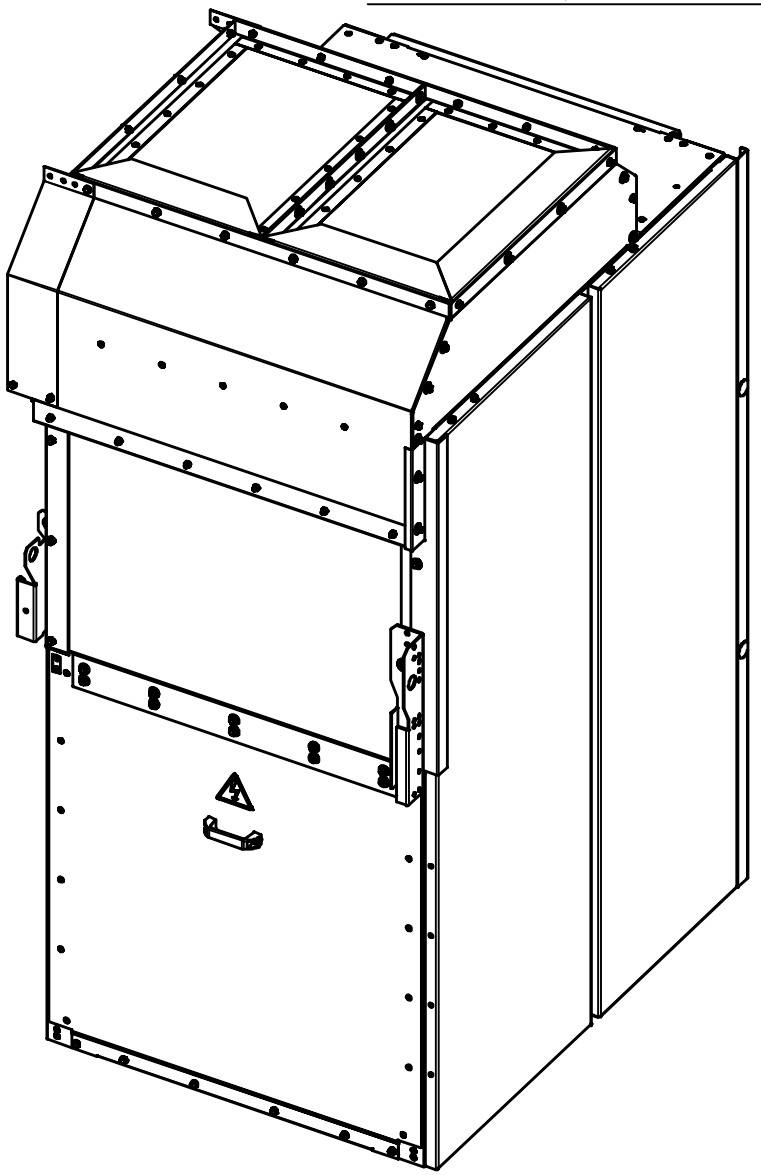

1) Combination screw M8x20 SN65480 +
Washer ISO7093-1-8-200 HV-A3L
2) Combination Nut M8 SN 65482

Tolerance Toleranz (ISO)	Material;Werkstoff	Mass ; Masse	Papersize Format	01-11-2012	KAVAL	Date Datum 16-05-2012	Designation Benennung
-	-	-	B/A3	Date Datum	Name Name	Name Name AYKOC	Transport materials 1000mm
--	-	Unit;Einheit mm	Scale Massstab 1:12	12/6641	01	Department Abteilung IC_LMV_MV_1_R&D	ISO-Projection
	Material No./Nr. 1 SWF:(-)	Material No./Nr. 2	Released Freigabe Frei	Mod./Ref-No. Aend.-Vorg.-Nr.	Revision Revision	Location Standort FFMCB	Page Blatt 2+
HPD						SIEMENS	Itemnumber Sachnummer 110-0397.9

printed by oprtcual, 12/07/12-07:37:27

Confié à titre de secret d'enterprise. Tous droits reserves.
Comunicado como segredo empresarial. Reservados todos os direitos.
Confiado como secreto industrial. Todos los derechos reservados.

Als Betriebsgeheimnis anvertraut. Alle Rechte vorbehalten.
Proprietary data, company confidential. All rights reserved.

≤31.5kA, BB≤2500A

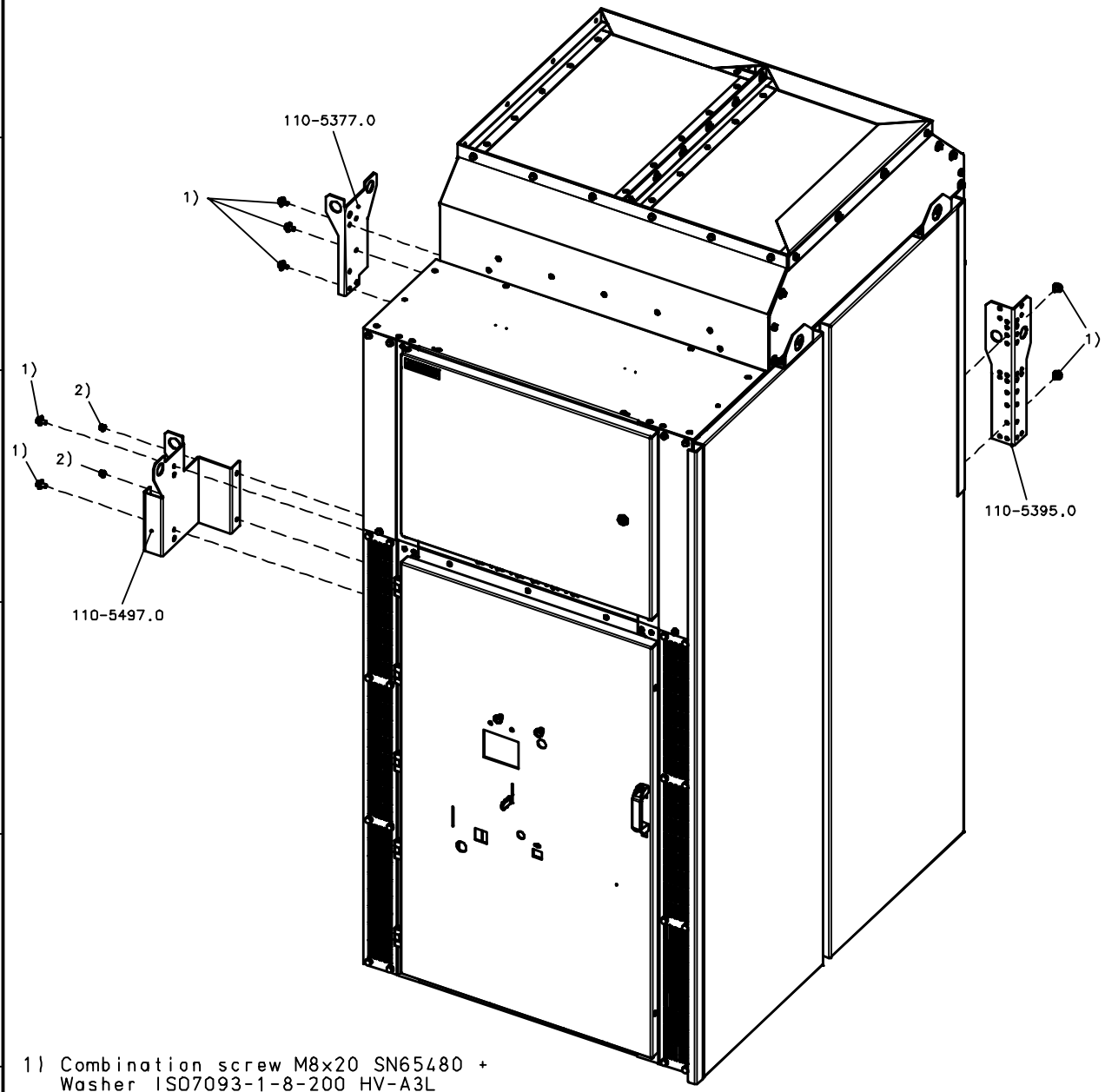

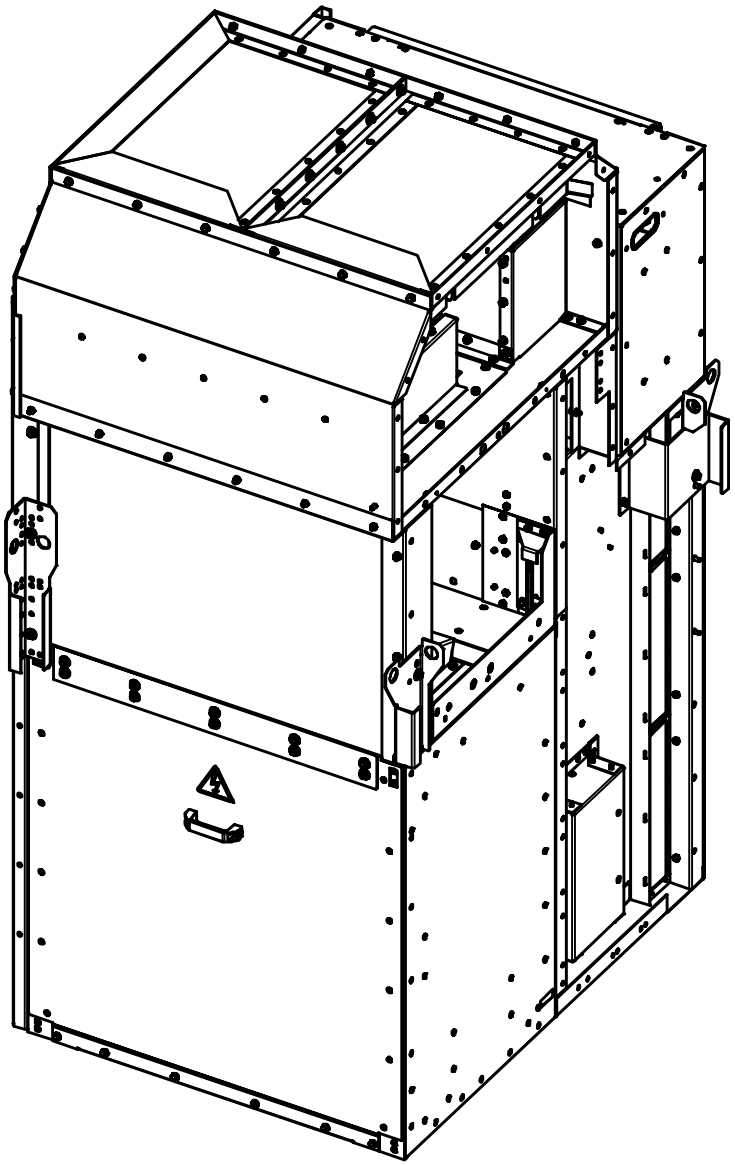

1) Combination screw M8x20 SN65480 +
Washer ISO7093-1-8-200 HV-A3L
2) Combination nut M8 SN 65482

Tolerance Toleranz (ISO)	Material;Werkstoff	Mass ; Masse	Papersize Format	01-11-2012	KAVAL	Date Datum	16-05-2012	Designation Benennung	ISO-Projection
-	-	-	B/A3	Date Datum	Name Name	Name Name	AYKOC	Transport materials 1000mm	
--	-	-	Scale Massstab 1:12			Department Abteilung	IC_LMV_MV_1_R&D		Page Blatt
		Unit;Einheit mm		12/6641	01	Location Standort	FFMCB		3+
	Material No./Nr. 1 SWF:(-)	Material No./Nr. 2	Released Freigabe Frei	Mod./Ref-No. Aend.-Vorg.-Nr	Revision Revision	SIEMENS		Itemnumber Sachnummer 110-0397.9	

HPD

printed by oprtcual, 12/07/12-07:38:05

Confié a titre de secret d'enterprise. Tous droits reserves.
Comunicado como segredo empresarial. Reservados todos os direitos.
Confiado como secreto industrial. Todos los derechos reservados.

Als Betriebsgeheimnis anvertraut. Alle Rechte vorbehalten.
Proprietary data, company confidential. All rights reserved.

40kA, BB≤4000A or ≤31.5kA, BB≥3150A

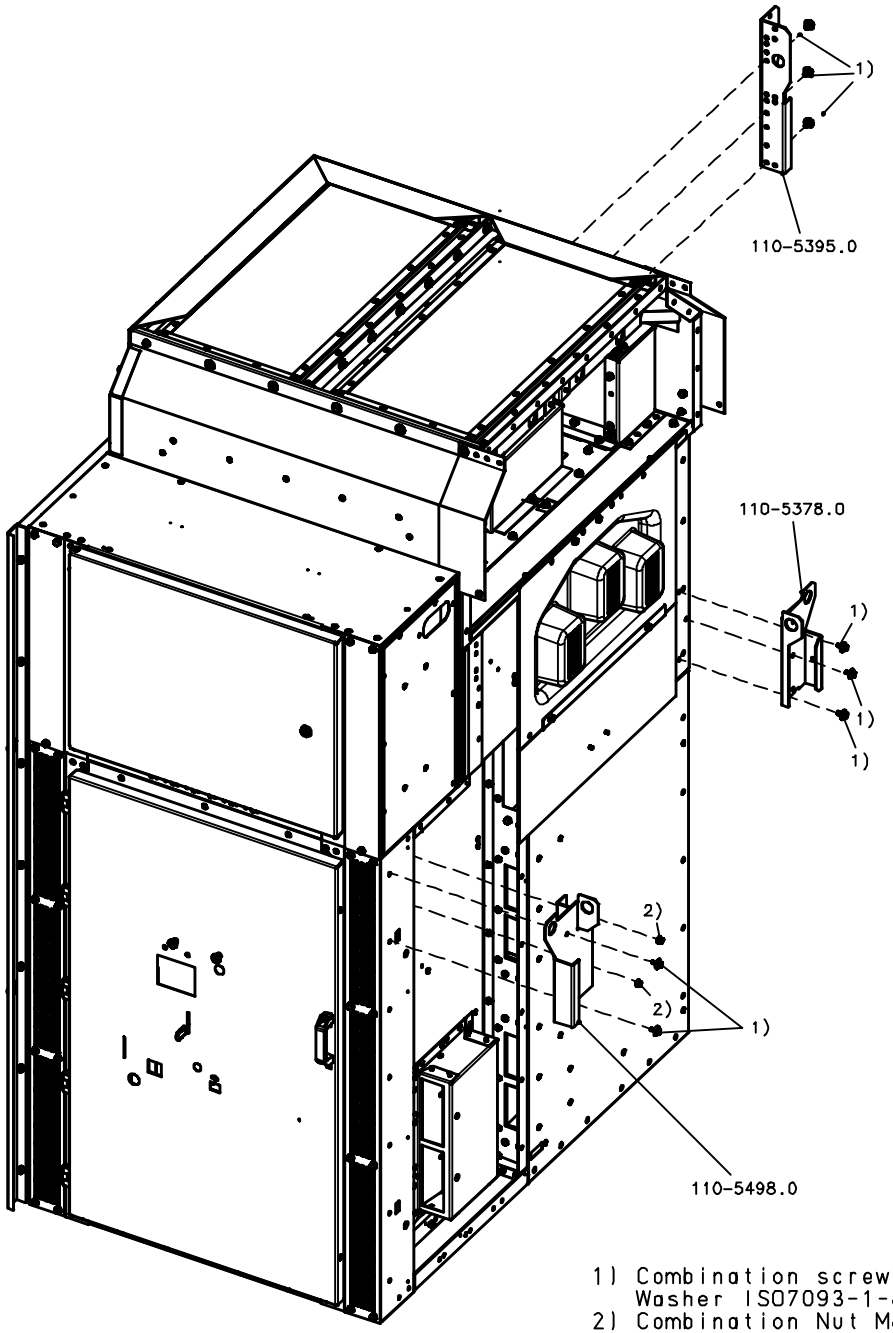

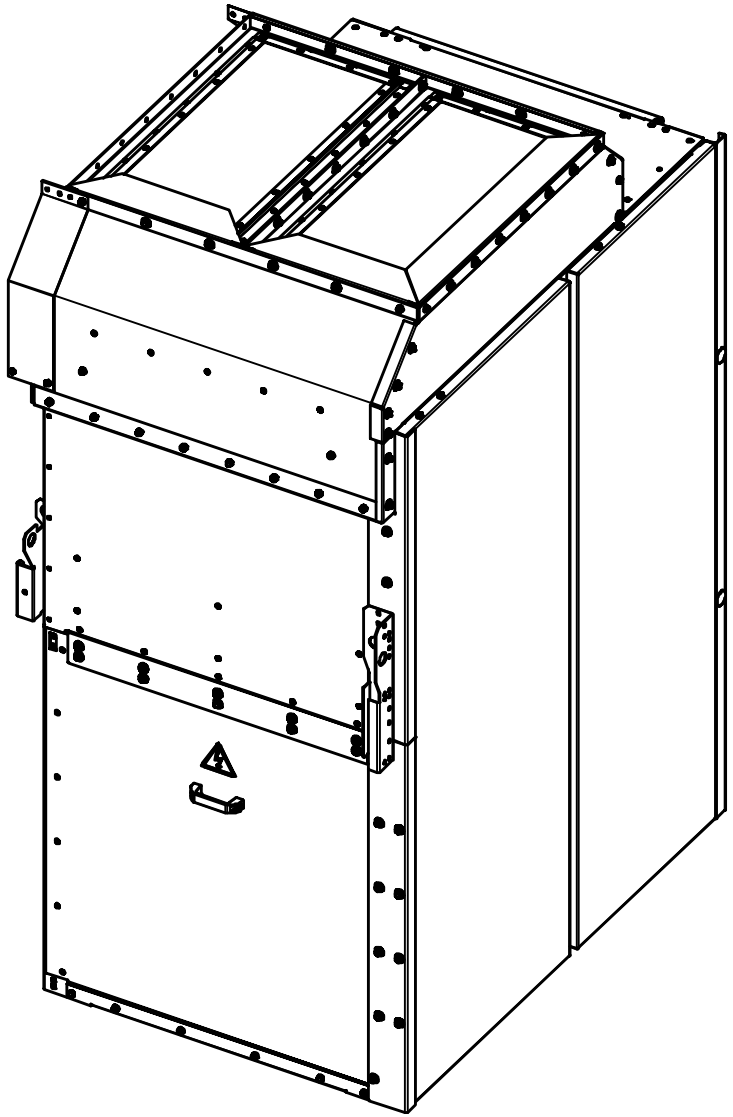

1) Combination screw M8x20 SN65480 +
Washer ISO7093-1-8-200 HV-A3L
2) Combination Nut M8 SN 65482

Tolerance Toleranz (ISO)	Material;Werkstoff	Mass ; Masse	Papersize Format	01-11-2012	KAVAL	Date Datum	16-05-2012	Designation Benennung	ISO-Projection
-	-	-	B/A3	Date Datum	Name Name	Name Name	AYKOC	Transport materials 1000mm	
--	-	Unit;Einheit mm	Scale Massstab 1:13			Department Abteilung	IC_LMV_MV_1_R&D		Page Blatt
	Material No./Nr. 1 SWF:(-)	Material No./Nr. 2	Released Freigabe Frei	12/6641	01	Location Standort	FFMCB		4+
				Mod./Ref-No. Aend.-Vorg.-Nr	Revision Revision	SIEMENS		Itemnumber Sachnummer 110-0397.9	

HPD

printed by oprtcual, 12/07/12-07:48:27

Confié à titre de secret d'enterprise. Tous droits reserves.
Comunicado como segredo empresarial. Reservados todos os direitos.
Confiado como secreto industrial. Todos los derechos reservados.

Als Betriebsgeheimnis anvertraut. Alle Rechte vorbehalten.
Proprietary data, company confidential. All rights reserved.

40kA,BB≤4000A or ≤31.5kA,BB≥3150A

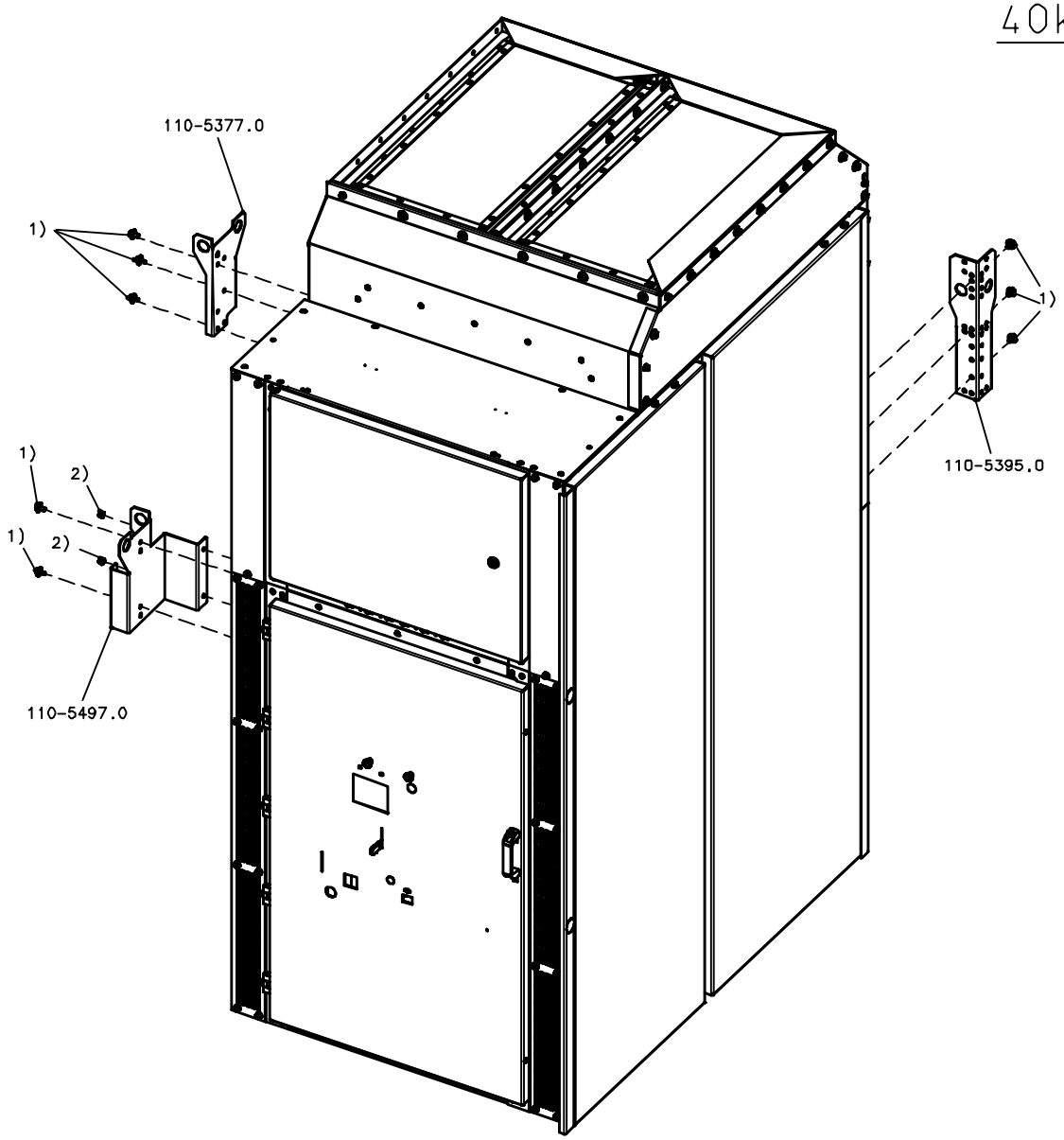

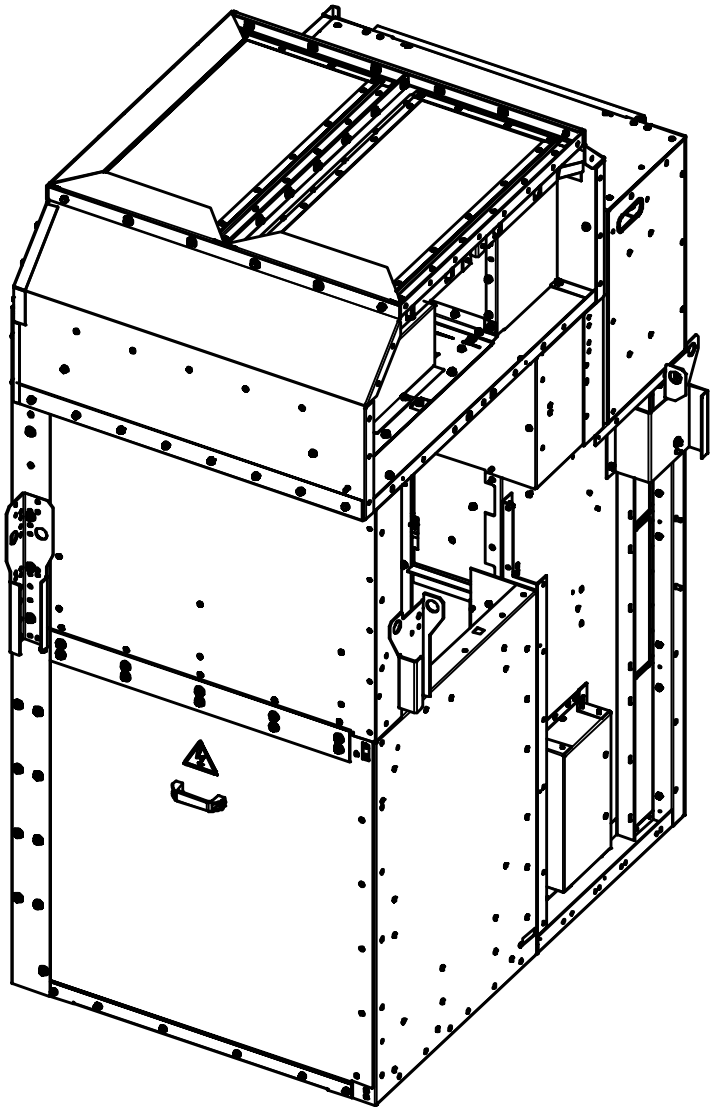

1) Combination screw M8x20 SN65480 +
Washer ISO7093-1-8-200 HV-A3L
2) Combination nut M8 SN 65482

Tolerance Toleranz (ISO)	Material;Werkstoff	Mass ; Masse	Papersize Format	01-11-2012	KAVAL	Date Datum	16-05-2012	Designation Benennung	ISO-Projection
-	-	-	B/A3	Date Datum	Name Name	Name Name	AYKOC	Transport materials 1000mm	
--	-	Unit;Einheit mm	Scale Massstab 1:12	12/6641	01	Department Abteilung	IC_LMV_MV_1_R&D		Page Blatt 5-
	Material No./Nr. 1 SWF:(-)	Material No./Nr. 2	Released Freigabe Frei	Mod./Ref-No. Aend.-Vorg.-Nr	Revision Revision	Location Standort	FFMCB	Itemnumber Sachnummer 110-0397.9	
						SIEMENS			

HPD

printed by oprtcual, 12/07/12-07:39:39

Confié à titre de secret d'enterprise. Tous droits reserves.
Comunicado como segredo empresarial. Reservados todos os direitos.
Confiado como secreto industrial. Todos los derechos reservados.

Als Betriebsgeheimnis anvertraut. Alle Rechte vorbehalten.
Proprietary data, company confidential. All rights reserved.

≤40kA, BB≤4000A

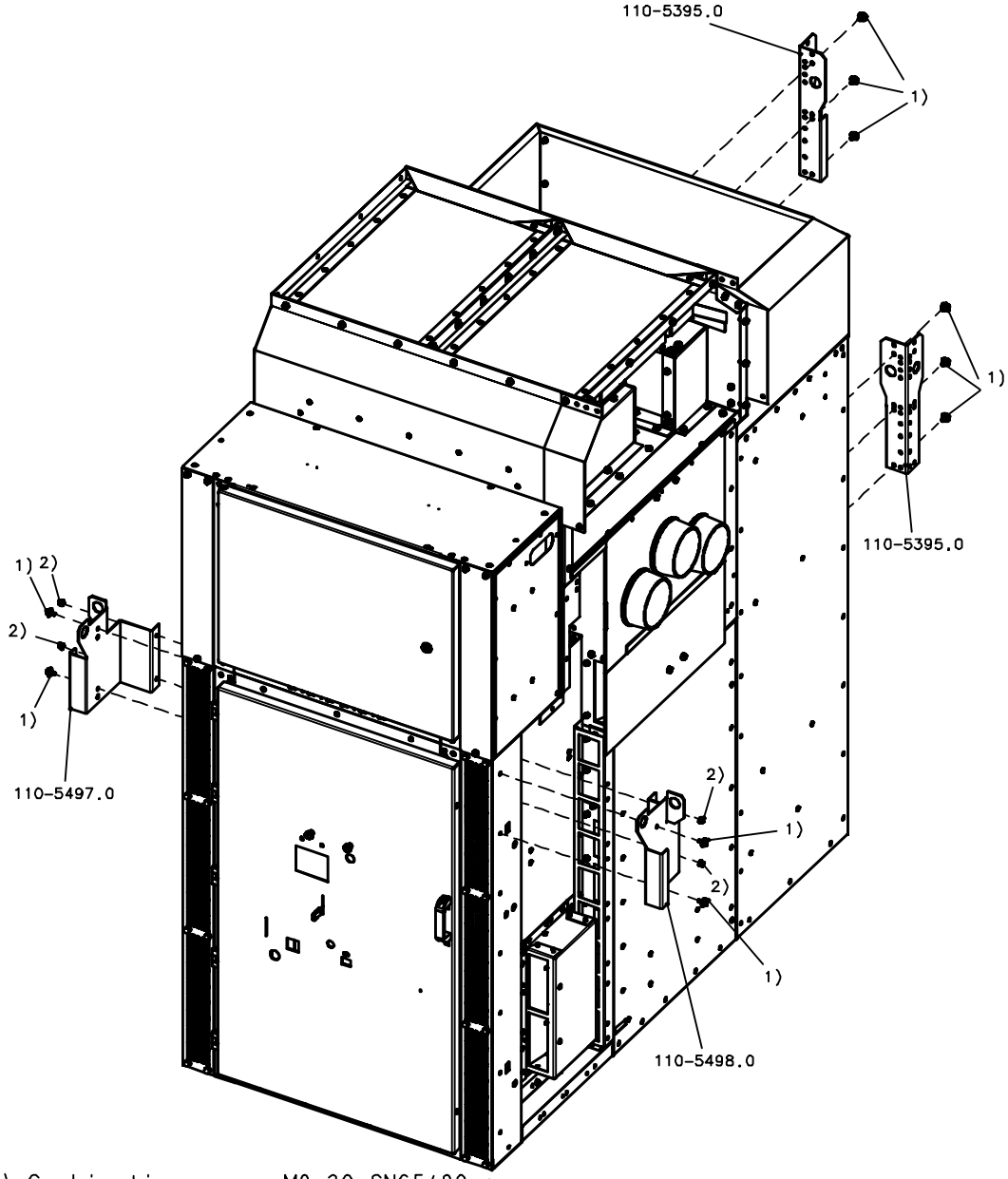

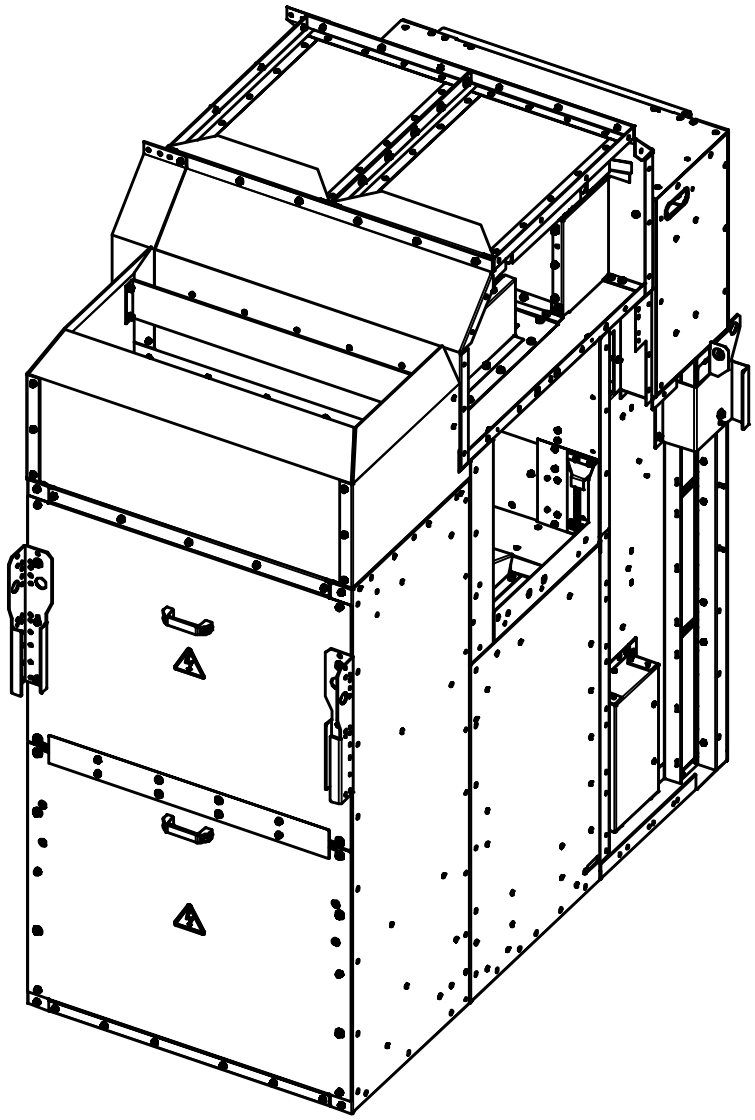

1) Combination screw M8x20 SN65480 +
Washer ISO7093-1-8-200 HV-A3L
2) Combination nut M8 SN 65482

Tolerance Toleranz (ISO)	Material;Werkstoff	Mass ; Masse	Papersize Format	09-11-2012	KAVAL	Date Datum	16-05-2012	Designation Benennung	ISO-Projection
-	-	-	B/A3	Date Datum	Name Name	Name Name	AYKOC	Transport materials 1000mm with rear box	
--	-	Unit;Einheit mm	Scale Massstab 1:14	12/6641	01	Department Abteilung	IC_LMV_MV_1_R&D		Page Blatt 1+
	Material No./Nr. 1 SWF:(-)	Material No./Nr. 2	Released Freigabe Frei	Mod./Ref-No. Aend.-Vorg.-Nr	Revision Revision	Location Standort	FFMCB	Itemnumber Sachnummer 110-0398.9	
HPD						SIEMENS			

printed by oprtcual, 12/07/12-07:53:02

Confié a titre de secret d'enterprise. Tous droits reserves.
Comunicado como segredo empresarial. Reservados todos os direitos.
Confiado como secreto industrial. Todos los derechos reservados.

Als Betriebsgeheimnis anvertraut. Alle Rechte vorbehalten.
Proprietary data, company confidential. All rights reserved.

≤31.5kA, BB≤2500A

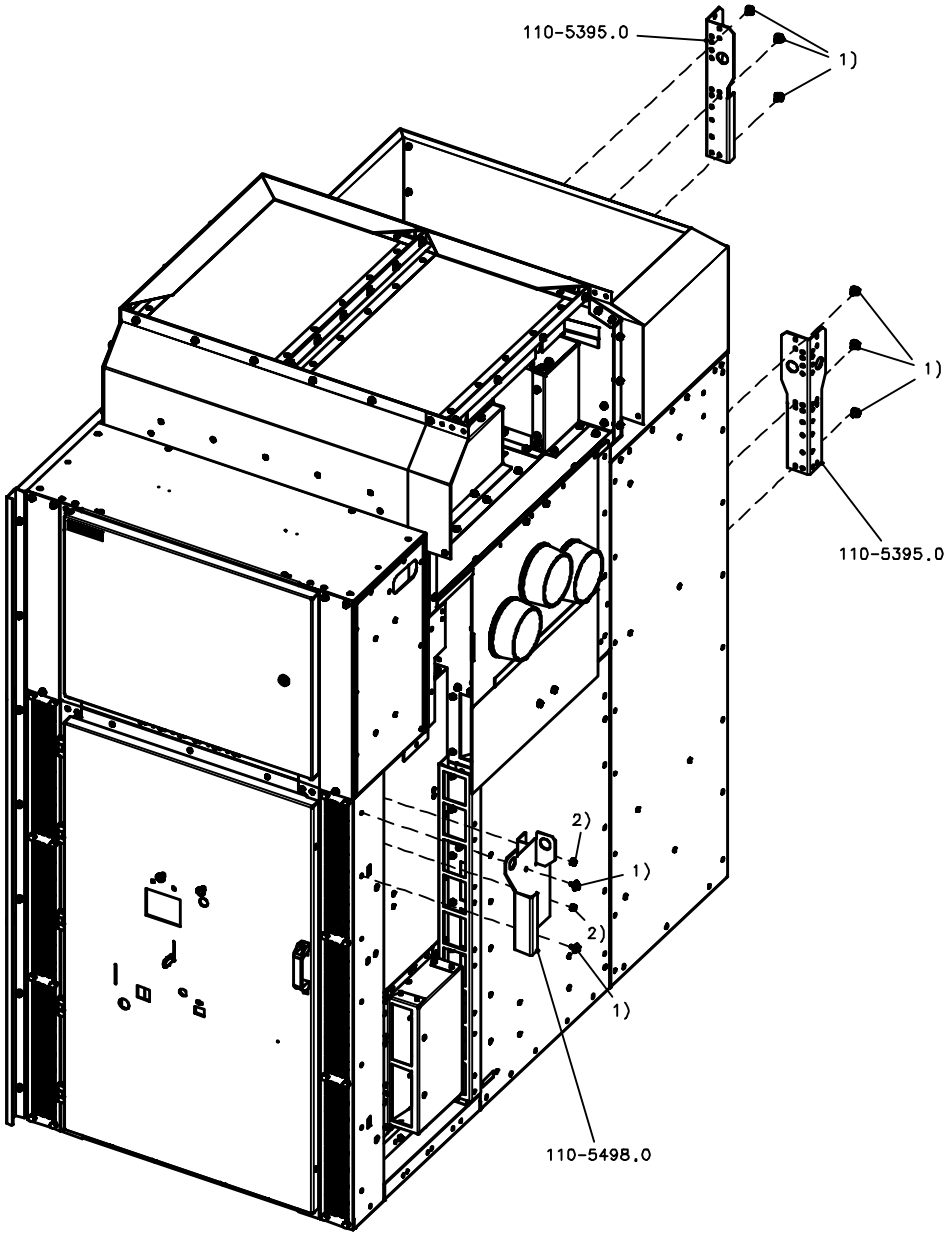

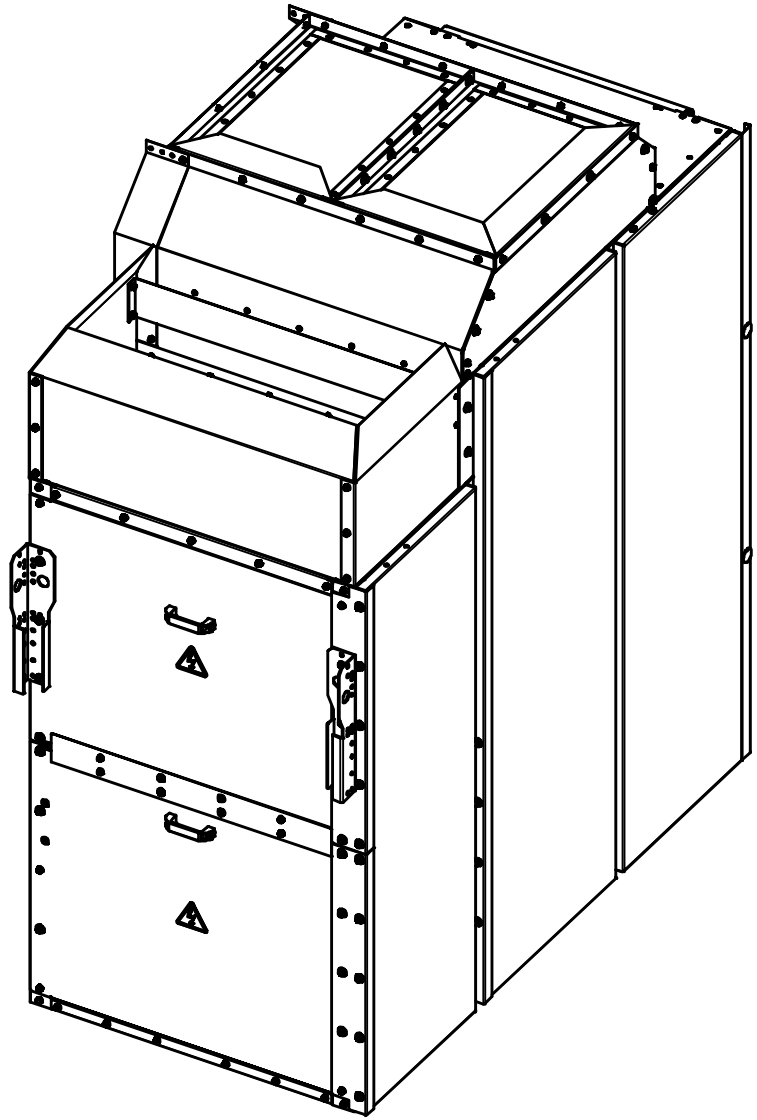

1) Combination screw M8x20 SN65480 +
   Washer ISO7093-1-8-200 HV-A3L
2) Combination nut M8 SN 65482

Tolerance Toleranz (ISO)	Material;Werkstoff	Mass ; Masse	Papersize Format	09-11-2012	KAVAL	Date Datum	16-05-2012	Designation Benennung	ISO-Projection
-	-	-	B/A3	Date Datum	Name Name	Name Name	AYKOC	Transport materials 1000mm with rear box	
--	-	Unit;Einheit mm	Scale Massstab 1:14	12/6641	01	Department Abteilung	IC_LMV_MV_1_R&D		Page Blatt 2+
	Material No./Nr. 1 SWF:(-)	Material No./Nr. 2	Released Freigabe Frei	Mod./Ref-No. Aend.-Vorg.-Nr.	Revision Revision	Location Standort	FFMCB	Itemnumber Sachnummer 110-0398.9	
HPD						SIEMENS			

Confié à titre de secret d'enterprise. Tous droits reserves.
Comunicado como segredo empresarial. Reservados todos os direitos.
Confiado como secreto industrial. Todos los derechos reservados.

Als Betriebsgeheimnis anvertraut. Alle Rechte vorbehalten.
Proprietary data, company confidential. All rights reserved.

≤31.5kA, BB≤2500A

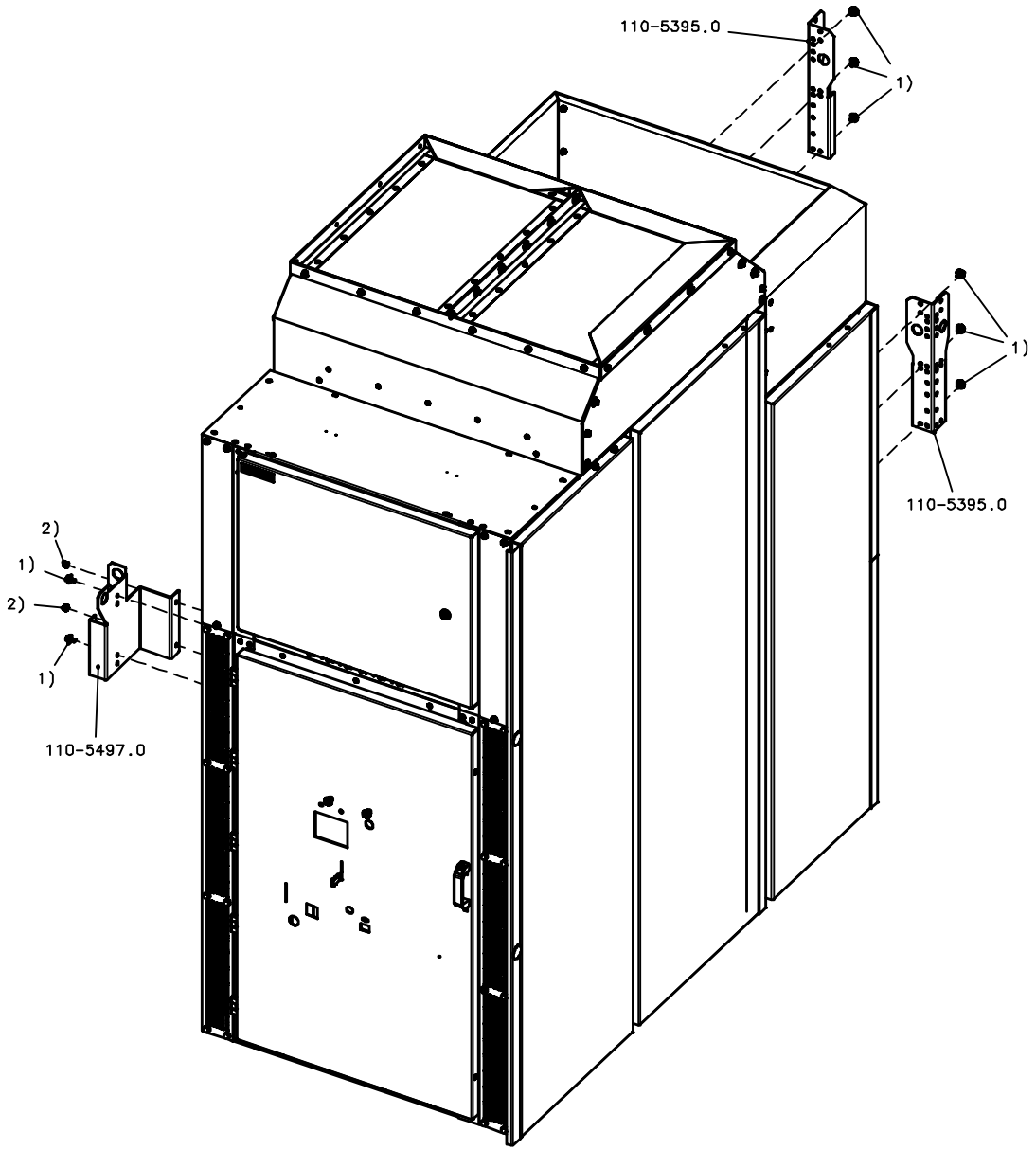

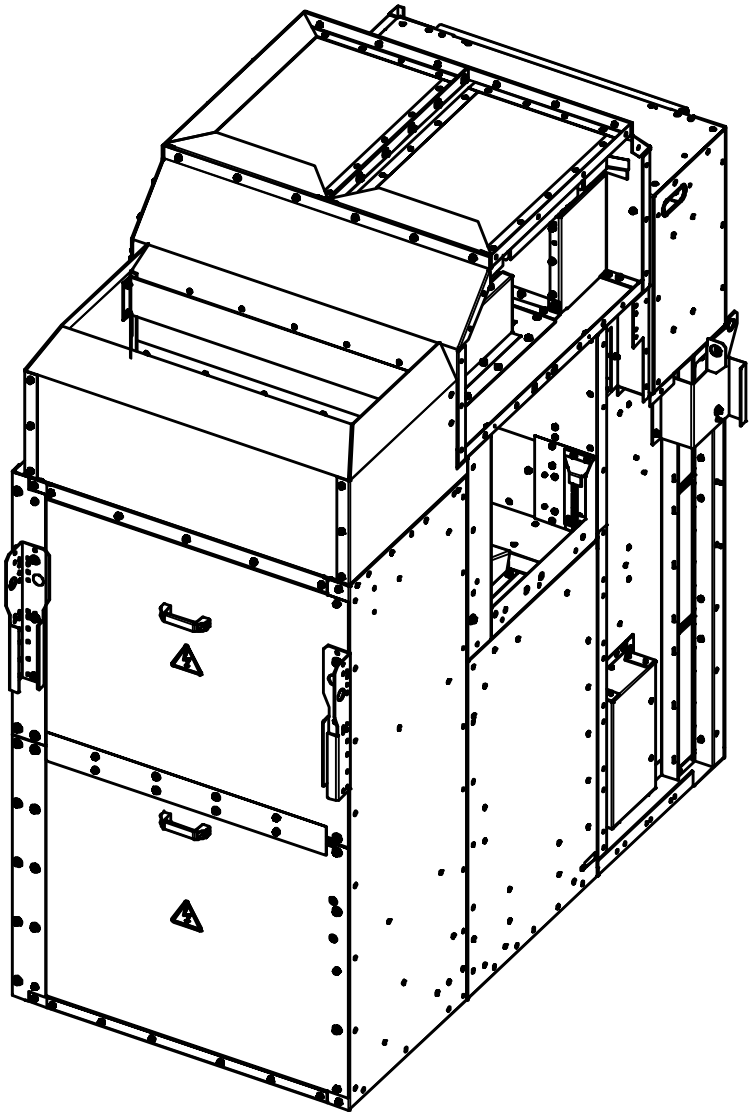

1) Combination screw M8x20 SN65480 +
   Washer ISO7093-1-8-200 HV-A3L
2) Combination nut M8 SN 65482

Tolerance Toleranz (ISO)	Material;Werkstoff	Mass ; Masse	Papersize Format	09-11-2012	KAVAL	Date Datum	16-05-2012	Designation Benennung	ISO-Projection
-	-	-	B/A3	Date Datum	Name Name	Name Name	AYKOC	Transport materials 1000mm with rear box	
--	-	Unit;Einheit mm	Scale Massstab 1:14	12/6641	01	Department Abteilung	IC_LMV_MV_1_R&D		Page Blatt 3+
	Material No./Nr. 1 SWF:(-)	Material No./Nr. 2	Released Freigabe Frei	Mod./Ref-No. Aend.-Vorg.-Nr.	Revision Revision	Location Standort	FFMCB	Itemnumber Sachnummer 110-0398.9	
						SIEMENS			

HPD

printed by oprtcual, 12/07/12-07:52:19

Confié à titre de secret d'enterprise. Tous droits reserves.
Comunicado como segredo empresarial. Reservados todos os direitos.
Confiado como secreto industrial. Todos los derechos reservados.

Als Betriebsgeheimnis anvertraut. Alle Rechte vorbehalten.
Proprietary data, company confidential. All rights reserved.

40kA, BB≤4000A or ≤31.5kA, BB≥3150A

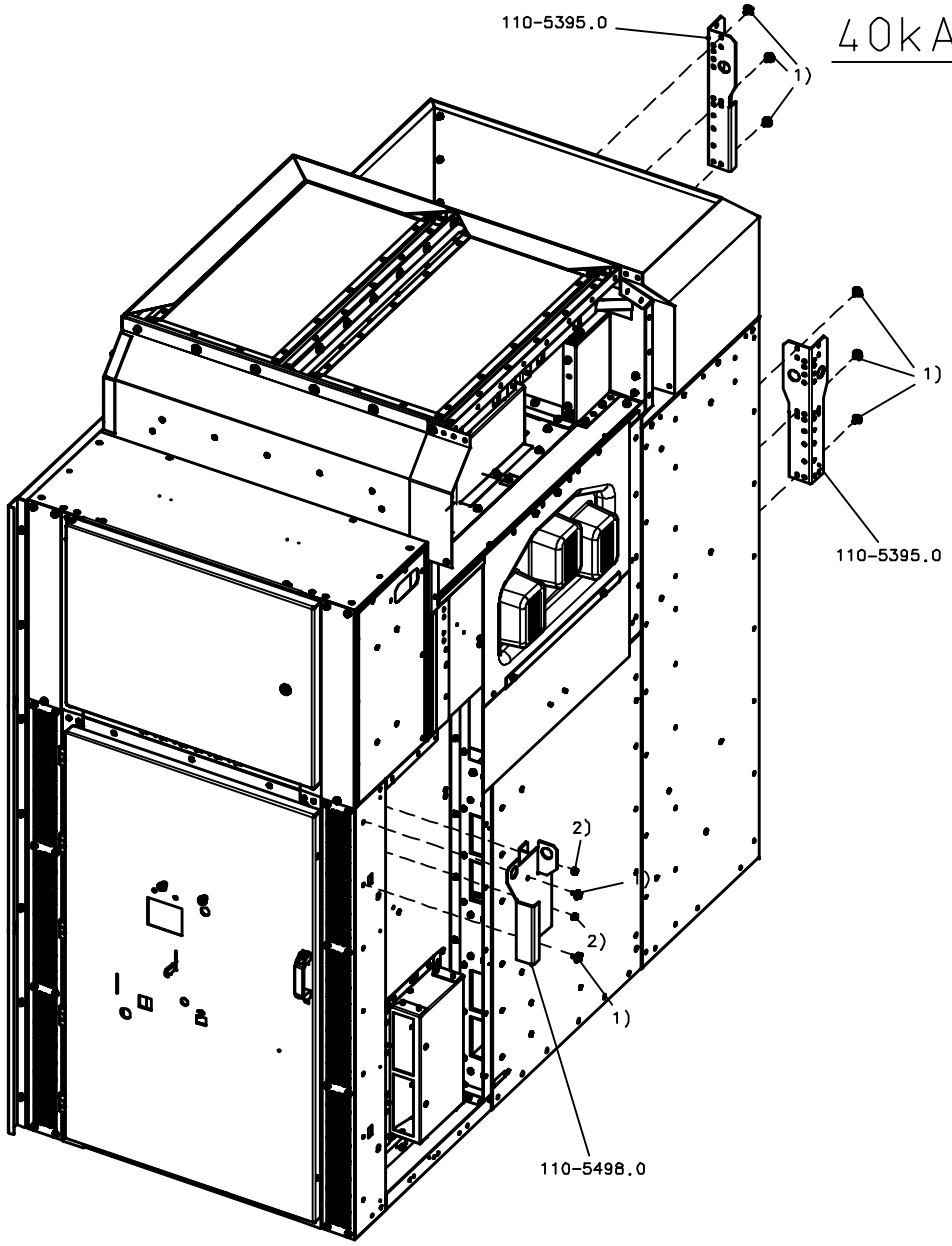

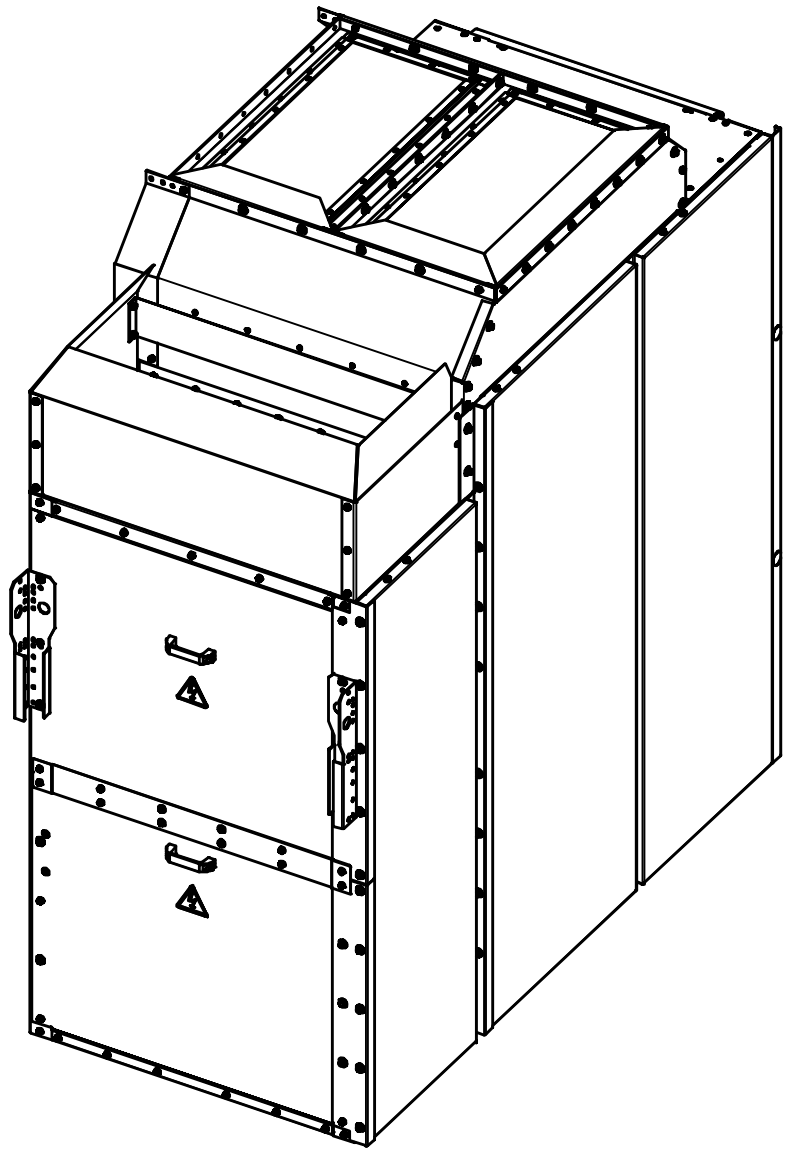

Tolerance Toleranz (ISO)	Material;Werkstoff	Mass ; Masse	Papersize Format	07-12-2012	KAVAL	Date Datum	16-05-2012	Designation Benennung	ISO-Projection
-	-	kg	B/A3			Name Name	AYKOC	Transport Materials 1000mm with rearbox	
--	-	0.00 lb	Scale Massstab	Date Datum	Name Name	Department Abteilung	IC_LMV_MV_1_R&D		
		Unit;Einheit	1:14	12/6641	01	Location Standort	FFMCB		Page Blatt
	Material No./Nr. 1	Material No./Nr. 2	Released Freigabe			SIEMENS		Itemnumber Sachnummer	
	SWF:(-)		Frei	Mod./Ref-No. Aend.-Vorg.-Nr.	Revision Revision			110-0398.9	4+

HPD

printed by oprtcual, 12/07/12-10:18:12

Confié à titre de secret d'enterprise. Tous droits reserves.
Comunicado como segredo empresarial. Reservados todos os direitos.
Confiado como secreto industrial. Todos los derechos reservados.

Als Betriebsgeheimnis anvertraut. Alle Rechte vorbehalten.
Proprietary data, company confidential. All rights reserved.

40kA, BB≤4000A or ≤31.5kA, BB≥3150A

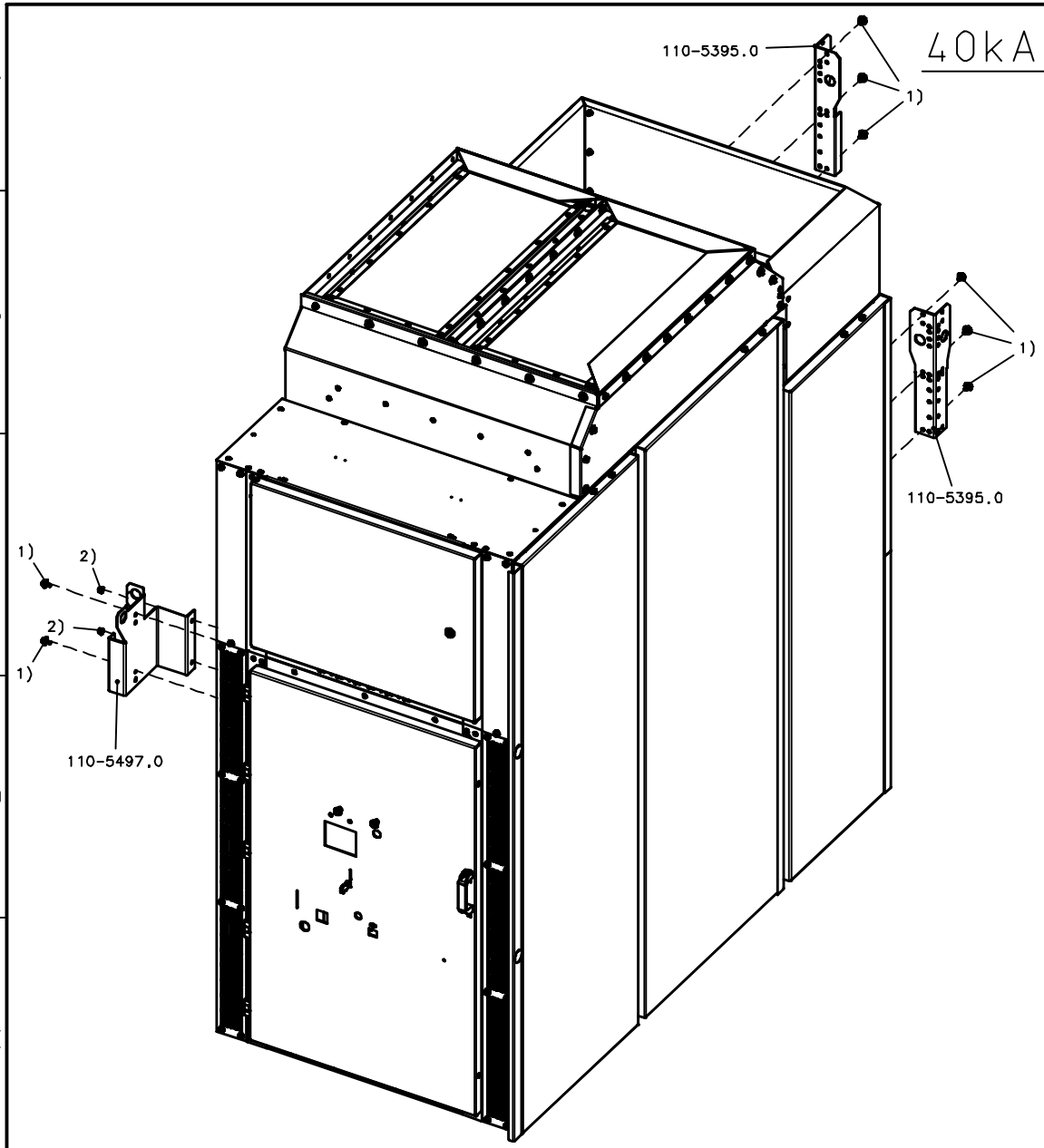

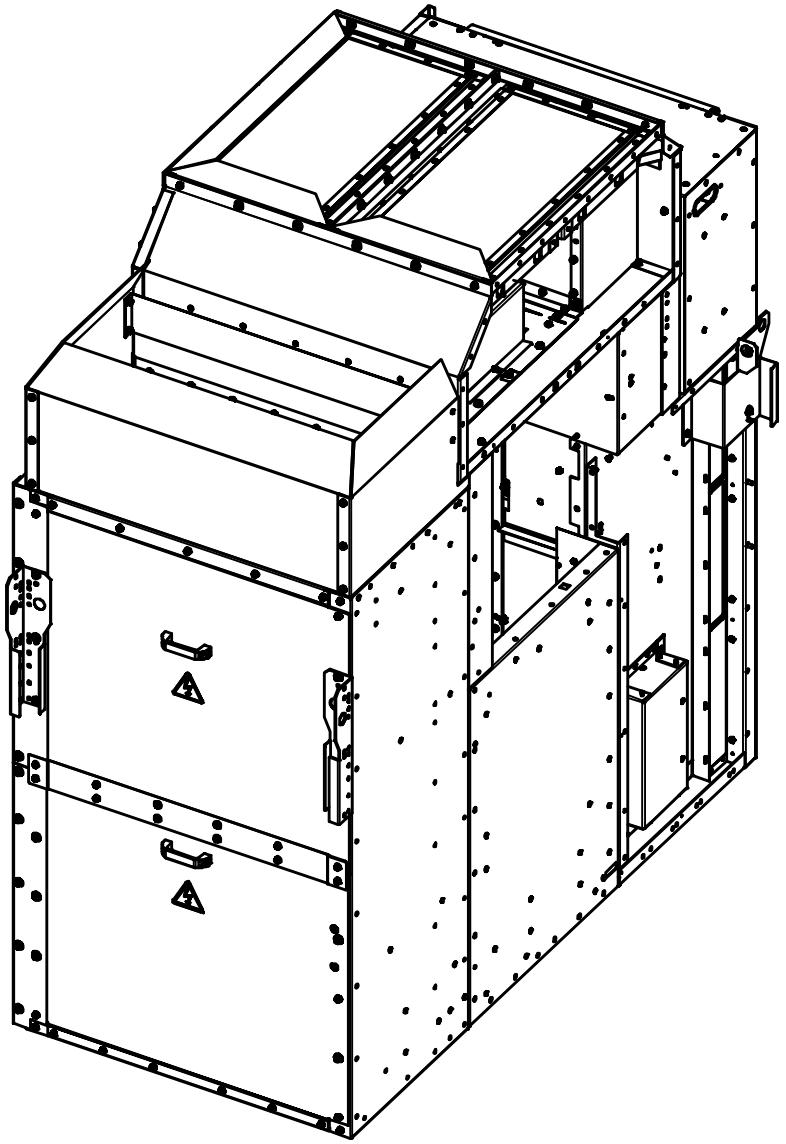

1) Combination screw M8x20 SN65480 +
   Washer ISO7093-1-8-200 HV-A3L
2) Combination nut M8 SN 65482

Tolerance Toleranz (ISO)	Material;Werkstoff	Mass ; Masse	Papersize Format	12-11-2012	KAVAL	Date Datum	16-05-2012	Designation Benennung	ISO-Projection
-	-	-	B/A3	Date Datum	Name Name	Name Name	AYKOC	Transport materials 1000mm with rear box	
--	-	Unit;Einheit mm	Scale Massstab 1:14	12/6641	01	Department Abteilung	IC_LMV_MV_1_R&D		Page Blatt 5-
	Material No./Nr. 1 SWF:(-)	Material No./Nr. 2	Released Freigabe Frei	Mod./Ref-No. Aend.-Vorg.-Nr.	Revision Revision	Location Standort	FFMCB	Itemnumber Sachnummer 110-0398.9	
HPD						SIEMENS			

printed by oprtcual, 12/07/12-07:54:48

Confiè a titre de secret d'enterprise. Tous droits reserves.
Comunicado como segredo empresarial. Reservados todos os direitos.
Confiado como secreto industrial. Todos los derechos reservados.

Als Betriebsgeheimnis anvertraut. Alle Rechte vorbehalten.
Proprietary data, company confidential. All rights reserved.

PRC WITH EXIT TO REAR

1:10

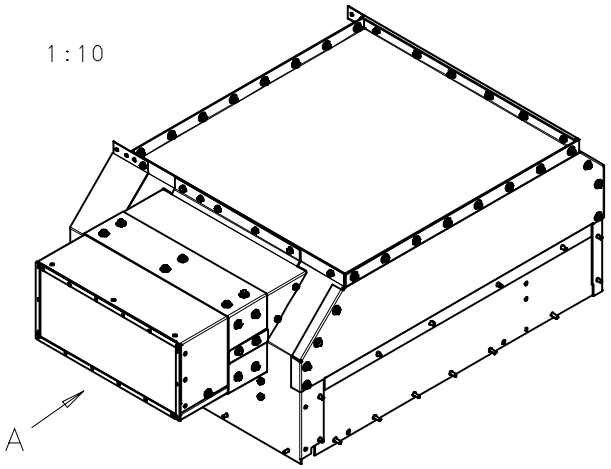

VIEW - A & A'

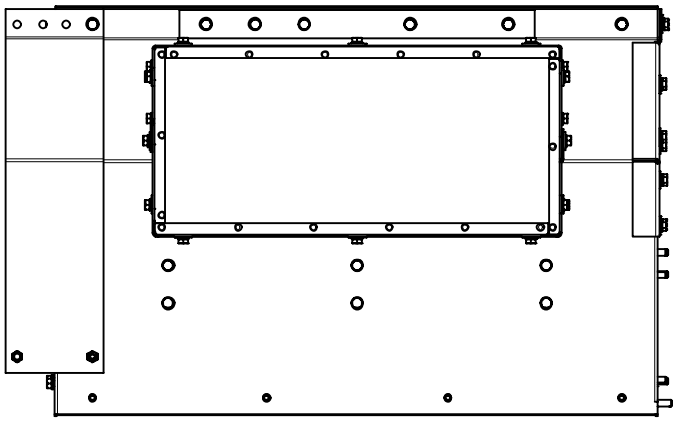

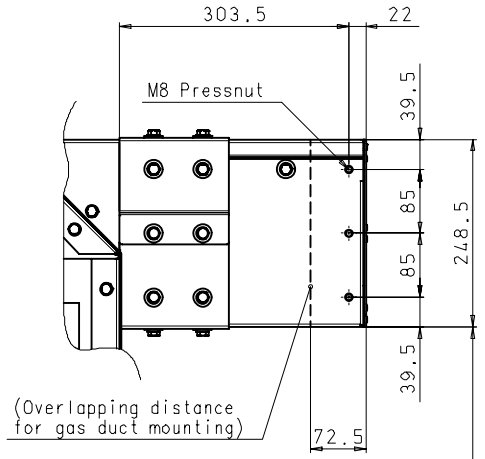

PRC WITH EXIT TO SIDE

1:10

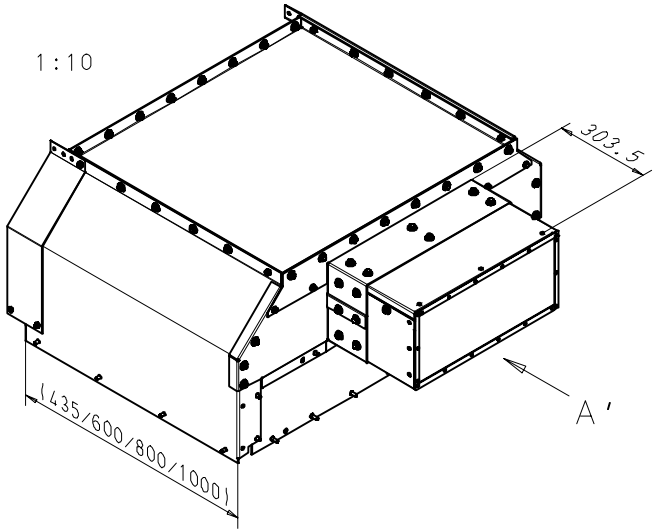

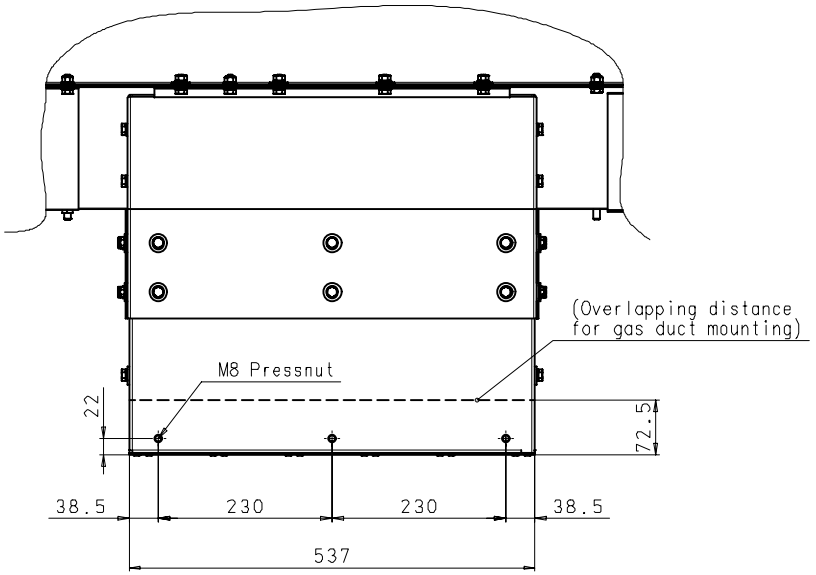

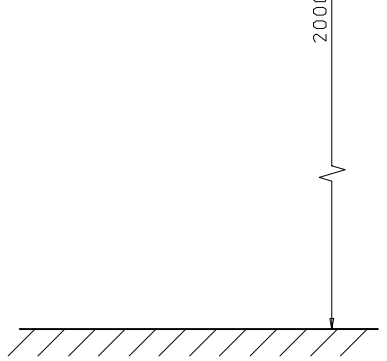

Tolerance Toleranz (ISO) DIN ISO 2768 medium	Material;Werkstoff	Mass ; Masse	Papersize Format C/A2	16-05-2011	CEKIC	Date Datum	16-05-2011	Designation Benennung	ISO-Projection
		Unit;Einheit mm	Scale Massstab 1:5	Date Datum	Name Name	Name Name	CEKIC,S	Dimension drawing for gas duct mounting	
	Material No./Nr. 1 SWF:(-	Material No./Nr. 2	Released Freigabe Frei	11/2404	00	Department Abteilung	E_D_MV_1_R&D		Page Blatt 1-
				Mod./Ref-No. Aend.-Vorg.-Nr.	Revision Revision	Location Standort	GEBZE	Itemnumber Sachnummer 110-0324.9	

SIEMENS

HPD

printed by aprtcual, 05/17/11-15:29:19

Confiè a titre de secret d'enterprise. Tous droits reserves.
Comunicado como segredo empresarial. Reservados todos os direitos.
Confiado como secreto Industrial. Todos los derechos reservados.

Als Betriebsgeheimnis anvertraut. Alle Rechte vorbehalten.
Proprietary data, company confidential. All rights reserved.

X

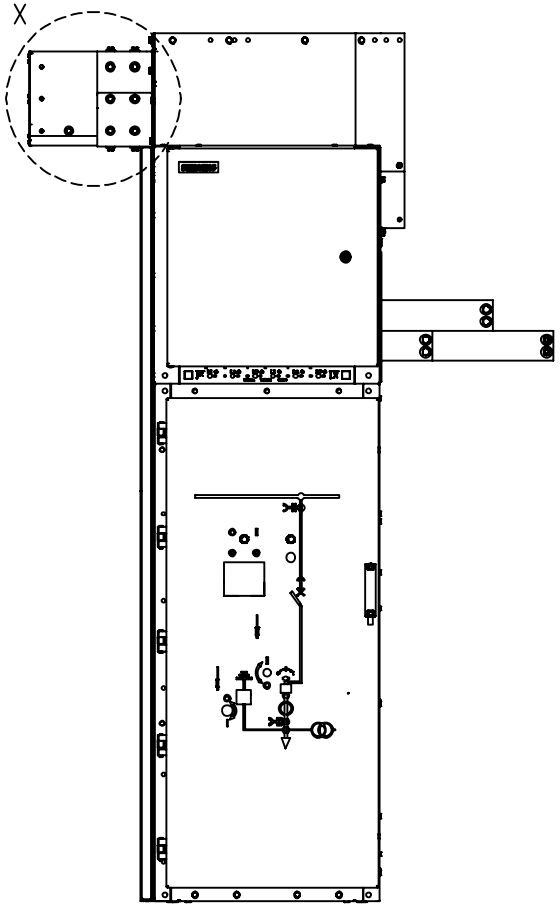

Detail X
1:2

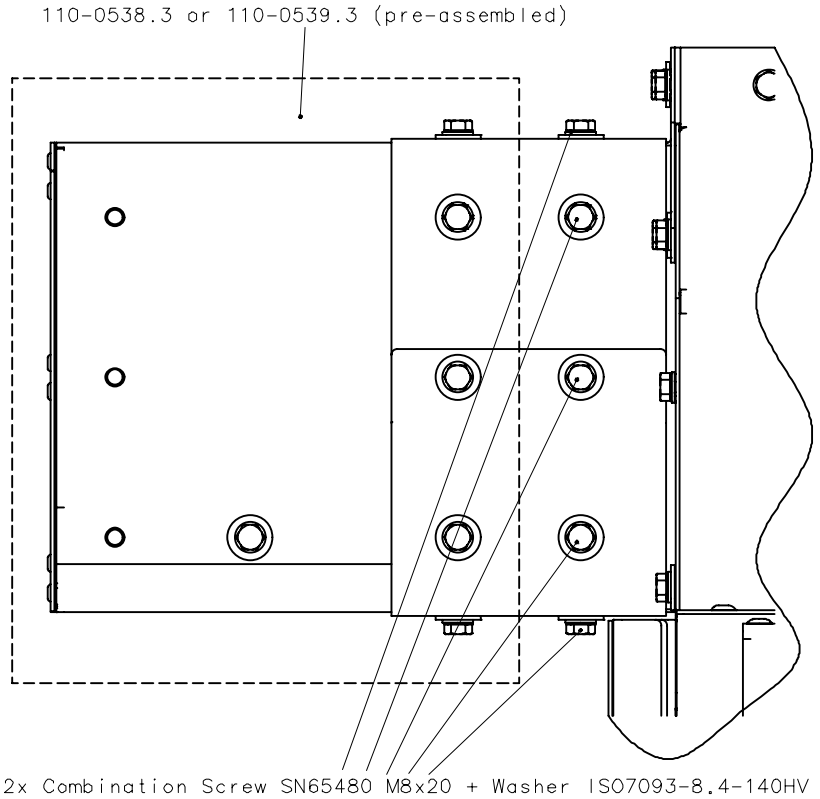

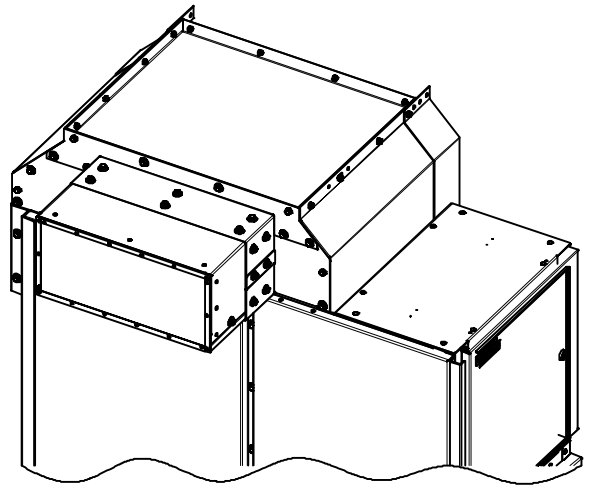

Tolerance Toleranz (ISO)	Material;Werkstoff	Mass ; Masse	Papersize Format	23-02-2010	FERRE	Date Datum	23-02-2010	Designation Benennung	ISO-Projection
-	-	-	C/A2	Date Datum	Name Name	Name Name	FERREIRAV	Assemb. Draw. IP Prot. Exit to Side	
-	-	Unit;Einheit mm	Scale Massstab 1:10	10/0864	00	Department Abteilung	E_D_MV_1_R&D		Page Blatt 1-
	Material No./Nr. 1 SWF:(-	Material No./Nr. 2	Released Freigabe Frei	Mod./Ref-No. Aend.-Vorg.-Nr.	Revision Revision	Location Standort	FFMCB	Itemnumber Sachnummer 110-0179.9	

SIEMENS

HPD

printed by cf2adm, 02/26/10-14:18:09

Confiè a titre de secret d'enterprise. Tous droits reserves.
Comunicado como segredo empresarial. Reservados todos os direitos.
Confiado como secreto industrial. Todos los derechos reservados.

Als Betriebsgeheimnis anvertraut. Alle Rechte vorbehalten.
Proprietary data, company confidential. All rights reserved.

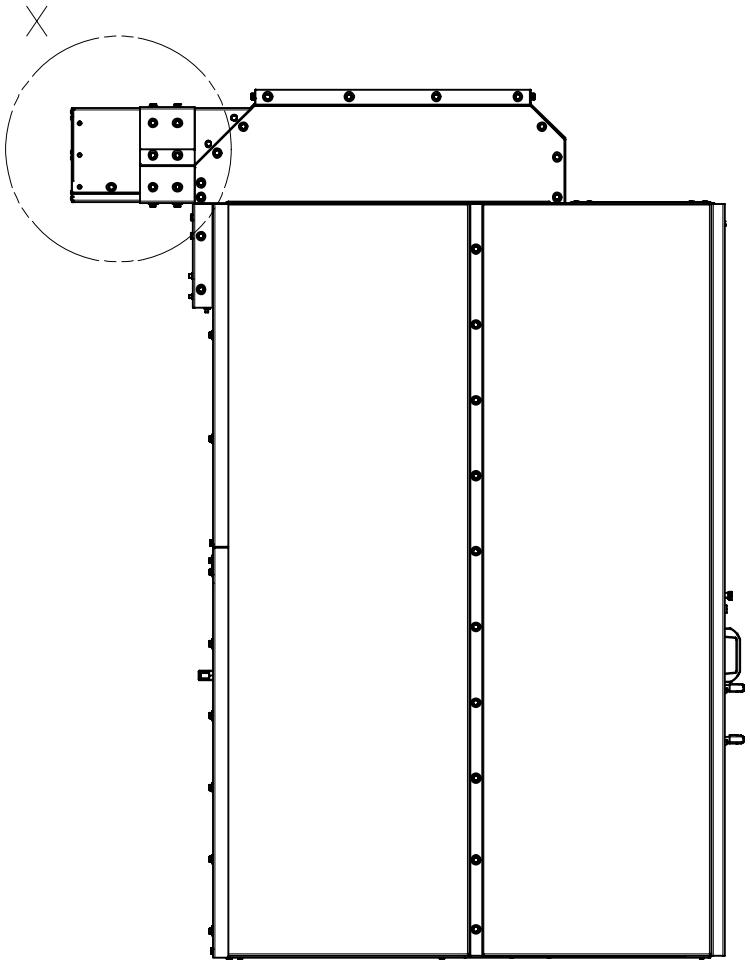

DETAIL X
1:2

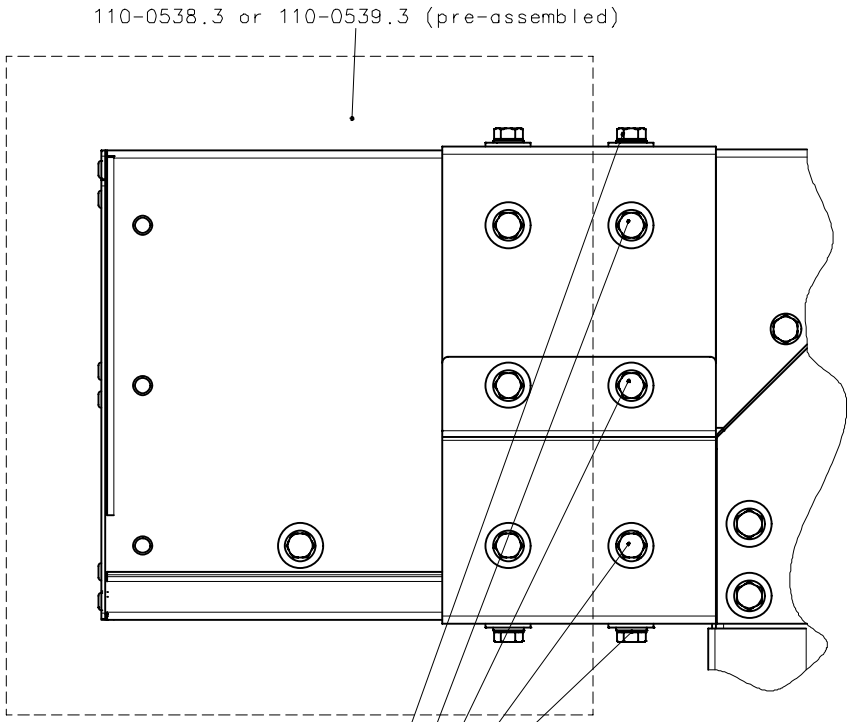

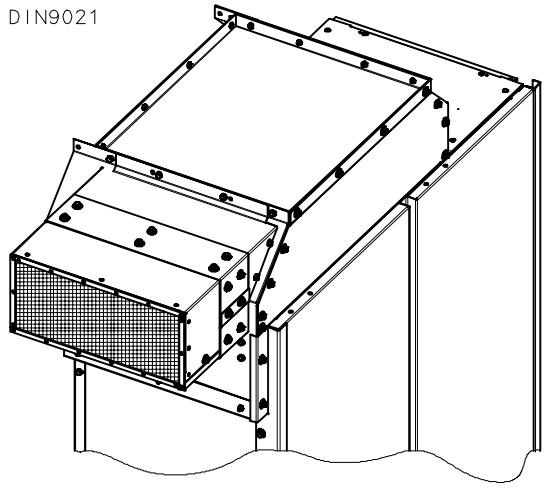

Tolerance Toleranz (ISO)	Material;Werkstoff	Mass ; Masse	Papersize Format	02-09-2010	SCHLD	Date Datum	29-07-2010	Designation Benennung	ISO-Projection
-	-	-	C/A2	Date Datum	Name Name	Name Name	E.S.OZTURK	Rear exit for PRC 435/600/800mm	
-	-	Unit;Einheit mm	Scale Massstab 1:10			Department Abteilung	E_D_MV_1_R&D	-	Page Blatt 1+
	Material No./Nr. 1 SWF:(-	Material No./Nr. 2	Released Freigabe Frei	10/3825	02	Location Standort	KARTAL	Itemnumber Sachnummer 110-0231.9	
				Mod./Ref-No. Aend.-Varg.-Nr.	Revision Revision	SIEMENS			

HPD

printed by cf2adm, 09/06/10-10:14:39

Installation of exit to rear for 600 and 800mm panels

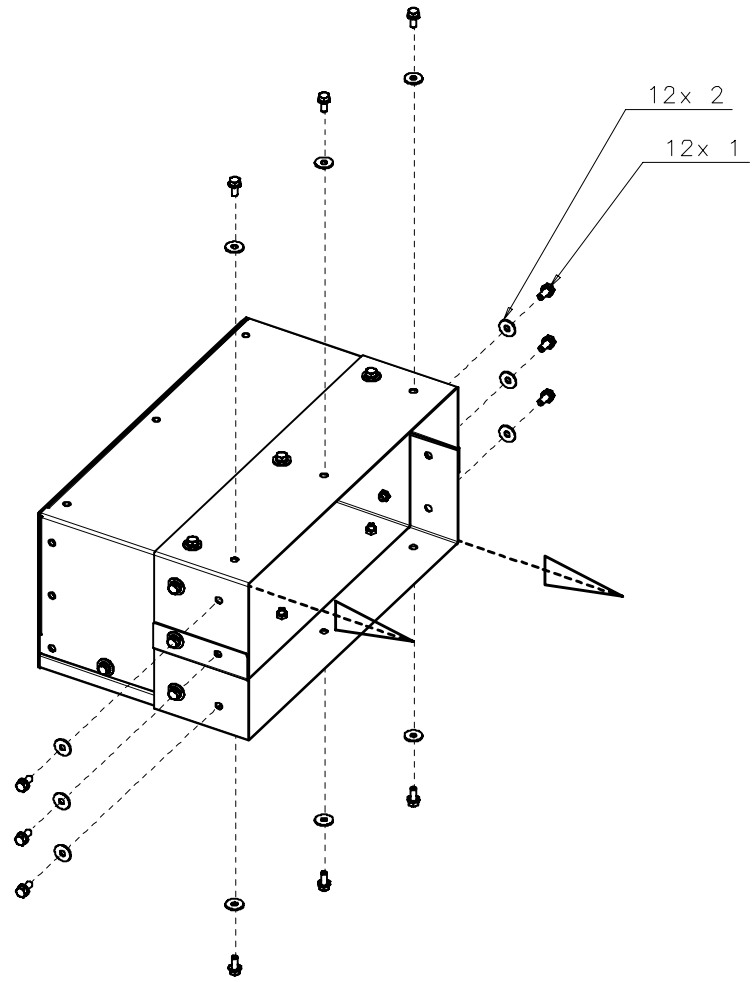

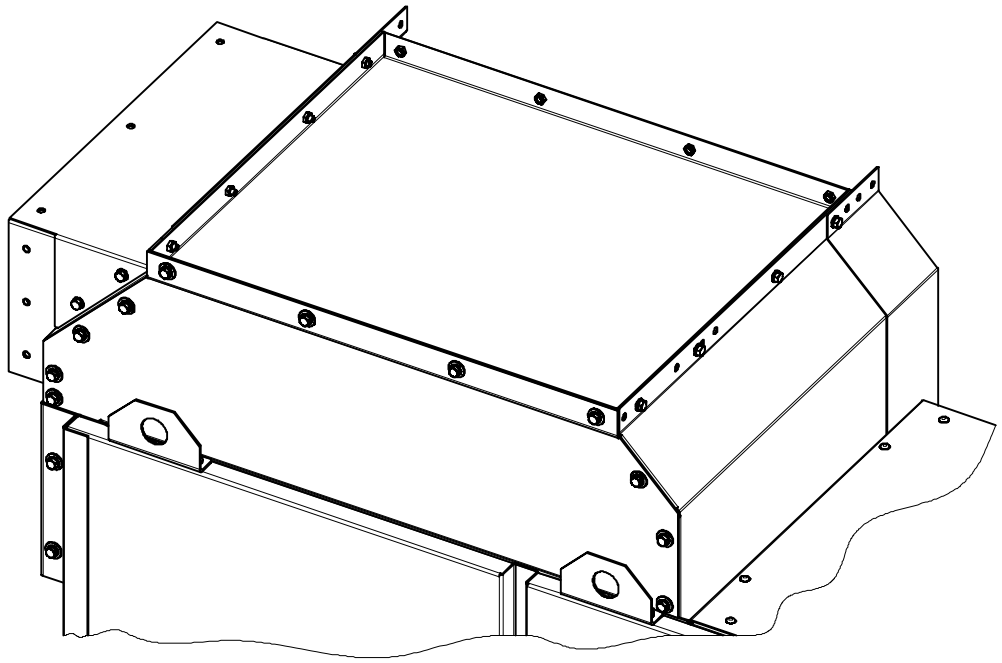

Fastening parts

1 Combination screw M8x20 SN65480 (SAP 4016512207)
2 Washer 8,4 DIN9021 (SAP 4108910716)

Confiè a titre de secret d'enterprise. Tous droits reserves.
Comunicado como segredo empresarial. Reservados todos os direitos.
Confiado como secreto industrial. Todos los derechos reservados.

Als Betriebsgeheimnis anvertraut. Alle Rechte vorbehalten.
Proprietary data, company confidential. All rights reserved.

Tolerance Toleranz (ISO)	Material;Werkstoff	Mass ; Masse	Papersize Format	03-09-2010	SCHLD	Date Datum	02-08-2010	Designation Benennung	ISO-Projection
		Unit;Einheit mm	Scale Massstab 1:5	Date Datum	Name Name	Name Name	E.S.OZTURK	Rear exit for PRC 435/600/800mm	
	Material No./Nr. 1 SWF:(-	Material No./Nr. 2	Released Freigabe Frei	10/3825	02	Department Abteilung	E_D_MV_1_R&D	-	Page Blatt 2+
				Mod./Ref-No. Aend.-Varg.-Nr.	Revision Revision	Location Standort	KARTAL	Itemnumber Sachnummer 110-0231.9	

SIEMENS

HPD

printed by cf2adm, 09/06/10-10:15:56

Confiè a titre de secret d'enterprise. Tous droits reserves.
Comunicado como segredo empresarial. Reservados todos os direitos.
Confiado como secreto industrial. Todos los derechos reservados.

Als Betriebsgeheimnis anvertraut. Alle Rechte vorbehalten.
Proprietary data, company confidential. All rights reserved.

Panel connection 435mm with 435

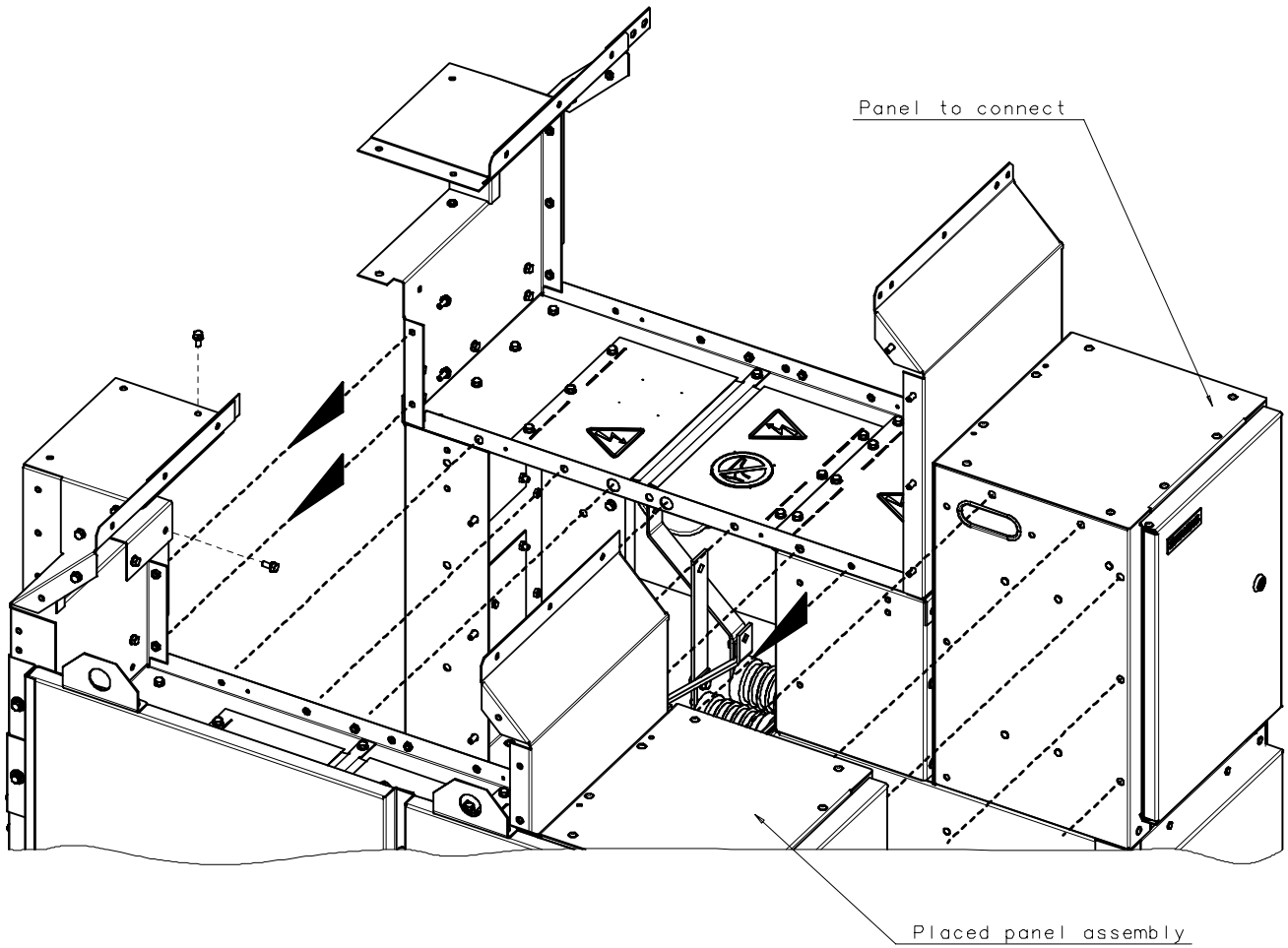

Installed exit to rear
To install use page 2 of drawing

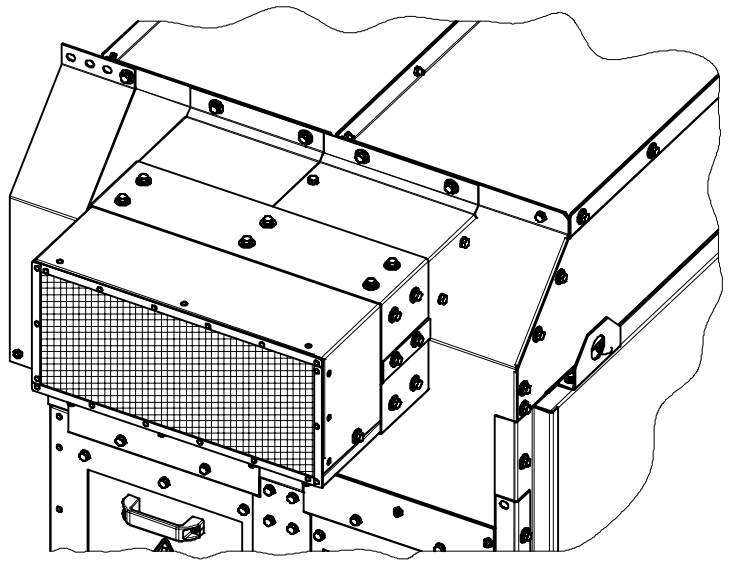

Tolerance Toleranz (ISO)	Material;Werkstoff	Mass ; Masse	Papersize Format	03-09-2010	SCHLD	Date Datum	03-09-2010	Designation Benennung	ISO-Projection
-	-	-	C/A2	Date Datum	Name Name	Name Name	SCHLUND	Rear exit to PRC 435/600/800mm	
-	-	Unit;Einheit mm	Scale Massstab 1:6			Department Abteilung	E_D_MV_1_R&D		Page Blatt
	Material No./Nr. 1	Material No./Nr. 2	Released Freigabe Frei	10/3825	02	Location Standort	FFMCB	Itemnumber Sachnummer 110-0231.9	3-
	SWF:(-			Mod./Ref-No. Aend.-Verg.-Nr.	Revision Revision	SIEMENS			

HPD

printed by cf2adm, 09/06/10-10:12:08

Confiè a titre de secret d'enterprise. Tous droits reserves.
Comunicado como segredo empresarial. Reservados todos os direitos.
Confiado como secreto industrial. Todos los derechos reservados.

Als Betriebsgeheimnis anvertraut. Alle Rechte vorbehalten.
Proprietary data, company confidential. All rights reserved.

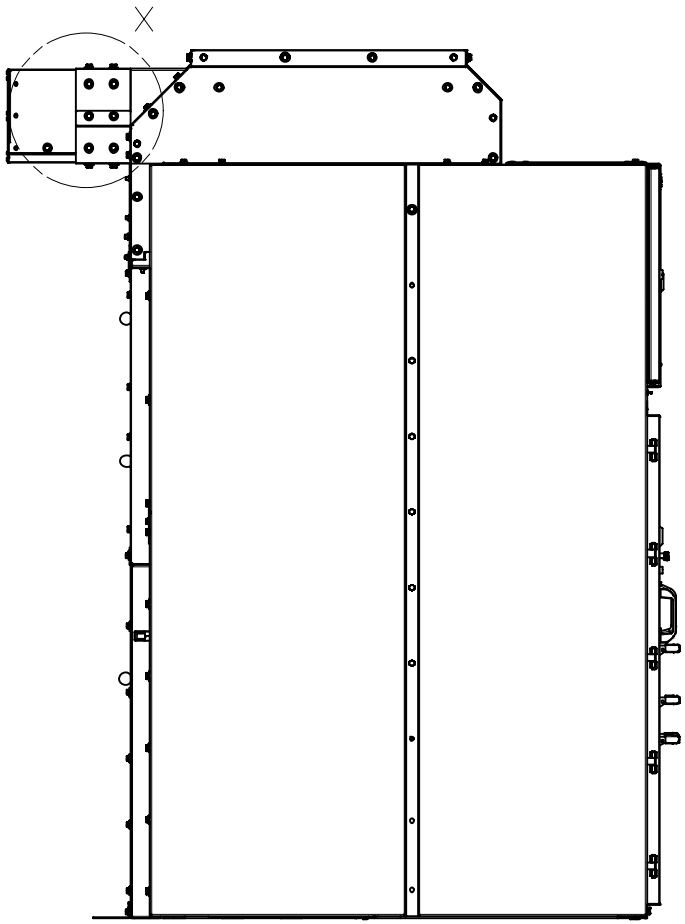

DETAIL-X
1 : 2

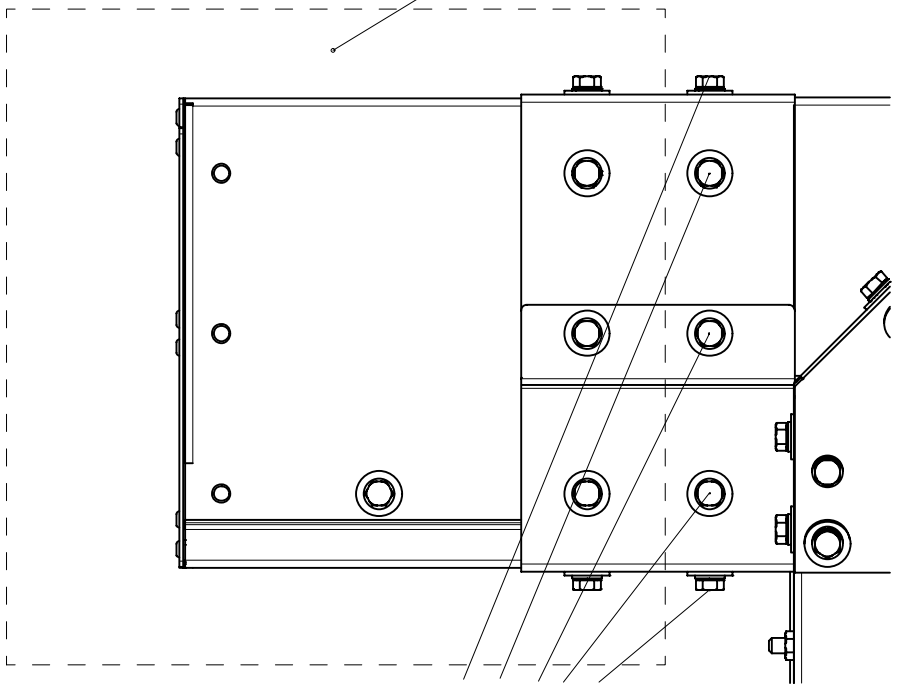

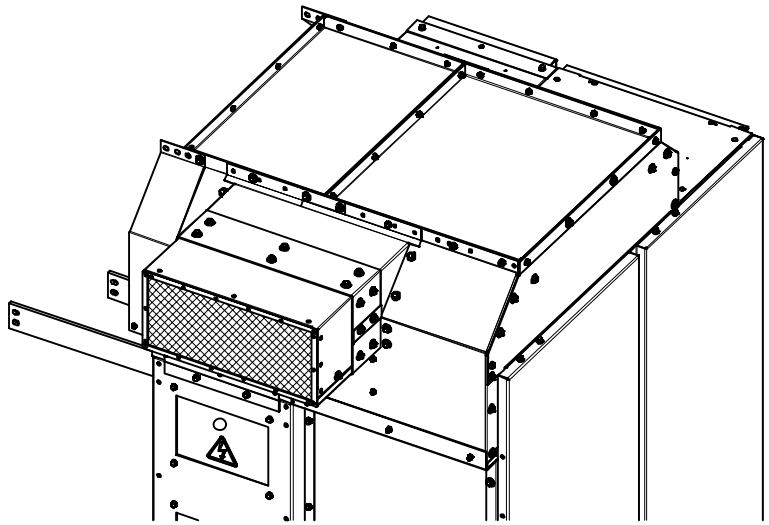

Tolerance Toleranz (ISO)	Material;Werkstoff	Mass ; Masse kg 0.00 lb	Papersize Format C/A2	28-07-2010	ES.OZ	Date Datum 28-07-2010	Designation Benennung Assem. Draw. IP Prot. Exit to Rear f. Combined Panels
-		Unit;Einheit mm	Scale Massstab 1:10	Date Datum 10/3391	Name Name 00	Name E.S.OZTURK	ISO-Projection
	Material No./Nr. 1 SWF:(	Material No./Nr. 2 :(	Released Freigabe Frei	Mod./Ref-No. Aend.-Vorg.-Nr.	Revision Revision	Department Abteilung E_D_MV_1_R&D	Page Blatt 1+
						Location Standort KARTAL	Itemnumber Sachnummer 110-0234.9
						SIEMENS	

PD

printed by cf2badm, 08/04/10-16:13:28

Confiè a titre de secret d'enterprise. Tous droits reserves.
Comunicado como segredo empresarial. Reservados todos os direitos.
Confiado como secreto industrial. Todos los derechos reservados.

Als Betriebsgeheimnis anvertraut. Alle Rechte vorbehalten.
Proprietary data, company confidential. All rights reserved.

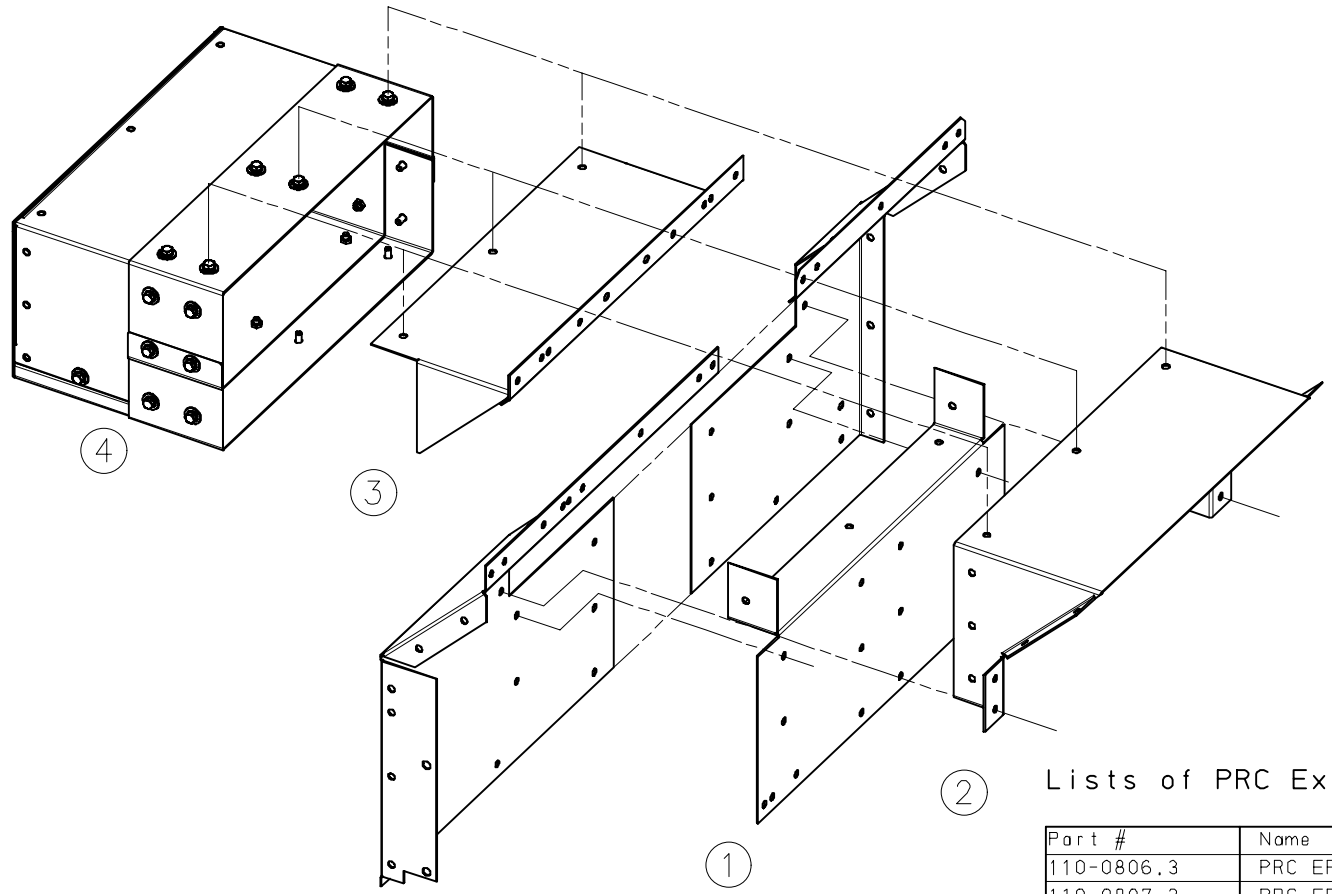

Attention!
Assembly must be completed in the given order.
Connecting parts list is 110-0855.3

Lists of PRC Exit to Rear for Combined Panels

Part #	Name
110-0806.3	PRC EPL Closed exit to rear 435-435mm
110-0807.3	PRC EPR Closed exit to rear 435-435mm
110-0808.3	PRC MP Closed exit to rear 435-435mm right panel
110-0809.3	PRC EPL Closed exit to rear 435-600mm
110-0810.3	PRC EPR Closed exit to rear 435-600mm
110-0811.3	PRC MP Closed exit to rear 435-600mm right panel
110-0812.3	PRC EPL Closed exit to rear 435-800mm
110-0813.3	PRC EPR Closed exit to rear 435-800mm
110-0814.3	PRC MP Closed exit to rear 435-800mm right panel
110-0856.3	PRC MP Closed exit to rear 435-435mm left panel
110-0857.3	PRC MP Closed exit to rear 435-600mm left panel
110-0858.3	PRC MP Closed exit to rear 435-800mm left panel

Tolerance Toleranz (ISO): -, --
Material;Werkstoff:
Mass ; Masse: kg 0.00 lb
Unit;Einheit: mm
Papersize Format: C/A2
Scale Massstab: 1:5
Material No./Nr. 1: SWF:(
Material No./Nr. 2: :(
Released Freigabe: Frei

28-07-2010	ES.OZ	Date Datum	28-07-2010
Date Datum	Name Name	Name Name	E.S.OZTURK
10/3391	00	Department Abteilung	E_D_MV_1_R&D
Mod./Ref-No. Aend.-Vorg.-Nr.	Revision Revision	Location Standort	KARTAL

SIEMENS

Designation Benennung: Assem. Draw. IP Prot. Exit to Rear f. Combined Panels
Itemnumber Sachnummer: 110-0234.9
ISO-Projection
Page Blatt: 2-

PD

printed by cf2adm, 08/04/10-16:13:53

Confiè a titre de secret d'enterprise. Tous droits reserves.
Comunicado como segredo empresarial. Reservados todos os direitos.
Confiado como secreto industrial. Todos los derechos reservados.

Als Betriebsgeheimnis anvertraut. Alle Rechte vorbehalten.
Proprietary data, company confidential. All rights reserved.

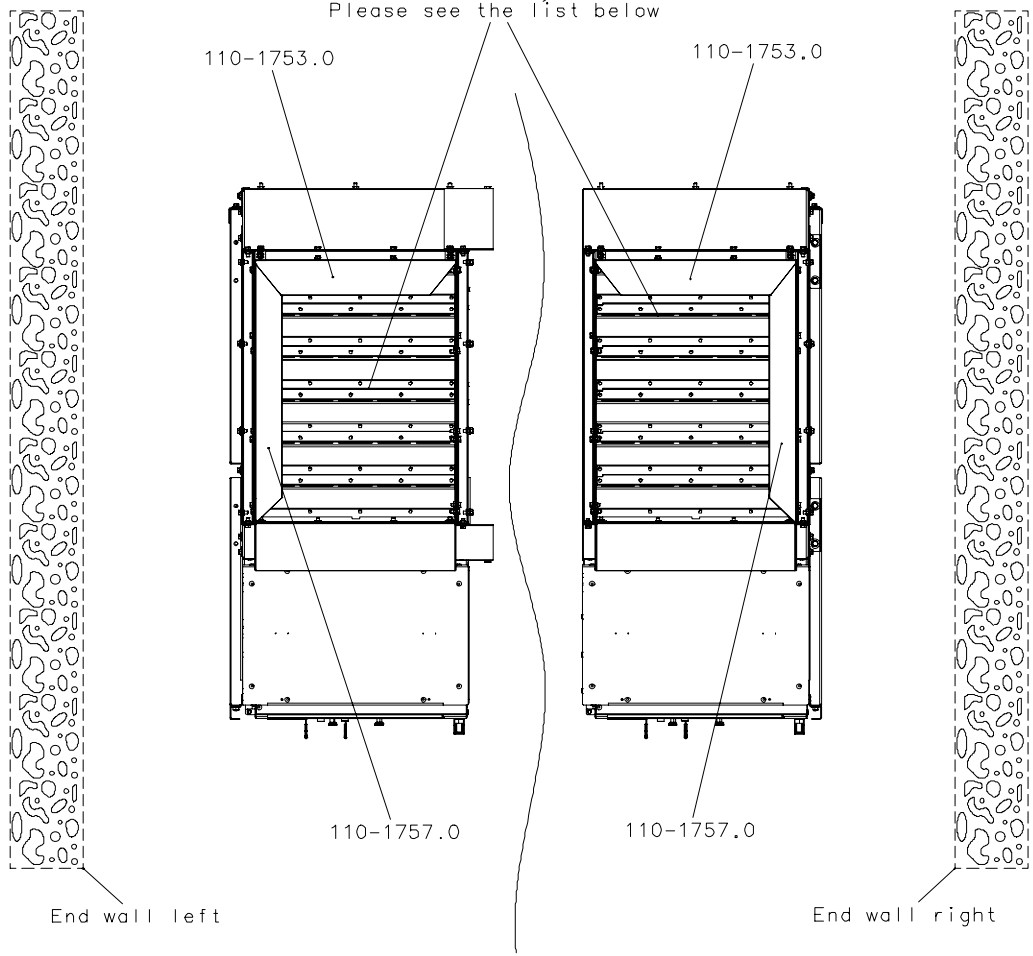

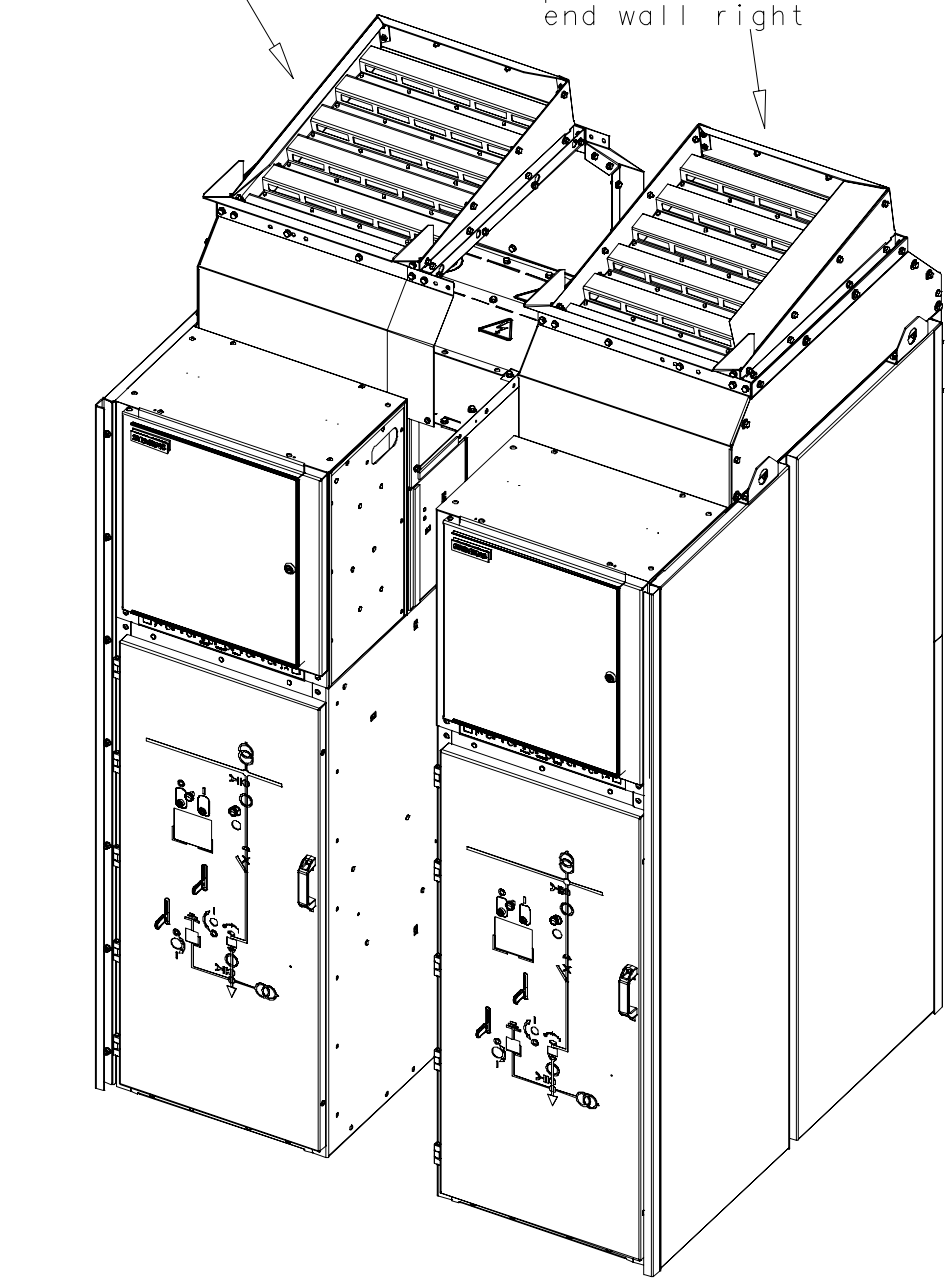

Absorber Assemblies

Part #	Part Name
110-0483.3	PRC absorber IP3X 600mm
110-0729.3	PRC absorber IP4X 600mm
110-0484.3	PRC absorber IP3X 800mm
110-0730.3	PRC absorber IP4X 800mm

Tolerance Toleranz (ISO)	Material;Werkstoff	Mass ; Masse	Papersize Format	06-08-2010	ES.OZ	Date Datum	06-08-2010
-	-	-	C/A2	Date Datum	Name Name	Name Name	E.S.OZTURK
-	-	Unit;Einheit mm	Scale Massstab W/O scl	10/3510	00	Department Abteilung	E_D_MV_1_R&D
--	Material No./Nr. 1 SWF:(-	Material No./Nr. 2	Released Freigabe Frei	Mod./Ref-No. Aend.-Verg.-Nr.	Revision Revision	Location Standort	KARTAL

SIEMENS

Designation Benennung: Instaln. Draw. f. PRC Absorber

Itemnumber Sachnummer: 110-0233.9

ISO-Projection

Page Blatt 1+

PD

printed by cf2adm, 08/10/10-07:25:17

Confiè a titre de secret d'enterprise. Tous droits reserves.
Comunicado como segredo empresarial. Reservados todos os direitos.
Confiado como secreto industrial. Todos los derechos reservados.

Als Betriebsgeheimnis anvertraut. Alle Rechte vorbehalten.
Proprietary data, company confidential. All rights reserved.

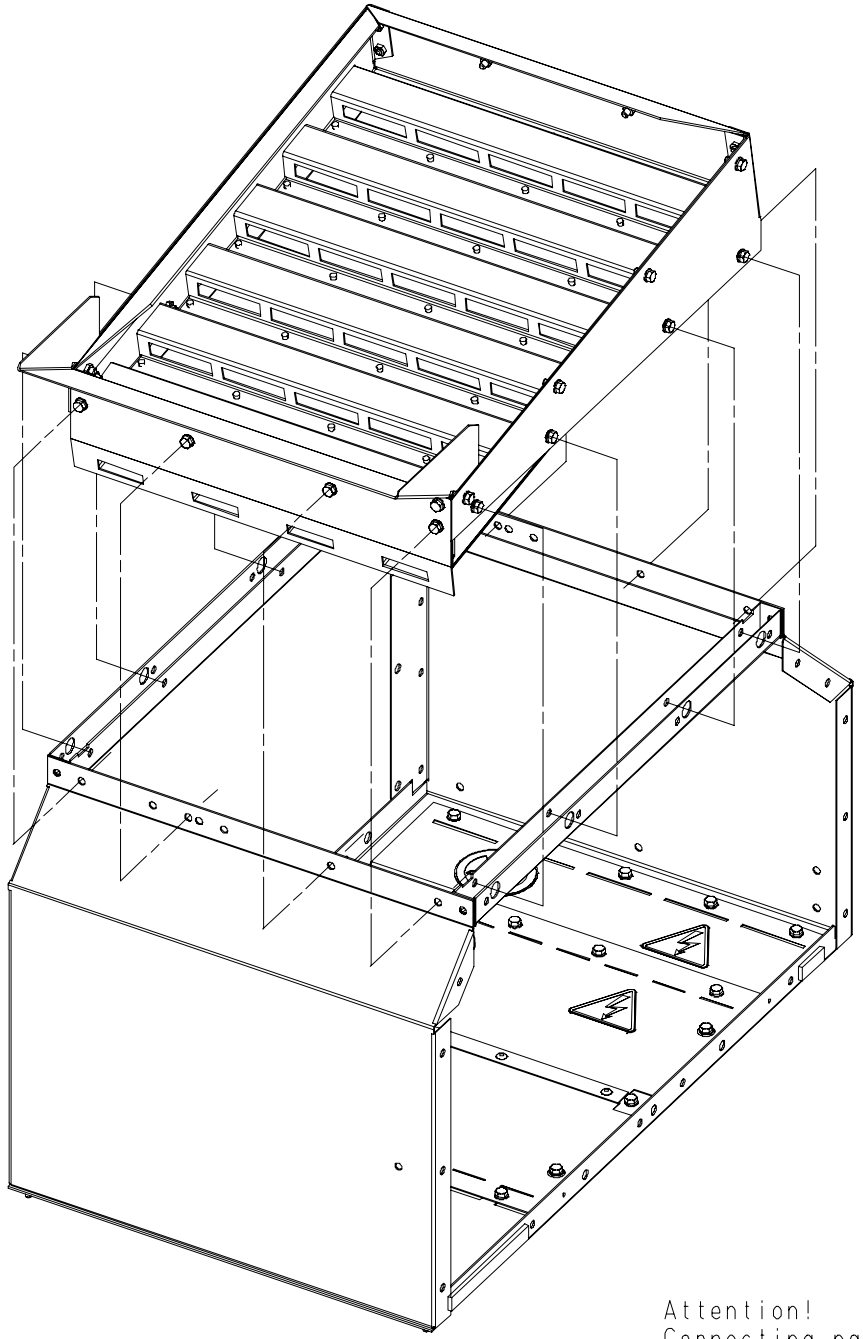

Attention!
Connecting parts list for this assembly is 110-0895.3

Tolerance Toleranz (ISO)	Material;Werkstoff	Mass ; Masse	Papersize Format	06-08-2010	ES.OZ	Date Datum	06-08-2010	Designation Benennung	ISO-Projection
-	-	-	C/A2	Date Datum	Name Name	Name Name	E.S.OZTURK	Instaln. Draw. f. PRC Absorber	
--	-	Unit;Einheit mm	Scale Massstab w/o scl.	10/3510	00	Department Abteilung	E_D_MV_1_R&D		Page Blatt 2-
	Material No./Nr. 1 SWF:(-	Material No./Nr. 2	Released Freigabe Frei	Mod./Ref-No. Aend.-Verg.-Nr.	Revision Revision	Location Standort	KARTAL	Itemnumber Sachnummer 110-0233.9	
PD						SIEMENS			

printed by cf2adm, 08/10/10-07:26:16

Confié à titre de secret d'enterprise. Tous droits reserves.
Comunicado como segredo empresarial. Reservados todos os direitos.
Confiado como secreto industrial. Todos los derechos reservados.

Als Betriebsgeheimnis anvertraut. Alle Rechte vorbehalten.
Proprietary data, company confidential. All rights reserved.

PRC MP closed 800mm

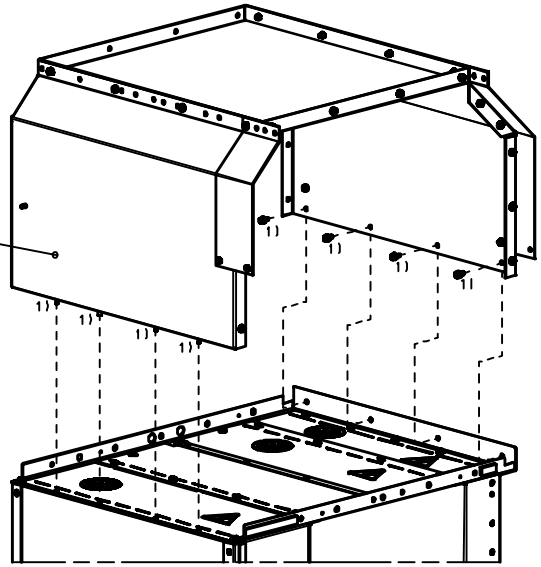

PRC EPR closed 800mm

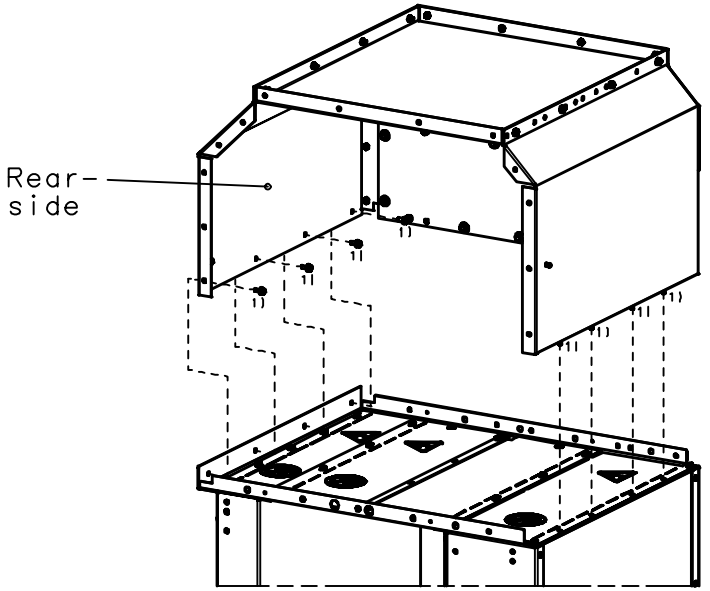

1) Bolt-and-washer SN 65480-C-M8x20-ZK-8.8-

Middle assembly of
pressure relief compartment

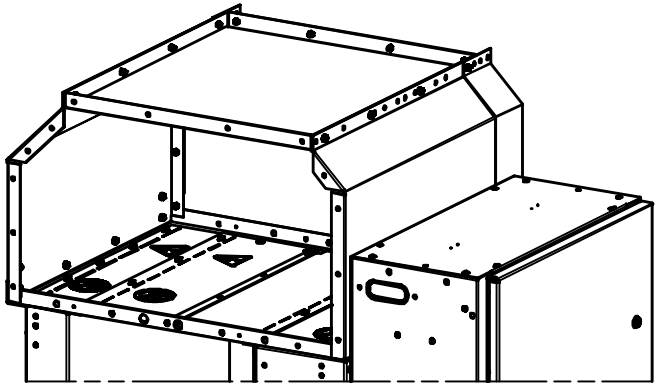

Tolerance Toleranz (ISO)	Material;Werkstoff	Mass ; Masse	Papersize Format	18-05-2012	WAGCH	Date Datum	18-05-2012	Designation Benennung	ISO-Projection
-	-	-	B/A3	Date Datum	Name Name	Name Name	WAGNER	PRC assembling	
--	-	Unit;Einheit	Scale Massstab			Department Abteilung	IC_LMV_MV_1_R&D		Page Blatt
		mm	1:15	12/3184	00	Location Standort	FFMCB		1+
	Material No./Nr. 1	Material No./Nr. 2	Released Freigabe			SIEMENS		Itemnumber Sachnummer	
	SWF:(-)		Frei	Mod./Ref-No. Aend.-Vorg.-Nr	Revision Revision			110-0490.9	

HPD

printed by oprtcual, 05/21/12-16:00:15

Confié à titre de secret d'enterprise. Tous droits reserves.
Comunicado como segredo empresarial. Reservados todos os direitos.
Confiado como secreto industrial. Todos los derechos reservados.

Als Betriebsgeheimnis anvertraut. Alle Rechte vorbehalten.
Proprietary data, company confidential. All rights reserved.

PRC MP absorber 800mm

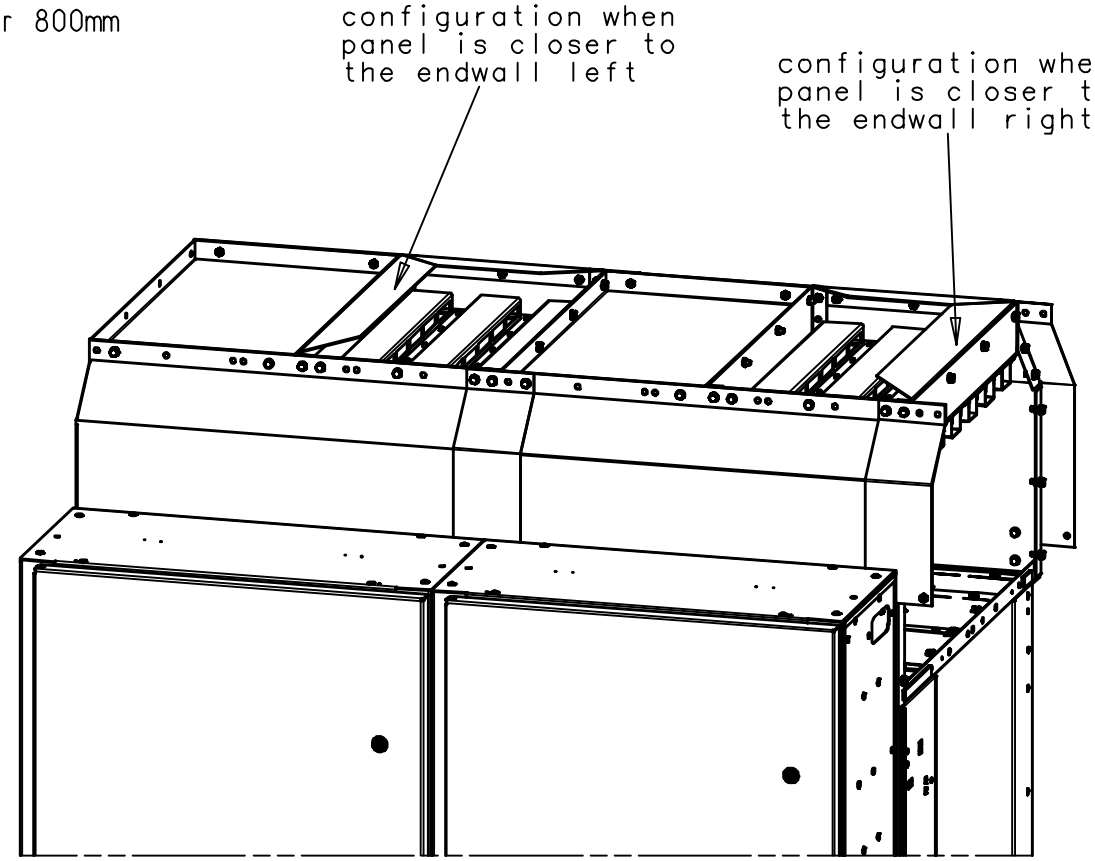

Middle assemblies of
pressure relief compartment

Tolerance Toleranz (ISO)	Material;Werkstoff	Mass ; Masse	Papersize Format	18-05-2012	WAGCH	Date Datum	18-05-2012	Designation Benennung	ISO-Projection
-	-	-	B/A3	Date Datum	Name Name	Name Name	WAGNER	PRC assembling	
--	-	Unit;Einheit	Scale Massstab			Department Abteilung	IC_LMV_MV_1_R&D		Page Blatt
		mm	1:15	12/3184	00	Location Standort	FFMCB		2+
	Material No./Nr. 1	Material No./Nr. 2	Released Freigabe	Mod./Ref-No. Aend.-Vorg.-Nr	Revision Revision	SIEMENS		Itemnumber Sachnummer	
	SWF:(-)		Frei					110-0490.9	

HPD

printed by oprtcual, 05/21/12-16:00:53

Confié à titre de secret d'enterprise. Tous droits reserves.
Comunicado como segredo empresarial. Reservados todos os direitos.
Confiado como secreto industrial. Todos los derechos reservados.

Als Betriebsgeheimnis anvertraut. Alle Rechte vorbehalten.
Proprietary data, company confidential. All rights reserved.

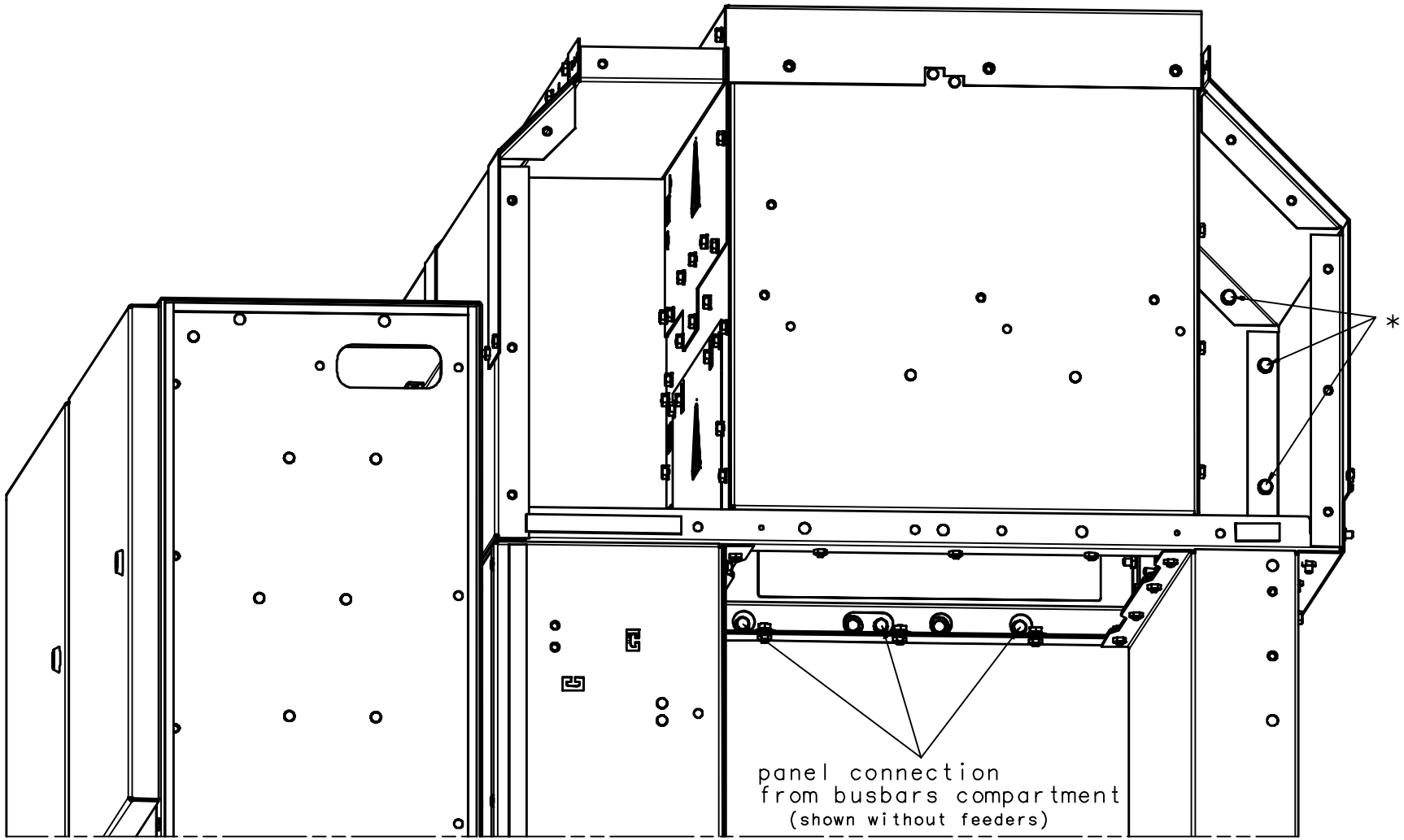

* panel connection
left and right hand side

Panel group with top box

Tolerance Toleranz (ISO)	Material;Werkstoff	Mass ; Masse	Papersize Format	18-05-2012	WAGCH	Date Datum	18-05-2012	Designation Benennung	ISO-Projection
-	-	-	B/A3	Date Datum	Name Name	Name Name	WAGNER	PRC assembling	
--	-	Unit;Einheit mm	Scale Massstab 1:15	12/3184	00	Department Abteilung	IC_LMV_MV_1_R&D		Page Blatt 3-
	Material No./Nr. 1 SWF:(-)	Material No./Nr. 2	Released Freigabe Frei	Mod./Ref-No. Aend.-Vorg.-Nr.	Revision Revision	Location Standort	FFMCB	Itemnumber Sachnummer 110-0490.9	
HPD						SIEMENS			

printed by oprtcual, 05/21/12-15:59:48

Confiè a titre de secret d'enterprise. Tous droits reserves.
Comunicado como segredo empresarial. Reservados todos os direitos.
Confiado como secreto industrial. Todos los derechos reservados.

Als Betriebsgeheimnis anvertraut. Alle Rechte vorbehalten.
Proprietary data, company confidential. All rights reserved.

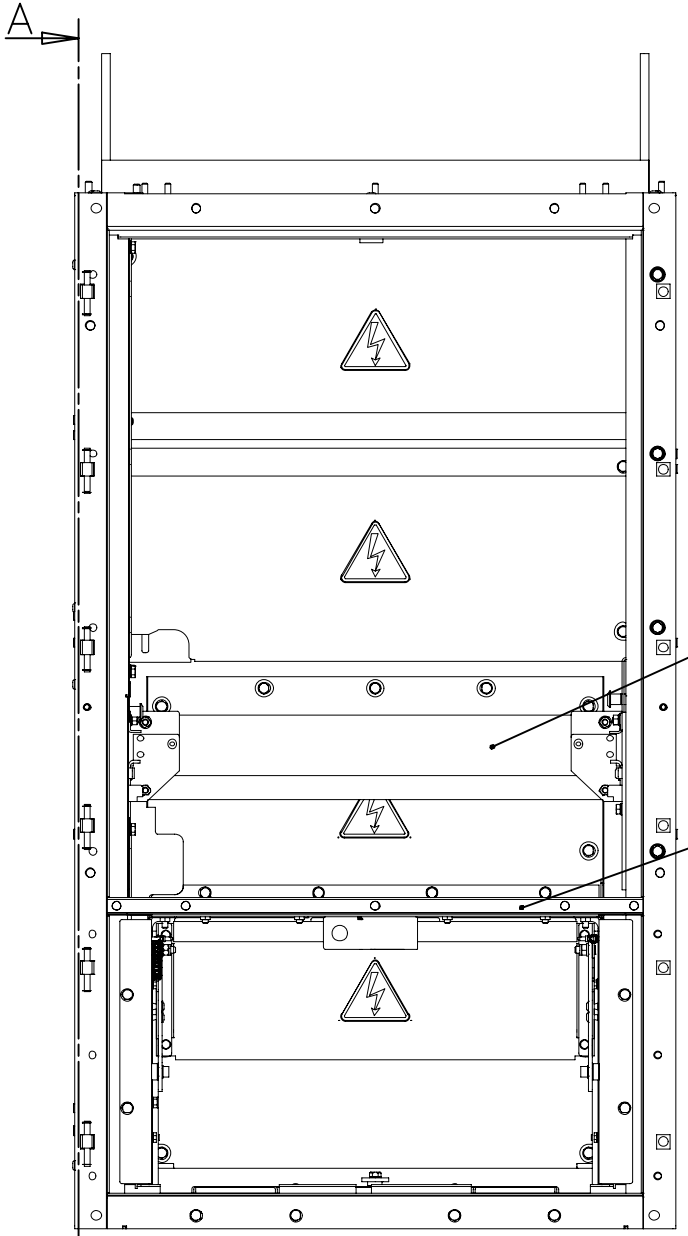

Front view without door

A–A

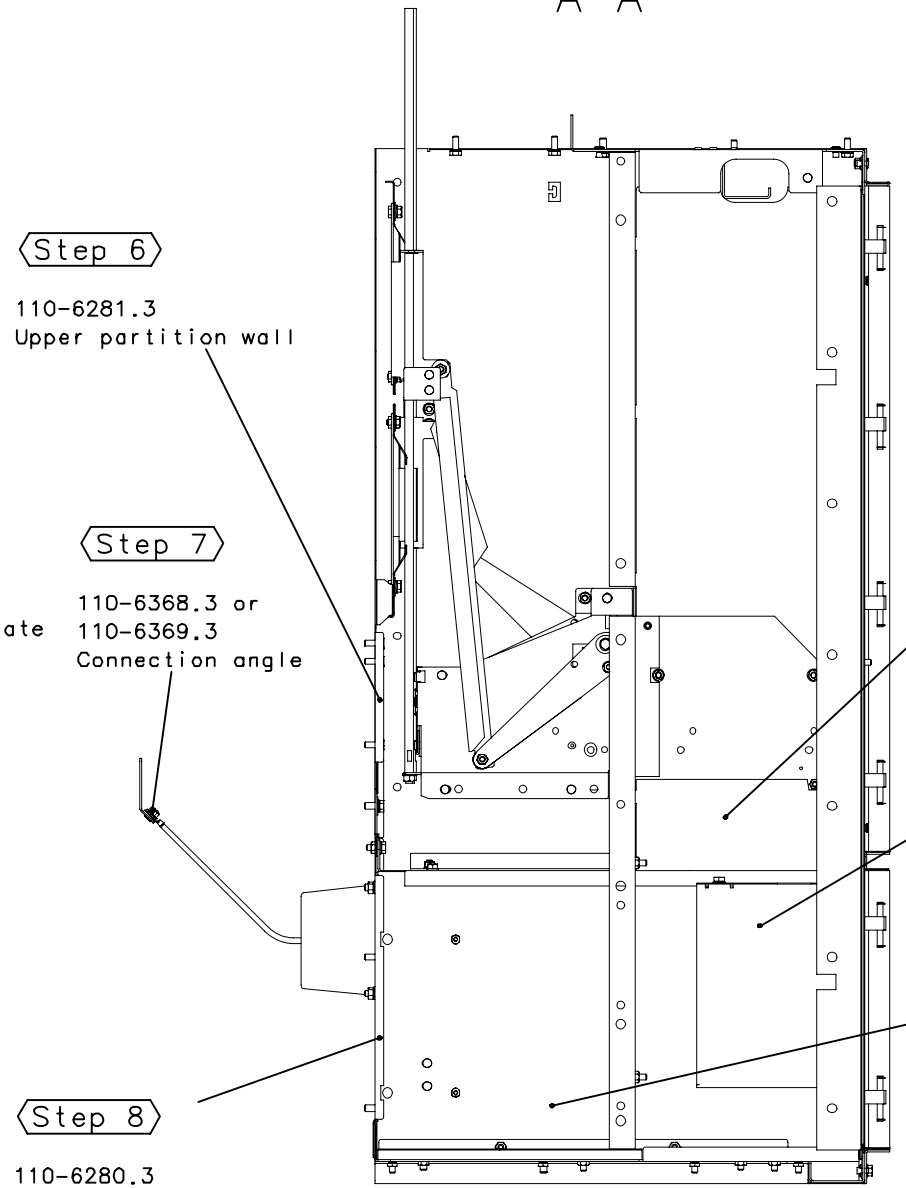

Step 6
110-6281.3
Upper partition wall

Step 5
110-6077.3
Arc fault plate

Step 7
110-6368.3 or
110-6369.3
Connection angle

Step 1
110-6323.3
Labyrinth

Step 2
110-6282.3
Extension MC

Step 3
110-6342.3
Support box

Step 4
110-6269.3
Shutter brackets

Step 8
110-6280.3
Lower partition wall

Tolerance Toleranz (ISO) DIN ISO 2768 mittel -	Material;Werkstoff - -	Mass ; Masse - -	Papersize Format C/A2	10-08-2010	DSB	Date Datum	10-08-2010	Designation Benennung	ISO-Projection
		Unit;Einheit mm	Scale Massstab 1:5	Date Datum	Name Name	Name	DREISBACH	Modul compartment with withdrawable VT	
	Material No./Nr. 1 SWF:(-	Material No./Nr. 2	Released Freigabe Frei	10/3563	00	Department Abteilung	E_D_MV_1_R&D		Page Blatt 1+
				Mod./Ref-No. Aend.-Vorg.-Nr.	Revision Revision	Location Standort	FFMCB	Itemnumber Sachnummer 110-0261.9	

SIEMENS

HPD

printed by cf2adm, 08/11/10-10:25:33

Confiè a titre de secret d'enterprise. Tous droits reserves.
Comunicado como segredo empresarial. Reservados todos os direitos.
Confiado como secreto industrial. Todos los derechos reservados.

Als Betriebsgeheimnis anvertraut. Alle Rechte vorbehalten.
Proprietary data, company confidential. All rights reserved.

Step 1

110-6323.3
Labyrinth

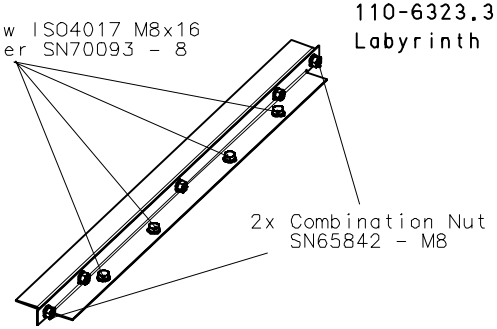

Step 2

110-6282.3
Extension MC

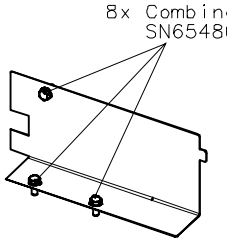

Step 3

110-6342.3
Support box

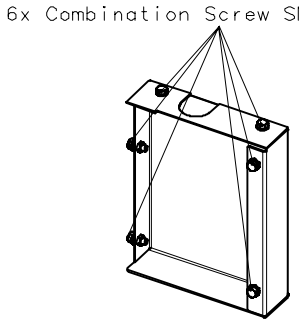

Step 4

110-6269.3
Shutter brackets

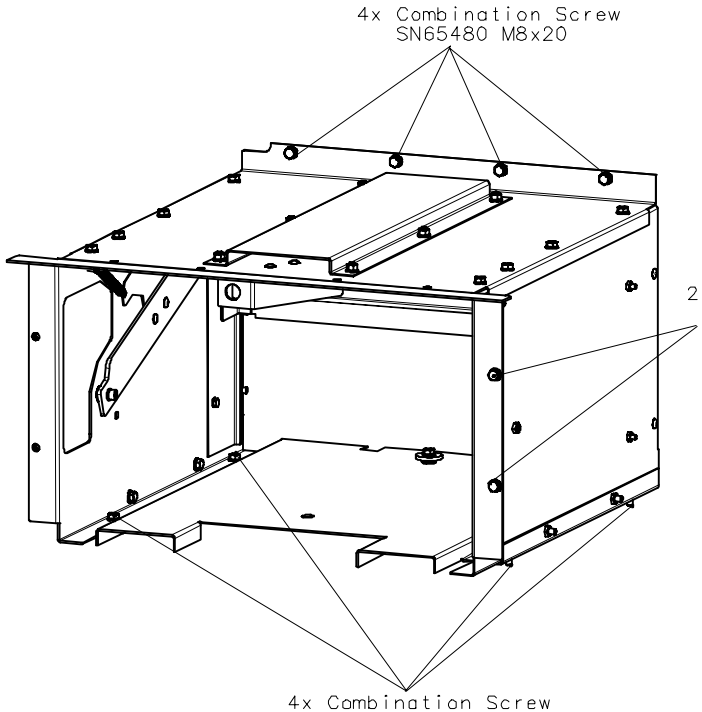

Step 5

110-6077.3
Arc fault plate

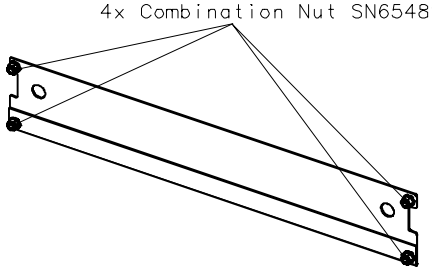

Tolerance Toleranz (ISO) DIN ISO 2768 medium -	Material;Werkstoff - -	Mass ; Masse - -	Papersize Format C/A2	10-08-2010	DSB	Date Datum 10-08-2010	Designation Benennung	ISO-Projection	
		Unit;Einheit mm	Scale Massstab 1:5	Date Datum	Name Name	Name DREISBACH	Modul compartment with withdrawable VT		
	Material No./Nr. 1 SWF:(-	Material No./Nr. 2	Released Freigabe Frei	10/3563	00	Department Abteilung E_D_MV_1_R&D		Page Blatt 2+	
				Mod./Ref-No. Aend.-Varg.-Nr.	Revision Revision	Location Standort FFMCB	Itemnumber Sachnummer 110-0261.9		
						SIEMENS			

HPD

printed by cf2adm, 08/11/10-10:26:16

Confiè a titre de secret d'enterprise. Tous droits reserves.
Comunicado como segredo empresarial. Reservados todos os direitos.
Confiado como secreto industrial. Todos los derechos reservados.

Als Betriebsgeheimnis anvertraut. Alle Rechte vorbehalten.
Proprietary data, company confidential. All rights reserved.

8x Combination Screw SN65480 M8x20
Washer DIN9021 - 8.4 - 140HV-A3L

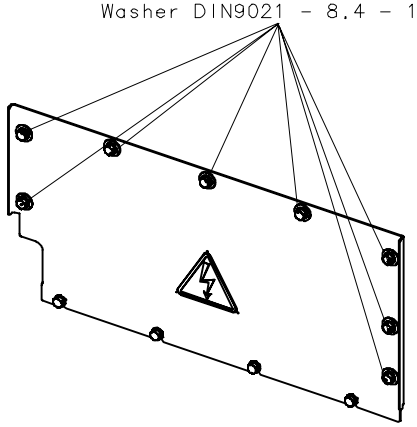

Step 6

110-6281.3
Upper partition wall

Step 7

110-6368.3 or
110-6369.3
Connection angle

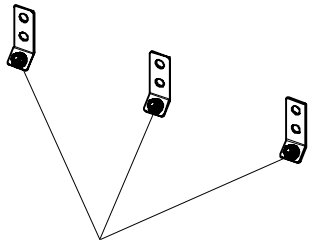

3x Hexagon Nut ISO4032 - M8
Spring washer DIN6796 - 8 - FSt
Washer DIN125 - 8.4 - 140HV-A3L

4x Combination Screw SN65480 M8x20
Washer DIN9021 - 8.4 - 140HV-A3L

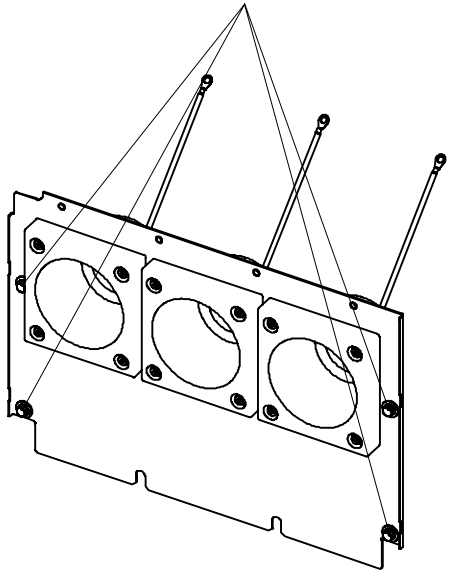

Step 8

110-6280.3
Lower partition wall

Tolerance Toleranz (ISO) DIN ISO 2768 medium -	Material;Werkstoff - -	Mass ; Masse - -	Papersize Format C/A2	10-08-2010	DSB	Date Datum 10-08-2010	Designation Benennung Modul compartment with withdrawable VT	ISO-Projection	
		Unit;Einheit mm	Scale Massstab 1:5	Date Datum	Name Name	Name DREISBACH			
	Material No./Nr. 1 SWF:(-	Material No./Nr. 2	Released Freigabe Frei	10/3563	00	Department Abteilung E_D_MV_1_R&D		Page Blatt 3-	
				Mod./Ref-No. Aend.-Varg.-Nr.	Revision Revision	Location Standort FFMCB	Itemnumber Sachnummer 110-0261.9		
						SIEMENS			

printed by cf2adm, 08/11/10-10:27:32

Possible switchgear combination

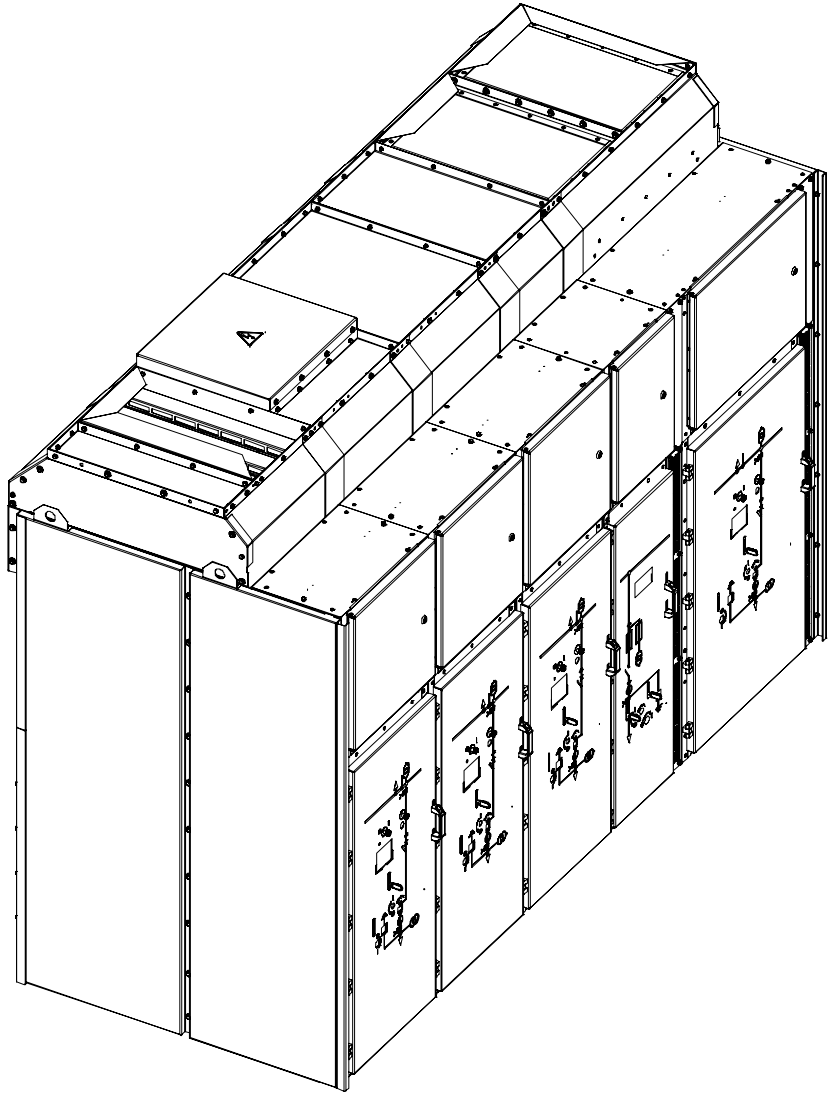

.left hand

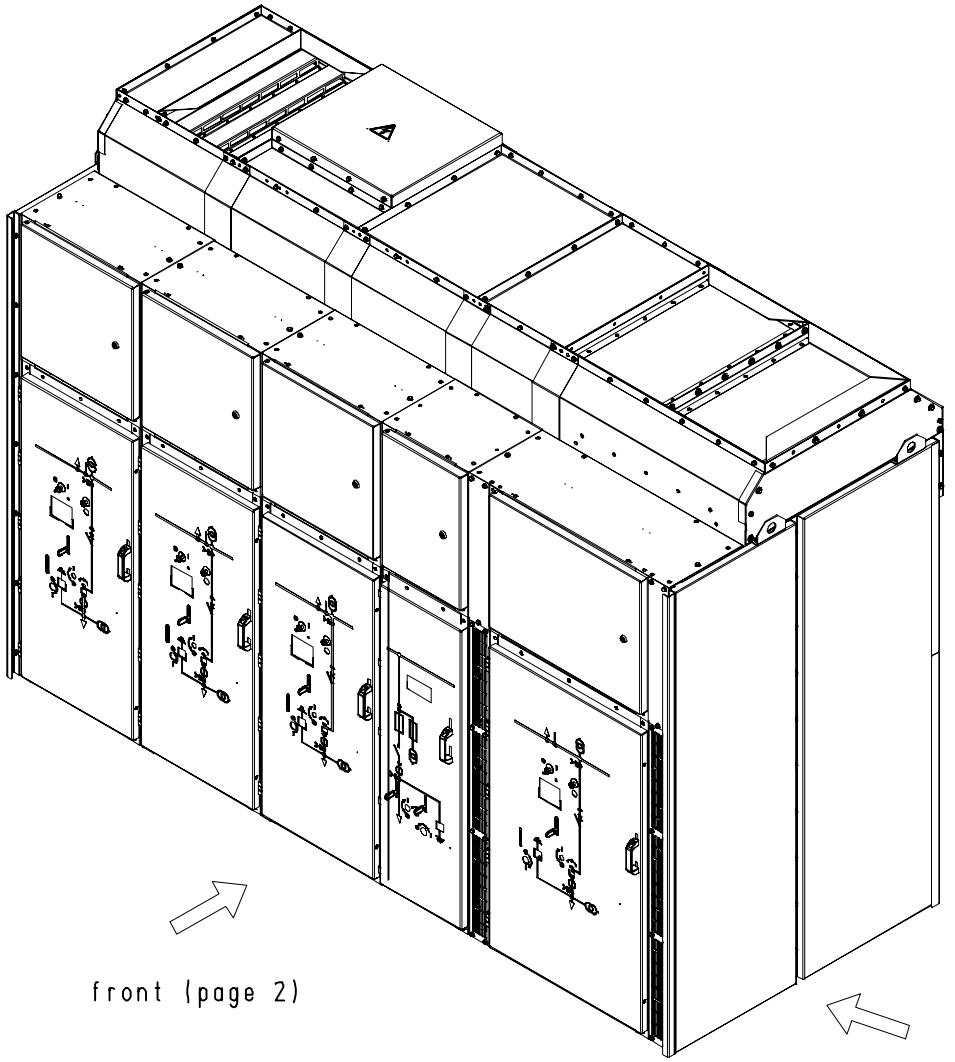

front (page 2)

.right hand

Confiè a titre de secret d'enterprise. Tous droits reserves.
Comunicado como segredo empresarial. Reservados todos os direitos.
Confiado como secreto industrial. Todos los derechos reservados.

Als Betriebsgeheimnis anvertraut. Alle Rechte vorbehalten.
Proprietary data, company confidential. All rights reserved.

Tolerance Toleranz (ISO)	Material;Werkstoff	Mass ; Masse	Papersize Format	27-07-2011	SCHLD	Date Datum	19-06-2009	Designation Benennung	ISO-Projection
		Unit;Einheit mm	Scale Massstab -//-	Date Datum	Name Name	Name Name	NEUMANN.A	Panel protection IP4X for panels 435/600/800/1000mm	
	Material No./Nr. 1 SWF:(-	Material No./Nr. 2	Released Freigabe Frei	11/3621	01	Department Abteilung	E_D_MV_1_R&D		Page Blatt 1+
				Mod./Ref-No. Aend.-Vorg.-Nr.	Revision Revision	Location Standort	FFMCB	Itemnumber Sachnummer 110-0051.9	

SIEMENS

HPD

printed by aprtcual, 11/23/11-11:23:57

Front view of possible switchgear combination

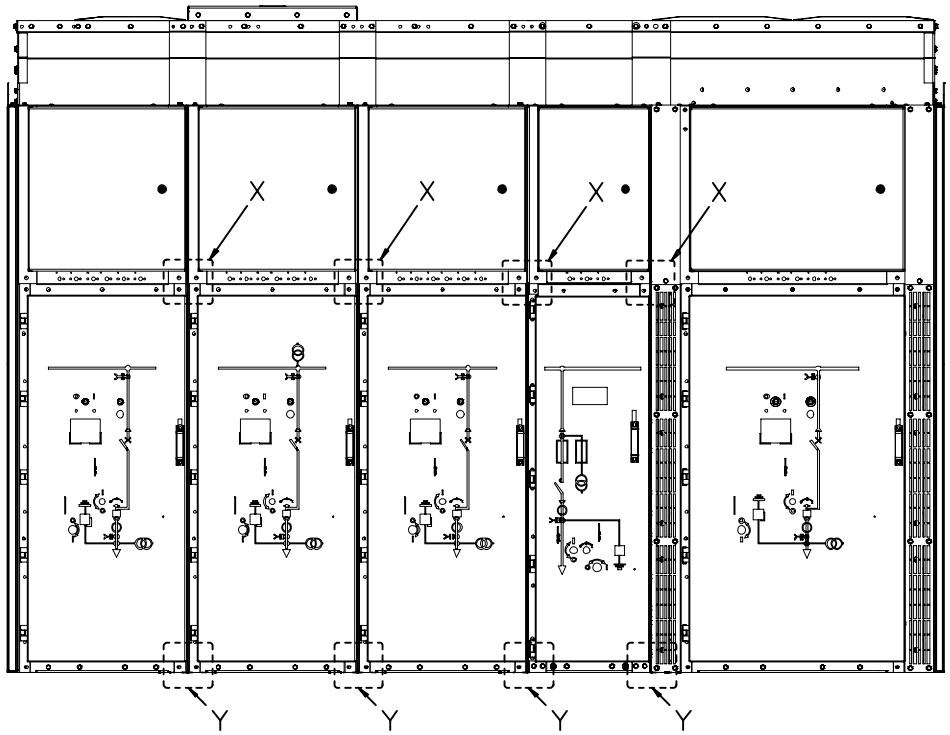

Additional variants of rear design are possible
See page 3 to detail.

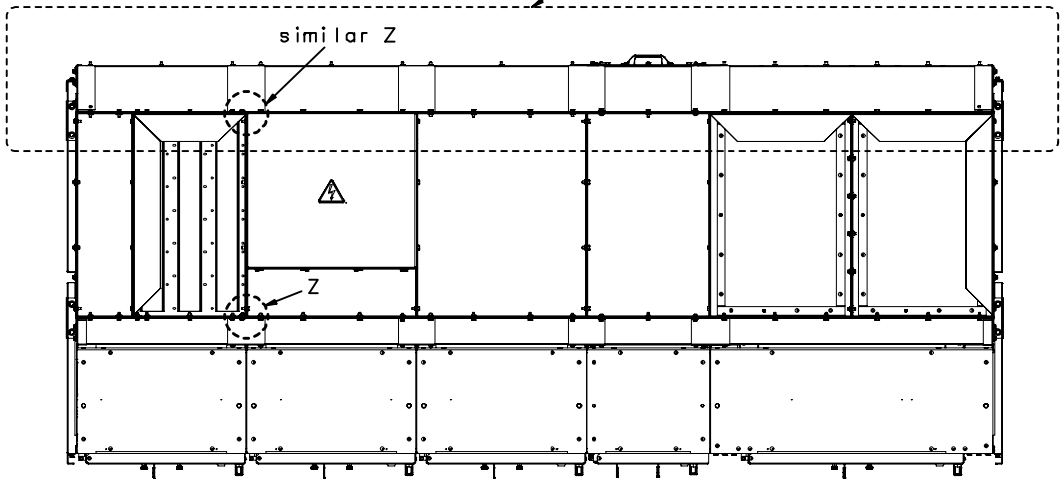

Detail X
1:2

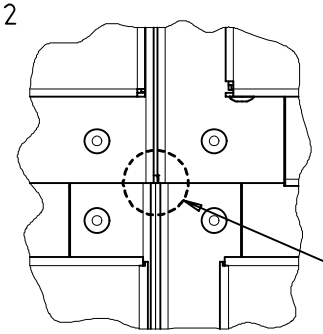

Detail Y
1:2

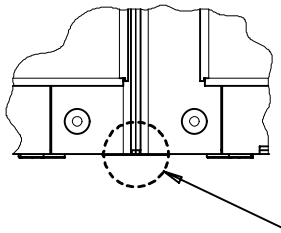

Detail Z
1:1

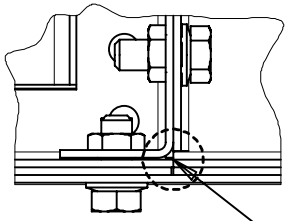

Confié à titre de secret d'enterprise. Tous droits reserves.
Comunicado como segredo empresarial. Reservados todos os direitos.
Confiado como secreto industrial. Todos los derechos reservados.

Als Betriebsgeheimnis anvertraut. Alle Rechte vorbehalten.
Proprietary data, company confidential. All rights reserved.

Tolerance Toleranz (ISO)	Material;Werkstoff	Mass ; Masse	Papersize Format	27-07-2011	SCHLD	Date Datum	19-06-2009	Designation Benennung	ISO-Projection
		Unit;Einheit mm	Scale Massstab -//-	Date Datum	Name Name	Name	NEUMANN.A	Panel protection IP4X for panels 435/600/800/1000mm	
	Material No./Nr. 1 SWF:(-	Material No./Nr. 2	Released Freigabe Frei	11/3621	01	Department Abteilung	E_D_MV_1_R&D		Page Blatt 2+
						Location Standort	FFMCB	Itemnumber Sachnummer 110-0051.9	
				Mod./Ref-No. Aend.-Verg.-Nr.	Revision Revision	SIEMENS			

HPD

printed by aprtcual, 11/23/11-11:25:38

Confiè a titre de secret d'enterprise. Tous droits reserves.
Comunicado como segredo empresarial. Reservados todos os direitos.
Confiado como secreto industrial. Todos los derechos reservados.

Als Betriebsgeheimnis anvertraut. Alle Rechte vorbehalten.
Proprietary data, company confidential. All rights reserved.

Design of panels with rear box

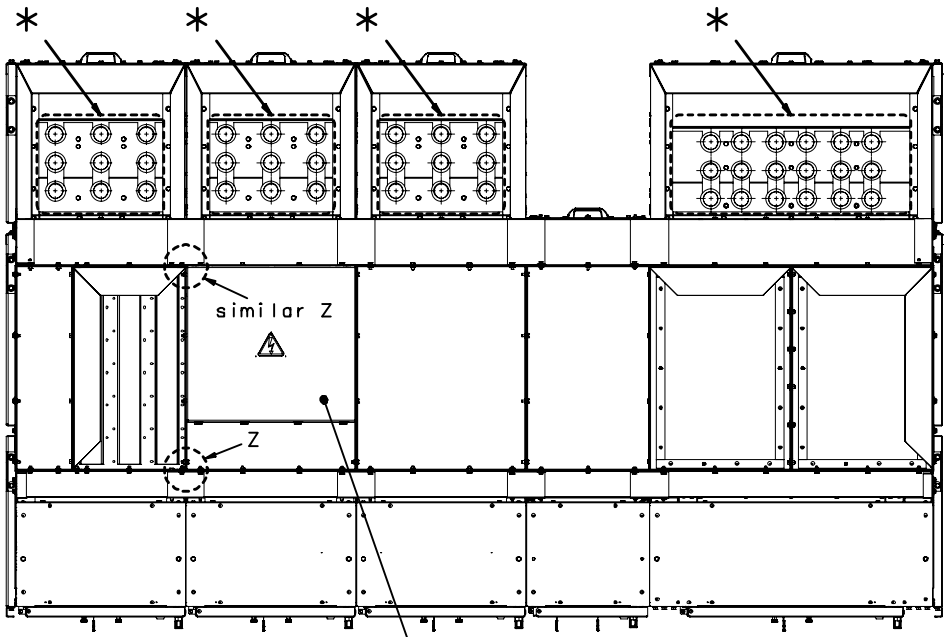

Detail A
1:5

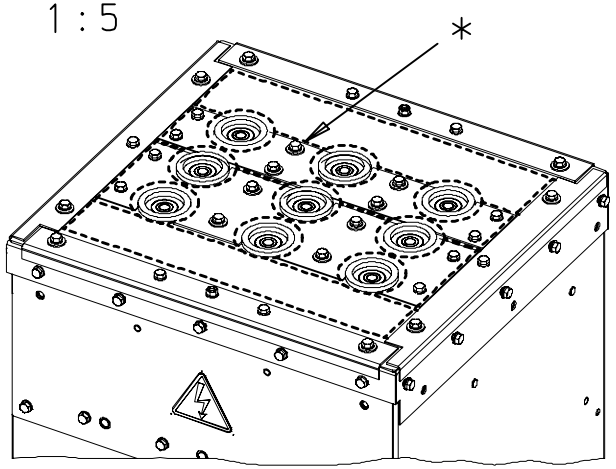

Details:

Detail Z is schowed on Page 2

* marked area after connecting of current cable must be sealed with SIKAFLEX

Tolerance Toleranz (ISO)	Material;Werkstoff	Mass ; Masse	Papersize Format	10-08-2011	SCHLD	Date Datum	19-06-2009	Designation Benennung	ISO-Projection
		Unit;Einheit mm	Scale Massstab -//-	Date Datum	Name Name	Name Name	NEUMANN.A	Panel protection IP4X for panels 600/800/1000mm	
	Material No./Nr. 1 SWF:(-	Material No./Nr. 2	Released Freigabe Frei	11/3621	01	Department Abteilung	E_D_MV_1_R&D		Page Blatt 3-
				Mod./Ref-No. Aend.-Vorg.-Nr.	Revision Revision	Location Standort	FFMCB	Itemnumber Sachnummer 110-0051.9	

SIEMENS

HPD

printed by aprtcual, 11/23/11-11:26:19

Confiè a titre de secret d'enterprise. Tous droits reserves.
Comunicado como segredo empresarial. Reservados todos os direitos.
Confiado como secreto industrial. Todos los derechos reservados.

Als Betriebsgeheimnis anvertraut. Alle Rechte vorbehalten.
Proprietary data, company confidential. All rights reserved.

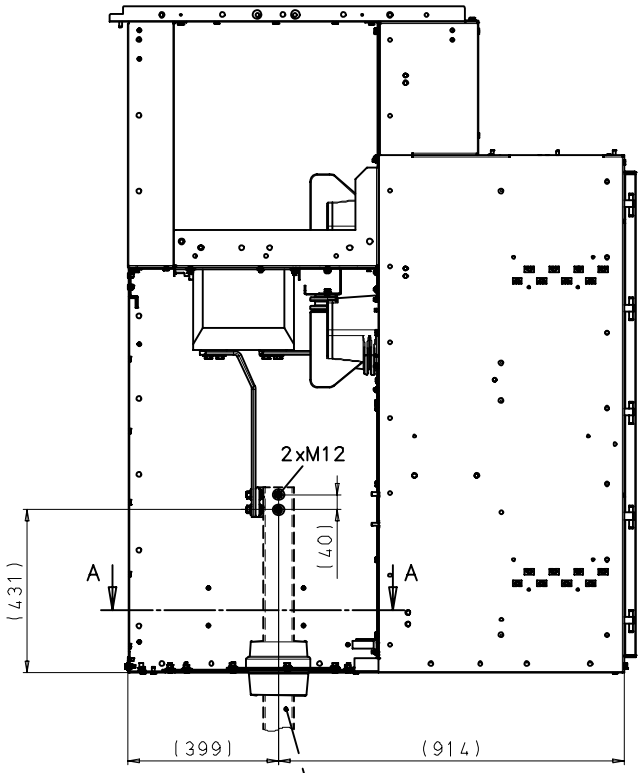

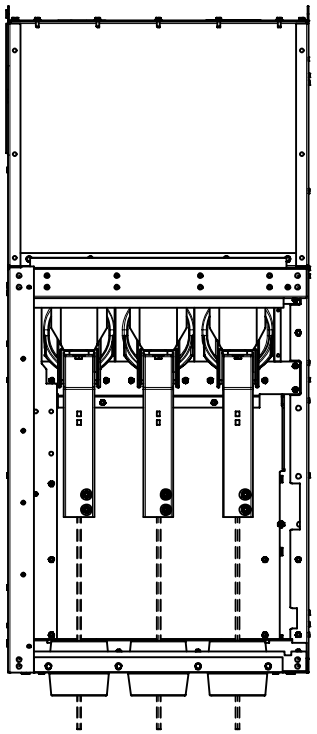

1x80x10 Cu rounded R5

Bar is not part of
the delivery

Minimum clear distance between
phase and earth: 170mm

A-A

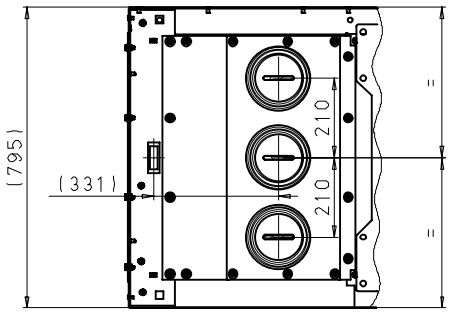

Tolerance Toleranz (ISO)	Material;Werkstoff	Mass ; Masse	Papersize Format	02-10-2009	FERRE	Date Datum	02-10-2009	Designation Benennung	ISO-Projection
DIN ISO 2768 medium	-	-	C/A2	Date Datum	Name Name	Name	FERREIRAV	Flat Copper Connection 1250A	
	-	-	Unit;Einheit mm	Scale Massstab		Department Abteilung	E_D_MV_1_R&D		Page Blatt
	Material No./Nr. 1	Material No./Nr. 2	Released Freigabe	09/4520	00	Location Standort	CORROIOS		1-
	SWF:(-		Frei	Mod./Ref-No. Aend.-Verg.-Nr.	Revision Revision	SIEMENS		Itemnumber Sachnummer	110-0117.9

printed by cf2adm, 10/16/09-13:37:04

Confiè a titre de secret d'enterprise. Tous droits reserves.
Comunicado como segredo empresarial. Reservados todos os direitos.
Confiado como secreto industrial. Todos los derechos reservados.

Als Betriebsgeheimnis anvertraut. Alle Rechte vorbehalten.
Proprietary data, company confidential. All rights reserved.

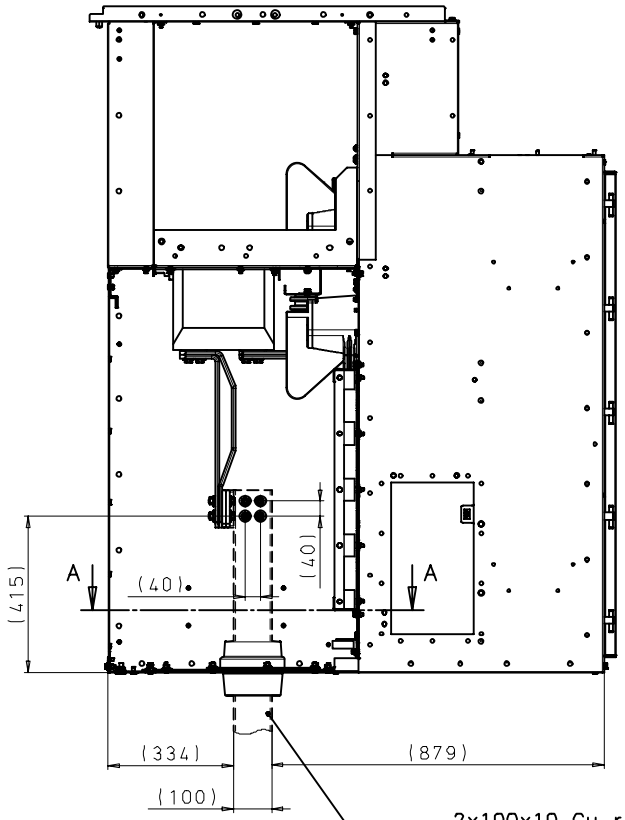

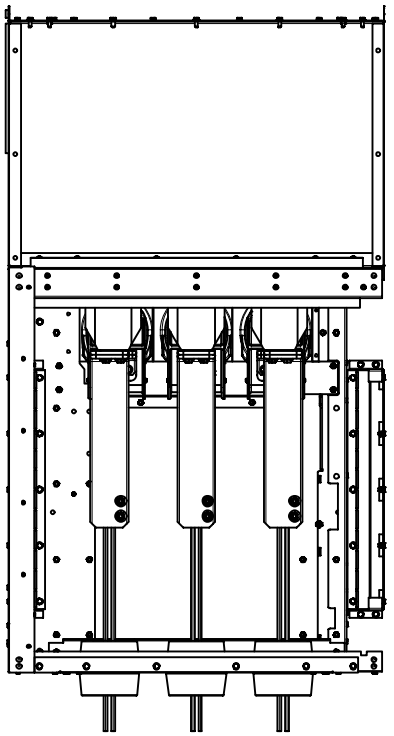

2x100x10 Cu rounded R5;

Bars are not part of the delivery;

Minimum clear distance between phase and earth: 170mm;

A-A

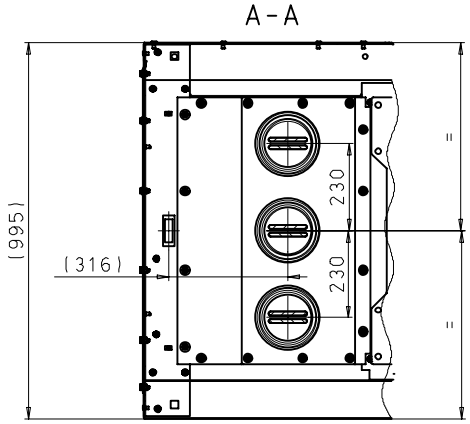

Tolerance Toleranz (ISO) DIN ISO 2768 medium	Material;Werkstoff - -	Mass ; Masse - -	Papersize Format C/A2	06-11-2009	FERRE	Date Datum	06-11-2009	Designation Benennung	ISO-Projection
		Unit;Einheit mm	Scale Massstab 1:10	Date Datum	Name Name	Name Name	FERREIRAV	Flat Copper Connection 2500A	
	Material No./Nr. 1 SWF:(- |	Material No./Nr. 2	Released Freigabe Frei	09/4835	00	Department Abteilung	E_D_MV_1_R&D		Page Blatt 1-
				Mod./Ref-No. Aend.-Vorg.-Nr.	Revision Revision	Location Standort	CORROIOS	Itemnumber Sachnummer 110-0118.9	
						SIEMENS			

HPD

printed by cf2adm, 12/15/09-14:14:51

Confié à titre de secret d'enterprise. Tous droits reserves.
Comunicado como segredo empresarial. Reservados todos os direitos.
Confiado como secreto industrial. Todos los derechos reservados.

Als Betriebsgeheimnis anvertraut. Alle Rechte vorbehalten.
Proprietary data, company confidential. All rights reserved.

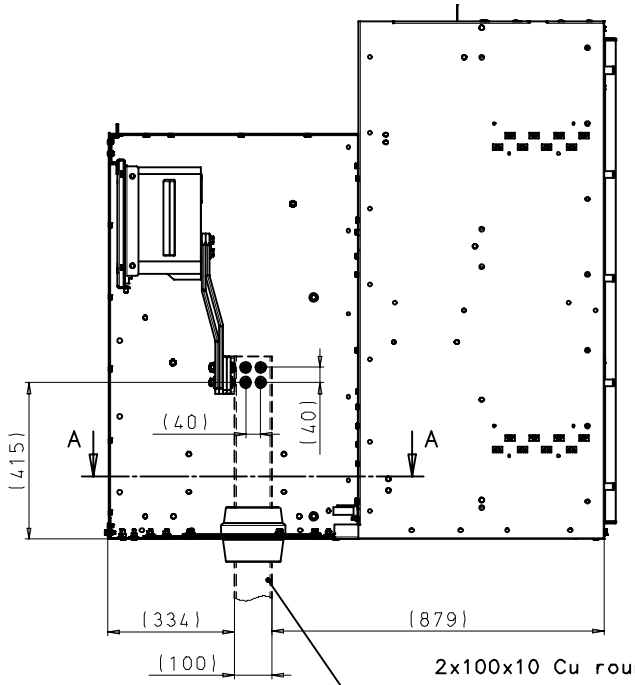

2x100x10 Cu rounded R5;

Bars are not part of the delivery;

Minimum clear distance between phase and earth: 170mm;

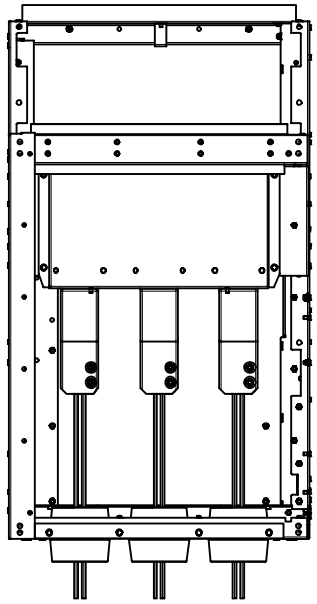

A-A

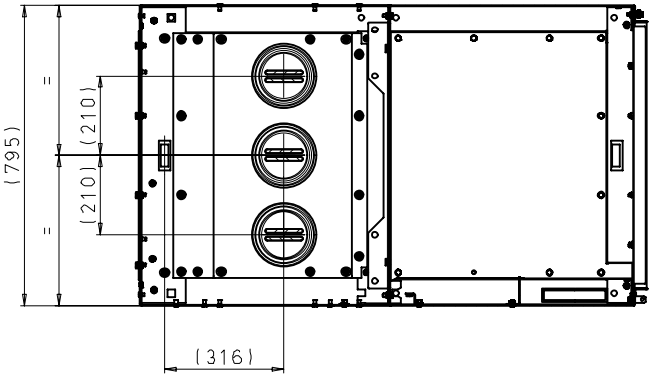

Tolerance Toleranz (ISO) DIN ISO 2768 medium	Material;Werkstoff - -	Mass ; Masse - -	Papersize Format C/A2	16-02-2012	DSB	Date Datum	16-02-2012	Designation Benennung	ISO-Projection
		Unit;Einheit mm	Scale Massstab 1:10	Date Datum	Name Name	Name Name	DREISBACH	Flat Copper Connection 2500A 800mm	
	Material No./Nr. 1 SWF:(-	Material No./Nr. 2	Released Freigabe Frei	12/0941	00	Department Abteilung	IC_LMV_MV_1_R&D		Page Blatt 1-
						Location Standort	FFMCB		
				Mod./Ref-No. Aend.-Vorg.-Nr.	Revision Revision	SIEMENS		Itemnumber Sachnummer 110-0237.9	

HPD

printed by aprtcual, 02/17/12-12:13:07

Confiè a titre de secret d'enterprise. Tous droits reserves.
Comunicado como segredo empresarial. Reservados todos os direitos.
Confiado como secreto industrial. Todos los derechos reservados.

Als Betriebsgeheimnis anvertraut. Alle Rechte vorbehalten.
Proprietary data, company confidential. All rights reserved.

1250A

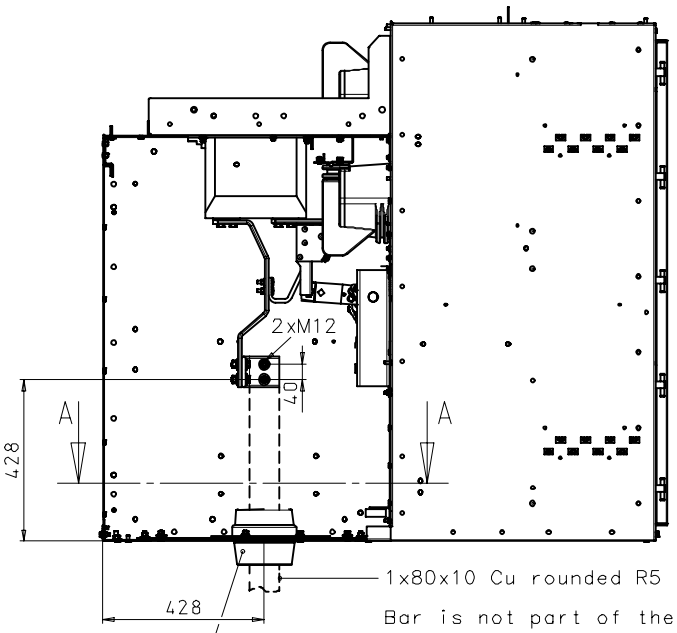

1x80x10 Cu rounded R5

Bar is not part of the delivery

Minimum clear distance between phase and earth: 170 mm

Insulators and o-rings loose delivered and to be installed on site.

A-A

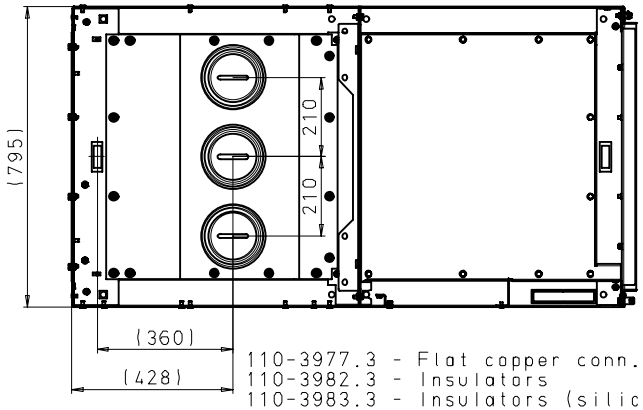

110-3977.3 - Flat copper conn. parts
110-3982.3 - Insulators
110-3983.3 - Insulators (silicon free)

2000A

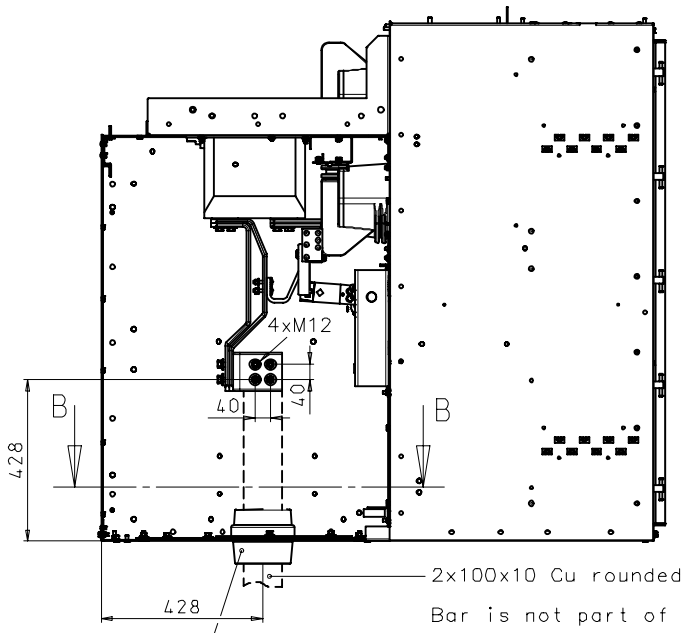

2x100x10 Cu rounded R5

Bar is not part of the delivery

Minimum clear distance between phase and earth: 170 mm

Insulators and o-rings loose delivered and to be installed on site.

B-B

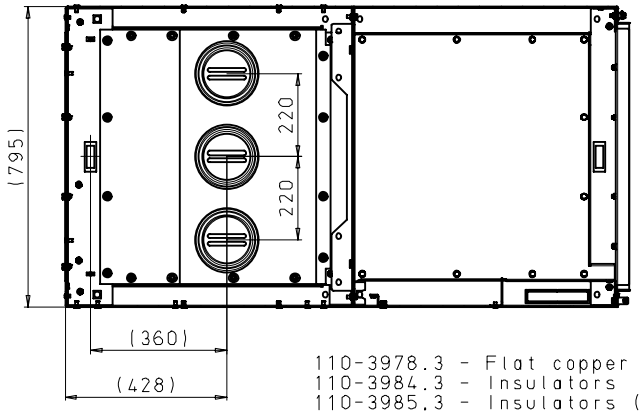

110-3978.3 - Flat copper conn. parts
110-3984.3 - Insulators
110-3985.3 - Insulators (silicon free)

Tolerance Toleranz (ISO) DIN ISO 2768 meidum --	Material;Werkstoff - -	Mass ; Masse - -	Papersize Format C/A2	25-05-2012	CEKIC	Date Datum 19-04-2011	Designation Benennung Flat Copper Connection 40kA
		Unit;Einheit mm	Scale Massstab 1:10	Date Datum	Name Name	Name KAAN BILGE	ISO-Projection
	Material No./Nr. 1 SWF:(-	Material No./Nr. 2	Released Freigabe Frei	12/3375	01	Department Abteilung E_D_MV_1_R&D	Page Blatt 1+
				Mod./Ref-No. Aend.-Vorg.-Nr.	Revision Revision	Location Standort KARTAL	Itemnumber Sachnummer 110-0321.9

SIEMENS

HPD

printed by aprtcual, 05/28/12-14:59:24

Confiè a titre de secret d'enterprise. Tous droits reserves.
Comunicado como segredo empresarial. Reservados todos os direitos.
Confiado como secreto industrial. Todos los derechos reservados.

Als Betriebsgeheimnis anvertraut. Alle Rechte vorbehalten.
Proprietary data, company confidential. All rights reserved.

2500A

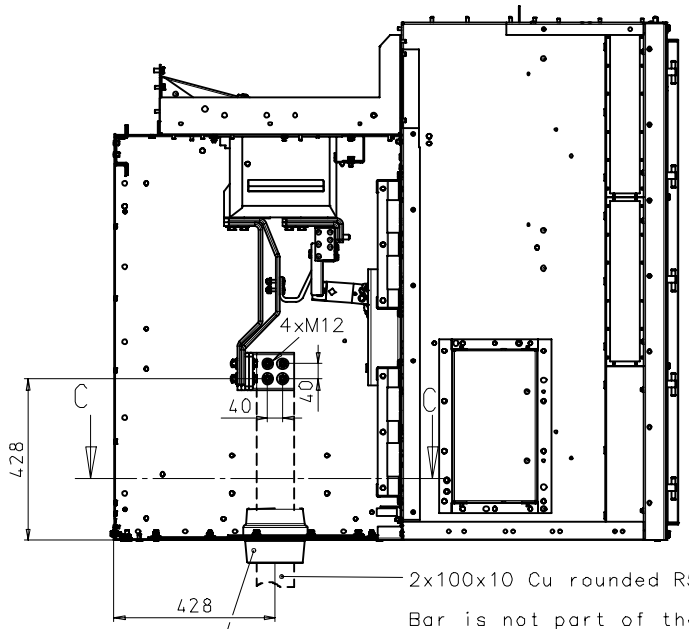

2x100x10 Cu rounded R5

Bar is not part of the delivery

Minimum clear distance between phase and earth: 170 mm

Insulators and o-rings loose delivered and to be installed on site.

3150A / 4000A

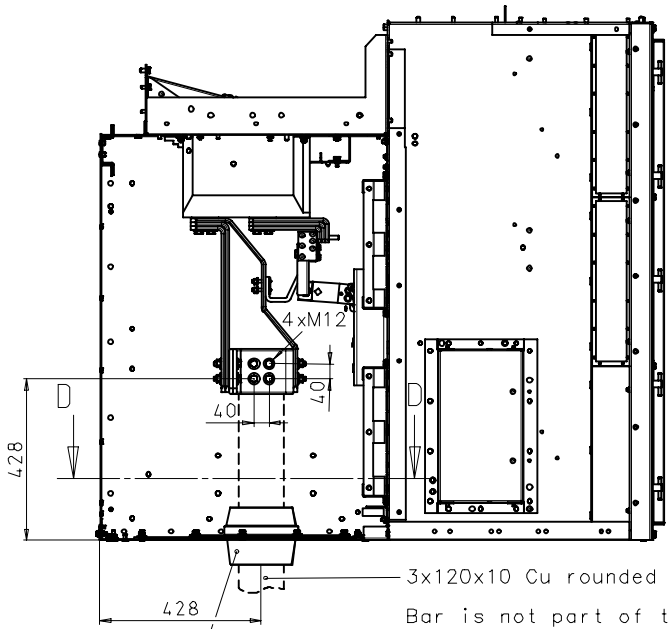

3x120x10 Cu rounded R5

Bar is not part of the delivery

Minimum clear distance between phase and earth: 170 mm

Insulators and o-rings loose delivered and to be installed on site.

C-C

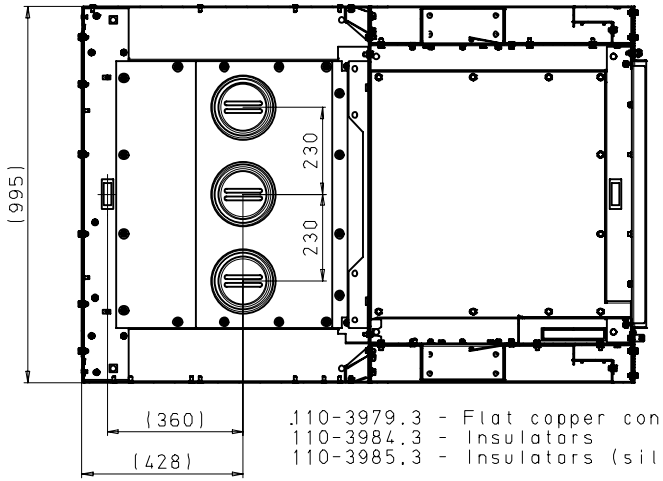

110-3979.3 - Flat copper conn. parts
110-3984.3 - Insulators
110-3985.3 - Insulators (silicon free)

D-D

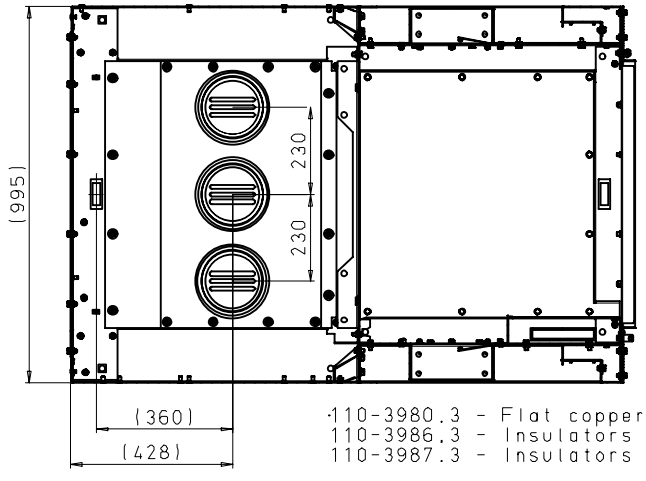

110-3980.3 - Flat copper conn. parts
110-3986.3 - Insulators
110-3987.3 - Insulators (silicon free)

Tolerance Toleranz (ISO) DIN ISO 2768 medium -	Material;Werkstoff - -	Mass ; Masse - -	Papersize Format C/A2	25-05-2012	CEKIC	Date Datum 19-04-2011	Designation Benennung Flat Copper Connection 40kA
		Unit;Einheit mm	Scale Massstab 1:10	Date Datum	Name Name	Name KAAN BILGE	ISO-Projection
	Material No./Nr. 1 SWF:(-	Material No./Nr. 2	Released Freigabe Frei	12/3375	01	Department Abteilung E_D_MV_1_R&D	Page Blatt 2-
				Mod./Ref-No. Aend.-Vorg.-Nr.	Revision Revision	Location Standort KARTAL	Itemnumber Sachnummer 110-0321.9

SIEMENS

HPD

printed by aprtcual, 05/20/12-15:00:00

Confié à titre de secret d'enterprise. Tous droits reserves.
Comunicado como segredo empresarial. Reservados todos os direitos.
Confiado como secreto industrial. Todos los derechos reservados.

Als Betriebsgeheimnis anvertraut. Alle Rechte vorbehalten.
Proprietary data, company confidential. All rights reserved.

2500A

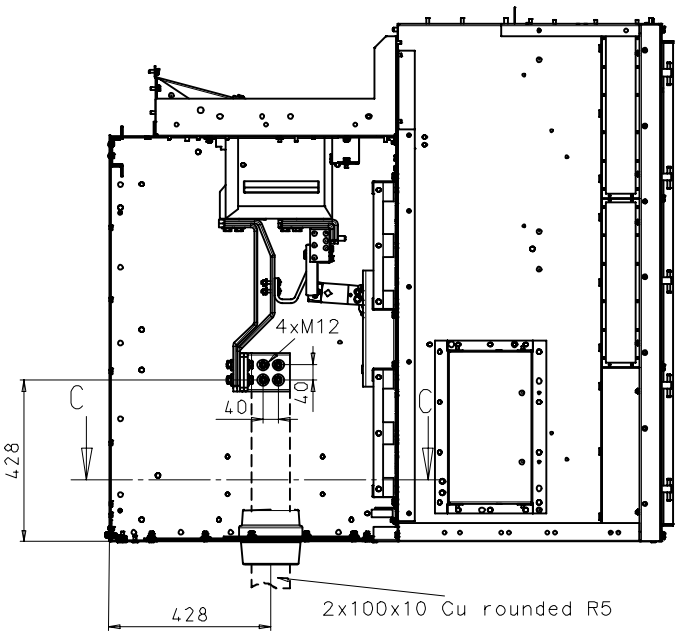

2x100x10 Cu rounded R5

Bar is not part of the delivery

Minimum clear distance between phase and earth: 170 mm

C-C

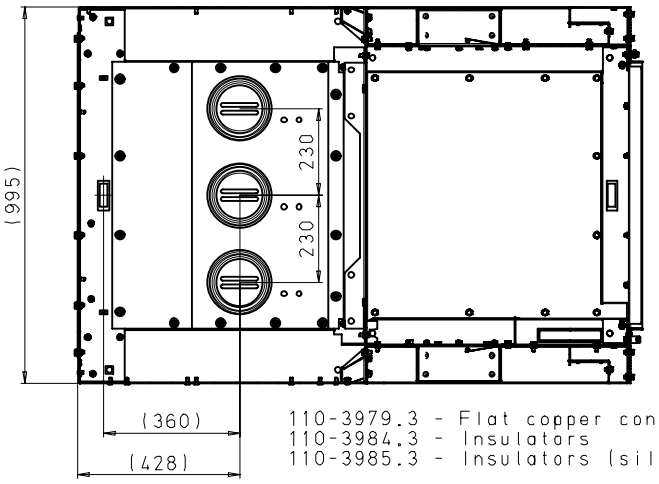

110-3979.3 - Flat copper conn. parts
110-3984.3 - Insulators
110-3985.3 - Insulators (silicon free)

3150A / 4000A

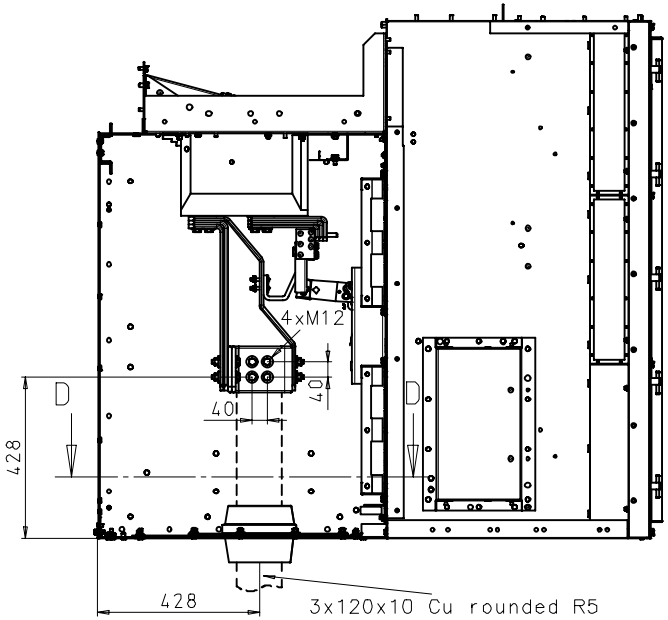

3x120x10 Cu rounded R5

Bar is not part of the delivery

Minimum clear distance between phase and earth: 170 mm

D-D

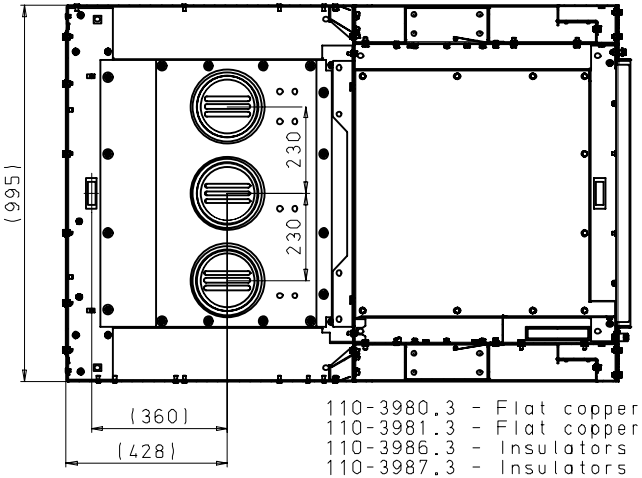

110-3980.3 - Flat copper conn. parts (3150A)
110-3981.3 - Flat copper conn. parts (4000A)
110-3986.3 - Insulators
110-3987.3 - Insulators (silicon free)

Tolerance Toleranz (ISO) DIN ISO 2768 medium -	Material;Werkstoff - -	Mass ; Masse - -	Papersize Format C/A2	20-04-2011	K.B	Date Datum	20-04-2011	Designation Benennung	ISO-Projection
		Unit;Einheit mm	Scale Massstab 1:10	Date Datum	Name Name	Name	KAAN BILGE	Flat Copper Connection 40kA	
	Material No./Nr. 1 SWF:(-	Material No./Nr. 2	Released Freigabe Frei	11/1447	00	Department Abteilung	E_D_MV_1_R&D		Page Blatt 3-
				Mod./Ref-No. Aend.-Vorg.-Nr.	Revision Revision	Location Standort	KARTAL	Itemnumber Sachnummer 110-0321.9	

SIEMENS

HPD

printed by aprtcual, 04/20/11-11:50:20

Confié à titre de secret d'enterprise. Tous droits reserves.
Comunicado como segredo empresarial. Reservados todos os direitos.
Confiado como secreto industrial. Todos los derechos reservados.

Als Betriebsgeheimnis anvertraut. Alle Rechte vorbehalten.
Proprietary data, company confidential. All rights reserved.

1x entry three core cable

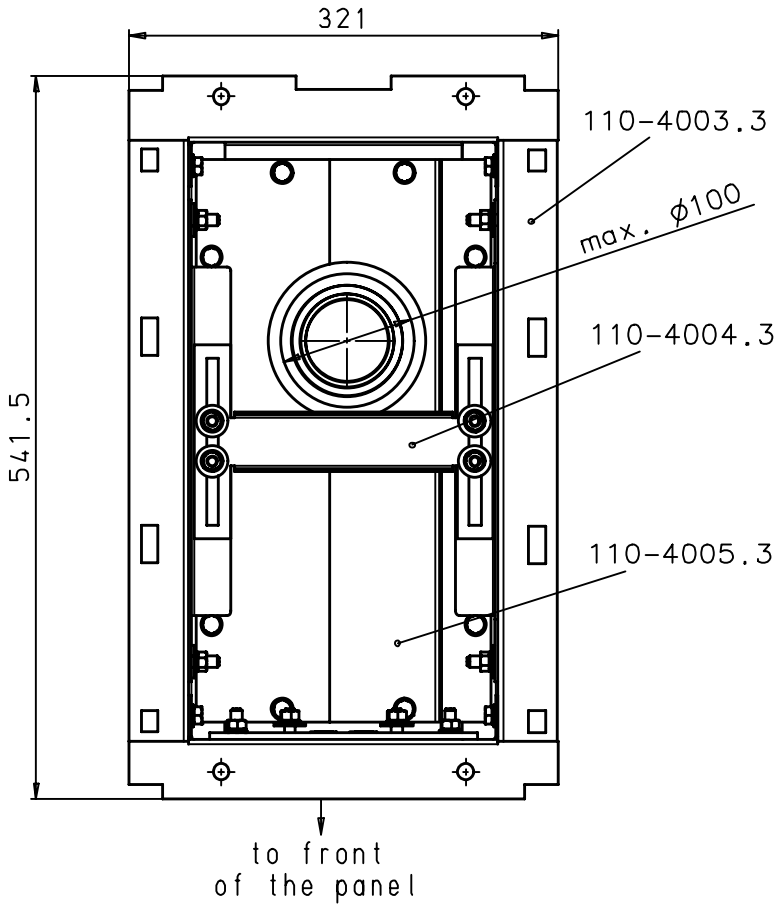

2x entry three core cable

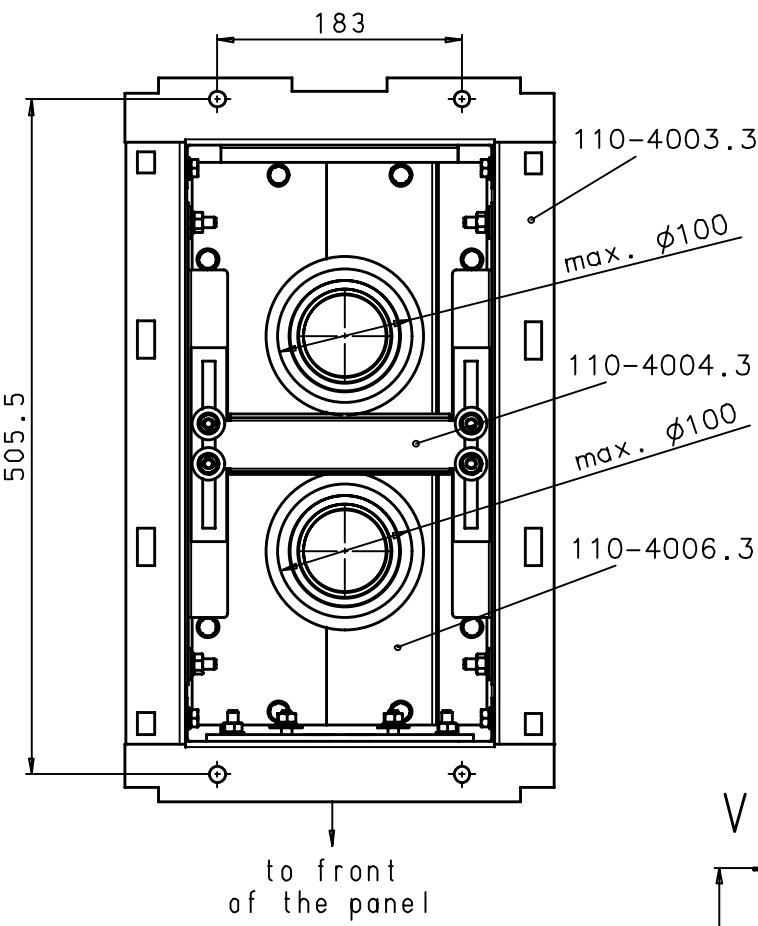

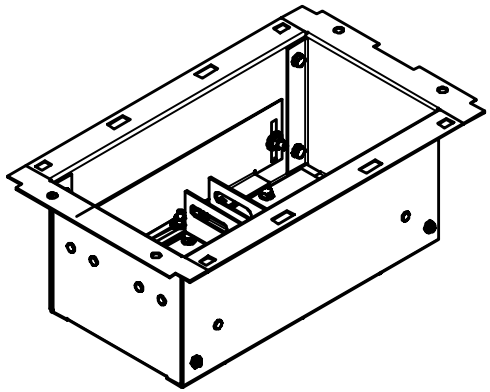

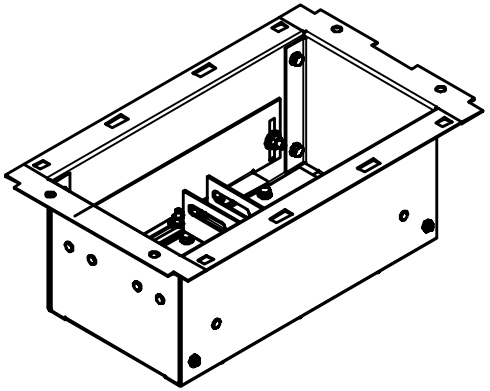

View A

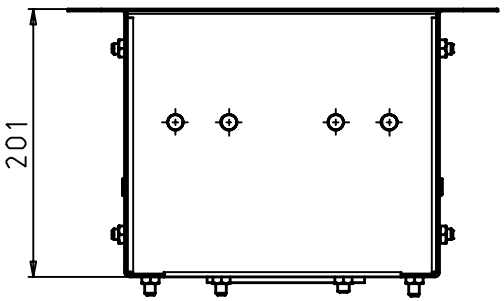



Tolerance Toleranz (ISO)	Material;Werkstoff	Mass ; Masse	Papersize Format	10-08-2011	SCHLD	Date Datum	18-01-2011	Designation Benennung	ISO-Projection
-	-	-	B/A3	Date Datum	Name Name	Name Name	FRIEDRICH,S	Deep bottom pan	
--	-	Unit;Einheit	Scale Massstab			Department Abteilung	E_D_MV_1_R&D	Version: Vacuum contactor panel	Page Blatt
	Material No./Nr. 1	Material No./Nr. 2	1:4	11/3896	01	Location Standort	FFMCB	Itemnumber Sachnummer	
	SWF:(-)		Released Freigabe Frei	Mod./Ref-No. Aend.-Vorg.-Nr	Revision Revision	SIEMENS		110-0297.9	1-

HPD

printed by oprtcual, 08/11/11-08:29:16

Confié à titre de secret d'enterprise. Tous droits reserves.
Comunicado como segredo empresarial. Reservados todos os direitos.
Confiado como secreto industrial. Todos los derechos reservados.

Als Betriebsgeheimnis anvertraut. Alle Rechte vorbehalten.
Proprietary data, company confidential. All rights reserved.

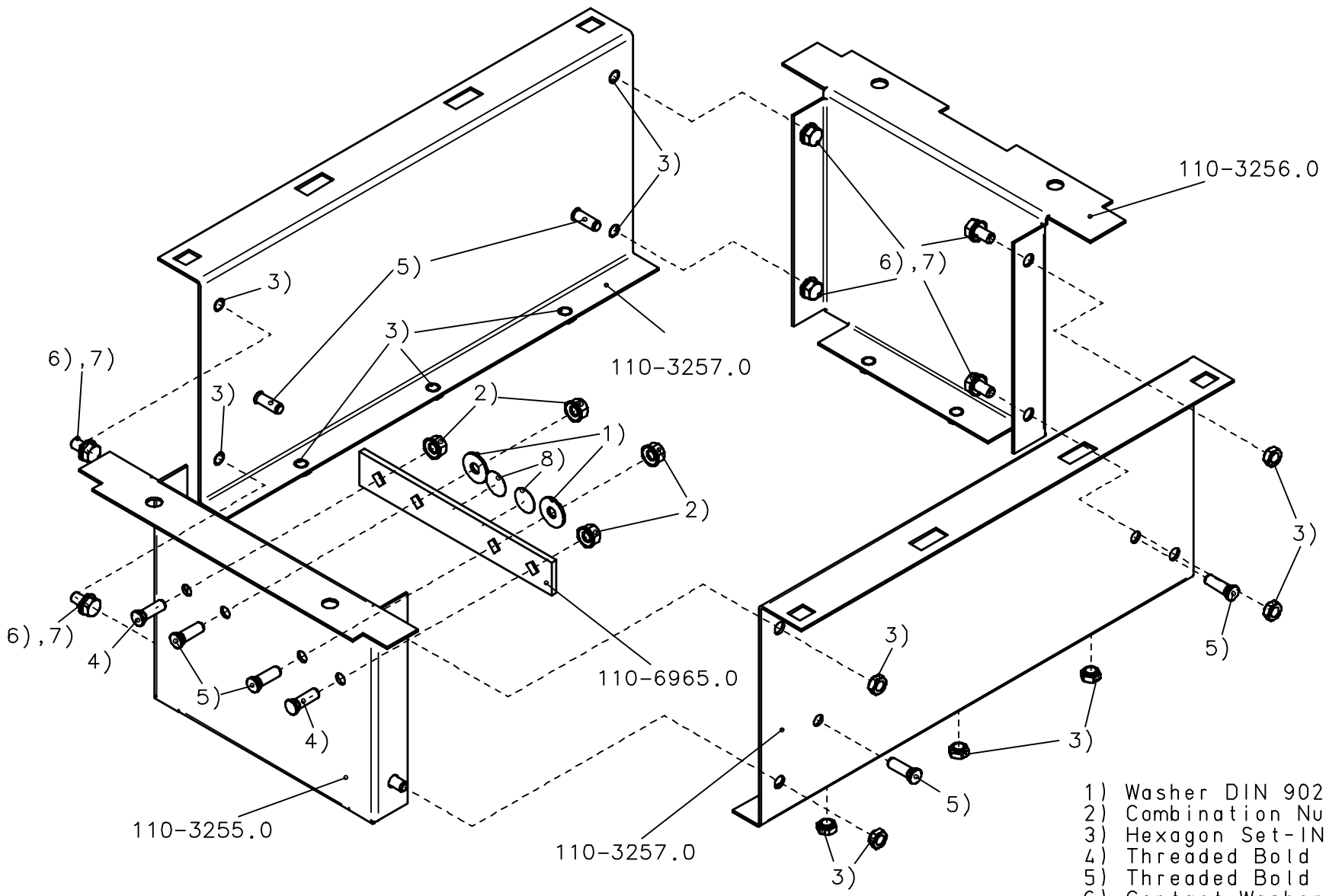

1) Washer DIN 9021-8,4-140HV-A3L
2) Combination Nut SN 65482-M8
3) Hexagon Set-IN Nut SN 60693-M8
4) Threaded Bold M8x15,5
5) Threaded Bold M8x25
6) Contact Washer SN 70093-8
7) Hexagon Screw ISO 4017-M8x16
8) Label Plate 2A20-12,5-KF-DRU

Tolerance Toleranz (ISO)	Material;Werkstoff	Mass ; Masse	Papersize Format	14-05-2015	ONAT	Date Datum	17-01-2011	Designation Benennung	ISO-Projection
DIN ISO 2768 medium	-	-	B/A3	Date Datum	Name Name	Name Name	FRIEDRICH,S	Deep bottom pan 435mm	
-	-	Unit;Einheit mm	Scale Massstab 1:3	15/2991	01	Department Abteilung	E_D_MV_1_R&D		Page Blatt 1+
	Material No./Nr. 1 SWF:(-)	Material No./Nr. 2	Released Freigabe Frei	Mod./Ref-No. Aend.-Vorg.-Nr.	Revision Revision	Location Standort	FFMCB	Itemnumber Sachnummer 110-4003.3	
HPD						SIEMENS			

printed by oprtcual, 05/14/15-15:28:52

Confié a titre de secret d'enterprise. Tous droits reserves.
Comunicado como segredo empresarial. Reservados todos os direitos.
Confiado como secreto industrial. Todos los derechos reservados.

Als Betriebsgeheimnis anvertraut. Alle Rechte vorbehalten.
Proprietary data, company confidential. All rights reserved.

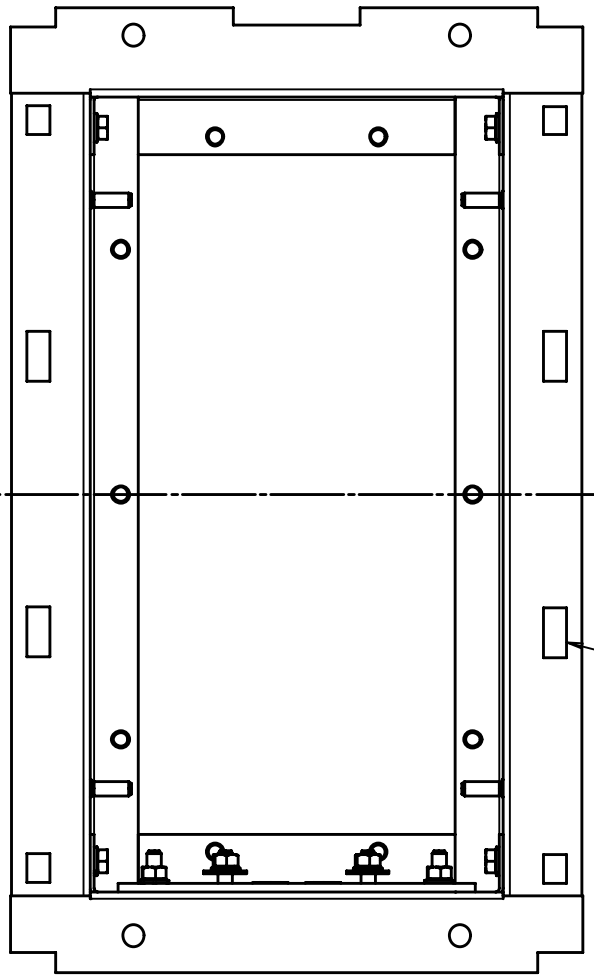

A-A

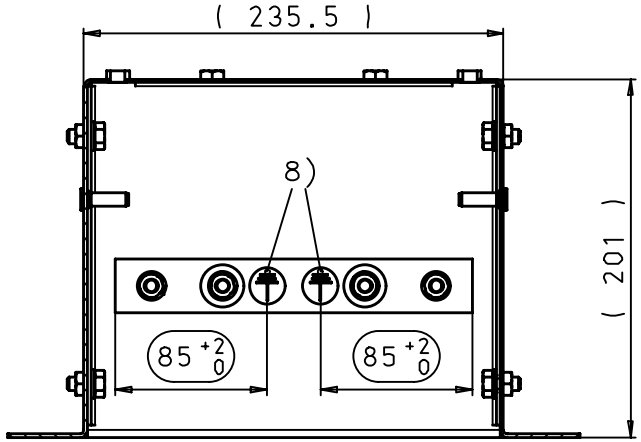

Insert 12x Combination Nut SN 65482-M8
8x Washer DIN 9021-8,4-140HV-A3L
into the plastic bag 5180302006 and fix
the bag with with cable strip at the frame.

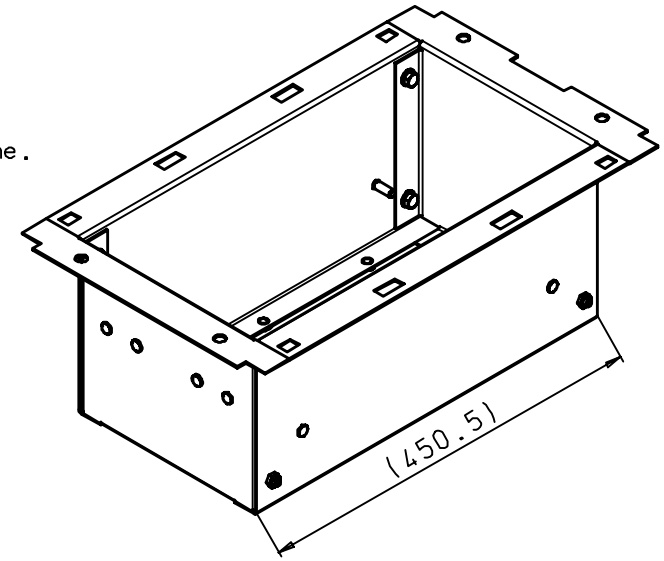

= stipulation for incoming inspection

Tolerance Toleranz (ISO) DIN ISO 2768 medium -	Material;Werkstoff - -	Mass ; Masse - -	Papersize Format B/A3	14-05-2015	ONAT	Date Datum	17-01-2011	Designation Benennung	ISO-Projection
		Unit;Einheit mm	Scale Massstab 1:3	Date Datum	Name Name	Name Name	FRIEDRICH,S	Deep bottom pan 435mm	
	Material No./Nr. 1 SWF:(-)	Material No./Nr. 2	Released Freigabe Frei	15/2991	01	Department Abteilung	E_D_MV_1_R&D		Page Blatt 2-
				Mod./Ref-No. Aend.-Vorg.-Nr	Revision Revision	Location Standort	FFMCB	Itemnumber Sachnummer 110-4003.3	
						SIEMENS			

HPD

printed by oprtcual, 05/14/15-15:28:32

Confiè a titre de secret d'enterprise. Tous droits reserves.
Comunicado como segredo empresarial. Reservados todos os direitos.
Confiado como secreto industrial. Todos los derechos reservados.

Als Betriebsgeheimnis anvertraut. Alle Rechte vorbehalten.
Proprietary data, company confidential. All rights reserved.

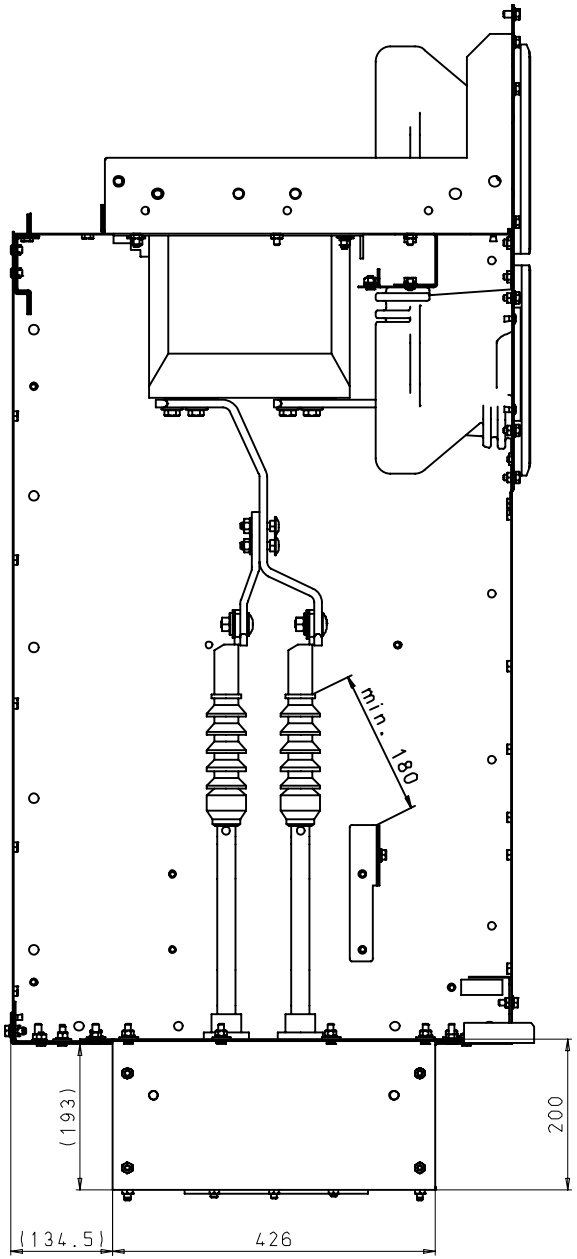

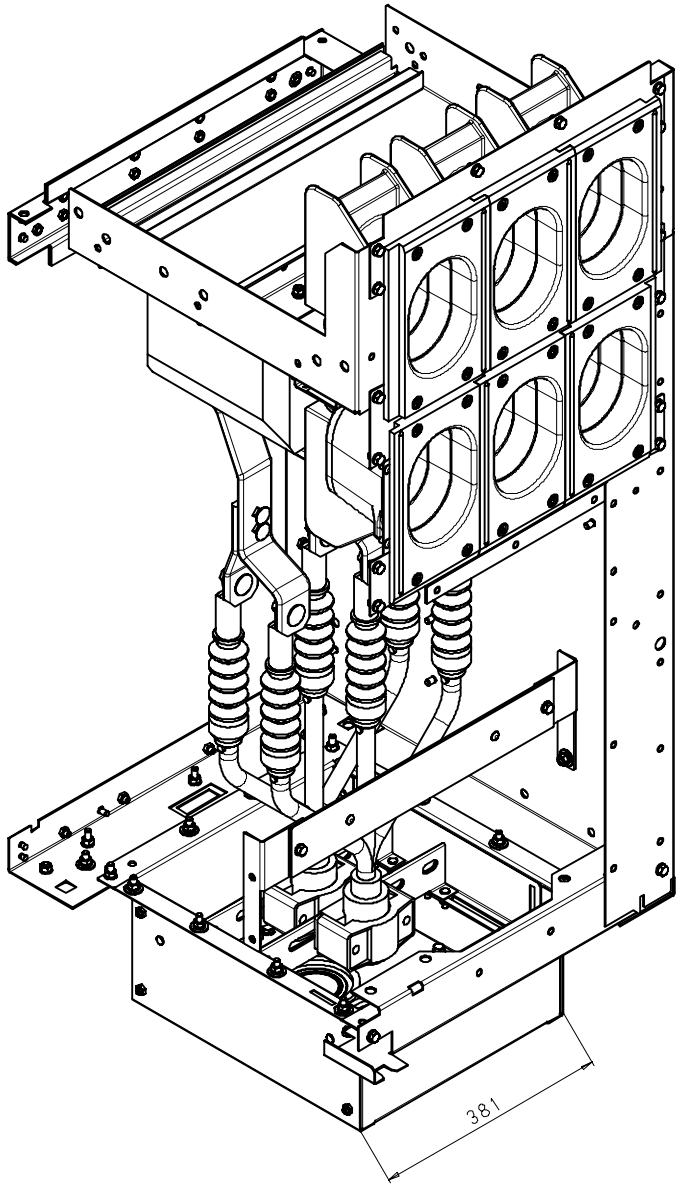

Tolerance Toleranz (ISO) - -	Material;Werkstoff - -	Mass ; Masse - -	Papersize Format C/A2	12-01-2011	FERRE	Date Datum 12-01-2011	Designation Benennung Deep Bottom Pan 31.5kA 600mm 12kV
		Unit;Einheit mm	Scale Massstab 1:5	Date Datum	Name Name	Name FERREIRAV	ISO-Projection
	Material No./Nr. 1 SWF:(-	Material No./Nr. 2	Released Freigabe Frei	11/0140	00	Department Abteilung E_D_MV_1_R&D	Page Blatt 1-
				Mod./Ref-No. Aend.-Vorg.-Nr.	Revision Revision	Location Standort CORROIOS	Itemnumber Sachnummer 110-0295.9

SIEMENS

HPD

printed by cf2adm, 01/21/11-15:09:21

Confié a titre de secret d'enterprise. Tous droits reserves.
Comunicado como segredo empresarial. Reservados todos os direitos.
Confiado como secreto industrial. Todos los derechos reservados.

Als Betriebsgeheimnis anvertraut. Alle Rechte vorbehalten.
Proprietary data, company confidential. All rights reserved.

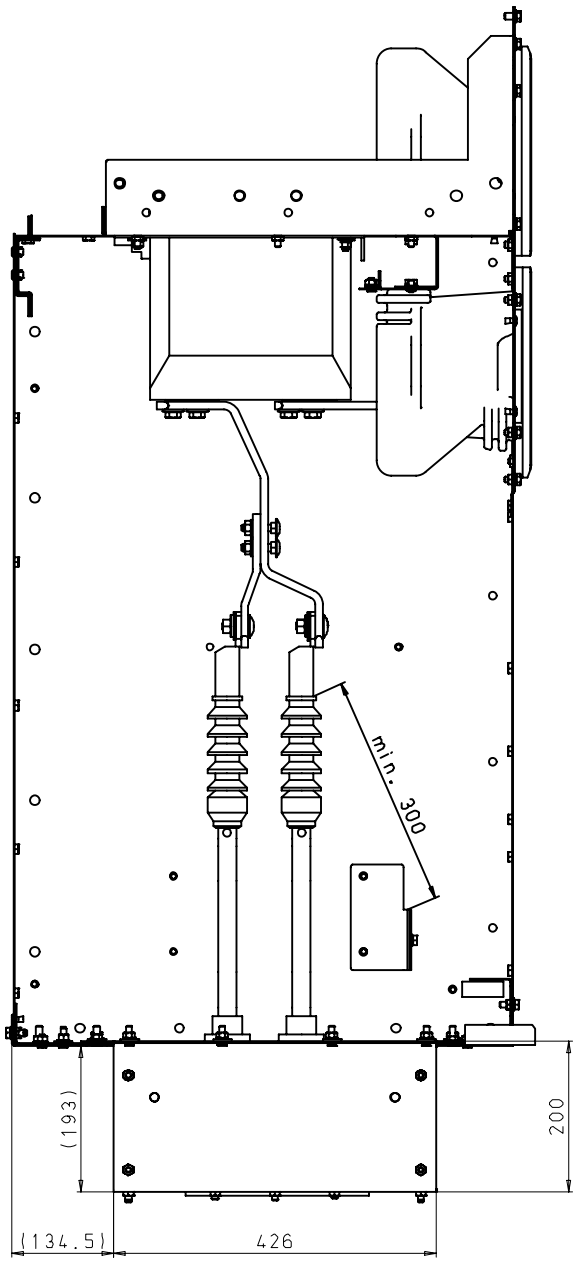

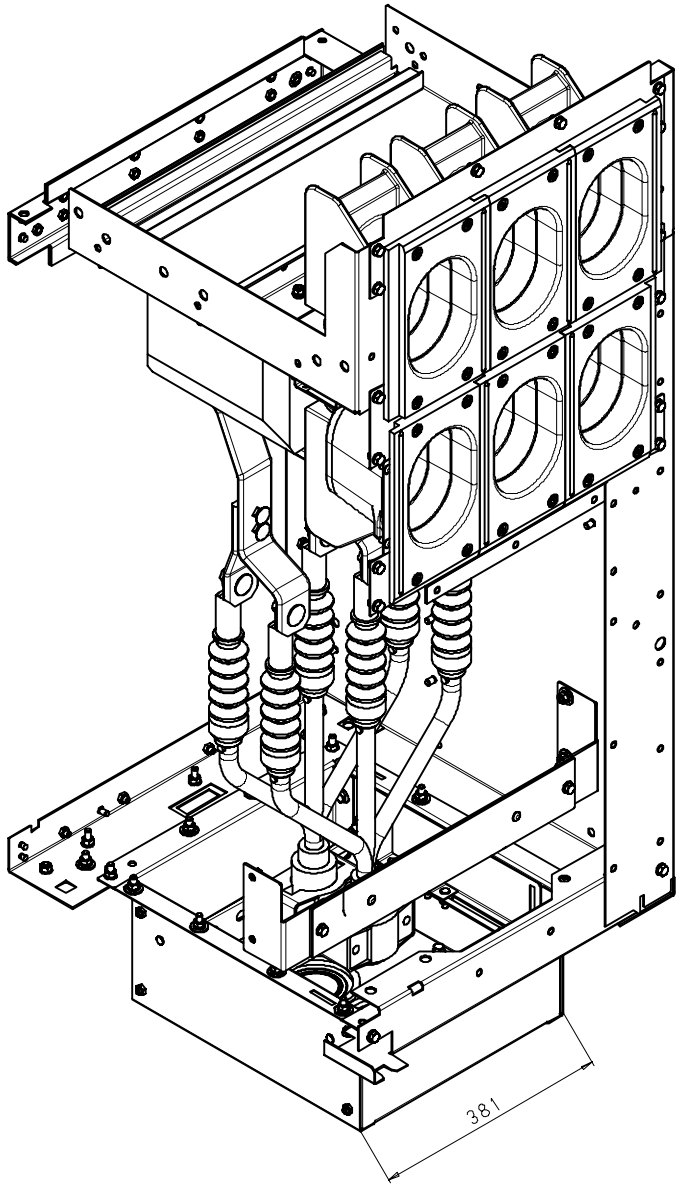

Tolerance Toleranz (ISO)	Material;Werkstoff	Mass ; Masse	Papersize Format	19-01-2011	FERRE	Date Datum	19-01-2011
-	-	-	C/A2			Name Name	FERREIRAV
-	-	-	Scale Massstab	Date Datum	Name Name	Department Abteilung	E_D_MV_1_R&D
--		Unit;Einheit mm	1:5	11/0140	00	Location Standort	CORROIOS
	Material No./Nr. 1 SWF:(-	Material No./Nr. 2	Released Freigabe Frei	Mod./Ref-No. Aend.-Vorg.-Nr.	Revision Revision	SIEMENS	Itemnumber Sachnummer 110-0298.9

Designation Benennung: Deep Bottom Pan 31.5kA 600mm 17.5kV

ISO-Projection

Page Blatt 1-

HPD

printed by cf2adm, 01/21/11-15:01:29

Confié à titre de secret d'enterprise. Tous droits reserves.
Comunicado como segredo empresarial. Reservados todos os direitos.
Confiado como secreto industrial. Todos los derechos reservados.

Als Betriebsgeheimnis anvertraut. Alle Rechte vorbehalten.
Proprietary data, company confidential. All rights reserved.

1x entry three core cable

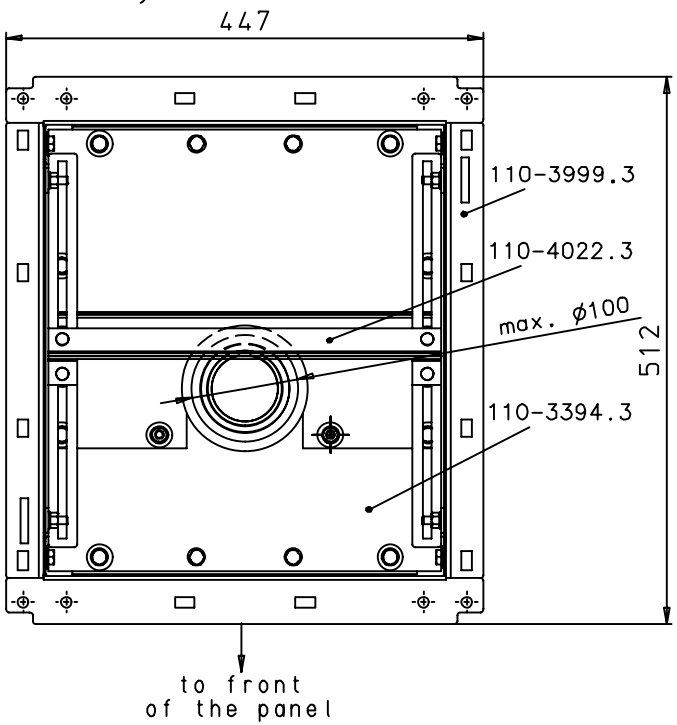

2x entry three core cable

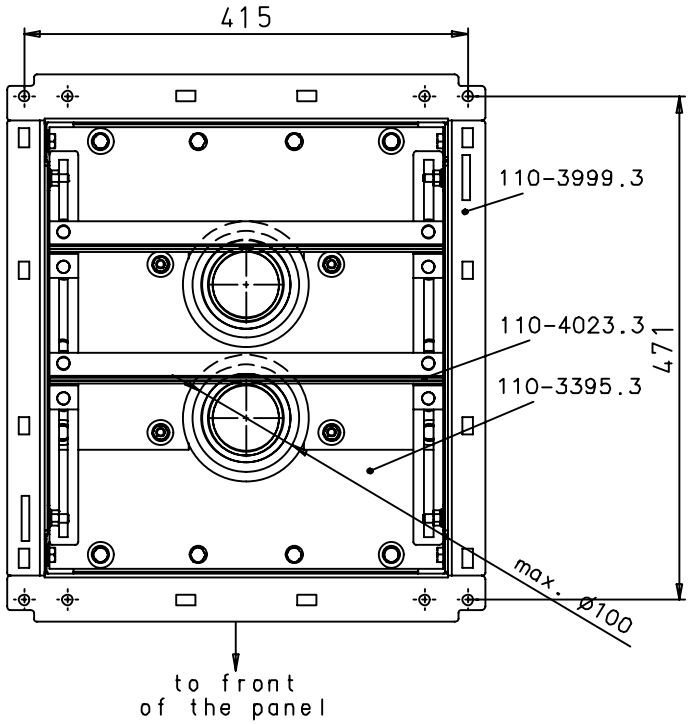

3x entry three core cable

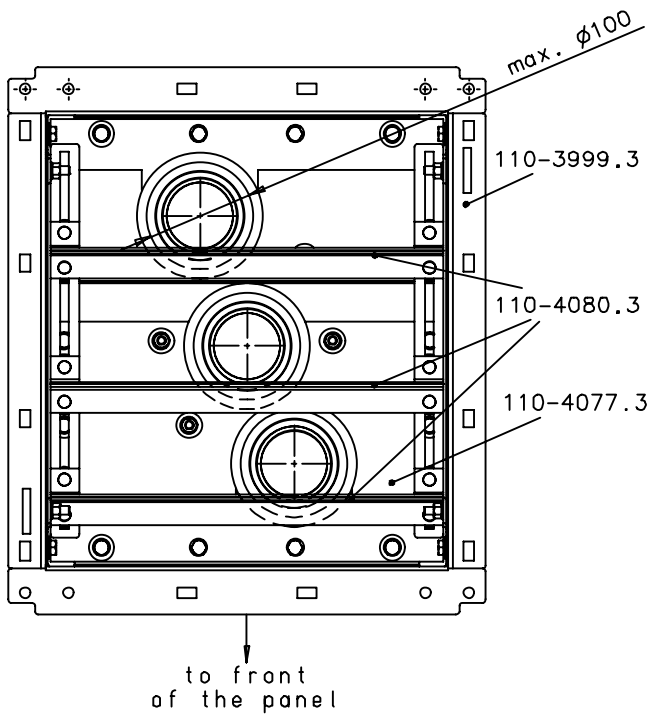



View A

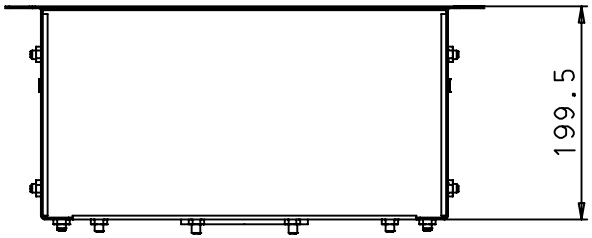

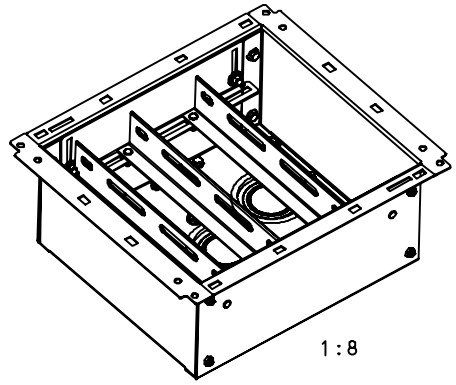

Tolerance Toleranz (ISO)	Material;Werkstoff	Mass ; Masse	Papersize Format	10-08-2011	SCHLD	Date Datum	23-02-2011	Designation Benennung	ISO-Projection
-	-	-	B/A3	Date Datum	Name Name	Name Name	FERREIRAV	Deep Bottom Pan 600mm cable entry	
--	-	Unit;Einheit mm	Scale Massstab 1:5	11/3896	01	Department Abteilung	E_D_MV_1_R&D		Page Blatt 1-
	Material No./Nr. 1 SWF:(-)	Material No./Nr. 2	Released Freigabe Frei	Mod./Ref-No. Aend.-Vorg.-Nr.	Revision Revision	Location Standort	CORROIOS	Itemnumber Sachnummer 110-0310.9	
						SIEMENS			

HPD

printed by oprtcual, 08/18/11-15:35:29

Confié a titre de secret d'enterprise. Tous droits reserves.
Comunicado como segredo empresarial. Reservados todos os direitos.
Confiado como secreto industrial. Todos los derechos reservados.

Als Betriebsgeheimnis anvertraut. Alle Rechte vorbehalten.
Proprietary data, company confidential. All rights reserved.

Deep Bottom Pan 600mm

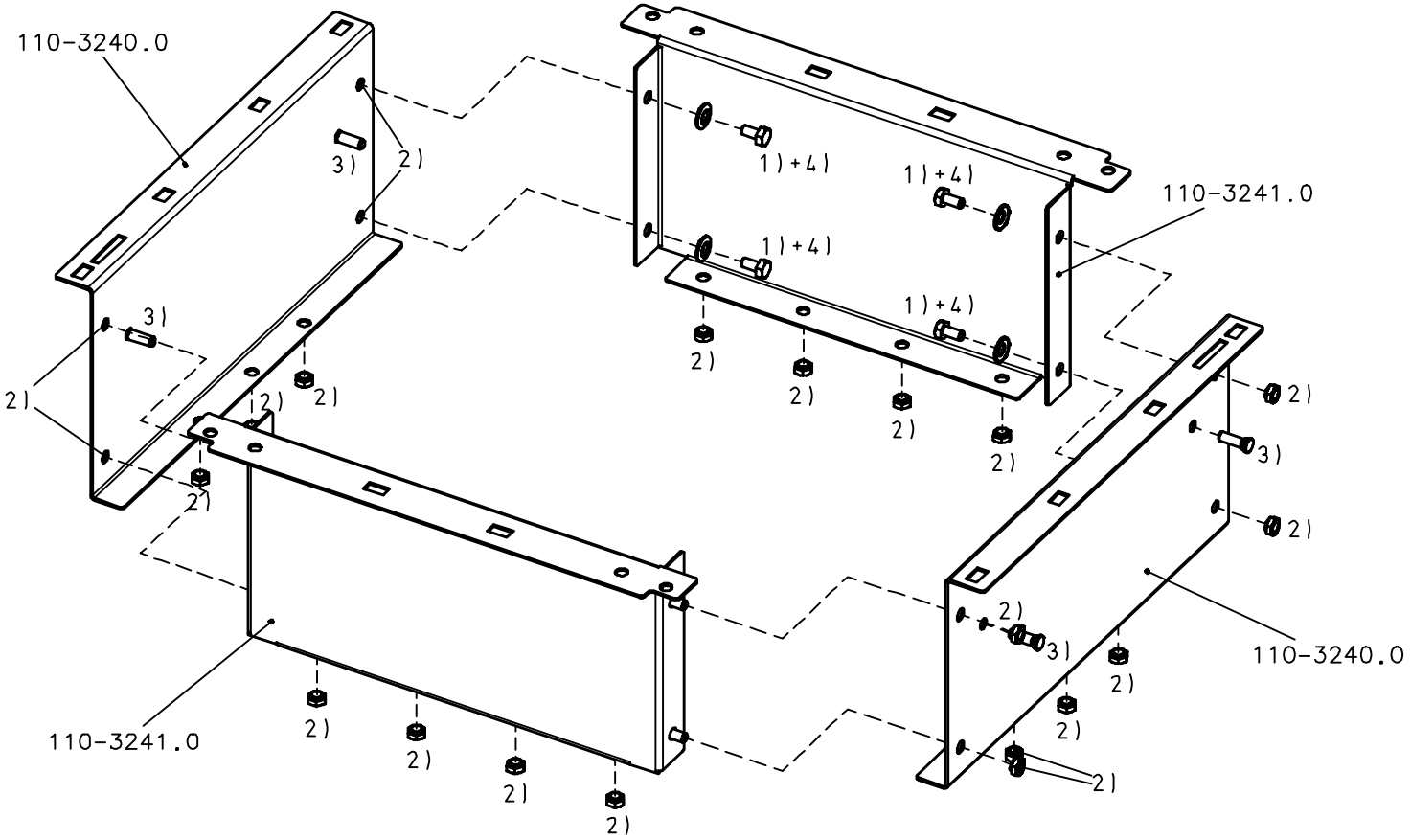

1) Hexagon Screw ISO 4017-M8x16
2) Hexagon Set-IN Nut SN 60693-M8
3) Threaded Bold M8x25
4) Contact Washer SN 70093-8

Tolerance Toleranz (ISO)	Material;Werkstoff	Mass ; Masse	Papersize Format	20-01-2011	FERRE	Date Datum	20-01-2011	Designation Benennung	ISO-Projection
-	-	-	B/A3	Date Datum	Name Name	Name Name	FERREIRAV	Deep Bottom Pan 31.5kA 600mm	
--	-	Unit;Einheit	Scale Massstab			Department Abteilung	E_D_MV_1_R&D		Page Blatt
	Material No./Nr. 1	Material No./Nr. 2	mm	11/0923	00	Location Standort	CORROIOS		1+
	SWF:(-)		1:4			SIEMENS		Itemnumber Sachnummer	
			Released Freigabe Frei	Mod./Ref-No. Aend.-Vorg.-Nr.	Revision Revision			110-3999.3	

HPD

printed by cf20adm, 02/20/11-12:31:10

Confié à titre de secret d'enterprise. Tous droits reserves.
Comunicado como segredo empresarial. Reservados todos os direitos.
Confiado como secreto industrial. Todos los derechos reservados.

Als Betriebsgeheimnis anvertraut. Alle Rechte vorbehalten.
Proprietary data, company confidential. All rights reserved.

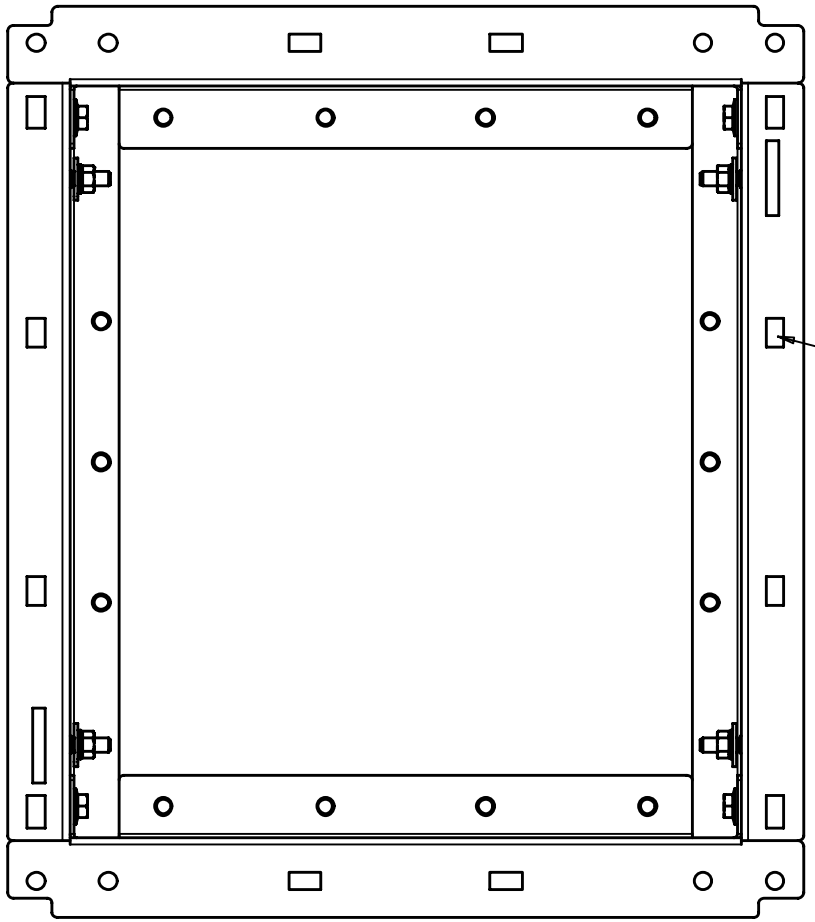

Insert 16x Combination Nut SN 65482-M8
12x Washer DIN 9021-8,4-140HV-A3L
into a plastic bag 5180302006 and fix the bag with with a cable strip at the frame.

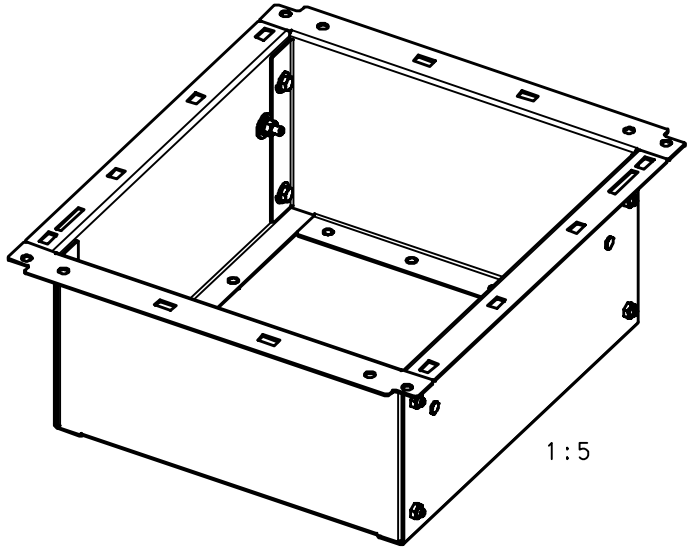

1:5

Tolerance Toleranz (ISO)	Material;Werkstoff	Mass ; Masse	Papersize Format	20-01-2011	FERRE	Date Datum	20-01-2011	Designation Benennung	ISO-Projection
-	-	-	B/A3	Date Datum	Name Name	Name Name	FERREIRAV	Deep Bottom Pan 31.5kA 600mm	
--	-	Unit;Einheit mm	Scale Massstab 1:3	11/0923	00	Department Abteilung	E_D_MV_1_R&D		Page Blatt 2-
	Material No./Nr. 1 SWF:(-)	Material No./Nr. 2	Released Freigabe Frei	Mod./Ref-No. Aend.-Vorg.-Nr	Revision Revision	Location Standort	CORROIOS	Itemnumber Sachnummer 110-3999.3	
						SIEMENS			

HPD

Confiè a titre de secret d'enterprise. Tous droits reserves.
Comunicado como segredo empresarial. Reservados todos os direitos.
Confiado como secreto industrial. Todos los derechos reservados.

Als Betriebsgeheimnis anvertraut. Alle Rechte vorbehalten.
Proprietary data, company confidential. All rights reserved.

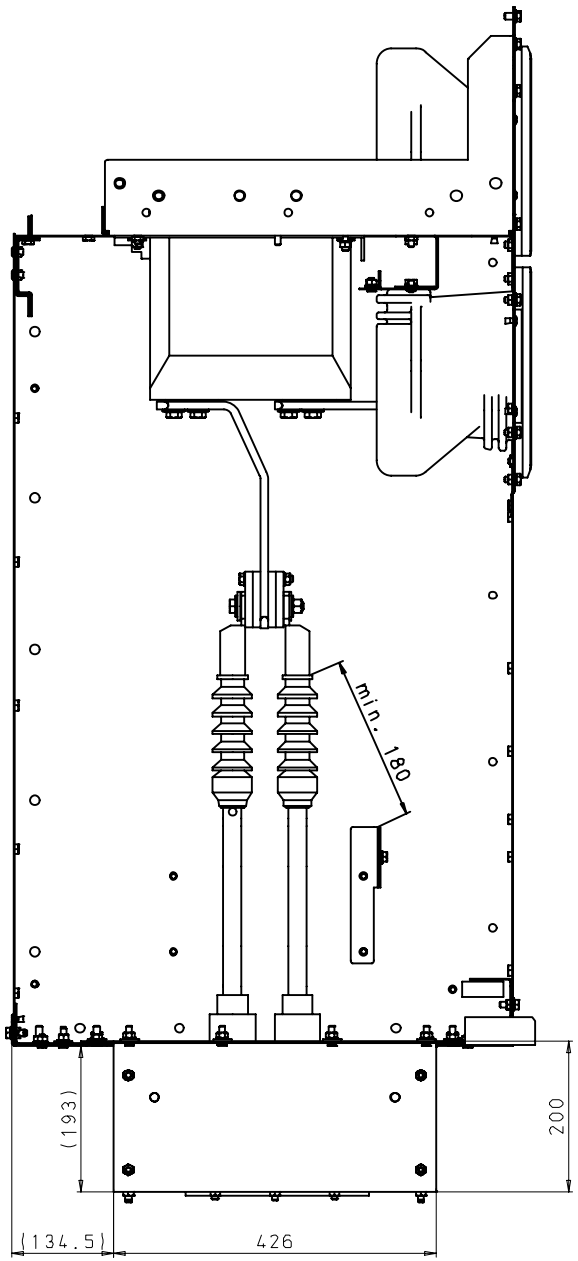

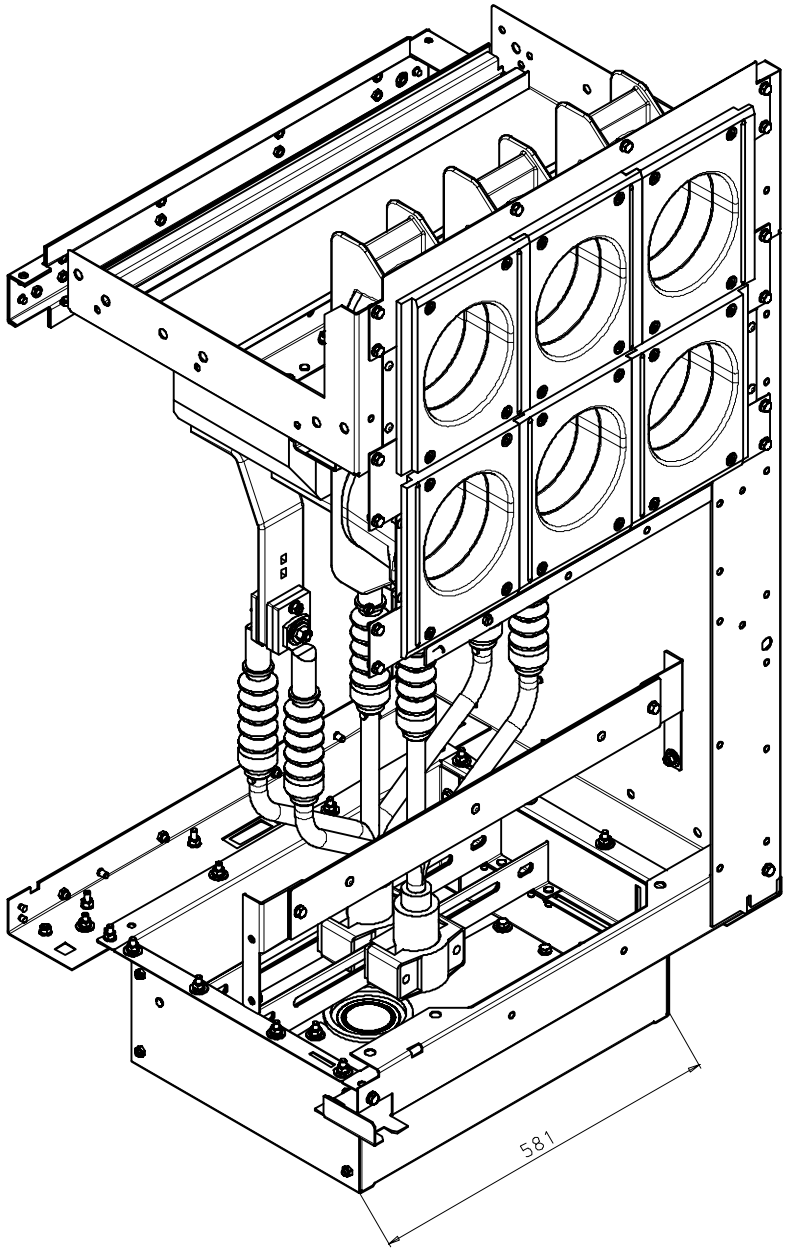

Tolerance Toleranz (ISO) - -	Material;Werkstoff - -	Mass ; Masse - -	Papersize Format C/A2	12-01-2011	FERRE	Date Datum 12-01-2011	Designation Benennung Deep Bottom Pan 31.5kA 800mm 12kV
		Unit;Einheit mm	Scale Massstab 1:5	Date Datum	Name Name	Name FERREIRAV	ISO-Projection
	Material No./Nr. 1 SWF:(-	Material No./Nr. 2	Released Freigabe Frei	11/0140	00	Department Abteilung E_D_MV_1_R&D	Page Blatt 1-
				Mod./Ref-No. Aend.-Vorg.-Nr.	Revision Revision	Location Standort CORROIOS	Itemnumber Sachnummer 110-0296.9

SIEMENS

HPD

printed by cf2adm, 01/21/11-15:22:56

Confiè a titre de secret d'enterprise. Tous droits reserves.
Comunicado como segredo empresarial. Reservados todos os direitos.
Confiado como secreto industrial. Todos los derechos reservados.

Als Betriebsgeheimnis anvertraut. Alle Rechte vorbehalten.
Proprietary data, company confidential. All rights reserved.

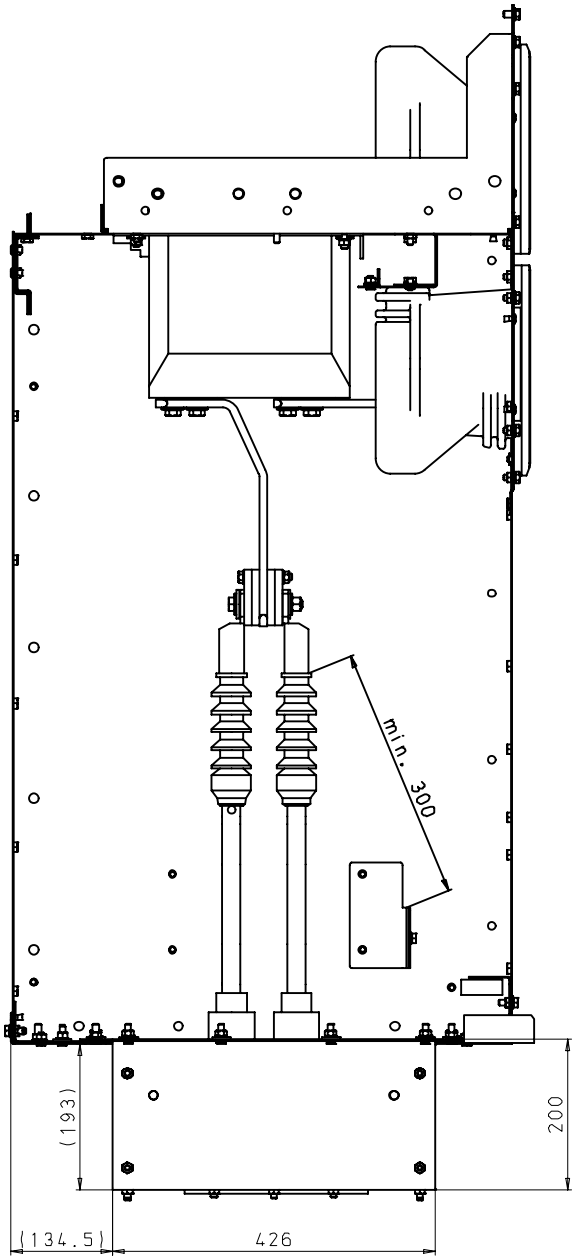

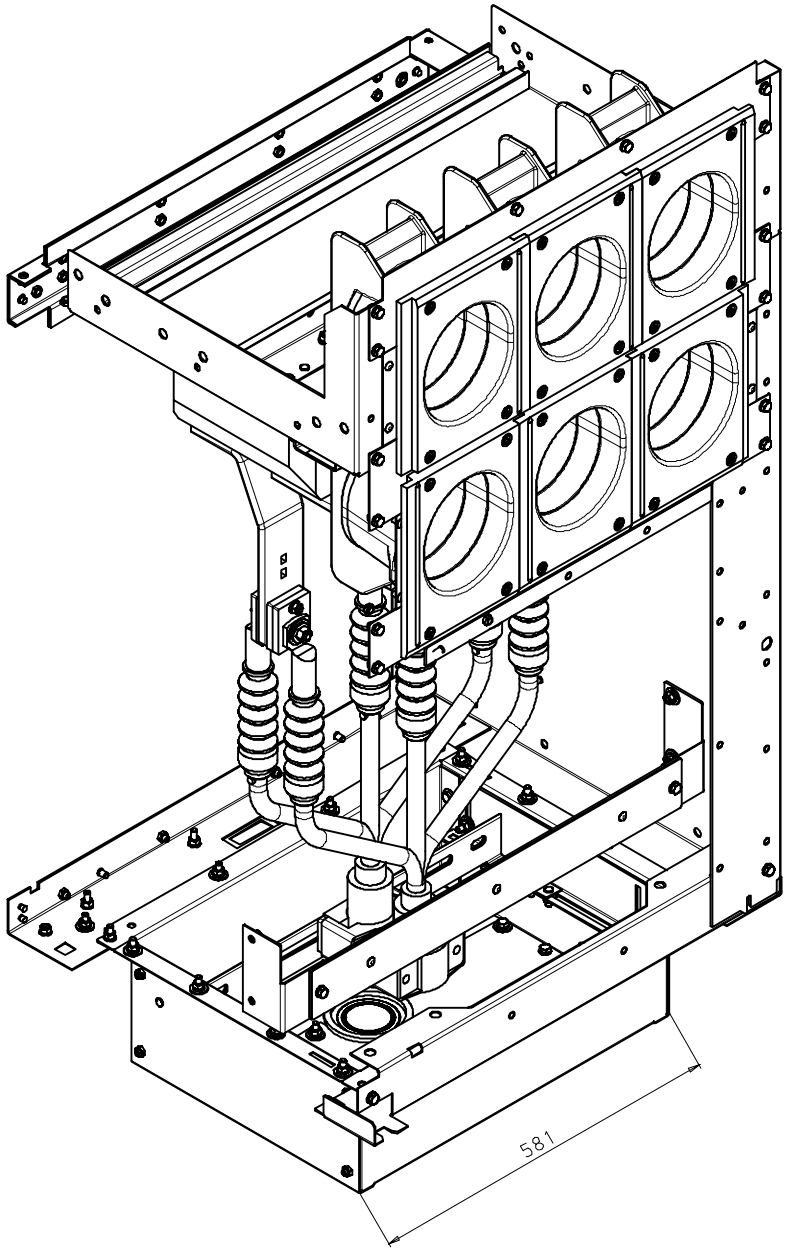

Tolerance Toleranz (ISO) - -	Material;Werkstoff - -	Mass ; Masse - -	Papersize Format C/A2	19-01-2011	FERRE	Date Datum	19-01-2011	Designation Benennung	ISO-Projection
		Unit;Einheit mm	Scale Massstab 1:5	Date Datum	Name Name	Name Name	FERREIRAV	Deep Bottom Pan 31.5kA 800mm 17.5kV	
	Material No./Nr. 1 SWF:(-	Material No./Nr. 2	Released Freigabe Frei	11/0140	00	Department Abteilung	E_D_MV_1_R&D		Page Blatt 1-
				Mod./Ref-No. Aend.-Vorg.-Nr.	Revision Revision	Location Standort	CORROIOS	Itemnumber Sachnummer 110-0299.9	

SIEMENS

HPD

printed by cf2adm, 01/21/11-15:02:02

Confié à titre de secret d'enterprise. Tous droits reserves.
Comunicado como segredo empresarial. Reservados todos os direitos.
Confiado como secreto industrial. Todos los derechos reservados.

Als Betriebsgeheimnis anvertraut. Alle Rechte vorbehalten.
Proprietary data, company confidential. All rights reserved.

1x entry three core cable

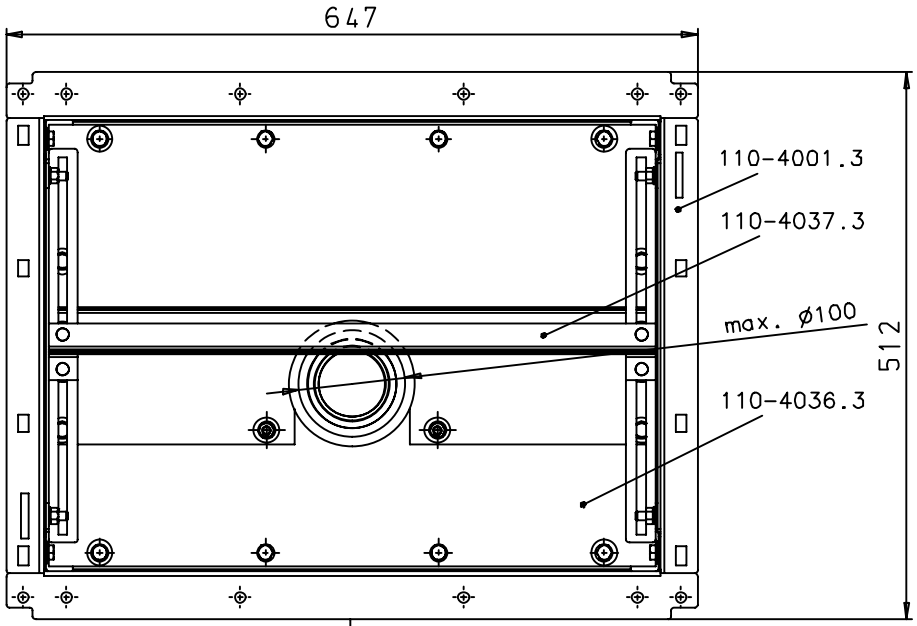

2x entry three core cable

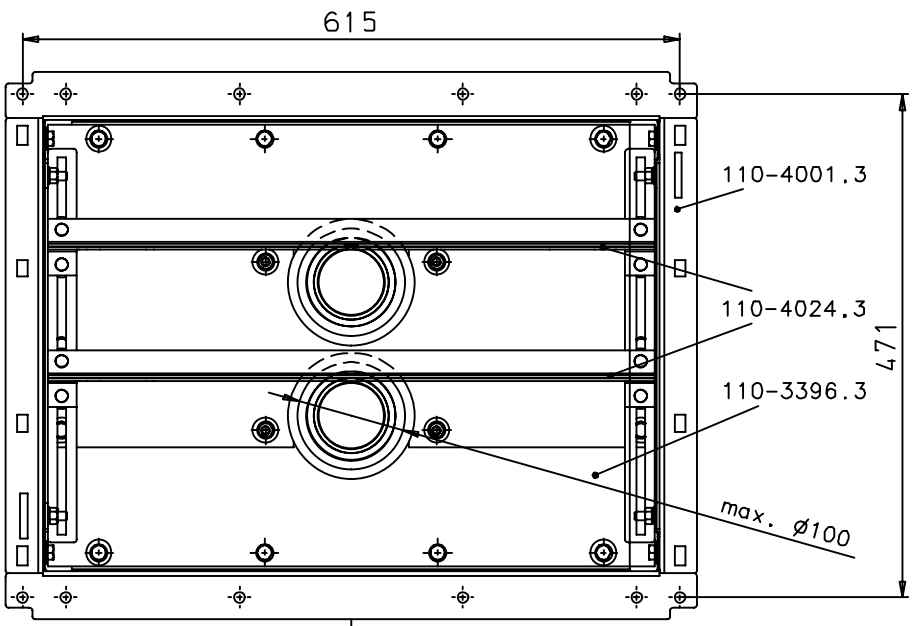



View A

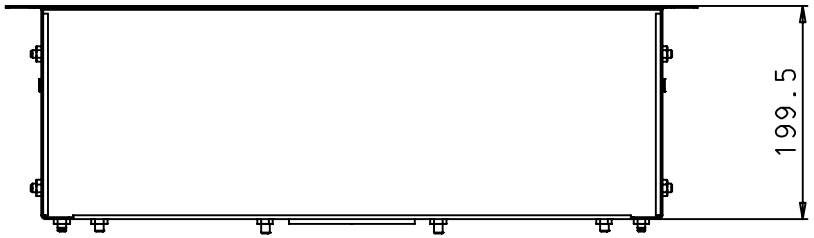

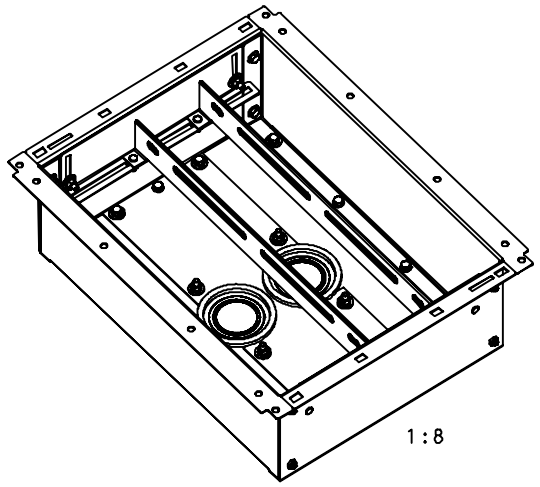

Tolerance Toleranz (ISO)	Material;Werkstoff	Mass ; Masse	Papersize Format	10-08-2011	SCHLD	Date Datum	23-02-2011	Designation Benennung	ISO-Projection
-	-	-	B/A3	Date Datum	Name Name	Name Name	FERREIRAV	Deep Bottom Pan 800mm cable entry	
--	-	Unit;Einheit mm	Scale Massstab 1:5	11/3896	01	Department Abteilung	E_D_MV_1_R&D		Page Blatt 1+
	Material No./Nr. 1 SWF:(-)	Material No./Nr. 2	Released Freigabe Frei	Mod./Ref-No. Aend.-Vorg.-Nr.	Revision Revision	Location Standort	CORROIOS	Itemnumber Sachnummer 110-0311.9	
HPD						SIEMENS			

printed by oprtcual, 08/10/11-15:36:12

Confié a titre de secret d'enterprise. Tous droits reserves.
Comunicado como segredo empresarial. Reservados todos os direitos.
Confiado como secreto industrial. Todos los derechos reservados.

Als Betriebsgeheimnis anvertraut. Alle Rechte vorbehalten.
Proprietary data, company confidential. All rights reserved.

3x entry three core cable

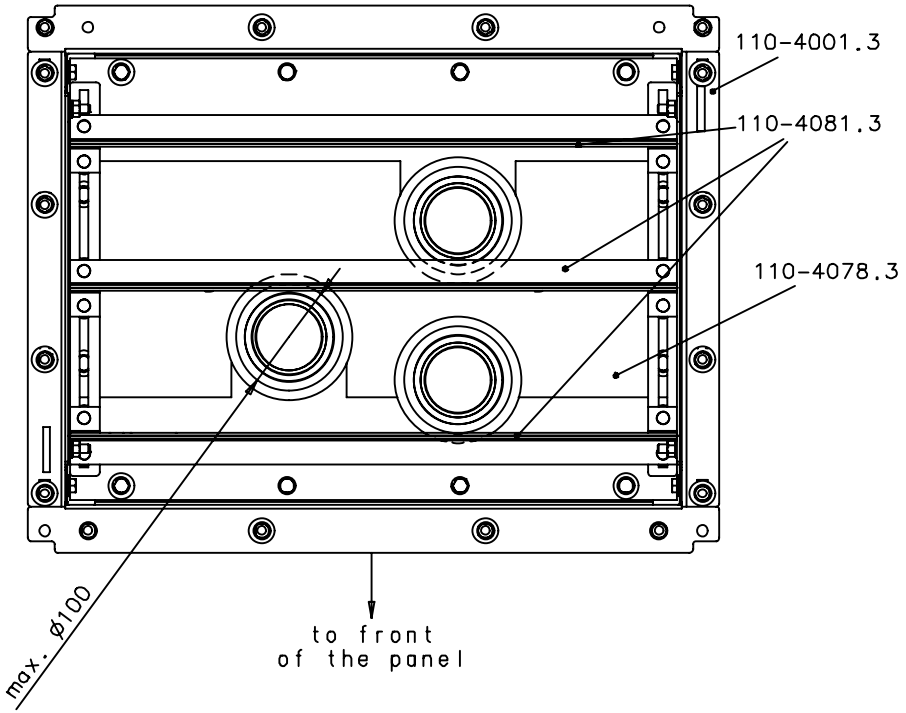

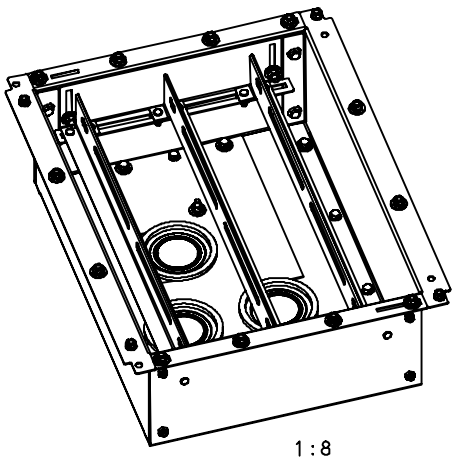

1:8

4x entry three core cable

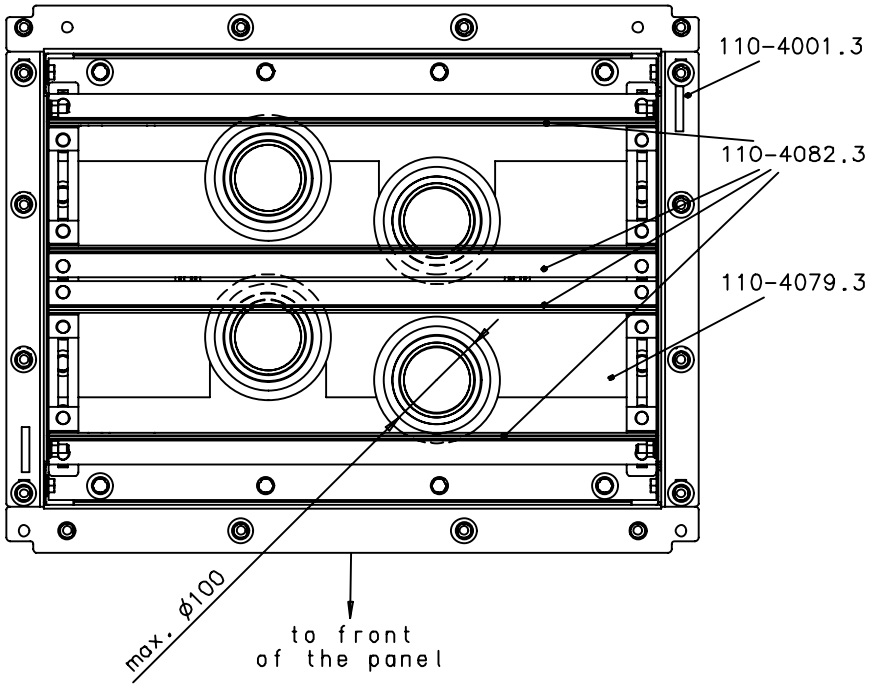

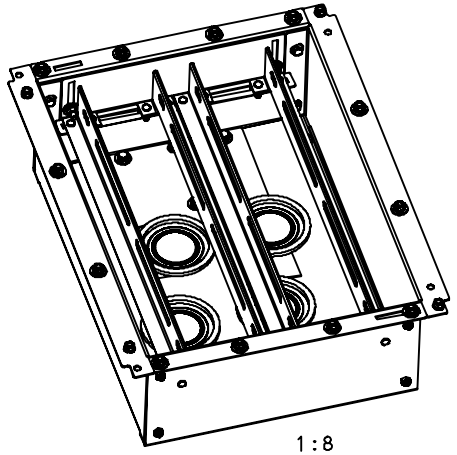

1:8

Tolerance Toleranz (ISO)	Material;Werkstoff	Mass ; Masse	Papersize Format	10-08-2011	SCHLD	Date Datum	23-02-2011	Designation Benennung	ISO-Projection
-	-	-	B/A3	Date Datum	Name Name	Name Name	FERREIRAV	Deep Bottom Pan 800mm cable entry	
--	-	Unit;Einheit	Scale Massstab			Department Abteilung	E_D_MV_1_R&D		Page Blatt
		mm	1:5	11/3896	01	Location Standort	CORROIOS		2-
	Material No./Nr. 1	Material No./Nr. 2	Released Freigabe	Mod./Ref-No. Aend.-Vorg.-Nr.	Revision Revision	SIEMENS		Itemnumber Sachnummer	
HPD	SWF:(-)		Frei					110-0311.9	

printed by oprtcual, 08/10/11-15:36:55

Confié a titre de secret d'enterprise. Tous droits reserves.
Comunicado como segredo empresarial. Reservados todos os direitos.
Confiado como secreto industrial. Todos los derechos reservados.

Als Betriebsgeheimnis anvertraut. Alle Rechte vorbehalten.
Proprietary data, company confidential. All rights reserved.

Deep Bottom Pan 800mm

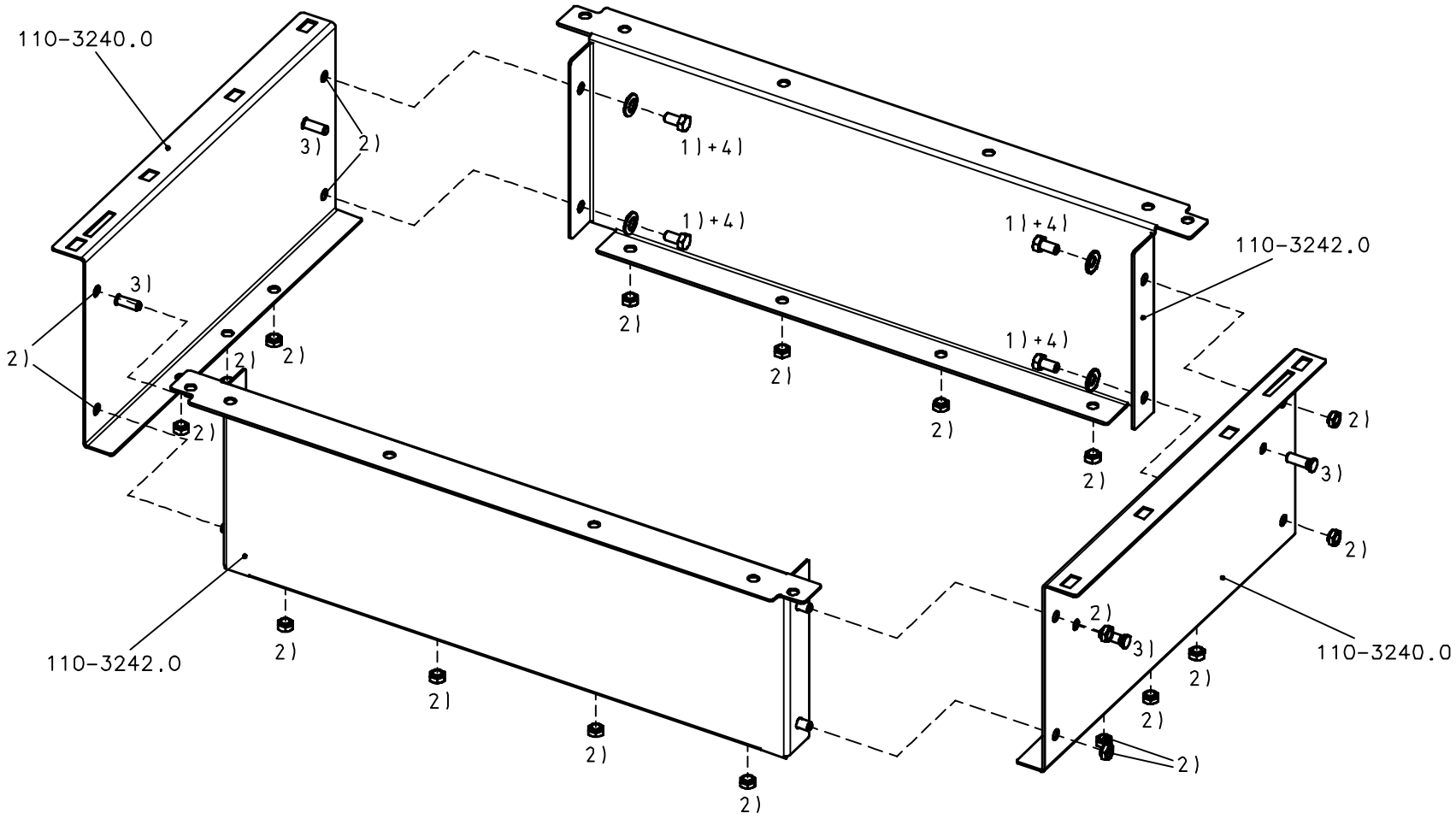

1) Hexagon Screw ISO 4017-M8x16
2) Hexagon Set-IN Nut SN 60693-M8
3) Threaded Bold M8x25
4) Contact Washer SN 70093-8

Tolerance Toleranz (ISO)	Material;Werkstoff	Mass ; Masse	Papersize Format	23-02-2011	FERRE	Date Datum	23-02-2011	Designation Benennung	ISO-Projection
-	-	-	B/A3	Date Datum	Name Name	Name Name	FERREIRAV	Deep Bottom Pan 31.5kA 800mm	
--	-	Unit;Einheit mm	Scale Massstab 1:4	11/0923	00	Department Abteilung	E_D_MV_1_R&D		Page Blatt 1+
	Material No./Nr. 1 SWF:(-)	Material No./Nr. 2	Released Freigabe Frei	Mod./Ref-No. Aend.-Vorg.-Nr	Revision Revision	Location Standort	CORROIOS	Itemnumber Sachnummer 110-4001.3	
HPD						SIEMENS			

printed by cf20adm, 03/14/11-09:00:55

Confié à titre de secret d'enterprise. Tous droits reserves.
Comunicado como segredo empresarial. Reservados todos os direitos.
Confiado como secreto industrial. Todos los derechos reservados.

Als Betriebsgeheimnis anvertraut. Alle Rechte vorbehalten.
Proprietary data, company confidential. All rights reserved.

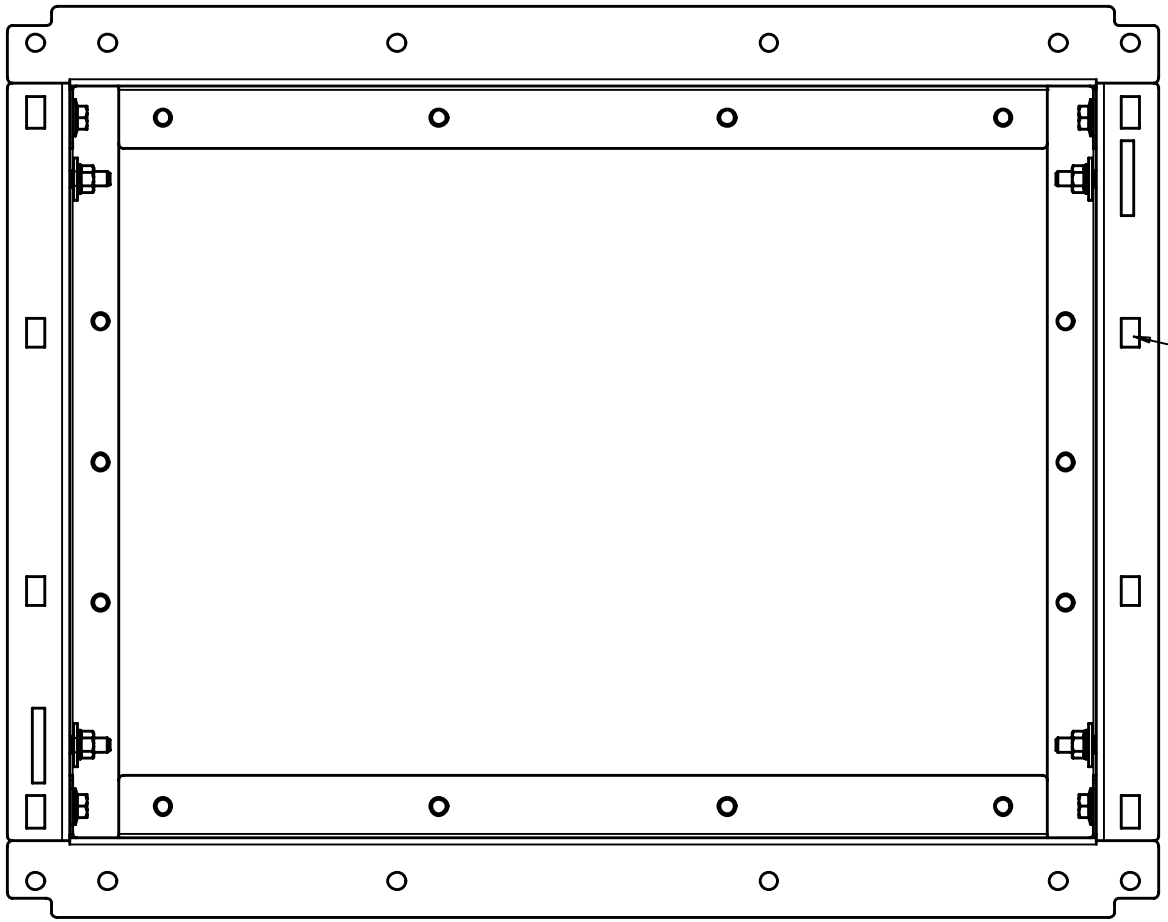

Insert 16x Combination Nut SN 65482-M8
12x Washer DIN 9021-8,4-140HV-A3L
into a plastic bag 5180302006 and fix the bag with with a cable strip at the frame.

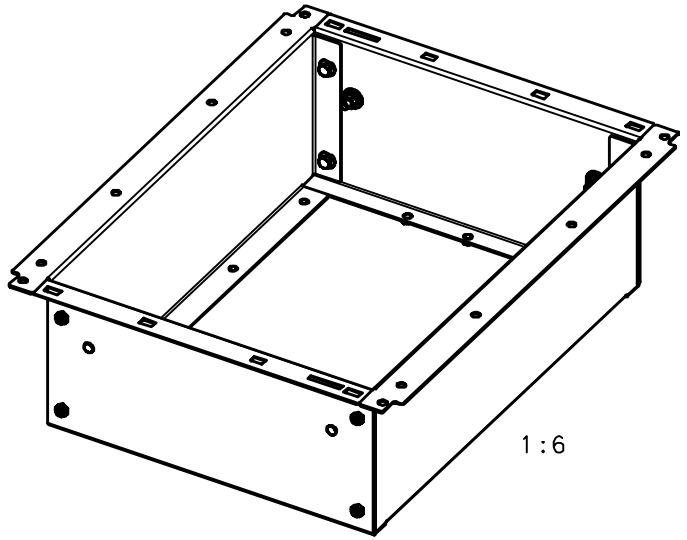

1:6

Tolerance Toleranz (ISO)	Material;Werkstoff	Mass ; Masse	Papersize Format	23-02-2011	FERRE	Date Datum	23-02-2011	Designation Benennung	ISO-Projection
-	-	-	B/A3	Date Datum	Name Name	Name Name	FERREIRAV	Deep Bottom Pan 31.5kA 800mm	
--	-	Unit;Einheit mm	Scale Massstab 1:3			Department Abteilung	E_D_MV_1_R&D		Page Blatt 2-
	Material No./Nr. 1 SWF:(-)	Material No./Nr. 2	Released Freigabe Frei	11/0923	00	Location Standort	CORROIOS	Itemnumber Sachnummer 110-4001.3	
				Mod./Ref-No. Aend.-Vorg.-Nr.	Revision Revision	SIEMENS			

HPD

printed by cf2@adm, @3/14/11-@9:@1:46

Confié a titre de secret d'enterprise. Tous droits reserves.
Comunicado como segredo empresarial. Reservados todos os direitos.
Confiado como secreto industrial. Todos los derechos reservados.

Als Betriebsgeheimnis anvertraut. Alle Rechte vorbehalten.
Proprietary data, company confidential. All rights reserved.

12kV

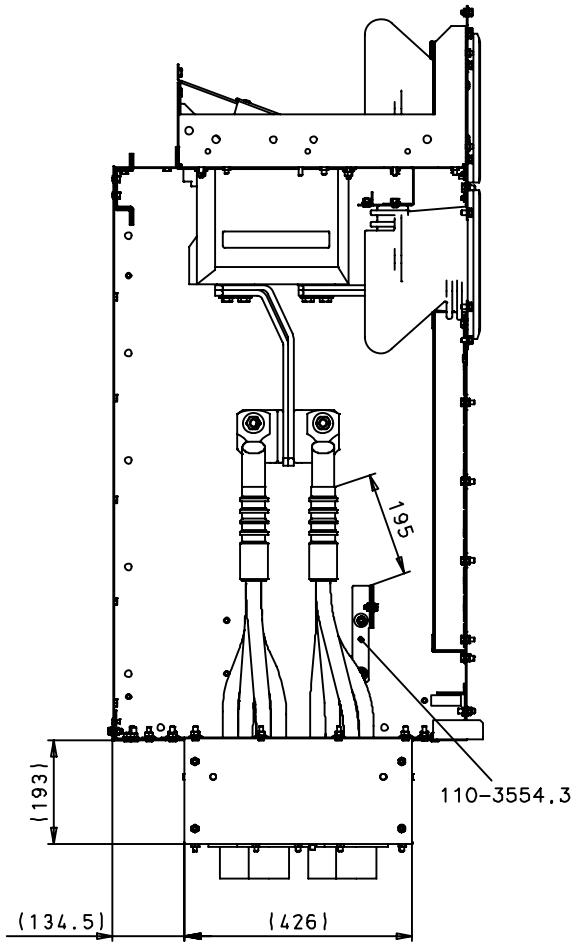

17.5kV

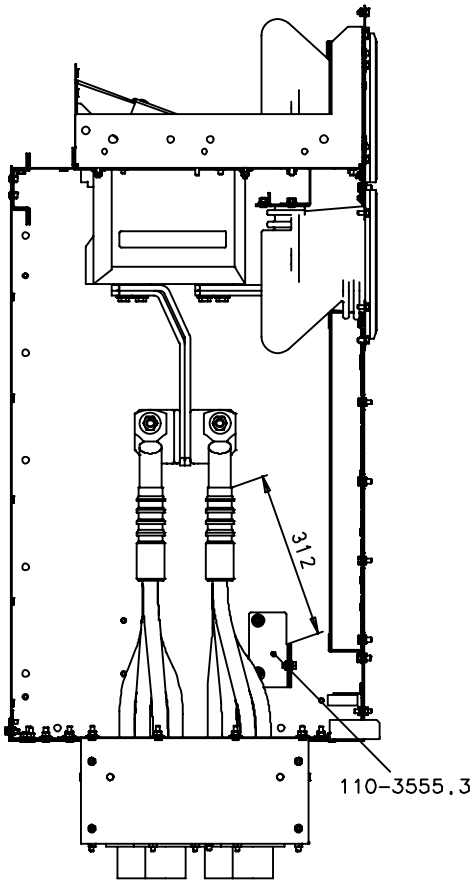

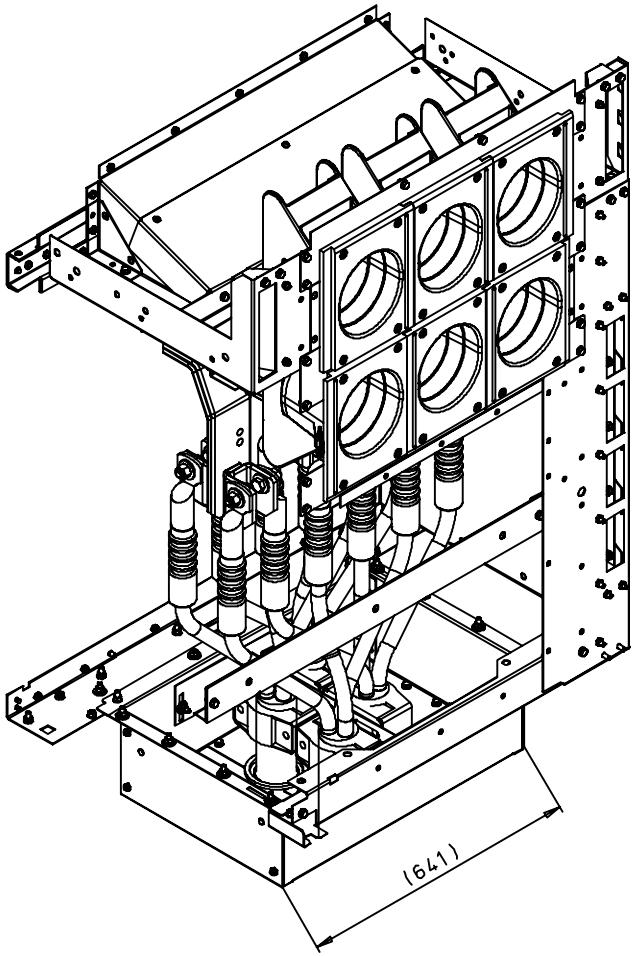

Tolerance Toleranz (ISO) - --	Material;Werkstoff - -	Mass ; Masse - -	Papersize Format B/A3	13-02-2012	DSB	Date Datum	13-02-2012	Designation Benennung	ISO-Projection
		Unit;Einheit mm	Scale Massstab 1:10	Date Datum	Name Name	Name Name	DREISBACH	Deep Bottom Pan 1000mm cable entry	
	Material No./Nr. 1 SWF:(-)	Material No./Nr. 2	Released Freigabe Frei	12/0836	00	Department Abteilung	IC_LMV_MV_1_R&D		Page Blatt 1+
				Mod./Ref-No. Aend.-Vorg.-Nr	Revision Revision	Location Standort	FFMCB		
						SIEMENS		Itemnumber Sachnummer 110-0225.9	

HPD

printed by oprtcual, 02/14/12-08:45:37

Confié à titre de secret d'enterprise. Tous droits reserves.
Comunicado como segredo empresarial. Reservados todos os direitos.
Confiado como secreto industrial. Todos los derechos reservados.

Als Betriebsgeheimnis anvertraut. Alle Rechte vorbehalten.
Proprietary data, company confidential. All rights reserved.

3x entry three core cable

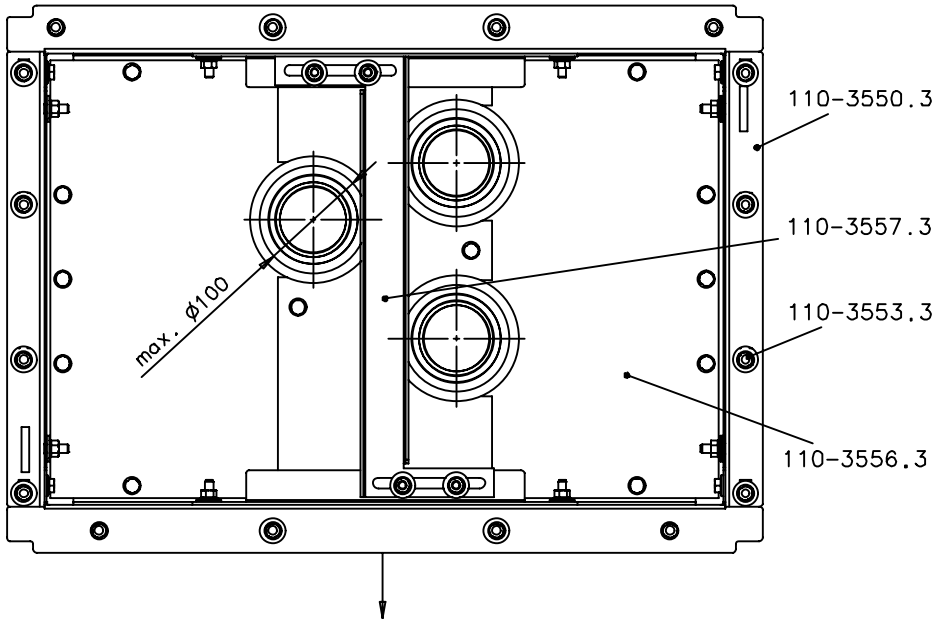

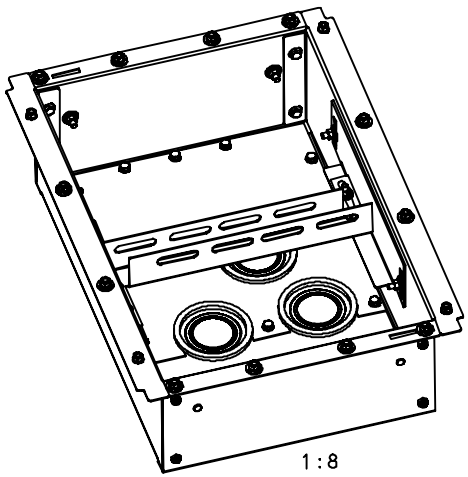

4x entry three core cable

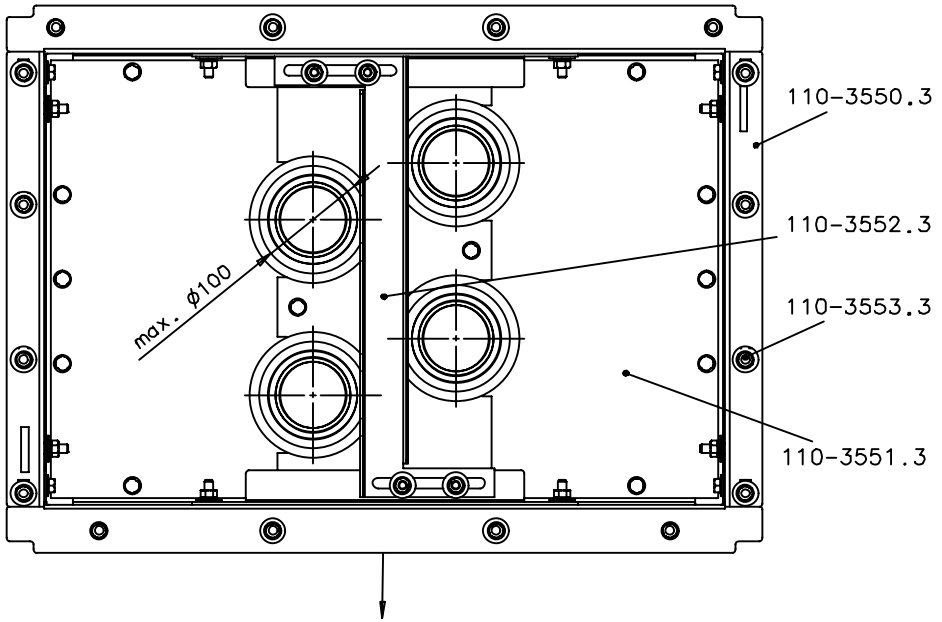

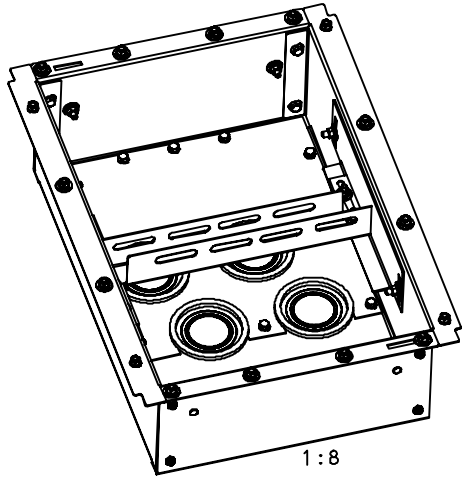

Tolerance Toleranz (ISO)	Material;Werkstoff	Mass ; Masse	Papersize Format	13-02-2012	DSB	Date Datum	13-02-2012	Designation Benennung	ISO-Projection
-	-	-	B/A3	Date Datum	Name Name	Name Name	DREISBACH	Deep Bottom Pan 1000mm cable entry	
--	-	Unit;Einheit	Scale Massstab			Department Abteilung	IC_LMV_MV_1_R&D		Page Blatt
	Material No./Nr. 1	Material No.2	1:5	12/0836	00	Location Standort	FFMCB		2-
	SWF:(-)		Released Freigabe Frei	Mod./Ref-No. Aend.-Vorg.-Nr	Revision Revision	SIEMENS		Itemnumber Sachnummer 110-0225.9	

HPD

printed by oprtcual, 02/14/12-08:44:53

Confié à titre de secret d'enterprise. Tous droits reserves.
Comunicado como segredo empresarial. Reservados todos os direitos.
Confiado como secreto industrial. Todos los derechos reservados.

Als Betriebsgeheimnis anvertraut. Alle Rechte vorbehalten.
Proprietary data, company confidential. All rights reserved.

Deep Bottom Pan 1000mm

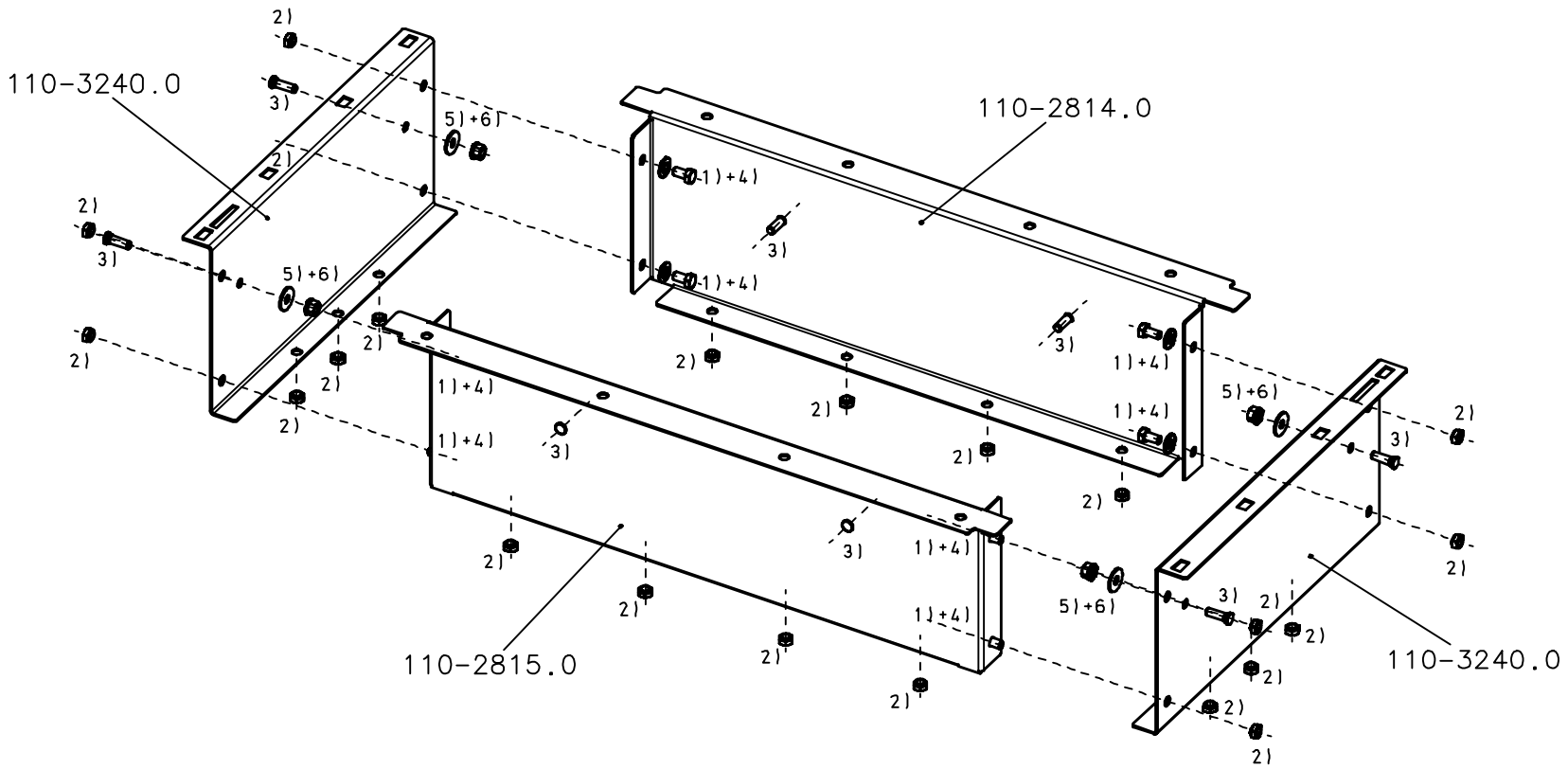

1) Hexagon Screw ISO 4017-M8x16
2) Hexagon Set-IN Nut SN 60693 - M8
3) Threaded Bold M8x25
4) Contact Washer SN 70093-8
5) Washer DIN9021 - 8.4 - 140HV-A3L
6) Combination Nut SN 65482 - M8

Tolerance Toleranz (ISO)	Material;Werkstoff	Mass ; Masse	Papersize Format	13-02-2012	DSB	Date Datum	13-02-2012	Designation Benennung	ISO-Projection
-	-	-	B/A3	Date Datum	Name Name	Name Name	DREISBACH	Deep Bottom Pan 31.5kA 1000mm	
--	-	-	Scale Massstab 1:5	12/0836	00	Department Abteilung	IC_LMV_MV_1_R&D		Page Blatt
	Material No./Nr. 1 SWF:(-)	Material No./Nr. 2	Unit;Einheit mm	Mod./Ref-No. Aend.-Vorg.-Nr.	Revision Revision	Location Standort	FFMCB	Itemnumber Sachnummer 110-3550.3	1+
			Released Freigabe Frei			SIEMENS			

HPD

Confié à titre de secret d'enterprise. Tous droits reserves.
Comunicado como segredo empresarial. Reservados todos os direitos.
Confiado como secreto industrial. Todos los derechos reservados.

Als Betriebsgeheimnis anvertraut. Alle Rechte vorbehalten.
Proprietary data, company confidential. All rights reserved.

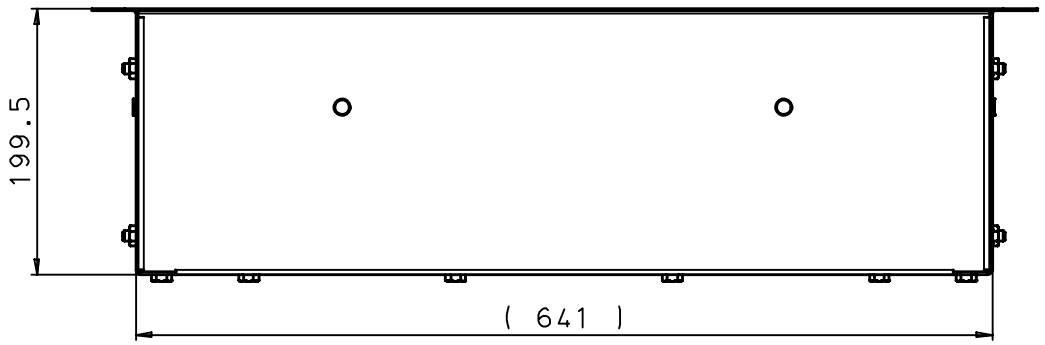

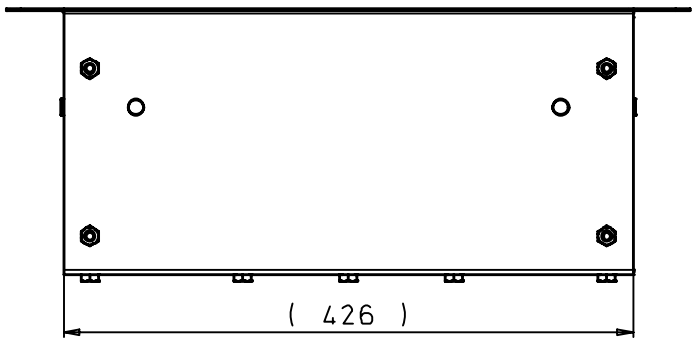

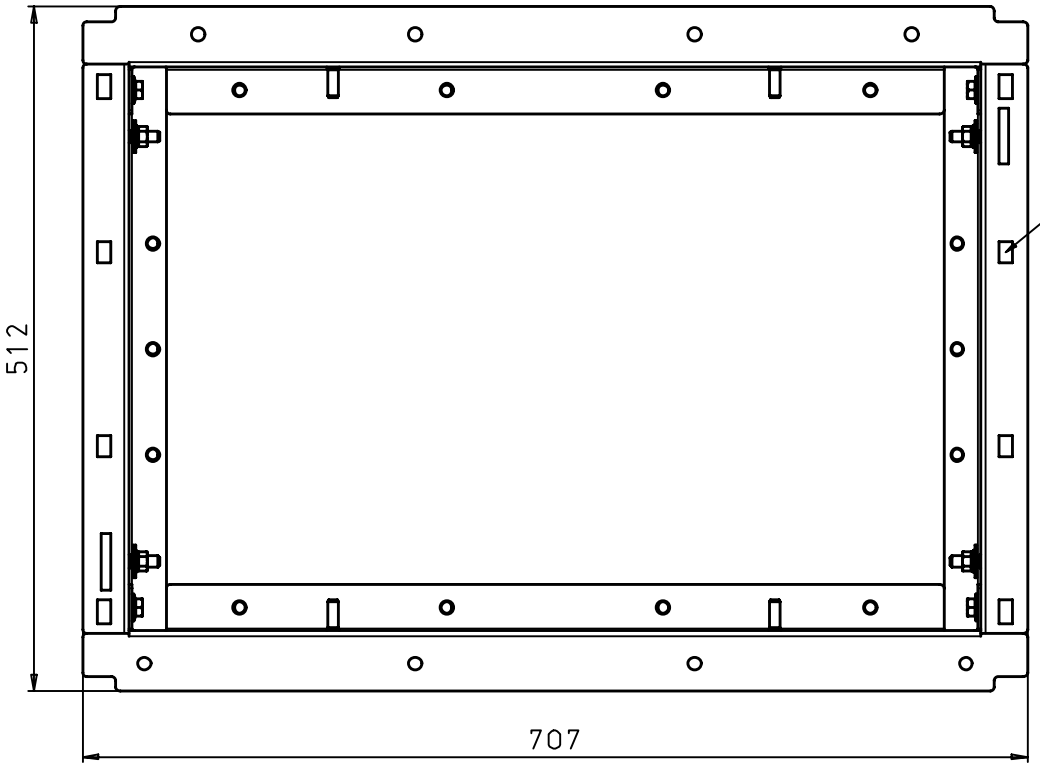

110-3553.3
Insert 16x Combination Nut SN 65482-M8
12x Washer DIN 9021-8,4-140HV-A3L
into a plastic bag 5180302006 and fix the bag with with a cable strip at the frame.

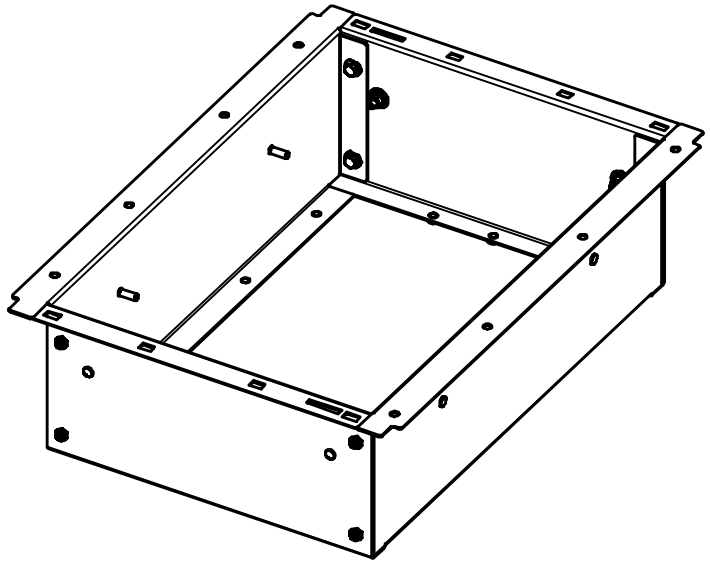

Tolerance Toleranz (ISO)	Material;Werkstoff	Mass ; Masse	Papersize Format	13-02-2012	DSB	Date Datum	13-02-2012	Designation Benennung	ISO-Projection
-	-	-	B/A3	Date Datum	Name Name	Name Name	DREISBACH	Deep Bottom Pan 31.5kA 1000mm	
--	-	Unit;Einheit mm	Scale Massstab 1:3	12/0836	00	Department Abteilung	IC_LMV_MV_1_R&D		Page Blatt 2-
	Material No./Nr. 1 SWF:(-)	Material No./Nr. 2	Released Freigabe Frei	Mod./Ref-No. Aend.-Vorg.-Nr	Revision Revision	Location Standort	FFMCB	Itemnumber Sachnummer 110-3550.3	
HPD						SIEMENS			

printed by oprtcual, 02/14/12-08:37:32

Confiè a titre de secret d'enterprise. Tous droits reserves.
Comunicado como segredo empresarial. Reservados todos os direitos.
Confiado como secreto industrial. Todos los derechos reservados.

Als Betriebsgeheimnis anvertraut. Alle Rechte vorbehalten.
Proprietary data, company confidential. All rights reserved.

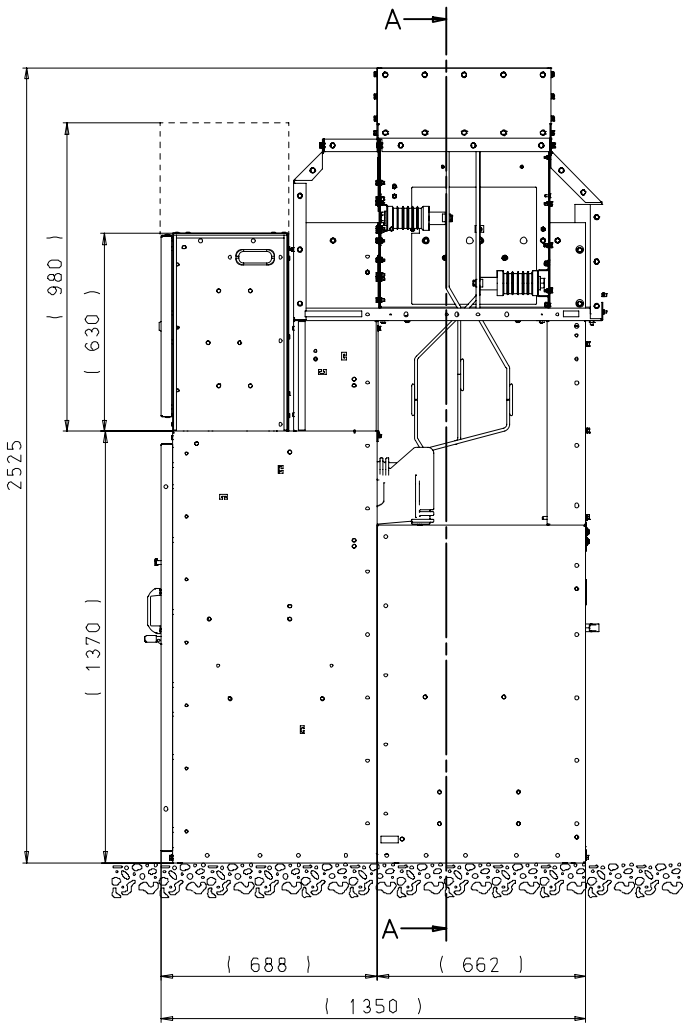

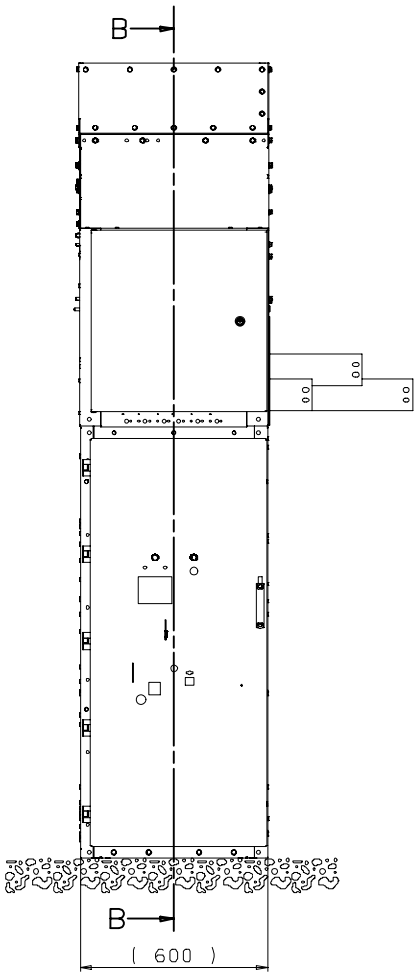

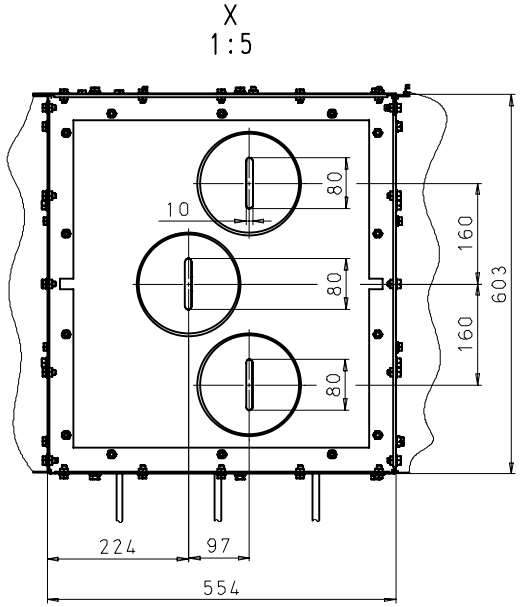

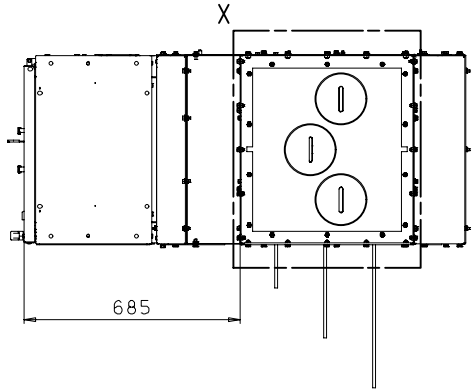

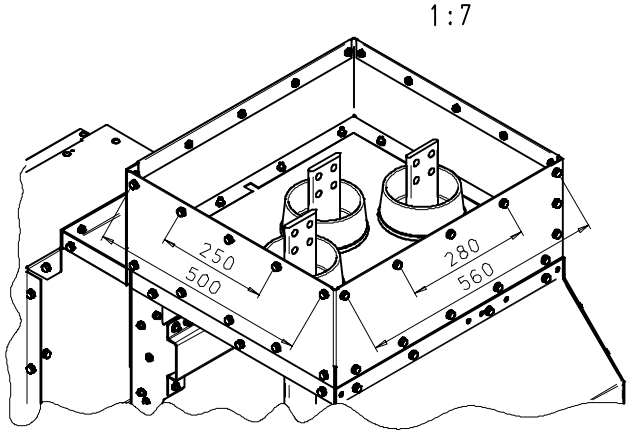

Tolerance Toleranz (ISO) - - -	Material;Werkstoff - -	Mass ; Masse - -	Papersize Format C/A2	18-04-2011	FRIED	Date Datum	22-02-2011	Designation Benennung	ISO-Projection
		Unit;Einheit mm	Scale Massstab 1:12	Date Datum	Name Name	Name Name	FRIEDRICH,S	Bar connection 12kV 600mm	
	Material No./Nr. 1 SWF:(-	Material No./Nr. 2	Released Freigabe Frei	11/0648	01	Department Abteilung	E_D_MV_1_R&D		Page Blatt 1+
						Location Standort	FFMCB		
				Mod./Ref-No. Aend.-Vorg.-Nr.	Revision Revision	SIEMENS		Itemnumber Sachnummer 110-2136.9	

HPD

printed by aprtcual, 05/17/11-15:35:28

Confiè a titre de secret d'enterprise. Tous droits reserves.
Comunicado como segredo empresarial. Reservados todos os direitos.
Confiado como secreto industrial. Todos los derechos reservados.

Als Betriebsgeheimnis anvertraut. Alle Rechte vorbehalten.
Proprietary data, company confidential. All rights reserved.

A-A

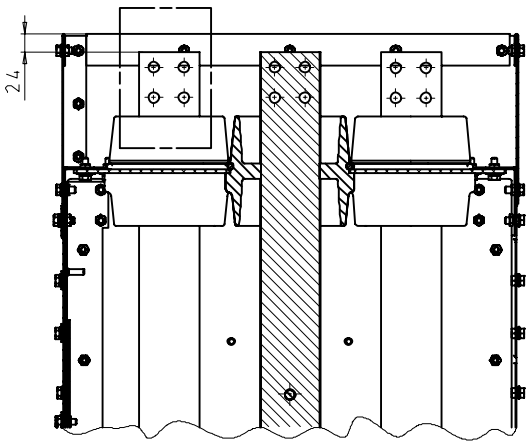

Y
1:2

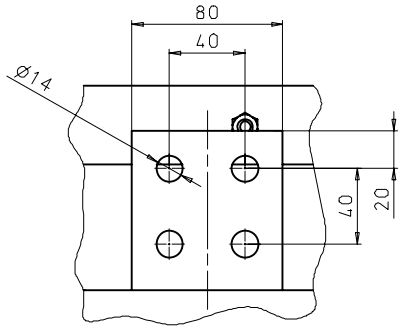

B-B

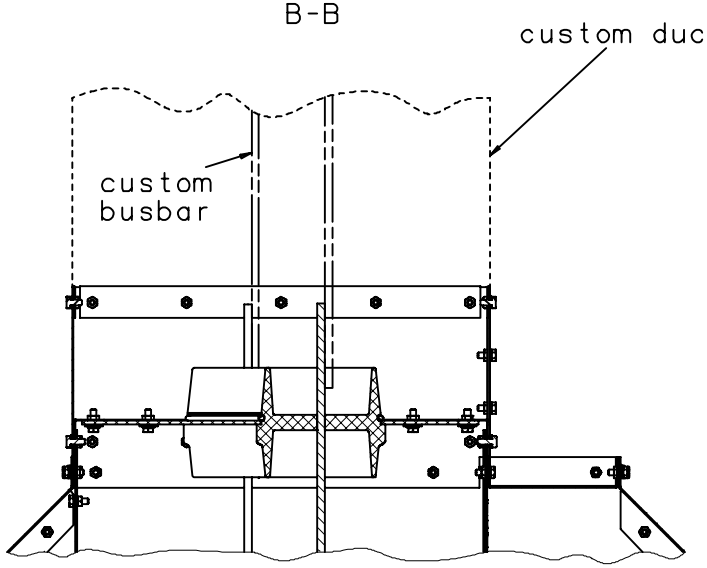

Tolerance Toleranz (ISO) - -	Material;Werkstoff - -	Mass ; Masse - -	Papersize Format C/A2	18-04-2011	FRIED	Date Datum	22-02-2011	Designation Benennung	ISO-Projection
		Unit;Einheit mm	Scale Massstab 1:5	Date Datum	Name Name	Name Name	FRIEDRICH,S	Bar connection 12kV 600mm	
	Material No./Nr. 1 SWF:(-	Material No./Nr. 2	Released Freigabe Frei	11/0648	01	Department Abteilung	E_D_MV_1_R&D		Page Blatt 2-
				Mod./Ref-No. Aend.-Varg.-Nr.	Revision Revision	Location Standort	FFMCB	Itemnumber Sachnummer 110-2136.9	

SIEMENS

HPD

printed by aprtcual, 05/17/11-15:34:43

Confiè a titre de secret d'enterprise. Tous droits reserves.
Comunicado como segredo empresarial. Reservados todos os direitos.
Confiado como secreto industrial. Todos los derechos reservados.

Als Betriebsgeheimnis anvertraut. Alle Rechte vorbehalten.
Proprietary data, company confidential. All rights reserved.

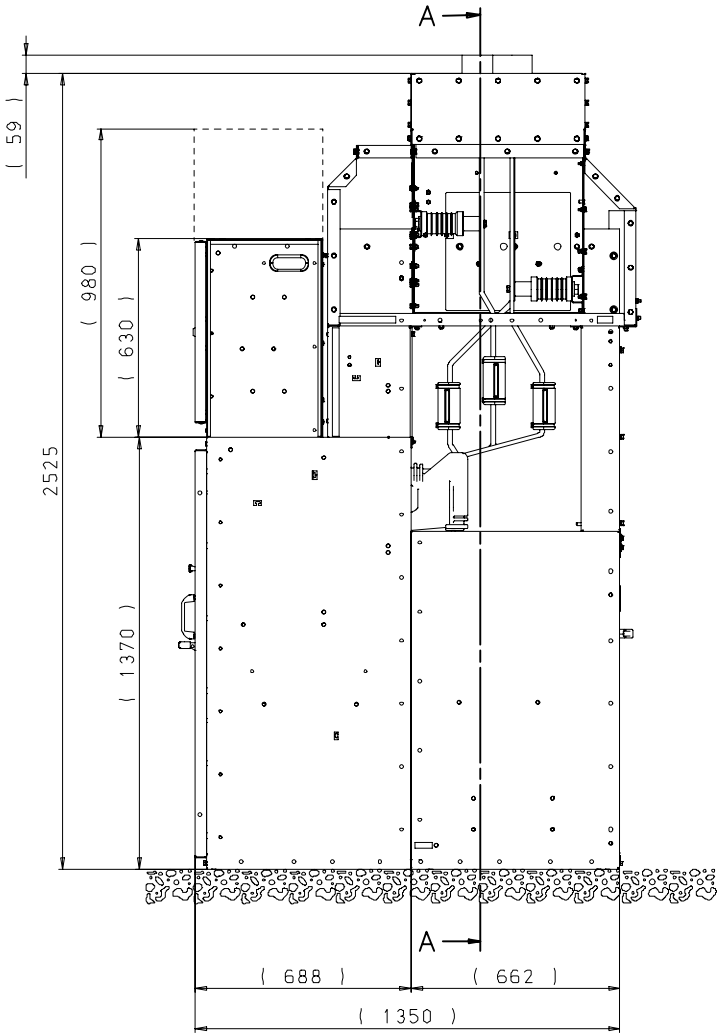

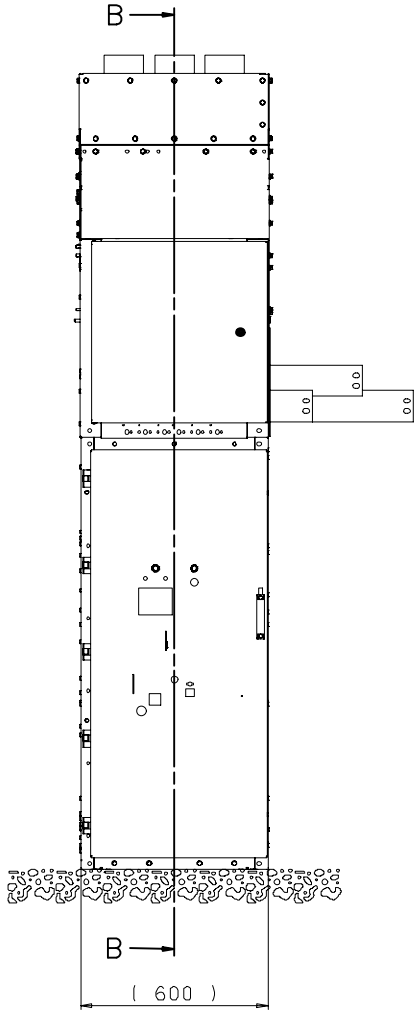

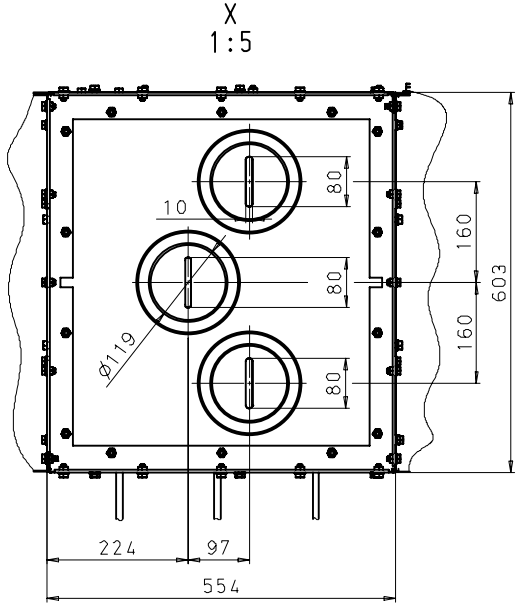

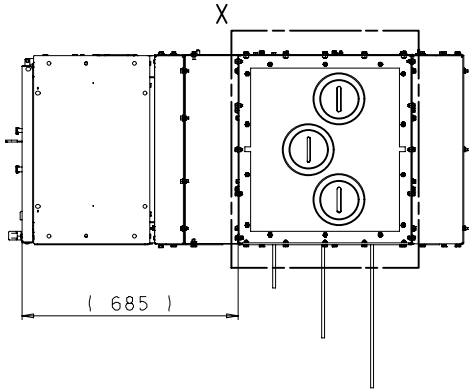

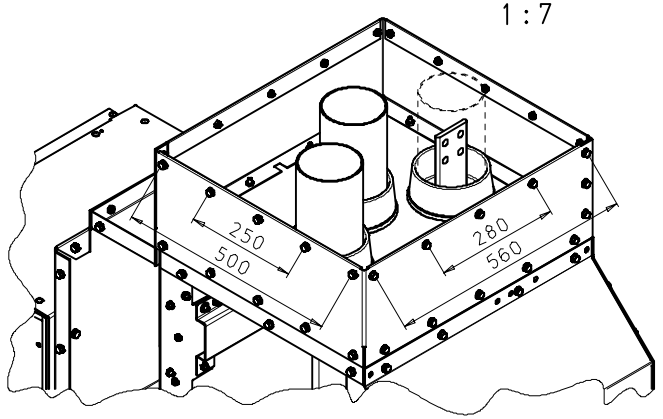

Tolerance (ISO)	Material;Werkstoff	Mass ; Masse	Papersize Format	22-02-2011	FRIED	Date Datum	22-02-2011
			C/A2			Name Name	FRIEDRICH,S
		Unit;Einheit mm	Scale Massstab 1:12	Date Datum	Name Name	Department Abteilung	E_D_MV_1_R&D
	Material No./Nr. 1 SWF:(-	Material No./Nr. 2	Released Freigabe Frei	11/0648	00	Location Standort	FFMCB
						Mod./Ref-No. Aend.-Vorg.-Nr.	Revision Revision

SIEMENS

Designation Benennung: Bar connection 17,5kV 600mm

Itemnumber Sachnummer: 110-2137.9

ISO-Projection

Page Blatt 1+

HPD

printed by aprtcual, 05/17/11-15:31:31

Confiè a titre de secret d'enterprise. Tous droits reserves.
Comunicado como segredo empresarial. Reservados todos os direitos.
Confiado como secreto industrial. Todos los derechos reservados.

Als Betriebsgeheimnis anvertraut. Alle Rechte vorbehalten.
Proprietary data, company confidential. All rights reserved.

A-A

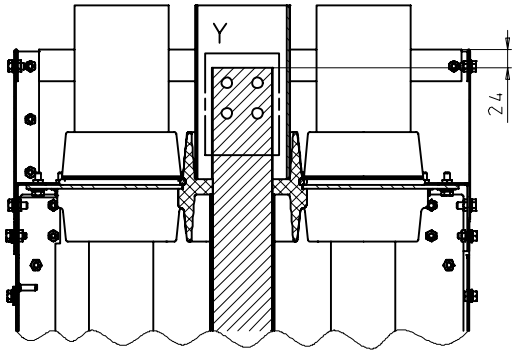

Y
1 : 2

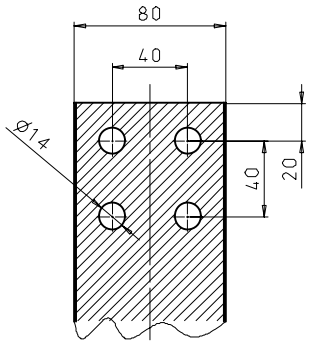

B-B

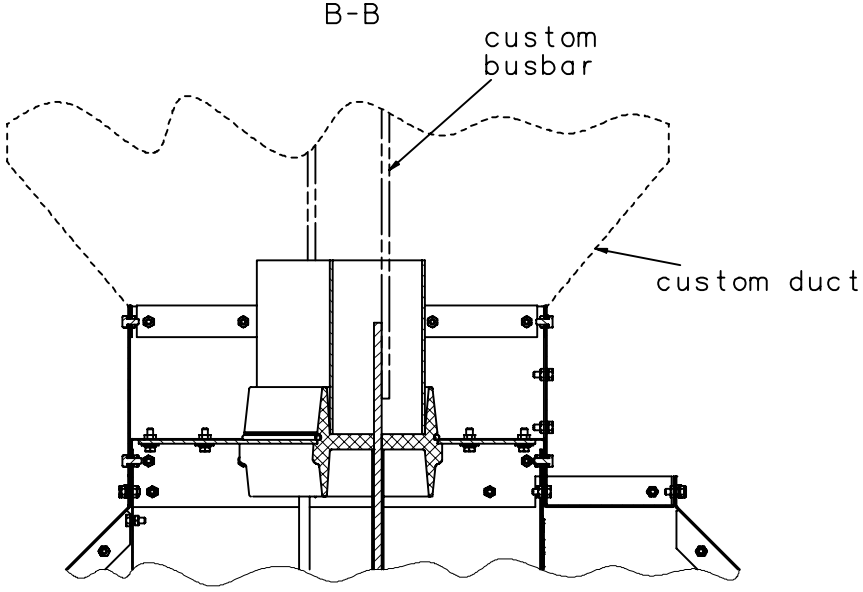

Tolerance Toleranz (ISO) - -	Material;Werkstoff - -	Mass ; Masse - -	Papersize Format C/A2	22-02-2011	FRIED	Date Datum	22-02-2011	Designation Benennung	ISO-Projection
		Unit;Einheit mm	Scale Massstab 1:5	Date Datum	Name Name	Name Name	FRIEDRICH,S	Bar connection 17,5kV 600mm	
	Material No./Nr. 1 SWF:(-	Material No./Nr. 2	Released Freigabe Frei	11/0648	00	Department Abteilung	E_D_MV_1_R&D		Page Blatt 2-
				Mod./Ref-No. Aend.-Varg.-Nr.	Revision Revision	Location Standort	FFMCB	Itemnumber Sachnummer 110-2137.9	

SIEMENS

HPD

printed by aprtcual, 05/17/11-15:33:58

Confiè a titre de secret d'enterprise. Tous droits reserves.
Comunicado como segredo empresarial. Reservados todos os direitos.
Confiado como secreto industrial. Todos los derechos reservados.

Als Betriebsgeheimnis anvertraut. Alle Rechte vorbehalten.
Proprietary data, company confidential. All rights reserved.

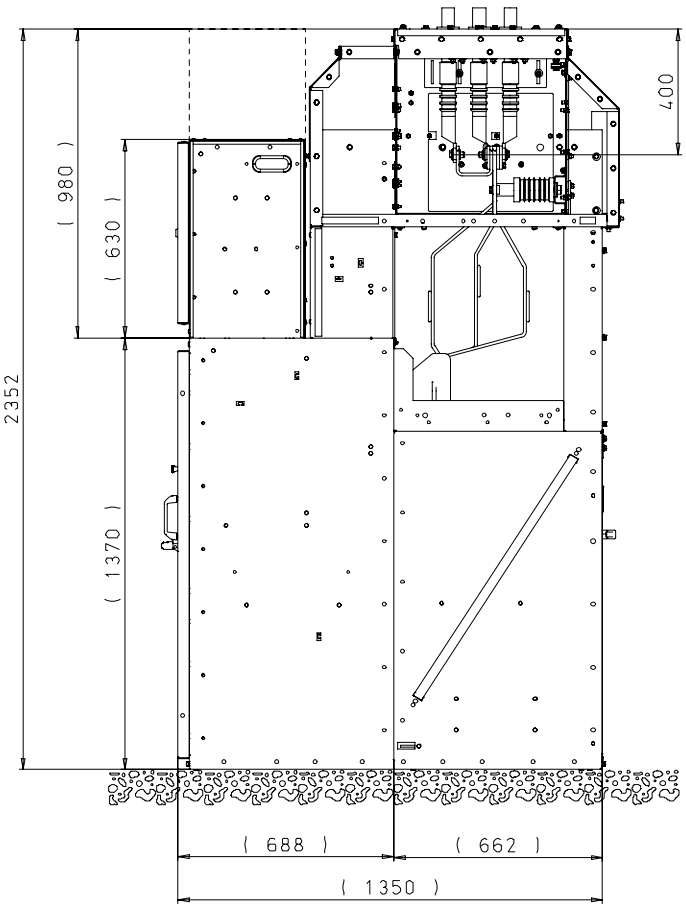

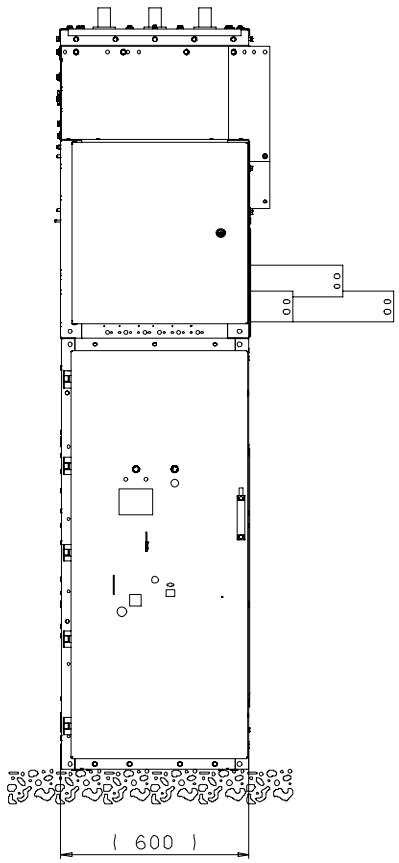

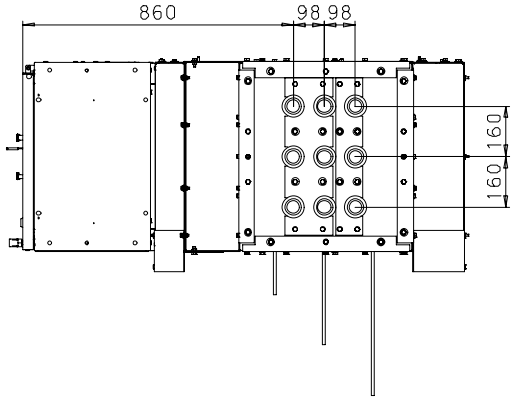

1:15

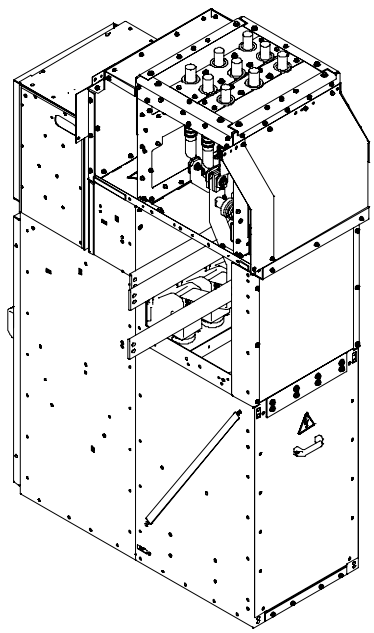

Tolerance Toleranz (ISO)	Material;Werkstoff	Mass ; Masse	Papersize Format	04-04-2011	FRIED	Date Datum	04-04-2011	Designation Benennung	ISO-Projection
-	-	-	C/A2	Date Datum	Name Name	Name Name	FRIEDRICH	Cable connection 12kV 600mm	
-	-	-	Scale Massstab			Department Abteilung	ED_MV_1_R&D		Page Blatt
		Unit;Einheit mm	1:12	11/0648	00	Location Standort	FFMCB		1-
	Material No./Nr. 1 SWF:(-	Material No./Nr. 2	Released Freigabe Frei	Mod./Ref-No. Aend.-Vorg.-Nr.	Revision Revision	SIEMENS		Itemnumber Sachnummer	110-2138.9

HPD

printed by aprtcual, 05/17/11-15:32:29

Confiè a titre de secret d'enterprise. Tous droits reserves.
Comunicado como segredo empresarial. Reservados todos os direitos.
Confiado como secreto industrial. Todos los derechos reservados.

Als Betriebsgeheimnis anvertraut. Alle Rechte vorbehalten.
Proprietary data, company confidential. All rights reserved.

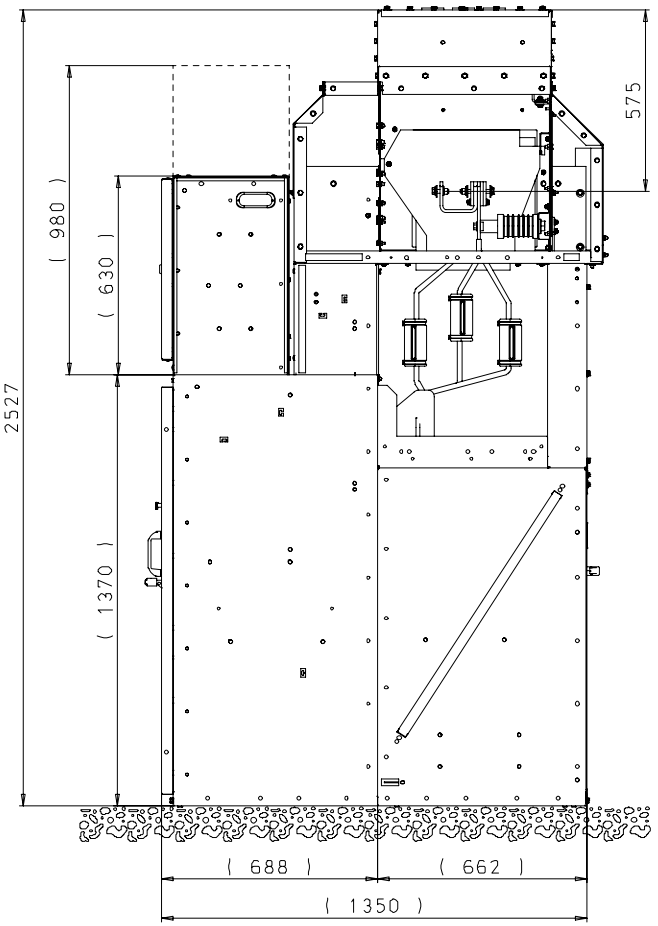

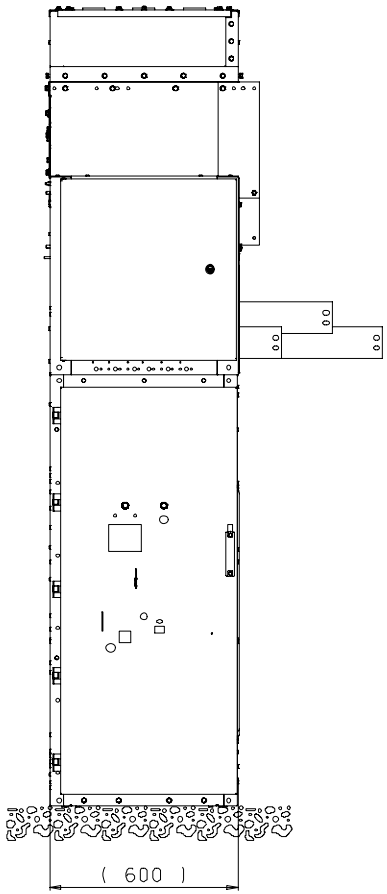

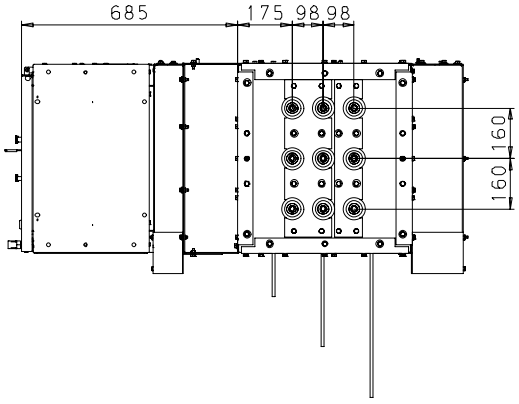

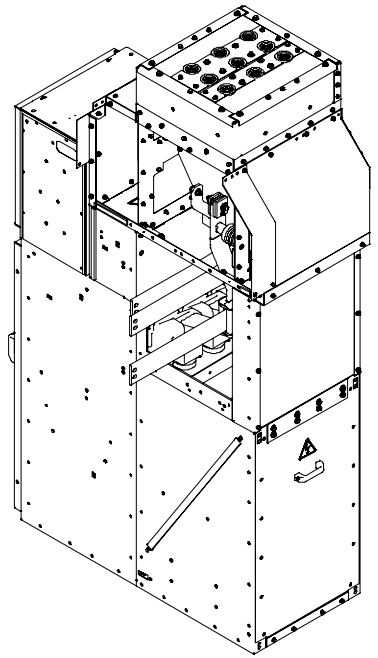

Tolerance Toleranz (ISO) - - -	Material;Werkstoff - -	Mass ; Masse - -	Papersize Format C/A2	04-04-2011	FRIED	Date Datum	04-04-2011	Designation Benennung	ISO-Projection
		Unit;Einheit mm	Scale Massstab 1:12	Date Datum	Name Name	Name Name	FRIEDRICH	Cable connection 17,5kV 600mm	
	Material No./Nr. 1 SWF:(-	Material No./Nr. 2	Released Freigabe Frei	11/0648	00	Department Abteilung	ED_MV_1_R&D		Page Blatt 1-
				Mod./Ref-No. Aend.-Vorg.-Nr.	Revision Revision	Location Standort	FFMCB	Itemnumber Sachnummer 110-2139.9	

SIEMENS

HPD

printed by aprtcual, 05/17/11-15:36:25

Confiè a titre de secret d'enterprise. Tous droits reserves.
Comunicado como segredo empresarial. Reservados todos os direitos.
Confiado como secreto industrial. Todos los derechos reservados.

Als Betriebsgeheimnis anvertraut. Alle Rechte vorbehalten.
Proprietary data, company confidential. All rights reserved.

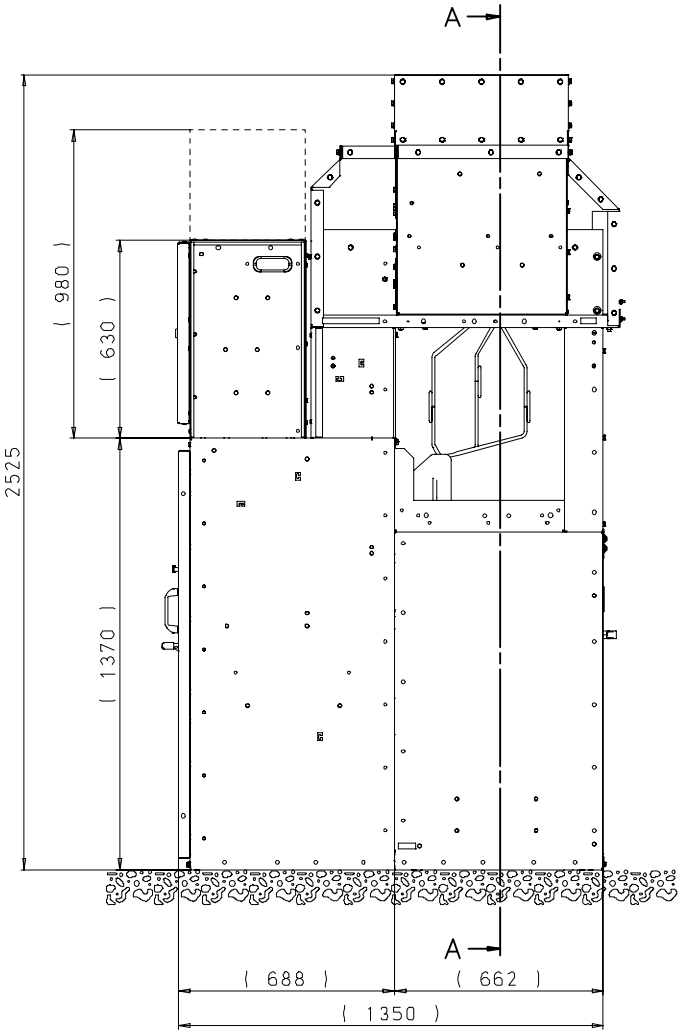

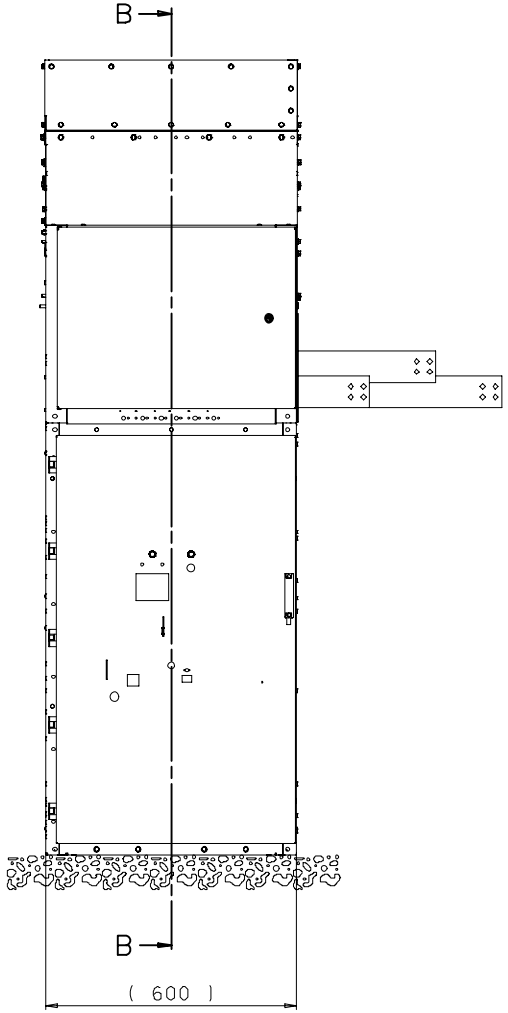

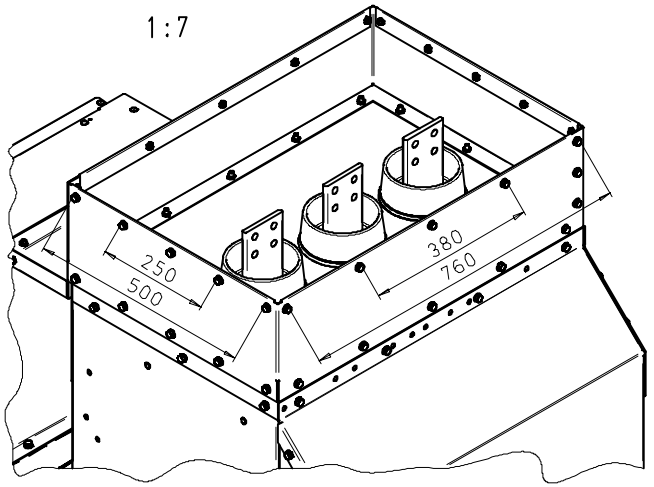

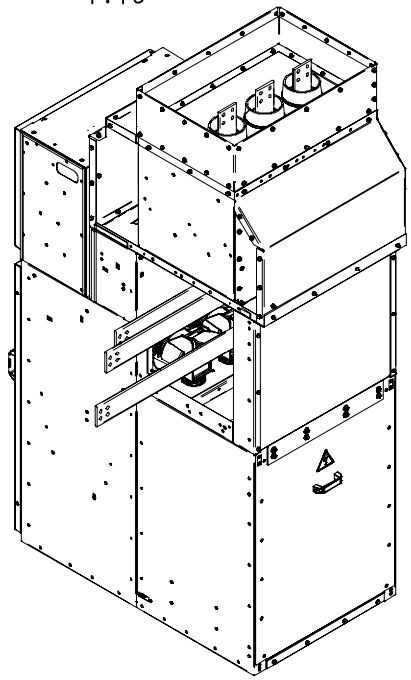

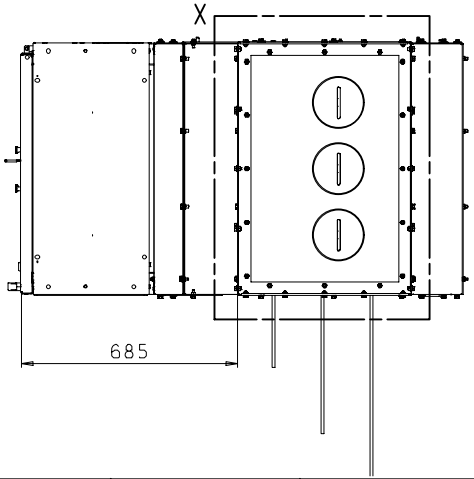

Tolerance Toleranz (ISO) DIN ISO 2768 medium -	Material;Werkstoff - -	Mass ; Masse - -	Papersize Format C/A2	08-06-2011	FRIED	Date Datum	08-06-2011	Designation Benennung	ISO-Projection
		Unit;Einheit mm	Scale Massstab 1:12	Date Datum	Name Name	Name	FRIEDRICH	Bar connection top box 800mm	
	Material No./Nr. 1 SWF:(-	Material No./Nr. 2	Released Freigabe Frei	11/2765	00	Department Abteilung	ED_MV_1_R&D		Page Blatt 1+
						Location Standort	FFMCB	Itemnumber Sachnummer 110-2201.9	
				Mod./Ref-No. Aend.-Verg.-Nr.	Revision Revision	SIEMENS			

HPD

printed by aprtcual, 06/22/11-08:36:21

Confiè a titre de secret d'enterprise. Tous droits reserves.
Comunicado como segredo empresarial. Reservados todos os direitos.
Confiado como secreto industrial. Todos los derechos reservados.

Als Betriebsgeheimnis anvertraut. Alle Rechte vorbehalten.
Proprietary data, company confidential. All rights reserved.

A-A

only for 17.5kV

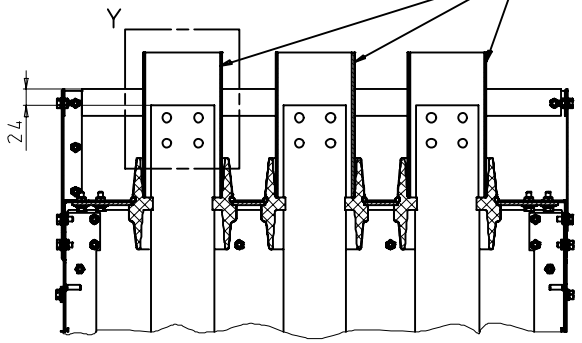

Y
1:3

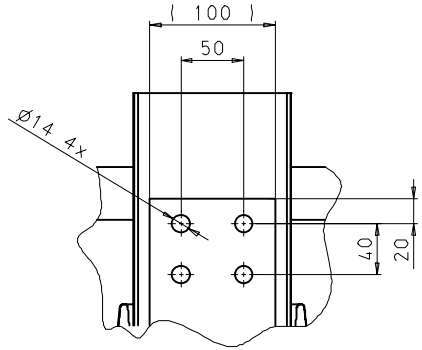

B-B

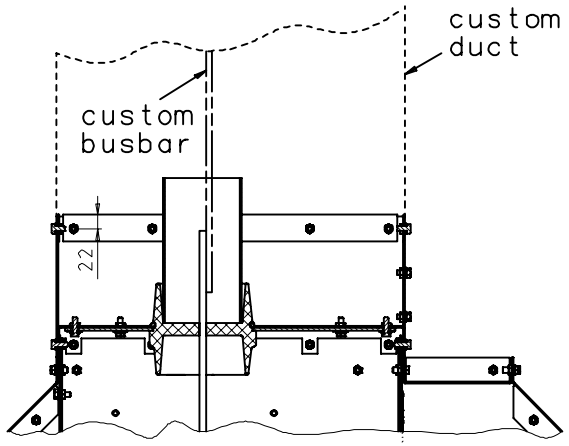

X

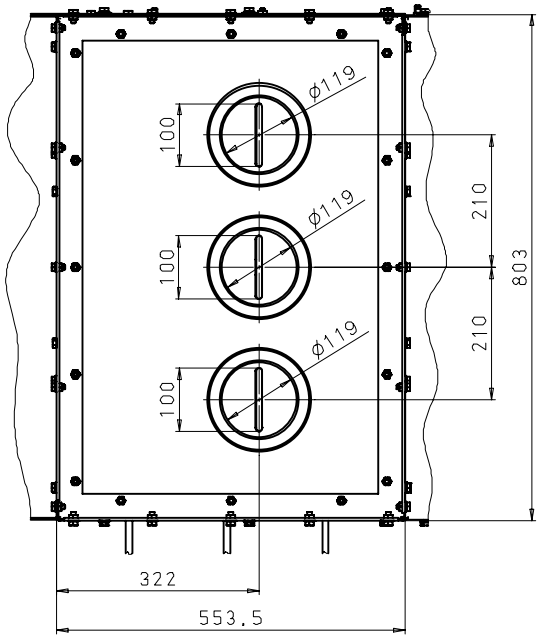

Bar connection 1250A 12kV/17,5kV

Tolerance Toleranz (ISO) DIN ISO 2768 medium -	Material;Werkstoff - -	Mass ; Masse - -	Papersize Format C/A2	08-06-2011	FRIED	Date Datum	08-06-2011	Designation Benennung	ISO-Projection
		Unit;Einheit mm	Scale Massstab 1:6	Date Datum	Name Name	Name	FRIEDRICH	Bar connection top box 800mm	
	Material No./Nr. 1 SWF:(-	Material No./Nr. 2	Released Freigabe Frei	11/2765	00	Department Abteilung	ED_MV_1_R&D		Page Blatt 2+
				Mod./Ref-No. Aend.-Vorg.-Nr.	Revision Revision	Location Standort	FFMCB	Itemnumber Sachnummer 110-2201.9	

SIEMENS

HPD

printed by aprtcual, 06/22/11-08:38:09

Confiè a titre de secret d'enterprise. Tous droits reserves.
Comunicado como segredo empresarial. Reservados todos os direitos.
Confiado como secreto industrial. Todos los derechos reservados.

Als Betriebsgeheimnis anvertraut. Alle Rechte vorbehalten.
Proprietary data, company confidential. All rights reserved.

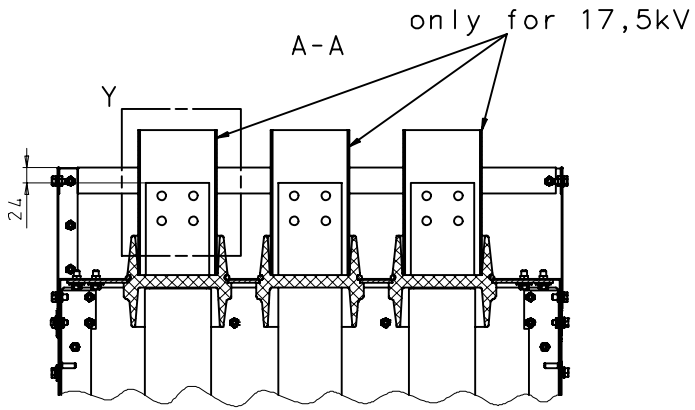

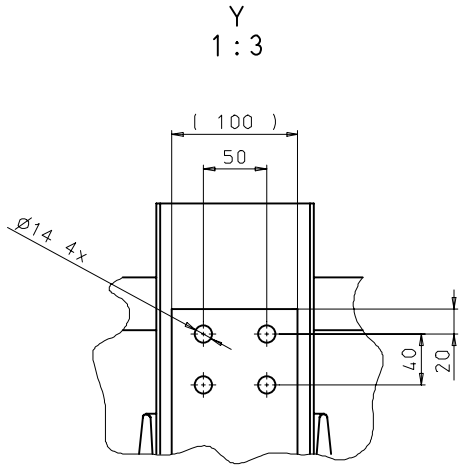

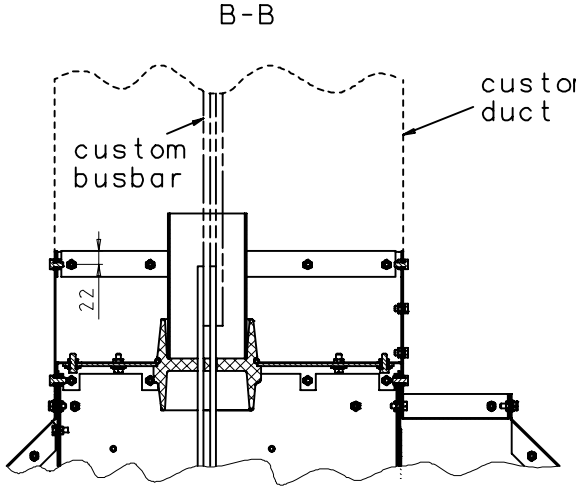

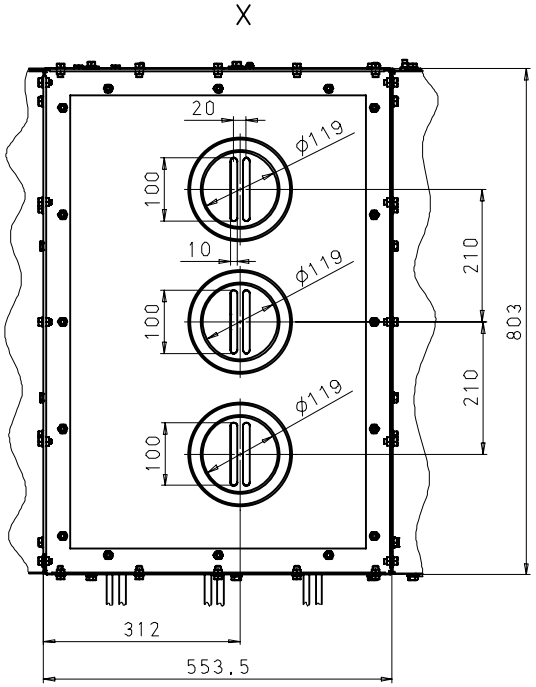

Bar connection 2500A 12kV/17,5kV

Tolerance Toleranz (ISO) DIN ISO 2768 medium -	Material;Werkstoff - -	Mass ; Masse - -	Papersize Format C/A2	08-06-2011	FRIED	Date Datum	08-06-2011	Designation Benennung	ISO-Projection
		Unit;Einheit mm	Scale Massstab 1:6	Date Datum	Name Name	Name	FRIEDRICH	Bar connection top box 800mm	
	Material No./Nr. 1 SWF:(-	Material No./Nr. 2	Released Freigabe Frei	11/2765	00	Department Abteilung	ED_MV_1_R&D		Page Blatt 3-
				Mod./Ref-No. Aend.-Vorg.-Nr.	Revision Revision	Location Standort	FFMCB	Itemnumber Sachnummer 110-2201.9	

SIEMENS

HPD

printed by aprtcual, 06/22/11-08:35:26

Confiè a titre de secret d'enterprise. Tous droits reserves.
Comunicado como segredo empresarial. Reservados todos os direitos.
Confiado como secreto industrial. Todos los derechos reservados.

Als Betriebsgeheimnis anvertraut. Alle Rechte vorbehalten.
Proprietary data, company confidential. All rights reserved.

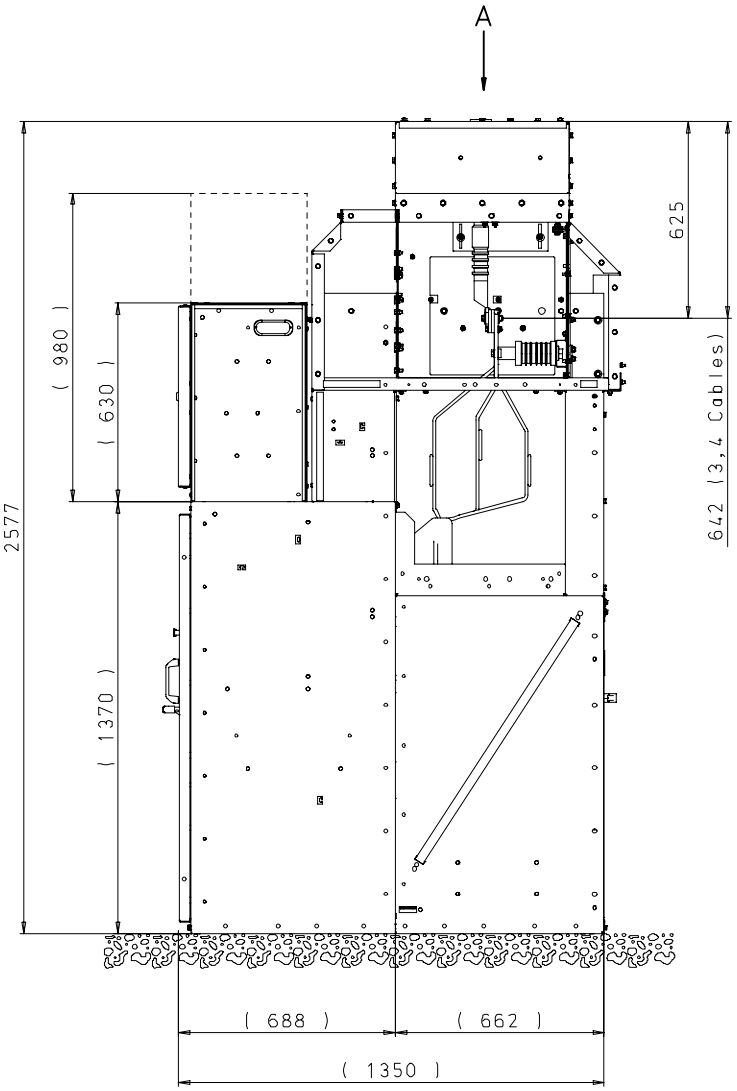

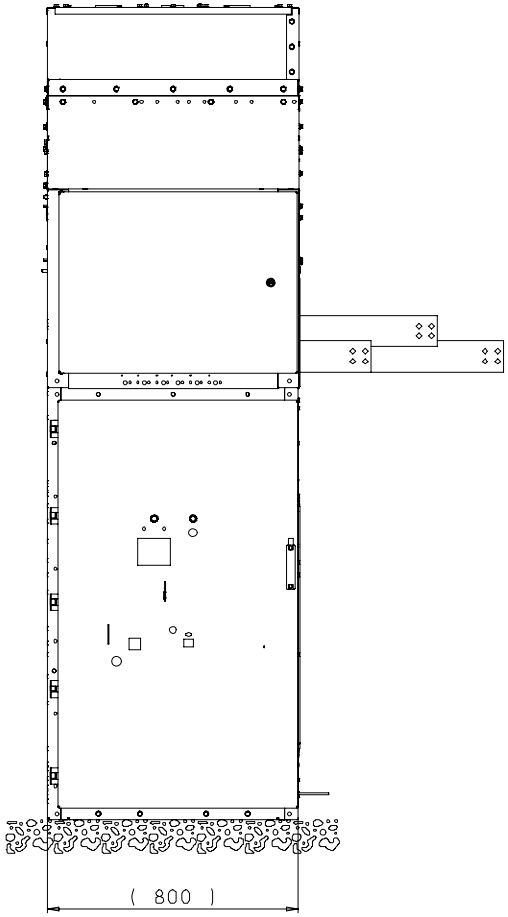

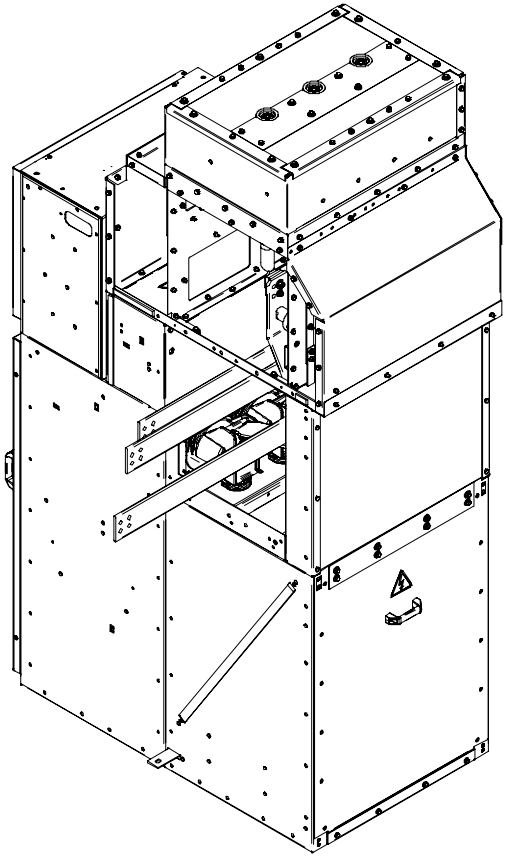

Tolerance Toleranz (ISO) DIN ISO 2768 medium -	Material;Werkstoff - -	Mass ; Masse - -	Papersize Format C/A2	16-06-2011	FRIED	Date Datum 16-06-2011	Designation Benennung Cable connection top box 800mm	ISO-Projection	
		Unit;Einheit mm	Scale Massstab 1:12	Date Datum	Name Name	Name FRIEDRICH			
	Material No./Nr. 1 SWF:(-	Material No./Nr. 2	Released Freigabe Frei	11/2766	00	Department Abteilung ED_MV_1_R&D		Page Blatt 1+	
				Mod./Ref-No. Aend.-Varg.-Nr.	Revision Revision	Location Standort FFMCB	Itemnumber Sachnummer 110-2202.9		

SIEMENS

HPD

printed by aprtcual, 09/08/11-14:38:42

Confiè a titre de secret d'enterprise. Tous droits reserves.
Comunicado como segredo empresarial. Reservados todos os direitos.
Confiado como secreto industrial. Todos los derechos reservados.

Als Betriebsgeheimnis anvertraut. Alle Rechte vorbehalten.
Proprietary data, company confidential. All rights reserved.

A

1 Cable/Phase
Feeder current 1250A
Bus bar current 1250A, 2500A
12kV, 17,5kV

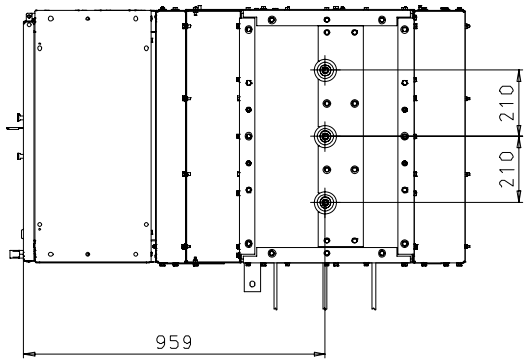

A

3 Cables/Phase
Feeder current 1250A
Bus bar current 1250A
12kV

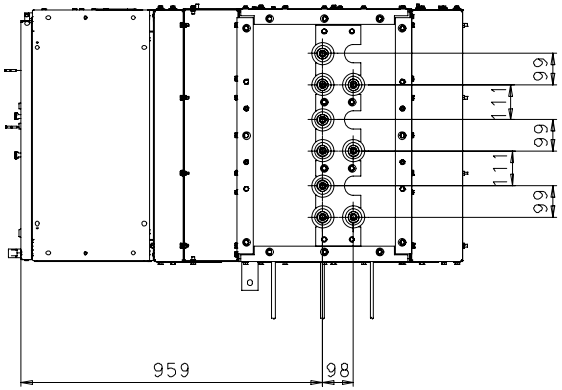

A

4 Cables/Phase
Feeder current 1250A
Bus bar current 1250A
12kV

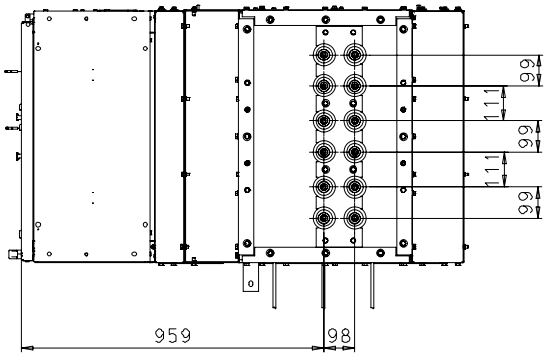

A

2 Cables/Phase
Feeder current 1250A
Bus bar current 1250A, 2500A
12kV, 17,5kV

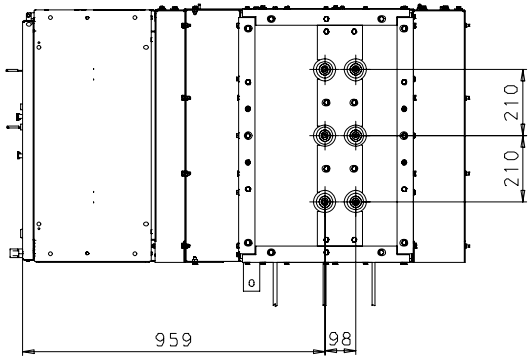

A

3 Cables/Phase
Feeder current 1250A
Bus bar current 1250A
17,5kV

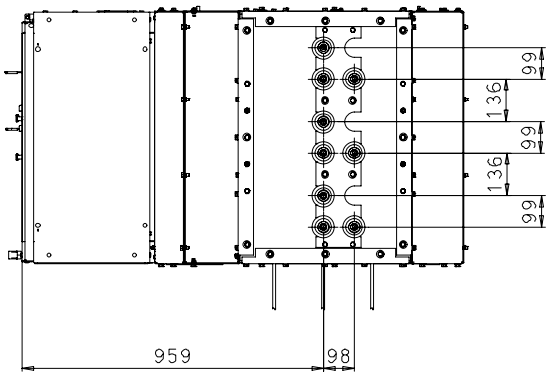

A

4 Cables/Phase
Feeder current 1250A
Bus bar current 1250A
17,5kV

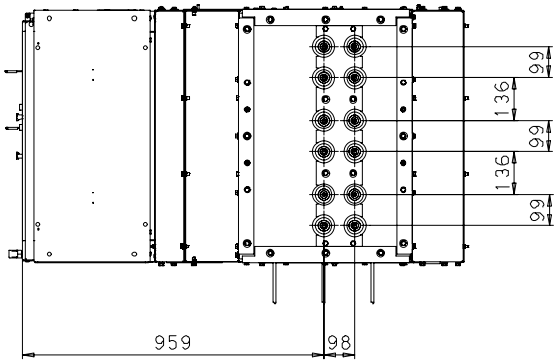

Tolerance Toleranz (ISO) DIN ISO 2768 medium	Material;Werkstoff - -	Mass ; Masse - -	Papersize Format C/A2	16-06-2011	FRIED	Date Datum 16-06-2011	Designation Benennung Cable connection top box 800mm	ISO-Projection	
		Unit;Einheit mm	Scale Massstab 1:12	Date Datum	Name Name	Name FRIEDRICH			
	Material No./Nr. 1 SWF:(-	Material No./Nr. 2	Released Freigabe Frei	11/2766	00	Department Abteilung ED_MV_1_R&D		Page Blatt 2+	
				Mod./Ref-No. Aend.-Varg.-Nr.	Revision Revision	Location Standort FFMCB	Itemnumber Sachnummer 110-2202.9		

SIEMENS

HPD

printed by aprtcual, 09/08/11-14:39:41

Confiè a titre de secret d'enterprise. Tous droits reserves.
Comunicado como segredo empresarial. Reservados todos os direitos.
Confiado como secreto industrial. Todos los derechos reservados.

Als Betriebsgeheimnis anvertraut. Alle Rechte vorbehalten.
Proprietary data, company confidential. All rights reserved.

A

3 Cables/Phase
Feeder current 1250A
Bus bar current 2500A
12kV

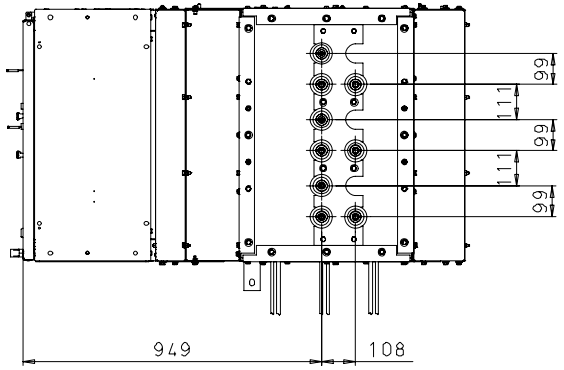

A

4 Cables/Phase
Feeder current 1250A
Bus bar current 2500A
12kV

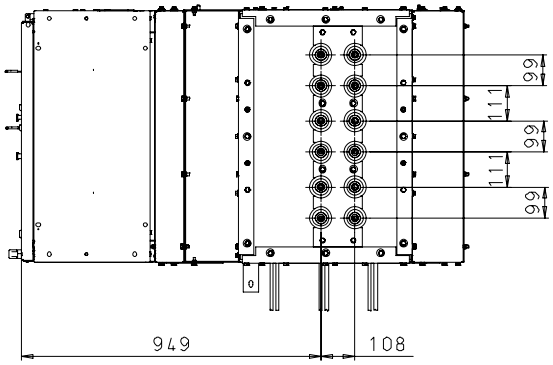

A

3 Cables/Phase
Feeder current 1250A
Bus bar current 2500A
17,5kV

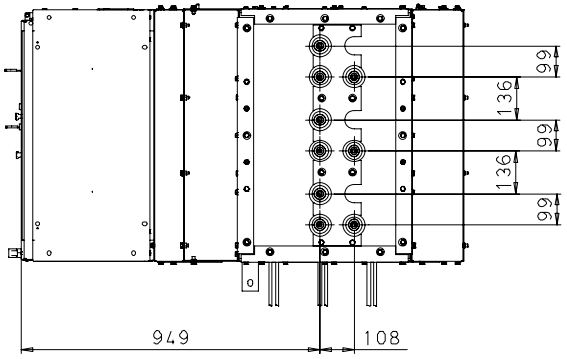

A

4 Cables/Phase
Feeder current 1250A
Bus bar current 2500A
17,5kV

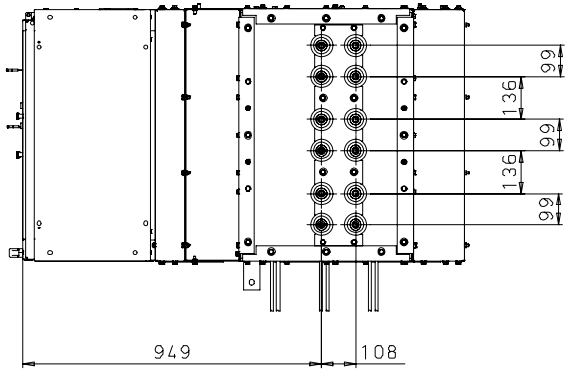

Tolerance Toleranz (ISO) DIN ISO 2768 medium -	Material;Werkstoff - -		Mass ; Masse - -	Papersize Format C/A2	16-06-2011	FRIED	Date Datum	16-06-2011	Designation Benennung	ISO-Projection
			Unit;Einheit mm	Scale Massstab 1:12	Date Datum	Name Name	Name	FRIEDRICH	Cable connection top box 800mm	
	Material No./Nr. 1 SWF:(-	Material No./Nr. 2		Released Freigabe Frei	11/2766	00	Department Abteilung	ED_MV_1_R&D		Page Blatt 3-
					Mod./Ref-No. Aend.-Varg.-Nr.	Revision Revision	Location Standort	FFMCB	Itemnumber Sachnummer 110-2202.9	

SIEMENS

HPD

printed by aprtcual, 09/08/11-14:48:38

Confié a titre de secret d'enterprise. Tous droits reserves.
Comunicado como segredo empresarial. Reservados todos os direitos.
Confiado como secreto industrial. Todos los derechos reservados.

Als Betriebsgeheimnis anvertraut. Alle Rechte vorbehalten.
Proprietary data, company confidential. All rights reserved.

TOP VIEW
Main Busbar System
Middle Panel

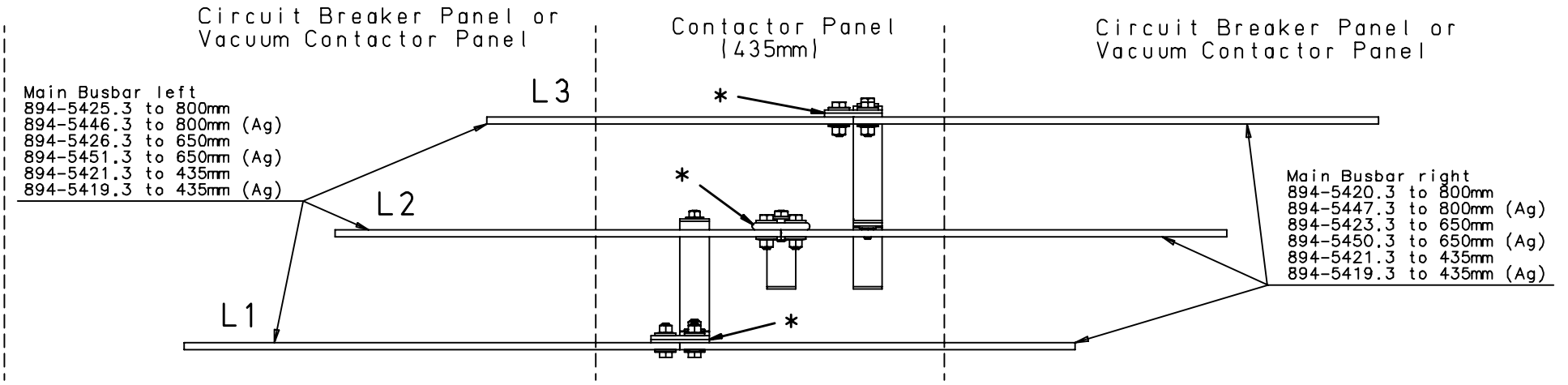

Mounting advice:

Before assemble the busbar together with feeder bars, brush and clean contact surfaces from copper bars, silver coated parts only clean contact surfaces (DO NOT BRUSH SILVER COATED PARTS) Then apply a thin film of Shell Vaseline 8422 DAB 8 grease.

Note : Hexagon Head Screws M12 have to be tightend with 70Nm according SN60084-3

Attention !

The fastening parts are from parts list 894-5311.3

(Ag) this assemblies with silver coated parts !

*** Adapter connections bars are from parts list 894-5465.3 For silver coated configuration you need 894-5471.3**

1 Hexagon screw M12x35 ISO 4017 (SAP 400251290)
+ Hexagon nut M12 ISO 4032 (SAP 4023210279)
+ 2 spring washer 13 DIN 6796 (SAP 4113510880)
2 Hexagon screw M12x40 ISO 4017 (SAP 400251291)
+ Hexagon nut M12 ISO 4032 (SAP 4023210279)
+ 2 spring washer 13 DIN 6796 (SAP 4113510880)
3 Hexagon screw M12x45 ISO 4017 (SAP 400251292)
+ Hexagon nut M12 ISO 4032 (SAP 4023210279)
+ 2 spring washer 13 DIN 6796 (SAP 4113510880)

Technical information of device:
1) Rated Voltage U=7.2kV
2) Rated Current I=1250A
3) Copper Busbar Size 1x80x10mm

Detail X
M 1:5

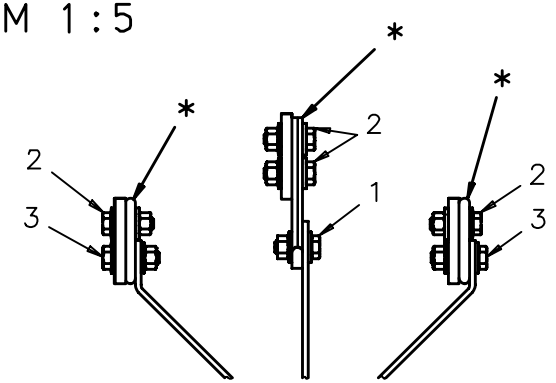

Side view
M 1:15

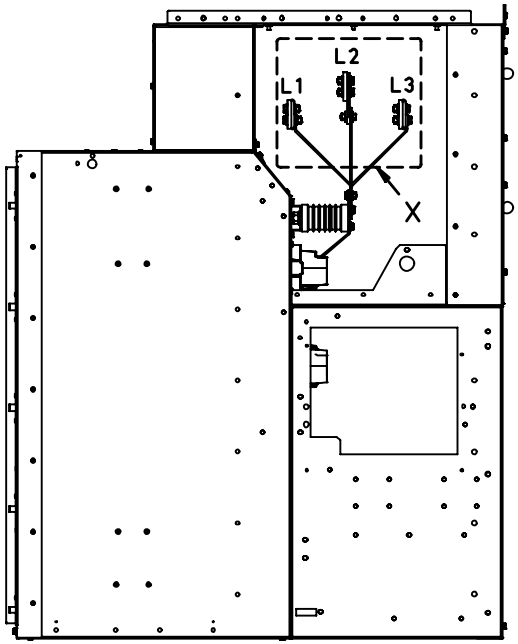

Tolerance Toleranz (ISO)	Material;Werkstoff	Mass ; Masse	Papersize Format	29-05-2009	HOFFS	Date Datum	24-09-2008
-	-	-	B/A3			Name Name	TRAJCESKI
--	-	-	Scale Massstab	Date Datum	Name Name	Department Abteilung	PTD_M1_R&D
		Unit;Einheit mm	1:6	09/2405	03	Location Standort	FFMCB
	Material No./Nr. 1 SWF:(-)	Material No./Nr. 2	Released Freigabe Frei	Mod./Ref-No. Aend.-Vorg.-Nr	Revision Revision	SIEMENS	Itemnumber Sachnummer 894-5437.9

Designation Benennung: Mounting Busbar VCP MP 1250A

ISO-Projection

Page Blatt 1-

HPD

printed by cf20adm, 06/17/09-09:42:33

Confié a titre de secret d'enterprise. Tous droits reserves.
Comunicado como segredo empresarial. Reservados todos os direitos.
Confiado como secreto industrial. Todos los derechos reservados.

Als Betriebsgeheimnis anvertraut. Alle Rechte vorbehalten.
Proprietary data, company confidential. All rights reserved.

TOP VIEW
Main Busbar System
Endpanel Right

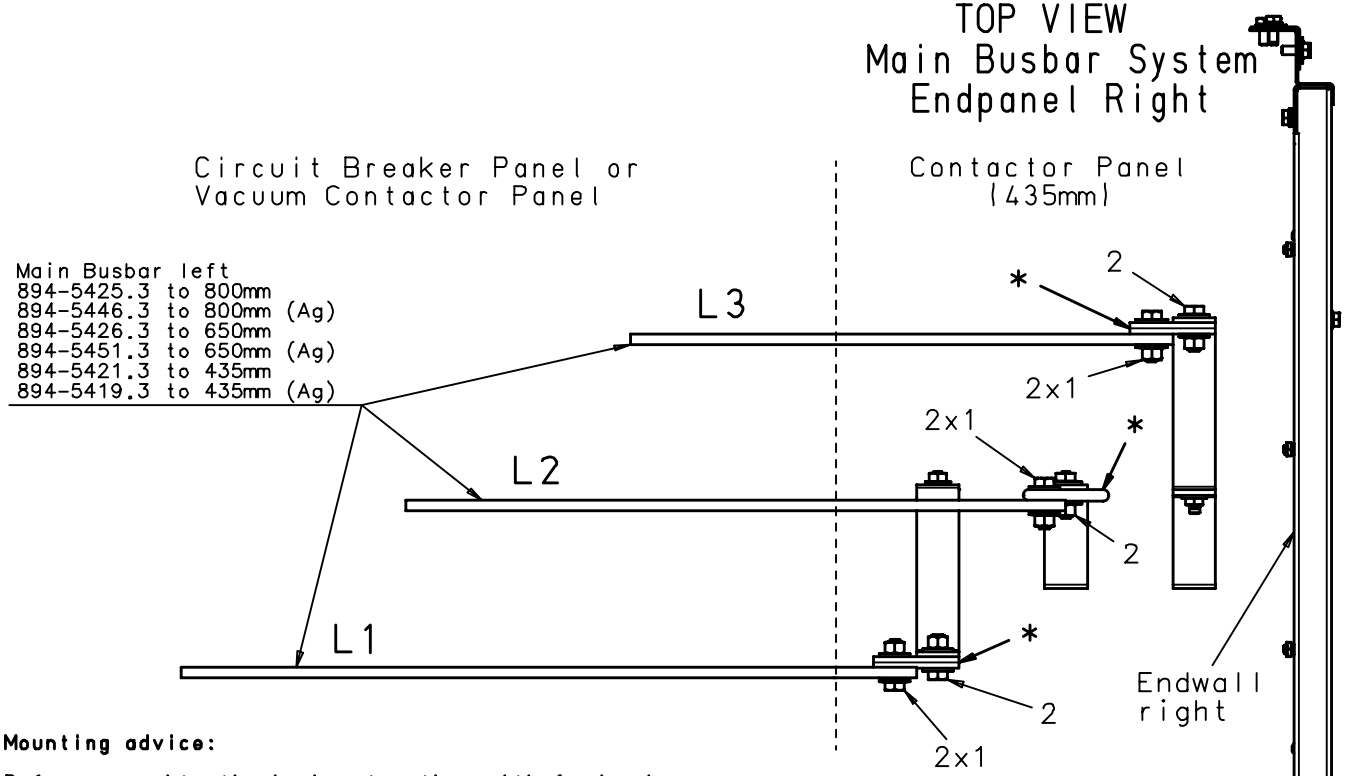

Technical information of device:
1) Rated Voltage U=7.2kV
2) Rated Current I=1250A
3) Copper Busbar Size 1x80x10mm

Side view
M 1:15

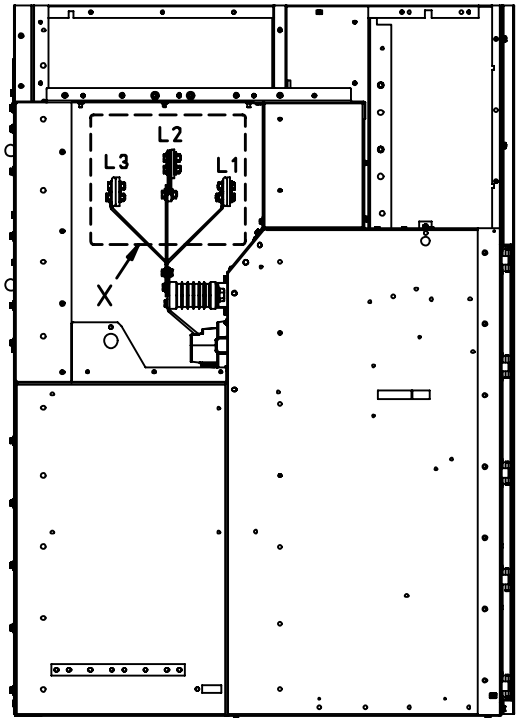

Mounting advice:

**Before assemble the busbar together with feeder bars,
brush and clean contact surfaces from copper bars,
silver coated parts only clean contact surfaces
(DO NOT BRUSH SILVER COATED PARTS)
Then apply a thin film of Shell Vaseline 8422 DAB 8 grease.**

**Note : Hexagon Head Screws M12 have to be tightend
with 70Nm according SN60084-3**

Attention !

The fastening parts are from parts list 894-5312.3

(Ag) this assemblies with silver coated parts !

*** Adapter connections bars are from parts list 894-5464.3
For silver coated configuration you need 894-5470.3**

1 Hexagon screw M12x40 ISO 4017 (SAP 400251291)
+ Hexagon nut M12 ISO 4032 (SAP 4023210279)
+ 2 spring washer 13 DIN 6796 (SAP 4113510880)
2 Hexagon screw M12x35 ISO 4017 (SAP 400251290)
+ Hexagon nut M12 ISO 4032 (SAP 4023210279)
+ 2 spring washer 13 DIN 6796 (SAP 4113510880)

Detail X
M 1:5

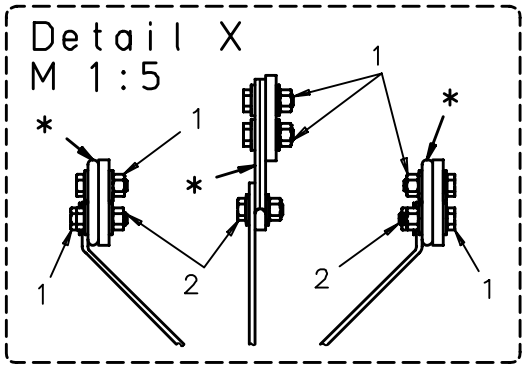

Tolerance Toleranz (ISO)	Material;Werkstoff	Mass ; Masse	Papersize Format	29-05-2009	HOFFS	Date Datum	24-09-2008	Designation Benennung	ISO-Projection
-	-	-	B/A3	Date Datum	Name Name	Name Name	TRAJCESKI	Mounting Busbar VCP EPR 1250A	
--	-	Unit;Einheit mm	Scale Massstab 1:5	09/2405	03	Department Abteilung	PTD_M1_R&D		Page Blatt 1-
	Material No./Nr. 1 SWF:(-)	Material No./Nr. 2	Released Freigabe Frei	Mod./Ref-No. Aend.-Vorg.-Nr.	Revision Revision	Location Standort	FFMCB	Itemnumber Sachnummer 894-5438.9	

SIEMENS

HPD

printed by cf20adm, 06/17/09-09:42:15

Confié à titre de secret d'enterprise. Tous droits reserves.
Comunicado como segredo empresarial. Reservados todos os direitos.
Confiado como secreto industrial. Todos los derechos reservados.

Als Betriebsgeheimnis anvertraut. Alle Rechte vorbehalten.
Proprietary data, company confidential. All rights reserved.

TOP VIEW
Main Busbar System
Endpanel Left

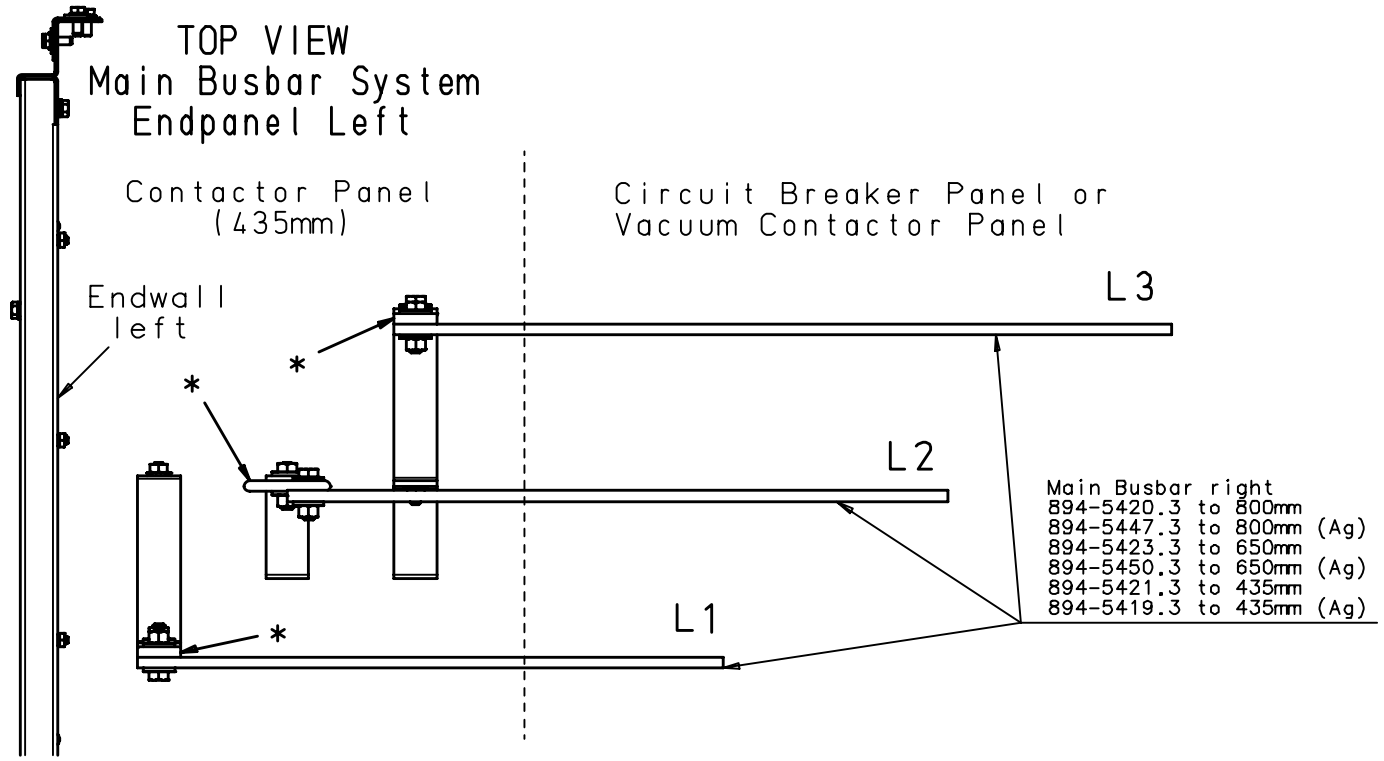

Main Busbar right
894-5420.3 to 800mm
894-5447.3 to 800mm (Ag)
894-5423.3 to 650mm
894-5450.3 to 650mm (Ag)
894-5421.3 to 435mm
894-5419.3 to 435mm (Ag)

Technical information of device:
1) Rated Voltage U=7.2kV
2) Rated Current I=1250A
3) Copper Busbar Size 1x80x10mm

Side view
M 1:15

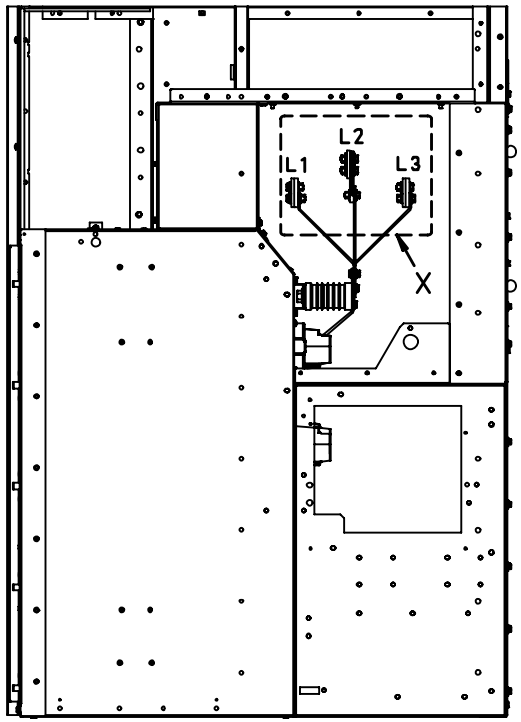

Mounting advice:

**Before assemble the busbar together with feeder bars,
brush and clean contact surfaces from copper bars,
silver coated parts only clean contact surfaces
(DO NOT BRUSH SILVER COATED PARTS)
Then apply a thin film of Shell Vaseline 8422 DAB 8 grease.**

**Note : Hexagon Head Screws M12 have to be tightend
with 70Nm according SN60084-3**

Attention !

The fastening parts are from parts list 894-5310.3

(Ag) this assemblies with silver coated parts !

*** Adapter connections bars are from parts list 894-5463.3
For silver coated configuration you need 894-5469.3**

1 Hexagon screw M12x40 ISO 4017 (SAP 400251291)
+ Hexagon nut M12 ISO 4032 (SAP 4023210279)
+ 2 spring washer 13 DIN 6796 (SAP 4113510880)
2 Hexagon screw M12x45 ISO 4017 (SAP 400251292)
+ Hexagon nut M12 ISO 4032 (SAP 4023210279)
+ 2 spring washer 13 DIN 6796 (SAP 4113510880)
3 Hexagon screw M12x35 ISO 4017 (SAP 400251290)
+ Hexagon nut M12 ISO 4032 (SAP 4023210279)
+ 2 spring washer 13 DIN 6796 (SAP 4113510880)

Detail X
M 1:5

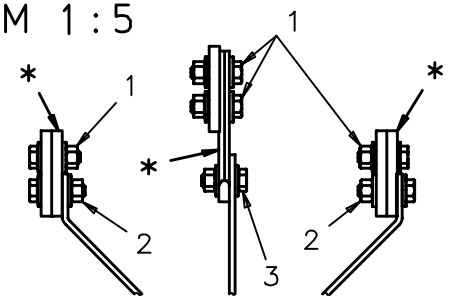

Tolerance Toleranz (ISO)	Material;Werkstoff	Mass ; Masse	Papersize Format	29-05-2009	HOFFS	Date Datum	24-09-2008	Designation Benennung	ISO-Projection
-	-	-	B/A3			Name Name	TRAJCESKI	Mounting Busbar VCP EPL 1250A	
--	-	Unit;Einheit	Scale Massstab	Date Datum	Name Name	Department Abteilung	PTD_M1_R&D		
		mm	1:5	09/2405	03	Location Standort	FFMCB		Page Blatt
	Material No./Nr. 1	Material No./Nr. 2	Released Freigabe			SIEMENS		Itemnumber Sachnummer	
	SWF:(-)		Frei	Mod./Ref-No. Aend.-Vorg.-Nr.	Revision Revision			894-5439.9	1-

HPD

printed by cf20adm, 06/17/09-09:41:57

Confié a titre de secret d'enterprise. Tous droits reserves.
Comunicado como segredo empresarial. Reservados todos os direitos.
Confiado como secreto industrial. Todos los derechos reservados.

Als Betriebsgeheimnis anvertraut. Alle Rechte vorbehalten.
Proprietary data, company confidential. All rights reserved.

Top View Middle Panel

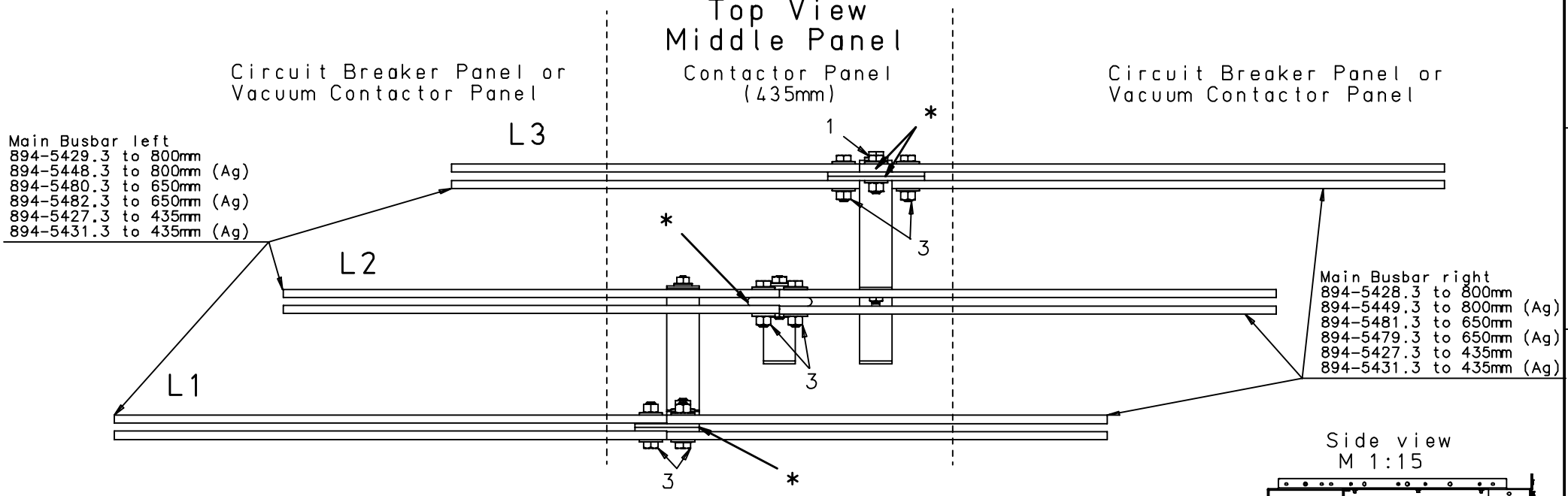

Mounting advice:

Before assemble the busbar together with feeder bars, brush and clean contact surfaces from copper bars. silver coated parts only clean contact surfaces (DO NOT BRUSH SILVER COATED PARTS) Then apply a thin film of Shell Vaseline 8422 DAB 8 grease.

Note : Hexagon Head Screws M12 have to be tightend with 70Nm according SN60084-3

Attention !

The fastening parts are from parts list 894-5315.3

(Ag) this assemblies with silver coated parts !

*** Adapter connections bars are from parts list 894-5468.3 For silver coated configuration you need 894-5474.3**

1 Hexagon screw M12x40 ISO 4017 (SAP 400251291)
+ Hexagon nut M12 ISO 4032 (SAP 4023210279)
+ 2 spring washer 13 DIN 6796 (SAP 4113510880)
2 Hexagon screw M12x45 ISO 4017 (SAP 400251292)
+ Hexagon nut M12 ISO 4032 (SAP 4023210279)
+ 2 spring washer 13 DIN 6796 (SAP 4113510880)
3 Hexagon screw M12x50 ISO 4017 (SAP 400251293)
+ Hexagon nut M12 ISO 4032 (SAP 4023210279)
+ 2 spring washer 13 DIN 6796 (SAP 4113510880)
4 Hexagon screw M12x55 ISO 4017 (SAP 400251294)
+ Hexagon nut M12 ISO 4032 (SAP 4023210279)
+ 2 spring washer 13 DIN 6796 (SAP 4113510880)

Technical information of device:
1) Rated Voltage U=7.2kV
2) Rated Current I=2500A
3) Copper Busbar Size 2x100mmx10mm

Detail X
M 1:5

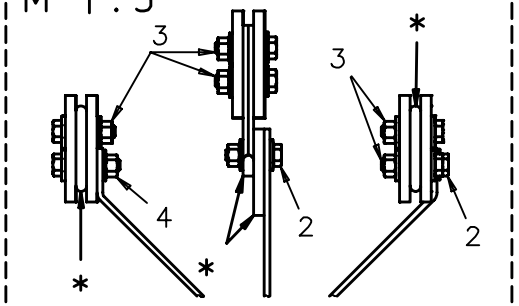

Side view
M 1:15

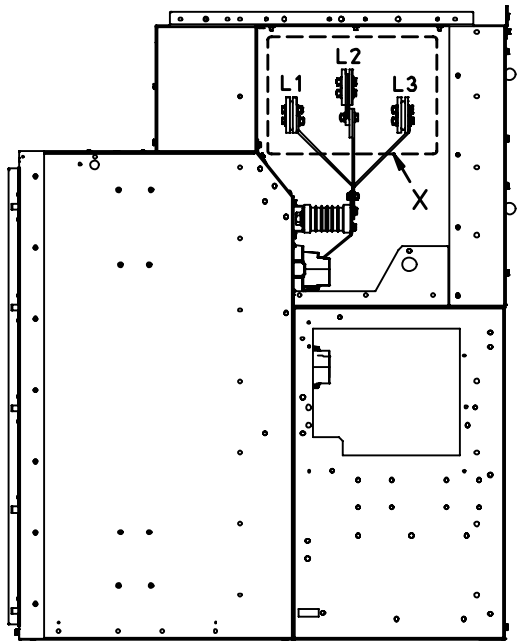

Tolerance Toleranz (ISO)	Material;Werkstoff	Mass ; Masse	Papersize Format	29-05-2009	HOFFS	Date Datum	25-09-2008
-	-	-	B/A3			Name Name	TRAJCESKI
--	-	-	Scale Massstab	Date Datum	Name Name	Department Abteilung	PTD_M1_R&D
		Unit;Einheit mm	1:5	09/2405	03	Location Standort	FFMCB
	Material No./Nr. 1 SWF:(-)	Material No./Nr. 2	Released Freigabe Frei	Mod./Ref-No. Aend.-Vorg.-Nr.	Revision Revision	SIEMENS	Itemnumber Sachnummer 894-5440.9

Designation Benennung: Mounting Busbar VCP MP 2500A

ISO-Projection

Page Blatt 1-

HPD

printed by cf20adm, 06/17/09-09:41:39

Confié a titre de secret d'enterprise. Tous droits reserves.
Comunicado como segredo empresarial. Reservados todos os direitos.
Confiado como secreto industrial. Todos los derechos reservados.

Als Betriebsgeheimnis anvertraut. Alle Rechte vorbehalten.
Proprietary data, company confidential. All rights reserved.

Top View Endpanel Right

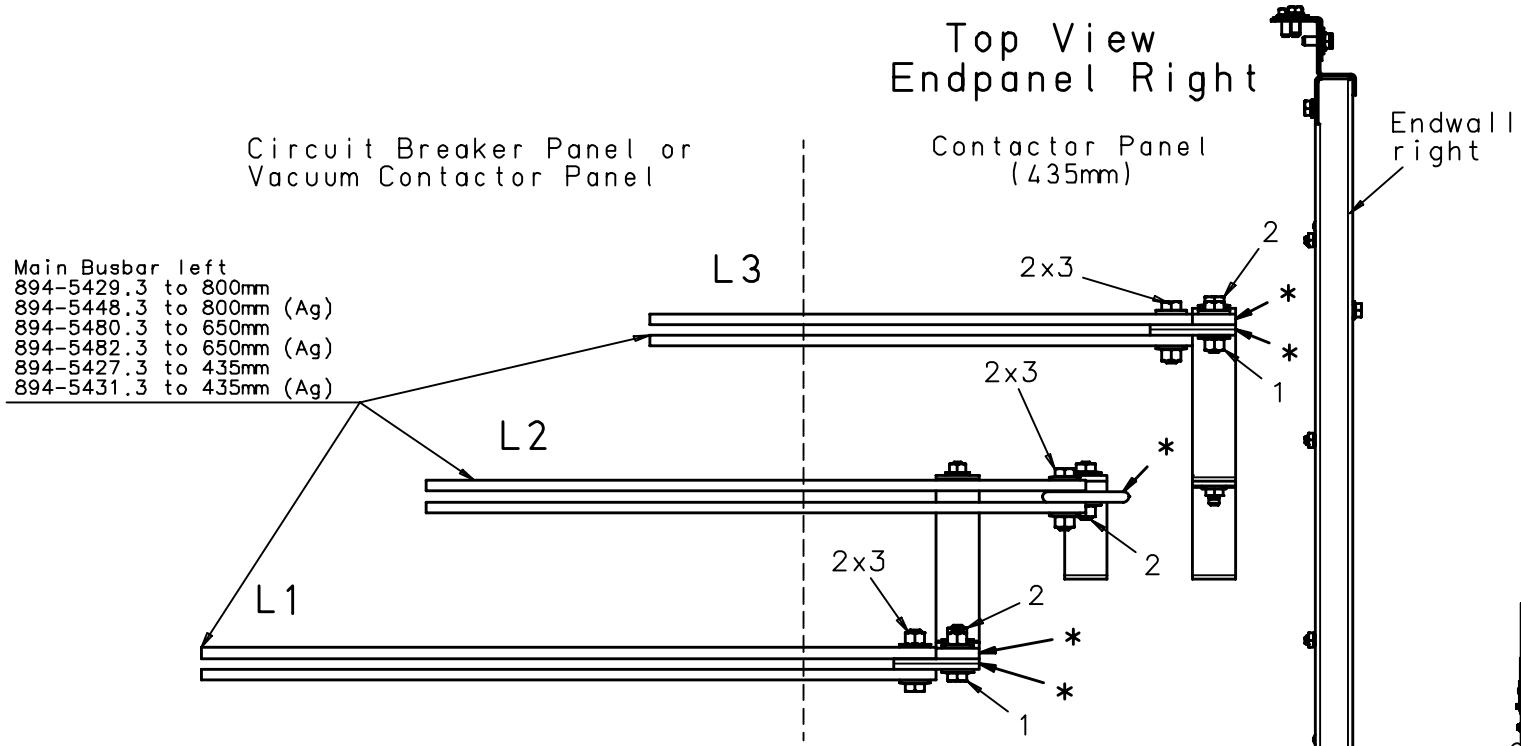

Mounting advice:

Before assemble the busbar together with feeder bars, brush and clean contact surfaces from copper bars. silver coated parts only clean contact surfaces (DO NOT BRUSH SILVER COATED PARTS) Then apply a thin film of Shell Vaseline 8422 DAB 8 grease.

Note : Hexagon Head Screws M12 have to be tightend with 70Nm according SN60084-3

Attention !

The fastening parts are from parts list 894-5313.3

(Ag) this assemblies with silver coated parts !

*** Adapter connections bars are from parts list 894-5467.3 For silver coated configuration you need 894-5473.3**

1 Hexagon screw M12x40 ISO 4017 (SAP 400251291)
+ Hexagon nut M12 ISO 4032 (SAP 4023210279)
+ 2 spring washer 13 DIN 6796 (SAP 4113510880)
2 Hexagon screw M12x45 ISO 4017 (SAP 400251292)
+ Hexagon nut M12 ISO 4032 (SAP 4023210279)
+ 2 spring washer 13 DIN 6796 (SAP 4113510880)
3 Hexagon screw M12x50 ISO 4017 (SAP 400251293)
+ Hexagon nut M12 ISO 4032 (SAP 4023210279)
+ 2 spring washer 13 DIN 6796 (SAP 4113510880)

Technical information of device:
1) Rated Voltage U=7.2kV
2) Rated Current I=2500A
3) Copper Busbar Size 2x100x10mm

Detail X
M 1:5

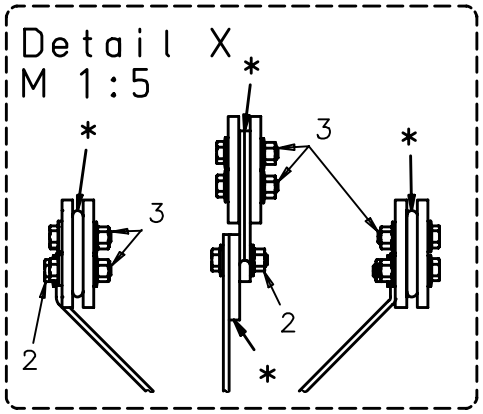

Side view
M 1:15

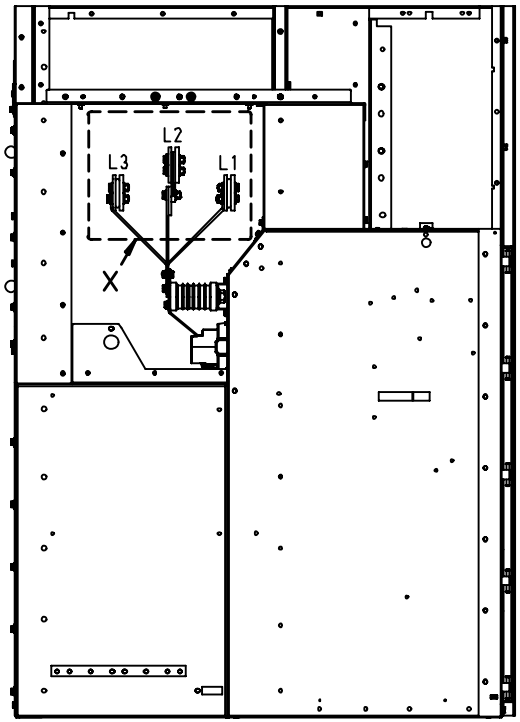

Tolerance Toleranz (ISO)	Material;Werkstoff	Mass ; Masse	Papersize Format	29-05-2009	HOFFS	Date Datum	25-09-2008
-	-	-	B/A3			Name Name	TRAJCESKI
--	-	Unit;Einheit	Scale Massstab	Date Datum	Name Name	Department Abteilung	PTD_M1_R&D
		mm	1:5	09/2405	03	Location Standort	FFMCB
	Material No./Nr. 1 SWF:(-)	Material No./Nr. 2	Released Freigabe Frei	Mod./Ref-No. Aend.-Vorg.-Nr	Revision Revision	SIEMENS	Itemnumber Sachnummer 894-5441.9

Designation Benennung: Mounting Busbar VCP EPR 2500A

ISO-Projection

Page Blatt 1-

HPD

printed by cf2@adm, 06/17/09-09:41:22

Confié a titre de secret d'enterprise. Tous droits reserves.
Comunicado como segredo empresarial. Reservados todos os direitos.
Confiado como secreto industrial. Todos los derechos reservados.

Als Betriebsgeheimnis anvertraut. Alle Rechte vorbehalten.
Proprietary data, company confidential. All rights reserved.

TOP VIEW
Endpanel Left

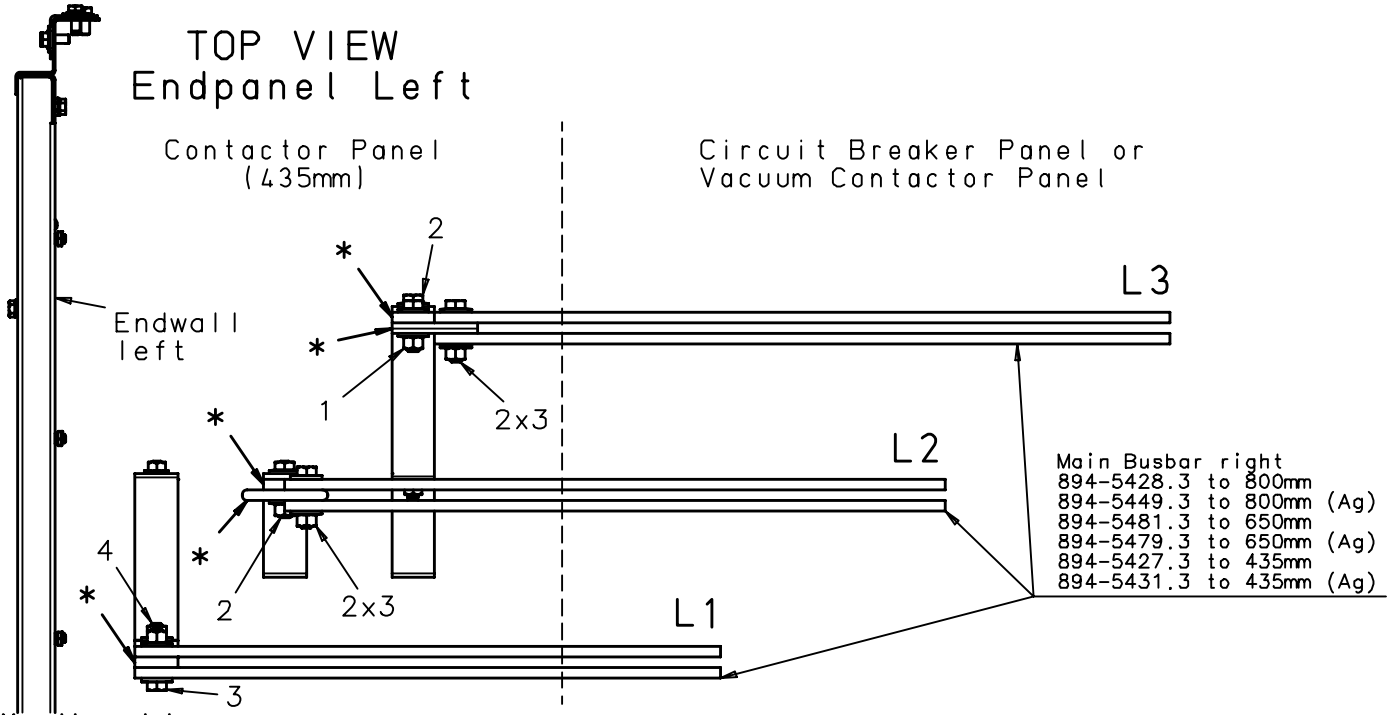

Mounting advice:

Before assemble the busbar together with feeder bars, brush and clean contact surfaces from copper bars. silver coated parts only clean contact surfaces (DO NOT BRUSH SILVER COATED PARTS) Then apply a thin film of Shell Vaseline 8422 DAB 8 grease.

Note : Hexagon Head Screws M12 have to be tightend with 70Nm according SN60084-3

Attention !

The fastening parts are from parts list 894-5314.3

(Ag) this assemblies with silver coated parts !

*** Adapter connections bars are from parts list 894-5466.3 For silver coated configuration you need 894-5472.3**

1 Hexagon screw M12x40 ISO 4017 (SAP 400251291)
+ Hexagon nut M12 ISO 4032 (SAP 4023210279)
+ 2 spring washer 13 DIN 6796 (SAP 4113510880)
2 Hexagon screw M12x45 ISO 4017 (SAP 400251292)
+ Hexagon nut M12 ISO 4032 (SAP 4023210279)
+ 2 spring washer 13 DIN 6796 (SAP 4113510880)
3 Hexagon screw M12x50 ISO 4017 (SAP 400251293)
+ Hexagon nut M12 ISO 4032 (SAP 4023210279)
+ 2 spring washer 13 DIN 6796 (SAP 4113510880)
4 Hexagon screw M12x55 ISO 4017 (SAP 400251294)
+ Hexagon nut M12 ISO 4032 (SAP 4023210279)
+ 2 spring washer 13 DIN 6796 (SAP 4113510880)

Technical information of device:
1) Rated Voltage U=7.2kV
2) Rated Current I=2500A
3) Copper Busbar Size 2x100x10mm

Detail X
M 1:5

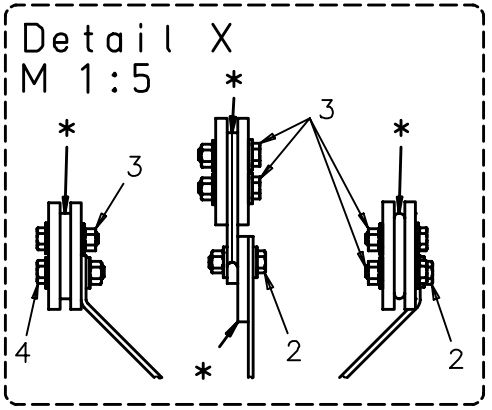

Side view
M 1:15

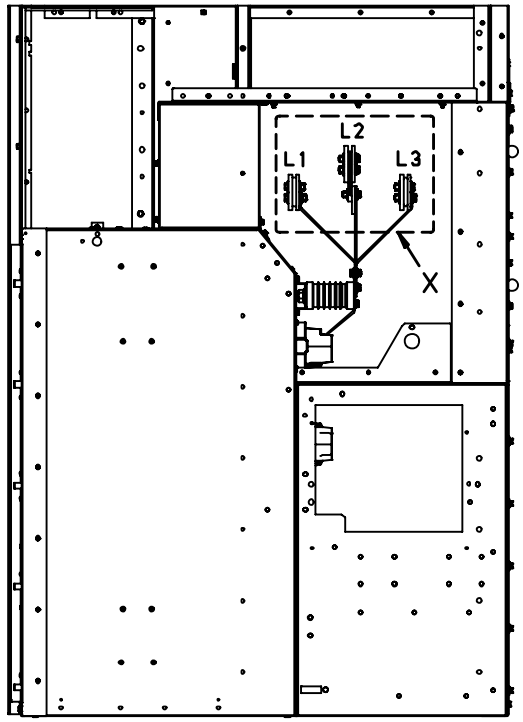

Tolerance Toleranz (ISO)	Material;Werkstoff	Mass ; Masse	Papersize Format	29-05-2009	HOFFS	Date Datum	25-09-2008
-	-	-	B/A3	Date Datum	Name Name	Name Name	TRAJCESKI
--	-	Unit;Einheit	Scale Massstab			Department Abteilung	PTD_M1_R&D
		mm	1:5	09/2405	03	Location Standort	FFMCB
	Material No./Nr. 1	Material No./Nr. 2	Released Freigabe			SIEMENS	
	SWF:(-)		Frei	Mod./Ref-No. Aend.-Vorg.-Nr	Revision Revision		

Designation Benennung: Mounting Busbar VCP EPL 2500A

Itemnumber Sachnummer: 894-5442.9

ISO-Projection

Page Blatt: 1-

HPD

printed by cf20adm, 06/17/09-09:41:03

Confiè a titre de secret d'enterprise. Tous droits reserves.
Comunicado como segredo empresarial. Reservados todos os direitos.
Confiado como secreto industrial. Todos los derechos reservados.

Als Betriebsgeheimnis anvertraut. Alle Rechte vorbehalten.
Proprietary data, company confidential. All rights reserved.

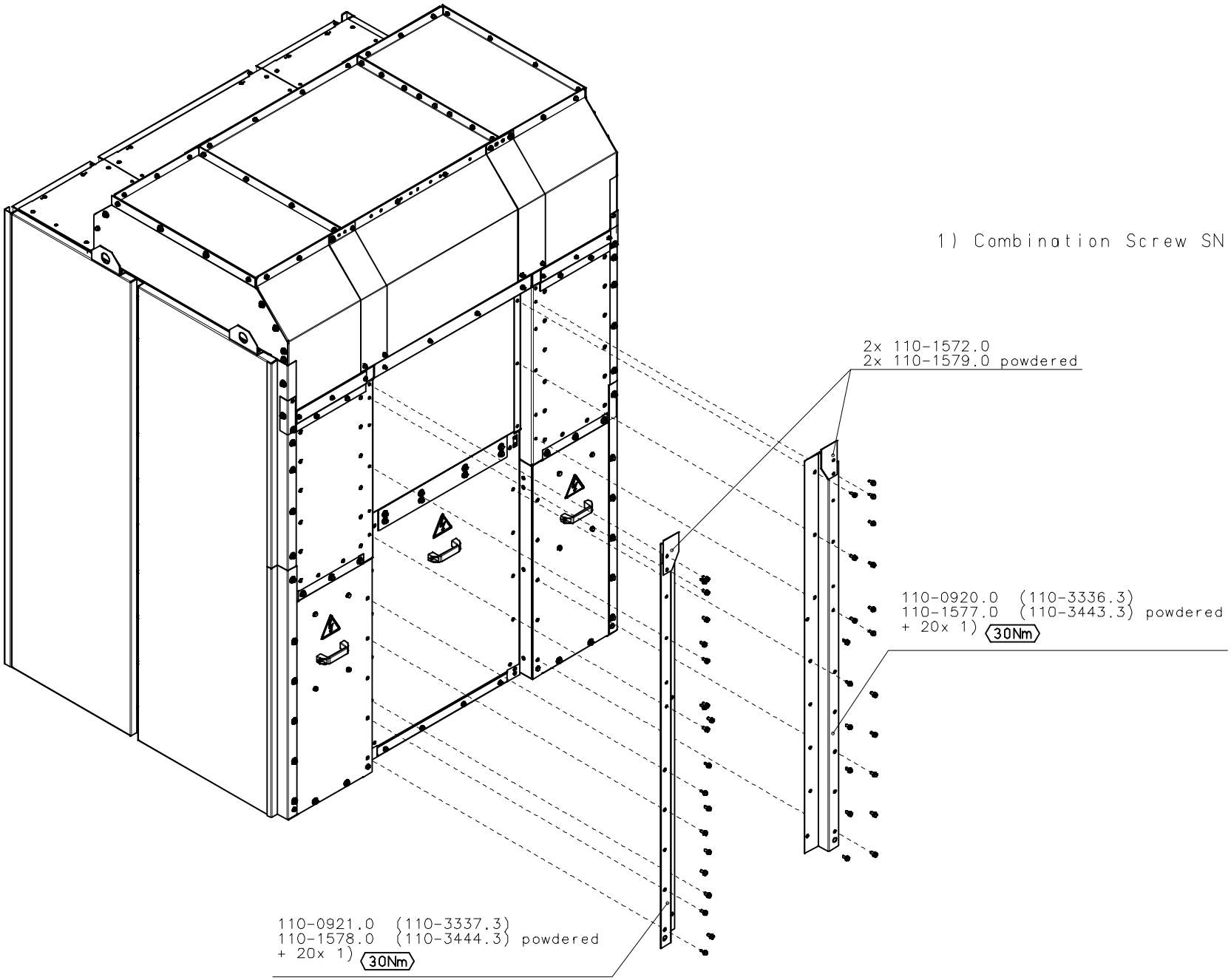

Tolerance Toleranz (ISO)	Material;Werkstoff	Mass ; Masse	Papersize Format	29-11-2010	FERRE	Date Datum	29-11-2010	Designation Benennung	ISO-Projection
-	-	-	C/A2	Date Datum	Name Name	Name Name	FERREIRAV	Panel connection MVC-NXAIR ≤31.5kA	
-	-	Unit;Einheit mm	Scale Massstab 1:10	10/5406	00	Department Abteilung	E_D_MV_1_R&D		Page Blatt
	Material No./Nr. 1 SWF:(-	Material No./Nr. 2	Released Freigabe Frei	Mod./Ref-No. Aend.-Vorg.-Nr.	Revision Revision	Location Standort	CORROIOS	Itemnumber Sachnummer 110-0281.9	1+

SIEMENS

HPD

printed by cf2adm, 12/10/10-12:33:12

Confiè a titre de secret d'enterprise. Tous droits reserves.
Comunicado como segredo empresarial. Reservados todos os direitos.
Confiado como secreto industrial. Todos los derechos reservados.

Als Betriebsgeheimnis anvertraut. Alle Rechte vorbehalten.
Proprietary data, company confidential. All rights reserved.

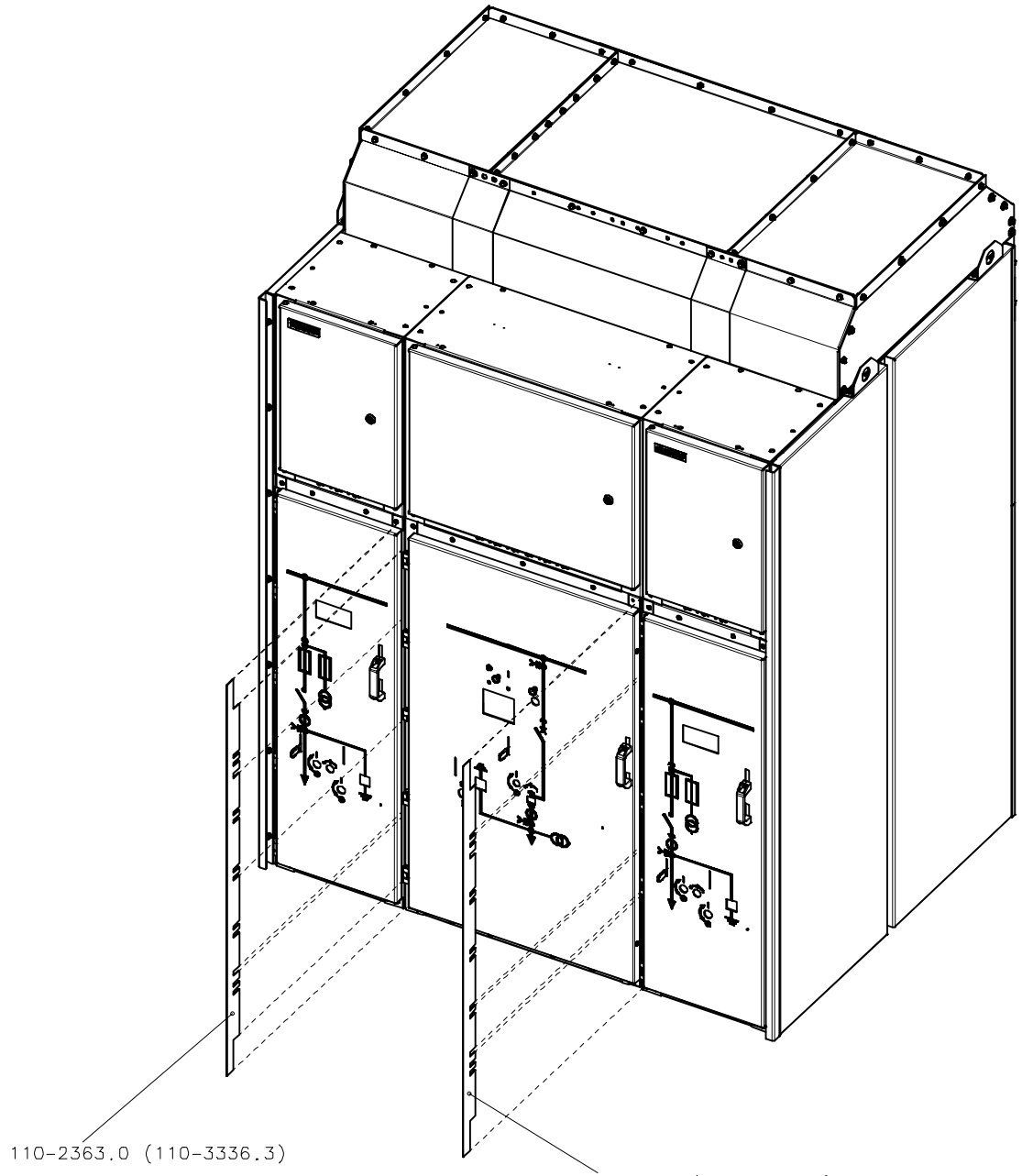

Tolerance Toleranz (ISO)	Material;Werkstoff	Mass ; Masse	Papersize Format	29-11-2010	FERRE	Date Datum	29-11-2010	Designation Benennung	ISO-Projection
-	-	-	C/A2	Date Datum	Name Name	Name Name	FERREIRAV	Panel connection MVC-NXAIR ≤31.5kA	
-	-	-	Scale Massstab			Department Abteilung	E_D_MV_1_R&D		
--		Unit;Einheit mm	1:10	10/5406	00	Location Standort	CORROIOS		Page Blatt
	Material No./Nr. 1 SWF:(-	Material No./Nr. 2	Released Freigabe Frei	Mod./Ref-No. Aend.-Verg.-Nr.	Revision Revision	SIEMENS		Itemnumber Sachnummer 110-0281.9	2+

HPD

printed by cf2adm, 12/10/10-12:34:03

Confiè a titre de secret d'enterprise. Tous droits reserves.
Comunicado como segredo empresarial. Reservados todos os direitos.
Confiado como secreto industrial. Todos los derechos reservados.

Als Betriebsgeheimnis anvertraut. Alle Rechte vorbehalten.
Proprietary data, company confidential. All rights reserved.

110-3439.3 Ledges for MVC panels connection for freestanding
110-3441.3 for powdered configuration

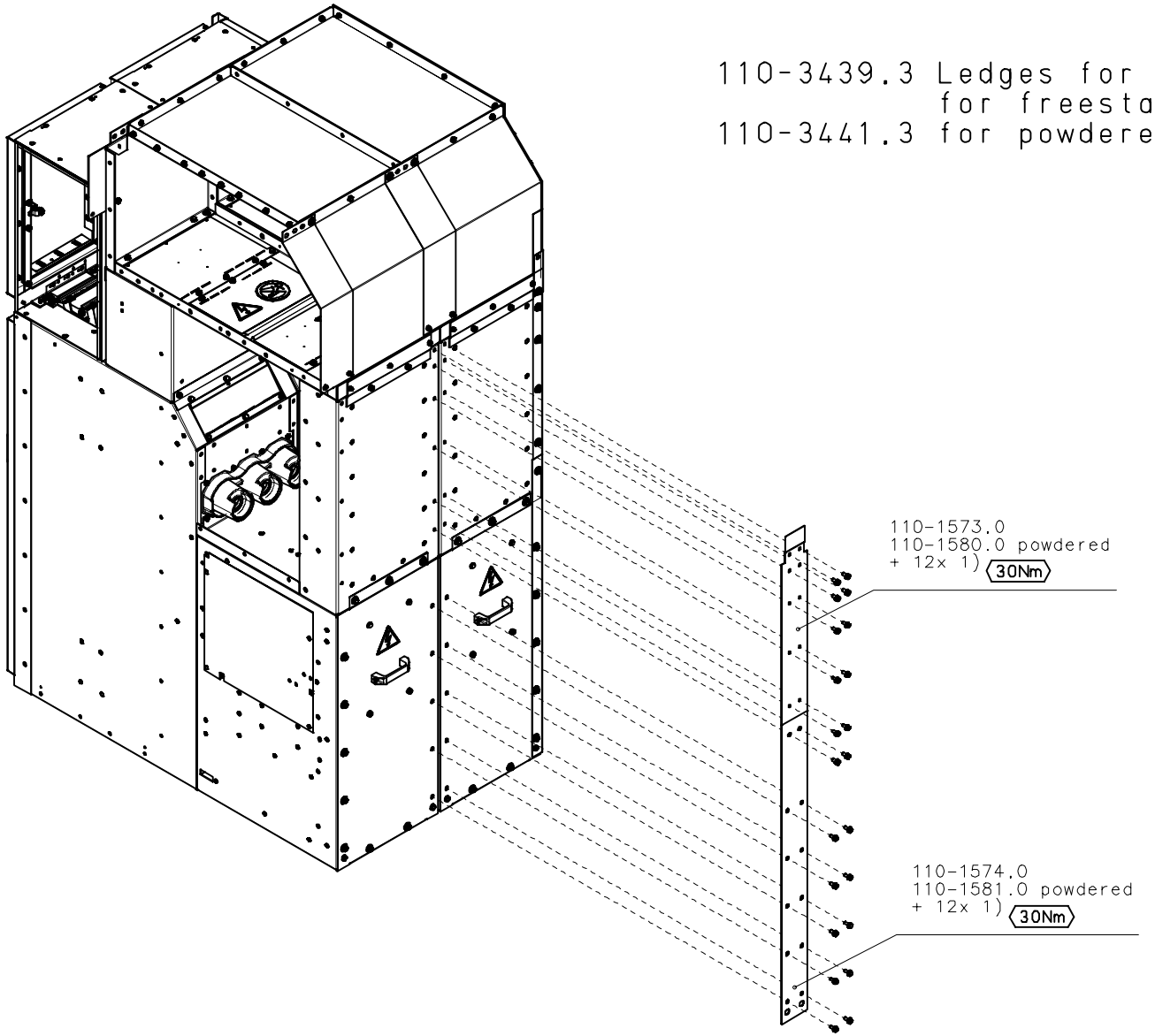

1) Combination Screw SN 65480-M8x20 (30Nm)

Tolerance Toleranz (ISO)	Material;Werkstoff	Mass ; Masse	Papersize Format	29-11-2010	FERRE	Date Datum	29-11-2010	Designation Benennung	ISO-Projection
		Unit;Einheit mm	C/A2	Date Datum	Name Name	Name Name	FERREIRAV	Panel connection MVC-NXAIR ≤31.5kA	
	Material No./Nr. 1	Material No./Nr. 2	Scale Massstab 1:10			Department Abteilung	E_D_MV_1_R&D		Page Blatt
	SWF:(-		Released Freigabe Frei	10/5406	00	Location Standort	CORROIOS	Itemnumber Sachnummer 110-0281.9	3-
				Mod./Ref-No. Aend.-Vorg.-Nr.	Revision Revision	SIEMENS			

HPD

printed by cf2adm, 12/10/10-12:34:47

Confiè a titre de secret d'enterprise. Tous droits reserves.
Comunicado como segredo empresarial. Reservados todos os direitos.
Confiado como secreto industrial. Todos los derechos reservados.

Als Betriebsgeheimnis anvertraut. Alle Rechte vorbehalten.
Proprietary data, company confidential. All rights reserved.

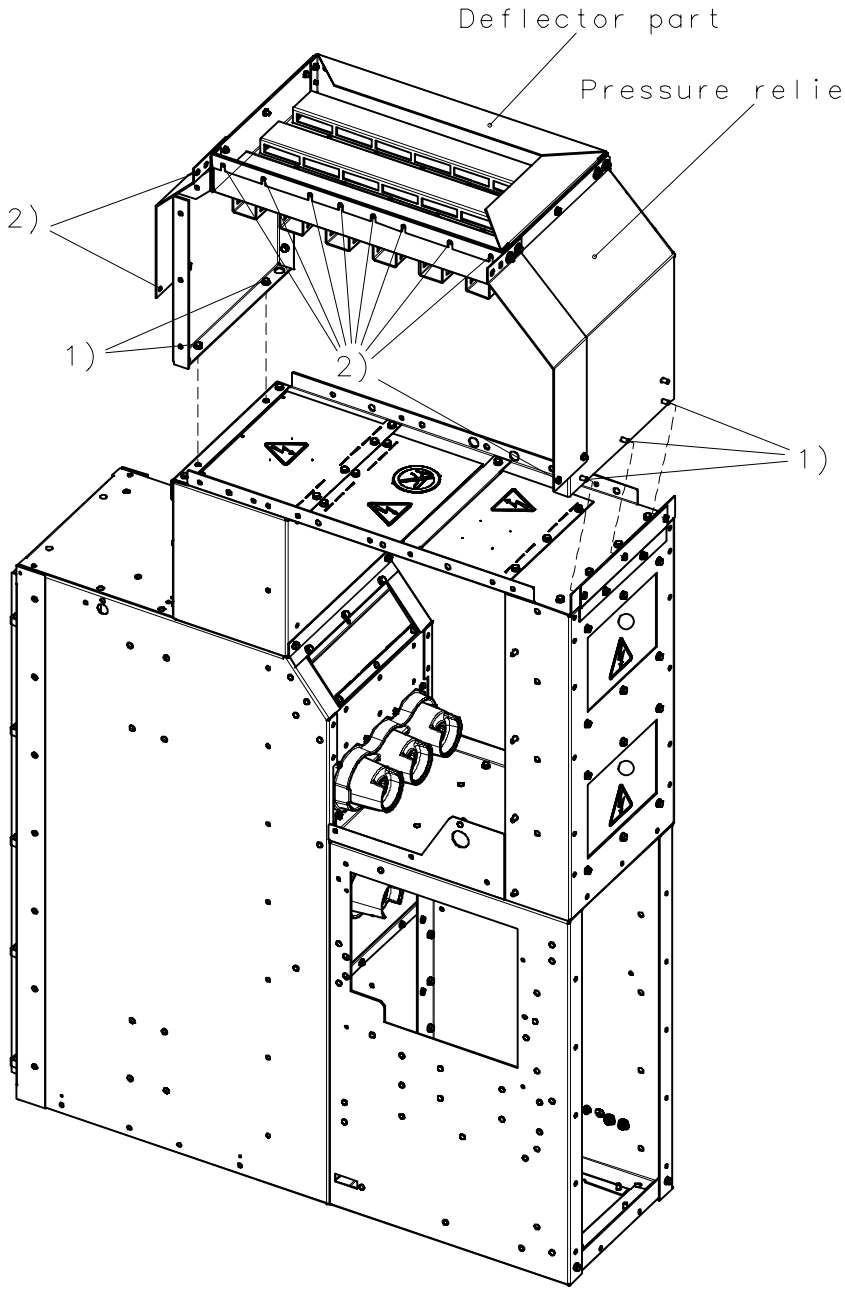

Note:
Installation of deflector part must be done that part shows from end of switch gear row to the center of the switch gear row.

Pressure relief duct is shown with absorber, also available as complete closed version.

1) Combination Screw SN65480-M8x20
2) connected with neighbour panel

Tolerance Toleranz (ISO)	Material;Werkstoff	Mass ; Masse	Papersize Format	18-06-2009	HOFFS	Date Datum	18-06-2009
-	-	-	C/A2			Name Name	HOFFMANN
--	-	-	Scale Massstab	Date Datum	Name Name	Department Abteilung	E_D_MV_1_R&D
		Unit;Einheit mm	1:8	09/2720	00	Location Standort	FFMCB
	Material No./Nr. 1 SWF:(-	Material No./Nr. 2	Released Freigabe Frei	Mod./Ref-No. Aend.-Vorg.-Nr.	Revision Revision	SIEMENS	

Designation Benennung: Installation pressure relief duct

Item number Sachnummer: 894-5450.9

ISO-Projection

Page Blatt 1-

HPD

printed by cf2adm, 06/22/09-07:37:57

Confié a titre de secret d'enterprise. Tous droits reserves.
Comunicado como segredo empresarial. Reservados todos os direitos.
Confiado como secreto industrial. Todos los derechos reservados.

Als Betriebsgeheimnis anvertraut. Alle Rechte vorbehalten.
Proprietary data, company confidential. All rights reserved.

Fully insulated version

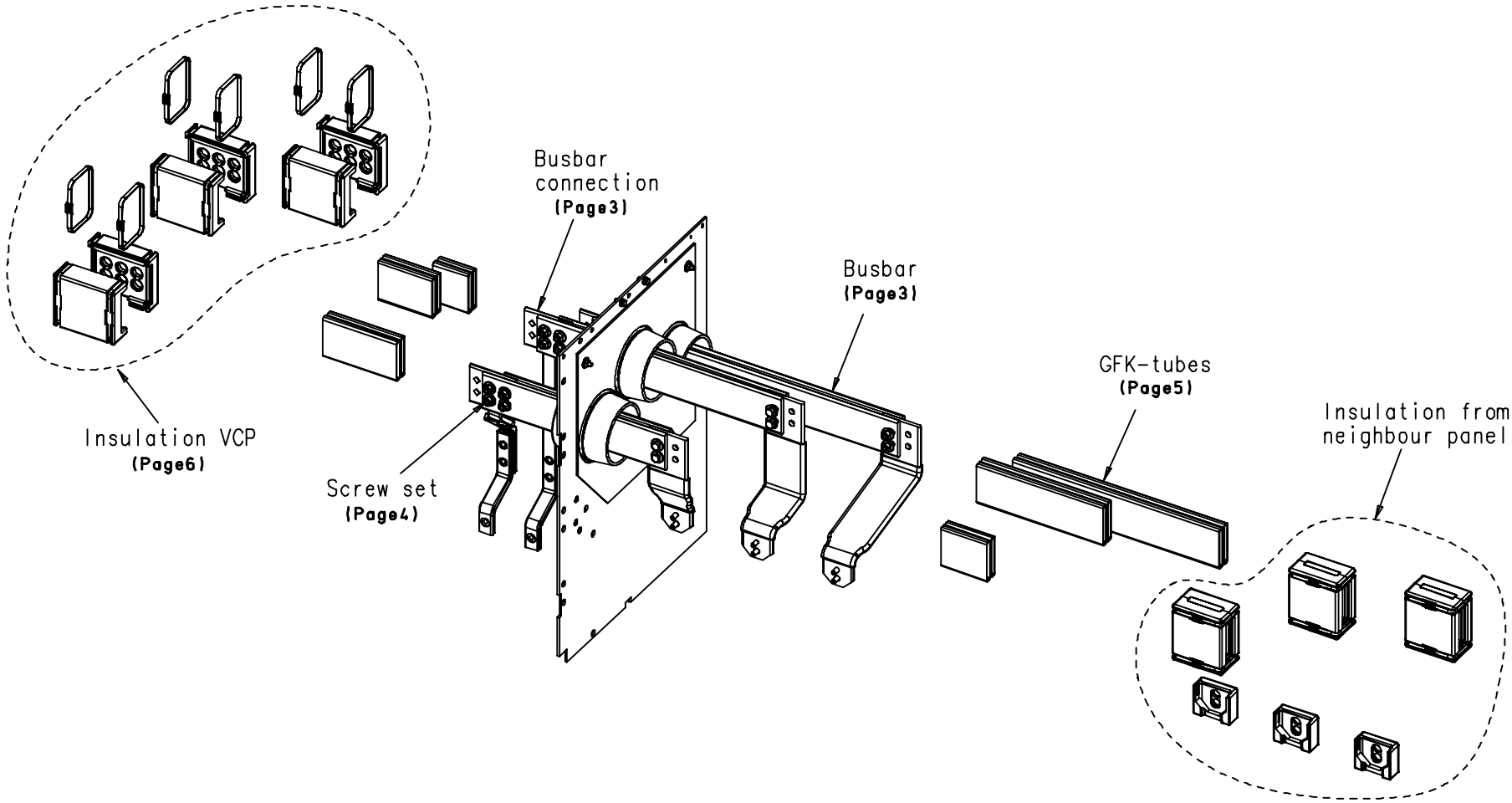

Tolerance Toleranz (ISO)	Material;Werkstoff	Mass ; Masse	Papersize Format	04-03-2013	COELH	Date Datum	04-03-2013	Designation Benennung	ISO-Projection
-	-	-	B/A3	Date Datum	Name Name	Name Name	COELHO,D	Busbar assembly on VCP 31,5kA	
--	-	Unit;Einheit	Scale Massstab			Department Abteilung	IC_LMV_MS_R&D_AIS1		Page Blatt
		mm	1:10	13/1377	00	Location Standort	FFMCB		1+
	Material No./Nr. 1	Material No./Nr. 2	Released Freigabe	Mod./Ref-No. Aend.-Vorg.-Nr.	Revision Revision	SIEMENS		Itemnumber Sachnummer	
	SWF:(-)		Frei					110-0432.9	

HPD

printed by oprtcual, 03/11/13-10:54:05

Confié à titre de secret d'enterprise. Tous droits reserves.
Comunicado como segredo empresarial. Reservados todos os direitos.
Confiado como secreto industrial. Todos los derechos reservados.

Als Betriebsgeheimnis anvertraut. Alle Rechte vorbehalten.
Proprietary data, company confidential. All rights reserved.

Non-insulated versions

7.2kV

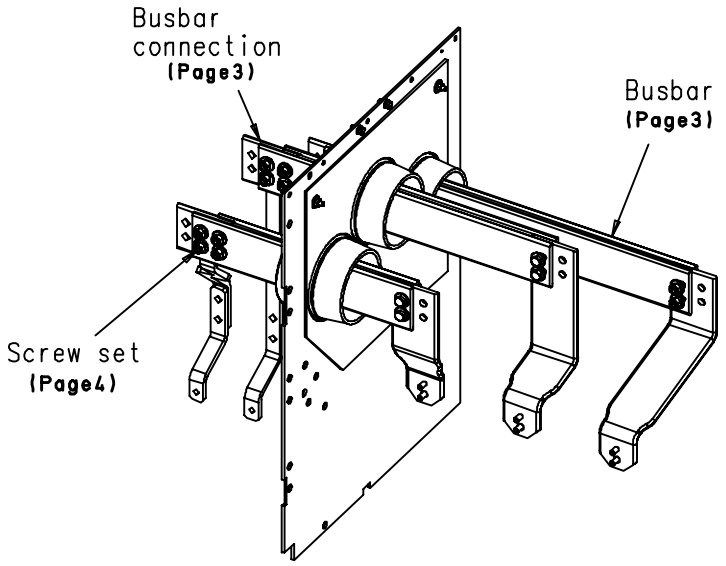

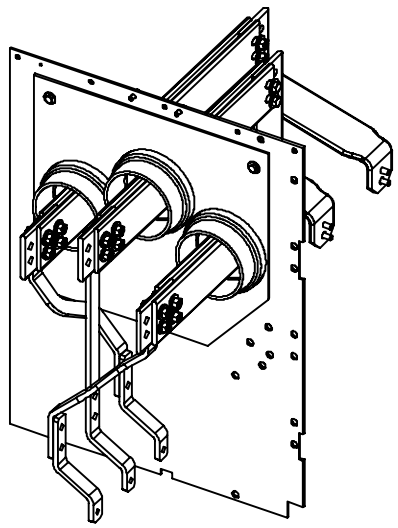

12kV

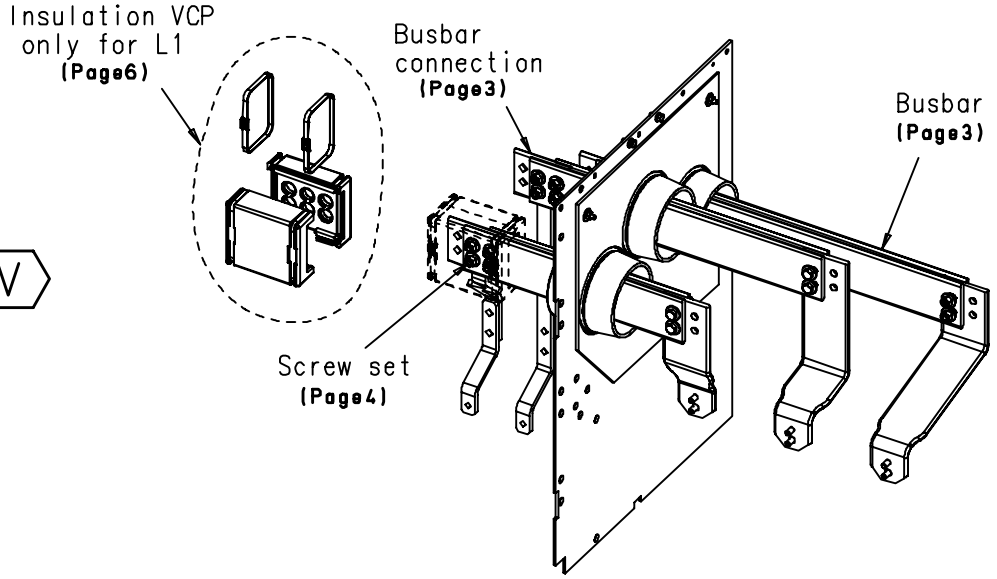

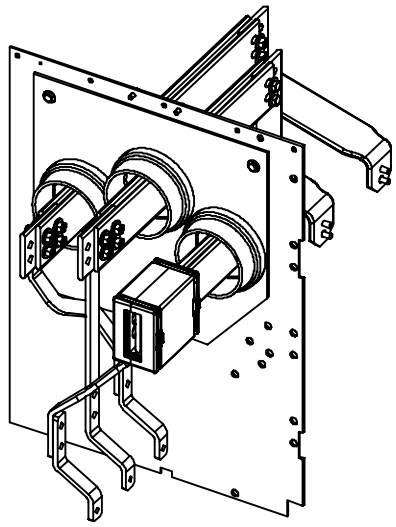

Tolerance Toleranz (ISO)	Material;Werkstoff	Mass ; Masse	Papersize Format	04-03-2013	COELH	Date Datum	04-03-2013	Designation Benennung	ISO-Projection
-	-	-	B/A3	Date Datum	Name Name	Name Name	COELHO,D	Busbar assembly on VCP 31,5kA	
--	-	Unit;Einheit mm	Scale Massstab 1:10	13/1377	00	Department Abteilung	IC_LMV_MS_R&D_AIS1		Page Blatt 2+
	Material No./Nr. 1 SWF:(-)	Material No./Nr. 2	Released Freigabe Frei	Mod./Ref-No. Aend.-Vorg.-Nr.	Revision Revision	Location Standort	FFMCB	Itemnumber Sachnummer 110-0432.9	
						SIEMENS			

HPD

printed by oprtcual, 03/11/13-10:54:33

Confié à titre de secret d'enterprise. Tous droits reserves.
Comunicado como segredo empresarial. Reservados todos os direitos.
Confiado como secreto industrial. Todos los derechos reservados.

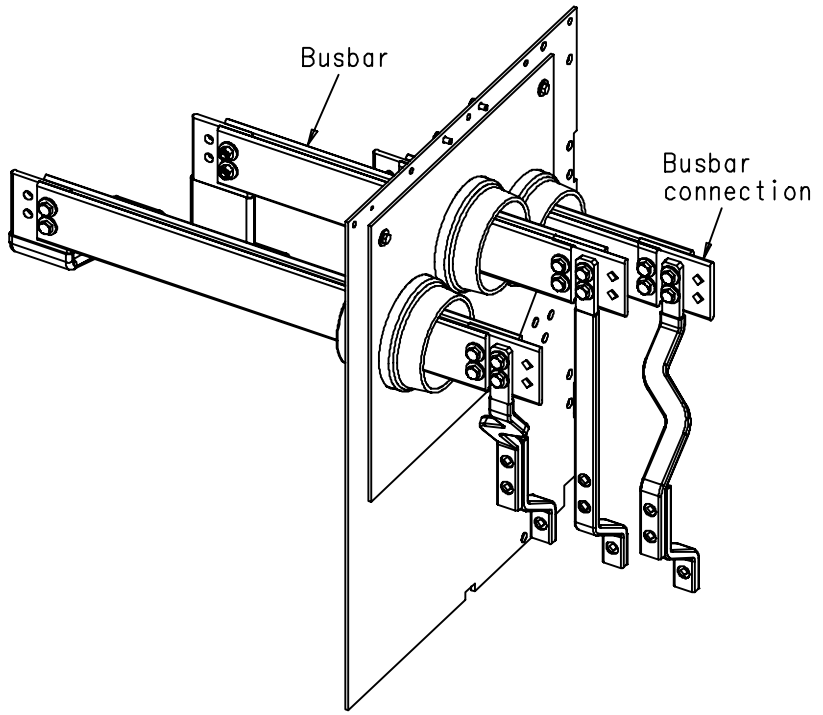

Bus bars versions:

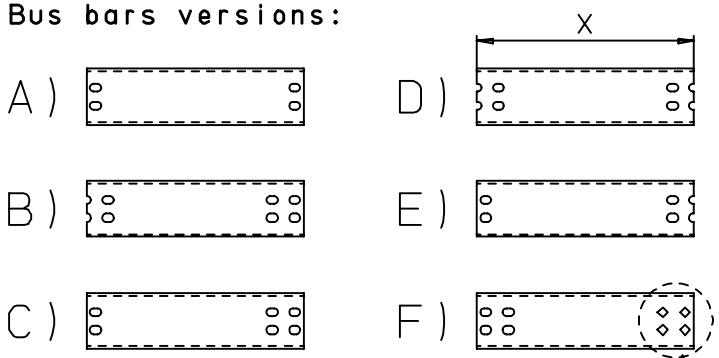

MP - Middle Panel.
EP - End panel or Bus riser or Bus Sectionalizer.
*) - The displayed dimensions are related to VCP on left side of neighbour panel. When the VCP is on the right, the busbar in L1 changes to L3 and vice versa.

	Busbar connection	Busbar connection	Busbar w/o Ag	Busbar w/ Ag	Type	Length "X" (mm) L1*	L2	L3*
1250A 1x100x10	MP-VCP / MP-VCP	3x 110-7455.0	110-2576.3	110-2593.3	D	433.0	433.0	433.0
	EP-VCP / MP-VCP		110-2578.3	110-2595.3	B	454.0	454.0	454.0
	MP-VCP / MP-600		110-2558.3	110-2570.3	E	405.5	515.5	625.5
	EP-VCP / MP-600		110-2560.3	110-2572.3	C	426.5	536.5	646.5
	EP-VCP / EP-600		110-2567.3	110-2574.3	F	467.5	577.5	687.5
	MP-VCP / EP-600		110-2768.3	110-2769.3	B	446.5	556.5	666.5
	MP-VCP / MP-800		110-2577.3	110-2594.3	E	455.5	615.5	775.5
	EP-VCP / MP-800		110-2579.3	110-2596.3	C	476.5	636.5	796.5
	EP-VCP / EP-800		110-2580.3	110-2597.3	F	517.5	677.5	837.5
	MP-VCP / EP-800		110-2581.3	110-2598.3	B	496.5	656.5	816.5
2500A 2x100x10	MP-VCP / MP-VCP		110-2582.3	110-2599.3	A	387.0	387.0	387.0
					D	433.0	433.0	433.0
	EP-VCP / MP-VCP		110-2584.3	110-2601.3	A	387.0	387.0	387.0
					B	454.0	454.0	454.0
	MP-VCP / MP-600		110-2559.3	110-2571.3	A	382.5	492.5	602.5
					E	405.5	515.5	625.5
	EP-VCP / MP-600		110-2561.3	110-2573.3	A	382.5	492.5	602.5
					C	426.5	536.5	646.5
	EP-VCP / EP-600		110-2569.3	110-2575.3	C	426.5	536.5	646.5
					F	467.5	577.5	687.5
	MP-VCP / EP-600		110-2680.3	110-2681.3	C	426.5	536.5	646.5
					B	446.5	556.5	666.5
	MP-VCP / MP-800		110-2583.3	110-2600.3	A	432.5	592.5	752.5
					E	455.5	615.5	775.5
	EP-VCP / MP-800		110-2585.3	110-2602.3	A	432.5	592.5	752.5
					C	476.5	636.5	796.5
	EP-VCP / EP-800		110-2586.3	110-2603.3	C	476.5	636.5	796.5
					F	517.5	677.5	837.5
	MP-VCP / EP-800		110-2587.3	110-2604.3	C	476.5	636.5	796.5
					B	496.5	656.5	816.5
	MP-VCP / MP-1000		110-2588.3	110-2605.3	A	532.5	692.5	852.5
					E	555.5	715.5	875.5
	EP-VCP / MP-1000		110-2589.3	110-2606.3	A	532.5	692.5	852.5
					C	576.5	736.5	896.5
	EP-VCP / EP-1000		110-2590.3	110-2607.3	C	576.5	736.5	896.5
					F	617.5	777.5	937.5
	MP-VCP / EP-1000		110-2592.3	110-2609.3	C	576.5	736.5	896.5
					B	596.5	756.5	916.5

Als Betriebsgeheimnis anvertraut. Alle Rechte vorbehalten.
Proprietary data, company confidential. All rights reserved.

Tolerance Toleranz (ISO) - --	Material;Werkstoff - -	Mass ; Masse - -	Papersize Format B/A3	04-03-2013	COELH	Date Datum 04-03-2013	Designation Benennung Busbar assembly on VCP 31,5kA
		Unit;Einheit mm	Scale Massstab -	Date Datum	Name Name	Name Name COELHO,D	ISO-Projection
	Material No./Nr. 1 SWF:(-)	Material No.2	Released Freigabe Frei	13/1377	00	Department Abteilung IC_LMV_MS_R&D_AIS1	Page Blatt 3+
				Mod./Ref-No. Aend.-Vorg.-Nr.	Revision Revision	Location Standort FFMCB	
						SIEMENS	Itemnumber Sachnummer 110-0432.9

HPD

printed by oprtcual, 03/11/13-10:53:42

Confié a titre de secret d'enterprise. Tous droits reserves.
Comunicado como segredo empresarial. Reservados todos os direitos.
Confiado como secreto industrial. Todos los derechos reservados.

Als Betriebsgeheimnis anvertraut. Alle Rechte vorbehalten.
Proprietary data, company confidential. All rights reserved.

Busbar	Neighbour panel	Panels disposal	Screw sets
1250A 1x100x10	VCP	MP-VCP / MP-VCP	110-2701.3
		EP-VCP / MP-VCP	110-2701.3
	600mm	MP-VCP / MP-600	110-2818.3
		EP-VCP / MP-600	110-2818.3
		EP-VCP / EP-600	110-2702.3
		MP-VCP / EP-600	110-2702.3
	800mm	MP-VCP / MP-800	110-2818.3
		EP-VCP / MP-800	110-2818.3
		EP-VCP / EP-800	110-2702.3
		MP-VCP / EP-800	110-2702.3
2500A 2x100x10	VCP	MP-VCP / MP-VCP	110-2703.3
		EP-VCP / MP-VCP	110-2703.3
	600mm	MP-VCP / MP-600	110-2816.3
		EP-VCP / MP-600	110-2816.3
		EP-VCP / EP-600	110-2817.3
		MP-VCP / EP-600	110-2817.3
	800mm	MP-VCP / MP-800	110-2816.3
		EP-VCP / MP-800	110-2816.3
		EP-VCP / EP-800	110-2817.3
		MP-VCP / EP-800	110-2817.3
	1000mm	MP-VCP / MP-1000	110-2704.3
		EP-VCP / MP-1000	110-2704.3
		EP-VCP / EP-1000	110-2705.3
		MP-VCP / EP-1000	110-2705.3

(REAR SIDE OF THE PANEL)

1x100x10

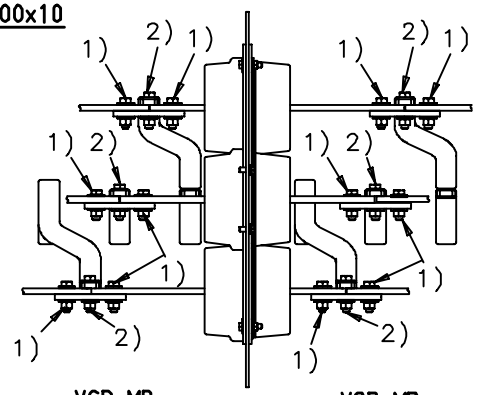

VCP-MP VCP-MP

1x100x10

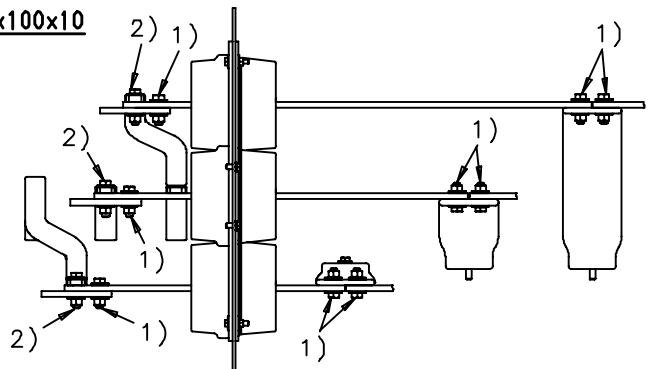

VCP-EP 600/800mm-MP

(FRONT SIDE OF THE PANEL)

(REAR SIDE OF THE PANEL)

2x100x10

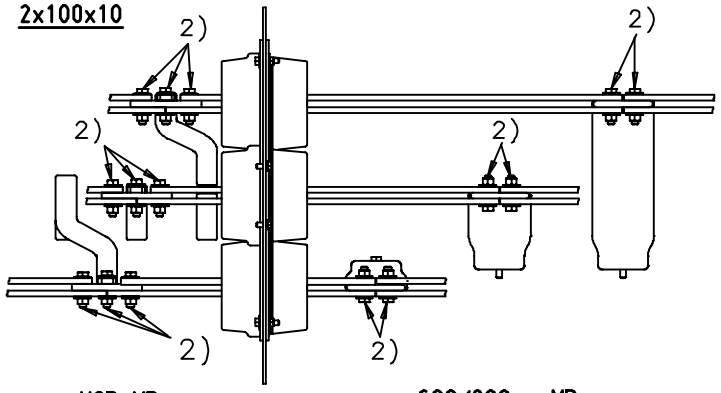

VCP-MP 600/800mm-MP

2x100x10

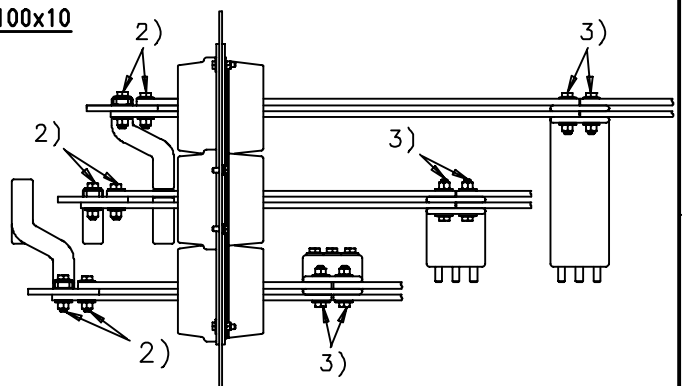

VCP-EP 1000mm-MP

(FRONT SIDE OF THE PANEL)

1) 1x Hexagon head screw M12x40 ISO4017 (70Nm)
2x Spring washer 12 DIN6796
1x Hexagon nut M12 ISO4032 (70Nm)

2) 1x Hexagon head screw M12x50 ISO4017 (70Nm)
2x Spring washer 12 DIN6796
1x Hexagon nut M12 ISO4032 (70Nm)

3) 1x Hexagon head screw M12x60 ISO4017 (70Nm)
2x Spring washer 12 DIN6796
1x Hexagon nut M12 ISO4032 (70Nm)

Tolerance Toleranz (ISO)	Material;Werkstoff	Mass ; Masse	Papersize Format	04-03-2013	COELH	Date Datum	04-03-2013	Designation Benennung	ISO-Projection
-	-	-	B/A3	Date Datum	Name Name	Name Name	COELHO.D	Busbar assembly on VCP 31,5kA	
--	-	Unit;Einheit mm	Scale Massstab -			Department Abteilung	IC_LMV_MS_R&D_AIS1		Page Blatt
	Material No./Nr. 1 SWF:(-)	Material No./Nr. 2	Released Freigabe Frei	13/1377	00	Location Standort	FFMCB		4+
				Mod./Ref-No. Aend.-Vorg.-Nr.	Revision Revision	SIEMENS		Itemnumber Sachnummer 110-0432.9	

HPD

printed by oprtcual, 03/11/13-10:52:46

Confié à titre de secret d'enterprise. Tous droits reserves.
Comunicado como segredo empresarial. Reservados todos os direitos.
Confiado como secreto industrial. Todos los derechos reservados.

Als Betriebsgeheimnis anvertraut. Alle Rechte vorbehalten.
Proprietary data, company confidential. All rights reserved.

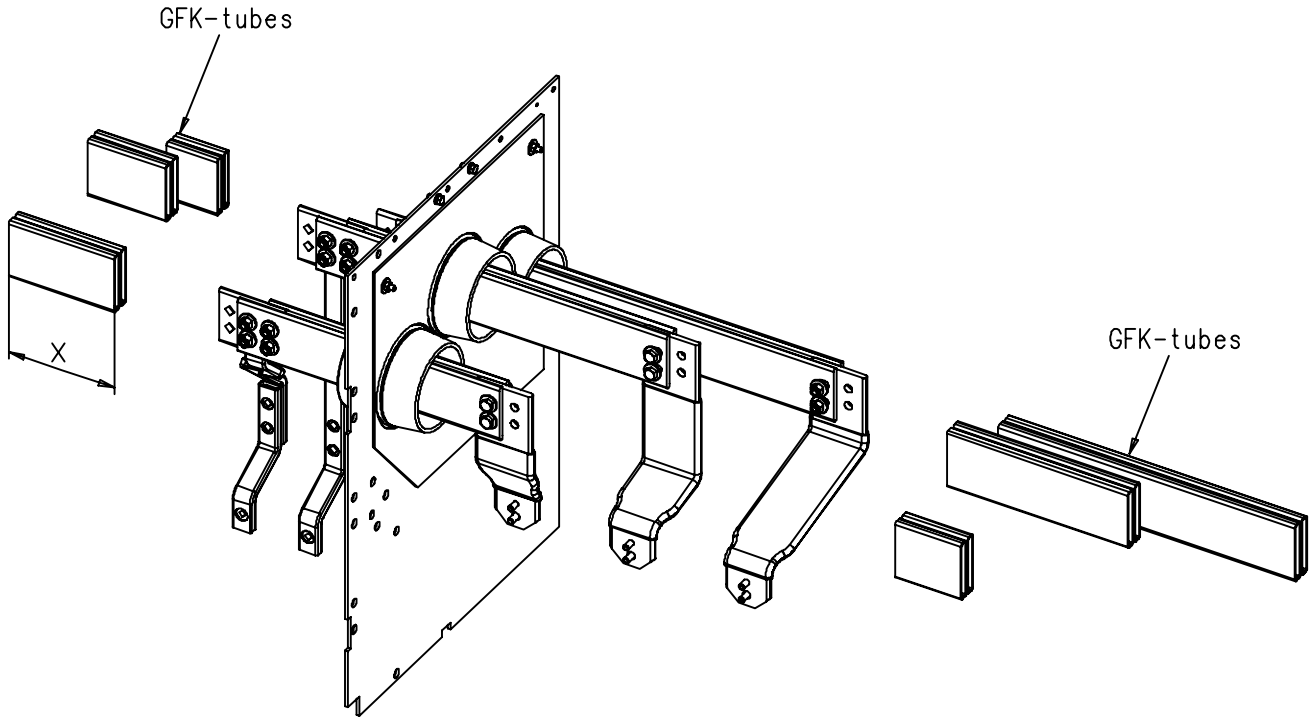

Busbar versions		GFK insulation part list		Length "X" (mm)					
				VCP Panel			Neighbour Panel		
		NSF	SF	L1*	L2	L3*	L1*	L2	L3*
VCP <-> VCP	1x100x10	110-2647.3	110-2648.3	192.0	138.5	92.0	192.0	138.5	92.0
	2x100x10	110-2653.3	110-2654.3						
VCP <-> 600	1x100x10	110-2645.3	110-2646.3	192.0	138.5	92.0	76.0	236.0	396.0
	2x100x10	110-2651.3	110-2652.3						
VCP <-> 800	1x100x10	110-2649.3	110-2650.3	192.0	138.5	92.0	116.0	326.0	536.0
	2x100x10	110-2655.3	110-2656.3						
VCP <-> 1000	2x100x10	110-2657.3	110-2658.3	192.0	138.5	92.0	219.5	429.5	639.5

SF - Silicone free
NSF - Non silicone free
*) - The displayed dimensions are related to VCP on left side of neighbour panel. When the VCP is on the right, the busbar in L1 changes to L3 and vice versa.

Tolerance Toleranz (ISO)	Material;Werkstoff	Mass ; Masse	Papersize Format	04-03-2013	COELH	Date Datum	04-03-2013	Designation Benennung	ISO-Projection
-	-	-	B/A3	Date Datum	Name Name	Name Name	COELHO,D	Busbar assembly on VCP 31,5kA	
--	-	Unit;Einheit	Scale Massstab			Department Abteilung	IC_LMV_MS_R&D_AIS1		Page Blatt
	Material No./Nr. 1	Material No./Nr. 2	Released Freigabe	13/1377	00	Location Standort	FFMCB		5+
	SWF:(-)		Frei	Mod./Ref-No. Aend.-Vorg.-Nr	Revision Revision	SIEMENS		Itemnumber Sachnummer	110-0432.9

HPD

printed by oprtcual, 03/11/13-10:55:00

Confié à titre de secret d'enterprise. Tous droits reserves.
Comunicado como segredo empresarial. Reservados todos os direitos.
Confiado como secreto industrial. Todos los derechos reservados.

Als Betriebsgeheimnis anvertraut. Alle Rechte vorbehalten.
Proprietary data, company confidential. All rights reserved.

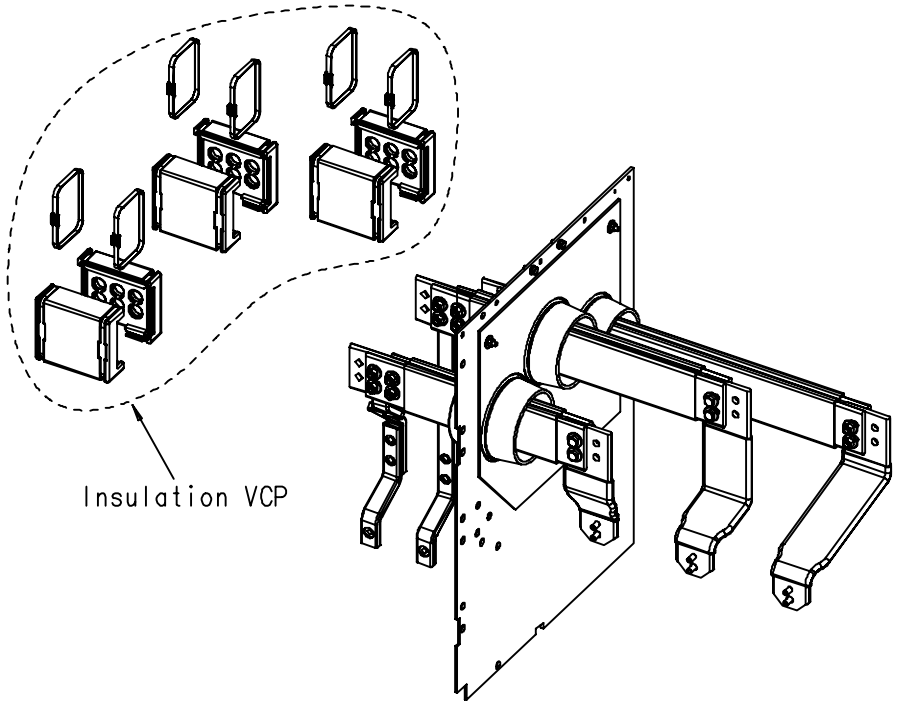

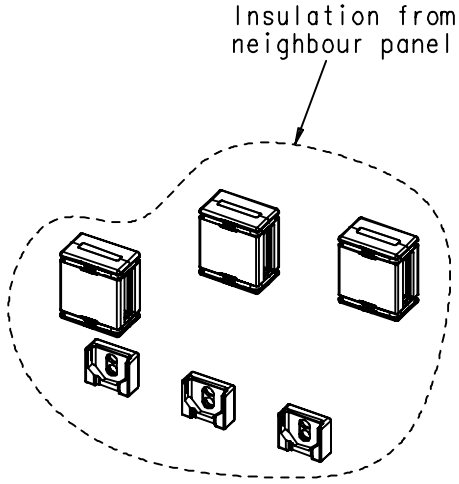

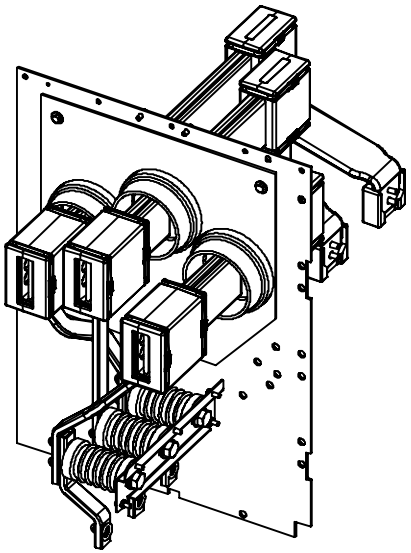

VCP	Busbar	7.2kV	12kV (only on L1)		Fully Insulated	
			NSF	SF	NSF	SF
Middle Panel	1x100x10	none	110-2689.3	110-2690.3	110-2659.3	110-2660.3
	2x100x10	none	110-2695.3	110-2696.3	110-2665.3	110-2666.3
End Panel Right	1x100x10	none	110-2691.3	110-2692.3	110-2661.3	110-2662.3
	2x100x10	none	110-2697.3	110-2698.3	110-2667.3	110-2668.3
End Panel Left	1x100x10	none	110-2693.3	110-2694.3	110-2663.3	110-2664.3
	2x100x10	none	110-2699.3	110-2700.3	110-2669.3	110-2670.3

SF - Silicone free
NSF - Non silicone free

Tolerance Toleranz (ISO)	Material;Werkstoff	Mass ; Masse	Papersize Format	04-03-2011	COELH	Date Datum	04-03-2011	Designation Benennung	ISO-Projection
-	-	-	B/A3	Date Datum	Name Name	Name Name	COELHO,D	Busbar assembly on VCP 31,5kA	
--	-	Unit;Einheit	Scale Massstab			Department Abteilung	IC_LMV_MS_R&D_AIS1		Page Blatt
		mm	-	13/1377	00	Location Standort	FFMCB		6-
	Material No./Nr. 1 SWF:(-)	Material No./Nr. 2	Released Freigabe Frei	Mod./Ref-No. Aend.-Vorg.-Nr	Revision Revision	SIEMENS		Itemnumber Sachnummer 110-0432.9	

HPD

printed by oprtcual, 03/11/13-10:53:13

Confié a titre de secret d'enterprise. Tous droits reserves.
Comunicado como segredo empresarial. Reservados todos os direitos.
Confiado como secreto industrial. Todos los derechos reservados.

Als Betriebsgeheimnis anvertraut. Alle Rechte vorbehalten.
Proprietary data, company confidential. All rights reserved.

Fully insulated version

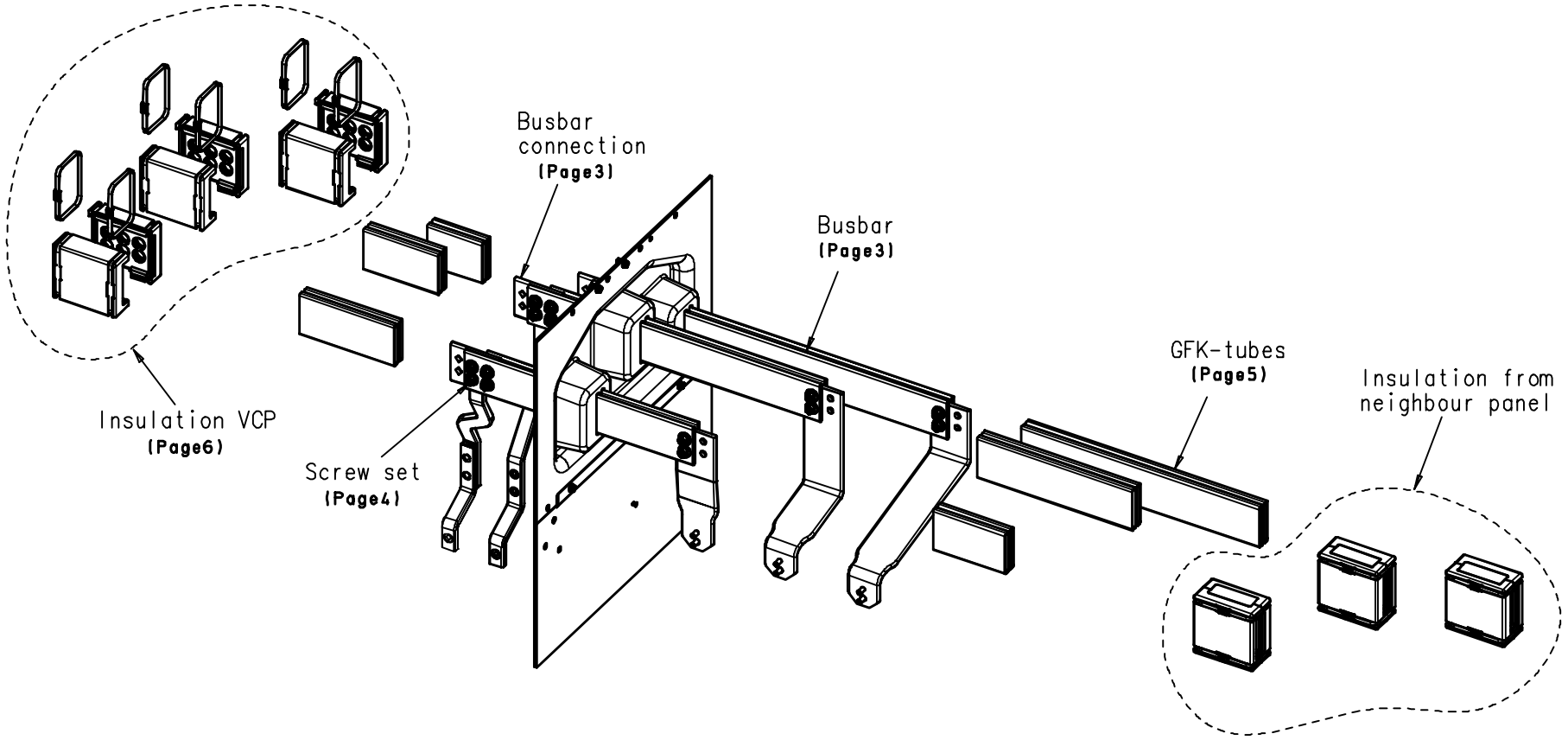

Tolerance Toleranz (ISO)	Material;Werkstoff	Mass ; Masse	Papersize Format	11-04-2013	AYK	Date Datum	21-03-2013	Designation Benennung	ISO-Projection
-	-	-	B/A3			Name Name	AYKOC	Busbar assembly on VCP 40kA	
--	-	Unit;Einheit	Scale Massstab	Date Datum	Name Name	Department Abteilung	IC_LMV_MS_R&D_AIS2		Page Blatt
		mm	1:10	13/2214	01	Location Standort	FFMCB		1+
	Material No./Nr. 1 SWF:(-)	Material No./Nr. 2	Released Freigabe Frei	Mod./Ref-No. Aend.-Vorg.-Nr	Revision Revision	SIEMENS		Itemnumber Sachnummer 110-0433.9	

HPD

printed by oprtcual, 04/11/13-13:17:01

Confié a titre de secret d'enterprise. Tous droits reserves.
Comunicado como segredo empresarial. Reservados todos os direitos.
Confiado como secreto industrial. Todos los derechos reservados.

Als Betriebsgeheimnis anvertraut. Alle Rechte vorbehalten.
Proprietary data, company confidential. All rights reserved.

Non-insulated versions

7.2kV/12kV

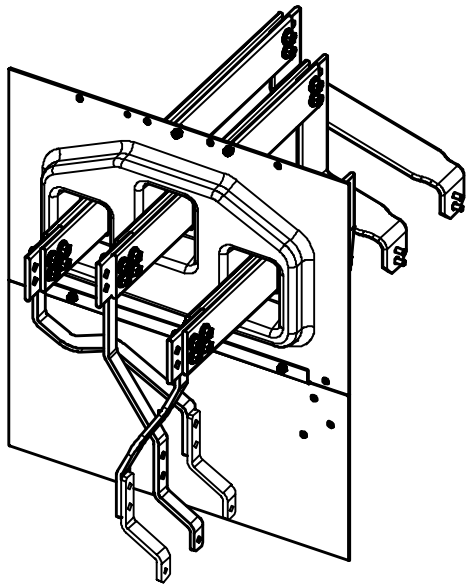

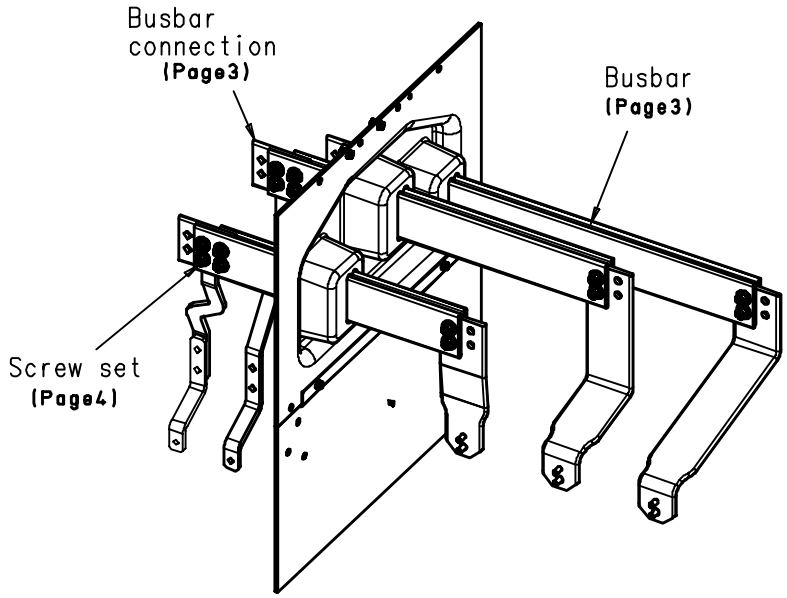

Tolerance Toleranz (ISO)	Material;Werkstoff	Mass ; Masse	Papersize Format	11-04-2013	AYK	Date Datum	21-03-2013	Designation Benennung	ISO-Projection
-	-	-	B/A3	Date Datum	Name Name	Name Name	AYKOC	Busbar assembly on VCP 40kA	
--	-	Unit;Einheit mm	Scale Massstab 1:10	13/2214	01	Department Abteilung	IC_LMV_MS_R&D_AIS2		Page Blatt 2+
	Material No./Nr. 1 SWF:(-)	Material No./Nr. 2	Released Freigabe Frei	Mod./Ref-No. Aend.-Vorg.-Nr	Revision Revision	Location Standort	FFMCB	Itemnumber Sachnummer 110-0433.9	

HPD

printed by oprtcual, 04/11/13-13:19:28

Confié a titre de secret d'enterprise. Tous droits reserves.
Comunicado como segredo empresarial. Reservados todos os direitos.
Confiado como secreto industrial. Todos los derechos reservados.

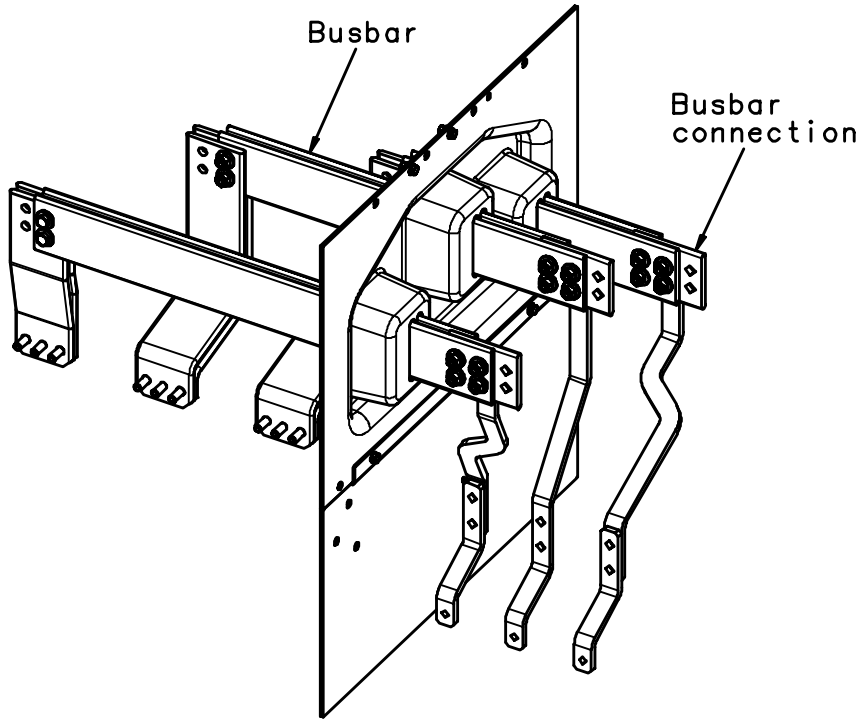

Bus bars versions:

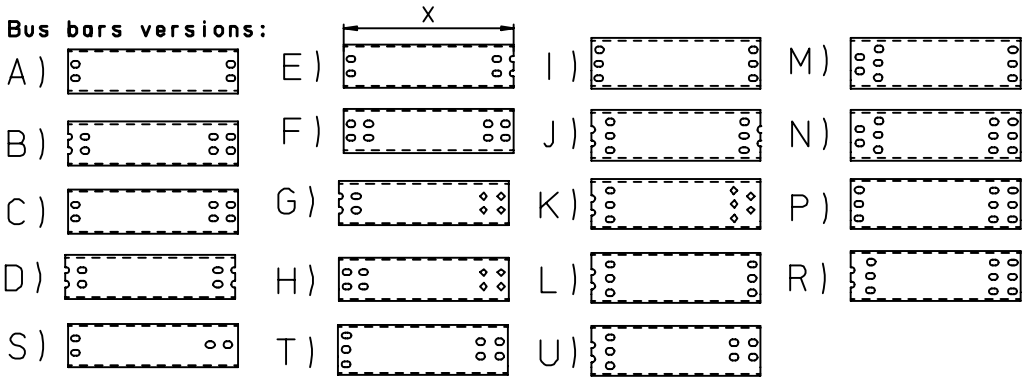

MP - Middle Panel.
EP - End panel or Bus riser or Bus Sectionalizer.
*) - The displayed dimensions are relative to VCP on left side of neighbour panel. When the VCP is on the right, the busbar in L1 changes to L3 and vice versa.

	Busbar connection	Busbar connection	Busbar w/o Ag	Busbar w/ Ag	Type	Length *X* (mm) L1*	L2	L3*
1250A 1x100x10	MP-VCP / MP-VCP	110-2799.3	110-2706.3	110-2707.3	D	388,0	388,0	388,0
	EP-VCP / MP-VCP		110-2706.3	110-2707.3	B	388,0	388,0	388,0
	MP-VCP / MP-800		110-2716.3	110-2717.3	E	432,5	592,5	752,5
	EP-VCP / MP-800		110-2716.3	110-2717.3	C	432,5	592,5	752,5
	EP-VCP / EP-800		110-2718.3	110-2719.3	F	476,5	636,5	796,5
	MP-VCP / EP-800		110-2718.3	110-2719.3	B	476,5	636,5	796,5
2500A 2x100x10	MP-VCP / MP-VCP		110-2710.3	110-2711.3	A	388	388	388
					D	433	433	433
	EP-VCP / MP-VCP		110-2708.3	110-2709.3	A	388	388	388
					G	456,5	456,5	456,5
	MP-VCP / MP-800		110-2720.3	110-2721.3	A	432,5	592,5	752,5
					E	455,5	615,5	775,5
	EP-VCP / MP-800		110-2722.3	110-2723.3	A	432,5	592,5	752,5
					C	476,5	636,5	796,5
	EP-VCP / EP-800		110-2726.3	110-2727.3	C	476,5	636,5	796,5
					H	517,5	677,5	837,5
	MP-VCP / EP-800		110-2724.3	110-2725.3	C	476,5	636,5	796,5
					G	496,5	656,5	816,5
	MP-VCP / MP-1000		110-2728.3	110-2729.3	A	532,5	692,5	852,5
					E	555,5	715,5	875,5
	EP-VCP / MP-1000		110-2730.3	110-2731.3	A	532,5	692,5	852,5
					C	576,5	736,5	896,5
	EP-VCP / EP-1000		110-2734.3	110-2735.3	C	576,5	736,5	896,5
					H	617,5	777,5	937,5
	MP-VCP / EP-1000		110-2732.3	110-2733.3	C	576,5	736,5	896,5
					H	596,5	756,5	916,5
4000A 3x120x10	MP-VCP / MP-VCP	110-2802.3	110-2714.3	110-2715.3	I	388	388	388
					J	433	433	433
	EP-VCP / MP-VCP		110-2712.3	110-2713.3	I	388	388	388
					K	456,5	456,5	456,5
	MP-VCP / MP-800		110-2736.3	110-2737.3	I	432	592,5	752,5
					L	453,5	613,5	773,5
	EP-VCP / MP-800		110-2740.3	110-2741.3	I	432	592,5	752,5
					M	472,5	632,5	792,5
	EP-VCP / EP-800		110-2742.3	110-2743.3	P	474	634,5	794,5
					M	514,5	674,5	834,5
	MP-VCP / EP-800		110-2738.3	110-2739.3	P	474	634,5	794,5
					R	495,5	655,5	815,5
	MP-VCP / MP-1000		110-2744.3	110-2745.3	I	532	692,5	852,5
					L	553,5	713,5	873,5
	EP-VCP / MP-1000		110-2746.3	110-2747.3	I	532	692,5	852,5
					M	572,5	732,5	892,5
	EP-VCP / EP-1000		110-2750.3	110-2751.3	P	574	734,5	894,5
					N	614,5	774,5	934,5
	MP-VCP / EP-1000		110-2748.3	110-2749.3	P	574	734,5	894,5
					R	595,5	755,5	915,5
1250A 1x100x10	VCP / CT on BB	110-2799.3	110-2828.3	110-2829.3	L1/L3:S L2:C	604	542	504
	CT on BB / VCP		110-2752.3	110-2753.3	L1/L3:S L2:C	504	542	604
2500A 2x100x10	VCP / CT on BB		110-2830.3	110-2831.3	C	604	542	504
					G	626,5	564,5	526,5
	CT on BB / VCP		110-2754.3	110-2755.3	C	504	542	604
					G	526,5	564,5	626,5
4000A 3x120x10	VCP / CT on BB	110-2802.3	110-2832.3	110-2833.3	L1/L3:T L2:R	604	542	504
					L1/L3:U L2:P	626,5	564,5	526,5
	CT on BB / VCP		110-2756.3	110-2757.3	L1/L3:T L2:R	504	542	604
					L1/L3:U L2:P	526,5	564,5	626,5

Tolerance Toleranz (ISO)	Material;Werkstoff	Mass ; Masse	Papersize Format	11-04-2013	AYK	Date 21-03-2013
DIN ISO 2768 medium	UPGM S-LP	kg 0.00 lb	B/A3	Date Datum	Name Name	Name AYKOC
-	-	Unit;Einheit mm	Scale Massstab 1:2	13/2214	01	Department Abteilung IC_LMV_MS_R&D_AIS2
	-					Location Standort FFMCB
	Material No./Nr. 1: SWF:( )	Material No./Nr. 2: -	Released Freigabe Frei	Mod./Ref-No. Aend.-Vorg.-Nr	Revision Revision	SIEMENS

Designation Benennung: Busbar assembling on VCP 40kA

Itemnumber Sachnummer: 110-0433.9

ISO-Projection

Page Blatt 3+

HPD

Als Betriebsgeheimnis anvertraut. Alle Rechte vorbehalten.
Proprietary data, company confidential. All rights reserved.

printed by oprtcual, 04/11/13-13:18:32

Confié a titre de secret d'enterprise. Tous droits reserves.
Comunicado como segredo empresarial. Reservados todos os direitos.
Confiado como secreto industrial. Todos los derechos reservados.

Busbar	Panels disposal	Screw sets
1250A 1x100x10	MP-VCP	110-2804.3
	EP-VCP	110-2803.3
2500A 2x100x10	MP-VCP	110-2806.3
	EP-VCP	110-2805.3

(REAR SIDE OF THE PANEL)

1x100x10

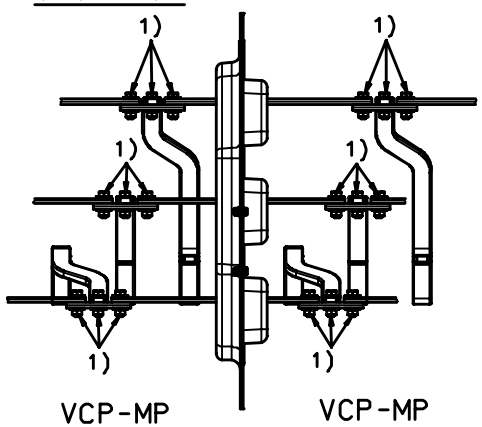

1x100x10

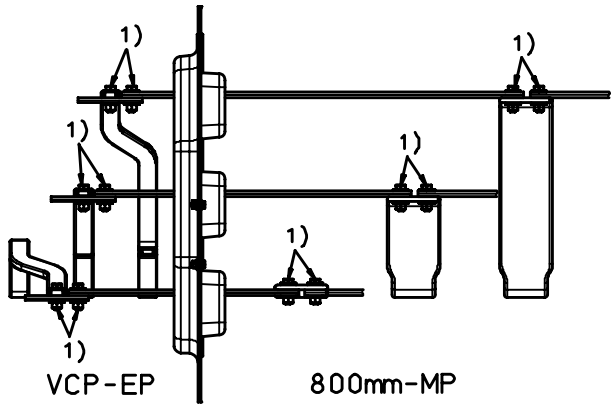

(FRONT SIDE OF THE PANEL)

(REAR SIDE OF THE PANEL)

2x100x10

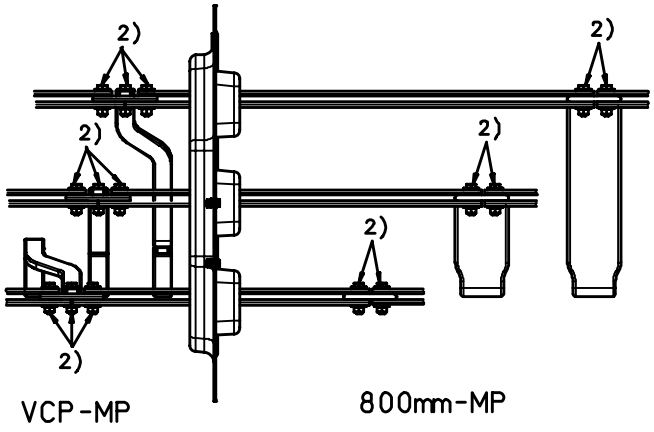

2x100x10

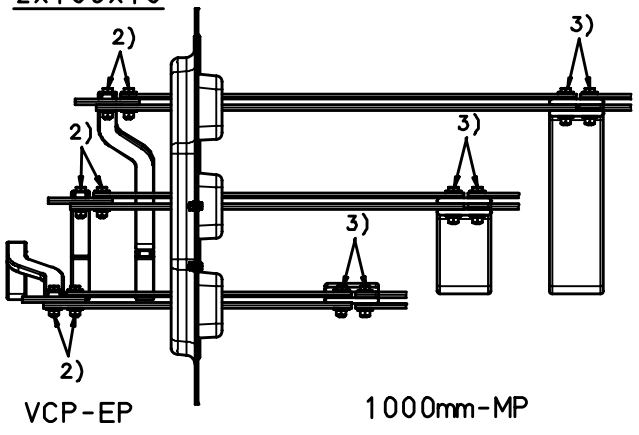

(FRONT SIDE OF THE PANEL)

1) 1x Hexagon head screw M12x40 ISO4017 (70Nm)
2x Spring washer 12 DIN6796
1x Hexagon nut M12 ISO4032 (70Nm)

2) 1x Hexagon head screw M12x50 ISO4017 (70Nm)
2x Spring washer 12 DIN6796
1x Hexagon nut M12 ISO4032 (70Nm)

3) 1x Hexagon head screw M12x60 ISO4017 (70Nm)
2x Spring washer 12 DIN6796
1x Hexagon nut M12 ISO4032 (70Nm)

Als Betriebsgeheimnis anvertraut. Alle Rechte vorbehalten.
Proprietary data, company confidential. All rights reserved.

Tolerance Toleranz (ISO)	Material;Werkstoff	Mass ; Masse	Papersize Format	11-04-2013	AYK	Date Datum	21-03-2013	Designation Benennung	ISO-Projection
-	-	-	B/A3	Date Datum	Name Name	Name Name	AYKOC	Busbar assembly on VCP 40kA	
--	-	-	Scale Massstab	13/2214	01	Department Abteilung	IC_LMV_MS_R&D_AIS2		Page Blatt
	Material No./Nr. 1 SWF:(-)	Material No./Nr. 2	Unit;Einheit mm	Mod./Ref-No. Aend.-Vorg.-Nr	Revision Revision	Location Standort	FFMCB	Itemnumber Sachnummer 110-0433.9	4+
			Released Freigabe Frei			SIEMENS			

HPD

printed by oprtcual, 04/11/13-13:18:09

Confié à titre de secret d'enterprise. Tous droits reserves.
Comunicado como segredo empresarial. Reservados todos os direitos.
Confiado como secreto industrial. Todos los derechos reservados.

Als Betriebsgeheimnis anvertraut. Alle Rechte vorbehalten.
Proprietary data, company confidential. All rights reserved.

Busbar	Panels disposal	Screw sets
4000A 3x120x10	MP-VCP	110-2808.3
	EP-VCP	110-2807.3

(REAR SIDE OF THE PANEL)

3x120x10

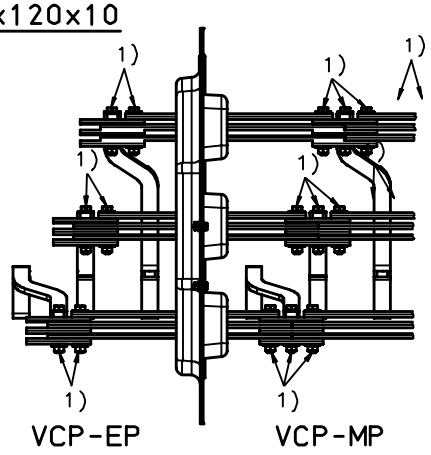

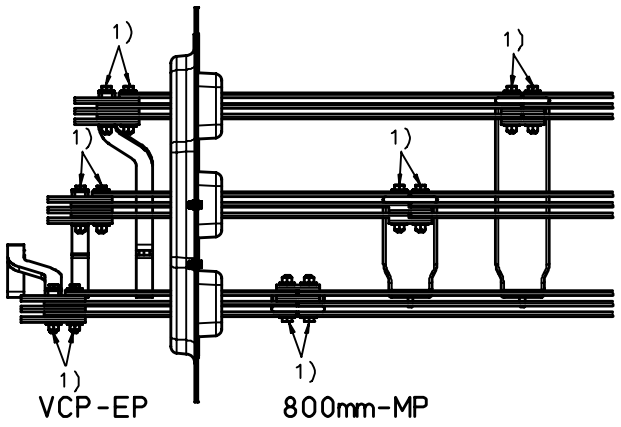

(FRONT SIDE OF THE PANEL)

(REAR SIDE OF THE PANEL)

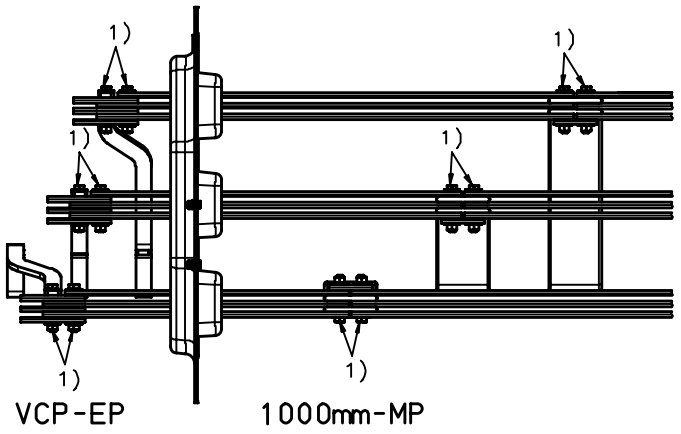

(FRONT SIDE OF THE PANEL)

1) 1x Hexagon head screw M12x80 ISO4017 (70Nm)
2x Spring washer 12 DIN6796
1x Hexagon nut M12 ISO4032 (70Nm)

Tolerance Toleranz (ISO)	Material;Werkstoff	Mass ; Masse	Papersize Format	11-04-2013	AYK	Date Datum	21-03-2013	Designation Benennung	ISO-Projection
-	-	-	B/A3	Date Datum	Name Name	Name Name	AYKOC	Busbar assembly on VCP 40kA	
--	-	Unit;Einheit mm	Scale Massstab -			Department Abteilung	IC_LMV_MS_R&D_AIS2		Page Blatt
	Material No./Nr. 1 SWF:(-)	Material No./Nr. 2	Released Freigabe Frei	13/2214	01	Location Standort	FFMCB	Itemnumber Sachnummer	5+
				Mod./Ref-No. Aend.-Vorg.-Nr	Revision Revision	SIEMENS		110-0433.9	

HPD

printed by oprtcual, 04/16/13-07:22:28

Confié a titre de secret d'enterprise. Tous droits reserves.
Comunicado como segredo empresarial. Reservados todos os direitos.
Confiado como secreto industrial. Todos los derechos reservados.

Als Betriebsgeheimnis anvertraut. Alle Rechte vorbehalten.
Proprietary data, company confidential. All rights reserved.

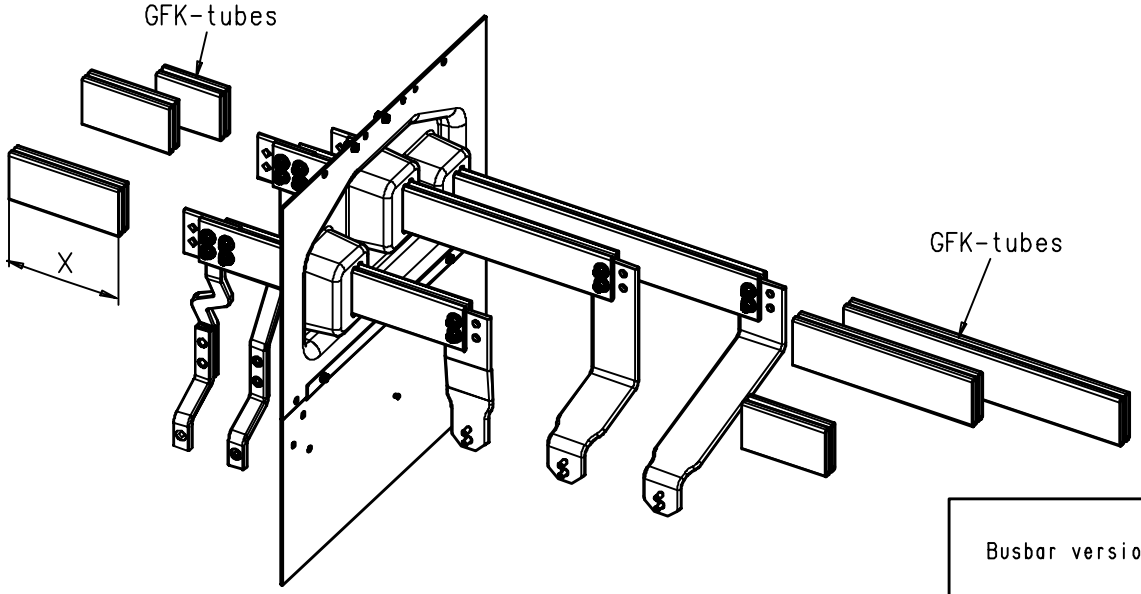

Busbar versions		GFK insulation part list		Length "X" (mm)					
				VCP Panel			Neighbour Panel		
		NSF	SF	L1	L2	L3	L1	L2	L3
VCP <-> VCP	1x100x10	110-2772.3	110-2773.3	239.25	189.5	139.25	54	104.5	154
	2x100x10	110-2774.3	110-2775.3						
	3x120x10	110-2776.3	110-2777.3	238.75	189.5	139	54	104.5	154
VCP <-> 800	1x100x10	110-2778.3	110-2779.3	239.25	189.5	139.25	82	292	502
	2x100x10	110-2780.3	110-2781.3						
	3x120x10	110-2812.3	110-2813.3	238.75	189.5	139	72	282	492
VCP <-> 1000	2x100x10	110-2810.3	110-2811.3	239.25	189.5	139.25	182	392	602
	3x120x10	110-2814.3	110-2815.3	238.75	189.5	139	172	382	592
VCP <-> CT on BB	1x100x10	110-2792.3	110-2793.3	239.25	189.5	139.25	229.5	200	229.5
	2x100x10	110-2794.3	110-2795.3						
	3x120x10	110-2796.3	110-2797.3	238.75	189.5	139	226	186	226
800 <-> VCP	1x100x10	110-2782.3	110-2783.3	587	377	167	54	104.5	154
	2x100x10	110-2785.3	110-2785.3						
	3x120x10	110-2788.3	110-2789.3	577	367	157	54	104.5	154
1000 <-> VCP	2x100x10	110-2786.3	110-2787.3	687	477	267	54	104.5	154
	3x120x10	110-2790.3	110-2791.3	677	467	257	54	104.5	154
CT <-> VCP on BB	1x100x10	110-2822.3	110-2823.3	314.5	282.75	314.5	54	104.5	154
	2x100x10	110-2824.3	110-2825.3						
	3x120x10	110-2826.3	110-2827.3	314.75	189.5	314.75	54	104.5	154

SF - Silicone free
NSF - Non silicone free

Tolerance Toleranz (ISO)	Material;Werkstoff	Mass ; Masse	Papersize Format	11-04-2013	AYK	Date Datum	21-03-2013
-	-	-	B/A3			Name Name	AYKOC
--	-	-	Scale Massstab	Date Datum	Name Name	Department Abteilung	IC_LMV_MS_R&D_AIS2
		Unit;Einheit mm	-	13/2214	01	Location Standort	FFMCB
	Material No./Nr. 1 SWF:(-)	Material No./Nr. 2	Released Freigabe Frei	Mod./Ref-No. Aend.-Vorg.-Nr	Revision Revision	SIEMENS	Itemnumber Sachnummer 110-0433.9

Designation Benennung: Busbar assembly on VCP 40kA

ISO-Projection

Page Blatt 6+

HPD

printed by oprtcual, 04/11/13-13:28:02

Confié à titre de secret d'enterprise. Tous droits reserves.
Comunicado como segredo empresarial. Reservados todos os direitos.
Confiado como secreto industrial. Todos los derechos reservados.

Als Betriebsgeheimnis anvertraut. Alle Rechte vorbehalten.
Proprietary data, company confidential. All rights reserved.

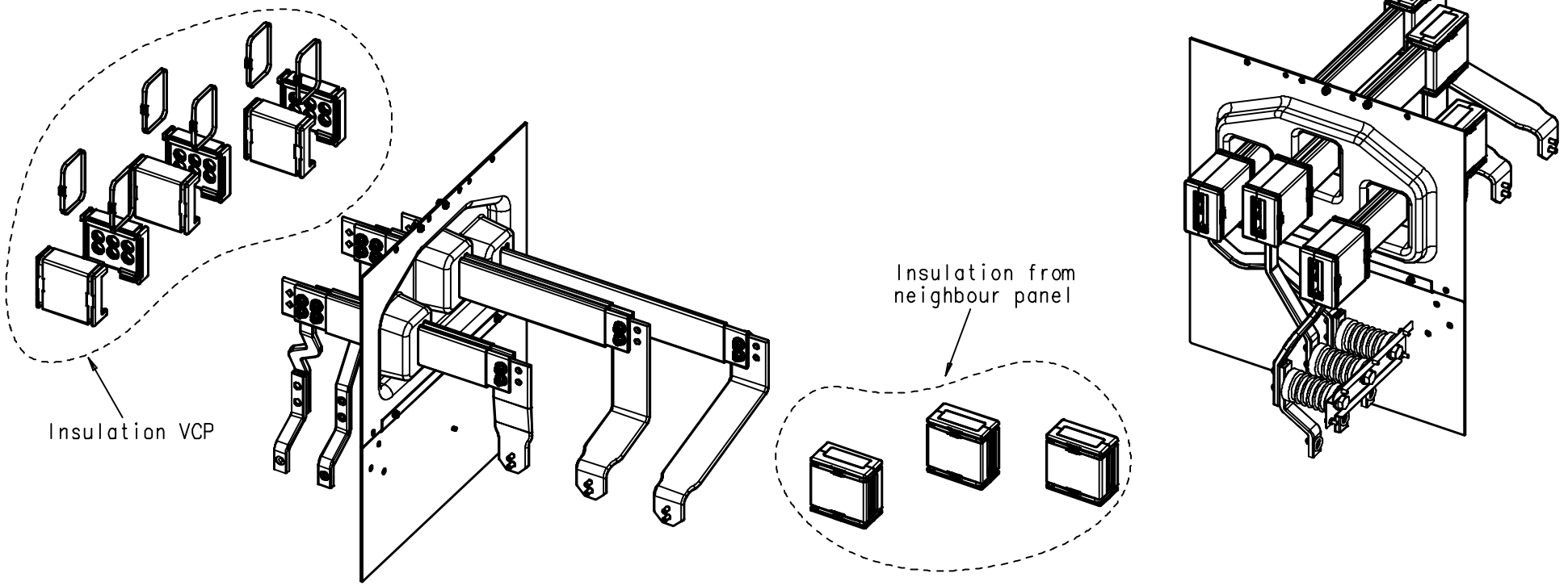

VCP	Busbar	7.2kV	Fully Insulated	
			NSF	SF
Middle Panel	1x100x10	none	110-2758.3	110-2759.3
	2x100x10	none	110-2762.3	110-2763.3
	3x120x10	none	110-2766.3	110-2767.3
End Panel	1x100x10	none	110-2760.3	110-2761.3
	2x100x10	none	110-2764.3	110-2765.3
	3x120x10	none	110-2770.3	110-2771.3

SF - Silicone free
NSF - Non silicone free

Tolerance Toleranz (ISO)	Material;Werkstoff	Mass ; Masse	Papersize Format	11-04-2013	AYK	Date Datum	21-03-2013	Designation Benennung	ISO-Projection
-	-	-	B/A3	Date Datum	Name Name	Name Name	AYKOC	Busbar assembly on VCP 40kA	
--	-	Unit;Einheit	Scale Massstab			Department Abteilung	IC_LMV_MS_R&D_AIS2		Page Blatt
		mm	-	13/2214	01	Location Standort	FFMCB		7-
	Material No./Nr. 1 SWF:(-)	Material No./Nr. 2	Released Freigabe Frei	Mod./Ref-No. Aend.-Vorg.-Nr	Revision Revision	SIEMENS		Itemnumber Sachnummer 110-0433.9	

HPD