SIEMENS

INSTALLATION & INSTRUCTION

PHASE SHIFT OVERLAY 4000 (PSO 4000)
PART NUMBERS 7A471, 7A473, 7A474, & 7A475

FEBRUARY 2024

DOCUMENT NO. SIG-00-07-06
VERSION C.7

Siemens Mobility, Inc.
One Penn Plaza
Suite 1100
New York, NY 10119-1101
1-800-793-SAFE
www.usa.siemens.com/rail-manuals

Copyright © 2024 Siemens Mobility, Inc.

All Rights Reserved

PRINTED IN THE U.S.A.

PROPRIETARY INFORMATION

The material contained herein constitutes proprietary and confidential information, and is the intellectual property of Siemens Mobility, Inc. (Siemens) protected under United States patent, copyright and/or other laws and international treaty provisions. This information and the software it describes are for authorized use only, and may not be: (i) modified, translated, reverse engineered, decompiled, disassembled or used to create derivative works; (ii) copied or reproduced for any reason other than specific application needs; or (iii) rented, leased, lent, sublicensed, distributed, remarketed, or in any way transferred; without the prior written authorization of Siemens. This proprietary notice and any other associated labels may not be removed.

TRANSLATIONS

The manuals and product information of Siemens Mobility, Inc. are intended to be produced and read in English. Any translation of the manuals and product information are unofficial and can be imprecise and inaccurate in whole or in part. Siemens Mobility, Inc. does not warrant the accuracy, reliability, or timeliness of any information contained in any translation of manual or product information from its original official released version in English and shall not be liable for any losses caused by such reliance on the accuracy, reliability, or timeliness of such information. Any person or entity that relies on translated information does so at his or her own risk.

WARRANTY INFORMATION

Siemens Mobility, Inc. warranty policy is as stated in the current Terms and Conditions of Sale document. Warranty adjustments will not be allowed for products or components which have been subjected to abuse, alteration, improper handling or installation, or which have not been operated in accordance with Seller's instructions. Alteration or removal of any serial number or identification mark voids the warranty.

SALES AND SERVICE LOCATIONS

Technical assistance and sales information on Siemens Mobility, Inc. products may be obtained at the following locations:

SIEMENS MOBILITY, INC.
2400 NELSON MILLER PARKWAY
LOUISVILLE, KENTUCKY 40223

TELEPHONE:	(502) 618-8800
FAX:	(502) 618-8810
SALES & SERVICE:	(800) 626-2710
WEB SITE:	www.usa.siemens.com/rail-manuals

SIEMENS MOBILITY, INC.
939 S. MAIN STREET
MARION, KENTUCKY 42064

TELEPHONE:	(270) 918-7800
CUSTOMER SERVICE:	(800) 626-2710
TECHNICAL SUPPORT:	(800) 793-7233
FAX:	(270) 918-7830

FCC RULES COMPLIANCE

The equipment covered in this manual has been tested and found to comply with the limits for Class A digital devices, pursuant to part 15 of the FCC Rules. These limits are designed to provide reasonable protection against harmful interference when the equipment is operated in a commercial environment. This equipment generates, uses, and can radiate radio frequency energy and, if not installed and used in accordance with the instruction manual, may cause harmful interference to radio communications. Operation of this equipment in a residential area is likely to cause harmful interference in which case the user will be required to correct the interference at his/her own expense.

DOCUMENT HISTORY

Version	Release Date	Sections Changed	Details of Change
A	Jul 2009		Initial Release
A.1	Jul 2009		Per Safety Case revision and release
A.2	Jun 2010		Per P4-F111
B	Jul 2010		Per P4-F112
B.1	Feb 2011		Per Randy O'Dell emails of 02-13-11 and 02-14-11
B.2	Mar 2012		Per Nathan Edds emails of 03-21-12 and 03-22-12
C	Jun 2012		All images reformatted to display properly in Adobe PDF format.
C.1	Apr 2014		Siemens Corporate Rebranding
C.2	Dec 2014		Section 7, Page 7-5, 7.4.1.3, Table 7-2: Made corrections to values in table for shunt distances
C.3	Apr 2016		Section 4, Page 4-6, 4.1.2.2, Table 4-5: Made corrections to values in table for Group 2 Frequencies
C.4	Apr 2017	Section 4	Page 4-4, Remove Note
C.5	Oct 2019	Section 4	Page 4-12, update 50,000 feet to 5,000.
C.6	Jul 2021	Section 1 Section 2 Section 3 Section 4 Section 5 Section 6 Section 7	Updated Section 1.1 with Receiver Threshold setting information. Updated Sections 2.3.8 /2.4.5 /2.5.7 with Receiver Threshold setting information. Update to Sections 3.4.1/3.4.3 regarding the Cab Signal Filter. Update to Section 4.1.4/4.1.5/4.1.6. Update to Section 5.2.6 regarding Broken Rail Detection. Added Receiver Threshold parameters to Tables 5.4, 5.5, 5.6, 5.7, 5.8, and 5.9. Updated all tables and lists with Receiver Threshold data. Update to Section 7.2.3, Track Wiring

Version	Release Date	Sections Changed	Details of Change
		Section 7 (cont.)	Updated Section 7.4.1 warning, 7.4.1.1 Receiver and Transceiver Calibration Procedure and 7.4.1.2 Crossing Assembly Approach Calibration and added warnings.
			Updated Tables 7.3 and 7.4 with receiver threshold data and warnings.
		Section 8	Updated Figure 8.2 Configuration Window.
		A-1	Updated glossary with Receiver Threshold data.
C.7	Feb 2024	Section 1	General content updates for 7A475 PSO 4000 Transceiver Assembly.
		Sections 1 & 4	Updated the three tables for Maximum Operating Distances at 0.06-Ohm Shunting Sensitivity for PSO Module various Frequencies (added 3 Ohm shunt column) .
		Section 1.2.5	Warning added.
		Sections 2	Updated all drawings to show Siemens logo.
		Section 2.5	Drawings updated throughout for the 7A475 PSO 4000 Transceiver Assembly.
		2.5.2	Added Figure 2-5 and note for Transceiver Assembly front panel description. Updated Table 2-9 to show RX 1 or 2.
		2.5.2.2	Added pins 5 and 6 for future use.
		Section 3	Updated all drawings to show Siemens logo.
		3.3.1.1	Text added to first paragraph regarding 7A355 coupler.
		3.5	Text added to end of section regarding adding an additional coupler.
		Section 5	Warnings added in Sections 5.1 and 5.3.
		Section 6	Warning added in Section 6.2. Updated all drawings with Siemens logo.
		Section 7	Content added to Section 7.1. Warnings added in Sections 7.1, 7.2.2. Added Module Replacement section. Updated all drawings with Siemens logo.
		8.1.2.4	Updated note with additional information about the threshold value.
		Section 9	Updated all drawings with Siemens logo.
		App A	Updated Table A-2 DT version & delivery method (flash drive).

Table of Contents

PROPRIETARY INFORMATION ii
TRANSLATIONS ii
WARRANTY INFORMATION ii
SALES AND SERVICE LOCATIONS ii
DOCUMENT HISTORY iii
NOTES, CAUTIONS, AND WARNINGS xv
ELECTROSTATIC DISCHARGE (ESD) PRECAUTIONS xvi
SECTION 1 System Overview 1-1
1.1 General 1-1
1.2 Specifications 1-4
1.2.1 Frequencies Available for Use with PSO 4000 1-4
1.2.2 PSO 4000 System Specifications 1-5
1.2.3 PSO Interoperability Plus Maximum Operating Distances and Frequency Groupings 1-6
1.2.4 Physical Data 1-10
1.2.5 Maintenance Data 1-11
SECTION 2 PSO 4000 Description 2-1
2.1 General 2-1
2.2 PSO 4000 Transmitter (P/N 7A471) 2-2
2.2.1 Transmitter Operation 2-2
2.2.2 Transmitter Physical Layout 2-3
2.2.3 Transmitter Configuration Settings 2-5
2.2.4 General Transmitter Parameters 2-7
2.2.5 Transmitter Configuration Parameters 2-8
2.2.6 Transmitter Default Settings 2-8
2.3 Receiver (P/N 7A473) 2-8
2.3.1 Receiver Operation 2-8
2.3.2 Receiver Physical Layout 2-9
2.3.3 Receiver Configuration Settings 2-11
2.3.4 Receiver Out of Service 2-12
2.3.5 Receiver LED Indicators 2-12
2.3.6 Receiver Configuration Parameters 2-13
2.3.7 Receiver Default Settings 2-14
2.3.8 Receiver Calibration 2-14
2.4 Crossing Assembly (P/N 7A474) 2-14

2.4.1 Crossing Assembly Operation 2-14
2.4.2 Crossing Assembly Physical Layout 2-15
2.4.3 Crossing Assembly Configuration Settings 2-19
2.4.4 Crossing Assembly Default Settings 2-19
2.4.5 Crossing Assembly Calibration 2-19
2.4.6 Crossing Assembly Out of Service 2-20
2.5 PSO 4000 Transceiver Assembly (P/N 7A475) 2-21
2.5.1 Transceiver Assembly Theory of Operation 2-21
2.5.2 Transceiver Assembly Physical Layout 2-21
2.5.3 Transceiver Assembly Configuration Settings 2-25
2.5.4 Transceiver Assembly LED Indicators 2-25
2.5.5 Transceiver Assembly Configuration Parameters 2-26
2.5.6 Transceiver Assembly Default Settings 2-26
2.5.7 Transceiver Assembly Calibration 2-26
2.5.8 Transceiver Assembly Out of Service 2-27
2.6 PSO 4000 System Wide Common Data 2-28
2.6.1 Version Data 2-28
2.6.2 Receiver Data 2-28
2.6.3 Diagnostic Data 2-28
2.6.4 Out of Service Data 2-29
2.6.5 Diagnostic Port Data 2-30
2.6.6 Diagnostic Message Data 2-31
2.6.7 Performance Data 2-31
2.6.8 System Data 2-32
2.6.9 Event Recording 2-32
2.6.10 LED Data 2-33
2.7 PSO 4000 System Functional Requirements 2-34
2.7.1 General 2-34
2.7.2 Directional Stick Logic Application Data 2-35
SECTION 3 Auxiliary Equipment 3-1
3.1 General 3-1
3.2 Battery Chokes and Filters 3-2
3.2.1 Equipment Description 3-2
3.2.2 Mounting Dimensions 3-2
3.2.3 Application Installation, 7A360, 62648 & 8A065A 3-4

3.2.4 PSO Battery Line Filter, 7A418 3-5
3.3 PSO Couplers 3-6
3.3.1 Tuned Receiver Coupler, 7A355-f 3-7
3.3.2 Tuned Receiver Coupler, Hi Z, 7A366-f 3-8
3.3.3 Line to Receiver Coupler, 7A388 3-9
3.3.4 Receiver Line to Rail Coupler, 7A377-1-f & Receiver Line to Rail Coupler, 7A377-2-f 3-11
3.3.5 Transmitter Line to Rail Coupler, 7A399-f 3-14
3.3.6 PSO Line Coupler, Low Z, 7A403 with PSO Line Terminator, 7A345 3-15
3.3.7 PSO Insulated Joint Bypass Coupler (Tuned), 7A422-f 3-17
3.4 AC Track Circuit/CAB SIGNAL FILTER, 7A417-X 3-20
3.4.1 Equipment Description, 7A417-X 3-20
3.4.2 Mounting Dimensions, 7A417-X 3-20
3.4.3 Application Installation, 7A417-X 3-21
3.5 Surge Protection Requirements Battery Surge Application Installation 3-23
3.5.1 Surge and Track Wire Protection for Electrified Track 3-24
3.6 AC Shunt, Wide Band, 8A076A 3-25
3.6.1 Equipment Description, 8A076A 3-25
3.6.2 Mounting Dimensions, 8A076A 3-25
3.6.3 Application Instruction, 8A076A 3-26
SECTION 4 Application Guidelines 4-1
4.1 General 4-1
4.1.1 PSO Interoperability Plus Maximum Operating Distances and Frequency Groupings .. 4-1
4.1.2 AFO Frequency and 3000/4000 Family GCP Frequency Compatibility 4-5
4.1.3 0.06-Ohm Shunting Sensitivity and No Impedance Bonds 4-8
4.1.4 0.2-Ohm Shunting Sensitivity and No Impendence Bonds 4-8
4.1.5 0.06-Ohm Shunting Sensitivity with Impedance Bonds 4-8
4.1.6 0.2-Ohm Shunting Sensitivity with Impedance Bonds 4-8
4.2 Frequency Usage and Compatibility Guidelines 4-9
4.2.1 Non-Electrified Track 4-9
4.2.2 Electrified Track 4-9
4.2.3 Frequency Groups 4-9
4.3 Requirements for Over Rail Non-Shunting Applications 4-11
4.4 Auxiliary Equipment Application Guidelines 4-12
4.4.1 AC Current/Cab Signal Filter, 7A417-X 4-12
4.4.2 Transmitter Line Applications 4-12

4.4.3 Receiver Line Applications 4-13
4.4.4 Insulated Joint Bypass Couplers (Non-Electrified Rail Only) 4-13
4.4.5 Battery Choke 4-14
4.4.6 Surge Protection 4-14
4.4.7 Use of PSO 4000 with PSO II and PSO III Equipment 4-14
SECTION 5 PSO 4000 System Menu Description 5-1
5.1 General 5-1
5.2 Menu System Overview 5-2
5.2.1 Controls and Indicators Used in Menu Navigation 5-2
5.2.2 Unit Main Menu Layouts 5-3
5.2.3 Navigating the Menus 5-4
5.2.4 Setup Menu Processes 5-5
5.2.5 Program Menu Processes 5-5
5.2.6 Calibration Menu Processes 5-6
5.2.7 Unit Functional Testing 5-6
5.3 Unit Main Menus 5-7
5.3.1 PSO 4000 Transmitter 5-8
5.3.2 PSO 4000 Receiver 5-11
5.3.3 PSO 4000 Crossing Assembly 5-16
5.3.4 PSO 4000 Transceiver Assembly 5-25
SECTION 6 PSO 4000 Application Programming Guidelines 6-1
6.1 Introduction and Overview 6-1
6.2 Logic Programming 6-1
6.2.1 Health/Stick Output Logic 6-1
6.2.2 Stick Cancel Timer and Directional Stick Logic 6-1
6.3 External Controlling of the PSO 4000 By Use of Inputs 6-6
6.3.1 Example 1: External Control of Crossing Relay (XR) Using External Input Control 6-7
6.3.2 Example 2: External Control of Receiver 1 Using External Input Control 6-7
6.3.3 Example 3: External Control of Receiver 2 Using External Input Control 6-7
6.3.4 Example 4: External Control of the Island Using External Input Control 6-7
6.3.5 Example 5: External Control of the Stick Cancel Timer 6-7
6.4 External Track Circuit Replacing a Crossing Assembly Component 6-7
6.4.1 Using an External Track Circuit in Place of Receiver 1 6-7
6.4.2 Using an External Track Circuit in Place of Receiver 2 6-7
6.4.3 Using an External Island Track Circuit in Place of the internal Island 6-7

6.5 Out of Service Operations 6-8
6.5.1 Component OOS Options 6-9
6.6 Example Programming for Various PSO 4000 Applications 6-13
6.6.1 Example 1: Programming of a Generic Track Circuit 6-13
6.6.2 Example 2: Programming of Typical Crossing Assembly Track Circuits 6-17
6.6.3 Example 3: Programming of Typical Transceiver Assembly Track Circuits 6-22
SECTION 7 Installation, Calibration, & Checkout Procedures 7-1
7.1 General Requirements 7-1
7.2 Wiring Requirements 7-1
7.2.1 Battery Wiring 7-1
7.2.2 Case Wiring 7-1
7.2.3 Track Wiring 7-2
7.3 PSO 4000 Installation 7-2
7.4 PSO 4000 Calibration 7-3
7.4.1 PSO 4000 Receiver, Crossing Assbly & Transceiver Assbly Receiver Calibration 7-3
7.5 PSO 4000 Checkout Procedures 7-10
7.5.1 Receiver and Transceiver Checkout Procedures 7-10
7.5.2 Crossing Assembly Checkout Procedures 7-11
7.6 Recalibration and Reprogramming 7-13
7.6.1 Recalibration/Reprogramming Requirements Due to Programming Changes 7-13
7.6.2 Recalibration/Reprogramming Requirements Due to Track Equipment Changes 7-14
7.7 Module Replacement 7-15
SECTION 8 Downloading Logs & Software 8-1
8.1 Downloading Recorded Data to a Computer File 8-1
8.1.1 Connecting the PSO 4000 to a HyperTerminal 8-1
8.1.2 Using the HyperTerminal 8-1
SECTION 9 Application Diagrams 9-1
APPENDIX A Miscellaneous Information A-1
A.1 Glossary A-1
A.2 Ordering Information A-3
APPENDIX B Dynamic Addressing of PSO 4000 Units B-1
B.1 Purpose of Dynamic Addressing B-1
B.2 Plannng the use of Dynamic Addressing B-1
APPENDIX C Troubleshooting C-1
C.1 General C-1

C.2 Diagnostic Messages....C-1
C.3 Troubleshooting other PSO 4000 Issues....C-3
APPENDIX D Data Transfer....D-1
D.1 Downloading Recorded Data to a Computer File....D-1
D.2 Using the Siemens Diagnostic Terminal....D-8

List of Figures

Figure 1-1 PSO 4000 Family (Transmitter, Receiver, Crossing Assembly, & Transceiver Assembly).. 1-1
Figure 1-2 PSO 4000 Mounting Dimensions 1-10
Figure 2-1 PSO 4000 Transmitter, 7A471 2-3
Figure 2-2 PSO 4000 Receiver, 7A473 2-9
Figure 2-3 PSO 4000 Crossing Assembly, 7A474 2-15
Figure 2-4 PSO 4000 Transceiver Assembly, P/N 7A475 (RX only) 2-22
Figure 2-5 PSO 4000 Transceiver Assembly, P/N 7A475 (RX1 and RX2) 2-23
Figure 3-1 PSO Battery Choke, 7A360 With Mounting Dimensions 3-2
Figure 3-2 Battery Choke, 62648 & Battery Choke, 8A065A with Mounting Dimensions 3-3
Figure 3-3 Typical Battery Chokes 8A065A, 62648, or PSO Battery Choke, 7A360 Application Installation 3-4
Figure 3-4 PSO Battery Line Filter, 7A418, With Mounting Dimensions 3-5
Figure 3-5 Battery Line Filter Usage Guidelines 3-6
Figure 3-6 Tuned Receiver Coupler, 7A355-f 3-7
Figure 3-7 Tuned Receiver Coupler, Hi Z, 7A366-f 3-8
Figure 3-8 Line to Receiver Coupler, 7A388 3-10
Figure 3-9 Receiver Line to Rail Coupler, 7A377-1-f 3-12
Figure 3-10 Receiver Line to Rail Coupler, 7A377-2-f 3-13
Figure 3-11 Transmitter Line to Rail Coupler, 7A399-f 3-15
Figure 3-12 PSO Line Coupler, Low Z, 7A403 with PSO Line Terminator, 7A345 3-16
Figure 3-13 PSO Insulated Joint Bypass Coupler (Tuned), 7A422-f 3-18
Figure 3-14 Typical 7A422-f Tuned Joint Bypass Coupler Application 3-19
Figure 3-15 Cab Signal Filter Installation Diagrams 3-21
Figure 3-16 Cab Signal Filter, 7A417-X, with Mounting Dimensions 3-22
Figure 3-17 Primary Battery Surge Protection 3-23
Figure 3-18 Surge and Fused Track Wire Protection in Electrified Track 3-24
Figure 3-19 AC Shunt, Wide Band, 8A076A 3-26
Figure 3-20 Insulated Joint Coupler Installation 3-26
Figure 5-1 PSO 4000 Units 5-1
Figure 6-1 Directional Stick Example – Train Not Yet in Approach 6-2
Figure 6-2 Directional Stick Example – Train Enters RX2 6-3
Figure 6-3 Directional Stick Example – Train Enters Island 6-4
Figure 6-4 Directional Stick Example – Train Enters RX1, Stick 1 Set 6-4
Figure 6-5 Directional Stick Example – Train Exits RX2 and Island 6-5

Figure 6-6 Directional Stick Example – Train Exits RX1 6-6
Figure 6-7 Generic PSO 4000 NWP Application 6-14
Figure 6-8 Typical Crossing Application 6-17
Figure 6-9 Typical Transceiver As Repeater Application 6-22
Figure 7-1 a) Transmitter Lower 10-Pin Connector, b) Receiver RX Occupancy Indicator 7-10
Figure 7-2 a) Transmitter Lower 10-Pin Connector, b) Crossing Assembly Lower 10-Pin Connector and Occupancy Indicator LEDs 7-11
Figure 8-1 PSO 4000 HyperTerminal Main Menu Window 8-1
Figure 8-2 PSO 4000 HyperTerminal Configuration Window 8-2
Figure 8-3 PSO 4000 HyperTerminal Status Log Window 8-3
Figure 8-4 PSO 4000 HyperTerminal Summary Log Window 8-4
Figure 8-5 PSO 4000 HyperTerminal Monitor Window 8-5
Figure 8-6 PSO 4000 HyperTerminal with Menu Window Closed 8-7
Figure 9-1 Surge and Fused Track Wire Protection in Electrified Track 9-2
Figure 9-2 Primary Battery Surge Protection 9-3
Figure 9-3 PSO 4000 Transmitter (7A471), Receiver (7A473), Crossing Assembly (7A474), & Transceiver Assembly (7A475) 9-4
Figure 9-4 Typical PSO 4000 NWP Application 9-5
Figure 9-5 Typical PSO 4000 Crossing Installation Application 9-6
Figure 9-6 Typical PSO 4000 Transceiver as Repeater Application 9-7
Figure 9-7 Basic Transceiver as Electric Lock Application 9-8
Figure 9-8 PSO Application using Tuned Receiver Coupler, Hi Z, 7A366-f 9-9
Figure 9-9 PSO 4000 Application using Line to Receiver Coupler, 7A388 and Receiver Line to Rail Coupler, 7A377-1-f 9-10
Figure 9-10 PSO 4000 Application using Line to Receiver Coupler, 7A388 and Receiver Line to Rail Coupler, 7A377-2-f 9-11
Figure 9-11 PSO 4000 Application using Transmitter Line to Rail Coupler, 7A399-f, Line to Receiver Coupler, 7A388 9-12
Figure 9-12 PSO 4000 Application using Transmitter Line to Rail Coupler, 7A399-f with Line to Receiver Coupler, 7A388 and Line to Receiver Coupler, 7A388 with Receiver Line to Rail Coupler, 7A377-2-f 9-13
Figure 9-13 Typical PSO 4000 Line Overlay Application using PSO Line Coupler, Low Z, 7A403 with PSO Line Terminator, 7A345 9-14

List of Tables

Table 1-1 Approach Frequencies Available for Use with PSO Module 1-4

Table 1-2 Island Frequencies Available for Use with PSO Module 1-5

Table 1-3 PSO 4000 System Specifications 1-5

Table 1-4 PSO 4000 Current Draw Specifications 1-6

Table 1-5 Maximum Operating Distances at 0.06-Ohm Shunting Sensitivity for PSO Module Standard Frequencies 1-7

Table 1-6 Maximum Operating Distances at 0.06-Ohm Shunting Sensitivity for PSO Module Alternate I (Harmon AFTAC II) Frequencies 1-8

Table 1-7 Maximum Operating Distances at 0.06-Ohm Shunting Sensitivity for PSO Module Alternate II (US&S AFO) Frequencies 1-9

Table 1-8 Physical Dimensions and Environmental Ranges 1-10

Table 2-1 Transmitter, P/N 7A471 Operating Controls 2-4

Table 2-2 Transmitter 10-Pin Connector Assignment Chart 2-4

Table 2-3 Input States & Codes Transmitted when Dynamic Addressing is Selected 2-6

Table 2-4 Receiver, P/N 7A473 Operating Controls 2-10

Table 2-5 Receiver 10-pin Connector Assignment Chart 2-10

Table 2-6 Crossing Assembly, P/N 7A474 Operating Controls 2-16

Table 2-7 Crossing Assembly 10-pin Connector Assignment Chart 2-16

Table 2-8 Transceiver Assembly, P/N 7A471 Operating Controls 2-23

Table 2-9 Transceiver Assembly 10-pin Connector Assignment Chart 2-24

Table 2-10 Output Occupancy Energization Times 2-31

Table 3-1 Equipment-Paragraph Cross Reference Chart 3-1

Table 3-2 Cab Signal Filter Relay Base Manufacturer-Frequency Cross Reference 3-20

Table 3-3 Cab Signal Filter Dimensions 3-20

Table 4-1 Maximum Operating Distances at 0.06-Ohm Shunting Sensitivity for PSO Module Standard Frequencies 4-2

Table 4-2 Maximum Operating Distances at 0.06-Ohm Shunting Sensitivity for PSO Module Alternate I (Harmon AFTAC II) Frequencies 4-3

Table 4-3 Maximum Operating Distances at 0.06-Ohm Shunting Sensitivity for PSO Module Alternate II (US&S AFO) Frequencies 4-4

Table 4-4 PSO Module Standard Frequency and 3000/4000 Family GCP Frequency Compatibility 4-5

Table 4-5 PSO Module Alternate I (Harmon AFTAC II) Frequency and 3000/4000 Family GCP Frequency Compatibility 4-6

Table 4-6 PSO Module Alternate II (US&S AFO) Frequency and 3000/4000 Family GCP Frequency Compatibility 4-7

Table 4-7 Track Frequency Groups 4-10

Table 5-1 General Menu Navigation and Selection Using The Pushbuttons 5-4
Table 5-2 PSO 4000 Transmitter Menu System 5-8
Table 5-3 PSO 4000 Transmitter Default Menu Settings 5-11
Table 5-4 PSO-4000 Receiver Menu System 5-12
Table 5-5 PSO 4000 Receiver Menu Default Settings 5-15
Table 5-6 PSO 4000 Crossing Assembly Menu System 5-17
Table 5-7 PSO 4000 Crossing Assembly Menu Default Settings 5-24
Table 5-8 PSO 4000 Transceiver Assembly Menu System 5-26
Table 5-9 PSO 4000 Transceiver Assembly Menu Default Settings 5-30
Table 6-1 Example 1 PSO 4000 Transmitter Settings 6-15
Table 6-2 Example 1 PSO 4000 Receiver Settings 6-16
Table 6-3 Example 2 WOT PSO 4000 Transmitter Settings 6-18
Table 6-4 Example 2 EOT PSO 4000 Transmitter Settings 6-19
Table 6-5 Example 2 PSO 4000 Crossing Assembly Settings 6-20
Table 6-6 Example 3 OT1 PSO 4000 Transmitter Settings 6-23
Table 6-7 Example 3 PSO 4000 Transceiver Assembly Settings 6-24
Table 6-8 Example 3 OT2 PSO 4000 Receiver Settings 6-26
Table 7-1 Maximum Distances for Track Wire by AWG Size 7-2
Table 7-2 Hardwire Shunt Placement Distances for Various Shunting Sensitivities & Island Frequencies 7-7
Table 7-3 Recalibration/Reprogramming Requirements Due to Programming Changes 7-13
Table 7-4 Recalibration/Reprogramming Requirements Due to Track Equipment Changes 7-14
Table 9-1 PSO 4000 Application Drawings 9-1

NOTES, CAUTIONS, AND WARNINGS

Throughout this manual, notes, cautions, and warnings are frequently used to direct the reader's attention to specific information. Use of the three terms is defined as follows:

WARNING

INDICATES A POTENTIALLY HAZARDOUS SITUATION WHICH, IF NOT AVOIDED, COULD RESULT IN DEATH OR SERIOUS INJURY. WARNINGS ALWAYS TAKE PRECEDENCE OVER NOTES, CAUTIONS, AND ALL OTHER INFORMATION.

CAUTION

REFERS TO PROPER PROCEDURES OR PRACTICES WHICH IF NOT STRICTLY OBSERVED, COULD RESULT IN A POTENTIALLY HAZARDOUS SITUATION AND/OR POSSIBLE DAMAGE TO EQUIPMENT. CAUTIONS TAKE PRECEDENCE OVER NOTES AND ALL OTHER INFORMATION, EXCEPT WARNINGS.

NOTE

Generally used to highlight certain information relating to the topic under discussion.

If there are any questions, contact Siemens Mobility, Inc. Application Engineering

ELECTROSTATIC DISCHARGE (ESD) PRECAUTIONS

Static electricity can damage electronic circuitry, particularly low voltage components such as the integrated circuits commonly used throughout the electronics industry. Therefore, procedures have been adopted industry-wide which make it possible to avoid the sometimes invisible damage caused by electrostatic discharge (ESD) during the handling, shipping, and storage of electronic modules and components. Siemens Mobility, Inc. has instituted these practices at its manufacturing facility and encourages its customers to adopt them as well to lessen the likelihood of equipment damage in the field due to ESD. Some of the basic protective practices include the following:

- Ground yourself before touching card cages, assemblies, modules, or components.
- Remove power from card cages and assemblies before removing or installing modules.
- Remove circuit boards (modules) from card cages by the ejector lever only. If an ejector lever is not provided, grasp the edge of the circuit board but avoid touching circuit traces or components.
- Handle circuit boards by the edges only.
- Never physically touch circuit board or connector contact fingers or allow these fingers to come in contact with an insulator (e.g., plastic, rubber, etc.).
- When not in use, place circuit boards in approved static-shielding bags, contact fingers first. Remove circuit boards from static-shielding bags by grasping the ejector lever or the edge of the board only. Each bag should include a caution label on the outside indicating static-sensitive contents.
- Cover workbench surfaces used for repair of electronic equipment with static dissipative workbench matting.
- Use integrated circuit extractor/inserter tools designed to remove and install electrostatic-sensitive integrated circuit devices such as PROMs (OK Industries, Inc., Model EX-2 Extractor and Model MOS-40 Inserter (or equivalent) are highly recommended).
- Utilize only anti-static cushioning material in equipment shipping and storage containers.

For information concerning ESD material applications, please contact the Technical Support Staff at 1-800-793-7233. ESD Awareness Classes and additional ESD product information are also available through the Technical Support Staff.

SECTION 1 **SYSTEM OVERVIEW**

1.0 SYSTEM OVERVIEW

1.1 GENERAL

The Phase Shift Overlay 4000 Track Circuit (PSO 4000) is a reliable and secure processor-based track occupancy overlay system that activates crossing warning devices as well as other systems and is sufficiently versatile to permit use in a wide variety of complex applications.

The PSO 4000 has four configurations, and each has a single printed circuit unit:

- PSO 4000 Transmitter, Part Number 7A471 (one transmitter).
- PSO 4000 Receiver, Part Number 7A473 (one receiver).
- PSO 4000 Crossing Assembly, Part Number 7A474 (two receivers and one island circuit).
- PSO 4000 Transceiver Assembly, Part Number 7A475 (one transmitter and one or two receivers).

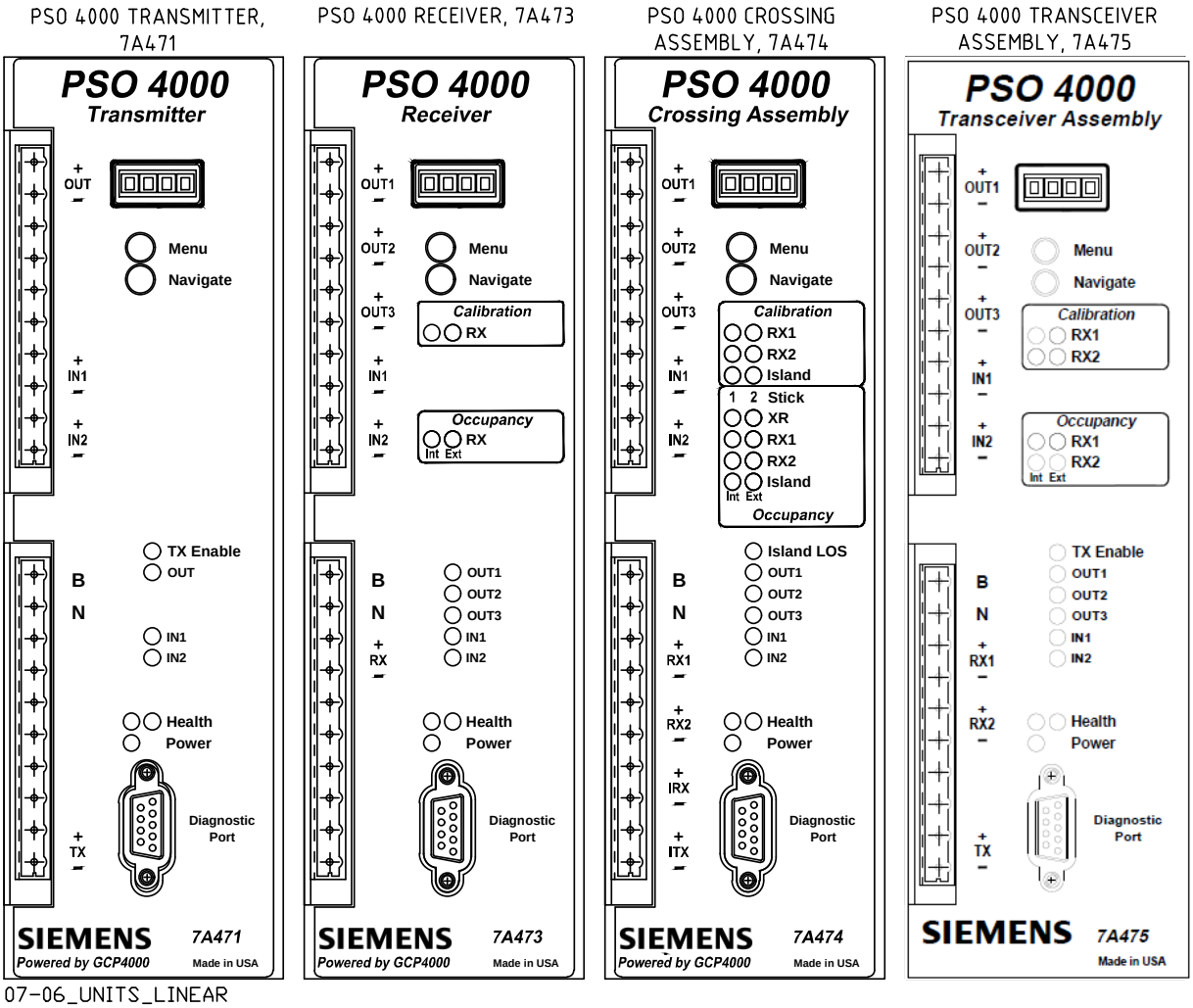

Figure 1-1 PSO 4000 Family (Transmitter, Receiver, Crossing Assembly, & Transceiver Assembly)

Additionally, each of the configurations has Vital Relay Outputs (VROs) and Vital Parallel Inputs (VPIs).

The PSO 4000 includes several features that were not available on the PSO II and PSO III. These are:

- Vital processor based.
- Receiver, transceiver assembly and crossing assembly each have three selectable vital outputs and two vital inputs.
- Additional PSO frequencies are provided.
- Provides internal logging of PSO 4000 operation.
- Menu driven using a four character display.

Menus provide field selectable options such as:

- PSO transmitter, receiver and island frequencies.
- PSO transmit power.
- Up to five unique modulation address codes.
- Configurable inputs and outputs for an application.
- Configurable receiver, island and input pickup delays.
- Internal Directional Stick Logic and Stick Cancel Timer.
- Taking units Out of Service.

The PSO 4000 transmitter, receiver, crossing assembly and transceiver assembly are functionally compatible with the PSO III receiver and transmitter as well as the PSO II receiver and PSO II transmitter when using an A or C address.

The transmitter generates a modulated audio-frequency track signal. It sends a coded, 8-bit address code through the rails using an audio frequency signal as a carrier. The rail connections for the coupling unit delimit the other end of the track circuit. The modulated signal is detected by the receiver where it is decoded and processed. The Receiver responds only to signals of the proper frequency, address, and amplitude. The ability of PSO 4000 to differentiate between its operating signal and all other signals present on the track is due to the nonsymmetrical coded modulation and receiver decoding techniques which ensure that the system is immune to random or foreign AM, FM, and beat signals. The receiver decodes the signal and, if it qualifies the signal as valid, the receiver produces an output to energize a vital relay. The receiver is connected to the track via a Tuned Receiver Coupler, which is a separate piece of equipment.

No insulated joints are needed to confine the signal because the coupling units have low impedance at the operating frequency of the track circuit, and high impedance at all other frequencies. The PSO 4000 can also be used on the same track used for coded or non-coded DC or AC track circuits, Grade Crossing Predictors (GCPs), motion detectors, and other audio frequency track circuits.

The crossing assembly includes two receivers plus a combination transmitter/receiver Island Track Circuit that is incorporated into the crossing card. The Crossing Assembly is capable of performing the Directional Stick Logic associated with a crossing application and has a Stick Cancel Timer as well. The Crossing Assembly provides configurable receiver and island pickup delays. The Crossing Assembly has the flexibility to use external inputs instead of or in addition to the internal PSO receivers and island. For instance, if the installation already has a track circuit in place (e.g., a DC track circuit), this could be used in place of one of the PSOs. Either of the PSO receivers and/or the Island may be enabled or disabled. The Crossing Assembly enables the system to supply a limited distance audio frequency track circuit with an effective range between 120 to 500 ft. (36.6 to 152.4 m).

The crossing assembly island circuit performs a similar function as Siemens's Model 71150 Intelligent Processor Island Track Circuit (IPITC). While designated primarily for use as the island track circuit at highway crossings, the system satisfies any application requiring a short, high-definition, audio frequency track circuit.

The PSO 4000 is available with up to five address codes and a wide variety of carrier frequencies. Sixteen PSO 4000 carrier frequencies, ranging from 156 Hz to 4000 Hz, are available for use and an additional 31 common frequencies, ranging from 500 Hz to 10200 Hz, typically used by non-Siemens equipment, are also available for use. Fourteen standard island frequencies are available for the Crossing Assembly and range from 2.14 kHz to 20.2 kHz; an additional 15 alternate island frequencies used by non-Siemens equipment that range from 2.3 kHz to 10.2 kHz are also available. For installations where multiple circuits are required on the same track, when using standard PSO channels, the PSO 4000 has two sets of eight frequencies each, that can be connected as required with negligible interference. Contact Siemens for applications using the alternative frequencies.

In applications requiring broken rail detection, a Receiver Threshold adjustment is available. This allows for adjustments to be compatible with the leakage paths associated with propulsion return circuits. With specialized coupling units, the PSO 4000 units may also provide line overlay applications.

1.2 SPECIFICATIONS

1.2.1 Frequencies Available for Use with PSO 4000

WARNING

NEVER USE AN APPROACH FREQUENCY THAT IS THE SAME AS THE ISLAND FREQUENCY.

The PSO Module Standard frequencies depicted in Table 1-1 are available for use with the PSO Module when utilized as a PSO transmitter or receiver. The Alternate I and Alternate II frequencies depicted in Table 1-1 are those typically used by other equipment and are available for use with PSO module. However, the alternate frequencies use Siemens modulation patterns and are not directly compatible with non-Siemens transmitters or receivers. When PSO module Receiver-Transmitter pairs are deployed, they can be substituted for other non-PSO II/III legacy overlay equipment operating on the same channel.

NOTE

When mixing standard and alternate frequencies, several frequencies may not be compatible due to harmonic content.

Table 1-1 Approach Frequencies Available for Use with PSO Module

Application Type	Frequencies Used
PSO Module Standard Frequencies (Hz)	156, 211, 285, 348, 430, 525, **645, 790, 970, 1180, 1450, 1770, 2140, 2630, 3240, 4000**
PSO Module Alternate I (Harmon AFTAC II) Frequencies (Hz)	500, **700, 900, 1100, 1300, 1600, 1640, 2300, 2800, 3100, 3500, 4000, 4900, 5400, 5900, 6400, 7100, 7700, 8300, 8900, 9500, 10200**
PSO Module Alternate II (US&S AFO) Frequencies (Hz)	**1000, 1100, 1125, 1250, 1375, 1500, 1640, 1750, 1875, 2175, 2300, 2675, 2800**

(Frequencies in **bold** text are recommended for use in electrified territories)

Table 1-2 Island Frequencies Available for Use with PSO Module

Application Type	Frequencies Used
PSO Module Standard Island Frequencies (Hz)	**2.14 kHz, 2.63 kHz, 3.24 kHz, 4.00 kHz, 4.90 kHz, 5.90 kHz, 7.10 kHz, 8.30 kHz, 10.0 kHz, 11.5 kHz, 13.2 kHz, 15.2 kHz, 17.5 kHz, 20.2 kHz**
PSO Module Alternate I (Harmon AFTAC II) and Alternate II (US&S AFO) Island Frequencies (Hz)	**2.3 kHz, 2.8 kHz, 3.1 kHz, 3.5 kHz, 4.0 kHz, 4.9 kHz, 5.4 kHz, 5.9 kHz, 6.4 kHz, 7.1 kHz, 7.7 kHz, 8.3 kHz, 8.9 kHz, 9.5 kHz, 10.2 kHz**

(Frequencies in **bold** text are recommended for use in electrified territories)

1.2.2 PSO 4000 System Specifications

Table 1-3 PSO 4000 System Specifications

Parameter	Values
Frequency Stability:	±0.01% (Hz) of the selected frequency
Modulation	Frequency Modulation with 8-bit serial address
Receiver Selectivity	Minimum 60 dB down on adjacent channels
Track Circuit Shunt	Typical values are between 0.06 ohm and 0.5 ohm sensitivity, other values are application dependent
Track Transmitter Load	25 Ohm
Track Receiver Load	250 Ohm
Island Selectivity	Minimum 30 dB down on adjacent channels
Relay Coil Resistance	400 to 1,000 Ohms
Input Power Supply	9.0 VDC to 16.5 VDC, 12.0 VDC nominal
Power Supply Ripple	1.0 VDC Peak to Peak maximum

Table 1-4 PSO 4000 Current Draw Specifications

Supply Voltage	9.0 V	12.0 V	16.5 V
PSO 4000 Transmitter, 7A471	0.849 A	0.604 A	0.435 A
PSO 4000 Receiver, 7A473	1.020 A	0.753 A	0.548 A
PSO 4000 Crossing Assembly, 7A474	0.871 A	0.630 A	0.459 A
PSO 4000 Transceiver Assembly, 7A475	1.120 A	0.820 A	0.588 A

1.2.3 PSO Interoperability Plus Maximum Operating Distances and Frequency Groupings

NOTE

NOTE

All PSO frequencies are available to be used in Electrified Propulsion Territory. An engineering review of interfering harmonics should be conducted.

1.2.3.1 PSO Module Standard Frequency Data

Table 1-5 provides maximum operating distance and frequency grouping data for Siemens PSO Modules.

Table 1-5 Maximum Operating Distances at 0.06-Ohm Shunting Sensitivity for PSO Module Standard Frequencies

Application	Group	Frequency (Hz)	Ballast		
			2 Ω/1,000 Ft. Operating Distance (Ft./M)	3 Ω/1,000 Ft. Operating Distance (Ft./M)	4 Ω/1,000 Ft. Operating Distance (Ft./M)
PSO Module Standard Frequencies	1	156	9000/2743	10750/3276	12500/3810
		285	6900/2103	8350/2545	9800/2987
		430	5800/1768	6900/2103	8000/2438
		645	4700/1433	5650/1722	6600/2012
		970	3900/1189	4700/1433	5500/1676
		1,450	3300/1006	3950/1204	4600/1402
		2,140	2600/792	3200/975	3800/1158
		3,240	2100/640	2550/777	3000/914
	2	211	7900/2408	9500/2896	11100/3383
		348	6300/1920	7650/2332	9000/2743
		525	5300/1615	6350/1935	7400/2255
		790	4300/1311	5200/1585	6100/1859
		1,180	3700/360	4450/1356	5200/1585
		1,770	3000/914	3600/1097	4200/1280
		2,630	2400/731	2850/869	3300/1006
		4,000	2000/610	2400/731	2800/853

(Frequencies in **bold** text are recommended for use in electrified territories)

The maximum operating distances shown in are between transmitter and receiver track wire connections for end-fed track circuits. For center-fed track circuits, double the distances given to obtain the maximum receiver-to-receiver distance.

1.2.3.2 PSO Module Alternate I (Harmon AFTAC II) Frequency Data

Table 1-6 provides maximum operating distance and frequency grouping data for frequencies used by Harmon AFTAC II units.

Table 1-6 Maximum Operating Distances at 0.06-Ohm Shunting Sensitivity for PSO Module Alternate I (Harmon AFTAC II) Frequencies

Application	Group	Frequency (Hz)	Ballast		
			2 Ω/1,000 Ft. Operating Distance (Ft./M)	3 Ω/1,000 Ft. Operating Distance (Ft./M	4 Ω/1,000 Ft. Operating Distance (Ft./M)
PSO Module Alternate I (Harmon AFTAC II) Frequencies	1	500	5100/1554	6000/1829	6900/2103
		900	4200/1280	4700/1433	5200/1585
		1300	3500/1067	3900/1189	4300/1311
		2300	1400/427	2100/540	2800/853
		3100	1250/945	1600/488	2150/655
		4000	900/274	1426/435	1950/594
		5400	700/213	1150/350	1600/488
		6400	500/152	1000/305	1500/457
		7700	500/152	850/259	1200/366
		8900	500/152	750/229	1000/305
		10200	500/152	650/198	800/244
	2	**700**	4400/1341	5150/1570	5900/1798
		1100	3800/1158	4200/1280	4600/1402
		1600	2000/610	2600/792	3200/975
		2800	1100/335	1650/503	2200/670
		3500	1000/305	1525/465	2050/625
		4900	700/213	1200/366	1700/518
		5900	600/183	1075/328	1550/472
		7100	500/152	950/289	1400/427
		8300	500/152	800/244	1100/335
		9500	500/152	700/213	900/274

(Frequencies in **bold** text are recommended for use in electrified territories)

The maximum operating distances shown in are between transmitter and receiver track wire connections for end-fed track circuits. For center-fed track circuits, double the distances given to obtain the maximum receiver-to-receiver distance.

1.2.3.3 PSO Module Alternate II (US&S AFO) Frequency Data

Table 1-7 provides maximum operating distance and frequency grouping data for frequencies used by US&S AFO units.

Table 1-7 Maximum Operating Distances at 0.06-Ohm Shunting Sensitivity for PSO Module Alternate II (US&S AFO) Frequencies

Application	Group	Frequency (Hz)	Ballast		
			2 Ω/1,000 Ft. Operating Distance (Ft./M)	3 Ω/1,000 Ft. Operating Distance (Ft./M)	4 Ω/1,000 Ft. Operating Distance (Ft./M)
PSO Module Alternate II (US&S AFO) Frequencies	1	**1000**	4000/1219	4300/1311	4600/1402
		1250	3500/1067	3950/1204	4400/1341
		1500	3300/1006	3700/1128	4100/1250
		1750	2900/884	3250/991	3600/1097
		2300	2600/792	2950/899	3300/1006
		2800	2400/732	2700/823	3000/914
	2	**1125**	3800/1158	4150/1265	4500/1372
		1375	3400/1036	3800/1158	4200/1280
		1640	3000/914	3300/1006	3600/1097
		1875	2800/853	3150/960	3500/1067
		2175	2700/823	3050/930	3400/1036
		2675	2500/762	2800/853	3100/945

(Frequencies in **bold** text are recommended for use in electrified territories)

The maximum operating distances shown in are between transmitter and receiver track wire connections for end-fed track circuits. For center-fed track circuits, double the distances given to obtain the maximum receiver-to-receiver distance.

1.2.4 Physical Data

Table 1-8 Physical Dimensions and Environmental Ranges

Parameter	Range of Values
Dimensions	9.54 inches high (24.23 centimeters) 3.65 inches wide (9.27 centimeters) 10.35 inches deep (26.29 centimeters)
Weight	6 pounds (2.7 kilograms)
Temperature Range	-40°F to +158°F (-40°C to +70°C)
Maximum Humidity	90% non-condensing

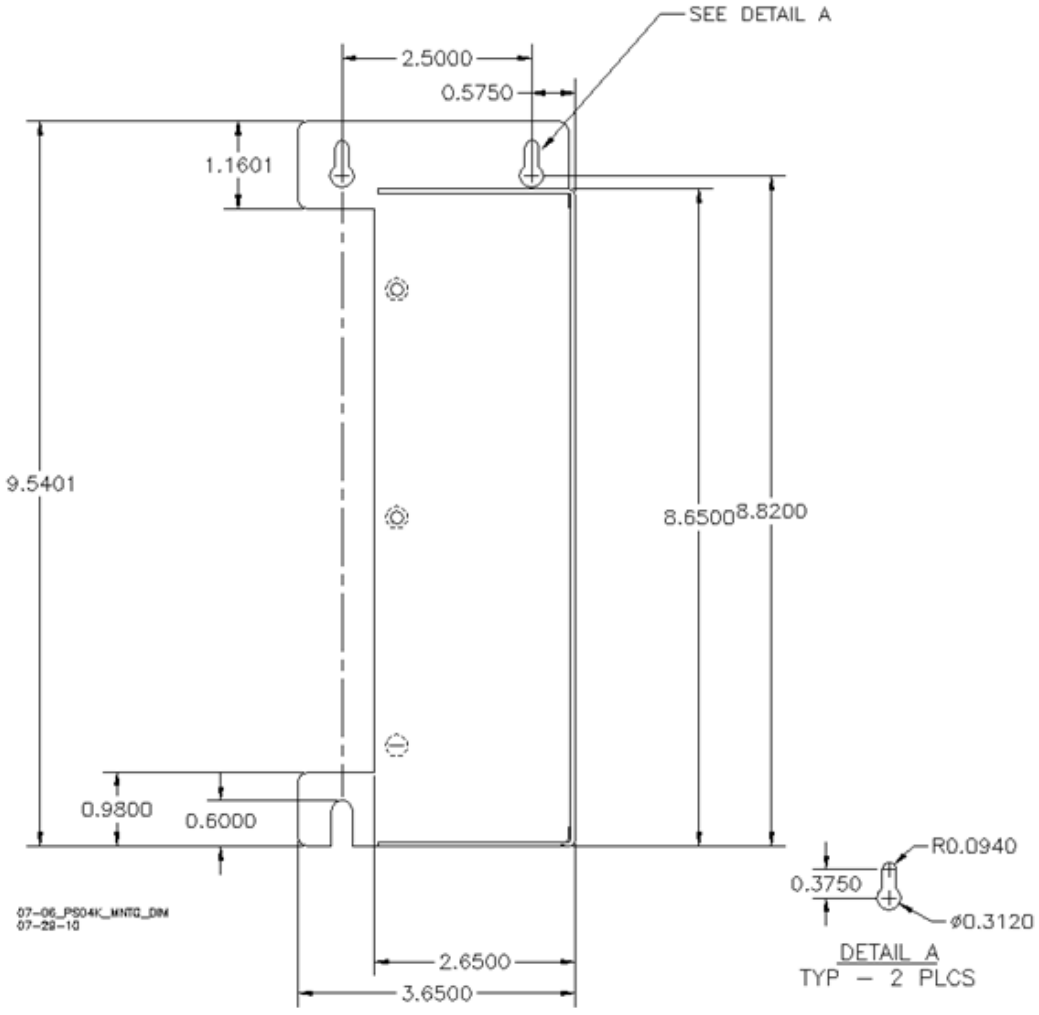

Figure 1-2 PSO 4000 Mounting Dimensions

1.2.5 Maintenance Data

There is no periodic maintenance performed on the PSO 4000. There are no user maintainable parts within the PSO 4000. Defective units are replaced as a whole:

- if any portion of a transmitter fails, replace the 7A471 transmitter.
- if any portion of a receiver fails, replace the 7A473 receiver.
- if any portion of a crossing assembly fails, replace the 7A474 crossing assembly.
- if any portion of a transceiver fails, replace the 7A475 transceiver.

WARNING

THE USER MUST PROVIDE TIMELY MAINTENANCE UPON FAILURE OF THE PSO 4000.

FAILURE TO PROVIDE TIMELY MAINTENANCE MAY POTENTIALLY LEAD TO UNSAFE FUNCTIONING OF THE UNIT.

This Page Intentionally Left Blank

SECTION 2 **PSO 4000 DESCRIPTION**

2.0 PSO 4000 DESCRIPTION

2.1 GENERAL

All PSO 4000 cases can be mounted either to a rack, a shelf or a backboard inside the wayside instrument housing. Refer to the following figures for general PSO 4000 case appearance and see Table 1-8 for Case Physical Dimensions. Inside each case is a single printed circuit unit that plugs into a motherboard. The case can support up to three (3) outputs and two (2) inputs. The purpose of the outputs and inputs change from case to case. All cases are powered by a power supply/battery that produces between 9.0 and 16.5 VDC (nominal 12 VDC). All connections made to the cases use 10-pin female connectors capable of accepting wire sizes from #14- #28 AWG. All connections to track, battery or equipment outside the instrument house are made via the use of Surge arrestors and equalizers. Further data common to all cases is presented in Sections 0 and 2.6.Common Case Components

2.1.1.1 Four Character Alphanumeric Display

As depicted on the transmitter in the previous figure, the four character alphanumeric display is located directly below the unit information written on the top of the faceplate. It displays letters, numbers, and limited symbols. The display test must be performed when setup is first initiated, or if parameter edits are performed and it has been more than 30 minutes since the last configuration changes. The test allows user verification that all symbols, numbers, and letters display properly. See Section 5.2.7.1 for further instructions on completing the display test. Once the unit has completed the startup process, a message scrolls across the display stating the unit type, frequency and address (e.g., PSO 4000 TX 645HZ A).

2.1.1.2 MENU Button

The MENU button is located immediately below the 4 Character Alphanumeric Display and is used in conjunction with the NAVIGATE button to navigate the menus. Use the MENU button to go down one level in the menu, to accept a parameter's value selection in the Setup and Program Menus; to signify acceptance of the Display Panel Test and cause any errors present to be displayed when pressed in the Diagnostic Menu.

2.1.1.3 NAVIGATE Button

The NAVIGATE button is located immediately below the Menu button and is used to move from one menu option to the next, to go up one level in the menu, to reject a parameter value selection or to signify failure of the Display Panel Test.

2.1.1.4 I/O, Health, & Power Status Indicators

These LEDs indicate: the health status of the unit; whether or not the output is energized; whether or not the inputs are energized; whether or not the transmitter is sending (TX Enable) or whether the receiver is calibrated (RX CAL). A flashing yellow LED indicates system health, and a steady green LED indicates that there is power to the case. A steady green TX Enable LED indicates that the transmitter is transmitting. A steady red RX Calibration LED indicates that the receiver is calibrated.

Prior to beginning programming, verify LED functionality using the *CHECK LED menu per Section 5.2.7.2. If any LED fails to light following retest, replace the unit.

2.1.1.5 Diagnostic Port

The diagnostic port is used by maintenance personnel to:

- obtain event logs using a Hyperterminal application.
- save a copy of the configuration of the system to a text file (this configuration report includes configuration settings, software and hardware versions, and calibration information).
- load new executive software using the standard Siemens Diagnostic Terminal (DT) program.

2.1.1.6 OUT LEDs

The OUT LED is lit when an assigned function (e.g., OUT1=RXA) is selected, energized and that function's input pickup delay has expired.

An OUT LED is not lit:

- If not assigned a function (e.g., OUT1=NONE) or
- If an assigned function (e.g., OUT1=RXA) is selected but not energized, or
- If an assigned function (e.g., OUT1=RXA) is selected and energized, but that input's pickup delay has not yet expired.

2.1.1.7 IN LEDs

The LED is lit when an assigned function (i.e., IN1=RX ENBL) is selected, energized, and the input pickup delay has expired.

An IN LED is not lit:

- If not assigned a function (e.g., IN1=NONE) or
- If an assigned function (e.g., IN1=RX ENBL) is selected but not energized or
- If an assigned function (e.g., IN1=RX ENBL) is selected and energized, but the pickup delay has not yet expired.

2.1.1.8 Power LED

The Power LED is lit green when power is applied to the unit.

2.2 PSO 4000 TRANSMITTER (P/N 7A471)

2.2.1 Transmitter Operation

The transmitter, P/N 7A471, generates a signal of the proper frequency, modulation rate, address, and signal amplitude. The transmitter utilizes either one of the 16 standard Siemens frequencies or one of the 31 alternate frequencies typically utilized by other equipment. The transmitter modulation frequency varies between ±1/64th of the chosen frequency (e.g., the Transmit Frequency selected is 2.14 kHz, and so the frequency ranges from 2.106 kHz to 2.173 kHz). The modulation is a Frequency Modulation providing a reoccurring eight-bit, non-symmetrical serial address. The address code (A, C, D, E, F, or DYN) is manually selected. The transmit amplitude is determined by the Transmit Level (Low or High Power) selected during setup.

2.2.2 Transmitter Physical Layout

The transmitter is mounted and connected as described in Section 2.1, and appears as shown in the following figure. This figure depicts the face of the transmitter.

Table 2-1 provides a description of each numbered item. Each item is further described in the following sections. Figure 6-3 depicts a typical installation of the transmitter.

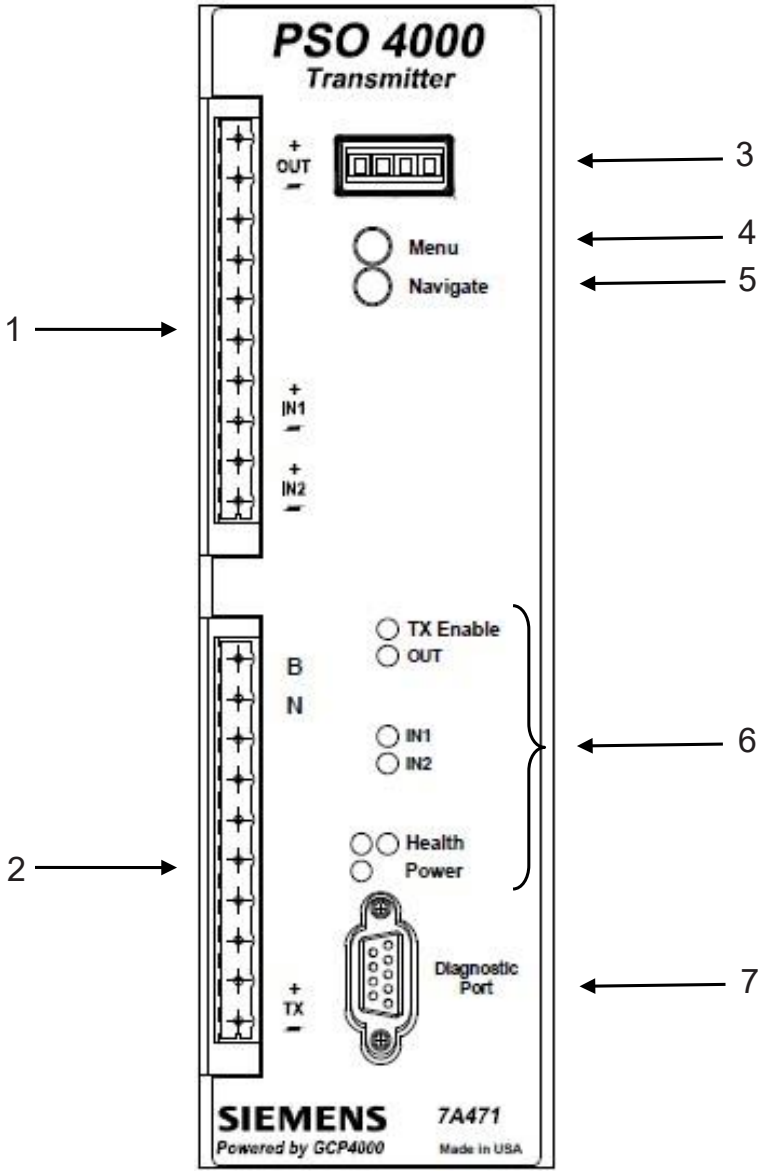

Figure 2-1 PSO 4000 Transmitter, 7A471

Table 2-1 Transmitter, P/N 7A471 Operating Controls

Item No.	Description
1	Upper 10-pin Connector
2	Lower 10-pin Connector
3	Four Character Alphanumeric Display
4	MENU Button
5	NAVIGATE Button
6	I/O, Health, & Power Status Indicators
7	Diagnostic Port

Table 2-2 provides pin assignment information for Upper and Lower 10-pin WAGO-style Connectors. The Upper 10-pin Connector links the output and input leads (OUT, IN1, and IN2, respectively) to the Unit. The Lower 10-pin Connector links the power supply/battery power and the track connections to the Unit. The pins on both connectors are numbered sequentially from 1 – 10 from top to bottom.

Table 2-2 Transmitter 10-Pin Connector Assignment Chart

Pin Number	Upper 10-pin Connector	Lower 10-pin Connector
1	OUT Positive	Power Supply / Battery Positive Input
2	OUT Negative	Power Supply / Battery Negative Input
3	Not Used	Not Used
4	Not Used	Not Used
5	Not Used	Not Used
6	Not Used	Not Used
7	IN1 Positive	Not Used
8	IN1 Negative	Not Used
9	IN2 Positive	Transmitter to Rail 1
10	IN2 Negative	Transmitter to Rail 2

2.2.2.1 Upper 10-pin Connector

The Upper 10-pin Connector allows connection for the Health output to a relay when desired as well as for when either of the two inputs are used. The transmitter output assignment is not user configurable. The input assignment options are Transmit Enable or None,. with Transmit Enable as the default value for Input 1 (IN1). If an input is configured as a Transmit Enable, the unit will only transmit when the input is energized. Use of the Transmit Enable is optional; planners determine whether or not the setting is used. See Section 2.2.3 for information regarding transmitter configuration settings and Appendix B for a description of Dynamic Addressing.

2.2.2.2 Lower 10-pin Connector

The Lower 10-pin Connector provides power supply/battery positive and negative connections for devices contained within the Unit. In the Transmitter, the only pins active are Pins 1, 2, 9, & 10, which provide battery positive and negative power to the Unit itself and the Transmitter connections to Rails 1 and 2, respectively.

2.2.2.3 Health LED

The unit is considered healthy when:

- Setup is complete and,
- The power supply voltage is between 9.0 and 16.5 VDC and,
- The unit is functional and,
- The Health LED is lit and flashes yellow at 1 Hz when unit is healthy and at 6 Hz when unhealthy.

2.2.3 Transmitter Configuration Settings

When Transmit Frequency Select is set to Standard, the user can select from the list of 16 Siemens frequencies. When it is set to Alternate, the user can select from the list of 31 frequencies typically used by other track overlay equipment. However, the Alternate frequencies use Siemens modulation patterns and are not compatible with non-Siemens transmitters or receivers.

Standard transmit codes (A or C) which are compatible with previous generations of PSOs can be set, as well as codes D, E, or F which are new codes, or Dynamic can be set. When Dynamic is set, the options AddrA and AddrC are available as input assignments. The code transmitted depends on the state of the inputs as shown in the following table.

In this table, Low = Deenergized (Turned off), and High = Energized (Turned on). When both inputs are high or low, no signal is transmitted.

Table 2-3 Input States & Codes Transmitted when Dynamic Addressing is Selected

Input 1 state (set to AddrA)	Input 2 state(set to AddrC)	Code transmitted
Low (Deenergized)	Low (Deenergized)	No transmit signal
High (Energized)	Low (Deenergized)	A
Low (Deenergized)	High (Energized)	C
High (Energized)	High (Energized)	No transmit signal

2.2.3.1 Transmitter LED Indicators

When configured for operation, the transmitter sends its signal over the track to the receiver, and the Transmitter LEDs are in the states shown.

2.2.3.2 TX Enable LED

The TX Enable LED indicates that the unit transmitter is functioning and sending a signal to the receiver. The TX Enable LED is lit whenever the unit:

- Is healthy and,
- Has been configured to the proper frequency and address code and,
- Has completed setup and,
- The power supply voltage is greater than 9.0 VDC but less than 16.5 VDC and,
- If an input is configured as a transmit enable (TX ENBL), the input is energized and the configured pickup delay time for that input has expired.

The TX Enable LED is not lit when:

- Setup is required, or
- The transmitter frequency is not set, or
- If an input is configured as a transmit enable, and the input is de-energized, or
- If an input is configured as a transmit enable, and the input is energized and the configured pickup delay for that input has not expired, or
- The transmitter is unhealthy.

2.2.4 General Transmitter Parameters

2.2.4.1 General

The Unit provides a PSO transmitter, one vital relay output (e.g., OUT1) that is not user configurable, and two vital parallel inputs (IN1 & IN2).

2.2.4.2 AddrA Modulation

The unit shall transmit a signal modulated with AddrA, when:

- the transmitter is transmitting a signal according to 2.2.3.2 and
- the Transmit Code is configured to AddrA or
- the Transmit Code is configured to Dynamic and
- all inputs configured to AddrA are energized and their delays are expired and
- if an input is configured to AddrC it is de-energized.

2.2.4.3 AddrC Modulation

The unit shall transmit a signal modulated with AddrC, when:

- the transmitter is transmitting a signal according to 2.2.3.2 and
- the Transmit Code is configured to AddrC or
- the Transmit Code is configured to Dynamic and
- all inputs configured to AddrC are energized and their pickup delays are expired and
- if an input is configured to AddrA it is de-energized.

2.2.4.4 AddrD Modulation

The unit shall transmit a signal modulated with AddrD, when

- the transmitter is transmitting a signal according to 2.2.3.2 and
- the Transmit Code is configured to AddrD

2.2.4.5 AddrE Modulation

The unit shall transmit a signal modulated with AddrE, when

- the transmitter is transmitting a signal according to 2.2.3.2 and
- the Transmit Code is configured to AddrE

2.2.4.6 AddrF Modulation

The unit shall transmit a signal modulated with AddrF, when

- the transmitter is transmitting a signal according to 2.2.3.2 and
- the Transmit Code is configured to AddrF

2.2.5 Transmitter Configuration Parameters

The Transmitter menu allows configuration of the Transmit Frequency Selection.

If Transmit Frequency Selection is set to:

- Standard, the Transmit Frequency is configured from the 16 standard Siemens frequency list.
- Alternate, the Transmit Frequency is configured from among the 31 alternate frequencies.

The interface allows:

- The Transmit Address to be configured to A, C, D, E, F or Dynamic.
- The Transmit Level to be configured to Low or High.

2.2.6 Transmitter Default Settings

When the *SET DEFAULTS parameter is selected on the Transmitter Menu, the values in Table 5-3 are set.

2.3 Receiver (P/N 7A473)

2.3.1 Receiver Operation

The receiver, P/N 7A473, detects the proper frequency, address, and signal amplitude sent by the transmitter. The receiver is connected to the track via a Tuned Receiver Coupler, which is a separate piece of equipment. No insulated joints are needed to confine the signal because the coupling units have low impedance at the operating frequency of the track circuit, and high impedance at all other frequencies. The receiver will detect either one of the 16 standard Siemens frequencies or one of the 31 alternate frequencies. The modulation is a Frequency Modulation providing a reoccurring, eight-bit non-symmetrical serial address. The address code (A, C, D, E, F, or DYN) is manually selected. The receiver must verify frequency, address, and signal amplitude prior to energizing any output functions.

2.3.2 Receiver Physical Layout

The receiver is mounted and connected as described in the previous sub-section and appears as shown in the following figure. This figure depicts the face of the receiver.

The following table provides a description of each item. Each item is further described in the following sections. Figure 9-5 depicts a typical installation of the receiver.

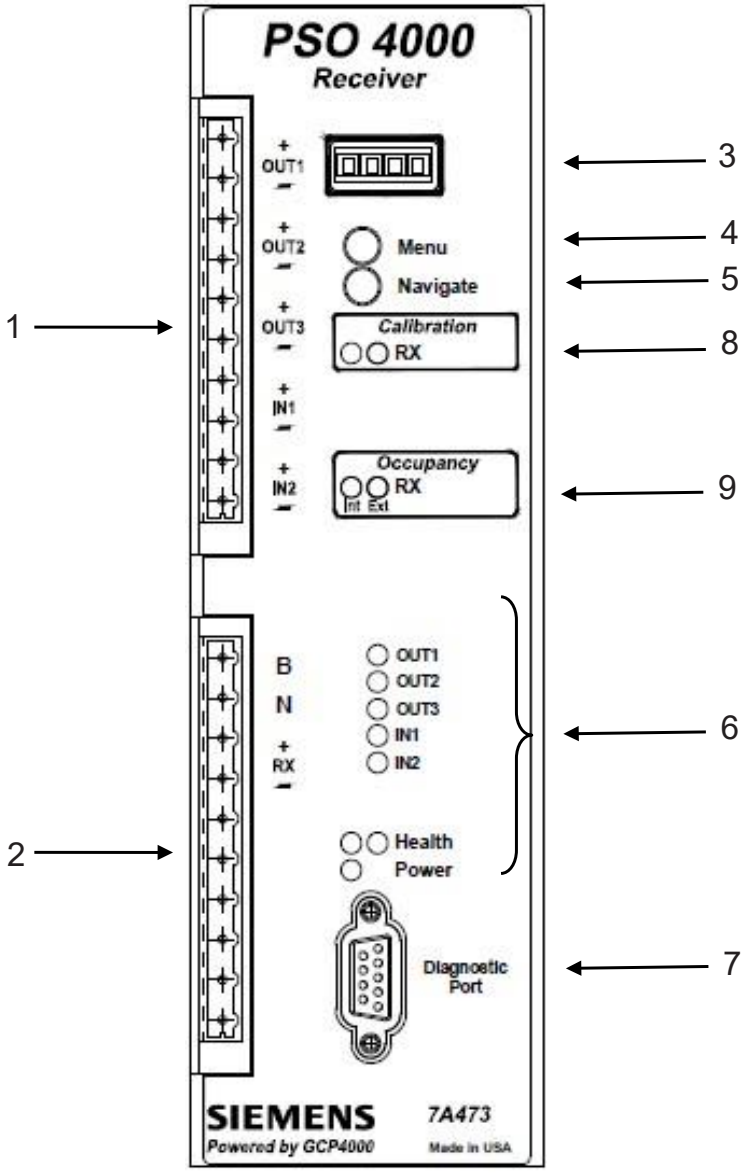

Figure 2-2 PSO 4000 Receiver, 7A473

Table 2-4 Receiver, P/N 7A473 Operating Controls

Item No.	Description
1	Upper 10-pin Connector
2	Lower 10-pin Connector
3	Four Character Alphanumeric Display
4	MENU Button
5	NAVIGATE Button
6	I/O, Health, & Power Status Indicators
7	Diagnostic Port
8	Calibration Indication Section
9	Occupancy Indication Section

Table 2-5 provides pin assignment information for Upper and Lower 10-pin WAGO-style Connectors. The Upper 10-pin Connector links the outputs and input leads (OUT1, OUT2, OUT3, IN1, and IN2, respectively) to the Unit. The Lower 10-pin Connector links the power supply/battery power and the track connections to the Unit. For further information regarding couplers, see Section 3, Auxiliary Equipment and Section 9, Application Drawings. The pins on both connectors are numbered sequentially from 1 – 10 from top to bottom.

Table 2-5 Receiver 10-pin Connector Assignment Chart

Pin Number	Upper 10-pin Connector	Lower 10-pin Connector
1	OUT1 Positive	Power Supply / Battery Positive
2	OUT1 Negative	Power Supply / Battery Negative
3	OUT2 Positive	Receiver to Applicable Coupler
4	OUT2 Negative	Receiver to Applicable Coupler
5	OUT3 Positive	Not Used
6	OUT3 Negative	Not Used
7	IN1 Positive	Not Used
8	IN1 Negative	Not Used
9	IN2 Positive	Not Used
10	IN2 Negative	Not Used

2.3.2.1 Upper 10-pin Connector

The Upper 10-pin Connector Block allows connection for the three outputs (OUT1, OUT2, & OUT3) and 2 inputs (IN1 & IN2). Each output's assignment options allow it to energize either:

- the unit's Health status
- None (no selection)
- Receiver Occupancy A (RXA)
- Receiver Occupancy C (RXC)
- Receiver Occupancy D (RXD)
- Receiver Occupancy E (RXE)
- Receiver Occupancy F (RXF).

The Output Receiver Occupancy value (e.g., >OUT1 =) must match the Receiver Address Code value (e.g., >RX ADDR =) selected. If Dynamic Addressing is selected, any receiver code (RXA through RXF) may be chosen.

The Input assignment options are:

- None
- Receiver Enable (which allows the Receiver to operate), or
- Out of Service (OOS).

2.3.2.2 Lower 10-pin Connector

The Lower 10-pin Connector provides power supply/battery positive and negative connections for devices contained within the Unit. In the Receiver, the only pins active are Pins 1, 2, 3, and 4, which provide Battery positive and negative power to the Unit itself and Receiver connections to the applicable coupler.

2.3.2.3 Health LED

The unit is considered healthy when:

- Setup is complete and
- The power supply voltage is between 9.0 and 16.5 VDC and
- The unit is functional and
- Out of Service is not enabled.

The Health LED is lit and flashes yellow at 1 Hz when unit is healthy and at 6 Hz when unhealthy.

2.3.3 Receiver Configuration Settings

When Receiver Code Dynamic is selected, the options RXA through RXF are available as output assignments. An output configured as RXA will be energized when a code A is received, and de-energized when no code or any other code other than a code A is received. An output configured as RXC will be energized when a code C is received, and de-energized when no code or any other code than a code C is received, and so on through the address choices. Outputs can be set for up to three different codes received by the unit.

2.3.4 Receiver Out of Service

⚠ WARNING

WARNING

THE RAILROAD PROCEDURES GOVERNING HOW TO TAKE A TRACK CIRCUIT OUT OF SERVICE SHALL BE FOLLOWED. THE INSTRUCTIONS IN THIS SECTION MAY BE FOLLOWED ONLY IF ALLOWED BY THE RAILROAD.

OUT OF SERVICE TRACKS WILL NOT RESPOND TO TRAIN OPERATION. TAKE ALTERNATE MEANS TO WARN VEHICULAR TRAFFIC, PEDESTRIANS, AND EMPLOYEES.

REQUIRED OPERATIONAL TESTS SHOULD BE PERFORMED IN ACCORDANCE WITH RAILROAD PROCEDURES WHEN RESTORING TRACKS TO SERVICE.

THE RAILROAD PROCEDURES FOR APPLYING TEMPORARY JUMPERS MUST BE FOLLOWED WHEN ENERGIZING THE "OUT OF SERVICE" INPUT(S).

INPUTS FOR "OUT OF SERVICE" SHOULD BE WIRED IN A PERMANENT MANNER IN ACCORDANCE WITH CIRCUIT PLANS.

DO NOT USE TEST TERMINALS OR SWITCHES THAT CAN VIBRATE CLOSED TO ENERGIZE OOS INPUTS.

The Receiver is taken out of service by programming the unit via the user interface and physically energizing an input. The unit is taken Out of Service by setting the OOS Allowed parameter to Yes (ENBL), assigning an input to be the OOS input, and then energizing the input. When the receiver is out of service, the Occupancy LED remains lit regardless of the PSO receiver state or the state of the Receiver Enable input. Refer to Section 6.5, Out of Service Operations, for further information.

When putting the Receiver back into service, deenergize the OOS input. If the "OOS Allowed" is set to disable with the OOS input still energized then the unit will go into a restrictive state (outputs de-energized) until the input is deenergized. This restrictive state can occur if:

- The OOS input is not de-energized before placing the unit back into service by setting the "OOS Allowed" to disabled.
- The out of service timer expires with the OOS input still energized
- The unit reboots while out of service.

Select whether the Out of Service is allowed (a user is allowed to take the Receiver Out of Service) or Disabled (a user is not allowed to the Receiver Out of Service).

2.3.5 Receiver LED Indicators

When the unit is configured and receiving a signal from the transmitter following calibration, the Receiver LEDs are in the states shown:

2.3.5.1 RX Calibration LED

The calibration indicator has a left LED, a right LED, and “RX” printed next to the two LEDs. When the receiver requires calibration, the left LED is lit. When the receiver is calibrated, the right LED is lit.

The right Calibration LED is lit when the PSO Receiver has been calibrated. The left Calibration LED is lit when the PSO Receiver has not been calibrated.

2.3.5.2 RX Occupancy LED

The occupancy indicator has a left LED, a right LED, and “RX” printed next to the two LEDs, with “Int” printed below the left column of LEDs and “Ext” printed below the right column of LEDs. When the receiver detects unoccupied track using internal, the left LED is lit. When the receiver detects unoccupied track using an external input from an external track circuit, the right LED is lit.

The Receiver Occupancy LED provides a visual indication of track occupancy status. The indication may be received from the internal PSO receiver which is signified by the left LED being lit red or be received from external track circuit via inputs and the associated input pickup delay time is expired, which is indicated by the right LED being lit green.

The left Occupancy LED is lit red when:

- No inputs (IN1=NONE and IN2=NONE) are programmed or
- The track circuit is functional and
- There is no train currently within the circuit.

The right Occupancy LED is lit green when:

- External inputs (i.e., IN1=RX ENBL or IN2=RX ENBL) are selected, energized, and that input’s pickup delay has expired and
- The track circuit is functional and
- There is no train currently within the circuit.

The left Occupancy LED is unlit when:

- A train is in the track circuit or
- The unit is unhealthy.

The right Occupancy LED is unlit when:

- External inputs (i.e., IN1=RX ENBL or IN2=RX ENBL) are selected, but not energized.
- External inputs (i.e., IN1=RX ENBL or IN2=RX ENBL) are selected and energized, but that input’s pickup delay has not yet expired.

2.3.6 Receiver Configuration Parameters

The Receiver menu allows the Receive Frequency Selection to be configured.

- If Receive Frequency Selection is set to Standard, the Receive Frequency is configured from the 16 standard Siemens frequency list.
- If the Receive Frequency Selection is set to Alternate, the Receive Frequency is configured from among the 31 alternate frequencies.

The interface allows configuration of the Receive Address to A, C, D, E, F or Dynamic and to configure the Receive Pickup Delay from 0 to 30s. The default is 2 seconds.

Additional items to be configured:

- Each input's pickup delay from 0 to 30s.
- Whether the Out of Service is Enabled (receiver may be taken out of service) or Disabled (receiver may not be taken out of service).

2.3.7 Receiver Default Settings

When the *SET DEFAULTS is selected on the Receiver Menu, the values in Table 5-5 are set.

2.3.8 Receiver Calibration

The Receiver requires user calibration in order to set the appropriate threshold for train detection. A shunt (e.g., 0.06 Ω, 0.1 Ω, etc.) is placed at a specific location on the track and the calibration for the receiver is started. The Unit monitors the signal level and stores that signal level in Non-Volatile Memory (NVRAM). This stored signal level is then used as a base line to determine whether the track is occupied. A Receiver Threshold setting is available for Broken Rail Applications. See Section 7.4 for calibration procedures.

2.4 CROSSING ASSEMBLY (P/N 7A474)

2.4.1 Crossing Assembly Operation

The Crossing Assembly, P/N 7A474, is comprised of two receivers and an Island track circuit. See Section 2.3 for information regarding standard receiver attributes. The address code (A, C, D, E, or F) is manually selected during setup, as the Crossing Assembly does not allow Dynamic Addressing. Also, each Receiver may be enabled or disabled during setup or re-programming.

The Crossing Assembly provides an internal Directional Stick Logic program utilizing the two approach receivers and the island circuit (three circuit logic). The island operates on a distance between 120 to 500 ft. (36.6 to 152.4 m) in length. A Stick Cancel Timer is also provided and allows a setting between 5 to 60 minutes. The island will transmit any of the 14 standard Siemens Island frequencies or the 15 non-Siemens alternate Island frequencies. The Island allows for an Island pickup delay between two and eight seconds that is user selectable. The Island Receiver is the same as the regular Receivers, except that the frequency list is different.

The Crossing Assembly has the flexibility to use an external track circuit via an input instead of an internal PSO 4000 receiver or island. For instance, if the installation already has a crossing approach track circuit in place, this could be used in place of one of the PSO Receivers (e.g., a DC Track circuit). Either of the PSO receivers and/or the Island may be enabled or disabled. The Crossing Assembly also allows individual components to be taken Out of Service, rather than the whole Crossing Assembly.

Either Receiver 1 (RX1), Receiver 2 (RX2), both Receivers (APPR), the Island (ISL), or the entire Crossing (XR) may be taken Out of Service.

2.4.2 Crossing Assembly Physical Layout

The crossing assembly is mounted and connected as described in the previous sub-section and is shown in the following figure. This figure depicts the face of the crossing assembly. The following table provides a description of each numbered item. Each item is further described in the following sections. Figure 9-5 depicts a typical installation of the crossing assembly.

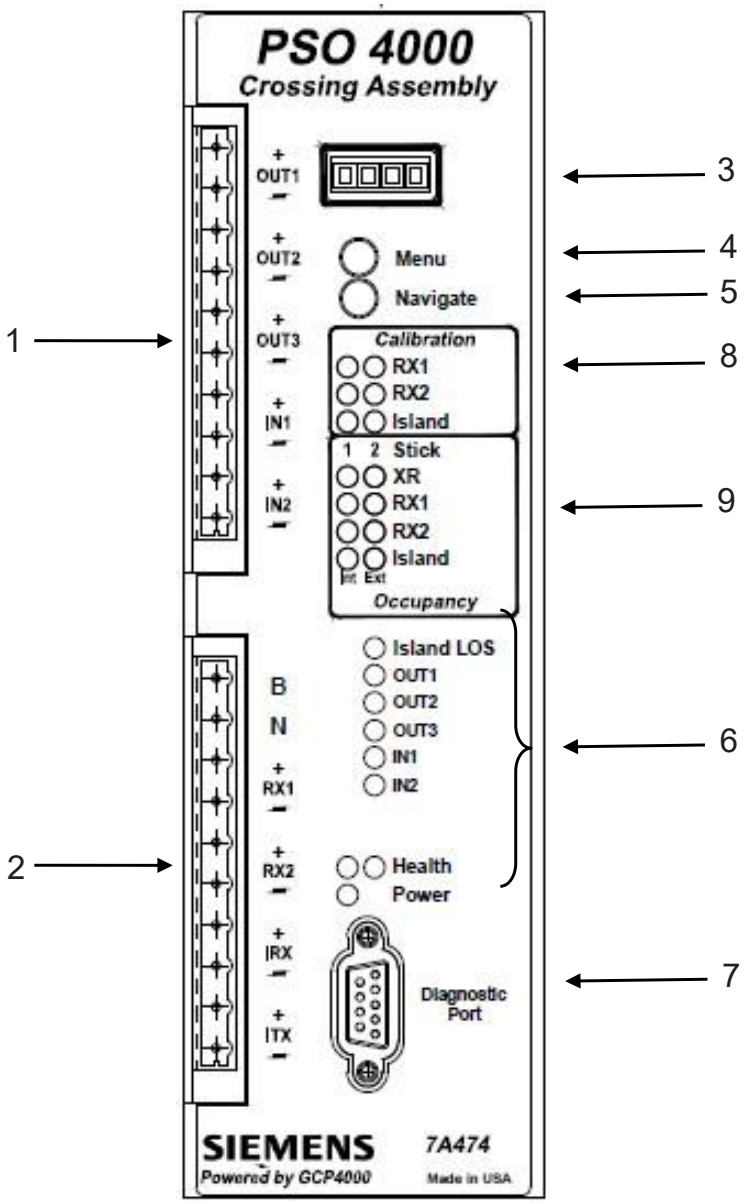

Figure 2-3 PSO 4000 Crossing Assembly, 7A474

Table 2-6 Crossing Assembly, P/N 7A474 Operating Controls

Item No.	Description
1	Upper 10-pin Connector
2	Lower 10-pin Connector
3	Four Character Alphanumeric Display
4	MENU Button
5	NAVIGATE Button
6	I/O, Health, & Power Status Indicators
7	Diagnostic Port
8	Calibration Indication Section
9	Occupancy Indication Section

Table 2-7 provides pin assignment information for Upper and Lower 10-pin WAGO-style Connectors. The Upper 10-pin Connector links the outputs and input leads (OUT1, OUT2, OUT3, IN1, and IN2, respectively) to the Unit. The Lower 10-pin Connector links the power supply/battery power and the track connections to the Unit. For further information regarding couplers, see Section 3, Auxiliary Equipment and Section 9, Application Drawings. The pins on both connectors are numbered sequentially from 1 – 10 from top to bottom.

Table 2-7 Crossing Assembly 10-pin Connector Assignment Chart

Pin Number	Upper 10-pin Connector	Lower 10-pin Connector
1	OUT1 Positive	Power Supply / Battery Positive Input
2	OUT1 Negative	Power Supply / Battery Negative Input
3	OUT2 Positive	Receiver 1 (RX1) to Applicable Coupler
4	OUT2 Negative	Receiver 1 (RX1) to Applicable Coupler
5	OUT3 Positive	Receiver 2 (RX2) to Applicable Coupler
6	OUT3 Negative	Receiver 2 (RX2) to Applicable Coupler
7	IN1 Positive	Island Receiver to Rail 1
8	IN1 Negative	Island Receiver to Rail 2
9	IN2 Positive	Island Transmitter to Rail 1
10	IN2 Negative	Island Transmitter to Rail 2

2.4.2.1 Upper 10-pin Connector

The Upper 10-pin Connector allows connection for the three outputs and two inputs. Each output's assignment options allow it to energize either None, XR (XR ENBL), Island (ISL ENBL), Receiver 1 Occupancy A (RX1A), Receiver 1 Occupancy C (RX1C), Receiver 1 Occupancy D (RX1D), Receiver 1 Occupancy E (RX1E), Receiver 1 Occupancy F (RX1F), Receiver 2 Occupancy A (RX2A), Receiver 2 Occupancy C (RX2C), Receiver 2 Occupancy D (RX2D), Receiver 2 Occupancy E (RX2E), Receiver 2 Occupancy F (RX2F), 1 Stick Set (RX1 Stick),2 Stick Set (RX2 Stick), Any Stick Set (RX Stick), Health/Stick Output Indicator (HSTO), or Health (HLTH). Each input's assignment options are None, XR Enable (XR ENBL), RX1 Enable (RX1 ENBL), RX2 Enable (RX2 ENBL), Stick Cancel (STK CNCL), or Out of Service (OOS).

2.4.2.2 Lower 10-pin Connector

The Lower 10-pin Connector provides power supply/battery positive and negative connections for devices contained within the Unit. In the Crossing Assembly, all pins are active as shown in Table 2-7.

2.4.2.3 Health LED

The unit is considered healthy when:

- Setup is complete and
- The power supply voltage is between 9.0 and 16.5 VDC and
- The unit is functional and
- Out of Service is not enabled.

The Health LED is lit and flashes yellow at 1 Hz when unit is healthy and at 6 Hz when unhealthy.

2.4.2.4 Calibration Indicator Section

The calibration indicator section has three rows of LEDs and text. Each row has a red and a green LED and each row is printed with Receiver 1(RX1), Receiver 2 (RX2), or Island (Island) next to the two LEDs. When the component requires calibration, the red LED is lit. When the receiver is calibrated, the green LED is lit.

2.4.2.5 Occupancy Indicator Section

The occupancy indicator has five rows of LEDs and text. Each row has a red LED on the left, a green LED on the right, and text printed next to the two LEDs with "Int" (internal) printed below the left column of LEDs and "Ext" (external) printed below the right column of LEDs.

ROW 1: STICK

The top row has the word "Stick" printed on it, with the number 1 over the left LED and the number 2 over the right LED. This indicates Directional Stick Logic occupancy data.

- When a train enters RX2 after approaching from the direction of RX1, the numeral "2" LED lights. When the train has exited the RX2 approach, the LED goes out.
- When a train enters RX1 after approaching from the direction of RX2, the numeral "1" LED lights. When the train has exited the RX1 approach, the LED goes out.

ROW 2: XR

The second line has “XR” printed on it, indicating the operational status of the Crossing.

- If the left LED (INT) is lit with no trains present, then all PSO logic for the crossing is internal and XR follows stick circuitry.
- If the right LED (EXT) is lit with no trains present, then some PSO logic for the crossing is external from a PSO input and is operating normally.
- If neither LED is lit without trains being present, then there is an error with the crossing PSO internal logic or external inputs.

ROW 3: RX1

The third line has “RX1” printed on it, indicating the operational status of Receiver 1.

- If the left LED (INT) is lit with no trains present, then all PSO logic for RX1 is internal and is operating normally.
- If the right LED (EXT) is lit with no trains present, then all PSO logic for RX1 is external from a PSO input and is operating normally.
- If neither LED is lit without trains being present, then there is an error with RX1 internal logic or external input.

ROW 4: RX2

The fourth line has “RX2” printed on it, indicating the operational status of Receiver 2.

- If the left LED (INT) is lit with no trains present, then all PSO logic for RX2 is internal and is operating normally.
- If the right LED (EXT) is lit with no trains present, then all PSO logic for RX2 is external from a PSO input and is operating normally.
- If neither LED is lit without trains being present, then there is an error with RX2 internal logic or external input.

ROW 5: ISLAND

The fifth line has “Island” printed on it, indicating the operational status of Island.

- If the left LED (INT) is lit with no trains present, then all PSO logic for ISLAND is internal and is operating normally.
- If the right LED (EXT) is lit with no trains present, then all PSO logic for ISLAND is external from a PSO input and is operating normally.
- If neither LED is lit without trains being present, then there is an error with ISLAND internal logic or external input.

2.4.3 Crossing Assembly Configuration Settings

The Island portion of the menu allows configuration of the Island Frequency Selection.

If the Island Frequency Selection is set to:

- Standard, the unit allows the Transmit Frequency to be configured to one of the 14 standard Siemens Island frequencies.
- Alternate, the unit allows the Transmit Frequency to be configured to one of the 15 alternate Island frequencies used by non-Siemens equipment.

The interface allows:

- the Loss of Shunt (LOS) time to be programmed.

The dynamic mode outputs are not available in the Crossing Assembly.

The Receiver 1 (RX1) and Receiver 2 (RX2) menus allow the Receive Frequency Selection to be configured for each receiver.

- If Receive Frequency Selection is set to Standard, the Receive Frequency is configured from the 16 standard Siemens frequency list.
- If the Receive Frequency Selection is set to Alternate, the Receive Frequency is configured from among the 31 alternate frequencies.

The interface allows configuration of the Receive Address to A, C, D, E, or F, and configuration of the Receive Pickup Delay from 0 to 30 seconds. The default is 2 seconds.

For information regarding Crossing Menus and Navigation, refer to Section 5.

2.4.3.1 Island LOS LED

Never lit, functionality currently disabled.

2.4.4 Crossing Assembly Default Settings

When the *SET DEFAULTS setting is selected on the Crossing Assembly Menu, the values in Table 5-7 are set.

2.4.5 Crossing Assembly Calibration

The Receivers and Island require user calibration in order to set the appropriate threshold for train detection. A shunt (e.g., hardwire, 0.06Ω, 0.1 Ω, etc.) is placed at a specific location on the track and the calibration for the selected receiver or Island is started. The Unit monitors the signal level and stores that signal level in Non-Volatile Memory (NVRAM). This stored signal level is then used as a base line to determine whether the track is occupied. A Receiver Threshold setting is available for Broken Rail Applications. See Section 7.4 for calibration procedures.

2.4.6 Crossing Assembly Out of Service

WARNING

THE RAILROAD PROCEDURES GOVERNING HOW TO TAKE A TRACK CIRCUIT OUT OF SERVICE SHALL BE FOLLOWED. THE INSTRUCTIONS IN THIS SECTION MAY BE FOLLOWED ONLY IF ALLOWED BY THE RAILROAD.

OUT OF SERVICE TRACKS WILL NOT RESPOND TO TRAIN OPERATION. TAKE ALTERNATE MEANS TO WARN VEHICULAR TRAFFIC, PEDESTRIANS, AND EMPLOYEES.

REQUIRED OPERATIONAL TESTS SHOULD BE PERFORMED IN ACCORDANCE WITH RAILROAD PROCEDURES WHEN RESTORING TRACKS TO SERVICE.

THE RAILROAD PROCEDURES FOR APPLYING TEMPORARY JUMPERS MUST BE FOLLOWED WHEN ENERGIZING THE "OUT OF SERVICE" INPUT(S).

INPUTS FOR "OUT OF SERVICE" SHOULD BE WIRED IN A PERMANENT MANNER IN ACCORDANCE WITH CIRCUIT PLANS.

DO NOT USE TEST TERMINALS OR SWITCHES THAT CAN VIBRATE CLOSED TO ENERGIZE OOS INPUTS.

The Crossing Assembly may be taken out of service in discrete parts or as a crossing. The Receiver is taken out of service by setting the OOS Allowed parameter to Yes (ENBL), assigning an input to be the OOS input, determining which components will be taken Out of Service, and then energizing the input. When the discrete part is out of service, the Occupancy LED remains lit regardless of the receiver state or the state of any enable input. Refer to Section 6.5, Out of Service Operations, for further information.

When putting the discrete part back into service, deenergize the OOS input. If the "OOS Allowed" is set to disable with the OOS input still energized then the unit will go into a restrictive state (outputs de-energized) until the input is deenergized. This restrictive state can occur if:

- The OOS input is not de-energized before placing the unit back into service by setting the "OOS Allowed" to "disabled."
- The out of service timer expires with the OOS input still energized
- The unit reboots while out of service.

The following discrete OOS options are available:

- Receiver 1 Out of Service: When receiver 1 is out of service the Receiver 1 Occupancy output will be energized regardless of PSO receiver 1 state and Receiver 1 Enable input. No Sticks can be set when receiver 1 is out of service.
- Receiver 2 Out of Service: When receiver 2 is out of service the Receiver 2 Occupancy output will be energized regardless of PSO receiver 2 state and Receiver 2 Enable input. No Sticks can be set when receiver 2 is out of service.

- Island Out of Service: When island is out of service the Island output will be energized regardless of island state and Island Enable input. No Sticks can be set when the island is out of service.
- Approaches Out of Service: This has the same effect as taking receiver 1 and receiver 2 out of service. No Sticks can be set when the approaches are out of service.
- Crossing Out of Service: This takes the crossing out of service. XR and Island will remain energized regardless of receiver occupancies and any Enable inputs.

Select whether the Out of Service is allowed (a user is allowed to take Island or receivers out of service) or Disabled (a user is not allowed to take island or receiver out of service).

2.5 PSO 4000 TRANSCEIVER ASSEMBLY (P/N 7A475)

2.5.1 Transceiver Assembly Theory of Operation

The Transceiver Assembly, P/N 7A475, is comprised of a transmitter and a receiver. The Transceiver Assembly transmitter functions as described in Section 2.2 and the Transceiver Assembly receiver functions as described in Section 2.3.

The presence of the transmitter and receiver allows the assembly to function in one of two modes of operation: Transceiver Mode or Repeater Mode. The mode is determined by the Repeater (RPTR) parameter. The default mode is Transceiver Mode, with the parameter set to disable (RPTR=DSBL).

When the repeater is disabled, the unit operates as a transceiver with independent transmitter and receiver functions. The TX ADDR parameter is visible when RPTR=DSBL (See Table 5-8). If the enable is de-energized while the output is running a drop delay, the drop delay time will be truncated.

In the Repeater Mode (RPTR=ENBL), the assembly repeats the code passed along from the receiver. This allows information (via the use of codes received) to be passed from one unit to another. It transmits the same address at its assigned frequency to the next receiver downstream.

2.5.2

2.5.2 Transceiver Assembly Physical Layout

The transceiver assembly is mounted and connected as described in the previous sub-section and appears as illustrated in the following figures. The figures show the face of the transceiver assembly. The following table provides a description of each numbered item. Each item is further described in the following sections. Figure 9-5 depicts a typical installation of the transceiver assembly.

NOTE

NOTE

The front panel of the transceiver will show either RX or RX1 and RX2 (newer model). These two front panel types are shown respectively in the following figures.

If RX1 and RX2 are shown, use RX1. Functionality for RX2 will be enabled in a future software release.

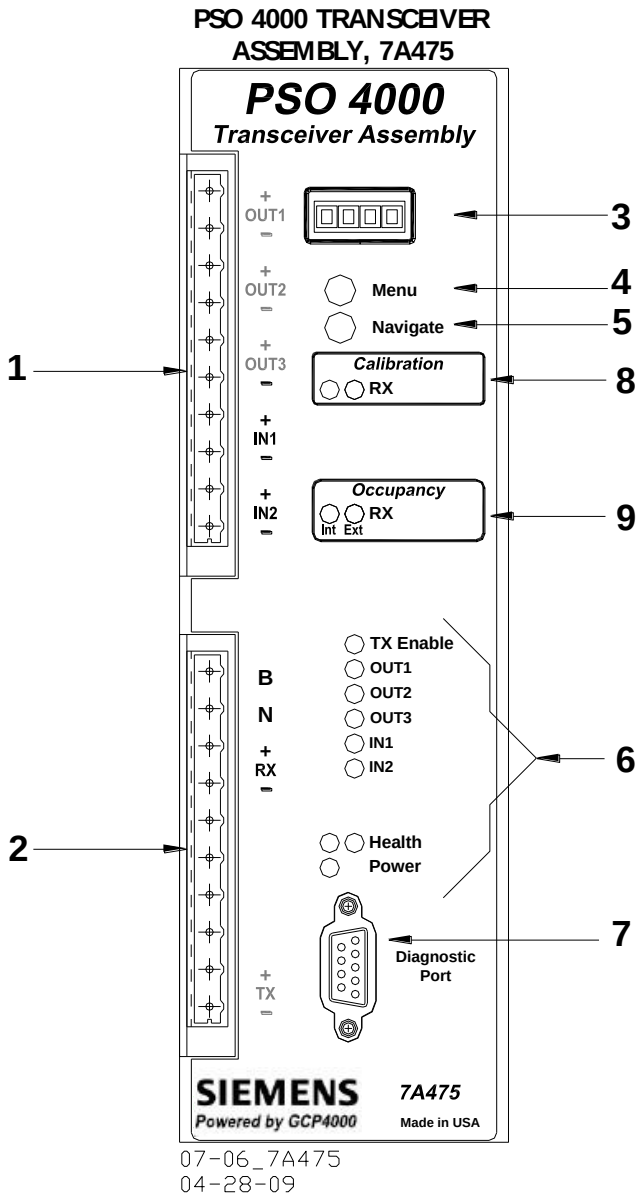

Figure 2-4 PSO 4000 Transceiver Assembly, P/N 7A475 (RX only)

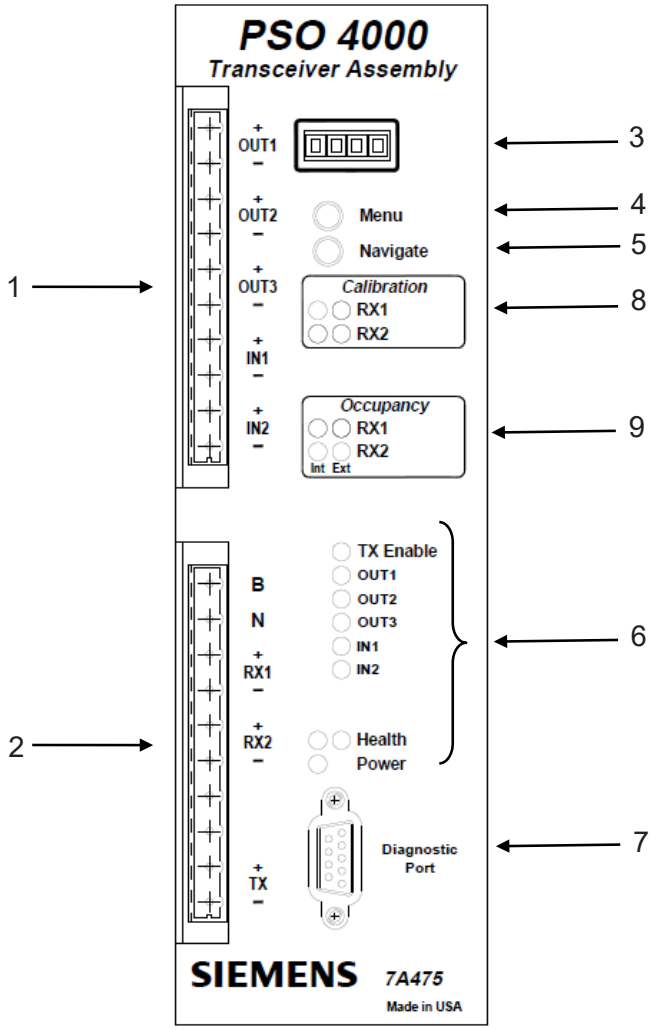

Figure 2-5 PSO 4000 Transceiver Assembly, P/N 7A475 (RX1 and RX2)

Table 2-8 Transceiver Assembly, P/N 7A471 Operating Controls

Item No.	Description
1	Upper 10-pin Connector
2	Lower 10-pin Connector
3	Four Character Alphanumeric Display
4	MENU Button
5	NAVIGATE Button
6	I/O, Health, & Power Status Indicators
7	Diagnostic Port
8	Calibration Indicator Section
9	Occupancy Indicator Section

The following table provides pin assignment information for upper and lower 10-pin WAGO-style connectors. The upper 10-pin connector links the outputs and input leads (OUT1, OUT2, OUT3, IN1, and IN2, respectively) to the unit. The lower 10-pin connector links the power supply/battery power and the track connections to the unit. The pins on both connectors are numbered sequentially from 1 – 10 from top to bottom.

Table 2-9 Transceiver Assembly 10-pin Connector Assignment Chart

Pin Number	Upper 10-pin Connector	Lower 10-pin Connector
1	OUT1 Positive	Power supply/battery positive input
2	OUT1 Negative	Power supply/battery negative input
3	OUT2 Positive	Receiver 1 to applicable coupler
4	OUT2 Negative	Receiver 1 to applicable coupler
5	OUT3 Positive	Receiver 2 to applicable coupler (future)
6	OUT3 Negative	Receiver 2 to applicable coupler (future)
7	IN1 Positive	Not used
8	IN1 Negative	Not used
9	IN2 Positive	Transmitter to Rail 1
10	IN2 Negative	Transmitter to Rail 2

2.5.2.1 Upper 10-pin Connector

The upper 10-pin connector allows connection for the three outputs and two inputs. Each output's assignment options allow it to energize either None, Health (HLTH), Receiver Occupancy A (RXA), Receiver Occupancy C (RXC), Receiver Occupancy D (RXD), Receiver Occupancy E (RXE), and Receiver Occupancy F (RXF). The Output Receiver Occupancy value (e.g., >OUT1 =) must match the Receiver Address Code value (e.g., >RX ADDR =) selected. If Dynamic Addressing is selected, any receiver code (RXA through RXF) may be chosen. Input assignment options are None, Receive Enable (REC ENBL), Transmit Enable (TX ENBL), and Out of Service (OOS).

2.5.2.2 Lower 10-pin Connector

The lower 10-pin connector provides battery positive and negative connections for devices contained within the unit. In the Transceiver Assembly, pins 1, 2, 3, 4, 5, 6, 9, & 10 are active, as shown in Figure 2-5.

2.5.2.3 Health LED

The unit is considered healthy when:

- Setup is complete and
- The power supply voltage is between 9.0 and 16.5 VDC and
- The unit is functional and
- Out of Service is not enabled.

The Health LED is lit and flashes yellow at 1 Hz when unit is healthy and at 6 Hz when unhealthy.

2.5.3 Transceiver Assembly Configuration Settings

For information regarding Transceiver Menus and Navigation, refer to Section 5.

2.5.4 Transceiver Assembly LED Indicators

When the unit is configured, calibrated and receiving occupancy information, this enables the transmitter to transmit occupancy information to the receiver and the Transceiver Assembly LEDs are in the states shown in the following sections.

2.5.4.1 TX Enable LED

The TX Enable LED indicates that the unit transmitter is functioning and sending a signal to the receiver. The TX Enable LED is lit whenever the unit:

- is healthy and
- has been configured to the proper frequency and code and
- has completed setup and
- is receiving power supply voltage greater than 9.0 VDC but less than 16.5 VDC and
- if an input is configured as a transmit enable (TX ENBL), the input is energized and the configured pickup delay time for that input has expired.

The TX Enable LED is not lit when:

- Setup is required.
- The transmitter frequency is not set.
- The receiver is not receiving a PSO transmitted signal if configured as a repeater.
- If an input is configured as a transmit enable, and the input is de-energized.
- If an input is configured as a transmit enable, and the input is energized and the configured pickup delay for that input has not expired.

2.5.5 Transceiver Assembly Configuration Parameters

2.5.5.1 Transceiver Transmitter

The Transmit Frequency Selection is configured:

- if Transmit Frequency Selection is Standard, the user will configure the Transmit Frequency from the standard frequency list.
- if Transmit Frequency Selection is Alternate, the interface shall allow the user to configure the Transmit Frequency from the Alternate frequency list.

The user will configure the Transmit Level to Low or High.

2.5.5.2 Transceiver Receiver

The Receive Frequency Selection is configured:

- if Receive Frequency Selection is Standard, Receive Frequency is set from the standard frequency list.
- if Receive Frequency Selection is Alternate, the Receive Frequency is set from the Alternate frequency list.

The Receiver Address is set to A, C, D, E, F or Dynamic, and the Receiver Pickup delay from 0 to 30s.

2.5.5.3 Input and Output Configuration Settings

The input's pickup delay is set between 0 to 30 seconds.

When the code received is mapped as an output (e.g., OUT1=RXA), an input may be configured to control/override the code receive function. Also, when an input is configured to control/override the code received, a drop delay (e.g., IN1 DDLY=00 SEC) appears. If the enable is de-energized while the output is running a drop delay, the drop delay time will be truncated.

2.5.6 Transceiver Assembly Default Settings

When the *SET DEFAULTS setting is selected on the Transceiver Assembly Menu, the values in Table 5-9 are set.

2.5.7 Transceiver Assembly Calibration

The receiver requires user calibration in order to set the appropriate threshold for train detection. A shunt (e.g., 0.06 Ω, 0.1 Ω, etc.) is placed at a specific location on the track and the calibration for the receiver is started. The Unit monitors the signal level and stores that signal level in Non-Volatile Memory (NVRAM). This stored signal level is then used as a base line to determine whether the track is occupied. A Receiver Threshold setting is available for Broken Rail Applications. See Section 7.4 for Transceiver Assembly calibration procedures.

2.5.8 Transceiver Assembly Out of Service

⚠ WARNING

WARNING

THE RAILROAD PROCEDURES GOVERNING HOW TO TAKE A TRACK CIRCUIT OUT OF SERVICE SHALL BE FOLLOWED. THE INSTRUCTIONS IN THIS SECTION MAY BE FOLLOWED ONLY IF ALLOWED BY THE RAILROAD.

OUT OF SERVICE TRACKS WILL NOT RESPOND TO TRAIN OPERATION. TAKE ALTERNATE MEANS TO WARN VEHICULAR TRAFFIC, PEDESTRIANS, AND EMPLOYEES.

REQUIRED OPERATIONAL TESTS SHOULD BE PERFORMED IN ACCORDANCE WITH RAILROAD PROCEDURES WHEN RESTORING TRACKS TO SERVICE.

THE RAILROAD PROCEDURES FOR APPLYING TEMPORARY JUMPERS MUST BE FOLLOWED WHEN ENERGIZING THE "OUT OF SERVICE" INPUT(S).

INPUTS FOR "OUT OF SERVICE" SHOULD BE WIRED IN A PERMANENT MANNER IN ACCORDANCE WITH CIRCUIT PLANS.

DO NOT USE TEST TERMINALS OR SWITCHES THAT CAN VIBRATE CLOSED TO ENERGIZE OOS INPUTS.

The Transceiver Assembly is taken out of service by programming the unit via the user interface and physically energizing an input. The unit is taken Out of Service by setting the OOS Allowed parameter to Yes (ENBL), assigning an input to be the OOS input, and then energizing the input. When the receiver is out of service, the Occupancy LED remains lit regardless of the PSO receiver state or the state of the Receiver Enable input. Refer to Section 6.5, Out of Service Operations, for further information.

When putting the Transceiver Assembly back into service, deenergize the OOS input. If the "OOS Allowed" is set to disable with the OOS input still energized then the unit will go into a restrictive state (outputs de-energized) until the input is deenergized. This restrictive state can occur if:

- The OOS input is not de-energized before placing the unit back into service by setting the "OOS Allowed" to "disabled."
- The out of service timer expires with the OOS input still energized
- The unit reboots while out of service.

Select whether the Out of Service is allowed (a user is allowed to take the Receiver Out of Service) or Disabled (a user is not allowed to take the Receiver Out of Service).

2.6 PSO 4000 SYSTEM WIDE COMMON DATA

The following items of information are common across the PSO 4000 system.

2.6.1 Version Data

This data is shown on the 4-character display with VERS scrolling across the display. The version data of all software and hardware in the unit is viewable. The Configuration Check Number (CCN) is also viewable. The CCN is calculated over the visible configuration parameters (i.e., the settings of configuration parameters which are not visible on the display will not affect the CCN). The CCN is displayed as a hexadecimal number.

The CCN will not change if new executive software is loaded if the visible configuration parameters are unchanged. If the visible configuration parameters do change, the CCN will change.

The PSO Check Number (PCN) is used to verify that settings on the PSO 4000 transceiver have not been changed or altered. The PCN encompasses the following data/parameters:

- All PSO calibration parameters
- Date and Time of last PSO calibration
- PSO TX Frequency
- PSO TX Level

2.6.2 Receiver Data

This data is shown on the 4-character display with INFO scrolling across the display. The receiver gain values and signal level for each receiver or island circuit may be viewed via the menu. If receiver signal level is being viewed, the signal level data is refreshed at least once per second. The unit code being received is shown, whether valid or not. The receiver and island gain (the measure of the signal level at calibration) may be viewed. The received signal level relative to the calibration level may also be viewed.

2.6.3 Diagnostic Data

This data is shown on the 4-character display with DIAG scrolling across the display. Whenever any of the following conditions occurs, the system provides diagnostic messages via the four character alphanumeric display:

- Setup is required.
- A receiver is not calibrated.
- The Island is not calibrated.
- The Island is unhealthy.
- A transmitter is unhealthy.
- A receiver is unhealthy.
- The Out of Service input is energized and “>OOS ALLOWED =” is set to No (DSBL).
- The receiver is receiving a signal above its calibration threshold, the configured pickup delay has expired, but the wrong address is being received.

See Appendix C for more information regarding diagnostic data.

2.6.4 Out of Service Data

This data is shown on the 4-character display with OOS scrolling across the display. Refer to Section 6.5, Out of Service Operations, for further information.

2.6.4.1 Receiver and Transceiver Assemblies

If the Out of Service Allowed function is enabled in the Receiver or Transceiver Assemblies, the unit may be taken out of service via energizing a selected OOS input.

If the Out of Service Timeout is used, the out of service timeout shall start when the taken out of service function initiates

If a Unit is Out of Service and any of the following occurs, the Unit is put back In Service:

- the Out of Service Timeout expires and the OOS input is energized. However, the Outputs will remain de-energized until the input is de-energized,
- the Out of Service input is de-energized,
- the unit reboots, but Outputs remain de-energized until the OOS input is de-energized,
- Out of Service Allowed is disabled.

If any part of the Unit was taken Out of Service and the Out of Service input is energized, the unit is placed in a restrictive state if:

- The Out of Service Timeout expires or
- The unit reboots

2.6.4.2 Crossing Assembly

When the OOS Allowed is selected to Enabled, the users may take a Crossing Assembly Out of Service as defined in the User Interface Out of Service Section, Section 6.5.

If the Out of Service Allowed function is enabled in the Crossing Assembly, the following components may be taken out of service via energizing a selected OOS input:

- Receiver 1
- Receiver 2
- Approaches (Receiver 1 and 2)
- Island
- Crossing

If the Out of Service Timeout is used, the out of service timeout shall start when the taken out of service function initiates

If a Unit is Out of Service and any of the following occurs, the Unit is put back In Service:

- the Out of Service Timeout expires and the OOS input is energized. However, the Outputs will remain de-energized until the input is de-energized,
- the Out of Service input is de-energized,
- the unit reboots, but Outputs remain de-energized until the OOS input is de-energized,
- Out of Service Allowed is disabled.

If any part of the Unit was taken Out of Service and the Out of Service input is energized, the unit is placed in a restrictive state if:

- The Out of Service Timeout expires or
- The unit reboots

2.6.4.3 Taking a Component Out of Service

To take a component part out of service:

- Ensure the Out of Service Allowed Parameter is set to Yes (ENBL),
- One input is configured as an Out of Service input,
- An Out of Service Time (None, 1…8, 13, 16, 24hrs) is set via the OOS menu.
- The component part to be placed out of service is selected from the menu.
- The user must energize the out of service input within 30 seconds of selecting the out of service component,
- The Out of Service input is energized.

When a component is Out of Service, it is returned back into service by removing the OOS input.

The user must return an out of service component part in the Crossing Assembly back into service prior to taking another component part out of service.

When a component is out of service, the menu will display which component is out of service and how much time remains until the unit comes back into service.

2.6.5 Diagnostic Port Data

Reports with the following information may be obtained using a Hyperterminal application:

- The configuration settings
- The CCN
- The receiver and island gain levels,
- The software version
- The hardware version

The event log may be saved to a file using a Hyperterminal application.

The following information may be viewed on a single screen and saved to a file, in real time (updated at least once per second using a Hyperterminal application):

- Island receive signal level,
- Island state (energized, de-energized, running pickup delay),
- Receiver signal level
- Receiver states (energized, de-energized, running pickup delay)
- Received modulation address

The system allows maintenance personnel to clear the event log using a Hyperterminal application. The executive software is updated using the DT program.

2.6.6 Diagnostic Message Data

The system provides diagnostic messages that enable personnel to see if there are any problems in the system. The Unit Health LED indicates if the system is healthy (slow flash) or unhealthy (fast flash). The display allows users to see the following:

- Setup not performed
- Island requires calibration
- Receiver 1 requires calibration
- Receiver 2 requires calibration
- Island Health Error
- Receiver 1 Health Error
- Receiver 2 Health Error
- Transmitter Health Error
- Out of Service input left high

See Appendix C for further information regarding diagnostic messages.

2.6.7 Performance Data

The Vital Relay Output indicating PSO Occupancy will de-energize within 1.0 seconds from the application of a shunt (of the same value as used for calibration) for a properly adjusted track circuit.

The Vital Relay Output indicating PSO Occupancy will energize within the following number of seconds plus the configured pickup delay from the removal of a shunt.

Table 2-10 Output Occupancy Energization Times

Frequency	Time
< 645	2s
>= 645	1s

The Vital Relay Output indicating Island Occupancy de-energizes within 1.0 seconds from the application of a shunt (of the same value as used for calibration) for a properly adjusted track circuit.

The Vital Relay Output indicating Island Occupancy energizes within 1.0 second from the removal of a shunt (of the same value as used for calibration) for a properly adjusted track circuit.

The Transmitter stops generating the transmit signal within 1s of the transmit enable input de-energizing.

The Transmitter starts generating the transmit signal within 1s of the transmit enable input energizing.

The Island is capable of detecting train occupancy in a minimum time of 0.5 seconds.

2.6.8 System Data

LEDs on the unit depict:

- Receiver Occupancy (Receiver, Transceiver and Crossing Assemblies)
- Island Occupancy (Crossing Assembly)
- input and output states
- XR, Occupancy, and Stick states (Crossing Assembly)
- Unit Health
- Power

The Occupancy LEDs will be off to indicate occupancy, flashing to indicate pickup delay running and On when there is no occupancy.

2.6.9 Event Recording

The system provides an event log capable of recording at least one day's worth of events under typical operating conditions. If power is removed, the event log is lost.

The system clears the event log if new executive software is loaded.

The system creates the following logs:

- Configuration Log – depicts the current configuration of the connected PSO 4000 Module
- Status Log – records all significant events that has occurred since last power on
- Summary Log – records all major events of significant
- Event Monitor – provides a near real-time listing of signal level, input and output status, and occupancy status

The system records an appropriate entry to the log (which may be downloaded via Hyperterminal) for the following events:

- A system reboot,
- A change to configuration,
- User performed Set to Default,
- User passing or failing Display Self-Test,
- Calibration of receiver or island,
- Island occupied (including signal level),
- Island pickup delay started (including signal level),
- Island pickup delay expired (including signal level),
- PSO Receiver 1 occupied (including signal level),
- PSO Receiver 1 pickup delay started (including signal level),
- PSO Receiver 1 pickup delay expired (including signal level),

- User takes Island or PSO Receiver out of service,
- User puts Island or PSO Receiver back in service,
- Out of Service Timer expired,
- Change in state of output (including the output name, and configured name and state),
- Change in state of input (including the input name, and configured name and state),
- Unit health error,
- Unit health error cleared,
- Island, PSO receiver, or transmitter health error,
- Island, PSO receiver, or transmitter health error cleared,
- Shutdown for any reason including information indicating why,
- User request to download log,
- Internal application Directional Stick Logic states (if they are not mapped to outputs).
- Status Log messages (assigning values to parameters, value measurements, invalid messages, etc.)
- Summary Log messages (Start of Buffer, re-boots executed, Runtime errors, End of Event Buffer Reached).

The logs regarding these events may be downloaded via the use of the Hyperterminal.

2.6.10 LED Data

The Unit shows:

- Whether power is being applied to the unit using a green LED.
- The health of the unit using a yellow LED.
- Whether an input is energized using red LEDs.
- Whether an output is energized using red LEDs.
- Input and Occupancy LEDs flash to indicate the pickup delay is running.

2.7 PSO 4000 SYSTEM FUNCTIONAL REQUIREMENTS

2.7.1 General

NOTE

NOTE

The CCN does not change if new executive software is loaded, and the visible configuration parameters are identical to the previous version of executive software.

When executive software is changed, the system uses the current configuration parameters if the executive software has the same configuration properties as the previously loaded version.

When executive software is changed, the system sets the configuration parameters back to their default values if the new executive software has incompatible configuration properties available from the previously loaded version.

The Configuration Check Number (CCN) is a hexadecimal number, calculated over visible configuration parameters. Setup is required whenever:

- A set to default has been done (by a user or by the system),
- The Unit reboots and the configuration stored in NVRAM is invalid,
- The island is enabled, and the island frequency has not been set,
- Receiver 1 is enabled, and the Receiver 1 frequency has not been set,
- Receiver 2 is enabled, and the Receiver 2 frequency has not been set,
- The Transmitter is enabled, and the Transmitter frequency has not been set, or
- A setup has not been done.

Setup is complete when all of the following are true:

- A setup has been completed and changes saved.
- The Unit reboots and the configuration stored in NVRAM is valid,
- The island is enabled, and the island frequency has been set or the island is disabled,
- Receiver 1 is enabled, and the Receiver 1 frequency has been set or the receiver is disabled,
- Receiver 2 is enabled, and the Receiver 2 frequency has been set or the receiver is disabled,
- The Transmitter is enabled, and the Transmitter frequency has been set or the transmitter is disabled.

Island Calibration is required when:

- The Island has not been calibrated for this frequency,
- The Island has not been calibrated with the current version of software,
- A set to default has been done (even if the original frequency has been restored).

Receiver Calibration is required when:

- The Receiver has not been calibrated for this frequency,
- The Receiver has not been calibrated with the current version of software,
- A set to default has been done (even if the original frequency has been restored).

2.7.2 Directional Stick Logic Application Data

The system can provide the following outputs:

- Crossing Relay (XR)
- 1 Stick (1STK)
- 2 Stick (2STK)
- Any Stick (STK)

This Page Intentionally Left Blank

SECTION 3 **AUXILIARY EQUIPMENT**

3.0 AUXILIARY EQUIPMENT

3.1 GENERAL

The equipment described in the following paragraphs may be used with the PSO 4000. Refer to Section 9 for application diagrams illustrating use of these items.

⚠ CAUTION

CAUTION

THE DEVICES DESCRIBED HERE MUST BE MOUNTED IN WEATHERPROOF ENCLOSURES UNLESS STATED OTHERWISE.

Table 3-1 Equipment-Paragraph Cross Reference Chart

Paragraph	Equipment Covered	Paragraph	Equipment Covered
3.6.1	AC Shunt, Wide Band, 8A076A	3.3.7	PSO Insulated Joint Bypass Coupler (Tuned), 7A422-f (1)
3.2.1	Battery Choke, 62648	3.3.6	PSO Line Coupler, Low Z, 7A403 with PSO Line Terminator, 7A345
3.2.1	Battery Choke, 8A065	3.3.4.1	Receiver Line to Rail Coupler, 7A377-1-f (1)
3.5	Battery Surge Protection	3.3.4.4	Receiver Line To Rail Coupler, 7A377-2-f (1)
3.4	Cab Signal Filter, 7A417-X (2)	3.5.1	Track Wire Surge Protection in Electrified Territory
3.3.3	Line to Receiver Coupler, 7A388	3.3.5	Transmitter Line to Rail Coupler, 7A399-f (1)
3.2.1	PSO Battery Choke, 7A360	3.3.1	Tuned Receiver Coupler, 7A355-f (1)
3.2.4	PSO Battery Line Filter, 7A418	3.3.2	Tuned Receiver Coupler, Hi Z, 7A366-f (1)

(1) **–f** following part number indicates unit is frequency specific – use appropriate PSO 4000 frequency

(2) **–X** following part number indicates dash number options are available

3.2 BATTERY CHOKES AND FILTERS

WARNING

WHERE GCP'S OR MOTION SENSORS ARE INSTALLED WITH THE PSO 4000, THE 7A360 CHOKE MUST NOT BE USED.

INSTEAD, USE THE 8A065A OR 62648 CHOKES (8A065A MUST BE USED WITHIN MODEL 300 OR 400 GCP APPROACHES).

3.2.1 Equipment Description

PSO Battery Choke, 7A360, (see Figure 3-1) connects in series to the rail of any track battery within the track circuit. Suitable substitutions for the PSO Battery Choke, 7A360 are the Battery Choke, 62648 and Battery Choke, 8A065A (see Figure 3-2).

Each of the battery chokes consists of a large inductor and a set of AREMA binding posts on a mounting base (see Figure 3-1 and Figure 3-2 for mounting dimensions).

3.2.2 Mounting Dimensions

3.2.2.1 PSO Battery Choke, 7A360

Mounting Dimensions for the PSO Battery Choke, 7A360 are as follows:

- Dimensions:
  - 5.0 inches (12.70 centimeters) wide
  - 5.5 inches (13.97 centimeters) deep
  - 3.4 inches (8.64 centimeters) high
- Weight:
  - 6 pounds, 8 ounces (2.95 kilograms) (approximate)

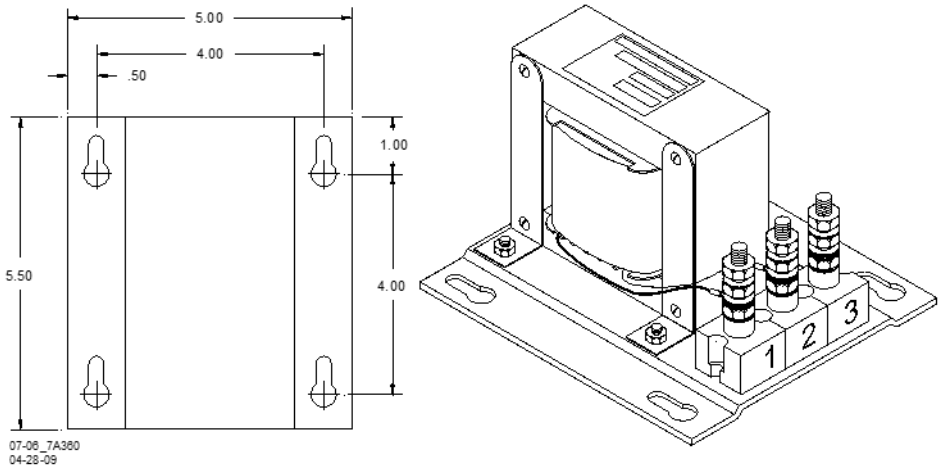

Figure 3-1 PSO Battery Choke, 7A360 With Mounting Dimensions

3.2.2.2 Battery Choke 62648 and Battery Choke 8A065A

Mounting Dimensions for the Battery Choke, 62648 and Battery Choke, 8A065A are as follows:

- Dimensions:
  - 4.5 inches (11.43 centimeters) wide
  - 5.0 inches (12.70 centimeters) deep
  - 8.5 inches (21.59 centimeters) high (to top of terminal studs)
- Weight
  - 17 pounds (7.72 kilograms) (approximate)

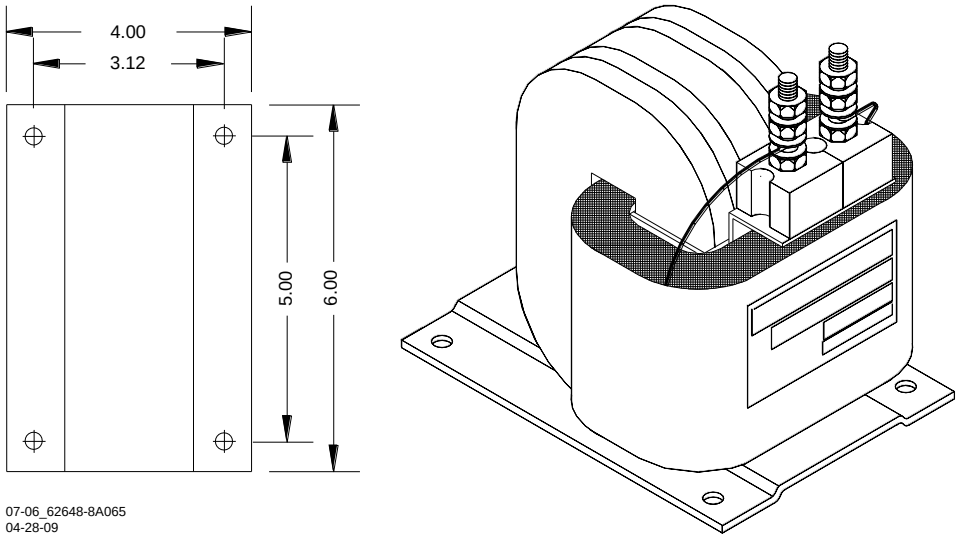

07-06_62648-8A065
04-28-09

Figure 3-2 Battery Choke, 62648 & Battery Choke, 8A065A with Mounting Dimensions

3.2.3 Application Installation, 7A360, 62648 & 8A065A

Application installation of a Battery Choke is as described in Section 4.5.5 and as depicted in Figure 3-3.

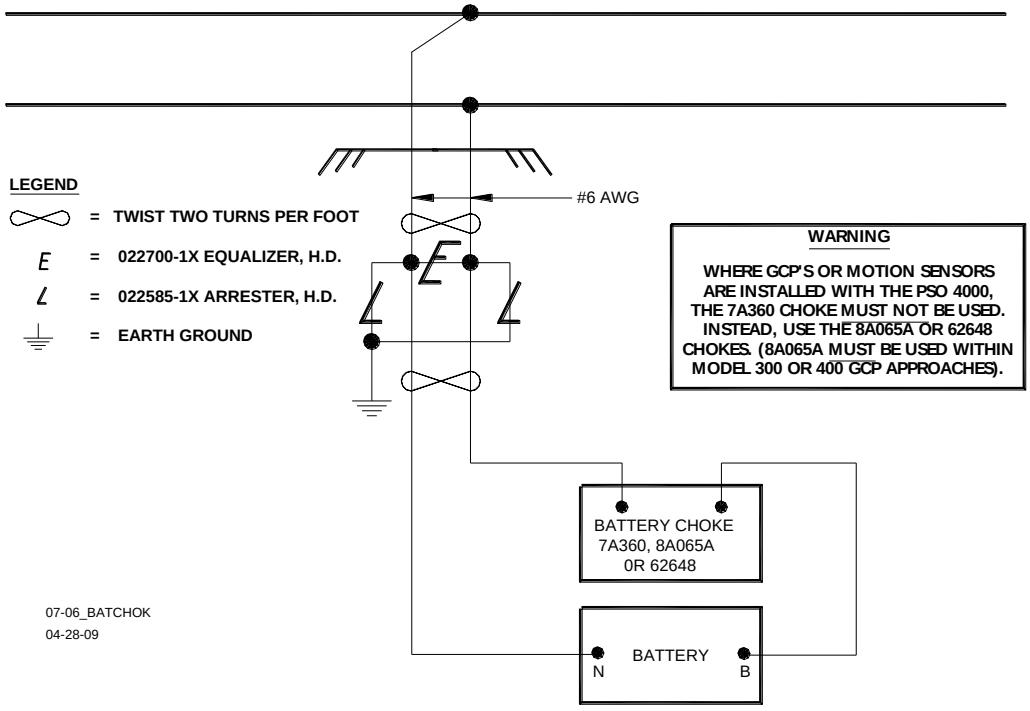

Figure 3-3 Typical Battery Chokes 8A065A, 62648, or PSO Battery Choke, 7A360 Application Installation

3.2.4 PSO Battery Line Filter, 7A418

3.2.4.1 Equipment Description, 7A418

The PSO Battery Line Filter, 7A418 assembly consists of a large choke coil, a capacitor, and a set of AREMA binding posts on a mounting base.

3.2.4.2 Mounting Dimensions, 7A418

Mounting Dimensions for the 7A418 Battery Line Filter assembly are as follows:

- Dimensions
  - 5.0 inches (12.70 centimeters) wide
  - 9.0 inches (22.86 centimeters) deep
  - 3.75 inches (9.53 centimeters) high
- Weight
  - 7 pounds, 2 ounces (3.23 kilograms) (approximate)

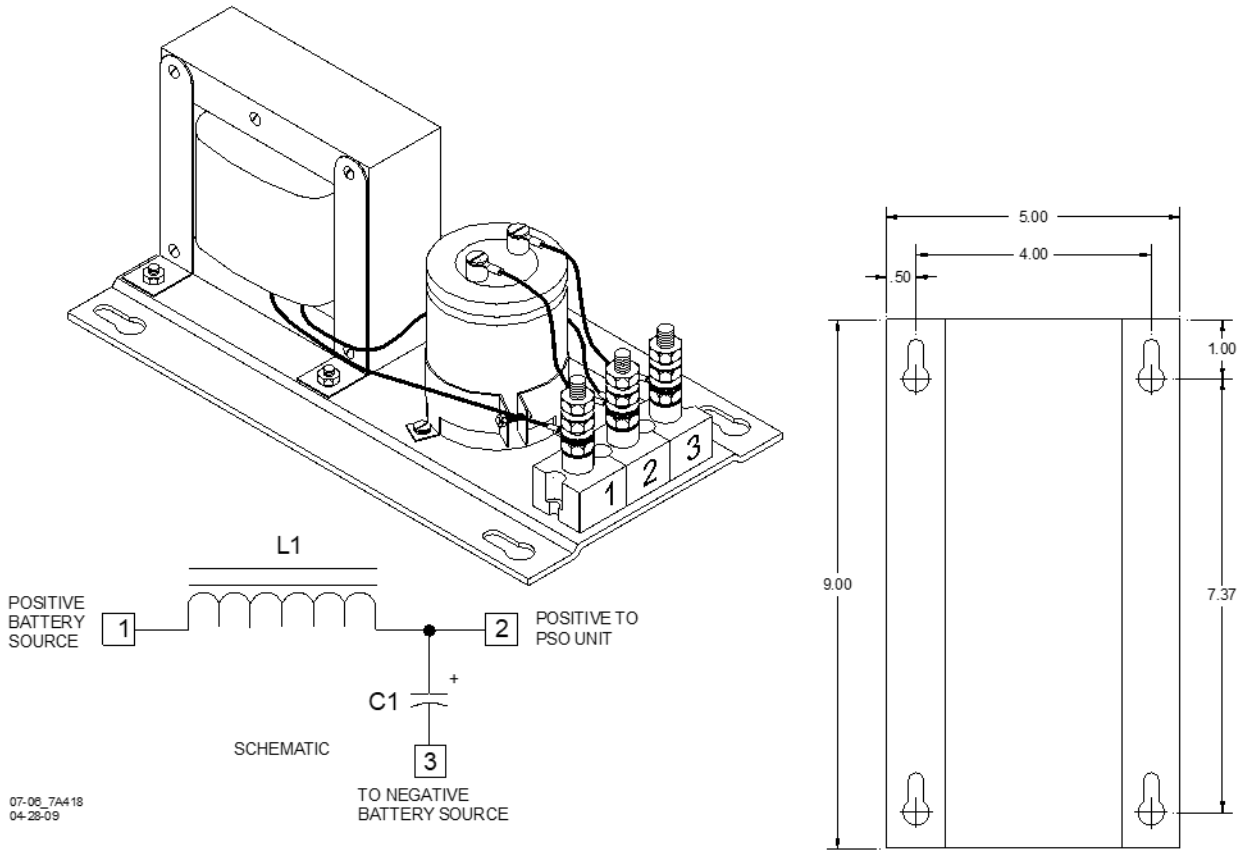

Figure 3-4 PSO Battery Line Filter, 7A418, With Mounting Dimensions

3.2.4.3 Application Installation, 7A418

PSO Battery Line Filter, 7A418, is recommended for use in providing decoupling between the battery and those PSO 4000 Assemblies utilizing the same frequency.

In track circuits where the transmitters and receivers are powered from the same battery, install the filter between the battery and each transmitter and the battery and each receiver of the same frequency (see examples below).

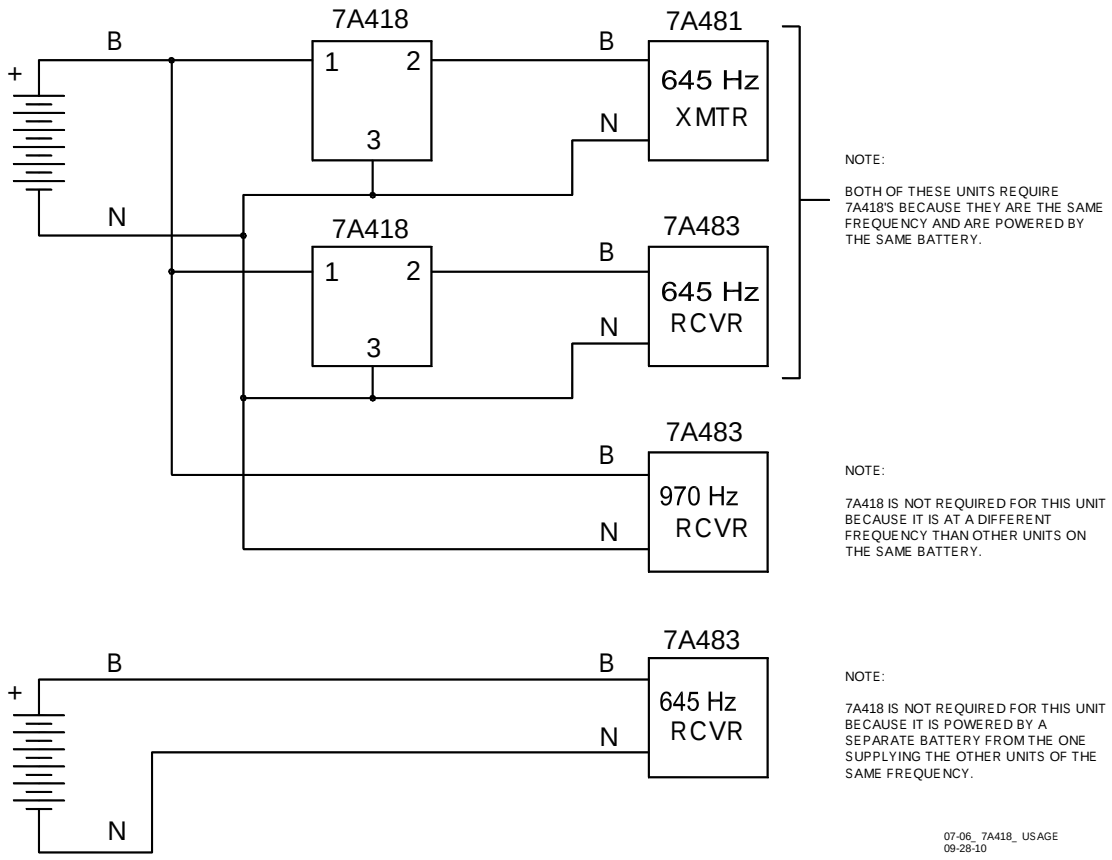

Figure 3-5 Battery Line Filter Usage Guidelines

3.3 PSO COUPLERS

NOTE

PSO Couplers (7A355-f, 7A366-f, 7A377-X-f, & 7A399-f) are available for use for the 16 standard PSO 4000 carrier frequencies, as well as for the 31 common frequencies typically used by non-Siemens equipment.

3.3.1 Tuned Receiver Coupler, 7A355-f

3.3.1.1 Equipment Description, 7A355-f

The tuned receiver coupler, 7A355-f, couples the phase shift overlay signal from the track to the receiver. The 7A355-f coupler provides a low (1 – 2 ohm) impedance to the receiver from the track. However, the coupler does not shunt other signals from the track since a low impedance is produced only at the specified frequency. The coupler must always be the same frequency as programmed on the PSO 4000 transmitter and receiver.

The coupler assembly consists of a tubular PVC plastic enclosure with mounting brackets at the base. There are four AREMA binding posts on the top of the assembly that provide connections to the circuits housed within the sealed unit (see Figure 3-6).

The 7A355-f coupler can be used when two receivers are located on the same side of the transmitter. In this application both receivers are coupled with the 7A355-f. This application applies when the distance from the transmitter to the farthest receiver is less than 40% of the published distance for the frequency used. When the distance from the transmitter to the farthest receiver is longer than 40% of the published distance, or other circumstances apply, the 7A366-f “Hi Z” receiver coupler should be used for the closest receiver to the transmitter (See Section 3.3.2).

3.3.1.2 Mounting Dimensions, 7A355-f

Mounting Dimensions for the Tuned Receiver Coupler, 7A355:

- Dimensions:
  - 3.50 inches (8.89 centimeters) in diameter
  - 7.75 inches (19.69 centimeters) high (to top of AREMA binding posts)
- Weight
  - 3.5 pounds (1.59 kilograms) approximate

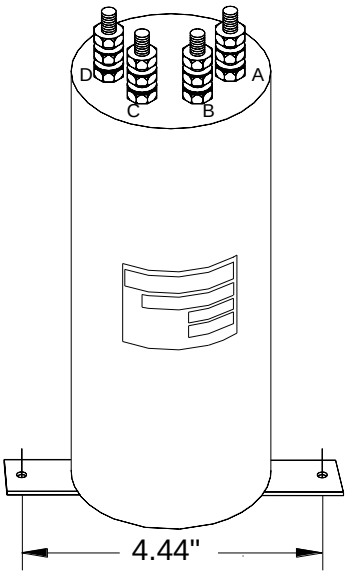

Figure 3-6 Tuned Receiver Coupler, 7A355-f

3.3.1.3 Application Installation, 7A355-f

See Figure 9-4, Figure 9-5, Figure 9-6, Figure 9-7, and Figure 9-8 for Tuned Receiver Coupler, 7A355-f application installation drawings. The coupler terminals are connected as follows:

- Terminals A & B connect to the wire leads that are connected to the shelter surge equipment terminals which are in turn connected the appropriate gauge twisted pair track leads that connect to the rails.
- Terminals C & D connect to the wire leads connected to “RX –“ and “RX +” on the PSO 4000 Lower 10-pin Connector

Twisted pair track wires running from the shelter surge equipment that is connected to the Tuned Receiver Coupler, 7A355-f to the rails via may be #9 AWG for distances of up to 100 ft. (30.5 m). For distances between 100 – 300 ft. (30.5 – 91.4 m) in length, track wires should be #6 AWG.

For distances greater than 300 ft. (30.52 m) but less than 2000 ft. (609.6 m), the Tuned Receiver Coupler, 7A355-f should be replaced by the Line to Receiver Coupler, 7A388. The 7A388 should be used in conjunction with either the Receiver Line to Rail Coupler, 7A377-1-f or the Receiver Line to Rail Coupler, 7A377-2-f (see paragraphs 3.3.4.1 and 3.3.4.4, respectively).

3.3.2 Tuned Receiver Coupler, Hi Z, 7A366-f

3.3.2.1 Equipment Description, 7A366-f

NOTE

NOTE

Maximum track distances will be reduced by at least 30% in applications using the Tuned Receiver Coupler, Hi Z, 7A366-f.

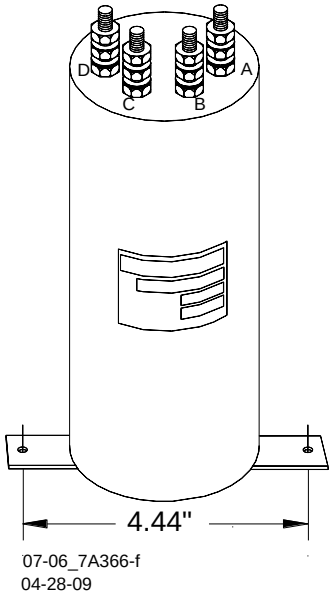

Figure 3-7 Tuned Receiver Coupler, Hi Z, 7A366-f

The Tuned Receiver Coupler, Hi Z, 7A366-f couples the phase shift overlay signal from the track to the receiver. The 7A366-f coupler provides an input impedance of 5 ohms, enabling other receivers on the track to be operated from the same transmitter. The coupler must always be of the same frequency as that set on the PSO 4000 transmitter and receivers. The coupler assembly consists of a tubular PVC plastic enclosure with mounting brackets at the base. There are four AREMA binding posts on the top of the assembly that provide connections to the circuits housed within the sealed unit (see Figure 3-7).

3.3.2.2 Mounting Dimensions, 7A366-f

Mounting Dimensions for the Tuned Receiver Coupler, Hi Z, 7A366:

- Dimensions:
  - 3.50 inches (8.89 centimeters) in diameter
  - 7.75 inches (19.69 centimeters) high (to top of AREMA binding posts)
- Weight
  - 3.5 pounds (1.59 kilograms) approximate

3.3.2.3 Application Installation, 7A366-f

See Figure 9-8 for Tuned Receiver Coupler, Hi Z, 7A366-f application installation drawings. The coupler terminals are connected as follows:

- Terminals A & B connect to the wire leads that are connected to the shelter surge equipment terminals which are in turn connected the appropriate gauge twisted pair track leads that connect to the rails.
- Terminals C & D connect to the wire leads connected to “RX –“ and “RX +” on the PSO 4000 Lower 10-pin Connector

There must be a minimum of 500 ft. (152.4 m) separating the track connections of the Tuned Receiver Coupler, Hi Z, 7A366-f from the track connections of the PSO 4000 Transmitter, 7A471.

Track wires connecting the Tuned Receiver Coupler, Hi Z, 7A366-f to the rails may be #9 AWG for distances between the coupler and the track of up to 100 ft. (30.5 m). When the distances are between 100 – 300 ft. (30.5 – 91.4 m) in length, track wires should be #6 AWG.

For distances greater than 300 ft. (30.52 m) but less than 2000 ft. (609.6 m), the Tuned Receiver Coupler, Hi Z, 7A366-f should be replaced by the Line to Receiver Coupler, 7A388. The 7A388 should be used in conjunction with either the Receiver Line to Rail Coupler, 7A377-1-f or the Receiver Line to Rail Coupler, 7A377-2-f (see paragraphs 3.3.4.1 and 3.3.4.4, respectively).

3.3.3 Line to Receiver Coupler, 7A388

3.3.3.1 Equipment Description, 7A388

The Line to Receiver Coupler, 7A388 is non-tuned and provides transmitter to line coupling or line to receiver impedance matching. The 7A388 coupler assembly consists of a tubular PVC plastic enclosure with mounting brackets at the base. There are four AREMA binding posts on the top of the assembly that provide connections to the circuits housed within the sealed units (see Figure 3-8).

3.3.3.2 Mounting Dimensions, 7A388

Mounting Dimensions for the Line to Receiver Coupler, 7A388 are as follows:

- Dimensions:
  - o 3.5 inches (8.89 centimeters) in diameter
  - o 10.75 inches (27.31 centimeters) high (to top of AREMA binding posts)
- Weight
  - o 5.25 pounds (2.38 kilograms) (approximate).

3.3.3.3 Application Installation, 7A388

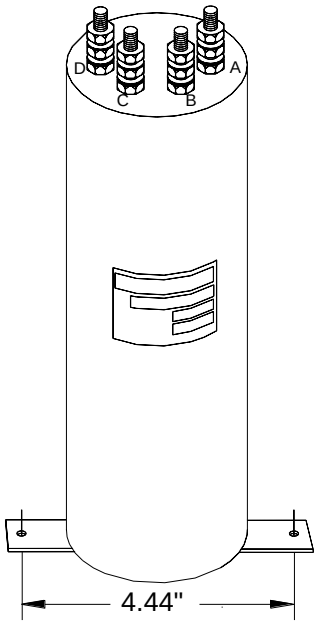

Figure 3-8 Line to Receiver Coupler, 7A388

See Figure 9-9, Figure 9-10, Figure 9-11, and Figure 9-12 for Line to Receiver Coupler, 7A388 application installation drawings. The coupler terminals are connected as follows:

3.3.3.3.1 Connecting Line to Receiver Coupler 7A388 to Receiver Line to Coupler, 7A377-1-f

- Terminals A & B connect to the wire leads connected to the shelter surge equipment terminals that are connected to the #14 AWG twisted pair of line wires which are connected to the equalizer that is connected to the #10 AWG leads marked “LINE” on the 7A377-1-f, (See Figure 9-9 for exact wiring)
- Terminals C & D connect to the wire leads connected to “RX –“ and “RX +” on the PSO 4000 Lower 10-pin Connector.

3.3.3.3.2 Connecting Line to Receiver Coupler 7A388 to Receiver Line to Coupler, 7A377-2-f

- Terminals A & B connect to the wire leads that are connected to the shelter surge equipment terminals which are connected to the #14 AWG twisted pair of line wires that are connected to the equalizer which is connected to the wire leads connected to Terminals C & D on the 7A377-2-f, (See Figure 9-10 for exact wiring)
- Terminals C & D connect to the wire leads connected to “RX –“ and “RX +” on the PSO 4000 Lower 10-pin Connector

3.3.3.3.3 Connecting Line to Receiver Coupler 7A388 to Transmitter Line to Coupler, 7A399-f

- Terminals A & B connect to the wire leads that are connected to the shelter surge equipment terminals which are connected to the #14 AWG twisted pair of line wires that are connected to the equalizer that is connected to the wire leads connected to Terminals A & B on the 7A399-f (See Figure 9-11 or Figure 9-12 for exact wiring).
- Terminals C & D connect to the wire leads connected to “TX –“ and “TX +” on the PSO 4000 Lower 10-pin Connector

The Line to Receiver Coupler, 7A388 should be used when the distance from the rails to the transmitter or receiver to the track is between 300 ft. (30.52 m) but less than 2000 ft. (609.6 m) (based on using 14AWG; increasing the diameter of the wire will proportionally increase the potential distance from 2000 ft./609.6 m). The Line to Receiver Coupler, 7A388 is used in conjunction with either the Receiver Line to Rail Coupler, 7A377-1-f for a pole mounted configuration or the Receiver Line to Rail Coupler,7A377-2-f for a shelf mounted configuration (see paragraphs 3.3.4.1 and 3.3.4.4 , respectively) or the Transmitter Line to Rail Coupler, 7A399-f.

3.3.4 Receiver Line to Rail Coupler, 7A377-1-f & Receiver Line to Rail Coupler, 7A377-2-f

NOTE

NOTE

The Receiver Line to Rail Couplers, 7A377-1-f or 7A377-2-f, are tuned couplers and should be mounted in a weatherproof shelter located within 100 ft. (30.5 m) of the track connection. The track wire which connects the Receiver Line to Rail Coupler, 7A377-1-f or 7A377-2-f to the rails should be #6 AWG.

The Receiver Line to Rail Coupler, 7A377-1-f (see Figure 3-9) and the Receiver Line to Rail Coupler, 7A377-2-f (see Figure 3-10), provide line to rail coupling when the receiver is remotely located from the rail connections as depicted in Figure 9-9.

3.3.4.1 Equipment Description, 7A377-1-f

The 7A377-1-f coupler assembly consists of a tubular PVC plastic enclosure with mounting plates extending from each end suitable for pole mounting. There are two #6 AWG wires marked “Rail” and two #10 AWG wires marked "Line" (see Figure 3-9). When ordering, specify part number 7001-7A377-ffff (ffff = the assigned frequency for the coupler).

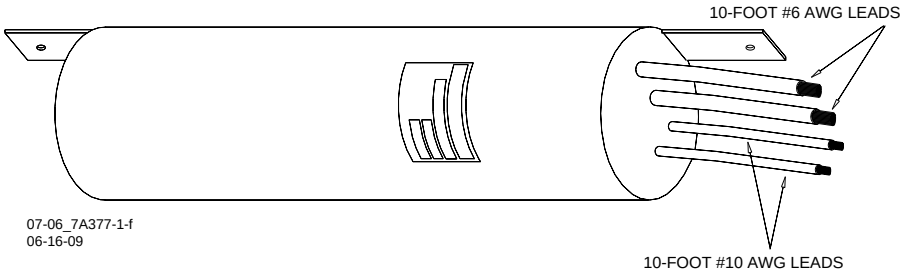

Figure 3-9 Receiver Line to Rail Coupler, 7A377-1-f

3.3.4.2 Mounting Dimensions, 7A377-1-f

Mounting Dimensions for the Receiver Line to Rail Coupler, 7A377-1-f are as follows:

- Dimensions:
  - o 3.50 inches (8.89 centimeters) O.D. in diameter
  - o 9.50 inches (24.13 centimeters) in length (mounting brackets not included)
  - o 13.00 inches (33.02 centimeters) in length (mounting brackets included)
- Weight
  - o 8 pounds (3.63 kilograms) (approximate)
- Leads:
  - o Stranded, black, 10 ft. (3.05 m) length; two #6 AWG (marked Rail) and two #10 AWG (marked Line).

3.3.4.3 Application Installation, 7A377-1-f

See Figure 9-9 for application installation drawings. The coupler wires are connected as follows:

- The two 10 ft. (3.04 m) long, #6 AWG leads (marked “Rail”) are connected to the sealed equalizer that is connected to the appropriate gauge twisted pair track wires connected to the rails
- The two 10 ft. (3.04 m) long, #10 AWG leads (marked “Line”) are connected to the sealed equalizer that is connected to the #14 AWG twisted pair of line wires that are connected to equipment shelter surge panel terminals that are in turn connected to Terminals A & B of the 7A388 (see Figure 9-8 for exact wiring)

The Receiver Line to Rail Coupler, 7A377-1-f should be used when the distance from the receiver to the track is between 300 ft. (30.52 m) but less than 2000 ft. (609.6 m) (based on using 14AWG; increasing the diameter of the wire will proportionally increase the potential distance from 2000 ft./609.6 m). The Receiver Line to Rail Coupler, 7A377-1-f is used in conjunction with the Line to Receiver Coupler, 7A388 (see paragraph 3.3.3).

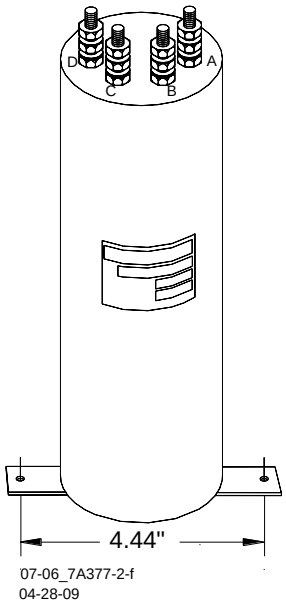

Figure 3-10 Receiver Line to Rail Coupler, 7A377-2-f

3.3.4.4 Equipment Description, Receiver Line-to-Rail Coupler 7A377-2-f

The 7A377-2-f coupler assembly consists of a tubular PVC plastic enclosure with mounting plates extending across the base suitable for shelf mounting. It is similar to the 7A377-1-f, but rather than having four wires protrude from the top of the assembly, the top of the 7A377-2-f has four AREMA binding posts that provide terminal connections for interface wiring (see Figure 3-10). When ordering, specify part number 7002-7A377-ffff (ffff = the assigned frequency for the coupler).

3.3.4.5 Mounting Dimensions, 7A377-2-f

Mounting Dimensions for the 7A377-2-f Receiver Line to Rail Coupler are as follows:

- Dimensions
  - o 3.5 inches (8.89 centimeters) O.D. in diameter
  - o 10.75 inches (27.31 centimeters) in height (to top of binding posts)
- Weight:
  - o 8 pounds (3.63 kilograms) (approximate)

3.3.4.6 Application Installation, 7A377-2-f

See Figure 9-10, and Figure 9-12 for application installation drawings. The coupler terminals are connected as follows:

- Terminals A & B are connected to the wire leads that are connected to the equalizer that is connected to the appropriate gauge twisted pair track wires, which are connected to the rails.
- Terminals C & D are connected to the wire leads that are connected to the sealed equalizer that is connected to the #14 AWG twisted pair of line wires that are connected to equipment shelter surge panel terminals that are in turn connected to Terminals A & B of the 7A388

The Receiver Line to Rail Coupler, 7A377-2-f should be used when the distance from the receiver to the track is between 300 ft. (30.52 m) but less than 2000 ft. (609.6 m) (based on using 14AWG; increasing the diameter of the wire will proportionally increase the potential distance from 2000 ft./609.6 m). The Receiver Line to Rail Coupler, 7A377-2-f is used in conjunction with the Line to Receiver Coupler, 7A388 (see paragraph 3.3.3).

3.3.5 Transmitter Line to Rail Coupler, 7A399-f

3.3.5.1 Equipment Description, 7A399-f

The Transmitter Line to Rail Coupler, 7A399-f couples the transmitter line to the track (see Figure 9-11 and Figure 9-12). The 7A399-f coupler assembly consists of a tubular PVC plastic enclosure with mounting brackets at the base. There are four AREMA binding posts on the top of the assembly that provide connections to the circuits housed within the sealed units (see Figure 3-11).

NOTE

NOTE

The Transmitter Line to Rail Coupler, 7A399-f should be mounted in a weatherproof shelter located within 100 ft. (30.5 m) of the track connection. The track wire connecting the Transmitter Line to Rail Coupler, 7A399-f to the track should be #6 AWG.

3.3.5.2 Mounting Dimensions, 7A399-f

Mounting Dimensions for the Transmitter Line to Rail Coupler, 7A399-f are as follows:

- Dimensions:
  - o 3.50 inches (8.89 centimeters) in diameter
  - o 7.75 inches (19.69 centimeters) high (to top of AREMA binding posts)
- Weight: 4.00 pounds. (1.81 kilograms) (approximate)

3.3.5.3 Application Installation, 7A399-f

See Figure 9-11 and Figure 9-12 for Transmitter Line to Rail Coupler, 7A399 application installation drawings. The coupler terminals are connected as follows:

- Terminals A & B are connected to the wire leads that are connected to the sealed equalizer that is connected to the #14 AWG twisted pair of line wires that are connected to equipment shelter surge panel terminals that are in turn connected to Terminals A & B of the 7A388.
- Terminals C & D are connected to the wire leads that are connected to the equalizer that is connected to the appropriate gauge twisted pair track wires, which are connected to the rails.

The Transmitter Line to Rail Coupler, 7A399-f should be used when the distance from the receiver to the track is between 300 ft. (30.52 m) but less than 2000 ft. (609.6 m) (based on using 14AWG; increasing the diameter of the wire will proportionally increase the potential distance from 2000 ft./609.6 m).

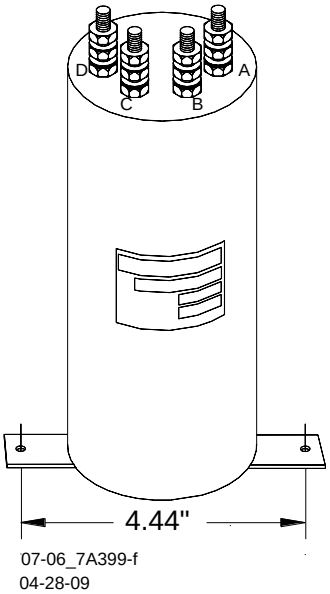

Figure 3-11 Transmitter Line to Rail Coupler, 7A399-f

The Transmitter Line to Rail Coupler, 7A399-f is used in conjunction with the Line to Receiver Coupler, 7A388 (see paragraph 3.3.3).

3.3.6 PSO Line Coupler, Low Z, 7A403 with PSO Line Terminator, 7A345

3.3.6.1 Equipment Description, 7A403

Control for additional signal aspects can be provided by overlaying a PSO 4000 frequency on two-wire signal HD line circuits. PSO 4000 line circuits can also be used to provide block indications between CTC control points by overlaying a frequency on the two-wire signal control circuits. The PSO circuit may be continued by coupling between line circuits between intermediate signals.

The PSO Line Coupler, Low Z, 7A403, with PSO Line Terminator, 7A345 is used to couple the PSO 4000 transmitter and receiver to the line as shown in Figure 9-13. The same coupler is used to bridge between adjacent circuits at intermediate signals when the PSO 4000 line circuit extends farther than one signal block. Frequencies higher than 970 Hz are recommended for line circuit applications. A battery choke must be installed in series with the DC line battery. The PSO Battery Choke, 7A360 is recommended for this purpose. The PSO Line Terminator, 7A345 is required on the PSO 4000 (not PSO II or PSO III) to provide line termination. The PSO Line Terminator, 7A345 is not normally required at receiver locations.

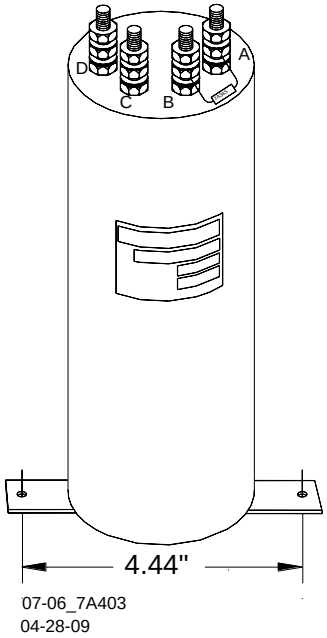

Figure 3-12 PSO Line Coupler, Low Z, 7A403 with PSO Line Terminator, 7A345

The coupler assembly consists of a tubular PVC plastic enclosure with mounting brackets at the base. There are four AREMA binding posts on the top of the assembly that provide connections to the circuits housed within the sealed unit (see Figure 3-12).

3.3.6.2 Mounting Dimensions, 7A403

Mounting Dimensions for the PSO Line Coupler, Low Z, 7A403 are as follows:

- Dimensions:
  - o 3.5 inches (8.89 centimeters) O.D. in diameter
  - o 8.25 inches (20.96 centimeters) in height (to top of AREMA binding posts)
- Weight:
  - o 5 pounds (2.27 kilograms) (approximate)

3.3.6.3 Application Installation, 7A403

WARNING

CONFIRM PROPER SIGNAL SYSTEM OPERATION FOLLOWING LINE OVERLAY INSTALLATION.

See Figure 9-13 for PSO Line Coupler, Low Z, 7A403 application installation drawings. The coupler terminals are connected as follows:

3.3.6.3.1 Signal West (Transmitter)

- Terminals A & B connect to the wire leads connected to “TX –“ and “TX +” on the PSO 4000 Lower 10-pin
- Connector Terminal C to West positive wire
- Terminal D to West negative wire

3.3.6.3.2 Signal Junction (Intermediate)

- Terminal A to West positive wire
- Terminal B to West negative wire
- Terminal C to East positive wire
- Terminal D to East negative wire

3.3.6.3.3 Signal East (Receiver)

- Terminals A & B connect to the wire leads connected to “RX –“ and “X +” on the PSO 4000 Lower 10-pin
- Terminal C to West positive wire
- Terminal D to West negative wire

Only those frequencies higher than 970 Hz are recommended for use with the PSO Line Coupler, 7A403. A PSO Battery Choke, 7A360 must be placed in series with each line battery.

3.3.7 PSO Insulated Joint Bypass Coupler (Tuned), 7A422-f

WARNING

WHEN ADDING OR REPLACING INSULATED JOINT COUPLERS, APPROPRIATE TESTS MUST BE MADE TO DETERMINE THAT THE INSULATED JOINT COUPLER DID NOT ADVERSELY AFFECT OTHER HIGHWAY CROSSING WARNING SYSTEMS OR WAYSIDE SIGNAL SYSTEM TRACK CIRCUITS.

THE 7A422-F MUST NOT BE USED TO PASS GCP OR MOTION SENSOR FREQUENCIES.

CAUTION

THE PSO INSULATED JOINT BYPASS COUPLER (TUNED), 7A422-F, SHOULD BE CONNECTED AS CLOSE AS PRACTICABLE TO THE INSULATED JOINTS, GENERALLY NO MORE THAN 25 FT. (7.62 M) FROM THE RAILS AND, TO AFFORD MAXIMUM PROTECTION FROM PHYSICAL DAMAGE, BE ENCASED IN A PROTECTIVE ENCLOSURE.

NOTE

The track wire connecting the PSO Insulated Joint Bypass Coupler (Tuned), 7A422-f, to the rails should be #6 AWG as a minimum.

3.3.7.1 Equipment Description, 7A422-f

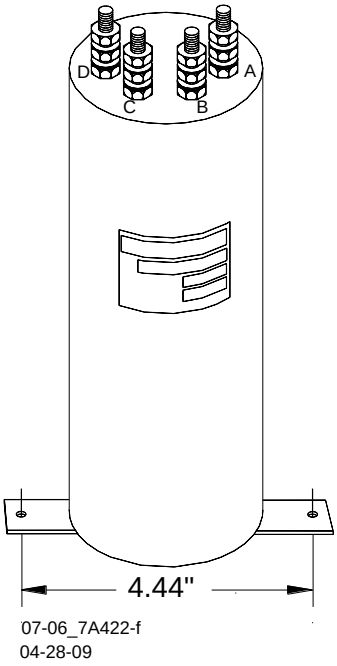

Figure 3-13 PSO Insulated Joint Bypass Coupler (Tuned), 7A422-f

The PSO Insulated Joint Bypass Coupler (Tuned), 7A422-f, passes a specific PSO 4000 frequency around an insulated joint in non-electrified territory.

The coupler assembly consists of a tubular PVC plastic enclosure with mounting brackets at the base. There are four AREMA binding posts on the top of the assembly that provide connections to the circuits housed within the sealed unit (see

Figure 3-13).

3.3.7.2 Mounting Dimensions, 7A422-f

Mounting Dimensions for the PSO Insulated Joint Bypass Coupler (Tuned), 7A422-f are as follows:

- Diameter:
  - o 3.5 inches (8.89 centimeters) O.D. in diameter
  - o 9.75 inches (24.77 centimeters) in height (to top of AREMA binding posts)
- Weight:
  - o 7 pounds (3.18 kilograms) (approximate)

Generally, the distance from the weatherproof enclosure enclosing the Tuned Joint Coupler, 7A422-f to the rails should not exceed 25 ft. (7.62m).

The track wire connecting the Tuned Joint Coupler, 7A422-f to the rails should be #6 AWG.

3.3.7.3 Application Installation, 7A422-f

Application installation of the Tuned Joint Coupler 7A422-f is as described in Section 4.5.4 and as depicted in Figure 3-14. The coupler terminals are connected as follows:

- Terminal A connects to Rail 1 on the east side of the insulated joint
- Terminal B connects to Rail 2 on the east side of the insulated joint
- Terminal C connects to Rail 2 on the west side of the insulated joint
- Terminal D connects to Rail 1 on the west side of the insulated joint

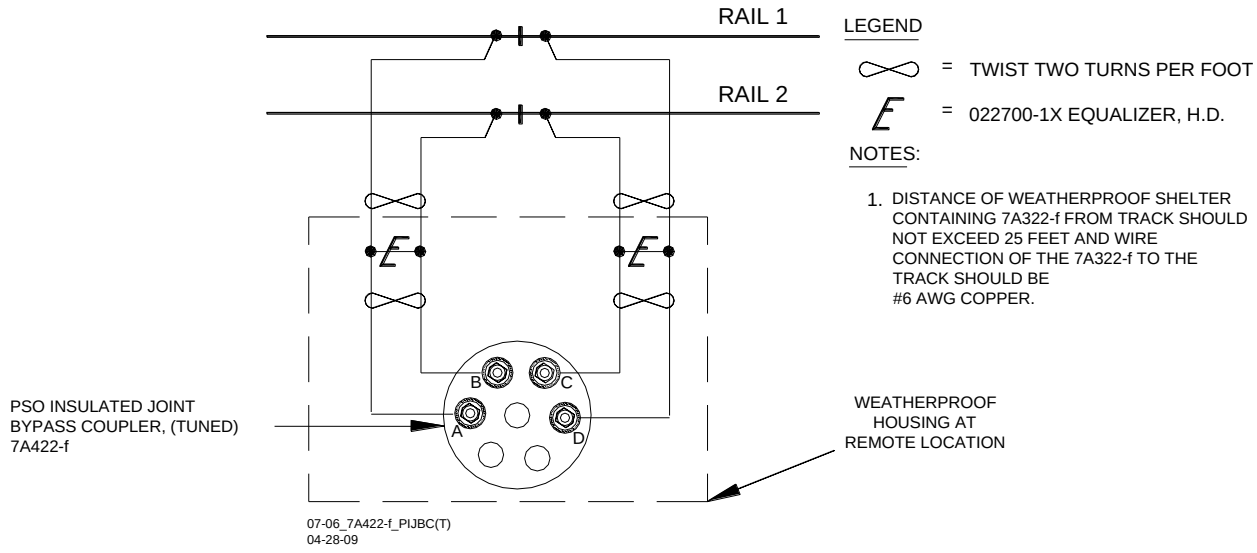

Figure 3-14 Typical 7A422-f Tuned Joint Bypass Coupler Application

3.4 AC TRACK CIRCUIT/CAB SIGNAL FILTER, 7A417-X

3.4.1 Equipment Description, 7A417-X

The Cab Signal Filter, 7A417-X, is designed for use in territory where 60, 90, 100, or 200-Hz cab signal or AC Track Circuits are used. Most applications require the use of a Cab Signal Filter. For further information, contact Siemens Engineering.

3.4.2 Mounting Dimensions, 7A417-X

The 7A417-X filter assembly can be configured according to signal frequency and relay mounting base type as indicated in the tab chart below (see Table 3-2). See Table 3-3 and Figure 3-16 for mounting dimensions. Due to the multiplicity of configurations and dimensions, refer to Figure 3-16 for the different mounting dimensions.

- Weight: 4 pounds, 8 ounces (2.04 kilograms) (average)

Table 3-2 Cab Signal Filter Relay Base Manufacturer-Frequency Cross Reference

7A417-X DASH NUMBER TAB CHART				
Relay Base Configuration	**Frequency**			
	100 Hz	**60 Hz**	**200 Hz**	**90 Hz**
Transcontrol	-01	-11	-21	-31
U. S. & S. (Ansaldo)	-02	-12	-22	-32
Siemens™	-03	-13	-23	-33

Mounting Dimensions for the Cab Signal Filter, 7A417-X assembly are delineated in Table 3-3:

Table 3-3 Cab Signal Filter Dimensions

Dash Number	Dimensions
-01, -02, -03, -11, -12, -13, -31, -32, -33	7.75 inches (19.69 centimeters) high
-21, -22, -23	5.0 inches (12.70 centimeters) high
-01, -11, -21, -31	6.75 inches (17.15 centimeters) wide 9.0 inches (22.86 centimeters) deep
-02, -12, -22, -32	4.94 inches (12.55 centimeters) wide 8.00 inches (20.32 centimeters) deep
-03, -13, -23, -33	4.94 inches (12.55 centimeters) wide 9.4375 inches (23.97 centimeters) deep

3.4.3 Application Installation, 7A417-X

A typical installation on the primary side of the track transformer, as described in Section 3.4.2, is depicted in Figure 3-15. Other applications of filters may be required depending on the type of cab signal circuits used.

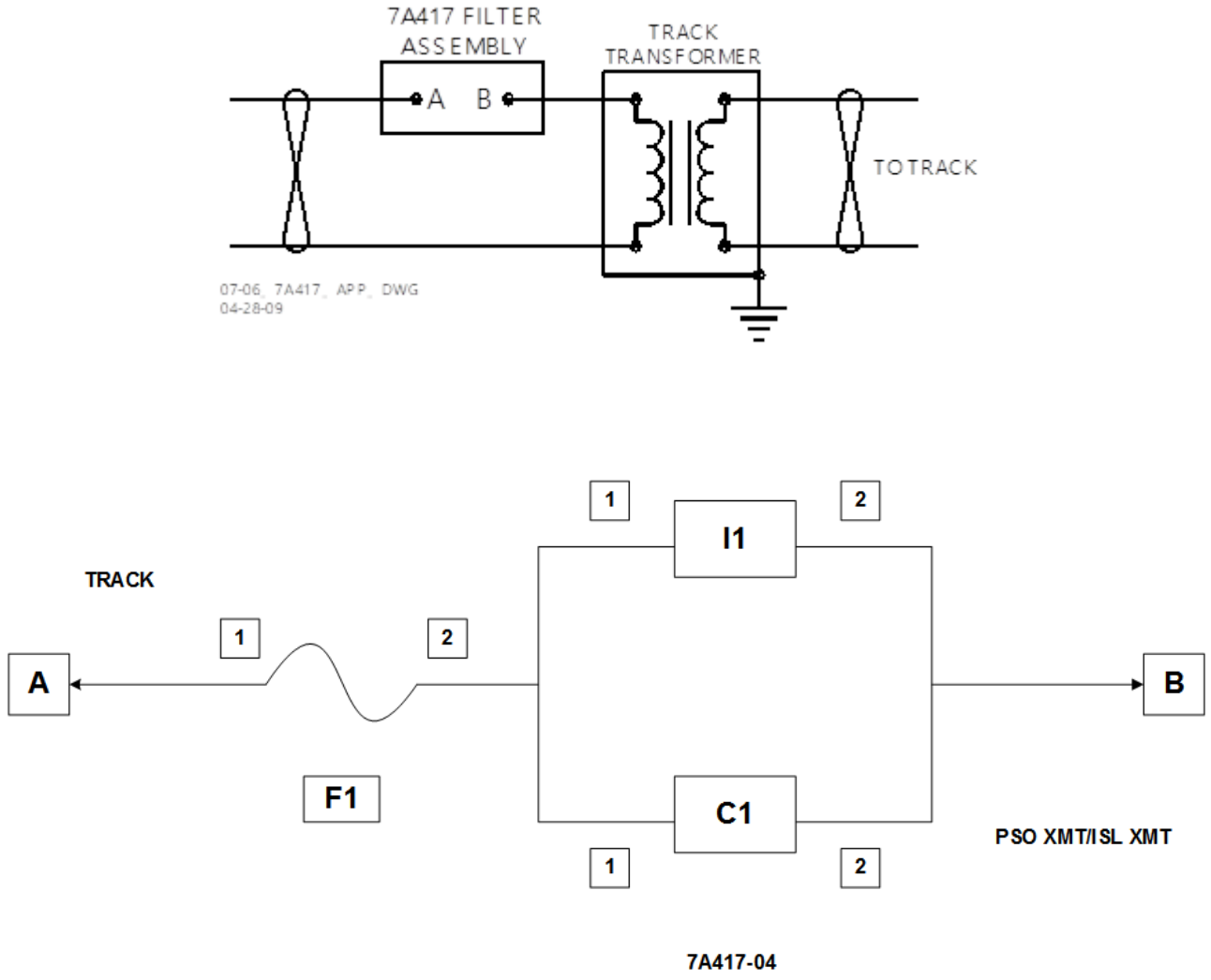

Figure 3-15 Cab Signal Filter Installation Diagrams

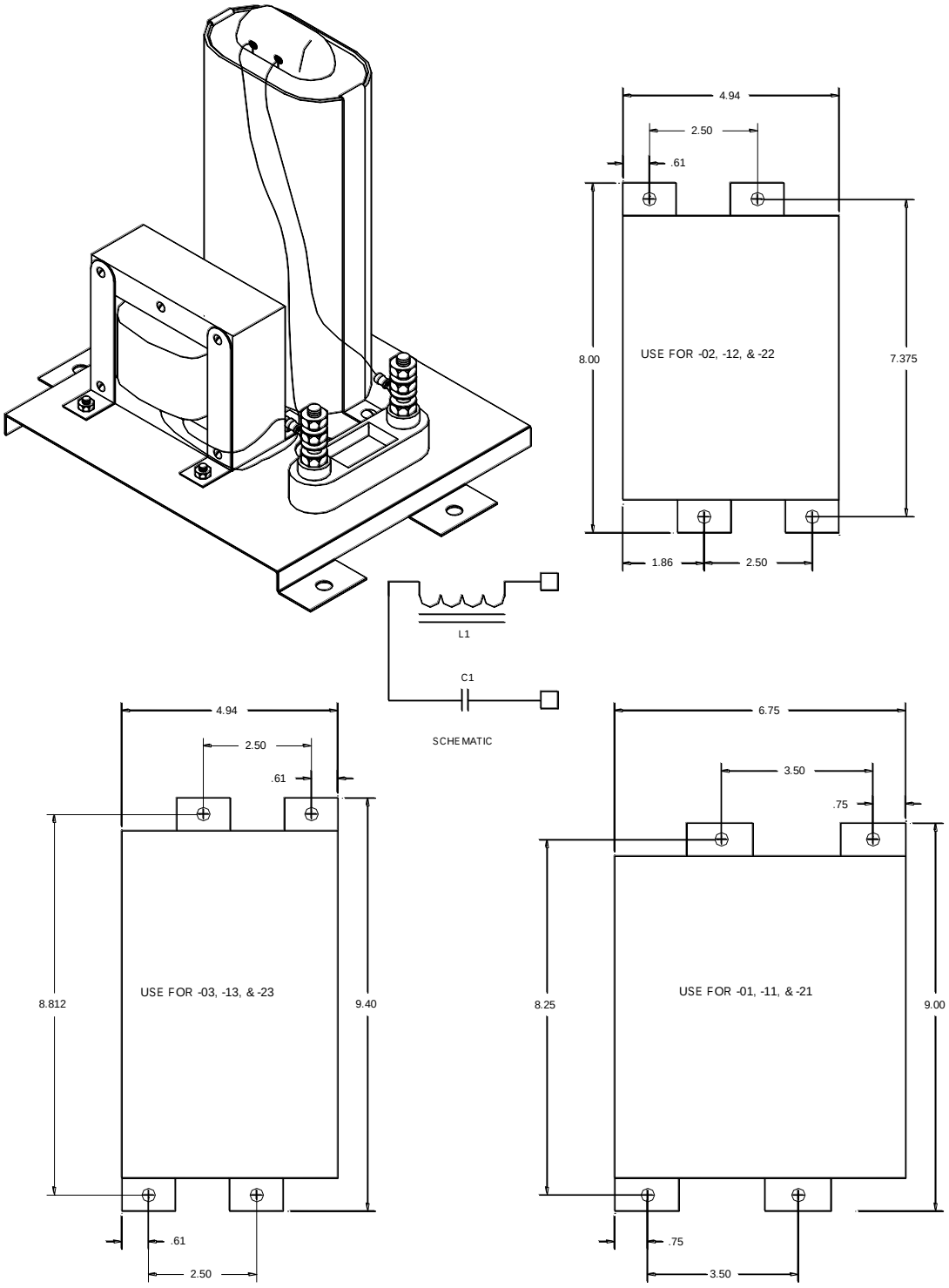

MWS_ 07-06_ 7A417
09-16-08

Figure 3-16 Cab Signal Filter, 7A417-X, with Mounting Dimensions

3.5 SURGE PROTECTION REQUIREMENTS BATTERY SURGE APPLICATION INSTALLATION

The PSO 4000 incorporates built-in surge protection. However, primary surge protection must be installed on all power supply/battery as shown in Figure 3-17. Track wire surge protection is shown on application drawings in Section 9.

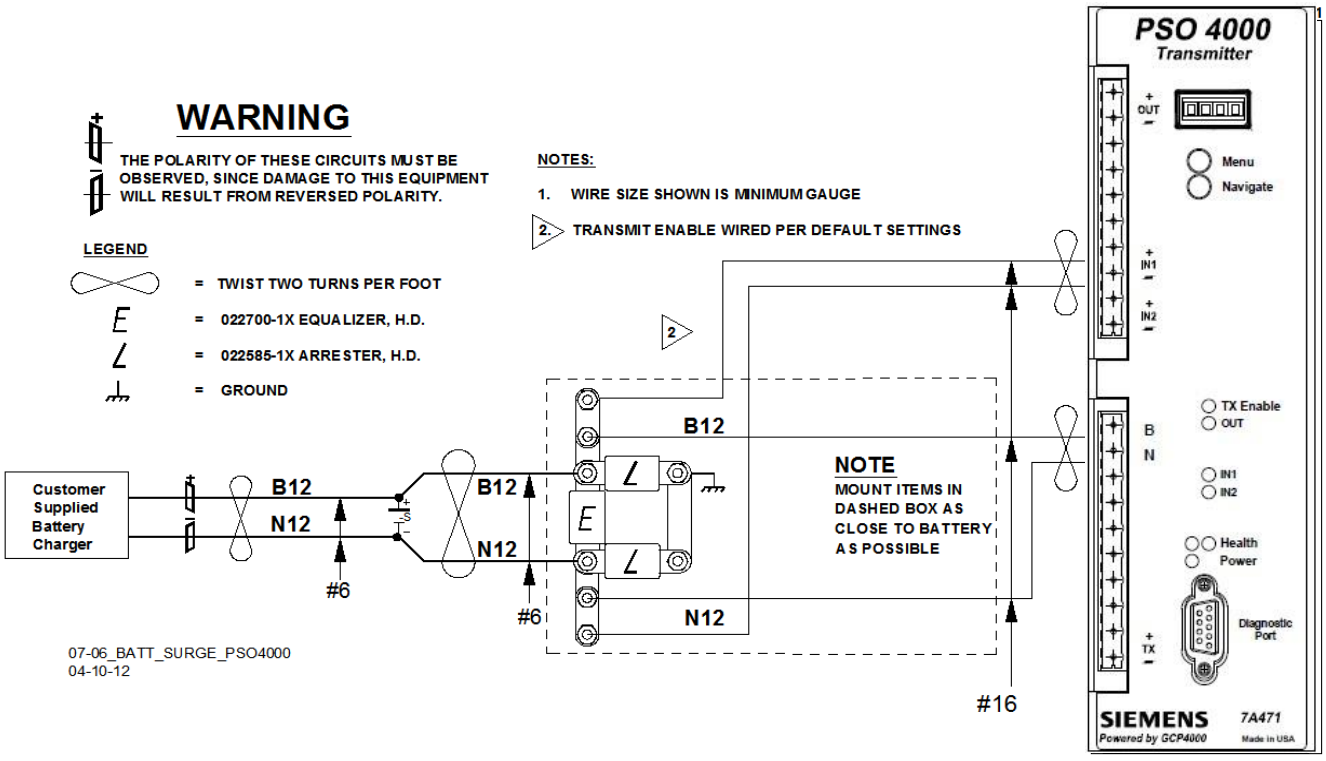

Figure 3-17 Primary Battery Surge Protection

In certain instances where transmitters must operate in severe surge environments, an additional coupler can be added to augment the primary surge protection. In this instance, a 7A355 Receiver Coupler can be used to afford extra protection to the transmitter. The 7A355 is installed with Terminals A and B to the transmitter and Terminals C and D to the track.

3.5.1 Surge and Track Wire Protection for Electrified Track

WARNING

IN ELECTRIFIED TERRITORY, ENSURE THAT THE EQUALIZER IN THE TRACK SURGE PANEL IS REPLACED BY A THIRD ARRESTOR.

In electrified territory, fuses and arresters must be installed on track leads as shown in Figure 3-18.

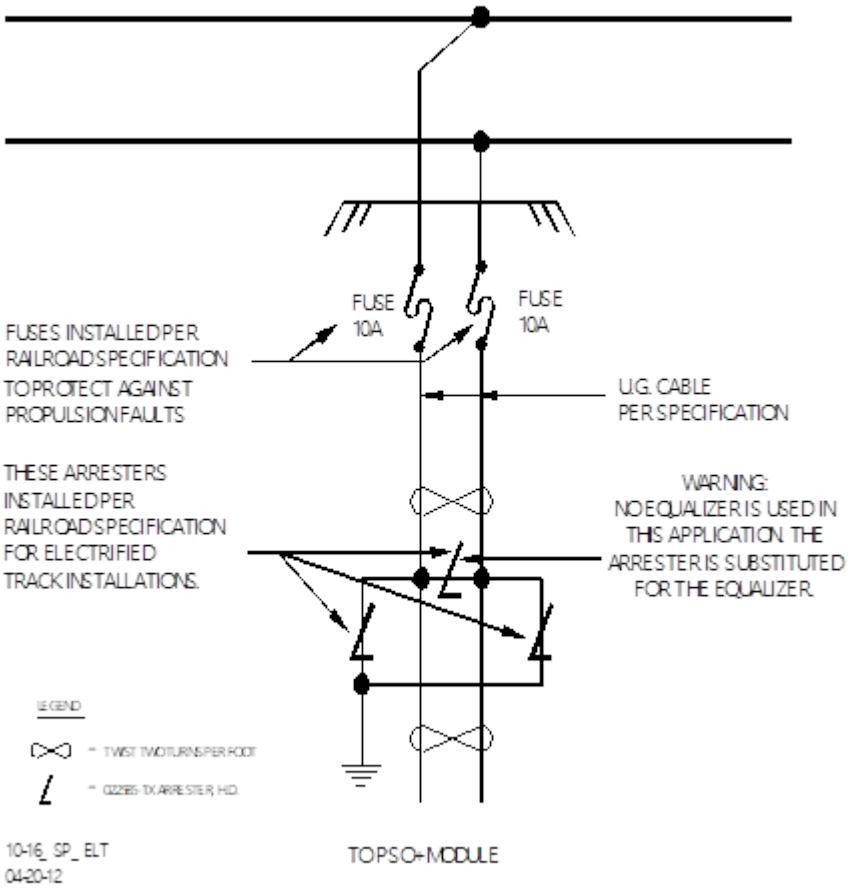

Figure 3-18 Surge and Fused Track Wire Protection in Electrified Track

3.6 AC SHUNT, WIDE BAND, 8A076A

WARNING

THE 8A076A WIDEBAND SHUNT MUST NOT BE USED TO BYPASS INSULATED JOINTS IN DC CODED TRACK CIRCUITS, WHERE AC OR CODED AC CIRCUITS EXIST, OR AT FEED POINT JOINTS OF UNIDIRECTIONAL GCP APPROACHES.

WHEN ADDING OR REPLACING BYPASS SHUNTS, APPROPRIATE TESTS MUSTS BE MADE TO DETERMINE THAT THE BYPASS SHUNT DID NOT ADVERSELY AFFECT OTHER HIGHWAY CROSSING WARNING SYSTEM OR WAYSIDE SIGNAL SYSTEM TRACK CIRCUITS.

CAUTION

THE SHUNT SHOULD BE CONNECTED AS CLOSE AS PRACTICABLE TO THE RAILS (WITHIN THE #6 AWG WIRE LEAD LENGTH) AND, TO AFFORD MAXIMUM PROTECTION FROM PHYSICAL DAMAGE, BE ENCASED IN A PROTECTIVE ENCLOSURE OR BURIED (EITHER VERTICALLY OR HORIZONTALLY IN A TERMINAL SHUNT BURIAL KIT, 62776) AT AN APPROPRIATE DEPTH. IT IS NOT NECESSARY TO BURY THE SHUNT BELOW THE FROST LINE.

3.6.1 Equipment Description, 8A076A

The AC Shunt, Wide Band, 8A076A (see Figure 3-19), provides an effective short circuit to AC but presents an open circuit to DC. This shunt is used to bypass insulated joints in DC track circuits.

The AC Shunt, Wide Band, 8A076A, is housed in a hermetically sealed, cylindrical case with a pair of 10 ft. (3.05 m) leads extending from one end.

3.6.2 Mounting Dimensions, 8A076A

- Dimensions:
  - 3.35 inches (8.5 centimeters) in diameter
  - 7.5 inches (19.1 centimeters) in height
- Weight:
  - 7 pounds (3.18 kilograms) (approximate)
- Leads:
  - 10 ft. (3.04 m); #6 AWG, stranded, black PVC

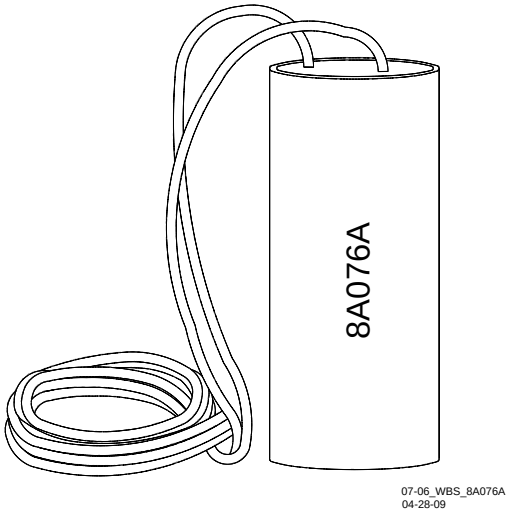

Figure 3-19 AC Shunt, Wide Band, 8A076A

3.6.3 Application Instruction, 8A076A

The AC Shunt, Wide Band, 8A076 is placed as shown in Figure 3-20.

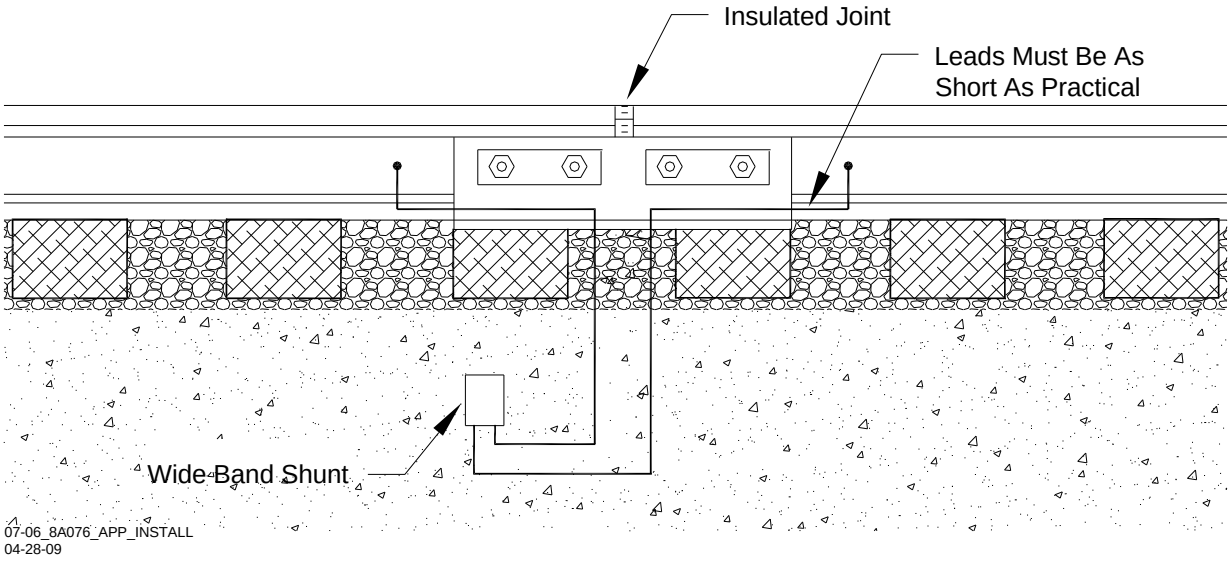

Figure 3-20 Insulated Joint Coupler Installation

SECTION 4 **APPLICATION GUIDELINES**

4.0 APPLICATION GUIDELINES

4.1 GENERAL

PSO 4000 track circuit applications should conform to the guidelines found in this section to ensure proper operation and trouble-free performance. The PSO 4000 system is capable of operation without insulated joints at either end or at both ends of the track circuit. Guidelines are provided for electrified and/or light rail operations as well as heavy rail applications. For special applications requiring additional information, contact Siemens Applications Engineering. Information describing the following functions is contained in this section:

- Operating Distances
- Frequency Usage and Compatibility Guidelines
- Application Requirements
- Application Programming Guidelines

4.1.1 PSO Interoperability Plus Maximum Operating Distances and Frequency Groupings

4.1.1.1 PSO Module Standard Frequency Data

Table 4-1 provides maximum operating distance and frequency grouping data for Siemens PSO Modules. The maximum operating distances are between transmitter and receiver track wire connections for end-fed track circuits. For center-fed track circuits, double the distances given to obtain the maximum receiver-to-receiver distance.

Table 4-1 **Maximum Operating Distances at 0.06-Ohm Shunting Sensitivity for PSO Module Standard Frequencies**

Application	Group	Frequency (Hz)	Ballast		
			2 Ω/1,000 Ft. Operating Distance (Ft./M)	3 Ω/1,000 Ft. Operating Distance (Ft./M)	4 Ω/1,000 Ft. Operating Distance (Ft./M)
PSO Module Standard Frequencies	1	156	9000/2743	10750/3276	12500/3810
		285	6900/2103	8350/2545	9800/2987
		430	5800/1768	6900/2103	8000/2438
		645	4700/1433	5650/1722	6600/2012
		970	3900/1189	4700/1433	5500/1676
		1,450	3300/1006	3950/1204	4600/1402
		2,140	2600/792	3200/975	3800/1158
		3,240	2100/640	2550/777	3000/914
	2	211	7900/2408	9500/2896	11100/3383
		348	6300/1920	7650/2332	9000/2743
		525	5300/1615	6350/1935	7400/2255
		790	4300/1311	5200/1585	6100/1859
		1,180	3700/360	4450/1356	5200/1585
		1,770	3000/914	3600/1097	4200/1280
		2,630	2400/731	2850/869	3300/1006
		4,000	2000/610	2400/731	2800/853

(Frequencies in **bold** text are recommended for use in electrified territories)

4.1.1.2 PSO Module Alternate I (Harmon AFTAC II) Frequency Data

Table 4-2 provides maximum operating distance and frequency grouping data for frequencies used by Harmon AFTAC II units.

The maximum operating distances shown in are between transmitter and receiver track wire connections for end-fed track circuits. For center-fed track circuits, double the distances given to obtain the maximum receiver-to-receiver distance.

NOTE

The alternate frequencies depicted in Table 4-2 are those typically used by Harmon equipment and are available for use with PSO 4000. However, the alternate frequencies use Siemens modulation patterns and are not directly compatible with non- Siemens transmitters or receivers.

Table 4-2 Maximum Operating Distances at 0.06-Ohm Shunting Sensitivity for PSO Module Alternate I (Harmon AFTAC II) Frequencies

Application	Group	Frequency (Hz)	Ballast		
			2 Ω/1,000 Ft. Operating Distance (Ft./M)	3 Ω/1,000 Ft. Operating Distance (Ft./M	4 Ω/1,000 Ft. Operating Distance (Ft./M)
PSO Module Alternate I (Harmon AFTAC II) Frequencies	1	500	5100/1554	6000/1829	6900/2103
		900	4200/1280	4700/1433	5200/1585
		1300	3500/1067	3900/1189	4300/1311
		2300	1400/427	2100/540	2800/853
		3100	1250/945	1600/488	2150/655
		4000	900/274	1426/435	1950/594
		5400	700/213	1150/350	1600/488
		6400	500/152	1000/305	1500/457
		7700	500/152	850/259	1200/366
		8900	500/152	750/229	1000/305
		10200	500/152	650/198	800/244
	2	**700**	4400/1341	5150/1570	5900/1798
		1100	3800/1158	4200/1280	4600/1402
		1600	2000/610	2600/792	3200/975
		2800	1100/335	1650/503	2200/670
		3500	1000/305	1525/465	2050/625
		4900	700/213	1200/366	1700/518
		5900	600/183	1075/328	1550/472
		7100	500/152	950/289	1400/427
		8300	500/152	800/244	1100/335
		9500	500/152	700/213	900/274

(Frequencies in **bold** text are recommended for use in electrified territories)

4.1.1.3 PSO Module Alternate II (US&S AFO) Frequency Data

Table 4-3 provides maximum operating distance and frequency grouping data for frequencies used by US&S AFO units.

The maximum operating distances shown in are between transmitter and receiver track wire connections for end-fed track circuits. For center-fed track circuits, double the distances given to obtain the maximum receiver-to-receiver distance.

NOTE

NOTE

The alternate frequencies depicted in Table 4-3 are those typically used by US&S equipment and are available for use with PSO 4000. However, the alternate frequencies use Siemens modulation patterns and are not directly compatible with non- Siemens transmitters or receivers.

Table 4-3 Maximum Operating Distances at 0.06-Ohm Shunting Sensitivity for PSO Module Alternate II (US&S AFO) Frequencies

Application	Group	Frequency (Hz)	Ballast		
			2 Ω/1,000 Ft. Operating Distance (Ft./M)	3 Ω/1,000 Ft. Operating Distance (Ft./M)	4 Ω/1,000 Ft. Operating Distance (Ft./M)
PSO Module Alternate II (US&S AFO) Frequencies	1	**1000**	4000/1219	4300/1311	4600/1402
		1250	3500/1067	3950/1204	4400/1341
		1500	3300/1006	3700/1128	4100/1250
		1750	2900/884	3250/991	3600/1097
		2300	2600/792	2950/899	3300/1006
		2800	2400/732	2700/823	3000/914
	2	**1125**	3800/1158	4150/1265	4500/1372
		1375	3400/1036	3800/1158	4200/1280
		1640	3000/914	3300/1006	3600/1097
		1875	2800/853	3150/960	3500/1067
		2175	2700/823	3050/930	3400/1036
		2675	2500/762	2800/853	3100/945

k(Frequencies in **bold** text are recommended for use in electrified territories)

4.1.2 AFO Frequency and 3000/4000 Family GCP Frequency Compatibility

Audio Frequency Overlay (AFO) equipment such as Siemens's PSO Module, Harmon's AFTAC II units, and United Switch and Signal's AFO units can be utilized within Model 3000/4000 GCP approaches. The tables below detail the compatibility of each manufacturer's equipment.

4.1.2.1 PSO Module Standard Frequency Compatibility

Table 4-4 depicts the frequency compatibility of the PSO Module Standard frequencies with the frequencies used by Model 3000 or Model 4000 families of Grade Crossing Predictors.

Table 4-4 PSO Module Standard Frequency and 3000/4000 Family GCP Frequency Compatibility

			Model 3000/4000 GCP Frequencies (Hz)										
			86	114	156	211	285	348	430	525	645	790	970
PSO Module Standard Frequencies	Group 1 Frequencies	156					▨	▨	▨	▨	▨	▨	▨
		285		▨	▨						▨	▨	▨
		430		▨	▨		▨				▨		▨
		645	▨	▨	▨		▨						
		970	▨	▨	▨	▨	▨	▨					
		1450	▨	▨	▨	▨	▨	▨					
		2140	▨	▨	▨	▨	▨	▨	▨	▨	▨	▨	
		3240	▨	▨	▨	▨	▨	▨	▨	▨	▨	▨	▨
	Group 2 Frequencies	211						▨		▨		▨	▨
		348										▨	
		525	▨	▨	▨	▨							
		790	▨	▨		▨	▨	▨					
		1180	▨	▨	▨	▨	▨	▨	▨				
		1770	▨	▨	▨	▨	▨	▨	▨	▨			▨
		2630	▨	▨	▨	▨	▨	▨	▨	▨	▨	▨	▨
		4000	▨	▨	▨	▨	▨	▨	▨	▨	▨	▨	▨

▨ Compatible Incompatible

4.1.2.2 Harmon AFTAC II Unit

Table 4-5 depicts the frequency compatibility of the PSO Module Alternate I (Harmon AFTAC II) frequencies with the frequencies used by Model 3000 or Model 4000 families of Grade Crossing Predictors.

Table 4-5 PSO Module Alternate I (Harmon AFTAC II) Frequency and 3000/4000 Family GCP Frequency Compatibility

			Model 3000/4000 GCP Frequencies (Hz)										
			86	114	156	211	285	348	430	525	645	790	970
PSO Module Alternate I (Harmon AFTAC II) Frequencies	Group 1 Frequencies	500											
		900											
		1300											
		2300											
		3100											
		4000											
		5400											
		6400											
		7700											
		8900											
		10200											
	Group 2 Frequencies	700											
		1100											
		1600											
		2800											
		3500											
		4900											
		5900											
		7100											
		8300											
		9500											

Compatible

Incompatible

NOTE

In some cases, AFTAC II unit compatibility with Model 3000/4000 GCP frequencies can be affected by Island Frequency, when that frequency is too close to the selected AFTAC II frequency. Changing the Island Frequency can sometimes enable the use of a given AFTAC II unit frequency.

4.1.2.3 United Switch and Signal AFO Unit

Table 4-6 depicts the frequency compatibility of the PSO Module Alternate II (US&S AFO) frequencies with the frequencies used by Model 3000 or Model 4000 families of Grade Crossing Predictors.

Table 4-6 PSO Module Alternate II (US&S AFO) Frequency and 3000/4000 Family GCP Frequency Compatibility

			Model 3000/4000 GCP Frequencies (Hz)										
			86	114	156	211	285	348	430	525	645	790	970
PSO Module Alternate II (US&S AFO) Frequencies	Group 1 Frequencies	1000											
		1250											
		1500											
		1750											
		2300											
		2800											
	Group 2 Frequencies	1125											
		1375											
		1640											
		1875											
		2175											
		2675											

Compatible | Incompatible

NOTE

In some cases, AFO unit compatibility with GCP 3000/4000 frequencies can be affected by Island Frequency, when that frequency is too close to the selected AFO unit frequency. Changing the Island Frequency can sometimes enable the use of a given AFO unit frequency.

4.1.3 0.06-Ohm Shunting Sensitivity and No Impedance Bonds

Table 4-1 indicates the recommended maximum PSO 4000 operating distances at each operating frequency under the following conditions:

- Ballast resistance values of:
    - 2 ohms per 1000 ft (304.8 m)
    - 3 ohms per 1000 ft (304.8 m)
    - 4 ohms per 1,000 ft (304.8 m)
- Shunting sensitivity of 0.06 ohm
- No impedance bonds in the circuit.

Distances specified are between the transmitter and receiver for end-fed track circuits. Maximum receiver-to-receiver distances for center-fed track circuits are found by doubling listed distances.

4.1.4 0.2-Ohm Shunting Sensitivity and No Impendence Bonds

Maximum PSO 4000 operating distance with 0.2-ohm shunting sensitivity and no impedance bonds in the circuit is 75% of the operating distance in Table 4-1, Table 4-2, and Table 4-3, for each frequency based on 2 ohms per 1000 ft (304.8 m) of ballast resistance.

4.1.5 0.06-Ohm Shunting Sensitivity with Impedance Bonds

The maximum PSO 4000 operating distance with 0.06-ohm shunting sensitivity and with impedance bonds in the circuit is 65% 0f the operating distance in Table 4-1, Table 4-2, and Table 4-3, for each frequency based on ballast resistance of 2 ohms per 1000 ft (304.5 m).

All frequencies are available for use. An engineering review of interfering harmonics should be conducted.

4.1.6 0.2-Ohm Shunting Sensitivity with Impedance Bonds

Typically, this represents PSO 4000 applications in Light Rail (Trolley) Electrified Territory. All frequencies can be used after an engineering study on interfering harmonics is conducted. Operating distance is generally 50% of the distances in Table 4-1, Table 4-2, and Table 4-3, based on ballast resistance of 2 ohms per 1000 ft (304.5 m) for frequencies 1180 Hz and below. Use 2000 ft for frequencies 1450 Hz and above for 2 ohm per 1000 ft applications.

4.2 FREQUENCY USAGE AND COMPATIBILITY GUIDELINES

NOTE

Avoid using adjacent channel frequencies on the same track. This is generally accomplished by separating the frequencies into two groups, as depicted in Table 4-7. When mixing standard and alternate frequencies, several frequencies may not be compatible due to harmonic content.

4.2.1 Non-Electrified Track

All PSO 4000 operating frequencies, (156 through 4000 Hz) are available for use on non-electrified track.

4.2.2 Electrified Track

The PSO 4000 system may be used in either AC or DC electrified track providing all other application requirements are met. All PSO 4000 operating frequencies can be used on electrified track.

NOTE

An engineering study should be conducted to eliminate interfering harmonics. Applications requiring broken rail detection are possible. In these applications use of the Receiver Threshold may be required.

WARNING

INCORRECT SETTING OF RECEIVER THRESHOLD CAN CAUSE BROKEN RAIL DETECTION TO NOT OPERATE.

4.2.3 Frequency Groups

As a general rule, avoid using adjacent channel frequencies on the same track except as described in the NOTE below Table 4-2. This is generally accomplished by separating the frequencies into two groups with one channel separation between frequencies in each group as follows.

4.2.3.1 Track Frequency Groups

One channel separation between frequencies is provided by dividing the 16 PSO 4000 frequencies into two groups of eight frequencies each as follows.

Table 4-7 Track Frequency Groups

Group 1 (Hz)	Group 2 (Hz)
156	211
285	348
430	525
645	790
970	1,180
1,450	1,770
2,140	2,630
3,240	4,000

NOTE

NOTE

All frequencies within a group are compatible and may be intermixed without restriction on the same rails without insulated joint separation. See Table 4-5 for AFTAC II unit frequency groupings and Table 4-6 for AFO unit frequency groupings.

4.2.3.2 Like Address Code Frequency Repetition

For PSO 4000s with like addresses (A or C), frequencies can be repeated on the same track when separated by at least 10,000 ft (3048 m) and one set of non-bypassed insulated joints (no type of insulated joint couplers used around the insulated joints).

4.2.3.3 Different Address Code Frequency Repetition

Identical frequencies may be used on either side of non-bypassed insulated joints (end to end track circuits) provided different address codes are used.

4.2.3.4 Like Address Code Frequency Repetition Using Non-Bypassed Insulated Joints

For PSO 4000s with like addresses (A or C), frequencies can be repeated without restriction on the same track when separated by two sets of non-bypassed insulated joints providing each set of insulated joints is separated by a minimum of 3,000 ft. (914.4 m).

4.2.3.5 Frequency Assignments in Multiple Track Territories

Normal caution must be exercised in assigning and setting multiple track addresses and frequencies. In multiple track territory frequency assignments must follow a pattern that avoids using the same frequency on adjacent tracks. Since it is not possible to meet this requirement in three- and four-track territory with available PSO 4000 frequencies, the address coding scheme described in Section 4.2.3.4 can be employed here as well. Each track uses a separate frequency with alternating track circuits assigned different address codes and separated by a set of non-bypassed insulated joints.

4.2.3.6 Multiple Track Highway Crossings

Multiple track highway crossing approaches can use group 1 frequencies on one track (track number 1) and group 2 frequencies on the other track (track number 2). Since two frequencies from each group are required at each crossing, when all frequencies have been used, the same frequencies may be repeated but this time using the group 2 frequencies on track number 1 and group 1 frequencies on track number 2. Continue to alternate this pattern as required. For further details, contact Siemens Application Engineering.

4.2.3.7 Island and Crossing Receiver Frequencies

The PSO 4000 receivers and Island frequencies used in the Crossing Assembly are fully compatible; however, the same frequency must not be used in a receiver approach and the island.

4.2.3.8 Impedance Bonds in Electrified Territory

Impedance bonds used in electric propulsion territory should provide a minimum of 2 ohms of impedance at all PSO 4000 frequencies in operation.

CAUTION

⚠ CAUTION

USE OF INSULATED JOINT BYPASS COUPLERS ON ELECTRIFIED TRACK IS NOT RECOMMENDED DUE TO SURGE DAMAGE CONCERNS.

4.3 REQUIREMENTS FOR OVER RAIL NON-SHUNTING APPLICATIONS

PSO systems are frequently used as a medium to transmit information from one location to another over rail. A common use is to indicate the position of a hand throw switch. When applied in this manner the PSO system is not required to shunt down when a train is present.

Even though the PSO is not required to shunt with a train, application rules are still necessary to avoid interference between transmitters and receivers, which are not of the same pair. “Separation Distance” refers to the distance between a receiver of one circuit and a transmitter of the same frequency and address that is intended for a different circuit. The rules for this non-shunting application are as follows:

- PSO 4000 frequencies may be repeated with one set of un-bypassed insulated joints and a separation distance of 10,000 ft. (3048 m). The essential point is that no coupling device can bypass the insulated joint.
- PSO 4000 frequencies may be repeated with two sets of un-bypassed insulated joints and at least 3000 ft. (914.4 m) separation distance.

- When un-bypassed joints are not available, identical frequencies can still be reused on the same track. When repeating frequencies of like addresses the following rules still apply:
    - For frequencies 156 Hz through 525 Hz, the separation must be at least 50,000 ft. (15240 m).
    - For frequencies 625 Hz through 1450 Hz, the separation must be at least 30,000 ft. (9144 m).
    - For frequencies 1770 Hz and above, the separation must be at least 20,000 ft. (6401 m).
- If the separation distances for each frequency are not available, repeating is still possible but alternative addresses (A and C) must be used. When using this application both receivers should be between the transmitter locations. In any case, there should be at least 5,000 ft. (1,524 m) between any transmitter and unassociated receiver.
- PSO 4000 circuit lengths can be 30% longer than the distances published for 0.06 Ohm Shunting. If shunt overrun (pre-shunting) is a concern, distances and calibration should revert to applications required for a shunting application.

4.4 AUXILIARY EQUIPMENT APPLICATION GUIDELINES

NOTE

NOTE

In some AC/DC coded/CAB applications, additional filters may be required. Contact Siemens Applications Engineering.

4.4.1 AC Current/Cab Signal Filter, 7A417-X

Cab Signal Filter, 7A417-X is designed for use in track territory where 60, 90, 100, or 200-Hz cab signal is used. The filter should be installed on the primary side of the track transformer as shown in Figure 3-15.

For the Cab Signal Filter, 7A417-X equipment description, see Section 3.4.1; for mounting dimensions, see Section 3.4.2 and Figure 3-16; and for application installation drawings, see Section 3.4.3 and Figure 3-15. Correct frequency and relay mounting base type must be specified in the railroad's written instructions and the couplers should be installed per the railroad's written instructions.

4.4.2 Transmitter Line Applications

When it is desirable to transmit signals over dedicated line wire or buried cable to the track, a Line to Receiver Coupler, 7A388 (See Section 3.3.3 and Figure 3-8), must be used to couple the transmitter to the line and a Transmitter Line to Rail Coupler, 7A399-f (See Section 3.3.5 and Figure 3-11), must be used to couple the line to the rail (for application drawings see Figure 9-10 and Figure 9-11). Correct frequency information must be specified in the railroad's or agency's written instructions and the couplers should be installed per those written instructions. A typical application is when the distance from the transmitter to the rail is between 300 – 2000 ft. (91.4 – 670.6 m) (based on using 14AWG, increasing the diameter of the wire will proportionally increase the potential distance from 2000 ft./609.6 m) (based on using 14AWG, increasing the diameter of the wire will proportionally increase the potential distance from 2000 ft./609.6 m).See Section 7.2.3 for further information regarding maximum distances for track wiring).

4.4.3 Receiver Line Applications

When open line or cable carries the signal from the rail to a distant receiver, the pole mounted Receiver Line to Rail Coupler, 7A377-1-f (See Section 3.3.4.1 and Figure 3-9), or the bench mounted Receiver Line to Rail Coupler, 7A377-2-f (See Section 3.3.4.4 and Figure 3-10) is required to couple the track to the line and a Line to Receiver Coupler, 7A388 (See Section 3.3.3 and Figure 3-8) is used to couple the line to the receiver. Total resistance of the line or cable pair must not exceed 100 ohms (see Figure 9-9, Figure 9-10, and Figure 9-12 for typical application drawings). Correct frequency information must be specified in the railroad's or agency's written instructions and the couplers should be installed per those written instructions. A typical application is when the distance from the receiver to the rail is between 300 – 2000 ft. (91.4 – 670.6 m) (based on using 14AWG, increasing the diameter of the wire will proportionally increase the potential distance from 2000 ft./609.6 m).). See Section 7.2.3 for further information regarding maximum distances for track wiring)

4.4.4 Insulated Joint Bypass Couplers (Non-Electrified Rail Only)

WARNING

WHEN GRADE CROSSING PREDICTOR (GCP) OR MOTION SENSOR FREQUENCIES ARE ALSO BYPASSED AROUND INSULATED JOINTS, ALONG WITH PSO 4000 FREQUENCIES, ALWAYS FOLLOW THE INSTRUCTIONS GOVERNING THE GCP OR MOTION SENSOR INSTALLATION.

Two types of insulated joint bypass couplers are used with PSO 4000:

1. PSO Insulated Joint Bypass Coupler (Tuned), 7A422-f (See Figure 3-13), is used with PSO circuits only in DC track circuits where there are no predictors used (for description, see Section 3.3.7; for application installation drawing, see Figure 3-14).
2. AC Shunt, Wide Band, 8A076A (See Figure 3-19) is acceptable for PSO operation when GCP's are being bypassed around insulated joints with wideband shunts. For description, see Section 3.6.1; for application installation drawing, see Figure 3-20.

When using the 7A422-f coupler, insulated joint coupler connections should be made with #6 AWG. Track wire should not exceed 25 ft. (7.62 m) in length, since the shorter the wire lengths and the larger the wire diameters, the less PSO signal loss will occur at each insulated joint. Correct frequency information must be specified in the railroad's written instructions and the couplers should be installed per the railroad's written instructions.

4.4.5 Battery Choke

WARNING

IF A BATTERY CHOKE IS INSTALLED WITHIN A MODEL 300 OR 400 GCP APPROACH, THE 8A065A CHOKE MUST BE USED.

When the PSO 4000 track circuit includes a DC track circuit track battery, or a track battery is located within 500 ft. (152.4 m) of a PSO 4000 track circuit that is not isolated by insulated joints, PSO Battery Choke, 7A360 (See Figure 3-1), is connected in series with the track battery. When GCP's or motion sensors are installed within PSO 4000 track circuits, Battery Choke, 8A065A, or Battery Choke, 62648 (See Figure 3-2), must be used in place of the 7A360 battery choke (for description, see Section 3.2.1). See Figure 3-3 for a typical application installation.

4.4.6 Surge Protection

The PSO 4000 incorporates built-in surge protection. However, primary surge protection must be installed on all AC power, battery, line, and track leads as described in Section 3.5.1. A typical battery surge protection application drawing is presented in Figure 3-17. In electrified territory, track wire surge protection must be installed as shown in Figure 3-18. All other track wire surge protection is shown in application drawings in Section 9.

4.4.7 Use of PSO 4000 with PSO II and PSO III Equipment

The PSO 4000 receiver and transmitter units are compatible with the signal format and track levels of Siemens's PSO II and PSO III receiver and transmitter units using the same address format. This means that a PSO II or PSO III transmitter is capable of driving a track circuit containing a PSO 4000 receiver, and that PSO II or PSO III receivers are capable of receiving and decoding a signal emanating from a PSO 4000 transmitter (A or C address only).

NOTE

When PSO applications overlap with MS/GCP track circuits, additional filtering may be required.

SECTION 5 PSO 4000 SYSTEM MENU DESCRIPTION

5.0 PSO 4000 SYSTEM MENU DESCRIPTION

5.1 GENERAL

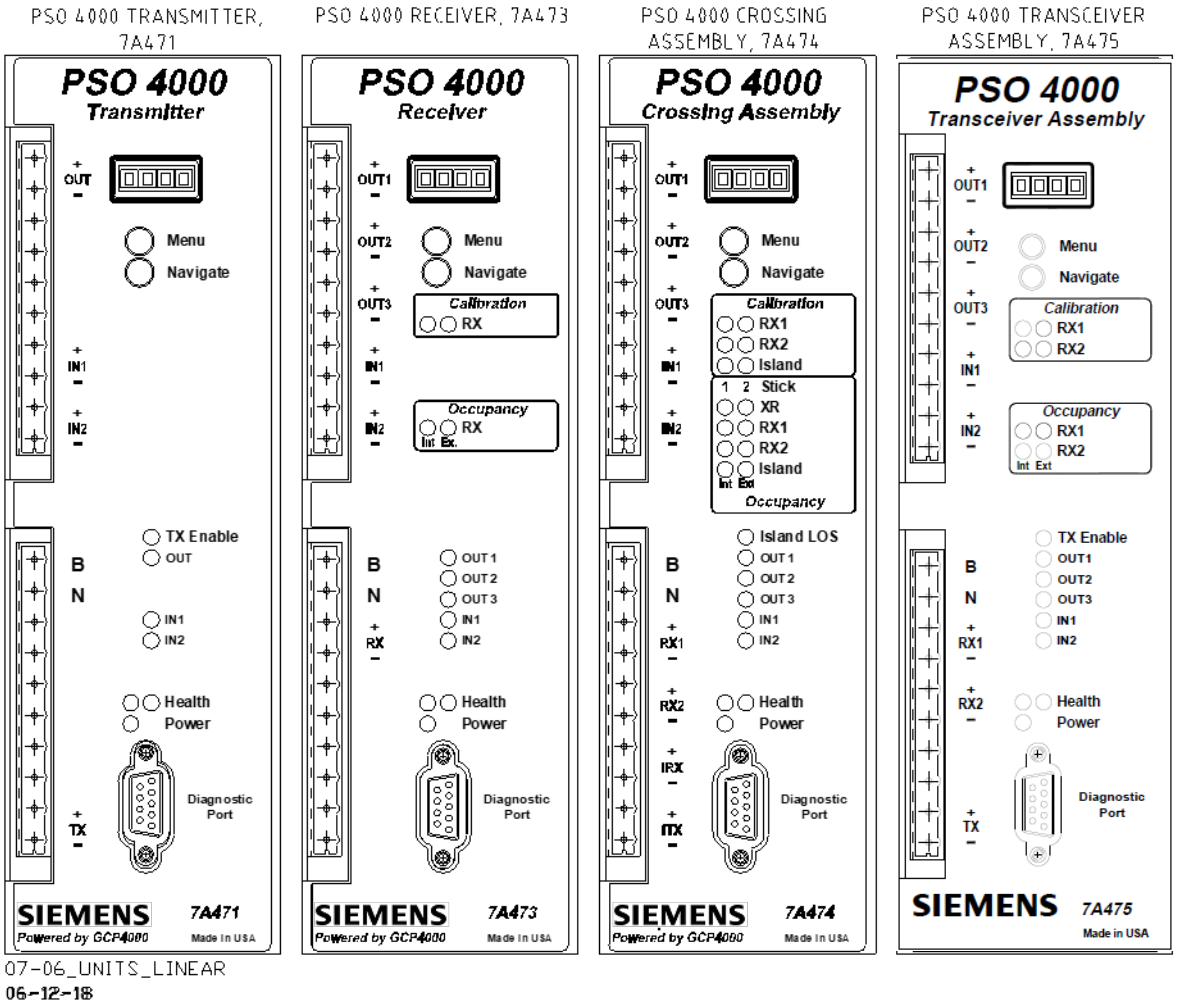

Figure 5-1 PSO 4000 Units

The PSO 4000 differs from earlier Phase Shift Overlay versions (PSO II & PSO III) in that its operation is completely software driven. There are only a few physical connections made within the Wayside Signal Shelter. There are no jumpers connected to the unit, nor are there any straps used to enable high power operation. The units come with the software pre-loaded, ready for field installation; requiring only individual unit software configuration following the railroad's approved wiring or installation instructions to place the unit into operation. This section addresses the PSO 4000 Menu System (see Section 5.2) and Menu Navigation (see Section 5.3).

WARNING

PROGRAM CHANGES MUST BE PERFORMED IN ACCORDANCE WITH RAILROAD PROCEDURES.

SYSTEM OPERATION MUST BE VERIFIED PRIOR TO PLACING SYSTEM IN SERVICE OR FOLLOWING PROGRAMMING, HARDWARE OR WIRING CHANGES.

5.2 MENU SYSTEM OVERVIEW

NOTE

The Setup (SETP) Menu should be used when initially programming the PSO 4000 Unit. This ensures that all required parameters are selected or reviewed during the initial setup and the program saved. Later, if any changes are required, changes to programming can be made using the Programming (PROG) Menu or by again navigating through the Setup (SETP) Menu.

The Set to Default parameter is used during new installations and is not required for reprogramming individual parameters.

The menu system allows users to implement changes without having to rely upon laptop computers to interface with the Unit. Each Unit has its own specific menu system of main menus, sub-menus, parameters, and individual values.

5.2.1 Controls and Indicators Used in Menu Navigation

5.2.1.1 Four Character Alphanumeric Display

As depicted on each of the Units shown in Figure 5-1, the Four Character Alphanumeric Display is located directly below the Unit Information written on the top of the faceplate. It displays letters, numbers, and limited symbols. The Display Test must be performed when setup is first initiated, or if parameter edits are performed and it has been more than 30 minutes since the last configuration changes. It allows user verification that all symbols, numbers, and letters display properly. See Section 5.2.7 for further instructions on completing the Display Test. Once the unit has completed the startup process, a message scrolls across the display stating the unit type, frequency and address on the Transmitter, Receiver, and Transceiver Assemblies. On the Crossing Assembly, once the startup process is complete, the message “PSO 4000 STKLGC_1” scrolls across the display.

5.2.1.2 MENU Button

The MENU button is located immediately below the 4 Character Alphanumeric Display. The major use of this button is to select the desired menu, parameter value, calibration, diagnostics, etc.

5.2.1.3 NAVIGATE Button

The NAVIGATE button is located immediately below the Menu button. There are two major uses of this button. The first is to scroll (move from one menu item to the next) through the menus, parameter values, etc. Each time the NAVIGATE button is momentarily pressed, the next menu item is displayed. The second use is to go up one level in the menu.

5.2.2 Unit Main Menu Layouts

5.2.2.1 Transmitter

The Transmitter has the following main menus:

- Diagnostics (DIAG)
- Setup (SETP)
- Program (PROG)
- Version Data (VERS)
- Testing (TEST).

5.2.2.2 Receiver

The Receiver has the following main menus:

- Diagnostics (DIAG)
- Setup (SETP)
- Program (PROG)
- Calibration (CAL)
- Out of Service (OOS) (when enabled)
- Signal Information (INFO)
- Version Data (VERS)
- Testing (TEST).

5.2.2.3 Crossing Assembly

The Crossing Assembly has the following main menus:

- Diagnostics (DIAG)
- Setup (SETP)
- Program (PROG)
- Calibration (CAL)
- Out of Service (OOS) (when enabled)
- Signal Information (INFO)
- Version Data (VERS)
- Testing (TEST).

5.2.2.4 Transceiver Assembly

The Transceiver Assembly has the following main menus:

- Diagnostics (DIAG)
- Setup (SETP)
- Program (PROG)
- Calibration (CAL)

- Out of Service (OOS) (when enabled)
- Signal Information (INFO)
- Version Data (VERS)
- Testing (TEST).

The unit's main menus, submenu groupings, and individual parameters are described in Section 5.3.

5.2.3 Navigating the Menus

Each unit has two buttons on the face of the unit. The top button is the MENU button and the bottom button is the NAVIGATE button (See Figure 5-1). In general, the pushbuttons are used to navigate the menus as shown in Table 5-1.

Table 5-1 General Menu Navigation and Selection Using The Pushbuttons

Option Desired	Action Taken
Move to the next item at the same menu level (e.g., if in the MAIN MENU level such as DIAG, move to the next MAIN Menu Item such as SETP)	Press NAVIGATE momentarily
Go down a MAIN Menu level (e.g., if at the SETUP MENU, select to the SUB-MENU level which is the first PARAMETER item of the SETUP Menu)	Press MENU momentarily
Move to the next PARAMETER value	Press NAVIGATE momentarily
To modify a PARAMETER value	Hold MENU until EDIT appears, press NAVIGATE multiple times until desired PARAMETER value appears, then hold MENU until DONE appears
To scroll down through PARAMETER items	Each time NAVIGATE is pressed a new PARAMETER item appears
To SAVE CHANGES to modified PARAMETER values	Hold MENU until DONE appears
To select a function such as SET TO DEFAULT, EXIT SETUP, etc.	Hold MENU until DONE appears
Go up one level (e.g., if in the INFO MENU SUB-MENU such as RX SIGNAL LEVEL, select to return to INFO at MAIN Menu level)	Hold NAVIGATE until BACK appears

5.2.4 Setup Menu Processes

Users can perform all the tasks required in the Setup menu using the buttons as described in Table 5-1 above. However, certain additional steps are required when using the Programming and Calibration submenus.

5.2.5 Program Menu Processes

The purpose of the program menu is to allow users to quickly go to a specific parameter that requires editing.

5.2.5.1 The Setup (SETP) Menu

The Setup (SETP) menu must be used to initially set up the unit parameters. A typical SETUP programming progresses as follows:

- During the Setup programming process, each parameter is visited, and values are selected.
- After setting the value for the IN2 LOS parameter, *SAVE CHANGES? appears.
- Press and hold the MENU button until DONE appears to save the changes. If corrections are needed, scroll through the setup menu to required parameter, correct the value, and scroll down until *SAVE CHANGES again appears.
- After the changes are saved or discarded, if other than the Transmitter is being programmed, track calibration is required.
- Then *EXIT SETUP appears. After the MENU button is pressed and held, the new CCN appears.
- Hold the NAVIGATE button until SETUP appears (or wait 30 seconds).
- Hold the NAVIGATE button until the top level scrolling unit description appears (or wait 90 seconds).

5.2.5.2 The Program (PROG) Menu

NOTE

The Programming (PROG) menu will be disabled if the Setup (SETP) has not been performed and saved.

The Program (PROG) Menu is used to edit parameter values. To edit an individual parameter:

- Press the NAVIGATE button to scroll through the main menu to the PROG Submenu.
- Momentarily press the MENU button and release it. This will select the PROG Submenu.
- Press the NAVIGATE button to scroll through the submenu until the desired Submenu item is listed.
- Momentarily press the MENU button and release it. This will select the first parameter of the PROG submenu.
- Press the NAVIGATE button to scroll through the parameter list until the desired parameter is displayed.

- Press and hold the MENU button until EDIT appears. This will select the first value. The first character of the value will flash.
- Press the NAVIGATE button to scroll through the values until the correct value appears in the Display.
- Press and hold the MENU button and release to initiate the change – a confirm message appears SET xxx = yyy?
- Press and hold the MENU button until DONE appears (if the NAVIGATE button is pressed and held, then cancel (CANC) appears. After either DONE or CANC appears, the parameter and its new value are displayed.

5.2.6 Calibration Menu Processes

Calibration is used to set signal threshold values (SIG LVL=100) for Receivers and Island Receivers. In Broken Rail Detection applications, the receiver threshold may be adjusted to a value higher than 100. See Section 7 for step by step instructions for each unit.

To calibrate an item (after placing the appropriate shunt on the track), scroll down the Main Menu to CAL. Then:

- Press the MENU button until either RX, RX1, RX2, or ISL CAL appears.
- Hold the MENU button down until the release (REL) message appears
- Approximately 2 seconds after button is released, the armed (ARMD) message appears
- Press and release the MENU button within 2 seconds of ARMD message's appearance to start calibration. If the MENU button is not pressed within 2 seconds, the calibration will cancel, and you must restart the calibration process.
- Either RX, RX1, RX2, or ISL CAL flashes during the calibration process.
- The 4-character display stops flashing, and PASS or FAIL appears when calibration is complete. The threshold value is stored in the Unit NVRAM.

5.2.7 Unit Functional Testing

5.2.7.1 Display Test Process

The Display Test is performed when setup is first initiated or if edits are performed from within the Setup or Program menus and it has been more than 30 minutes since the last configuration changes.

To run the Display Test when no parameters are being changed:

- Navigate down the Menu to the TEST Section by
  - Use the NAVIGATE button to scroll down to the TEST menu.
  - Press and release the MENU button. (*RUN DISPLAY TEST) scrolls across the Four Character Alphanumeric Display
  - Press and release the MENU button. (* + > . 0 1 2 3 4 5 6 7 8 9 A B C D E F G H I J K L M N O P Q R S T U V W X Y Z) scrolls across the Four Character Alphanumeric Display
- After the first complete iteration of the Display Test, determine whether all characters were correctly displayed on the panel.
  - If the test was successful, press and hold the MENU button until PASS appears.
  - If the test was not successful, press and hold the NAVIGATE button until FAIL appears. Perform the Display Test a second time. If the test is unsuccessful again, replace the Unit.

5.2.7.2 Check LEDs

To verify functionality of the Unit's LEDs:

- Press the NAVIGATE button to scroll through the main menu to the TEST submenu.
- Momentarily press the MENU button and release it. This will select the submenu.
- Press the NAVIGATE button to scroll through the submenu until *CHECK LEDS appears.
- Momentarily press the MENU button and release it. This will begin the test
  - o During the test, all LEDs visible on the unit turn off and turn on. Each LED will go out and come back on in order from the top to the bottom of the left column of LEDs and then will go out and come back on in order from the top to the bottom of the right column of LEDs.
- After the first complete iteration of the LEDs lighting, press and hold the NAVIGATE button. TEST will appear.
  - o If any LEDs did not function correctly, after one complete iteration of the LEDs being turning off and on, scroll back through the menu to *CHECK LEDS. Momentarily press the MENU button and release it. This will restart the test. If any LED fails to display during the second test, replace the unit.
- Hold the NAVIGATE button until the top level scrolling description appears.

5.3 UNIT MAIN MENUS

Each of the unit menus differ from each other. While many values are common across the units, care must be taken so that proper selections are made. Default entries are shown in **bold** type.

⚠ WARNING

WARNING

THE INPUTS AND OUTPUTS ON THE PSO 4000 CAN BE CONFIGURED FOR DIFFERENT FUNCTIONS.

FAILURE TO PROGRAM THESE TO THE CORRECT FUNCTION AS SPECIFIED IN THE SITE PLANS WILL RESULT IN IMPROPER SYSTEM OPERATION.

⚠ WARNING

WARNING

PROGRAMMING AND PROGRAM CHANGES MUST BE PERFORMED IN ACCORDANCE WITH RAILROAD PROCEDURES. SYSTEM OPERATION MUST BE VERIFIED PRIOR TO PLACING SYSTEM IN SERVICE OR FOLLOWING PROGRAMMING, HARDWARE OR WIRING CHANGES.

5.3.1 PSO 4000 Transmitter

NOTE

NOTE

The Loss of Shunt (LOS) value that is set in >IN1LOS=0 and >IN2LOS=0 refers to the amount of time set in seconds for the pickup delay.

The following symbols are used in this table and have these associated meanings:

> = Editable Configuration

+ = Non-editable Information

***** = Commands – i.e., set defaults, run display tests, save changes, etc.

Guidelines regarding Dynamic Addressing are found in Appendix B.

The menu for the PSO 4000 Transmitter is as depicted in the following table.

Table 5-2 PSO 4000 Transmitter Menu System

MAIN MENU	SUB-MENU	PARAMETER	FREQ SEL.	VALUES
DIAG				See Appendix C -Troubleshooting
SETP		*SET DEFAULTS		
		>TX FRQ=	STND	**Not Set**, 156, 211, 285, 348, 430, 525, 645, 790, 970, 1180, 1450, 1770, 2140, 2630, 3240, 4000
			ALT	**Not Set**, 500, 700, 900, 1000, 1100, 1125, 1250, 1300, 1375, 1500, 1600, 1640, 1750, 1875, 2175, 2300, 2675, 2800, 3100, 3500, 4000, 4900, 5400, 5900, 6400, 7100, 7700, 8300, 8900, 9500, 10.2
		>TX ADDR=		**A**, C, D, E, F, Dynamic (DYN)
		>TX LVL=		**Low**, High
		>IN 1=		None, **Transmit Enable (TX ENBL)** or, if Dynamic Addressing is selected, Address Code A (TXA) or Address Code C (TXC)

MAIN MENU	SUB-MENU	PARAMETER	FREQ SEL.	VALUES
		>IN 2=		**None**, Transmit Enable (TX ENBL) or, if Dynamic Addressing is selected, Address Code A (TXA) or Address Code C (TXC)
		>IN 1 LOS=		0 – 30 Sec (default **0**)
		>IN 2 LOS=		0 – 30 Sec(default **0**)
		*SAVE CHANGES?		
		*EXIT SETUP?		
PROG	TX	>TX FRQ=	STND	**Not Set**, 156, 211, 285, 348, 430, 525, 645, 790, 970, 1180, 1450, 1770, 2140, 2630, 3240, 4000
			ALT	**Not Set**, 500, 700, 900, 1000, 1100, 1125, 1250, 1300, 1375, 1500, 1600, 1640, 1750, 1875, 2175, 2300, 2675, 2800, 3100, 3500, 4000, 4900, 5400, 5900, 6400, 7100, 7700, 8300, 8900, 9500, 10.2
		>TX ADDR=		**A**, C, D, E, F, Dynamic
		>TX LVL=		**Low**, High
	IO	>IN 1=		None, **Transmit Enable (TX ENBL)** or, if Dynamic Addressing is selected, Address Code A (TXA) or Address Code C (TXC)
		>IN 2=		**None**, Transmit Enable (TX ENBL) or, if Dynamic Addressing is selected, Address Code A (TXA) or Address Code C (TXC)
		>IN 1 LOS=		0 – 30 Sec (default **0**)
		>IN 2LOS=		0 – 30 Sec(default **0**)
TIME		>DAYLIGHT SAVINGS		**DSBL**, ENBL
		>YEAR		**00** -99
		>MONTH		**01** - 12

MAIN MENU	SUB-MENU	PARAMETER	FREQ SEL.	VALUES
		>DAY		**01** - 31
		>HOUR		**00** – 23 HR
		>MINUTE		**00** – 59 MIN
		>SECOND		**00** – 59 SEC
VERS				(Examples Only)
		+CCN=		C6__22__C0__ 2E__
		+MEF=		PSO00_40.MEF
		+ID=		9V380A02.D
		+BOOT=		9V388A01.B
		+XIL=		80428 CO3.0
		+PART=		7000-7A471-0001
		+SERIAL=		2345
		+BUILD DATE=		01-31-08
		+HW REV=		B
TEST		*RUN DISPLAY TEST		Performed as described in Section 5.2.7.1.
		*CHECK LEDS		Performed as described in Section 5.2.7.2

When the Set Default parameter is selected, the values in Table 5-3 are set.

Table 5-3 PSO 4000 Transmitter Default Menu Settings

Parameter	Value
Transmit Frequency Selection	Standard
Transmit Frequency	Not Set
Transmit Address	A
Transmit Level	Low
IN1 Pickup Delay (LOS)	0 Sec
IN2 Pickup Delay (LOS)	0 Sec

5.3.2 PSO 4000 Receiver

NOTE

NOTE

Generally, when programming outputs to a specific occupancy address (i.e., Receiver Occupancy A {RXA}, Receiver Occupancy C {RXC}, Receiver Occupancy D {RXD}, etc.), the occupancy address chosen must match the previously selected address code (e.g., >RX ADDR =) chosen (i.e., RXC requires AddrC, RXF requires AddrF, etc.). However, when Dynamic Addressing is selected (a special application), any occupancy state (RXA, RXC, RXD, RXE, or RXF) may be selected.

Further guidelines regarding Dynamic Addressing are found in Appendix B.

The Loss of Shunt (LOS) value that is set in >IN1LOS=0 and >IN2LOS=0 refers to the amount of time set in seconds for the pickup delay.

The following symbols are used in this table and have these associated meanings:

> = Editable Configuration

+ = Non-editable Information

***** = Commands – i.e., set defaults, run display tests, save changes, etc.

The menu for the PSO 4000 Receiver is as depicted in Table 5-4 below.

Table 5-4 PSO-4000 Receiver Menu System

Main Menu	Sub-Menu	Parameter	Freq. Sel.	Values
DIAG				See Appendix C -Troubleshooting.
SETP		*SET DEFAULTS		
		>RX FRQ=	STND	**Not Set**, 156, 211, 285, 348, 430, 525, 645, 790, 970, 1180, 1450, 1770, 2140, 2630, 3240, 4000
			ALT	**Not Set**, 500, 700, 900, 1000, 1100, 1125, 1250, 1300, 1375, 1500, 1600, 1640, 1750, 1875, 2175, 2300, 2675, 2800, 3100, 3500, 4000, 4900, 5400, 5900, 6400, 7100, 7700, 8300, 8900, 9500, 10.2
		>RX ADDR=		**A**, C, D, E, F, Dynamic
		>RX LOS=		0 – 30 Sec (default **2**)
		>RX THR=		100 – 9999 (default 100)
		>OOS ALLOWED=		**No (DSBL)**, Yes (ENBL)
		>OUT 1=		None, Health (HLTH), **Receiver Occupancy A (RXA)**, Receiver Occupancy C (RXC), Receiver Occupancy D (RXD), Receiver Occupancy E (RXE), Receiver Occupancy F (RXF).
		>OUT 2=		**None**, Health (HLTH), Receiver Occupancy A (RXA), Receiver Occupancy C (RXC), Receiver Occupancy D (RXD), Receiver Occupancy E (RXE), Receiver Occupancy F (RXF).
		>OUT3=		None, **Health (HLTH)**, Receiver Occupancy A (RXA), Receiver Occupancy C (RXC), Receiver Occupancy D (RXD), Receiver Occupancy E (RXE), Receiver Occupancy F (RXF).
		>IN 1=		**None**, Receive Enable (RX ENBL) or if OOS is enabled, Out of Service (OOS)
		>IN 2=		**None**, Receive Enable (RX ENBL) or if OOS is enabled, Out of Service (OOS))

Main Menu	Sub-Menu	Parameter	Freq. Sel.	Values
		>IN 1 LOS=		0 – 30 Sec (default **0**)
		>IN 2 LOS=		0 – 30 Sec(default **0**)
		*SAVE CHANGES?		
		*RX CAL		As stated in Section 5.2.6 above
		*EXIT SETUP?		
PROG	RX	>RX FRQ=	STND	**Not Set**, 156, 211, 285, 348, 430, 525, 645, 790, 970, 1180, 1450, 1770, 2140, 2630, 3240, 4000
			ALT	**Not Set**, 500, 700, 900, 1000, 1100, 1125, 1250, 1300, 1375, 1500, 1600, 1640, 1750, 1875, 2175, 2300, 2675, 2800, 3100, 3500, 4000, 4900, 5400, 5900, 6400, 7100, 7700, 8300, 8900, 9500, 10.2
		>RX ADDR=		**A**, C, D, E, F, Dynamic
		>RX LOS=		0-30 Sec **(2)**
		>RX THR=		100 – 9999 (default 100)
	OOS	>OOS ALLOWED=		**No (DSBL)**, Yes (ENBL)
	IO	>OUT 1=		None, Health (HLTH), **Receiver Occupancy A (RXA)**, Receiver Occupancy C (RXC), Receiver Occupancy D (RXD), Receiver Occupancy E (RXE), Receiver Occupancy F (RXF).
		>OUT 2=		**None**, Health (HLTH), Receiver Occupancy A (RXA), Receiver Occupancy C (RXC), Receiver Occupancy D (RXD), Receiver Occupancy E (RXE), Receiver Occupancy F (RXF).
		>OUT3=		None, **Health (HLTH)**, Receiver Occupancy A (RXA), Receiver Occupancy C (RXC), Receiver Occupancy D (RXD), Receiver Occupancy E (RXE), Receiver Occupancy F (RXF).
		>IN 1=		**None**, Receiver Enable (RX ENBL), Out of Service (OOS)

Main Menu	Sub-Menu	Parameter	Freq. Sel.	Values
		>IN 2=		**None**, Receiver Enable, (RX ENBL), Out of Service (OOS)
		>IN 1 LOS=		0 – 30 Sec (default **0**)
		>IN 2 LOS=		0 – 30 Sec(default **0**)
TIME		>DAYLIGHT SAVINGS		**DSBL**, ENBL
		>YEAR		**00** -99
		>MONTH		**01** - 12
		>DAY		**01** - 31
		>HOUR		**00** – 23 HR
		>MINUTE		**00** – 59 MIN
		>SECOND		**00** – 59 SEC
CAL		*RX CAL		As stated in Section 5.2.6 above
OOS		>SET OOS TIME		**NONE,** 1, 2, 3, 4, 5, 6, 7, 8, 12, 16, 24 HRS
		RX		>TAKE RX OOS? *SET OOS INPUT HIGH
INFO		+RX SIG LVL=		Range = 0 to 9999
		+RX GAIN=		Range = 0 – 9999
		+RX ADDR=		A, C, D, E, F, or DYN
VERS				(Examples Only)
		+CCN=		3E__63__92__ 1D__
		+MEF=		PSO00_40.MEF
		+ID=		9V380A02.D
		+BOOT=		9V388A01.B
		+XIL=		80428 CO3.0
		+PART=		7000-7A473-0001

Main Menu	Sub-Menu	Parameter	Freq. Sel.	Values
		+SERIAL=		2346
		+BUILD DATE=		01-31-08
		+HW REV=		B
TEST		*RUN DISPLAY TEST		Performed as described in Section 5.2.7.1.
		*CHECK LEDS		Performed as described in Section 5.2.7.2

When the Set Default parameter is selected, the values in Table 5-5 are set.

Table 5-5 PSO 4000 Receiver Menu Default Settings

Parameter	Value
Receiver Frequency Selection	Standard
Receiver Frequency	Not Set
Receiver Address	A
Receive LOS (Pickup Delay)	2 Sec
Receiver Threshold	100
Out of Service Allowed	No
OUT1	Receiver Occupancy
OUT2	None
OUT3	Health
IN1	None
IN2	None
IN1 Pickup Delay (LOS)	0 Sec
IN2 Pickup Delay (LOS)	0 Sec

5.3.3 PSO 4000 Crossing Assembly

NOTE

NOTE

Under the current revision of the software, no application changes are possible.

Outputs and occupancy addresses:

- Generally, when programming outputs to a specific occupancy address (i.e., Receiver Occupancy A {RX1}, Receiver Occupancy C {RXC}, Receiver Occupancy D {RXD}, etc.), the occupancy address chosen must match the previously selected address code (e.g., >RX1 ADDR =) chosen (i.e., RXC requires AddrC, RXF requires AddrF, etc.).

Directional Stick Logic:

- When 1 Stick (RX1 STK), 2 Stick (RX2 STK) or Any Stick (RX STK) are programmed to an output then these outputs will de-energize when the appropriate stick is set (energized).
- The Any Stick (both Sticks down cause output to be energized) can be used to drive a relay in the signal system (when desired), to prevent train signals from clearing if a crossing still has either directional stick up (energized). The 1 Stick (RX1 STK) or 2 Stick (RX2 STK) can be used in special applications where only the 1 Stick or 2 Stick needs to be checked.
- Further Guidelines regarding Directional Stick Logic (RX1 STK, RX2 STK, or RX STK) is found in Section 6.2.2.

The Loss of Shunt (LOS) value that is set in >IN1LOS=0 and >IN2LOS=0 refers to the amount of time set in seconds for the pickup delay.

The following symbols are used in this table and have these associated meanings:

> = Editable Configuration

+ = Non-editable Information

***** = Commands – i.e., set defaults, run display tests, save changes, etc.

The menu for the PSO 4000 Crossing Assembly is as depicted in Table 5-6.

Table 5-6 PSO 4000 Crossing Assembly Menu System

Main Menu	Sub-Menu	Parameter	Freq. Sel.	Values
DIAG				See Appendix C -Troubleshooting
SETP		+APP= STKLGC_1		No other selection values currently available
		*SET DEFAULTS		
		>STKCANC=		**15**, (5, 15, 25, 35, 45, 55, 60 Min)
		>ISL=		**ENBL**, DSBL
		>ISL FRQ=	STND	**Not Set,** 2140, 2630, 3240, 4000, 4900, 5900, 7100, 8300, 10.0, 11.5, 13.2, 15.2, 17.5, 20.2
			ALT	**Not Set**, 2300, 2800, 3100, 3500, 4000, 4900, 5400, 5900, 6400, 7100, 7700, 8300, 8900, 9500, 10.2
		>ISL LOS=		2 – 8 Sec (Default **2**)
		>RX1=		**Enabled** (**ENBL**)**,** Disabled (DSBL)
		>RX1 FRQ=	STND	**Not Set**, 156, 211, 285, 348, 430, 525, 645, 790, 970, 1180, 1450, 1770, 2140, 2630, 3240, 4000
			ALT	**Not Set**, 500, 700, 900, 1000, 1100, 1125, 1250, 1300, 1375, 1500, 1600, 1640, 1750, 1875, 2175, 2300, 2675, 2800, 3100, 3500, 4000, 4900, 5400, 5900, 6400, 7100, 7700, 8300, 8900, 9500, 10.2
		>RX1 ADDR=		**A**, C, D, E, F
		>RX1 LOS=		0 – 30 Sec (default **2**)
		>RX1 THR=		100 – 9999 (default 100)
		>RX2=		**Enabled** (**ENBL**)**,** Disabled (DSBL)

Main Menu	Sub-Menu	Parameter	Freq. Sel.	Values
		>RX2 FRQ=	STND	**Not Set**, 156, 211, 285, 348, 430, 525, 645, 790, 970, 1180, 1450, 1770, 2140, 2630, 3240, 4000
			ALT	**Not Set**, 500, 700, 900, 1000, 1100, 1125, 1250, 1300, 1375, 1500, 1600, 1640, 1750, 1875, 2175, 2300, 2675, 2800, 3100, 3500, 4000, 4900, 5400, 5900, 6400, 7100, 7700, 8300, 8900, 9500, 10.2
		>RX2 ADDR=		**A**, C, D, E, F
		>RX2 LOS=		0 – 30 Sec (default **2**)
		>RX2 THR=		100 – 9999 (default 100)
		>OOS ALLOWED=		**No (DSBL)**, Yes (ENBL)
		>OUT 1=		None, Crossing Relay (**XR**), Island (ISL), 1 Stick Set (RX1 STK), 2 Stick Set (RX2 STK), Any Stick Set (RX STK), Health (HLTH), Health/Stick Output Indicator (HSTO), Receiver 1 Occupancy A, C, D, E, or F (RX1A-F), Receiver 2 Occupancy A, C, D, E, or F (RX2A-F)
		>OUT 2=		None, Crossing Relay (XR), Island (**ISL**), 1 Stick Set (RX1 STK), 2 Stick Set (RX2 STK), Any Stick Set (RX STK), Health (HLTH), Health/Stick Output Indicator (HSTO), Receiver 1 Occupancy A, C, D, E, or F (RX1A-F), Receiver 2 Occupancy A, C, D, E, or F (RX2A-F)
		>OUT3=		None, Crossing Relay (XR), Island (ISL), 1 Stick Set (RX1 STK), 2 Stick Set (RX2 STK), Any Stick Set (**RX STK**), Health (HLTH), Health/Stick Output Indicator (HSTO), Receiver 1 Occupancy A, C, D, E, or F (RX1A-F), Receiver 2 Occupancy A, C, D, E, or F (RX2A-F)

Main Menu	Sub-Menu	Parameter	Freq. Sel.	Values
		>IN 1=		**None**, XR Enable (XR ENBL), Receiver 1 Enable (RX1 ENBL), Receiver 2 Enable (RX2 ENBL), Island Enable (ISL ENBL), Stick Cancel (STK CNCL), Out of Service (OOS)
		>IN 2=		**None**, XR Enable (XR ENBL), Receiver 1 Enable (RX1 ENBL), Receiver 2 Enable (RX2 ENBL), Island Enable (ISL ENBL), Stick Cancel (STK CNCL), Out of Service (OOS)
		>IN 1 LOS=		0 – 30 Sec (default **0**)
		>IN 2 LOS=		0 – 30 Sec(default **0**)
		*SAVE CHANGES?		
		*RX1 CAL		As stated in Section 5.2.6 above
		*RX2 CAL		As stated in Section 5.2.6 above
		*ISL CAL		As stated in Section 5.2.6 above
		*EXIT SETUP?		
PROG	APP	>APP= STKLGC_1		No other selection values currently available
		>STKCANC=		**15**, (5, 15, 25, 35, 45, 55, 60 Min)
	ISL	>ISL=		**Enabled** (**ENBL**), Disabled (DSBL)
		>ISL FRQ=	STND	**Not Set,** 2140, 2630, 3240, 4000, 4900, 5900, 7100, 8300, 10.0, 11.5, 13.2, 15.2, 17.5, 20.2
			ALT	**Not Set**, 2300, 2800, 3100, 3500, 4000, 4900, 5400, 5900, 6400, 7100, 7700, 8300, 8900, 9500, 10.2
		>ISL LOS=		2 – 8 Sec (Default **2**)
	RX1	>RX1=		**Enabled** (**ENBL**), Disabled (DSBL)

Main Menu	Sub-Menu	Parameter	Freq. Sel.	Values
		>RX1 FRQ=	STND	**Not Set**, 156, 211, 285, 348, 430, 525, 645, 790, 970, 1180, 1450, 1770, 2140, 2630, 3240, 4000
			ALT	**Not Set**, 500, 700, 900, 1000, 1100, 1125, 1250, 1300, 1375, 1500, 1600, 1640, 1750, 1875, 2175, 2300, 2675, 2800, 3100, 3500, 4000, 4900, 5400, 5900, 6400, 7100, 7700, 8300, 8900, 9500, 10.2
		>RX1 ADDR=		**A**, C, D, E, F
		>RX1 LOS=		0-30 Sec **(2)**
		>RX1 THR=		100 – 9999 (default 100)
	RX2	>RX2=		**Enabled** (**ENBL**), Disabled (DSBL)
		>RX2 FRQ=	STND	**Not Set**, 156, 211, 285, 348, 430, 525, 645, 790, 970, 1180, 1450, 1770, 2140, 2630, 3240, 4000
			ALT	**Not Set**, 500, 700, 900, 1000, 1100, 1125, 1250, 1300, 1375, 1500, 1600, 1640, 1750, 1875, 2175, 2300, 2675, 2800, 3100, 3500, 4000, 4900, 5400, 5900, 6400, 7100, 7700, 8300, 8900, 9500, 10.2
		>RX2 ADDR=		**A**, C, D, E, F
		>RX2 LOS=		0-30 Sec **(2)**
		>RX2 THR=		100 – 9999 (default 100)
	OOS	>OOS ALLOWED=		**No** (**DSBL**), Yes (ENBL)
	IO	>OUT 1=		None, **Crossing Relay** (**XR**), Island (ISL), 1 Stick Set (RX1 STK), 2 Stick Set (RX2 STK), Any Stick Set (RX STK), Health (HLTH), Health/Stick Output Indicator (HSTO), Receiver 1 Occupancy A, C, D, E, or F (RX1A-F), Receiver 2 Occupancy A, C, D, E, or F (RX2A-F)

Main Menu	Sub-Menu	Parameter	Freq. Sel.	Values
		>OUT 2=		None, Crossing Relay (XR), **Island** (**ISL**), 1 Stick Set (RX1 STK), 2 Stick Set (RX2 STK), Any Stick Set (RX STK), Health (HLTH), Health/Stick Output Indicator (HSTO), Receiver 1 Occupancy A, C, D, E, or F (RX1A-F), Receiver 2 Occupancy A, C, D, E, or F (RX2A-F)
		>OUT3=		None, Crossing Relay (XR), Island (ISL), 1 Stick Set (RX1 STK), 2 Stick Set (RX2 STK), **Any Stick Set** (**RX STK**), Health (HLTH), Health/Stick Output Indicator (HSTO), Receiver 1 Occupancy A, C, D, E, or F (RX1A-F), Receiver 2 Occupancy A, C, D, E, or F (RX2A-F)
		>IN 1=		**None**, XR Enable (XR ENBL), Receiver 1 Enable (RX1 ENBL), Receiver 2 Enable (RX2 ENBL), Island Enable (ISL ENBL), Stick Cancel (STK CNCL), Out of Service (OOS)
		>IN 2=		**None**, XR Enable (XR ENBL), Receiver 1 Enable (RX1 ENBL), Receiver 2 Enable (RX2 ENBL), Island Enable (ISL ENBL), Stick Cancel (STK CNCL), Out of Service (OOS)
		>IN 1 LOS=		0 – 30 Sec (default **0**)
		>IN 2 LOS=		0 – 30 Sec(default **0**)
TIME		>DAYLIGHT SAVINGS		**DSBL**, ENBL
		>YEAR		**00** -99
		>MONTH		**01** - 12
		>DAY		**01** - 31
		>HOUR		**00** – 23 HR
		>MINUTE		**00** – 59 MIN
		>SECOND		**00** – 59 SEC
CAL		*RX1 CAL		As stated in Section 5.2.6 above

Main Menu	Sub-Menu	Parameter	Freq. Sel.	Values
		*RX2 CAL		As stated in Section 5.2.6 above
		*ISL CAL		As stated in Section 5.2.6 above
		XNG		>TAKE XNG OOS? *SET OOS INPUT HIGH
		XNG		>TAKE XNG OOS? *SET OOS INPUT HIGH
OOS		>SET OOS TIME		**NONE,** 1, 2, 3, 4, 5, 6, 7, 8, 12, 16, 24 HRS
		RX1		>TAKE RX1 OOS? *SET OOS INPUT HIGH
		RX2		>TAKE RX2 OOS? *SET OOS INPUT HIGH
		APPR		>TAKE APPR OOS? *SET OOS INPUT HIGH
		ISL		>TAKE ISL OOS? *SET OOS INPUT HIGH
INFO		+ISL SIG LVL=		Range = 0 – 9999
		+RX1 SIG LVL=		Range = 0 – 9999
		+RX2 SIG LVL=		Range = 0 – 9999
		+ISL RX GAIN+		Range = 0 – 9999
		+RX1 GAIN=		Range = 0 – 9999
		+RX2 GAIN=		Range = 0 – 9999
		+RX1 ADDR=		A, C, D, E, F
		+RX2 ADDR=		A, C, D, E, F
VERS				(Examples Only)
		+CCN=		6F__EF__D1__ 51__

Main Menu	Sub-Menu	Parameter	Freq. Sel.	Values
		+MEF=		PSO00_40.MEF
		+ID=		9V380A02.D
		+BOOT=		9V388A01.B
		+XIL=		80428 CO3.0
		+PART=		7000-7A474-0001
		+SERIAL=		2347
		+BUILD DATE=		01-31-08
		+HW REV=		B
TEST		*RUN DISPLAY TEST		Performed as described in Section 5.2.7.1.
		*CHECK LEDS		Performed as described in Section 5.2.7.2

When the Set Default parameter is selected, the values in Table 5-7 are set.

Table 5-7 PSO 4000 Crossing Assembly Menu Default Settings

Parameter	Value
Application	Directional Stick Logic
Stick Cancel Timer	15 mins
Island	Enabled
Island Frequency Selection	Standard
Island Frequency	Not Set
Island Pickup Delay (LOS)	2 Sec
Receiver 1 & 2	Enabled
Receiver 1 & 2 Frequency Selection	Standard
Receiver 1 & 2 Frequency	Not Set
Receiver 1 & 2 Address	A
Receiver 1 & 2 LOS (Pickup Delay)	2 Sec
Receiver 1 & 2 Threshold	100
Out of Service Allowed	No
OUT1	XR
OUT2	Island
OUT3	Any Stick Set
IN1	Not Set
IN2	Not Set
IN1 Pickup Delay (LOS)	0 Sec
IN2 Pickup Delay (LOS)	0 Sec

5.3.4 PSO 4000 Transceiver Assembly

NOTE

Generally, when programming outputs to a specific occupancy address (i.e., Receiver Occupancy A {RXA}, Receiver Occupancy C {RXC}, Receiver Occupancy D {RXD}, etc.), the occupancy address chosen must match the previously selected address code (e.g., >RX1 ADDR =) chosen (i.e., RXC requires AddrC, RXF requires AddrF, etc.). However, when Dynamic Addressing is selected (a special application), any occupancy state (RXA, RXC, RXD, RXE, or RXF) may be selected.

Further guidelines regarding Dynamic Addressing are found in Appendix B.

The Loss of Shunt (LOS) value that is set in >IN1LOS=0 and >IN2LOS=0 refers to the amount of time set in seconds for the pickup delay.

The Transceiver may have the transmitter disabled/enabled to repeat the code from the receiver. When the repeater is disabled, the unit functions as a true transceiver; the transmitter is fully independent of the receiver. The TX ADDR parameter is visible when RPTR=DSBL.

The PSO Check Number (PCN) appears a parameter in the Version portion of the menu. The PCN encompasses the following data/parameters:

- All PSO calibration parameters
- Date and Time of last PSO calibration
- PSO TX Frequency
- PSO TX Level

The following symbols are used in this table and have these associated meanings:

> = Editable Configuration

+ = Non-editable Information

***** = Commands – i.e., set defaults, run display tests, save changes, etc.

The menu for the PSO 4000 Transceiver Assembly is as depicted in the following table.

Table 5-8 PSO 4000 Transceiver Assembly Menu System

Main Menu	Sub-Menu	Parameter	Freq. Sel.	Values
DIAG				See Appendix C -Troubleshooting
SETP		*SET DEFAULTS		
		>RPTR=		**DSBL**, ENBL
		>TX FRQ=	STND	**Not Set**, 156, 211, 285, 348, 430, 525, 645, 790, 970, 1180, 1450, 1770, 2140, 2630, 3240, 4000
			ALT	**Not Set**, 500, 700, 900, 1000, 1100, 1125, 1250, 1300, 1375, 1500, 1600, 1640, 1750, 1875, 2175, 2300, 2675, 2800, 3100, 3500, 4000, 4900, 5400, 5900, 6400, 7100, 7700, 8300, 8900, 9500, 10.2
		>TX ADDR=		**A**, C, D, E, F, Dynamic (DYN) (If
		>TX LVL=		**Low**, High
		>RX=		**Enabled** (ENBL)**,** Disabled (DSBL) (If RPTR=ENBL)
		>RX FRQ=	STND	**Not Set**, 156, 211, 285, 348, 430, 525, 645, 790, 970, 1180, 1450, 1770, 2140, 2630, 3240, 4000
			ALT	**Not Set**, 500, 700, 900, 1000, 1100, 1125, 1250, 1300, 1375, 1500, 1600, 1640, 1750, 1875, 2175, 2300, 2675, 2800, 3100, 3500, 4000, 4900, 5400, 5900, 6400, 7100, 7700, 8300, 8900, 9500, 10.2
		>RX ADDR=		**A**, C, D, E, F, Dynamic
		>RX LOS=		0 – 30 Sec (default **2**)
		>RX THR=		100 – 9999 (default 100)
		>RX (CODE) DDLY=		0 – 30 Sec (default **0**) (Visible when >RPTR=ENBL)
		>OOS ALLOWED=		**No (DSBL)**, Yes (ENBL)
		>OUT 1=		**None**, Health (HLTH), Receiver Occupancy A (RXA), Receiver Occupancy C (RXC), Receiver Occupancy D (RXD), Receiver Occupancy E (RXE), Receiver Occupancy F (RXF)

Main Menu	Sub-Menu	Parameter	Freq. Sel.	Values
		>OUT 2=		**None**, Health (HLTH), Receiver Occupancy A (RXA), Receiver Occupancy C (RXC), Receiver Occupancy D (RXD), Receiver Occupancy E (RXE), Receiver Occupancy F (RXF)
		>OUT3=		None**, Health** (HLTH), Receiver Occupancy A (RXA), Receiver Occupancy C (RXC), Receiver Occupancy D (RXD), Receiver Occupancy E (RXE), Receiver Occupancy F (RXF)
		>IN 1=		None, Receiver Enable (RX ENBL), **Transmit Enable (TX ENBL)**, Out of Service (OOS)
		>IN 2=		**None**, Receiver Enable (RX ENBL), Transmit Enable (TX ENBL), Out of Service (OOS)
		>IN 1 LOS=		0 – 30 Sec (default **0**)
		>IN 2 LOS=		0 – 30 Sec(default **0**)
		>IN1 DDLY=		0 – 30 Sec (default **0**)
		>IN2 DDLY=		0 – 30 Sec (default **0**)
		*SAVE CHANGES?		
		*RX CAL		As stated in Section 5.2.6 above
		*EXIT SETUP?		
PROG	TX	>RPTR=		**DSBL**, ENBL
		>TX FRQ=	STND	**Not Set**, 156, 211, 285, 348, 430, 525, 645, 790, 970, 1180, 1450, 1770, 2140, 2630, 3240, 4000
			ALT	**Not Set**, 500, 700, 900, 1000, 1100, 1125, 1250, 1300, 1375, 1500, 1600, 1640, 1750, 1875, 2175, 2300, 2675, 2800, 3100, 3500, 4000, 4900, 5400, 5900, 6400, 7100, 7700, 8300, 8900, 9500, 10.2
		>TX ADDR=		**A**, C, D, E, F, Dynamic (DYN) (Not visible if RPTR=ENBL)
		>TX LVL=		**Low**, High

Main Menu	Sub-Menu	Parameter	Freq. Sel.	Values
	RX	>RX FREQ=	STND	**Not Set**, 156, 211, 285, 348, 430, 525, 645, 790, 970, 1180, 1450, 1770, 2140, 2630, 3240, 4000
			ALT	**Not Set**, 500, 700, 900, 1000, 1100, 1125, 1250, 1300, 1375, 1500, 1600, 1640, 1750, 1875, 2175, 2300, 2675, 2800, 3100, 3500, 4000, 4900, 5400, 5900, 6400, 7100, 7700, 8300, 8900, 9500, 10.2
		>RX ADDR=		**A**, C, D, E, F, Dynamic
		>RX LOS=		0-30 Sec **(2)**
		>RX THR=		100 – 9999 (default 100)
		>RX (CODE) DDLY=		0 – 30 Sec (default **0**) (Visible when >RPTR=ENBL)
	OOS	>OOS ALLOWED=		**No (DSBL)**, Yes (ENBL)
	IO	>OUT 1=		**None**, Health (HLTH), Receiver Occupancy A (RXA), Receiver Occupancy C (RXC), Receiver Occupancy D (RXD), Receiver Occupancy E (RXE), Receiver Occupancy F (RXF)
		>OUT 2=		**None**, Health (HLTH), Receiver Occupancy A (RXA), Receiver Occupancy C (RXC), Receiver Occupancy D (RXD), Receiver Occupancy E (RXE), Receiver Occupancy F (RXF)
		>OUT3=		**None**, Health (HLTH), Receiver Occupancy A (RXA), Receiver Occupancy C (RXC), Receiver Occupancy D (RXD), Receiver Occupancy E (RXE), Receiver Occupancy F (RXF)
		>IN 1=		None, Receiver Enable (RX ENBL), **Transmit Enable (TX ENBL)**, if enabled, Out of Service (OOS)
		>IN 2=		**None**, Transmit Enable (TX ENBL), Receiver Enable (RX ENBL), if enabled, Out of Service (OOS)
		>IN 1 LOS=		0 – 30 Sec (default **0**)
		>IN 2 LOS=		0 – 30 Sec(default **0**)
TIME		>DAYLIGHT SAVINGS		**DSBL**, ENBL

Main Menu	Sub-Menu	Parameter	Freq. Sel.	Values
		>YEAR		**00** -99
		>MONTH		**01** - 12
		>DAY		**01** - 31
		>HOUR		**00** – 23 HR
		>MINUTE		**00** – 59 MIN
		>SECOND		**00** – 59 SEC
CAL		*RX CAL		As stated in Section 5.2.6
INFO		+RX SIG LVL=		Range = 0 – 9999
		+RX GAIN=		Range = 0 – 9999
		+RX ADDR=		A, C, D, E, F, or DYN (Visible when >RPTR=DSBL)
VERS				(Examples Only)
		+CCN=		0A__43__A9__ 22__
		+PCN		06__30__00_7C
		+MEF=		PSO00_40.MEF
		+ID=		9V380A02.D
		+BOOT=		9V388A01.B
		+XIL=		80428 CO3.0
		+PART=		7000-7A475-0001
		+SERIAL=		2348
		+BUILD DATE=		01-31-08
		+HW REV=		B

Main Menu	Sub-Menu	Parameter	Freq. Sel.	Values
TEST		*RUN DISPLAY TEST		Performed as described in Section 5.2.7.1.
		*CHECK LEDS		Performed as described in Section 5.2.7.2

Table 5-9 PSO 4000 Transceiver Assembly Menu Default Settings

Parameter	Value
Transmit Frequency Selection	Standard
Transmit Frequency	Not Set
Transmit Level	Low
Receiver Frequency Selection	Standard
Receiver Frequency	Not Set
Receiver Address	A
Receiver LOS (Pickup Delay)	2 Sec
Receiver Threshold	100
Receiver (Code) Drop Delay	0 sec
Out of Service Allowed	No
OUT1	None
OUT2	None
OUT3	Health
IN1	None
IN2	None
IN1 Pickup Delay (LOS)	0 Sec
IN2 Pickup Delay (LOS)	0 Sec

SECTION 6 PSO 4000 APPLICATION PROGRAMMING GUIDELINES

6.0 PSO 4000 APPLICATION PROGRAMMING GUIDELINES

6.1 INTRODUCTION AND OVERVIEW

The PSO 4000 allows many application functions to be configured in software, reducing the equipment and wiring needed by older generation track occupancy information systems. The following application programming guidelines are provided to assist in planning PSO 4000 usage. In this section, the following items are addressed:

- Logic programming (see Section 6.2).
- External controlling of the PSO 4000 by use of Inputs (see Section 6.3).
- External track circuit replacing a Crossing Assembly component (see Section 6.4).
- Out of Service (OOS) operations (see Section 6.5).
- PSO 4000 application programming examples (see Section 6.6).

6.2 LOGIC PROGRAMMING

The PSO 4000 Crossing Assembly, 7A474, provides programming options that reduce the need for external crossing relays and timers, wiring between inputs and outputs and wiring to external relays. These options include:

- Health/Stick Output Logic
- Directional Stick Logic and Stick Cancel Timers

⚠ WARNING

WARNING

PROGRAM CHANGES MUST BE PERFORMED IN ACCORDANCE WITH RAILROAD PROCEDURES.

SYSTEM OPERATION MUST BE VERIFIED PRIOR TO PLACING SYSTEM IN SERVICE OR FOLLOWING PROGRAMMING, HARDWARE, OR WIRING CHANGES.

6.2.1 Health/Stick Output Logic

The Health/Stick Output Indicator (HSTO) is a signal that can be programmed to an output to provide crossing status. The output is energized when:

- the Crossing Assembly is healthy and
- Any Stick Set (RX STK)is energized

6.2.2 Stick Cancel Timer and Directional Stick Logic

Directional Stick Logic drives the XR function which, when selected to an output, enables the Crossing Assembly to activate the crossing signals on the approach of a train and deactivate the crossing signals when the train leaves the island circuit.

6.2.2.1 Stick Cancellation Timer

A Stick Cancellation Timer is used to cancel the Directional Stick in case the approach receiver being overridden by the Directional Stick does not energize after the train has left its PSO circuit. The timer begins to run time when the island circuit energizes, and the Directional Stick is set as the train departs the crossing. Therefore, the stick cancellation time is not affected by train length. A latch prevents an intermittent island circuit from resetting the Stick Cancellation Timer. The Stick Cancellation time range of values are 5, 15, 25, 35, 45, 55, & 60 minutes, with a default setting of 15 minutes.

6.2.2.2 Typical Stick Operation and Logic

The PSO 4000 crossing assembly utilizes a three circuit Directional Stick Logic for proper crossing activation and deactivation. The crossing location is setup and programmed as follows:

- The West Approach is enabled and programmed as RX1.
- The Island is enabled and programmed as ISL.
- The East Approach is enabled and programmed as RX2.
- PSO 1 is configured as a transmitter.
- PSO 2 is configured as a crossing module where:
    - the XR is programmed as an output of the PSO 4000 to control the highway crossing warning system:
    - one output is programmed as XR (OUT1=XR)
    - one output is programmed as Stick 1 (OUT2=Stick 1)
    - one output is programmed as Stick 2 (OUT3=Stick 2)
    - no inputs are programmed.
- PSO 3 is configured as a transmitter.

Typical operation of the stick logic is as follows:

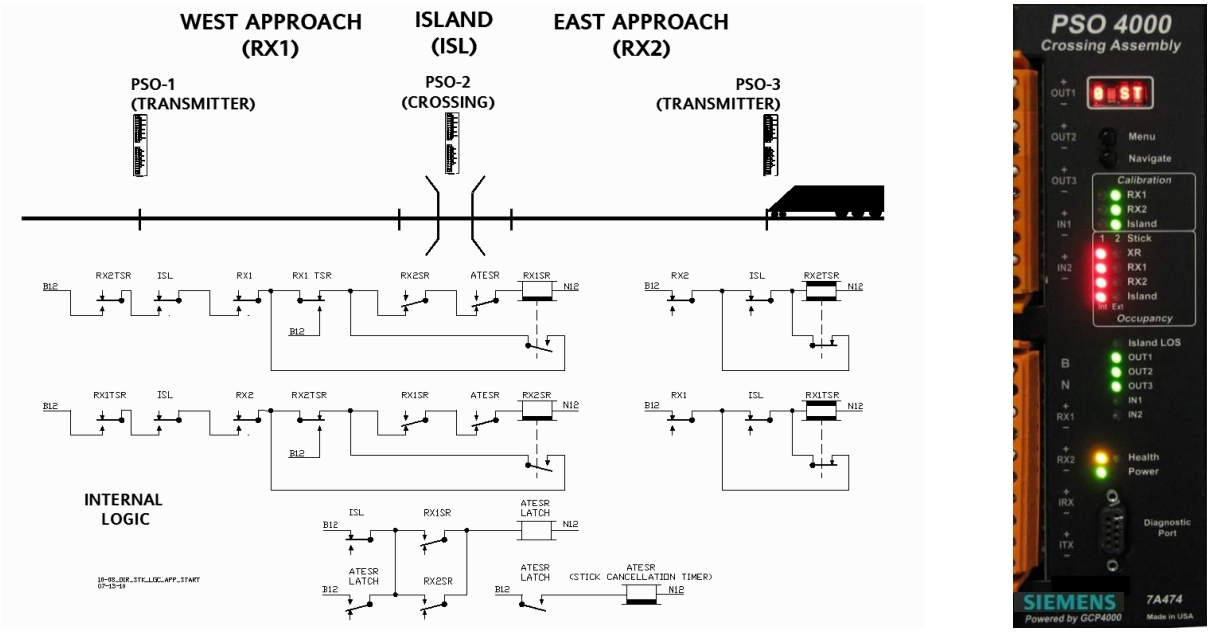

Figure 6-1 Directional Stick Example – Train Not Yet in Approach

Prior to entering RX2, the Stick1 and Stick2 indicator LEDs are not lit and the XR, RX1, RX2, and Island Occupancy LEDs are lit. The OUT1, OUT2, and OUT3 LEDs are lit.

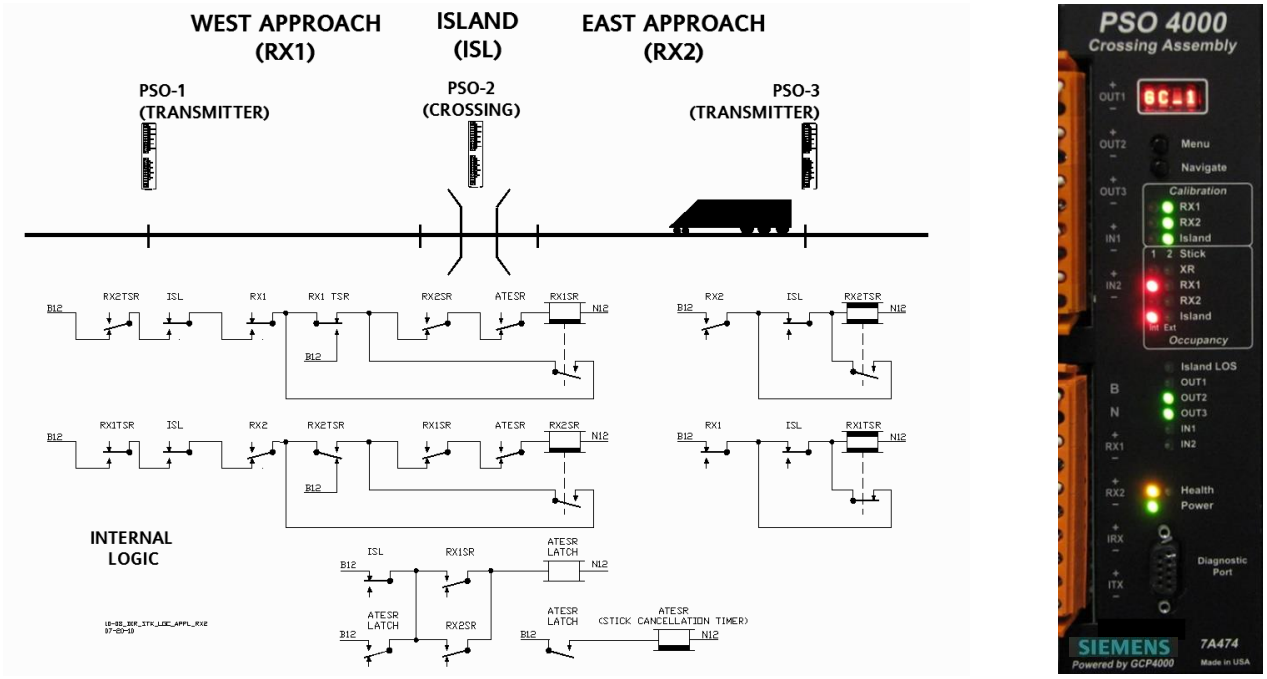

Figure 6-2 Directional Stick Example – Train Enters RX2

The train enters RX2: RX2 and XR de-energize. The RX2 and XR Occupancy LEDs go out. OUT1 de-energizes and the OUT1 LED goes out. XR de-energizing activates the highway crossing warning system. No stick has been set in the event log.

Figure 6-3 Directional Stick Example – Train Enters Island

The train enters the Island circuit: the Island de-energizes. The Island Occupancy LED goes out. XR remains de-energized. OUT1 remains unlit. OUT2 and OUT3 remain lit. No stick has been set in the event log. The indicator LEDs for both Stick 1 and Stick 2 remain unlit.

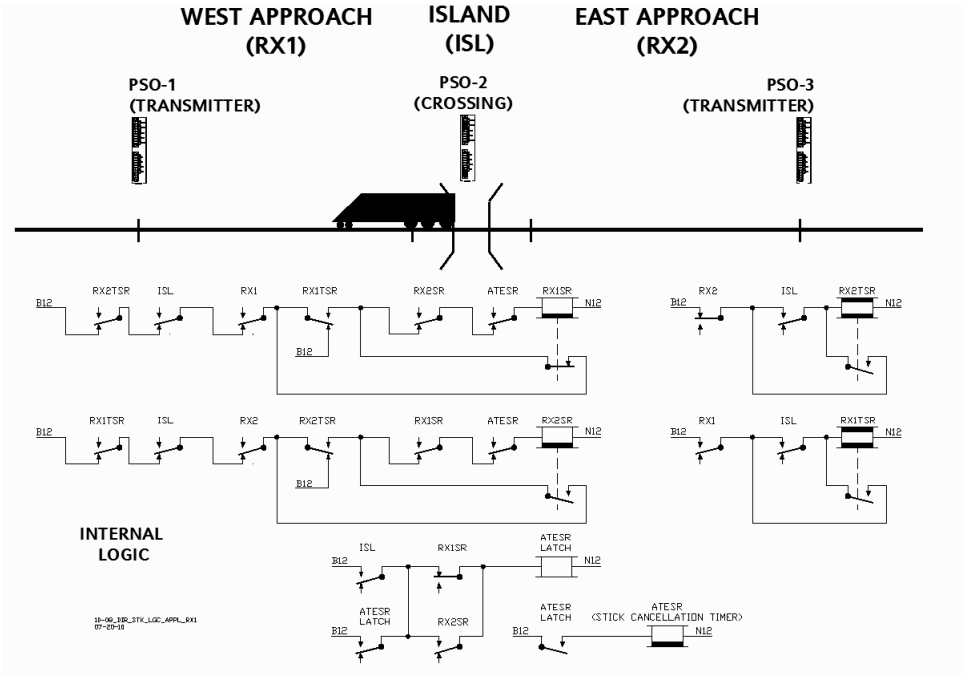

Figure 6-4 Directional Stick Example – Train Enters RX1, Stick 1 Set

The train enters RX1: RX1 de-energizes and Stick1 is set. The RX1 Occupancy LED goes out. The Stick 1 LED lights. OUT1 remains de-energized, OUT2 de-energizes, OUT3 remains energized. Stick 1 is set in the Event Log and the Stick 1 indicator LED lights.

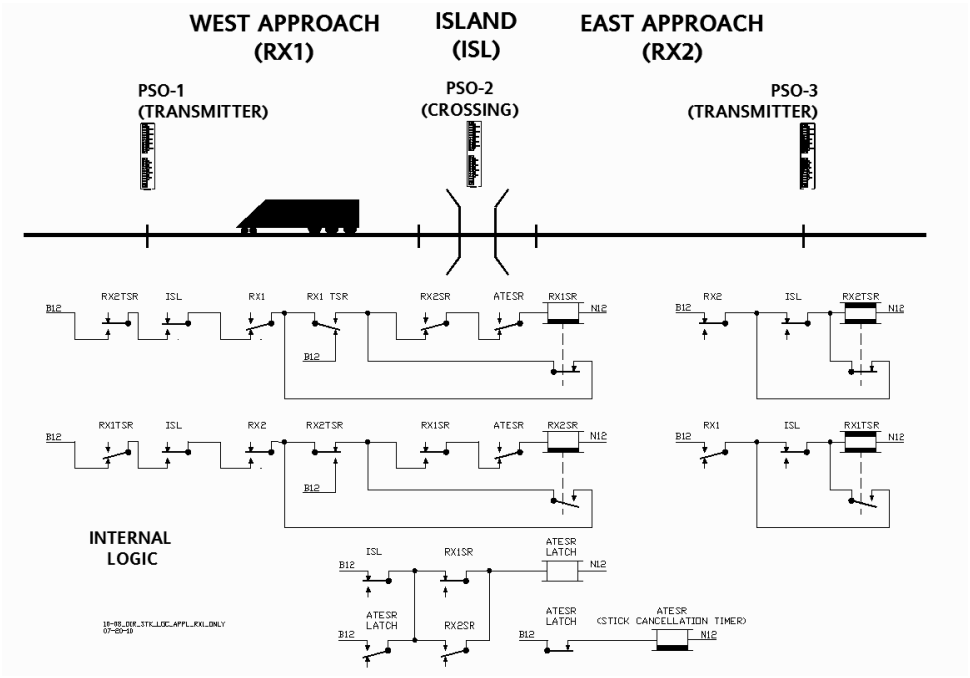

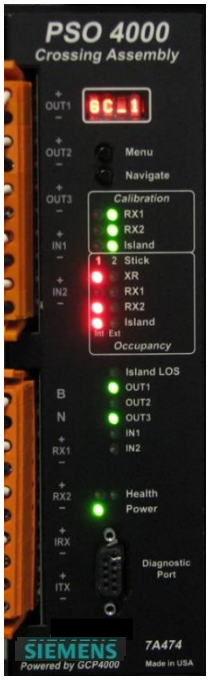

Figure 6-5 Directional Stick Example – Train Exits RX2 and Island

The train clears the RX2 & ISL circuits: RX2 and ISL pickup delays (LOS/programmed time delays) start as the train exits each respective track circuit (LOS time running will be indicated as a flashing LED). Once LOS expires the XR, RX2, and Island energize. The XR, RX2, and Island LEDs light. OUT1 energizes, OUT2 remains de-energized, and OUT3 remains energized. Stick 1 remains set in the Event Log and the Stick 1 indicator LED remains lit.

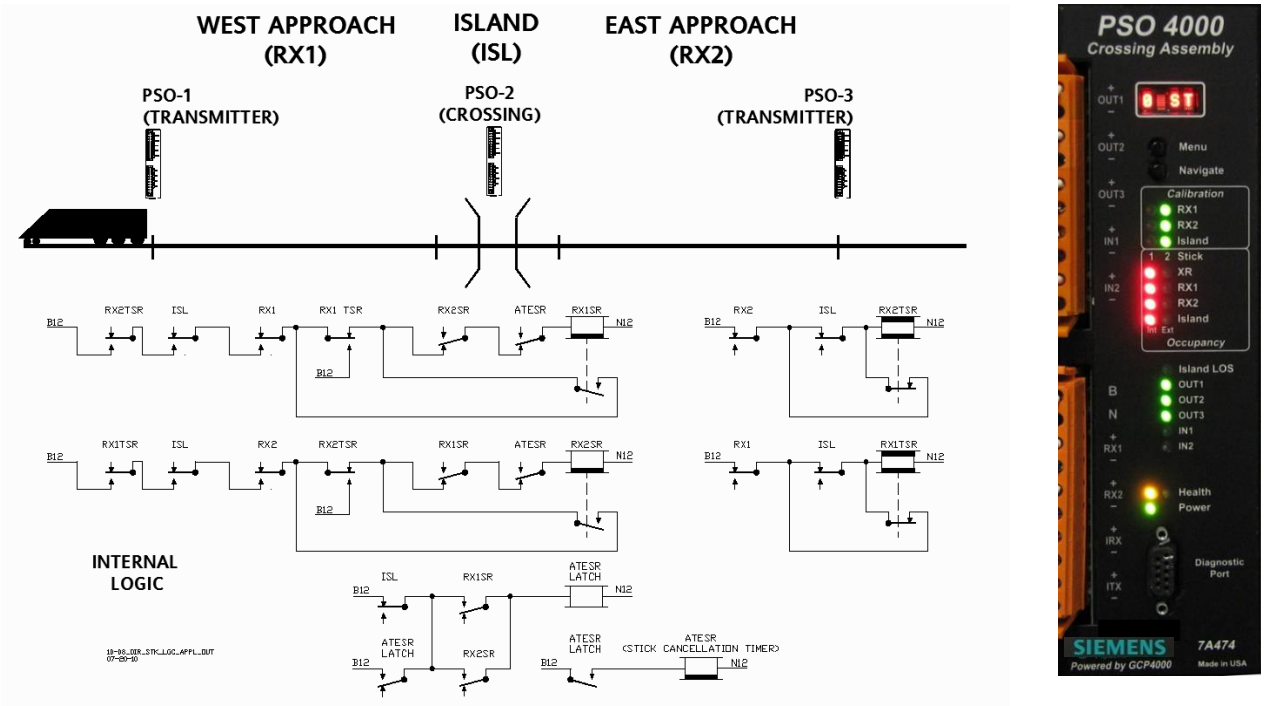

Figure 6-6 Directional Stick Example – Train Exits RX1

When the train clears the RX1 circuit: RX1 pickup delay (LOS/programmed time delay) starts as the train exits RX1 (LOS time running will be indicated as a flashing LED). Once LOS expires RX1 energizes and Stick1 de-energizes. The Stick1 indicator LED goes out and The RX1 LED lights. The OUT1 and OUT3 remain energized and OUT2 energizes. Stick 1 is cleared in the Log.

See Section 6.4 information regarding external track circuit substitutes.

6.3 EXTERNAL CONTROLLING OF THE PSO 4000 BY USE OF INPUTS

The PSO 4000 can receive occupancy information from external equipment concerning the approaches or the island. One or both inputs may be configured for external control of the Crossing Relay (XR ENBL), Receiver 1 (RX1 ENBL), Receiver 2 (RX2 ENBL), or the Island (ISL ENBL), as well as an external cancel of the directional stick cancel timer. (STK CNCL). Additionally, the PSO 4000 may be taken Out of Service (OOS) by properly programming it and energizing an OOS input. (See Section 6.5).

⚠ CAUTION

CAUTION

IT IS RECOMMENDED TO SET LOSS OF SHUNT TO THREE SECONDS FOR ALL RECEIVER/XR OUTPUTS. THIS PROVIDES A 3 SECOND LOSS OF SHUNT TIME.

6.3.1 Example 1: External Control of Crossing Relay (XR) Using External Input Control

The 12 VDC output of a DC island circuit relay on a secondary track can be connected to IN1 or IN2. This, when coupled with programming the selected INPUT to XR, will de-energize the PSO 4000 XR output when the input is de-energized.

6.3.2 Example 2: External Control of Receiver 1 Using External Input Control

RX1 receiver, when required, may be controlled by either IN1 or IN2. This, when coupled with programming the selected INPUT to RX1, will cause the PSO 4000 RX1 receiver to de-energize when the input is deenergized.

6.3.3 Example 3: External Control of Receiver 2 Using External Input Control

RX2 receiver, when required, may be controlled by either IN1 or IN2. This, when coupled with programming the selected INPUT to RX2, will cause the PSO 4000 RX2 receiver to de-energize when the input is deenergized.

6.3.4 Example 4: External Control of the Island Using External Input Control

The island receiver, when required, may be controlled by either IN1 or IN2. This, when coupled with programming the selected INPUT to ISL, will cause the PSO 4000 island receiver to de-energize when the input is de-energized.

6.3.5 Example 5: External Control of the Stick Cancel Timer

The Directional Stick Cancel Timer, when required, may have its time canceled by IN1 or IN2. This, when coupled with programming the selected INPUT to STK CNCL, will cause the stick cancel timer time to change to zero (immediately causing the directional stick to deenergize) when the input is deenergized.

6.4 EXTERNAL TRACK CIRCUIT REPLACING A CROSSING ASSEMBLY COMPONENT

An external track circuit such as a preexisting audio overlay or DC track circuit may be used to replace a component in the Crossing Assembly.

6.4.1 Using an External Track Circuit in Place of Receiver 1

An external track circuit can be used in place of the built in PSO Receiver 1 (RX1). Scroll down the PSO 4000 Menu to Setup or Program. Scroll down to Receiver 1 (RX1). Set RX1 to Disabled (RX1=DSBL). Scroll down to the I/O portion of the menu. Set the input for IN1 to Receiver 1 Enable (IN1=RX1 ENBL).

6.4.2 Using an External Track Circuit in Place of Receiver 2

An external track circuit can be used in place of the built in PSO Receiver 2 (RX2). Scroll down the PSO 4000 Menu to Setup or Program. Scroll down to Receiver 2 (RX2). Set RX2 to Disabled (RX2=DSBL). Scroll down to the I/O portion of the menu. Set the input for IN1 to Receiver 2 Enable (IN1=RX2 ENBL).

6.4.3 Using an External Island Track Circuit in Place of the internal Island

An external island track circuit can be used in place of the built in Island. Scroll down the PSO 4000 Menu to Setup or Program. Scroll down to Island (ISL). Set ISL to Disabled (ISL=DSBL). Scroll down to the I/O portion of the menu. Set the input for IN1 to Island Enable (IN1=ISL ENBL).

6.5 OUT OF SERVICE OPERATIONS

WARNING

⚠ WARNING

THE RAILROAD PROCEDURES GOVERNING HOW TO TAKE A TRACK CIRCUIT OUT OF SERVICE SHALL BE FOLLOWED. THE INSTRUCTIONS IN THIS SECTION MAY BE FOLLOWED ONLY IF ALLOWED BY THE RAILROAD.

OUT OF SERVICE TRACKS WILL NOT RESPOND TO TRAIN OPERATION. TAKE ALTERNATE MEANS TO WARN VEHICULAR TRAFFIC, PEDESTRIANS, AND EMPLOYEES.

REQUIRED OPERATIONAL TESTS SHOULD BE PERFORMED IN ACCORDANCE WITH RAILROAD PROCEDURES WHEN RESTORING TRACKS TO SERVICE.

THE RAILROAD PROCEDURES FOR APPLYING TEMPORARY JUMPERS MUST BE FOLLOWED WHEN ENERGIZING THE "OUT OF SERVICE" INPUT(S).

INPUTS FOR "OUT OF SERVICE" SHOULD BE WIRED IN A PERMANENT MANNER IN ACCORDANCE WITH CIRCUIT PLANS.

DO NOT USE TEST TERMINALS OR SWITCHES THAT CAN VIBRATE CLOSED TO ENERGIZE OOS INPUTS.

NOTE

NOTE

The Display Test will pop up when required during SETUP or PROG. It allows user verification that all symbols, numbers, and letters display properly. The Display Test will pop up if the unit is being reprogrammed to allow Out of Service. See Section 5.2.7.1 for further information on the Display Test.

When placing the unit into Out of Service, however, the Display Test will not pop up, since the unit is not being programmed, but merely turning on an option.

When a crossing is taken out of service, the crossing outputs remain energized (no crossing activation). The stick, island and XR LEDs remain ON during train movements. The island is ignored when the island is set OOS. Directional Stick Logic will not operate the crossing when OOS. When a component is Out of Service, the system displays a message that scrolls across the 4-character display (e.g., "+RX OOS REM TIME 00:59").

If the input of a unit that is Out of Service is de-energized for any reason, the unit's Out of Service option must be reprogrammed prior to taking the unit back OOS.

6.5.1 Component OOS Options

NOTE

NOTE

If a component is Out of Service and one of the following occurs, the component is put back In Service:

- The Out of Service Timer expires
- The Out of service input is de-energized
- The user puts the component back into service using the user interface
- The Unit reboots
- The Unit detects a health error (not including Island or PSO component errors)
- Out of Service is disabled.

The receiver component of the Receiver, 7A473 or Transceiver Assembly, 7A475 may be taken out of service; this essentially takes the entire unit Out of Service when the input is energized. Unlike the Receiver or Transceiver Assembly, individual components of the Crossing Assembly are taken Out of Service or the entire Crossing Assembly may be taken Out of Service.

When OOS is enabled on the Receiver or the Transceiver Assembly, receiver of the unit is taken out of service when the OOS input is energized. When OOS is enabled on the Crossing Assembly, the following functions may be taken out of service individually when the corresponding OOS inputs are energized:

- Receiver 1
- Receiver 2
- Approaches (both RX1 and RX2 receivers, but the island remains active)
- Island
- Crossing (complete Crossing Assembly OOS)

NOTE

NOTE

If a selected Out of Service (OOS) input has been set high (selected on) but the sub-menu OOS parameter remains disabled (>OOS = DSBL), then the crossing will activate when the OOS sub-menu parameter is enabled (>OOS = ENBL). Always enable the sub-menu OOS parameter (>OOS = ENBL) prior to setting the OOS input high.

When any of the Crossing Assembly functions are taken Out of Service (OOS), the directional stick logic does not operate.

6.5.1.1 Receiver (Receiver, 7A473 or Transceiver Assembly, 7A475)

To take the Receiver or Transceiver Out of Service:

1. Scroll down the main menu to PROG and select PROG.
2. Scroll down the PROG sub-menu to the OOS group and select OOS=ENBL.
3. Scroll down the PROG sub-menu to the I/O portion of the sub-menu and set one of the input parameters to Out of Service (in this case, IN1=OOS).
4. Navigate back up the menu tree to the sub-menu level, with either PROG or CAL appearing on the display.
5. Scroll down the menu to the OOS sub-menu and select OOS. When >SET OOS TIME appears, select the length of time desired in hourly increments (NONE, 1, 2, 3, 4, 5, 6, 7, 8, 12, 16, or 24hours).
6. When RX appears, press and hold the Select button.
7. Select “TAKE RX OOS?” as it appears in the window.
8. When “*SET OOS INPUT HIGH appears, the required input (IN1) must be energized within in 30 seconds or CANC appears followed by RX appearing on the display.
9. When power is applied to IN1 within 30 seconds, Receiver (RX) is taken OOS and “+RX OOS” along with any OOS time remaining scrolls across the 4-digit display.

6.5.1.2 Receiver 1 (Crossing Assembly, 7A474)

To take Receiver 1 Out of Service:

1. Scroll down the main menu to PROG and select PROG.
2. Scroll down the PROG sub-menu to the OOS group and select OOS=ENBL.
3. Scroll down the PROG sub-menu to the I/O portion of the sub-menu and set one of the input parameters to Out of Service (in this case, IN1=OOS).
4. Navigate back up the menu tree to the sub-menu level, with either PROG or CAL appearing on the display.
5. Scroll down the menu to the OOS sub-menu. When >SET OOS TIME appears, select the length of time desired in hourly increments (None, 1, 2, 3, 4, 5, 6, 7, 8, 12, 16, or 24hours).
6. When RX1 appears, press and hold the Select button.
7. Select “TAKE RX1 OOS?” as it appears in the window.
8. When “*SET OOS INPUT HIGH appears, the required input (IN1) must be energized within in 30 seconds or CANC appears followed by RX1 appearing on the display.
9. When power is applied to IN1 within 30 seconds, Receiver 1 (RX1) is taken OOS and “+RX1 OOS” along with any OOS time remaining scrolls across the 4-digit display.

6.5.1.3 Receiver 2 (Crossing Assembly, 7A474)

To take Receiver 1 Out of Service:

1. Scroll down the main menu to PROG and select PROG.
2. Scroll down the PROG sub-menu to the OOS group and select OOS=ENBL.
3. Scroll down the PROG sub-menu to the I/O portion of the sub-menu and set one of the input parameters to Out of Service (in this case, IN1=OOS).
4. Navigate back up the menu tree to the sub-menu level, with either PROG or CAL appearing on the display.
5. Scroll down the menu to the OOS sub-menu. When >SET OOS TIME appears, select the length of time desired in hourly increments (None, 1, 2, 3, 4, 5, 6, 7, 8, 12, 16, or 24hours).
6. When RX2 appears, press and hold the Select button.

7. Select “TAKE RX2 OOS?” as it appears in the window.
8. When “*SET OOS INPUT HIGH appears, the required input (IN1) must be energized within in 30 seconds or CANC appears followed by RX2 appearing on the display.
9. When power is applied to IN1 within 30 seconds, Receiver 2 (RX2) is taken OOS and “+RX2 OOS” along with any OOS time remaining scrolls across the 4-digit display.

6.5.1.4 Both Approaches (Crossing Assembly, 7A474)

To take both approaches Out of Service:

1. Scroll down the main menu to PROG and select PROG.
2. Scroll down the PROG sub-menu to the OOS group and select OOS=ENBL.
3. Scroll down the PROG sub-menu to the I/O portion of the sub-menu and set one of the input parameters to Out of Service (in this case, IN1=OOS).
4. Navigate back up the menu tree to the sub-menu level, with either PROG or CAL appearing on the display.
5. Scroll down the menu to the OOS sub-menu. When >SET OOS TIME appears, select the length of time desired in hourly increments (None, 1, 2, 3, 4, 5, 6, 7, 8, 12, 16, or 24hours).
6. When APPR appears, press and hold the Select button.
7. Select “TAKE APPR OOS?” as it appears in the window.
8. When “*SET OOS INPUT HIGH appears, the required input (IN1) must be energized within in 30 seconds or CANC appears followed by APPR appearing on the display.
9. When power is applied to IN1 within 30 seconds, both approaches (APPR) are taken OOS and “+APPR OOS” along with any OOS time remaining scrolls across the 4-digit display.

6.5.1.5 Island (Crossing Assembly, 7A474)

To take the Island (ISL) Out of Service:

1. Scroll down the main menu to PROG and select PROG.
2. Scroll down the PROG sub-menu to the OOS group and select OOS=ENBL.
3. Scroll down the PROG sub-menu to the I/O portion of the sub-menu and set one of the input parameters to Out of Service (in this case, IN1=OOS).
4. Navigate back up the menu tree to the sub-menu level, with either PROG or CAL appearing on the display.
5. Scroll down the menu to the OOS sub-menu. When >SET OOS TIME appears, select the length of time desired in hourly increments (None, 1, 2, 3, 4, 5, 6, 7, 8, 12, 16, or 24hours).
6. When ISL appears, press and hold the Select button.
7. Select “TAKE ISL OOS?” as it appears in the window.
8. When “*SET OOS INPUT HIGH appears, the required input (IN1) must be energized within in 30 seconds or CANC appears followed by ISL appearing on the display.
9. When power is applied to IN1 within 30 seconds, the island (ISL) is taken OOS and “+ISL OOS” along with any OOS time remaining scrolls across the 4-digit display.

6.5.1.6 The Crossing (Crossing Assembly, 7A474)

To take the crossing as a whole Out of Service:

1. Scroll down the main menu to PROG and select PROG.
2. Scroll down the PROG sub-menu to the OOS group and select OOS=ENBL.
3. Scroll down the PROG sub-menu to the I/O portion of the sub-menu and set one of the input parameters to Out of Service (in this case, IN1=OOS).
4. Navigate back up the menu tree to the sub-menu level, with either PROG or CAL appearing on the display.
5. Scroll down the menu to the OOS sub-menu. When >SET OOS TIME appears, select the length of time desired in hourly increments (None, 1, 2, 3, 4, 5, 6, 7, 8, 12, 16, or 24hours).
6. When XNG appears, press and hold the Select button.
7. Select “TAKE XNG OOS?” as it appears in the window.
8. When “*SET OOS INPUT HIGH appears, the required input (IN1) must be energized within in 30 seconds or CANC appears followed by XNG appearing on the display.
9. When power is applied to IN1 within 30 seconds, Receiver 2 (XNG) is taken OOS and “+XNG OOS” along with any OOS time remaining scrolls across the 4-digit display.

6.5.1.7 Returning an OOS Function to Service

NOTE

NOTE

Waiting for the programmed OOS cancel timer to cycle and return the OOS function back to service will cause the crossing to be continuously activated because the OOS input is still high. The OOS input must be first deenergized.

An OOS function is returned to service as follows:

- First, de-energize the input
- Second, scroll down the PROG sub-menu to OOS, and select Disable (>OOS = DSBL).

When putting a unit back into service, deenergize the OOS input. If the “OOS Allowed” is set to disable with the OOS input still energized then the unit will go into a restrictive state (outputs de-energized) until the input is deenergized. This restrictive state can occur if:

- The OOS input is not de-energized before placing the unit back into service by setting the OOS Allowed to disabled.
- The out of service timer expires with the OOS input still energized
- The unit reboots while out of service.

When returned to service, the 4-digit display returns to normal configuration, reflecting typical crossing data of unit type and stick logic file (e.g., PSO 4000 STKLGC_1).

6.6 EXAMPLE PROGRAMMING FOR VARIOUS PSO 4000 APPLICATIONS

6.6.1 Example 1: Programming of a Generic Track Circuit

A generic PSO 4000 transmitter/receiver track circuit is shown in the following figure.

In this example, a simple transmitter and receiver track circuit is programmed to 645 Hz, address A. All LOS (Pickup Delay) settings add 1 second to the default setting.

NOTE

The display test will run on the 4-character display when required during SETUP or PROG. It allows user verification that all symbols, numbers, and letters display properly. See Section 5.2.7.1 for further information on the display test.

Each menu step must be checked for the correct example values. Verify that the LOS values (Pickup Delay) specified in the written instructions are entered correctly.

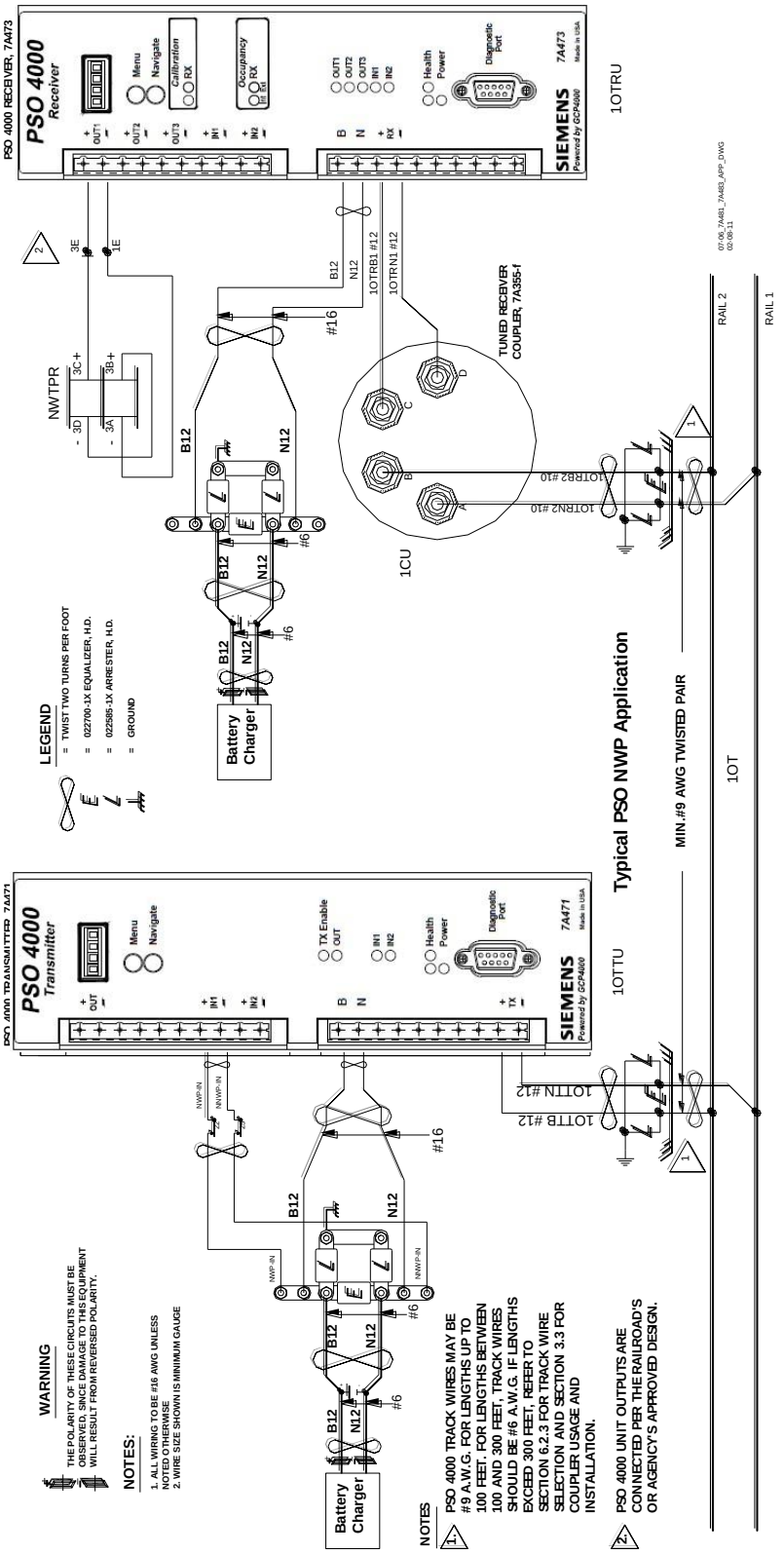

Figure 6-7 Generic PSO 4000 NWP Application

6.6.1.1 Transmitter Programming

To program the Transmitter, set the following parameters as shown below:

- Scroll down the main menu and select SETP. Scroll down and select *Set Default.
- Scroll to TX FRQ, select STND, and after the Display Test is passed, select 645.
- Scroll to TX ADDR, verify A is set.
- Scroll to TX LVL, verify Low is set.
- Scroll to IN1, verify TX ENBL is set.
- Scroll to IN2, verify None is set.
- Scroll down and select SAVE CHANGES
- Scroll down and select EXIT SETUP

If an input (e.g., IN1) is configured as a Transmit Enable, the unit will only transmit when the input is energized. Use of the Transmit Enable is optional; planners determine whether or not the setting is used. In this example, connect the Transmit Enable leads to IN1 on the PSO 4000 Transmitter. Energize the circuit.

Table 6-1 Example 1 PSO 4000 Transmitter Settings

Parameter	Value Selected
Set Defaults?	Press Menu 2 seconds until DONE appears
Transmit Frequency	Standard, 645Hz
Transmit Address	A
Transmit Level	Low
IN1	TX ENBL
IN2	None
Save Changes?	Press Menu until DONE appears
Exit Setup?	Press Menu until DONE appears

On the face of the Transmitter the TX Enable LED and the OUT LED are lit. The transmitter is ready for service.

6.6.1.2 Receiver Programming

CAUTION

IT IS RECOMMENDED TO SET LOSS OF SHUNT TO THREE SECONDS FOR ALL RECEIVER/XR OUTPUTS. THIS PROVIDES A 3 SECOND LOSS OF SHUNT TIME.

To program the Receiver, set the following parameters as shown below:

- Scroll down the main menu and select SETP. Scroll down and select *Set Default.
- Scroll to RX FRQ, select STND, and after the Display Test is passed, select 645.
- Scroll to RX ADDR, verify A is set.
- Scroll to RX LOS, select 3 seconds.
- Scroll to RX THR, verify 100 is set.
- Scroll to OOS ALLOWED, verify DSBL is set.
- Scroll to OUT1, verify RXA is set.
- Scroll to OUT2, verify None is set.
- Scroll to OUT3, verify HLTH is set
- Scroll to IN1, verify None is set.
- Scroll to IN2, verify None is set.
- Scroll to IN1 LOS, select 1 second.
- Scroll to IN2 LOS, select 1 second.
- Scroll down and select SAVE CHANGES
- Scroll down and select RX CAL (Calibrate the Receiver)
- Scroll down and select EXIT SETUP

Table 6-2 Example 1 PSO 4000 Receiver Settings

Parameter	Value Selected
Set Defaults	Press Menu 2 seconds until DONE appears
Receiver Frequency	Standard, 645Hz
Receiver Address	A
Receiver LOS (Pickup Delay)	3 seconds
Receiver Threshold	100
Out Of Service Allowed	DSBL
OUT1	RXA
OUT2	None
OUT3	HLTH
IN1	None
IN2	None
IN1 LOS (Pickup Delay)	1 second
IN2 LOS (Pickup Delay)	1 second.
Save Changes?	Press Menu until DONE appears
Receiver Calibration	As stated in Section 5.2.6
Exit Setup?	Press Menu until DONE appears

On the face of the Receiver, the right Calibration LED is lit. The left Occupancy RX LED is also lit, signifying that track circuit is functional and currently unoccupied. The OUT1 and OUT3 LEDs are also lit, signifying the status of the receiver and the receiver health, respectively.

6.6.2 Example 2: Programming of Typical Crossing Assembly Track Circuits

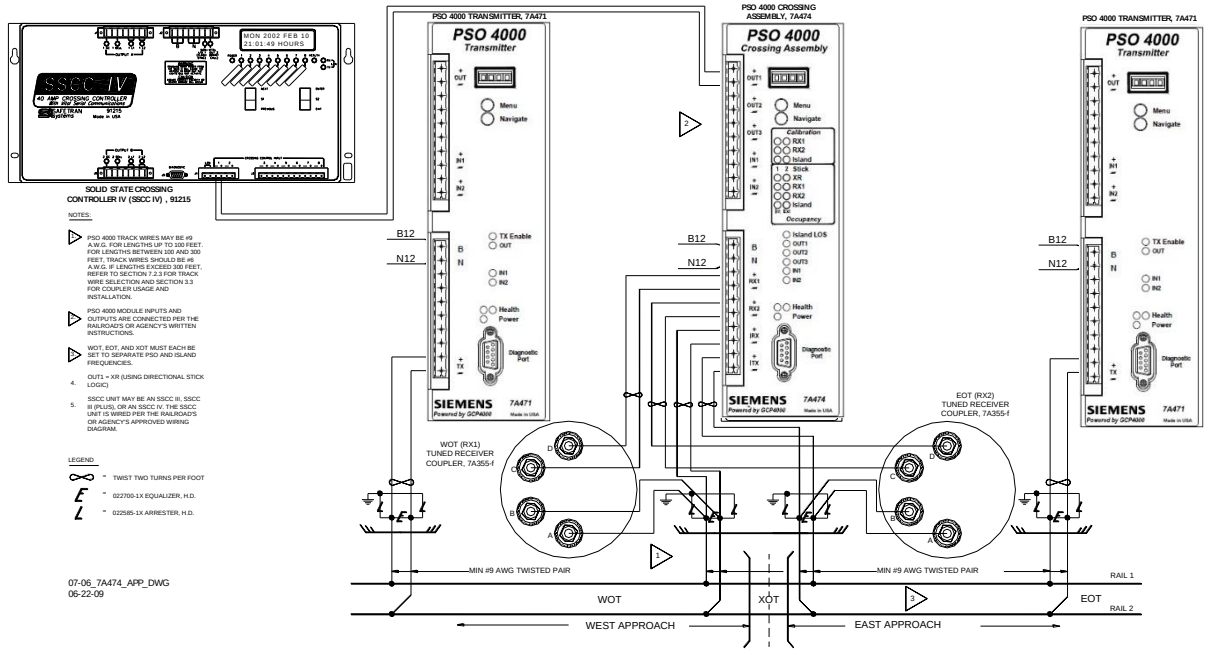

Figure 6-8 Typical Crossing Application

An example of PSO 4000 programming of a crossing that has Crossing Assembly in between the two track circuits is shown in Figure 6-8. In this example track circuit WOT has the transmitter frequency set at 645Hz and code “A” modulation; track circuit XOT has the Island frequency set to 4000Hz; and EOT has the transmitter frequency set at 1180Hz with code “C” modulation. The Crossing Assembly’s Input/Output Connecter OUT1 terminals are wired to an SSCCIV and the sub-menu Output 1 parameter is set to XR Enable (>OUT1 = XR ENBL). All LOS (Pickup Delay) settings add 1 second to the default settings.

6.6.2.1 Remote Transmitter Programming for WOT Track Circuit (Transmitter, P/N 7A471)

To program the WOT Transmitter, set the following parameters as shown below:

- Scroll down the main menu and select SETP. Scroll down and select *Set Default.
- Scroll to TX FRQ, select STND, and after the Display Test is passed, select 645.
- Scroll to TX ADDR, select A is set.
- Scroll to TX LVL, verify Low is set.
- Scroll to IN1, select None.
- Scroll to IN2, verify None is set.
- Scroll to IN1 LOS, select 1 second.
- Scroll to IN2 LOS, select 1 second.
- Scroll down and select SAVE CHANGES
- Scroll down and select EXIT SETUP

Table 6-3 Example 2 WOT PSO 4000 Transmitter Settings

Parameter	Value Selected
Set Defaults?	Press Menu 2 seconds until DONE appears
Transmit Frequency	Standard, 645Hz
Transmit Address	A
Transmit Level	Low
IN1	None
IN2	None
IN1 LOS (Pickup Delay)	1 second
IN2 LOS (Pickup Delay)	1 second
Save Changes?	Press Menu until DONE appears
Exit Setup?	Press Menu until DONE appears

On the face of the Transmitter the TX Enable LED and the OUT LED are lit. The transmitter is ready for service.

6.6.2.2 Remote Transmitter Programming for EOT Track Circuit (Transmitter, P/N 7A471)

CAUTION

IT IS RECOMMENDED TO SET LOSS OF SHUNT TO THREE SECONDS FOR ALL RECEIVER/XR OUTPUTS. THIS PROVIDES A 3 SECOND LOSS OF SHUNT TIME.

To program the EOT Transmitter, set the following parameters as shown below:

- Scroll down the main menu and select SETP. Scroll down and select *Set Default.
- Scroll to TX FRQ, select STND, and after the Display Test is passed, select 1180.
- Scroll to TX ADDR, select C.
- Scroll to TX LVL, verify Low is set.
- Scroll to IN1, select None.
- Scroll to IN2, verify None is set.
- Scroll to IN1 LOS, select 1 second.
- Scroll to IN2 LOS, select 1 second.
- Scroll down and select SAVE CHANGES
- Scroll down and select EXIT SETUP

Table 6-4 Example 2 EOT PSO 4000 Transmitter Settings

Parameter	Value Selected
Set Defaults?	Press Menu 2 seconds until DONE appears
Transmit Frequency	Standard, 1180Hz
Transmit Address	C
Transmit Level	Low
IN1	None
IN2	None
IN1 LOS (Pickup Delay)	1 second
IN2 LOS (Pickup Delay)	1 second
Save Changes?	Press Menu until DONE appears
Exit Setup?	Press Menu until DONE appears

On the face of the Transmitter the TX Enable LED and the OUT LED are lit. The transmitter is ready for service.

6.6.2.3 Crossing Assembly Programming for XOT Track Circuit (Crossing Assembly, 7A474)

To program the Crossing Assembly, set the following parameters as shown below:

- Scroll down the main menu and select SETP. Scroll down past “APP” and select *Set Default.
- Scroll to STKCANC, after the Display Test is passed, select 15 min
- Scroll to ISL, select ENBL.
- Scroll to ISL FRQ, select STND, then select 4000
- Scroll to ISL LOS, select 3 seconds.
- Scroll to RX1, select ENBL.
- Scroll to RX1 FRQ, select STND, and then select 645.
- Scroll to RX1 ADDR, verify A is set.
- Scroll to RX1 LOS, verify 3 seconds is set.
- Scroll to RX1 THR, verify 100 is set.
- Scroll to RX2, verify ENBL is set.
- Scroll to RX2 FRQ, select STND, and then select 1180.
- Scroll to RX2 ADDR, select C.
- Scroll to RX2 LOS, select 3 seconds.
- Scroll to RX2 THR, verify 100 is set.
- Scroll to OOS ALLOWED, verify DSBL is set.
- Scroll to OUT1, verify XR is set.
- Scroll to OUT2, verify ISL is set.
- Scroll to OUT3, verify RX STK is set.
- Scroll to IN1, verify None is set.
- Scroll to IN2, verify None is set.
- Scroll to IN1 LOS, select 1 second.
- Scroll to IN2 LOS, select 1 second.
- Scroll down and select SAVE CHANGES
- Scroll down and select RX1 CAL (Calibrate Receiver 1)
- Scroll down and select RX2 CAL (Calibrate Receiver 2)
- Scroll down and select ISL CAL (Calibrate the Island)
- Scroll down and select EXIT SETUP

Table 6-5 Example 2 PSO 4000 Crossing Assembly Settings

Parameter	Value Selected
Application	STKLGC_1 (Non-editable)
Set Defaults?	Press Menu 2 seconds until DONE appears
Stick Cancel Timer	15 mins
Island	Enable
Island Frequency	Standard, 4000 Hz

Parameter	Value Selected
Island LOS (Pickup Delay)	3 seconds
Receiver 1	Enable
Receiver 1 Frequency	Standard, 645 Hz
Receiver 1 Address	A
Receiver 1 LOS (Pickup Delay)	3 seconds
Receiver 1 Threshold	100
Receiver 2	Enable
Receiver 2 Frequency	Standard, 1180 Hz
Receiver 2 Address	C
Receiver 2 LOS (Pickup Delay)	3 seconds
Receiver 2 Threshold	100
Out of Service Allowed	No
OUT1	Crossing Relay
OUT2	Island
OUT3	Any Stick Set
IN1	None
IN2	None
IN1 LOS (Pickup Delay)	1 second
IN2 LOS (Pickup Delay)	1 second
Save Changes?	Press Menu until DONE appears
Receiver 1 Calibration	As stated in Section 5.2.6
Receiver 2 Calibration	As stated in Section 5.2.6
Island Calibration	As stated in Section 5.2.6
Exit Setup?	Press Menu until DONE appears

On the face of the Crossing Assembly, the Calibration LEDs (RX1, RX2, and Island) are lit. The Stick 1 and Stick 2 LED are not lit. These LEDs are only lit when the Stick is set. The Occupancy LEDs (XR, RX1, RX2, and Island) are lit. The lights in these Occupancy section signify that track circuit is functional and currently unoccupied. The OUT1, OUT 2, and OUT3 LEDs are also lit, signifying the status of the Crossing Relay, the Island and the unit health, respectively.

6.6.3 Example 3: Programming of Typical Transceiver Assembly Track Circuits

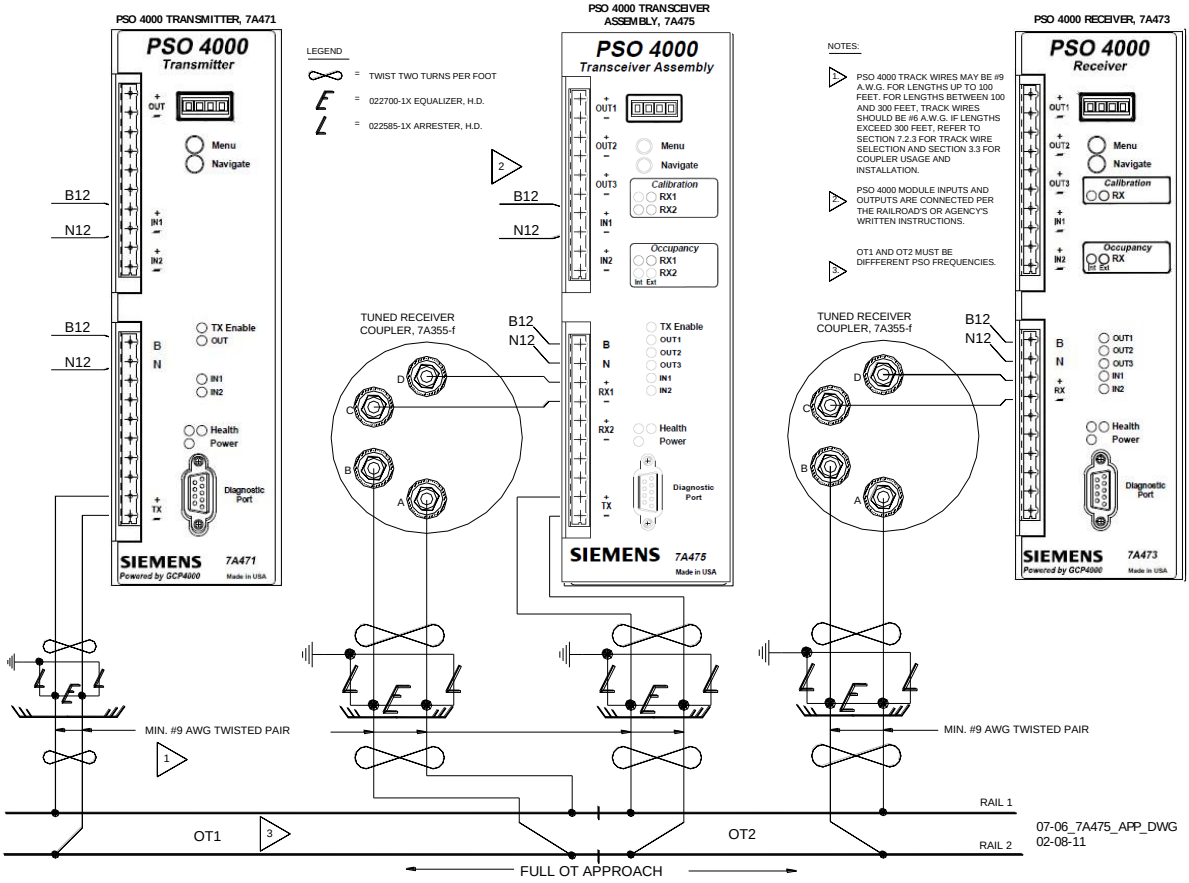

Figure 6-9 Typical Transceiver As Repeater Application

An example of PSO 4000 programming of two track circuits that have a transceiver in between the two track circuits is shown in Figure 6-5. In this example track circuit OT1 has the transceiver receiver frequency set at 645 Hz and code “A” modulation while OT2 has the transceiver transmitter frequency set 1180 Hz with its code modulation is automatically set by the transceiver receiver code selected. In this case also code A. All LOS (Pickup Delay) settings are 1 second.

6.6.3.1 Remote Transmitter Programming for OT1 Track Circuit (Transmitter, P/N 7A471)

To program the OT1 Transmitter, set the following parameters as shown below:

Scroll down the main menu and select SETP. Scroll down and select *Set Default.

- Scroll to TX FRQ, select STND, and after the Display Test is passed, select 645.
- Scroll to TX ADDR, verify A is set.
- Scroll to TX LVL, verify Low is set.
- Scroll to IN1, verify TX ENBL is set.
- Scroll to IN2, verify None is set.
- Scroll to IN1 LOS, select 1 second.
- Scroll to IN2 LOS, select 1 second.
- Scroll down and select SAVE CHANGES
- Scroll down and select EXIT SETUP

If an input (e.g., IN1) is configured as a Transmit Enable, the unit will only transmit when the input is energized. Use of the Transmit Enable is optional; planners determine whether or not the setting is used. In this example, connect the Transmit Enable leads to IN1 on the PSO 4000 Transmitter. Energize the circuit.

Table 6-6 Example 3 OT1 PSO 4000 Transmitter Settings

Parameter	Value Selected
Set Defaults?	Press Menu 2 seconds until DONE appears
Transmit Frequency	Standard, 645Hz
Transmit Address	A
Transmit Level	Low
IN1	TX ENBL
IN2	None
IN1 LOS (Pickup Delay)	1 second
IN2 LOS (Pickup Delay)	1 second
Save Changes?	Press Menu until DONE appears
Exit Setup?	Press Menu until DONE appears

On the face of the Transmitter the TX Enable LED and the OUT LED are lit. The transmitter is ready for service.

6.6.3.2 Transceiver Assembly Programming (Transceiver Assembly, 7A475)

⚠ CAUTION

CAUTION

IT IS RECOMMENDED TO SET LOSS OF SHUNT TO THREE SECONDS FOR ALL RECEIVER/XR OUTPUTS. THIS PROVIDES A 3 SECOND LOSS OF SHUNT TIME.

To program the Transceiver Assembly, set the following parameters as shown below:

- Scroll down the main menu and select SETP. Scroll down and select *Set Default.
- Scroll to TX FRQ, select STND, and after the Display Test is passed, select 1180
- Scroll to TX LVL, verify Low is set.
- Scroll to RX FRQ, select STND, and then select 645.
- Scroll to RX ADDR, verify A is set.
- Scroll to RX LOS, select 3 seconds.

- Scroll to RX THR, verify 100 is set.
- Scroll to OOS ALLOWED, verify DSBL is set.
- Scroll to OUT1, select RXA.
- Scroll to OUT2, select None.
- Scroll to OUT3, select HLTH.
- Scroll to IN1, verify TX ENBL is set.
- Scroll to IN2, verify None is set.
- Scroll to IN1 LOS, select 1 second.
- Scroll to IN2 LOS, select 1 second.
- Scroll down and select SAVE CHANGES
- Scroll down and select RX CAL (Calibrate the Receiver)
- Scroll down and select EXIT SETUP

If an input (e.g., IN1) is configured as a Transmit Enable, the unit will only transmit when the input is energized. Use of the Transmit Enable is optional; planners determine whether or not the setting is used. In this example, connect the Transmit Enable leads to IN1 on the PSO 4000 Transceiver. Energize the circuit.

Table 6-7 Example 3 PSO 4000 Transceiver Assembly Settings

Parameter	Value Selected
Set Defaults?	Press Menu 2 seconds until DONE appears
Transmit Frequency	Standard, 1180Hz
Transmit Level	Low
Receiver Frequency	Standard, 645Hz
Receiver Address	A
Receiver LOS (Pickup Delay)	3 seconds
Receiver Threshold	100
Out of Service Allowed	DSBL
OUT1	RXA
OUT2	None
OUT3	HLTH
IN1	TX ENBL
IN2	None
IN1 LOS (Pickup Delay)	1 second
IN2 LOS (Pickup Delay)	1 second.
Save Changes?	Press Menu until DONE appears
Receiver Calibration	As stated in Section 5.2.6
Exit Setup?	Press Menu until DONE appears

On the face of the Transceiver Assembly, the right Calibration LED is lit. The left Occupancy RX LED is also lit, signifying that track circuit is functional and currently unoccupied. The TX Enable LED is lit. The OUT1 and OUT3 LEDs are also lit, signifying the status of the receiver and the receiver health, respectively.

6.6.3.3 Remote Receiver Programming for OT2 Track Circuit (Receiver, P/N 7A473)

To program the OT2 Receiver, set the following parameters as shown below:

- Scroll down the main menu and select SETP. Scroll down and select *Set Default.
- Scroll to RX FRQ, select STND, and after the Display Test is passed, select 1180.
- Scroll to RX ADDR, verify A is set.
- Scroll to RX LOS, select 3 second.
- Scroll to RX THR, verify 100 is set.
- Scroll to OOS ALLOWED, select DSBL.
- Scroll to OUT1, select RXA.
- Scroll to OUT2, verify None is set.
- Scroll to OUT3, select HLTH.
- Scroll to IN1, verify None is set.
- Scroll to IN2, verify None is set.
- Scroll to IN1 LOS, select 1 second.
- Scroll to IN2 LOS, select 1 second.
- Scroll down and select SAVE CHANGES
- Scroll down and select RX CAL (Calibrate the Receiver)
- Scroll down and select EXIT SETUP

Table 6-8 Example 3 OT2 PSO 4000 Receiver Settings

Parameter	Value Selected
Set Defaults	Press Menu 2 seconds until DONE appears
Receiver Frequency	Standard, 1180Hz
Receiver Address	A
Receiver LOS (Pickup Delay)	3 seconds
Receiver Threshold	100
Out Of Service Allowed	DSBL
OUT1	RXA
OUT2	None
OUT3	HLTH
IN1	None
IN2	None
IN1 LOS (Pickup Delay)	1 second
IN2 LOS (Pickup Delay)	1 second.
Save Changes?	Press Menu until DONE appears
Receiver Calibration	As stated in Section 5.2.6
Exit Setup?	Press Menu until DONE appears

On the face of the Receiver, the right Calibration LED is lit. The left Occupancy RX LED is also lit, signifying that track circuit is functional and currently unoccupied. The OUT1 and OUT3 LEDs are also lit, signifying the status of the receiver and the receiver health, respectively.

SECTION 7 INSTALLATION, CALIBRATION, & CHECKOUT PROCEDURES

7.0 INSTALLATION, CALIBRATION, & CHECKOUT PROCEDURES

7.1 GENERAL REQUIREMENTS

It is recommended that the following wiring and installation requirements be read before the starting installation. Follow approved railroad wiring instructions and procedures for the installation. Once the installation is complete, verify that the software loaded on the module is that approved by the railroad, and program each PSO 4000 unit per approved railroad written instructions prior to calibration.

⚠ WARNING

WARNING

RAILROADS OR AGENCIES ARE RESPONSIBLE FOR ENSURING ONLY PROPERLY TRAINED AND AUTHORIZED PERSONNEL HAVE ACCESS TO THE PSO 4000.

7.2 WIRING REQUIREMENTS

7.2.1 Battery Wiring

Battery wiring to the PSO 4000 equipment should be #16 AWG stranded minimum and twisted in pair. The wires are connected to at the shelter battery surge suppression panel. For proper battery surge protection, the battery surge suppression panel should be wired as shown in Figure 9-2.

7.2.2 Case Wiring

Case wiring to the PSO 4000 equipment should be #16 AWG stranded. See Section 9 for further information.

⚠ WARNING

WARNING

FAILURE TO FOLLOW THE RAILROAD'S OR AGENCY'S APPROVED WIRING OR INSTALLATION GUIDELINES REGARDING VITAL RELAY INPUTS AND VITAL RELAY OUTPUTS MAY LEAD TO POSSIBLE UNSAFE OPERATION OF THE SYSTEM.

7.2.3 Track Wiring

Equipment connections to the rails should be as short as is practical (preferably less than a 100 ft. {30.5 m} pair) and should be #9 AWG or #6 AWG. For lengths of 100 – 300 ft. (30.5 – 91.4 m), use #6 AWG. If the lengths exceed 300 ft. (91.4 m), Receiver Rail to Line Coupler, 7A377-1-f, Receiver Rail to Line Coupler, 7A377-2-f, or Transmitter Rail to Line Coupler, 7A399-f, should be used. The 7A377-1-f, 7A377-2-f, or 7A399-f couplers must be emplaced in a weatherproof shelter that is positioned as close as possible to the track, but no more than 100 ft. (30.5 m) from the track. Track wires should be plug connected or welded to the rails.

Typically, the maximum distance between the Line to Receiver Coupler, 7A388 and the Receiver Line-to-Rail Coupler, 7A377-1-f or 7A377-2-f, or the Line to Receiver Coupler, 7A388 and the Transmitter Line-to-Rail Coupler, 7A399-f is 2000 ft. (609.6 m), when using #14 AWG stranded wire. Table 7-1 provides the maximum distance possible between the Couplers for 10 AWG through 14 AWG, inclusive.

Table 7-1 Maximum Distances for Track Wire by AWG Size

Wire Size	Diameter (Inch)	Diameter (Millimeter)	Maximum Distance (Ft./M)
14 AWG	0.0641	1.628	2000/609.6
13 AWG	0.0720	1.828	2500/762.0
12 AWG	0.0808	2.053	3100/944.9
11 AWG	0.0907	2.305	4000/1219.2
10 AWG	0.1019	2.588	5000/1524.0

7.3 PSO 4000 INSTALLATION

Perform the following steps to install the PSO 4000 units:

1. Install and connect all PSO equipment in the wayside signaling location per the railroad’s or agency’s approved wiring or installation diagram.
2. Connect all required leads per the railroad’s or agency’s approved wiring or installation diagram.
3. Prior to beginning programming, verify LED functionality using the *CHECK LED portion of the TEST menu per Section 5.2.7.2. If any LED fails to light following test, replace the unit.
4. Program the unit beginning with the setup (SETP) menu per the railroad’s or agency’s approved written instructions.

7.4 PSO 4000 CALIBRATION

7.4.1 PSO 4000 Receiver, Crossing Assembly, and Transceiver Assembly Receiver Calibration

WARNING

VERIFY THAT THE TRANSMITTER SOFTWARE, FREQUENCY, AND ADDRESS FORMAT ARE AS SPECIFIED BY THE RAILROAD'S OR AGENCY'S APPROVED WIRING OR INSTALLATION DIAGRAM. FAILURE TO DO SO MAY LEAD TO INCORRECT OR UNSAFE OPERATION OF THE TRACK CIRCUIT.

VERIFY THAT THE PSO 4000 RECEIVER, CROSSING ASSEMBLY, AND TRANSCEIVER ASSEMBLY'S SOFTWARE, FREQUENCY, AND ADDRESS FORMATS ARE AS SPECIFIED BY THE RAILROAD'S OR AGENCY'S APPROVED WIRING OR INSTALLATION DIAGRAM. FAILURE TO DO SO MAY LEAD TO INCORRECT OR UNSAFE OPERATION OF THE TRACK CIRCUIT.

IF ANY RECEIVER IS CALIBRATED IN POOR BALLAST CONDITIONS, IT MUST BE RE-CALIBRATED WHEN BALLAST CONDITIONS IMPROVE. DO NOT ATTEMPT TO CALIBRATE WITH CAB SIGNAL TRANSMITTING.

FAILURE TO FOLLOW THE RAILROAD'S OR AGENCY'S APPROVED WIRING OR INSTALLATION GUIDELINES REGARDING RECEIVER SETTINGS AND CALIBRATION MAY LEAD TO POSSIBLE UNSAFE OPERATION OF THE TRACK CIRCUIT.

PRIOR TO TESTING FOR, AND SETTING RECEIVER THRESHOLD (BROKEN RAIL DETECTION), ENSURE THERE ARE NO TRAINS IN THE SUBSTATION BLOCK AND ALL IMPEDANCE BONDS, CROSSBONDS, AND TRACTION RETURN ARE CONNECTED PER DESIGN.

AFTER CALIBRATION, VERIFY THAT THE PSO CIRCUIT DE-ENERGIZES WHEN SHUNTED WITH THE APPROPRIATE CALIBRATION RESISTANCE (0.06, 0.2, 0.3, 0.4 OR 0.5 OHMS). FAILURE TO DO SO MAY LEAD TO INCORRECT OR UNSAFE OPERATION OF THE TRACK CIRCUIT.

FOLLOWING INSTALLATION OR AFTER ANY RECEIVER MENU CHANGES HAVE BEEN MADE, RECALIBRATE THE RECEIVER AND TEST FOR PROPER OPERATION PER THE REQUIREMENTS SPECIFIED IN Table 7-3 AND Table 7-4.

7.4.1.1 Receiver and Transceiver Calibration

With the PSO 4000 Receiver, 7A473 or PSO 4000 Transceiver Assembly, 7A475 properly installed and programmed per railroad instructions, calibrate the receiver (RX) as follows:

1. When the track ballast is good, connect a track test shunt (hardwire, 0.06-ohm, 0.2-ohm, or as required) across the track at the receiver track connections. When the ballast is poor, connect the shunt across the track at a point 30 ft. (9.14 m) beyond the receiver track connections. Verify solid connections of the shunt to each rail.

NOTE

NOTE

Shunt position can be moved according to application and desired drop out point for circuit. For example, with crossovers, shunt the farthest crossover point from the receiver.

2. Scroll down the Main Menu until CAL appears on the display. Then:
3. Press the MENU button for two (2) seconds until RX CAL appears.
4. Hold the MENU button down until the release (REL) message appears. Release the MENU button immediately once the release (REL) message appears.
5. As soon as the MENU button is released, the armed (ARMD) message appears. Immediately press and release the MENU button as soon as the ARMD message appears. This starts the calibration process. If the MENU button is not pressed within two (2) seconds, the calibration process cancels and the calibration process must be restarted.
6. *RX CAL flashes during the calibration process.
7. PASS or FAIL appears for two (2) seconds when calibration is complete. When PASS appears, continue to Step 8. If FAIL appears, the CALIBRATION REQUIRED LED remains lit.

⚠ WARNING

WARNING

IF “FAIL” APPEARS ON THE DISPLAY, THE CALIBRATION REQUIRED LED (LEFT COLUMN) REMAINS LIT, OR THE CALIBRATED LED (RIGHT COLUMN) DOES NOT LIGHT, THE CALIBRATION PROCESS DID NOT COMPLETE.

SHOULD THIS HAPPEN, CYCLE THE UNIT POWER AND THEN REPEAT STEP 2 to 7 ABOVE. IF “FAIL” APPEARS AGAIN, FURTHER TROUBLESHOOTING IS REQUIRED.

8. Remove the test shunt. The RX Occupancy LED should light. If the RX Occupancy LED fails to light, the calibration process has failed (refer to the WARNING above). Inspect all equipment and connections and repeat steps 1 to 7. If the calibration fails again, further troubleshooting is required.
9. If broken Rail Detection is required by this application proceed to Step 10.
   Otherwise go to *Section 7.5.1**Receiver and Transceiver Checkout Procedures***.
10. Scroll down the main menu until INFO appears on the display.
11. Press and release the Menu button. “RX SIG LVL=” appears on the display.
12. Simulate a broken rail by removing one side of the TX circuit from the rail.
13. Record the displayed value.

14. Reconnect the TX circuit wire that was just removed.
15. After the PSO 4000 circuit recovers, remove the TX circuit from the other rail.
16. Record the RX SIG LVL value displayed.
17. Reconnect the TX circuit that was just removed.
18. Using the Menu and Navigate buttons return to the Main Menu and scroll until SETP is reached.
19. Press and release the Menu button to enter the SETP sub menu. Scroll down until "<RX THR=" is displayed.
20. Enter a value that is 10% higher than the highest value in Step 13 or Step 16.
21. Conduct a broken rail simulation for both rails (steps 12 through 20). Ensure that the receiver registers occupied (Signal Level Drops below that used in Step 20).
22. If it does not, adjust the THR level to reflect the simulated broken rail value.
23. Record the final THR value on the Program Sheet and proceed to *Section 7.5.1Receiver and Transceiver Checkout Procedures*.

⚠ WARNING

WARNING

ENTERING AN INCORRECT THRESHOLD VALUE IN STEP 20 OR FAILURE TO COMPLETE VERIFICATION IN STEPS 21 AND 22 CAN RESULT IN FAILURE TO DETECT BROKEN RAIL.

7.4.1.2 Crossing Assembly Approach Calibration

With the PSO 4000 Crossing Assembly, 7A474 properly installed and programmed per railroad instructions, calibrate the approaches (RX1 or RX2) as follows:

1. When the track ballast is good, connect a test shunt (hardwire, 0.06-ohm, 0.2-ohm, or as required) across the track at the receiver track connections of the approach. When the ballast is poor, connect the shunt across the track at a point 30 ft. (9.14 m) beyond the receiver track connections of the approach. Verify solid connections of the shunt to each rail.

NOTE

NOTE

At grade crossings with insulated joints, an alternative shunt placement can be considered to assist in setting the directional stick circuit. Typically, this has been up to 4 ties inside of the island circuit.

2. Scroll down the Main Menu until CAL appears on the display. Then:
3. Press the MENU button for two (2) seconds until RX1 (RX2) CAL appears.
4. Hold the MENU button down until the release (REL) message appears. Release the MENU button immediately once the release (REL) message appears.
5. As soon as the MENU button is released, the armed (ARMD) message appears. Immediately press and release the MENU button as soon as the ARMD message appears. This starts the calibration process. If the MENU button is not pressed within two (2) seconds, the calibration process cancels and the calibration process must be restarted.
6. *RX1 (*RX2) CAL flashes during the calibration process.

7. PASS or FAIL appears for two (2) seconds when calibration is complete. When PASS appears, continue to Step 3. If FAIL appears, the CALIBRATION REQUIRED LED remains lit.

⚠ WARNING

WARNING

IF "FAIL" APPEARS ON THE DISPLAY, THE CALIBRATION REQUIRED LED (LEFT COLUMN) REMAINS LIT, OR THE CALIBRATED LED (RIGHT COLUMN) DOES NOT LIGHT, THE CALIBRATION PROCESS DID NOT COMPLETE.

SHOULD THIS HAPPEN, CYCLE THE UNIT POWER AND THEN REPEAT STEP 2 ABOVE. IF "FAIL" APPEARS AGAIN, FURTHER TROUBLESHOOTING IS REQUIRED.

8. Remove the test shunt. The RX1 (RX2) Occupancy LED should light. If the RX1 (RX2) Occupancy LED fails to light, the calibration process has failed (refer to the WARNING above). Inspect all equipment and connections and repeat steps 1 & 2. If the calibration fails again, further troubleshooting is required.
9. If broken Rail Detection is required by this application proceed to Step 10. Otherwise go to Section 7.5.1.
10. Scroll down the main menu until INFO appears on the display.
11. Press and release the Menu button. "RX SIG LVL=" appears on the display.
12. Simulate a broken rail by removing one side of the TX circuit from the rail.
13. Record the displayed value.
14. Reconnect the TX circuit wire that was just removed.
15. After the PSO 4000 circuit recovers, remove the TX circuit from the other rail.
16. Record the RX SIG LVL value displayed.
17. Reconnect the TX circuit that was just removed.
18. Using the Menu and Navigate buttons return to the Main Menu and Scroll until SETP is reached.
19. Press and release the Menu button to enter the SETP Sub menu. Scroll down until "<RX THR=" is displayed.
20. Enter a value that is 10% higher than the highest value in Step 13 or Step 16.
21. Conduct a broken rail simulation for both rails (steps 12 through 20). Ensure that the receiver registers occupied (Signal Level Drops below that used in Step 20).
22. If it does not, adjust the THR level to reflect the simulated broken rail value.
23. Record the final THR value on the Program Sheet and proceed to Section 7.5.1 Receiver and Transceiver Checkout Procedures.

⚠ WARNING

WARNING

ENTERING AN INCORRECT THRESHOLD VALUE IN STEP 20 OR FAILURE TO COMPLETE VERIFICATION IN STEPS 21 AND 22 CAN RESULT IN FAILURE TO DETECT BROKEN RAIL.

7.4.1.3 Crossing Assembly Island Calibration

Table 7-2 Hardwire Shunt Placement Distances for Various Shunting Sensitivities & Island Frequencies

Island Frequency (kHz)	0.12 Ω Sensitivity Shunt Distance (Feet/meters)	0.3 Ω Sensitivity Shunt Distance (Feet/meters)	0.4 Ω Sensitivity Shunt Distance (Feet/meters)	0.5 Ω Sensitivity Shunt Distance (Feet/meters)
2.14	20/6.10	50/15.24	67/20.42	84/25.60
2.3	19/5.79	47/14.32	63/19.02	79/24.07
2.63	17/5.18	43/13.11	58/17.68	72/21.95
2.8	16/4.87	40/12.19	53/16.15	66/20.11
3.1	15/4.57	37/11.27	49/14.93	61/18.59
3.24	13/3.96	33/10.06	44/13.41	55/16.76
3.5	11/3.35	27.5/8.38	37/11.28	46/14.02
4.0	10.5/3.20	27/8.23	36/10.97	45/13.72
4.9	9/2.74	23/7.01	31/9.45	39/11.89
5.4	8/2.44	20/6.10	27/8.23	34/10.36
5.9	7.5/2.29	19/5.80	26/7.92	32/9.75
6.4	7/2.13	18/5.49	24/7.31	30/9.14
7.1	6.5/1.98	17/5.18	23/7.01	29/8.84
7.7	6.5/1.98	16/4.88	21/6.40	26/7.92
8.3	6/1.83	15/4.57	20/6.10	25/7.62
8.9	6/1.83	15/4.57	20/6.10	25/7.62
9.5	5.5/1.68	14/4.27	19/5.79	24/7.31
10.0	5/1.52	13/3.96	18/5.49	23/7.01
10.2	5/1.52	13/3.96	18/5.49	23/7.01
11.5	4.5/1.37	12/3.66	16/4.88	20/6.10
13.2	4.0/1.22	10/3.05	14/4.27	17/5.18
15.2	3.5/1.06	9/2.74	12/3.66	15/4.57
17.5	3.0/.91	8/2.44	11/3.35	14/4.27
20.2	3.0/.91	8/2.44	11/3.35	14/4.27

⚠ WARNING

WARNING

AFTER CALIBRATION, VERIFY THE TRACK CIRCUIT DE-ENERGIZES WHEN THE ISLAND CIRCUIT IS SHUNTED WITH THE APPROPRIATE CALIBRATION RESISTANCE ACCORDING WITH RAILROAD PROCEDURES AND APPLICABLE FRA RULES. FAILURE TO DO SO MAY LEAD TO INCORRECT OR UNSAFE OPERATION OF THE TRACK CIRCUIT.

FOLLOWING INSTALLATION OR AFTER ANY RECEIVER MENU CHANGES HAVE BEEN MADE, RECALIBRATE THE RECEIVER AND TEST FOR PROPER OPERATION PER THE REQUIREMENTS SPECIFIED IN Table 7-3 AND Table 7-4.

FOR ALL ISLAND INSTALLATIONS WHERE POOR SHUNTING HAS BEEN EXPERIENCED OR IS ANTICIPATED, PROGRAMMING A 4-SECOND ISLAND PICKUP DELAY AND UTILIZING A 0.3 OHM SHUNTING SENSITIVITY CALIBRATION ARE RECOMMENDED.

NOTE

NOTE

If a proper resistance test shunt is used, place the shunt at the receiver rail connection.

Table 7-2 provides hardwire shunt distance values for shunting sensitivities of 0.12, 0.3, 0.4 and 0.5 ohms for areas where poor island shunting may be a problem.

1. Temporarily connect a hardwire shunt across the track at the appropriate distance beyond the island receiver rail connections as specified in the hardwire shunt distance chart of Table 7-2 (0.12, 0.3, 0.4 and 0.5 ohms).
2. Scroll down the Main Menu until CAL appears on the display. Then:
3. Press the MENU button for two (2) seconds until ISL CAL appears.
4. Hold the MENU button down until the release (REL) message appears. Release the MENU button immediately once the release (REL) message appears.
5. As soon as the MENU button is released, the armed (ARMD) message appears. Immediately press and release the MENU button as soon as the ARMD message appears. This starts the calibration process. If the MENU button is not pressed within two (2) seconds, the calibration process cancels and the calibration process must be restarted.
6. ISL CAL flashes during the calibration process.
7. PASS or FAIL appears for two (2) seconds when calibration is complete. When PASS appears, continue to Step 8. If FAIL appears, see WARNING below.

WARNING

IF "FAIL" APPEARS ON THE DISPLAY, THE CALIBRATION REQUIRED LED (LEFT COLUMN) REMAINS LIT, OR THE CALIBRATED LED (RIGHT COLUMN) DOES NOT LIGHT, THE CALIBRATION PROCESS DID NOT COMPLETE.

SHOULD THIS HAPPEN, CYCLE THE UNIT POWER AND THEN REPEAT STEPS 2 TO 7 ABOVE. IF "FAIL" APPEARS AGAIN, FURTHER TROUBLESHOOTING IS REQUIRED.

8. Remove the hardware island shunt. The Island Occupancy LED should light. If the Island Occupancy LED fails to light, the calibration process has failed (refer to the WARNING above). Inspect all equipment and connections and repeat steps 1 to 7. If the calibration fails again, further troubleshooting is required.
9. Review the face of the PSO 4000 Crossing Assembly. In the Calibration section, the green RX1, RX2, and ISL LEDs are lit, indicating that the circuits have been calibrated. In the Occupancy section the red XR, RX1, RX2 and ISL LEDs are lit, indicating that the circuits are not occupied.
10. Once the Island has been calibrated, proceed to Crossing Assembly Checkout Procedures, Section 7.5.2.

7.5 PSO 4000 CHECKOUT PROCEDURES

7.5.1 Receiver and Transceiver Checkout Procedures

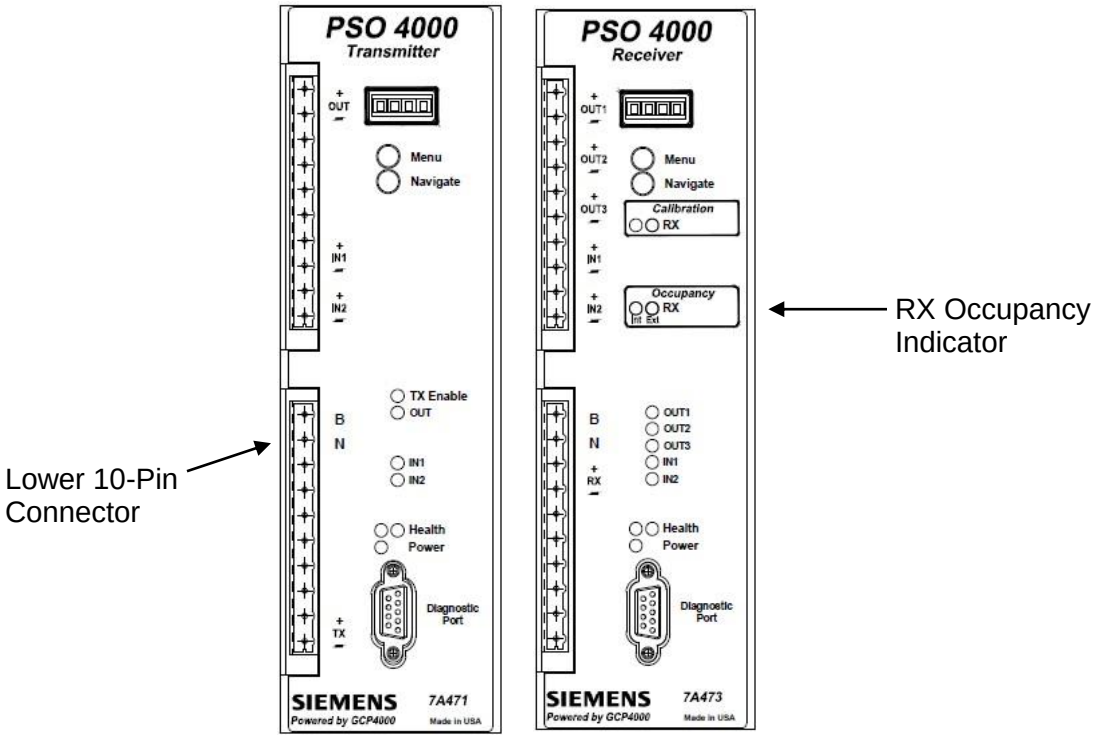

Figure 7-1 a) Transmitter Lower 10-Pin Connector, b) Receiver RX Occupancy Indicator

1. Scroll down the Main Menu of the Receiver until INFO appears on the display.
2. Momentarily press the MENU button and release it. “+RX SIG LVL =” appears on the Display.
3. Take note of the Signal Level. This is the normal receive signal value.
4. In the shelter containing the transmitter, remove the transmitter’s signal to the track by disconnecting a transmitter lead from the shelter’s track surge equipment. If it takes greater than 90 seconds to have the transmitter’s lead removed, repeat Step 2 prior to continuing on to Step 5.
5. On the receiver, take note of the Signal Level. If the Signal Level is greater than 20, an unassociated signal of like frequency may be present.

⚠ WARNING

WARNING

DO NOT PROCEED TO STEP 6. THIS CONDITION MUST BE RESOLVED. DO NOT PROCEED TO STEP 6 AND BEYOND UNTIL THE UNASSOCIATED SIGNAL OF LIKE FREQUENCY IS NO LONGER PRESENT.

6. Verify that the RX LED found in the Occupancy portion of the face of the unit (see Figure 7-1B) is de-energized.
7. Restore the Transmitter signal to the track by reconnecting the lead in the transmitter's shelter track surge equipment.
8. Verify that the RX LED found in the Occupancy portion of the face of the unit energizes. If the LEDs fail to light, troubleshoot the unit, re-calibrate, and perform Steps 1 -7 again.
9. Verify proper operation of the track circuit equipment before placing in service in accordance with railroad or agency procedures and applicable FRA rules.
10. Verify proper PSO 4000 operation by observing train moves, per railroad or agency policy.
11. The system is now ready for operation.

7.5.2 Crossing Assembly Checkout Procedures

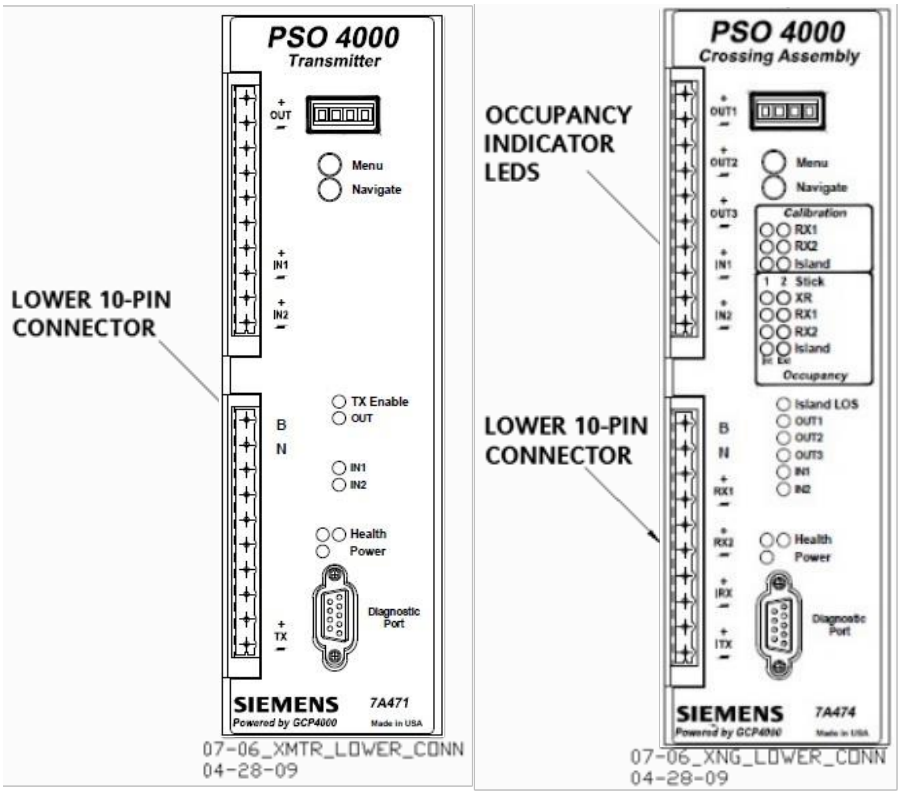

Figure 7-2 a) Transmitter Lower 10-Pin Connector,
b) Crossing Assembly Lower 10-Pin Connector and Occupancy Indicator LEDs

1. Scroll down the Crossing Assembly Main Menu until INFO appears on the display.
2. Scroll down the sub-menu one step until "+RX1 SIG LVL =" appears on the Display.
3. Take note of the Signal Level. This is the normal receive signal value.
4. In the shelter containing the transmitter for the receiver 1 (RX1) track circuit, remove the transmitter's signal to the track by disconnecting a transmitter lead from the shelter's track surge equipment.
5. On the Crossing Assembly, take note of the Signal Level. If the Signal Level is greater than 20, an unassociated signal of like frequency is present.

⚠ WARNING

WARNING

THIS CONDITION MUST BE RESOLVED.

DO NOT PROCEED TO STEP 6 AND BEYOND UNTIL THE UNASSOCIATED SIGNAL OF LIKE FREQUENCY IS NO LONGER PRESENT.

6. Verify that the RX1 and XR indicator LEDs found in the Occupancy portion of the face of the unit de-energize. If the LEDs fail to de-energize, replace the unit.
7. Restore the receiver 1 (RX1) track circuit Transmitter signal to the track by reconnecting the lead in the transmitter's shelter track surge equipment.
8. Verify that the RX1 and XR indicator lights found in the Occupancy portion of the face of the unit energize. If the LEDs fail to energize, replace the unit.
9. Press and release the NAVIGATE button. "+RX2 SIG LVL =" appears on the Display.
10. In the shelter containing the transmitter for the receiver 2 (RX2) track circuit, remove the transmitter's signal to the track by disconnecting a transmitter lead from the shelter's track surge equipment.
11. Repeat Steps 5 – 8 for receiver 2 (RX2), then proceed to Step 12.
12. Momentarily press the MENU button and release it. "+ISL SIG LVL =" appears on the Display.
13. Take note of the Signal Level
14. Remove the Island Transmitter signal to the track by opening one of the wires that runs to the rail connection.
15. Take note of the Signal Level. If the Signal Level is greater than 20, an unassociated signal of like frequency is present.

⚠ WARNING

WARNING

THIS CONDITION MUST BE RESOLVED.

DO NOT PROCEED TO STEP 16 AND BEYOND UNTIL THE UNASSOCIATED SIGNAL OF LIKE FREQUENCY IS NO LONGER PRESENT.

16. Verify that the Island and XR indicator LEDs found in the Occupancy portion of the face of the unit de-energize. If the LEDs fail to de-energize, replace the unit.
17. Once the unassociated signal has been removed, restore the Transmitter signal to the track by reconnecting the wire that runs between Pin 9 of the Lower 10-pin Connector and the surge equalizer at the Surge Panel.
18. Verify that the Island and XR indicator lights found in the Occupancy portion of the face of the unit energize. If the LEDs fail to energize, replace the unit.
19. Verify proper operation of the track circuit equipment before placing in service in accordance with railroad or agency procedures and applicable FRA rules.
20. Verify proper PSO 4000 operation by observing train moves, per railroad or agency policy.
21. The system is now ready for operation.

7.6 RECALIBRATION AND REPROGRAMMING

7.6.1 Recalibration/Reprogramming Requirements due to Programming Changes

The following table indicates the receiver and island recalibration requirements that result from any of the indicated programming changes. For example, if the transmit power is changed from low to high, only the receiver must be recalibrated; the island calibration does not change.

Table 7-3 Recalibration/Reprogramming Requirements due to Programming Changes

Programming Changes Requiring Recalibration	Receiver Calibration Required?	Island Calibration Required?
PSO 4000 Frequency Changed	Yes - including receiver threshold	No
Island Frequency Changed	No	Yes
Transmit Level Changed From: Low to High Or High to Low	Yes - including receiver threshold	No
Approach Length Changed	Yes - including receiver threshold	No
Island Length Changed	No	Yes

WARNING

FAILURE TO RECALIBRATE OR RESET RECEIVER THRESHOLD CAN RESULT IN IMPROPER SYSTEM OPERATION.

7.6.2 Recalibration/Reprogramming Requirements due to Track Equipment Changes

The following table indicates the recalibration required when any changes made to the existing track equipment. For example, when existing Tuned Insulated Joint Coupler, 7A422-f in an installation is replaced or moved to a different location, the receiver must be recalibrated, but not the island.

Table 7-4 Recalibration/Reprogramming Requirements due to Track Equipment Changes

Track Equipment Changes Requiring Recalibration	Receiver Calibration Required?	Island Calibration Required?
Termination Shunts of Other Frequencies Added, Removed From, or Moved Within PSO 4000 Approach(es)	Yes - including receiver threshold	No
Wideband Insulated Joint Coupler (8A076) Replaced in PSO 4000 Approach(es)	Yes - including receiver threshold	No
Tuned Insulated Joint Couplers (7A422-f) Replaced in PSO 4000 Approach(es)	Yes - including receiver threshold	No
PSO 4000 Track Wire(s) Replaced	Yes - including receiver threshold	Yes
Ballast/Ties	Yes - including receiver threshold	Yes
Impedance Bonds/Cross Bonding/Traction Return	Yes - including receiver threshold	Yes

WARNING

FAILURE TO RECALIBRATE OR RESET RECEIVER THRESHOLD CAN RESULT IN IMPROPER SYSTEM OPERATION.

7.7 MODULE REPLACEMENT

If a PSO module is replaced, the following needs to be checked:

a) Check the module is the same type as the one replaced (i.e., Transmitter, Receiver, Transceiver, Crossing package.)
b) Check the software version is the one currently approved by the railroad.
c) Program the new module as per the site plans.
d) Recalibrate the receiver(s) as per section 7.4.
e) Verify the operation of the module as per Section 7.5.

⚠ WARNING

WARNING

FAILURE TO FOLLOW THE ABOVE STEPS CAN RESULT IN IMPROPER SYSTEM OPERATION.

SYSTEM OPERATION MUST BE VERIFIED PRIOR TO PLACING SYSTEM IN SERVICE OR FOLLOWING PROGRAMMING, HARDWARE OR WIRING CHANGES.

This Page Intentionally Left Blank

SECTION 8 DOWNLOADING LOGS & SOFTWARE

8.0 DOWNLOADING LOGS & SOFTWARE

8.1 DOWNLOADING RECORDED DATA TO A COMPUTER FILE

The following procedures enable downloading of data recorder memory contents to a PC/laptop using the Microsoft® Windows® HyperTerminal applications. A number of other widely used software programs are available that can be used to accomplish the same task.

8.1.1 Connecting the PSO 4000 to a HyperTerminal

See Appendix D, Data Transfer, for information on connecting a PSO 4000 unit to a HyperTerminal.

8.1.2 Using the HyperTerminal

The HyperTerminal PSO4000 Main Menu allows users to gather information regarding four areas: Configuration, Status Log, Summary Log, and Monitor. The HyperTerminal application also enables users to transfer data (i.e., to send and receive files and send items to the printer).

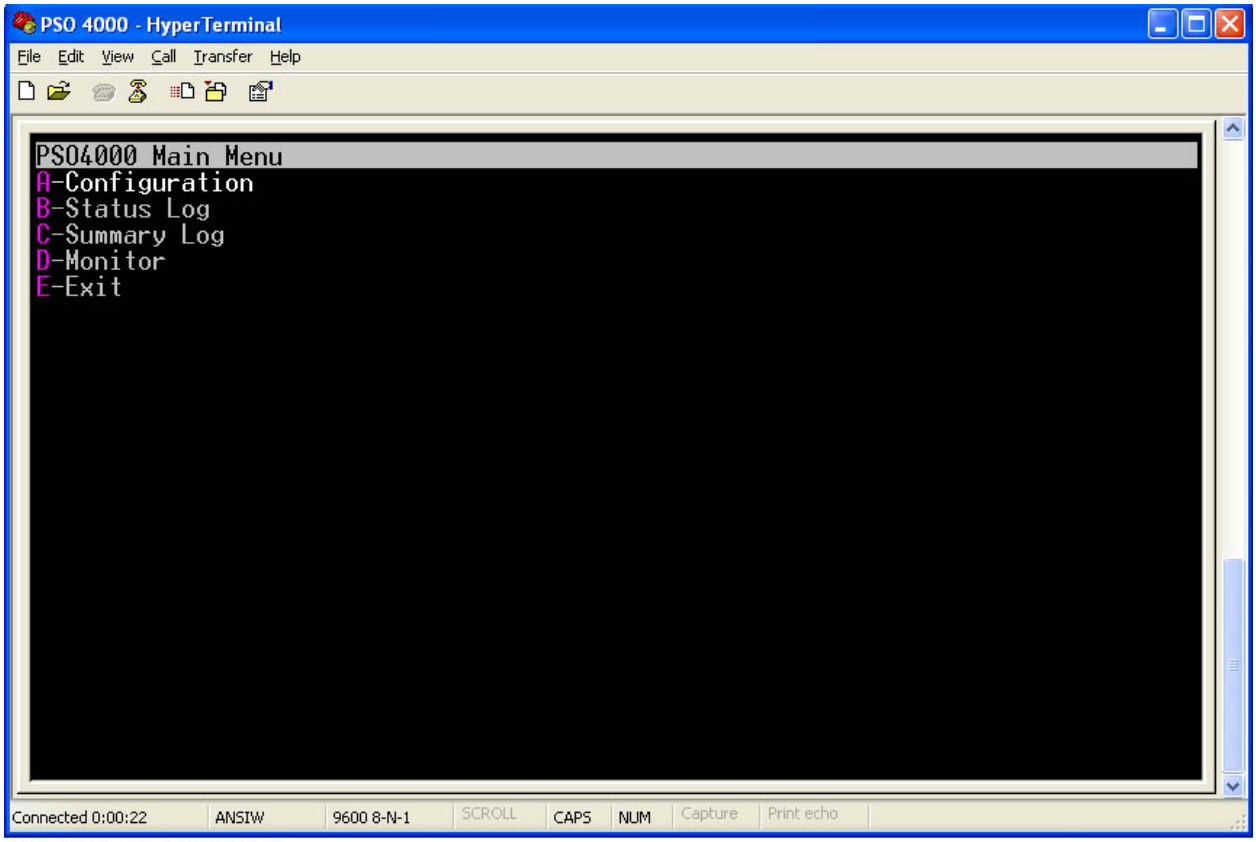

Figure 8-1 PSO 4000 HyperTerminal Main Menu Window

8.1.2.1 Configuration Window

To select the Configuration Window, use the up (↑) or down (↓) arrows to move to line A – Configuration and hit Enter or type the letter the letter “A” and the PSO 4000 Configuration Window opens. The Configuration Window depicts the current configuration of the connected PSO 4000 unit.

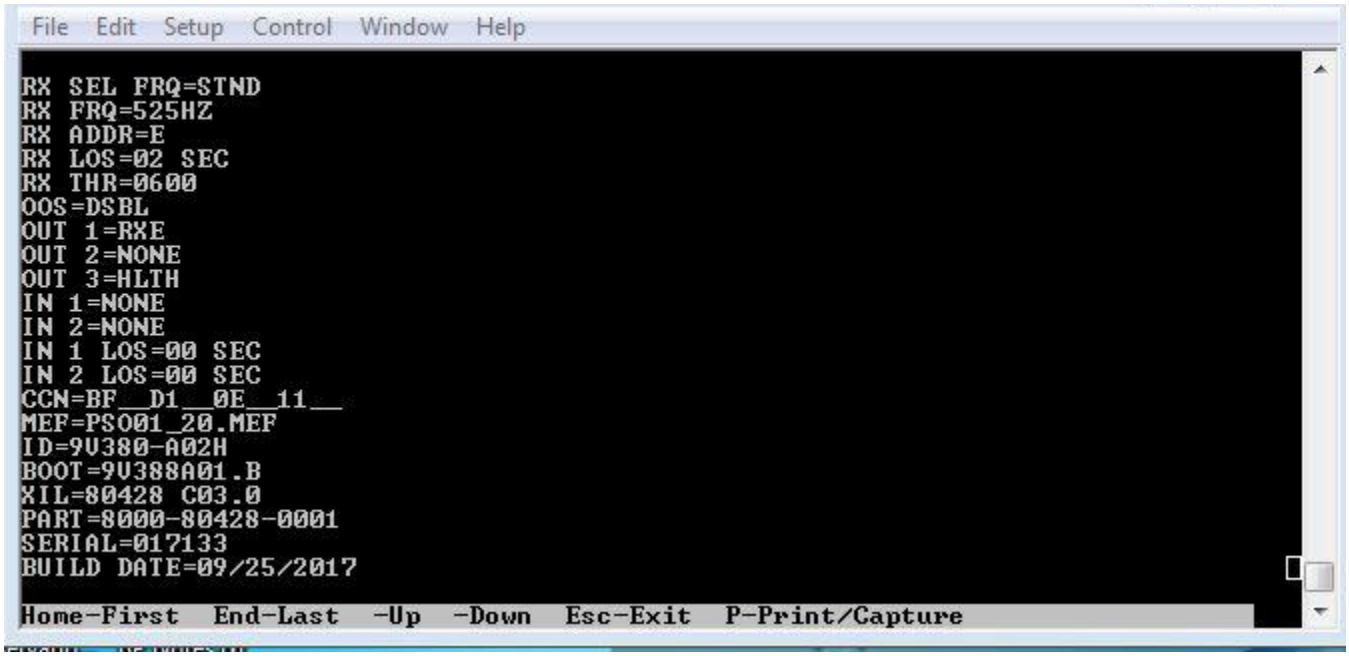

Figure 8-2 PSO 4000 HyperTerminal Configuration Window

To print the data displayed on the Configuration Window, follow the procedure outlined in Section D.1.2.3.

To return to the Main Menu Window, hit the “Esc” key. This will exit the Configuration Window and return users to the Main Menu Window.

8.1.2.2 Status Log Window

To select Status Log Window, use the up or down arrows to move to line B – Status Log and hit Enter or type the letter the letter “B” and the PSO 4000 Status Log Window opens. The Status Log Window depicts the status log, reporting the parameters stored in the Unit log.

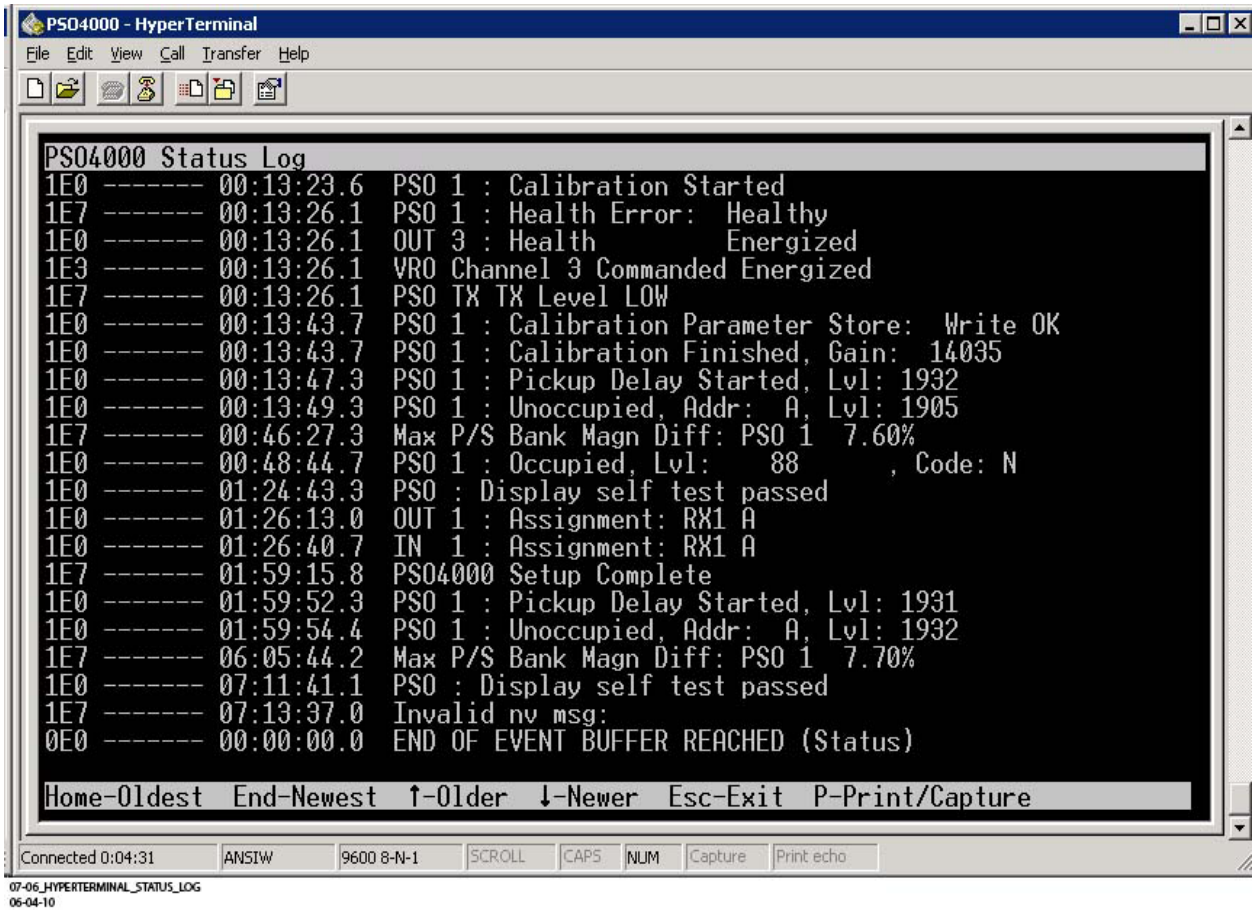

Figure 8-3 PSO 4000 HyperTerminal Status Log Window

Occupancy can be determined either by signal level or by the Address Code received. In Figure 8-3, the initial occupancy is due to Code A being received but is later determined to be Code N (no code received) due the track being shunted.

To print the data displayed on the Log Window, follow the procedure outlined in Section D.1.2.3.

To return to the Main Menu Window, hit the “Esc” key. This will exit the Log Window and return users to the Main Menu Window.

8.1.2.3 Summary Log Window

To select the Summary Log Window, use the up or down arrows to move to line B – Summary Log and hit Enter or type the letter the letter “C” and the PSO 4000 Summary Log Window opens. The Summary Log Window depicts the current event log, reporting the events stored in the Unit log.

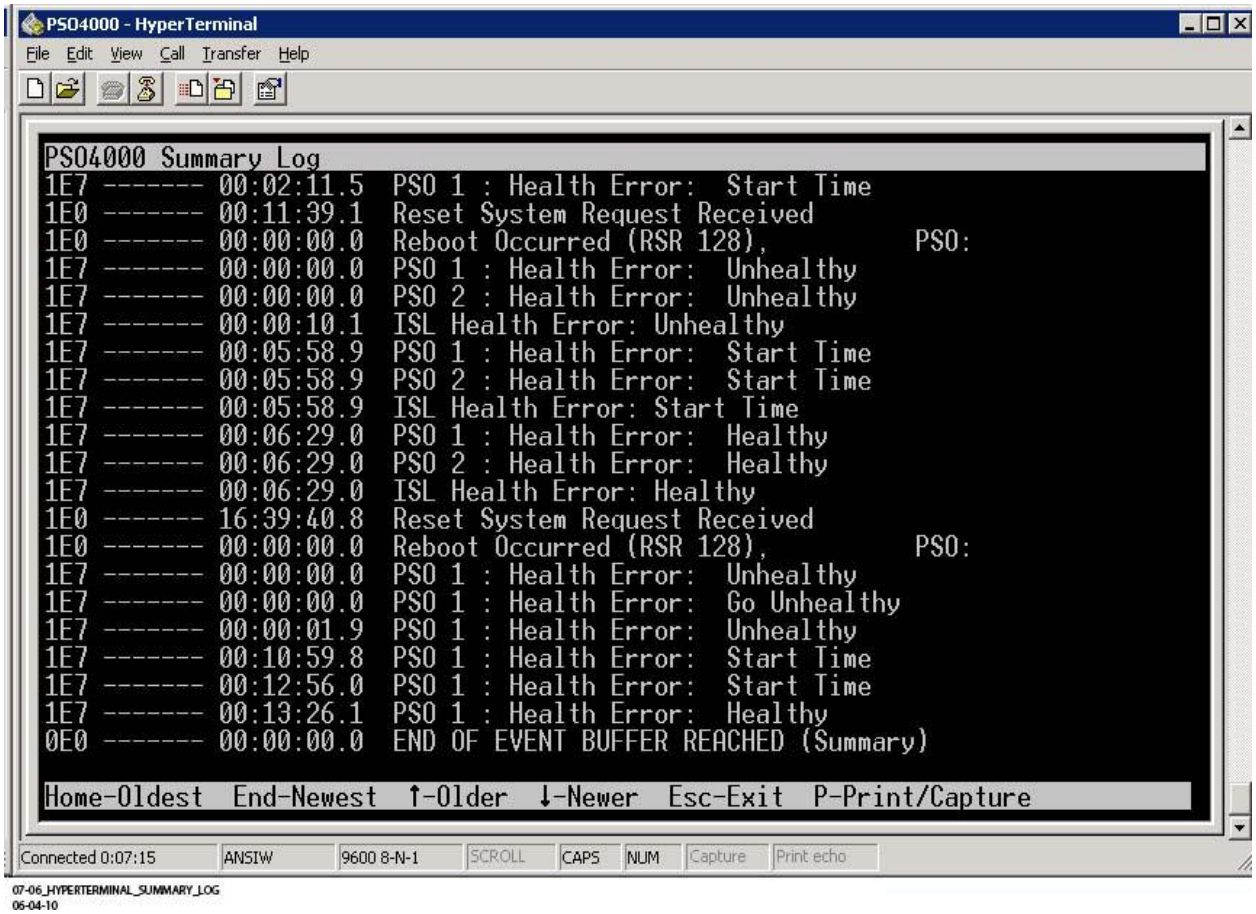

Figure 8-4 PSO 4000 HyperTerminal Summary Log Window

To print the data displayed on the Log Window, follow the procedure outlined in Section D.1.2.3.

To return to the Main Menu Window, hit the “Esc” key. This will exit the Summary Log Window and return users to the Main Menu Window.

8.1.2.4 Monitor Window

NOTE

NOTE

When calibrated, the RX1, RX2, or ISL threshold value is set to 100.

If the RX1 or RX2 Threshold parameter is set above the default of 100, the RX THR value becomes the threshold for the respective circuit.

To select Monitor Window, use the up or down arrows to move to line D – Monitor and hit Enter or type the letter the letter “D” and the PSO 4000 Monitor Window opens. The Monitor Window depicts the current event log, reporting the events stored in the unit log. The Monitor Window provides information in four areas: Signal Level, Inputs, Outputs, and Occupancy.

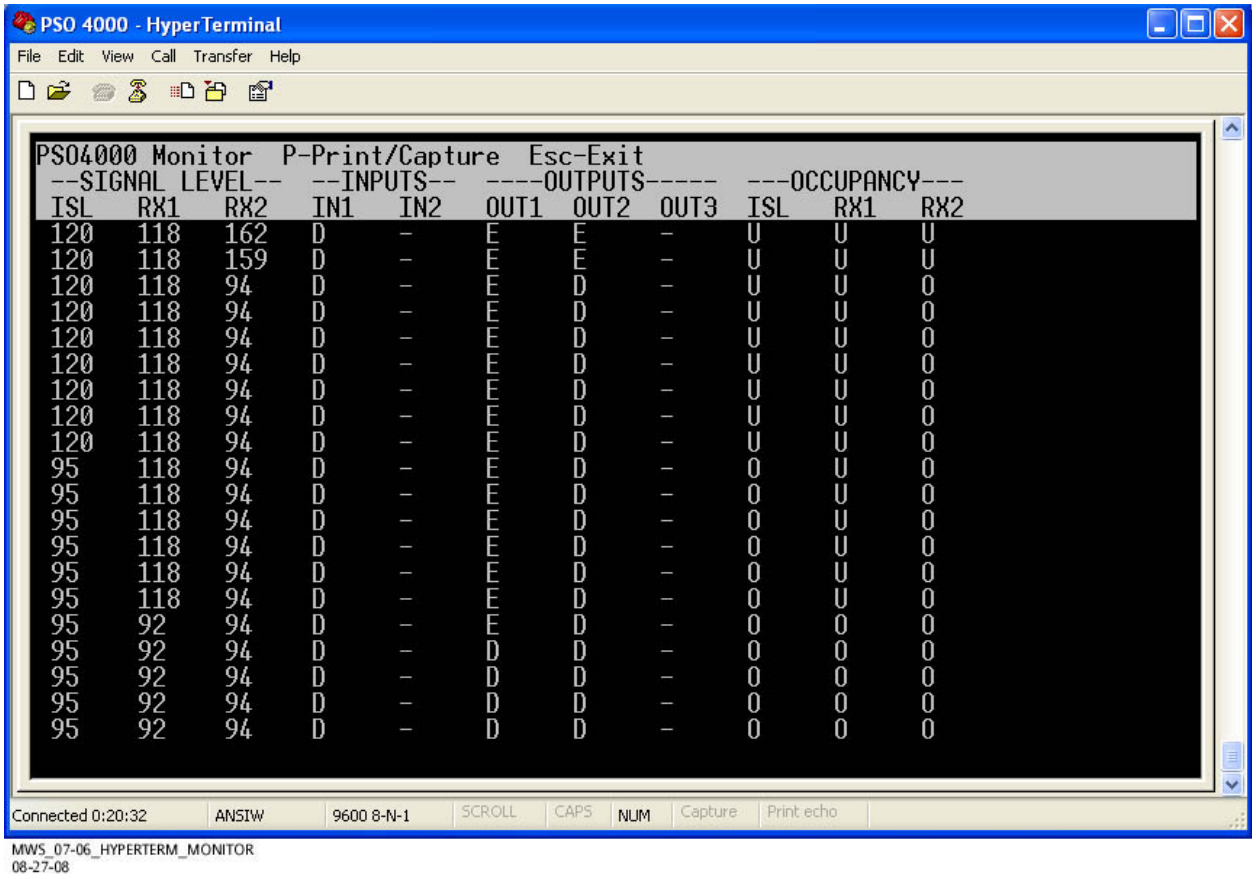

MWS_07-06_HYPERTERM_MONITOR
08-27-08

Figure 8-5 PSO 4000 HyperTerminal Monitor Window

NOTE

NOTE

In any column, “-” means the item is not used.

Signal Level – Provides the signal level received for the Island (ISL), Receiver 1 (RX1) and Receiver 2 (RX2), and for RX1 and RX2: the configurable receiver threshold values. The signal level is matched against the calibration threshold stored in NVRAM, and for RX1 and RX2, it is matched against the configurable receiver threshold values, to determine track occupancy:

- ISL – 0/9999
- RX1 – 0/9999
- RX2 – 0/9999

Inputs – Provides the status of the two VPIs (IN 1 & IN 2) using the following codes:

- D = De-energized
- E = Energized

Outputs – Provides the status of the three VROs (OUT 1, OUT 2, & OUT 3) using the following codes:

- D = De-energized
- E = Energized

Occupancy – Provides the occupancy status of the Island (ISL), Receiver 1 (RX1) and Receiver 2 (RX2) using the following codes:

- O = Occupied
- P = Running Pickup Delay
- U = Unoccupied

To print the data displayed on the Monitor Window, follow the procedure outlined in Section D.1.2.3.

To return to the Main Menu Window, hit the “Esc” key. This will exit the Monitor Window and return users to the Main Menu Window.

8.1.2.5 Exit the PSO 4000 HyperTerminal Window

To close the PSO 4000 HyperTerminal Window, use the up or down arrows to move to line D – Exit and hit Enter or type the letter the letter “D” and the PSO 4000 Monitor Window closes.

The HyperTerminal remains connected to the unit, and the PSO 4000 HyperTerminal Window may be restarted by pressing CTRL > L.

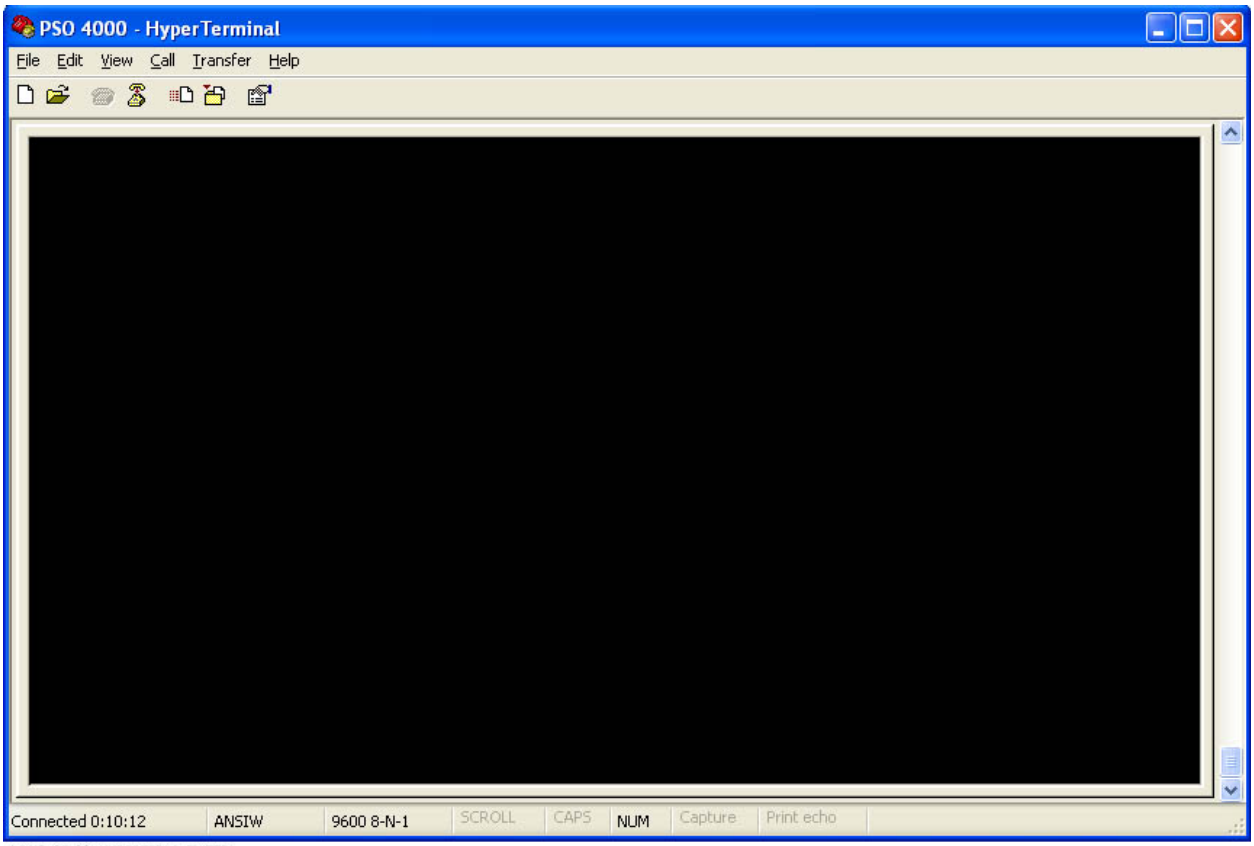

MWS_07-06_HYPERTERM_EXITED
08-27-08

Figure 8-6 PSO 4000 HyperTerminal with Menu Window Closed

This Page Intentionally Left Blank

SECTION 9 **APPLICATION DIAGRAMS**

9.0 APPLICATION DIAGRAMS

This section contains typical PSO 4000 installation diagrams as listed in the following table. Connections are also shown for Auxiliary Equipment.

Table 9-1 PSO 4000 Application Drawings

DRAWING	TITLE
Figure 9-1	Surge and Fused Track Wire Protection in Electrified Track
Figure 9-2	Primary Battery Surge Protection
Figure 9-3	PSO 4000 Transmitter (7A471), Receiver (7A473), Crossing Assembly (7A474), & Transceiver Assembly (7A475)
Figure 9-4	Typical PSO 4000 NWP Application
Figure 9-5	Typical PSO 4000 Crossing Installation Application
Figure 9-6	Typical PSO 4000 Transceiver as Repeater Application
Figure 9-7	Basic Transceiver as Electric Lock Application
Figure 9-8	PSO Application using Tuned Receiver Coupler, Hi Z, 7A366-f
Figure 9-9	PSO 4000 Application using Line to Receiver Coupler, 7A388 and Receiver Line to Rail Coupler, 7A377-1-f
Figure 9-10	PSO 4000 Application using Line to Receiver Coupler, 7A388 and Receiver Line to Rail Coupler, 7A377-2-f
Figure 9-11	PSO 4000 Application using Transmitter Line to Rail Coupler, 7A399-f, Line to Receiver Coupler, 7A388
Figure 9-12	PSO 4000 Application using Transmitter Line to Rail Coupler, 7A399-f with Line to Receiver Coupler, 7A388 and Line to Receiver Coupler, 7A388 with Receiver Line to Rail Coupler, 7A377-2-f
Figure 9-13	Typical PSO 4000 Line Overlay Application using PSO Line Coupler, Low Z, 7A403 with PSO Line Terminator, 7A345

⚠ WARNING

WARNING

IN ELECTRIFIED TERRITORY, ENSURE THAT THE NORMAL EQUALIZER PLACED ACROSS THE PSO TRACK LEADS IN THE TRACK SURGE PANEL IS REPLACED BY A THIRD ARRESTOR PER RAILROAD OR AGENCY SPECIFICATION AS SHOWN IN Figure 9-1.

ENSURE THAT THE PSO TRACK LEADS HAVE FUSES INSTALLED PER RAILROAD OR AGENCY SPECIFICATION AS SHOWN IN Figure 9-1.

NOTE

In the following application drawings, all wiring is #16 AWG stranded wire unless otherwise noted.

The Receiver Line to Rail Couplers, 7A377-1-f or 7A377-2-f and the Transmitter Line to Rail Coupler 7A399-f must be mounted in a weatherproof housing as near to the track as possible, but no further than 100 feet from the track.

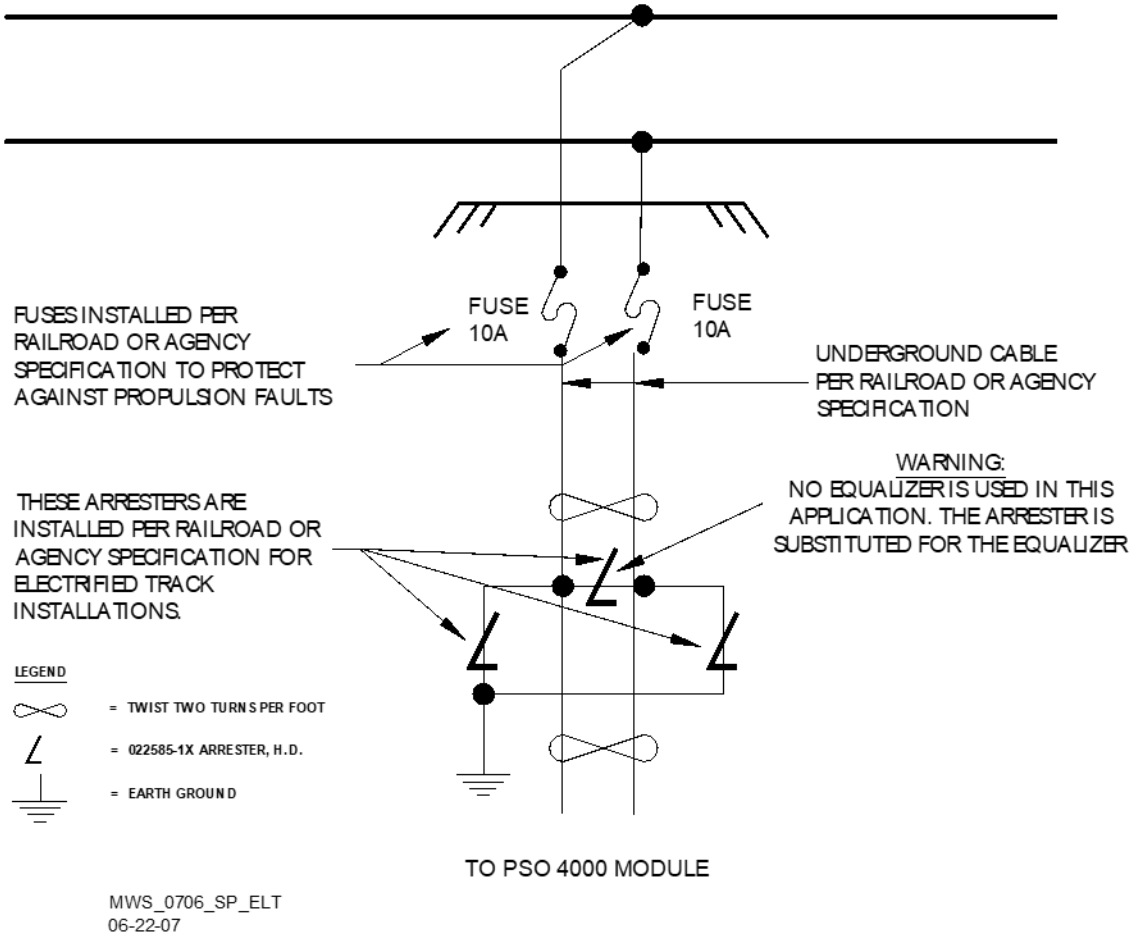

Figure 9-1 Surge and Fused Track Wire Protection in Electrified Track

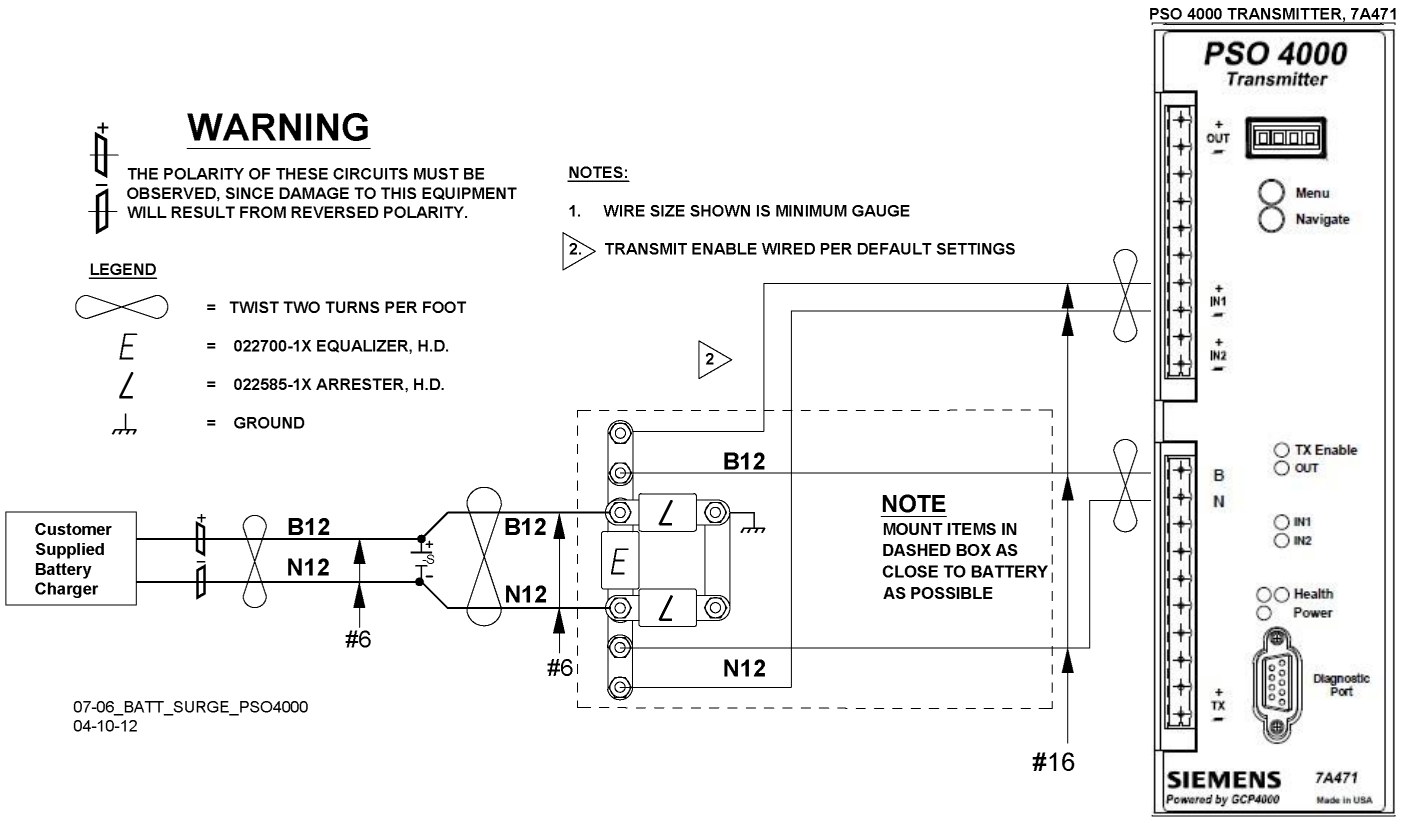

Figure 9-2 Primary Battery Surge Protection

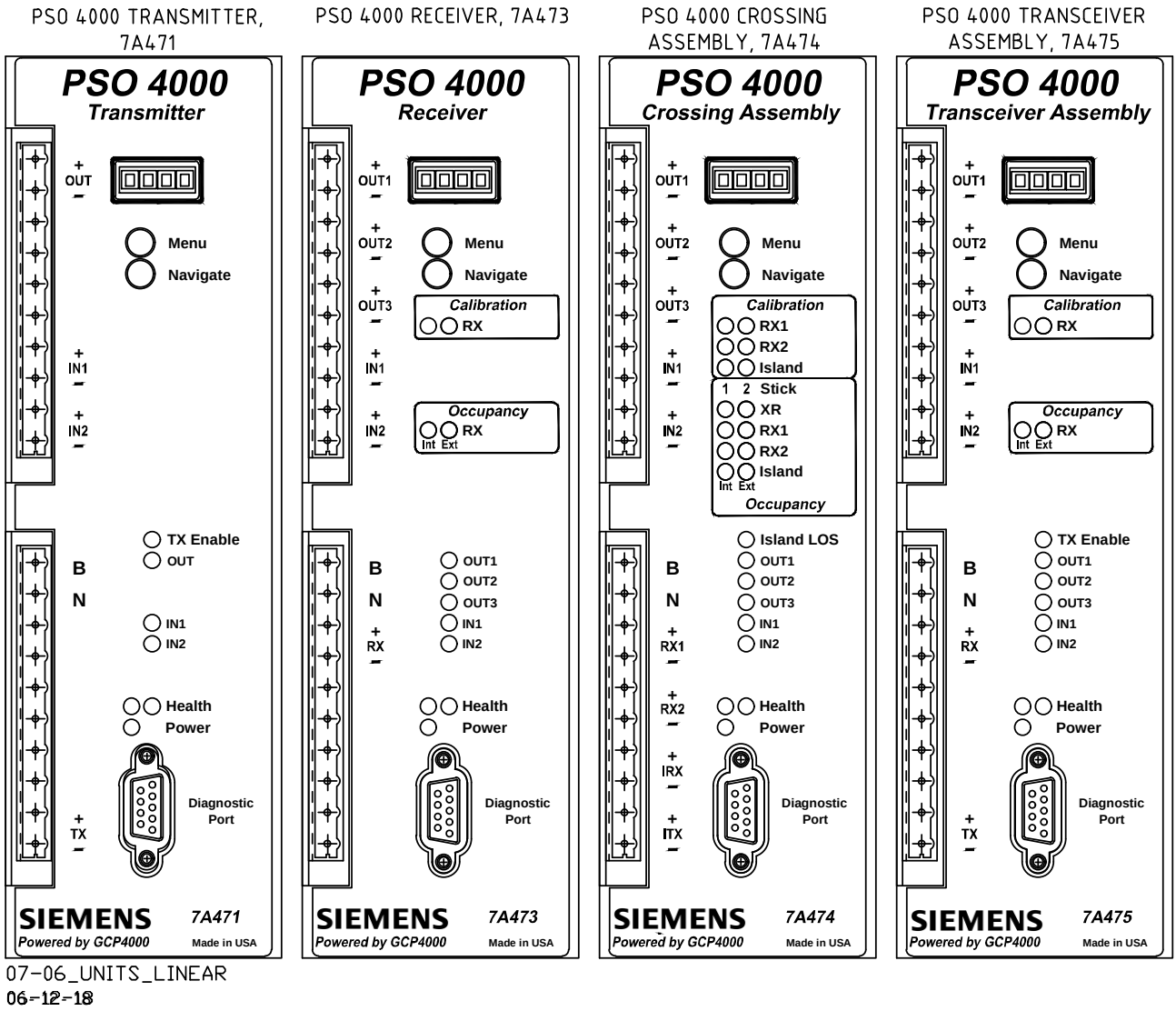

Figure 9-3 PSO 4000 Transmitter (7A471), Receiver (7A473), Crossing Assembly (7A474), & Transceiver Assembly (7A475)

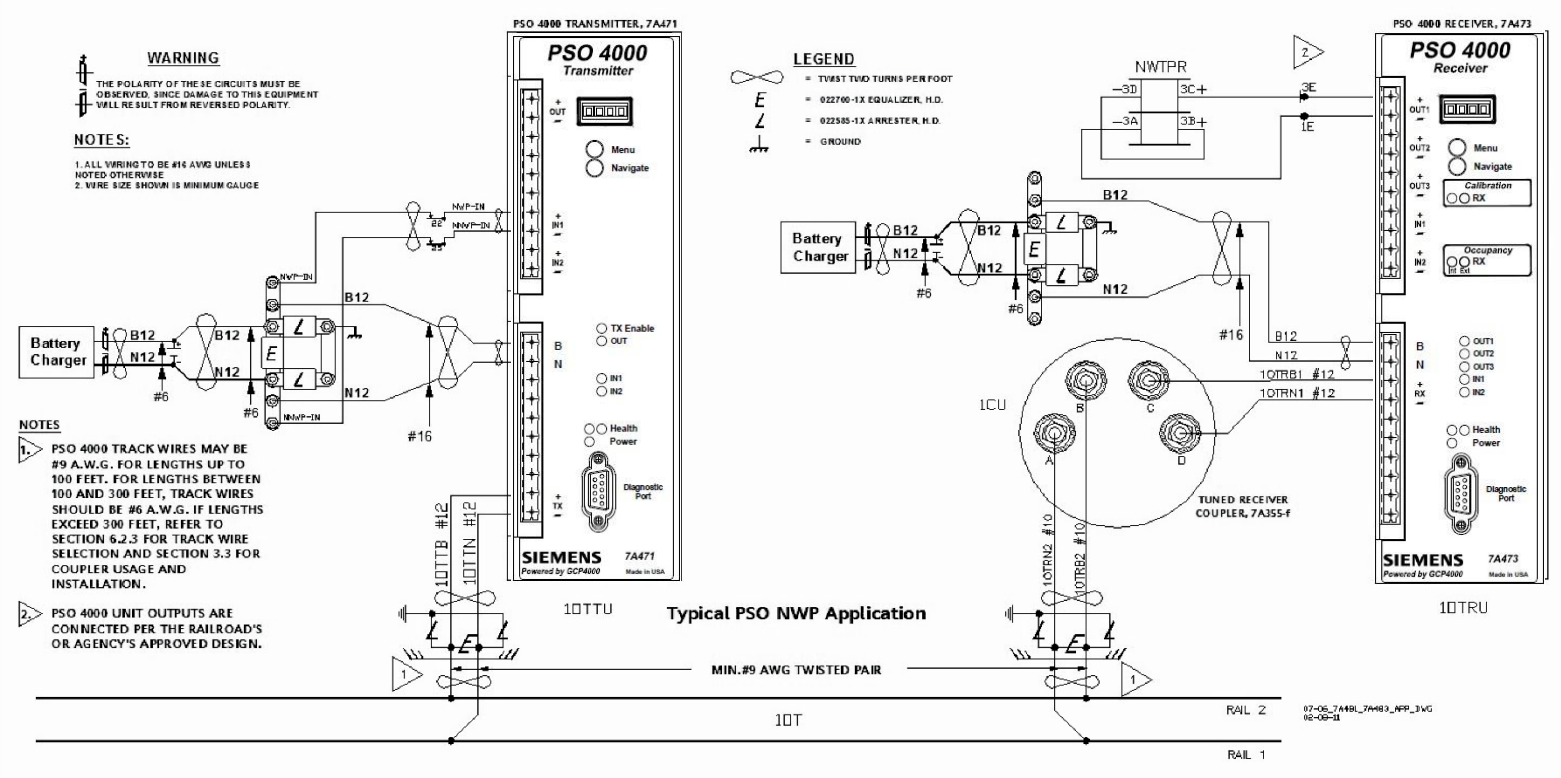

Figure 9-4 Typical PSO 4000 NWP Application

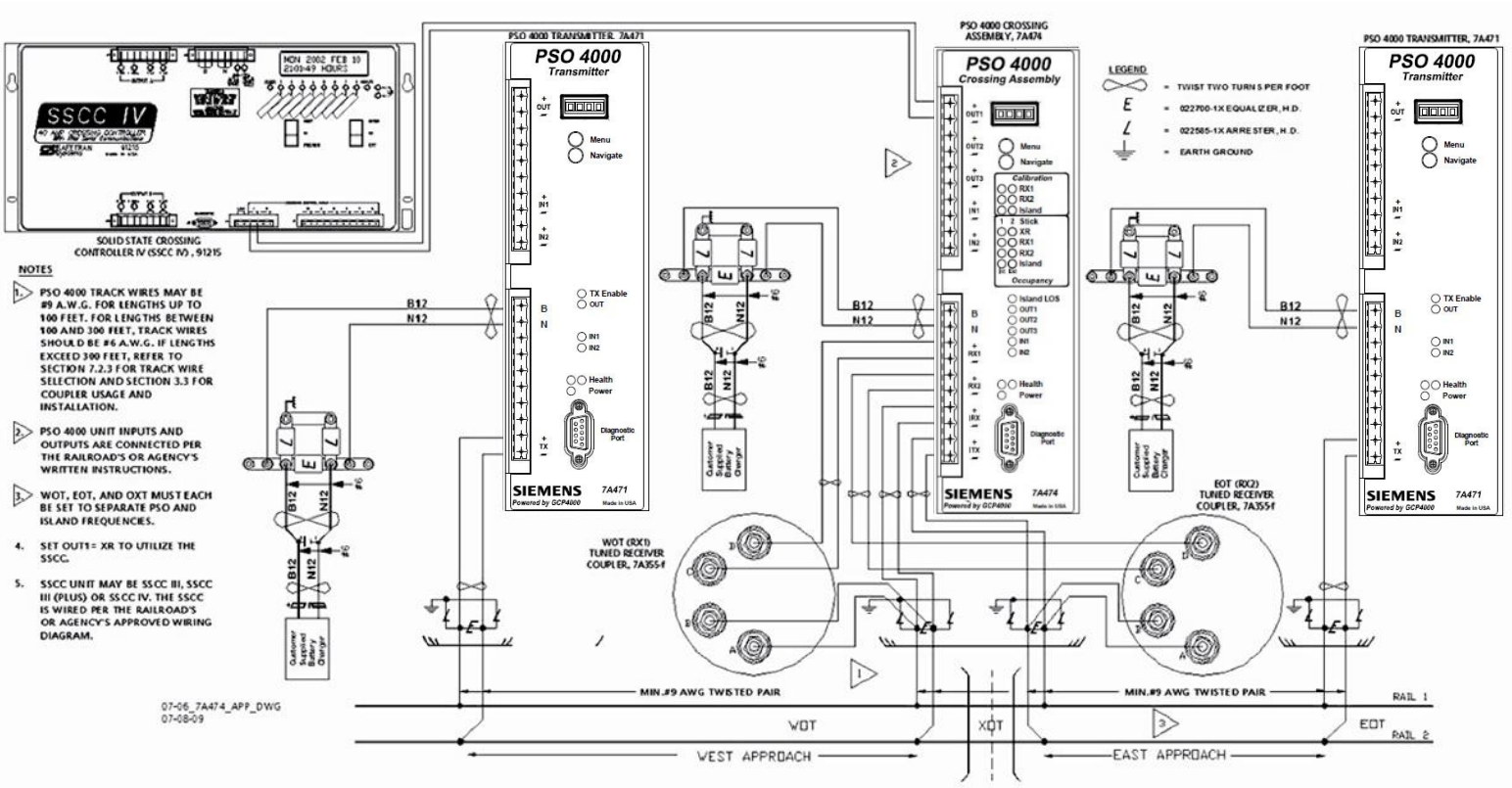

Figure 9-5 Typical PSO 4000 Crossing Installation Application

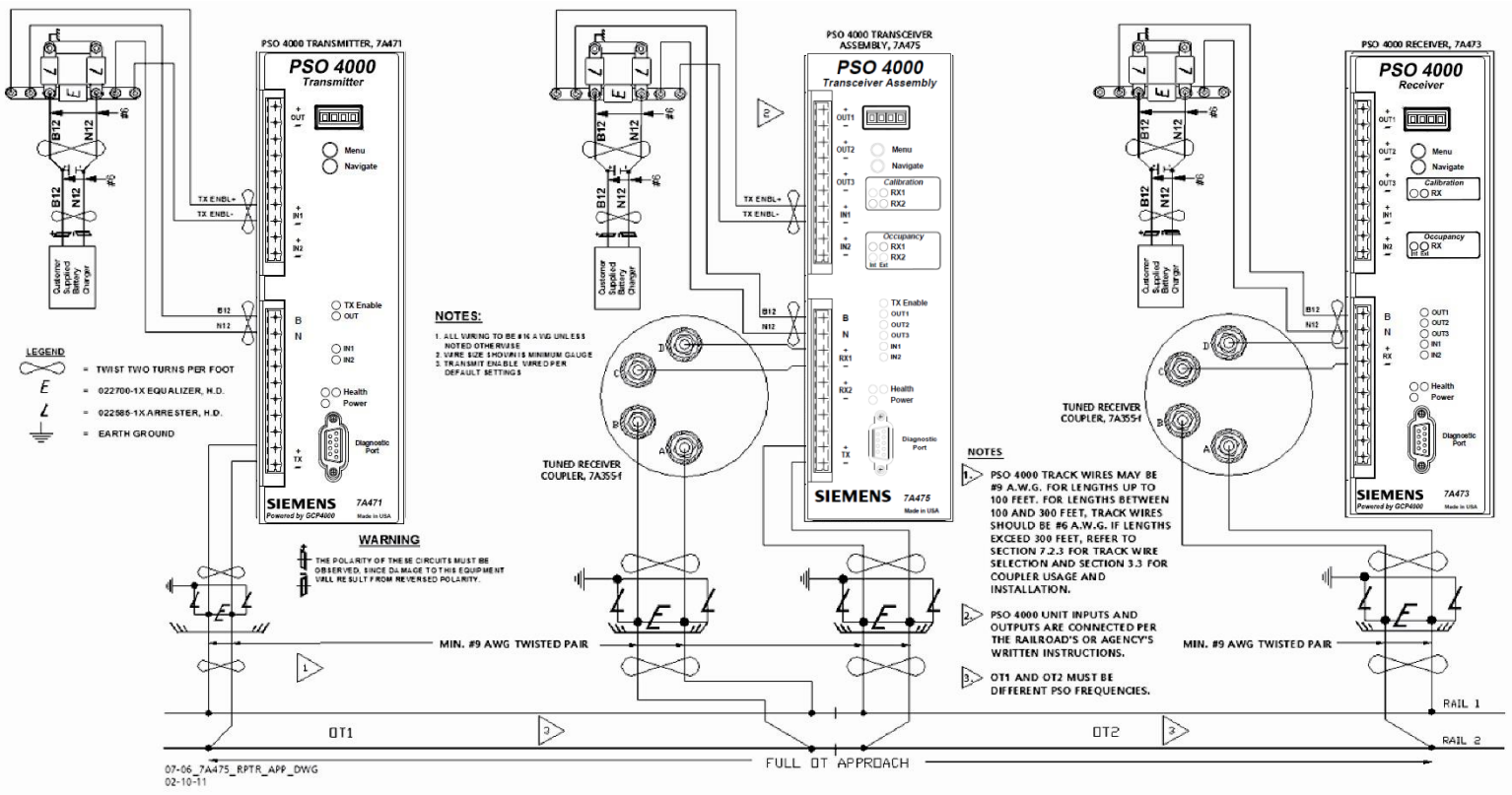

Figure 9-6 Typical PSO 4000 Transceiver as Repeater Application

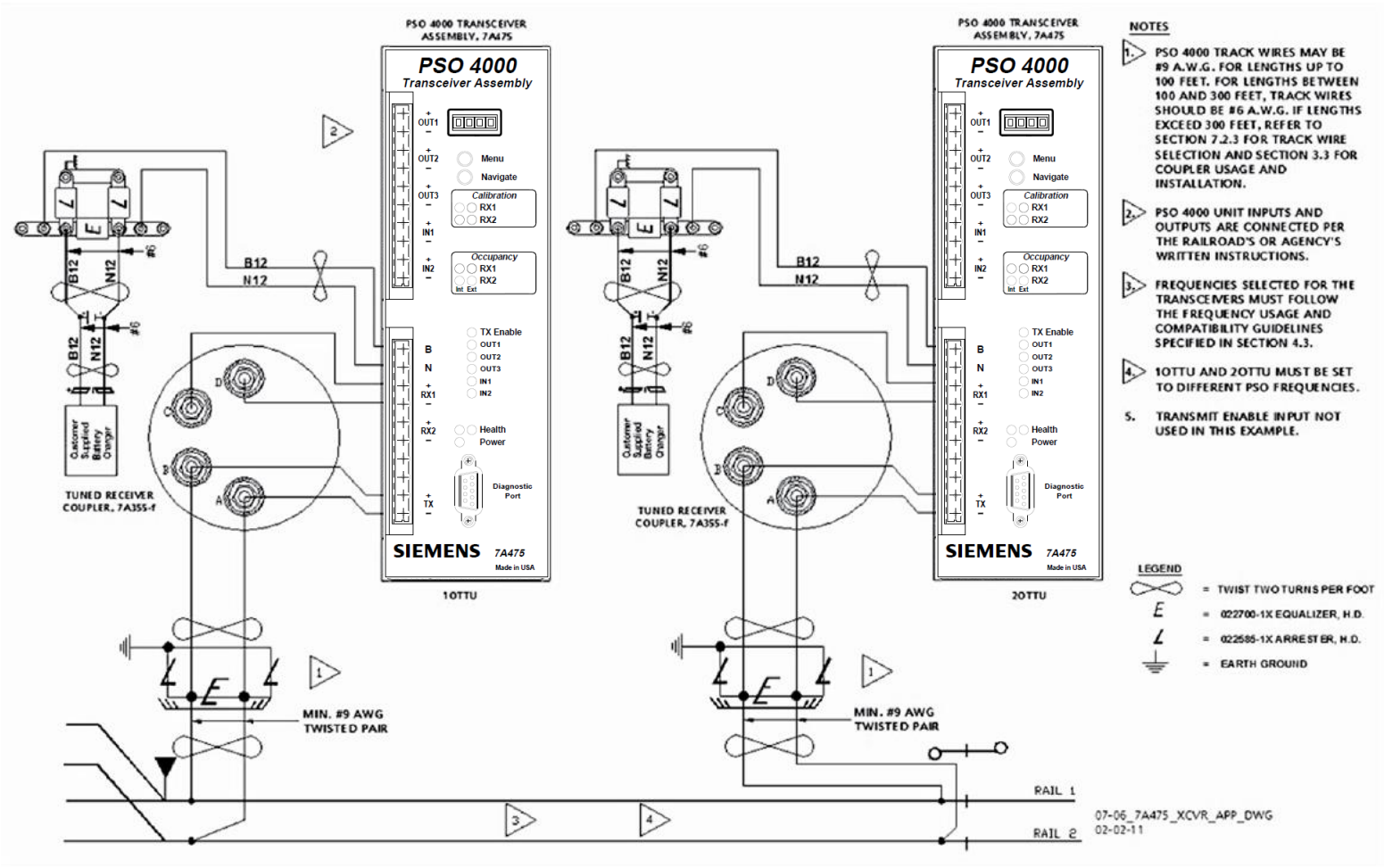

Figure 9-7 Basic Transceiver as Electric Lock Application

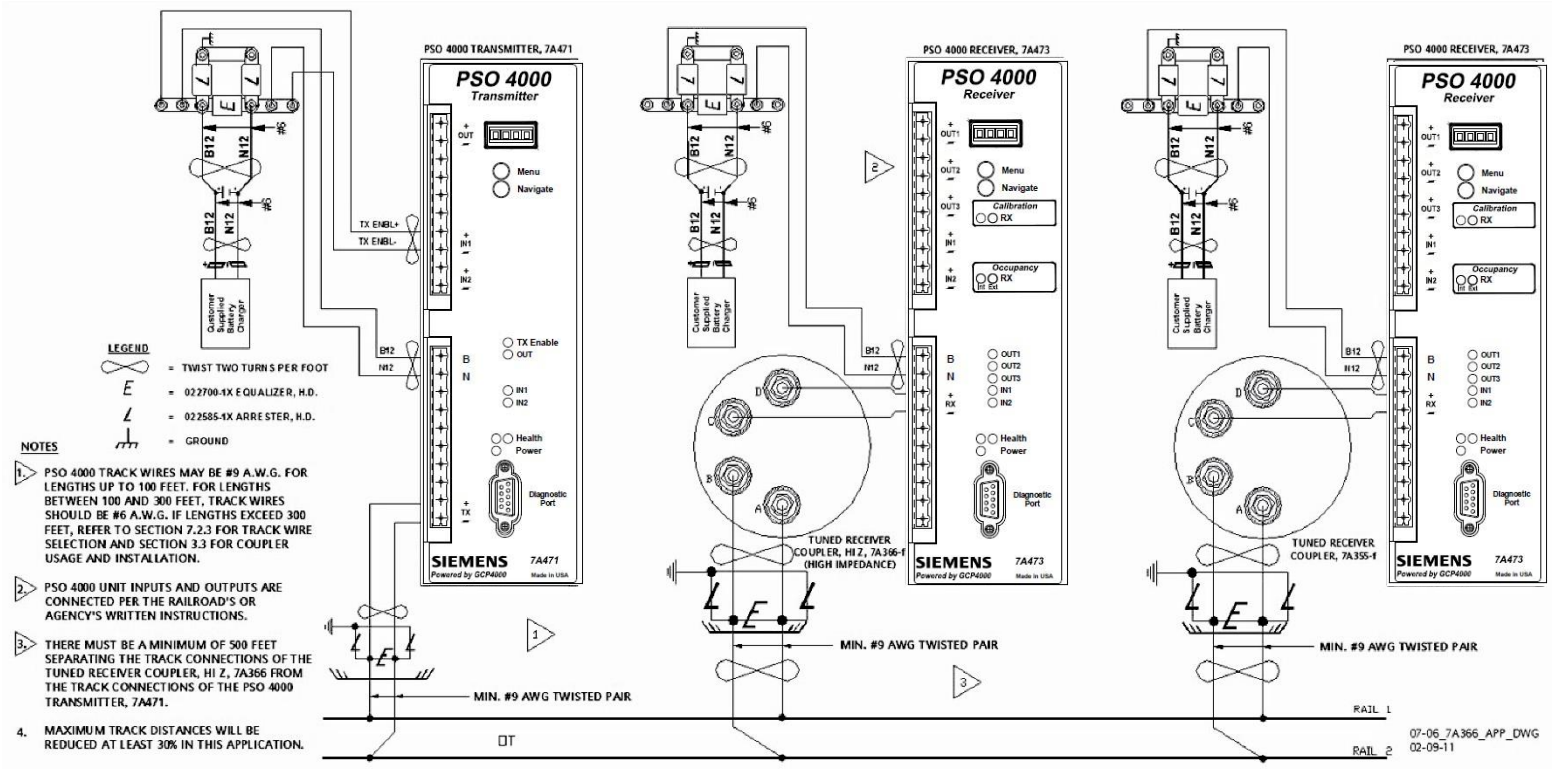

Figure 9-8 PSO Application using Tuned Receiver Coupler, Hi Z, 7A366-f

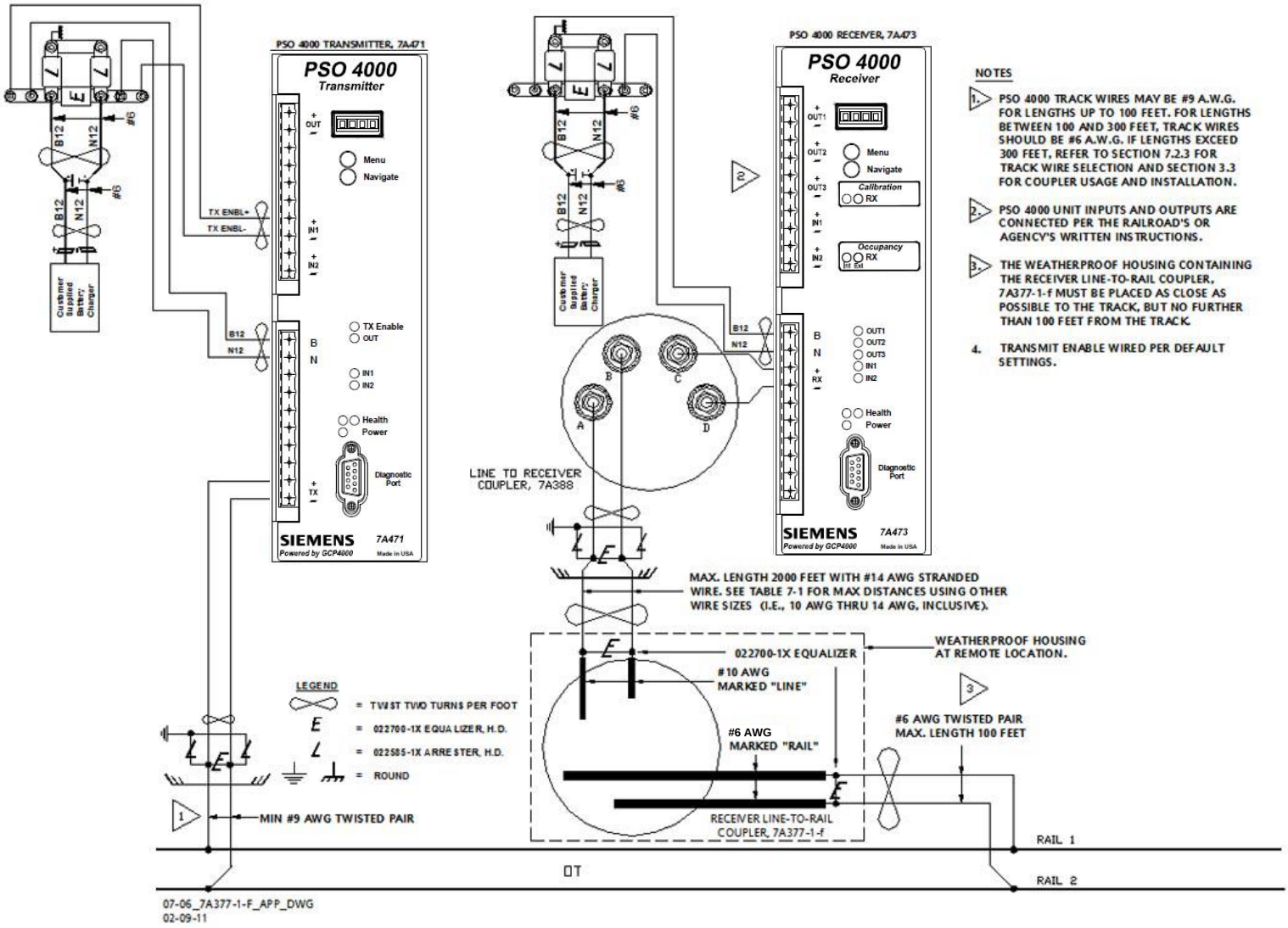

Figure 9-9 PSO 4000 Application using Line to Receiver Coupler, 7A388 and Receiver Line to Rail Coupler, 7A377-1-f

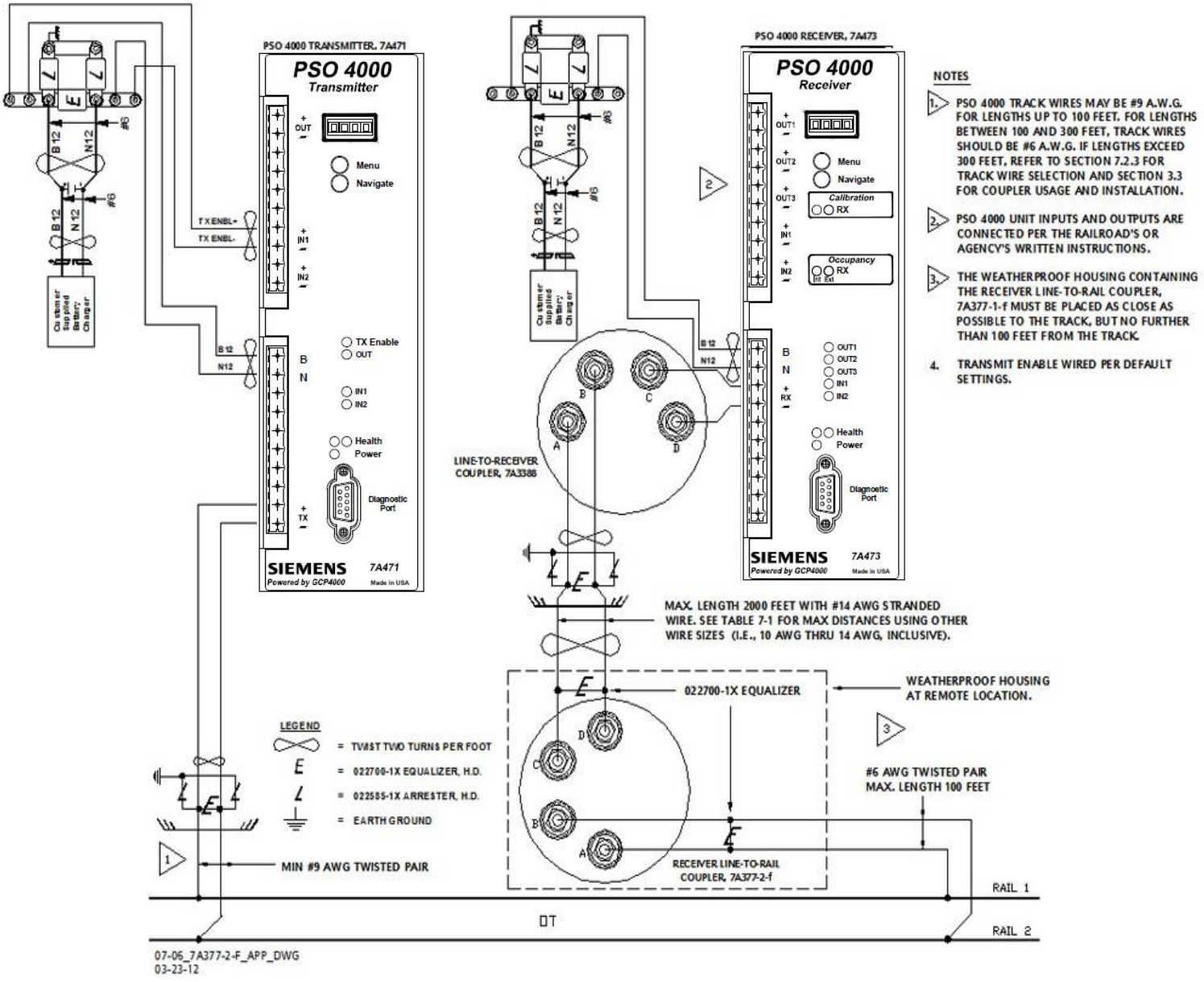

Figure 9-10 PSO 4000 Application using Line to Receiver Coupler, 7A388 and Receiver Line to Rail Coupler, 7A377-2-f

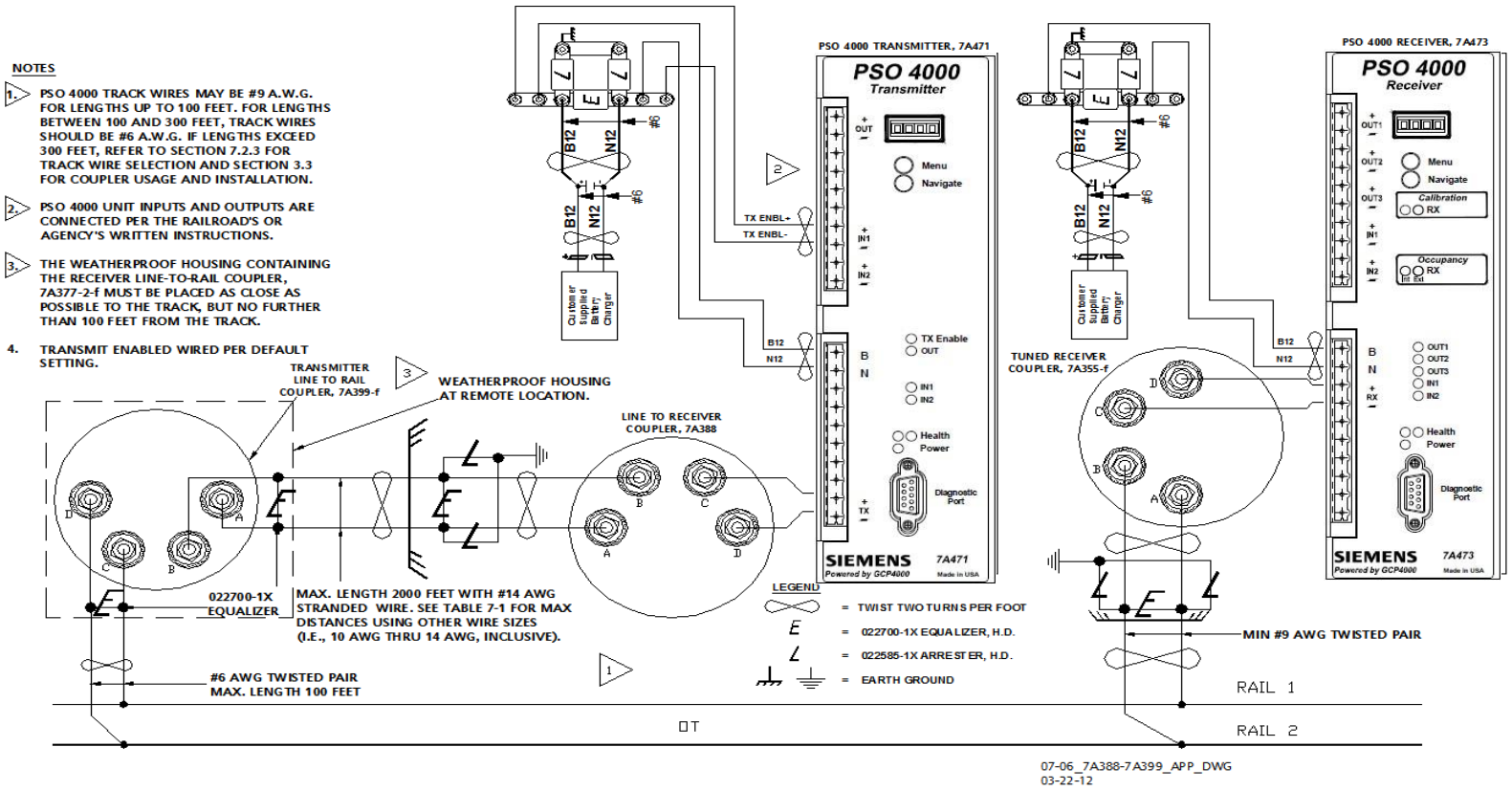

Figure 9-11 PSO 4000 Application using Transmitter Line to Rail Coupler, 7A399-f, Line to Receiver Coupler, 7A388

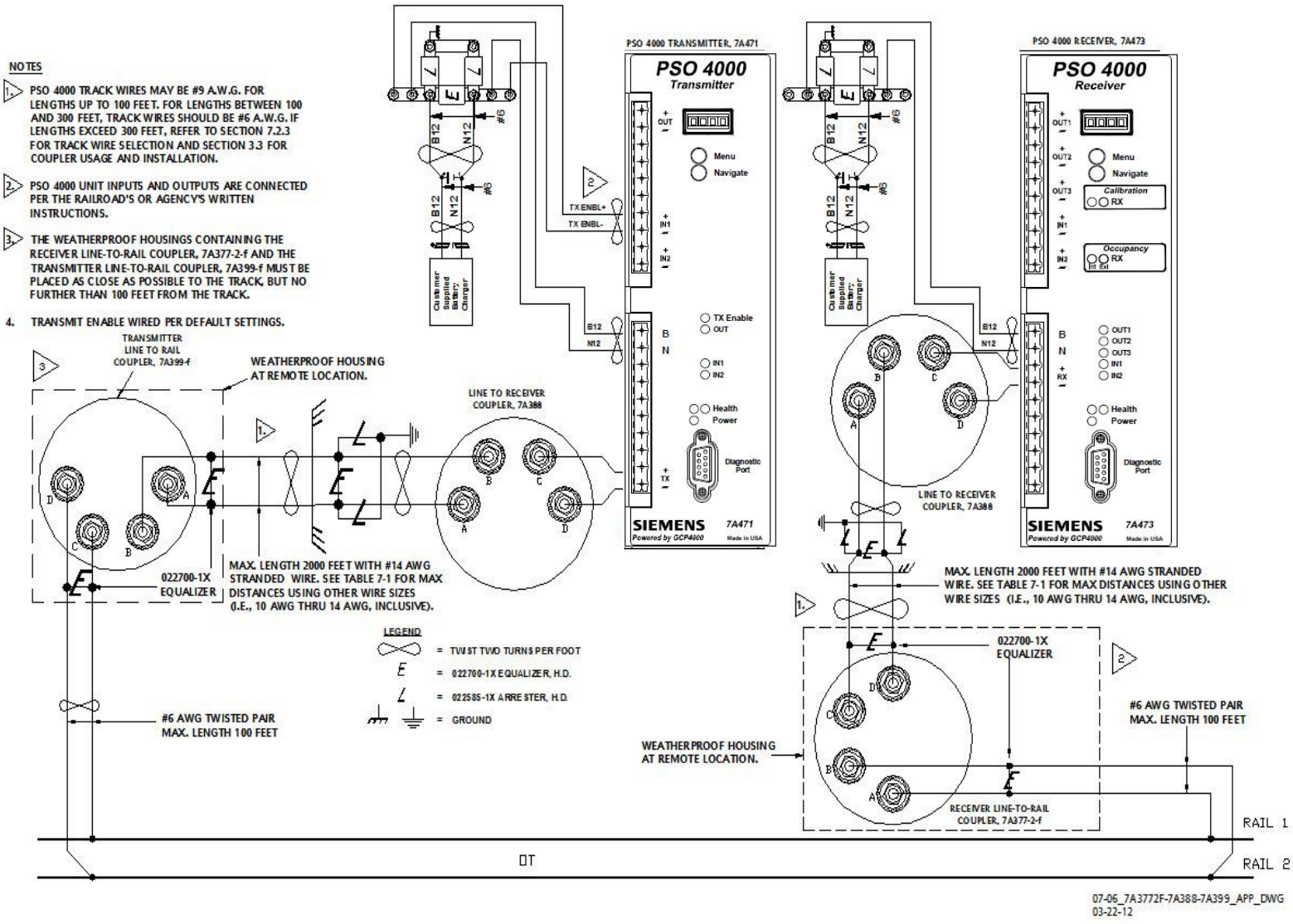

Figure 9-12 PSO 4000 Application using Transmitter Line to Rail Coupler, 7A399-f with Line to Receiver Coupler, 7A388 and Line to Receiver Coupler, 7A388 with Receiver Line to Rail Coupler, 7A377-2-f

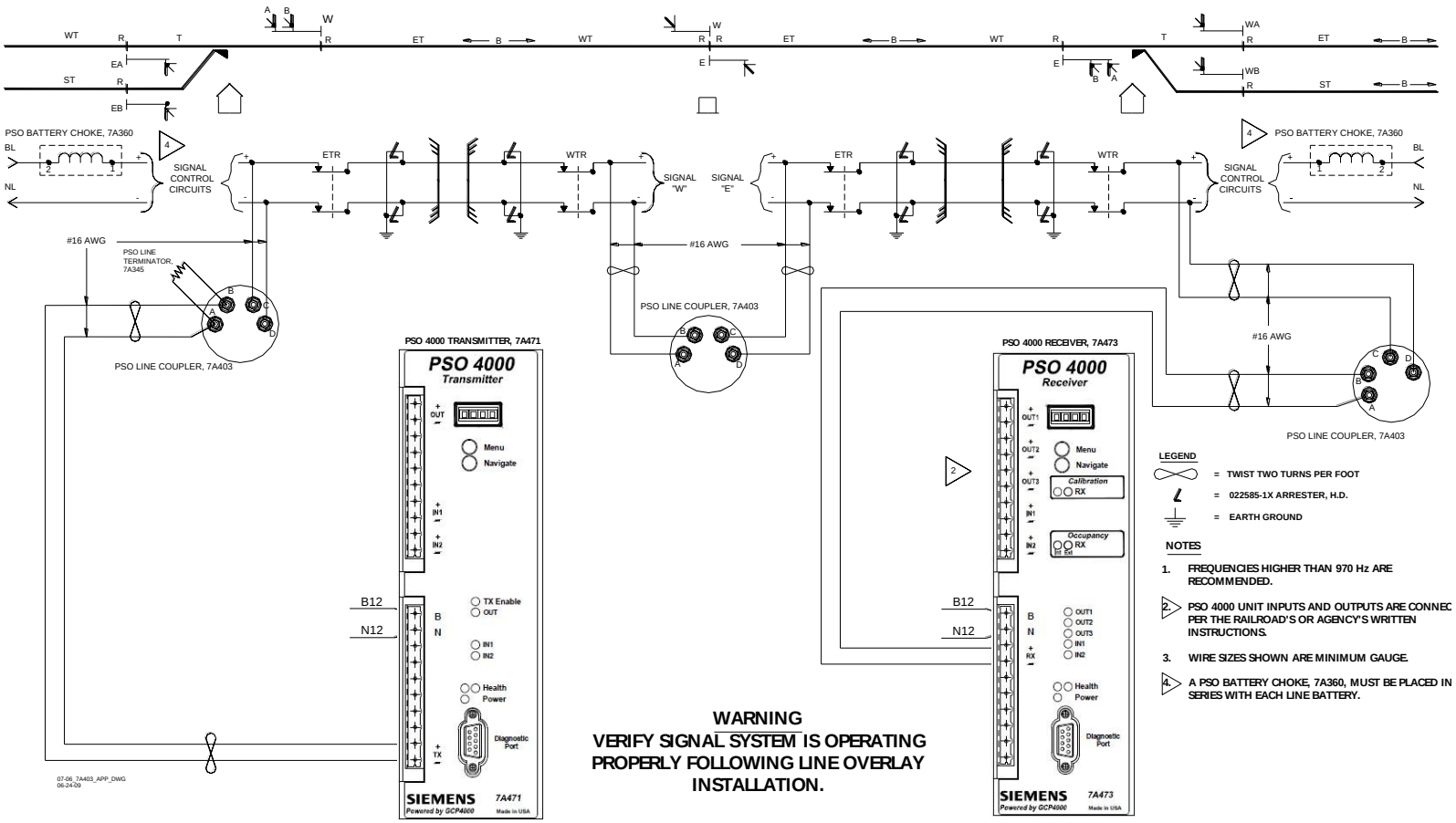

Figure 9-13 Typical PSO 4000 Line Overlay Application using PSO Line Coupler, Low Z, 7A403 with PSO Line Terminator, 7A345

APPENDIX A MISCELLANEOUS INFORMATION

A.1 GLOSSARY

Table A-1 Glossary

Term	Definition
AAR	Association of American Railroads – An organization that establishes uniformity and standardization among different railroad systems.
AF	Audio Frequency
AFO	Audio Frequency Overlay
AREMA	American Railway Engineering And Maintenance-of-Way Association – an organization that supersedes AAR.
ATCS	Advanced Train Control System – A set of standards compiled by the AAR for controlling all aspects of train operation.
CAL	Calibration Programming Submenu
CCN	Configuration Check Number – The 32 bit CRC of the configuration data.
CRC	Cyclical Redundancy Check - Used to determine that data has not been corrupted.
dB	Decibels
DIAG	Diagnostics Programming Submenu
Dot number	Department Of Transportation crossing inventory number assigned to every highway-railroad crossing that consists of six numbers with an alpha suffix.
DT	Siemens Systems Diagnostic Terminal Utility Diagnostic Terminal – The Diagnostic Terminal (DT) is a Siemens developed Windows® based software that can run on a PC, which allows users to perform programming, calibration, and troubleshooting.
-f	Frequency
Flash memory	A type of non-volatile memory that can be reprogrammed in-circuit via software.
GCP	Grade Crossing Predictor – A train detection device used as part of a highway-railroad grade crossing warning system to provide a relatively uniform warning time.

Term	Definition
Highway-Railroad Grade Crossing Advance Warning Sign	A traffic control sign (round yellow sign with RR and a black X) placed by the highway agency in advance of many highway-railroad grade crossings
healthy	The PSO Unit itself and the VPIs, VROs, are operating as intended. Health is indicated by a solid green light. Unhealthy conditions are indicated by a flashing yellow LED.
Hz	Hertz
INFO	Signal Information Programming Submenu
ISL CAL REQD	Island Calibration Required
kHz	Kilohertz
LED	Light Emitting Diode
LOS	Loss of Shunt – Commonly due to rust and/or rail contamination. LOS timers provide a pickup delay function.
MEF	Module Executable File – The executive software running on the PSO 4000 module. The user can download the MEF through the Diag port to update the software.
NVRAM	Non-Volatile Random Access Memory
OOS	Out of Service
Out of service	The process for taking one or more GCP approach circuits and/or approach and island circuits out of service.
PCB	Printed Circuit Board
Pickup Delay	An internal delay time between when an input receives the signal to pick up and when it actually responds
Prog	Programming Submenu
PSO	Siemens’s first generation of equipment generating audio frequency overlay track circuit
PSO II	Siemens’s earlier previous generation of audio frequency overlay track circuit
PSO III	Siemens’s most recent previous generation of audio frequency overlay track circuit

Term	Definition
PSO 4000	Phase Shift Overlay 4000 Track Circuit
RX	Receive or Receiver
RX CAL REQD	Receiver Calibration Required (Receiver Unit Only)
RX1 CAL REQD	Receiver 1 Calibration Required (Crossing Unit and Transceiver Only)
RX2 CAL REQD	Receiver 2 Calibration Required (Crossing Unit Only)
RX THR	Receiver Threshold
SETP	Setup Programming Submenu
SSCC	Solid State Crossing Controller
TEST	Test Programming Submenu
TX	Transmit or Transmitter
TX unhealthy	Transmitter Unit is unhealthy
Unit	Physical package including PCBs and input/output terminals for connecting to external devices and equipment.
VERS	Version Data Submenu
VPI	Vital Parallel Input - a module input circuit the function of which affects the safety of train operation.
VRMS	Volt Root Mean Square
VRO	Vital Relay Output - a module output circuit the function of which affects the safety of train operation.
XR	Designation for a railroad crossing relay, or equivalent crossing activation circuit.

A.2 ORDERING INFORMATION

To order replacement components, refer to the following table and call Customer Service at (800) 793-7233.

Table A-2 PSO 4000 Replacement Parts and Part Numbers

Item Description	Part Number
PSO 4000 Units	
Transmitter	7000-7A471-0001
Receiver	7000-7A473-0001
Crossing Assembly	7000-7A474-0001
Transceiver Assembly	7000-7A475-0001
PSO 4000 Auxiliary Equipment	
AC Shunt, Wide Band, 8A076	8000-8A076-0001
Battery Choke, 62648	6000-62648-0001
Battery Choke, 8A065	8000-8A065-0001
Cab Signal Filter, 7A417-X	7000-7A417-00XX (see Note 2 below)
Line to Receiver Coupler, 7A388	7000-7A388-0001
PSO Battery Choke, 7A360	7000-7A360-0001
PSO Battery Line Filter, 7A418	7000-7A418-0001
PSO Insulated Joint Bypass Coupler (Tuned), 7A422-f	7000-7A422- ffff (see Note 1 below)
PSO Line Coupler, Low Z, 7A403	7000-7A403-0001
PSO Line Terminator, 7A345	7000-7A345-0001
Receiver Line to Rail Coupler (Pole Mounted)7A377-1-f	7001-7A377- ffff (see Note 1 below)
Receiver Line to Rail Coupler (Shelf Mounted)7A377-2-f	7002-7A377- ffff (see Note 1 below)
Transmitter to Line Rail Coupler, 7A399-f	7000-7A399- ffff (see Note 1 below)
Tuned Receiver Coupler, 7A355-f	7000-7A355- ffff (see Note 1 below)
Tuned Receiver Coupler, Hi Z, 7A366	7000-7A366- ffff (see Note 1 below)
PSO 4000 Supporting Equipment	
Siemens Diagnostic Terminal (DT)	Z224-9V774-A01AV (see Note 3 below)

Note 1: Order the component by the frequency required as per the railroad's wiring or installation diagram (i.e., -0154 for 154 Hz frequency, 2630 for 2.63 kHz, 4000 for 4.0 kHz, etc.)

Note 2: See Section 6.1.7, Cab Signal Filter 7A417-X, and Table 6-3, Cab Signal Filter Manufacturer-Frequency Cross Reference for the final two digits of the required code specifying the manufacturer and the frequency required for the location.

Note 3: Siemens will ship the latest available version of the Diagnostic Terminal (DT) on a USB Flash Drive. Version Z224-9V774-A01AV was current at the time of this document's publication.

APPENDIX B DYNAMIC ADDRESSING OF PSO 4000 UNITS

Purpose of Dynamic Addressing

Dynamic addressing provides a way to send information down the track and is somewhat similar to using the PSO like a coded track circuit.

Planning the Use of Dynamic Addressing

One use of dynamic addressing involves using a signal in lieu of an electric lock.

- As an example, a railroad has an industry siding and wants to put a new signal there., The intent is to be able to use dynamic addressing so that they can set the aspect on this signal, perhaps proceed and stop.
- At the transmitter, assign the inputs as TXA and TXC. With only 2 inputs no other combination than TXA and TXC makes sense for dynamic mode. At the receiver, assign the address code as dynamic and assign two of the outputs as RXA and RXC.
- This allows equipment, perhaps a bipolar relay, to be connected at each end of the circuit. Using this manner of programming, two non-restrictive and one restrictive signal aspects (i.e., PROCEED, MEDIUM and STOP) could be transmitted.
- The transmitter has a built in 1s drop delay for the TXA and TXC inputs, which allows the inputs to switch (i.e., from TXA to TXC) smoothly without an appreciable drop out of the RXA and RXC outputs.

This Page Intentionally Left Blank

APPENDIX C TROUBLESHOOTING

C.1 GENERAL

There is no periodic maintenance performed on the PSO 4000. There are no user maintainable parts within the PSO 4000. Defective units are replaced as a whole:

- if any portion of a transmitter fails, replace the 7A471 transmitter.
- if any portion of a receiver fails, replace the 7A473 receiver.
- if any portion of a Crossing Assembly fails, replace the 7A474 crossing assembly.
- if any portion of a transceiver fails, replace the 7A475 transceiver.

Troubleshooting the PSO 4000 is simple. Clear problems identified by DIAG errors per Table . Clear other issues per the troubleshooting diagram in Figure C-1.

C.2 DIAGNOSTIC (DIAG) MESSAGES

Perform any actions directed by the unit in the Reason column. If the correction fails to bring the unit back into operation, replace the unit.

Table C-1 PSO 4000 Diagnostic (DIAG) Messages

Message	Reason
ISL CAL REQD	ISL needs calibration.
ISL CALIBRATING	ISL is calibrating.
ISL FREQ NOT SET	ISL freq not set/not supported
ISL RCV ERR	Rcv3 not active (rcv3 time out). p/s buffer samples out of sync. p/s mag differ ADC channel failure.
ISL RECOVERING	ISL recovering from unhealthy state such as freq not set/not supported, sample rate error, bad cal mag (cal mag = 0), ADC failure, p/s mag differs, rcv3 not active (rcv3 time out), p/s buffer samples out of sync, ISL transmitter error.
ISL STABILIZING	ISL transmitter 10 second warm up period
ISL XMT ERR	ISL transmitter error
OOS IP HIGH	The OOS input is high but the unit is not out of service.
OUT 1 ADDR NOT USED	VRO 1 address assigned but this address is not the same as the address configured to receive.
OUT 2 ADDR NOT USED	VRO 2 address assigned but this address is not the same as the address configured to receive.
OUT 3 ADDR NOT USED	VRO 3 address assigned but this address is not the same as the address configured to receive.

PSO XMT ERR	PSO transmitter error
PSO1 RCV ERR	Rcv1 not active (rcv1 time out). p/s buffer samples out of sync. p/s mag differ or p/s address code differ ADC channel failure
PSO2 RCV ERR	Rcv2 not active (rcv2 time out). p/s buffer samples out of sync. p/s mag differ or p/s address code differ ADC channel failure.
RCV1 CAL REQD	Rcv1 needs calibration.
RCV1 CARRIER ONLY	Rcv1 receives only a carrier signal and no code.
RCV1 FRQ NOT SET	Rcv1 freq not set/not supported
RCV1 RECOVERING	Rcv1 recovering from unhealthy state such as freq not set/not supported, bad cal mag (cal mag = 0), ADC failure, p/s mag/code differs, rcv1 not active (rcv1 time out), p/s buffer samples out of sync.
RCV1 WRONG CODE RCVD	Rcv1 receives wrong address code.
RCV1/2 FREQ SAME ERR	Rcv1 and Rcv2 set to the same freq
RCV1/ISL FREQ ERR	Rcv1 and ISL set to the same freq.
RCV1/XMT FREQ ERR	Rcv1 and TX set to the same freq
RCV2 RECOVERING	Rcv2 recovering from unhealthy state such as freq not set/not supported, bad cal mag (cal mag = 0), ADC failure, p/s mag/code differs, rcv2 not active (rcv2 time out), p/s buffer samples out of sync.
RCV2 CAL REQD	Rcv2 needs calibration.
RCV2 CARRIER ONLY	Rcv2 receives only a carrier signal and no code.
RCV2 FRQ NOT SET	Rcv2 freq not set/not supported
RCV2 WRONG CODE RCVD	Rcv2 receives wrong address code.
RCV2/ISL FREQ ERR	Rcv2 and ISL set to the same freq.
SMP RCV ERR	ISL receiver sample rate error. Receivers get bad cal magnitude.
TX FRQ NOT SET	PSO TX freq not set/not supported
TX RECOVERING	TX recovering from unhealthy state such as freq not set/not supported, PSO transmitter error.

C.3 TROUBLESHOOTING OTHER PSO 4000 ISSUES

WARNING

AFTER INSTALLATION OR AFTER ANY MENU CHANGES HAVE BEEN MADE, RECALIBRATE THE RECEIVER AND TEST FOR PROPER OPERATION. REQUIRED OPERATIONAL TEST SHOULD BE PERFORMED IN ACCORDANCE WITH RAILROAD OR AGENCY PROCEDURES.

IF ANY RECEIVER IS CALIBRATED IN POOR BALLAST CONDITIONS, IT MUST BE RE-CALIBRATED WHEN BALLAST CONDITIONS IMPROVE.

AFTER CALIBRATION, VERIFY THAT THE TRACK CIRCUIT DE-ENERGIZES WHEN THE TRACK CIRCUIT IS SHUNTED WITH THE APPROPRIATE CALIBRATION RESISTANCE. FAILURE TO DO SO MAY LEAD TO INCORRECT OR UNSAFE OPERATION OF THE TRACK CIRCUIT.

FAILURE TO FOLLOW THE RAILROAD'S OR AGENCY'S APPROVED WIRING OR INSTALLATION GUIDELINES REGARDING SETTINGS AND CALIBRATION MAY LEAD TO POSSIBLE UNSAFE OPERATION OF THE TRACK CIRCUIT.

NOTE

On a Crossing Assembly, if Stick Cancel is assigned to an input (IN1=STK CNCL), this input should "normally" be energized. De-energizing the input will release the stick if the stick is set.

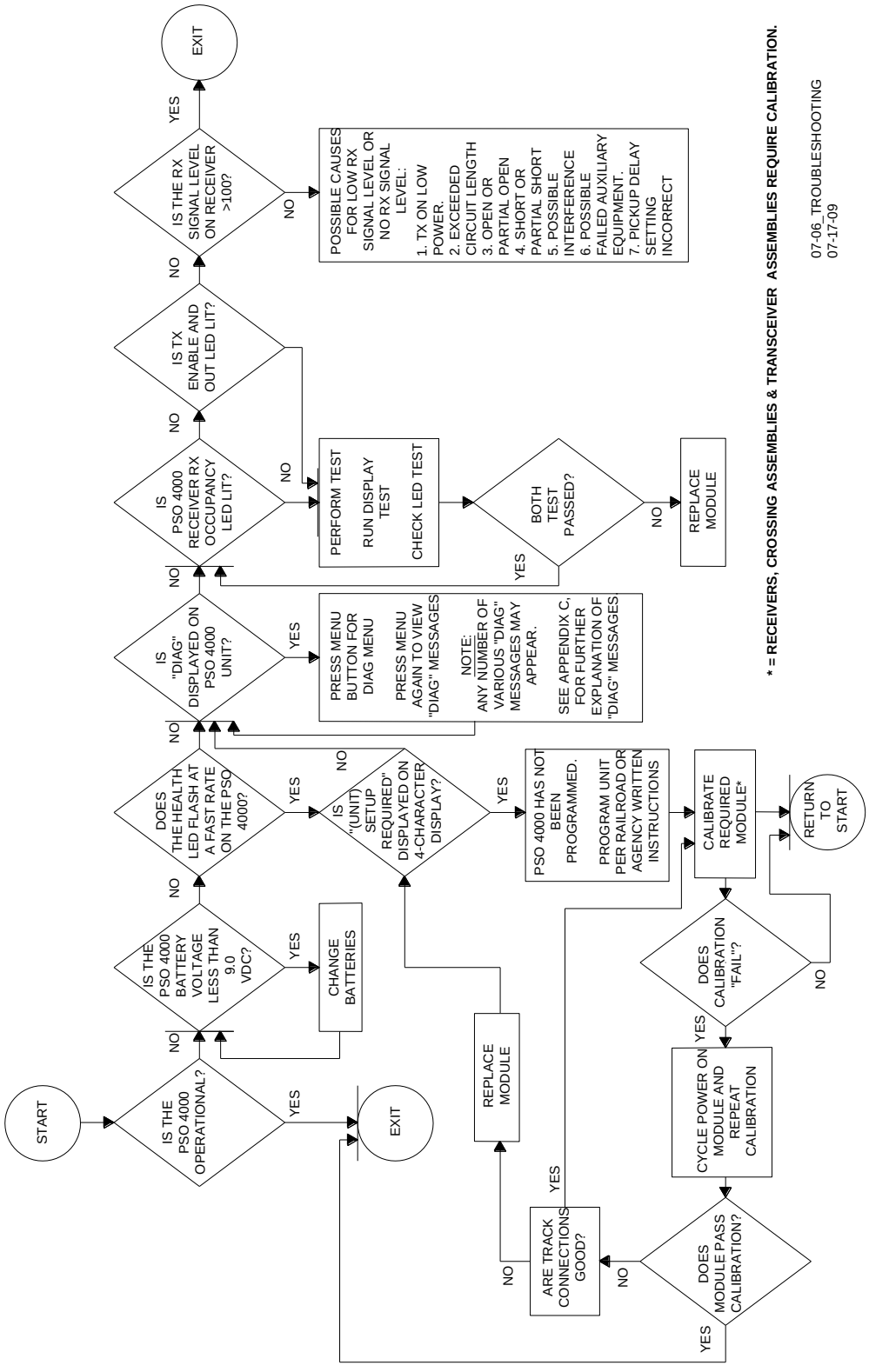

Figure C-1 PSO 4000 Troubleshooting Diagram

APPENDIX D DATA TRANSFER

D.1 DOWNLOADING RECORDED DATA TO A COMPUTER FILE

The following procedures enable downloading of data recorder memory contents to a PC/laptop using the Microsoft® Windows® HyperTerminal applications. A number of other widely used software programs are available that can be used to accomplish the same task.

D.1.1 Opening a HyperTerminal

Connect an appropriate interface cable between Diagnostic Port on the front of the unit (Figure 7-1) and an available serial port on the PC/laptop (normally COM1 or COM2). Click START > ALL PROGRAMS > ACCESSORIES > COMMUNICATIONS > HYPERTERMINAL. The HyperTerminal opens.

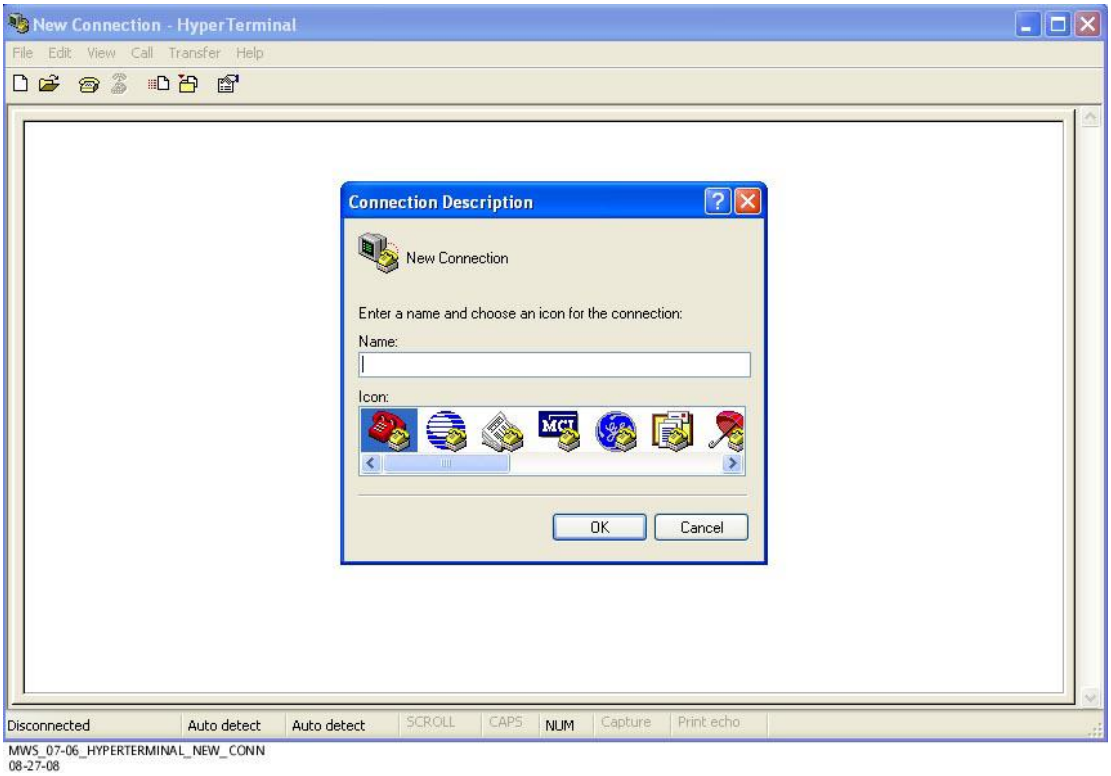

Figure D-1 Windows® HyperTerminal Application

Click FILE > NEW CONNECTION. The Connection Description window opens.

Figure D-2 Connection Description Window

Name the connection and select an icon for the connection. Click OK. The Connect To window opens.

Figure D-3 Connect To Window

Click the “Connect using:” pull down arrow. Select the same communications port (COM2, COM1, or TCP/IP {Winsock}) that is used to communicate using the Diagnostic Terminal. (The System Administrator will tell you which port is used on the laptop computer). The Properties window opens.

Figure D-4 COM1 Properties Window

Enter the following values into the pull-downs as shown above:

- Bits per second: 9600
- Data Bits: 8
- Parity: None
- Stop Bits: 1
- Flow Control: None

Click OK. The HyperTerminal begins operation. This may be verified by looking at the timer running in the lower left corner of the HyperTerminal.

Press CTRL > L. The HyperTerminal connects to the unit and begins operation.

NOTE

NOTE

To stop any Print/Capture process at any point, press the ESCAPE (Esc) key to exit the process.

D.1.2 Transferring Data with the HyperTerminal

The HyperTerminal has built-in functionality to transfer data using the Transfer pull-down. Either Click TRANSFER > and the desired selection or press ALT > T> and the desired selection.

Figure D-5 Windows® HyperTerminal with Transfer Options Open

Send File

The Send File option allows users to send a file via the HyperTerminal. Click TRANSFER > SEND FILE or press ALT > T > S and the Send File Window opens.

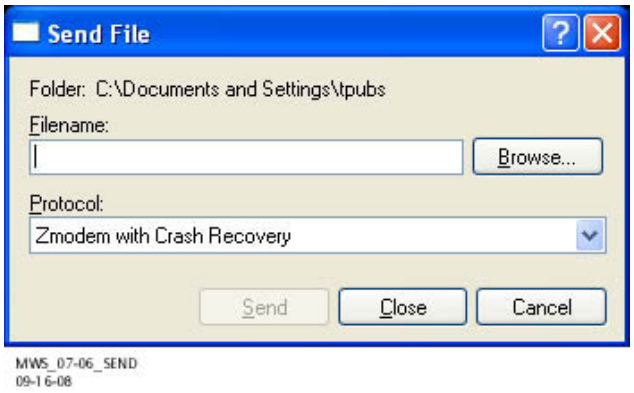

Figure D-6 Send File Window

Enter the path or click Browse and select desired file from the directory. Click OK.

Click SEND. The file is sent to the desired location.

Receive File

The Receive File option allows users to receive a file via the HyperTerminal. Click TRANSFER > RECEIVE FILE or press ALT > T > R and the Receive File Window opens.

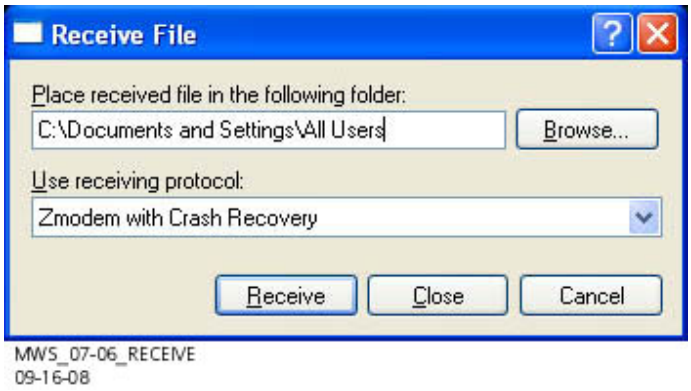

Figure D-7 Receive File Window

Enter the path or click Browse and select desired path in the directory. Click OK.

Click RECEIVE. The file is placed in the desired location.

Capture Text

To capture text as it flows across the HyperTerminal screen, press the letter “P”. This begins the Print/Capture process. Then click TRANSFER > CAPTURE or press ALT > T > C. The Capture Screen Window opens.

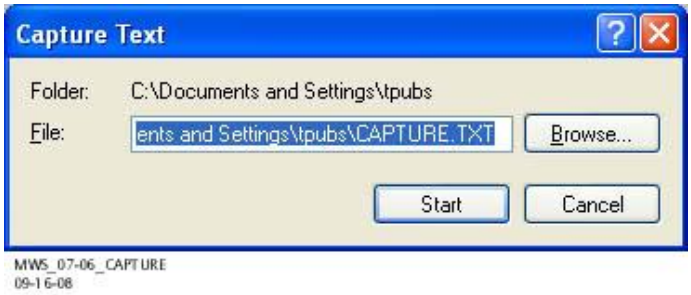

Figure D-8 Capture Text Screen

Either accept the path and file name generated by the computer, enter a new file name, or click the BROWSE button and select the file name and directory location desired. Click START.

If desired, the capture can be paused by clicking TRANSFER > CAPTURE > PAUSE or by pressing ALT > T > C > P. The screen capture may be restarted by clicking TRANSFER > CAPTURE > RESUME or by pressing ALT > T > C > R.

To stop the capture, click TRANSFER > CAPTURE > STOP or by pressing ALT > T > C > S. Then strike any key to exit. Additionally, to exit without saving the file, press the ESCAPE (Esc) key.

Send Text File

The Send Text File option allows users to send a text file via the HyperTerminal. Click TRANSFER > SEND TEXT FILE or press ALT > T > T and the Send Text File Window opens.

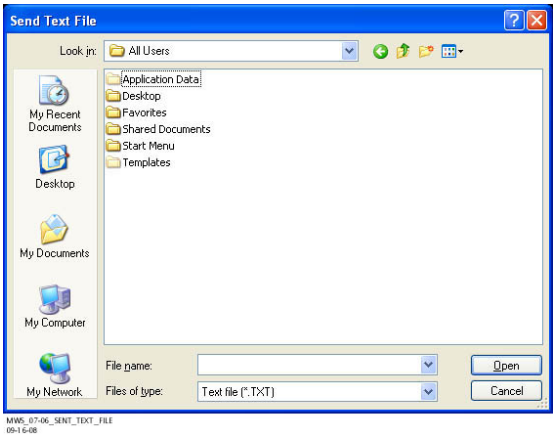

Figure D-9 Send Text File Window

Navigate the directory and select the desired file. Click OK. Click SEND. The file is sent to the desired location.

Capture to Printer

To capture text as it flows across the HyperTerminal screen, press the letter “P”. This begins the Print/Capture process. Then click TRANSFER > CAPTURE TO PRINTER or press ALT > T > P. The Save PDF File As window opens.

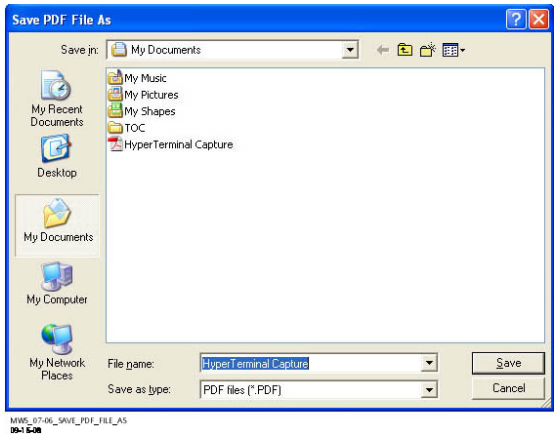

Figure D-10 Save PDF File As Window

Either use the default file name of HyperTerminal Capture or enter a new file name. Click SAVE. Clicking the TRANSFER > CAPTURE TO PRINTER or pressing ALT > T > P will reveal that there is a check mark next to the title “CAPTURE TO PRINTER” signifying that the data capture is in progress.

Figure D-11 Windows® HyperTerminal Capturing Data for the Printer

The file will capture all information that comes across the screen until either TRANSFER > CAPTURE TO PRINTER is again clicked or press ALT > T > P is pressed again. After that, press any key to reset the screen to the active menu. The PDF file will open, ready to send to the printer.

D.2 USING THE SIEMENS DIAGNOSTIC TERMINAL (DT)

The Diagnostic Terminal (DT) is a Siemens developed Windows® based software that is available on USB Flash Drive from Siemens Customer Service. The Diagnostic Terminal (DT) provides a maintenance interface that provides interface with:

- The Maintenance Log
  - Add Log Entry
  - Clear the Maintenance Log
  - Save the Maintenance Log
- The Status Log
  - View the Status Log
  - Save the Status Log
  - Copy the Status Log
- The Summary Log
  - View the Summary Log
  - Save the Summary Log
  - Copy the Summary Log
  - Clear the Summary Log
  - Open a stored Summary Log
- The Diagnostic Log
  - View the Diagnostic Log
  - Renew the Diagnostic Log
  - Clear the Diagnostic Log
  - Save the Diagnostic Log
- The Sniffer Log
  - View the Sniffer Log
  - Stop or Start the Sniffer Log
  - Clear the Sniffer Log
  - Copy the Sniffer Log
  - Save the Sniffer Log

D.2.1 Installing the DT

To install the DT, please follow the instructions given on the software disc. Call Siemens Customer Service at 800.733-7233 to order the Siemens Diagnostic Terminal.

D.2.2 Initial DT Setup

Connect an appropriate interface cable between Diagnostic Port on the front of the unit (Figure 7-1) and an available serial port on the PC/laptop (normally COM1 or COM2).

Open the DT by selecting the desktop icon.

Figure D-12 Siemens Diagnostic Terminal (DT) Desktop Icon

The initial DT Window opens.

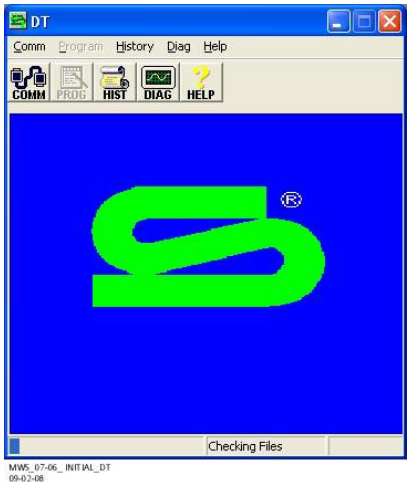

Figure D-13 Initial DT Window

When the DT opens, select COMM>DISCONNECT. This stops the DT from looking for other pre-programmed components.

Figure D-14 DT Window COMM>DISCONNECT Pulldown

Select COMM>DT PORT SETUP.

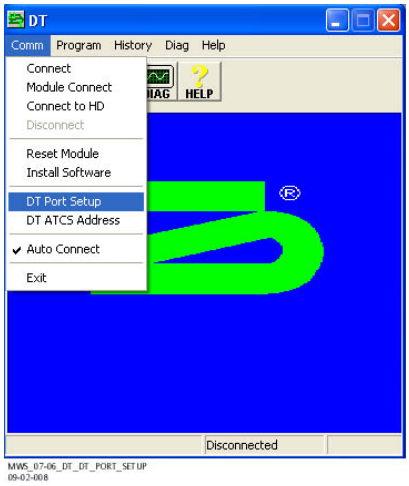

Figure D-15 DT PORT SETUP Pulldown

The Communication Settings Window opens.

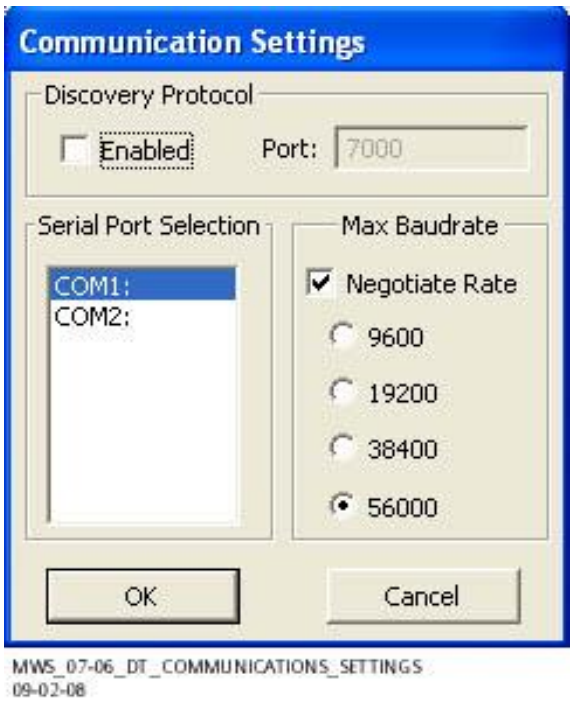

Figure D-16 Communication Settings Window

On the Communication Settings Window, select the correct COM location to which the interface cable is connected. Then ensure the Negotiate Rate check box is selected and that the 56000 radio button is selected. Select OK.

Select COMM>UNIT CONNECT. This connects the DT to the PSO Unit.

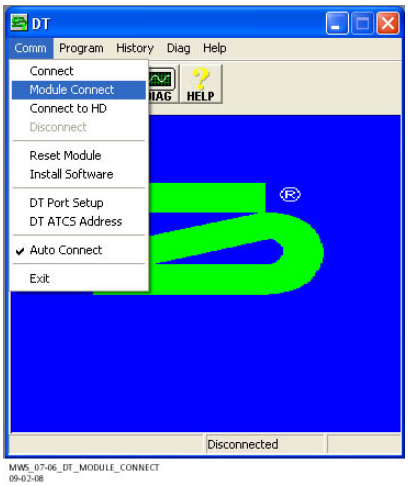

Figure D-17 Connecting the DT Unit

Once the connection is established, the lower right section of the Status Bar states, “Connected to Unit” and “Ready” appears in the center section. The DT is now set to interact with the unit.

Figure D-18 Connected DT Unit

D.2.3 Maintenance Log

The Maintenance Log is accessed through either the top level pull-down menu (select HISTORY>MAINTENANCE LOG as shown in Figure D-19) or by selecting the HIST button and further selecting MAINTENANCE LOG.

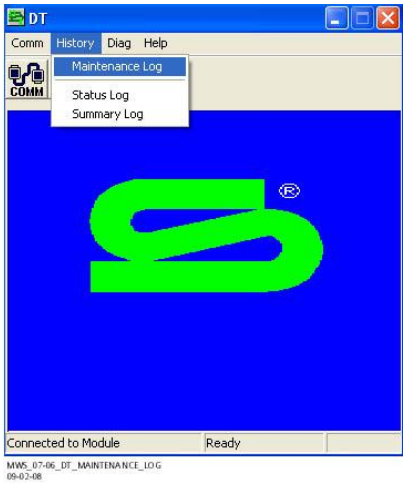

Figure D-19 Accessing the DT Maintenance Log

Once opened, the Maintenance Log initially displays as seen in Figure D-20.

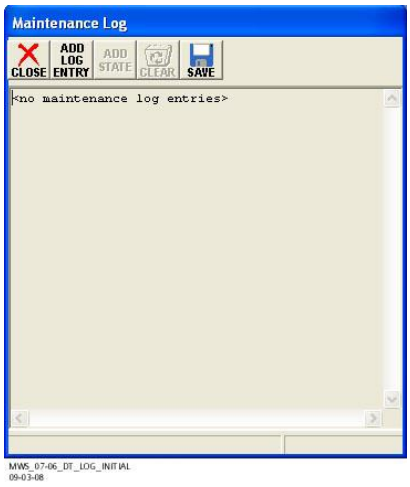

Figure D-20 DT Maintenance Log Window (Initial Use)

The Maintenance Log is a user maintained log of actions pertaining to the PSO 4000 Unit. Entries are made as required by the maintainer. The maintainer may, as stated above, perform the following actions:

- Add Log Entry
- Save the Maintenance Log
- Clear the Maintenance Log

Add a Log Entry

To add an entry to the Maintenance Log, select the ADD LOG ENTRY button.

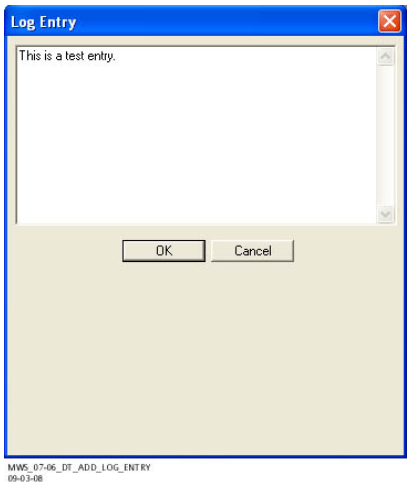

Figure D-21 Log Entry Window

Enter the required text and select the OK button. The required text appears in the Maintenance Log.

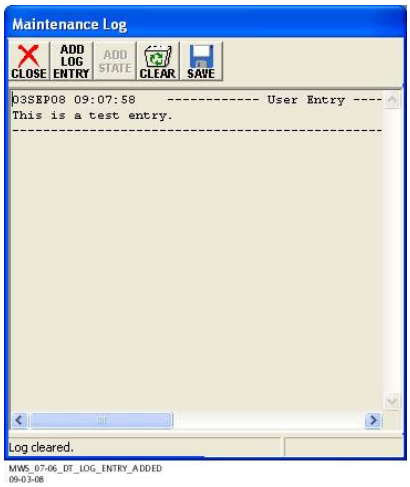

Figure D-22 Updated DT Maintenance Log

Save the Maintenance Log

When required, Maintenance Logs can be saved back on to a computer. To save the log, select the SAVE button. This opens the Save Maintenance Log As Window.

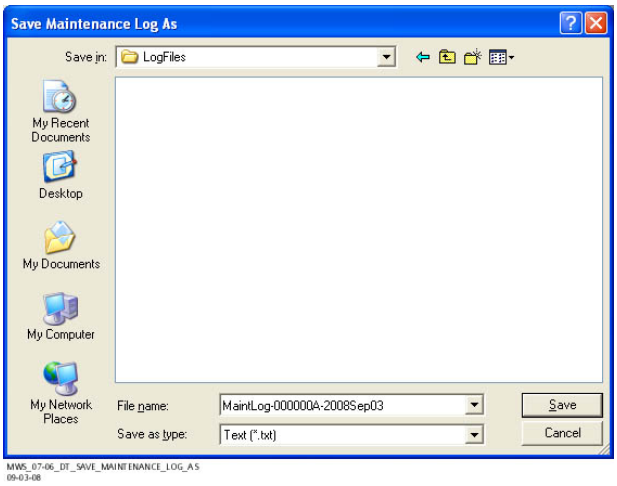

Figure D-23 DT Save Maintenance Log As Window

Use the SAVE AS: pulldown to open the appropriate folder and select the SAVE button to save the log as a text file. The file can easily be printed, if required. Once the report has been saved, the words “Report saved.” appear across the bottom of the window status bar (see Figure D-24).

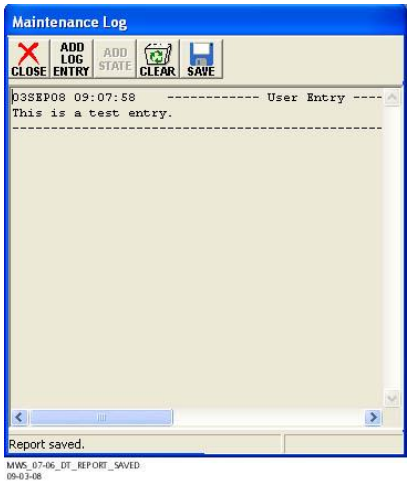

Figure D-24 DT Maintenance Log Window – Report Saved Message

Clear the Maintenance Log

To clear the Maintenance Log, select the CLEAR button. The CONFIRM dialog box opens.

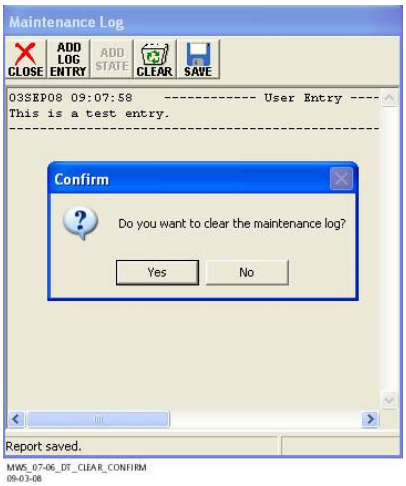

Figure D-25 Confirm Dialog Box

D.2.4 Status Log

The Status Log contains the current status of all programmed parameters. The Maintenance Log is accessed through either the top level pull-down menu (select HISTORY>STATUS LOG as shown in Figure D-19) or by selecting the HIST button and further selecting STATUS LOG.

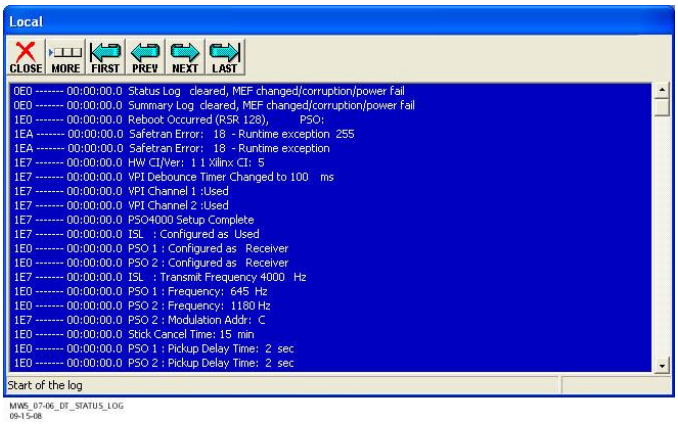

Figure D-26 DT Status Log Window

Save the Status Log

When required, Status Log can be saved back on to a computer. To save the log, select the SAVE button. This opens a pull-down to save either text (default) or binary (currently disabled). Select the TEXT option (see Figure D-32). This opens the Download Options Window. Select either Download All Events or Download By Date, then select OK. This opens the Save Status Log As Window.

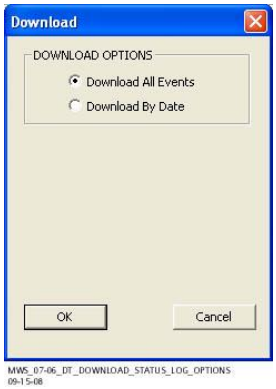

Figure D-27 DT Download Options Window

Use the SAVE AS: pulldown to open the appropriate folder and select the SAVE button to save the log as a text file. The file can easily be printed, if required. Once the report has been saved, the words “Report saved.” appear across the bottom of the window status bar.

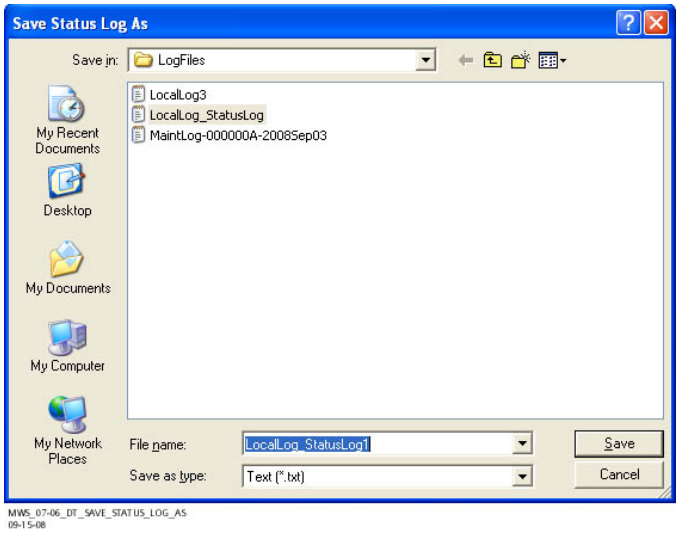

Figure D-28 DT Save Status Log As Window

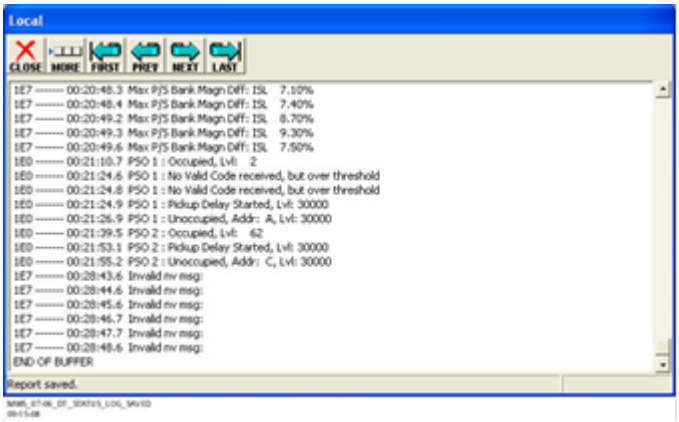

Figure D-29 DT Status Log Window – Report Saved Notification

Copy the Status Log

When required, Status Log can be copied onto a blank text page. To copy the log, select the copy button, open a Notepad or WordPad page, and select PASTE. The log is copied onto that page.

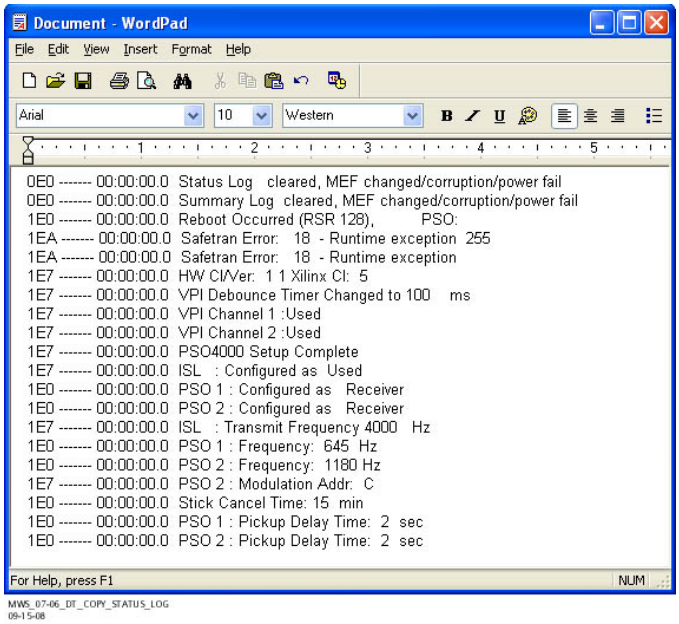

Figure D-30 DT Status Log Copied into WordPad

D.2.5 Summary Log

The Summary Log contains the current status of the Unit. The Summary Log is accessed through either the top level pull-down menu (select HISTORY>SUMMARY LOG as shown in Figure D-19) or by selecting the HIST button and further selecting SUMMARY LOG.

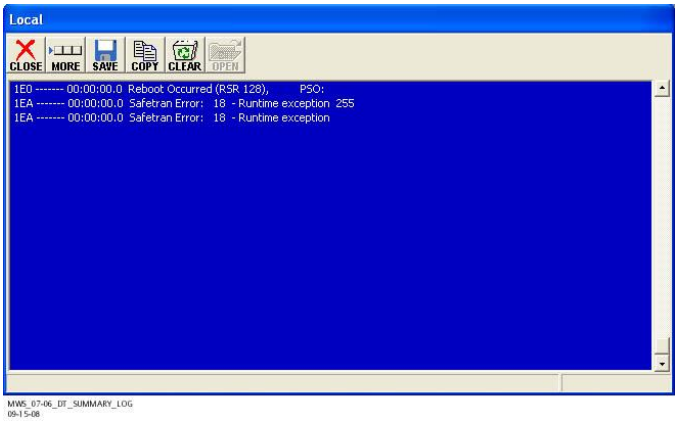

Figure D-31 DT Summary Log Window

Save the Summary Log

When required, Summary Log can be saved back on to a computer. To save the log, select the SAVE button. This opens a pull-down to save either text (default) or binary (currently disabled). Select the TEXT option.

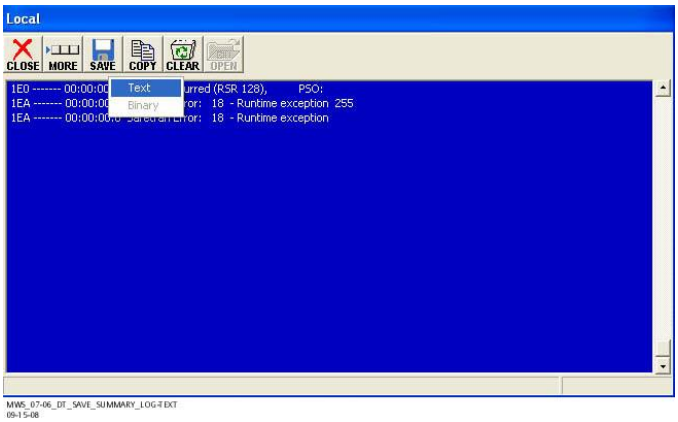

Figure D-32 DT Save Summary Log in Text Window

This opens the Download Options Window. Select either Download All Events or Download By Date, then select OK (see Figure D-). This opens the Save Status Log As Window.

Use the SAVE AS: pulldown to open the appropriate folder and select the SAVE button to save the log as a text file.

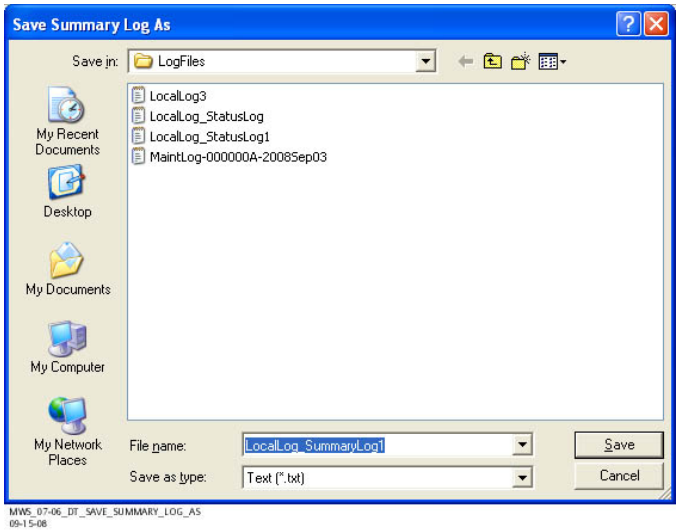

Figure D-33 DT Save Summary Log As Window

The file can easily be printed, if required. Once the report has been saved, the words “Report saved.” appear across the bottom of the window status bar.

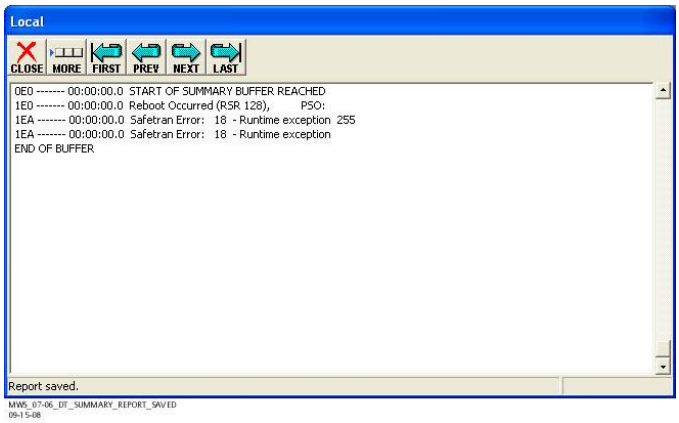

Figure D-34 DT Summary Log Window – Report Saved Notification

Copy the Summary Log

When required, Summary Log can be copied onto a blank text page. To copy the log, select the copy button, open a Notepad or WordPad page, and select PASTE. The log is copied onto that page.

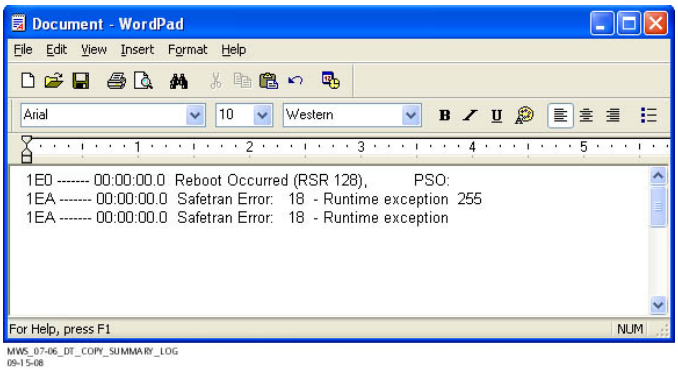

Figure D-35 DT Summary Log Copied into WordPad

Clear the Summary Log

To clear the Summary Log, select the CLEAR button. The CONFIRM dialog box opens.

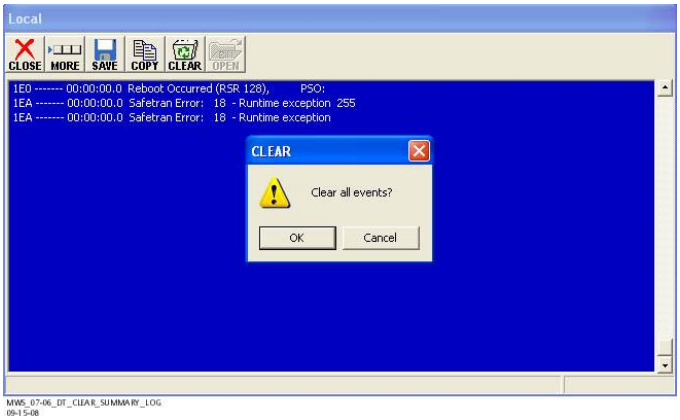

Figure D-36 Clear Summary Log Events Window

D.2.6 Diagnostic Log

The Diagnostic Log maintains a record of all Diagnostic Messages sent by the Unit. To view the Diagnostic Log, select DIAG > DIAGNOSTIC LOG or select the DIAG button and further select DIAGNOSTIC LOG.

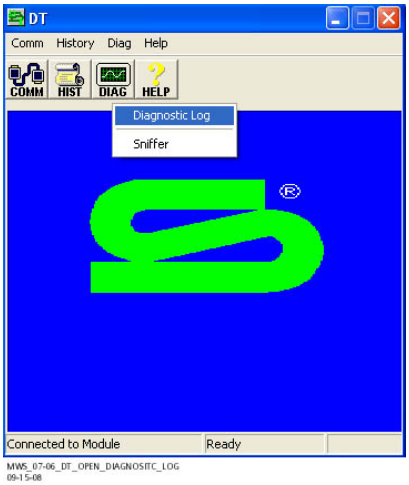

Figure D-37 DT Open Diagnostic Log Window

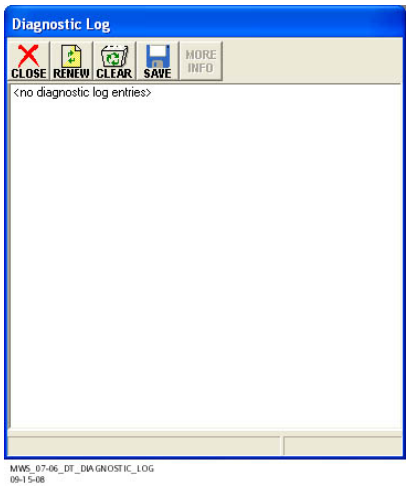

Figure D-38 Diagnostic Log Window

Renew the Diagnostic Log

To renew the Diagnostic Log, select the RENEW button. The DT will add any diagnostic events that have happened in the interim between when the Diagnostic Log was initially opened and when the RENEW button was selected.

Clear the Diagnostic Log

To clear the Diagnostic Log, select the CLEAR button. LOG CLEARED appears across the bottom of the window in the status bar.

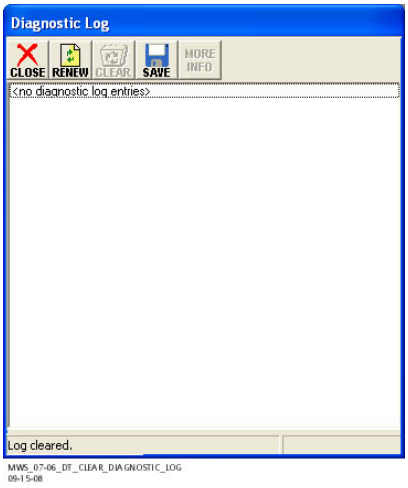

Figure D-39 Diagnostic Log – Log Cleared Window

Save the Diagnostic Log

When required, Diagnostic Log can be saved back on to a computer. To save the log, select the SAVE button. This opens the Save Diagnostic Log As Window.

Use the SAVE AS: pulldown to open the appropriate folder and select the SAVE button to save the log as a text file.

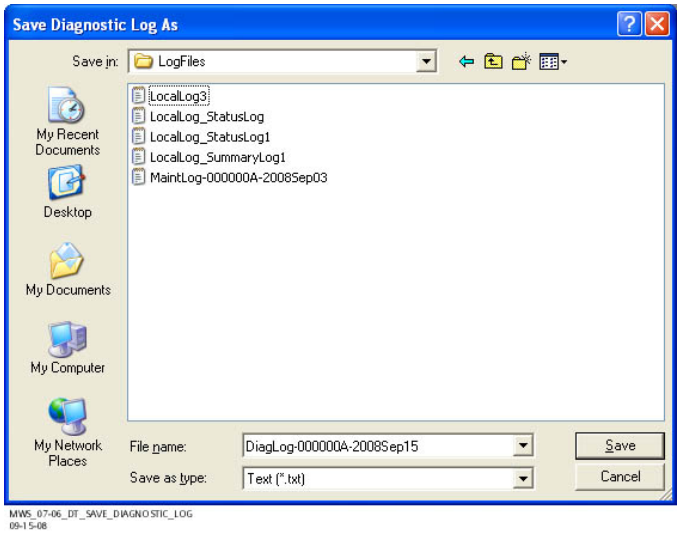

Figure D-40 Save Diagnostic Log As Window

The file can easily be printed, if required. Once the report has been saved, the words “Report saved.” appear across the bottom of the window status bar.

Figure D-41 Diagnostic Log – Report Saved Window

D.2.7 Sniffer Log

The Sniffer Log is designed to track the communications between the DT and the connected PSO 4000 Unit. To view the Sniffer Log, select DIAG > SNIFFER or select the DIAG button and further select SNIFFER. The Sniffer Window opens.

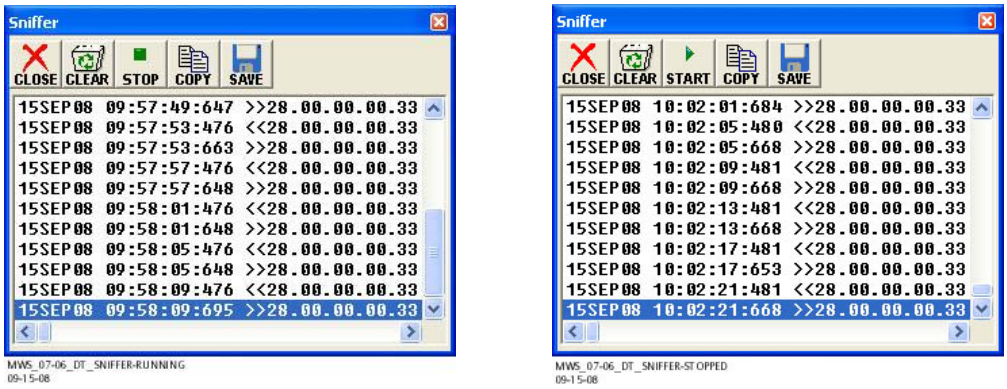

Figure D-42 Sniffer Window – A) Running & B) Stopped

Stop or Start the Sniffer Log

The Sniffer Log can be stopped or restarted through the use of the Stop and Start buttons, respectively (see Figure D-42).

Clear the Sniffer Log

To clear the Sniffer Log, select the CLEAR button. The Sniffer clears and restarts logging immediately.

Copy the Sniffer Log

When required, Sniffer Log can be copied onto a blank text page. To copy the log, select the copy button, open a Notepad or WordPad page, and select PASTE. The log is copied onto that page.

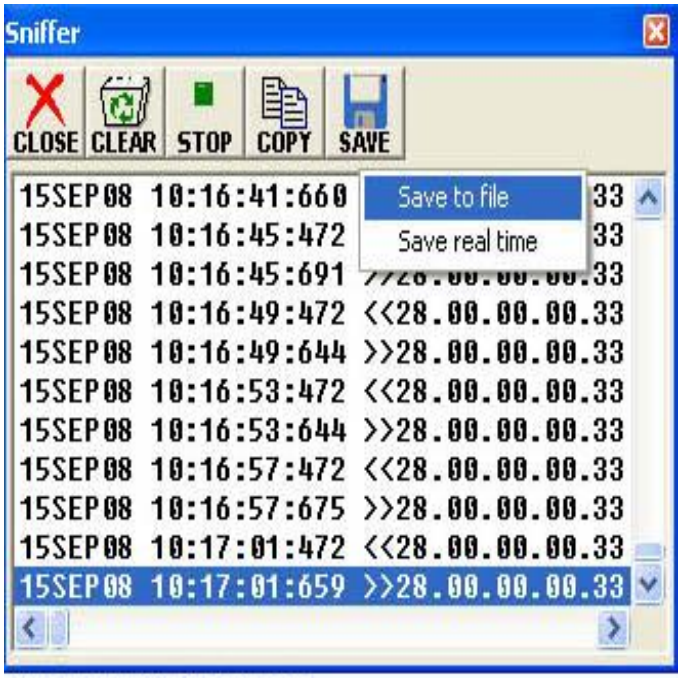

Figure D-43 Sniffer Log Copied into WordPad

Save the Sniffer Log

When required, Sniffer Log can be saved back on to a computer. To save the log, select the SAVE button. This opens a pull-down to either SAVE TO FILE or SAVE TO REAL TIME. The Save to File option saves the log at the time the SAVE button is selected. The Save to Real Time option opens the SAVE SNIFFER LOG AS Window and begins saving the file when the SAVE button is selected.

Use the SAVE AS: pulldown to open the appropriate folder and select the SAVE button to save the log as a text file. When Save To File is chosen, the log is saved at this point. When choosing the Save To Real Time option, the log saves until the SAVE > STOP SAVING REAL TIME is chosen. At that point, the log stops saving and the file is closed.

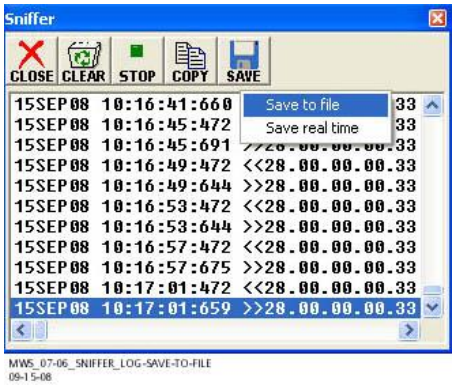

Figure D-44 Sniffer Log – Save to File Window

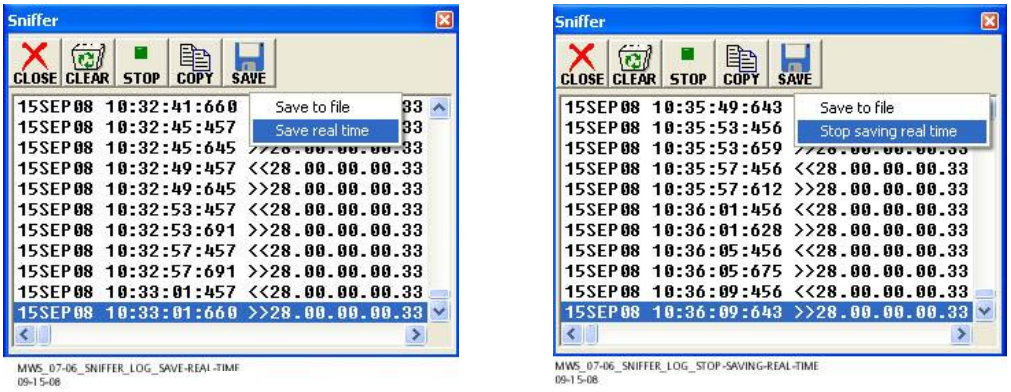

A **B**

Figure D-45 Sniffer Log – A) Save Real Time & B) Stop Saving Real Time Windows

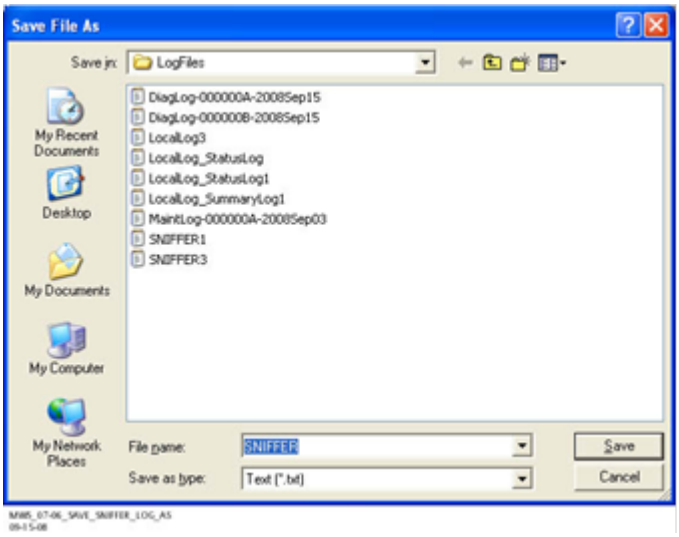

Figure D-46 Save Sniffer Log As Window