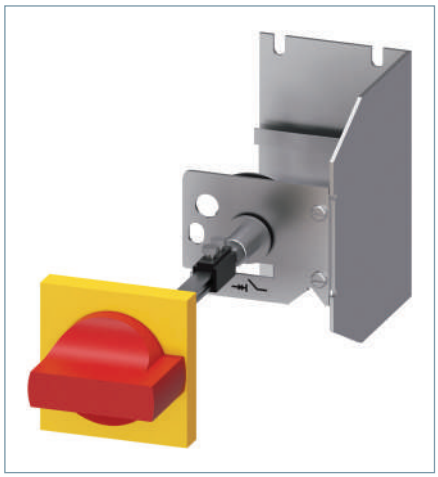

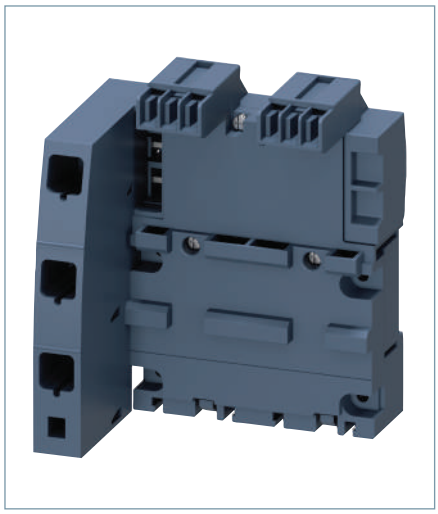

contents

Section Overview 1/2 - 1/3

Motor Starter Protectors
3RV20 MSP, Class 10/20 1/4 - 1/5

Circuit Breakers
3RV27, 3RV28 Circuit Breaker UL 489 1/6

Accessories
Auxiliary Switches 1/7
Auxiliary Releases 1/7
Busbars 1/8
Mounting Accessories 1/9 - 1/12
Rotary Operating Mechanisms 1/13
Enclosures & Front Plates 1/13
3RV29 Infeed System 1/14 - 1/17

General Data for Motor Starter Protectors
Manual Motor Starter Ratings 1/18
Group Installation Ratings 1/19
Combination Motor Controller Ratings 1/20
3RV27 and 3RV28 Circuit Breaker Ratings 1/21
Export Application Ratings 1/22 - 1/23
Rules for Mounting 1/24
Technical Data 1/25 - 1/28
Overview of MSP Functions & Applications 1/29
Application as a Combination Motor Controller 1/30
Application in DC Switching 1/31
Design 1/31
Characteristics 1/32
Circuit Diagrams 1/32
Dimensions 1/33 - 1/34

General Data for Accessories
Mountable Accessories
- Overview 1/35 - 1/36
- Circuit Diagrams 1/37 - 1/35
- Dimensions 1/38

Busbar Accessories
- Overview 1/39
- Dimensions 1/40 - 1/41

Operating Mechanisms
- Overview 1/42
- Circuit Diagrams 1/43
- Dimensions 1/43 - 1/44

Enclosures & Front Plates
- Overview 1/45
- Dimensions 1/46

Spring Terminal Infeed System
- Design 1/47
- Technical Data 1/47
- Dimensions 1/48

contents

SIRIUS 3RV motor starter protectors up to 100 A

Size S00, S0

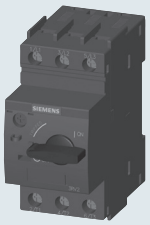

For motor protection CLASS 10

Selection and ordering data

Size	Rated Current	Page
S00	up to 16 A	1/4
S0	up to 40 A	1/4
S2	up to 65 A	1/5
S3	up to 100 A	1/5

For motor protection CLASS 20

Selection and ordering data

Size	Rated Current	Page
S2	up to 65 A	1/5
S3	up to 100 A	1/5

General data for SIRIUS motor starter protectors

	Page
Technical data	1/18
Overview	1/28
Characteristics	1/32
Circuit diagrams	1/32
Dimension drawings	1/33

Circuit Breakers 3RV27, 3RV28

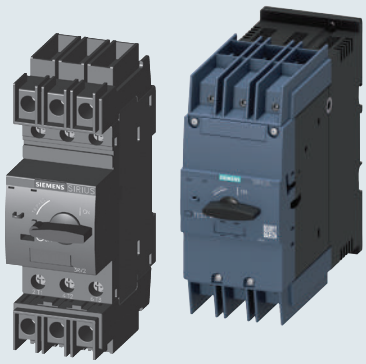

	Page
Selection and ordering data	1/6
Dimension drawings	1/34

SIRIUS 3RV29 infeed system

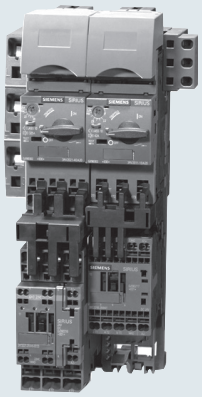

	Page
Selection and ordering data	1/16-1/17
Technical data	1/47
Overview	1/14-1/15
Dimension drawings	1/48

3RV MSP auxiliaries and accessories

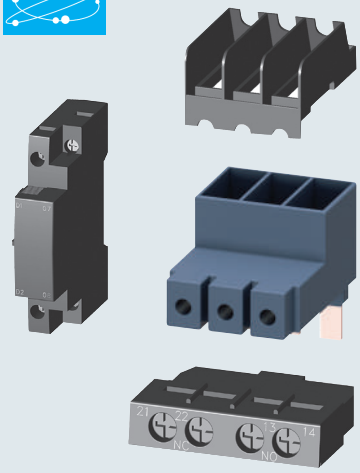

	Page
Selection and ordering data 1/7-1/8	
Technical data	1/27
Overview	1/35
Circuit diagrams	1/37
Dimension drawings	1/38

contents

3RV busbar and accessories

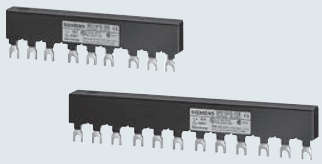

	Page
Selection and ordering data	1/8
Overview	1/39
Technical data	1/40

Accessories for motor starter protectors with Spring-Type terminals

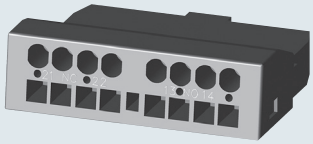

	Page
Selection and ordering data	1/7
Technical data	1/28

Mounting Accessories

	Page
Selection and ordering data	1/9 -1/12
Overview	1/36
Technical data	1/38

Rotary operating mechanisms

	Page
Selection and ordering data	1/13
Technical data	1/28
Overview	1/42
Circuit diagrams	1/43
Dimension drawings	1/43

Enclosures and front plates

	Page
Selection and ordering data	1/13
Overview	1/45
Dimension drawings	1/46

Description

The 3RV20x MSPs are UL approved as Self Protected Combination Motor Controllers which are also called Type E. In this application, all the required functions for a motor branch are provided in one device: disconnect, short circuit protection, motor control and overload protection. A type E terminal adaptor is required. The 3RV20x MSPs are also approved for use as follows:

– Manual Motor Controller: Motor starter, motor disconnect, control and overload—protection.
– Group Installation: Motor starter only, motor disconnect, control and overload protection.
– Tap conductor Protection in Group Installation acc. NEC: Motor starter only; motor disconnect, control and overload protection.

When the 3RV20x is used with one of the 3 above mentioned approvals, the 3RV20x can be installed downstream of one circuit breaker or fuse set.

For more detailed application information and rules how to apply, size and rate the 3RV20x in control panels in general, in group installations or in accordance to international IEC standards visit our website: www.usa.siemens.com/controlpaneldesign

Ordering Information

- ON/OFF rotary handle with lockout and visible trip indication.
- Adjustment dial for setting to motor FLA.
- Class 10 overload trip characteristics.
- Short circuit trip at 13 times the maximum setting of the FLA adjustment dial.
- Short circuit current rating:
- Ambient compensated up to 140° F (applies to side by side mounting).
- Phase loss sensitivity.
- Test trip function.
- Terminal versions: screw, spring, ring lug.
- Auxiliaries and Accessories see pages 1/7–1/17.
- General Information see pages 1/29–1/32.
- Technical Data see pages 1/18–1/28.
- Dimensions see page 1/33.

Note: **Select MSP by motor Full Load Amperes. Horsepower ratings are for reference only.**

Illustration	FLA Adjustment Range [A]	Single-Phase HP Ratings		Three-Phase HP Ratings[1]				Instantaneous short circuit release [A]	UL short-circuit breaking capacity @ 480V [kA]	**Size S00** [2) 4)] Order Number	**Size S0** [2) 4)] Order Number
		115V	230V	200V	230V	460V	**575V**				
	0.11-0.16	—	—	—	—	—	**—**	2.1	65	**3RV2011-0AA●●**	**—**
	0.14-0.2	—	—	—	—	—	**—**	2.6	65	**3RV2011-0BA●●**	**—**
	0.18-0.25	—	—	—	—	—	**—**	3.3	65	**3RV2011-0CA●●**	**—**
	0.22-0.32	—	—	—	—	—	**—**	4.2	65	**3RV2011-0DA●●**	**—**
	0.28-0.4	—	—	—	—	—	**—**	5.2	65	**3RV2011-0EA●●**	**—**
	0.35-0.5	—	—	—	—	—	**—**	6.5	65	**3RV2011-0FA●●**	**—**
	0.45-0.63	—	—	—	—	—	**—**	8.2	65	**3RV2011-0GA●●**	**3RV2021-0GA●●**
	0.55-0.8	—	—	—	—	½	**½**	10	65	**3RV2011-0HA●●**	**3RV2021-0HA●●**
	0.7-1	—	—	—	—	½	**½**	13	65	**3RV2011-0JA●●**	**3RV2021-0JA●●**
	0.9-1.25	—	—	—	—	¾	**¾**	16	65	**3RV2011-0KA●●**	**3RV2021-0KA●●**
	1.1-1.6	—	1/10	—	½	1	**1**	21	65	**3RV2011-1AA●●**	**3RV2021-1AA●●**
	1.4-2	—	⅙	—	½	1	**1 ½**	26	65	**3RV2011-1BA●●**	**3RV2021-1BA●●**
	1.8-2.5	1/10	¼	½	¾	1 ½	**2**	33	65	**3RV2011-1CA●●**	**3RV2021-1CA●●**
	2.2-3.2	⅛	⅓	¾	1	2	**3**	42	65	**3RV2011-1DA●●**	**3RV2021-1DA●●**
	2.8-4	⅙	½	1	1	3	**3**	52	65	**3RV2011-1EA●●**	**3RV2021-1EA●●**
	3.5-5	¼	½	1 ½	1 ½	3	**5**	65	65	**3RV2011-1FA●●**	**3RV2021-1FA●●**
	4.5-6.3	¼	¾	2	2	5	**5**	82	65	**3RV2011-1GA●●**	**3RV2021-1GA●●**
	5.5-8	⅓	1	2	3	5	**7 ½**	104	65	**3RV2011-1HA●●**	**3RV2021-1HA●●**
	7-10	½	1 ½	23	3	7 ½	**10**	130	65	**3RV2011-1JA●●**	**3RV2021-1JA●●**
	9-12.5	¾	2	3	5	7 ½	**10**	163	65	**3RV2011-1KA●●**	**3RV2021-1KA●●**
	10-16	1	2	5	5	10	**—**	208	65	**3RV2011-4AA●●**	**3RV2021-4AA●●**
	13-20	1 ½	3	7 ½	7 ½	15	**—**	260	65	**—**	**3RV2021-4BA●●**
	16-22	1 ½	3	7 ½	7 ½	15	**—**	286	65	**—**	**3RV2021-4CA●●**
	18-25	2	3	7 ½	7 ½	20	**—**	325	65	**—**	**3RV2021-4DA●●**
	23-28	2	5	7 ½	10	20	**—**	364	50	**—**	**3RV2021-4NA●●** [5)]
	27-32	2	5	10	10	20	**—**	400	50	**—**	**3RV2021-4EA●●** [5)]
	30-36 [3)]	3	5	10	10	25	**—**	432	12	**—**	**3RV2021-4PA●●** [6)]
	34-40 [3)]	3	7 ½	10	10	30	**—**	480	12	**—**	**3RV2021-4FA●●** [6)]
	9-12.5	½	1 ½	3	3	7 ½	**10**	163	30	**—**	**3RV2023-1KA●●** [7)]
	11-16	1	2	3	5	10	**10**	208	30	**—**	**3RV2023-4AA●●** [7)]
	14-20	1 ½	3	5	5	10	**15**	260	30	**—**	**3RV2023-4BA●●** [7)]
	17-22	1 ½	3	5	7 ½	15	**20**	286	30	**—**	**3RV2023-4CA●●** [7)]
	20-25	2	3	7 ½	7 ½	15	**20**	325	30	**—**	**3RV2023-4DA●●** [7)]

Screw terminals, no auxiliary: ●● = 10
Screw Terminals, with 1NO/1NC Aux:●● = 15
Spring terminals, no auxiliary: ●● = 20
Spring Terminals, with 1NO/1NC Aux: ●● = 25
Ring Lug Terminals, no Auxiliary: ●● = 40

1) Select motor starter protector by motor full load amps. Horsepower ratings for reference only.
2) The motor starter protectors rated up to 32 A can be used as manual motor controllers or as Type E combination motor controllers. For use as a Type E combination motor controller, a Type E terminal is required. See accessories page 1/10.
3) These products are NOT certified as Type E combination motor controllers. They can only be used as manual motor controllers.
4) 3RV2 MSPs can only be used with Innovations contactors and accessories
5) Available only with •• = 10, or •• = 15, or •• = 20
6) Available only with •• = 10, or •• = 15
7) Available only with •• = 10, or •• = 20

Description

The 3RV203/204 MSPs are UL approved as Self Protected Combination Motor Controllers which are also called Type E. In this application, all the required functions for a motor branch are provided in one device: disconnect, short circuit protection, motor control and overload protection. A type E terminal adaptor is required for all S2 frame 3RV2031 above 45A and all S2 frame 3RV2032 as well as for all S3 frame motor starter protectors.

The 3RV203/204 MSPs are also approved for use as follows:
– Manual Motor Controller: Motor starter, motor disconnect, control and overload protection.
– Group Installation: Motor starter only, motor disconnect, control and overload protection.
– Tap conductor Protection in Group Installation acc. NEC: Motor starter only; motor disconnect, control and overload protection.

When the 3RV203/204 is used with one of the 3 above mentioned approvals, they can be installed downstream of one circuit breaker or fuse set.

For more detailed application information and rules how to apply, size and rate these MSPs in control panels in general, in group installations or in accordance to international IEC standards visit our website: www.usa.siemens.com/controlpaneldesign

Ordering Information

- ON/OFF rotary handle with lockout and visible trip indication.
- Adjustment dial for setting to motor FLA.
- Class 10 overload trip characteristics.
- Short circuit trip at 13 times the maximum setting of the FLA adjustment dial.
- Short circuit current rating:
- Ambient compensated up to 140° F (applies to side by side mounting).
- Phase loss sensitivity.
- Test trip function.
- Auxiliaries and Accessories see pages 1/7–1/17.
- General Information see pages 1/29–1/32.
- Technical Data see pages 1/18–1/28.
- Dimensions see page 1/33.

Note: **Select MSP by motor Full Load Amperes. Horsepower ratings are for reference only.**

Illustration	FLA Adjustment Range [A]	Single Phase HP rating 1)		3 Phase HP Rating 1)				Inst. Short-Circuit Release [A]	UL AIC (480V) [kA] 6)	Trip Class 10 Order Number 4)	Trip Class 20 Order Number 4)
		115V	240V	200V	230V	460V	575V				
	3RV203 Frame Size S2										
	9.5 - 14	1.5	3	5	5	10	**15**	208	65	**3RV2031-4SA10**	**3RV2031-4SB10**
	12 - 17	1.5	3	5	7.5	15	**15**	260	65	**3RV2031-4TA10**	**3RV2031-4TB10**
	14 - 20	1.5	3	7.5	7.5	15	**20**	260	65	**3RV2031-4BA10**	**3RV2031-4BB10**
	18 - 25	2	5	7.5	10	20	**25**	325	65	**3RV2031-4DA10**	**3RV2031-4DB10**
	22 - 32	3	5	10	10	25	**30**	416	65	**3RV2031-4EA10**	**3RV2031-4EB10**
	28 - 36	3	7.5	15	15	30	**40**	520	65	**3RV2031-4PA10**	**3RV2031-4PB10**
	32 - 40	3	7.5	15	15	30	**40**	585	65	**3RV2031-4UA10**	**3RV2031-4UB10**
	35 - 45	3	10	15	15	40	**50**	650	65	**3RV2031-4VA10**	**3RV2031-4VB10**
	42 - 52	5	10	15	20	40	**50**	741	65	**3RV2031-4WA10**	**3RV2031-4WB10**
	49 - 59	5	15	20	25	50	**60**	845	30	**3RV2031-4XA10**	**3RV2031-4XB10**
	54 - 65	5	15	20	25	50	**60**	845	30	**3RV2031-4JA10**	**3RV2031-4JB10**
	62 - 73	7.5	15	25	30	60	**75**	949	20	**3RV2031-4KA10**	**3RV2031-4KB10**
	70 - 80	7.5	15	25	30	60	**75**	1040	20	**3RV2031-4RA10**	**3RV2031-4RB10**
	3RV204 Frame Size S3										
	28 - 40	3	7.5	15	15	30	**40**	520A	65	**3RV2041-4FA10**	**3RV2042-4FB10**
	36 - 50	5	10	15	20	40	**50**	650A	65	**3RV2041-4HA10**	**3RV2042-4HB10**
	45 - 63	5	15	20	25	50	**60**	819A	65	**3RV2041-4JA10**	**3RV2042-4JB10**
	57 - 75	7.5	15	25	25	60	**75**	975A	65	**3RV2041-4KA10**	**3RV2042-4KB10**
	65 - 84	7.5	15	25	30	60	**75**	1170A	65	**3RV2041-4RA10**	**3RV2042-4RB10**
	75 - 93	7.5	20	30	40	75	**100** 3)	1300A	65	**3RV2041-4YA10**	**3RV2042-4YB10**
	80 - 100	10	25	40	40	75	**100** 3)	1300A	65	**3RV2041-4MA10**	**3RV2042-4MB10**

1) Select motor starter protector by motor full load amps. Horsepower ratings for reference only.

2) Size S2 and S3 are listed as type E combination motor controllers. For required Type E terminals see page 1/10. 3RV2031 MSPs with a current setting limit of 45A or less do not require a type E terminal and fulfill the spacing requirements of UL508.

3) Shaded ratings apply for group installation only. These ratings do not apply as UL listed manual combination starters.

4) Pre-assembled motor starter protector and transverse auxiliary switch with 1NO + 1NC is available. Replace the last digit of the order no. with a "5".

5) 3RV1 MSPs can only be used with 3RT1 contactors and accessories. 3RV2 MSPs can only be used with 3RT2 contactors and accessories.

6) For 100kA SCCR rated MSPs, change the part number from 3RV2031 to 3RV2032. (applies to S2 frame only through 65A).

Refer to pages 1/18 to 1/20 when using an MSP in a Manual Motor Starter or a Manual Self-Protected Combination Motor Controller.

Selection and ordering data

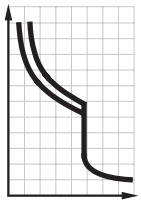

Rated Current[1] [A]	Thermal overload release (non-adjustable) [A]	Short Circuit breaking capacity [kA] 480 VAC	480Y/ 277VAC	600Y/ 347VAC	For Motor Protection[2] Instantaneous Over Current Release [A]	Order Number (Screw Terminals)	Weight [kg]	For Transformer Protection[3] Instantaneous Over Current Release [A]	Order Number (Screw Terminals)	Weight [kg]
Innovations Frame Size S00[4]										
0.16	0.16	—	65	10	2.1	**3RV2711-0AD10**	0.390	3.3	**3RV2811-0AD10**	0.390
0.2	0.2	—	65	10	2.6	**3RV2711-0BD10**	0.390	4.2	**3RV2811-0BD10**	0.390
0.25	0.25	—	65	10	3.3	**3RV2711-0CD10**	0.390	5.2	**3RV2811-0CD10**	0.390
0.32	0.32	—	65	10	4.2	**3RV2711-0DD10**	0.390	6.5	**3RV2811-0DD10**	0.390
0.4	0.4	—	65	10	5.2	**3RV2711-0ED10**	0.390	8.2	**3RV2811-0ED10**	0.390
0.5	0.5	—	65	10	6.5	**3RV2711-0FD10**	0.390	10	**3RV2811-0FD10**	0.390
0.63	0.63	—	65	10	8.2	**3RV2711-0GD10**	0.390	13	**3RV2811-0GD10**	0.400
0.8	0.8	—	65	10	10	**3RV2711-0HD10**	0.390	16	**3RV2811-0HD10**	0.450
1	1	—	65	10	13	**3RV2711-0JD10**	0.450	21	**3RV2811-0JD10**	0.450
1.25	1.25	—	65	10	16	**3RV2711-0KD10**	0.450	26	**3RV2811-0KD10**	0.460
1.6	1.6	—	65	10	21	**3RV2711-1AD10**	0.460	33	**3RV2811-1AD10**	0.460
2	2	—	65	10	26	**3RV2711-1BD10**	0.460	42	**3RV2811-1BD10**	0.460
2.5	2.5	—	65	10	33	**3RV2711-1CD10**	0.460	52	**3RV2811-1CD10**	0.460
3.2	3.2	—	65	10	42	**3RV2711-1DD10**	0.460	65	**3RV2811-1DD10**	0.460
4	4	—	65	10	52	**3RV2711-1ED10**	0.450	82	**3RV2811-1ED10**	0.460
5	5	—	65	10	65	**3RV2711-1FD10**	0.460	104	**3RV2811-1FD10**	0.460
6.3	6.3	—	65	10	82	**3RV2711-1GD10**	0.460	130	**3RV2811-1GD10**	0.460
8	8	—	65	10	104	**3RV2711-1HD10**	0.460	163	**3RV2811-1HD10**	0.460
10	10	—	65	10	130	**3RV2711-1JD10**	0.460	208	**3RV2811-1JD10**	0.460
12.5	12.5	—	65	10	163	**3RV2711-1KD10**	0.460	260	**3RV2811-1KD10**	0.460
15	15	—	65	—	208	**3RV2711-4AD10**	0.470	286	**3RV2811-4AD10**	0.470
Innovations Frame Size S0[4]										
20	20	—	50	—	260	**3RV2721-4BD10**	0.514	325	**3RV2821-4BD10**	0.516
22	22	—	50	—	286	**3RV2721-4CD10**	0.516	364	**3RV2821-4CD10**	0.528
Innovations Frame Size S3[5]										
10	10	65	—	20	150	**3RV2742-5AD10**	0.460	—	—	—
15	15	65	—	20	225	**3RV2742-5BD10**	0.460	—	—	—
20	20	65	—	20	260	**3RV2742-5CD10**	0.460	—	—	—
25	25	65	—	20	325	**3RV2742-5DD10**	0.460	—	—	—
30	30	65	—	20	390	**3RV2742-5ED10**	0.460	—	—	—
35	35	—	65	20	455	**3RV2742-5FD10**	0.460	—	—	—
40	40	—	65	20	520	**3RV2742-5GD10**	0.460	—	—	—
45	45	—	65	20	585	**3RV2742-5HD10**	0.460	—	—	—
50	50	—	65	20	650	**3RV2742-5JD10**	0.460	—	—	—
60	60	—	65	20	780	**3RV2742-5LD10**	0.460	—	—	—
70	70	—	65	10	910	**3RV2742-5QD10**	0.460	—	—	—

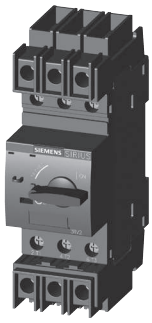

1) 100 % rated value acc. to UL 489 and IEC 60947-2 (100 % rated breaker).

2) Circuit breakers for system protection of motor and non-motor loads. Requires use of separate overload protection for motor applications.

3) Circuit breakers for system and transformer protection according to UL/CSA. Specially designed for transformers with high inrush current.

4) Transverse and lateral auxiliary switches can be ordered separately (see "Mountable accessories").

5) Transverse auxiliary switches must not be mounted. Lateral auxiliary switches can be ordered separately (see "Mountable accessories").

Refer to page 1/21 when using as upstream protection of a Manual Motor Controller or a Manual Motor Controller Suitable for Tap Conductor Protection in Group Installations.

Selection and ordering data

	Type	Version	Width	Innovations: Fits 3RV2 Frame Size	Innovations: Screw Connection Order No.
Auxiliary switches[3]			**mm**	**Innovations**	
3RV2901-1E	**Transverse auxiliary switches**	1 CO 1 NO + 1 NC 2 NO		S00, S0, S2, S3	**3RV2901-1D** 1), 2) **3RV2901-1E** 1) **3RV2901-1F**
3RV2901-1G	**Solid-state compatible, transverse auxiliary switches for use in dusty atmosphere** and in electronic circuits with low operating currents	1 CO		S00, S0, S2, S3	**3RV2901-1G**
3RV2901-1A	**Covering caps for transverse auxiliary switch slots** (pack of 10)			S00, S0, S2, S3	**3RV2901-0H**
	Lateral auxiliary switches (side mount) Width = 9 mm	1 NO + 1 NC 2 NO 2 NC 2 NO + 2 NC	9 9 9 18	S00, S0, S2, S3	1), 2) **3RV2901-1A** 1) **3RV2901-1B** 1) **3RV2901-1C** **3RV2901-1J**
Signaling switch[4]				**Innovations**	
3RV2921-1M	**Signaling switch** (side mount) Individual tripped and short-circuit signaling Width = 18 mm	1 NO + 1 NC each	18	S00, S0, S2, S3	1), 2) **3RV2921-1M**
Auxiliary releases [5]				**Innovations**	
3RV2902-1AB4	**Undervoltage releases** (side mount) Width = 18 mm	**DC** 24 V		S00, S0, S2, S3	**3RV2902-1AB4**
		AC 50 Hz / **AC 60 Hz** 24 V / — 110 V / 120 V — / 208 V 230 V / 240 V 400 V / 440 V 415 V / 480 V 500 V / 600 V		S00, S0, S2, S3	**3RV2902-1AB0** **3RV2902-1AF0** 1), 2) **3RV2902-1AM1** 1), 2) **3RV2902-1AP0** **3RV2902-1AV0** **3RV2902-1AV1** **3RV2902-1AS0**
	Undervoltage releases with leading auxiliary contacts 2 NO (side mount) Width = 18 mm	230 V / 240 V 400 V / 440 V 415 V / 480 V		S00, S0, S2, S3	1) **3RV2922-1CP0** 1) **3RV2922-1CV0** 1), 2) **3RV2922-1CV1**
		230 V / 240 V 400 V / 440 V 415 V / 480 V		S00, S0, S2, S3	1) **3RV2922-1CP0** 1) **3RV2922-1CV0** 1), 2) **3RV2922-1CV1**
	Shunt releases (side mount) Width = 18 mm	**AC 50/60 Hz 100% ON[6]** / **AC 50/60 Hz 5 sec ON[7]** 20-24 V / 20-70 V 90-110 V / 70-190 V 210-240 V / 190-330 V 350-415 V / 330-500 V 500 V / 500 V		S00, S0, S2, S3	1), 2) **3RV2902-1DB0** 1), 2) **3RV2902-1DF0** 1) **3RV2902-1DP0** **3RV2902-1DV0** **3RV2902-1DS0**

1) This product is also available with spring terminals. The order no. must be changed in the 8th position to a "2":e.g. 3RV1901-2E or 3RV2901-2E

2) This product is also available with ring lug terminals. The order no. must be changed in the 8th position to a "4": e.g. 3RV2901-4E

3) Each motor starter protector can be fitted with one transverse and one lateral auxiliary switch. The lateral auxiliary switch 2 NO + 2 NC is used without transverse auxiliary switch.

4) One signaling switch can be mounted at the left of the motor starter protector. This accessory cannot be used on the 3RV27 and 3RV28 circuit breakers.

5) One auxiliary release can be mounted at the right of each MSP. motor starter protector.

6) The response voltage at the lower limit of the voltage range at 0.85 (Tu=60°C) is valid for 100% (infinite)

7) The response voltage at the lower limit of the voltage range at 0.9 (Tu=60°C) applies for a duty cycle of 5 seconds at AC 50/60 Hz and DC.

Selection and ordering data

	Modular spacing	Number of motor starter protectors that can be connected: Without lateral accessories	Incl. lateral auxiliary switch	With auxiliary trip unit	Rated current I_n at 690 V	For motor starter protectors Size	Order No.	Order quantity	Weight approx.
	mm				A				kg
Three-phase busbar systems for Classic and Innovations[1]									
	For feeding several motor starter protectors with screw terminals, mounted side-by-side on standard mounting rails, insulated, with touch protection.								
3RV19 15-1AB	45[3]	2	--	--	63	S00, S0[2]	**3RV19 15-1AB**	1 unit	0.044
		3				S00, S0[2]	**3RV19 15-1BB**	1 unit	0.071
		4				S00, S0[2]	**3RV19 15-1CB**	1 unit	0.099
		5				S00, S0[2]	**3RV19 15-1DB**	1 unit	0.124
3RV19 15-1BB	55[4]	--	2	--	63	S00, S0[2]	**3RV19 15-2AB**	1 unit	0.048
		--	3			S00, S0[2]	**3RV19 15-2BB**	1 unit	0.079
		--	4			S00, S0[2]	**3RV19 15-2CB**	1 unit	0.111
		--	5			S00, S0[2]	**3RV19 15-2DB**	1 unit	0.140
3RV19 15-1CB		2	--	--	108	S2	**3RV19 35-1A**	1 unit	0.150
		3				S2	**3RV19 35-1B**	1 unit	0.214
		4				S2	**3RV19 35-1C**	1 unit	0.295
3RV19 15-1DB	63[5]	--	--	2	63	S00, S0[2]	**3RV19 15-3AB**	1 unit	0.052
				4		S00, S0[2]	**3RV19 15-3CB**	1 unit	0.120
	75[5]	--	2	2	108	S2	**3RV19 35-3A**	1 unit	0.161
			3	3		S2	**3RV19 35-3B**	1 unit	0.262
			4	4		S2	**3RV19 35-3C**	1 unit	0.369

1) Not suitable for 3RV21 motor starter protectors with overload relay function.
2) Approved for motor starter protectors size S0 with $I_n \leq 32$ A.
3) For 3RV2 motor starter protectors without accessories mounted on the side.
4) For 3RV2 motor starter protectors with auxiliary switches with 1 NO + 1 NC, 2 NO and 2 NC mounted on the left (9 mm wide).
5) For 3RV2 motor starter protectors with mounted accessories (18 mm wide). Auxiliary switches with 2 NO + 2 NC or signaling switch (mounted on the left) or with auxiliary release (mounted on the right).

	Version	Modular spacing	For motor starter protectors Size	Order No.	Order quantity	Weight approx.
		mm				kg
Connecting pieces for three-phase busbars				**For Innovations**		
3RV19 15-5DB	For connecting three-phase busbars for motor starter protectors of size S0 (left) to size S00 (right)	45	S00, S0	**3RV19 15-5DB**	1 unit	0.042

	Conductor cross-section, AWG cables, solid or stranded: For **3RV1** MSP	For **3RV2** MSP	Tightening torque	For motor starter protector size	**3RV2 Innovations[2]** Order No.
	AWG	AWG	Nm		
Three-phase feeder terminals					
3RV2925-5AB	**Connection from top**				
	—	10…4	3…4	S00	**3RV2925-5AB**
	—	10…4	3…4	S0	**3RV2925-5AB**
3RV2915-5B	**Connection from below[3]**				
	—	10…4	Input: 4, Output: 2 ... 2.5	S00, S0	**3RV2915-5B**
3RV2935-5A	**Connection from top**				
	14...0	--	4-6	S2	**3RV2935-5A**
Three-phase feeder terminals for constructing "Type E Starters"					**Innovations**
3RV2935-5E	**Connection from top**				
	—	10…4	3-4	S00	**3RV2925-5EB**
	—	10…4	3-4	S0	**3RV2925-5EB**
	8...0	10...2/0	4.5-6	S2	**3RV2935-5E**

1) Do not mix 3RV1 Classic Accessories with 3RV2 Innovations MSPs
2) Do not mix 3RV2 Innovations Accessories with 3RV1 Classic MSPs
3) This terminal is connected in place of a switch, please take the space requirement into account.

Overview

Accessories for "Self-Protected Combination Motor Controllers (Type E)" according to UL 508/UL 60947-4-1

The 3RV20 motor starter protectors with screw terminals are approved according to UL 508/UL 60947-4-1 as "Self-Protected Combination Motor Controllers (Type E)".

This requires increased clearance and creepage distances (1 inch and 2 inches respectively) at the input side of the device, which are achieved by mounting a terminal block or a phase barrier.

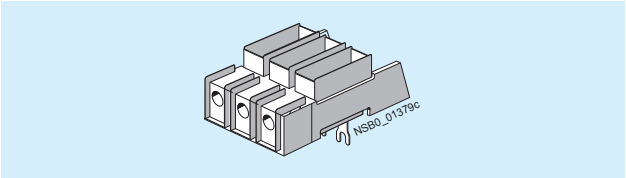

SIRIUS 3RV2928-1H terminal block

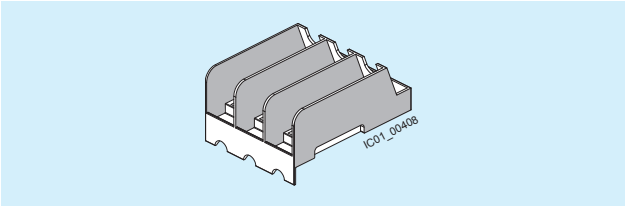

SIRIUS 3RV2938-1K phase barrier

Motor starter protectors/ circuit breakers	Size	Essential accessories for "Self-Protected Combination Motor Controllers (Type E)" according to UL 508/UL 60947-4-1
3RV201., 3RV202.	S00/S0	3RV2928-1H terminal block or 3RV2928-1K phase barrier
3RV2031-4B1., 3RV2031-4D.1., 3RV2031-4E1., 3RV2031-4P.1., 3RV2031-4S.1., 3RV2031-4T.1., 3RV2031-4U.1., 3RV2031-4V.1.	S2	--
3RV2031-4J.1., 3RV2031-4K.1., 3RV2031-4R.1., 3RV2031-4W.1., 3RV2031-4X.1., 3RV2032	S2	3RV2938-1K phase barrier
3RV204	S3	3RT2946-4GA07 terminal block

-- No accessories needed

Special threephase infeed terminals are required for constructing "Type E Starters" with an insulated threephase busbar system (see page 1/8).

The 3RV29 infeed system also enables the assembly of "Type E Starters", see page 1/14 onwards.

Note:

According to CSA, these terminal blocks and the phase barriers can be omitted when the device is used as a "Self-Protected Combination Motor Controller (Type E)".

Link modules

Feeders can be easily assembled from single devices with the help of the link modules. The following table shows the different combination options for devices with screw or spring-type terminals.

Combination devices	3RV2 motor starter protectors/ circuit breakers Size	3RT2 contactors; 3RW30, 3RW40 soft starters; 3RF34 solid-state contactors Size	Link modules Screw terminals	Link modules Spring-type terminals
Link modules for connecting switching devices to 3RV2 motor starter protectors/circuit breakers[1)]				
3RT2 contactors with AC or DC coil	S00	S00	3RA1921-1DA00	3RA2911-2AA00
	S0	S00		--
	S2	S2	3RA2931-1AA00	--
3RT2 contactors with AC coil	S0	S0	3RA2921-1AA00	3RA2921-2AA00
	S00	S0		--
3RT2 contactors with DC coil	S0	S0	3RA2921-1BA00	3RA2921-2AA00
	S00	S0		--
3RW30 soft starters	S00	S00	3RA2921-1BA00	3RA2911-2GA00
	S0	S00		--
3RW30/ 3RW40 soft starters	S0	S0	3RA2921-1BA00	3RA2921-2GA00
	S00	S0		--
	S2[2)]	S2[2)]	3RA2931-1AA00	--
3RF34 solid-state contactors	S00/S0	S00	3RA2921-1BA00	--
Hybrid link modules for connecting contactors with spring-type terminals to 3RV2 motor starter protectors/circuit breakers with screw terminals[3)]				
3RT2 contactors with AC or DC coil	S00	S00	3RA2911-2FA00	--
	S0	S0	3RA2921-2FA00	--

-- Version not possible

1) The link modules cannot be used for the 3RV2.21-4PA1., 3RV2.21-4FA1., 3RV2.31-4K.1., 3RV2.31-4R.1., 3RV2.32-4K.1., 3RV2.32-4R.1., 3RV27 and 3RV28 motor starter protectors/circuit breakers.

2) To assemble the feeder between a motor starter protector and a soft starter in size S2, the 3RA2932-1AC00 standard mounting rail adapter must be used.

3) The motor starter protector to contactor hybrid link modules cannot be used for the 3RV2.21-4PA1., 3RV2.21-4FA1., 3RV27 and 3RV28 motor starter protectors/circuit breakers. They are only suitable for constructing direct-on-line starters.

Note:

- Link modules can be used in
  - Sizes S00 and S0: up to max. 32 A
  - Size S2: up to max. 65 A
- Hybrid link modules can be used in
  - Sizes S00 and S0: up to max. 32 A

Selection and ordering data

Terminal blocks and phase barriers for "Self-Protected Combination Motor Controllers (Type E)" according to UL 508 / UL 60947-4-1

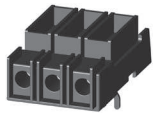
3RV29 28-1H

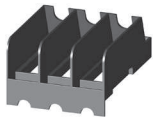
3RV29 28-1K

3RT1946-4GA07

Note:
UL 508 / UL 60947-4-1 demands 1-inch clearance and 2-inch creepage distance at line side for "Combination Motor Controller Type E".
The following terminal blocks or phase barriers must be used on 3RV motor starter protectors.
The terminal blocks or phase barriers cannot be used in combination with the 3RV19 .5 three-phase busbars.
For construction with three-phase busbars, see "Accessories for busbar"

Version	For motor starter protector size	Innovations 3RV2/3RT2 Order No.	Order Quantity
Terminal blocks type E			
For extended clearance and creepage distances (1 and 2 inch)	S00, S0	**3RV29 28-1H**	1 unit
	S0	**–**	1 unit
	S2	**3RV29 35-5E**	1 unit
	S3	**3RT2946-4GA07**	1 unit
Phase barriers			
For extended clearance and creepage distances (1 and 2 inch)	S00, S0	**3RV29 28-1K**	1 unit
	S2	**3RV29 38-1K**	1 unit

Link modules for motor starter protector to contactor [1]

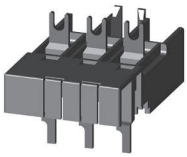
3RA29 21-1AA00

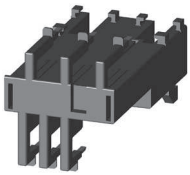
3RA29 11-2AA00

Actuating voltage of contactor	Size 3RT contactor	3RV motor starter protector	Innovations 3RV2/3RT2 Order No.	Order Quantity
For mechanical and electrical connection between motor starter protector and contactor with screw terminals.			**Screw Terminals**	
Single-unit packaging				
AC/DC	S00	S00/S0	**3RA19 21-1DA00**	1 unit
AC	S0	S00/S0	**3RA29 21-1AA00**	1 unit
AC	S2	S2	**3RA29 31-1AA00**	1 unit
AC	S3	S3	**3RA19 41-1AA00**	1 unit
DC	S0	S00/S0	**3RA29 21-1BA00**	1 unit
DC	S2	S2	**3RA29 31-1AA00**	1 unit
DC	S3	S3	**3RA19 41-1AA00**	1 unit
Multi-unit packaging				
AC/DC	S00	S00/S0	**3RA19 21-1D**	10 units
AC	S0	S00/S0	**3RA29 21-1A**	10 units
DC	S0	S00/S0	**3RA29 21-1B**	10 units
AC/DC	S2	S2	**3RA29 31-1A**	5 units
AC/DC	S3	S3	**3RA19 41-1A**	5 units
For mechanical and electrical connection between motor starter protector and contactor with spring-type terminals.			**Spring-type Terminals**	
Single-unit packaging				
AC/DC	S00	S00	**3RA29 11-2AA00**	1 unit
AC [2]	S0	S0	**3RA29 21-2AA00**	1 unit
DC	S0	S0	**3RA29 21-2AA00**	1 unit
Multi-unit packaging				
AC/DC	S00	S00	**3RA29 11-2A**	10 units
AC [2]	S0	S0	**3RA29 21-2A**	10 units
DC	S0	S0	**3RA29 21-2A**	10 units
Spacers				
For compensating height on AC contactors				
Single-unit packaging	S0	S0	**3RA29 11-1CA00**	1 unit
Multi-unit packaging	S0	S0	**3RA29 11-1C**	5 units

1) The link modules for motor starter protector to contactor cannot be used for the 3RV2. 21-4PA1., 3RV2. 21-4FA1., 3RV27 and 3RV28 motor starter protectors

2) A spacer for height compensation on AC contactors size S0 is optionally available

Note
Size S0 link modules can be used up to max. 32 A.
Size S2 link modules can be used up to 65A max.

Selection and ordering data

Link modules for motor starter protector to soft starter[1) 3)] and motor starter protector to solid-state contactor

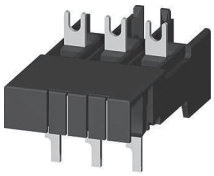
3RA29 21-1BA00

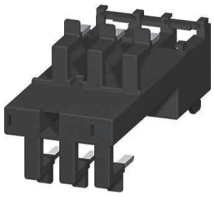
3RA29 21-2GA00

Size: 3RW30, 3RW40 soft starters; 3RF34 solid-state contactors	Size: 3RV2 motor starter protectors	Order No.	PU (UNIT, SET, M)	PS*	Weight approx. kg
Connection between motor starter protector and soft starter / solid-state contactor with screw terminals		**Screw terminals**			
Single-unit packaging					
S00	S00/S0	**3RA29 21-1BA00**	1	1 unit	0.068
S0	S00/S0	**3RA29 21-1BA00**	1	1 unit	0.068
S2[3)]	S2	**3RA29 31-1AA00**	1	1 unit	0.104
S3[4)]	S3	**3RA19 41-1A**	1	1 unit	0.104
Multi-unit packaging					
S00	S00/S0	**3RA29 21-1B**	1	10 units	0.068
S0	S00/S0	**3RA29 21-1B**	1	10 units	0.068
S2[3)]	S2	**3RA29 31-1A**	1	5 units	0.104
S3[4)]	S2	**3RA19 41-1A**	1	5 units	0.104
Connection between motor starter protector and soft starter with spring-type terminals		**Spring-type terminals**			
Single-unit packaging					
S00	S00	**3RA29 11-2GA00**	1	1 unit	0.038
S0	S0	**3RA29 21-2GA00**	1	1 unit	0.072
Multi-unit packaging					
S00	S00	**3RA29 11-2G**	1	10 units	0.380
S0	S0	**3RA29 21-2G**	1	10 units	0.720

1) The link modules for motor starter protector to soft starter and for motor starter protector to solid-state contactor cannot be used for the 3RV2. 21-4PA1., 3RV2. 21-4FA1., 3RV27 and 3RV28 motor starter protectors.

Note:
S0 link modules can be used up to max. 32 A.
S2 link modules can be used up to max. 65 A.

Hybrid link modules for motor starter protector to contactor[1)]

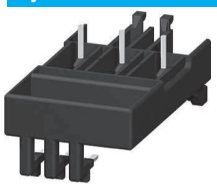
3RA29 11-2FA00

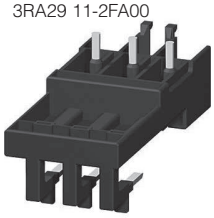
3RA29 21-2FA00

Actuating voltage of contactor	Size: 3RT2 contactors	Size: 3RV2 motor starter protectors	Order No.	PU (UNIT, SET, M)	PS*	Weight approx. kg
For mechanical and electrical connection between motor starter protector with screw terminals and contactor with spring-type terminals						
Single-unit packaging						
AC/DC	S00	S00	**3RA29 11-2FA00**	1	1 unit	0.029
AC[2)]/DC	S0	S0	**3RA29 21-2FA00**	1	1 unit	0.056
Multi-unit packaging						
AC/DC	S00	S00	**3RA29 11-2F**	1	10 units	0.290
AC[2)]/DC	S0	S0	**3RA29 21-2F**	1	10 units	0.560
Spacers[2)] for compensating the height on AC contactors						
Single-unit packaging	S0	S0	**3RA29 11-1CA00**	1	1 unit	0.001
Multi-unit packaging	S0	S0	**3RA29 11-1C**	1	5 units	0.001

1) The hybrid link modules for motor starter protector to contactor cannot be used for the 3RV2. 21-4PA1., 3RV2. 21-4FA1., 3RV27 and 3RV28 motor starter protectors or reversing starters.

2) A spacer for height compensation on AC contactors size S0 is optionally available. See 3RA2911-1CA00

3) To assemble the starter between a motor starter protector and a soft starter in size S2, the 3RA2932-1AC00 standard mounting rail adapter must be used.

4) It is only permissible to assemble the feeder between the motor starter protector and the soft starter in Size S3 on a mounting plate.

Note:
Hybrid link modules can be used up to max. 32 A.

Selection and ordering data

	Type	Design	For SIRIUS MSP size	Order No.	Order Quantity	Weight approx. (kg)
Isolator module [1]						
3RV2938-1A without padlock, 3RV29 28-1A without padlock 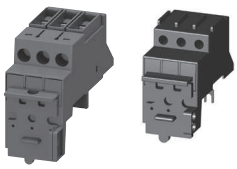		Visible isolating distance for isolating individual motor starter protectors from the network, lockable in isolating position.	S00, S0	**3RV29 28-1A**	1 unit	0.132
			S2 [1]	**3RV29 38-1A**	1 unit	0.368
Auxiliary terminal, 3 pole						
3RT19 46-4F		For connection of auxiliary and control cables to the main conductor connections	S3	**3RT29 46-4F**	1 unit	0.10
Covers						
3RV1 (size S3) with 3RT19 46-4EA1	**Terminal cover** for box terminals	Additional touch guard to be fitted at the box terminals (2 units can be mounted per MSP)	S2	**3RT29 36-4EA2**	1 unit	0.014
			S3	**3RT29 46-4EA2**	1 unit	0.019
3RV29 28-4AA00 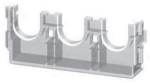	**Terminal cover** for cable lug and bar connection	For maintaining the required voltage clearance and as protection against the equipment being touched if distant box terminals are used (2 units can be mounted per MSP)	S3	**3RT19 46-4EA1**	1 unit	0.03
3RV29 08-4AA10	**Terminal cover** for devices with ring lug terminal connection	• Main current level	S00, S0 [2]	**3RV29 28-4AA00**	1 unit	0.01
		• For transverse auxiliary switches	S00, S0 [2]	**3RV29 08-4AA10**	1 unit	0.01
3RV29 08-0P	**Scale cover**	For covering the current setting scale. Packing unit: Bag with 10 scale covers.	S00, S0, S2 [3]	**3RV29 08-0P**	10 units	
			S3	**3RV19 08-0P**	10 units	
Fixing Material						
3RB1900-0B	**Push-in lugs** For screwing the motor starter protector onto mounting plates.	Two units are required for each motor starter protector.	S00	**3RB19 00-0B**	10 units	0.10
Tools for opening spring-type terminals by hand						
3RA29 08-1A	**Screwdriver** For all SIRIUS devices with spring terminals	Length approx. 200 mm, 3.0 mm x 0.5 mm, titanium gray/black partially insulated	S00, S0, S2	**3RA29 08-1A**	1 unit	0.045

1) The isolator module for size S2 can be used only with 3RV2 motor starter protectors/circuit breakers up to max. 65 A. Similarly, it cannot be used with the transverse auxiliary switch or three-phase busbars.

2) Compatible with 3RV20 motor starter protectors.

3) Compatible with 3RV20, 3RV21, and 3RV24 motor starter protectors.

Selection and ordering data

Door-coupling rotary operating mechanisms for Classic and Innovations

3RV29 26-0B

The door-coupling rotary operating mechanisms consist of a knob, a coupling driver and a 130/330 mm long extension shaft (6 mm x 6 mm). The door-coupling rotary operating mechanisms are designed to degree of protection IP64. The door locking device prevents accidental opening of the control cabinet door in the ON postion of the motor starter protector. The OFF position can be locked with up to 3 padlocks.

Type	Details	For SIRIUS MSP size	Order No.	Approx. Wt. (kg)
Door-coupling rotary operating mechanisms (black)	Extension shaft 130 mm	S00, S0	**3RV29 26-0B**	0.111
		S2, S3	**3RV29 26-0B**	0.1
	Extension shaft 330 mm	S00, S0	**3RV29 26-0K**	0.324
		S2, S3	**3RV29 26-0K**	0.3
EMERGENCY STOP door-coupling rotary operating mechanisms (red/yellow)	Extension shaft 130 mm	S00, S0	**3RV29 26-0C**	0.110
		S2, S3	**3RV29 26-0C**	0.1
	Extension shaft 330 mm	S00, S0	**3RV29 26-0L**	0.316
		S2, S3	**3RV29 26-0L**	0.3

Door-coupling rotary operating mechanisms for arduous conditions

3RV29 26-2C

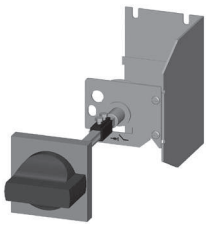

The door-coupling rotary operating mechanisms consist of a knob, a coupling driver, an extension shaft of 300 mm length (8 mm x 8 mm), a spacer and two metal brackets, into which the MSP is inserted. The door-coupling rotary operating mechanisms are designed for degree of protection IP65. The door locking device reliably prevents accidental opening of the control cabinet door in the ON position of the MSP. The OFF postion can be locked with up to 3 padlocks. Laterally mountable auxiliary releases and two-pole auxiliary switches can be used. The door-coupling rotary operating mechanisms thus meet the requirements for isolating functions according to IEC 60 947-2.

Type	For SIRIUS MSP size	Order No.	Approx. Wt. (kg)
Door-coupling rotary operating mechanisms (gray)	S00, S0	**3RV29 26-2B**	1.2
	S2	**3RV29 36-2B**	1.6
	S3	**3RV29 46-2B**	1.7
EMERGNCY STOP door-coupling rotary operating mechanisms (red/yellow)	S00, S0	**3RV29 26-2C**	1.2
	S2	**3RV29 36-2C**	1.5
	S3	**3RV29 46-2C**	1.7

Enclosures and front plates
No UL/CSA certification

Front Plates

3RV19 23-4B
+ 3RV19 23-4G

Type	Details	For SIRIUS MSP size	Order No.	Approx. Wt. (kg)
Molded-plastic front plate with rotary operating mechanism, lockable. For actuation of 3RV motor starter protectors in any enclosure	For actuation of 3RV MSPs in any enclosure, degree of protection IP55 (front plate)	S00, S0 S2, S3	**3RV19 23-4B**	0.08
Molded-plastic front plate with EMERGENCY STOP door-coupling rotary operating mechanisms (red/yellow)	EMERGENCY-STOP operation of 3RV MSPs in any enclosure, degree of protection IP55	S00, S0 S2, S3	**3RV19 23-4E**	0.08
Holders for front plates	Holder is mounted on front plate, MSP size S00 or S0 with or without accessories is snapped in	S00, S0	**3RV19 23-4G**	0.19

Enclosures for wall mounting [2]

3RV19 23-1CA00

3RV19 23-1DA01

Type	Details	For SIRIUS MSP size	Order No.	Approx. Wt. (kg)
Molded-plastic enclosure for wall mounting with rotary operating mechanism, lockable, with metric cable gland	Degree of protection IP55, with N and PE terminals, lockable in 0 position **overall width:**			
	54 mm (for switch + lateral auxiliary switch)	S00, S0	**3RV19 23-1CA00**	0.26
	72 mm (for switch + lateral auxiliary switch + auxiliary release)	S00, S0	**3RV19 23-1DA00**	0.30
Cast aluminum surface-mount enclosure with rotary operating mechanism, lockable, with metric cable gland	Degree of protection IP65, with PE terminals,[1] lockable in 0 position **overall width:**			
	72 mm (for MSP + lateral auxiliary switch + auxiliary release)	S00, S0	**3RV19 23-1DA01**	1.02
Cast aluminum surface-mount enclosure with EMERGENCY-OFF rotary operating mechanism, red/yellow, lockable, with metric cable gland	Degree of protection IP65, with PE terminals,[1] lockable in 0 position **overall width:**			
	72 mm (for MSP + lateral auxiliary switch + auxiliary release)	S00, S0	**3RV19 23-1GA01**	1.01

1) If required, an additional N terminal can be mounted (e.g. 8WA10 11-1BG11).

2) For S2 versions, see 3RV1933-1DA00 (black) or 3RV1933-1GA00 (red/yellow)

Overview

The 3RV29 infeed system is a convenient means of energy supply and distribution for a group of several motor starter protectors or complete motor starters with a screw or springtype connection in sizes S00 and S0 (exception: this system cannot be used for the 3RV21).

Siemens now has UL/CSA approvals for using the 3RV27 and 3RV28 UL489 Circuit Breakers with the 3RV2917 Infeed System and with the 3RV1915 comb-busbars. Up until now it was limited to standard 3RV20 MSPs. These new approvals will greatly enhance application flexibility for customers. Not only can they use the bus systems to feed motor loads, they can now feed non-motor loads which should allow the bus systems to feed complete control panel applications. Customers will need to remove the line side terminals on any 3RV27 or 28s that will be fed by the bus system.

The 3RV29 infeed system is approved in accordance with IEC to 500V. It is also UL approved and authorized for “Self-Protected Combination Motor Controller” (Type E starter) as well as for Type F starter (Type E starter + contactor). The system is based on a basic module complete with a lateral incoming unit (three-phase busbar with infeed). This infeed with spring-type terminals is mounted on the right or left depending on the version and can be supplied with a maximum conductor cross section of 4 AWG (with end sleeve).

A basic module has two sockets onto each of which a motor starter protector can be snapped.

Expansion modules are available for extending the system (three-phase busbars for system expansion). The individual modules are connected through an expansion plug.

The electrical connection between the three-phase busbars and the motor starter protectors is implemented through plug-in connectors. The complete system can be mounted on a TH 35 standard mounting rail to EN 60715 and can be expanded as required up to a maximum current carrying capacity of 63 A. The system is mounted extremely quickly and easily thanks to the simple plug-in technique. Thanks to the lateral infeed, the system also saves space in the control cabinet. The additional overall height required for the infeed unit is only 30 mm. The alternative infeed possibilities on each side offer a high degree of flexibility for configuring the control cabinet: Infeed on left-hand or right-hand side as well as infeed on one side and outfeed on the other side to supply further loads are all possible.

A terminal block with spring-type connections in combination with a standard mounting rail enables the integration of not only SIRIUS motor starter protectors but also single-phase, 2-phase and 3-phase components such as 5SY miniature circuit breakers or SIRIUS relay components.

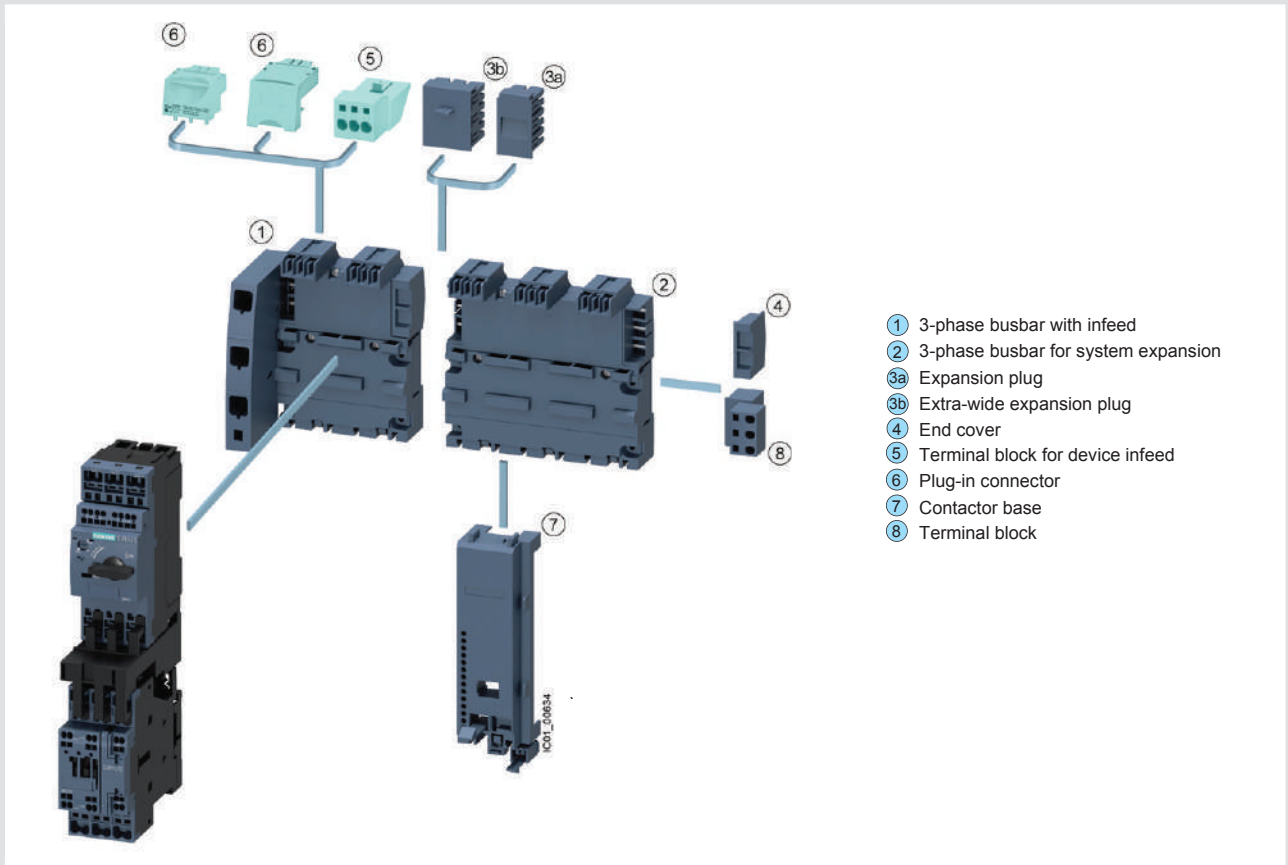

3RV29 infeed system

① *Three-phase busbars with infeed*

A three-phase busbar with infeed unit is required for connecting the energy supply. This module comprises one infeed module and 2 sockets which each accept one motor starter protector. A choice of two versions with infeed on the left or right is available. The infeed is connected using spring-type terminals. The spring-type terminals permit conductor cross-sections of up to 25 mm^2 with end sleeves. An end cover is supplied with each module.

② *Three-phase busbars for system expansion*

The three-phase busbars for system expansion allow the system to be expanded. There is a choice of modules with 2 or 3 sockets. The system can be expanded as required up to a maximum current carrying capacity of 63 A. An expansion plug is supplied with each module.

③a *Expansion plug*

The expansion plug is used for electrical connection of adjacent three-phase busbars. The current carrying capacity of this plug equals 63 A. One expansion plug is supplied with each three-phase busbar for system expansion. Additional expansion plugs are therefore only required as spare parts.

③b *Extra-wide expansion plug*

The wide expansion plug makes the electrical connection between two three-phase busbars, thus performing the same function as the 3RV29 17-5BA00 expansion plug; the electrical characteristics (e.g. a current carrying capacity of 63 A) are identical.

The 3RV29 17-5E expansion plug is 10 mm wider than the 3RV29 17-5BA00 expansion plug, hence in the plugged state there is a distance of 10 mm between the connected three-phase busbars. This distance can be used to lay the auxiliary current and control current wiring ("wiring duct"). The motor starter protector and contactor can be wired from underneath, which means that the complete cable duct above the system can be omitted.

④ *End cover*

The end cover is used to cover the three-phase busbar at the open end of the system. This cover is therefore only required once for each system. An end cover is supplied with each three-phase busbar system with infeed. Further end covers are therefore only required as spare parts.

⑤ *Terminal block for device infeed*

A new addition to the system is a connector for outfeeding to a device slot within a module. This offers the option not only of connecting three-phase loads to the system, but also of integrating single-phase loads into the infeed system.

⑥ *Plug-in connector*

The plug-in connector is used for the electrical connection between the three-phase busbar and the 3RV2 motor starter protector. These plug-in connectors are available in versions for screw or spring-type terminals.

⑦ *Contactor base*

Motor starters can be assembled in the system using the contactor base. The contactor bases are suitable for contactors sizes S00 and S0 with spring-type and screw terminals and are simply snapped onto the three-phase busbars. Direct-on-line starters and reversing starters are possible. One contactor base is required for direct-on-line starters and two are required for reversing starters.

To assemble motor starters for reversing starters, the contactor bases can be arranged alongside each other (90 mm overall width). In this case the mechanical interlocking of the contactors is possible. The contactor bases are also suitable for soft starters size S00 and S0 with screw connection.

The infeed system is designed for mounting on a 35 mm standard mounting rail with 7.5 mm overall depth. This standard mounting rail gives the contactor base a stable mounting surface to sit on. If standard mounting rails with a depth of 15 mm are used, the spacer connected to the bottom of the contactor base must be knocked out and plugged into the mating piece that is also on the underside. Then the contactor base also has a stable mounting surface. When standard mounting rails with a depth of 7.5 mm are used, the spacer has no function and can be removed.

The link modules are used for direct start motor starters, in which case the use of a contactor base is not absolutely necessary. Motor starter protector and contactor assemblies can then be directly snapped onto the sockets of the three-phase busbars. For starters of size S00 and S0, the corresponding 3RA19 21-1...., 3RA29 11-2...., 3RA29 21-1.... or 3RA29 21-2.... link modules should generally be used.

⑧ *Terminal block*

The 3RV29 17-5D terminal block enables the integration of not only SIRIUS motor starter protectors but also single-phase, 2-phase and 3-phase components. Using the terminal block the 3 phases can be fed out of the system; which means that single-phase loads can also be integrated in the system. The terminal block is plugged into the slot of the expansion plug and thus enables outfeeding from the middle or end of the infeed system. The terminal block can be rotated through 180° and be locked to the support modules of the infeed system. The 3RV19 17-7B 45 mm standard mounting rail for screwing onto the support plate is available in addition in order to be able to plug the single-phase, 2-phase and 3-phase components onto the infeed system.

Selection and ordering data

	Type	Version	For 3RV20, 3RV23, 3RV24, 3RV27, 3RV28, motor starter protectors Size	Order No.	Standard Pack Quantity	Weight approx. kg
Three-phase busbars with infeed						
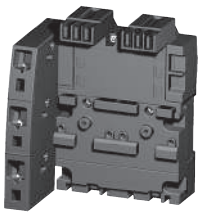 3RV29 17-1A	**3-phase busbars with infeed** incl. end cover 3RV29 17-6A	For 2 motor starter protectors with screw connection or spring-type terminals				
		• With infeed on the left	S00, S0	**3RV29 17-1A**	1 unit	0.369
		• With infeed on the right	S00, S0	**3RV29 17-1E**	1 unit	0.369
Three-phase busbars for system expansion						
 3RV29 17-4A	**Three-phase busbars** incl. 3RV29 17-5BA00 expansion plug	For motor starter protectors with screw connection or spring-type terminals				
		• For 2 motor starter protectors	S00, S0	**3RV29 17-4A**	1 unit	0.229
		• For 3 motor starter protectors	S00, S0	**3RV29 17-4B**	1 unit	0.328
Plug-in connectors						
 3RV29 17-5AA00	**Plug-in connectors** to make contact with the 3RV2 motor starter protectors	• For spring-type terminals		**Spring-type terminals**		
		- Single-unit packaging	S00[1)] S0[2)]	**3RV29 17-5AA00** **3RV29 27-5AA00**	1 unit 1 unit	0.046 0.059
		- Multi-unit packaging	S00[1)] S0[2)]	**3RV29 17-5A** **3RV29 27-5A**	10 units 10 units	0.046 0.059
 3RV29 17-5CA00		• For screw terminals		**Screw terminals**		
		- Single-unit packaging	S00[1)] S0[2)]	**3RV29 17-5CA00** **3RV19 27-5AA00**	1 unit 1 unit	0.029 0.040
		- Multi-unit packaging	S00[1)] S0[2)]	**3RV29 17-5C** **3RV19 27-5A**	10 units 10 units	0.029 0.036

	Type	Version	For contactors Size	Order No.	Standard Pack Quantity	Weight approx. kg
Contactor bases						
 3RV29 27-7AA00	**Contactor bases** for mounting direct-on-line or reversing starters	Single-unit packaging	S00	**3RV29 17-7AA00**	1 unit	0.042
			S00, S0	**3RV29 27-7AA00**	1 unit	0.050

1) I > 14 A, note derating; see the system manual "SIRIUS Innovations", Chapter "Motor Starter Protectors".

2) I > 16 A, note derating; see the system manual "SIRIUS Innovations", Chapter "Motor Starter Protectors".

3RV29 infeed system

	Type	Version	Order No.	Standard Pack Quantity	Weight approx. kg
Terminal blocks					
3RV29 17-5D	**Terminal blocks** For integration of single-phase, two-phase and three-phase components	Single-unit packaging	**3RV29 17-5D**	1 unit	0.049
45 mm standard mounting rails					
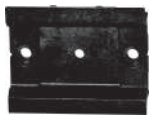 3RV19 17-7B	**45 mm standard mounting rails** for mounting onto bus bar adapters	Single-unit packaging	**3RV19 17-7B**	1 unit	0.261
Extra-wide expansion plugs					
3RV29 17-5E	**Extra-wide expansion plugs as accessory**	Single-unit packaging	**3RV29 17-5E**	1 unit	0.037
Expansion plugs					
3RV29 17-5BA00	**Expansion plugs**[1] as spare part	Single-unit packaging	**3RV29 17-5BA00**	1 unit	0.026
End covers					
3RV29 17-6A	**End covers**[2] as spare part	Multi-unit packaging	**3RV29 17-6A**	10 units	0.005
Terminal blocks for device infeed					
3RV2917-5FA00	**Terminal blocks for** [2] **device infeed**	Single-unit packaging	**3RV2917-5FA00**	1 units	0.010

[1] The expansion plug is included in the scope of supply of the 3RV29 17-4 three-phase busbars for system expansion.

[2] The end cover is included in the scope of supply of the 3RV29 17-1 three-phase busbars with infeed system.

Permissible rated data of devices approved for North America (UL/CSA)

Motor starter protectors of the 3RV2 series are approved for UL/CSA, and according to UL508/UL 60947-4-1 and CSA C22.2 No. 14/CSA C22.2 No. 60947-4-1 they can be used on their own or as load feeders in combination with a contactor.

These motor starter protectors can be used as "Manual Motor Controllers" for "Group Installations", as "Manual Motor Controllers Suitable for Tap Conductor Protection in Group Installations" and as "Self-Protected Combination Motor Controllers" (Type E).

3RV motor starter protectors as "Manual Motor Controllers"

If used as a "Manual Motor Controller", the motor starter protector is always operated in combination with an upstream short-circuit protection device. Approved fuses or a circuit breaker according to UL 489/CSA C22.2 No. 5 can be used. These devices must be dimensioned according to the National Electrical Code (UL) or Canadian Electrical Code (CSA).

Approval of the 3RV as a Manual Motor Controller can be found under the following file numbers:

- UL File No. 47705, CCN: NLRV,
- CSA Master Contract 165071, Product Class: 3211 05.

Motor starter protectors		hp rating[1] for FLA[2] max.		Rated current I_n	240 V AC UL/CSA I_{bc}[3]		480 V AC UL/CSA I_{bc}[3]		600 V AC UL/CSA I_{bc}[3]	
Type	V	1-phase	3-phase	A	kA		kA		kA	
Size S00										
3RV2011, 3RV2111, 3RV2311, 3RV2411				0.16 ... 2	65		65		30	
				2.5	65		65		30	
FLA[2] max.	115	1	2	3.2	65		65		30	
16 A,480 V	200	2	3	4	65		65		30	
12.5 A, 600 V	230	2	5	5	65		65		30	
	460	--	10	6.3	65		65		30	
	575/600	--	10	8	65		65		30	
				10	65		65		30	
				12.5	65		65		30	
				16	65		65		—	
Size S0										
3RV2021, 3RV2121, 3RV2321, 3RV2421				0.16 ... 12.5	65		65		30	
				16 ... 25	65		65		--/(30)[4]	
FLA[2] max.	115	3	5	28, 32	65		50		--	
40 A, 480 V	200	5	10	36, 40	65		12		--	
	230	7 1/2	10							
	460	--	30							
	575/600	--	--							
Size S2					**3RV2031**	**3RV2032**	**3RV2031**	**3RV2032**	**3RV2031**	**3RV2032**
				14	65	100	65	100	25	25
3RV2031, 3RV2131, 3RV2331, 3RV2032, 3RV2332				17	65	100	65	100	25	25
				20	65	100	65	100	25	25
FLA [2] MAX. 65A	115/120	5	10	25	65	100	65	100	25	25
600V	200/208	10	20	32	65	100	65	100	25	25
NEMA size 2	230/240	15	25	36	65	100	65	100	25	25
	460/480	—	50	40	65	100	65	100	22	22
	575/600	—	60	45	65	100	65	100	22	22
				52	65	100	65	100	22	22
	a) with max 225A Class J fuse			59	65 [a]	100 [a]	65 [a]	100 [a]	20 [a]	25 [a]
	b) with max 250A Class J fuse			65	65 [b]	100 [b]	65 [b]	100 [b]	20 [b]	25 [b]
Size S3										
3RV20 41/3RV20 42, 3RV21 42, 3RV23 41/3RV23 42				16	65		65		30	
				20	65		65		30	
FLA[2] max. 99 A,	115	7 1/2	--	25	65		65		30	
600 V	200	20	30	32	65		65		30	
NEMA size 3	230	20	40	40	65		65		30	
	460	--	75	50	65		65		30	
	575/600	--	100	63	65		65		30	
				75	65		65		30	
				90	65		65		10	
				100	65		65		10	

[1] HP rating = Power rating in horse power (maximum motor rating).
[2] FLA = Full Load Amps/Motor full load current.
[3] Corresponds to "short-circuit breaking capacity" according to UL/CSA.
[4] The values in brackets only apply to 3RV2.23 motor starter protectors.

3RV motor starter protectors as "Manual Motor Controllers Suitable for Tap Conductor Protection in Group Installations"

The application as "Manual Motor Controllers Suitable for Tap Conductor Protection in Group Installations" is only available from UL.
CSA does not recognize this approval! When the motor starter protector is used as a "Manual Motor Controller Suitable for Tap Conductor Protection in Group Installations", it must always be combined with upstream short-circuit protection. As short-circuit-protection device, approved fuses or a motor starter protector according to UL 489 can be used.
These devices must be dimensioned according to the National Electrical Code.

The 3RV motor starter protectors are approved as "Manual Motor Controllers Suitable for Tap Conductor Protection in Group Installations" under the following file number:

- UL File No. 47705, CCN: NLRV.

Motor starter protectors		hp rating[1] for FLA[2] max.		Rated current I_n	240 V AC UL I_{bc}[3]		Up to 480Y/277V AC UL I_{bc}[3]		Up to 600Y/347V AC UL I_{bc}[3]	
Type	V	1-phase	3-phase	A	kA		kA		kA	
Size S00										
3RV20 11				0.16 ... 0.8	65		65		30	
				1	65		65		30	
FLA[2] max.16 A, 480 Y / 277 V	115/120	1	2	1.25	65		65		30	
	200/208	2	3							
NEMA size 0	230/240	2	5	2	65		65		30	
	460/480	--	10	2.5	65		65		30	
	575/600	--	10	3.2	65		65		30	
				4	65		65		30	
				5	65		65		30	
				6.3	65		65		30	
				8	65		65		30	
				16	65		65		—	
Size S0										
3RV20 21				0.63 ... 1.6	65		65		30	
				2	65		65		30	
FLA[2] max.	115/120	2	5	2.5	65		65		30	
25 A, 480 Y / 277 V	200/208	3	7.5							
12.5 A, 600 V	230/240	3	10	3.2	65		65		30	
	460/480	3	20	4	65		65		30	
NEMA size 1	575/600	—	—	5	65		65		30	
				6.3	65		65		30	
				8	65		65		30	
				10	65		65		30	
				12.5	65		65		30	
				25	65		65		—	
				32	50		50		—	
Size S2					**3RV2031**	**3RV2032**	**3RV2031**	**3RV2032**	**3RV2031**	**3RV2032**
				14	65	100	65	100	25	25
3RV2031, 3RV2032, 3RV2431				17	65	100	65	100	25	25
				20	65	100	65	100	25	25
FLA [2] MAX. 65A	115/120	5	10	25	65	100	65	100	25	25
600V	200/208	10	20	32	65	100	65	100	25	25
NEMA size 2	230/240	15	25	36	65	100	65	100	25	25
	460/480	—	50	40	65	100	65	100	22	22
	575/600	—	60	45	65	100	65	100	22	22
				52	65	100	65	100	22	22
				59	65	100	30	42	--	--
				65	65	100	30	42	--	--
Size S3										
3RV20 4.				16	65		65		30	
				20	65		65		30	
FLA[2] max.	115/120	7 1/2	--	25	65		65		30	
100 A, 480 V	200/208	20	30							
75 A, 600 V	230/240	20	40	32	65		65		30	
	460/480	--	75	40	65		65		30	
NEMA size 3	575/600	--	75	50	65		65		30	
				63	65		65		30	
				75	65		65		30	
				90	65		65		--	
				100	65		65		--	

1) HP rating = Power rating in horse power (maximum motor rating).
2) FLA = Full Load Amps/Motor full load current.
3) Complies with "short-circuit breaking capacity" according to UL.

3RV motor starter protectors as "Self-Protected Combination Motor Controllers (Type E)"

UL 508/UL 60947-4-1 approval demands 1-inch clearance and 2-inch creepage distance at line side for “Self-Protected Combination Motor Controller Type E”.

Therefore, 3RV20 motor starter protectors of sizes S00 to S2 are approved according to UL 508/UL 60947-4-1 in combination with the terminal blocks listed below.

CSA does not require these extended clearances and creepage distances. According to CSA, these terminal blocks can be omitted when the device is used as a “Self-Protected Combination Motor Controller”.

The 3RV20 motor starter protectors are approved as “Self-Protected Combination Motor Controllers” under the following file numbers:

- UL File No. E156943, CCN: NKJH
- CSA Master Contract 165071, Product Class: 3211 08

Motor starter protectors		hp rating[1] for FLA[2] max.		Rated current I_n	Up to 240 V AC UL/CSA I_{bc}[3]		Up to 480 Y/277 V AC UL/CSA I_{bc}[3]		Up to 600 Y/347 V AC UL/CSA I_{bc}[3]	
Type	V	1-phase	3-phase	A	kA		kA		kA	
Size S00										
3RV2011 + 3RV29 28-1H[4) 5)]				0.16 ... 12.5	65		65		30	
				16	65		65		—	
FLA[2] max. 16 A	115	1	2							
480 V	200	2	3							
NEMA size 0	230	2	5							
	230	—	10							
	575/600	—	10							
Size S0										
3RV2021 + 3RV29 28-1H[4) 5)]				0.63 ... 1.6	65		65		30	
				2	65		65		30	
				2.5	65		65		30	
FLA[2] max.	115	2	5	3.2	65		65		30	
25 A, 480 V	200	3	7.5	4	65		65		30	
12.5 A, 600 V	230	3	10	5	65		65		30	
	460	—	20							
NEMA size 1	575/600	—	—	6.3	65		65		30	
				8	65		65		30	
				10	65		65		30	
				12.5	65		65		30	
				16	65		65		—	
				20	65		65		—	
				22	65		65		—	
				25	65		65		—	
				32	50		50		—	
Size S2					**3RV2031**	**3RV2032**	**3RV2031**	**3RV2032**	**3RV2031**	**3RV2032**
3RV2031/3RV2032 + 3RV2938-1K[4)]				14	65	100	65	100	25	25
				17	65	100	65	100	25	25
				20	65	100	65	100	25	25
FLA [2] MAX. 65A	115/120	5	10	25	65	100	65	100	25	25
600V	200/208	10	20	32	65	100	65	100	25	25
NEMA size 2	230/240	15	25	36	65	100	65	100	25	25
	460/480	—	50	40	65	100	65	100	22	22
	575/600	—	60	45	65	100	65	100	22	22
				52	65	100	65	100	22	22
				59	65	100	20	30	—	—
				65	65	100	20	30	—	—
Size S3										
3RV2041 + 3RT2946-4GA07[4)]				16	65		65		30	
				20	65		65		30	
				25	65		65		30	
FLA[2] max.	115	10	--							
100 A, 480 V	200	20	30	32	65		65		30	
75 A, 600 V	230	20	40	40	65		65		30	
	460	--	75	50	65		65		30	
NEMA size 3	575/600	--	75	63	65		65		30	
				75	65		65		30	
				90	65		65		—	
				100	65		65		—	

Ratings of the auxiliary switches and alarm switches			Lateral auxiliary switch with 1 NO + 1 NC, 2 NO, 2 NC, 2 NO + 2 NC and signalling switch	Transverse auxiliary switch with 1 changeover contact	Transverse auxiliary switch with 1 NO + 1 NC, 2 NO
Max. rated voltage	• to NEMA Ⓤ	AC V	600		250
	• to NEMA Ⓒ	AC V	600		250
Uninterrupted current		A	10	5	2.5
Breaking capacity			A600	B600	C300
			Q300	R300	R300

1) HP rating = Power rating in horse power (maximum motor rating).
2) FLA = Full Load Amps/Motor full load current.
3) Corresponds to "short-circuit breaking capacity" according to UL/CSA.
4) Not required for CSA.
5) Alternatively, the 3RV2928-1K phase barrier can also be used.

3RV27/28 circuit breakers

These circuit breakers are approved according to UL 489 and CSA C22.2 No. 5-02 for 100 % rated current (100 % rated breaker). They can be used therefore as upstream short-circuit protective devices for "Manual Motor Controllers" and "Manual Motor Controllers Suitable for Tap Conductor Protection in Group Installations".

The 3RV27/28 circuit breakers are approved under the following file numbers:

- UL File No. E235044, CCN: DIVQ,
- CSA Master Contract 165071, Product Class: 1432 01.

Circuit breakers Type	**Rated current I_n** A	**240 V AC** UL/CSA I_{bc} [1] kA	**480 Y/277 V AC** UL/CSA I_{bc} [1] kA	**480 V AC** UL/CSA I_{bc} [1] kA	**600 Y/347 V AC** UL/CSA I_{bc} [1] kA
Size S00/S0					
3RV27 11 / 3RV28 11 **3RV27 21 / 3RV28 21**	0.16 … 1.25	65	65	65	10
	1.6	65	65	65	10
	2	65	65	65	10
	2.5	65	65	65	10
	3.2	65	65	65	10
	4	65	65	65	10
	5	65	65	65	10
	6.3	65	65	65	10
	8	65	65	65	10
	10	65	65	65	10
	12.5	65	65	65	10
	15	65	65	65	--
	20	50	50	50	--
	22	50	50	50	--
Size S3					
3RV27 42	10	65	65	65	20
	15	65	65	65	20
	20	65	65	65	20
	25	65	65	65	20
	30	65	65	65	20
	35	65	65	--	20
	40	65	65	--	20
	45	65	65	--	20
	50	65	65	--	20
	60	65	65	--	20
	70	65	65	--	10

[1] Complies with "short-circuit breaking capacity" according to UL.

Technical specifications

Short-circuit breaking capacity I_{cu}, I_{cs} acc. to IEC 60947-2

This table shows the rated ultimate short-circuit breaking capacity I_{cu} and the rated service short-circuit breaking capacity I_{cs} of the 3RV2 motor starter protectors/circuit breakers with different inception voltages dependent of the rated current I_n of the motor starter protectors/circuit breakers.

Power can be supplied to the motor starter protectors/circuit breakers via the terminals at the top or at the bottom without restricting the rated data. If the short-circuit current at the place of installation exceeds the rated short-circuit breaking capacity of the motor starter protector/circuit breaker as specified in the table, a back-up fuse is required. It is also possible to install an upstream motor starter protector/circuit breaker with a limiter function.

The maximum rated current for the back-up fuse is specified in the tables. The rated ultimate short-circuit breaking capacity then applies as specified on the fuse.

Fuseless construction

Motor starter protector contactor combinations for short-circuit currents up to 150 kA can be ordered in the form of fuseless load feeders according to Chapter 6.

Motor starter protectors/circuit breakers	Rated current I_n	Up to 240 V AC[1]			Up to 400 V[1]/415 V AC[2]			Up to 440 V[1]/460 V AC[2] (these values do not apply to 3RV17 42 circuit breakers)			Up to 500 V[1]/525 V AC[2]			Up to 690 V AC[1]		
		I_{cu}	I_{cs}	Max. fuse (gL/gG)	I_{cu}	I_{cs}	Max. fuse (gL/gG)[3]	I_{cu}	I_{cs}	Max. fuse (gL/gG)[3]	I_{cu}	I_{cs}	Max. fuse (gL/gG)[3]	I_{cu}	I_{cs}	Max. fuse (gL/gG)[3][4]
Type	A	kA	kA	A	kA	kA	A	kA	kA	A	kA	kA	A	kA	kA	A
Size S00																
3RV2.11	0.16 ... 1	100	100	°	100	100	°	100	100	°	100	100	°	100	100	°
	1.25; 1.6	100	100	°	100	100	°	100	100	°	100	100	°	100	100	°
	2; 2.5	100	100	°	100	100	°	100	100	°	100	100	°	10	10	25
	3.2; 4	100	100	°	100	100	°	50	10	°	100	100	°	10; 6	10; 4	32
	5; 6.3	100	100	°	100	100	°	50	10	°	100	100	°	6	4	32
	8	100	100	°	50	12.5	°	50	50	63	42	42	63	6	4	50
	10	100	100	°	50	12.5	°	50	50	80	42	42	63	6	4	50
	12	100	100	°	50	12.5	°	50	50	80	42	42	80	4	4	63
	16	100	100	°	55	30	100	50	10	80	10	5	80	4	4	63
Size S0																
3RV2.21	16	100	100	°	55	25	100	50	10	80	10	5	80	4	2	63
	20	100	100	°	55	25	125	50	10	80	10	5	80	4	2	63
	22	100	100	°	55	25	125	50	10	100	10	5	80	4	2	63
	25	100	100	°	55	25	125	50	10	100	10	5	80	4	2	63
	28	100	100	°	55	25	125	30	10	125	10	5	100	4	2	100
	32	100	100	°	55	25	125	30	10	125	10	5	100	4	2	100
	36	100	100	°	20	10	125	12	8	125	6	3	100	3	2	100
	40	100	100	°	20	10	125	12	8	125	6	3	100	3	2	100
Size S2																
3RV2.31	14; 17	100	100	°	65	30	100	50	25	100	12	6	63	5	3	63
	20	100	100	°	65	30	100	50	25	100	12	6	80	5	3	80
	25	100	100	°	65	30	100	50	15	100	12	6	80	5	3	80
	32; 36	100	100	°	65	30	125	50	15	125	10	5	100	4	2	100
	40; 45	100	100	°	65	30	160	50	15	125	10	5	100	4	2	100
	52	100	100	°	65	30	160	50	15	125	10	5	125	4	2	125
	59 ... 80	Values on request														
Size S2, with increased switching capacity																
3RV2.32	14; 17	100	100	°	100	50	°	65	30	100	18	10	63	8	5	63
	20; 25	100	100	°	100	50	°	65	30	100	18	10	80	8	5	80
	32 ... 45	100	100	°	100	50	°	65	30	125	15	8	100	6	4	100
	52	100	100	°	100	50	°	65	30	125	15	8	125	6	4	125
	59 ... 80	Values on request														
Size S3																
3RV2. 41	40	100	100	°	50	25	125	50	20	125	12	6	100	6	3	63
	50	100	100	°	50	25	125	50	20	125	12	6	100	6	3	80
	63	100	100	°	50	25	160	50	20	160	12	6	100	6	3	80
	75	100	100	°	50	25	160	50	20	160	8	4	125	5	3	100
	90; 100	100	100	°	50	25	160	50	20	160	8	4	125	5	3	125

Short-circuit resistant up to at least 50 kA

° No back-up fuse required, since short-circuit resistant up to 100 kA

1) 10 % overvoltage.

2) 5 % overvoltage.

3) Back-up fuse only required if the short-circuit current at the place of installation > I_{cu}.

4) Alternatively, fuseless limiter combinations for 690 V AC can also be used.

Short-circuit breaking capacity I_{cuIT} in the IT system (IT network) according to IEC 60947-2

3RV motor starter protectors are suitable for operation in IT systems. Values valid for triple-pole short-circuit are I_{cu} up to I_{cs}. In case of double ground fault on different phases at the input and output side of a motor starter protector, the special short-circuit breaking capacity I_{cuIT} applies. The specifications in the table below apply to 3RV motor starter protectors.

In the colored areas, I_{cuIT} is 100 kA, or in some ranges it is 50 kA. Therefore the motor starter protectors are short-circuit resistant in these ranges.

If the short-circuit current at the place of installation exceeds the rated short-circuit breaking capacity of the motor starter protector as specified in the table, a back-up fuse is required. The maximum rated current for the back-up fuse is specified in the tables. The rated short-circuit breaking capacity then applies as specified on the fuse.

Motor starter protectors	Rated current I_n	Up to 240 V AC[1]		Up to 400 V[1]/415 V AC[2]		Up to 500 V[1]/525 V AC[2]		Up to 690 V AC[1) 5)]	
		I_{cuIT}	Max. fuse (gL/gG)[3]	I_{cuIT}	Max. fuse (gL/gG)[3)4)]	I_{cuIT}	Max. fuse (gL/gG)[3]	I_{cuIT}	Max. fuse (gL/gG)[3]
Type	A	kA	A	kA	A	kA	A	kA	A
Size S00									
3RV20, 3RV26 11-0BD10	0.16 ... 0.63	100	°	100	°	On request	On request	On request	On request
	0.8; 1	100	°	100	°				
	1.25; 1.6	100	°	100	°				
	2; 2.5	100	°	8	25				
	3.2; 4	100	°	8;4	32				
	5; 6.3	100	°	4	32:50				
	8; 10	100	°	4	50				
	12.5	100	°	4	63				
	16	55	80	4	63				
Size S0									
3RV2.21	16	55	80	4	63	2	50	1.5	40
	20	55	80	4	63	2	50	1.5	50
	22	55	80	4	63	2	50	1.5	50
	25	55	80	4	63	2	50	1.5	50
	28	55	80	2	63	2	63	1.5	63
	32	55	80	2	63	2	63	1.5	63
	36	20	80	2	63	2	63	1.5	63
	40	20	80	2	63	2	63	1.5	63
Size S2									
3RV2.31	14...25	100	°	8	100	6	80	4	63
	32...45	100	°	6	125	4	100	3	80
	52	100	°	4	160	3	125	2	100
	59 ... 80	Values on request							
Size S2, with increased switching capacity									
3RV2.32	14 ... 25	100	°	8	100	6	80	4	63
	32 ... 45	100	°	6	125	6	100	4	80
	52	100	°	6	160	6	125	4	100
	59 ... 80	Values on request							
Size S3									
3RV2. 41	40	50	125	10	63	5	50	5	50
	50	50	125	8	80	3	63	3	63
	63	50	160	6	80	3	63	3	63
	75	50	160	5	100	2	80	2	80
	90; 100	50	160	5	125	2	100	2	100

	Short-circuit resistant up to at least 50 kA
°	No back-up fuse required, since short-circuit resistant up to 100 kA

1) 10 % overvoltage.

2) 5 % overvoltage.

3) Back-up fuse only required, if short-circuit current at the place of installation > I_{cuIT}.

4) Alternatively, fuseless limiter combinations for 690 V AC can also be used.

5) Over-voltage category II applies for applications on IT systems > 600V

Technical data

Rules for mounting motor starter protectors/circuit breakers

When mounting MSPs, the following clearance must be maintained to grounded or live parts.

SIRIUS MSP			Clearance to grounded or live parts		
			Y	X	at the side Z
Type	size		mm	mm	mm
3RV2.1	S00	up to 690 V	30	70	9
3RV2. 2	S0 [2]	up to 500 V	30	90	9
		up to 690 V	50 [1]	90	30
3RV2. 3	S2	up to 690 V	50	—	10
3RV2. 4	S3	up to 240 V	50	167	10
		up to 440 V	70	167	10
		up to 500 V	110	167	10
		up to 690 V	150	167	30
3RV27 42	S3	up to 240 V	90	167	10
		up to 400 V	90	167	10

Minimum clearance between MSPs and grounded or live parts

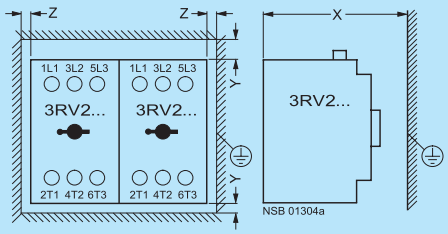

1) Up to and including the setting range of 32 A. For the 36/40 A setting range the clearance is 70 mm.
2) In conjunction with the type E terminal block 3RV2928-1H the applicable lateral clearance is 30 mm for all voltages.

Standard mounting for S0, S2 and S3

Wiring module

Size S0: 3RV19 15-1AB

Size S2: 3RV19 35-1A

Size S3: 3RA19 43-3D
(Caution: The wiring module demands 10 mm spacing between the MSPs)

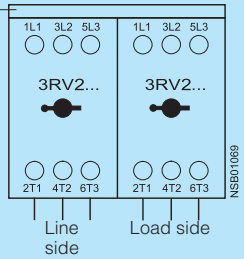

General Data

3RV – up to 80 A

General data

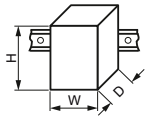

Type			**3RV2.1.**	**3RV2.2.**	**3RV2.3.**	**3RV27, 3RV28**
Size			S00	S0	S2	S00, S0
Dimensions (W x H x D)						
• Screw terminals		mm	45 x 97 x 91	45 x 97 x 91	55 x 140 x 149	45 x 144 x 92
• Spring-type terminals		mm	45 x 106 x 91	45 x 119 x 91	--	--
Standards						
• IEC 60947-1, EN 60947-1 (VDE 0660 Part 100)			Yes			
• IEC 60947-2, EN 60947-2 (VDE 0660 Part 101)			Yes			
• IEC 60947-4-1, EN 60947-4-1 (VDE 0660 Part 102)			Yes	Yes	Yes	--
• UL 508/UL 60947-4-1, CSA C22.2 No. 14/CSA C22.2 No. 60947-4-1			Yes	Yes	Yes	--
• UL 489, CSA C22.2 No. 5			--	--	--	Yes
Number of poles			3			
Max. rated current $I_{n\ max}$ (= max. rated operational current I_e)		A	16	40	80	22
Permissible ambient temperature						
• Storage/transport		°C	–50 ... +80			
• Operation	I_n: 0.16 ... 32 A	°C	–20 ... +70 (current reduction above +60 °C)		--	
	I_n: 36 ... 40 A	°C	--	–20 ... +40 (the devices must not be mounted side-by-side and they must not be assembled with link modules with contactors. A lateral clearance of 9 mm is required.)	--	
	I_n: 14 ... 80 A	°C	--		–20 ... +70 (current reduction above +60 °C)	--
Permissible rated current at inside temperature of control cabinet						
• +60 °C		%	100			
• +70 °C		%	87			
Permissible rated current at ambient temperature of enclosure (applies for motor starter protector/circuit breaker inside enclosure ≤ 32 A)						
• +35 °C		%	100		On request	100
• +60 °C		%	87			87
Rated operational voltage U_e						
• Acc. to IEC		V AC	690 (when a molded-plastic enclosure is used only 500 V)			
• Acc. to UL/CSA		V AC	600			
Rated frequency		Hz	50/60			
Rated insulation voltage U_i		V	690			
Rated impulse withstand voltage U_{imp}		kV	6			
Utilization category						
• IEC 60947-2 (motor starter protector/circuit breaker)			A			
• IEC 60947-4-1 (motor starter)			AC-3			
Trip class CLASS	Acc. to IEC 60947-4-1		10		10/20	--
DC short-circuit breaking capacity (time constant t = 5 ms)						
• 1 conducting path 150 V DC		kA	10		On request	10
• 2 conducting paths in series 300 V DC		kA	10			10
• 3 conducting paths in series 450 V DC		kA	10			10
Power loss P_v for each motor starter protector/circuit breaker Dependent on the rated current I_n (upper setting range)	I_n: 0.16 ... 0.63 A	W	5		--	5
	I_n: 0.8 ... 6.3 A	W	6		--	6
	I_n: 8 ... 16 A	W	7		--	7
	I_n: 16 A	W	--	7	10	7
$R_{per\ conducting\ path} = \frac{P}{I^2 \times 3}$	I_n: 17 ... 25 A	W	--	8	12	8
	I_n: 28 ... 32 A	W	--	11	14	--
	I_n: 36 ... 40 A	W	--	14	15	--
	I_n: 45 ... 52 A	W	--	--	17	--
	I_n: ... 80 A	W	--	--	On request	--
Shock resistance	Acc. to IEC 60068-2-27	*g*/ms	25/11 (square and sine pulse)			
Degree of protection	Acc. to IEC 60529		IP20			
Touch protection	Acc. to EN 50274		Finger-safe for vertical contact from the front			
Temperature compensation	Acc. to IEC 60947-4-1	°C	–20 ... +60			
Phase failure sensitivity	Acc. to IEC 60947-4-1		Yes (only for 3RV23 motor starter protectors)			No
Explosion protection – Safe operation of motors with "increased safety" type of protection			Yes (only for 3RV20 motor starter protectors)			
EC type test certificate number according to directive 94/9/EC (ATEX)			DMT 02 ATEX F 001 Ex II (2) GD		On request	No

Conductor cross-sections of main circuit

Type		3RV2.11	3RV2.21	3RV2.31-4B1., 3RV2.31-4D.1., 3RV2.31-4E.1., 3RV2.31-4P.1., 3RV2.31-4S.1., 3RV2.31-4T.1., 3RV2.31-4U.1., 3RV2.31-4V.1.	3RV2.31-4J.1., 3RV2.31-4K.1., 3RV2.31-4R.1., 3RV2.31-4W.1., 3RV2.31-4X.1., 3RV2431-4VA1., 3RV2.32	3RV27, 3RV28
Size		S00	S0	S2		S00, S0
Connection type		**Screw terminals**				
Terminal screw		M3, Pozidriv size 2	M4, Pozidriv size 2	M6, Pozidriv size 2		M4, Pozidriv size 2
Operating devices	mm	⌀ 5 ... 6	⌀ 5 ... 6	⌀ 5 ... 6		⌀ 5 ... 6
Prescribed tightening torque	Nm	0.8 ... 1.2	2 ... 2.5	3.0 ... 4.5		2.5 ... 3
Conductor cross-sections (min./max.), 1 or 2 conductors can be connected						
• Solid or stranded	mm^2	2 x (0.75 ... 2.5)[1], 2 x 4	2 x (1 ... 2.5)[1], 2 x (2.5 ... 10)[1]	2 x (1 ... 25)[1], 1 x (1 ... 35)[1]	2 x (1 ... 35)[1], 1 x (1 ... 50)[1]	2 x (1 ... 10)[1], max. 1 x 25
• Finely stranded with end sleeve (DIN 46228-1)	mm^2	2 x (0.5 ... 1.5)[1], 2 x (0.75 ... 2.5)[1]	2 x (1 ... 2.5)[1], 2 x (2.5 ... 6)[1], 1 x 10	2 x (1 ... 16)[1], 1 x (1 ... 25)[1]	2 x (1 ... 25)[1], 1 x (1 ... 35)[1]	1 x (1 ... 16), max. 6 + 16
• AWG cables, solid or stranded	AWG	2 x (20 ... 16)[1], 2 x (18 ... 12)[1]	2 x (16 ... 12)[1], 2 x (14 ... 8)[1]	2 x (18 ... 3)[1], 1 x (18 ... 2)[1]	2 x (18 ... 2)[1], 1 x (18 ... 1)[1]	2 x (14 ... 10)
Connection type		**Spring-type terminals**				
Operating devices	mm	3.0 x 0.5 and 3.5 x 0.5				
Conductor cross-sections (min./max.), 1 or 2 conductors can be connected						
• Solid or stranded	mm^2	2 x (0.5 ... 4)	2 x (1 ... 10)	--		
• Finely stranded without end sleeve	mm^2	2 x (0.5 ... 2.5)	2 x (1 ... 6)	--		
• Finely stranded with end sleeve (DIN 46228-11)	mm^2	2 x (0.5 ... 2.5)	2 x (1 ... 6)	--		
• AWG cables, solid or stranded	AWG	2 x (20 ... 12)	2 x (18 ... 8)	--		
Max. external diameter of the conductor insulation	mm	3.6	3.6	--		
Connection type		**Ring terminal lug connections**				
Terminal screw		M3, Pozidriv size 2	M4, Pozidriv size 2	--		
Operating devices	mm	⌀ 5 ... 6	⌀ 5 ... 6	--		
Prescribed tightening torque	Nm	0.8 ... 1.2	2 ... 2.5	--		
Usable ring terminal lugs	mm	d_2 = min. 3.2, d_3 = max. 7.5	d_2 = min. 4.3, d_3 = max. 12.2	--		
• DIN 46234 without insulation sleeve						
• DIN 46225 without insulation sleeve						
• DIN 46237 with insulation sleeve						
• JIS C2805 Type R without insulation sleeve						
• JIS C2805 Type RAV with insulation sleeve						
• JIS C2805 Type RAP with insulation sleeve						

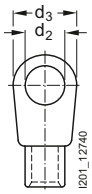

[1] If two different conductor cross-sections are connected to one clamping point, both cross-sections must be in the range specified.

		3RV2.1. S00	3RV2.2. S0	3RV2.3. S2	3RV27, 3RV28 S00, S0
Front transverse auxiliary switches					
		Switching capacity for different voltages			
		1 CO		**1 NO + 1 NC, 2 NO**	
Rated operational current I_e					
• At AC-15, alternating voltage					
- 24 V	A	4		2	
- 230 V	A	3		0.5	
• At AC-12 = I_{th}, alternating voltage					
- 24 V	A	10		2.5	
- 230 V	A	10		2.5	
• At DC-13, direct voltage *L/R* 200 ms					
- 24 V	A	1		1	
- 48 V	A	--		0.3	
- 60 V	A	--		0.15	
- 110 V	A	0.22		--	
- 220 V	A	0.1		--	
Minimum load capacity	V	17			
	mA	1			
Front transverse solid-state compatible auxiliary switches					
		Switching capacity for different voltages			
		1 CO			
Rated operational voltage U_e	Alternating voltage V	125			
Rated operational current I_e/AC-14	at U_e = 125 V A	0.1			
Rated operational voltage U_e	Direct voltage *L/R* 200 ms V	60			
Rated operational current I_e/DC-13	at U_e = 60 V A	0.3			
Minimum load capacity	V	5			
	mA	1			
Lateral auxiliary switches with signaling switch					
		Switching capacity for different voltages: Lateral auxiliary switch with 1 NO + 1 NC, 2 NO, 2 NC, 2 NO + 2 NC Signaling switch			
Rated operational current I_e					
• At AC-15, alternating voltage					
- 24 V	A	6			
- 230 V	A	4			
- 400 V	A	3			
- 690 V	A	1			
• At AC-12 = I_{th}, alternating voltage					
- 24 V	A	10			
- 230 V	A	10			
- 400 V	A	10			
- 690 V	A	10			
• At DC-13, direct voltage *L/R* 200 ms					
- 24 V	A	2			
- 110 V	A	0.5			
- 220 V	A	0.25			
- 440 V	A	0.1			
Minimum load capacity	V	17			
	mA	1			
Auxiliary releases					
		Undervoltage releases		**Shunt releases**	
Power consumption					
• During pick-up					
- AC voltages	VA/W	20.2/13		20.2/13	
- DC voltages	W	20		13 ... 80	
• During uninterrupted duty					
- AC voltages	VA/W	7.2/2.4		--	
- DC voltages	W	2.1		--	
Response voltage					
• Tripping	V	0.35 ... 0.7 x U_s		0.7 ... 1.1 x U_s	
• Pick-up	V	0.85 ... 1.1 x U_s		--	
Opening time maximum	ms	20			
Short-circuit protection for auxiliary and control circuits					
Melting fuses operational class gG	A	10			
Miniature circuit breakers C characteristic	A	6 (prospective short-circuit current < 0.4 kA)			

Conductor cross-sections for auxiliary and control circuits

Type		3RV2.11	3RV2.21	3RV2.31, 3RV2.32	3RV27, 3RV28
Size		S00	S0	S2	S00, S0
Connection type		**Screw terminals**			
Terminal screw		M3, Pozidriv size 2			
Operating devices	mm	⌀ 5 ... 6			
Prescribed tightening torque	Nm	0.8 ... 1.2			
Conductor cross-sections (min./max.), 1 or 2 conductors can be connected					
• Solid or stranded	mm^2	2 x (0.5 ... 1.5)[1], 2 x (0.75 ... 2.5)[1]			
• Finely stranded with end sleeve (DIN 46228-1)	mm^2	2 x (0.5 ... 1.5)[1], 2 x (0.75 ... 2.5)[1]			
• AWG cables, solid or stranded	AWG	2 x (18 ... 14)[1], 2 x (20 ... 16)[1]			
Connection type		**Spring-type terminals**			
Operating devices	mm	3.0 x 0.5 and 3.5 x 0.5			
Conductor cross-sections (min./max.), 1 or 2 conductors can be connected					
• Solid or stranded	mm^2	2 x (0.5 ... 2.5)			
• Finely stranded without end sleeve	mm^2	2 x (0.5 ... 2.5)			
• Finely stranded with end sleeve (DIN 46228-1)	mm^2	2 x (0.5 ... 1.5)			
• AWG cables, solid or stranded	AWG	2 x (20 ... 14)			
Max. external diameter of the conductor insulation	mm	3.6			
Connection type		**Ring terminal lug connections**			
Terminal screw		M3, Pozidriv size 2			
Operating devices	mm	⌀ 5 ... 6			
Tightening torque	Nm	0.8 ... 1.2			
Usable ring terminal lugs	mm	d_2 = min. 3.2, d_3 = max. 7.5			
• DIN 46234 without insulation sleeve					
• DIN 46225 without insulation sleeve					
• DIN 46237 with insulation sleeve					
• JIS C2805 Type R without insulation sleeve					
• JIS C2805 Type RAV with insulation sleeve					
• JIS C2805 Type RAP with insulation sleeve					

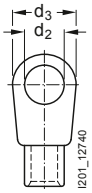

[1] If two different conductor cross-sections are connected to one clamping point, both cross-sections must be in the range specified.

Terminals for "Self-Protected Combination Motor Controllers (Type E) according to UL 508/UL 60947-4-1"

Type		3RV2928-1H
Prescribed tightening torque	Nm	2.5 ... 3
Conductor cross-sections		
• Front clamping point connected		
- Solid	mm^2	1 ... 10
- Finely stranded with end sleeve	mm^2	1 ... 16
- Stranded	mm^2	2.5 ... 25
- AWG cables, solid or stranded	AWG	14 ... 3
- Terminal screw		M4
• Rear clamping point connected		
- Solid	mm^2	1 ... 10
- Finely stranded with end sleeve	mm^2	1 ... 16
- Stranded	mm^2	1.5 ... 25
- AWG cables, solid or stranded	AWG	14 ... 6
- Terminal screw		M4
• Both clamping points connected		
- Front clamping point:		
Solid	mm^2	1 ... 10
Finely stranded with end sleeve	mm^2	1 ... 10[1], 1 ... 6[1]
Stranded	mm^2	2.5 ... 10
AWG cables, solid or stranded	AWG	14 ... 6
Terminal screw		M4
- Rear clamping point:		
Solid	mm^2	1 ... 10
Finely stranded with end sleeve	mm^2	1 ... 10[1], 1 ... 16[1]
Stranded	mm^2	2.5 ... 10
AWG cables, solid or stranded	AWG	16 ... 3
Terminal screw		M4

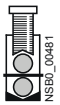

[1] The following can be connected when both clamping points are connected:
- Front 1 ... 10 mm^2 and rear 1 ... 10 mm^2
- Front 1 ... 6 mm^2 and rear 1 ... 16 mm^2

Overview

S00 MSP with laterally mounted undervoltage release with leading auxiliary switch

3RV Motor Starter Protectors (MSPs) are built for a world of applications while meeting the requirements of control users worldwide. Each MSP features a manual ON/OFF switch, a Class 10 adjustable bimetallic overload relay (Class 20 available in the two largest frame sizes), and magnetic trip elements for short circuit protection.

Construction

The motor starter protectors are available in four sizes:

- Size S00 - 3RV201
  Maximum rated current is 16 Amps. Suitable for motors up to 10 HP at 600V. Available in both screw terminal and spring-type terminal versions.
- Size S0 - 3RV202
  Maximum rated current is 40 Amps. Suitable for motors up to 20 HP at 600V. Available in both screw terminal and spring-type terminal verisons.
- Size S2 - 3RV203
  Maximum rated current is 50 Amps. Suitable for motors up to 50 HP at 600V.
- Size S3 - 3RV204
  Maximum rated current is 100 Amps. Suitable for motors up to 100 HP at 600V.

Functions

Releases

3RV motor starter protectors are equipped with bimetallic-based, inverse-time delayed overload releases - electromagnetic short-circuit releases.

The overload releases can be set in accordance with the load current. The overcurrent releases are permanently set to a value 13 times the rated current and thus enable trouble-free start-up of motors.

The scale cover can be sealed to prevent unauthorized adjustments to the set current.

Release classes

The release classes of thermally delayed releases are based on the tripping time (t_A) at 7.2 times the operational current in cold state (excerpt from IEC 60 947-4):

- CLASS 10 A 2 s < t_A < 10 s
- CLASS 10 4 s < t_A < 10 s
- CLASS 20 6 s < t_A < 20 s
- CLASS 30 9 s < t_A < 30 s

The release must trip within this time!

Operating mechanisms

S00, S0, S2 and S3 MSPs are actuated via a rotary operating mechanism. If the MSP trips, the rotary operating mechanism switches to the tripped position to indicate this. Before the MSP is reclosed, the rotary operating mechanism must be reset manually to 0 position, in order to prevent the former from closing by mistake before the fault has been cleared.

In the case of MSPs with rotary operating mechanisms, an electrical signal can be output via a signalling switch to indicate that the MSP has tripped.

All operating mechanisms can be locked in 0 position with a padlock (shackle diameter 3.5 to 4.5 mm).

Application

Operating conditions

3RV MSPs are suitable for use in any climate. They are designed for operation in closed rooms under normal conditions (e.g. no dust, corrosive vapours or harmful gases). Suitable enclosures must be provided for installation in dusty or damp rooms.

Motor Protection

3RV MSPs use bimetallic heater elements to provide class 10 or 20 overcurrent protection for both AC and DC motors. The bimetallic heaters sense the motor current directly, so the overloads are insensitive to high frequencies, harmonic waves and sinusoidal currents and voltages.

Each MSP has a fourth bimetallic strip that reacts only to the ambient temperature inside the control panel. This ambient compensation prevents the MSP from nuisance tripping when the panel temperature is higher than the ambient temperature of the motor.

A built-in differential trip bar causes the MSP to trip faster on a phase loss condition, to help reduce motor damage from phase loss.

Magnetic trip elements in each MSP take the device off line when it senses currents of 13 times the maximum FLA dial setting.

3RT2	**0**	**1**	**1**	**-**	**0**	**A**	**A**	**1**	**0**
SIRIUS MSP or Circuit Breaker	Application 0 = Motor Protection 7 = UL 489	Frame Size 3 = S2 4 = S3	Standard		Amperage Range Possible choices listed below see page 1/4-1/7 for an entire listing 0, 1, 4	B through K	Class A = 10	Terminal Type 1 = Screw 2 = Spring Loaded 4 = Ring Lug	Auxiliary Switch
3RV2	**0**	**1**	**1**	**-**	**0**	**A**	**A**	**1**	**0**
SIRIUS Innovations MSP or Circuit Breaker	Application 0 = Motor Protection 7 = UL 489	Frame Size 1 = S00 2 = S0 3 = S2 4 = S3	Standard		Amperage Range Possible choices listed below see page 1/4-1/7 for an entire listing 0, 1, 4	B through K	Class A = 10 B = 20	Terminal Type 1 = Screw 2 = Spring Loaded 4 = Ring Lug	Auxiliary Switch

Note: MPSs and Contactors of the same frame size are made to easily fit together with the use of a link module.

Applications:

The 3RV MSPs can be used in a variety of applications:

As a manual starter

All 3RV MSPs are UL listed as Manual Motor Controllers per UL508. This makes them ideal for applications requiring simple manual starting and stopping of motors. A separate short circuit protective device, such as a circuit breaker or fuses, is still required ahead of the MSP. This up-stream protective device should be sized per NEC code, not to exceed 400% of the maximum FLA adjustment dial setting.

As a component in a group installation

A group motor installation indicates multiple motor controllers under one short circuit protective device, such as a circuit breaker. 3RV MSPs have a group installation short-circuit current rating of 65 kA at 480V and up to 30kA at 600V. By using a link module, a 3RT contactor can be directly mounted to the load side of the MSP.

3RV MSPs have been UL tested with and without 3RT contactors for group installation.

As a Self-protected manual combination starter, Type E.

Most 3RV MSPs have also been UL listed as UL508 Type E, Self-protected Manual Combination Starters. This UL listing allows the MSP to be mounted in a manually operated machine without having to add separate short circuit protection upstream.

These devices have a short circuit current rating of 65 kA @ 240V, 480Y/277V and up to 30kA @ 600Y/347V.

As part of a Combination Motor Contoller, Type F

When a 3RT contactor is connected to the load side of a 3RV device that is rated as a "Manual Self-protected Combination Motor Controller, Type E", the assembly can be applied as a "Combination Motor Controller, Type F". This versions allows for remote starting and stopping of the motor load.

These assemblies have a short circuit current rating of 65 kA @ 240V, 480Y/277V and up to 30 kA @ 600Y/347V.

As a circuit breaker for export

When exporting to many countries outside of the U.S. and North America, the 3RV can be applied as a thermal magnetic circuit breaker for use in motor branch circuits.

3RV29 28-1K

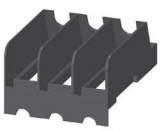

3RV29 38-1K

Terminals for "Combination Motor Controller Type E" to UL 508

The 3RV MSP for motor protection is approved according to UL 508 as "Combination Motor Controller Type E".

As of July, 2001, UL 508 demands at line-side of the device used for this purpose an increased clearance and creepage distance (1" or 2").

Here, the terminal block 3RV29 28-1H must be used for size S0. The block is simply screwed to the basic unit.

Basic units of size S2 are already compliant with new clearance and creepage distance requirements.

The terminal block 3RT29 46-4GA07 must be used for size S3. The standard box terminal is to be replaced by this terminal block.

According to CSA, these terminal blocks can be omitted when the device is used as "Combination Motor Controller Type E".

By using a link module, a 3RT contactor can be directly mounted to the load side of a 3RV MSP. This assembly of a 3RV and a 3RT provides a complete, remotely operated, combination starter, Type F.

3RV29 28-1H

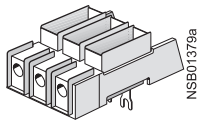

3RT29 46-4GA07

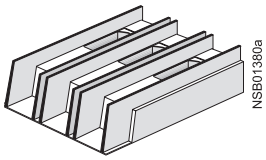

Terminals for "Combination Motor Controller Type E" to UL 508

3RV29 28-1H

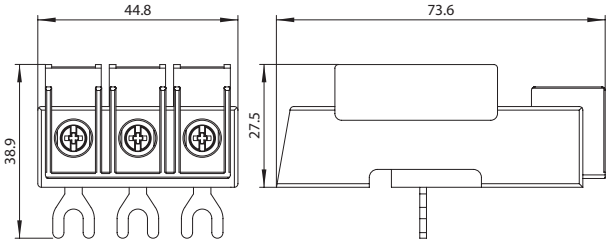

3RT29 46-4GA07

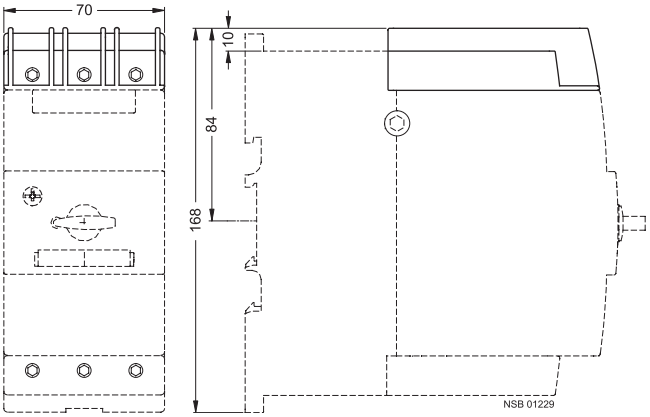

Switching of direct current

3RV motor starter protectors fo r alternating currents are also suitable for DC switching.

The maximum permissible DC voltage per conducting path must, however, be adhered to. Higher voltages require a series connection with 2 or 3 conducting paths.

The response values of the overload release remain unchanged; the response values of a short-circuit release increase by approximately 30 % for DC. The example circuits for DC switching can be seen in the table below.

Example circuit for size S00 to S3 3RV motor starter protectors

Example circuit for size S00 to S3 3RV motor starter protectors	Maximum permitted DC voltage U_e	Notes
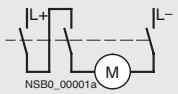	150 V DC	Three-pole switching, non-grounded system[1)] If there is no possibility of a ground fault, or if every ground fault is rectified immediately (ground-fault monitoring), then the maximum permitted DC voltage can be tripled.
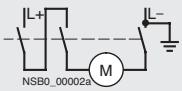	300 V DC	Two-pole switching, grounded system The grounded pole is always assigned to the individual conducting path, so that there are always 2 conducting paths in series in the event of a ground fault.
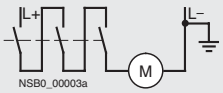	450 V DC	Single-pole switching, grounded system 3 conducting paths in series. The grounded pole is assigned to the unconnected conducting path.

1) It is assumed that this circuit always provides safe disconnection even in the event of a double ground fault that bridges two contacts.

Design

Mounting

The motor starter protectors are secured in position by snapping them onto 35 mm standard mounting rails according to DIN EN 50 022. A mounting rail with a height of 15 mm is required for S3 MSPs. A 75-mm mounting rail can be used as an alternative here.

S2 and S3 MSPs can also be screwed directly onto a baseplate.

The push-in lugs 3RV29 28-0B are available for screw mounting of S00 and S0 MSPs.

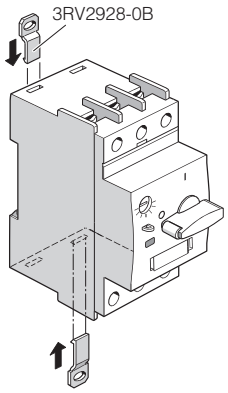

Screw connection

3RV MSPs of sizes S00 and S0 are fitted with terminals with captive screws and clamping pieces, allowing the connection of 2 conductors with different cross-sections.

The box terminals of the S2 and S3 MSPs also enable 2 conductors with different cross-sections to be connected. With the exception of S3 MSPs which are equipped with 4 mm hexagon socket terminal screws, all terminal screws are tightened with a Pozidriv screwdriver size 2.

The box terminals of the S3 MSPs can be removed in order to connect conductors with cable lugs or connecting bars. A terminal cover is available to help prevent contact with shock protection and to ensure that the required clearances and creepage distances are maintained if the box terminals are removed.

Spring-type connection [2)]

As an alternative to screw terminals, S00 and S0 devices are also available with Spring-type terminal connection.

This screwless Spring-type terminal technique, as known for modular terminal blocks, offers shock-proof and vibration proof connection of conductors.

Devices with Spring-type connection allow independent connection of two conductors per terminal.

MSP with Spring-type terminal connection

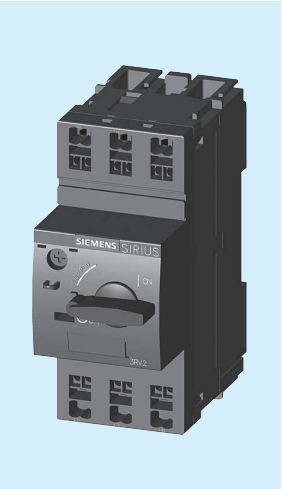

1) It is assumed that this circuit always provides safe cut-out, even in the event of a double earth fault that bridges two contacts.
2) For notes on Spring-type terminal connection, see section 19.

Characteristics

The time/current characteristic, the current limiting characteristics and the I^2t characteristics were determined in accordance with DIN VDE 0660 or IEC 60 947.

The tripping characteristic of the **inverse-time delayed overload releases** (thermal overload releases or 'A' releases) for DC and AC with a frequency of 0 to 400 Hz also apply to the time/current characteristic.

The characteristics apply to the cold state. At operating temperature, the tripping times of the thermal releases are reduced to approximately 25 %.

Under normal operating conditions, all three poles of the device must be loaded. The three main conducting paths must be connected in series in order to protect single-phase or DC loads.

With 2-pole and 3-pole loading, the maximum deviation in the tripping time for 3 times the setting current and upwards is ± 20 % and thus in accordance with DIN VDE 0165.

The tripping characteristics for the instantaneous, electromagnetic overcurrent releases (short-circuit releases, 'N' releases) are based on the rated current I_n that represents the maximum value of the setting range for MSPs with adjustable overload releases. If the current is set to a lower value, the tripping current of the 'N' release is increased by a corresponding factor.

The characteristics of the electromagnetic overcurrent releases apply to frequencies of 50/60 Hz. Appropriate correction factors must be used for lower frequencies up to 16 $^2/_3$ Hz, for higher frequencies up to 400 Hz and for DC.

The printed characteristic curve determined for the MSP relates to a specific setting range. It is, however, also valid as a schematic representation of MSPs with other current ranges.

Typical time/current characteristic of 3RV

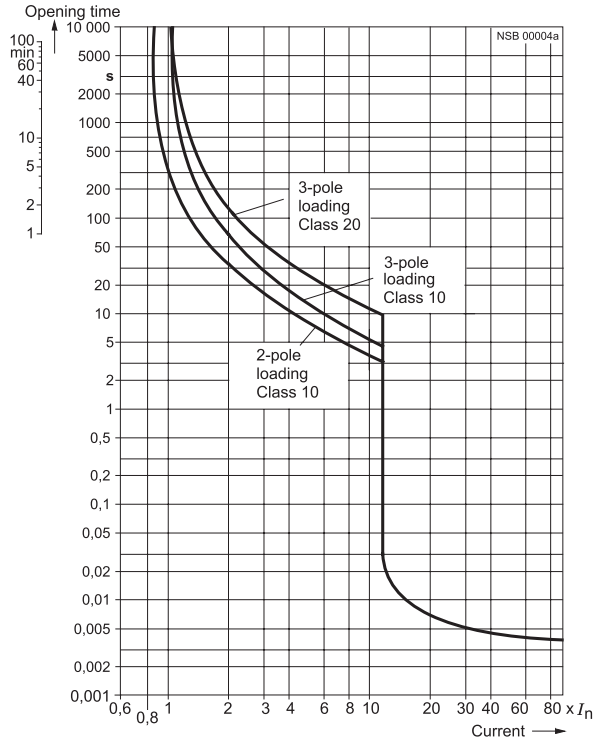

Circuit diagrams

Internal connections

Motor starter protectors 3RV.

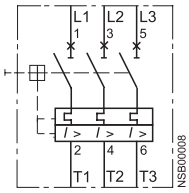

Dimension drawings

3RV2 MSP, size S00

3RV20 11

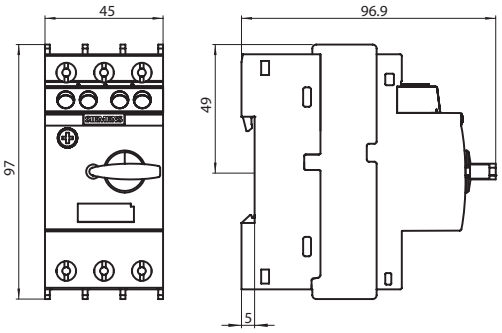

3RV2 MSP, size S0

3RV20 21

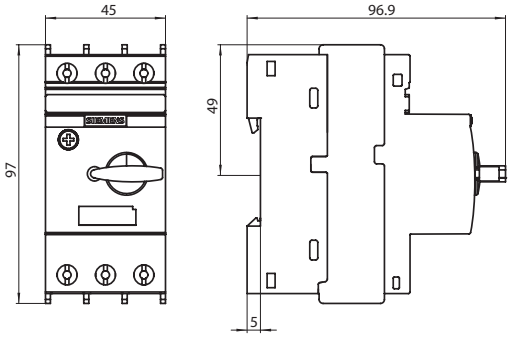

3RV2 MSP, size S2

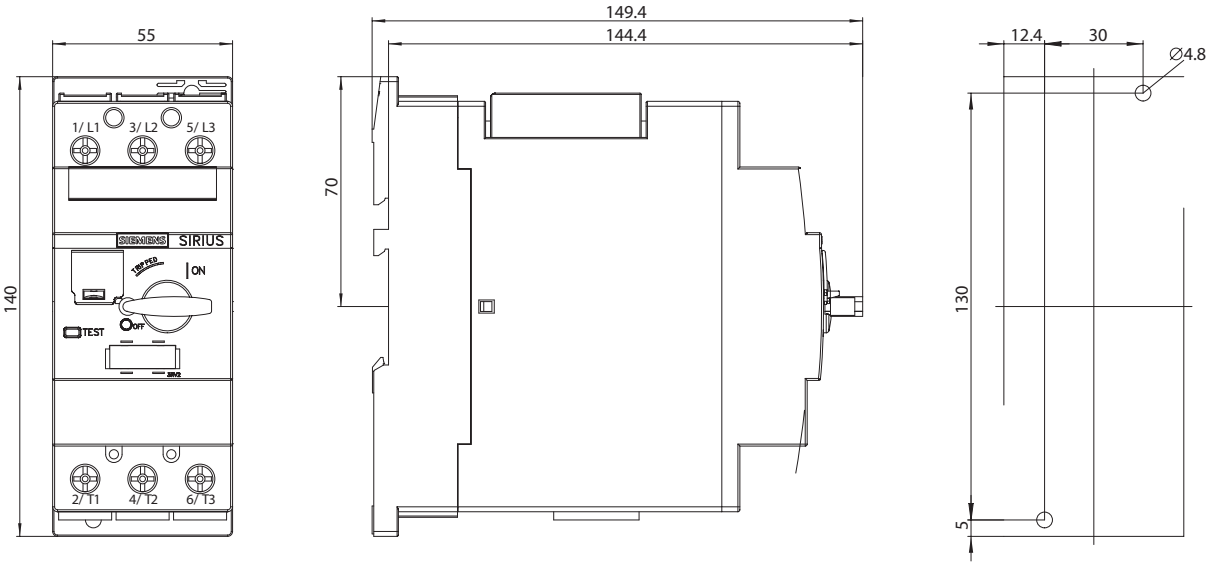

3RV2.31 motor starter protector (<= 45A)

3RV2.32 MSP, size S2

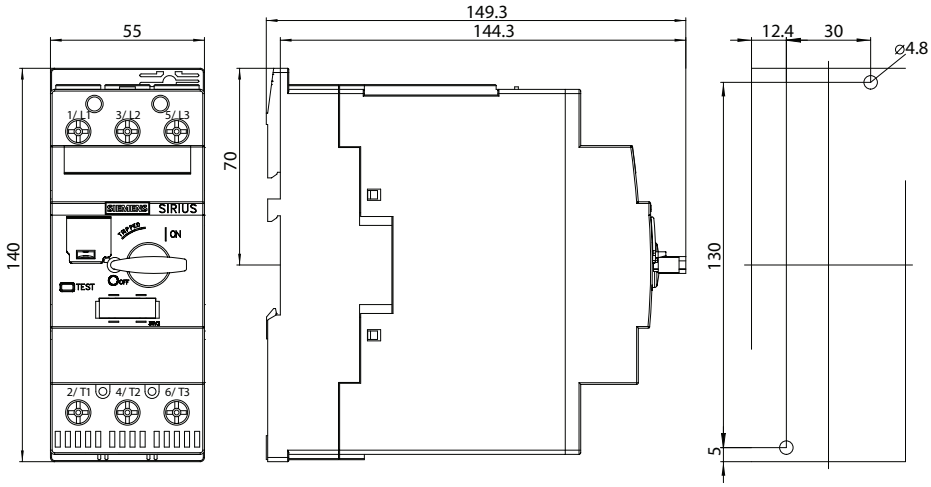

3RV27 and 3RV28 circuit breakers, size S00, S0 and S3

3RV27 21, 3RV28 21

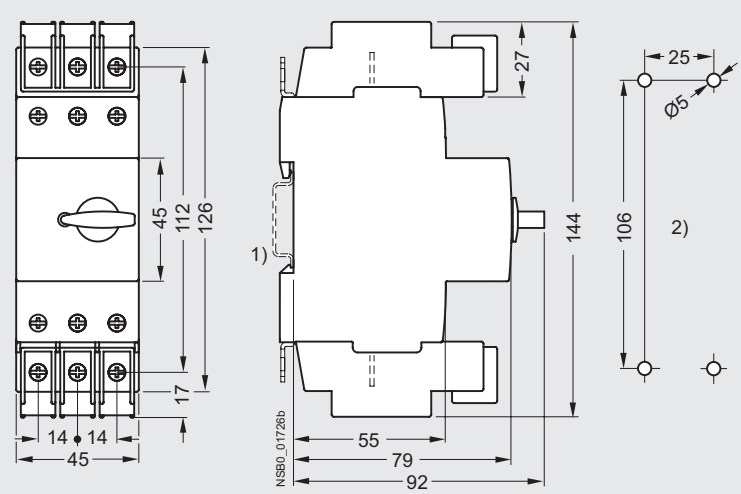

1) Mounting according to EN 60715 to standard mounting rail TH 35.
2) Drilling pattern.

3RV27 circuit breakers, size S3

3RV27 42

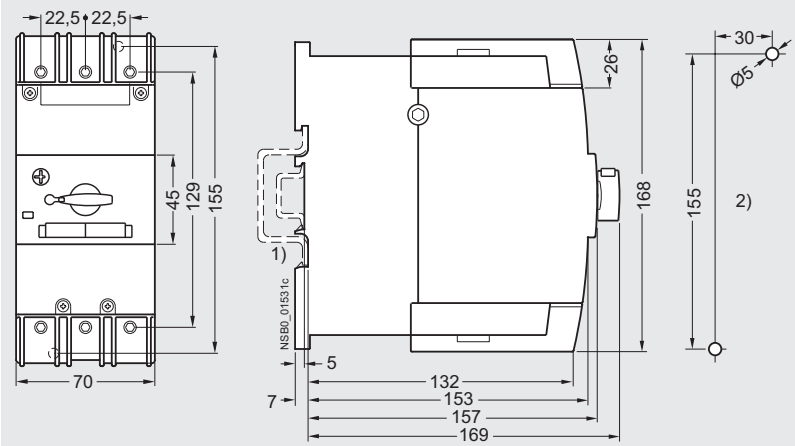

1) Mounting according to EN 60715 on TH 35 standard mounting rail, 15 mm deep, or TH 75 standard mounting rail.
2) Drilling pattern.

Overview

Mounting location and function

The 3RV2 motor starter protectors/circuit breakers have three main contact elements. In order to achieve maximum flexibility, auxiliary switches, signaling switches, auxiliary releases and isolator modules can be supplied separately.

These components are easily fitted to the switches without the use of any tools according to requirements.

Overview graphic, see page 7/7.

Front side Note: • A maximum of four auxiliary contacts with auxiliary switches can be mounted on each motor starter protector/circuit breaker.	**Transverse auxiliary switches, solid-state compatible transverse auxiliary switches** 1 NO + 1 NC or 2 NO or 1 CO	An auxiliary switch block can be inserted transversely on the front. The overall width of the motor starter protectors/circuit breakers remains unchanged.
Left-hand side Notes: • A maximum of four auxiliary contacts with auxiliary switches can be mounted on each motor starter protector/circuit breaker. • Lateral auxiliary switches (two contacts) and signaling switches can be mounted separately or together. • The signaling switch cannot be used for the 3RV27 and 3RV28 circuit breakers.	**Lateral auxiliary switches (2 contacts)** 1 NO + 1 NC or 2 NO or 2 NC	One of the three lateral auxiliary switches can be mounted on the left side per motor starter protector/circuit breaker. The contacts of the auxiliary switch close and open together with the main contacts of the motor starter protector/circuit breaker. The width of the lateral auxiliary switch with two contacts is 9 mm.
	Lateral auxiliary switches (4 contacts) 2 NO + 2 NC	One lateral auxiliary switch with four contacts can be mounted on the left side per motor starter protector/circuit breaker. The contacts of the auxiliary switch close and open together with the main contacts of the motor starter protector/circuit breaker. The width of the lateral auxiliary switch with four contacts is 18 mm.
	Signaling switches Tripping 1 NO + 1 NC Short circuit 1 NO + 1 NC	One signaling switch can be mounted on the left side of each motor starter protector. The signaling switch has two contact systems. One contact system always signals tripping irrespective of whether this was caused by a short circuit, an overload or an auxiliary release. The other contact system only switches in the event of a short circuit. There is no signaling as a result of switching off with the actuator. In order to be able to switch on the motor starter protector again after a short circuit, the signaling switch must be reset manually after the error cause has been eliminated. The overall width of the signaling switch is 18 mm.
Right-hand side Notes: • One auxiliary release can be mounted per motor starter protector/circuit breaker. • Accessories cannot be mounted at the right-hand side of the 3RV21 motor starter protectors for motor protection with overload relay function.	**Auxiliary releases**	
	Shunt releases	For remote-controlled tripping of the motor starter protector/circuit breaker. The release coil should only be energized for short periods (see circuit diagrams).
	or	
	Undervoltage releases	Trips the motor starter protector/circuit breaker when the voltage is interrupted and prevents the motor from being restarted accidentally when the voltage is restored. Used for remote-controlled tripping of the motor starter protector/circuit breaker. Particularly suitable for EMERGENCY-STOP disconnection by way of corresponding EMERGENCY-STOP pushbuttons according to DIN EN 60204-1.
	or	
	Undervoltage releases with leading auxiliary contacts 2 NO	Function and use as for the undervoltage release without leading auxiliary contacts, but with the following additional function: the auxiliary contacts will open in switch position OFF to deenergize the coil of the undervoltage release, thus interrupting energy consumption. In the "tripped" position, these auxiliary contacts are not guaranteed to open. The leading contacts permit the motor starter protector/circuit breaker to reclose. The overall width of the auxiliary release is 18 mm.
Top Notes: • The isolator module cannot be used for the 3RV27 and 3RV28 circuit breakers. • The isolator module for size S2 - can only be used with 3RV2 motor starter protectors/circuit breakers up to max. 65 A - cannot be used with the transverse auxiliary switch • The isolator module covers the terminal screws of the transverse auxiliary switch. If the isolator module is used, we therefore recommend that either the lateral auxiliary switches be fitted or that the isolator module not be mounted until the auxiliary switch has been wired.	**Isolator modules**	Isolator modules can be mounted to the upper connection side of the motor starter protectors. The supply cable is connected to the motor starter protector through the isolator module. The plug can only be unplugged when the motor starter protector is open and isolates all 3 poles of the motor starter protector from the network. The shock-protected isolation point is clearly visible and secured with a padlock to prevent reinsertion of the plug.

For a complete overview of which accessories can be used for the various motor starter protectors/circuit breakers, see page 7/2

Overview

S00 and S0 motor starter protectors with mountable accessories

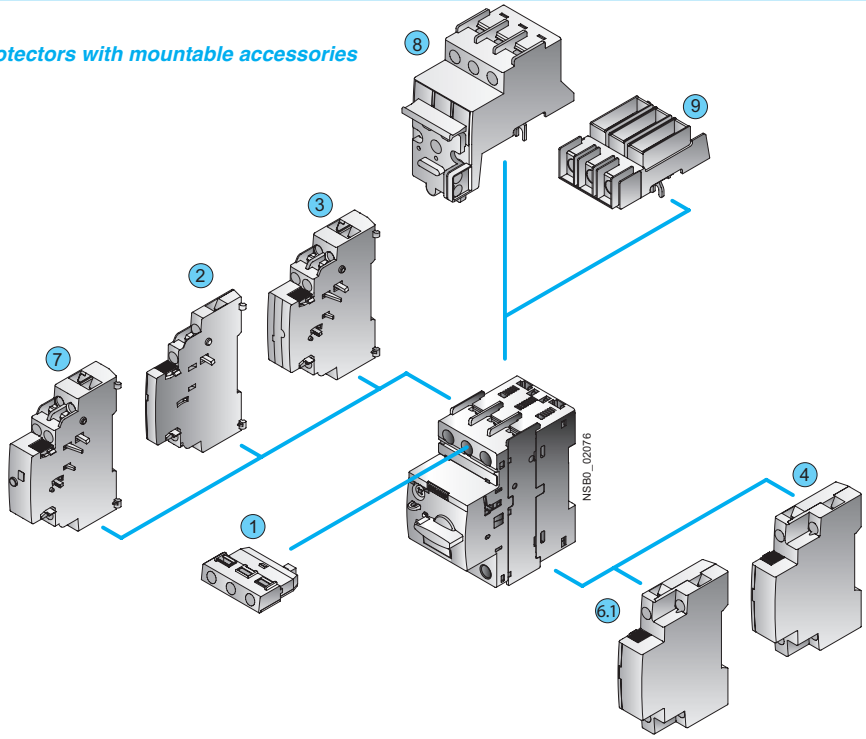

Motor starter protectors, sizes S2 or S3, with mountable accessories

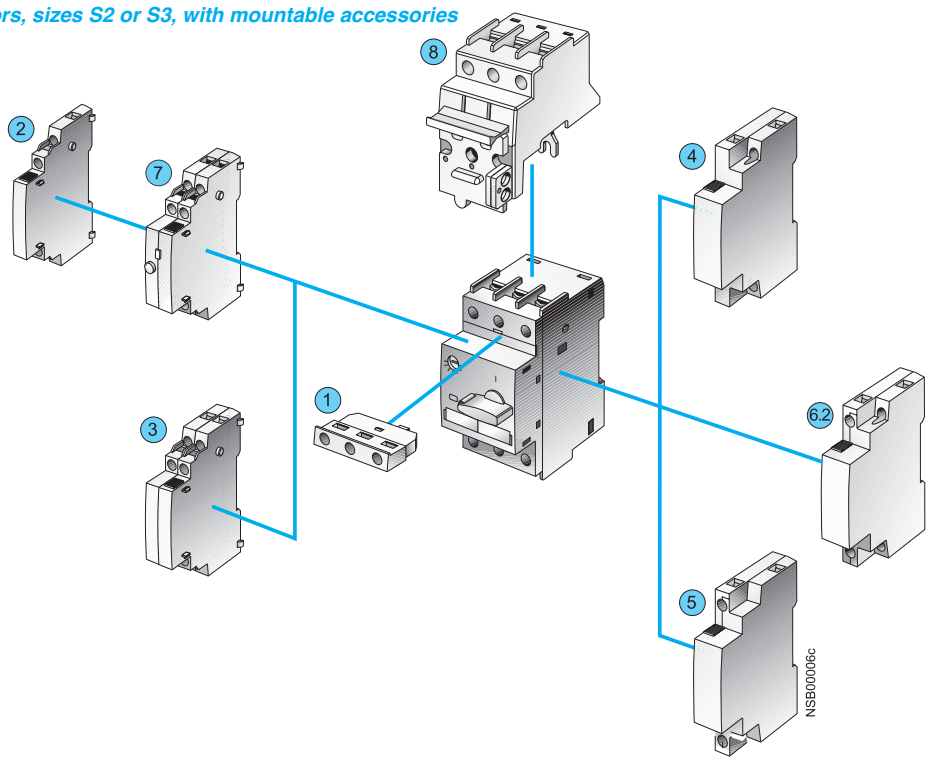

Mountable accessories for all sizes S00 ... S3	Mountable accessories	for sizes	Mountable accessories	for sizes
(1) Transverse auxiliary switch	(6.1) Undervoltage release with leading auxiliary contacts (can not be used with 3RV21 circuit breakers)	S00, S0	(7) Signaling switch (can not be used with 3RV27 and 3RV28 circuit breakers)	S00 ... S3
(2) Lateral auxiliary switch with 2 contacts		S2, S3	(8) Isolator module (can not be used with 3RV27 and 3RV28 circuit breakers)	S0 and S2
(3) Lateral auxiliary switch with 4 contacts	(6.2) Undervoltage release with leading auxiliary contacts		(9) Terminal block E	
(4) Shunt release				
(5) Undervoltage release				

Circuit diagrams

Internal connections

Shunt release

3RV19 02-1D / 3RV29 02-1D

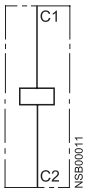

Undervoltage release

3RV19 02-1A / 3RV29 02-1A

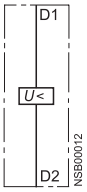

Undervoltage release with leading auxiliary contacts

3RV19 12-1C / 3RV29 12-1C
3RV19 22-1C / 3RV29 22-1C

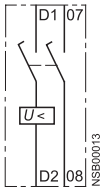

Lateral auxiliary switch with 4 contacts

3RV19 01-1J / 3RV29 01-1J

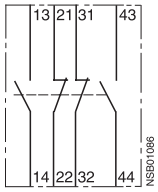

Transverse auxiliary switch

3RV19 01-1D
3RV29 01-1D
3RV19 01-1G
3RV29 01-1G

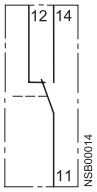

3RV19 01-1E
3RV29 01-1E
3RV19 01-2E
3RV29 01-2E

3RV19 01-1F
3RV29 01-1F

Lateral auxiliary switch with 2 contacts

3RV19 01-1A
3RV29 01-1A
3RV19 01-2A
3RV29 01-2A

3RV19 01-1B
3RV29 01-1B
3RV19 01-2B
3RV29 01-2B

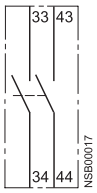

3RV19 01-1C
3RV29 01-1C
3RV19 01-2C
3RV29 01-2C

Signalng switch

3RV19 21-1M / 3RV29 21-1M

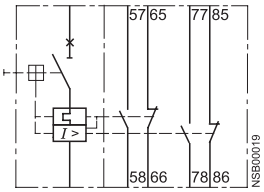

External connections

Shunt release

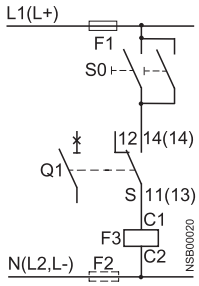

Undervoltage release

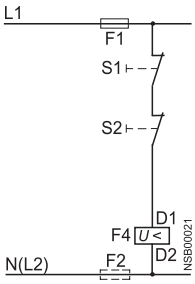

S0; S1; S2	OFF pushbuttons in system
Q1	Motor starter protectors
S	Auxiliary switch of MSP Q1
F1; F2	Fuses (gL/gG) max. 10 A
F3	Shunt release
F4	Undervoltage release

Circuit diagrams

Typical circuits

3RV2 MSPs with 3RV29 21-1M signalling switch

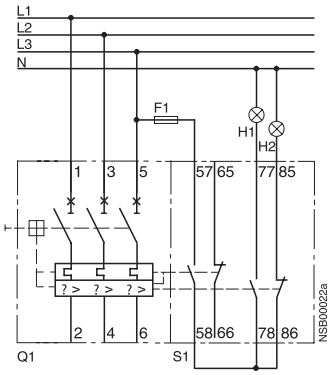

Separate "Tripped" and "Short circuit" signals

H1: "Short circuit" signal

H2: "Overload" or "Tripped by auxiliary release" signal

H1; H2	Indicator lights
F1	Fuses (gL/gG) max. 10 A
Q1	MSP
S1	Signalling switch

Motor starter protectors tripped by means of pushbutton or EMERGENCY STOP button in the system

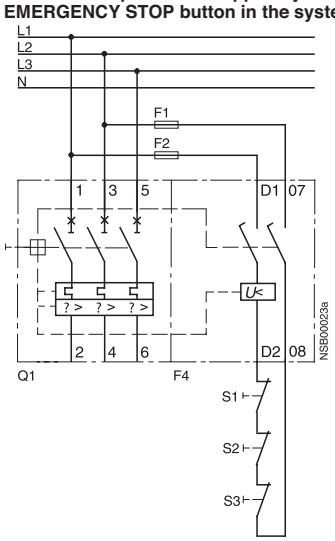

The leading auxiliary contacts open in "OFF" position of the MSP to switch off the coil voltage of the under-voltage release, thus avoiding power consumption in switched off state.

In the "tripped" position of the MSP, these contacts are not guaranteed to open.

F1; F2	Fuses (gL/gG) max. 10 A
Q1	MSP
F4	Undervoltage release
S1; S2, S3	OFF pushbuttons in system

Dimension drawings

Isolator modules

3RV29 28-1A
for MSPs size S00, S0

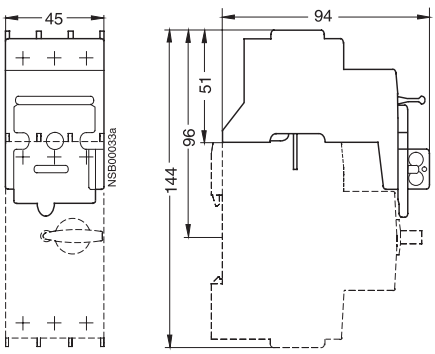

3RV29 38-1A
for MSPs size S2

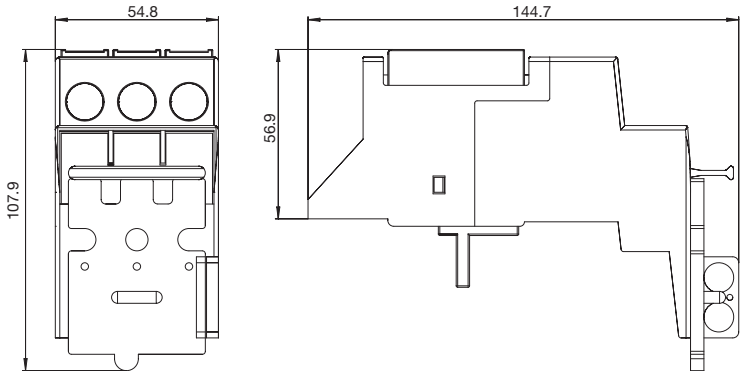

For dimension drawings of auxiliary switches, signalling switches and auxiliary releases, see page 1/33 and 1/34.

Overview

Busbar adapters

The MSPs are mounted directly with the aid of busbar adapters on FastBus-busbar systems with 40 mm and 60 mm centerline spacing, in order to save space and to reduce wiring times and costs.

FastBus-busbar adapters for busbar systems with 40 mm centerline spacing are suitable for copper busbars with a width of 12 mm to 15 mm, while those with 60 mm centerline spacing are suitable for widths of 12 mm to 30 mm. The busbars can be 4 to 5 mm or 10 mm thick.

The MSPs are snapped onto the adapter and connected on the line side. This prepared unit is then plugged directly onto the busbar system, and is thus connected both mechanically and electrically at the same time.

Refer to page 1/10 for busbar adapters for specific MSPs and accessories.

Further busbar adapters for snap-mounting direct-on-line starters and reversing starters, as well as additional accessories such as line terminals and outgoing terminals, busbar copper, etc., can be found in Section 5.

SIRIUS MSPs and combination starters with FastBus-busbar adapters snapped onto busbars

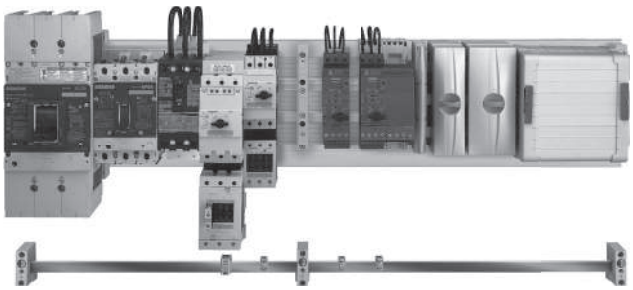

Insulated three-phase busbar system

Three-phase busbar systems provide an easy, time-saving and clearly arranged means of feeding 3RV2 motor starter protectors with screw terminals. They can be used for the different types of motor starter protector up to 32 A. The 3RV19 15 three-phase busbar systems are generally unsuitable for the 3RV21 motor starter protectors for motor protection with overload relay function.

The busbars are suitable for between 2 and 5 circuit breakers/motor starter protectors. However, any kind of extension is possible by clamping the tags of an additional busbar (rotated by 180°) underneath the terminals of the respective last motor starter protector.

A combination of motor starter protectors of different sizes is possible. The motor starter protectors are supplied by appropriate feeder terminals.

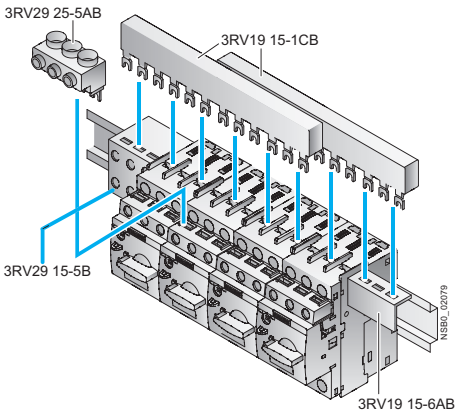

SIRIUS three-phase busbar system size S00/S0

The three-phase busbar systems are finger-safe. They are designed for any short-circuit stress which can occur at the output side of connected motor starter protectors.

8US busbar adapters for 60 mm systems

The motor starter protectors are mounted directly with the aid of busbar adapters on busbar systems with 60 mm center-to-center clearance in order to save space and to reduce infeed times and costs.

The busbar adapters for busbar systems with 60 mm center-to-center clearance are suitable for copper busbars with a width of 12 mm to 30 mm. The busbars can be 5 mm or 10 mm thick.

The motor starter protectors are snapped onto the adapter and connected on the line side. This prepared unit is then plugged directly onto the busbar system, and is thus connected both mechanically and electrically at the same time.

For further busbar adapters for snap-mounting direct-on-line starters and reversing starters as well as additional accessories such as line terminals and outgoing terminals, flat copper profile, etc., can be found in Section 5.

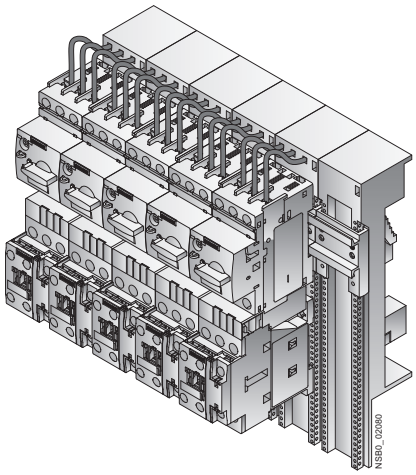

SIRIUS load feeders with busbar adapters snapped onto busbars

The three-phase busbar systems can also be used to construct “Type E Starters” according to UL/CSA. Special feeder terminals must be used for this purpose however (see “Selection and Ordering Data” on page 1/8).

Dimension drawings

3RV19 15-1.. 3-phase busbar

for S00 and S0 MSPs , modular spacing 45 mm
for 2 MSPs 3RV19 15-1AB
for 3 MSPs 3RV19 15-1BB
for 4 MSPs 3RV19 15-1CB
for 5 MSPs 3RV19 15-1DB

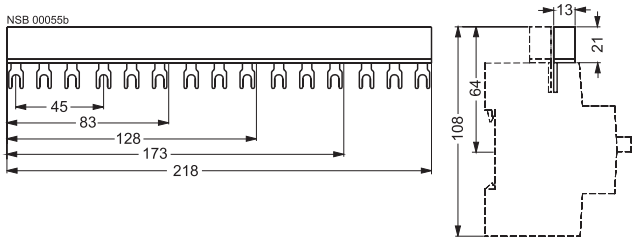

3RV19 15-2.. 3-phase busbar

for S00 and S0 circuit-breakers, modular spacing 55 mm
for 2 MSPs with accessories 3RV19 15-2AB
for 3 MSPs with accessories 3RV19 15-2BB
for 4 MSPs with accessories 3RV19 15-2CB
for 5 MSPs with accessories 3RV19 15-2DB

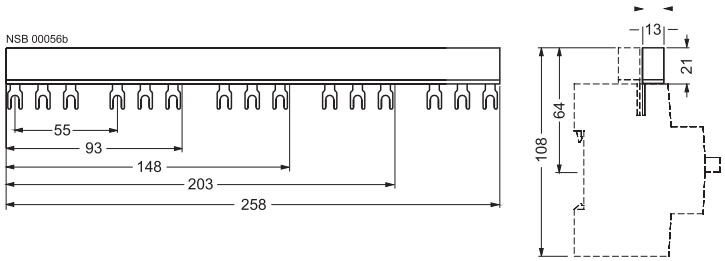

3RV19 15-3.. 3-phase busbar

for S00 and S0 MSPs, modular spacing 63 mm
for 2 MSPs with accessories 3RV19 15-3A
for 3 MSPs with accessories 3RV19 15-3B
for 4 MSPs with accessories 3RV19 15-3C

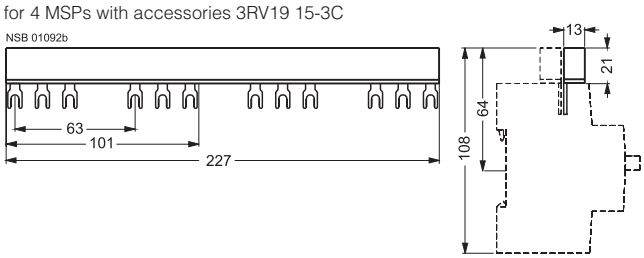

3RV19 35-1.. 3-phase busbar

for S2 MSP, modular spacing 55 mm
for 2 MSPs 3RV19 35-1A
for 3 MSPs 3RV19 35-1B
for 4 MSPs 3RV19 35-1C

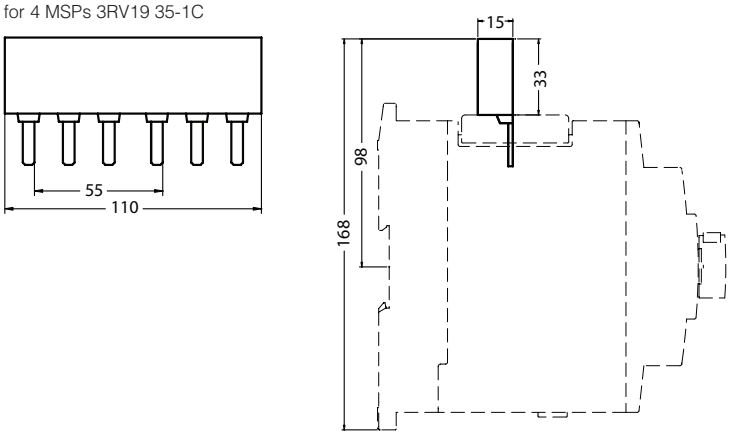

Dimension drawings

3RV19 35-3. . 3-phase busbar

for S2 MSP, modular spacing 75 mm
for 2 MSPs with accessories 3RV19 35-3A
for 3 MSPs with accessories 3RV19 35-3B
for 4 MSPs with accessories 3RV19 35-3C

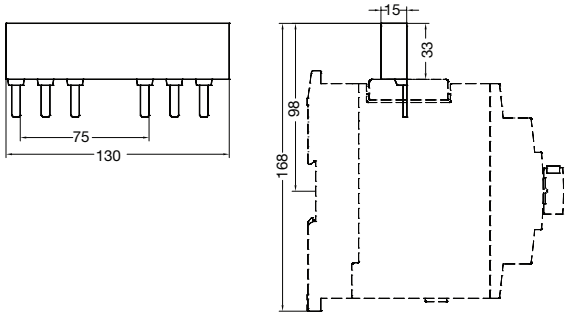

3RV29 25-5AB. 3-phase line-side terminals

connection from above,
size S00 and S0

3RV29 35-5B
connection from above,
size S00 and S0

a) 3RV1. 1 19 mm
3RV1. 2 23 mm

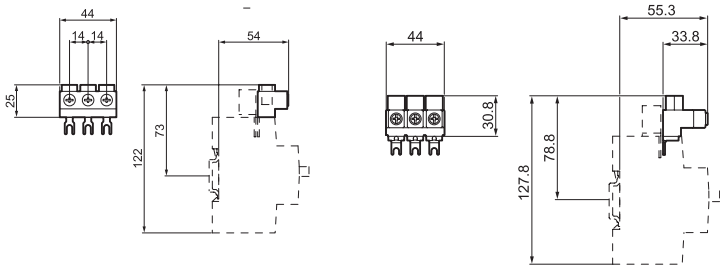

3RV29 25-5EB 3-phase line-side terminal

connection from above,
size S0

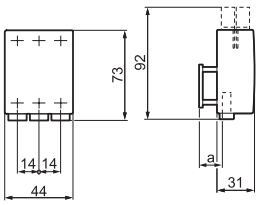

3RV19 35-5A 3-phase line-side terminal

for MSP size S2

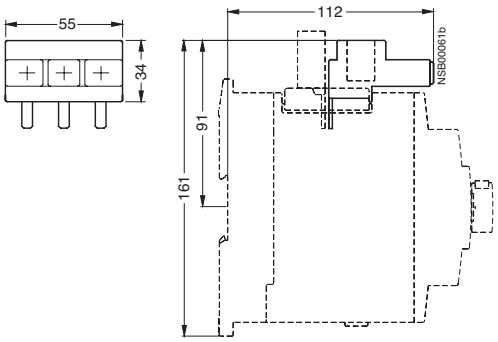

3RV19 15-5DB Connector

For connecting a 3-phase busbar for
MSPs of the size S0
(left) to size S00 (right)

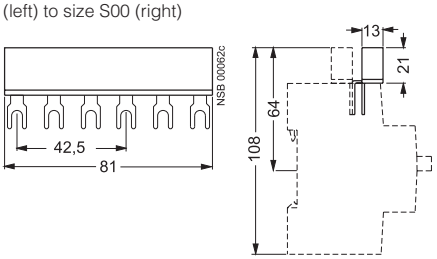

3RV19 25-5EB to construct "Type E Starters"

Connected from top, for motor starter protector size S0

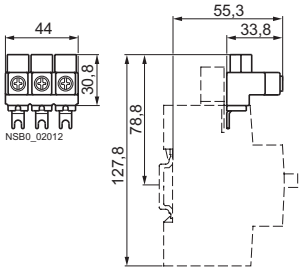

3RV29 35-5E

Connected from top, for motor starter protector size S2

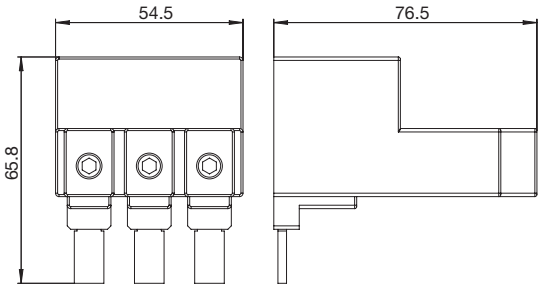

Overview

Door-coupling rotary operating mechanisms

Motor starter protectors with a rotary operating mechanism can be mounted in a control cabinet and operated externally by means of a door-coupling rotary operating mechanism. When the cabinet door with motor starter protector is closed, the operating mechanism is coupled. When the motor starter protector closes, the coupling is locked which prevents the door from being opened unintentionally. This interlock can be defeated by the maintenance personnel. In the OPEN position, the rotary operating mechanism can be secured against reclosing with up to 3 padlocks. Inadvertent opening of the door is not possible in this case either.

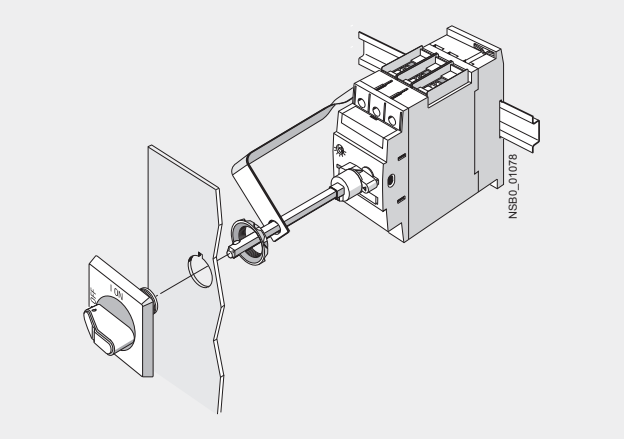

SIRIUS 3RV29 26-0K door-coupling rotary operating mechanism

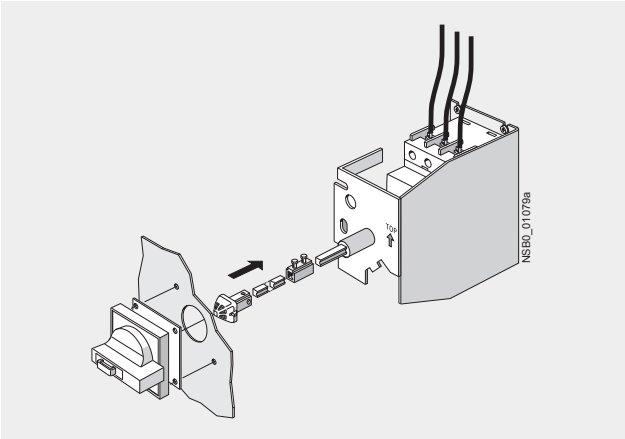

SIRIUS 3RV29 26-2B door-coupling rotary operating mechanism for arduous conditions

Circuit diagrams

Typical circuits

3RV MSP with 3RV19 36/3RV19 46 remote-controlled motorized operating mechanism

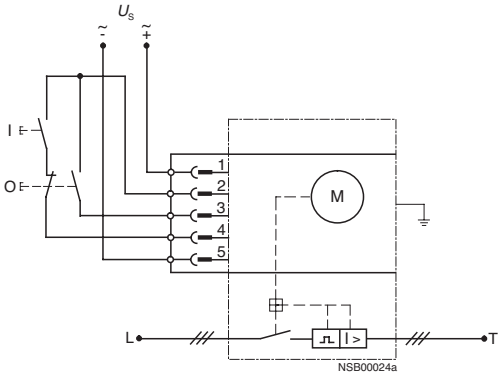

Dimensional drawings

Door coupling rotary mechanism

3RV29 26-0B/3RV29 26-0C short shaft[4]), for MSP sizes S00, S0, S2 and S3

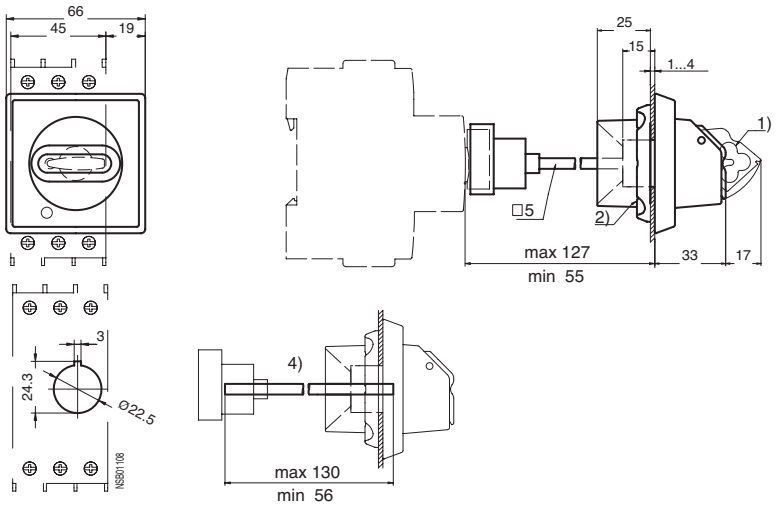

1) Lockable in 0 position, with shackle diameter max. 8 mm
2) Mounting with screw cap
3) Supplied with a shaft length of 330 mm; adaptable by shortening of the shaft.
4) Supplied with a shaft length of 130 mm; adaptable by shortening of the shaft.
5) Grounding terminal 35 mm² and bracket for 330 mm shaft.

3RV29 26-0K/3RV29 26-0L long shaft (with bracket)[3]), for MSP sizes S00, S0, S2 and S3

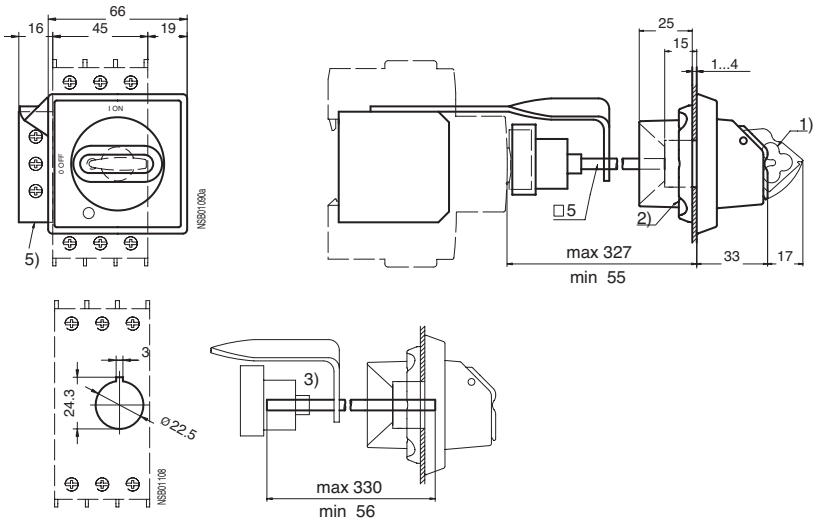

Dimension drawings

3RV29 . 6-2. Door coupling rotary mechanism for heavy duty

3RV29 26-2., 3RV29 36-2., 3R29 46-2.
for sizes S00, S0, S2 and S3

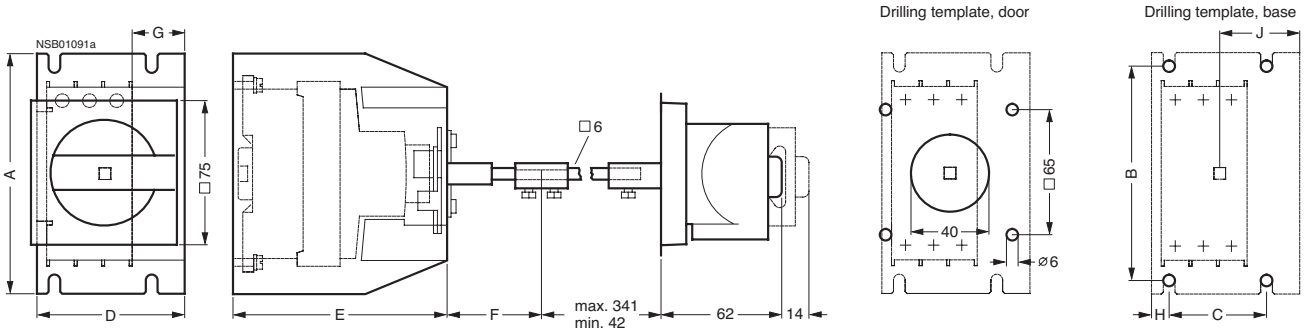

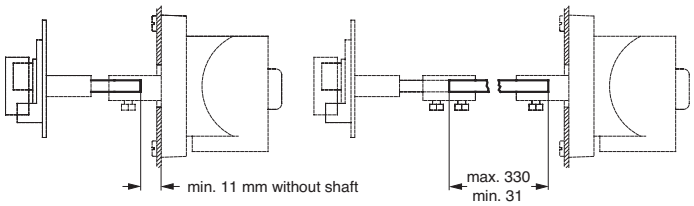

Type	Size	Dimensions								
		A	B	C	D	E	F	G	H	I
3RV29 26-2.	S00, S0	125	111	50	77	112	50	27	9	42
3RV29 36-2.	S2	170	144	60	87	162	50	27	10	47
3RV29 46-2.	S3	194	180	60	100	187	48	25	10	53

Overview

Enclosure

For stand-alone installation of motor starter protector size S2 ($I_{n\ max}$ = 65 A), molded-plastic enclosures for surface mounting are available.

When installed in a molded-plastic enclosures the motor starter protectors have a rated operational voltage U_e of 500 V.

The molded-plastic enclosures are designed to degree of protection IP55.

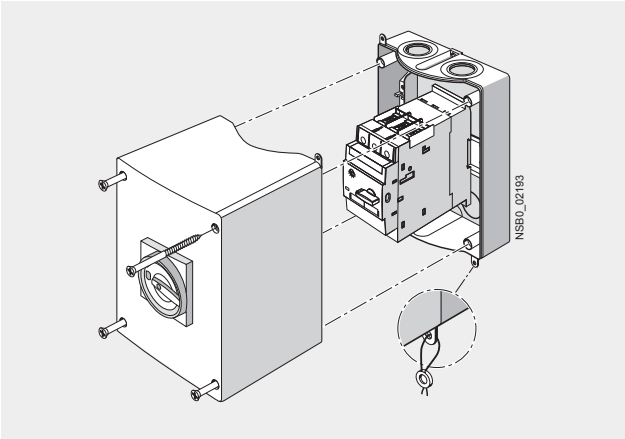

Enclosures for surface mounting

All enclosures are equipped with N and PE terminals. There are two knock-out cable entries for cable glands at the top and two at the bottom; also on the rear corresponding cable entries are scored. There is a knockout on the top of the enclosure for indicator lights that are available as accessories.

In the enclosure for motor starter protector size S2 there is also room for the laterally mounted auxiliary release. There is no provision for installing a motor starter protector with a signaling switch.

The molded-plastic enclosures of the size S2 motor starter protectors are fitted with a rotary operating mechanism.

The enclosures can be supplied with either a black rotary operating mechanism or with an EMERGENCY-STOP rotary operating mechanism with a red/yellow knob.

The rotary operating mechanisms can be locked in the Open position with up to 3 padlocks.

No UL/CSA certification

Front plates

Motor starter protectors are frequently required to be actuated in any enclosure. Front plates equipped with a rotary operating mechanism for motor starter protector sizes S2 and S3 are available for this purpose.

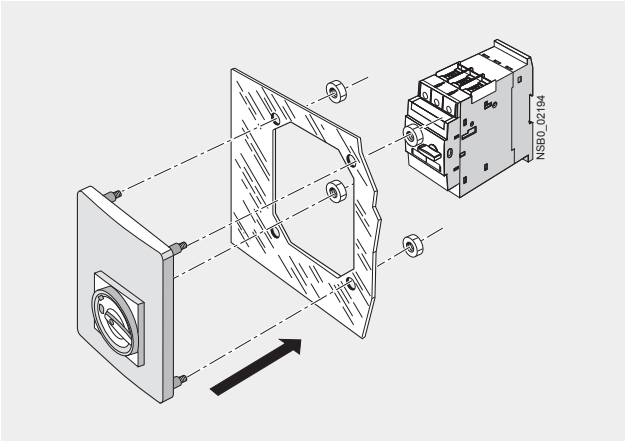

Front plate for size S2

Dimension drawings

3RV19 . 3-1. . . . Cast aluminum enclosure for wall mounting

for MSPs of size S2
3RV19 33-1. . . .

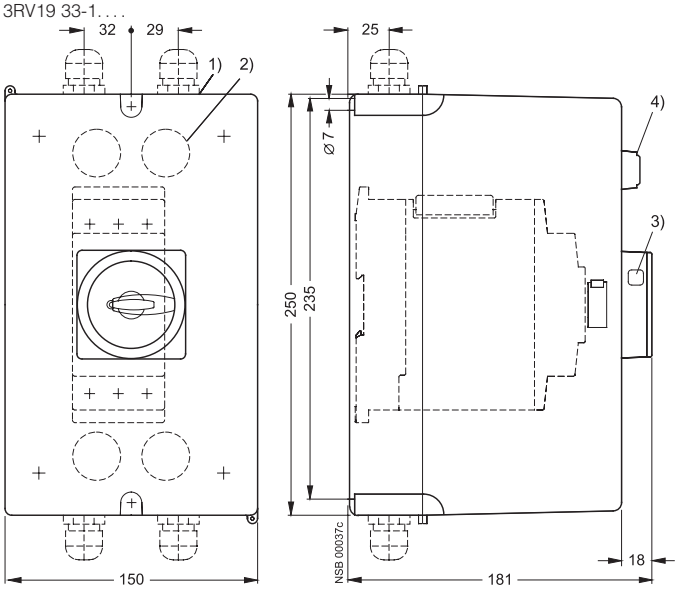

1) Knock-outs for M32 (left) and M40 (right).
2) M32 knock-outs for rear-side cable entry.
3) Opening for padlock with shackle diameter max. 8 mm.
4) Indicator light 3RV19 03-5.

Molded-plastic front plate 3RV19 23-4.

for MSP sizes S0, S2, S3
3RV29 23-4B
3RV29 23-4E
3RV19 23-4G (only for size S0)

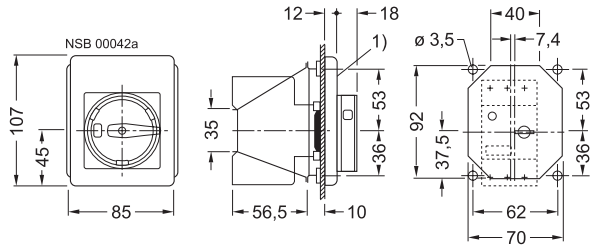

Design

Installation guidelines

Distance in Y direction from live, earthed or insulated parts according to IEC 60947-4: 10 mm.

In addition, the installation guidelines for motor starter protectors or fuseless load feeders including the clearances must be complied with.

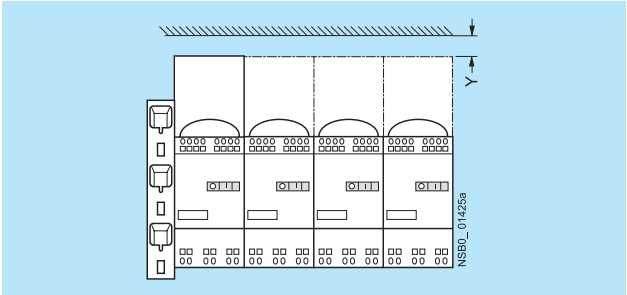

Technical specifications					
Type					3RV29.7
Size					S00, S0
Rated operational voltage *Ue*					
Acc. To IEC		10% overvoltage	V AC	V	500
		5% overvoltage	V AC	V	525
Acc. To UL/CSA					600
Rated frequency				Hz	50/60
Rated current In				A	63
Permissible rated current at inside temperature of control cabinet					
Motor starter protectors	Size	Rated current	Inside temperature of control cabinet		
3RV2.11	S00	… 14 A	60 °C	%	100
		> 14 … 16 A	40 °C	%	100
			60 °C	%	87
3RV2.21	S0	… 16 A	60 °C	%	100
		> 16 … 25 A	40 °C	%	100
			60 °C	%	87
		> 25 … 32 A	40 °C	%	87
Permissible ambient temperature					
Storage/transport				°C	-50 ... +80
Operation				°C	-20 … +60
Rated impulse withstand voltage *Uimp*				kV	6
Short-circuit strength					corresponds to the mounted motor starter protector or load feeder
Degree of protection acc. To IEC 60529					IP20 (In the terminal compartment of the infeed without connected IP00 conductor)
Touch protection acc. to IEC 60529					Finger Safe

Conductor cross-sections				
Type		Three-phase busbar with infeed 3RV2917-1A,3RV2917-1E	Terminal block 3RV2917-5D	Terminal block for device infeed 3RV2917-5FA00
Conductor cross-sections (min./max.)				
• Solid or stranded	mm^2	4 … 25	1.5 … 6	1 … 10
• Finely stranded with end sleeve	mm^2	4 … 25	1.5 … 4	1 … 6
• Finely stranded without end sleeve	mm^2	6 … 25	1.5 … 6	--
• AWG cables	AWG	10 … 3	15 … 10	18 … 8

Cage Clamp infeed system

3-phase busbars with line-side terminals
for 2 circuit-breakers of sizes S00 and S0
3RV29 17-1.

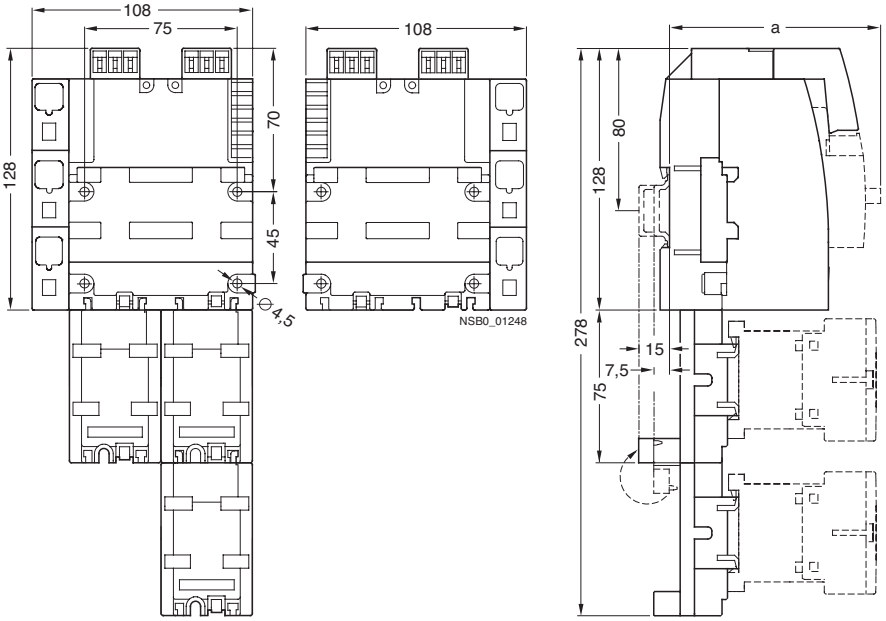

	S00	S0
a	104	125

3-phase busbars for system expansion
for 2 and 3 circuit-breakers of sizes S00 and S0
3RV29 17-4.

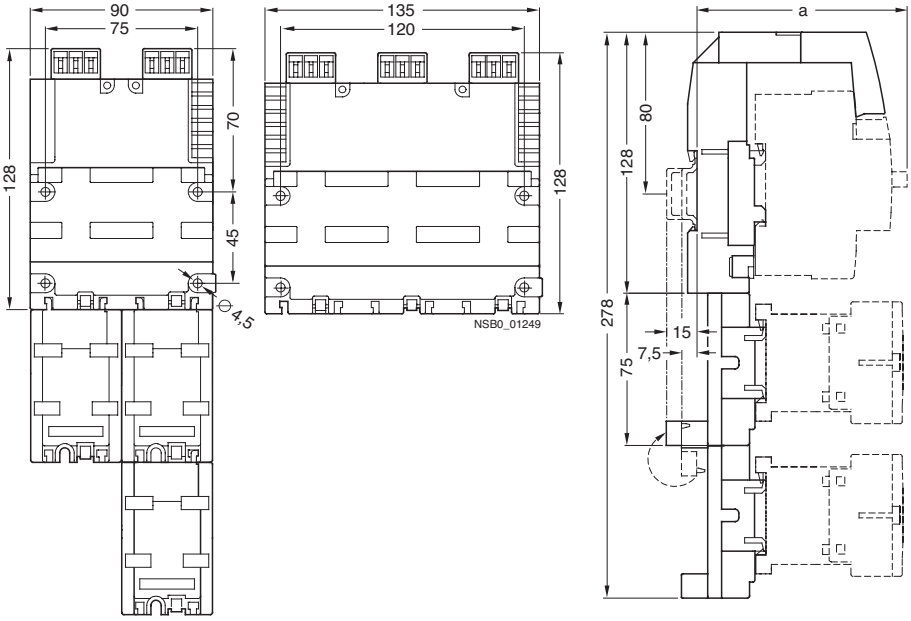

	S00	S0
a	104	125