IF IN DOUBT ASK
DO NOT SCALE

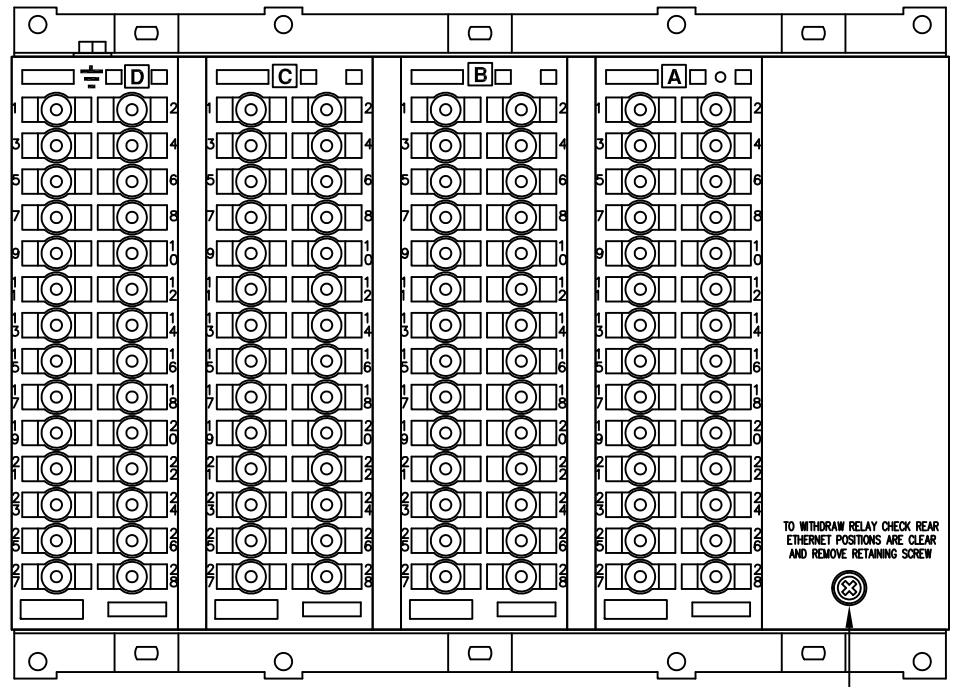

RELAY VIEWED FROM REAR

'A'

TO WITHDRAW RELAY CHECK REAR ETHERNET POSITIONS ARE CLEAR AND REMOVE RETAINING SCREW

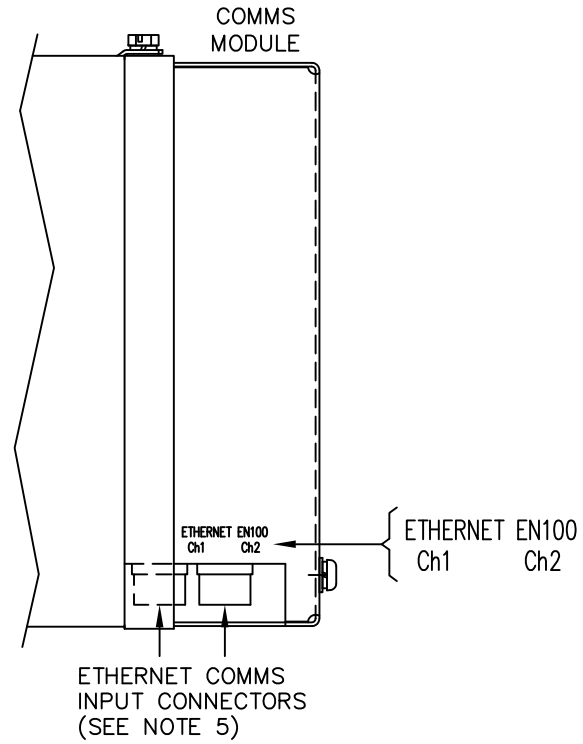

PART SIDE VIEW ON ARROW 'A'

NOTES

1) TERMINALS RECOMMENDED ARE PRE-INSULATED & MUST BE CRIMPED USING APPROVED TOOLING.
AMP PIDG OR PLASTI GRIP FUNNEL ENTRY (RING TONGUE) FOR M4 FIXING STUD.

SUPPLIER	PART NUMBER	CABLE SIZE
AMP	342103	0.25–1.6mm²
AMP	342143	1.0–2.6mm²

OR ANY OTHER MANUFACTURERS EQUIVALENT TERMINAL.

2) FOR OUTLINE & PANEL DRILLING, SEE 2995X10020 (A4).

3) CONNECTIONS TO THIS COMMUNICATIONS FACILITY IS BY SCREENED, TWISTED PAIR CABLE, ON SITE.
WHEN WIRING OTHER FACILITIES ENSURE THAT THESE TERMINALS ARE NOT OBSCURED BY OTHER WIRE RUNS.

4) CONTACTS SHOWN THUS
ARE INTERNAL RELAY CASE ASSEMBLY AND CLOSE WHEN THE RELAY CHASSIS IS WITHDRAWN FROM THE CASE.

5) THE ETHERNET PORTS CAN BE EITHER –
2xFIBRE OPTIC, DUPLEX CONNECTORS OR
2xELECTRICAL, RJ45 CONNECTORS.

ABBREVIATIONS
I–CURRENT INPUTS
V–VOLTAGE INPUTS
BI–BINARY INPUTS
BO–BINARY OUTPUTS
CO–CHANGE OVER BINARY OUTPUT CONTACTS
NO–NORMALLY OPEN BINARY OUTPUT CONTACTS
NC–NORMALLY CLOSED BINARY OUTPUT CONTACTS

SERIAL PORT IDENTIFICATION	
COM1	RS485 (ON BLOCK 'B' TERMINALS 14,16,18 & 20)
COM2	USB TYPE 'B' PORT (ON RELAY FRONT LABEL)

ETHERNET PORT IDENTIFICATION	
Ch1	ETHERNET PORT (ON REAR COMMS MODULE)
Ch2	ETHERNET PORT (ON REAR COMMS MODULE)

NOT SUBJECT TO UPDATE ONCE COPIED / PRINTED OR DOWNLOADED

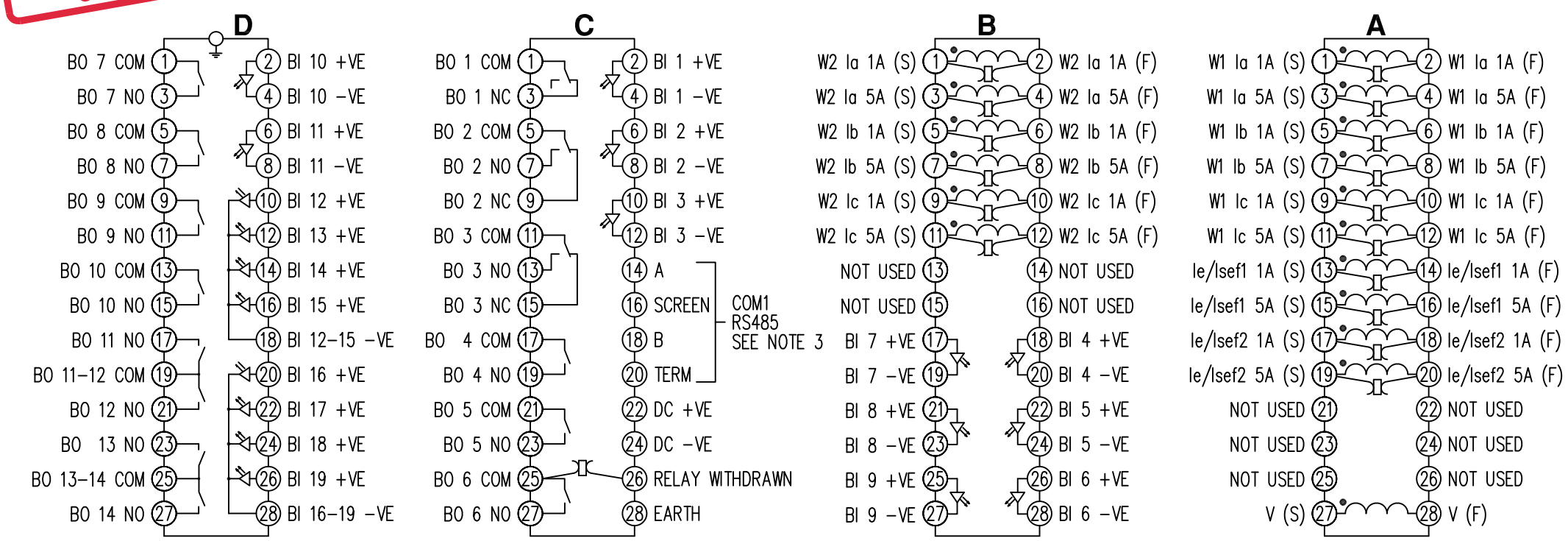

ISSUE	DATE	CHANGE NOTED
2 RDW 30/7/13	18.07.13	RETAINING SCREW POSITION CHANGED. MN435/3650, 3J1770, KB
1	22/03/21	

MATERIAL:

Copyright © 2012 Siemens Protection Devices Ltd. Hebburn

Dimensions in millimetres : Surface texture in micrometres.
Machine where marked ✓
For explanation of dimensions, tolerances, notes etc. see B.S.308.
Limit on untoleranced unmachined dimensions ± _____
Limits on untoleranced machined dimensions to B.S.4500;
i.e. up to 6±0.1; over 30 to 120±0.3; over 315±0.8;
over 6 to 30±0.2; over 120 to 315±0.5;
General unmachined angular tolerance ± _____

Finish:

Treatment:

Title:
TERMINAL ID & WIRING DIAGRAM FOR 7SR242 DUOBIAS
E10, 8I,1V,19BI,2CO,11NO,1NC,RS485, ETHERNET COMMS.

SIEMENS PROTECTION DEVICES LTD.

Original Scale. NTS

First used on:
Similar Articles:
Supersedes:

Drg. No. 2435W40091

DRAWN	CHECKED	APPROVED	DATE	IE	OPS	PCP	Purch.Spec.	TQ	EAC	CE	STD	A3
K.BURDON	RD.WATSON	RD.WATSON	22/03/2012									