Proprietary data, company confidential. All rights reserved
Confie a titre de secret d'entreprise. Tous droits reserves
Communicado como segredo empresarial. Reservados todos os direitos.
Confiado como secreto industrial. Nos reservamos todos los derechos.

Weitergabe sowie Vervielfaeltigung dieser Unterlage, Verwertung und Mitteilung ihres Inhaltes ist nicht ausdrueklich zugestanden. Zuwiderhandlungen verpflichten zu Schadenersatz. Alle Rechte fuer den Fall der Patenterteilung oder GM-Eintragung vorbehalten.

NOTES

1) TERMINALS RECOMMENDED ARE PRE-INSULATED & MUST BE CRIMPED USING APPROVED TOOLING.
AMP PIDG OR PLASTI GRIP FUNNEL ENTRY (RING TONGUE) FOR M4 FIXING STUD.

SUPPLIER	PART NUMBER	CABLE SIZE
AMP	342103	0.25–1.6mm²
AMP	342143	1.0–2.6mm²

OR ANY OTHER MANUFACTURERS EQUIVALENT TERMINAL.

2) FOR OUTLINE & PANEL DRILLING, SEE 2995X10004 (A4).

3) CONNECTIONS TO THIS COMMUNICATIONS FACILITY IS BY SCREENED, TWISTED PAIR CABLE, ON SITE.
WHEN WIRING OTHER FACILITIES ENSURE THAT THESE TERMINALS ARE NOT OBSCURED BY OTHER WIRE RUNS.

4) CONTACTS SHOWN THUS
ARE INTERNAL RELAY CASE ASSEMBLY CONTACTS AND CLOSE WHEN THE RELAY CHASSIS IS WITHDRAWN FROM THE CASE.

5) FOR THE RELAY CASE ASSEMBLY SEE 2436G40048

ABBREVIATIONS
I–CURRENT INPUTS
V–VOLTAGE INPUTS
BI–BINARY INPUTS
BO–BINARY OUTPUTS
CO–CHANGE OVER BINARY OUTPUT CONTACTS
NO–NORMALLY OPEN BINARY OUTPUT CONTACTS
NC–NORMALLY CLOSED BINARY OUTPUT CONTACTS

COMMUNICATIONS IDENTIFICATION	
COM1	RS485 (ON BLOCK 'B' TERMINALS 14,16,18 & 20)
COM2	USB TYPE 'B' PORT (ON RELAY FRONT LABEL)
COM3	ETHERNET(x2) PORTS (ON REAR COMMS MODULE)

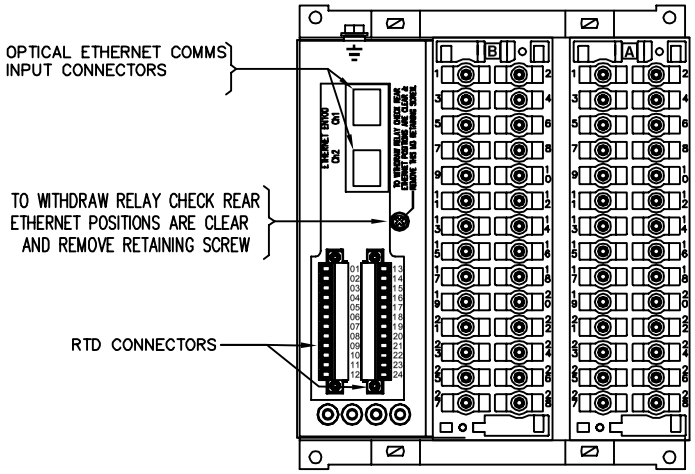

RELAY VIEWED FROM REAR

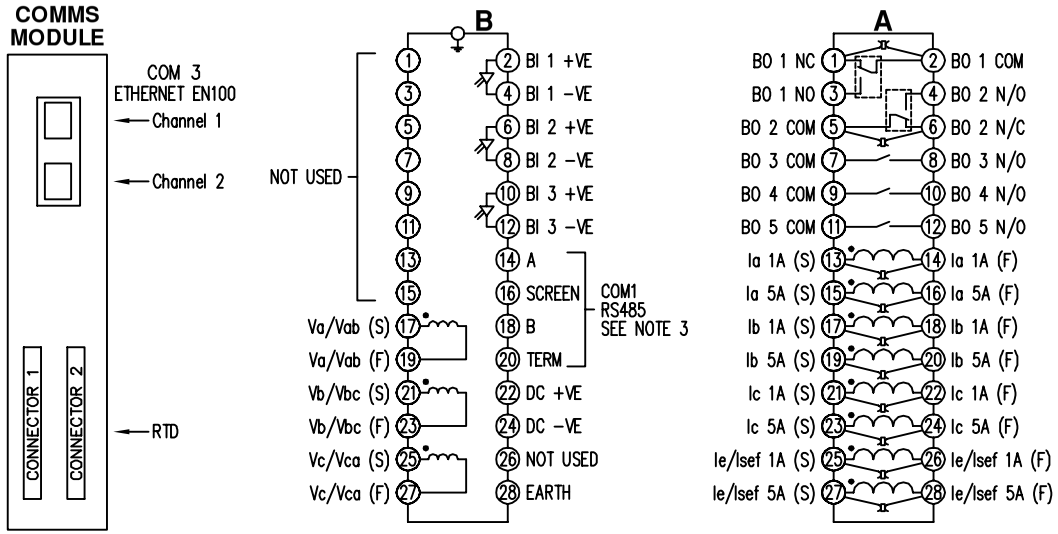

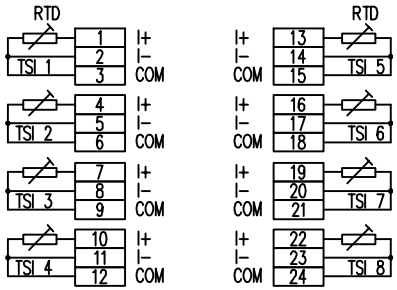

CONNECTOR 1 CONNECTOR 2

FOR INTERNAL USE ONLY
UNCONTROLLED COPY
NOT SUBJECT TO UPDATE

UNSPECIFIED TOLERANCES (IN MM)	
DIMENSION	TOLERANCE
0 < 6	±0.1
6 < 15	±0.15
15 < 30	±0.2
30 <	±0.25

Rev.	Change	Date	Name
1A	DRAWING RELEASED	25-04-2017	AMAR

FINISH

Maßstab/Scale NTS

Volumen[cm^3]:

Material:

	Name	Date
DRN. BY	AMAR	25-04-2017
CHD. BY	JOHN SP.	25-04-2017
APPD. BY	JAYANT J.	25-04-2017

EM EA PRO R&D

Siemens Ltd

Title
TERMINAL ID & WIRING DIAGRAM FOR 7SR17
4CT+3VT+3BI+5BO(2CO+3NO),OPTICAL ETH(x2),8 RTD

Document No 2436W40068 Rev. 1A

7SR17 Sheet 1 of 1

Die Zeichnung wurde mit Pro/Engineer erstellt