© Siemens AG 2014

4/2 Introduction
4/2 Communication overview
4/3 System components
4/4 AS-Interface specification V3.0

4/6 ASIsafe
4/6 Introduction
4/48 DP/AS-i F-Link
4/40 F-CM AS-i Safety ST for SIMATIC ET 200P
Ch. 3 SIRIUS 3RK3 Modular Safety System
4/8 AS-Interface safety monitors
4/9 AS-Interface safety modules
4/12 SIRIUS 3SF1 mechanical safety switches
4/28 SIRIUS 3SF2 cable-operated switches for AS-Interface
4/29 SIRIUS EMERGENCY-STOP mushroom pushbuttons for AS-Interface
4/32 AS-Interface F adapters for EMERGENCY-STOP devices

4/33 Masters
4/33 Masters for SIMATIC S7
4/33 CM 1243-2
4/35 CP 343-2P / CP 343-2
4/37 Masters for SIMATIC ET 200
4/37 CM AS-i Master ST for SIMATIC ET 200SP
4/40 F-CM AS-i Safety ST for SIMATIC ET 200SP

4/43 Network transitions
4/43 DP/AS-i LINK Advanced
4/46 DP/AS-Interface Link 20E
4/48 DP/AS-i F-Link
4/52 IE/AS-i LINK PN IO

4/55 Slaves
4/55 I/O modules for use in the field, high degree of protection
4/55 Digital I/O modules, IP67 - Introduction
4/56 Digital I/O modules, IP67 - K60
4/58 Digital I/O modules, IP68/IP69K - K60R
4/60 Digital I/O modules, IP67 - K45
4/62 Digital I/O modules, IP67 - K20
4/64 Analog I/O modules, IP67 - K60
4/67 I/O modules for use in the control cabinet
4/67 Introduction
4/68 SlimLine
4/70 F90 module
4/71 Flat module
4/72 Special integrated solutions
4/72 AS-interface communication modules
4/74 Modules with special functions
4/74 Counter modules
4/75 Ground-fault detection modules
4/76 Overvoltage protection module
4/77 AS-Interface connections for LOGO!
4/78 Contactors and contactor assemblies
4/78 Power contactors for switching motors – SIRIUS 3RT20 contactors
4/79 Contactor assemblies – SIRIUS 3RA24 for wye-delta assemblies
4/80 SIRIUS 3RA27 function modules for AS-Interface
4/82 Motor starters for use in the control cabinet
4/82 SIRIUS 3RA6 compact starters
4/82 - General data
4/85 - 3RA61 direct-on-line starters
4/86 - 3RA62 reversing starters
4/87 - Accessories
4/92 - Add-on modules for AS-Interface
4/94 - Infeed system for 3RA6
4/101 Motor starters for use in the field, high degree of protection
4/101 SIRIUS M200D motor starters
4/101 - General data
4/102 - M200D motor starters for AS-Interface
4/107 - Accessories
4/111 SIRIUS MCU motor starters for AS-Interface
4/111 - General data
4/113 - Plastic enclosures, electromechanical switching
4/114 - Metal enclosures, electromechanical switching
4/116 - Metal enclosures, electronic switching
4/117 Motor starters for AS-Interface, 24 V DC
4/120 SINAMICS G110D distributed inverters
4/123 3SF5 pushbuttons and indicator lights
4/123 Housing and front panel module for AS-Interface
4/123 - General data
4/124 - With standard fittings
4/125 - Components
4/126 - Customized equipment
4/127 - Front panel module
4/132 8WD4 signaling columns

4/137 Power supply units and data decoupling modules
4/137 AS-Interface power supply units
4/138 30 V power supply units
IC 10[1)] 24 V power supply units
4/140 S22.5 data decoupling modules
4/142 Data decoupling modules for S7-1200
4/142 DCM 1271 data decoupling modules

4/144 Transmission media
4/144 AS-Interface shaped cables

4/145 System components and accessories
4/145 Repeater
4/146 Extension plug
4/147 Addressing units
4/149 Analyzer
4/152 Miscellaneous accessories

4/155 Software
4/155 AS-Interface block library for SIMATIC PCS 7

1) See Catalog IC 10 "Industrial controls".

© Siemens AG 2014

Communication overview

Overview

AS-Interface is an open, international standard according to EN 50295 and IEC 62026-2 for process and field communication. Leading manufacturers of actuators and sensors all over the world support the AS-Interface. Interested companies are provided with the electrical and mechanical specifications by the AS-Interface Association.

AS-Interface is a single master system. For automation systems from Siemens, there are communications processors (CPs) communications modules (CMs) and network transitions (links) that control the process or field communication as masters, and actuators and sensors that are activated as AS-Interface slaves.

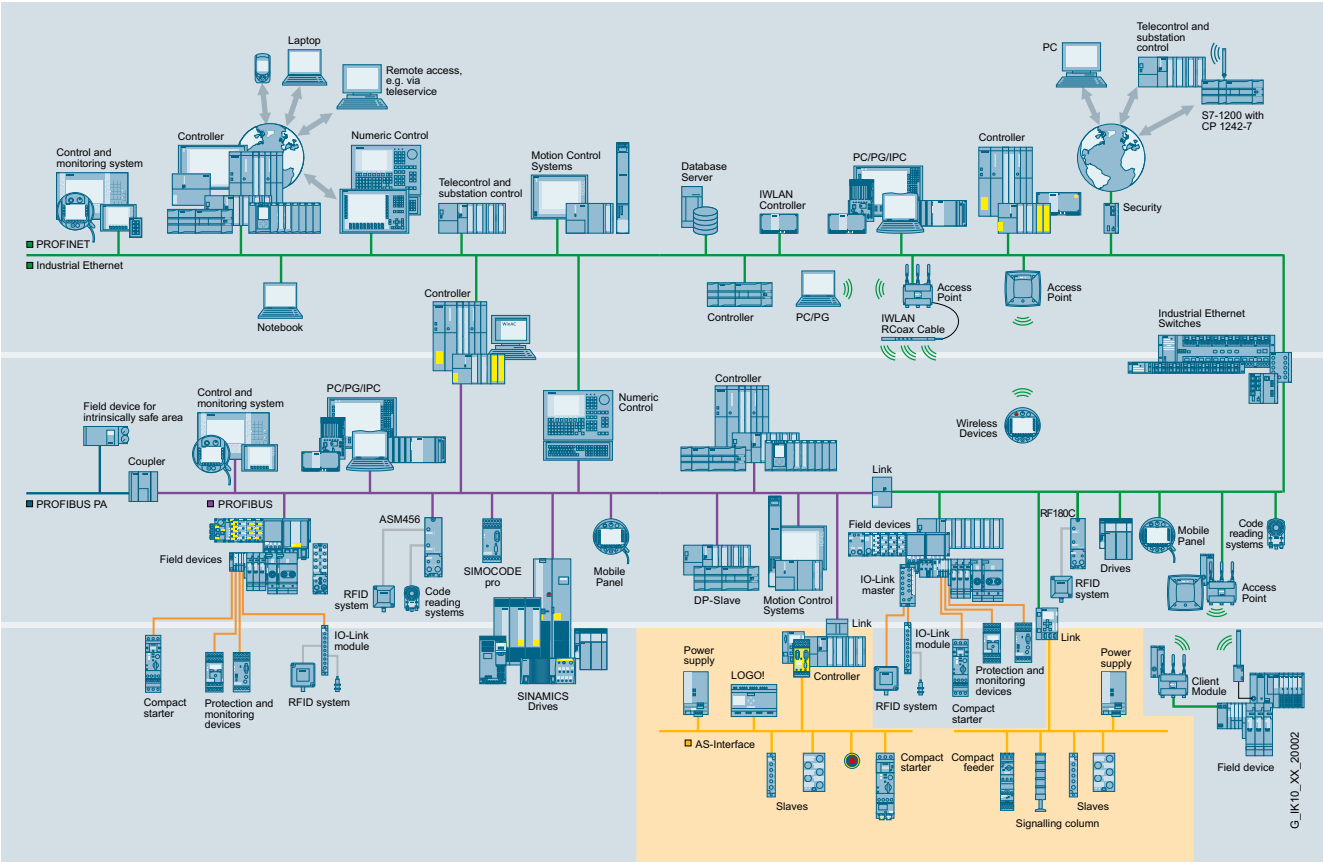

Benefits

A key feature of AS-Interface technology is the use of a shared two-conductor cable for data transmission and the distribution of auxiliary power to the sensors/actuators. A power supply unit which meets the requirements of the AS-Interface transmission method and has an external data decoupling module if required is used for the distribution of auxiliary power. The AS-Interface cable used for the wiring is mechanically coded and hence protected against polarity reversal and can be easily contacted by the insulation piercing method.

Elaborately wired control cables in the control cabinet and marshalling racks can be replaced by AS-Interface.

The AS-Interface cable can be connected to any points thanks to a specially developed cable and connection by the insulation piercing method.

With this concept you become extremely flexible and achieve high savings.

Application

I/O data exchange

The AS-i master transmits automatically the inputs and outputs between the control system and the digital and analog AS-Interface slaves.

Slave diagnostics information is forwarded to the control system when required.

The latest AS-Interface masters according to the AS-Interface Specification V3.0 support integrated analog value processing. This means that data exchange with analog AS-Interface slaves is just as easy as with digital slaves.

Command interface

In addition to I/O data exchange with binary and analog AS-Interface slaves the AS-Interface masters provide a number of other functions through the command interface.

Hence it is possible, for example, for slave addresses to be issued, parameter values transferred or configuration information read out from user programs.

For more information see
http://support.automation.siemens.com/WW/view/en/51678777.

© Siemens AG 2014

Overview

To implement communication, a system installation has the following main components:

- Master interface modules for central control units such as SIMATIC S7, ET 200/ET 200SP distributed peripherals, or network transitions from PROFIBUS/PROFINET to AS-Interface
- Power supply units, if required in combination with a data decoupling module for the power supply to the slaves
- AS-Interface shaped cables
- Network components such as repeaters and extension plugs (cannot be used for AS-i Power24V)
- Modules for connection of standard sensors/actuators
- Actuators and sensors with integrated AS-i slave
- Secure modules for transferring safety-related data over AS-Interface
- Addressing units for setting the slave addresses during commissioning

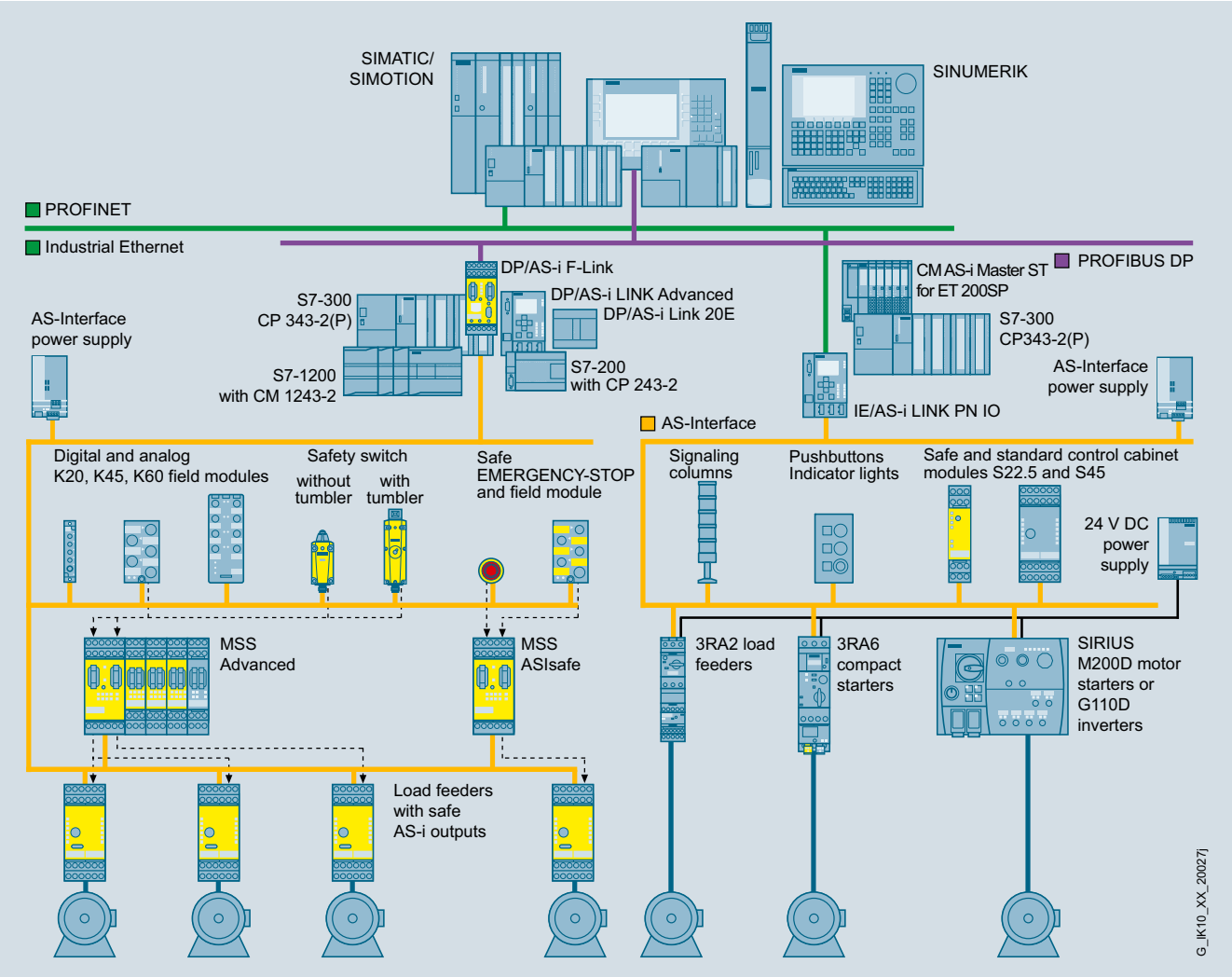

Example of a configuration with the system components

Features

Standard	EN 50295 / IEC 62026-2
Topology	Line, star or tree structure (same as electrical wiring)
Transmission medium	Unshielded two-wire cable (2 x 1.5 mm^2) for data and auxiliary power
Connection methods	Contacting of the AS-Interface cable by insulation piercing method
Maximum cable length	• 100 m without repeater • 200 m with extension plug • 300 m with two repeaters in series connection • 600 m with extension plugs and two repeaters connected in parallel Larger cable lengths are also possible when additional repeaters are connected in parallel

Maximum cycle time	• 5 ms in maximum configuration with 31 standard addresses • 10 ms in maximum configuration with 62 A/B addresses • profile-specific for slaves with extended data, e.g. analog slaves
Number of stations per AS-Interface line	• Up to 62 Slaves (A/B technology) • Integrated analog value transmission
Number of binary sensors and actuators	Max. 496 DI/496 DO
Access control	• Cyclic polling master/slave procedure • Cyclic data acceptance from host (PLC, PC)
Error safeguard	Identification and repetition of faulty message frames

© Siemens AG 2014

Overview

Scope of the AS-Interface specification

Maximum number of slaves			Number of digital inputs	Number of digital outputs
Digital	Analog	ASIsafe	DI	DO
62	62	31	62 × 8 = 496	62 × 8 = 496

Basic data

AS-Interface Specification 3.0 describes a fieldbus system with an AS-i master and up to 62 AS-i slaves.

- The standard slaves continue to occupy one AS-i address (1...31).
- Slaves with extended addressing divide an address into an A address (1A...31A) and a B address (1B...31B). Up to 62 A/B slaves can be connected accordingly to one AS-Interface network.
- Mixed operation of standard slaves and A/B slaves is possible without difficulty. The AS-i master identifies automatically which type of slave is connected. No special adjustments are required of the user.
- A digital AS-i slave has up to 4 digital inputs and 4 digital outputs.
- Transmission of digital input/output data requires a cycle time of max. 5 ms with 31 slaves, see "Communication cycle" for further values.
- Integrated analog value transmission permits access to both analog values and digital values without the need for any special function blocks.

Communication cycle

Maximum cycle time (digital signals)
• 5 ms with 31 slaves • 10 ms with 62 slaves • Up to 20 ms for A/B slaves with 4DI/4DO • Up to 40 ms for A/B slaves with 8DI/8DO

Each address is queried in max. 5 ms cycle time. If two A/B slaves are operated on one basic address (e.g. 12A and 12B), a maximum 10 ms will be required for updating the data of both slaves.

All slave types can be mixed and used on a single AS-Interface network.

For more information, for example, to find out whether an AS-Interface slave is a standard or A/B slave, refer to "Selection and ordering data" of the relevant slave.

Available masters with the latest AS-Interface specification V3.0

- CP 343-2, CP 343-2P (S7-300 / ET 200M)
- DP/AS-i LINK Advanced
- DP/AS-i F-Link
- DP/AS-Interface Link 20E
- IE/AS-i LINKPNIO
- CM 1243-2 (S7-1200)
- CM AS-i Master ST (ET 200SP)

More information

AS-Interface system manual

The AS-Interface system manual is available as a free download.

- German
  http://support.automation.siemens.com/WW/view/de/26250840
- English
  http://support.automation.siemens.com/WW/view/en/26250840

© Siemens AG 2014

Overview

AS-Interface data decoupling modules for AS-i Power24V,
left: S22.5 data decoupling module,
right: DCM 1271 data decoupling module for SIMATIC S7-1200

Parallel wiring frequently dominates, above all, in applications with very few I/Os. Although AS-Interface is similarly well suited for small applications, its use is often prevented by the cost of the 30 V AS-Interface power supply unit which is required in addition.
Through the expansion of AS-Interface with AS-i Power24V and the resulting possibility of using existing standard 24 V DC power supply units in AS-i networks, AS-Interface is now also attractive for applications with a very tight budget.

Data and power in standard AS-Interface networks up to now

One of the great advantages of AS-Interface is the ability to convey not only data, but also the power needed for the connected slaves and sensors over the same unshielded two-conductor cable. This is owed to the service-proven AS-Interface power supply units which provide integrated data decoupling as well as overload and short-circuit protection and integrated ground-fault monitoring.

The new technology

Through the expansion of AS-Interface with AS-i Power24V it is now also possible to use 24 V standard power supply units in AS-i networks. The communication technology of AS-Interfaces works at the same high level of quality with an operating voltage of both 30 V DC and 24 V DC.

	Key data of AS-i Power24V
Number of slaves	Up to 62 standard slaves and up to 31 safe slaves
Topology	Any
Range	Up to 50 m
Components	• 24 V power supply unit with little residual ripple and imitation to max. 40 V • AS-i Power24V-capable data decoupling with integrated ground-fault detection • AS-i Power24V-capable masters, slaves and components

Requirements for operation of an AS-i Power24V network

- When 24 V power supply units are used, the maximum network range of 50 m must be observed in order to reach slaves and sensors with a sufficient level of voltage (at least 18 V).
- The power supply units must comply with the PELV (Protective Extra Low Voltage) or SELV (Safety Extra Low Voltage) standards, have a residual ripple of < 250 mV_{pp}, and in the event of a fault must limit the output voltage to a maximum of 40 V. SITOP power supply units are recommended, see Catalog IC 10, Chapter 15 "Products for Specific Requirements" → "Stabilized Power Supplies".
- When used in conjunction with standard 24 V power supply units, each AS-Interface network requires Power24V-capable data decoupling with adapted ground-fault detection, see page 4/75.
- For reliable operation of an AS-i network with 24 V voltage, it is important that the masters, slaves and other components are approved for AS-i Power24V. AS-i Power24V-capable AS-i components can also be used without restriction in standard 30 V AS-i networks.
- The use of repeaters or extension plugs in AS-i Power24V networks is not permitted.

Benefits

AS-i Power24V networks incur no additional costs for an AS-Interface power supply unit because an already existing 24 V power supply unit can be used. This brings the user several benefits:

- The level of standardization of very small applications can be increased further.
- The additional advantages of a modern communication system in terms of commissioning, maintenance and diagnostics can be fully exploited.

Application

Construction of an AS-i Power24V network

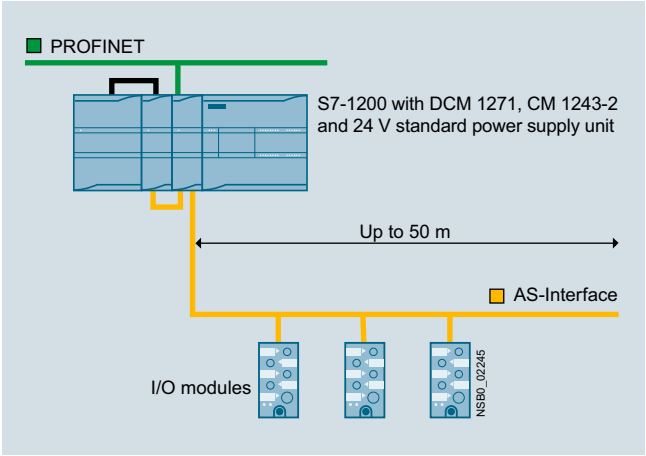

Construction of an AS-i Power24V network with an AS-Interface DCM 1271 data decoupling module and S7-1200 (simple network)

More information

Complete overview of AS-i Power24V-capable devices currently available from Siemens see
http://support.automation.siemens.com/WW/view/en/42806066.

© Siemens AG 2014

Overview

ASIsafe – Safety is included

ASIsafe enables the integration of safety-related components, such as EMERGENCY-STOP pushbuttons, protective door switches or safety light arrays, in an AS-Interface network. These are fully compatible with the familiar AS-Interface components (masters, slaves, power supplies, repeaters, etc.) in accordance with IEC 62026-2 and are operated in conjunction with them on the yellow AS-Interface cable.

Tested safety

The transmission method for safety-related signals is approved for implementing applications up to PL e according to EN ISO 13849-1 and up to SIL 3 according to IEC 62061/IEC 61508.

Higher-level control

Nodes on the AS-Interface bus are as usual controlled in operation by the standard program of the higher-level SIMATIC (F) CPU or by a SINUMERIK control.

Configuring safety functions

In order to implement safe functions, the information from the safe and standard nodes must be combined logically and further parameters set. The configuration of the safety functions depends on which safety solution is being used:

- In the case of the AS-i safety solution with F-CPU: In conjunction with the SIMATIC AS-i F-Link as a safe AS-i master, all safety functions and logic operations are configured via STEP 7 and processed in the controller (F-CPU) by the fail-safe program.
- In the case of the AS-i safety solution with local evaluation by MSS: In conjunction with the Modular Safety System, all safety functions and logic operations are configured using the MSS ES software and processed in the MSS central unit.

AS-i safety solution with F-CPU

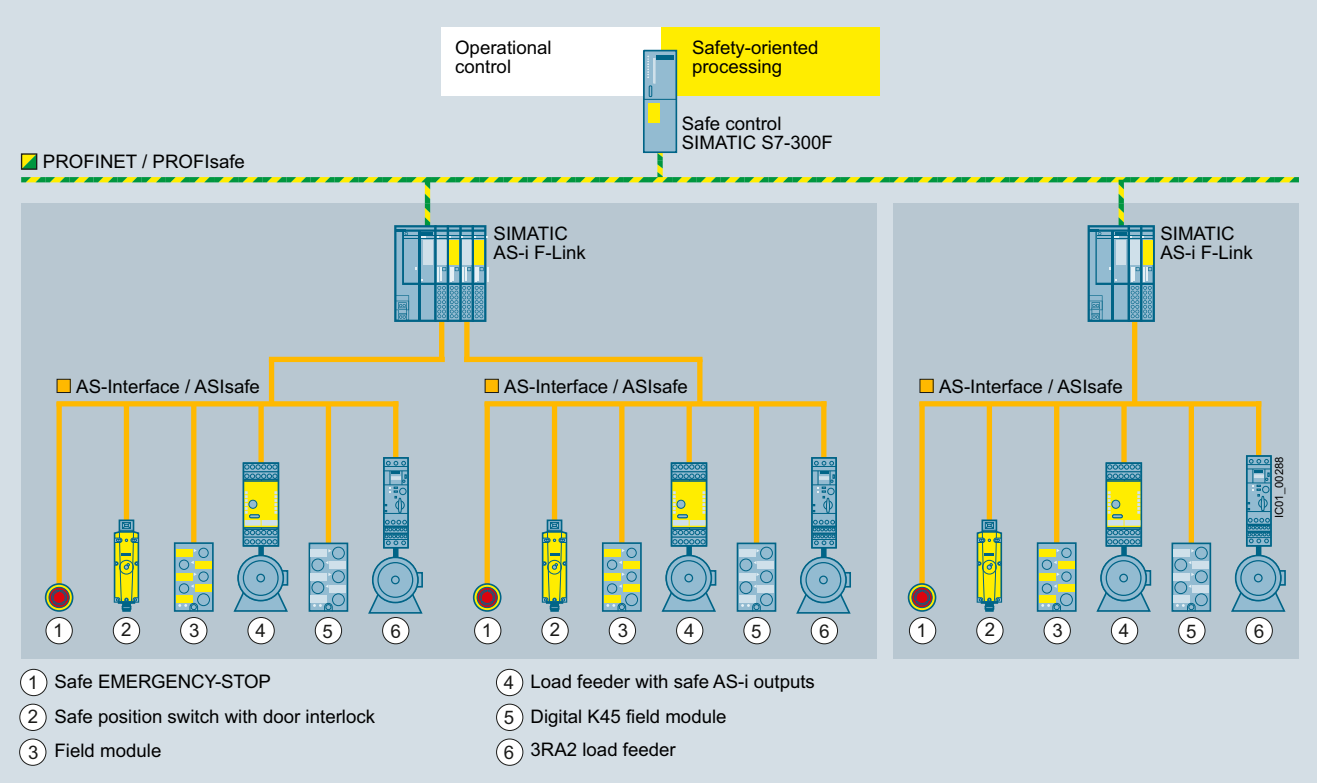

AS-Interface configuration with SIMATIC AS-i F-Link, consisting of an ET 200SP station with CM AS-i Master ST and F-CM AS-i Safety ST modules

The SIMATIC AS-i F-Link allows AS-Interface to be used with fail-safe SIMATIC or SINUMERIK controls.

The allocation of tasks is as follows:

- Acquisition of safety-related signals via safe input slaves on the AS-Interface bus.
  Further signals can be acquired via other SIMATIC F-DI modules.
- Evaluation and processing of signals via the fail-safe SIMATIC or SINUMERIK control
- Reaction by safe output modules on the AS-Interface bus or other SIMATIC F-DQ modules

The SIMATIC AS-i F-Link is implemented as a modular arrangement of ET 200SP components.

Simple combination of the CM AS-i Master ST and F-CM AS-i Safety ST modules in one ET 200SP station with PROFINET interfacing results in a powerful PN/AS-i F-Link, which can be expanded further in a modular fashion using ET 200SP I/O modules.

Using these design methods, it is possible to create configurations for virtually any application. Besides the single AS-i master, double, triple or generally multiple masters can be realized with or without fail-safe functionality.

© Siemens AG 2014

Overview (continued)

AS-i safety solution with local evaluation by MSS

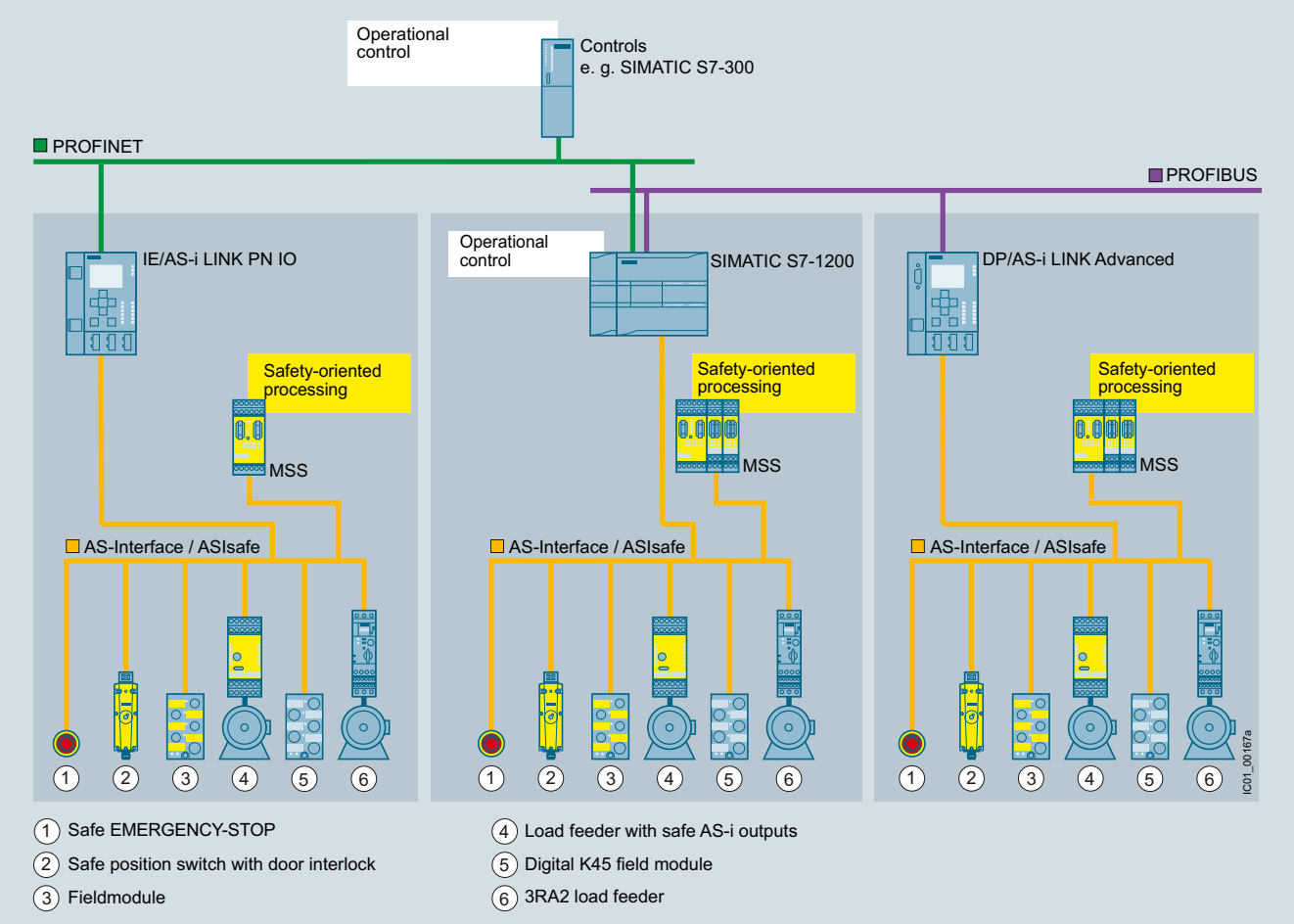

AS-Interface design with 3RK3 Modular Safety System (MSS)

The local AS-i safety solution utilizes the 3RK3 Modular Safety System (MSS) to process safety-related signals. Use of a standard controller (i.e. not an F-CPU) and a standard AS-i master is sufficient for this purpose.

The allocation of tasks is as follows:

- Acquisition of safety-related signals via safe input slaves on the AS-Interface bus. Further signals can be acquired via F-DI inputs of the central unit or the expansion modules of the MSS.
- Acquisition and processing of signals via the central unit of the MSS
- Reaction via safe output modules on the AS-Interface bus of via F-DQ outputs of the central unit or expansion modules of the MSS

Benefits

- Easy plant configuration thanks to standardized AS-Interface technology
- Safety-related and standard data on the same bus
- Existing systems can be expanded quickly and easily
- Optimum integration in TIA (Safety Diagnostics) and Safety Integrated
- Inclusion of the safety signals in the plant diagnostics, also on existing HMI panels
- Approved to PL e according to EN ISO 13849-1 or SIL 3 according to IEC 61508
- ASIsafe is certified by TÜV (Germany), NRTL (USA) and INRS (France)

Application

Integrated safety technology in the AS-Interface system is used wherever EMERGENCY-STOP pushbuttons, protective door interlocks, safe position switches, light arrays and two-hand operator controls are installed.

More information

More information and circuit examples relevant to safety systems see
http://support.automation.siemens.com/WW/view/en/20208582.

© Siemens AG 2014

Selection and ordering data

	Version	Article No.
3RK1105-1BE04-0CA0	**Basic safety monitor** Version 3 With screw terminals, removable terminals, width 45 mm	**Screw terminals**
	• One enabling circuit (monitor type 1)	**3RK1105-1AE04-0CA0**
	• Two enabling circuits (monitor type 2)	**3RK1105-1BE04-0CA0**
	Expanded safety monitors Version 3 With screw terminals, removable terminals, width 45 mm	
	• One enabling circuit (monitor type 3)	**3RK1105-1AE04-2CA0**
	• Two enabling circuits (monitor type 4)	**3RK1105-1BE04-2CA0**
	Expanded safety monitors with integrated safe slave Version 3 With screw terminals, removable terminals, width 45 mm	
	• Two enabling circuits including control of a safe AS-i output / safe coupling (monitor type 6)	**3RK1105-1BE04-4CA0**
	Basic safety monitors Version 3 With spring-type terminals, removable terminals, width 45 mm	**Spring-type terminals**
	• One enabling circuit (monitor type 1)	**3RK1105-1AG04-0CA0**
	• Two enabling circuits (monitor type 2)	**3RK1105-1BG04-0CA0**
	Expanded safety monitors Version 3 With spring-type terminals, removable terminals, width 45 mm	
	• One enabling circuit (monitor type 3)	**3RK1105-1AG04-2CA0**
	• Two enabling circuits (monitor type 4)	**3RK1105-1BG04-2CA0**
	Expanded safety monitor with integrated safe slave Version 3 With spring-type terminals, removable terminals, width 45 mm	
	• Two enabling circuits including control of a safe AS-i output / safe coupling (monitor type 6)	**3RK1105-1BG04-4CA0**
Accessories		
	ASIsafe CD Included in the scope of supply: • ASIMON V3 configuration software on CD ROM, for PC with the 32-bit operating systems Windows XP, Windows Vista Business/Ultimate, Windows 7	**3RK1802-2FB06-0GA1**
3RK1901-5AA00	**Cable sets** Included in the scope of supply: • PC configuration cable for communication between PC (serial interface) and safety monitor, length approx. 1.50 m • Transfer cable between two safety monitors, length approx. 0.25 m	**3RK1901-5AA00**
	Sealable covers For securing against unauthorized configuration of the safety monitor	**3RP1902**
	Push-in lugs For screw fixing	**3RP1903**

© Siemens AG 2014

Overview

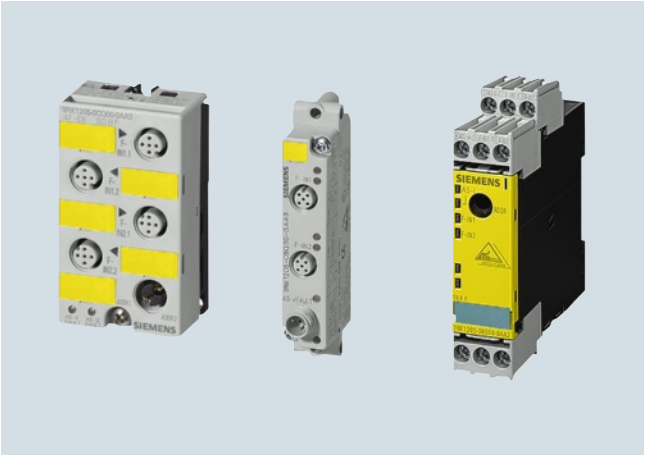

AS-Interface safety modules: K45F (left), K20F (center) and S22.5F (right)

S45F SlimLine module, safe AS-i output

Safety modules for AS-Interface (ASIsafe modules) are available for field use in degree of protection IP67 (K20F and K45F compact modules) and for the control cabinet (S22.5F SlimLine modules) in degree of protection IP20.

A very compact module with an optimum price/performance ratio is thus available for very application.

All modules for the connection of (mechanical) switches and safety sensors with contacts feature cross-circuit monitoring of the connected sensor line. On versions for the connection of solid-state switches and safety sensors (e.g. light arrays) the cross-circuit monitoring must be performed by the sensor.

The following modules are available for selection:

K20F compact safety modules for use in the field

Being only 20 mm wide, the K20F module is particularly well suited for applications where modules need to be arranged in the most confined space. The K20F modules are connected to the AS-Interface with a round cable with M12 cable box instead of with the AS-Interface flat cable. This enables extremely compact installation. The flexibility of the round cable means that it can also be used on moving machine parts without any problems. The K20 modules are also ideal for such applications as their non-encapsulated design makes them particularly light in weight.

K45F compact safety modules for use in the field

The platform of the K45F modules covers the following variations:

- Connection of ("mechanical") switches/safety sensors with contacts:
  - K45F 2F-DI: Two safety-related inputs in operation up to Category 2 according to EN ISO 13849-1. If Category 4 is required, a two-channel input is available on the module.
  - K45F 2F-DI/2DO: There are also two standard outputs in addition to the safe inputs. Supplied from the yellow AS-i cable
  - K45F 2F-DI/2DO U_{aux}: same as K45F 2F-DI/2DO, but supplied from the black 24 V DC cable
  - K45F 4F-DI: Four safety-related inputs in operation up to Category 2, two for Category 4. Extremely compact double slave (uses two full AS-i addresses).
- Connection of solid-state switches / safety sensors (non-contact protective devices, ESPE):
  - K45F LS (light sensor): Safe input module for the connection of electronic safety sensors with testing semiconductor outputs (OSSD)
    In particular non-contact protective devices such as active, optoelectronic light arrays and light arrays for Type 2 and Type 4 according to IEC 61496.
    Transmitters as well as receivers are supplied with power from the yellow AS-i cable. Matching sensor cables and optionally a separate transmitter supply module are available as accessories.

S22.5F SlimLine safety modules for use in control cabinets and local control cabinets

The S22.5F SlimLine safety module has two safety inputs. The safe connection of signals to ASIsafe networks in the cabinet is also possible therefore. For operation up to Category 2, both inputs can be separately assigned; if Category 4 is required, a two-channel input is available on the module.

In addition there are two S22.5F module versions which have two standard outputs in addition to the two safety inputs; power is supplied either from only the yellow AS-Interface cable or as auxiliary voltage from the black 24 V DC cable.

S45F SlimLine safety modules with safe outputs for the safe distributed disconnection of actuators

With the safe S45F SlimLine-Module, the shutdown signal, for example from the Modular Safety System, can be used through the ASIsafe for distributed safety-related disconnection.

To this end, the module has a dual-channel relay output with which an enabling circuit up to safety category 4 and Performance Level e according to EN ISO 13849-1 and SIL 3 according to EN 62061 / IEC 61508 can be deactivated safely.

As an additional possibility the module offers normal switching of the output using an AS-i standard output bit.

The module has three digital inputs and two digital outputs for the additional connection of sensors and actuators. These can be used, inter alia, for the necessary monitoring of downstream contactors of the feedback circuit.

© Siemens AG 2014

Selection and ordering data

3RK1205-0BQ30-0AA3

3RK1205-0BQ00-0AA3

3RK1205-0BE00-0AA2

3RK1405-1SE15-0AA2

	Version			Article No.
	K20F compact safety modules			
	I/O type		U_{aux} 24 V	
	2 F-DI		--	**3RK1205-0BQ30-0AA3**
	K45F compact safety modules Modules supplied without mounting plate			
	I/O type		U_{aux} 24 V	
	2 F-DI		--	**3RK1205-0BQ00-0AA3**
	4 F-DI[1]		--	**3RK1205-0CQ00-0AA3**
	2 F-DI / 2 DO		--	**3RK1405-0BQ20-0AA3**
	2 F-DI / 2 DO		✓	**3RK1405-1BQ20-0AA3**
	2 F-DI LS type 2[2]		--	**3RK1205-0BQ21-0AA3**
	2 F-DI LS type 4[3]		--	**3RK1205-0BQ24-0AA3**
	S22.5F SlimLine safety modules			
	Connection	I/O type	U_{aux} 24 V	
	Screw	2 F-DI	--	**3RK1205-0BE00-0AA2**
		2 F-DI / 2 DO	--	**3RK1405-0BE00-0AA2**
		2 F-DI / 2 DO	✓	**3RK1405-1BE00-0AA2**
	Spring-type	2 F-DI	--	**3RK1205-0BG00-0AA2**
		2 F-DI / 2 DO	--	**3RK1405-0BG00-0AA2**
		2 F-DI / 2 DO	✓	**3RK1405-1BG00-0AA2**
	S45F SlimLine safety module			
	Connection	I/O type	U_{aux} 24 V	
	Screw	1F-RO/3DI/2DO	✓	**3RK1405-1SE15-0AA2**
	Spring-type	1F-RO/3DI/2DO	✓	**3RK1405-1SG15-0AA2**

✓ Available or possible
-- Not available or not possible

[1] Module occupies two AS-Interface addresses
[2] Connection of previous Siemens light curtain FS 400 3RG7843 (type 2) through socket 1/3.
[3] Connection of previous Siemens light curtain FS 400 3RG7846 (type 4) through socket 1/3, other makes through socket 2/3.

© Siemens AG 2014

Accessories

	Version	Article No.
3RK1901-2EA00	**K45 mounting plates** For mounting K45F • For wall mounting • For standard rail mounting	 **3RK1901-2EA00** **3RK1901-2DA00**
	24 V supply modules for K45F LS (light sensor) • Optional, for transmitter power supply for large protective field widths • Max. current carrying capacity 200mA • Modules supplied without mounting plate	**3RK1901-1NP00**
3RK1901-1AA00	**Input bridges for K45F** • Black version • Red version	 **3RK1901-1AA00** **3RK1901-1AA01**
3RK1901-1KA00	**AS-Interface M12 sealing caps** For free M12 sockets	**3RK1901-1KA00**
3RK1901-1KA01	**AS-Interface M12 sealing caps, tamper-proof** For free M12 sockets	**3RK1901-1KA01**

4

© Siemens AG 2014

Overview

The 3SF1 position switches with safety-related communication can be directly connected using the AS-Interface bus system. The safety functions no longer have to be conventionally wired up.

With the 3SF1 position switches the ASIsafe electronics component is integrated in the switch enclosure.

Examples of selection options in the modular system

Modular system

The position switches of the 3SF11.4 and 3SF12.4 series are designed as a modular system comprising different versions of the basic switch and an actuator which must be ordered separately. Thanks to the modular design of the switch the end users can select the right solution for their application from numerous versions and install it themselves in a very short time.

Design

The 3SF1 switches are available in four different enclosure sizes:

- Plastic and metal enclosures according to EN 50047, 31 mm wide, with M12 plug
- Metal enclosures according to EN 50041, 40 mm wide, with M12 plug
- Plastic enclosures, 50 mm wide, with M12 plug and M12 socket
- Metal enclosures, 56 mm wide, with M12 plug and M12 socket

Display

The switches have a status display with three LEDs:

- LED 1 (yellow): F-IN1
- LED 2 (yellow): F-IN2
- LED 3 (green/red): AS-i/FAULT

Connection

Connection to the AS-Interface is by means of a 4-pole M12 connector socket (plastic version) connected to the yellow AS-Interface bus cable.

The wide enclosures (50 or 56 mm) also have an M12 socket for connecting a second position switch. Category 4 according to EN 954-1 is thus achieved.

Benefits

The new generation of 3SF1 position switches offers:

- ASIsafe electronics component integrated in the enclosure, with low power consumption < 60 mA
- An extensive range of actuators
- Status display with three LEDs

Operating conditions

With the standard position switches, mechanical positions of moving machine parts are converted into electrical signals. Through their modular and uniform design and large number of variants, the devices can comply with practically all requirements in industry.

Devices are available with enclosure versions to suit the particular ambient conditions. Different control tasks can be performed with the best contact blocks suited for the particular purpose. And many different actuator variants are available to match the mechanical configuration of the moving machine parts. Dimensions, fixing points and characteristics are largely in accordance with the EN 50041 or EN 50047 standards.

The devices are suitable for use in any climate.

Standards

The switches comply with the standards IEC 60947-1 (Low-Voltage Switchgear and Controlgear, General) and IEC 60947-5-1 (Electromechanical Control Circuit Devices).

The mechanical design of the switches corresponds to the requirements of the fail-safe principle according to EN 1088.

Approvals

AS-Interface according to EN 50295 and IEC 62026-2.

With a 3SF1 position switch it is possible to achieve Category 2 according to ISO 13849-1 or SIL 1 according to IEC 61508.

Categories 3 or 4 according to ISO 13849-1 or SIL 2 or 3 according to IEC 61508 can be achieved by using a second 3SE5 position switch.

The 3SF1 position switches are approved according to UL 508, UL 50 and UL 746-C.

Manuals

More information see configuration manual
"SIRIUS 3SE5 / 3SF1 Position Switches"
http://support.automation.siemens.com/WW/view/en/43920150

© Siemens AG 2014

Selection and ordering data

Modular system

For the ASIsafe version of the position switch, the basic switch and actuator must be ordered separately.

1 or 2 contacts · 3 LEDs · Degree of protection IP65 (31 mm) or IP66/IP67 (50 mm) · M12 connector socket

	Version	Contacts	LEDs		Article No.
Basic switches (with rounded plunger[1]) · Enclosure width 31 mm acc. to EN 50047					
ASIsafe basic switch	**With Teflon plunger,** with M12 connector socket, 4-pole channel 1 on NC contact, channel 2 on NC contact				
	• Slow-action contacts	2 NC	24 V DC	➔	**3SF1234-1KC05-1BA1**
	• Snap-action contacts	2 NC	24 V DC	➔	**3SF1234-1LC05-1BA1**
Basic switches (with rounded plunger[1]) · Enclosure width 50 mm					
ASIsafe basic switch	**With Teflon plunger,** with M12 connector socket, 4-pole channel 1 on NC contact, channel 2 on M12 socket, right				
	• Slow-action contacts	1 NC	24 V DC	➔	**3SF1244-1KC05-1BA2**
	• Snap-action contacts	1 NC	24 V DC	➔	**3SF1244-1LC05-1BA2**

⚙ For online configurator see www.siemens.com/sirius/configurators.

➔ Positive opening according to IEC 60947-5-1, Appendix K, or positively driven actuator for use in safety circuits.

[1] For enclosures with widths of 31 mm and 50 mm, the basic switch is a complete unit with rounded plungers.

© Siemens AG 2014

Selection and ordering data (continued)

	Version	Diameter mm		Article No.
Operating mechanisms				
Roller plunger	**Roller plungers, type C acc. to EN 50047**			
	• Plastic roller	10	➔	**3SE5000-0AD03**
	• High-grade steel roller	10	➔	**3SE5000-0AD04**
With central fixing	**Roller plungers with central fixing**			
	• Plastic roller	10	➔	**3SE5000-0AD10**
	• High-grade steel roller	10	➔	**3SE5000-0AD11**
Roller lever	**Roller levers, type E acc. to EN 50047**			
	• Metal lever, plastic roller	13	➔	**3SE5000-0AE10**
	• Metal lever, high-grade steel roller	13	➔	**3SE5000-0AE11**
	• High-grade steel lever, plastic roller	13	➔	**3SE5000-0AE12**
	• High-grade steel lever, high-grade steel roller	13	➔	**3SE5000-0AE13**
Angular roller lever	**Angular roller levers**			
	• Metal lever, plastic roller	13	➔	**3SE5000-0AF10**
	• Metal lever, high-grade steel roller	13	➔	**3SE5000-0AF11**
	• High-grade steel lever, plastic roller	13	➔	**3SE5000-0AF12**
	• High-grade steel lever, high-grade steel roller	13	➔	**3SE5000-0AF13**
Twist actuators with lever				
Twist actuator	**Twist actuators**, plastic (without lever)			
	Switching right or left, adjustable		➔	**3SE5000-0AK00**
Twist lever	***Lever for twist actuators*** **Twist levers, type A acc. to EN 50047**			
	• Metal lever, plastic roller	19	➔	**3SE5000-0AA21**
	• Metal lever, high-grade steel roller	19	➔	**3SE5000-0AA22**
	• Metal lever, roller with ball bearing	19	➔	**3SE5000-0AA23**
	• Metal lever, plastic roller	30	➔	**3SE5000-0AA25**
	• High-grade steel lever, plastic roller	19	➔	**3SE5000-0AA31**
	• High-grade steel lever, high-grade steel roller	19	➔	**3SE5000-0AA32**
	Twist levers, length 30 mm, straight[1]			
	• Metal lever, plastic roller	19	➔	**3SE5000-0AA24**
	• Metal lever, plastic roller	30	➔	**3SE5000-0AA26**
Twist lever, adjustable length	**Twist levers, adjustable length, with grid hole**			
	• Metal lever, plastic roller	19	➔	**3SE5000-0AA60**
	• Metal lever, high-grade steel roller	19	➔	**3SE5000-0AA61**
	• Metal lever, plastic roller	50	➔	**3SE5000-0AA67**
	• Metal lever, rubber roller	50	➔	**3SE5000-0AA68**
	• High-grade steel lever, plastic roller	19	➔	**3SE5000-0AA62**
	• High-grade steel lever, high-grade steel roller	19	➔	**3SE5000-0AA63**

➔ Positively driven actuator, for use in safety circuits.

[1] Can be clinch mounted (turned through 180°, rear of lever).

© Siemens AG 2014

Selection and ordering data

Modular system

For the ASIsafe version of the position switch, the basic switch and actuator must be ordered separately.

2 contacts · 3 LEDs · Degree of protection IP66/IP67 · M12 connector socket

	Version	Contacts	LEDs		Article No.
Basic switches (with rounded plunger[1]) · Enclosure width 31 mm acc. to EN 50047					
	With Teflon plunger, with M12 connector socket, 4-pole channel 1 on NC contact, channel 2 on NC contact				
	• Slow-action contacts	2 NC	24 V DC	➔	**3SF1214-1KC05-1BA1**
	• Snap-action contacts	2 NC	24 V DC	➔	**3SF1214-1LC05-1BA1**

ASIsafe basic switch

For online configurator see www.siemens.com/sirius/configurators.

➔ Positive opening according to IEC 60947-5-1, Appendix K, or positively driven actuator for use in safety circuits.

[1] For enclosures with widths of 31 mm, the basic switch is a complete unit with rounded plungers.

© Siemens AG 2014

Selection and ordering data (continued)

	Version	Diameter mm		Article No.
Operating mechanisms				
Plain plungers	**Plain plungers**			
	• High-grade steel plungers	10	➔	**3SE5000-0AB01**
Roller plunger	**Roller plungers, type C acc. to EN 50047**			
	• Plastic roller	10	➔	**3SE5000-0AD03**
	• High-grade steel roller	10	➔	**3SE5000-0AD04**
With central fixing	**Roller plunger with central fixing**			
	• Plastic roller	10	➔	**3SE5000-0AD10**
	• High-grade steel roller	10	➔	**3SE5000-0AD11**
Roller lever	**Roller levers, type E acc. to EN 50047**			
	• Metal lever, plastic roller	13	➔	**3SE5000-0AE10**
	• Metal lever, high-grade steel roller	13	➔	**3SE5000-0AE11**
	• High-grade steel lever, plastic roller	13	➔	**3SE5000-0AE12**
	• High-grade steel lever, high-grade steel roller	13	➔	**3SE5000-0AE13**
Angular roller lever	**Angular roller levers**			
	• Metal lever, plastic roller	13	➔	**3SE5000-0AF10**
	• Metal lever, high-grade steel roller	13	➔	**3SE5000-0AF11**
	• High-grade steel lever, plastic roller	13	➔	**3SE5000-0AF12**
	• High-grade steel lever, high-grade steel roller	13	➔	**3SE5000-0AF13**
Twist actuators with lever				
Twist actuator	**Twist actuators**, plastic (without lever) Switching right or left, adjustable		➔	**3SE5000-0AK00**
Twist lever	***Lever for twist actuators*** **Twist levers, type A acc. to EN 50047**			
	• Metal lever, plastic roller	19	➔	**3SE5000-0AA21**
	• Metal lever, high-grade steel roller	19	➔	**3SE5000-0AA22**
	• Metal lever, roller with ball bearing	19	➔	**3SE5000-0AA23**
	• Metal lever, plastic roller	30	➔	**3SE5000-0AA25**
	• High-grade steel lever, plastic roller	19	➔	**3SE5000-0AA31**
	• High-grade steel lever, high-grade steel roller	19	➔	**3SE5000-0AA32**
	Twist levers, length 30 mm, straight[1]			
	• Metal lever, plastic roller	19	➔	**3SE5000-0AA24**
	• Metal lever, plastic roller	30	➔	**3SE5000-0AA26**
Twist lever, adjustable length	**Twist levers, adjustable length, with grid hole**			
	• Metal lever, plastic roller	19	➔	**3SE5000-0AA60**
	• Metal lever, high-grade steel roller	19	➔	**3SE5000-0AA61**
	• Metal lever, plastic roller	50	➔	**3SE5000-0AA67**
	• Metal lever, rubber roller	50	➔	**3SE5000-0AA68**
	• High-grade steel lever, plastic roller	19	➔	**3SE5000-0AA62**
	• High-grade steel lever, high-grade steel roller	19	➔	**3SE5000-0AA63**

➔ Positively driven actuator, for use in safety circuits.

[1] Can be clinch mounted (turned through 180°, rear of lever).

© Siemens AG 2014

Selection and ordering data (continued)

Modular system

For the ASIsafe version of the position switch, the basic switch and actuator must be ordered separately.

1 or 2 contacts · 3 LEDs · Degree of protection IP66/IP67 · M12 connector socket

	Version	Contacts	LED		Article No.
Basic switches · Enclosure width 40 mm acc. to EN 50041					
ASIsafe basic switch	With M12 connector socket, 4-pole, channel 1 on NC contact, channel 2 on NC contact				
	• Slow-action contacts	2 NC	24 V DC	➔	**3SF1114-1KA00-1BA1**
	• Snap-action contacts	2 NC	24 V DC	➔	**3SF1114-1LA00-1BA1**
Basic switches · Enclosure width 56 mm					
ASIsafe basic switch	With M12 connector socket, 4-pole, channel 1 on NC contact, channel 2 on M12 socket, right				
	• Slow-action contacts	1 NC	24 V DC	➔	**3SF1124-1KA00-1BA2**
	• Snap-action contacts	1 NC	24 V DC	➔	**3SF1124-1LA00-1BA2**

For online configurator see www.siemens.com/sirius/configurators.

➔ Positive opening according to IEC 60947-5-1, Appendix K, or positively driven actuator for use in safety circuits.

	Version	Diameter mm		Article No.
Operating mechanisms				
Plain plunger	**Plain plungers**			
	High-grade steel plungers		➔	**3SE5000-0AB01**
Rounded plunger	**Rounded plungers, type B, acc. to EN 50041**			
	High-grade steel plungers		➔	**3SE5000-0AC02**
Roller plunger	**Roller plungers, type C acc. to EN 50041**			
	High-grade steel rollers	13	➔	**3SE5000-0AD02**
Roller lever	**Roller levers**			
	• Metal lever, plastic roller	22	➔	**3SE5000-0AE01**
	• Metal lever, high-grade steel roller	22	➔	**3SE5000-0AE02**
	• High-grade steel lever, plastic roller	22	➔	**3SE5000-0AE03**
	• High-grade steel lever, high-grade steel roller	22+	➔	**3SE5000-0AE04**
Angular roller lever	**Angular roller levers**			
	• Metal lever, plastic roller	22	➔	**3SE5000-0AF01**
	• Metal lever, high-grade steel roller	22	➔	**3SE5000-0AF02**
	• High-grade steel lever, plastic roller	22	➔	**3SE5000-0AF03**
	• High-grade steel lever, high-grade steel roller	22	➔	**3SE5000-0AF04**

➔ Positively driven actuator, for use in safety circuits.

© Siemens AG 2014

Selection and ordering data (continued)

	Version	Diameter		Article No.
		mm		
Twist actuators with lever				
Twist actuator	**Twist actuators**, metal (without lever)			
	• Switching right or left, adjustable		➔	**3SE5000-0AH00**
	• For fork levers, latching		➔	**3SE5000-0AT10**
	Lever for twist actuators			
Twist lever	**Twist levers 27 mm, type A, according to EN 50041**			
	• Metal lever, plastic roller	19	➔	**3SE5000-0AA01**
	• Metal lever, high-grade steel roller	19	➔	**3SE5000-0AA02**
	• Metal lever, roller with ball bearing	19	➔	**3SE5000-0AA03**
	• Metal lever, 2 plastic rollers	19	➔	**3SE5000-0AA04**
	• Metal lever, plastic roller	30	➔	**3SE5000-0AA05**
	• Metal lever, plastic roller	50	➔	**3SE5000-0AA07**
	• Metal lever, rubber roller	50	➔	**3SE5000-0AA08**
	• High-grade steel lever, plastic roller	19	➔	**3SE5000-0AA11**
	• High-grade steel lever, high-grade steel roller	19	➔	**3SE5000-0AA12**
	Twist levers, length 35 mm, offset			
	• Metal lever, plastic roller	19	➔	**3SE5000-0AA15**
	• High-grade steel lever, plastic roller	19	➔	**3SE5000-0AA16**
	Twist levers, length 30 mm, straight[1]			
	• Metal lever, plastic roller	19	➔	**3SE5000-0AA24**
	• Metal lever, plastic roller	30	➔	**3SE5000-0AA26**
Twist lever, adjustable length	**Twist levers, adjustable length, with grid hole**			
	• Metal lever, plastic roller	19	➔	**3SE5000-0AA60**
	• Metal lever, high-grade steel roller	19	➔	**3SE5000-0AA61**
	• Metal lever, plastic roller	50	➔	**3SE5000-0AA67**
	• Metal lever, rubber roller	50	➔	**3SE5000-0AA68**
	• High-grade steel lever, plastic roller	19	➔	**3SE5000-0AA62**
	• High-grade steel lever, high-grade steel roller	19	➔	**3SE5000-0AA63**
Fork lever	**Fork levers** (for switches with snap-action contacts only)			
	• 2 metal levers, 2 plastic rollers	19	➔	**3SE5000-0AT01**
	• 2 metal levers, 2 high-grade steel rollers	19	➔	**3SE5000-0AT02**
	• 2 high-grade steel levers, 2 plastic rollers	19	➔	**3SE5000-0AT03**
	• 2 high-grade steel levers, 2 high-grade steel rollers	19	➔	**3SE5000-0AT04**

➔ Positively driven actuator, for use in safety circuits.

[1] Can be clinch mounted (turned through 180°, rear of lever).

© Siemens AG 2014

Overview

The 3SF1 safety switches with safety-related communication can be directly connected using the AS-Interface bus system. The safety functions no longer have to be conventionally wired up.

With the 3SF1 safety switches the ASIsafe electronics component is integrated in the switch enclosure.

3SF1 safety switches head with separate actuator and with integrated ASIsafe electronics

The 3SF1 safety switches with separate actuator have the same enclosure as standard switches.

Operation

The actuator head is included in the scope of supply. For actuation from four directions it can be adjusted through 4 × 90°. The switches can also be approached from above.

The actuator is not included in the scope of supply of the safety switch and must be ordered separately. There are six variants to choose from, depending on the application.

The actuator is encoded. Simple overruling by hand or auxiliary devices is impossible.

A high-grade steel blocking insert for attaching up to eight padlocks is available for even more safety.

A rubber cap to protect the actuator entry of the actuator head from contamination is available for operation of the enclosures in dusty environments.

Display

The switches have a status display with three LEDs:

- LED 1 (yellow): F-IN1
- LED 2 (yellow): F-IN2
- LED 3 (green/red): AS-i/FAULT

Connection

Connection to the AS-Interface is by means of a 4-pole M12 connector socket (plastic version) connected to the yellow AS-Interface bus cable.

The wide enclosures (50 or 56 mm) also have an M12 socket for connecting a second safety switch. Category 4 according to ISO 13849-1 is thus achieved.

Benefits

The new generation of 3SF1 safety switches with separate actuator offers

- ASIsafe electronics component integrated in the enclosure, with low power consumption < 60 mA
- An extensive range of actuators
- Status display with three LEDs

Operating conditions

Safety switches with separate actuator are used where the position of doors, covers or protective grilles must be monitored for safety reasons.

The safety switch can only be operated with the matching coded actuator. Simple overruling by hand or auxiliary devices is impossible.

Devices are available with enclosure versions to suit the particular ambient conditions. Different control tasks can be performed with the best contact blocks suited for the particular purpose. Dimensions and fixing points of the enclosure are in accordance with EN 50041 or EN 50047 standards.

The devices are suitable for use in any climate.

Standards

The switches comply with the standards IEC 60947-1 (Low-Voltage Switchgear and Controlgear, General) and IEC 60947-5-1 (Electromechanical Control Circuit Devices).

The mechanical design of the switches corresponds to the requirements of the fail-safe principle according to EN 1088.

Approvals

AS-Interface according to EN 50295 and IEC 62026-2.

With a 3SF1 safety switch it is possible to achieve Category 3 according to ISO 13849-1 or SIL 2 according to IEC 61508.

Category 4 according to ISO 13849-1 or SIL 3 according to IEC 61508 can be achieved by using an additional 3SE5 safety switch.

The 3SF1 safety switches are approved according to UL 508, UL 50 and UL 746-C.

© Siemens AG 2014

Overview

- Contacts: 1 or 2 slow-action contacts
- Status display with 3 LEDs 24 V DC;
  1: F–IN1, 2: F–IN2, 3: AS-i/FAULT
- Degree of protection IP65 (31 mm) or IP66/IP67 (50 mm)

Selection and ordering data

	Version[1]	Contacts		Article No.
Enclosure width 31 mm acc. to EN 50047				
ASIsafe	**5 directions of approach** M12 connector socket, 4-pole, channel 1 on NC contact, channel 2 on NC contact Slow-action contacts	2 NC	➔	**3SF1234-1QV40-1BA1**
Enclosure width 50 mm				
ASIsafe	**5 directions of approach** M12 connector socket, 4-pole, channel 1 on NC contact, channel 2 on M12 socket, right Slow-action contacts	1 NC	➔	**3SF1244-1QV40-1BA2**

For online configurator see www.siemens.com/sirius/configurators.

➔ Positive opening according to IEC 60947-5-1, Appendix K.

[1] Supplied without actuator. Please order separately.

© Siemens AG 2014

Overview

- Contacts: 1 or 2 slow-action contacts
- Status display with 3 LEDs 24 V DC;
  1: F–IN1, 2: F–IN2, 3: AS-i/FAULT
- Degree of protection IP66/IP67

Selection and ordering data

	Version[1]	Contacts		Article No.
Enclosure width 31 mm acc. to EN 50047				
ASIsafe	**5 directions of approach** M12 connector socket, 4-pole, channel 1 on NC contact, channel 2 on NC contact Slow-action contacts	2 NC	➔	**3SF1214-1QV40-1BA1**
Enclosure width 40 mm acc. to EN 50041				
ASIsafe	**5 directions of approach** M12 connector socket, 4-pole, channel 1 on NC contact, channel 2 on NC contact Slow-action contacts	2 NC	➔	**3SF1114-1QV10-1BA1**
Enclosure width 56 mm				
ASIsafe	**5 directions of approach** M12 connector socket, 4-pole, channel 1 on NC contact, channel 2 on M12 socket, right Slow-action contacts	1 NC	➔	**3SF1124-1QV10-1BA2**

⚙ For online configurator see www.siemens.com/sirius/configurators.

➔ Positive opening according to IEC 60947-5-1, Appendix K.

[1] Supplied without actuator. Please order separately.

© Siemens AG 2014

Selection and ordering data

	Version		Article No.
Actuators			
	Standard actuators		
	Standard actuators, length 75.6 mm	➔	**3SE5000-0AV01**
	With vertical fixing, length 53 mm	➔	**3SE5000-0AV02**
	With transverse fixing, length 47 mm	➔	**3SE5000-0AV03**
	With transverse fixing, plastic[1] length 47 mm	➔	**3SE5000-0AW11**
	Radius actuators		
	Direction of approach from left, length 40 mm	➔	**3SE5000-0AV04**
	Direction of approach from right, length 44.5 mm	➔	**3SE5000-0AV06**
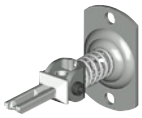	Universal radius actuators, length 69 mm		
	• Length 77 mm	➔	**3SE5000-0AV05**
	• Length 77 mm, tab rotated 90°	➔	**3SE5000-0AV05-1AA6**
	Universal radius actuators, heavy duty		
	• Length 67 mm	➔	**3SE5000-0AV07-1AK2**
	• Length 77 mm	➔	**3SE5000-0AV07**
Optional accessories			
	Protective caps made of black rubber for the actuator head, to protect the actuator openings from contamination (only for enclosure width 40 or 56 mm)		**SE5 000-0AV08-1AA2**
	Blocking inserts, high-grade steel, for actuator head, for up to 8 padlocks		**3SE5000-0AV08-1AA3**

➔ Actuator can be used in safety circuits.

[1] Not suitable for safety switches with interlocking.

© Siemens AG 2014

Overview

The 3SF1 safety switches with safety-related communication can be directly connected using the AS-Interface bus system. The safety functions no longer have to be conventionally wired up.

With the 3SF1 safety switches the ASIsafe electronics component is integrated in the switch enclosure.

3SF1 safety switch with solenoid interlocking and with integrated ASIsafe electronics

Operation

The actuator head is included in the scope of supply. For actuation from four directions it can be adjusted through 4 × 90°. The switches can also be approached from above.

The actuator is not included in the scope of supply of the safety switch and must be ordered separately. There are eight variants to choose from, depending on the application.

The actuator is encoded. Simple overruling by hand or auxiliary devices is impossible.

A high-grade steel blocking insert for attaching up to eight padlocks is available for even more safety.

A rubber cap to protect the actuator entry of the actuator head from contamination is available for operation of the enclosures in dusty environments.

Solenoid interlocking

There are two versions for interlocking the actuator:

- Spring-actuated lock (closed-circuit principle) with various release mechanisms
- Solenoid-locked (open-circuit principle)

Display

The switches have a status display with four LEDs:

- LED 1 (green): AS-i
- LED 2 (red): FAULT
- LED 3 (yellow): F-IN1
- LED 4 (yellow): F-IN2

Connection

Connection to the AS-Interface is by means of a 4-pole M12 connector socket (plastic version) connected to the yellow AS-Interface bus cable (no additional supply of auxiliary power is required thanks to the low current consumption of the solenoid of max. 170 mA).

Benefits

The new generation of 3SF13 safety switches with solenoid interlocking offers:

- More safety through higher locking forces:
  - 1300 N for the plastic version
  - 2600 N for the metal version
- Various release mechanisms:
  Lock release, escape release and emergency release
- ASIsafe electronics integrated in the enclosure; connected through 4-pole M12 connector
- Current consumption of the solenoid maximum 170 mA
- Two contact blocks as standard equipment, hence fewer versions needed
- Same dimensions for all enclosure versions: Plastic, metal
- An extensive range of actuators
- Status display with four LEDs

Operating conditions

The safety switches with solenoid interlocking are exceptional safety-related devices which prevent an unforeseen or intentional opening of protective doors, protective grilles or other covers as long as a dangerous situation is present (i.e. follow-on motion of the switched-off machine).

The safety switches with solenoid interlocking have the following functions:

- Enabling the machine or process with closed and locked protective device
- Locking the machine or process with opened protective device
- Position monitoring of the protective device and solenoid interlocking

Standards

The switches comply with the standards IEC 60947-1 (Low-Voltage Switchgear and Controlgear, General) and IEC 60947-5-1 (Electromechanical Control Circuit Devices).

The mechanical design of the switches corresponds to the requirements of the fail-safe principle according to EN 1088.

Approvals

AS-Interface according to EN 50295 and IEC 62026-2.

The switches are approved for use with locking devices according to EN 1088 and EN 292, Parts 1 and 2.

3SF53 safety switches with solenoid interlocking have a VDE test mark.

With a 3SF13 safety switch it is possible to achieve Category 3 according to ISO 13849-1 or SIL 2 according to IEC 61508.

Category 4 according to ISO 13849-1 (EN 954-1) or SIL 3 according to IEC 61508 can be achieved by using an additional 3SE5 safety switch.

The 3SF1 safety switches are approved according to UL 508, UL 50 and UL 746-C.

© Siemens AG 2014

Overview

5 directions of approach · Degree of protection IP66/IP67

- Slow-action contacts:
  - Version -1BA1: ASIsafe channel 1 on 1 NC contact from the actuator and channel 2 on 1 NC contact from the solenoid
  - Version -1BA3: ASIsafe channel 1 on the first NC contact from the actuator and channel 2 on the second NC contact from the actuator
  - Version -1BA4: ASIsafe channel 1 on 2 NC contacts from the actuator and channel 2 on 1 NC contact from the solenoid. A discrepancy between the two contacts of the actuator will be evaluated already in the switch.
- Solenoid: Rated operational voltage 24 V DC
- 1 300 N locking force
- Status display with 4 LEDs 24 V DC;
  1: AS-i, 2: FAULT, 3: F–IN1, 4: F–IN2

Safety level

The new 3SF1324-1S.21-1BA4 safety switches are also recommended where there are several protective door interlocking devices where reliable diagnostics and quick restart capability of equipment is required.

- A response is received from the solenoid.
- No opening of the doors after the solenoid is unlocked.

SIL 2 according to IEC 61508 or PL d according to ISO 13849-1 can be achieved with the AS-i safety monitor or in the DP/AS-i F-Link.

Comparison of versions

Version	Contacts Actuator / solenoid	Achievable safety level	Diagnostics Solenoid feedback	Reclosing condition after unlocking the solenoid (depending on the type of evaluation)
3SF1324-1S.21-1BA1	1 NC / 1 NC	SIL 1 / PL c	✓	Door does not have to be opened
	1 NC / 1 NC	SIL 2 / PL d	✓	Door has to be opened
3SF1324-1S.21-1BA3	2 NC	SIL 2 / PL d	--	Door does not have to be opened
3SF1324-1S.21-1BA4	2 NC / 1 NC	SIL 2 / PL d	✓	Door does not have to be opened

Selection and ordering data

	Interlock[1]	Contacts Actuator / solenoid		Article No.
1300 N locking force · Enclosure width 54 mm				
 3SF1324-1SD21-...	**Spring-actuated locks**			
	• With auxiliary release	1 NC / 1 NC	➔	**3SF1324-1SD21-1BA1**
	• With auxiliary release	2 NC / –	➔	**3SF1324-1SD21-1BA3**
	• With auxiliary release	2 NC / 1 NC	➔	**3SF1324-1SD21-1BA4**
	• With auxiliary release with lock	1 NC / 1 NC	➔	**3SF1324-1SE21-1BA1**
 3SF1324-1SF21-...	• With escape release from the front	1 NC / 1 NC	➔	**3SF1324-1SF21-1BA1**
	• With escape release from the front	2 NC / 1 NC	➔	**3SF1324-1SF21-1BA4**
	• With escape release from the back and auxiliary release from the front	1 NC / 1 NC	➔	**3SF1324-1SG21-1BA1**
	• With escape release from the back and auxiliary release from the front	1 NC / 1 NC	➔	**3SF1324-1SG21-1BA4**
	• With emergency release from the back and auxiliary release from the front	1 NC / 1 NC	➔	**3SF1324-1SJ21-1BA1**
 3SF1324-1SB21-...	**Solenoid locks**	1 NC / 1 NC	➔	**3SF1324-1SB21-1BA1**
		2 NC / –	➔	**3SF1324-1SB21-1BA3**

For online configurator see www.siemens.com/sirius/configurators.
➔ Positive opening according to IEC 60947-5-1, Appendix K.
[1] Supplied without actuator. Please order separately.

Note:

For actuators and optional accessories see page 4/22.

© Siemens AG 2014

Overview

5 directions of approach · Degree of protection IP66/IP67

- Slow-action contacts:
  Version -1BA1: ASIsafe channel 1 on 1 NC contact from the actuator and channel 2 on 1 NC contact from the solenoid
- Solenoid: Rated operational voltage 24 V DC
- 2 600 N locking force
- Status display with 4 LEDs 24 V DC;
  1: AS-i, 2: FAULT, 3: F–IN1, 4: F–IN2

Safety level

Version	Contacts Actuator / solenoid	Achievable safety level	Diagnostics Solenoid feedback	Reclosing condition after unlocking the solenoid (depending on the type of evaluation)
3SF1314-1S.21-1BA1	1 NC / 1 NC	SIL 1 / PL c	✓	Door does not have to be opened
	1 NC / 1 NC	SIL 2 / PL d	✓	Door has to be opened

Selection and ordering data

	Interlock[1]	Contacts Actuator / solenoid		Article No.
2600 N locking force · Enclosure width 54 mm				
 3SF1314-1SD21-...	**Spring-actuated locks**			
	• With auxiliary release	1 NC / 1 NC	➔	**3SF1314-1SD11-1BA1**
	• With auxiliary release with lock	1 NC / 1 NC	➔	**3SF1314-1SE11-1BA1**
	• With escape release from the front	1 NC / 1 NC	➔	**3SF1314-1SF11-1BA1**
	• With escape release from the back and auxiliary release from the front	1 NC / 1 NC	➔	**3SF1314-1SG11-1BA1**
 3SF1314-1SF21-...	• With emergency release from the back and auxiliary release from the front	1 NC / 1 NC	➔	**3SF1314-1SJ11-1BA1**
 3SF1314-1BF21-...	**Solenoid locks**	1 NC / 1 NC	➔	**3SF1314-1SB11-1BA1**

For online configurator see www.siemens.com/sirius/configurators.

➔ Positive opening according to IEC 60947-5-1, Appendix K.

[1] Supplied without actuator. Please order separately.

Note:

For actuators and optional accessories see page 4/22.

© Siemens AG 2014

Overview

The 3SF1 safety hinge switches with safety-related communication can be directly connected using the AS-Interface bus system. The safety functions no longer have to be conventionally wired up.

With the 3SF1 safety switches the ASIsafe electronics component is integrated in the switch enclosure.

The hinge switches are provided for mounting on hinges. There are two actuator variants here:
- Hollow shaft, inner diameter 8 mm, outer 12 mm
- Solid shaft, diameter 10 mm

For the ASIsafe version of the hinge switch, the basic switch and actuator head must be ordered separately. The basic switches correspond to the standard safety switches (use only versions with snap-action contacts).

The standards and approvals are the same as for the 3SF1 safety switches (see page 4/12).

Selection and ordering data

Modular system

1 or 2 contacts · 3 LEDs · Degree of protection IP65 (31 mm) or IP66/IP67 (50 mm) · M12 connector socket

	Version	Contacts	LEDs		Article No.
Basic switches · Enclosure width 31 mm acc. to EN 50047					
ASIsafe basic switch	**With Teflon plunger, with M12 connector socket**, 4-pole, channel 1 on NC contact, channel 2 on NC contact Snap-action contacts	2 NC	24 V DC	➔	**3SF1234-1LC05-1BA1**
Basic switches · Enclosure width 50 mm					
ASIsafe basic switch	**With Teflon plunger, with M12 connector socket**, 4-pole channel 1 on NC contact, channel 2 on M12 socket, right Snap-action contacts	1 NC	24 V DC	➔	**3SF1244-1LC05-1BA2**
Actuator heads					
Actuator head with hollow shaft	**With hollow shaft** • Operating angle 10°				**3SE5000-0AU21**
Actuator head with solid shaft	**With solid shaft** • Operating angle 10°				**3SE5000-0AU22**

For online configurator see www.siemens.com/sirius/configurators.

➔ Positive opening according to IEC 60947-5-1, Appendix K.

© Siemens AG 2014

Overview

The 3SF1 safety hinge switches with safety-related communication can be directly connected using the AS-Interface bus system. The safety functions no longer have to be conventionally wired up.

With the 3SF1 safety switches the ASIsafe electronics component is integrated in the switch enclosure.

The hinge switches are provided for mounting on hinges. There are two actuator variants here:
- Hollow shaft, inner diameter 8 mm, outer 12 mm
- Solid shaft, diameter 10 mm

For the ASIsafe version of the hinge switch, the basic switch and actuator head must be ordered separately. The basic switches correspond to the standard safety switches (use only versions with snap-action contacts).

The standards and approvals are the same as for the 3SF1 safety switches (see page 4/12).

Selection and ordering data

Modular system

1 or 2 contacts · 3 LEDs · Degree of protection IP66/IP67 · M12 connector socket

	Version	Contacts	LED		Article No.
Basic switches · Enclosure width 31 mm acc. to EN 50047					
ASIsafe basic switch	**With Teflon plunger,** with M12 connector socket, 4-pole channel 1 on NC contact, channel 2 on NC contact • Snap-action contacts	2 NC	24 V DC	➔	**3SF1214-1LC05-1BA1**
Basic switches · Enclosure width 40 mm acc. to EN 50041					
ASIsafe basic switch	**With M12 connector socket**, 4-pole, channel 1 on NC contact, channel 2 on NC contact Snap-action contacts	2 NC	24 V DC	➔	**3SF1114-1LA00-1BA1**
Basic switches · Enclosure width 56 mm					
ASIsafe basic switch	**With M12 connector socket**, 4-pole, channel 1 on NC contact, channel 2 on M12 socket, right Snap-action contacts	1 NC	24 V DC	➔	**3SF1124-1LA00-1BA2**
Actuator heads					
Actuator head with hollow shaft	**Hollow shaft** • Operating angle 10°				**3SE5000-0AU21**
Actuator head with solid shaft	**Solid shaft** • Operating angle 10°				**3SE5000-0AU22**

For online configurator see www.siemens.com/sirius/configurators.

➔ Positive opening according to IEC 60947-5-1, Appendix K.

© Siemens AG 2014

Overview

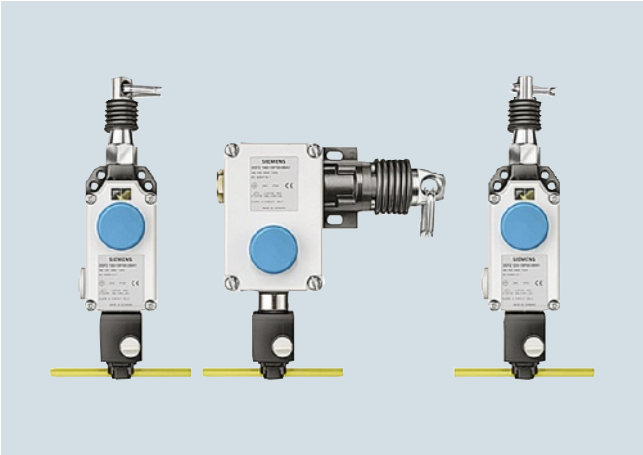

SIRIUS cable-operated switches are used for monitoring or for EMERGENCY-STOP devices on particularly endangered system components.

AS-Interface cable-operated switches can be directly connected via the bus system AS-Interface with safety-related communication. The safety functions no longer have to be conventionally wired up.

As the effective range of a cable-operated switch is only limited by the length of the trip-wire, large systems can also be protected.

Standards

The switches with positive latching are suitable for operation in EMERGENCY-STOP devices according to EN ISO 13850. They can achieve up to category 4 according to ISO 13849-1 or SIL 3 according to IEC 61508.

Selection and ordering data

	Version	Basic switches	Contacts		Article No.
Cable-operated switch with AS-i F adapter					
	Metal enclosures with dust protection, IP65 latching acc. to ISO 13850, with button reset, 2 NC contacts				
	• For wire lengths up to 10 m, with alignment window	*3SE7120-1BF00*	2 NC	➔	**3SF2120-1BF00-0BA1**
	• For wire lengths up to 25 m, with alignment window	*3SE7150-1BF00*	2 NC	➔	**3SF2150-1BF00-0BA1**
	• For wire lengths up to 50 m	*3SE7140-1BF00*	2 NC	➔	**3SF2140-1BF00-0BA1**

➔ Positive opening according to IEC 60947-5-1, Appendix K.

© Siemens AG 2014

Overview

EMERGENCY- STOP devices can be directly connected via the standard AS-Interface with safety-related communication. This applies only to series SIRIUS 3SB3 EMERGENCY-STOP mushroom pushbuttons for front panel mounting and installation in an enclosure.

AS-Interface EMERGENCY-STOP enclosure

The enclosure is supplied fully equipped and wired. It contains:

- SIRIUS 3SB3 EMERGENCY-STOP mushroom pushbutton with positive latching according to ISO 13850 and rotate-to-unlatch mechanism
- Contact blocks 2 NC contacts
- F slave with 2 safe inputs
- Inscription plate

The plastic enclosures are equipped with a plastic EMERGENCY-STOP mushroom pushbutton, the metal enclosures with a metal EMERGENCY-STOP mushroom pushbutton.

The plastic enclosures are designed with a terminal for the AS-Interface shaped cable (the cable is contacted by the insulation piercing method and routed along the exterior of the enclosure). With metal enclosure versions, the AS-Interface shaped cable (or a round cable) is brought into the enclosure.

The EMERGENCY-STOP enclosures are also available with an M12 connector socket.

Selection and ordering data

	Version	Connection	Article No.
5SF5811-0AA08	**AS-Interface EMERGENCY-STOP mushroom pushbutton in plastic enclosure**		
	• Yellow enclosure top	Insulation piercing method	**3SF5811-0AA08**
	• Yellow enclosure top with protective collar	Insulation piercing method	**3SF5811-0AB08**
	• Yellow enclosure top	M12 connector socket	**3SF5811-0AA10**
3SF5811-2AB08	**AS-Interface EMERGENCY-STOP mushroom pushbutton in metal enclosure**		
	• Yellow enclosure top	Cable gland	**3SF5811-2AA08**
	• Yellow enclosure top with protective collar	Cable gland	**3SF5811-2AB08**
	• Yellow enclosure top	M12 connector socket	**3SF5811-2AA10**
3SF5811-2AA10	• Yellow enclosure top with protective collar	M12 connector socket	**3SF5811-2AB10**

© Siemens AG 2014

Selection and ordering data

EMERGENCY-STOP devices acc. to ISO 13850 and IEC 60947-5-5
- With holder for front plate mounting
- Connection with AS-Interface F adapter
- Yellow contrast surfaces must be ordered separately.

	Version	Approval	Article No.
With plastic enclosure			
Mushroom diameter 32 mm	**EMERGENCY-STOP mushroom pushbuttons, Ø 32 mm,** with positive latching according to ISO 13850, with rotate-to-unlatch mechanism	DVE	**3SB3000-1FA20**
Mushroom diameter 40 mm, with rotate-to-unlatch mechanism with switch position indication	**EMERGENCY-STOP mushroom pushbuttons, Ø 40 mm,** with positive latching according to ISO 13850, with rotate-to-unlatch mechanism	DVE	
	• Without switch position indicator		**3SB3000-1HA20**
	• With mechanical switch position indication		**3SB3000-1HA26**
Mushroom diameter 40 mm, pull-to-unlatch mechanism	**EMERGENCY-STOP mushroom pushbuttons, Ø 40 mm,** with positive latching according to ISO 13850, with pull-to-unlatch mechanism	DVE	**3SB3000-1TA20**
Mushroom diameter 60 mm	**EMERGENCY-STOP mushroom pushbuttons, Ø 60 mm,** with positive latching according to ISO 13850, with rotate-to-unlatch mechanism	DVE	**3SB3000-1AA20**
Mushroom diameter 40 mm, with RONIS key-operated switch	**EMERGENCY-STOP mushroom pushbuttons, Ø 40 mm, with RONIS key-operated switch,** lock No. SB 30, with positive latching according to ISO 13850, unlocking only possible using key	DVE	**3SB3000-1BA20**
	EMERGENCY-STOP mushroom pushbuttons, Ø 40 mm, with CES key-operated switch, lock No. SSG 10, with positive latching according to ISO 13850, unlocking only possible using key	DVE	**3SB3000-1KA20**
Mushroom diameter 40 mm, with CES key-operated switch	**EMERGENCY-STOP mushroom pushbuttons, Ø 40 mm, with BKS key-operated switch,** lock No. S1, with positive latching according to ISO 13850, unlocking only possible using key	DVE	**3SB3000-1LA20**
	EMERGENCY-STOP mushroom pushbuttons, Ø 40 mm, with O.M.R. key-operated switch, lock No. 73037, with positive latching according to ISO 13850, unlocking only possible using key	DVE	**3SB3000-1MA20**

For online configurator see www.siemens.com/sirius/configurators.

See Industry Mall for accessories such as yellow backing plates.

© Siemens AG 2014

Selection and ordering data (continued)

EMERGENCY-STOP devices acc. to ISO 13850 and IEC 60947-5-5
- With holder for front plate mounting
- Connection with AS-Interface F adapter
- Yellow contrast surfaces must be ordered separately.

	Version	Approval	Article No.
With metal enclosure			
Mushroom diameter 32 mm	**EMERGENCY-STOP mushroom pushbuttons, Ø 32 mm,** with positive latching according to ISO 13850, with rotate-to-unlatch mechanism	DVE	
	• Standard version		**3SB3500-1FA20**
	• Solvent-resistant[1]		**3SB3500-1FA20-0PA0**
Mushroom diameter 40 mm, with rotate-to-unlatch mechanism with switch position indication	**EMERGENCY-STOP mushroom pushbuttons, Ø 40 mm,** with positive latching according to ISO 13850, with rotate-to-unlatch mechanism	DVE	
	Without switch position indicator		**3SB3500-1HA20**
	Without switch position indicator, solvent-resistant[1]		**3SB3500-1HA20-0PA0**
	With mechanical switch position indication		**3SB3500-1HA26**
Mushroom diameter 40 mm, pull-to-unlatch mechanism	**EMERGENCY-STOP mushroom pushbuttons, Ø 40 mm,** with positive latching according to ISO 13850, with pull-to-unlatch mechanism	DVE	**3SB3500-1TA20**
Mushroom diameter 60 mm	**EMERGENCY-STOP mushroom pushbuttons, Ø 60 mm,** with positive latching according to ISO 13850, with rotate-to-unlatch mechanism	DVE	**3SB3500-1AA20**
Mushroom diameter 40 mm, with RONIS key-operated switch	**EMERGENCY-STOP mushroom pushbuttons, Ø 40 mm, with RONIS key-operated switch,** lock No. SB 30, with positive latching according to ISO 13850, unlocking only possible using key	DVE	**3SB3500-1BA20**
	EMERGENCY-STOP mushroom pushbuttons, Ø 40 mm, with CES key-operated switch, lock No. SSG 10, with positive latching according to ISO 13850, unlocking only possible using key	DVE	**3SB3500-1KA20**
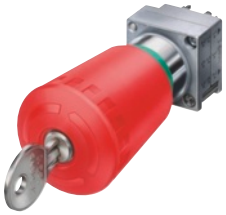 Mushroom diameter 40 mm, with CES key-operated switch	**EMERGENCY-STOP mushroom pushbuttons, Ø 40 mm, with BKS key-operated switch,** lock No. S1, with positive latching according to ISO 13850, unlocking only possible using key	DVE	**3SB3500-1LA20**
	EMERGENCY-STOP mushroom pushbuttons, Ø 40 mm, with O.M.R. key-operated switch, lock No. 73037, with positive latching according to ISO 13850, unlocking only possible using key	DVE	**3SB3500-1MA20**

For online configurator see www.siemens.com/sirius/configurators.

See Industry Mall for accessories such as yellow backing plates.

[1] Not suitable for laser inscription.

© Siemens AG 2014

AS-Interface F adapters for EMERGENCY-STOP devices

Overview

The AS-Interface F adapter is used to connect an EMERGENCY-STOP device according to ISO 13850 from the 3SB3 series to the AS-Interface bus system. The F adapter is suitable for control devices with mounting on front plates.

The F adapter has a safe AS-Interface 2I slave and is snapped from behind onto the EMERGENCY-STOP mushroom pushbutton. In the 2I/1O expanded version, an output is also available for actuating an indicator light with LED.

Depending on the version, screw terminals or spring-type terminals or the insulation piercing method are used for connecting to the AS-Interface bus cable. Addressing is performed using the AS-Interface connection or the integrated addressing socket.

Safety category 4 (SIL 3) is achieved with the adapter.

Selection and ordering data

	Version	Connection	Article No.
3SF5402-1AA03	**AS-Interface F adapter for 3SB3 EMERGENCY-STOP mushroom pushbuttons** For mounting on front plates		
	• 2I	Screw terminals	**3SF5402-1AA03**
	• 2I/1O, with output for LED control		**3SF5402-1AB03**
	• 2I	Spring-type terminals	**3SF5402-1AA04**
	• 2I/1O, with output for LED control		**3SF5402-1AB04**
	• 2I	Insulation piercing method	**3SF5402-1AA05**
	• 2I/1O, with output for LED control		**3SF5402-1AB05**

3SF5402-1AA04

3SF5402-1AA05

© Siemens AG 2014

Overview

CM 1243-2 communication module for S7-1200

The CM 1243-2 communication module is the AS-Interface master for the SIMATIC S7-1200 and has the following features:

- Connection of up to 62 AS-Interface slaves
- Integrated analog value transmission
- Supports all AS-Interface master functions according to the AS-Interface Specification V3.0
- Indication of the operating state on the front of the device displayed via LED
- Display of operating mode, AS-Interface voltage faults, configuration faults and peripheral faults via LED behind the front panel
- Compact enclosure in the design of the SIMATIC S7-1200
- Suitable for AS-i power 24V: in combination with the optional DCM 1271 data decoupling module, a standard 24 V power supply unit can be used.
- Configuration and diagnostics via the TIA Portal

Design

The CM 1243-2 communication module is positioned to the left of the S7-1200 CPU and linked to the S7-1200 via lateral contacts.

It has:

- Terminals for two AS-i cables (internally jumpered) via two screw terminals each respectively
- One terminal for connection to the functional ground
- LEDs for indication of the operating state and fault statuses of the connected slaves

The screw terminals (included in scope of supply) can be removed to facilitate installation.

Function

The CM 1243-2 supports all specified functions of the AS-Interface Specification V3.0.

The values of the digital AS-i slaves can be activated via the process image of the S7-1200. During configuration of the slaves in the TIA Portal, the values of the analog AS-i slaves can also be accessed directly in the process image.

It is also possible to exchange all data of the AS-i master and the connected AS-i slaves with the S7-1200 via the data record interface.

Changeover of the operating mode, automatic application of the slave configuration and the re-addressing of a connected AS-i slave can be implemented via the control panel of the CM 1243-2 in the TIA Portal.

The optional DCM 1271 data decoupling module has an integrated detection unit for detecting ground faults on the AS-Interface cable. The integrated overload protection also disconnects the AS-Interface cable if the drive power required exceeds 4 A.

Notes on safety:

The use of this product requires suitable protective measures (e.g. network segmentation for IT security among others) in order to ensure safe plant operation, see www.siemens.com/industrialsecurity.

Configuration

To configure CM 1243-2, you require STEP 7 V11+ SP2 or STEP 7 V12 or higher.

For STEP 7 V11+ SP2 or higher, the additional Hardware Support Package for CM 1243-2 is required. This is available via the Industry Online Support Portal, see http://support.automation.siemens.com/WW/view/en/54164095.

The software enables user-friendly configuration and diagnostics of the AS-Interface master and any connected slaves.

Alternatively, you can also apply the AS-Interface ACTUAL configuration at the "touch of a button" via the control panel integrated in the TIA Portal/STEP 7.

© Siemens AG 2014

Benefits

- More flexibility and versatility in the use of SIMATIC S7-1200 as the result of a significant increase in the number of digital and analog inputs/outputs available
- Very easy configuration and diagnostics of the AS-Interface via the TIA Portal (STEP 7 V11+ SP2 or higher)
- No need for the AS-i power supply unit with AS-i Power24V: The AS-Interface cable is supplied through an existing 24 V DC PELV power supply unit. For decoupling, the AS-i DCM 1271 data decoupling module is required, see page 4/142.
- LEDs for indication of fault statuses for fast diagnostics
- Monitoring of AS-Interface voltage facilitates diagnostics

Application

The CM 1243-2 is the AS-Interface master connection for the 12xx CPUs of the SIMATIC S7-1200. Connection to the AS-Interface greatly increases the number of inputs and outputs available for S7-1200 (max. 496 DI/496 DO on the AS-Interface per CM).

The integrated analog value processing also makes the analog values available at the AS-Interface for the S7-1200 (per CM up to 31 standard analog slaves, each with up to 4 channels, or up to 62 A/B analog slaves, each with up to 2 channels).

Selection and ordering data

	Version	Article No.
3RK7243-2AA30-0XB0	**CM 1243-2 communication modules** • AS-Interface masters for SIMATIC S7-1200 • Corresponds to AS-Interface Specification V3.0 • Dimensions (W × H × D / mm): 30 × 100 × 75	**3RK7243-2AA30-0XB0**

Accessories

	Version	Article No.
	5-pole screw terminals for AS-i master CM 1243-2 and AS-i DCM 1271 data decoupling module • With screw terminals	**3RK1901-3MA00**

More information

Manual "AS-i Master CM 1243-2 and AS-i Data Decoupling Module DCM 1271 for SIMATIC S7-1200" see http://support.automation.siemens.com/WW/view/en/57358958.

© Siemens AG 2014

Overview

CP 343-2P / CP 343-2

The CP 343-2P is the AS-Interface master for the SIMATIC S7-300 programmable controller and the ET 200M distributed I/O station.

The CP 343-2 is the basic version of the module.

The CP343-2P / CP 343-2 performs the following features:

- Connection of up to 62 AS-Interface slaves
- Integrated analog value transmission (all analog profiles)
- Supports all AS-Interface master functions according to the AS-Interface Specification V3.0
- Display of the operating state and readiness for operation of connected slaves by means of LEDs in the front panel
- Fault indications (e. g. AS-Interface voltage fault, configuration fault) by means of LEDs in the front panel
- Compact enclosure in the design of the SIMATIC S7-300
- Suitable for AS-i Power24V (from product version 2/firmware version 3.1) and for standard AS-i with 30 V voltage.
- With CP 343-2P additionally: Supports the configuration of the AS-Interface network with STEP 7 V5.2 and higher

Design

The CP 343-2P / CP 343-2 is connected like an I/O module to the S7-300. It has:

- Two terminal connections for direct connection of the AS-Interface cable
- LEDs in the front panel for indicating the operating state and the readiness for operation of all connected and activated slaves
- Pushbuttons for switching over the master operating state and for adopting the existing ACTUAL configuration of the AS-i slave as the DESIRED configuration

Function

The CP 343-2P / CP 343-2 supports all specified functions of the AS-Interface Specification V3.0.

The CP 343-2P / CP 343-2 occupies 16 bytes each in the I/O address area of the SIMATIC S7-300. The digital I/O data of the standard slaves and A slaves are saved in this area. The digital I/O data of the B slaves and the analog I/O data can be accessed with the S7 system functions for read/write data record.

If required, master calls can be performed with the command interface, e.g. read/write parameters, read/write configuration.

For more information see
http://support.automation.siemens.com/WW/view/en/51678777.

Notes on safety:

The use of this product requires suitable protective measures (e.g. network segmentation for IT security among others) in order to ensure safe plant operation, see
www.siemens.com/industrialsecurity.

Configuration

All connected AS-Interface slaves are configured at the press of a button. No further configuration of the CP is required.

With CP 343-2P additionally

The CP 343-2P also supports configuring of the AS-Interface network with STEP 7 V5.2 and higher. Specifying the AS-i configuration in HW-Config facilitates the setting of slave parameters and documentation of the plant. Uploading the ACTUAL configuration of an already configured AS-Interface network is also supported. The saved configuration cannot be overwritten at the press of a button and is therefore tamper-proof.

Benefits

- Shorter start-up times through simple configuration at the press of a button
- Using it in the ET 200M distributed I/O system allows flexible machine-related structures to be constructed
- Provides diagnostics of the AS-Interface network
- Well suited also for complex applications thanks to connection options for 62 slaves and integral analog value processing
- Reduction of standstill and servicing times in the event of a fault thanks to the LED indicators:
  - Status of the AS-Interface network
  - Slaves connected and their readiness for operation
  - Monitoring of the AS-Interface mains voltage
- Lower costs for stock keeping and spare parts because the CP can be used for the SIMATIC S7-300 as well as for the ET 200M
- With CP 343-2P additionally: Improved plant documentation and support for service assignments thanks to a description of the AS-Interface configuration in the STEP 7 project
- No need for the AS-i power supply unit with AS-i Power24V: The AS-Interface cable is supplied through an existing 24 V DC PELV power supply unit. An AS-i data decoupling module (e.g. 3RK1901-1DE12-1AA0) is required for the decoupling, see page 4/142.
- Operation with AS-Interface power supply (see page 4/142) possible without restrictions.

© Siemens AG 2014

Application

The CP 343-2P / CP 343-2 is the AS-Interface master connection for the SIMATIC S7-300 and the ET 200M.

Through connection to AS-Interface it is possible to access max. 248 DI/248 DO per CP, using 62 A/B slaves with 4DI/4DO each.

With the integrated analog value processing, it is easy to transmit analog signals (per CP up to 62 A/B analog slaves with a maximum of 2 channels each or up to 31 standard analog slaves with a maximum of 4 channels each).

The CP 343-2P is the further development of the CP 343-2 and contains its entire functionality. An existing STEP 7 user program for a CP 343-2 can thus be used without restrictions with a CP 343-2P. It is only in STEP 7 HW-Config that the two modules are configured differently, with the CP 343-2P offering additional options. This is why the CP 343-2P is recommended.

Selection and ordering data

	Version	Article No.
6GK7343-2AH11-0XA0	**CP 343-2P communications processors** For connection of SIMATIC S7-300 and ET 200M to AS-Interface; Configuration of the AS-i network using the SET key or STEP 7 (V5.2 and higher); without front connector; corresponds to AS-Interface Specification V3.0; dimensions (W x H x D / mm): 40 x 125 x 120	**6GK7343-2AH11-0XA0**
6GK7343-2AH01-0XA0	**CP 343-2 communications processors** Basic version for connection of SIMATIC S7-300 and ET 200M to AS-Interface Configuration of the AS-i network using the SET key; without front connector; corresponds to AS-Interface Specification V3.0; dimensions (W x H x D / mm): 40 x 125 x 120	**6GK7343-2AH01-0XA0**

Accessories

Version	Article No.
Front connector, 20-pole	
• With screw terminals	**6ES7392-1AJ00-0AA0**
• With spring-type terminals	**6ES7392-1BJ00-0AA0**

More information

AS-i block library for PCS 7 for easy connection of AS-Interface to PCS 7 see

- Catalog IC 10, Chapter 14 "Parameterization, Configuration and Visualization with SIRIUS" ⇒ "AS-Interface Block Library for SIMATIC PCS 7"
- Industry Mall: "Automation Technology"
  ⇒ "Industrial Controls"
  ⇒ "Parameterization, Configuration and Visualization with SIRIUS"
  ⇒ "AS-Interface Block Library for SIMATIC PCS 7"

Manuals

Manuals see
http://support.automation.siemens.com/WW/view/en/14310380/133300.

© Siemens AG 2014

Overview

CM AS-i Master ST for SIMATIC ET 200SP

The CM AS-i Master ST communication module is designed for use in the SIMATIC ET 200SP distributed I/O system and has the following features:

- Connection of up to 62 AS-Interface slaves
- Supports all AS-Interface master functions according to the AS-Interface Specification V3.0
- User-friendly configuration with graphic display of the AS-i line in TIA Portal V12.0 or in other systems using GSD
- Supply via AS-Interface cable
- Suitable for AS-i Power24V and for AS-Interface with 30 V voltage
- Integrated ground-fault monitoring for the AS-Interface cable
- Through connection to AS-Interface, the number of digital inputs and outputs available for the control system is greatly increased (max. 496 DI/496 DO on the AS-Interface per CM AS-i Master ST).
- Integrated analog value processing (all analog profiles)

Basic unit: ET 200SP distributed I/O system

The SIMATIC ET 200SP is a scalable and highly flexible distributed I/O system for connecting the process signals to a central control system via PROFIBUS or PROFINET.

Up to eight CM AS-i Master STs can be plugged into a SIMATIC ET 200SP with the IM 155-6 PN standard interface module.

For more information, see "SIMATIC ET 200SP ET 200SP Distributed I/O System" System Manual, http://support.automation.siemens.com/WW/view/en/58649293.

Design

The CM AS-i Master ST module has an ET 200SP module enclosure with a width of 20 mm. A C0 type BaseUnit (BU) is required for use in the ET 200SP.

The module has LED indicators for diagnostics, operation, AS-i voltage and AS-i slave status and offers informative front-side module inscription for

- Plain-text marking of the module type and function class
- 2D matrix code (article number and serial number)
- Circuit diagram
- Color coding of the CM module type: Light gray
- Hardware and firmware version
- Complete article number

Function

The CM AS-i Master ST supports all specified functions of the AS-Interface Specification V3.0.

The input/output values of the digital AS-i slaves can be activated via the cyclic process image. The values of the analog AS-i slaves can be reached via data record transfer.

If required, master calls can be performed with the command interface, e.g. read/write parameters, read/write configuration.

Changeover of the operating mode, automatic application of the slave configuration and the re-addressing of a connected AS-i slave can be implemented via the control panel of the CM AS-i Master ST in the TIA Portal.

Notes on safety:

The use of this product requires suitable protective measures (e.g. network segmentation for IT security among others) in order to ensure safe plant operation, see www.siemens.com/industrialsecurity.

Configuration

The following software is required for configuration of the CM AS-i Master ST module:

- STEP 7 (classic), V5.5 SP3 HF4 or higher with HSP 2092 or
- STEP 7 (TIA Portal), V12 or higher or
- the GSD file of the ET 200SP with STEP 7 or another engineering tool

The TIA Portal enables user-friendly configuration and diagnostics of the AS-i master and, in the event of interfacing to a SIMATIC S7-300/S7-400 station, any connected slaves.

Alternatively, you can also apply the AS-Interface ACTUAL configuration as the DESIRED configuration at the "touch of a button" via the control panel integrated in the TIA Portal or connection of an optional button. Configuration with the GSD file is possible only with the button.

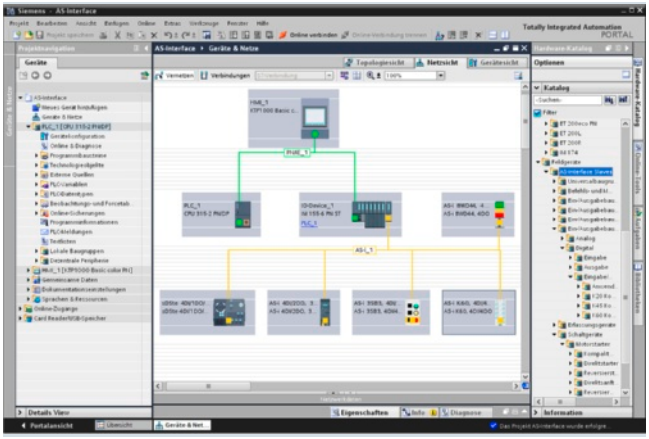

Configuration of an AS-Interface network with CM AS-i Master ST via TIA Portal

The CM AS-i Master ST module occupies 32 input bytes and 32 output bytes in the I/O data of the ET 200SP station.

© Siemens AG 2014

CM AS-i Master ST for SIMATIC ET 200SP

Benefits

The CM AS-i Master ST for ET 200SP communication module enables modular, easy and high-performance expansion of AS-Interface networks via engineering in the TIA Portal.

Up to eight CM AS-i Master ST units can be plugged into one ET 200SP station with IM 155-6 PN Standard. The maximum configuration depends on the interface module used.

Multiple masters as well as single masters can thus be implemented in the ET 200SP depending on the number of modules.

Together with the interface module, a scalable PROFINET/AS-i Link or PROFIBUS/AS-i Link can be assembled.

Application

Configuration examples of AS-Interface networks with CM AS-i Master ST for SIMATIC ET 200SP

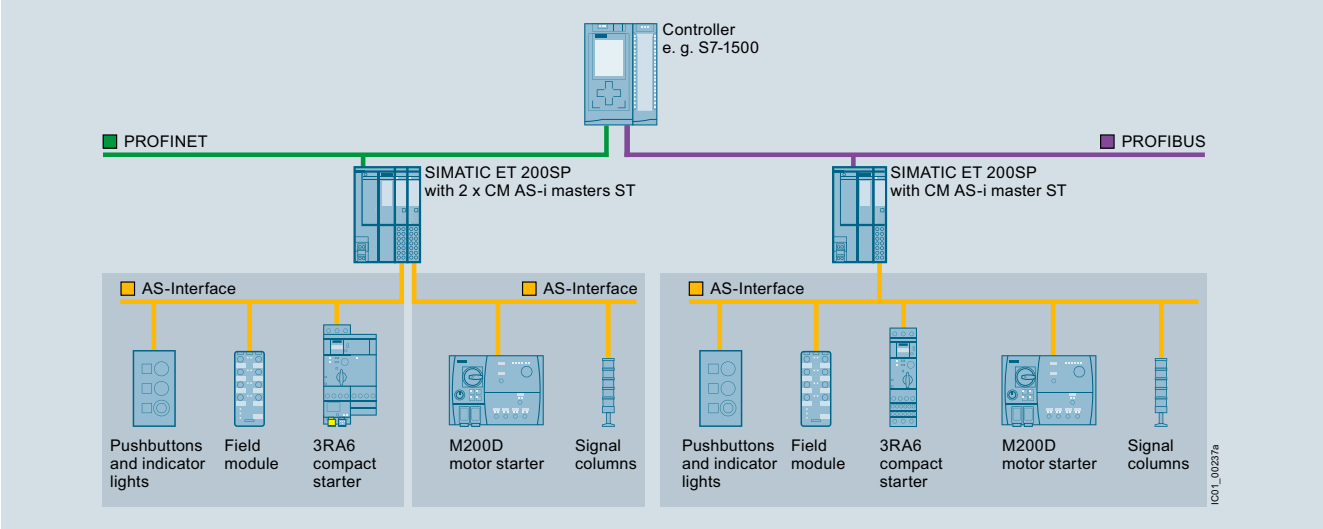

Configuration of AS-Interface networks under a SIMATIC ET 200SP

Selection and ordering data

	Version	Article No.
3RK7137-6SA00-0BC1	**CM AS-i Master ST communication modules** • AS-Interface master for SIMATIC ET 200SP, can be plugged onto BaseUnit type C0 • Corresponds to AS-Interface Specification V3.0 • Dimensions (W × H × D / mm): 20 x 73 x 58	**3RK7137-6SA00-0BC1**

Accessories

	Version	Spring-type terminals Article No.
6ES7193-6BP20-0DC0	**BaseUnit BU20-P6+A2+4D** • BaseUnit (light), BU type C0 • Suitable for the CM AS-i Master ST module • For connection of AS-Interface cable to the CM AS-i Master ST • Beginning of an AS-i network, disconnection of AS-i voltage to the left-hand module	**6ES7193-6BP20-0DC0**

© Siemens AG 2014

Accessories (continued)

	Version	Article No.
6ES7155-6AA00-0BN0	**PROFINET interface modules IM 155-6 PN Standard** Max. 32 I/O modules, max. 256 bytes I/O data per station	
	• Including server module and bus adapter 2 x RJ45 (supplied without RJ45 connector)	**6ES7155-6AA00-0BN0**
	• Including server module (bus adapter must be ordered separately, see below)	**6ES7155-6AU00-0BN0**
	PROFINET interface modules IM 155-6 PN High Feature Max. 64 I/O modules, Max. 1440 bytes I/O data per station	
	• Including server module (bus adapter must be ordered separately, see below)	**6ES7155-6AU00-0CN0**
	PROFIBUS interface modules IM 155-6 DP High Feature Max. 32 I/O modules, Max. 244 bytes I/O data per station	
	• Including server module and PROFIBUS connector	**6ES7155-6BA00-0CN0**
	Bus adapters for PROFINET For connection of the Ethernet cable to the PROFINET IM 155-6 PN interface module	
6ES7193-6AR00-0AA0	• Connection 2 x RJ45 (supplied without RJ45 connector)	**6ES7193-6AR00-0AA0**
6ES7193-6AF00-0AA0	• Connection 2 x FC (FastConnect)	**6ES7193-6AF00-0AA0**

More information

Manuals

"CM AS-i Master ST for SIMATIC ET 200SP" manual see
http://support.automation.siemens.com/WW/view/en/71756485.

"SIMATIC ET 200SP BaseUnits" manual see
http://support.automation.siemens.com/WW/view/en/59753521.

"SIMATIC ET 200SP ET 200SP Distributed I/O System" system manual see
http://support.automation.siemens.com/WW/view/en/58649293.

Industry Mall

For more information see Industry Mall at "Automation Technology"
⇒ "Industrial Communication" ⇒ "AS-Interface" ⇒ "Masters" ⇒ "Masters for SIMATIC ET 200".

© Siemens AG 2014

F-CM AS-i Safety ST for SIMATIC ET 200SP

Overview

F-CM AS-i Safety ST for SIMATIC ET 200SP

The F-CM AS-i Safety ST fail-safe communication module supplements an AS-Interface network without additional wiring to produce a safety-related AS-i network.

Important features:

- Fail-safe communication module for the ET 200SP
  - 31 fail-safe input channels in the process image
  - 16 fail-safe output channels in the process image
  - Certified up to SIL 3 (IEC 62061/IEC 61508), PL e (EN ISO 13849-1)
  - Parameterization conforms with other fail-safe I/O modules of the ET 200SP
- The communication module supports PROFIsafe in PROFINET configurations. Suitable for use with fail-safe SIMATIC S7-300F/S7-416F CPUs.
- For reading up to 31 fail-safe AS-i input slaves
  - 2 sensor inputs/signals for each fail-safe AS-i input slave
  - Adjustable evaluation of sensor signals: 2-channel or 2 x 1-channel
  - Integrated discrepancy evaluation in the case of 2-channel signals
  - Integrated AND operation in the case of 2 x 1-channel signals
  - Input delay can be parameterized
  - Start-up test can be set
  - Sequence monitoring can be activated
- For control of up to 16 fail-safe AS-i output circuit groups
  - The output circuit groups are controlled independently of one another.
  - One output circuit group can act on one or more actuators (e.g. to switch drives simultaneously).
  - An actuator (e.g. a contactor) is interfaced via a fail-safe AS-i output module (e.g. safe SlimLine module S45F, Article No. 3RK1405-1SE15-0AA2, see page 4/10).
  - Simple fault acknowledgment via the process image
- Simple module replacement thanks to automatic importing of the safety parameters from the coding element
- Comprehensive diagnostic options
- Can be plugged onto type C1 or type C0 BaseUnits (BU)
- Supply via AS-Interface voltage
- 8 LED indicators for diagnostics, operating state, fault indication and supply voltage
- Informative front-side module inscription
  - Plain-text marking of the module type and function class
  - 2D matrix code (article number and serial number)
  - Circuit diagram
  - Color coding of the CM module type: Light gray
  - Hardware and firmware version
  - Complete article number
- Optional labeling accessories
  - Labeling strips
  - Reference identification label

Design

The fail-safe F-CM AS-i Safety ST module has an ET 200SP module enclosure with a width of 20 mm.

One AS-i master according to the AS-i Specification V3.0 and fail-safe AS-i input slaves and/or fail-safe AS-i output modules are needed for operation. The CM AS-i Master ST communication module (Article No. 3RK7137-6SA00-0BC1) is recommended as the AS-i master for the ET 200SP, see page 4/38.

SIMATIC AS-i F-Link

Simple combination of the CM AS-i Master ST and F-CM AS-i Safety ST modules in one ET 200SP station with PROFINET interfacing results in a powerful PN/AS-i F-Link, which can be expanded further in a modular fashion.

SIMATIC AS-i F-Link: combination of an ET 200SP interface module, CM AS-i Master ST and F-CM AS-i Safety ST

With the digital and analog I/O modules of the ET 200SP, local inputs and outputs can be realized in the SIMATIC AS-i F-Link so as to ensure that the F-Link complies precisely with customer requirements. Expansion variants for almost every application are possible thanks to the selection of standard and fail-safe I/O modules.

Besides the single AS-i master, double, triple or generally multiple masters can be realized with or without fail-safe functionality.

© Siemens AG 2014

Overview (continued)

Supported BaseUnits

With the recommended combination of the CM AS-i Master ST and F-CM AS-i Safety ST modules, the CM module is plugged onto a light type C0 BaseUnit and, directly on the right of it, the F-CM module is plugged onto a dark type C1 BaseUnit.
The AS-i cable is connected only on the light BaseUnit of the CM module.

If the F-CM AS-i Safety ST module is not combined with the CM AS-i Master ST module, but another AS-i master is used instead, then the F-CM module is plugged onto a light type C0 BaseUnit. In this case, the AS-i cable is connected on the light BaseUnit of the F-CM module.

Note on safety:

The use of this product requires suitable protective measures (e.g. network segmentation for IT security among others) in order to ensure safe plant operation, see www.siemens.com/industrialsecurity.

Configuration

The following software is required for configuration of the F-CM AS-i Safety ST module:

- STEP 7 (classic), V5.5 SP3 HF4 or higher with HSP 2093 and Distributed Safety V5.4 SP5 or F-Configuration Pack SP11

Configuration and programming are done entirely in the STEP 7 user interface. No additional configuration software is needed for commissioning.

Data management – together with all other configuration data of the SIMATIC – is realized completely in the S7 project.

The input and output channels are assigned to the process image automatically and manual linking via configuration function blocks is not necessary.

If the F-CM AS-i Safety ST module is replaced, all necessary settings are automatically imported into the new module.

The F-CM AS-i Safety ST module occupies 16 input bytes and 8 output bytes in the I/O data of the ET 200SP station.

Application

Thanks to use of the fail-safe module in the ET 200SP, it is possible to fulfill the safety-related application requirements in a manner that is integrated in the overall automation solution.

The safety functions required for fail-safe operation are integrated in the modules. Communication with the fail-safe SIMATIC S7 CPUs is realized via PROFIsafe.

The safety application is programmed in the SIMATIC S7 F-CPU with Distributed Safety. The fail-safe input signals of the ASI-safe slave modules are read via the AS-i bus line and are combined with any chosen further signals in the fail-safe program.

The fail-safe output signals can be output through fail-safe SIMATIC output modules or also directly via AS-i – with the aid of fail-safe AS-i output modules, e.g. 3RK1405-1SE15-0AA2 (see page 4/10). No special functions are required for this in the program.

Configuration examples of AS-Interface networks with CM AS-i Master ST and F-CM AS-i Safety ST for SIMATIC ET 200SP

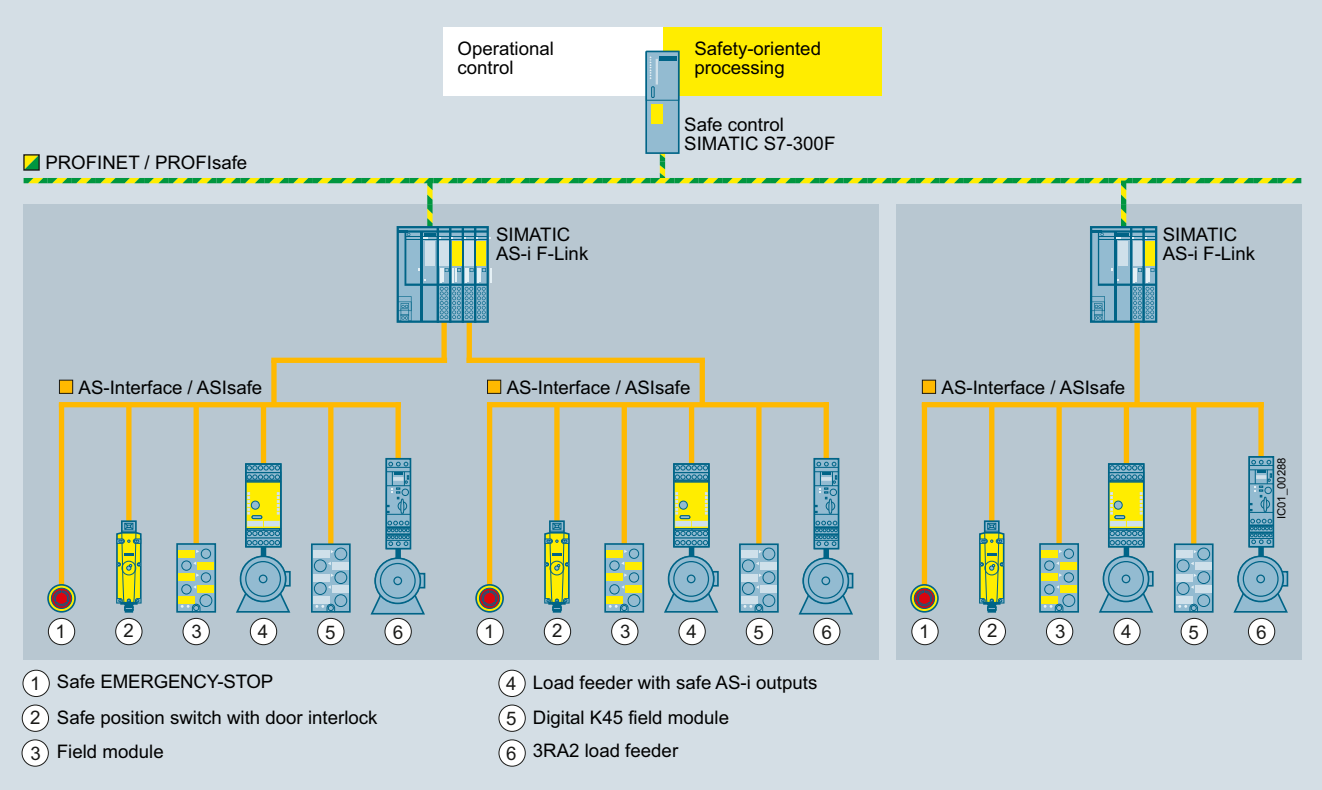

AS-Interface configuration with SIMATIC AS-i F-Link, consisting of an ET 200SP station with CM AS-i Master ST and F-CM AS-i Safety ST modules

© Siemens AG 2014

F-CM AS-i Safety ST for SIMATIC ET 200SP

Selection and ordering data

	Version	Article No.
3RK7136-6SC00-0BC1	**F-CM AS-i Safety ST communication modules** • Fail-safe module for SIMATIC ET 200SP, can be plugged onto BaseUnit type C1 (alternatively type C0) • An AS-i master, e.g. CM AS-i Master ST, is required for operation (see page 4/38) • Suitable for use up to SIL 3 (IEC 62061/IEC 61508), PL e (EN ISO 13849-1) • Approved for use with PROFINETIM 155-6 PN Standard and IM 155-6 PN High Feature interface modules, under CPU S7-300F or CPU S7-416F. Further approvals on request. • Coding element type F (included in scope of supply) • Dimensions (W × H × D / mm): 20 x 73 x 58	**3RK7136-6SC00-0BC1**

Accessories

	Version	Spring-type terminals Article No.
6ES7193-6BP20-0BC1	**BaseUnit BU20-P6+A2+4B** • BaseUnit (dark), BU type C1 • Suitable for the F-CM AS-i Safety ST fail-safe module • Continuation of an AS-i network, connection with the AS-i voltage of the left-hand module	**6ES7193-6BP20-0BC1**
	Coding element type F (spare part) • for ET 200SP modules F-CM AS-i Safety ST, F-DI, F-DQ, F-PM-E • Packing unit 5 items	**6ES7193-6EF00-1AA0**

Further accessories see page 4/39.

More information

Manuals

"F-CM AS-i Safety ST Module" manual see
http://support.automation.siemens.com/WW/view/en/90265988.

"SIMATIC ET 200SP BaseUnits" manual see
http://support.automation.siemens.com/WW/view/en/59753521.

"SIMATIC ET 200SP ET 200SP Distributed I/O System" system manual see
http://support.automation.siemens.com/WW/view/en/58649293.

Industry Mall

For more information
see Industry Mall at "Automation Technology"
⇒ "Industrial Communication" ⇒ "AS-Interface" ⇒ "Masters"
⇒ "Masters for SIMATIC ET 200".

© Siemens AG 2014

Overview

DP/AS-i LINK Advanced

PN	DP-M	DP-S	ASi-M		
		●	●		IK10_10195

The DP/AS-i LINK Advanced is a compact network transition between PROFIBUS (DP Slave) and AS-Interface, with the following features:

- Single and double AS-Interface master (according to AS-Interface Specification V3.0) for connection of 62 AS-Interface slaves or 124 AS-Interface slaves (with a double master)
- Integrated analog value transmission (all analog profiles)
- Integrated ground-fault monitoring for the AS-Interface cable
- User-friendly local diagnostics and startup by means of a full graphic display and control keys or through a web interface with a standard browser on the PC screen
- Optimum TIA integration using STEP 7
- Integration in non-Siemens engineering tools using the PROFIBUS GSD file
- Vertical integration (standard web interface) through Industrial Ethernet
- Supply voltage from the AS-Interface shaped cable or alternatively with 24 V DC (optional)
- Suitable for AS-i Power24V (from product version 4 / firmware version 2.2) and for Standard AS-i with 30 V voltage
- Module exchange without entering the connection parameters (e.g. PROFIBUS address) using C-PLUG (optional)

Design

- Compact plastic enclosure in degree of protection IP20 for standard rail mounting
- COMBICON plug-in screw terminals
- Compact design:
  - Pixel graphics display in the front panel for detailed display of the operating state and readiness for operation of all connected AS-Interface slaves
  - 6 pushbuttons for starting up and testing the AS-Interface line directly on the DP/AS-i LINK Advanced
  - LED indication of the operating state of PROFIBUS DP and AS-Interface
  - Integrated Ethernet port (RJ45 socket) for user-friendly start-up, diagnostics and testing of DP/AS-i LINK Advanced through a web interface using a standard browser
- Small mounting depth thanks to recessed plug mounting
- Operation without fans and batteries

Functionality

Communications

The DP/AS-i LINK Advanced enables a PROFIBUS DP master to cyclically access the I/O data of all the slaves of a lower-level AS-Interface segment. Also supported are the expanded slave types with higher I/O data volume according to AS-i Specification V3.0.

The DP/AS-i LINK Advanced occupies the following address area:

- As a single master: 32 bytes of input data and 32 bytes of output data in which the I/O data of the connected AS-Interface slaves (standard and A/B slaves) of an AS-i line are stored.
- As double master, double the number of bytes
- Optional additional I/O bytes for data from analog slaves

The size of the input/output image can be compressed so that only the actually required I/O address area is occupied in the system of the DP master. The integrated evaluation of analog signals is just as easy as access to digital values because the analog process data also lie directly in the I/O address area of the CPU.
PROFIBUS DP-V1 Masters also provide the option of triggering AS-Interface Master calls over the acyclic PROFIBUS services (e. g. write parameters, amend addresses, read diagnostic values). Using an operating display in AS-i Link it is possible to fully commission the lower-level AS-Interface line.
DP/AS-i LINK Advanced is equipped with an additional Ethernet port which enables use of the integrated web server. The web server can be called up with any standard web browser (e. g. Internet Explorer) without additional software. It allows all diagnostics information to be shown on the PC and the bus configuration and, if applicable, any adjustments, to be displayed. Firmware updates are also possible using this port.
The optional C-PLUG supports module exchange without entering the connection parameters (PROFIBUS address etc.), keeping downtimes to a minimum in the event of a fault.

Diagnostics

The following diagnostics is possible using LEDs, the display and control keys, web interface or STEP 7:

- Operating state of the DP/AS-i LINK Advanced
- Status of the link as a PROFIBUS DP slave
- Diagnostics of the AS-Interface network
- Message frame statistics
- Standard diagnostics pages in the web interface for fast diagnostics access through Ethernet using a standard browser
- For the use of the web interfaces no network settings are necessary on the PC (Zeroconf procedure).
- The reporting of diagnostic events is optionally possible via E-Mail or SNMP Trap. The integrated diagnostic buffer saves the events including time stamp.

Notes on safety:

The use of this product requires suitable protective measures (e.g. network segmentation for IT security among others) in order to ensure safe plant operation, see www.siemens.com/industrialsecurity.

Configuration

The DP/AS-i LINK Advanced can be configured as follows:

- With STEP 7 as of V5.4: With STEP 7 the AS-Interface configuration can be uploaded in STEP 7. Furthermore, AS-Interface slaves can also be conveniently configured in HW-Config (slave selection dialog).
- By adopting the ACTUAL configuration of the AS-Interface on the display
- Alternatively DP/AS-i LINK Advanced can be integrated into the engineering tool over the PROFIBUS GSD file (e.g. STEP 7 versions below V5.4 or engineering tools from third-party software houses).

© Siemens AG 2014

DP/AS-i LINK Advanced

Benefits

- Short startup times through simple configuration at the press of a button and testing of the AS-Interface line using the display or web interface
- Reduction of standstill and servicing times in the event of a slave failure thanks to user-friendly diagnostics using the display or web interface and through simple module exchange with the help of the C-PLUG exchange medium
- Reduced amount of engineering work thanks to user-friendly configuration of Siemens slaves using the slave catalog in HW-Config (STEP 7)
- Costs saved by the double AS-Interface master when large volumes of project data are involved
- Saves the need for AS-i power supply with AS-i Power24V: The AS-Interface cable assembly is fed through an existing 24 V DC PELV power supply unit. For decoupling, an AS-i data decoupling module is required, see power supply units and data decoupling modules.
- Standard mode with AS-Interface power supply (see power supply units and data decoupling modules) possible without restrictions, whereby no further operational voltage is required.

Application

The DP/AS-i LINK Advanced is a PROFIBUS DP-V1 slave (according to IEC 61158/IEC 61784) and an AS-Interface master (based on AS-Interface Specification V3.0 according to IEC 62026-2). It enables transparent data access to AS-Interface from PROFIBUS DP.

Exchanging data with the PROFIBUS DP master

PROFIBUS DP masters (DP-V0) can exchange I/O data with AS-Interface in cyclic mode. PROFIBUS DP masters with acyclic services (DP-V1) are able in addition to initiate AS-Interface master calls (e.g. reading/writing the AS-i configuration during normal operation). As such, the DP/AS-i LINK Advanced is particularly well suited for a distributed construction and for connection of a lower-level AS-Interface network.

Single masters

For applications with typical volumes of project data, it is sufficient to use the DP/AS-i LINK Advanced in its version as an AS-Interface single master. The single master can operate up to 248 DI/248 DO, using 62 A/B slaves with 4 DI/4 DO each.

Double masters

For applications with large volumes of project data, the DP/AS-i LINK Advanced is used in its version as an AS-Interface double master. In this case, twice the volume of project data can be used on two AS-Interface lines running independently of each other. The double master can operate up to 496 DI/496 DO, using 2 AS-i networks each with 62 A/B slaves with 4DI/4DO each.

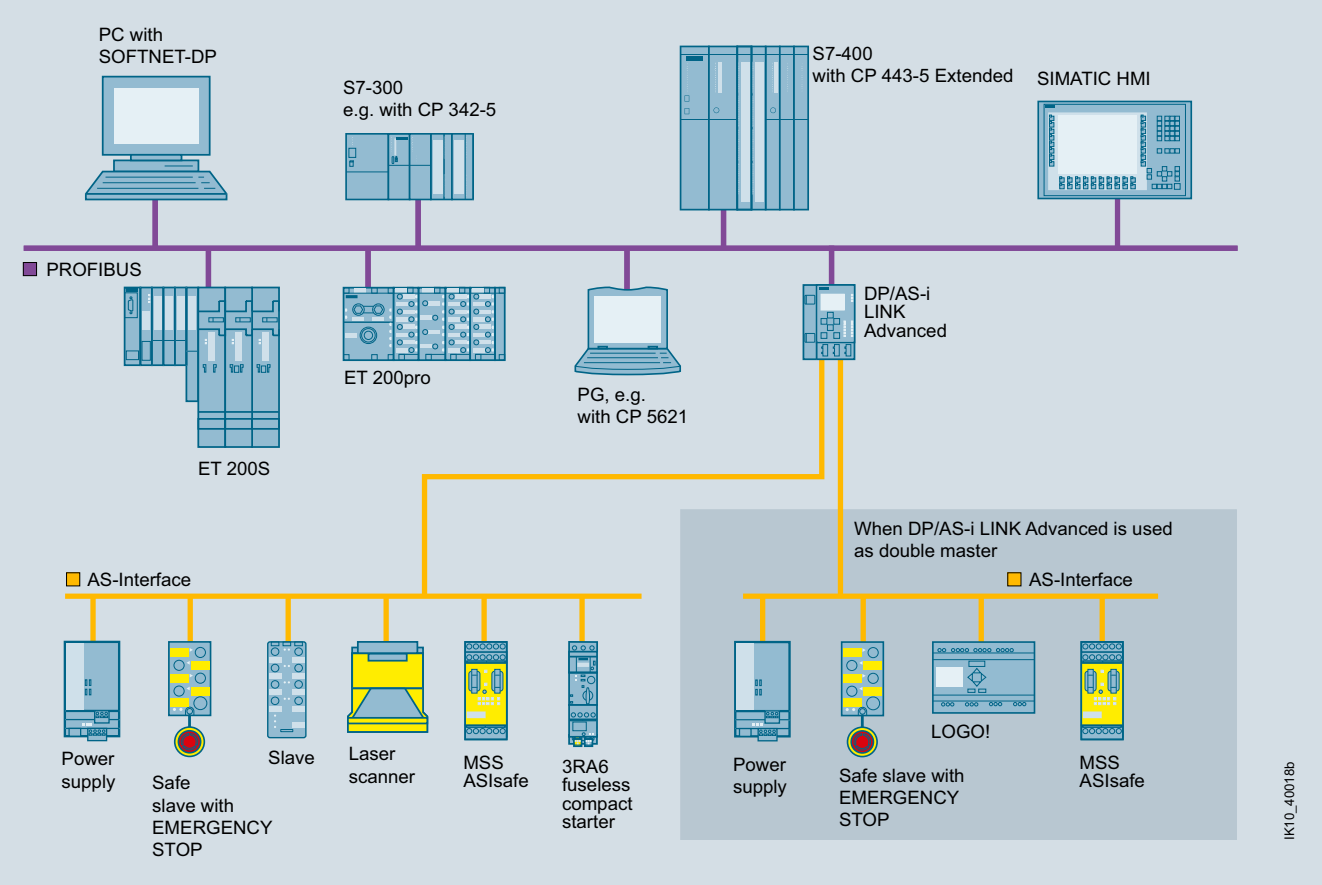

Integration of AS-Interface on PROFIBUS through DP/AS-i LINK Advanced as single/double master

© Siemens AG 2014

Selection and ordering data

	Version	Combicon connection Article No.
DP/AS-i LINK Advanced	**DP/AS-i LINK Advanced** Network transition between PROFIBUS DP and AS-Interface; degree of protection IP20; including COMBICON plug-in screw terminals for connection of an AS-Interface cable (two AS-Interface cables for double masters) and the optional 24 V supply; corresponds to AS-Interface Specification 3.0; dimensions (W x H x D / mm): 90 x 132 x 88.5	
	• Single master with display	**6GK1415-2BA10**
	• Double master with display	**6GK1415-2BA20**
Accessories		
	C-PLUG Exchange medium for the simple exchange of devices in the event of a fault; for accommodating configuration and application data, can be used in SIMATIC NET products with a C-PLUG slot	**6GK1900-0AB00**
	PROFIBUS FastConnect Standard Cable GP FastConnect standard type with special design for fast installation, 2-core, shielded	**6XV1830-0EH10**
	PROFIBUS FastConnect **RS485 bus connectors with angled cable feeder (35°)** With insulation displacement connection, the max. transmission rate is 12 Mbit/s Activatable terminating resistor is integrated	
	• Without PG connection socket	**6ES7972-0BA60-0XA0**
	• With PG connection socket	**6ES7972-0BB60-0XA0**
	PROFIBUS FastConnect Stripping Tool Preset stripping tool for speedy stripping of PROFIBUS FastConnect bus cables	**6GK1905-6AA00**
	IE FC RJ45 Plug 90 RJ45 plug-in connector for Industrial Ethernet, with robust metal enclosure and integrated insulation displacement contacts for connection of Industrial Ethernet FC installation cables; with 90° cable feeder	
	• 1 pack = 1 unit	**6GK1901-1BB20-2AA0**
	• 1 pack = 10 units	**6GK1901-1BB20-2AB0**
	• 1 pack = 50 units	**6GK1901-1BB20-2AE0**

More information

Manuals see
http://support.automation.siemens.com/WW/view/en/28602701/133300.

AS-i block library for PCS 7 for easy connection of AS-Interface to PCS 7 see

- Catalog IC 10, Chapter 14 "Parameterization, Configuration and Visualization with SIRIUS" ⇒ "AS-Interface Block Library for SIMATIC PCS 7"
- Industry Mall: "Automation Technology"
  ⇒ "Industrial Controls"
  ⇒ "Parameterization, Configuration and Visualization with SIRIUS"
  ⇒ "AS-Interface Block Library for SIMATIC PCS 7"

© Siemens AG 2014

DP/AS-Interface Link 20E

Overview

DP/AS-Interface Link 20E

PN	DP-M	DP-S	ASi-M		
		●	●		

IK10_10195

DP/AS-Interface Link 20E connects PROFIBUS DP to AS-Interface and has the following features:

- PROFIBUS DP slave and AS-Interface master
- Up to 62 AS-Interface slaves, each with 4 digital inputs and 4 digital outputs as well as analog slaves can be connected
- Integrated analog value transmission (all analog profiles)
- Supports all AS-Interface master functions according to the AS-Interface Specification V3.0
- Supply from AS-Interface cable; hence no additional power supply required
- Suitable for AS-i Power24V (from product version 2 / firmware version 3.1) and for Standard AS-i with 30 V voltage
- Supports the uploading of the AS-Interface configuration in STEP 7 V5.2 and higher

Design

- Compact plastic enclosure in degree of protection IP20 for standard rail mounting
- LEDs in the front panel for indicating the operating state and functional readiness of all connected slaves
- Setting of PROFIBUS DP address is possible by pressing a button
- LED indication of the PROFIBUS DP slave address, DP bus faults and diagnostics
- Two pushbuttons for switching over the operating state and for adopting the existing ACTUAL configuration as the DESIRED configuration

Functionality

Communications

The DP/AS-Interface Link 20E enables a DP master to access all the slaves of an AS-Interface network.

The DP/AS-Interface Link 20E occupies a standard 32 bytes of input data and 32 bytes of output data in which the digital I/O data of the connected AS-Interface slaves (standard and A/B slaves) of an AS-i line are stored.

The size of the input/output image can be compressed so that only the actually required I/O address area is occupied in the system of the DP master.

The analog I/O data can be accessed with the S7 system functions for read/write data records.

Configuration

The DP/AS-Interface Link 20E is configured as follows:

- With STEP 7 as of Version V5.1 SP2:
  With STEP 7 configuring the AS-Interface configuration can be uploaded in STEP 7 V5.2 and higher. Furthermore, AS-Interface slaves from Siemens can also be conveniently configured in HW Config (slave selection dialog).
- By adopting the ACTUAL configuration of the AS-Interface by using the SET pushbutton on the front panel
- Alternatively, DP/AS-Interface Link 20E can be integrated by means of the PROFIBUS GSD file in the engineering tool (e.g. for STEP 7 V5.1 and lower or for non-Siemens engineering tools).

Benefits

- Reduction of installation costs because the power is supplied entirely via the AS-Interface cable, which means that no additional power supply is required.
- Short startup times thanks to easy configuration at the touch of a button
- The LED indicators help reduce downtime and service times if a slave fails.
- Easy and fast startup through reading out the AS-Interface configuration

Application

The DP/AS-Interface Link 20E is a PROFIBUS DP slave (according to IEC 61158 / IEC 61784) and an AS-Interface master (according to IEC 62026-2). It enables the AS-Interface to be operated on PROFIBUS DP.

DP/AS-Interface Link 20E can operate up to 248 DI/248 DO when using 62 A/B slaves with 4DI/4DO each.

PROFIBUS DP masters (DP-V0) can exchange digital I/O data cyclically with the AS-Interface.

PROFIBUS DP masters with acyclic services (DP-V1) are also able to exchange analog I/O data and initiate AS-Interface master calls (e. g. reading/writing the AS-i configuration during normal operation).

© Siemens AG 2014

Application (continued)

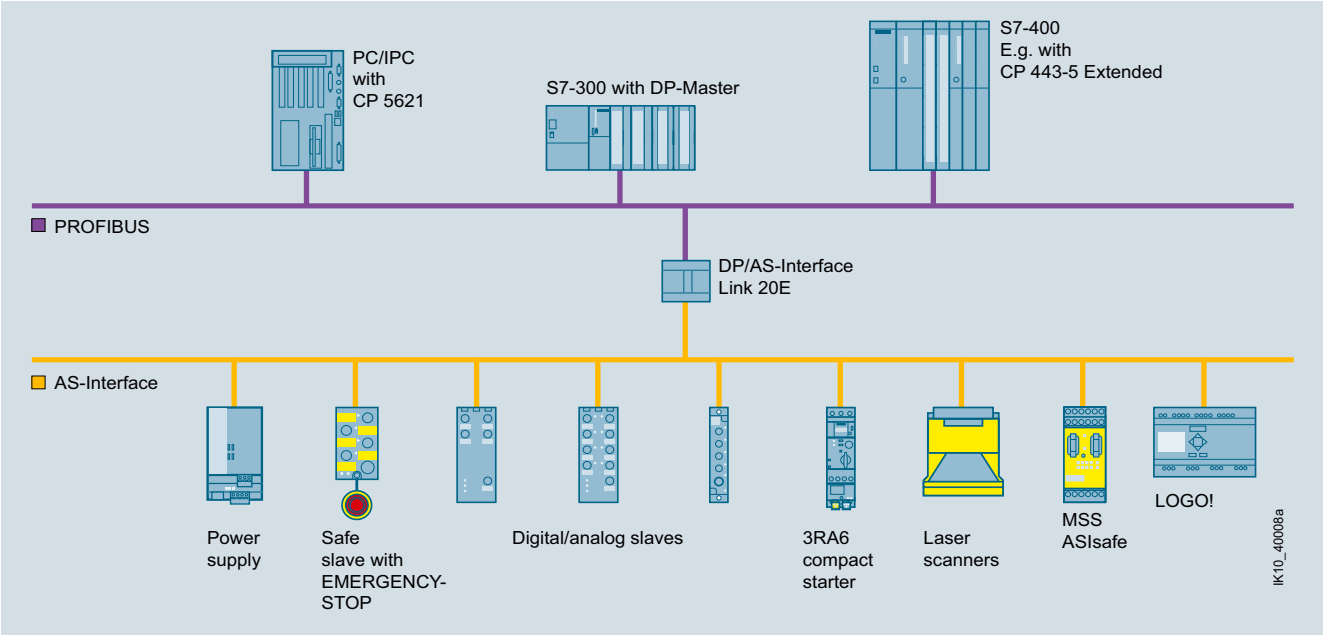

Transition from PROFIBUS DP to AS-Interface using DP/AS-Interface Link 20E

Selection and ordering data

	Version	Screw terminals Article No.
 6GK1 415-2AA10	**DP/AS-Interface Link 20E** Network transition between PROFIBUS DP and AS-Interface in degree of protection IP20; including screw terminals for connection of the AS-Interface cable; corresponds to AS-Interface Specification V3.0; dimensions (W x H x D / mm): 90 x 80 x 60 (dimensions without fixing lugs)	**6GK1415-2AA10**
Accessories		
	PROFIBUS FC Standard Cable GP FastConnect standard type with special design for fast installation, 2-core, shielded	**6XV1830-0EH10**
	PROFIBUS FastConnect With insulation displacement connection, the max. transmission rate is 12 Mbit/s Activatable terminating resistor is integrated	
	• RS485 bus connector with 90° cable feeder	
	- Without PG connection socket	**6ES7972-0BA52-0XA0**
	- With PG connection socket	**6ES7972-0BB52-0XA0**
	• RS485 bus connector with angled cable feeder (35°)	
	- Without PG connection socket	**6ES7972-0BA60-0XA0**
	- With PG connection socket	**6ES7972-0BB60-0XA0**
	PROFIBUS FastConnect Stripping Tool Preset stripping tool for speedy stripping of PROFIBUS FastConnect bus cables	**6GK1905-6AA00**

More information

Manuals see
http://support.automation.siemens.com/WW/view/en/28602858/133300.

© Siemens AG 2014

Overview

DP/AS-i F-Link

PN	DP-M	DP-S	ASi-M		
		●	●		

IK10_10195

The DP/AS-i F-Link is a compact, safety-related network transition between PROFIBUS (DP Slave) and AS-Interface, with the following features:

- Monitoring the inputs of safety-related digital AS-i slaves (ASIsafe slaves) and forwarding of data through PROFIsafe. No additional safety-related components required for the AS-Interface (e. g. MSS ASIsafe Modular Safety System)
- Can be used up to PL e according to EN ISO 13849-1 and to SIL 3 according to IEC 62061/IEC 61508.
- Connection of up to 62 AS-Interface slaves
- Supports all AS-Interface master functions according to the AS-Interface Specification V3.0
- Typically easy transmission of non-safety-related input/output data of all AS-i slaves
- Integrated analog value transmission (all analog profiles)
- Direct integration in PROFIBUS networks.
  Optional integration in PROFINET environments through PROFINET/PROFIBUS gateway (IE/PB Link PN IO) or through SIMATIC S7-315/317/319 F PN/DP or S7-416F-3 PN/DP
- Connection to ET 200S with IM-F-CPU using DP master module is possible
- Optimum TIA integration in STEP 7 using Object Manager, integration in non-Siemens engineering tools using PROFIBUS GSD file
- Local diagnostics using LEDs and display with control keys

Design

- Rugged, slim plastic enclosure, degree of protection IP20, for standard mounting rail or wall mounting (with adapter)
- Compact design:
  - LEDs in the front panel for indicating the operating state and functional readiness of all connected slaves
  - 2 buttons on the front for start-up and call-up of diagnostics information
  - 4 LEDs for display of the operating state of the device, of PROFIBUS DP and the AS-Interface network
  - Front PROFIBUS DP connection with sub D connector
  - Removable terminal blocks for connection of AS-i +/- and control supply voltage (over 24 V DC PELV power supply unit)
  - Narrow width (45 mm)
- Operation without fans and batteries
- Fast device replacement in the event of a fault

Functionality

Communication principle

The PROFIBUS DP master or the safe control communicates with the AS-Interface slaves over the DP/AS-i F-Link.
The AS-Interface process data are mapped in different data areas for non-safety-related input and output data and safety-related input data.

Diagnostics

Extensive diagnostics is possible using the four LEDs, display and control keys or SIMATIC S7. Further details can be found in the manual.

Configuration

The DP/AS-i F-Link is configured as follows:

- With STEP 7 as of Version V5.4 SP1: In particular, Siemens AS-Interface slaves can be conveniently configured via the slave selection dialog.
- Uploading the actual configuration of an already configured AS-Interface network in a STEP 7 project is possible.
- Alternatively, DP/AS-i F-Link can be integrated by means of the PROFIBUS GSD file in the engineering tool
  As a startup aid, it is also possible to adopt the ACTUAL configuration in the appliance storage device directly on the appliance to activate the AS-interface slaves.

Programming

In contrast to the MSS ASIsafe Modular Safety System, the DP/AS-i F-Link is a pure gateway, which does not run through its own safety logic. Programming of the safety function is implemented at the level of the higher-level fail-safe PLC, e. g.:

- With Distributed Safety, Version V5.4 SP1 or higher for SIMATIC S7-300F/416F
- With the SAFETY INTEGRATED "SI-Basic" or "SI-COMFORT NCU" software for SINUMERIK 840D pl/sl

The safety and standard range can access the digital and analog I/O data of the connected AS-Interface slaves directly through the I/O address area of the CPU.

© Siemens AG 2014

Benefits

- Gaps in (bus-based) safety technology closed: safety-related signals (EMERGENCY-STOP, door interlock, light curtains etc.) collected with AS-i and transferred to higher-level F-PLC. This enables:
  - Quick installation, easy commissioning: benefits of AS-i can now be systematically leveraged in the field for Safety Integrated.
  - Cost-effective solution as ASIsafe is ideally suited for the collection of "fewer but more distributed fail-safe bits"
- Price advantage: As a fully fledged AS-i master according to Specification V3.0, more inputs and outputs can be used, e.g.:
  - Up to 248 DI/248 DO when using 62 A/B slaves with 4DI/4DO each
  - Up to 62 digital or analog slaves
- Investment protection:
  - Connection to PROFIBUS networks, such as DP/AS-i LINK Advanced or DP/AS-Interface Link 20E
  - Downward compatibility to AS-Interface Specification V2
  - Open for modern automation concepts with AS-i
- Teaching the code sequences of ASIsafe slaves is possible at the press of a button
- Reduced amount of engineering work thanks to user-friendly configuration of all AS-i slaves from Siemens using the slave selection dialog in HW-Config (STEP 7), including setting the F-parameter of the ASIsafe slaves modeled on PROFIsafe slaves
- Cost-savings thanks to programming of the safety logic with the familiar, powerful commands of the distributed safety packages from the fail-safe SIMATIC PLC in F-FBD or F-LAD, incl. TÜV-certified function blocks for typical safety applications
- Use in machine tools under SINUMERIK 840 D (pl/sl) possible
- Reduction of standstill and servicing times in the event of a slave failure thanks to user-friendly diagnostics using the display and through simple module exchange (only a few settings by control keys are required, without use of the configuring tool)

Application

Links between PROFIsafe and ASIsafe

The DP/AS-i F-Link is a PROFIBUS DP-V1 slave (according to IEC 61158 and IEC 61784) and an AS-Interface master (based on
AS-Interface Specification V3.0 according to IEC 62026-2).
It enables transparent data access to AS-Interface from PROFIBUS DP. The DP/AS-i F-Link is also an AS-i master with which safety-related input data can be passed from ASIsafe slaves via the PROFIsafe protocol to a fail-safe CPU with PROFIBUS DP master. No additional safety cabling or monitoring is required (in particular no MSS ASIsafe Modular Safety System).

The transmission of binary values or analog values is possible depending on the slave type. All slaves according to AS-Interface Specification V2.0, V2.1 or V3.0 can be used as AS-i slaves.

PROFIBUS DP masters according to DP-V0 or DP-V1 can exchange I/O data with lower-level AS-i slaves in cyclic mode. PROFIBUS DP masters with acyclic services according to DP-V1 are able in addition to initiate AS-i command calls (e.g. reading/writing the AS-i configuration during normal operation).
In addition to digital I/O data, analog data can also be saved with high performance in the cyclic I/O of a fail-safe S7-300/S7-416 F-CPU.

In configuring mode the DP/AS-i F-Link reads in the configuration data of the peripherals on the AS-Interface. Slave addresses can be set using the display and the control keys, and the code sequences of safe AS-i slaves can be taught.

During operation, four display LEDs and the display provide detailed diagnostics information, which directly localizes the fault if required. Using the PLC user program it is possible to read out diagnostics data records and make them available to a higher-level operating and monitoring system (e. g. WinCC Flexible or TRANSLINE HMI).

© Siemens AG 2014

Application (continued)

Network connectivity

The DP/AS-i F-Link can be used in PROFIBUS and PROFINET networks as follows:

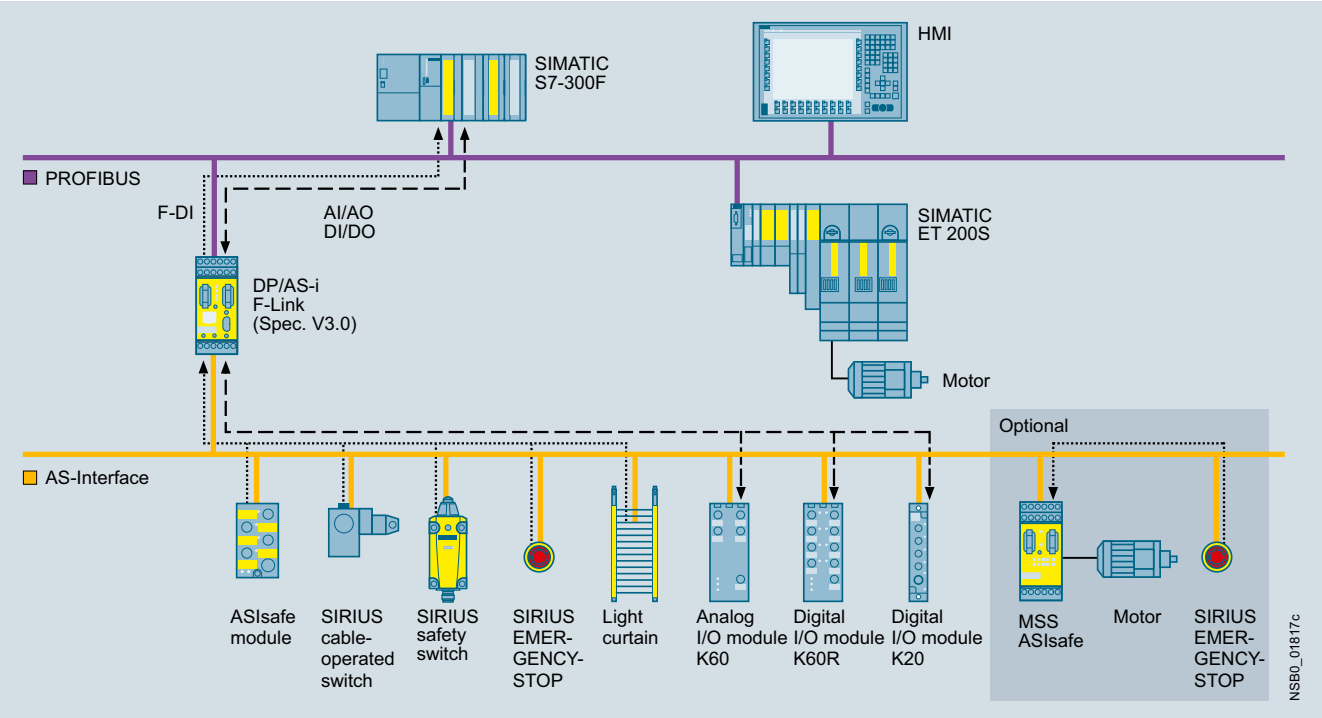

Integration in PROFIBUS networks under SIMATIC F-PLC

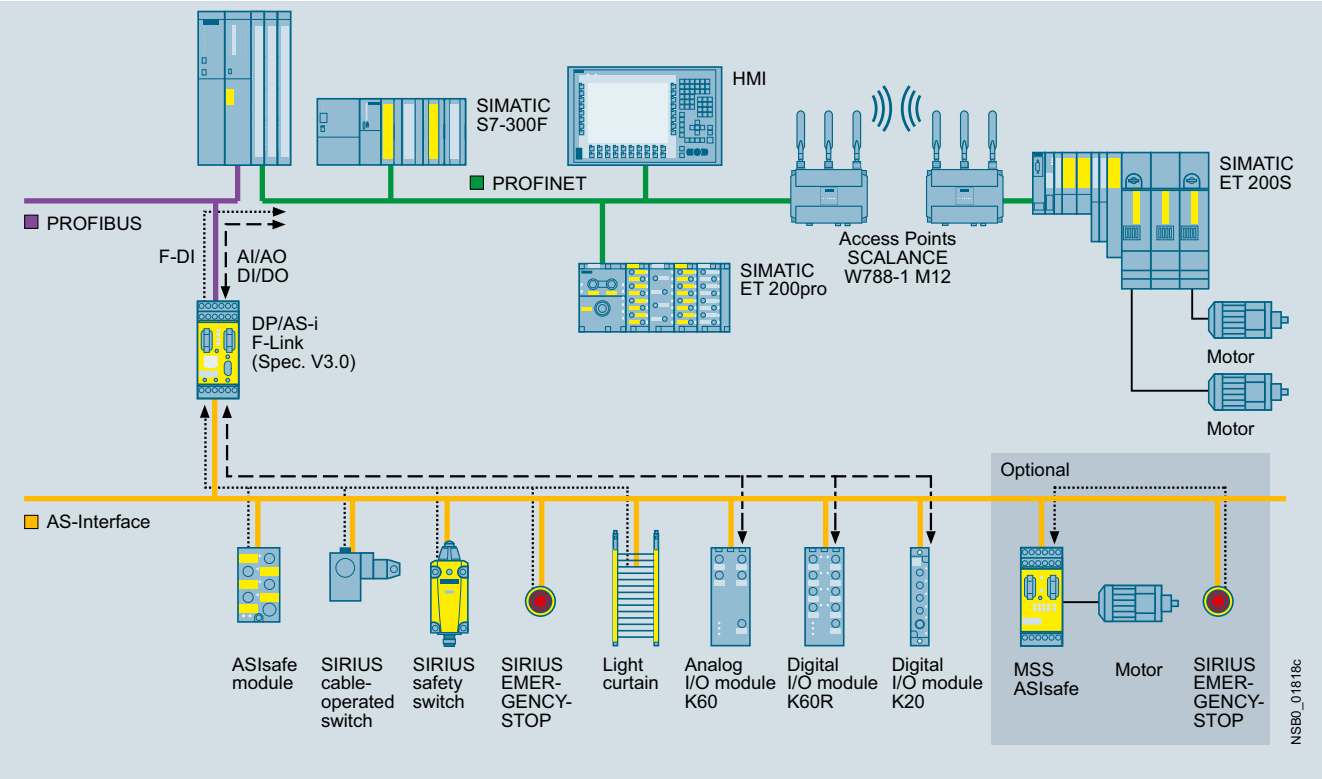

Integration in PROFINET networks under SIMATIC F PLC (alternatively through IE/PB Link)

© Siemens AG 2014

Application (continued)

Further network connectivity options

- Integration in PROFINET networks under SIMATIC F PLC through IE/PB Link
- Integration in SINUMERIK Power Line and Solution Line
- Integration under non-Siemens fail-safe control systems using PROFIBUS GSD file, see http://support.automation.siemens.com/WW/view/en/113250

Selection and ordering data

	Version	Article No.
DP/AS-i F-Link	**DP/AS-i F-Link** Network transition between PROFIBUS DP and AS-Interface for safety-related data transmission from ASIsafe to PROFIBUS DP – PROFIsafe in degree of protection IP20; corresponds to AS-Interface Specification V3.0; not approved for AS-i Power24V; dimensions (W x H x D / mm): 45 x 104 x 120	
	• With screw terminals	**3RK3141-1CD10**
	• With spring-type terminals	**3RK3141-2CD10**

More information

For more accessories for the PROFIBUS connection see page 4/47.

For the DP/AS-i F-Link manual see http://support.automation.siemens.com/WW/view/en/24196041.

Circuit examples for safety systems with DP/AS-i F-Link see http://support.automation.siemens.com/WW/view/en/24509484.

The F-Link Object Manager must be installed for configuration with STEP 7 / HW-Config, see http://support.automation.siemens.com/WW/view/en/24724923.

© Siemens AG 2014

Overview

IE/AS-i LINK PN IO

PN	DP-M	DP-S	ASi-M		
●			●		

The IE/AS-i LINK PN IO is a compact network transition between PROFINET/Industrial Ethernet (PROFINET IO Device) and AS-Interface, with the following features:

- Single and double AS-Interface master (according to AS-Interface Specification V3.0) for connection of 62 AS-Interface slaves or 124 AS-Interface slaves (with a double master)
- Integrated analog value transmission (all analog profiles)
- Integrated ground-fault monitoring for the AS-Interface cable
- User-friendly local diagnostics and startup by means of a full graphic display and control keys or through a web interface with a standard browser on the PC screen
- Optimum TIA integration using STEP 7
- Integration in non-Siemens engineering tools using the PROFINET GSD file
- Vertical integration (standard web interface) through Industrial Ethernet
- Supply via AS-Interface cable or with 24 V DC
- Suitable for AS-i Power24V (from product version 4 / firmware version 2.2) and for AS-Interface with 30 V voltage
- Module exchange without entering the connection parameters (IP address etc.) using C-PLUG (optional)
- Costs saved by the double AS-Interface master when large volumes of project data are involved

Design

- Compact plastic enclosure in degree of protection IP20 for standard rail mounting
- COMBICON plug-in screw terminals
- Compact design:
- Pixel graphics display in the front panel for detailed display of the operating state and readiness for operation of all connected AS-Interface slaves
- Six pushbuttons for starting up and testing the AS-Interface line directly on the IE/AS-i LINK PN IO
- LED display of the operating state of PROFINET IO and AS-Interface
- Integrated 2-port switch (RJ45 socket) for connection to Industrial Ethernet
- Small mounting depth thanks to recessed plug mounting
- Operation without fans and batteries

Functionality

Communications

The IE/AS-i LINK PN IO enables a PROFINET IO controller to cyclically access the I/O data of all the slaves of a lower-level AS-Interface segment. Also supported are the expanded slave types with higher I/O data volume according to AS-i Specification V3.0.

The IE/AS-i LINK PN IO occupies the following address area:

- As a single master with full expansion: 62 bytes of input data and 62 bytes of output data in which the I/O data of the connected AS-Interface slaves (standard and A/B slaves) of an AS-i line are stored.
- As double master, double the number of bytes
- Optional additional I/O bytes for data from analog slaves

The size of the input/output image can be compressed so that only the actually required I/O address area is occupied in the system of the IO controller.
The integrated evaluation of analog signals is just as easy as access to digital values because the analog process data also lie directly in the I/O address area of the CPU.
PROFINET IO controllers are able in addition to initiate AS-Interface master calls (e. g. to write parameters, change addresses, read diagnostic values) through the acyclic PROFINET services.
Using an operating display in AS-Interface Link it is possible to fully commission the lower-level AS-i line.
The IE/AS-i LINK PN IO is equipped with two Ethernet ports which are connected by an internal switch. With the Ethernet it is possible in addition to use the integrated web server. The web server can be called up with any standard web browser (e. g. Internet Explorer) without additional software. It enables the PC to present all diagnostics information and to display the set bus configuration and parameters as well as their adaptation where applicable. Firmware updates are also possible using this port.
The optional C-PLUG supports module exchange without entering the connection parameters (e. g. IP address), keeping downtimes to a minimum in the event of a fault.

Diagnostics

The following diagnostics is possible using the display and control keys, web interface or STEP 7:

- Operating state of the IE/AS-i LINK PN IO
- Status of the link as a PROFINET IO device
- Diagnostics of the AS-Interface network
- Message frame statistics
- Standard diagnostics pages in the web interface for fast diagnostics access through Ethernet using a standard browser
- The reporting of diagnostic events is optionally possible via E-Mail or SNMP Trap. The integrated diagnostic buffer saves the events including time stamp.

Notes on safety:

The use of this product requires suitable protective measures (e.g. network segmentation for IT security among others) in order to ensure safe plant operation, see www.siemens.com/industrialsecurity.

Configuration

The IE/AS-i LINK PN IO is configured as follows:

- STEP 7 V5.4 or higher is required for configuring the full functional scope of the IE/AS-i LINK PN IO. With STEP 7 configuring the AS-Interface configuration can be uploaded in STEP 7 V5.4 SP2 and higher. Furthermore, AS-Interface slaves from Siemens can also be conveniently configured in HW Config (slave selection dialog).
- Alternatively, IE/AS-i LINK PN IO can be integrated by means of the PROFINET GSD file in the engineering tool (e. g. for STEP 7 V5.4 SP2 and lower, TIA portal, or for non-Siemens engineering tools).

© Siemens AG 2014

Benefits

- Short startup times through simple configuration at the press of a button and testing of the AS-Interface line using the display or web interface
- Reduction of standstill and servicing times in the event of a slave failure thanks to user-friendly diagnostics using the display or web interface
- Costs saved by the double AS-Interface master when large volumes of project data are involved
- Saves the need for AS-i power supply with AS-i Power24V: The AS-Interface cable assembly is fed through an existing 24 V DC PELV power supply unit. For decoupling, an AS-i data decoupling module is required, see power supply units and data decoupling modules.
- Standard mode with AS-Interface power supply (see power supply units and data decoupling modules) possible without restrictions, whereby no further operational voltage is required

Application

The DP/AS-i LINK PN IO is a PROFINET IO device (according to IEC 61158/IEC 61784) and an AS-Interface master (based on AS-Interface Specification V3.0 according to IEC 62026-2). It enables transparent data access to AS-Interface from Industrial Ethernet.

Exchanging data with PROFINET IO controllers

PROFINET IO controllers can exchange I/O data with AS-Interface in cyclic mode and can perform AS-i master calls in addition with acyclic services (e.g. reading/writing the AS-i configuration during normal operation). IE/AS-i LINK PN IO is, therefore, suitable for distributed configurations and for integrating a lower-level AS-Interface network.

Single masters

For applications with typical volumes of project data, it is sufficient to use the IE/AS-i LINK PN IO in its version as an AS-i single master. The single master can operate up to 248 DI/248 DO, using 62 A/B slaves with 4DI/4DO each.

Double masters

For applications with large volumes of project data, the IE/AS-i LINK PN IO is used in its version as an AS-i double master. In this case, twice the volume of project data can be used on two AS-i lines running independently of each other. The double master can operate up to 496 DI/496 DO, using 2 AS-i networks with 62 A/B slaves each with 4DI/4DO each.

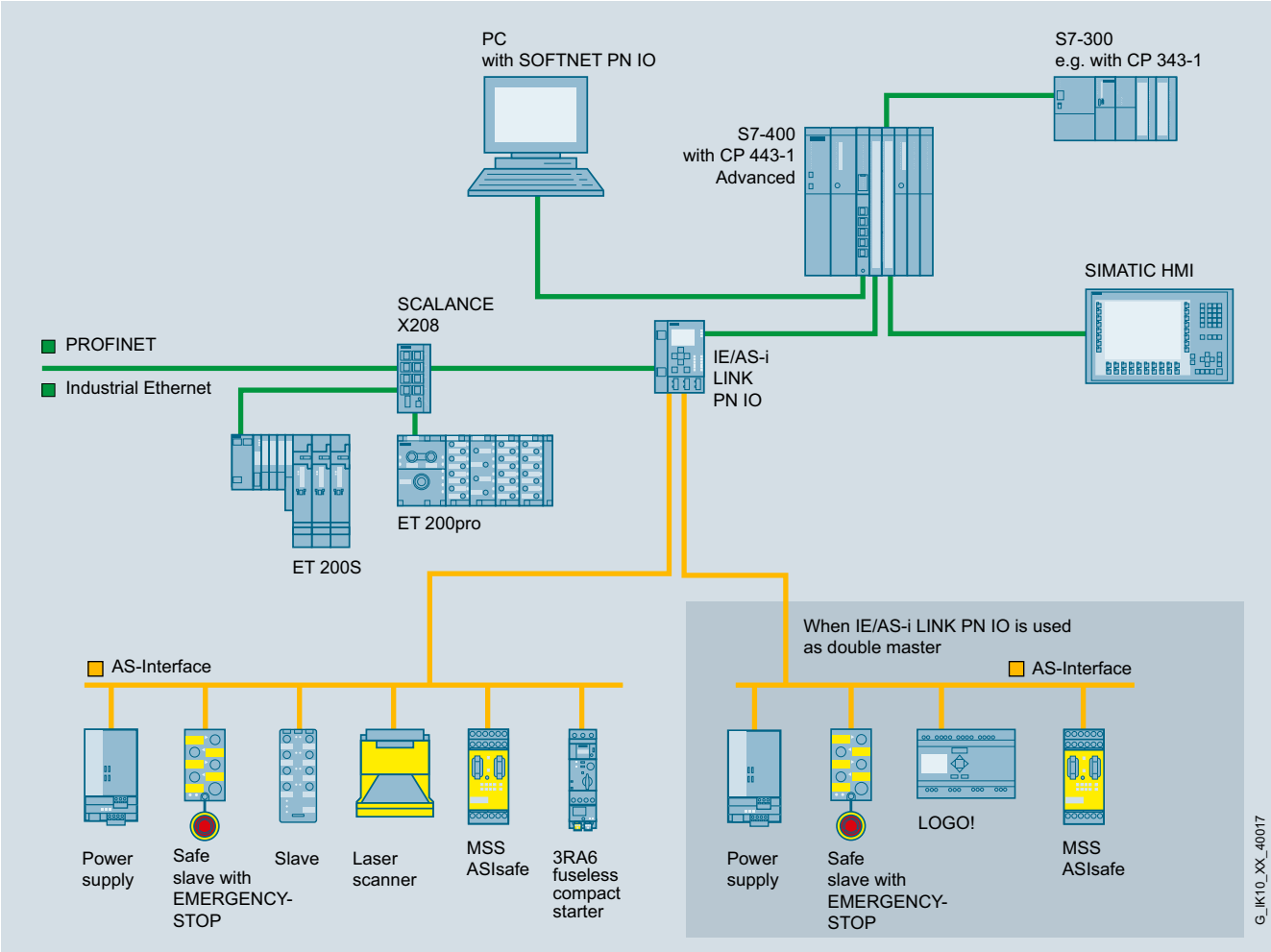

Integration of AS-Interface on PROFINET through IE/AS-i LINK PN IO as single/double master

© Siemens AG 2014

Application (continued)

Wireless communication

Using an upstream IWLAN client module, e.g. SCALANCE W748-1 RJ45, an AS-Interface line can be integrated in the PROFINET world by wireless means.

Sample uses are applications which up to now have been performed with fault-prone tow chain or collector wire technology. Maintenance costs are thus reduced.

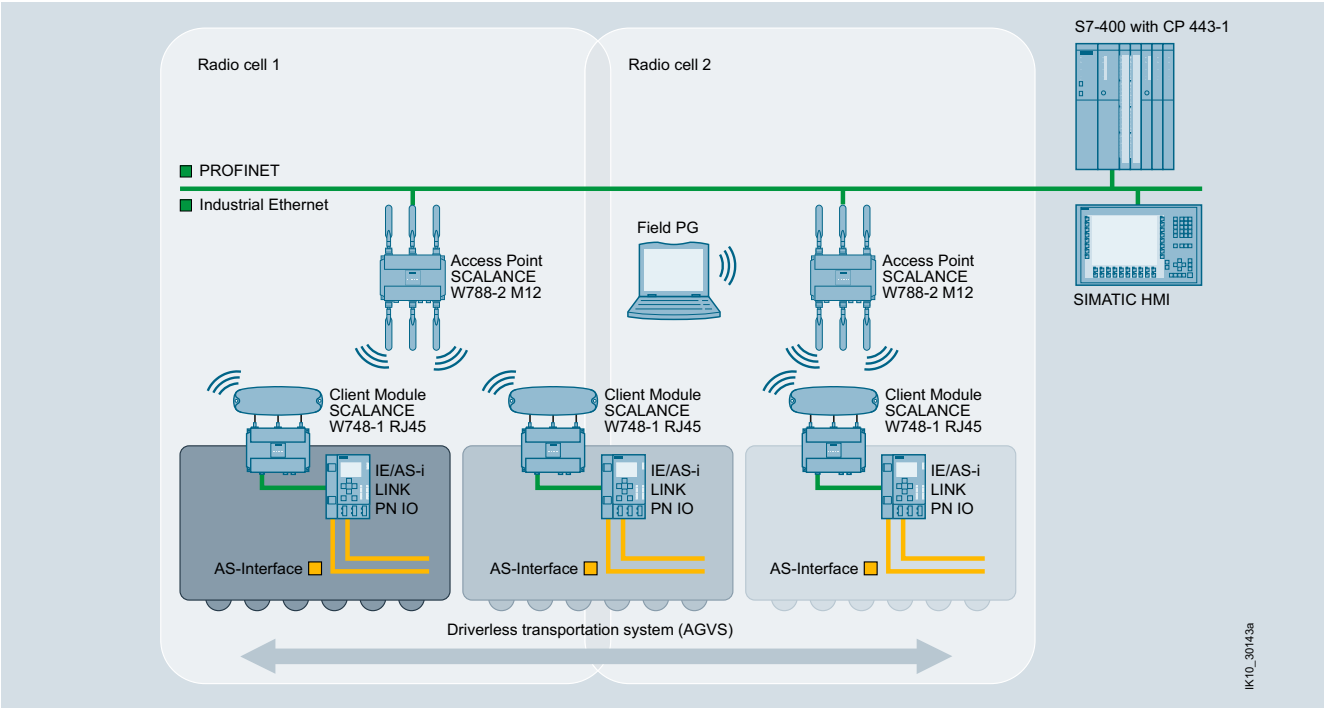

Wireless communication between Industrial Ethernet and AS-Interface components

Selection and ordering data

	Version	Combicon connection Article No.
IE/AS-i LINK PN IO	**IE/AS-i LINK PN IO** Network transition between PROFINET/Industrial Ethernet and AS-Interface in degree of protection IP20; including COMBICON plug-in screw terminals for connecting an AS-Interface cable (two AS-Interface cables for a double master) and the optional 24 V supply; corresponds to AS-Interface Specification 3.0; dimensions (W x H x D / mm): 90 x 132 x 88.5	
	• Single master with display	**6GK1411-2AB10**
	• Double master with display	**6GK1411-2AB20**
Accessories		
	C-PLUG Exchange medium for the simple exchange of devices in the event of a fault; for accommodating configuration and application data; can be used in SIMATIC NET products with a C-PLUG slot	**6GK1900-0AB00**
	IE FC RJ45 Plug 90 RJ45 plug-in connector for Industrial Ethernet, with robust metal enclosure and integrated insulation displacement contacts for connection of Industrial Ethernet FC installation cables; with 90° cable feeder	
	• 1 pack = 1 unit	**6GK1901-1BB20-2AA0**
	• 1 pack = 10 units	**6GK1901-1BB20-2AB0**
	• 1 pack = 50 units	**6GK1901-1BB20-2AE0**

More information

Manuals see
http://support.automation.siemens.com/WW/view/en/29992487/13330.

© Siemens AG 2014

Overview

K60

K20

K45

Three coordinated series of AS-Interface compact modules with digital and analog compact modules and a high degree of protection are available for use in the field:

- Series K60 (digital and analog)
- Series K45 (digital)
- Series K20 (digital)

All compact modules are characterized by particularly simple handling. The K60 and K45 modules are mounted with a mounting plate. The mounting plate is used to mount the AS-Interface flat cables and enables mounting on a wall or standard mounting rail.

The particularly narrow K20 modules are directly mounted without a mounting plate and connected to the AS-Interface using a round cable.

Connection types

For flexible connection of different sensors and actuators, the following PIN assignments are available on the I/O modules with M12 sockets:

Standard assignment

With the standard assignment, one sensor/actuator is connected per M12 socket. In this case the signal for the outputs is acquired at PIN4 while the signal for the inputs is acquired at PIN4 and PIN2. As the result, sensors can be connected directly to PIN2 and PIN4.

Y assignment

With the Y assignment, two sensors or two actuators can be connected to one M12 socket. In this case, both PIN4 and PIN2 are provided for one sensor signal and one actuator signal on each M12 socket.

Y-II assignment

The Y-II assignment offers the following options:

- Individual connection of a sensor/actuator to one M12 socket
- Connection of two sensors/actuators to one M12 socket as follows:
  - The signal of the first sensor/actuator is connected to PIN4 of the first socket.
  - The signal of the second sensor/actuator is connected to PIN2 of the first socket and to PIN4 of the second socket.

  In this case, the second socket is not required and is closed with a sealing cap.

Overview of digital compact modules

The following table provides an overview of the important features of the digital compact modules.

Version	K60	K45	K20
8 inputs/2 outputs	✓	--	--
8 inputs	✓	✓	--
4 inputs/4 outputs	✓	✓	✓
4 inputs/3 outputs	✓	--	--
4 inputs/2 outputs	✓	--	--
4 inputs	✓	✓	✓
2 inputs/2 outputs	--	✓	✓
4 outputs	✓	✓	✓
3 outputs	--	✓	--
AS-Interface connection	Flat cable / round cable	Flat cable	Round cable
I/O connection method	M12	M12/M8	M12/M8
Pin assignment	Standard/Y-II/Y	Standard/Y	Standard/Y
Degree of protection	IP65/IP67/IP68/IP69K	IP65/IP67	IP65/IP67
ATEX 3D (Zone 22)	✓	--	--
Extended address mode	✓	✓	✓

✓ Available

-- Not available

© Siemens AG 2014

Overview

The K60 digital AS-Interface compact modules are characterized by optimized handling characteristics and user-friendliness. They permit the mounting times and startup times of AS-Interface to be reduced by up to 40 %.

Mounting and connection of the AS-Interface shaped cables

Assembly of the K60 modules is performed with a mounting plate which accommodates the AS-Interface shaped cables. Two different mounting plates are offered for

- Wall mounting
- Standard rail mounting

The mounting plate and the compact module are joined together by means of a screw, with simultaneous contacting of the AS-Interface cable by the service-proven insulation piercing method.

Addressing and connection of the sensors/actuators

Addressing of the K60 modules is performed using an addressing socket integrated in the compact module. The addresses can also be assigned after installation.

K60 modules with a maximum of four digital inputs and outputs

These compact modules contain the M12 standard connections for inputs and outputs. Using M12 standard connectors, a maximum of four sensors and four actuators can be connected to the compact module.

K60 compact modules with a maximum of eight digital inputs

These modules have eight digital inputs for connection through M12 plugs.

The module requires two AS-Interface addresses for processing all eight inputs. The addressing can thus be performed through a double addressing socket integrated in the module.

K60 compact modules with four digital inputs and outputs according to AS-Interface Specification 3.0

The extended address mode (A/B addresses) AS-Interface Specification 3.0 enables the connection of up to 62 slaves on one AS-Interface network. With the extended address mode, four outputs are now possible even with A/B slaves (instead of only three outputs possible up to now with Specification 2.1). Hence with full expansion of an AS-Interface network, there are now 248 inputs as well as 248 outputs available on one AS-i network.

Please note, however,

- that these modules can be used only with a master according to AS-i Specification 3.0
- that the cycle times for the outputs may be up to 20 ms.

K60 data couplers

An AS-Interface data coupler has been added to the K60 compact module range. Integrated in this module are two AS-i slaves which are connected to two different AS-i networks. Each of the two integrated slaves has four virtual inputs and four virtual outputs. The bidirectional data transmission of four data bits between two AS-i networks is thus possible in a simple and cost-effective manner. The data coupler need its own address in each AS-i network.

Each AS-i network works with a different cycle time depending on the number of stations. Hence two AS-i networks are not necessarily synchronous. For this reason the AS-i data coupler can be used to transmit only standard data and no safety data.

K60 compact modules for use in hazardous areas (ATEX)

Two versions of the K60 modules are available for operation in Zone 22 hazardous areas according to Classification II 3D (dusty atmosphere, non-conductive dust). The version with four inputs and four outputs has the designation (Ex) II 3D Ex tD A22 IP65X T75°C and the version with four inputs has the designation (Ex) II 3D Ex tD A22 IP65X T60°C.

Special conditions have to be observed for the safe operation of these devices. In particular the module must be protected by suitable measures from mechanical damage.

More information

For other conditions for safe operation see
http://support.automation.siemens.com/WW/view/en/18290447.

© Siemens AG 2014

Selection and ordering data

	Version					Article No.
3RK1400-1DQ00-0AA3	**Digital I/O modules, IP67 - K60** • PNP transistor • Width 60 mm • Connection method: M12 • Modules supplied without mounting plate					
	Type	Current carrying capacity of outputs	Slave type	Pin assignment	Sensor power supply off	
	8 inputs/ 2 outputs[1]	2 A	A/B	Special	AS-i	**3RK2400-1HQ00-0AA3**
	8 inputs[1]	--	Standard	Y-II	AS-i	**3RK1200-0DQ00-0AA3**
		--	A/B	Y-II	AS-i	**3RK2200-0DQ00-0AA3**
		--	A/B	Y-II	U_{aux}	**3RK2200-1DQ00-1AA3**
	4 inputs/ 4 outputs	2 A	Standard	Y-II	AS-i	**3RK1400-1DQ00-0AA3**
		2 A	Standard	Standard	AS-i	**3RK1400-1CQ00-0AA3**
		1 A	Standard	Y-II	AS-i	**3RK1400-1DQ01-0AA3**
		1 A	Standard	Standard	AS-i	**3RK1400-1DQ03-0AA3**
		2 A	A/B (Spec. 3.0)	Y-II	AS-i	**3RK2400-1DQ00-0AA3**
		2 A	A/B (Spec. 3.0)	Y-II	U_{aux}	**3RK2400-1DQ00-1AA3**
	4 inputs/ 3 outputs	2 A	A/B	Y-II	AS-i	**3RK2400-1FQ03-0AA3**
	4 inputs/ 2 outputs	2 A	Standard	Y-II	AS-i	**3RK1400-1MQ00-0AA3**
	4 inputs	--	Standard	Y-II	AS-i	**3RK1200-0CQ00-0AA3**
		--	A/B	Y-II	AS-i	**3RK2200-0CQ00-0AA3**
	2x2 inputs/ 2x2 outputs	1 A	Standard	Y	AS-i	**3RK1400-1DQ02-0AA3**
	4 outputs	2 A	Standard	Y-II	--	**3RK1100-1CQ00-0AA3**
		2 A	A/B (Spec. 3.0)	Y-II	--	**3RK2100-1CQ00-0AA3**
	Digital I/O modules IP67 – K60, version ATEX (Ex) II 3D Ex tD A22 IP65X T75°C/60°C • PNP transistor • Width 60 mm • Current carrying capacity of the inputs: 200 mA • Connection method: M12 • Modules supplied without mounting plate					
	Type	Current carrying capacity of outputs		Slave type	Pin assignment	
	4 inputs/ 4 outputs	2 A		Standard	Y-II	**3RK1400-1DQ05-0AA3**
	4 inputs	--		Standard	Y-II	**3RK1200-0CQ05-0AA3**
	Digital I/O modules IP67 - K60 data couplers • Modules supplied without mounting plate					
	Type	Current carrying capacity of outputs		Slave type	Pin assignment	
	Data coupler 4 inputs/4 outputs (virtual)	--		Standard	--	**3RK1408-8SQ00-0AA3**

Accessories

3RK1901-0CA00	**K60 mounting plates** Suitable for all K60 compact modules • Wall mounting • Standard rail mounting	 **3RK1901-0CA00** **3RK1901-0CB01**
3RK1901-1KA00	**AS-Interface M12 sealing caps** For free M12 sockets	**3RK1901-1KA00**
3RK1902-0AR00	**Sealing sets** • For K60 mounting plate and standard distributor • Cannot be used for K45 mounting plate • One set contains one straight and one shaped seal	**3RK1902-0AR00**

[1] Module occupies two AS-Interface addresses

© Siemens AG 2014

Overview

Operation in particularly harsh environments

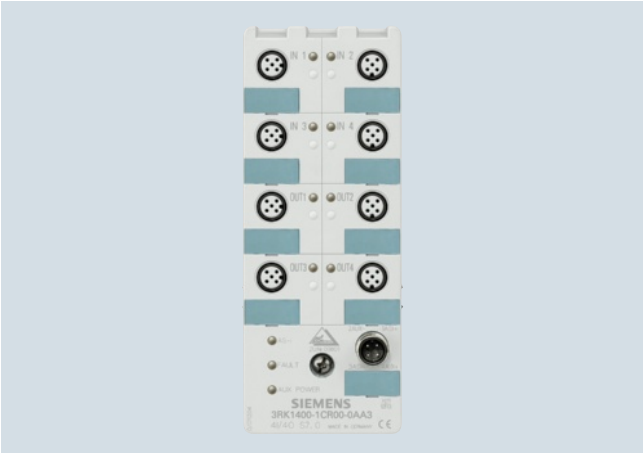

K60R module in degree of protection IP68/IP69K

Modules with degree of protection IP67 cannot be used in areas exposed to permanently high levels of humidity, in applications with drilling emulsions and cutting oils or when cleaning with high-pressure cleaners. The answer for these applications is provided by the expansion of the K60 compact modules with the K60R module with degree of protection IP68/IP69K.

The K60R modules are connected instead of the AS-Interface flat cable using a round cable with M12 cable box.
The AS-Interface bus cable and the 24 V DC auxiliary power supply are routed in this case in a shared round cable.

Degree of protection IP68 permits many new applications that were impossible with the former field modules with degree of protection IP67. In applications such as filling plants or machine tools, the K60R with degree of protection IP68 enables the module to be used directly in zones exposed to permanent loading by humidity. It is thus possible to make even more rigorous savings in wiring with AS-Interface. For more information on IP68 test conditions see section "IP68/IP69KK tests."

Cleaning with high-pressure cleaners, such as is regularly performed in the food and drinks industry for instance, is possible without difficulty (IP69K).

In applications with tow chains, many users rely on placing the AS-Interface bus cable in a round cable. With the K60R module, a round cable connection is possible for direct connection to a round cable. No adapter is required.

Mounting

The same mounting plates are used as for the K60 modules. Instead of using flat cables, the K60R is connected using a 4-pole round cable with an M12 connection. With the K60R the mounting plate thus serves only as a fixture and ground terminal.

Addressing

Addressing is performed using the same socket as for the bus connection. Connecting the module to the addressing unit takes place over a 3-pole standard M12 cable.

When the mounting is finished, the module is connected with the addressing cable to the addressing unit and addressed. The addressing cable is then removed and the module connected to the bus cable.

Connection

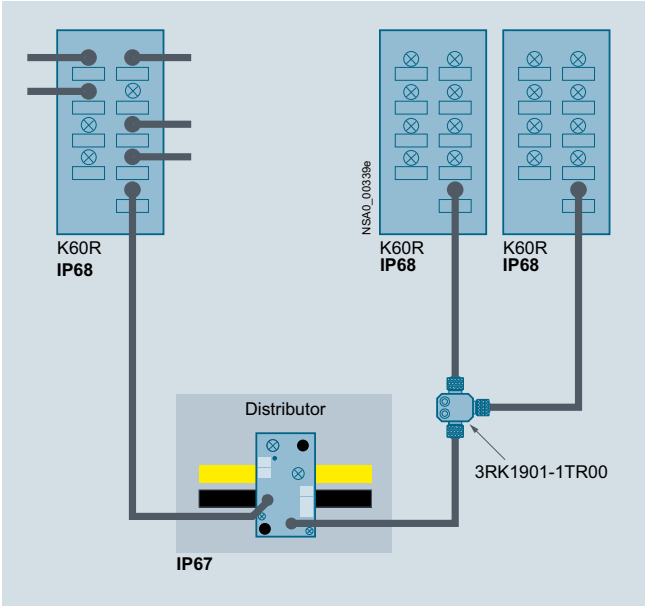

K60R connection options

In the IP67 environment, the service-proven standard components are connected using flat cables. Spur lines are laid into the IP68 environment by means of an AS-Interface M12 feeder (3RK1901-1NR..). The module is connected with a round cable to an M12 cable box. For this purpose, the module has an M12 bus connection instead of the former addressing socket. The AS-Interface bus cable and the 24 V DC auxiliary voltage are routed together in a 4-pole round cable. There must be no ground conductor in this round cable. Connection to ground is made through the mounting plate.

In the IP68 environment, only cables with extruded M12 plugs may be used.

To connect more than one K60R module to one spur line, the spur line can be split again using a T distributor (3RK1901-1TR00) with degree of protection IP68.

Please note the following conditions:

- The configuration guidelines for AS-Interface apply.
  For all M12 connecting cables, the maximum permissible current is limited to 4 A. The cross-section of these cables amounts to just 0.34 mm². For connection of the K60R modules, the aforementioned M12 connecting cables can be used for the spur lines. The voltage drop caused by the ohmic resistance (approx. 0.11 Ω/m) must be taken into account.
- For round cable connections with shared AS-i and U_{aux} in a single cable, the following maximum lengths apply:
  - Per spur line from feeder to module: maximum 5 m
  - Total of all round cable segments in an AS-Interface network: maximum 20 m

IP68/IP69K tests

- K60R modules were tested with the following tests:
- Stricter test than IP67: 90 min at 1.8 m depth of water (IP67: 30 min at 1 m depth of water)
- Salt water test: Five months in salt water, 20 cm deep, at room temperature
- Test with particularly creepable oil: Five months completely under oil at room temperature

© Siemens AG 2014

Overview (continued)

- Test with drilling emulsion: Five months at room temperature (components of the drilling emulsion: Anionic and non-ionic emulsifiers, paraffinic low-aromatic mineral oil, boric acid alkanolamines, corrosion inhibitors, oil content 40 %)
- Test in oil bath (Excellence 416 oil) with alternating oil bath temperature: 130 cycles of 15 to 55 °C, two months
- Cleaning with a high-pressure cleaner according to IP69K: 80 to 100 bar, 10 to 15 cm distance, time per side > 30 s, water temperature 80 °C

To simulate requirements as realistically as possible, the modules were artificially aged prior to the tests by 15 temperature cycles of -25/+85 °C. During the test, the modules were connected to 3RX1 connecting cables. Unassigned connections were closed with 3RK1901-1KA00 sealing caps.

Note:

Screw caps and M12 connections must be tightened with the correct torque.

Selection and ordering data

	Version	Article No.
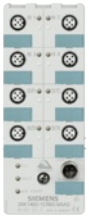 3RK1400-1CR00-0AA3	**Digital I/O modules, IP68/IP69K - K60R** • 4 inputs/4 outputs • Width 60 mm • IP68/IP69K • Standard assignment • Current carrying capacity: - 200 mA (inputs) - 2 A (outputs) • Standard slave • Modules supplied without mounting plate	**3RK1400-1CR00-0AA3**
Accessories		
3RK1901-0CA00	**K60 mounting plates** Suitable for all K60 and K60R compact modules • Wall mounting • Standard rail mounting	 **3RK1901-0CA00** **3RK1901-0CB01**
3RK1901-1KA00	**AS-Interface M12 sealing caps** For free M12 sockets	**3RK1901-1KA00**
3RK1901-1NR21	**AS-Interface M12 feeders, current carrying capacity up to 4 A**	
	For flat cable: AS-i/U_{aux}; For: M12 socket; Cable length: --; Cable end in feeder: Not available	**3RK1901-1NR20**
	For flat cable: AS-i/U_{aux}; For: M12 cable box; Cable length: 1 m; Cable end in feeder: Not available	**3RK1901-1NR21**
	For flat cable: AS-i/U_{aux}; For: M12 cable box; Cable length: 2 m; Cable end in feeder: Not available	**3RK1901-1NR22**
3RK1901-1NR04	**AS-Interface M12 feeders, 4-fold, current carrying capacity up to 4 A**	
	For flat cable: AS-i/U_{aux}; For: 4-fold M12 socket, delivery includes mounting plate (for wall and standard rail mounting); Cable length: --; Cable end in feeder: Not available	**3RK1901-1NR04**
3RK1901-1TR00	**M12 T distributors** • IP68 • 1 x M12 plug • 2 x M12 box	**3RK1901-1TR00**
3RK1902-4PB15-3AA0	**M12 connecting cables** • 3-pole • For addressing AS-i slaves with M12 bus connection • Cable length 1.5 m	**3RK1902-4PB15-3AA0**

© Siemens AG 2014

Overview

K45 compact modules

The K45 series of compact modules supplements the large K60 compact modules which have a proven track record in industry. They are the logical consequence for rounding off the bottom end of the existing product range.

The acclaimed advantages of the existing K60 compact modules are fully emulated by the K45 modules. The K45 modules, however, have a considerably smaller footprint and mounting depth.

Yet in spite of these small dimensions all the modules have large labels and an integrated addressing socket.

Two mounting plates are offered for the K45 compact modules:

- The mounting plate for wall mounting has a hole pattern that is identical to that of the K60 compact modules. This means that K60 compact modules can be mounted together with K45 modules in an aligned arrangement. The shaped cables can be inserted in the recesses of the mounting plates where they cause no hindrance.
- The mounting plate for standard rail mounting

Connection of the AS-Interface shaped cables

The mounting plate and the compact module are joined together by means of a screw, with simultaneous contacting of the AS-Interface cable by the service-proven insulation piercing method.

Now, mounting the AS-Interface shaped cables is in fact easier than ever. The yellow and black AS-Interface shaped cable can be inserted into the mounting plates from the left or right regardless of the position of the coding lug. The correct polarity of the applied voltages is thus guaranteed.

Addressing and connection of the sensors/actuators

Addressing of the K45 compact modules is performed using an addressing socket integrated in the module. The addresses can be assigned even when mounted.

K45 modules with a maximum of four digital inputs and outputs

These compact modules contain up to four M12 standard connections or M8 standard connections for inputs and outputs. Using M12 or M8 standard connectors, a maximum of four sensors and four actuators can be connected to the compact module. Depending upon the module, the sockets can have a double assignment.
Pin assignment: Y – i.e. via a socket, two sensors or one sensor/one actuator is connected.

K45 modules with a maximum of eight digital inputs

These modules have eight digital inputs for connection through M12 plugs. The sockets have a double assignment
Pin assignment: Y – i.e. via a socket, two sensors or one sensor/one actuator is connected.

The module requires two AS-Interface addresses for processing all eight inputs. The addresses can be assigned through a double addressing socket integrated in the module.

K45 modules with four digital inputs and outputs/four digital outputs according to AS-i Specification 3.0

The extended address mode (A/B addresses) according to AS-Interface Specification 3.0 enables the connection of up to 62 slaves on one AS-i network. With this extended address mode, four outputs are now possible even with A/B slaves (instead of only three outputs possible up to now with Specification 2.1). Hence with full expansion of an AS-Interface network, there are now 248 inputs as well as 248 outputs available on one AS-Interface system.

Please note, however,

- that these modules can be used only with a master according to AS-i Specification 3.0
- that the cycle times for the outputs may be up to 20 ms.

Depending on the module, the sockets can have a double assignment. Pin assignment: Y – i.e. via a socket, two sensors or one sensor/one actuator is connected.

© Siemens AG 2014

Selection and ordering data

	Version						Article No.
3RK1400-0GQ20-0AA3	**Digital I/O modules, IP67 - K45** • PNP transistor • Width 45 mm • Current carrying capacity of the inputs: 200 mA • Modules supplied without mounting plate						
	Type	Current carrying capacity of outputs	Slave type	Pin assignment	U_{aux} 24 V	Connection methods	
	8 inputs[1]	--	A/B	Y	--	M12	**3RK2200-0DQ20-0AA3**
	4 inputs	--	Standard	Standard	--	M12	**3RK1200-0CQ20-0AA3**
		--	Standard	Standard	--	M8 screw	**3RK1200-0CT20-0AA3**
		--	A/B	Standard	--	M12	**3RK2200-0CQ20-0AA3**
		--	A/B	Standard	--	M8 screw	**3RK2200-0CT20-0AA3**
	2 x 2 inputs	--	A/B	Y	--	M12	**3RK2200-0CQ22-0AA3**
	2 inputs/ 2 outputs	2 A[2]	Standard	Standard	✓	M12	**3RK1400-1BQ20-0AA3**
	2 x (1 input/ 1 output)	0.2 A	Standard	Y	--	M12	**3RK1400-0GQ20-0AA3**
	4 x (1 input/ 1 output)	0.2 A	A/B (Spec. 3.0)	Y	--	M12	**3RK2400-0GQ20-0AA3**
	4 x (1 input/ 1 output)	0.5 A	A/B (Spec. 3.0)	Y	✓	M12	**3RK2400-1GQ20-1AA3**
	4 outputs	1 A	A/B (Spec. 3.0)	Standard	✓	M12	**3RK2100-1CQ20-0AA3**
	3 outputs	1 A	A/B	Standard	✓	M12	**3RK2100-1EQ20-0AA3**
	4 outputs	1 A	Standard	Standard	✓	M12	**3RK1100-1CQ20-0AA3**
	2 outputs/ 2 inputs	2 A	A/B	Standard	✓	M12	**3RK2400-1BQ20-0AA3**

Accessories

3RK1901-2EA00	**K45 mounting plates** • For wall mounting • For standard rail mounting	 **3RK1901-2EA00** **3RK1901-2DA00**
3RK1901-1KA00 3RK1901-1PN00	**AS-Interface sealing caps** • For free M12 sockets • For free M8 sockets	 **3RK1901-1KA00** **3RK1901-1PN00**

✓ Available
-- Not available

[1] Module occupies two AS-Interface addresses

[2] The typical current carrying capacity per output increases with version "E12" from 1.5 to 2 A (available since approx. 07/2003).

© Siemens AG 2014

Overview

Digital I/O modules, IP67 - K20

The K20 compact module series rounds off the AS-Interface compact modules with a particularly slim design and a width of a mere 20 mm. Thanks to its extremely compact dimensions, these modules are particularly suited for handling machine applications in the field of production engineering where modules need to be arranged in the smallest of spaces.

Robotics is yet another application area. Instead of the AS-Interface flat cable, the K20 modules are connected to AS-Interface over a round cable with M12 cable box.
The AS-Interface bus cable and the 24 V DC auxiliary power supply are routed in this case in a shared round cable.
This enables extremely compact installation.

The flexibility of the round cable means that it can also be used on moving machine parts without any problems. The K20 modules are also ideal for such applications as their non-encapsulated design makes them particularly light in weight.

In applications with tow chains, many users rely on placing the AS-Interface bus cable in a round cable. In this case, the K20 modules support direct connection to the round cable. No flat to round cable adapter is required.

The K20 compact module series includes standard AS-Interface modules, as well as an ASIsafe version for the connection of safety-related sensors, such as EMERGENCY-STOP push-buttons or protective door monitoring. All standard AS-Interface K20 modules support, as far as technically possible, the expanded address mode (A/B addresses) according to AS-Interface Specification 2.1, which enables connection of 62 stations to an AS-Interface network. The K20 module with four inputs and four outputs works in expanded address mode according to AS-Interface specification 3.0 which, for the first time, supports four outputs with an A/B slave, thus enabling 248 inputs and 248 outputs in a fully expanded AS-Interface network.

For particularly space-saving dimensions, the sensors and actuators are connected over M8 plug-in connectors. Alternatively, M12 connectors with Y assignment can be used.

Selection and ordering data

	Version					Article No.
3RK2200-0CT30-0AA3	**Digital I/O modules, IP67 – K20** Width 20 mm					
	Type	Current carrying capacity of outputs	Slave type	Pin assignment	Connection methods	
	4 inputs	--	A/B	Standard	M8	**3RK2200-0CT30-0AA3**
		--	A/B	Y	M12	**3RK2200-0CQ30-0AA3**
	2 inputs/ 2 outputs	1	A/B	Standard	M8	**3RK2400-1BT30-0AA3**
		1	A/B	Y	M12	**3RK2400-1BQ30-0AA3**
	4 outputs	1	A/B (Spec. 3.0)	Standard	M8	**3RK2100-1CT30-0AA3**
	4 inputs/ 4 outputs	1	Standard	Standard	M8	**3RK1400-1CT30-0AA3**
		1	A/B (Spec. 3.0)	Standard	M8	**3RK2400-1CT30-0AA3**
	2 safe inputs	--	Standard	Y-II	M12	**3RK1205-0BQ30-0AA3**

© Siemens AG 2014

Selection and ordering data (continued)

	Version				Article No.
Accessories					
3RK1901-1KA00	**AS-Interface sealing caps**				
	• For free M12 sockets				**3RK1901-1KA00**
	• For free M8 sockets				**3RK1901-1PN00**
3RK1901-1PN00					
3RK1901-1NN10	**AS-Interface compact distributors, for AS-Interface flat cable** Current carrying capacity up to 8 A				**3RK1901-1NN10**
3RX9801-0AA00	**AS-Interface M12 feeders** • Degree of protection IP67 • Current carrying capacity up to 2 A				
	For flat cable	For	Cable length	Cable end in feeder	
	AS-i	M12 socket	--	Available	**3RX9801-0AA00**
3RK1901-1NR10	**AS-Interface M12 feeders** • Degree of protection IP67/IP68/IP69K • Current carrying capacity up to 4 A				
	For flat cable	For	Cable length	Cable end in feeder	
3RK1901-1NR11	AS-i	M12 socket	--	Not available	**3RK1901-1NR10**
	AS-i	M12 cable box	1 m	Not available	**3RK1901-1NR11**
	AS-i	M12 cable box	2 m	Not available	**3RK1901-1NR12**
	AS-i/U_{aux}	M12 socket	--	Not available	**3RK1901-1NR20**
	AS-i/U_{aux}	M12 cable box	1 m	Not available	**3RK1901-1NR21**
	AS-i/U_{aux}	M12 cable box	2 m	Not available	**3RK1901-1NR22**
3RK1901-1NR04	**AS-Interface M12 feeders, 4-fold** Current carrying capacity up to 4 A				
	For flat cable	For	Cable length	Cable end in feeder	
	AS-i/U_{aux}	4-fold M12 socket, delivery includes mounting plate (for wall and standard rail mounting)	--	Not available	**3RK1901-1NR04**
3RK1901-1TR00	**M12 T distributors** • IP68 • 1 x M12 plug • 2 x M12 box				**3RK1901-1TR00**
6ES7194-1KA01-0XA0	**M12 Y-shaped coupler plugs** For connection of two sensors to one M12 socket with Y assignment				**6ES7194-1KA01-0XA0**
3RK1902-4PB15-3AA0	**M12 connecting cables** • 3-pole • For addressing AS-i slaves with M12 bus connection • Cable length 1.5 m				**3RK1902-4PB15-3AA0**

4

© Siemens AG 2014

Overview

K60 analog compact module

AS-Interface analog modules from the K60 compact series detect or issue analog signals locally. These modules are linked to the higher-level controller through an AS-Interface master according to Specification 2.1 or Specification 3.0.

The analog modules are divided into the following groups:

- Input modules
  - for sensors with current signal
  - for sensors with voltage signal
  - for sensors with thermal resistor
- Output modules
  - for current actuators
  - for voltage actuators

The input modules according to Profile 7.3/7.4 are available with two or four input channels. It is possible in addition to convert the two-channel module to using only one input channel, thus enabling very short times before the analog value is available. The conversion is effected by means of a jumper plug at socket 3. The transmission times achieved with analog modules according to Profile 7.A.9 are shorter by half than those achieved with Profile 7.3/7.4. Operation is adjustable in this case, e.g. it is possible to choose with the ID1 code whether the module is operated with one or two channels.

The output modules are configured as two-channel modules as standard.

The input and output channels are electrically separated from the AS-Interface network. If sensors with a higher power requirement are to be connected, more power can be supplied through the auxiliary voltage as an alternative to the internal supply.

In the manual, the modules are presented in great detail along with their technical specifications and in-depth notes on operation. Sample function blocks round off the manual.

Benefits

- Analog modules are just as easy to integrate in AS-Interface as digital modules
- Analog values can be easily detected and issued locally
- Preprocessing of the analog value transmission in the master enables rapid evaluation of the analog values
- Up to four values can be detected using one analog module
- Faster transmission and conversion of analog values thanks to the new option for a switchover to single-channel operation

In addition, Specification 3.0 now also offers:

- A/B technology, now also with analog modules
- On average, double fast transmission times (only 3 or 4 cycles, depending on the resolution selected)
- Variable adjustable mode: 12 bit or 14 bit resolution, 1 or 2-channel, selectable over the ID1 code
- Extra simple handling of analog value processing with masters of Specification 3.0, the DP/AS-i LINK Advanced

© Siemens AG 2014

Selection and ordering data

	Version			Article No.
3RK1207-1BQ44-0AA3	**Analog I/O modules IP67 - K60, analog profile 7.3** • Slave type: Standard • Width 60 mm • Modules supplied without mounting plate			
	Inputs	Type	Measuring range	
	1 or 2 inputs (selectable using jumper plug at socket 3)	Current	4 ... 20 mA or ±20 mA (selectable)[1]	**3RK1207-1BQ40-0AA3**
		Voltage	± 10 V or 1 ... 5 V (selectable)	**3RK1207-2BQ40-0AA3**
		Thermal resistance	Pt 100 or Ni 100 or 0 ... 600 Ω (selectable)[1]	**3RK1207-3BQ40-0AA3**
	4 inputs	Current	4 ... 20 mA or ±20 mA (selectable)	**3RK1207-1BQ44-0AA3**
		Voltage	± 10 V or 1 ... 5 V (selectable)	**3RK1207-2BQ44-0AA3**
		Thermal resistance	Pt 100 or Ni 100 or 0 ... 600 Ω (selectable)	**3RK1207-3BQ44-0AA3**
	Outputs	Type	Output range	
	2 outputs	Current for 2-wire actuators	4 ... 20 mA or ± 20 mA or 0 ... 20 mA (selectable)[1]	**3RK1107-1BQ40-0AA3**
		Voltage for 2-wire actuators	± 10 V or 0 ... 10 V or 1 ... 5 V (selectable)	**3RK1107-2BQ40-0AA3**
3RK2207-2BQ50-0AA3	**Analog I/O modules IP67 - K60, analog profile 7.A.9** • Slave type: A/B (Spec. 3.0) • Width 60 mm • Modules supplied without mounting plate			
	Inputs	Type	Measuring range	
	1 or 2 inputs (variably adjustable)	Current	4 ... 20 mA or ±20 mA (selectable)	**3RK2207-1BQ50-0AA3**
		Voltage	± 10 V or 1 ... 5 V (selectable)	**3RK2207-2BQ50-0AA3**

[1] Some modules are available in the extended temperature range (from -25 to 70 °C) and for use in difficult environmental conditions (coated according to environment standard IEC 60721).

Description	SIPLUS Article No.	Corresponds to module
SIPLUS AS-Interface 2AA, IP67	6AG1107-1BQ40-7AA3	3RK1107-1BQ40-0AA3
SIPLUS AS-Interface 2AI, IP67	6AG1207-1BQ40-7AA3	3RK1207-1BQ40-0AA3
SIPLUS AS-Interface 2AI, IP67	6AG1207-3BQ40-7AA3	3RK1207-3BQ40-0AA3

For more information see www.siemens.com/siplus-extreme.

© Siemens AG 2014

Selection and ordering data (continued)

	Version	Article No.
Accessories		
	Manual "AS-Interface Analog Modules K60"	See http://support.automation.siemens.com/WW/view/en/6007797
3RK1901-0CA00	**K60 mounting plates** • Wall mounting • Standard rail mounting	 **3RK1901-0CA00** **3RK1901-0CB01**
3RK1901-1KA00	**M12 sealing caps**	**3RK1901-1KA00**
3RK1902-0AR00	**Sealing sets** • For mounting plate K60 and distributor • Cannot be used for K45 mounting plate • One set contains one straight and one shaped seal	**3RK1902-0AR00**
3RK1901-1AA00	**Jumper plugs** For changing over the 2-channel input modules	**3RK1901-1AA00**

© Siemens AG 2014

Overview

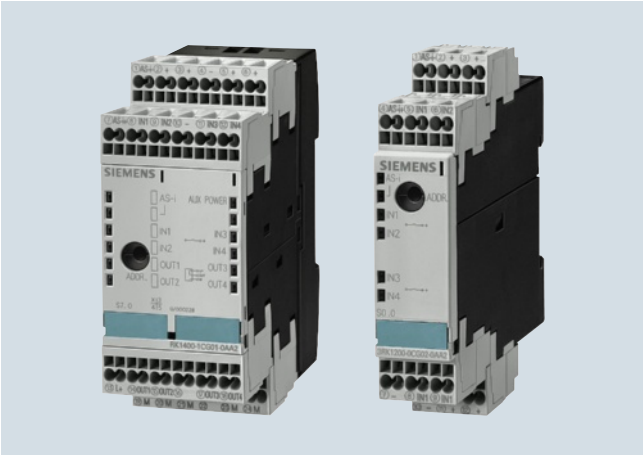

SlimLine S22.5/S45

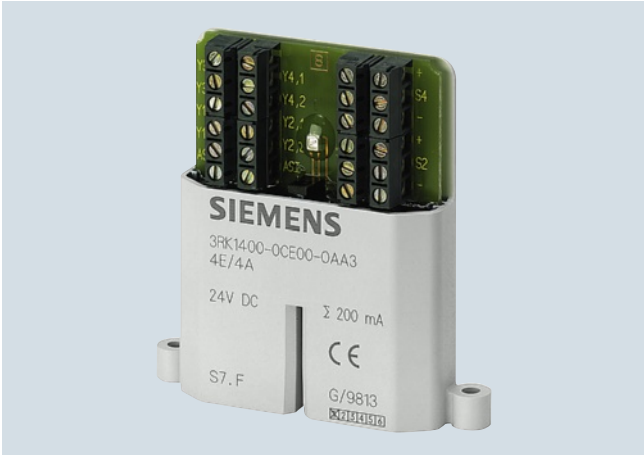

Flat module

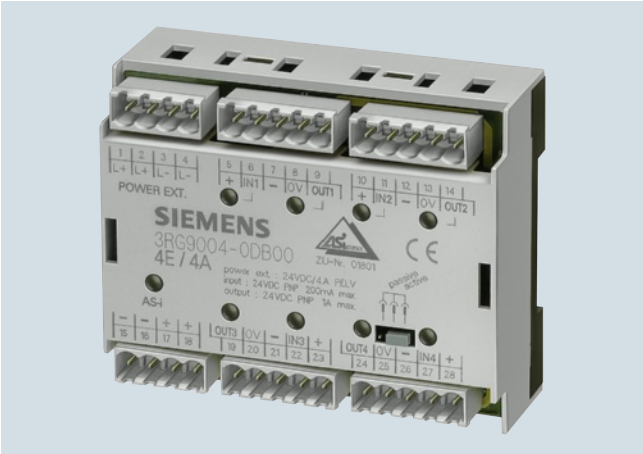

F90 module[1)]

For AS-Interface applications inside control cabinets, there are various module series for the most diverse requirements:

- SlimLine S22.5
- SlimLine S45
- F90 module[1)]
- Flat module

All modules of these series can be snap-mounted directly on a standard mounting rail or be fastened using screws.

AS-Interface modules in IP20 have direct terminals for the AS-Interface cables and therefore do not require a base.

Type series	Spectrum	Mounting onto TH 35 standard mounting rail according to IEC 60715	Wall mounting using push-in lugs (type 3RP1903)	Other possibilities
SlimLine S22.5	• 4I (standard and A/B modules) • 4O • 2I/2O (steady-state/relay outputs) • Counters[2)] • Ground-fault detection modules[2)]	✓	✓	--
SlimLine S45	• 4I/4O (steady-state/relay outputs) • 4I/4O with floating I/Os • 4I/3O (A/B modules) • 4I/4O (A/B modules Spec. 3.0)	✓	✓	--
F90 module	• 4I/4O (screw terminals) • 4I/4O (connection using Combicon connector) • 16I	✓	--	--
Flat module	• 4I/4O (screw terminals)	--	--	Integrated lugs for screw fixing

✓ Available

-- Not available

1) See Catalog IC 10, Chapter 2 "Industrial Communication".

2) For more information about these modules see "Modules with Special Functions" from page 4/74.

© Siemens AG 2014

Overview

SlimLine modules of the S22.5 and S45 series

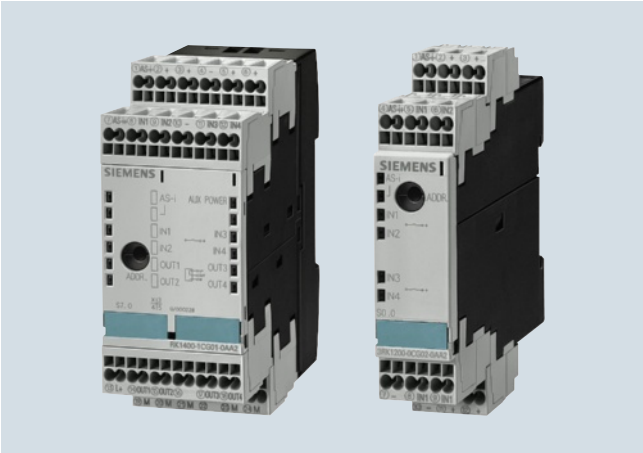

SlimLine S45 module (left) and S22.5 module (right)

The AS-Interface series of modules for the "SlimLine" control cabinet with degree of protection IP20 creates space in the cabinet and in distributed local boxes.

For these modules, the priority was placed on a narrow design. They have a width of only 22.5 mm or 45 mm.

Standard sensors/actuators and the AS-Interface cable can be connected using removable screw terminals or spring-type terminals.

Integrated adapters enable mounting onto a standard mounting rail. Disassembly from the standard mounting rail is quick and easy and requires no tools.

With an additional accessory (push-in lugs), the modules can also be screwed on.

All modules are fitted at the front with LEDs which indicate the module's status.

An addressing socket integrated at the front enables the module to be addressed also when it is installed.

In addition to the digital input/output modules, there are modules of design S22.5 with special functions. These include:

- Counter modules
- Ground-fault detection modules

For more information about these modules see

- section "Modules with Special Functions" on page 4/74
- Industry Mall: Section "Automation Technology"
  ⇒ "SIRIUS Industrial Controls"
  ⇒ "Industrial Communication"
  ⇒ "AS-Interface" ⇒ "Slaves"
  ⇒ "Modules with Special Functions"

The AS-Interface Specification 3.0 adds a number of completely new features to the AS-Interface bus system. The extended address mode (A/B addresses) enables the connection of up to 62 slaves on one AS-Interface network. With the extended address mode according to Specification 3.0, four outputs are now possible for the first time even with A/B slaves (instead of only three outputs possible up to now with Specification 2.1). Hence with full expansion of an AS-Interface network, there are now 248 inputs as well as 248 outputs available on one AS-Interface system.

Modules with four inputs and four outputs as A/B slaves according to Specification 3.0 are also available for the control cabinet as SlimLine S45 modules.

Note:

Please note that the modules according to Specification 3.0 can be used only with a new master according to AS-Interface Specification 3.0, and that the cycle times for the outputs must not exceed 20 ms.

© Siemens AG 2014

Selection and ordering data

	Version						Article No.
3RK1200-0CE00-0AA2 3RK1400-0BG00-0AA2	**SlimLine S22.5 modules** • Inputs: PNP transistor • Width 22.5 mm						
	Type	Connection		Slave type	Inputs	Outputs	
	4 inputs	Screw		Standard	2-wire	--	**3RK1200-0CE00-0AA2**
				Standard	2- and 3-wire	--	**3RK1200-0CE02-0AA2**
				A/B slave	2- and 3-wire	--	**3RK2200-0CE02-0AA2**
		Spring-type		Standard	2-wire	--	**3RK1200-0CG00-0AA2**
				Standard	2- and 3-wire	--	**3RK1200-0CG02-0AA2**
				A/B slave	2- and 3-wire	--	**3RK2200-0CG02-0AA2**
	2 inputs/ 2 outputs	Screw		Standard	2-wire	PNP transistor 2 A	**3RK1400-0BE00-0AA2**
				Standard	2-wire	Relays	**3RK1402-0BE00-0AA2**
		Spring-type		Standard	2-wire	PNP transistor 2 A	**3RK1400-0BG00-0AA2**
				Standard	2-wire	Relays	**3RK1402-0BG00-0AA2**
	4 outputs	Screw		Standard	--	PNP transistor 1 A	**3RK1100-1CE00-0AA2**
		Spring-type		Standard	--	PNP transistor 1 A	**3RK1100-1CG00-0AA2**
3RK1400-1CG00-0AA2	**SlimLine S45 modules** • Inputs: PNP transistor • Width 45 mm						
	Type	Connection		Slave type	Inputs	Outputs	
	4 inputs/ 4 outputs	Screw		Standard	2- and 3-wire	PNP transistor 1 A	**3RK1400-1CE00-0AA2**
				Standard	2- and 3-wire	PNP transistor 2 A	**3RK1400-1CE01-0AA2**
				Standard	2- and 3-wire floating	PNP transistor 1 A floating	**3RK1402-3CE01-0AA2**
				Standard	2- and 3-wire	Relays	**3RK1402-3CE00-0AA2**
				A/B (Spec. 3.0)	2- and 3-wire	PNP transistor 2 A	**3RK2400-1CE01-0AA2**
		Spring-type		Standard	2- and 3-wire	PNP transistor 1 A	**3RK1400-1CG00-0AA2**
				Standard	2- and 3-wire	PNP transistor 2 A	**3RK1400-1CG01-0AA2**
				Standard	2- and 3-wire floating	PNP transistor 1 A floating	**3RK1402-3CG01-0AA2**
				Standard	2- and 3-wire	Relays	**3RK1402-3CG00-0AA2**
				A/B (Spec. 3.0)	2- and 3-wire	PNP transistor 2 A	**3RK2400-1CG01-0AA2**
	4 inputs/ 3 outputs	Screw		A/B slave	2- and 3-wire	PNP transistor 2 A	**3RK2400-1FE00-0AA2**
		Spring-type		A/B slave	2- and 3-wire	PNP transistor 2 A	**3RK2400-1FG00-0AA2**
Accessories							
3RP1902	**Sealable covers** To secure against unauthorized addressing						**3RP1902**
3RP1903	**Push-in lugs** For screw fixing						**3RP1903**

© Siemens AG 2014

Selection and ordering data

	Version					Article No.
3RG9002-0DB00	**F90 module** • Standard slave • Width 90 mm					
	Type	Connection		Inputs	Outputs	
	4 inputs/ 4 outputs	Screw		2- and 3-wire PNP transistor	PNP transistor 1 A	**3RG9002-0DB00**
				2- and 3-wire PNP transistor	PNP transistor 2 A	**3RG9002-0DA00**
				2- and 3-wire PNP transistor floating	PNP transistor 2 A	**3RG9002-0DC00**
		Combicon[1]		2- and 3-wire PNP transistor	PNP transistor 1 A	**3RG9004-0DB00**
				2- and 3-wire PNP transistor	PNP transistor 2 A	**3RG9004-0DA00**
				2- and 3-wire PNP transistor floating	PNP transistor 2 A	**3RG9004-0DC00**
	16 inputs	Screw		PNP transistor	--	**3RG9002-0DE00**
		Combicon[1]		PNP transistor	--	**3RG9004-0DE00**

Accessories

Combicon connector sets For 4I/4O and 16E modules with Combicon connection; one set comprises: • 4 x 5-pole plug for connection • Standard sensors/actuators • 2 x 4-pole plug for AS-Interface and external auxiliary voltage	**3RX9810-0AA00**

[1] Scope of supply does not include Combicon connector set 3RX9810-0AA00, this must be ordered separately, see "Accessories".

© Siemens AG 2014

Overview

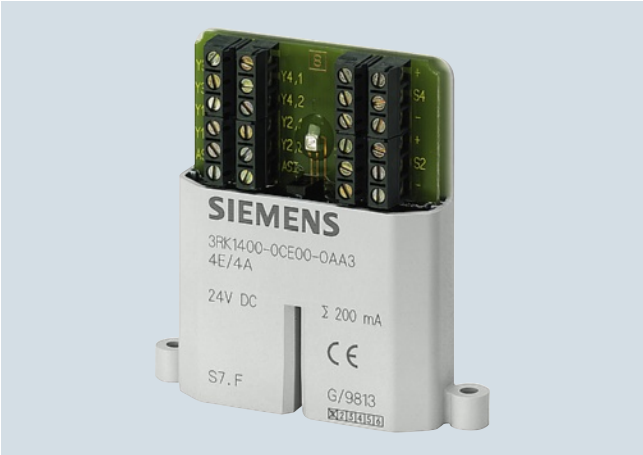

Flat module

The flat module for the control cabinet in degree of protection IP20 has 4 inputs and 4 outputs.

The module is fitted at the front with an LED which indicates the module's status.

With the integrated lugs, the modules can be screwed on.

An integrated addressing socket enables the module to be addressed when it is installed.

Standard sensors/actuators and the AS-Interface cable can be connected using screw terminals.

Selection and ordering data

	Version	Screw terminals Article No.
 3RK1400-0CE00-0AA3	**Flat module** • 4 inputs/4 outputs • 200 mA for all I/Os	**3RK1400-0CE00-0AA3**

© Siemens AG 2014

Overview

AS-Interface communication modules for printed circuit board installation

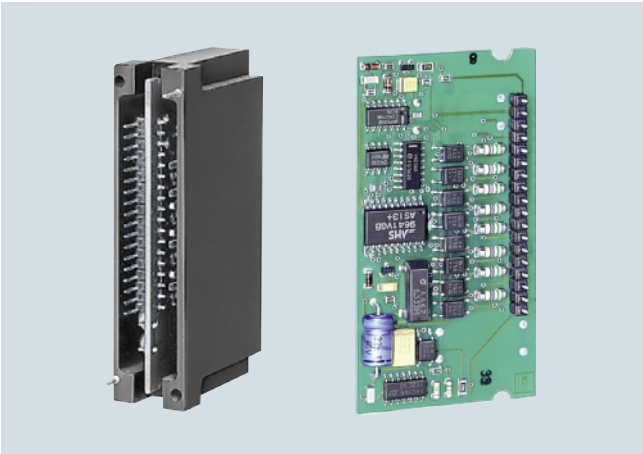

AS-Interface communication module 3RK1400-0CD00-0AA3 (left),
AS-Interface communication module 3RK2400-1FD00-0AA2 (right)

3RK1400-0CD00-0AA3 AS-Interface communication modules for printed circuit board installation

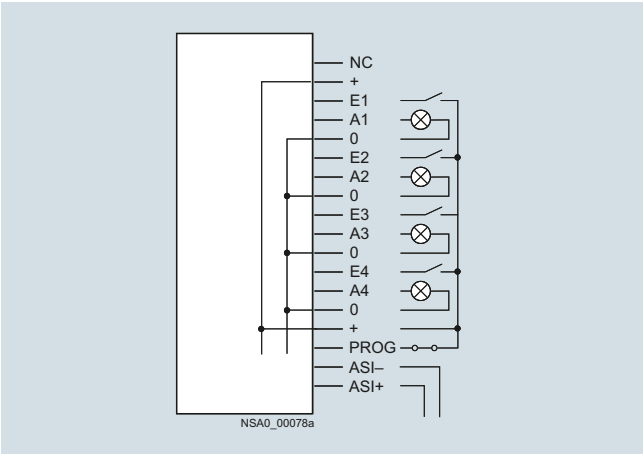

3RK1400-0CD00-0AA3

With the 4I/4O module for printed circuit board installation, it is possible for up to four mechanical contacts to be queried or indicator lights to be operated, the necessary energy being provided by the AS-Interface system (yellow AS-Interface cable).

Note:

If the switching outputs are overloaded, the module does not respond to invoking by a master.

3RK1400-0CD01-0AA3 AS-Interface communication modules for printed circuit board installation

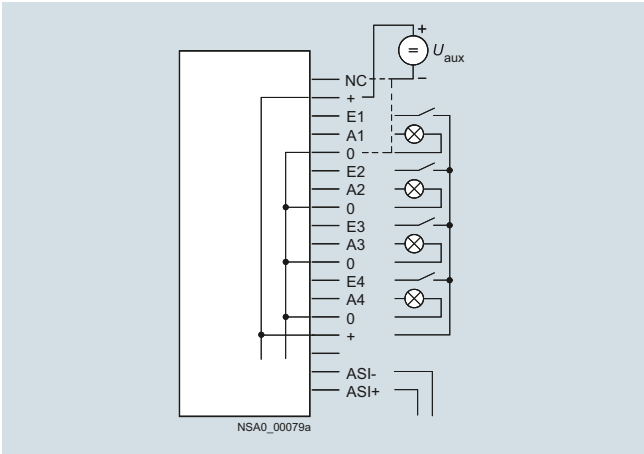

3RK1400-0CD01-0AA3

With the 4I/4O module 3RK1400-0CD01-0AA3 for printed circuit board installation, it is possible for up to four mechanical contacts to be queried or indicator lights to be operated, the necessary energy for the inputs and outputs being provided from the auxiliary voltage (24 V PELV). If (+) is connected to U_{aux}+ and (NC) to U_{aux}– , the outputs are not short-circuit and overload proof; if U_{aux}– is connected to (0), the outputs are overload and short-circuit proof (maximum summation current 200 mA).
In this case, the module does not respond even to invoking by a master when the switching outputs are overloaded.

3RG9005-0SA00 AS-Interface communication modules for printed circuit board installation

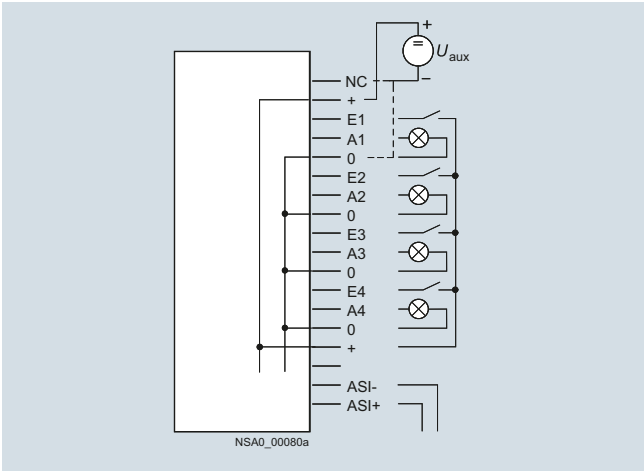

3RG9005-0SA00

With the 4I/4O module for printed circuit board mounting, it is possible for up to four mechanical contacts to be queried or indicator lights to be operated, the power for inputs and outputs being provided from an auxiliary voltage (24 V PELV). If (+) is connected to U_{aux}+ and (NC) to U_{aux}- , the outputs are not short-circuit and overload proof; if U_{aux} – is connected to (0), the outputs are overload and short-circuit proof (maximum summation current 200 mA). In this case, the module does not respond even to invoking by a master when the switching outputs are overloaded.

© Siemens AG 2014

Overview (continued)

3RK1400-1CD00-0AA2, 3RK2400-1FD00-0AA2
AS-Interface communication modules
for printed circuit board installation

Connection	Connection pad
AS-i +	27, 29
AS-i -	28, 30
Sensor+	17, 18, 23, 24
Sensor-	13, 14, 19, 20
IN1	21
IN2	22
IN3	15
IN4	16
U_{aux} + (L24+)	2, 4
U_{aux} - (M24)	1, 3
OUT1	9
OUT2	10
OUT3	5
OUT4	6 (not assigned for 3RK2400-1FD00-0AA2 4I/3O module)
OUT-	7, 8
Not assigned	11, 12, 25, 26

With the 4I/4O or 4I/3O module for printed circuit board installation, it is possible for up to four mechanical contacts or 3-conductor sensors according to IEC 947-5-2 to be connected.

Up to four indicator lights via the 4I/4O module or up to three indicator lights via the 4I/3O module can also be controlled. The power for short-circuit proof solid-state switching outputs is provided from an auxiliary voltage (24 V PELV).

Mounting is very easy using a "Card Edge Board-to-Board Connector". This connector can be ordered for vertical and horizontal mounting from the company AMP, for example:

- 180° version for vertical mounting (AMP):
  Type 530843-2
- 90° version for horizontal mounting (AMP):
  Type 650118-1

If the inputs are loaded with more than 200 mA, the module does not respond to invoking by a master.

3RK1200-0CD00-0AA2
AS-Interface communication modules
for printed circuit board installation

Connection	Connection pad
AS-i +	27, 29
AS-i -	28, 30
Sensor+	17, 18, 23, 24
Sensor-	13, 14, 19, 20
IN1	21
IN2	22
IN3	15
IN4	16
Not assigned	1, 2, 3, 4, 5, 6, 7, 8, 9, 10, 11, 12, 25, 26

With the 4I module for printed circuit board installation, it is possible for up to four mechanical contacts or 3-conductor sensors to be connected, the power for inputs being provided from the AS-Interface cable.

Mounting is very easy using a "Card Edge Board-to-Board Connector". This connector can be ordered for vertical and horizontal mounting from the company AMP, for example:

- 180° version for vertical mounting (AMP):
  Type 530843-2
- 90° version for horizontal mounting (AMP):
  Type 650118-1

If the inputs are loaded with more than 200 mA, the module does not respond to invoking by a master.

Selection and ordering data

	Version	Slave type	Article No.
3RK1400-0CD00-0AA3	**4 inputs / 4 outputs**		
	• Supply of I/Os using AS-Interface cable (max. 200 mA) - Printed circuit board with solder pins, protected by enclosure	Standard	**3RK1400-0CD00-0AA3**
	• Supply of I/Os using external auxiliary voltage (24 V PELV) - Printed circuit board with solder pins, protected by enclosure - Printed circuit board with solder pins for horizontal mounting	 Standard Standard	 **3RK1400-0CD01-0AA3** **3RG9005-0SA00**
	• Supply of outputs using external auxiliary voltage (24 V PELV) - Printed circuit board with gold-plated direct connector for 30-pole male connector socket for simple installation with direct connector	Standard	**3RK1400-1CD00-0AA2**
	4 inputs / 3 outputs • Supply of outputs using external auxiliary voltage (24 V PELV) - Printed circuit board with gold-plated direct connector for 30-pole male connector socket for simple installation with direct connector	A/B	**3RK2400-1FD00-0AA2**
3RG9005-0SA00	**4 inputs** • Printed circuit board with gold-plated direct connector • For 30-pole male connector socket • For simple installation with direct connector	Standard	**3RK1200-0CD00-0AA2**

© Siemens AG 2014

Overview

Counter module with spring-type terminals

The counter module is used to send hexadecimally coded count values (LSB=D0, MSB=D3) to a higher-level controller. The count value is increased by one for each valid count pulse at terminal 8. Beginning at 0, the module counts up to 15 and then begins again at 0. The controller adopts the current value and determines the number of pulses between two host invocations through subtraction from the previous value. The total number of count pulses is determined by adding these differences.

For the values sent to be unambiguous, no more than 15 count values are allowed between two host invocations or AS-Interface master invocations at terminal 8. The maximum permissible transmission frequency is calculated from these times:

$f_{TRmax} = 15 / T_{max}$

T_{max} : max. possible transmission time from the slave to the host

A further condition for the maximum frequency is the required pulse shape. For the counter to accept a pulse as valid, a Low must have been applied at the input for at least 300 µs and a High for at least 1 ms.

This results in a maximum frequency of $f_{Zmax} = 1 / 1.3$ ms = 769 Hz independently of the control system (see figure below).

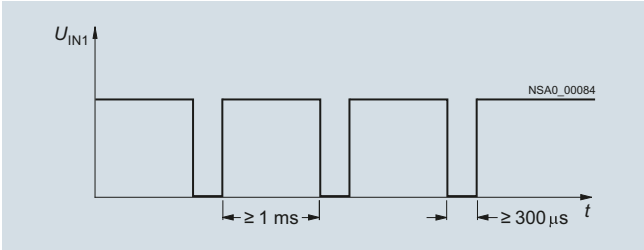

Maximum frequency for the counter module

If the time criterion stipulated in the figure is violated, the count value is rejected.

The counter is active only for the reset parameter P2 (default). The counter is deleted when P2 is set, and the incoming count pulses are not registered until after P2 is reset again.

Note:

A customized function block is necessary or must be programmed.

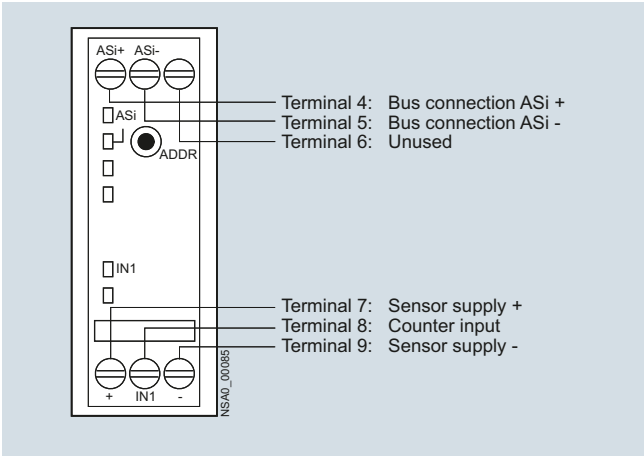

Counter module connection options

Selection and ordering data

	Version		Article No.
3RK1200-0CE03-0AA2	**Counter modules** Width 22.5 mm • With screw terminals		**3RK1200-0CE03-0AA2**
3RK1200-0CG03-0AA2	• With spring-type terminals		**3RK1200-0CG03-0AA2**

© Siemens AG 2014

Overview

Ground-fault detection module

"Ground faults in any control circuit must not lead to unintentional starting or potentially hazardous movements or prevent the machine from stopping." (IEC 60204-1/VDE 0113-1).

The AS-Interface ground-fault detection module is used to meet these requirements. Using this module from the SlimLine series, ground faults in AS-Interface systems can be reliably detected and reported.

The following ground faults are detected:

- Ground fault from AS-i "+"
- Ground fault from AS-i "-"
- Ground fault from sensors and actuators which are supplied from the AS-Interface voltage.

Note:

Not suitable for AS-Interface Power24V.

Selection and ordering data

	Version		Article No.
3RK1408-8KE00-0AA2	**Ground-fault detection modules** Width 22.5 mm • With screw terminals		**3RK1408-8KE00-0AA2**
	• With spring-type terminals		**3RK1408-8KG00-0AA2**

© Siemens AG 2014

Overvoltage protection modules

Overview

AS-Interface overvoltage protection module

The AS-Interface overvoltage protection module (protection module) protects downstream AS-Interface devices or individual sections in AS-i networks from conducted overvoltages which can be caused by switching operations and remote lightning strikes. The location of the protection module forms within the lightning protection zone concept the transition from zone 1 to 2/3. Direct lightning strikes must be coped with using additional protective measures at the transitions from lightning protection zone 0A to 1.

With the AS-Interface overvoltage protection module, it is now also possible to integrate AS-Interface in the overall overvoltage protection concept of a plant or machine.

The module has the same design and degree of protection (IP67) as the AS-Interface K45 compact modules. It is a passive module without AS-i IC and as such does not need its own address on the AS-Interface network. The module can be used to protect the AS-Interface cable and the cable for the auxiliary voltage from overvoltage. Overvoltages are discharged through a ground cable with a green/yellow oil-proof outer sheath. This cable is fixed in the module and must be connected with low resistance to the system's ground.

Rated discharge current I_{sn}

The rated discharge current is the peak value of a surge current of the form 8/20 µs (microseconds), for which the protection module is designed in accordance with a specified test program. With waveform 8/20, 100 % of the value is achieved after 8 µs and 50 % after 20 µs.

Protection level U_p

The protection level of a protection module is the highest momentary value of the voltage at the terminals, established in individual tests and characterizes the capability of a protection module to limit overvoltages to a residual level.

Configuration guidelines

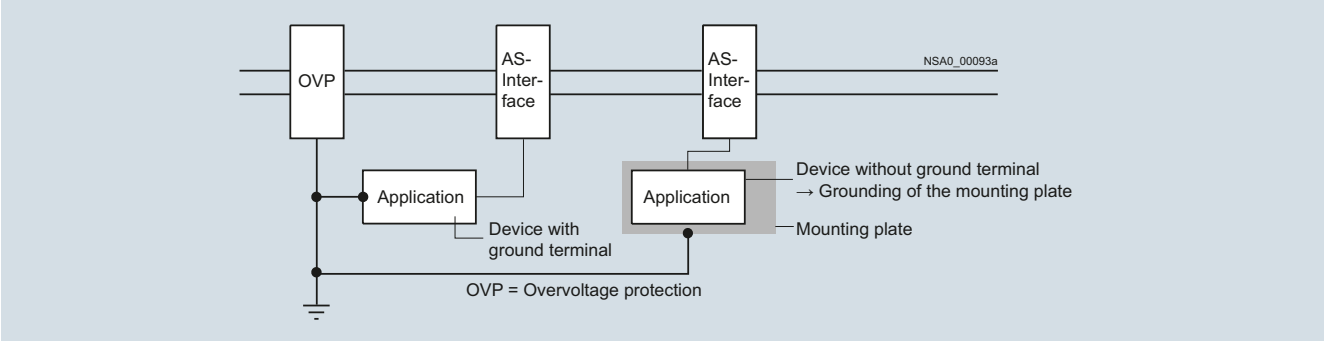

The grounding of protection modules and the units to be protected must be effected through a shared grounding point.

If insulated devices are protected, their mounts must be included in the grounding points.

Sample application

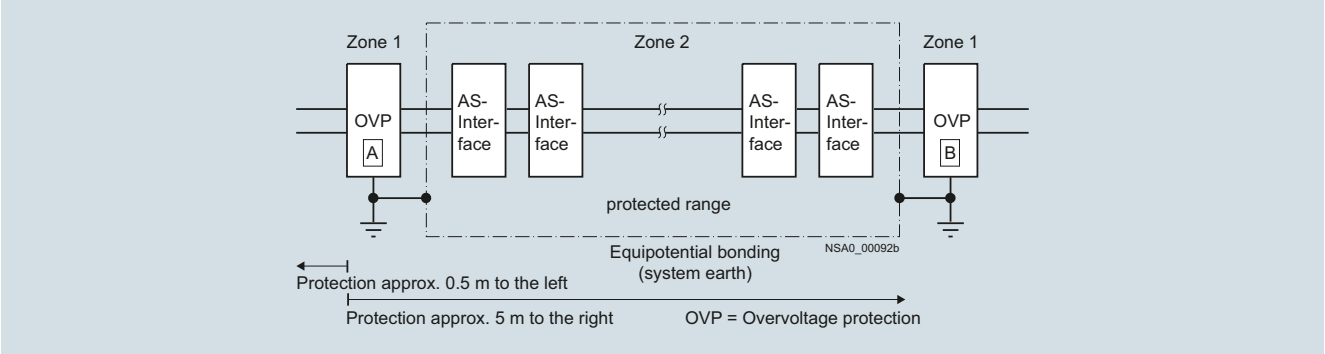

Selection and ordering data

	Version	Article No.
	AS-Interface overvoltage protection module Delivery includes mounting plate (for wall and standard rail mounting)	**3RK1901-1GA01**

© Siemens AG 2014

Overview

Every LOGO! can now be connected to the AS-Interface system

AS-Interface connections for LOGO!

Using the AS-Interface connection for LOGO!, an intelligent slave can be integrated in the AS-Interface system. With the modular interface it becomes possible to integrate the different basic units in the system according to their functionality. Similarly, functionalities can be quickly and easily adapted to new requirements by exchanging the basic unit.

The interface module provides four inputs and four outputs on the system. These inputs and outputs do not actually exist in hardware terms, however, but are only virtually present through the interface on the bus.

Selection and ordering data

	Version	Article No.
3RK1400-0CE10-0AA2	**AS-Interface connections for LOGO!** • 4 virtual inputs • 4 virtual outputs	**3RK1400-0CE10-0AA2**

© Siemens AG 2014

Overview

Contactors with communication interface, sizes S00 and S0

Contactor versions with communication interface are required to establish a connection to the control system via IO-Link or AS-Interface. The link is established by means of function modules mounted on the front of the contactor.

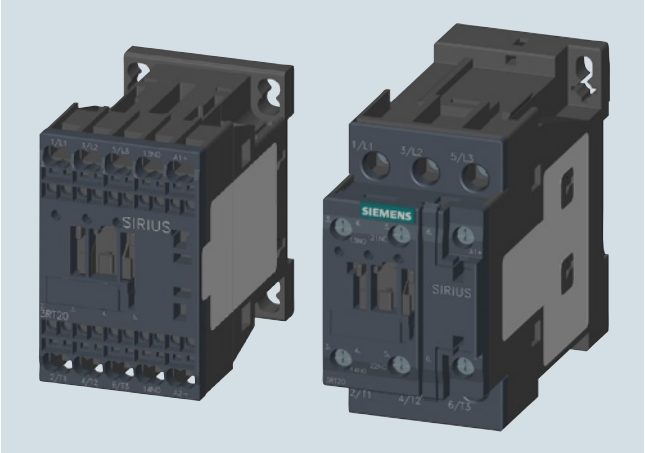

Contactor size S00 with communication interface and spring-type terminals and contactor size S0 with screw terminals

Standards

IEC 60947-1, EN 60947-1,
IEC 60947-4-1, EN 60947-4-1,
IEC 60947-5-1, EN 60947-5-1 (auxiliary switches)

The 3RT20 contactors for switching motors are climate-proof and are suitable and tested for use worldwide.

If the devices are used in ambient conditions which deviate from common industrial conditions (IEC 60721-3-3 "Stationary Use, Weather-Protected"), information must be obtained about possible restrictions with regard to the reliability and endurance of the device and possible protective measures. In this case contact our Technical Assistance.

3RT2 contactors are finger-safe according to EN 50274.

The contactors are suitable for screw fixing or for mounting onto TH 35 standard mounting rails according to IEC 60715.

Contact reliability

If voltages ≤ 110 V and currents ≤ 100 mA are to be switched, the auxiliary contacts of the 3RT2 contactor or 3RH21 contactor relay should be used as they guarantee a high level of contact reliability.

These auxiliary contacts are suitable for solid-state circuits with currents ≥ 1 mA at a voltage ≥ 17 V.

Connection methods

The 3RT2 contactors are available with screw terminals or spring-type terminals.

Short-circuit protection of the contactors

For short-circuit protection of contactors without overload relays, see Technical specifications (see Note).

To assemble fuseless motor feeders you must select combinations of motor starter protector and contactor as explained in "3RA2 Load Feeders".

Motor protection

3RU21 thermal overload relays or 3RB30 solid-state overload relays can be fitted to the 3RT2 contactors for protection against overload. The overload relays must be ordered separately.

Ratings of three-phase motors

The quoted rating (in kW) refers to the output power on the motor shaft (according to the nameplate).

Control supply voltage

Contactors with communication interface are available with 24 V DC operation.

Note:

For selection and ordering data for 3RT20 contactors and 3RA23 reversing contactor assemblies with communication interface see Chapter 5, "IO-Link".

Manuals and configurator

For more information, see
- System manual "SIRIUS Innovations – System Overview", http://support.automation.siemens.com/WW/view/en/60311318
- Manual "SIRIUS Innovations – SIRIUS 3RT2 Contactors/ Contactor Assemblies", http://support.automation.siemens.com/WW/view/en/60306557

Online configurator see www.siemens.com/sirius/configurators.

© Siemens AG 2014

Overview

These 3RA24 contactor assemblies for wye-delta starting are designed for standard applications.

Note:

Contactor assemblies for wye-delta starting in special applications such as very heavy starting or wye-delta starting of special motors must be customized. Help with designing such special applications is available from Technical Assistance.

The 3RA24 contactor assemblies for wye-delta starting can be ordered as follows:

- Complete, fully wired and tested, with electrical and mechanical interlock
- As individual parts for customer assembly.

A dead interval of 50 ms on reversing is already integrated in the function module for wye-delta starting. The auxiliary contacts integrated in the contactors (see Chapter 5, "IO-Link") are unassigned.

Selection and ordering data

Fully-wired and tested contactor assemblies

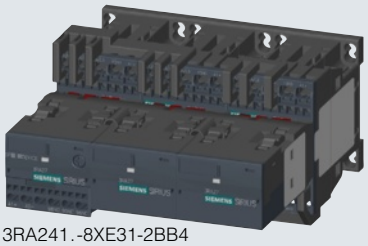

3RA241.-8XE31-2BB4

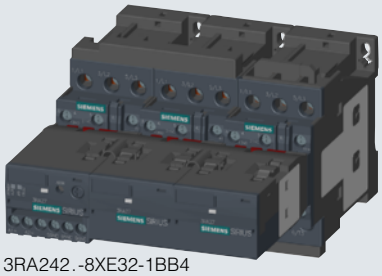

3RA242.-8XE32-1BB4

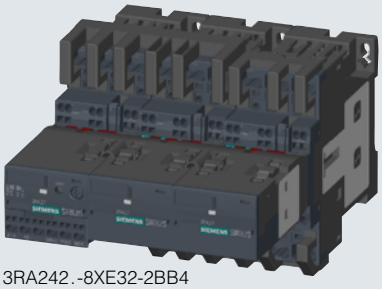

3RA242.-8XE32-2BB4

Rated data AC-3					Rated control supply voltage U_s [1]	Screw terminals	Spring-type terminals
Operational current I_e up to	Ratings of three-phase motors [1] at 50 Hz and						
400 V	230 V	**400 V**	500 V	690 V		**Article No.**	**Article No.**
A	kW	**kW**	kW	kW	V		
DC operation							
Size S00							
For AS-Interface connection							
12	3.3	**5.5**	7.2	9.2	24 DC	**3RA2415-8XH31-1BB4**	**3RA2415-8XH31-2BB4**
16	4.7	**7.5**	10.3	9.2	24 DC	**3RA2416-8XH31-1BB4**	**3RA2416-8XH31-2BB4**
25	5.5	**11**	11	11	24 DC	**3RA2417-8XH31-1BB4**	**3RA2417-8XH31-2BB4**
Size S0							
For AS-Interface connection							
25	7.1	**11**	15,6	19	24 DC	**3RA2423-8XH32-1BB4**	**3RA2423-8XH32-2BB4**
32 / 40	11.4	**15 / 18.5**	19	19	24 DC	**3RA2425-8XH32-1BB4**	**3RA2425-8XH32-2BB4**
50	--	**22**	19	19	24 DC	**3RA2426-8XH32-1BB4**	**3RA2426-8XH32-2BB4**

For online configurator see www.siemens.com/sirius/configurators.

[1] Guide value for 4-pole standard motors at 50 Hz 400 V AC.
The actual starting and rated data of the motor to be switched must be considered when selecting the units.

Components for customer assembly

Assembly kits with wiring modules and mechanical connectors are available for contactor assemblies for wye-delta starting. Contactors, overload relays, function modules for wye-delta starting, auxiliary switches for electrical interlock – if required also infeed terminals – must be ordered separately.

The wiring kits for sizes S00 and S0 contain the top and bottom main conducting path connections between the line and delta contactors (top) and between the delta and star contactors (bottom).

Selection of contactors for customer assembly

Rated data AC-3 at 50 Hz 400 V AC			Size			
Rating	Operational current I_e	Motor current		Line/delta contactor	Star contactor	**Article No. complete**
kW	A	A				
5.5	12	9.5 ... 13.8	**S00-S00-S00**	3RT2015-.BB41-0CC0	3RT2015-.BB41-0CC0	**3RA2415-8XH31-.BB4**
7.5	16	12.1 ... 17		3RT2017-.BB41-0CC0	3RT2015-.BB41-0CC0	**3RA2416-8XH31-.BB4**
11	25	19 ... 25		3RT2018-.BB41-0CC0	3RT2016-.BB41-0CC0	**3RA2417-8XH31-.BB4**
11	25	19 ... 25	**S0-S0-S0**	3RT2024-.BB40-0CC0	3RT2024-.BB40-0CC0	**3RA2423-8XH32-.BB4**
15	32	24.1 ... 34		3RT2026-.BB40-0CC0	3RT2024-.BB40-0CC0	**3RA2425-8XH32-.BB4**
18.5	40	34.5 ... 40		3RT2026-.BB40-0CC0	3RT2024-.BB40-0CC0	**3RA2425-8XH32-.BB4**
22	50	31 ... 43		3RT2027-.BB40-0CC0	3RT2026-.BB40-0CC0	**3RA2426-8XH32-.BB4**

© Siemens AG 2014

SIRIUS 3RA27 function modules for AS-Interface

Overview

The function modules for mounting onto contactors enable the configuration of starters and contactor assemblies for direct-on-line, reversing and wye-delta starting without any additional, complicated wiring of the individual components.

They include the key control functions required for the particular feeder, e.g. timing and interlocking, and can be connected to the control system via the bus system.

Manuals

For more information see manual
"SIRIUS Function Modules for AS-Interface",
http://support.automation.siemens.com/WW/view/en/39318922

Selection and ordering data

	Version	Screw terminals Article No.	Spring-type terminals Article No.
Function modules for direct-on-line starting			
3RA2712-1AA00 3RA2712-2AA00	**AS-Interface connection**	**3RA2712-1AA00**	**3RA2712-2AA00**
Function modules for reversing starting[1]			
3RA2712-1BA00 3RA2712-2BA00	**AS-Interface connection**, comprising one basic and one coupling module	**3RA2712-1BA00**	**3RA2712-2BA00**
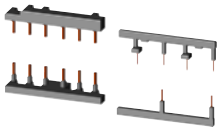 3RA2923-2AA1 3RA2923-2AA2	**Assembly kits for making 3-pole contactor assemblies** The assembly kit contains: Mechanical interlock, 2 connecting clips for 2 contactors, wiring modules on the top and bottom		
	• For size S00	**3RA2913-2AA1**	**3RA2913-2AA2**
	• For size S0		
	- For main, auxiliary and control current	**3RA2923-2AA1**	**--**
	- Only for main current[2]	**--**	**3RA2923-2AA2**

Suitable contactors or reversing contactor assemblies with communication interface are required (see Chapter 5, "IO-Link").

Note:

When using the function modules, no other auxiliary switches are allowed to be connected to the basic units.

[1] For prewired contactor assemblies for reversing starting with communication interface see Chapter 5, "IO-Link". When these contactor assemblies are used, the assembly kit for the wiring is already integrated.

[2] Version in size S0 with spring-type terminals:
Only the wiring modules for the main circuit are included.
No connectors are included for the auxiliary and control circuit.

© Siemens AG 2014

Selection and ordering data (continued)

	Version	Screw terminals Article No.	Spring-type terminals Article No.
***Function modules for wye-delta starting*[1]**			
3RA2712-1CA00 3RA2712-2CA00	**AS-Interface connection**, comprising one basic module and two coupling modules	**3RA2712-1CA00**	**3RA2712-2CA00**
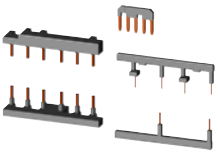 3RA2923-2BB1 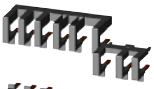 3RA2923-2BB2	**Assembly kits for making 3-pole contactor assemblies** The assembly kit contains: Mechanical interlock, 4 connecting clips for 3 contactors, star jumper, wiring modules on the top and bottom[2]		
	• For size S00	**3RA2913-2BB1**	**3RA2913-2BB2**
	• For size S0		
	- For main, auxiliary and control current	**3RA2923-2BB1**	**--**
	- Only for main current	**--**	**3RA2923-2BB2**
	The assembly kit contains: Mechanical interlock, 2 connecting clips for 3 contactors, wiring modules on the top and bottom[2], 3-phase infeed terminals		
	• For size S0	**3RA2924-2BB1**	**--**

Suitable contactors with communication interface are required (see Chapter 5, "IO-Link").

Note:

When using the function modules, no other auxiliary switches are allowed to be connected to the basic units.

[1] For complete contactor assemblies for wye-delta starting including function modules, see page 4/79.

[2] When using the function modules for wye-delta starting, the wiring modules for the auxiliary current are not required.

	Version	Article No.
Accessories		
3RA2910-0	**Sealable covers** for 3RA27, 3RA28, 3RA29	**3RA2910-0**

© Siemens AG 2014

Overview

3RA6 fuseless compact starters and infeed system for 3RA6

3RA62 reversing starter

Integrated functionality

The SIRIUS 3RA6 compact starters are a generation of innovative load feeders with the integrated functionality of a motor starter protector, contactor and solid-state overload relay.
In addition, various functions of optional mountable accessories (e.g. auxiliary switches, surge suppressors) are already integrated in the SIRIUS compact starter.

Field of application

The SIRIUS compact starters can be used wherever standard three-phase motors up to 32 A (approx. 15 kW/400 V) are directly started.

The compact starters are not suitable for the protection of DC loads.

Approvals according to IEC, UL, CSA and CCC standards have been issued for the compact starters.

Low variance of devices

Thanks to wide setting ranges for the rated current and wide voltage ranges, the equipment variance is greatly reduced compared to conventional load feeders.

Very high operational reliability

The high short-circuit breaking capacity and defined shut-down when the end of service life is reached means that the SIRIUS compact starter achieves a very high level of operational reliability that would otherwise have only been possible with considerable additional outlay. This sets it apart from devices with similar functionality.

Safe disconnection

The auxiliary switches (NC contacts) of the 3RA6 compact starters are designed as mirror contacts. It is therefore possible to use safe disconnection equipment, e.g. EMERGENCY-STOP, up to Category 2 (EN 954-1), or combine it with other redundant switching devices for use up to Category 3 or 4.

Communications integration through AS-Interface

To enable communications integration through AS-Interface there is an AS-i add-on module available in several versions for mounting instead of the control circuit terminals on the SIRIUS compact starter.

The design of the AS-i add-on module permits a group of up to 62 feeders with a total of four cables to be connected to the control system. This reduces wiring work considerably compared to the parallel wiring method.

Communications integration using IO-Link

SIRIUS 3RA64, 3RA65 compact starters for IO-Link see Chapter 5: "IO-Link".

Permanent wiring/easy replacement

Using the SIRIUS infeed system for 3RA6 it is possible to carry out the wiring in advance without a compact starter needing to be connected.

A compact starter is very easily replaced simply by pulling it out of the device without disconnecting the wiring.

Even with screw connections or mounting on a standard mounting rail there is no need to disconnect any wiring (on account of the removable main and control circuit terminals) in order to replace a compact starter.

Consistent solution from the infeed to the motor feeder

The SIRIUS infeed system for 3RA6 with integrated PE bar is offered as a user-friendly possibility of feeding in summation currents up to 100 A with a maximum conductor cross-section of 70 mm^2 and connecting the motor cable directly without additional intermediate terminals.

Screw and spring-type terminals

The SIRIUS compact starters and the infeed system for 3RA6 are available with screw and spring-type terminals.

	Screw terminals
	Spring-type terminals

System configurator for engineering

A free system configurator is available to reduce further the amount of engineering work for selecting the required compact starters and matching infeed.

Types of infeed for the 3RA6 fuseless compact starters

On the whole four different infeed possibilities are available:

- Parallel wiring
- Use of three-phase busbars (combination with SIRIUS motor starter protectors and SIRIUS contactors possible)
- 8US busbar adapters
- SIRIUS infeed system for 3RA6

To comply with the clearance and creepage distances demanded according to UL 508 there are the following infeed possibilities:

© Siemens AG 2014

Overview (continued)

Type of infeed	Infeed terminal (acc. to UL 508, type E)	Type
Parallel wiring	Terminal block for "Self-Protected Combination Motor Controller (Type E)"	**3RV2928-1H**
Three-phase busbars	Three-phase infeed terminal for constructing "Type E Starters", UL 508	**3RV2925-5EB**
Infeed system for 3RA6	Infeed on left, 50/70 mm^2, screw terminal with 3 sockets, outgoing terminal with screw/spring-type connections, including PE bar	**3RA6813-8AB** (screw terminals), **3RA6813-8AC** (spring-type terminals)

SIRIUS 3RA6 compact starters

The SIRIUS 3RA6 compact starters are universal motor feeders according to IEC 60947-6-2. As control and protective switching devices (CPS) they can connect, convey and disconnect the thermal, dynamic and electrical loads from short-circuit currents up to I_q = 53 kA, i.e. they are practically weld-free. They combine the functions of a motor starter protector, a contactor and a solid-state overload relay in one enclosure. Direct-on-line starters with 45 mm width and reversing starters with 90 mm width are available as variants.

The reversing starter version comes with not only an internal electrical interlock but also with a mechanical interlock to prevent simultaneous actuation of both directions of rotation.

The compact starters have isolating features in accordance with IEC 60947.2 and can be used as disconnector units (main control switch according to DIN EN 60204 or DIN VDE 0113). Isolation is effected by moving the handle into the "OFF" position, disconnection by means of the control contacts is not enough.

3RA6 fuseless compact starters are supplied for 5 different current setting ranges. The 3RA61 and 3RA62 have 2 control voltage ranges (AC/DC), the 3RA64 and 3RA65 have one control voltage range (DC):

Current setting range	At 400 V AC for three-phase motors Standard output *P*	Rated control supply voltage for 3RA61, 3RA62 compact starters	Rated control supply voltage for 3RA64, 3RA65 compact starters for IO-Link
A	kW	V AC/DC	V DC
0.1 ... 0.4	0.09	24 110 ... 240	24
0.32 ... 1.25	0.37		
1 ... 4	1.5		
3 ... 12	5.5		
8 ... 32	15		

Note:

The 3RA1 load feeders can be used for fuseless load feeders > 32 A up to 100 A.

The SENTRON 3VL circuit breakers and the SIRIUS 3RT contactors can be used for fuseless load feeders >100 A.

Operating conditions

The SIRIUS 3RA6 compact starters are suitable for use in any climate. They are intended for use in enclosed rooms in which no severe operating conditions (such as dust, caustic vapors, hazardous gases) prevail. Suitable covers must be provided for installation in dusty and damp locations.

The SIRIUS compact starters are generally designed to degree of protection IP20. The permissible ambient temperature during operation is -20 to +60 °C.

The rated short-circuit current I_{CS} according to IEC 60947-6-2 is 53 kA at 400 V.

Note:

The maximum permissible short-circuit currents of the device versions for the various forms of power supply and voltages are available on request from Technical Assistance:
Tel.: +49 (9 11) 8 95-59 00
E-mail: technical-assistance@siemens.com.

Overload tripping times

The tripping time in the event of overload can be set on the device to normal startup conditions (CLASS 10) and to heavy starting conditions (CLASS 20). As the breaker mechanism still remains closed after an overload, resetting is possible by either local manual reset or autoreset after 3 minutes cooling time.

With autoreset there is no need to open the control cabinet.

Diagnostics options

The compact starter provides the following diagnostics options:

- With LEDs
  - Connection to the control voltage
  - Position of the main contacts
- With mechanical display
  - Tripping due to overload
  - Tripping due to short circuit
  - Tripping due to malfunction (end of service life reached because of worn switching contacts or a worn switching mechanism or faults in the control electronics)

These states can also be evaluated in the higher-level control system:

- With parallel wiring using the integrated auxiliary and signaling switches of the compact starter
- With AS-Interface or IO-Link in even greater detail using the respective communication interface

Four complement versions for 3RA61/3RA62 compact starters

- For standard mounting rail or screw fixing:
  basic version including 1 pair of main circuit terminals and 1 pair of control circuit terminals
- For standard mounting rail or screw fixing when using the AS-i add-on module:
  without control circuit terminals because the AS-i add-on module is plugged on instead
- For use with the infeed system for 3RA6:
  without main circuit terminals because they are supplied with the infeed system and the expansion modules
- For use with the infeed system for 3RA6 and the AS-i add-on module: without terminal complement (also for reordering when replacing the compact starter)
- The control circuit terminals are always required by the compact starters for IO-Link; the main circuit terminals depend on the use of the infeed system.

© Siemens AG 2014

Overview (continued)

More components of the 3RA6

Apart from the control supply voltage, "Overload" (1 CO) and "Short circuit / Function fault" (1 NO) signaling contacts are already integrated into the 3RA61/3RA62 – and lockable via two 6-pole removable control circuit terminals. The 3RA61 has two auxiliary contacts (1 NO + 1 NC) for displaying the position of the main contacts. Unlike the 3RA61 direct-on-line starter, the 3RA62 reversing starter has one auxiliary contact (1 S) per direction of rotation per main contact.

Available for the 3RA61 and 3RA64 direct-on-line starters is a slot for an optional auxiliary switch block (optionally 2 NO, 2 NC or 1 NO + 1 NC) and for the 3RA62 and 3RA65 reversing starters there are two slots (for auxiliary switch blocks see "Accessories" on page 4/88).

In contrast to the direct-on-line starter, the 3RA62 reversing starter has one auxiliary contact (1 NC) per direction of rotation per main contact.

Positively-driven operation of the auxiliary contacts

There is positively-driven operation between individual auxiliary circuits for the compact starter in the version as a direct-on-line starter for parallel wiring (3RA61) between the auxiliary circuits of the NC contacts (NC 21-22) and the NO contacts (NO 13-14) in the basic unit.

In addition, the optional auxiliary switch block offers positively-driven contacts in the 3RA69 13-1A version, each with one normally closed contact and one normally open contact.

Benefits

The SIRIUS 3RA6 compact starters offer a number of benefits:

- Compact design saves space in the control cabinet
- Little planning and assembly work and far less wiring thanks to a single complete unit with one article number
- Little variance through wide voltage range and 5 wide setting ranges for the rated current mean low stock levels
- High plant availability through integrated functionalities such as prevention of main contact welding and disconnection at end of service life
- Greater productivity through automatic device reset in case of overload and differentiated detection of overload and short circuit
- Easy checking of the wiring and testing of the motor direction prior to start-up thanks to optional "control kits"
- Speedy replacement of devices thanks to removable terminals with spring-type and screw connections in the main and control circuit
- Efficient power distribution through the related SIRIUS infeed system for 3RA6
- Direct connection of the motor feeder cable to the SIRIUS infeed system for 3RA6 thanks to integrated PE bar
- Connecting and looping through incoming feeders up to a cross-section of 70 mm^2
- When using the infeed system for 3RA6, possibility of directly connecting the motor cable without intermediate terminals
- Integration in Totally Integrated Automation thanks to the optional connection to AS-Interface or IO-Link

The SIRIUS 3RA6 compact starters create the basis for high-availability and future-proof machine concepts.

© Siemens AG 2014

Selection and ordering data

3RA61 20-1CB32

3RA61 20-2EB32

Direct-on-line start

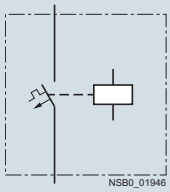

Width 45 mm

Rated short-circuit current I_{CS} = 53 kA at 400 V

A set of 3RA69 40-0A adapters is required for screw fixing.

Standard three-phase motor 4-pole at 400 V AC[1] Standard output *P*	Setting range for solid-state overload release	Instantaneous overcurrent release	**Article No.**	**Article No.**
kW	A	A		
For use with the infeed system for 3RA6 and with the AS-i add-on module or as a replacement device, without main and control circuit terminals				
0.09	0.1 ... 0.4	56	**3RA6120-0A■30**	**--**
0.37	0.32 ... 1.25	56	**3RA6120-0B■30**	**--**
1.5	1 ... 4	56	**3RA6120-0C■30**	**--**
5.5	3 ... 12	168	**3RA6120-0D■30**	**--**
15	8 ... 32	448	**3RA6120-0E■30**	**--**
			Screw terminals	**Spring-type terminals**
For standard mounting rail or screw fixing, *including 1 pair of main circuit terminals and 1 pair of control circuit terminals*				
0.09	0.1 ... 0.4	56	**3RA6120-1A■32**	**3RA6120-2A■32**
0.37	0.32 ... 1.25	56	**3RA6120-1B■32**	**3RA6120-2B■32**
1.5	1 ... 4	56	**3RA6120-1C■32**	**3RA6120-2C■32**
5.5	3 ... 12	168	**3RA6120-1D■32**	**3RA6120-2D■32**
15	8 ... 32	448	**3RA6120-1E■32**	**3RA6120-2E■32**
For use in the infeed system for 3RA6, *without main circuit terminals with 1 pair of control circuit terminals*				
0.09	0.1 ... 0.4	56	**3RA6120-1A■33**	**3RA6120-2A■33**
0.37	0.32 ... 1.25	56	**3RA6120-1B■33**	**3RA6120-2B■33**
1.5	1 ... 4	56	**3RA6120-1C■33**	**3RA6120-2C■33**
5.5	3 ... 12	168	**3RA6120-1D■33**	**3RA6120-2D■33**
15	8 ... 32	448	**3RA6120-1E■33**	**3RA6120-2E■33**
Article No. supplements for rated control supply voltage				
• 24 V AC/DC			**B**	**B**
• 110 ... 240 V AC/DC			**P**	**P**
For standard mounting rail or screw fixing when using the AS-i add-on module *with 1 pair of main circuit terminals without control circuit terminals* ***Rated control supply voltage 24 V AC/DC***				
0.09	0.1 ... 0.4	56	**3RA6120-1AB34**	**3RA6120-2AB34**
0.37	0.32 ... 1.25	56	**3RA6120-1BB34**	**3RA6120-2BB34**
1.5	1 ... 4	56	**3RA6120-1CB34**	**3RA6120-2CB34**
5.5	3 ... 12	168	**3RA6120-1DB34**	**3RA6120-2DB34**
15	8 ... 32	448	**3RA6120-1EB34**	**3RA6120-2EB34**

[1] The actual starting and rated data of the motor to be protected must be considered when selecting the units.

© Siemens AG 2014

Selection and ordering data

3RA62 50-1CP32

3RA62 50-2DP32

Reversing duty

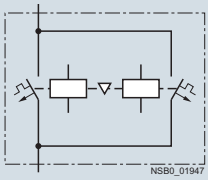

Width 90 mm

Rated short-circuit current I_{CS} = 53 kA at 400 V

Two sets of 3RA69 40-0A adapters are required for screw fixing.

Standard three-phase motor 4-pole at 400 V AC[1)] Standard output *P*	Setting range for solid-state overload release	Instantaneous overcurrent release	Article No.	Article No.
kW	A	A		
For use with the infeed system for 3RA6 and with the AS-i add-on module or as a replacement device, without main and control circuit terminals				
0.09	0.1 ... 0.4	56	**3RA6250-0A■30**	--
0.37	0.32 ... 1.25	56	**3RA6250-0B■30**	--
1.5	1 ... 4	56	**3RA6250-0C■30**	--
5.5	3 ... 12	168	**3RA6250-0D■30**	--
15	8 ... 32	448	**3RA6250-0E■30**	--
			Screw terminals	**Spring-type terminals**
For standard mounting rail or screw fixing, *including 1 pair of main circuit terminals and 1 pair of control circuit terminals*				
0.09	0.1 ... 0.4	56	**3RA6250-1A■32**	**3RA6250-2A■32**
0.37	0.32 ... 1.25	56	**3RA6250-1B■32**	**3RA6250-2B■32**
1.5	1 ... 4	56	**3RA6250-1C■32**	**3RA6250-2C■32**
5.5	3 ... 12	168	**3RA6250-1D■32**	**3RA6250-2D■32**
15	8 ... 32	448	**3RA6250-1E■32**	**3RA6250-2E■32**
For use in the infeed system for 3RA6, *without main circuit terminals with 1 pair of control circuit terminals*				
0.09	0.1 ... 0.4	56	**3RA6250-1A■33**	**3RA6250-2A■33**
0.37	0.32 ... 1.25	56	**3RA6250-1B■33**	**3RA6250-2B■33**
1.5	1 ... 4	56	**3RA6250-1C■33**	**3RA6250-2C■33**
5.5	3 ... 12	168	**3RA6250-1D■33**	**3RA6250-2D■33**
15	8 ... 32	448	**3RA6250-1E■33**	**3RA6250-2E■33**
Article No. supplements for rated control supply voltage				
• 24 V AC/DC			**B**	**B**
• 110 ... 240 V AC/DC			**P**	**P**
For standard mounting rail or screw fixing when using the AS-i add-on module *with 1 pair of main circuit terminals without control circuit terminals* ***Rated control supply voltage 24 V AC/DC***				
0.09	0.1 ... 0.4	56	**3RA6250-1AB34**	**3RA6250-2AB34**
0.37	0.32 ... 1.25	56	**3RA6250-1BB34**	**3RA6250-2BB34**
1.5	1 ... 4	56	**3RA6250-1CB34**	**3RA6250-2CB34**
5.5	3 ... 12	168	**3RA6250-1DB34**	**3RA6250-2DB34**
15	8 ... 32	448	**3RA6250-1EB34**	**3RA6250-2EB34**

[1)] The actual starting and rated data of the motor to be protected must be considered when selecting the units.

© Siemens AG 2014

Overview

Accessories for SIRIUS 3RA6 compact starters

The following accessories are available specially for the 3RA6 compact starters:

- AS-i add-on module:
  see page 4/92 onwards "AS-interface add-on modules"
- External auxiliary switch blocks: Snap-on auxiliary switch as versions 2 NO, 2 NC and 1 NO + 1 NC with screw or spring-type terminals; the contacts of the auxiliary switch block open and close jointly with the main contacts of the compact starter. The NC contacts are designed as mirror contacts.
- Control kit: Aid for manually closing the main contacts in order to check the wiring and motor direction under conditions of short-circuit protection
- Adapter for screw fixing the compact starter, including push-in lugs
- Main circuit terminals: Available with screw and spring-type terminals
- Main circuit terminals mixed connection method:
  With the main circuit terminals mixed connection method it is also possible in the main circuit to switch from screw terminals on the line side to spring-type terminals on the outgoing side. This enables for example the side-by-side mounting of several compact starters and their cost-efficient connection using three-phase
  busbars on the infeed side. The motors are then connected directly by the quick and reliably contacting spring-type connection method.

Accessories for UL applications

The terminal block for "Self-Protected Combination Motor Controller", type E is available for complying with the clearance and creepage distances demanded according to UL 508.

Accessories for infeed using three-phase busbar systems

The three-phase busbars can be used as an easy, time-saving and clearly arranged means of feeding SIRIUS 3RA6 compact starters with screw connection. Motor starter protector sizes S00 and S0 can also be integrated.

The busbars are suitable for between 2 and 5 devices. However, any kind of extension up to a maximum summation current of 63 A is possible by clamping the tags of an additional busbar (rotated by 180°) underneath the terminals of the respective last motor starter protector.

A connecting piece is required for the combination with 3RV1 motor starter protector size S00. Motor starter protectors S00 and S0 of the 3RV2 series can be combined in any way (without a special connecting piece). The motor starter protectors are supplied by appropriate infeed terminals. Special infeed terminals are required for constructing "Type E Starters" according to UL/CSA.

The three-phase busbar systems are finger-safe but empty connection tags must be fitted with covers. They are designed for any short-circuit stress which can occur at the output side of connected SIRIUS 3RA6 compact starters or motor starter protectors.

Busbar adapters for 60 mm systems

The compact starters are mounted directly with the aid of busbar adapters on busbar systems with 60 mm center-to-center clearance in order to save space and to reduce infeed times and costs. These feeders are suitable for copper busbars with a width from 12 to 30 mm. The busbars can be 4 to 5 mm or 10 mm thick.

The 8US busbar system can be loaded with a maximum summation current of 630 A.

The "reversing starter" version requires a device holder along side the busbar adapter for lateral mounting.

The compact starters are snapped onto the adapter and connected on the line side. This prepared unit is then plugged directly onto the busbar system, and is thus connected both mechanically and electrically at the same time.

Note:

For more accessories such as incoming and outgoing terminals, flat copper profiles etc., see Catalog LV 10.

Accessories for operation with closed control cabinet doors

Door-coupling rotary operating mechanisms for standard and emergency-stop applications are available for operating the compact starter with closed control cabinet doors.

© Siemens AG 2014

Selection and ordering data

	Version	Article No.
Accessories specially for 3RA6 compact starters		
3RA6950-0A	**Control kit** For mechanical actuation of the compact starter	**3RA6950-0A**
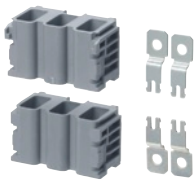 3RA6940-0A	**Adapters for screw fixing the compact starter** (set including push-in lugs) Direct-on-line starters require one set, reversing starters two sets.	**3RA6940-0A**
		Screw terminals
3RA6911-1A	**Auxiliary switch blocks for compact starters** • 2 NO • 2 NC • 1 NO +1 NC (these auxiliary contacts are positively driven.)	 **3RA6911-1A** **3RA6912-1A** **3RA6913-1A**
3RA6920-1A	**Main circuit terminals** (incoming and outgoing side)	**3RA6920-1A**
3RA6920-1B	**Control circuit terminals** • For 3RA61 • For 3RA62	 **3RA6920-1B** **3RA6920-1C**
		Spring-type terminals
3RA6911-2A	**Auxiliary switch blocks for compact starters** • 2 NO • 2 NC • 1 NO +1 NC (these auxiliary contacts are positively driven.)	 **3RA6911-2A** **3RA6912-2A** **3RA6913-2A**
3RA6920-2A	**Main circuit terminals** (incoming and outgoing side)	**3RA6920-2A**
3RA6920-2B	**Control circuit terminals** • For 3RA61 • For 3RA62	 **3RA6920-2B** **3RA6920-2C**

© Siemens AG 2014

Selection and ordering data (continued)

	Version	Article No.
Accessories specially for 3RA6 compact starters *(continued)*		
3RA6920-3A	**Main circuit terminals mixed connection method** 1 set comprises: • 1 joint block on the line side with screw terminals • 1 joint block on the outgoing side with spring-type terminals	**3RA6920-3A**

	Version	Article No.
Terminals for "Self-Protected Combination Motor Controllers (Type E)" acc. to UL 508 for infeed through parallel wiring with compact starters		
3RV2928-1H	*Note:* *UL 508 demands 1-inch clearance and 2-inch creepage distance at line side for "Combination Motor Controller Type E". Terminal blocks are not required for use according to CSA. These terminal blocks cannot be used in combination with 3RV19 .5 three-phase busbars.* **Terminal blocks type E** For extended clearance and creepage distances (1 and 2 inch)	**3RV2928-1H**

	Number of compact starters and motor starter protectors that can be connected Without lateral accessories	Modular spacing	Rated current I_n at 690 V	For motor starter protectors	Article No.
		mm	A	Size	
Three-phase busbars for infeed with 3RA6					
	For feeding several compact starters and/or motor starter protectors with screw terminals, mounted side-by-side on standard mounting rails, insulated, with touch protection.				
3RV1915-1AB	2	45	63	S00, S0[1]	**3RV1915-1AB**
3RV1915-1BB	3	45	63	S00, S0[1]	**3RV1915-1BB**
3RV1915-1CB	4	45	63	S00, S0[1]	**3RV1915-1CB**
3RV1915-1DB	5	45	63	S00, S0[1]	**3RV1915-1DB**

[1] Not suitable for 3RV11/3RV21 motor starter protectors for motor protection with overload relay function and for 3RV17/3RV27 and 3RV18/3RV28 circuit breakers according to UL 489 / CSA C22.2 No.5-02.
Joint clamping of 3RV1 motor starter protector sizes S00 and S0 is not possible on account of the different modular spacings and the different height of the terminals. The 3RV1915-5DB connecting piece is available for connecting the compact starters to the 3RV1 motor starter protector size S00. Motor starter protectors S00/S0 of the 3RV2 series can be jointly clamped; no connecting piece has to be used.

	Version	Modular spacing	For motor starter protectors	Article No.
		mm	Size	
Covers for connection tags of the three-phase busbars				
3RV1915-6AB	Touch protection for empty positions	--	S00, S0	**3RV1915-6AB**

© Siemens AG 2014

Selection and ordering data (continued)

	Conductor cross-section Solid or stranded	Finely stranded with end sleeve	AWG cables, solid or stranded	Tightening torque	For compact starters and motor starter protectors	Article No.
	mm²	mm²	AWG	Nm	Size	
Three-phase feeder terminals for three-phase busbars						
3RV1925-5AB	**Connection from top**					
	2.5 ... 25	4 ... 16	10-4	4	S0	**3RV1925-5AB**
3RV2915-5B	**Connection from below**[1]					
	2.5 ... 25	4 ... 16	10-4	Input: 4; Output: 2 ... 2.5	S00, S0	**3RV2915-5B**
Three-phase infeed terminals for constructing "Type E Starters" according to UL 508 for three-phase busbars						
3RV2925-5EB	**Connection from top**					
	2.5 ... 25	4 ... 16	10-4	--	S0	**3RV2925-5EB**

[1] This terminal is connected in place of a switch, please take the space requirement into account.

	Version	Article No.
Busbar adapters for 60 mm system		
8US12 11-1NS10	For flat copper profiles according to DIN 46433 Width: 12 ... 30 mm Thickness: 4 ... 5 mm or 10 mm	**8US1211-1NS10**
Device holders for lateral mounting along side the busbar adapter for 60 mm systems		
8US12 50-1AA10	Required in addition to the busbar adapter for mounting a reversing starter	**8US150-1AA10**

	Version	Color of handle	Version of extension shaft	Article No.
			mm	
Door-coupling rotary operating mechanisms for operating the compact starter with closed control cabinet doors				
3RV2926-0B	The door-coupling rotary operating mechanisms consist of a knob, a coupling driver and a 130 mm long extension shaft (6 mm x 6 mm). The door-coupling rotary operating mechanisms are designed to degree of protection IP65. The door interlocking prevents accidental opening of the control cabinet door in the ON position of the motor starter protector. The OFF position can be locked with up to 3 padlocks.			
	Door-coupling rotary operating mechanisms	Black	130	**3RV2926-0B**
	EMERGENCY-STOP door-coupling rotary operating mechanisms	Red/yellow	130	**3RV2926-0C**

© Siemens AG 2014

Selection and ordering data (continued)

	Version	Article No.
Tools for opening spring-type terminals		
3RA2908-1A	**Screwdrivers** For all SIRIUS devices with spring-type terminals Length approx. 200 mm, 3.0 mm x 0.5 mm, titanium gray/black, partially insulated	**Spring-type terminals** **3RA2908-1A**
Blank labels		
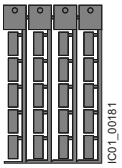 3RT2900-1SB20	**Unit labeling plates**[1)] for SIRIUS devices 20 mm x 7 mm, titanium gray	**3RT2900-1SB20**

[1)] PC labeling system for individual inscription of unit labeling plates available from: murrplastik Systemtechnik GmbH www.murrplastik.com.

More information

The system manual "SIRIUS Compact Starter and Accessories" can be downloaded from the Download Center at https://support.automation.siemens.com/WW/view/en/27136554/133300.

© Siemens AG 2014

Overview

Various AS-i add-on modules are available for communication of the 3RA6 compact starter with the control system using AS-Interface:

- Standard version
- With two local inputs
- With two free external inputs
- With one free external input and one free external output
- With two free external outputs
- For local control

The AS-i add-on modules can be combined only in connection with compact starters with a rated control supply voltage of 24 V AC/DC.

AS-i add-on module for local controller

With this new module it is also possible for the connected compact starter to be operated directly using simple switches, i.e. without recourse to AS-i communication, if required.

"Automatic" mode

NC contacts can be connected to the inputs Y2 and Y4 through the local terminals on the AS-i add-on module. If the "+" connections are connected simultaneously to both local inputs, the AS-i add-on module will be in "Automatic" mode, i.e. it will communicate with the control system through AS-Interface.

Local control

Opening the two inputs Y2 and Y4 will result in the direct disconnection of the compact starter. Operation through AS-i communication is finished and the compact starter can now be switched on and off directly using NO contacts (one NO contact per direction of rotation on the reversing starter).

"LED AUX Power" must light up green, the 24 V DC supply must be ensured and the AS-i control supply voltage must no longer be applied.

Resetting to "Automatic" mode

Simultaneous application of a "1" signal at the local inputs. The availability bit DI 0 is switched to a "1" signal.

If AS-i communication is reset, the motor is first switched off and then on again when requested by the control system.

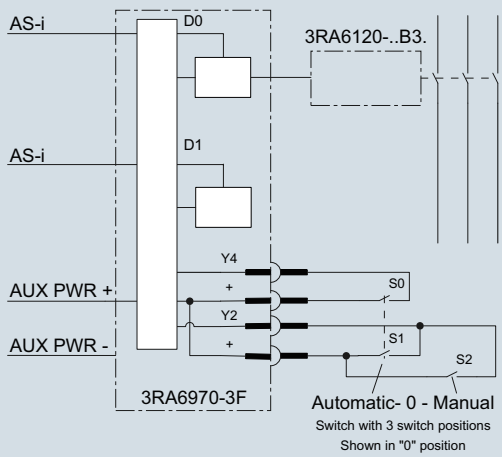

Switch with 3 switch positions			
Switch	Automatic	0	Manual
S0	Closed	Open	Open
S1	Closed	Open	Open
S2	Open	Open	Closed

NSB0_02096a

Circuit diagram example for controlling a 3RA61 20 direct-on-line starter using an AS-i add-on module for local control

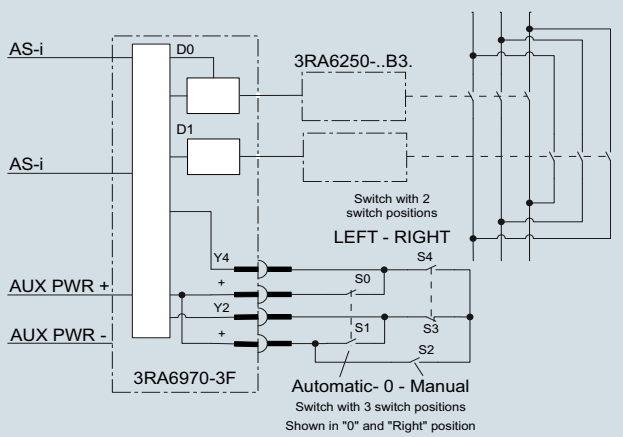

Switch with 3 switch positions			
Switch	Automatic	0	Manual
S0	Closed	Open	Open
S1	Closed	Open	Open
S2	Open	Open	Closed

Switch with 2 switch positions		
Switch	Left	Right
S3	Open	Closed
S4	Closed	Open

NSB0_02097a

Circuit diagram example for controlling a 3RA6250 reversing starter using an AS-i add-on module for local control

© Siemens AG 2014

Selection and ordering data

	Version	Article No.
AS-i add-on modules		
3RA6970-3A	**Standard version** For communication of the compact starter with the control system using AS-Interface	**3RA6970-3A**
	With two local inputs For safe disconnection through local safety relays, e.g. cable-operated switches	**3RA6970-3B**
	With two free external inputs Replaces the digital standard inputs "Motor On" and "Group warning"	**3RA6970-3C**
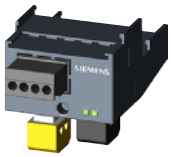 3RA6970-3B to -3F	**With one free external input and one free external output** Replaces the digital standard input "Group warning"	**3RA6970-3D**
	With two free external outputs Only for direct-on-line starters, replaces the digital standard output "Motor left"	**3RA6970-3E**
	For local control Control of the compact starter optionally using AS-Interface or local switches	**3RA6970-3F**
Spare parts for AS-i add-on modules		
	Connectors for data and auxiliary supply cable with 2 insulation displacement terminations for standard litz wires 2 x 0.5 ... 0.75 mm^2	
	• Flat, yellow, extender	**3RK1901-0NA00**
	• Flat, black, extender	**3RK1901-0PA00**
Accessories for AS-i add-on modules		
3RK1904-2AB02	**AS-Interface addressing unit V 3.0** • For AS-Interface modules and sensors and actuators with integrated AS-Interface in accordance with AS-i Specification V3.0 • For setting the AS-i address of standard slaves, and slaves with extended addressing mode (A/B slaves) • With input/output test function and many other commissioning functions • Battery operation with 4 batteries type AA (IEC LR6, NEDA 15) • Scope of supply: - Addressing unit with 4 batteries - Addressing cable, with M12 plug to addressing plug (hollow plug), length 1.5m	**3RK1904-2AB02**

© Siemens AG 2014

Overview

The infeed system for 3RA6 compact starters enables far less wiring in the main circuit and, thanks to the easy exchangeability of the compact starters, reduces the usual downtimes for maintenance work during the plant's operating phase.

The infeed system provides the possibility of completely prewiring the main circuit without a compact starter needing to be connected at the same time. As the result of the removable terminals in the main circuit, compact starters can be integrated in an infeed system in an easy manner (without the use of tools).

In addition, the integrated PE bar means it is optionally possible to connect the motor cable directly to the infeed system without additional intermediate terminals. The infeed system for 3RA6 compact starters is designed for summation currents up to 100 A with a maximum 70 mm² conductor cross-section on the feeder terminal block.

The infeed system can be mounted on a standard mounting rail or flat surfaces.

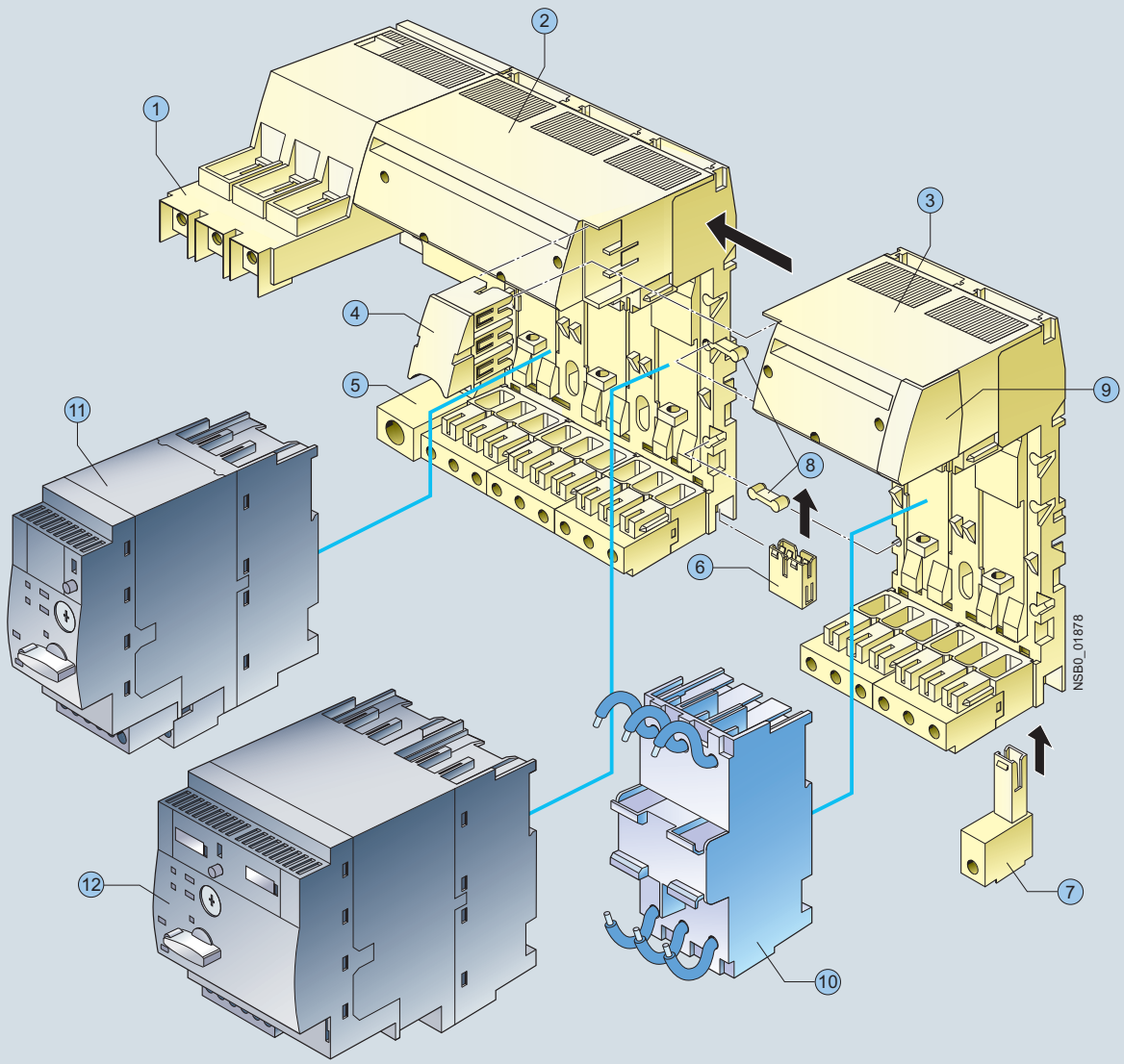

1. Feeder terminal
2. Three-socket expansion module
3. Two-socket expansion module
4. Expansion plug
5. PE infeed
6. PE expansion plug
7. PE pick-off
8. Connecting wedges
9. End cover
10. 45 mm adapter for SIRIUS motor starter protector size S0
11. 3RA61 direct-on-line starter
12. 3RA62 reversing starter

Infeed system for 3RA6 compact starters

© Siemens AG 2014

Overview (continued)

① ***Infeed***

The 3-phase infeed is available with screw connection (25/35 mm^2 up to 63 A or 50/70 mm^2 up to 100 A) and spring-type connection (25/35 mm^2 up to 63 A).

The infeed with spring-typed terminal can be fitted on the left as well on as the right to an expansion module.

The infeed with screw terminal is supplied only with a 3-socket expansion module and permanently fitted on the left side.

The infeeds with screw connection enable connection of the main conductors (L1, L2, L3) either from above or from below.

The infeed with screw connection is supplied complete with 1 end cover, the infeed with spring-load connection complete with 2 end covers.

② ***Three-socket expansion modules***

The expansion module with 3 sockets for compact starters is available with screw connection and with spring-type connection.

Expansion modules enable the infeed system to be expanded and can be fitted to each other in any number.

Two expansion modules are held together with the help of 2 connecting wedges and 1 expansion plug. These assembly parts are included in the scope of supply of the respective expansion module.

When the infeed system for 3RA6 is used, the compact starters (plug-in modules) are easily assembled and disassembled even when live.

Optional possibilities:
- PE connection on motor outgoing side
- Outfeed for external auxiliary devices
- Connection to 3RV29 infeed system
- Integration of SIRIUS 3RV1 and 3RV2 motor starter protectors size S0 up to 25 A (using 3RA6890-0BA adapter)

③ ***Two-socket expansion modules***

If only 2 instead of 3 additional sockets are required, then the 2 -socket expansion module is the right choice. It has the same functionality as the 3-socket expansion module.

④ ***Expansion plug***

Two expansion modules can be connected together using the expansion plug. Flexible expansion of the infeed system is thus possible.

⑤ ***PE infeeds***

This module enables a PE cable to be connected.

The PE infeed can be ordered with screw connection and spring-type connection (35 mm^2) and can be fitted on the right or left to the expansion block.

⑥ ***PE expansion plug***

The PE expansion plug is inserted from below and enables two PE bars to be connected.

⑦ ***PE pick-off***

The PE pick-off is available with screw connection and spring-type connection (6/10 mm^2). It is snapped into the infeed system from below.

⑧ ***Connecting wedges***

Two connecting wedges are used to hold together 2 expansion modules.

⑨ ***End covers***

On the last expansion module of a row, the socket provided for the expansion plug can be covered by inserting the end cover.

⑩ ***45 mm adapters for SIRIUS 3RV1, 3RV2 motor starter protectors***

SIRIUS 3RV1 and 3RV2 motor starter protectors size S0 with screw connection can be fitted to the adapter, enabling them to be plugged into the infeed system.

IP20 terminal covers for increasing finger-safety

Universally configured terminal covers are available for the 3-phase infeeds with screw connection 25/35 mm^2 and 50/70 mm^2:

- 3RA68 80-2AB terminal covers for infeeds with screw connection 25/35 mm^2 (3RA6812-8AB/AC)
- 3RA68 80-3AB terminal covers for infeeds with screw connection 50/70 mm^2 (3RA6813-8AB/AC)

The terminal covers can be used in two ways on the infeed terminals of the infeeds with screw connection 25/35 mm^2 and 50/70 mm^2 (see illustration):

- If the terminals are connected, the cables are also covered:
  - by approx. 14 mm with the 3RA6880-2AB
  - by approx. 18 mm with the 3RA6880-3AB
- On clamping points without connected cables, the covers can be turned once and then pushed over the clamping points for finger-safe covering of the metal parts.

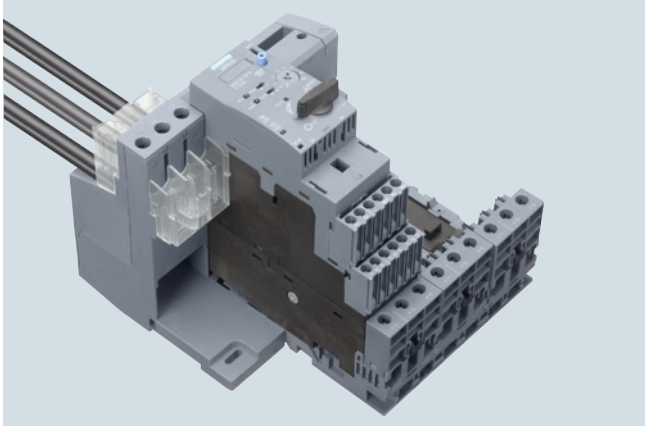

Use of the 3RA6880-2AB terminal cover on the infeed with screw connection 25/35 mm^2 (3RA6812-8AB/AC). The upper cover increases the finger-safety for the connected conductors. The identical lower cover is turned for use and prevents touching of the voltage-carrying metal parts of the feeder terminal. For better recognition, the covers are shown as transparent in this illustration and not in their original color.

Terminal blocks

Using the terminal block the 3 phases can be fed out of the system; this means that single-phase, two-phase and three-phase components can also be integrated in the system.

After the end cover is pulled out, the terminal block can be plugged onto an expansion module.

Expansion plug for SIRIUS 3RV29 infeed systems

After the end cover is pulled out, the expansion plug for the SIRIUS 3RV29 infeed system can be plugged onto an expansion module. It connects the infeed system for 3RA6 compact starters with the SIRIUS 3RV29 infeed system.

© Siemens AG 2014

Overview (continued)

Maximum rated operational current

The following maximum rated operational currents apply for the components of the infeed system for 3RA6:

Component	Maximum rated operational current A
Infeed with screw connection 50/70 mm²	100
Infeed with screw connection 25/35 mm²	63
Infeed with spring-type connection 25/35 mm²	63
Expansion plug	63

With side-by-side mounting of several expansion modules, the maximum rated operational current from the second expansion module to the end of the row is 63 A.

Proposal for upstream short-circuit protection devices

The following short-circuit data apply for the components of the infeed system for 3RA6 compact starters.

Conductor cross-section mm²	Inscriptions	Proposal for upstream short-circuit protection device
Short-circuit protection for infeed block (25/35 mm²) with screw connection		
2.5 ... 35	$I_{d,\,max}$ = 19 kA, I^2t = 440 kA²s	**3RV1041-4JA10**
Short-circuit protection for infeed block (50/70 mm²) with screw connection		
2.5 ... 70	$I_{d,\,max}$ = approx. 22 kA	**3RV1041-4MA10**
Short-circuit protection for infeed block with spring-type connection		
4	$I_{d,\,max}$ = 9.5 kA, I^2t = 85 kA²s	**3RV1021-4DA10**
6	$I_{d,\,max}$ = 12.5 kA, I^2t = 140 kA²s	**3RV1031-4EA10**
10	$I_{d,\,max}$ = 15 kA, I^2t = 180 kA²s	**3RV1031-4HA10**
16/25	$I_{d,\,max}$ = 19 kA, I^2t = 440 kA²s	**3RV1041-4JA10**
Short-circuit protection for terminal block		
1.5	$I_{d,\,max}$ = 7.5 kA	**5SY...** [1]
2.5	$I_{d,\,max}$ = 9.5 kA	
4	$I_{d,\,max}$ = 9.5 kA	
6	$I_{d,\,max}$ = 12.5 kA	

[1] To prevent the possibility of short circuits, the cables on the terminal block must be installed so that they are short-circuit proof according to EN 60439-1 Section 7.5.5.1.2.

© Siemens AG 2014

Selection and ordering data

	Version		Article No.
Three-phase infeeds and expansion modules			
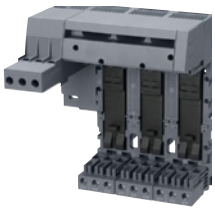 3RA6812-8AB	**Infeeds with screw connection 25/35 mm² left**		**Screw terminals**
	Infeeds with screw connection at line side with a permanently fitted 3-socket expansion module with screw or spring-type terminals on the outgoing side and integrated PE bar		
	Expansion module with 3 sockets for 3 direct-on-line starters or 1 direct-on-line starter and 1 reversing starter		
	• Screw terminals on the outgoing side		**3RA6812-8AB**
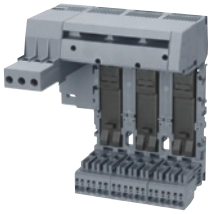 3RA6812-8AC	• Spring-type terminals on the outgoing side		**3RA6812-8AC**
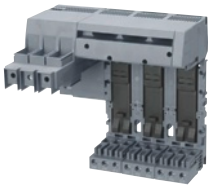 3RA6813-8AB	**Infeeds with screw connection 50/70 mm² left**		**Screw terminals**
	Infeeds with screw connection at line side with a permanently fitted 3-socket expansion module with screw or spring-type terminals on the outgoing side and integrated PE bar		
	Expansion module with 3 sockets for 3 direct-on-line starters or 1 direct-on-line starter and 1 reversing starter, suitable for UL operation according to UL 508 Type E		
	• Screw terminals on the outgoing side		**3RA6813-8AB**
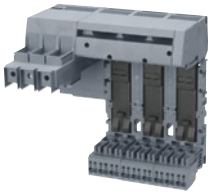 3RA6813-8AC	• Spring-type terminals on the outgoing side		**3RA6813-8AC**
3RA6830-5AC	**Infeeds with spring-type connection 25/35 mm² left or right**		**Spring-type terminals**
	Up to 63 A		**3RA6830-5AC**

© Siemens AG 2014

Selection and ordering data (continued)

	Version	Article No.
Expansion modules		
3RA6822-0AB	**Two-socket expansion modules** with screw or spring-type connection and integrated PE bar with 2 sockets for 2 direct-on-line starters or 1 reversing starter Expansion plug and 2 connecting wedges are included in the scope of supply.	
		Screw terminals
	• Screw terminals	**3RA6822-0AB**
		Spring-type terminals
3RA6822-0AC	• Spring-type terminals	**3RA6822-0AC**
3RA6823-0AB	**Three-socket expansion modules** with screw or spring-type connection and integrated PE bar with 3 sockets for 3 direct-on-line starters or 1 direct-on-line starter and 1 reversing starter Expansion plug and 2 connecting wedges are included in the scope of supply.	
		Screw terminals
	• Screw terminals	**3RA6823-0AB**
		Spring-type terminals
3RA6823-0AC	• Spring-type terminals	**3RA6823-0AC**

© Siemens AG 2014

Selection and ordering data (continued)

	Version	Article No.
Accessories for infeed systems for 3RA6		
	PE infeeds 25/35 mm²	
		Screw terminals
3RA6860-6AB	• Screw terminals	**3RA6860-6AB**
		Spring-type terminals
3RA6860-5AC	• Spring-type terminals	**3RA6860-5AC**
	PE pick-offs 6/10 mm²	
		Screw terminals
3RA6870-4AB	• Screw terminals	**3RA6870-4AB**
		Spring-type terminals
3RA6870-3AC	• Spring-type terminals	**3RA6870-3AC**
	Expansion plugs	
3RA6890-0EA	PE expansion plug	**3RA6890-0EA**
3RA6890-1AB	Expansion plug between 2 expansion modules Is included in the scope of supply of the expansion modules.	**3RA6890-1AB**
3RA6890-1AA	Expansion plug for SIRIUS 3RV29 infeed system Connects infeed system for 3RA6 to 3RV29 infeed system	**3RA6890-1AA**

© Siemens AG 2014

Selection and ordering data (continued)

	Version	Article No.
Accessories for infeed systems for 3RA6 *(Continued)*		
3RA6890-0BA	**45 mm adapters** For SIRIUS size S0 3RV1 and 3RV2 motor starter protectors up to 25 A • Screw terminals (conductor cross-section AWG 10)	**Screw terminals** **3RA6890-0BA**
3RA6880-2AB	**Terminal covers for infeeds with screw connection** IP 20 terminal covers for infeeds with screw connection 25/35 mm² (3RA68 12-8AB/AC) (2 units per pack)	**3RA6880-2AB**
3RA6880-3AB	IP 20 terminal covers for infeeds with screw connection 50/70 mm² (3RA68 13-8AB/AC) (2 units per pack)	**3RA6880-3AB**
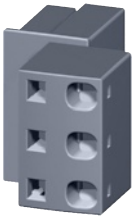 3RV2917-5D	**Terminal blocks** For integration of single-phase, 2-phase and 3-phase external components • Spring-type terminals	**Spring-type terminals** **3RV2917-5D**
Tools for opening spring-type terminals		
3RA2908-1A	**Screwdrivers** For all SIRIUS devices with spring-type terminals Length approx. 200 mm, 3.0 mm x 0.5 mm, titanium gray/black, partially insulated	**Spring-type terminals** **3RA2908-1A**

© Siemens AG 2014

Overview

SIRIUS M200D AS-i Basic motor starters with manual local operation

The intelligent, highly flexible SIRIUS M200D motor starters for distributed configurations are designed to start, monitor and protect motors and loads up to 5.5 kW.

The M200D motor starters are available in four versions:

M200D AS-i Basic	M200D AS-i Standard	M200D PROFIBUS	M200D PROFINET
Motor control with			
AS-i communication		PROFIBUS	PROFINET
Mechanical or electronic switching			
✓	✓	✓	✓
Electronic switching with soft starter functionality			
--	✓	✓	✓

✓ Function available
-- Function not available

Basic functionality

All M200D motor starter versions have the following functions:

- Available as direct-on-line and reversing starters in a rugged design
- Electromechanical or electronic switching version
- Little variance – only 2 device versions up to 5.5 kW thanks to wide range setting
- All versions have the same enclosure dimensions
- Degree of protection IP65
- Quick and fail-safe wiring of system and motor cables using ISO 23570 plug-in connector technology (Q4/2 and Q8/0)
- Robust and widely used M12 connection method for digital inputs and outputs
- Integrated feeder connector monitoring
- Full motor protection through overload protection and a temperature sensor (PTC, TC)
- Short-circuit and overload protection integrated
- Integrated repair switch lockable with 3 locks (multi-level service)
- Uniform wiring to the G110D/G120D frequency inverters and to the ET200pro distributed peripherals system
- Extensive diagnostics concept using LEDs
- Optional integrated manual local control with key-operated switch (ordering option)
- Optionally available brake actuation with voltages from 180 V DC (no rectifier needed in motor) or 230/400 V AC (order versions)

Benefits

M200D motor starters provide the following advantages for customers:

- High plant availability through plug-in capability of the main circuit, communication and IOs – relevant for installing and replacing devices
- Cabinet-free construction and near-motor installation thanks to the high degree of protection IP65
- The motor starters record the actual current flow for the parameterizable electronic motor overload protection. Reliable messages concerning the overshooting or under-shooting of setpoint values for comprehensive motor protec-tion. All motor protection functions can be defined by simple parameterization
- Low stock levels and low order costs through a wide setting range for the current or a wide setting range for the electronic motor protection of 1:10 (only 2 device versions up to 5.5 kW)
- The integrated wide range for the current enables a single device to cover numerous standard motors of different sizes
- Comprehensive offering of accessories, including ready-as-sembled cables
- The M200D motor starters can be installed with a few manual steps The integrated plug-in technology enables far lower wiring outlay:
  preassembled cables can be plugged directly onto the motor starter module
- Easy and user-friendly installation because all versions have the same enclosure dimensions
- Fast and user-friendly commissioning using optional manual local control
- Increase of process speed through integrated functions such as "Quick Stop" and "Disable Quick Stop", e.g. at points and crossings
- Optional manual local control with momentary-contact and latching operation for easier start-up and easier servicing

Application

The high degree of protection IP65 makes the M200D motor starters suitable in particular for use on extensive conveying systems such as are found in mail sorting centers, airports, automotive factories and the packing industry.

For simple operating mechanism tasks, particularly in conveyor applications, the new SINAMICS G110D frequency inverter series with a performance range from 0.75 kW to 7.5 kW and degree of protection IP65 is the ideal partner for the M200D motor starters.

The SINAMICS G110D frequency inverters permit stepless speed control of three-phase asynchronous motors and meet the requirements of conveyor applications with frequency control (for more information see catalog D 31).

© Siemens AG 2014

Overview

For motor control using AS-Interface there are the following M200D motor starter versions: SIRIUS M200D AS-i Basic and SIRIUS M200D AS-i Standard (basic functionality see page 4/101 "SIRIUS M200D Motor Starters" ⇒ "General Data" ⇒ "Overview").

SIRIUS M200D AS-i Basic

Functionality

- Easy and fast on-site start-up through parameterization of local setting knobs (DIP switches) and rotary coding switches for adjusting the rated operational current. The rotary coding switch has an OFF position for deactivating the overload protection with the help of the thermal motor model when using a temperature sensor.

Communications

- AS-i communication with A/B addressing according to Spec V2.1
- The AS-i bus is connected cost-effectively using an M12 connection on the device. Of the 4 digital inputs, 2 are contained in the process image and can therefore be used in the PLC program. The other 2 inputs are locally effective and permanently assigned with functions.
- The LEDs can provide comprehensive diagnostics of the device on the spot. In addition to diagnostics using the PAE process image, the device can create up to 15 different diagnostic signals per slave. The message with the highest priority can be read out through the AS-i communication. This is yet another new development which distinguishes the M200D AS-i Basic motor starter from the rest of the market and adds innovative technology, maximum availability and transparency to the system.

SIRIUS M200D AS-i Standard

The intelligent, highly flexible M200D AS-i Standard motor starters in A/B technology are designed to start and protect motors and loads up to 5.5 kW. They are available in direct-online or reversing starter versions, in a mechanical version and also an electronic version (the latter with soft start function).

The M200D AS-i Standard motor starter is the most functional member of the SIRIUS motor starter family in the high degree of protection IP65 for AS-i communication. Consistency with other products of the SIRIUS M200D motor starter range and with the frequency converter and ET200pro peripherals system is assured.

Functionality

- AS-i communication with A/B addressing according to Spec 3.0
- Electronic version also with soft start function
- AS-i slave profile 7AE/7A5 with process image 6I/4O
- Full TIA integration: All digital inputs and outputs exist in the cyclic process image and are visible through AS-i, providing maximum flexibility and best adaptability to the application.
- Additionally expanded diagnostics using data record through AS-i bus
- Complete plant monitoring using statistics data record and current value monitoring by means of data records
- Parameterization through AS-i bus with the help of data records or an expanded process image from the user program
- Control of the motor starter using a command data record from the user program
- Flexible assignment of the digital inputs and outputs with all available assignable input actions
- Parameterization using Motor Starter ES at the local interface (ordering option for start-up software)
- Diagnostics with the help of Motor Starter ES (ordering option for start-up software)

Mounting and installation

The M200D motor starters can be installed with a few manual steps. The integrated plug-in technology enables far lower wiring outlay. Connecting cables can be plugged directly onto the motor starter module. Swapping of the connecting wires and malfunctions within the plant are prevented by preassembled cables. The AS-i bus is connected cost-effectively using an M12 connection on the device. All versions have identical enclosure dimensions for easier system design and conversion.

Parameterization and configuration

The particularly robust M200D AS-i Standard motor starter is characterized by numerous functions which can be flexibly parameterized. It enables highly flexible parameterization through the AS-i bus using data records from the user program as well as user-friendly local parameterization using the Motor Starter ES start-up software through the local point-to-point interface.

Functions can be flexibly assigned to the digital inputs and outputs, adapting them to all possible conveyor applications. All motor protection functions, limit values and reactions can be defined by parameterization. The AS-i Standard is unique. In its 6I/4O process image the motor starter sends all 4 digital inputs and the digital output via the process image to the PLC in cyclic mode. System configuration and system documentation are facilitated not least by a number of CAX data.

Operation

The new motor starter generation is characterized by high functionality, maximum flexibility and the highest level of automation.

All digital inputs and outputs exist in the cyclic process image. All limit values for monitoring functions and their reactions are parameterizable and therefore adaptable to the application. The motor starters record the actual current flow. Evaluating the current of the parameterizable solid-state overload protection increases the availability of the drives, as do reliable messages concerning the overshooting or undershooting of setpoint values.

Diagnostics and maintenance

The M200D sets new standards for diagnostics. In addition to diagnostics using the PAE process image and diagnostics by "parameter echo" (up to 15 different diagnostic signals per slave can be read out via AS-i communication), the possibility of reading out diagnostic data records is unique on the market.

The AS-i Standard is recommended in particular for expansive and highly automated system components because the possibility of monitoring devices and systems with data records (statistical data, measured values and device diagnostics) provides an in-depth view of the plant from the control room, guaranteeing the monitoring process and increasing plant availability.

The integrated maintenance timer can be used to implement preventative maintenance and avoid plant downtimes through look-ahead servicing.

Local control of a drive is possible using the ordering option with integrated manual operation. This is yet another new development which distinguishes the M200D AS-i Standard motor starter from the rest of the market and adds innovative technology, maximum availability and transparency to the plant.

© Siemens AG 2014

Overview (continued)

	SIRIUS M200D AS-i Basic	**SIRIUS M200D AS-i Standard**
Device functions (firmware features)		
Slave on the bus		
Fieldbus	✓ AS-i	
Slave type	✓ A/B acc. to Spec 2.1	✓ A/B acc. to Spec 3.0
Profile	✓ 7.A.E	✓ 7.A.E & 7.A.5
Number of assigned AS-i addresses on the bus	✓ 1	✓ 2
Number of stations per AS-i master	✓ Max. 62 devices	✓ Max. 31 devices
AS-i master profile	✓ M3 and higher	✓ M4 and higher
Parameterization		
DIP switches	✓	--
Potentiometer for rated operational current	✓	--
Motor Starter ES	--	✓
Data records through AS-i	--	✓
Diagnostics		
Diagnostics through parameter channel	✓	
Acyclic through data records	--	✓
Expanded process image PAE 4 bytes	--	✓
Process image		
Process image	✓ 4I/3O	✓ 6I/4O
Data channels		
Local optical interface (manual local)	✓	
AS-i bus	✓	
Motor Starter ES via local interface	--	✓
Motor Starter ES via bus	--	
Data records[1] (acyclic)		
Parameterization	--	✓
Diagnostics	--	✓
Measured values	--	✓
Statistics	--	✓
Commands	--	✓
Inputs		
Number	✓ 4	
• Of which in the process image	✓ 2 through AS-i	✓ 4 through AS-i
Input action	✓ Permanently assigned functions, see manual	✓ Parameterizable: flexible
Quick stop	✓ Permanent function: latching, edge-triggered	✓ Parameterizable function: latching (edge-triggered), non-latching (level-triggered)
Outputs		
Number	✓ 1	
Output action	✓ Permanent function: assigned with group fault	✓ Parameterizable: For function, see manual
Brake output		
180 V DC / 230/400 V AC / none	✓	
Motor protection		
Overload protection	✓ Electronic, wide range 1:10	
Short-circuit protection	✓	
Full motor protection	✓	
Temperature sensor	✓ Parameterizable using DIP switches: PTC or Thermoclick or deactivated	✓ Parameterizable using Motor Starter ES, data record: PTC or Thermoclick or deactivated

✓ Function available
-- Function not available

[1] The data records are a reduced selection compared with PROFIBUS/PROFINET.

© Siemens AG 2014

Overview (continued)

	SIRIUS M200D AS-i Basic	**SIRIUS M200D AS-i Standard**
Device functions (firmware features)		
Device function		
Repair switch	✓	
Lower current limit monitoring	--	✓ Parameterizable
Upper current limit monitoring	--	✓ Parameterizable
Zero current detection	✓ Permanent function: disconnection, less than 18.75% of the rated operational current I_e	✓ Parameterizable
Blocking current	✓ Permanent function: starting up of the motor: tripping limit up to 800% of the rated operational current I_e for 10 s Active operation: Threshold for tripping "blocking current" up to 400% of the rated operational current I_e	✓ Parameterizable
Unbalance	✓ Permanent function: up to 30 % of the rated operational current I_e (only mechanical MS)	✓ Parameterizable
Load type	✓ Permanent function: 3-phase	✓ Parameterizable: 1 and 3-phase
Tripping class	✓ Parameterizable using DIP switches: CLASS 10/deactivated	Parameterizable using Motor Starter ES, data record: CLASS 5, 10, 15, 20
Protection against voltage failure	✓	✓ Parameterizable: activated/deactivated
Soft starter control function		
Soft start function	--	✓ Only solid-state version
Bypass function	--	✓ Only solid-state version

✓ Function available
-- Function not available

Application

The M200D AS-i standard is particularly suitable for highly automated applications in conveyor systems, which require that devices and systems be monitored to prevent or limit plant downtime. The option of planning the functions of the motor starter or its interfaces also makes fine-adjustment to the function of the motor starter in the application possible and hence provides for extreme flexibility.

© Siemens AG 2014

Selection and ordering data

M200D AS-i Basic without manual local control

M200D AS-i Basic with manual local control

Version	Article No.					
Electromechanical starters (with integrated contactor)	**3RK1315-6**	■	**S41-**	■	**AA**	■
Setting range for rated operational current / A						
• 0.15 ... 2		**K**				
• 1.5 ... 12		**L**				
Direct-on-line starters/ reversing starters						
• Direct-on-line starters				**0**		
• Reversing starters				**1**		
• Direct-on-line starters with manual local operation				**2**		
• Reversing starters with manual local operation				**3**		
Brake actuation						
• Without brake actuation						**0**
• Brake actuation (230/400 V AC)						**3**
• Brake actuation (180 V DC)						**5**

Version	Article No.					
Electronic starters (with thyristors)	**3RK1315-6**	■	**S71-**	■	**AA**	■
Setting range for rated operational current / A						
• 0.15 ... 2		**K**				
• 1.5 ... 9		**N**				
Direct-on-line starters/ reversing starters						
• Direct-on-line starters				**0**		
• Reversing starters				**1**		
• Direct-on-line starters with manual local operation				**2**		
• Reversing starters with manual local operation				**3**		
Brake actuation						
• Without brake actuation						**0**
• Brake actuation (230/400 V AC)						**3**
• Brake actuation (180 V DC)						**5**

© Siemens AG 2014

Selection and ordering data

M200D AS-i Standard without manual local control

M200D AS-i Standard with manual local control

Version	Article No.					
Electromechanical starters (with integrated contactor)	**3RK1325-6**	■	**S41-**	■	**AA**	■
Setting range for rated operational current / A						
• 0.15 ... 2		**K**				
• 1.5 ... 12		**L**				
Direct-on-line starters/ reversing starters						
• Direct-on-line starters				**0**		
• Reversing starters				**1**		
• Direct-on-line starters with manual local operation				**2**		
• Reversing starters with manual local operation				**3**		
Brake actuation						
• Without brake actuation						**0**
• Brake actuation (230/400 V AC)						**3**
• Brake actuation (180 V DC)						**5**

Version	Article No.					
Electronic starters (with thyristors)	**3RK1325-6**	■	**S71-**	■	**AA**	■
Setting range for rated operational current / A						
• 0.15 ... 2		**K**				
• 1.5 ... 12		**L**				
Direct-on-line starters/ reversing starters						
• Direct-on-line starters				**0**		
• Reversing starters				**1**		
• Direct-on-line starters with manual local operation				**2**		
• Reversing starters with manual local operation				**3**		
Brake actuation						
• Without brake actuation						**0**
• Brake actuation (230/400 V AC)						**3**
• Brake actuation (180 V DC)						**5**

© Siemens AG 2014

Overview

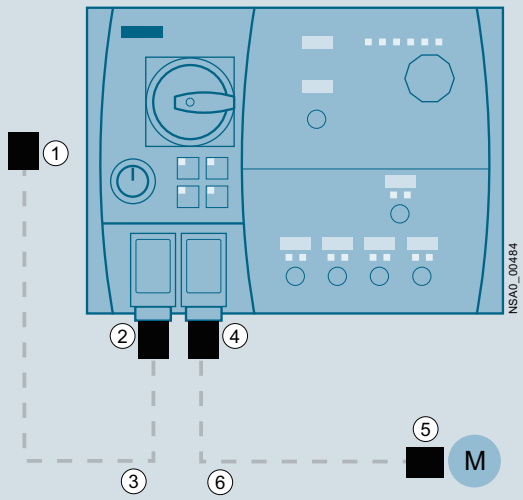

1. Power feeder plug
2. Power connection plug
3. Incoming energy supply cable
4. Motor connection plug
5. Motor plug
6. Motor cable

Power and motor connection on the M200D motor starter (in this example: M200D for AS-i)

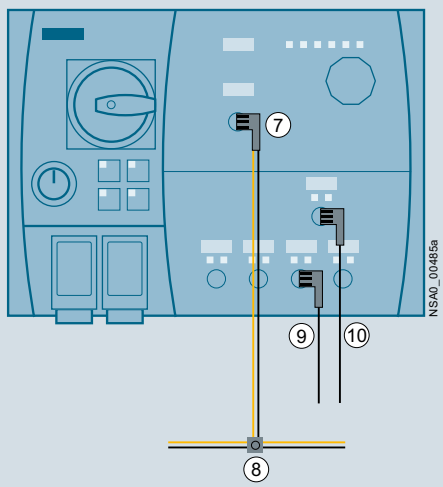

7. Connection for motor control with AS-i communication
8. AS-Interface M12 feeder
9. Connection for digital input (IO communication, 5-pole)
10. Connection for digital output (IO communication, 4 or 5-pole)

Communication connection using AS-Interface and digital inputs and outputs

© Siemens AG 2014

Selection and ordering data

The accessories listed below represent a basic selection sorted by:

- Accessories for all M200D motor starters
- Accessories for M200D motor starters for AS-interface

Note:

More connection technology products, see "Siemens Solution Partners Automation" under "Distributed Field Installation System" technology.

	Version	Article No.
Mountable accessories		
	M200D protective brackets	**3RK1911-3BA00**
Incoming power supply		
	① **Power feeder plugs** Connector set for power supply, e.g. for connecting to T terminal connectors, comprising a coupling enclosure, straight outgoing feeder (with bracket), pin insert for HAN Q4/2, incl. gland	
	• 5 male contacts 2.5 mm^2	**3RK1911-2BS60**
	• 5 male contacts 4 mm^2	**3RK1911-2BS20**
	• 5 male contacts 6 mm^2	**3RK1911-2BS40**
	② **Power connection plugs** Connector set for power supply for connection to M200D motor starters, comprising a cable-end connector hood, angular outgoing feeder, female insert for HAN Q4/2, incl. gland	
	• 5 female contacts 2.5 mm^2 2 female contacts 0.5 mm^2	**3RK1911-2BE50**
	• 5 female contacts 4 mm^2 2 female contacts 0.5 mm^2	**3RK1911-2BE10**
	• 5 female contacts 6 mm^2 2 female contacts 0.5 mm^2	**3RK1911-2BE30**
	② +㉗ ③ **Power connection cable** Assembled at one end with "N" and jumper pin 11 and 12 for plug monitoring, with HAN Q4/2, angular; open at one end; 5 x 4 mm^2	
	• Length 1.5 m	**3RK1911-0DC13**
	• Length 5.0 m	**3RK1911-0DC33**
Motor cable		
	④ **Motor connection plugs** Connector set for motor cable for connection to M200D motor starters, comprising a cable-end connector hood, angular outgoing feeder, pin insert for HAN Q8/0, incl. gland	
	• 8 male contacts 1.5 mm^2	**3RK1902-0CE00**
	• 6 male contacts 2.5 mm^2	**3RK1902-0CC00**
	⑤ **Motor plugs** Connector set for motor cable for connection to motors, comprising a cable-end connector hood, straight outgoing feeder, female insert for HAN 10e, incl. star jumper, incl. gland	
	• 7 female contacts 1.5 mm^2	**3RK1911-2BM21**
	• 7 female contacts 2.5 mm^2	**3RK1911-2BM22**
	④ +㉗ ⑥ **Motor cables, assembled at one end** For connection to M200D motor starter, HAN Q8/0, angular, length 5 m	
	• Motor cables for motor without brake, 4 x 1.5 mm^2	**3RK1911-0EB31**
	• Motor cables for motor without brake with thermistor, 6 x 1.5 mm^2	**3RK1911-0EF31**
	• Motor cable for motor with brake actuation, braking voltage 400 V AC or 180 V DC, 6 x 1.5 mm^2	**3RK1911-0ED31**
	• Motor cable for motor with brake actuation, braking voltage 400 V AC or 180 V DC and thermistor, 8 x 1.5 mm^2	**3RK1911-0EG31**
	• Motor cable for motor with brake actuation, braking voltage 230 V AC, 6 x 1.5 mm^2	**3RK1911-0EH31**
	• Motor cable for motor with brake actuation, braking voltage 230 V AC and thermistor, 8 x 1.5 mm^2	**3RK1911-0EE31**

© Siemens AG 2014

Selection and ordering data (continued)

	Version	Article No.
Motor control with IO communication		
3RK1902-4BA00-5AA0	**M12 plugs, straight** Screw fixing, 5-pole screw terminals, max. 0.75 mm^2, A-coded, max. 4 A	**3RK1902-4BA00-5AA0**
3RK1902-4DA00-5AA0	⑩ **M12 plugs, angular** Screw fixing, 5-pole screw terminals, max. 0.75 mm^2, A-coded, max. 4 A	**3RK1902-4DA00-5AA0**
3RK1902-4H...-5AA0	⑨,㉗⑩ **Control cables, assembled at one end** M12 plugs, angular, screw fixing, 5-pole, 5 x 0.34 mm^2, A-coded, black PUR sheath, max. 4 A • Cable length 1.5 m • Cable length 5 m • Cable length 10 m	 **3RK1902-4HB15-5AA0** **3RK1902-4HB50-5AA0** **3RK1902-4HC01-5AA0**
3RK1902-4PB15-3AA0	**Control cable, assembled at both ends** Straight M12 plug, straight M12 socket, screw fixing, 3-pole, 3 x 0.34 mm^2, A-coded, black PUR sheath, max. 4 A • Cable length 1.5 m	 **3RK1902-4PB15-3AA0**
Further accessories		
3RK1922-3BA00	**Handheld devices** For M200D motor starters (including ET 200pro, ET 200S High-Feature and ECOFAST), for local operation. 3RK1922-2BP00 serial interface cable must be ordered separately.	**3RK1922-3BA00**
	RS 232 interface cablel for serial data link	**3RK1922-2BP00**
	USB interface cables, length 2.5 m	**6SL3555-0PA00-2AA0**
3RK1902-0CW00	**M12 sealing caps** For sealing unused input or output sockets – not for M12 AS-i connection (one set contains 10 sealing caps)	**3RK1901-1KA00**
	Crimping tools for pins/sockets 4 mm^2 and 6 mm^2	**3RK1902-0CW00**
	Dismantling tool for HAN Q4/2	**3RK1902-0AB00**
	Dismantling tool for male and female contacts (HAN Q8/0)	**3RK1902-0AJ00**

4

© Siemens AG 2014

Selection and ordering data (continued)

	Version	Article No.
	Only for M200D motor starters for AS-interface	
	Motor control with AS-i communication	
3RK1902-4GB50-4AA0	⑦ **Control cables, assembled at one end** M12 socket, angular, screw fixing, 4-pole, 4 x 0.34 mm^2, A-coded, black PUR sheath, max. 4 A • Cable length 5 m	**3RK1902-4GB50-4AA0**
3RK1902-4CA00-4AA0	⑦ **M12 socket, angular,** screw fixing, 4-pole screw terminal, max. 0.75 mm^2, A-coded, max. 4 A	**3RK1902-4CA00-4AA0**
3RK1901-1NR21	⑧ **AS-Interface M12 feeder**	
3RK1901-1MN00	**Cable terminating pieces** For sealing of open cable ends (shaped AS-Interface cable) in IP67	**3RK1901-1MN00**
	Further accessories	
3RK1904-2AB02	**AS-Interface addressing unit V 3.0** • For AS-Interface modules and sensors and actuators with integrated AS-Interface in accordance with AS-i Specification V3.0 • For setting the AS-i address of standard slaves, and slaves with extended addressing mode (A/B slaves) • With input/output test function and many other commissioning functions • Battery operation with 4 batteries type AA (IEC LR6, NEDA 15) • Scope of supply: - Addressing unit with 4 batteries - Addressing cable, with M12 plug to addressing plug (hollow plug), length 1.5 m	**3RK1904-2AB02**
3RK1902-4PB15-3AA0	**M12 addressing cables to M12** • Standard M12 cable for addressing slaves with M12 connection, e.g. K60R modules • When using the current version of the 3RK1904-2AB01 addressing unit • 1.5 m	**3RK1902-4PB15-3AA0**

For flat cable	For	Cable length	Cable end in feeder	
AS-i/U_{aux}	M12 socket	--	Not available	**3RK1901-1NR20**
AS-i/U_{aux}	M12 cable box	1 m	Not available	**3RK1901-1NR21**
AS-i/U_{aux}	M12 cable box	2 m	Not available	**3RK1901-1NR22**

© Siemens AG 2014

Overview

3RK4320-3.R51-.BA0

3RK4320-3.Q54-.BA.

3RK4320-5.Q64-.BA.

Portfolio of the SIRIUS 3RK43 MCU motor starter family

The SIRIUS MCU motor starter family (MCU = Motor Control Unit) rounds off the bottom end of the SIRIUS motor starter range.

This series of motor starters in a high degree of protection is a system solution for the cabinet-free controlling of AC loads in the field.

The MCU product range extends from I/O-controlled motor starters – addressing a central sub-distribution board via I/O stations – in a plastic enclosure for simple applications to motor starters with AS-i communication in a rugged metal enclosure for demanding tasks.
(For complete range, see Catalog IC 10 ⇒ Motor Starters for Use in the Field, High Degree of Protection)

The MCU motor starters are completely pre-wired inside, have a high degree of protection and are designed for switching and protecting any AC loads. They are mostly used on standard three-phase motors in direct or reversing duty up to 5.5 kW at 400/500 V AC (electromechanical switching) and 400/460 V AC (electronic switching).

The motor and short-circuit protection integrated in the MCUs consists either of an electromechanical controlgear assembly or solid-state overload protection and a motor starter protector unit for short-circuit protection.

MCUs with metal enclosure are designed for the switching of three-phase motors. Integrated control of the electrically operated motor brake with a braking voltage of 230 V AC or 400 V AC is a standard feature. The braking voltage is routed to the motor over the motor cable.

SIRIUS MCU motor starters have the following main features:

- Direct-on-line or reversing starters
- Up to 5.5 kW
- High degree of protection, namely IP55 on MCU motor starters in a plastic enclosure and IP54 on motor starters in a metal enclosure, enables distributed configurations in the field and saves space in the control cabinet
- Electromechanical or electronic switching
- Easy and user-friendly control and monitoring through AS-Interface bus communication
- Controlled stopping through 230 V AC brake control or 400 V AC for motor brake
- Integrated lockable repair switch
- Comprehensive motor protection thanks to integrated overload and short-circuit protection with SIRIUS 3RV motor starter protectors or integrated solid-state overload relays (solid-state starters)
- Overload protection with thermal release (bimetal) or solid-state overload relay with wide range setting
- Power and load connection by means of an M screw
- Main power loop possible (daisy chain; max. 2 x 6 mm^2)
- Robust and widely used M12 connection method for digital inputs and outputs to connect I/O stations and the AS-i bus connection increase flexibility and prevent errors in the system configuration.
- The LEDs (for AS-i bus connection) can provide comprehensive diagnostics of the device on the spot.
- Simple mounting for AS-i and external auxiliary voltage (24 V DC) over an M12 connection
- Manual operation: An integrated key-operated switch "MAN-0-AUTO" and a selector button for switching on, switching off and changing the direction of rotation for control purposes during commissioning or maintenance

MCU motor starters with AS-i bus connection in a plastic enclosure

This motor starter version offers an economical solution for controlling and monitoring conveyor belts, pumps, fans or compressors.

On this MCU the control commands and the status queries are sent over the AS-i bus. The yellow cable (bus) and the black AS-i cable for 24 V DC AUX are connected through an M12 plug.

The transparent enclosure top permits monitoring of the status LEDs. These MCUs come completely pre-wired inside.

MCU motor starters with AS-i bus connection in a metal enclosure for electromechanical or electronic switching

These MCUs with their rugged metal enclosure in degree of protection IP54 are ideal in particular for controlling and monitoring three-phase motors in harsh ambient conditions such as are often found in conveyor systems.

A special feature of this version is the manual local operation of the motor starter.

The key-operated switch "MAN-0-AUTO" for selecting Manual, 0 or Automatic mode prevents unauthorized changes of operating mode. In automatic mode the MCU is controlled through the AS-i bus.

In manual mode a selector button is used for switching on, switching off and changing the direction of rotation.

The status/diagnostics LEDs fitted to the cover indicate the current operating state of the motor starter.

Unlike the electromechanical starter, the electronic motor starter has wear-free solid-state switching devices which guarantee a high switching frequency.

Another highlight of the electronic switching version is the solid-state overload relay for motor protection, which has a wide setting range for the motor current.

© Siemens AG 2014

Overview (continued)

	3RK4320-3.R51-.BA0	3RK4320-3.Q54-.BA.	3RK4320-5.Q64-.BA.
Type	**SIRIUS MCU motor starters for AS-Interface**		
	Plastic enclosure	**Metal enclosure**	**Metal enclosure**
	Electromechanical switching	**Electromechanical switching**	**Electronic switching**
Device functions (software features)			
Slave on the bus			
Fieldbus	✓ AS-i		
Bus connection	✓ M12		
Slave type	✓ AS-i Spec 2.0	✓ A/B acc. to Spec 2.1	
AS-i Slave Profile IO.ID.ID2	✓ 3.0.F	✓ 7.A.E	
Number of assigned AS-i addresses on the bus	✓ 1		
Number of stations	✓ Max. 31 devices	✓ Max. 62 devices	
Diagnostics			
LED	✓		
Process image			
Process image	✓ 2I/2O	✓ 4I/3O	
Data channels			
Manual local operation	--	✓	
Inputs			
Number	✓ 1	✓ 2	
• Of which in the process image	✓ DI1	✓ DI2 / DI3	
Connection	✓ Screw terminal, internal	✓ M12 - A coded	
Input signal	✓ Switching contact or 2-wire Bero	✓ Switching contact or 2/3-wire Bero	
Input level	✓ AS-i +		
Outputs			
Number	✓ 1 on the direct-on-line starter 0 on the reversing starter	✓ 1	
• Of which in the process image	✓ DO1	✓ DO2	
Connection	✓ Screw terminal, internal	✓ M12 - A coded	
Output level	✓ Relay contact, floating	✓ AUX-PWR+ (24 V DC)	
Motor protection			
Overload protection	✓ Thermal overload release		✓ Electronic overload releases Wide range
Short-circuit protection	✓		
Auto RESET	--		✓
Temperature sensor	--	✓ TC (Thermoclick)	
Device function			
Response when repair switch is tripped	✓ Signal through AS-i		
Plug monitoring	--	Possible (with plug option)	

✓ Function available
-- Function not available.

© Siemens AG 2014

Overview

MCU for AS-i, plastic enclosure

- Direct-on-line or reversing starters up to 12 A at 400 V AC (50/60 Hz)
- Repair switches (black/gray) lockable with padlocks (max. 3 units)
- Integrated overload and short-circuit protection with SIRIUS 3RV motor starter protectors/circuit breakers Class 10 with short-circuit breaking capacity I_{CU} = 50 kA at 400 V AC
- Overload protection with thermal release (bimetal)
- Transparent plastic enclosure with LED status displays for monitoring the AS-i status
- IP55 degree of protection
- Cable connections by means of M screws
- Main power loop possible (daisy chain; max. 2 x 6 mm²)
- AS-Interface through M12 plug-in terminal
- 4 x M20 glands enclosed
- Communication: AS-Interface 2I/2O (standard slaves)

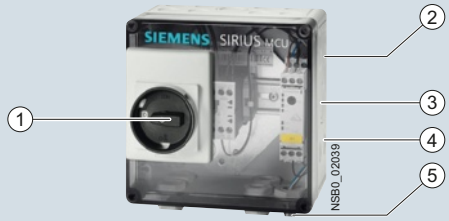

1. Main control switch / repair switch
2. Load outgoing feeder through M screw
3. Main incoming power supply through M screw (max. 6 mm²)
4. Main power loop possible (daisy chain)
5. AS-i communication / U_{aux} (24 V DC) through M12 plug

(position of outgoing units as example – outgoing units are possible on all sides)

MCU for AS-i, plastic enclosure

Selection and ordering data

	Rated current I_e	Suitable for three-phase motors[1] with P	Setting range Thermal overload release	Article No.
	A	kW	A	
Direct-on-line starters				
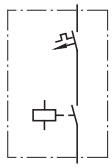 Direct-on-line start	0.63	0.18	0.45 ... 0.63	**3RK4320-3AR51-0BA0**
	0.8	0.18	0.55 ... 0.8	**3RK4320-3BR51-0BA0**
	1	0.25	0.7 ... 1	**3RK4320-3CR51-0BA0**
	1.25	0.37	0.9 ... 1.25	**3RK4320-3DR51-0BA0**
	1.6	0.55	1.1 ... 1.6	**3RK4320-3ER51-0BA0**
	2	0.75	1.4 ... 2	**3RK4320-3FR51-0BA0**
	2.5	0.75	1.8 ... 2.5	**3RK4320-3GR51-0BA0**
	3.2	1.10	2.2 ... 3.2	**3RK4320-3HR51-0BA0**
	4	1.50	2.8 ... 4	**3RK4320-3JR51-0BA0**
	5	1.50	3.5 ... 5	**3RK4320-3KR51-0BA0**
	6.3	2.20	4.5 ... 6.3	**3RK4320-3LR51-0BA0**
	8	3.00	5.5 ... 8	**3RK4320-3MR51-0BA0**
	10	4.00	7 ... 10	**3RK4320-3NR51-0BA0**
	12.5	5.50	9 ... 12.5	**3RK4320-3PR51-0BA0**
Reversing starters				
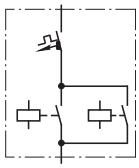 Reversing duty	0.63	0.18	0.45 ... 0.63	**3RK4320-3AR51-1BA0**
	0.8	0.18	0.55 ... 0.8	**3RK4320-3BR51-1BA0**
	1	0.25	0.7 ... 1	**3RK4320-3CR51-1BA0**
	1.25	0.37	0.9 ... 1.25	**3RK4320-3DR51-1BA0**
	1.6	0.55	1.1 ... 1.6	**3RK4320-3ER51-1BA0**
	2	0.75	1.4 ... 2	**3RK4320-3FR51-1BA0**
	2.5	0.75	1.8 ... 2.5	**3RK4320-3GR51-1BA0**
	3.2	1.10	2.2 ... 3.2	**3RK4320-3HR51-1BA0**
	4	1.50	2.8 ... 4	**3RK4320-3JR51-1BA0**
	5	1.50	3.5 ... 5	**3RK4320-3KR51-1BA0**
	6.3	2.20	4.5 ... 6.3	**3RK4320-3LR51-1BA0**
	8	3.00	5.5 ... 8	**3RK4320-3MR51-1BA0**
	10	4.00	7 ... 10	**3RK4320-3NR51-1BA0**
	12.5	5.50	9 ... 12.5	**3RK4320-3PR51-1BA0**

[1] Guide value for 4-pole standard motors at 50 Hz 400 V AC.
The actual starting and rated data of the motor to be protected must be considered when selecting the units.

© Siemens AG 2014

Overview

MCU for AS-i, metal enclosure, electromechanical

- Direct-on-line or reversing starters up to 12 A
- Repair switches (black/gray) lockable with padlocks (max. 3 units)
- Short-circuit protection with SIRIUS 3RV motor starter protectors/circuit breakers CLASS 10 with short-circuit breaking capacity I_{cu} = 50 kA at AC 400 V
- Overload protection with thermal release (bimetal)
- Manual operation and key-operated switch for operating mode selection
- LED status display of the operating states
- Metal enclosure
- Degree of protection IP54
- Switched brake control 400 V or 230 V
- Cable connections by means of M screws
- Main power loop possible (daisy chain; max. 2 x 6 mm^2)
- 2 x M25 glands
- 1 x M12 plug for AS-i/auxiliary voltage (24 V DC)
- 2 × M12 socket for connection of 2 sensors
- 1 × M12 socket for connection of one actuator
- Communication: AS-Interface 4I/3O (slaves in A/B technology can be addressed)

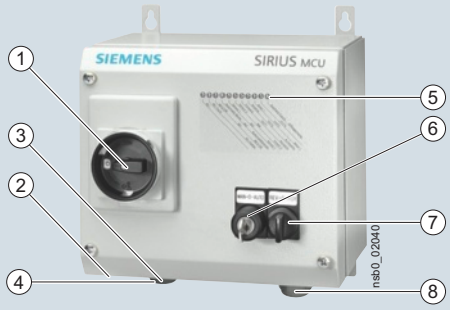

1. Main control switch / repair switch
2. Main incoming power supply (400 V AC) through M screw
3. AS-i communication / U_{aux} (24 V DC) through M12 plug
4. 2 sensor inputs (M12 socket), 1 actuator output (M12 socket)
5. LED status displays of the operating states
6. Key-operated switch: Manual-0-Auto
7. Manual operation: ON/OFF or Left-0-Right (selector button)
8. Load outgoing feeder through M screw

MCU for AS-i, metal enclosure, electromechanical switching

© Siemens AG 2014

Selection and ordering data

	Rated current I_e	Suitable for three-phase motors[1] with P	Setting range Thermal overload release	Article No.
	A	kW	A	
Direct-on-line starters				
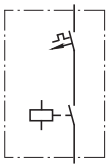 Direct-on-line start	0.63	0.18	0.45 ... 0.63	**3RK4320-3AQ54- 0BA■**
	0.8	0.18	0.55 ... 0.8	**3RK4320-3BQ54- 0BA■**
	1	0.25	0.7 ... 1	**3RK4320-3CQ54- 0BA■**
	1.25	0.37	0.9 ... 1.25	**3RK4320-3DQ54- 0BA■**
	1.6	0.55	1.1 ... 1.6	**3RK4320-3EQ54- 0BA■**
	2	0.75	1.4 ... 2	**3RK4320-3FQ54- 0BA■**
	2.5	0.75	1.8 ... 2.5	**3RK4320-3GQ54- 0BA■**
	3.2	1.10	2.2 ... 3.2	**3RK4320-3HQ54- 0BA■**
	4	1.50	2.8 ... 4	**3RK4320-3JQ54- 0BA■**
	5	1.50	3.5 ... 5	**3RK4320-3KQ54- 0BA■**
	6.3	2.20	4.5 ... 6.3	**3RK4320-3LQ54- 0BA■**
	8	3.00	5.5 ... 8	**3RK4320-3MQ54- 0BA■**
	10	4.00	7 ... 10	**3RK4320-3NQ54- 0BA■**
	12.5	5.50	9 ... 12.5	**3RK4320-3PQ54- 0BA■**
	Brake control / V			
	• 230			**2**
	• 400			**3**
Reversing starters				
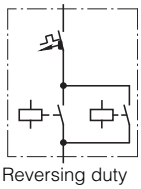 Reversing duty	0.63	0.18	0.45 ... 0.63	**3RK4320-3AQ54- 1BA■**
	0.8	0.18	0.55 ... 0.8	**3RK4320-3BQ54- 1BA■**
	1	0.25	0.7 ... 1	**3RK4320-3CQ54- 1BA■**
	1.25	0.37	0.9 ... 1.25	**3RK4320-3DQ54- 1BA■**
	1.6	0.55	1.1 ... 1.6	**3RK4320-3EQ54- 1BA■**
	2	0.75	1.4 ... 2	**3RK4320-3FQ54- 1BA■**
	2.5	0.75	1.8 ... 2.5	**3RK4320-3GQ54- 1BA■**
	3.2	1.10	2.2 ... 3.2	**3RK4320-3HQ54- 1BA■**
	4	1.50	2.8 ... 4	**3RK4320-3JQ54- 1BA■**
	5	1.50	3.5 ... 5	**3RK4320-3KQ54- 1BA■**
	6.3	2.20	4.5 ... 6.3	**3RK4320-3LQ54- 1BA■**
	8	3.00	5.5 ... 8	**3RK4320-3MQ54- 1BA■**
	10	4.00	7 ... 10	**3RK4320-3NQ54- 1BA■**
	12.5	5.50	9 ... 12.5	**3RK4320-3PQ54- 1BA■**
	Brake control / V			
	• 230			**2**
	• 400			**3**

[1] Guide value for 4-pole standard motors at 50 Hz 400 V AC.
The actual starting and rated data of the motor to be protected must be considered when selecting the units.

© Siemens AG 2014

Overview

MCU for AS-i, metal enclosure, electronic

- Direct-on-line or reversing starters up to 12 A
- Switching frequency up to 3 600/h
- Repair switches (black/gray) lockable with padlocks (max. 3 units)
- Short-circuit protection with SIRIUS 3RV motor starter protectors/circuit breakers
- Overload protection with solid-state overload relay
- Manual operation and key-operated switch for operating mode selection
- LED status display of the operating states
- Metal enclosure
- Degree of protection IP54
- Switched brake control 400 V or 230 V
- Cable connections by means of M screws
- Main power loop possible (daisy chain; max. 2 x 6 mm^2)
- 2 x M25 glands
- 1 x M12 plug for AS-i/auxiliary voltage (24 V DC)
- 2 × M12 plugs for connection of 2 sensors
- 1 × M12 socket for connection of one actuator
- Communication: AS-Interface 4I/3O (slaves in A/B technology can be addressed)

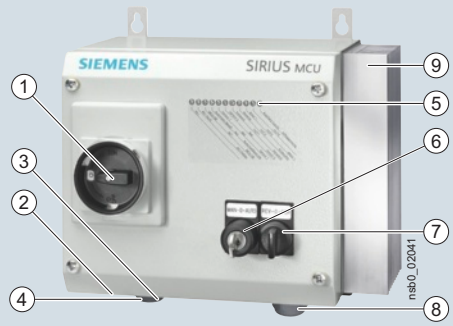

1. Main control switch / repair switch
2. Main incoming power supply (400 V AC) through M screw
3. AS-i communication / U_{aux} (24 V DC) through M12 plug
4. 2 sensor inputs (M12 socket), 1 actuator output (M12 socket)
5. LED status displays of the operating states
6. Key-operated switch: Manual-0-Auto
7. Manual operation: ON/OFF or Left-0-Right (selector button)
8. Load outgoing feeder through M screw
9. Heat sink

MCU for AS-i, metal enclosure, electronic switching

Selection and ordering data

	Rating for three-phase motor Rated value[1]	Current setting value of the inverse-time delayed overload release I_e	Brake control	
	kW	A	V	**Article No.**
Direct-on-line starters				
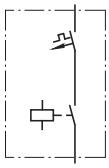 Direct-on-line start	0.12 … 0.37	0.32 … 1.25	230	**3RK4320-5DQ64-0BA2**
	0.55 … 1.5	1 … 4	230	**3RK4320-5JQ64-0BA2**
	1.1 … 5.5	3 … 12	230	**3RK4320-5PQ64-0BA2**
	0.12 … 0.37	0.32 … 1.25	400	**3RK4320-5DQ64-0BA3**
	0.55 … 1.5	1 … 4	400	**3RK4320-5JQ64-0BA3**
	1.1 … 5.5	3 … 12	400	**3RK4320-5PQ64-0BA3**
Reversing starters				
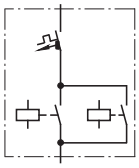 Reversing duty	0.12 … 0.37	0.32 … 1.25	230	**3RK4320-5DQ64-1BA2**
	0.55 … 1.5	1 … 4	230	**3RK4320-5JQ64-1BA2**
	1.1 … 5.5	3 … 12	230	**3RK4320-5PQ64-1BA2**
	0.12 … 0.37	0.32 … 1.25	400	**3RK4320-5DQ64-1BA3**
	0.55 … 1.5	1 … 4	400	**3RK4320-5JQ64-1BA3**
	1.1 … 5.5	3 … 12	400	**3RK4320-5PQ64-1BA3**

[1] Guide value for 4-pole standard motors at 50 Hz 400 V AC.
The actual starting and rated data of the motor to be protected must be considered when selecting the units.

© Siemens AG 2014

Overview

AS-Interface 3RK1400-1MQ01-0AA4 double direct-on-line starter 24 V DC

With the K60 AS-Interface 24 V DC motor starters for the low-end performance range up to 70 W, it is now possible to connect 24 V DC motors and the associated sensors directly to the AS-Interface quickly and easily.

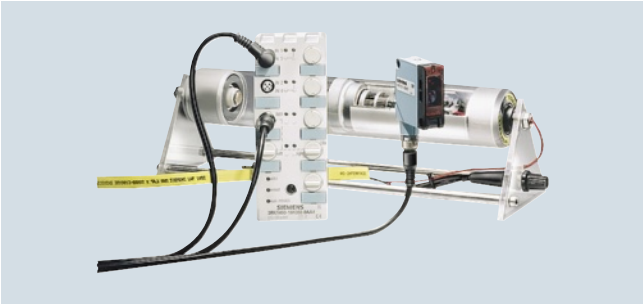

Connection of an actuator roller with integrated DC motor to an AS-Interface 24 V DC motor starter

Three different versions are available:

- Single direct-on-line starters
  (without brake and reversible quick-stop function)
- Double direct-on-line starters
  (with brake and reversible quick-stop function)
- Reversing starters
  (with brake and reversible quick-stop function)

DC motors are connected to the module using M12 plug-in connections. The sensors and the module electronics can be supplied from the yellow AS-Interface cable. An auxiliary voltage (24 V DC) is only required for supplying the outputs, which can be provided via the black AS-Interface cable.

Quick-stop function

All AS-Interface 24 V DC motor starters feature a quick-stop function which can be switched on and off as required using a switch integrated into the module. The quick-stop function allows a connected motor to be disconnected immediately using an applied sensor signal (High). The switch for the quick-stop function is located alongside the input sockets and is protected by an M12 sealing cap.

Brake

The double direct-on-line starter and the single reversing starter versions feature an integrated permanently set brake function, i.e. as soon as the output signal is set to "0", the motor is braked.

Start-up using integrated buttons

Buttons integrated into the module (below the output sockets) can be used to set the motor used. The buttons are protected by an M12 sealing cap.

Note concerning double and reversing starters:

If an input with the quick-stop function receives a "High" signal, the corresponding output (e.g. quick-stop input 1 ⇒ output 1) is switched off within the device (the motor is braked).
The manual key function (Key 1/2) for local operation is only permitted to be used during "CPU Stop" in the higher-level PLC.

Note concerning single direct-on-line starters:

If an input with the quick-stop function receives a "High" signal, the corresponding output (e.g. quick-stop input 1 ⇒ output 1) is switched off within the device (the motor runs down without being braked) The manual key function (Key 1) for local operation is only permitted to be used and defined during "CPU Stop" in the higher-level PLC.

© Siemens AG 2014

Overview (continued)

Applications

Single direct-on-line starter without brake (with adjustable quick-stop function)

1st possibility: Connection to a maximum of four sensors without pollution indication

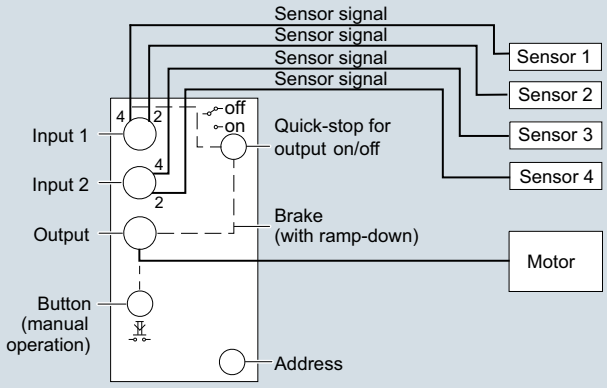

2nd possibility: Connection to a maximum of two sensors with pollution indication

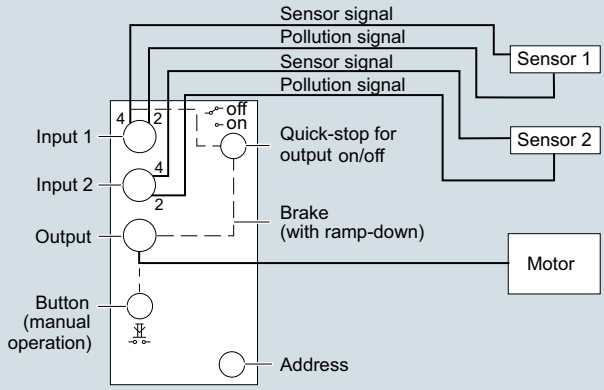

Double direct-on-line starter with brake (with adjustable quick-stop function)

1st possibility: Connection to a maximum of four sensors without pollution indication

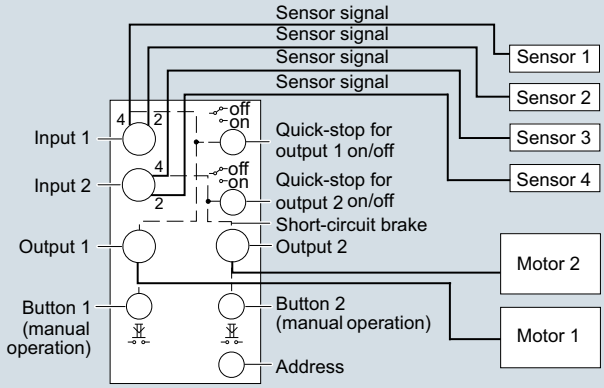

2nd possibility: Connection to a maximum of two sensors with pollution indication

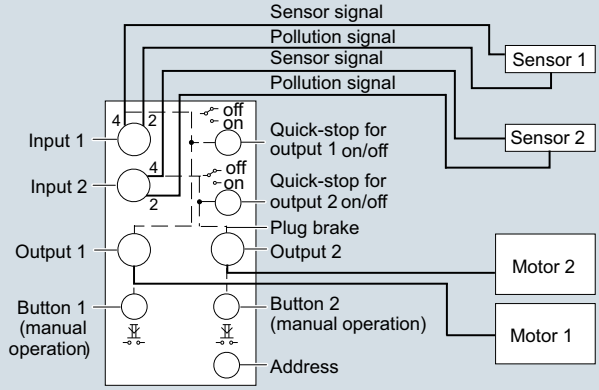

Single reversing starter with brake (with adjustable quick-stop function)

1st possibility: Connection to a maximum of four sensors without pollution indication

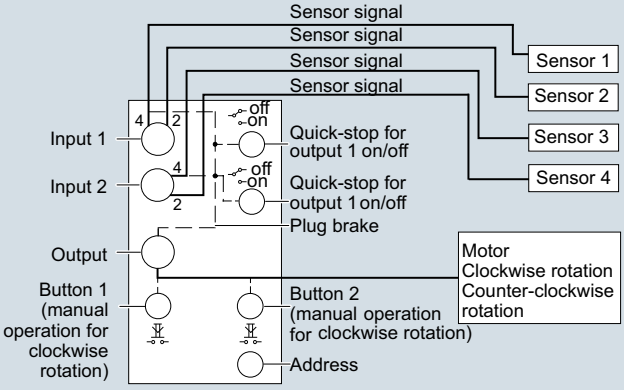

2nd possibility: Connection to a maximum of two sensors with pollution indication

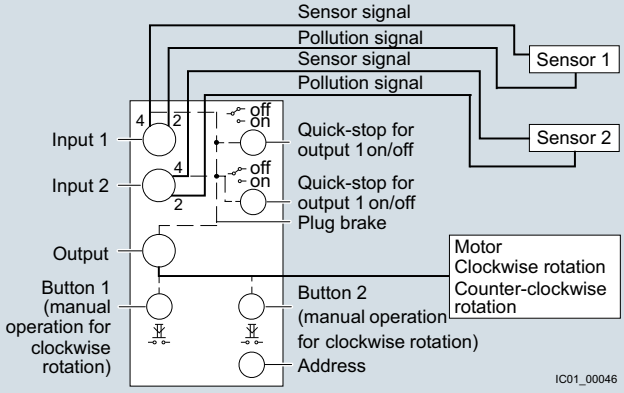

© Siemens AG 2014

Selection and ordering data

	Version	Inputs/outputs	Current carrying capacity of outputs	Slave type	Article No.
			A		
Motor starters (width 60 mm)					
3RK1400-1MQ01-0AA4	**Single direct-on-line starters**[1)]	4 inputs / 1 output	2	Standard	**3RK1400-1NQ01-0AA4**
	Double direct-on-line starters[1)]	4 inputs / 2 outputs	1 x 3 or 2 x 2	Standard	**3RK1400-1MQ01-0AA4**
	Single reversing starters[1)]	4 inputs / 1 output	2.5	Standard	**3RK1400-1MQ03-0AA4**

[1)] Modules supplied without mounting plate.

	Version	Article No.
Accessories		
3RK1901-0CA00	**K60 mounting plates** Suitable for all K60 compact modules • Wall mounting • Standard rail mounting	 **3RK1901-0CA00** **3RK1901-0CB01**
3RK1901-1KA00	**AS-Interface M12 sealing caps** For free M12 sockets	**3RK1901-1KA00**
3RK1901-1KA01	**AS-Interface M12 sealing caps, tamper-proof** For free M12 sockets	**3RK1901-1KA01**
3RK1902-0AR00	**Sealing sets** • For K60 mounting plate and standard distributor • Cannot be used for K45 mounting plate • Set contains one straight and one shaped seal	**3RK1902-0AR00**

© Siemens AG 2014

Overview

The new SINAMICS G110D distributed frequency inverter series is the solution for basic drive tasks especially in the field of conveyor systems. The inverter allows the speed of three-phase induction motors to be continually controlled and fulfills the requirements of conveyor-related applications with open-loop frequency control. It can be optimally integrated into the system thanks to its compact and low-profile design in an IP65 degree of protection. This drive can be optimally integrated into the Siemens TIA world of automation via AS-Interface.

With its wide power range from 0.75 kW to 7.5 kW, it is suitable for a wide range of distributed drive solutions.

Example: SINAMICS G110D, frame size FSA

Reasons for using distributed drive systems

- Modular drive solutions – therefore standardized mechatronic elements that can be individually tested
- A control cabinet is not required, resulting in a smaller space requirement and lower cooling requirements
- Long cables between the inverter and motor can be avoided (which means lower power losses, reduced noise emission and lower costs for shielded cables and additional filters)
- Distributed configurations offer considerable benefits for conveyor systems with their extensive coverage (e.g. in the automotive and logistics sectors)

Siemens family of distributed drives

Siemens offers an innovative portfolio of inverters to optimally implement distributed drive solutions. The strengths of the individual members of the drive family permit simple adaptation to the widest range of application demands:

- Identical connection systems
- Identical mounting dimensions for SINAMICS G110D and SINAMICS G120D
- Standard commissioning and engineering tool

Products from the family of distributed drives:

- SINAMICS G110D inverters
- SINAMICS G120D inverters
- SINAMICS G110M frequency inverters
- SIMATIC ET 200pro FC-2 frequency converters (available soon)
- SIRIUS M200D motor starters

Device design

SINAMICS G110D is a compact inverter in degree of protection IP65 where the Control Unit (CU) and Power Module (PM) function units are combined in one device.

The closed-loop control electronics controls and monitors the power electronics in several different control modes that can be selected. The digital inputs and analog inputs on the device mean that sensors can be simply and directly connected at the drive. The input signals can either be directly linked within the closed-loop control or they can be transferred to the central control via AS-Interface for further processing within the context of the overall system.

The power electronics supply the motor in the power range from 0.75 kW to 7.5 kW. It is controlled (open-loop) from the microprocessor-based control. State-of-the-art IGBT technology with pulse-width-modulation is used for highly reliable and flexible motor operation. It also features an extensive range of functions offering a high degree of protection for the inverter and motor. The unusually flat mechanical construction is optimized so that the device can be directly used in the plant. The compact inverter has the same drilling dimensions for all of the power ratings (standard "footprint"); further, the dimensions are identical to those of the SINAMICS G120D inverter. This significantly simplifies design engineering, installation and retrofitting of the system.

The latest technical documentation (catalogs, dimension drawings, certificates, manuals and operating instructions) are available on the Internet at:
http://www.siemens.com/sinamics-g110d/documentation

and offline on the DVD-ROM CA 01 in the DT Configurator.
In addition, the DT Configurator can be used in the Internet without requiring any installation. The DT Configurator is available in the Industry Mall at the following address:
http://www.siemens.com/dt-configurator

STARTER commissioning tool

The STARTER commissioning tool (V4.1.3 and higher) supports the commissioning and maintenance of SINAMICS G110D inverters. The operator guidance combined with comprehensive, user-friendly functions for the relevant drive solution allow you to commission the device quickly and easily.

© Siemens AG 2014

Benefits

- Wide range of power ratings from 0.75 kW to 7.5 kW
- Fast commissioning and maintenance as well as extended diagnostic functions and communications capability with AS-Interface according to Specification 3.0
  - Reduced number of interfaces
  - Plant-wide engineering
  - Easy to handle
- Mechanical design, installation and retrofit of systems are significantly simplified as a result of the compact and space-saving design with an extremely low profile and with the same drilling dimensions for all power ratings; further, the dimensions are identical with those of the SINAMICS G120D inverter.
- Simple commissioning and maintenance using the same, standardized connectors for the bus, power and I/O connections (ISO 23570) for the complete power range of SINAMICS G110D and SINAMICS G120D inverters.
- The same connectors are used as for the SIRIUS M200D motor starter
- Simple, standard implementation of complete distributed plant and system concepts by using products in a scalable fashion:
  - SIRIUS M200D (motor starter)
  - SINAMICS G110D (inverter for basic, conveyor-related applications)
  - SINAMICS G110M (distributed inverter integrated in the motor)
  - SIMATIC ET 200pro FC-2 (available soon)
  - SINAMICS G120D (inverter for sophisticated, conveyor-related applications)
- High degree of operator friendliness by using the Intelligent Operator Panel (IOP) to parameterize, diagnose, control (open-loop) and copy drive parameters in the BOP
- Easy to replace using a plug-in design and the use of a memory card provide the highest degree of service friendliness
- Simple connection, engineering, data management as well as control of the inverter in complex plants and systems as a result of the consequential integration in TIA (Totally Integrated Automation)
- Using the optional maintenance switch, the inverter can be simply disconnected from the line supply when service is required, without any additional components or without additional wiring costs when engineering the system
- Using the optional manual local control, commissioning can be carried out fast and limited to specific areas, the application can be manually pre-tested on site and the system can be cleared or emptied without requiring complex options.
- By being able to connect up to five sensors directly at the unit, practically all of the drive-relevant information can be directly managed; local pre-processing of the signals relieves the fieldbus to achieve fast and reproducible response times
- Integrated class A EMC filter (acc. to EN 55011)
- Integrated brake control, brake voltages supported: 180 V DC and 205 V DC
- Integrated motor protection using a thermal motor model and evaluation of PTC, KTY or bimetal temperature sensors
- Simple device replacement and fast copying of parameters to the memory card using the optional memory card holder and the optional memory card
- Engineering and commissioning using standard engineering tools such as SIZER (V3.2 and higher), STARTER (V4.1.3 and higher) and Drive ES ensure fast engineering and simple commissioning - STARTER is integrated into STEP 7 with Drive ES Basic, with all of the benefits of central data management and unified communication
- Software parameters for easy adaptation to 50 Hz or 60 Hz motors (IEC or NEMA motors)
- Increased degree of ruggedness and longer service life as the electronic modules are coated
- Globally certified acc. to CE, UL, C-tick

Application

SINAMICS G110D is ideally suited for basic conveyor system applications in the industrial environment for which a distributed drive with communications capability is required. This is especially true for distribution logistics and for airports.

Further, SINAMICS G110D is suitable for many additional low-performance applications in many sectors, e.g. in the automotive sector, in the food and beverages industry (without tensides) and in the packaging industry.

Selection and ordering data

Rated power [1]		Rated output current [2]	Input current	Frame size	SINAMICS G110D with integrated class A line filter	SINAMICS G110D with integrated class A line filter and integrated maintenance switch
kW	hp	A	A		**Article No.**	**Article No.**
380 … 500 V 3 AC [3]						
0.75	1	2.3	2.0	FSA	**6SL3511-0PE17-5AM0**	**6SL3511-1PE17-5AM0**
1.5	1.5 [4]	4.3	3.8	FSA	**6SL3511-0PE21-5AM0**	**6SL3511-1PE21-5AM0**
3	4	7.7	7.0	FSA	**6SL3511-0PE23-0AM0**	**6SL3511-1PE23-0AM0**
4	5	10.2	9.1	FSB	**6SL3511-0PE24-0AM0**	**6SL3511-1PE24-0AM0**
5.5	7.5	13.2	12.2	FSC	**6SL3511-0PE25-5AM0**	**6SL3511-1PE25-5AM0**
7.5	10	19.0	17.9	FSC	**6SL3511-0PE27-5AM0**	**6SL3511-1PE27-5AM0**

1) Rated power based on the rated output current I_{rated}. The rated output current I_{rated} is based on the duty cycle for high overload (HO).
2) The rated output current I_{rated} is based on the duty cycle for high overload (high overload HO). These current values apply at 400 V and are specified on the rating plate.
3) 500 V +10% is possible outside the UL range.
4) Not governed by a specific standard.

© Siemens AG 2014

Ordering data

	Article No.
Accessories	
Manual local control with key-operated switch Easy to use for local operation and commissioning	**6SL3555-0PL00-2AA0**
RS232 interface cable Connecting cable for commissioning the SINAMICS G110D frequency inverter with the STARTER commissioning tool	**3RK1922-2BP00**
USB interface cable Connecting cable for commissioning the SINAMICS G110D frequency inverter with the STARTER commissioning tool	**6SL3555-0PA00-2AA0**
Braking resistors for SINAMICS G110D frequency inverter To reduce the excess energy of the DC link	
• Rated power 0.75 kW and 1.5 kW	**6SL3501-0BE08-6AA0**
• Rated power 3 kW and 4 kW	**6SL3501-0BE12-1AA0**
• Rated power 5.5 kW and 7.5 kW	**6SL3501-0BE14-1AA0**
Intelligent Operator Panel IOP Handheld For use with frequency inverters with SINAMICS G120, SINAMICS G120P, SINAMICS G110D, SINAMICS G120D or SIMATIC ET 200pro FC-2 Included in the scope of delivery: • Intelligent Operator Panel IOP • Handheld housing • Rechargeable batteries (4 × AA) • Charging unit (international) • RS232 connecting cable (3 m long, can only be used for SINAMICS G120 and SIMATIC ET 200S FC-2) • USB cable (1 m long)	**6SL3255-0AA00-4HA0**
Memory card The parameter settings for an inverter fit on the memory card. When service is required, e.g. after the inverter has been replaced and the data have been downloaded from the memory card the drive system is immediately ready for use again.	
• SINAMICS memory card (SD card)	**6SL3054-4AG00-2AA0**
Card holder for memory card To use the memory card, a card holder is required that can be plugged in either under the blanking cover or under the optional manual local control	**6SL3555-0PM00-0AA0**
Connector kit for braking resistor For using or connecting other braking resistors with the SINAMICS G110D	**6SL3563-4RA00-0GA00**
UL connector fitting set For power and motor, for using SINAMICS G110D in UL-compliant applications	**6SL3563-4UA00-0GA0**
Protection bar For protecting the connector against shearing due to mechanical stress	
• For frame sizes FSA and FSB	**6SL3263-1HA20-0GA0**
• For frame size FSC	**6SL3263-1HC20-0GA0**
Adapter For mounting the SINAMICS G110D instead of a SIRIUS M200D motor starter	**6SL3263-1GA20-0GA0**

More information

Further information on technical data, accessories and ordering data is available in Catalog D 31 and online in the Siemens Industry Mall.

© Siemens AG 2014

Overview

Distributed command devices of the 3SB3 series can be quickly connected to the AS-Interface using AS-Interface enclosures. Using suitable components you can make your own enclosures with integrated AS-Interface or flexibly modify existing enclosures.

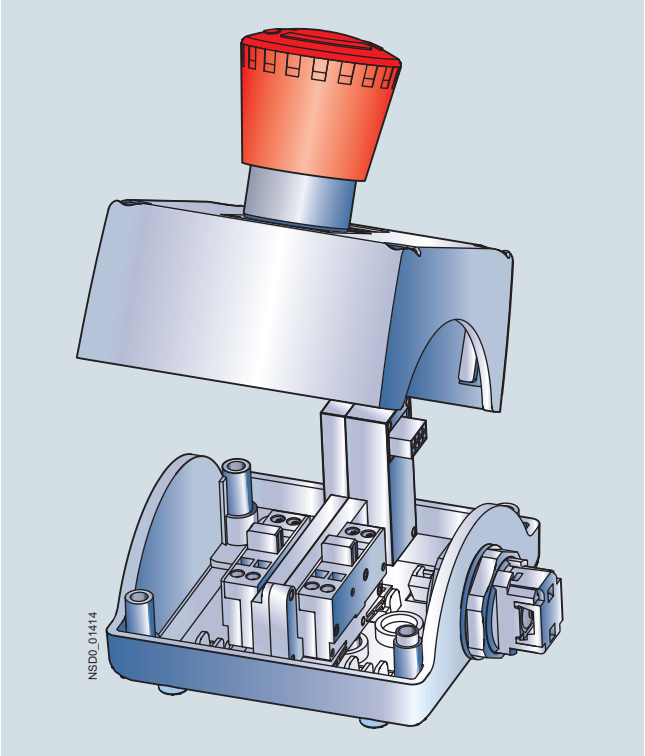

Enclosures

Color of enclosure cover:

- Gray, RAL 7035 or
- Yellow, RAL 1004, for EMERGENCY-STOP.

Color of enclosure base:

- Black, RAL 9005.

Installation of AS-Interface slaves

The following slave types are available for connecting the command points:

- Slave in A/B technology with 4 inputs and 3 outputs
- Slave with 4 inputs and 4 outputs
- F Slave with two secure inputs for EMERGENCY-STOP mushroom pushbutton

The following table shows the maximum number of equippable slaves:

Enclosures for	Number of slaves for enclosures without EMERGENCY-STOP	Number of slaves for enclosures with EMERGENCY-STOP
1 command point	Not available	1 × F slave
2 command points	1 × slave 4I/4O or 4I/3O	Not available
3 command points	1 × slave 4I/4O or 4I/3O	1 × slave 4I/4O or 4I/3O + 1 × F slave
4 command points	2 × slave 4I/4O or 4I/3O[1)]	2 × slave 4I/4O or 4I/3O + 1 × F slave[1)]
6 command points	2 × slave 4I/4O or 4I/3O	2 × slave 4I/4O or 4I/3O + 1 × F slave

[1)] Applies to plastic enclosures. For metal enclosures with 4 command points, only 1 × slave 4I/4O or 4I/3O is possible.

Connection

One set of links is required in each case to connect a slave to contact blocks, to lampholders and to the connection element.

The connection elements are mounted in the front-end cable glands and are used for connection of the AS-Interface or for bringing unused inputs or outputs out of the enclosure.

For connection to AS-Interface selection can be made between:

- Terminal for shaped AS-Interface cable.
  The cable is contacted by the insulation piercing method and routed past the enclosure on the outside (possible only with plastic enclosure).
- Cable gland for the shaped AS-Interface cable or round cable. The cable is routed into the enclosure (preferable for metal enclosure).
- Connection using M12 plug.

If less than all inputs/outputs of the installed slaves in an enclosure are used for connecting the command devices, free inputs and outputs can be routed on request to the outside through an M12 socket on the top or bottom side of the enclosure.

To supply inputs with power, the S+ connection of the slave must be assigned to the socket, for outputs the OUT– connection must be assigned.

Addressing is performed using the AS-Interface connections or the integrated addressing socket. An external power supply is not required.

Note:

You can find dimensional drawings, manuals and other technical information on the Internet at
www.siemens.com/industrial-controls/support

© Siemens AG 2014

Overview

Enclosures with standard fittings are available with:

- 1 to 3 command points,
- Operational voltage through AS-Interface (approx. 30 V),
- Vertical mounting type
- Plastic enclosures are equipped with plastic actuators and indicators, metal enclosures are equipped with metal actuators and indicators.

The enclosures without EMERGENCY-STOP each have one user module with 4I/3O; the enclosures with EMERGENCY-STOP mushroom pushbuttons have a safe AS-Interface slave integrated in the enclosure.

Enclosures with EMERGENCY-STOP mushroom pushbuttons are fitted with two NC contact blocks, which are wired to the safe slave. The contact blocks and lampholders (with spring-type terminals) of the control device, and the AS-Interface slaves, are mounted in the base of the enclosure and are cable-connected.

The plastic enclosures are designed with a connection for the AS-Interface flat cable (the cable is run passed the outside of the enclosure). For metal enclosures, the AS-Interface cable is run inside the enclosure.

The tops of enclosures with EMERGENCY-STOP mushroom pushbuttons are yellow. They are also available with an M12 connector.

Selection and ordering data

	Version		Article No.
3SF5811-0AA08	*Equipping options (A, B, C = identification letters of the command points)*	*No. of command points*	
	With M12 top connector		
	A = EMERGENCY-STOP mushroom pushbuttons	1	**3SF5811-0AA10**
	With terminal for insulation piercing method at top		
	A = EMERGENCY-STOP mushroom pushbuttons	1	**3SF5811-0AA08**
	A = EMERGENCY-STOP mushroom pushbuttons, with protective collar	1	**3SF5811-0AB08**
3SF5812-0DA00	B = Pushbutton green, label "I" A = Pushbutton red, label "O"	2	**3SF5812-0DA00**
	B = Pushbutton white, label "I" A = Pushbutton black, label "O"	2	**3SF5812-0DB00**
	C = Indicator light clear, label without inscription B = Pushbutton green, label "I" A = Pushbutton red, label "O"	3	**3SF5813-0DA00**
	C = Indicator light clear, label without inscription B = Pushbutton white, label "I" A = Pushbutton black, label "O"	3	**3SF5813-0DC00**
	C = Pushbutton black, label "II" B = Pushbutton black, label "I" A = Pushbutton red, label "O"	3	**3SF5813-0DB00**

3SF5811-2AB08	*Equipping options (A, B, C = identification letters of the command points)*	*No. of command points*	
	With M12 top connector		
	A = EMERGENCY-STOP mushroom pushbuttons	1	**3SF5811-2AA10**
	A = EMERGENCY-STOP mushroom pushbuttons, with protective collar	1	**3SF5811-2AB10**
	With cable gland at top		
	A = EMERGENCY-STOP mushroom pushbuttons yellow enclosure top	1	**3SF5811-2AA08**
	A = EMERGENCY-STOP mushroom pushbuttons, yellow enclosure top, with protective collar	1	**3SF5811-2AB08**
3SF5812-2DA00	B = Pushbutton green, label "I" A = Pushbutton red, label "O"	2	**3SF5812-2DA00**
	B = Pushbutton white, label "I" A = Pushbutton black, label "O"	2	**3SF5812-2DB00**
3SF5813-2DA00	C = Indicator light clear, label without inscription B = Pushbutton green, label "I" A = Pushbutton red, label "O"	3	**3SF5813-2DA00**
	C = Indicator light clear, label without inscription B = Pushbutton white, label "I" A = Pushbutton black, label "O"	3	**3SF5813-2DC00**
	C = Pushbutton black, label "II" B = Pushbutton black, label "I" A = Pushbutton red, label "O"	3	**3SF5813-2DB00**

© Siemens AG 2014

Selection and ordering data

For self-equipping of the enclosures

	Version	No. of command points	Article No.
3SF5500-0BA	**AS-Interface slaves**		
	F slave, 2 safe inputs, for plastic enclosure, EMERGENCY-STOP, without protective collar	1 ... 6	**3SF5500-0BA**
	F slave, 2 safe inputs, for plastic or metal enclosure EMERGENCY-STOP, with protective collar	1	**3SF5500-0DA**
	A/B slave, 4 inputs/3 outputs, for plastic enclosure	2 ... 6	**3SF5500-0BB**
3SF5500-0BB	Slave, 4 inputs/4 outputs, for plastic enclosure	2 ... 6	**3SF5500-0BC**
	Set of links		
	For F slave		**3SF5900-0BA**
	For slave 4I/4O or A/B slave 4I(3O)		**3SF5900-0BB**
	Connection elements		
3SF5900-0CA	For AS-Interface shaped cable, connection by insulation piercing method, for plastic enclosure	1 ... 3 4 ... 6	**3SF5900-0CA** **3SF5900-0CB**
3SF5900-0CC	For AS-Interface connection using M12 plug, for plastic enclosure	1 ... 3 4 ... 6	**3SF5900-0CC** **3SF5900-0CD**
	For bringing out unused inputs/outputs through an M12 socket, for plastic enclosure	1 ... 3 4 ... 6	**3SF5900-0CE** **3SF5900-0CF**
	For AS-Interface shaped cable, cable is routed into the enclosure, for plastic or metal enclosure	1 ... 3 4 ... 6	**3SF5900-0CG** **3SF5900-0CH**
3SF5900-0CG	For round cable, cable is routed into the enclosure, for plastic or metal enclosure	1 ... 3 4 ... 6	**3SF5900-0CJ** **3SF5900-0CK**

		No. of command points	Article No.
3SF5500-0CB	**AS-Interface slaves**		
	F slave, 2 safe inputs, for metal enclosure EMERGENCY-STOP, without protective collar	1 ... 6	**3SF5500-0CA**
	F slave, 2 safe inputs, for plastic or metal enclosure EMERGENCY-STOP, with protective collar	1	**3SF5500-0DA**
	A/B slave, 4 inputs/3 outputs, for metal enclosure	2 ... 6	**3SF5500-0CB**
	Slave, 4 inputs/4 outputs, for metal enclosure	2 ... 6	**3SF5500-0CC**
	Set of links		
	For F slave		**3SF5900-0BA**
	For slave 4I/4O or A/B slave 4I(3O)		**3SF5900-0BB**
	Connection elements		
3SF5900-0CG	For AS-Interface connection using M12 plug, for metal enclosure	1 ... 3 4 ... 6	**3SF5900-2CC** **3SF5900-2CD**
	For bringing out unused inputs/outputs through an M12 socket, for metal enclosure	1 ... 3 4 ... 6	**3SF5900-2CE** **3SF5900-2CF**
3SF5900-0CJ	For AS-Interface shaped cable, cable is routed into the enclosure, for plastic or metal enclosure	1 ... 3 4 ... 6	**3SF5900-0CG** **3SF5900-0CH**
	For round cable, cable is routed into the enclosure, for plastic or metal enclosure	1 ... 3 4 ... 6	**3SF5900-0CJ** **3SF5900-0CK**

Note:

You can find empty enclosures and elements of equipment in Catalog IC 10, Chapter "Commanding and signaling devices" and in the Industry Mall at www.siemens.com/industrymall.

© Siemens AG 2014

Overview

Enclosures can be equipped with optional command devices for implementing customized command device-to-AS-Interface connections.

Customized enclosures are available with between 2 and 6 command points.

One command point comprises:

- 1 actuator or indicator
- Up to 3 contact blocks or up to 2 contact blocks + 1 lampholder
- 1 inscription label

For plastic enclosures the command points are equipped as standard with plastic actuators and indicators, for metal enclosures they are equipped with metal actuators and indicators.

Installation of AS-Interface slaves

The following slave types are available for connecting the command points:

- Slave in A/B technology with 4 inputs and 3 outputs
- Slave with 4 inputs and 4 outputs
- F Slave with 2 safe inputs for EMERGENCY-STOP

The following table shows the maximum number of equippable slaves:

Enclosures for	Number of slaves for enclosures without EMERGENCY-STOP	Number of slaves for enclosures with EMERGENCY-STOP
2 command points	1 × slave 4I/4O or 4I/3O	Version not available
3 command points	1 × slave 4I/4O or 4I/3O	1 × slave 4I/4O or 4I/3O + 1 × F slave
4 command points	2 × slave 4I/4O or 4I/3O[1)]	2 × slave 4I/4O or 4I/3O + 1 × F slave[1)]
6 command points	2 × slave 4I/4O or 4I/3O	2 × slave 4I/4O or 4I/3O + 1 × F slave

[1)] Applies to plastic enclosures. For metal enclosures with 4 command points, only 1 × slave 4I/4O or 4I/3O is possible.

Connection

The customized enclosure is supplied fully equipped and wired. For connection to AS-Interface selection can be made between:

- Terminal for shaped AS-Interface cable.
  The cable is contacted by the insulation piercing method and routed past the enclosure on the outside (possible only with plastic enclosure).
- Cable gland for the shaped AS-Interface cable or round cable. The cable is routed into the enclosure (preferable for metal enclosure).
- Connection using M12 plug.

If less than all inputs/outputs of the installed slaves in an enclosure are used for connecting the command devices, free inputs and outputs can be routed on request to the outside through an M12 socket on the top or bottom side of the enclosure. The required pin assignments for the M12 socket must be stated on the order form.

To supply inputs with power, the S+ connection of the slave must be assigned to the socket, for outputs the OUT– connection must be assigned.

Addressing is performed using the AS-Interface connections or the integrated addressing socket. An external power supply is not required.

EMERGENCY-STOP

On enclosures with EMERGENCY-STOP, the EMERGENCY-STOP mushroom pushbutton can be wired conventionally or via a safe AS-Interface slave.

When the EMERGENCY-STOP mushroom pushbutton is conventionally wired, up to three switching contacts can be selected for the EMERGENCY-STOP function. If EMERGENCY-STOP is interrogated via AS-Interface, two contacts can be used for the safety circuit.

When the pushbutton is conventionally wired, an EMERGENCY-STOP contact block can be interrogated via AS-Interface if required.

Selection and ordering data

Customized enclosures are selected and ordered directly via the 3SB3/3SF5 configurator for pushbuttons and indicator lights.

An electronic order form will be generated for the additional options. You reach the configurator via the electronic catalog CA 01 on CD-ROM or DVD, or via the online catalog (Mall) on the Internet:
www.siemens.com/industrymall

Select the configurator for "Pushbutton Units and Indicator Lights 3SB3, 3SF5" from the configurator list.
Start the configuring process by selecting list entry "Execute" and select "Customized enclosure ASI".

The list price of the complete enclosure is generated in the configurator for the customized equipment. To utilize this service, you must register and log on in the configurator.

Please send the electronically generated order form in parallel with the order to our Competence Center at
sirius-attach.aud@siemens.com

If you are unable to access either of these media, please contact our Technical Assistance.

© Siemens AG 2014

Overview

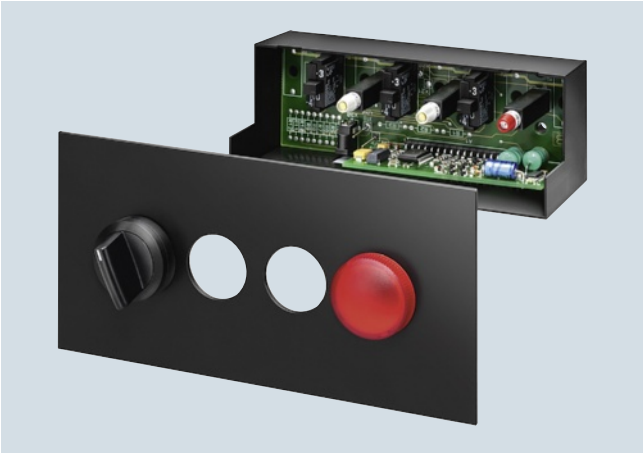

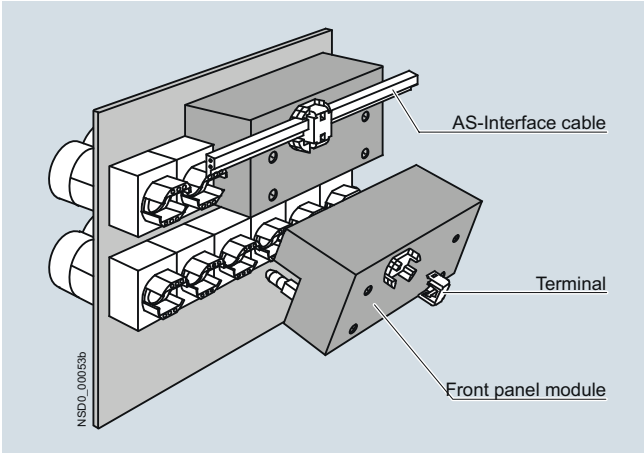

Series 3SB3 command devices installed in front panels can be connected to the AS-Interface bus system by means of the AS-Interface front panel module. Round or square pushbuttons and indicator lights made of plastic or metal can be used. It is not possible to use mushroom pushbuttons or acoustic signaling devices.

The front panel module consists of:

- Slave 4I/4O
- 4 3SB3 commanding and signaling devices
- Accessories (lamps, name plates, mounting parts)

Elements of equipment must be stated on the order form (see next page).

The front panel module is attached by screws to the rear face of the front panel over a group of four actuators or indicators which are lined up horizontally or vertically. The contact blocks and lampholders are integrated in the module.

The grid size required to mount command devices in the front panel measures 30 mm × 45 mm.

The AS-Interface shaped cable is connected by the insulation piercing method via a terminal at the rear of the module.

Addressing of the module is performed using the AS-Interface connections or the integrated addressing socket.

Selection and ordering data

Version	**Article No.**
AS-Interface front panel module for 3SB3 command devices	
4I/4O	**3SF5874-4AZ**

© Siemens AG 2014

Selection and ordering data

The front panel module must be stated on the order form which is enclosed with the order. This order form cannot be generated by the 3SB3/3SF5 configurator. To receive an electronic copy of the order from, please contact our Technical Support:

Tel. +49 (911) 895-59 00
Fax +49 (911) 895-59 07

All required options such as, for example, type of actuators and indicators, switching contacts, lampholders or accessories (inscription labels and lamp type) must be stated on the order form.

The order codes to be stated on the form can be found in the list of the options which are available for a surcharge.

The price for the unit is calculated from the basic price of the module and the surcharges applicable to optional equipment.

The surcharges include all components that are needed to meet the stated equipment requirements (actuators and indicators, switching contacts, lampholders and accessories).

Order form

Order form front panel module	**to sirius-attach.aud@siemens.com**	
Date	Customer order reference code	Supplier order reference code

1. No. of command points
☐ 4 command points

2. Design of actuators
☐ Round, plastic
☐ Square, plastic
☐ Round, metal

3. Name plates
☐ None
☐ With name plate including attached inscription label 12.5 mm × 27 mm
☐ With name plate including attached inscription label 27 mm × 27 mm

4. Equipment (top view of panel front face)

Labeling of name plates

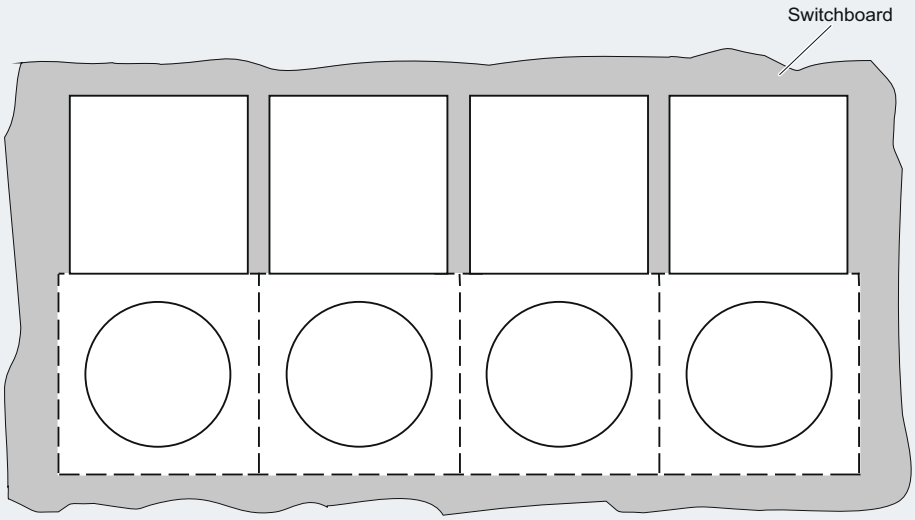

Equipment (codes)

A	B	C	D

Design of contact blocks

left	right	left	right	left	right	left	right
☐ 1 NO	☐ 1 NO	☐ 1 NO	☐ 1 NO	☐ 1 NO	☐ 1 NO	☐ 1 NO	☐ 1 NO
☐ 1 NC	☐ 1 NC	☐ 1 NC	☐ 1 NC	☐ 1 NC	☐ 1 NC	☐ 1 NC	☐ 1 NC

NSD0_00057d

5. Lamps for illuminated actuators and indicator lights
☐ 24 V incandescent lamp (also used if no other option is selected)
☐ 30 V incandescent lamp
☐ Super bright LED (the color of the LED matches the color of the actuator/indicator light)

© Siemens AG 2014

Selection and ordering data (continued)

Selection of equipment according to order form

Version	Codes according to colors													
	Black		**Red**		**Yellow**		**Green**		**Blue**		**White**		**Clear**	
Actuators and indicators														
Pushbuttons with flat button	D	BK	D	RD	D	YE	D	GN	D	BU	D	WH	D	CL
Illuminated pushbuttons with flat button	–		DL	RD	DL	YE	DL	GN	DL	BU	DL	WH	DL	CL
Pushbuttons with raised button	DH	BK	DH	RD	DH	YE	–		DH	BU	–		–	
Illuminated pushbuttons with raised button	–		DHL	RD	DHL	YE	DHL	GN	DHL	BU	–		DHL	CL
Pushbuttons with raised front ring	DHF	BK	DHF	RD	DHF	YE	DHF	GN	DHF	BU	DHF	WH	–	
Pushbuttons with raised front ring, castellated [1]	DFZ	BK	DFZ	RD	DFZ	YE	DFZ	GN	DFZ	BU	DFZ	WH	–	
Pushbutton switches with flat button	DS	BK	DS	RD	DS	YE	DS	GN	DS	BU	DS	WH	–	
Illuminated pushbutton switches with flat button	–		DLS	RD	DLS	YE	DLS	GN	DLS	BU	DLS	WH	DLS	CL
Indicator lights, smooth lens	–		L	RD	L	YE	L	GN	L	BU	L	WH	L	CL
Selector switches with 2 switch positions														
Switching sequence O-I, latching														
Non-illuminated	K1	BK	K1	RD	–		K1	GN	–		K1	WH	–	
Illuminated	–		BK1	RD	BK1	YE	BK1	GN	BK1	BU	–		BK1	CL
Switching sequence O-I, momentary contact														
Non-illuminated	K2	BK	K2	RD	–		K2	GN	–		K2	WH	–	
Illuminated	–		BK2	RD	BK2	YE	BK2	GN	BK2	BU	–		BK2	CL
Selector switches with 3 switch positions														
Switching sequence I–O–II, latching														
Non-illuminated	K4	BK	K4	RD	–		K4	GN	–		K4	WH	–	
Illuminated	–		BK4	RD	BK4	YE	BK4	GN	BK4	BU	–		BK4	CL
Switching sequence I–O–II, momentary contact														
Non-illuminated	K5	BK	K5	RD	–		K5	GN	–		K5	WH	–	
Illuminated	–		BK5	RD	BK5	YE	BK5	GN	BK5	BU	–		BK5	CL
Switching sequence I–O–II, latching to the right, momentary contact to the left														
Non-illuminated	K6	BK	K6	RD	–		K6	GN	–		K6	WH	–	
Switching sequence I–O–II, latching to the left, momentary contact to the right														
Non-illuminated	K7	BK	K7	RD	–		K7	GN	–		K7	WH	–	

[1] For plastic version only.

Note:

For more information about actuators and indicator lights, see Catalog IC 10, Chapter "Commanding and signaling devices" and in the Industry Mall at: www.siemens.com/industrymall.

© Siemens AG 2014

Selection and ordering data (continued)

Selection of equipment according to order form

Version	Codes Key can be removed in position O	I	II	O and I	O and II	I and II	I, O and II
Locks with 2 switch positions							
Switching sequence O-I, latching							
Type RONIS:							
Lock No. SB30	RSB 1A	RSB 1E	–	RSB 1AE	–	–	–
Type CES:							
Lock No. SSG 10	CES 1A	CES 1E	–	CES 1AE	–	–	–
Lock No. LSG 1	CESL 1A	–	–	CESL 1AE	–	–	–
Type CES with key monitoring:							
Lock No. SSG 10	CES SU 1A						
Type BKS:							
Lock No. S1	BKS 1A	BKS 1E	–	BKS 1AE	–	–	–
Lock No. E1 (for VW)	BKS A 1A	–	–	BKS A 1AE	–	–	–
Lock No. E2 (for VW)	BKS E 1A	–	–	BKS E 1AE	–	–	–
Lock No. E7 (for VW)	BKS C 1A	–	–	BKS C 1AE	–	–	–
Lock No. E9 (for VW)	BKS B 1A	–	–	BKS B 1AE	–	–	–
Type O.M.R.:							
Black, lock No. 73034	OMR BK 1A	OMR BK 1E	–	OMR BK1AE	–	–	–
Switching sequence O-I, momentary contact							
Type RONIS:							
Lock No. SB30	RSB 2A	–	–	–	–	–	–
Type CES:							
Lock No. SSG 10	CES 2A	–	–	–	–	–	–
Lock No. LSG 1	CESL 2A	–	–	–	–	–	–
Type BKS:							
Lock No. S1	BKS 2A	–	–	–	–	–	–
Type O.M.R.:							
Black, lock No. 73034	OMR BK 2A	–	–	–	–	–	–
Locks with 3 switch positions							
Switching sequence I–O–II, latching							
Type RONIS:							
Lock No. SB30	RSB 4A	RSB 4E	RSB 4D	–	–	RSB 4ED	RSB 4EAD
Type CES:							
Lock No. SSG 10	CES 4A	CES 4E	CES 4D	–	–	CES 4ED	CES 4EAD
Type CES with key monitoring:							
Lock No. SSG 10	CES SU 4A						
Type BKS:							
Lock No. S1	BKS 4A	BKS 4E	BKS 4D	–	–	BKS 4ED	BKS 4EAD
Type O.M.R.:							
Black, lock No. 73034	OMR BK 4A	–	–	–	–	OMR BK 4ED	OMR BK 4EAD
Switching sequence I–O–II, momentary contact							
Type RONIS:							
Lock No. SB30	RSB 5A	–	–	–	–	–	–
Type CES:							
Lock No. SSG 10	CES 5A	–	–	–	–	–	–
Type BKS:							
Lock No. S1	BKS 5A	–	–	–	–	–	–
Type O.M.R.:							
Black, lock No. 73034	OMR BK 5A	–	–	–	–	–	–

Note:
For more information about actuators and indicator lights, see Catalog IC 10, Chapter "Commanding and signaling devices" and in the Industry Mall at: www.siemens.com/industrymall.

© Siemens AG 2014

Selection and ordering data (continued)

Selection of equipment according to order form

Version	Codes Key can be removed in position O	I	II	O and I	O and II	I and II	I, O and II
Locks with 3 switch positions							
Switching sequence I–O–II, latching to the right, momentary contact to the left							
Type RONIS: Lock No. SB30	RSB 6A	–	RSB 6D	–	RSB 6AD	–	–
Type CES: Lock No. SSG 10	CES 6A	–	CES 6D	–	CES 6AD	–	–
Type BKS: Lock No. S1	BKS 6A	–	BKS 6D	–	BKS 6AD	–	–
Type O.M.R.: Black, lock No. 73034	OMR BK 6A	–	OMR BK 6D	–	OMR BK 6AD	–	–
Switching sequence I–O–II, latching to the left, momentary contact to the right							
Type RONIS: Lock No. SB30	RSB 7A	RSB 7E	–	RSB 7AE	–	–	–
Type CES: Lock No. SSG 10	CES 7A	CES 7E	–	CES 7AE	–	–	–
Type BKS: Lock No. S1	BKS 7A	BKS 7E	–	BKS 7AE	–	–	–
Type O.M.R.: Black, lock No. 73034	OMR BK 7A	OMR BK 7E	–	–	–	–	–

Note:

For more information about actuators and indicator lights, see Catalog IC 10, Chapter "Commanding and signaling devices" and in the Industry Mall at: www.siemens.com/industrymall.

© Siemens AG 2014

Overview

The 8WD4 signaling columns are flexible in design and versatile in use.

They are used in machines or in automatic processes for monitoring complex procedures or as visual or acoustic warning devices in emergency situations, e.g. for displaying individual assembly stages.

8WD44 signaling columns with connection to AS-Interface cables

Two product series are available:

- 8WD42
  - Thermoplast enclosure, diameter 50 mm
  - Degree of protection IP54
- 8WD44
  - Thermoplast enclosure, diameter 70 mm
  - Advanced design and significantly improved illumination
  - Fast and flexible connection using spring-type terminals (optional)
  - Integrated degree of protection IP65

A signaling column (from top to bottom) consists of the cover, several light elements, the AS-Interface adapter element, the connection element and (depending on the mounting method) different fixing components.

One acoustic element can be optionally mounted per signaling column. The cover is included in the scope of supply of the acoustic element and fixed in place. The cover supplied with the connection element is then not needed.

Communications via AS-Interface

The 8WD4 signaling columns can be directly connected to the AS-Interface bus system through an adapter element that can be integrated in the column. Wiring outlay is reduced as the result.

Connection

8WD42:

The two-wire bus cable is fixed to the screw terminals in the connection element. The adapter element must be the first module to be mounted on the connection element. A maximum of 4 signaling elements can then be mounted on it.

The 8WD4228-0BB adapter element is a standard slave.

8WD44:

The two-wire bus cable is fixed to the screw or spring-type terminals in the connection element. The adapter element must be the first module to be mounted on the connection element. The signaling elements can then be mounted on it.

The 8WD4428-0BE adapter element is a standard slave.
A maximum of 4 signaling elements can be mounted on it.

The 8WD4428-0BD adapter element with A/B technology enables the connection of up to 62 slaves on one AS-Interface system. The addressing socket provides user-friendly parameterization of the AS-Interface elements. A maximum of 3 signaling elements can be mounted on it.

© Siemens AG 2014

Selection and ordering data

	Version	Rated voltage	Color	Article No.
Acoustic elements [1]				
	Buzzer elements 80 dB, pulsating or continuous tone, adjustable by means of a wire jumper	24 V AC/DC	Black	**8WD4220-0FA**
Light elements for incandescent lamps/LEDs, BA 15d bases [2]				
	Continuous light elements	24 ... 230 V AC/DC	Red Green Yellow Clear Blue	**8WD4200-1AB** **8WD4200-1AC** **8WD4200-1AD** **8WD4200-1AE** **8WD4200-1AF**
Light elements with integrated LED				
	Continuous light elements	24 V AC/DC	Red Green Yellow Clear Blue	**8WD4220-5AB** **8WD4220-5AC** **8WD4220-5AD** **8WD4220-5AE** **8WD4220-5AF**
	Blinklight elements	24 V AC/DC	Red Green Yellow Clear Blue	**8WD4220-5BB** **8WD4220-5BC** **8WD4220-5BD** **8WD4220-5BE** **8WD4220-5BF**
Adapter elements for AS-Interface				
	AS-Interface adapter elements With/without external auxiliary voltage, switchable			
	• Standard AS-i	for 4 signaling elements	Black	**8WD4228-0BB**
Connection elements [3]				
	Connection elements with cover Screw terminals		Black	
	• For mounting on pipes, brackets and floors			**8WD4208-0AA**

[1] One acoustic element can be mounted per signaling column. The cover is included in the scope of supply of the acoustic elements and fixed in place.

[2] The lamp is not included in the scope of supply. Please order separately.

[3] The connection element with cover is an essential part for assembling the signaling columns.

© Siemens AG 2014

Selection and ordering data (continued)

	Version		Article No.
Mounting			
	Feet, single	Plastic, for mounting on pipes	**8WD4308-0DB**
		Metal, for pipe lengths > 400 mm	**8WD4308-0DC**
		Plastic, for floor mounting (without pipe)	**8WD4208-0DE**
	Adjustable-angle feet for positioning in 7.5° increments[1]	Plastic, for mounting on pipes, incl. rubber seal	**8WD4408-0DF**
	Pipes, single	Length 100 mm	**8WD4208-0EF**
		Length 150 mm	**8WD4308-0EE**
		Length 250 mm	**8WD4308-0EA**
		Length 400 mm	**8WD4308-0EB**
		Length 1 000 mm	**8WD4308-0ED**
	Sockets for feet	Side cable outlet (can also be used without feet)	**8WD4308-0DD**
		Side cable outlet, with magnetic fixing[2]	**8WD4308-0DE**
	Brackets for mounting with foot		**8WD4408-0CC**
	Brackets for wall mounting (plastic)	Mounting without feet and pipe	**8WD4208-0CD**
	Adapters for single-hole mounting	Mounting without feet and pipe, with M18 thread and fixing nut	**8WD4208-0EH**
Lamps			
	Incandescent lamps, 5 W, 24 V AC/DC		
	Base BA 15d		**8WD4328-1XX**
	LEDs, 24 V AC/DC		
	Base BA 15d	Red	**8WD4428-6XB**
		Green	**8WD4428-6XC**
		Yellow	**8WD4428-6XD**
		Clear	**8WD4428-6XE**
		Blue	**8WD4428-6XF**

[1] Markings for 30°, 45°, 60° and 90°.
[2] For horizontal mounting, only 1 element is recommended.

© Siemens AG 2014

Selection and ordering data

	Version	Rated voltage	Color	Article No.
Acoustic elements [1]				
	Buzzer elements 85 dB, pulsating or continuous tone, adjustable by means of a wire jumper	24 V AC/DC	Black	**8WD4420-0FA**
	Siren elements, multi-tone, 100 dB, 8 tones and volume are adjustable	24 V AC/DC	Black	**8WD4420-0EA2**
	Siren elements 108 dB, IP40	24 V DC	Black	**8WD4420-0EA**
Light elements for incandescent lamps/LEDs, BA 15d bases [2]				
	Continuous light elements	12 ... 230 V AC/DC	Red	**8WD4400-1AB**
			Green	**8WD4400-1AC**
			Yellow	**8WD4400-1AD**
			Clear	**8WD4400-1AE**
			Blue	**8WD4400-1AF**
Light elements with integrated flash lamp [3]				
	Flashlight elements with integrated electronic flash	24 V DC	Red	**8WD4420-0CB**
			Green	**8WD4420-0CC**
			Yellow	**8WD4420-0CD**
			Clear	**8WD4420-0CE**
			Blue	**8WD4420-0CF**
Light elements with integrated LED				
	Continuous light elements	24 V AC/DC	Red	**8WD4420-5AB**
			Green	**8WD4420-5AC**
			Yellow	**8WD4420-5AD**
			Clear	**8WD4420-5AE**
			Blue	**8WD4420-5AF**
	Blinklight elements	24 V AC/DC	Red	**8WD4420-5BB**
			Green	**8WD4420-5BC**
			Yellow	**8WD4420-5BD**
			Clear	**8WD4420-5BE**
			Blue	**8WD4420-5BF**
	Rotating light elements	24 V AC/DC	Red	**8WD4420-5DB**
			Green	**8WD4420-5DC**
			Yellow	**8WD4420-5DD**
			Clear	**8WD4420-5DE**
			Blue	**8WD4420-5DF**
Adapter elements for AS-Interface				
	AS-Interface adapter elements			
	With/without external auxiliary voltage, switchable			
	• A/B technology	for 3 signaling elements	Black	**8WD4428-0BD**
	• Standard AS-i	for 4 signaling elements	Black	**8WD4428-0BE**
Connection elements [4]				
	Connection elements with cover		Black	
	Screw terminals			
	• For mounting on pipes			**8WD4408-0AA**
	• For mounting on brackets and floors			**8WD4408-0AB**
	Spring-type terminals			
	• For mounting on pipes			**8WD4408-0AD**
	• For mounting on brackets and floors			**8WD4408-0AE**
	Cover (replacement)			**8WD4408-0XA**

[1] One acoustic element can be mounted per signaling column. The cover is included in the scope of supply of the acoustic elements and fixed in place.

[2] The lamp is not included in the scope of supply. Please order separately.

[3] The lamp is included in the scope of supply.

[4] The connection element with cover is an essential part for assembling the signaling columns.

© Siemens AG 2014

Selection and ordering data (continued)

	Version		Article No.
Mounting			
	Foot with pipe	Pipe length 100 mm	**8WD4308-0DA**
	Feet, single	Plastic, for mounting on pipes	**8WD4308-0DB**
		Metal, for pipe lengths > 400 mm	**8WD4308-0DC**
	Adjustable-angle feet for positioning in 7.5° increments[1]	Plastic, for mounting on pipes, incl. rubber seal	**8WD4408-0DF**
	Pipes, single	Length 100 mm	**8WD4208-0EF**
		Length 150 mm	**8WD4308-0EE**
		Length 250 mm	**8WD4308-0EA**
		Length 400 mm	**8WD4308-0EB**
		Length 1 000 mm	**8WD4308-0ED**
	Sockets for feet	Side cable outlet (can also be used without feet)	**8WD4308-0DD**
		Side cable outlet, with magnetic fixing[2]	**8WD4308-0DE**
	Brackets for wall mounting (mounting without feet and pipe)	For single-sided mounting	**8WD4308-0CA**
		For double-sided mounting	**8WD4308-0CB**
	Brackets for mounting with foot		**8WD4408-0CC**
	Brackets for base mounting	Mounting without feet and pipe	**8WD4408-0CD**
	Adapters for mounting on pipes according to NPT	Mounting on pipes, ∅ 25 mm, with NPT 1/2" thread	**8WD4308-0DF**
Lamps			
	Incandescent lamps, 5 W, 24 V AC/DC		
	Base BA 15d		**8WD4328-1XX**
	LEDs, 24 V AC/DC		
	Base BA 15d	Red	**8WD4428-6XB**
		Green	**8WD4428-6XC**
		Yellow	**8WD4428-6XD**
		Clear	**8WD4428-6XE**
		Blue	**8WD4428-6XF**

[1] Markings for 30°, 45°, 60° and 90°.
[2] For horizontal mounting, only 1 element is recommended.

© Siemens AG 2014

Overview

AS-Interface power supply unit for 3 A

AS-Interface power supply units feed 30 V DC into the AS-Interface cable and supply the AS-Interface components. They include power-optimized data decoupling for the separation of communication signals and control supply voltage. As the result, AS-Interface is able to convey both data and power along a single line. The power supply units are resistant to overload and short circuits.

Dimensions

AS-Interface power supply units have compact dimensions in widths of 50 / 70 / 120 mm. No distances from other devices need to be observed when mounting the power supply units.

Features

- Higher rating: The power supply units deliver currents of 2.6 to 8 A.
- Integrated data decoupling: As the result, AS-Interface is able to convey both data and power along a single line.
- Integrated ground-fault detection: The power supply units perform the reliable detection and signaling of ground faults according to IEC 60204-1. The AS-Interface voltage can be disconnected automatically in the event of a ground fault.
- Integrated overload detection: An output overload is detected and reported over a diagnostics LED.
- Diagnostics memory: Any ground faults or overloads on the output side are stored in a diagnostics memory until the device is RESET.
- Remote RESET and remote signaling: Using relay contacts, a ground fault can be signaled and evaluated by a central controller and/or indicator light.
- Diagnostics LEDs: Three different LEDs indicate the status of the AS-Interface power supply locally at the power supply unit.
- Ultra-wide input range / two-phase connection: The ultra-wide input range of 120 to 500 V of the 8 A version means that the supply units can be used in virtually any network worldwide. In addition, this version dispenses with the need for an Nconductor as the device can be connected directly between 2 phases of a network.
- Operation with 24 V DC: The 3 A power supply unit is also available as a version with a 24 V DC input. This power supply unit is suitable for use in battery-powered systems or in systems with UPS (uninterruptible power supply).
- Removable terminal blocks with spring-type connections: For easy exchanging of devices, each power supply unit has three removable terminal blocks: for the input side, for the output side and for Signal/RESET connections.

Benefits

- Complete solution for supplying AS-Interface networks while making full use of the maximum possible cable length per AS-i segment
- Only AS-i masters and AS-i slaves need to be connected to the AS-Interface cable in order to operate AS-Interface
- Compact, space-saving dimensions
- Reliable power supply even for large numbers of AS-Interface modules with a high power requirement
- Integrated ground-fault and overload detection saves the need for additional components and enhances safety
- Fast fault detection and reduced downtimes thanks to diagnostics memory, remote signaling and remote RESET
- Reduced downtimes as the result of removable terminal blocks which enable the fast exchanging of devices
- Ultra-wide input range of the 8 A version permits single-phase and two-phase operation and saves the need for an N conductor
- Can be used world-wide thanks to, for example, UL/CSA approval (UL 508)
- With the 2.6 A version the output power is restricted to max. 100 W for use in NEC Class 2 circuits

Selection and ordering data

	Version		Spring-type terminals Article No.
 3RX9501-0BA00	**AS-Interface power supply units, IP20** • AS-i single output 30 V DC • With integrated ground-fault detection • With the 2.6 A version, the output power is restricted to max. 100 W (for use in NEC Class 2 circuits) • Dimensions: Width: 50 mm (3 A/2.6 A); 70 mm (5 A), 120 mm (8 A); Height: 125 mm; Depth: 125 mm		
	Output current	Input voltage	
	2.6 A/max. 100 W	120/230 V AC (selectable)	**3RX9501-2BA00**
	3 A	120/230 V AC (selectable)	**3RX9501-0BA00**
	3 A	24 V DC	**3RX9501-1BA00**
	5 A	120/230 V AC (selectable)	**3RX9502-0BA00**
 3RX9503-0BA00	8 A	120/230 ... 500 V AC (selectable)	**3RX9503-0BA00**

© Siemens AG 2014

Overview

PSN130S 30 V power supply units for 3 A, 4 A and 8 A

The PSN130S 30 V power supply units feed 30 V DC into the AS-Interface cable and supply the AS-Interface components, but do not include data decoupling. Data decoupling modules are needed in addition therefore to separate communication signals and control supply voltage, see page 4/140 or 4/142.

The power supply units are resistant to overload and short circuits.

Dimensions

The 30 V power supply units have compact dimensions in widths of 50 and 70 mm. No distances from other devices need to be observed when mounting the power supply units.

Features

- Primary clocked power supply units for connection to a single-phase AC network
- Power for currents of 3, 4 and 8 A
- The output voltage is floating, and resistant to short-circuits and no-load operation. In the event of an overload, the output voltage will be reduced or switched off. After a short-circuit or overload the devices will start up again automatically.
- In the event of a device fault, the output voltage will be limited to max. 37 V.
- Modular installation devices in degree of protection IP20 and safety class I
- Diagnostics: With an output voltage > 26.5 V DC, the green LED (30V O.K.) is lit and the signaling contact 13-14 is closed.

Benefits

- Low-cost alternative solution for supplying AS-Interface networks while making full use of the maximum possible cable length per AS-i segment
- Cost advantage particularly for multiple networks
- Compact, space-saving dimensions
- Reliable power supply even for large numbers of AS-Interface modules with a high power requirement
- Can be used world-wide thanks to, for example, UL/CSA approval (UL 508)

Application

Configuration examples of AS-Interface networks with a 30 V power supply unit

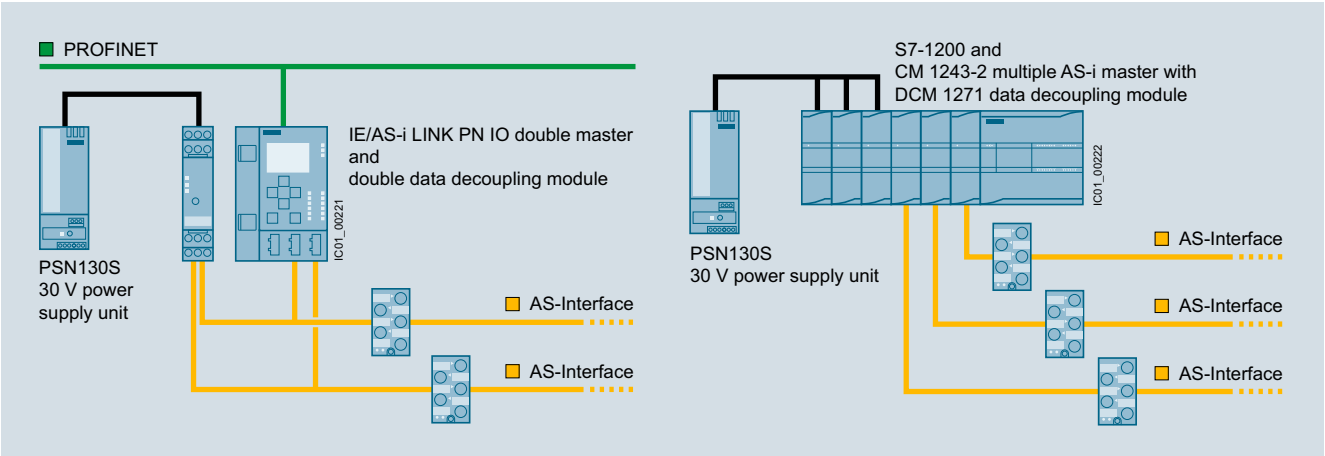

Configuration of AS-Interface multiple networks, each with one PSN130S 30 V power supply unit (examples with schematic representation):
Left: Double network based on the S22.5 double data decoupling module and IE/ASi LINK PN IO double master
Right: Triple network based on the SIMATIC S7-1200 with DCM 1271 data decoupling modules and CM 1243-2 communication processors

© Siemens AG 2014

Technical specifications

Version		3 A	4 A	8 A
Input data				
• Input voltage, rated value U_e	V AC	120 / 230 V, single-phase, automatic selection		
• Input voltage range	V AC	85 ... 132 / 174 ... 264		
• Mains frequency	Hz	50 / 60		
• Power consumption at full load, typ.	W	103	139	270
Output data				
• Output voltage, rated value U_a	V DC	30		
• Residual ripple	mV_{ss}	< 150		
• Output current, rated value at -20 °C ... +60 °C	A	3	4	8
• Max. output current at +60 °C ... +70 °C	A	3	3	4
Degree of efficiency in rated conditions				
• Degree of efficiency	%	87	88	90
• Power loss, typ.	W	12	17	25
Protection and monitoring				
• Output overvoltage protection	V	< 37		
• Current limit, typ.	A	4	5.5	11
Safety				
• Electrical separation primary / secondary		Output voltage PELV / SELV according to IEC 60950 and EN 50178		
• Safety class		I		
• Degree of protection		IP20		

Version		3 A	4 A	8 A
Approvals				
• UL		UL 508 / CSA 22.2		
• Pollution degree		IEC 60950		
• Overvoltage category and electrical separation		EN 50178 and IEC 61558		
EMC				
• Emitted interference (class B)		IEC 61000-6-3		
• Line harmonics limit		IEC 61000-3-2		
• Interference immunity		IEC 61000-6-2		
Operating data				
Ambient temperature				
• Operation	°C	-20 ... +70		
• Transport / storage	°C	-40 ... +85		
Pollution degree		2		
Humidity class		Climate class according to DIN 50010, relative air humidity max. 100 %, without condensation		
Dimensions and weight				
• Width	mm	50	50	70
• Height x depth	mm	125 x 126.5		
• Weight	kg	0.4	0.4	0.7

Selection and ordering data

	Version		Screw terminals Article No.
3RX9511-0AA00	**PSN130S 30 V DC power supply units (without AS-i data decoupling)** • Output voltage 30 V DC • Dimensions: Width: 50 mm (3 A / 4 A); 70 mm (8 A); Height: 125 mm; Depth: 126.5 mm		
	Output current	Input voltage	
	3 A	120 / 230 V AC (automatic selection)	**3RX9511-0AA00**
3RX9512-0AA00	4 A	120 / 230 V AC (automatic selection)	**3RX9512-0AA00**
3RX9513-0AA00	8 A	120 / 230 V AC (automatic selection)	**3RX9513-0AA00**

More information

Operating instructions and more technical information see
http://support.automation.siemens.com/WW/view/en/64364000.

© Siemens AG 2014

Overview

AS-Interface S22.5 double data decoupling module:
Screw terminal version (picture left),
Spring-type terminal version (picture right)

With the aid of the S22.5 data decoupling module, the AS-Interface network can also be supplied with 24 V DC or 30 V DC from a standard power supply unit and the transmission of data and power can be realized along one cable.
The combination of data decoupling modules and standard power supply units is therefore a cost-efficient alternative to the service-proven AS-Interface power supply units.
The quality of the data signals and the reliable operation of the AS-i network are not negatively affected as the result.

Features of the S22.5 data decoupling module

- Degree of protection IP20
- Narrow design: 22.5 mm wide
- Version with screw or spring-type terminals
- Versions for single and double data decoupling
- Supply of several AS-i networks with a single power supply unit
- Operation with 24 V DC or 30 V DC, grounded or non-grounded
- Adjustable current limiting up to 2 x 4 A
- Integrated ground-fault detection with fault storage
- Diagnostics LEDs and signaling contacts
- RESET by button or remote RESET

Ground-fault detection

The integrated ground-fault detection works with a grounded and non-grounded supply: The connection of negative pole and ground (upstream from the data decoupling module) customary with 24 V DC power supplies is permitted. A ground fault to the negative or positive pole on the AS-Interface network (downstream from the data decoupling module) is detected and stored as a fault and will be signaled using LEDs and a relay contact.

Benefits

- Compatible expansion of the AS-Interface system
- An existing standard power supply unit with 24 V DC or 30 V DC can be used for supplying AS-i networks
- The AS-Interface system can also be used in tightly budgeted applications because no AS-Interface power supply unit needs to be purchased
- Applications benefit in addition from the advantages of a modern bus system:
  - High level of standardization
  - Additional diagnostics and maintenance information
  - Faster commissioning
- Easy and cost-efficient design of single and multiple networks is possible

Application

The AS-Interface data decoupling module is designed for AS-Interface networks with 30 V supply or 24 V supply (AS-iPower24V).

Operation of an AS-i network with the data decoupling module and a 30 V standard power supply unit is technically equivalent to the use of an AS-Interface power supply unit and offers the service-proven features of AS-Interface for all applications.

AS-Interface Power24V uses a 24 V power supply unit in conjunction with a data decoupling module and is particularly suitable for

- Compact machines using AS-Interface input/output modules
- Applications in the control cabinet for AS-Interface integration of SIRIUS Innovations contactors and compact starters (3RT2 contactors through 3RA27 function modules or 3RA6 compact starters through 3RA69 AS-i add-on modules).

When using the double data decoupling module or other data decoupling modules, several AS-Interface networks can be operated with a single power supply unit. This results in an additional cost advantage.

Note:

The power supply units must comply with the PELV (Protective Extra Low Voltage) or SELV (Safety Extra Low Voltage) standards, have a residual ripple of < 250 mV_{pp}, and in the event of a fault, must limit the output voltage to a maximum of 40 V.
We recommend SITOP power supply units, see Catalog IC 10, Chapter 15 "Products for Specific Requirements"
⇒ "Stabilized Power Supplies" or PSN130S 30 V power supplies, see page 4/138.

Note on AS-i Power24V:

The length of an AS-i Power24V network is restricted to 50 m in order to limit the voltage drop along the cable.

AS-i masters, AS-i slaves and the sensors and actuators supplied through the AS-i cable must be designed for the reduced voltage. Sensors and actuators for the standard voltage range of 10 to 30 V can be supplied with sufficient voltage.

Please also continue to observe the requirements specified in the section "Extension of AS-i Power24V" for implementation of AS-i Power24V, see page 4/5.

For more information on AS-i Power24V,
see "AS-Interface System Manual"
http://support.automation.siemens.com/WW/view/en/26250840.

© Siemens AG 2014

Application

Construction of an AS-i Power24V network with an AS-Interface S22.5 data decoupling module

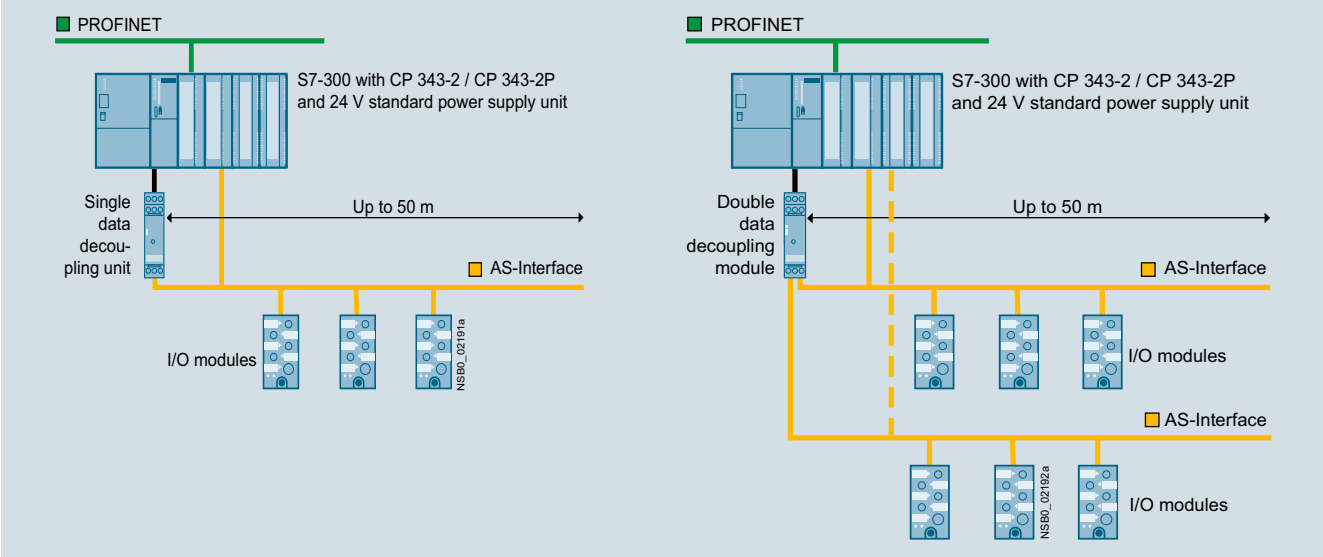

Construction of an AS-i Power24V network with an AS-Interface S22.5 data decoupling module: Picture left: single network, picture right: multiple network

Selection and ordering data

	Version	Article No.
3RK1901-1DE12-1AA0	**S22.5 data decoupling modules** With screw terminals, removable terminals, width 22.5 mm, height 101 mm, depth 115 mm • Single data decoupling module, 1 x 4 A • Double data decoupling module, 2 x 4 A	**Screw terminals** **3RK1901-1DE12-1AA0** **3RK1901-1DE22-1AA0**
3RK1901-1DG12-1AA0	**S22.5 data decoupling modules** With spring-type terminals, removable terminals, width 22.5 mm, height 105 mm, depth 115 mm • Single data decoupling module, 1 x 4 A • Double data decoupling module, 2 x 4 A	**Spring-type terminals** **3RK1901-1DG12-1AA0** **3RK1901-1DG22-1AA0**

Circuit diagrams

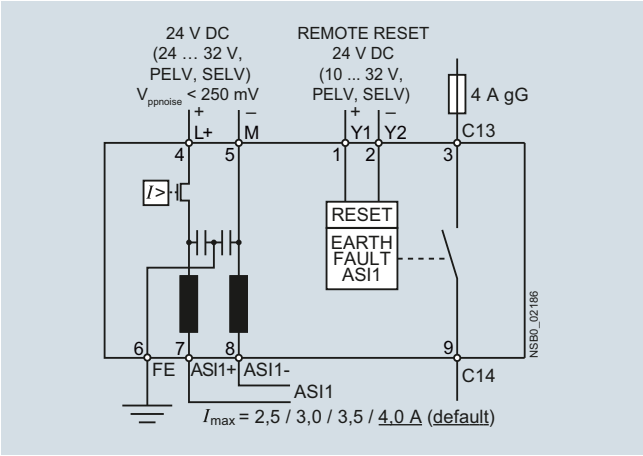

Single data decoupling module

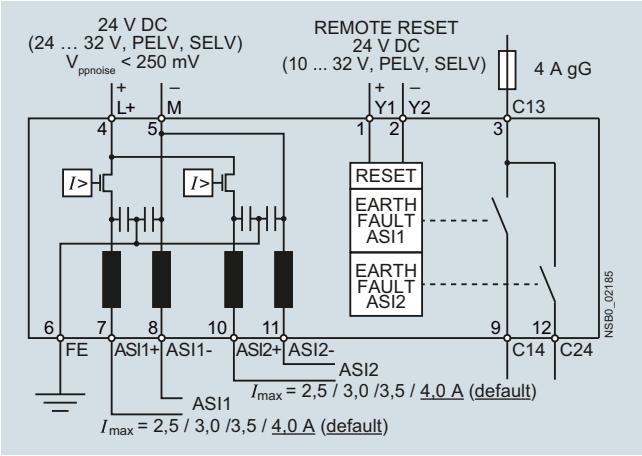

Double data decoupling module

© Siemens AG 2014

DCM 1271 data decoupling module

Overview

DCM 1271 data decoupling module for SIMATIC S7-1200

With the aid of the DCM 1271 data decoupling module, the AS-Interface network can also be supplied with 24 V DC or 30 V DC from a standard power supply unit and the transmission of data and power can be realized along one cable.

The DCM 1271 data decoupling module has the same enclosure design as the S7-1200 module and is therefore ideal for combining with the CM 1243-2 AS-i master.

Features of the DCM 1271 data decoupling module

- Design: S7-1200, 30 mm wide, degree of protection IP20
- Detachable terminals (scope of supply)
- Single data decoupling
- Supply of several AS-i networks with a single power supply unit
- Operation with 24 V DC or 30 V DC, grounded or non-grounded
- Current limiting at 4 A
- Integrated ground-fault detection
- Diagnostics LEDs for ground faults and overloads
- Signaling contacts for ground-fault detection

Ground-fault detection

The integrated ground-fault detection works with a grounded and non-grounded supply: The connection of negative pole and ground (upstream from the data decoupling module) customary with 24 V DC power supplies is permitted. A ground fault to the negative or positive pole on the AS-Interface network (behind the data decoupling module) is identified and signaled via LED and a transistor output.

Benefits

- An existing standard power supply unit with 24 V DC or 30 V DC can be used for supplying AS-i networks
- The AS-Interface system can also be used in tightly budgeted applications because no AS-Interface power supply unit needs to be purchased
- Applications benefit in addition from the advantages of a modern bus system:
  - High level of standardization
  - Additional diagnostics and maintenance information
  - Faster commissioning

Application

The AS-Interface data decoupling module is designed for AS-Interface networks with 30 V supply or 24 V supply (AS-Interface Power24V).

Operation of an AS-i network with the data decoupling module and a 30 V standard power supply unit is technically equivalent to the use of an AS-Interface power supply unit and offers the service-proven features of AS-Interface for all applications.

AS-Interface Power24V uses a 24 V power supply unit in conjunction with a data decoupling module and is particularly suitable for

- Compact machines using AS-Interface input/output modules
- Applications in the control cabinet for AS-Interface integration of SIRIUS Innovations contactors and compact starters (3RT2 contactors through 3RA27 function modules or 3RA6 compact starters through 3RA69 AS-i add-on modules)

Note:

The power supply units must comply with the PELV (Protective Extra Low Voltage) or SELV (Safety Extra Low Voltage) standards, have a residual ripple of < 250 mV_{pp}, and in the event of a fault, must limit the output voltage to a maximum of 40 V.
We recommend SITOP power supply units, see Catalog IC 10, Chapter 15 "Products for Specific Requirements"
⇒ "Stabilized Power Supplies" or PSN130S 30 V power supplies, see page 4/138.

Note on AS-i Power24V:

The length of an AS-i Power24V network is restricted to 50 m in order to limit the voltage drop along the cable.

AS-i masters, AS-i slaves and the sensors and actuators supplied through the AS-i cable must be designed for the reduced voltage. Sensors and actuators for the standard voltage range of 10 to 30 V can be supplied with sufficient voltage.

Please also continue to observe the requirements specified in the section "Extension of AS-i Power24V" for implementation of AS-i Power24V, see page 4/5.

Construction of an AS-i Power24V network with AS-Interface DCM 1271 data decoupling module

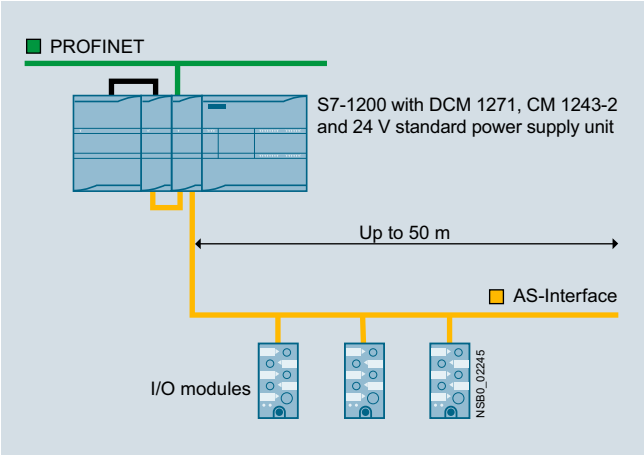

© Siemens AG 2014

Selection and ordering data

	Version	Article No.
3RK7271-1AA30-0AA0	**DCM 1271 data decoupling modules** • With screw terminals, removable terminals (included in the scope of supply) • Dimensions (W × H × D / mm): 30 × 100 × 75	**3RK7271-1AA30-0AA0**

Accessories

	Version	Screw terminals Article No.
	Screw terminals	
	• 5-pole for AS-i master CM 1243-2 and AS-i DCM 1271 data decoupling module	**3RK1901-3MA00**
	• 3-pole for AS-i DCM 1271 data decoupling module for connecting the power supply unit	**3RK1901-3MB00**

Circuit diagrams

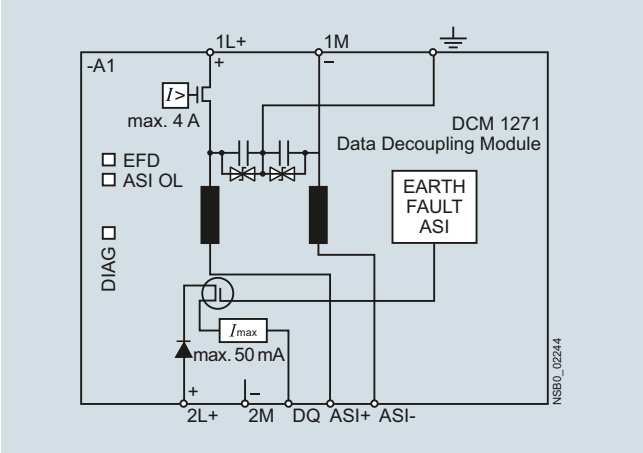

DCM 1271 single data decoupling module

More information

Manuals see http://support.automation.siemens.com/WW/view/en//50414115/133300.

For more information on AS-i Power24V, see
"AS-Interface System Manual" http://support.automation.siemens.com/WW/view/en/26250840.

© Siemens AG 2014

Overview

AS-Interface shaped cable

The actuator-sensor interface – the networking system used for the lowest field area – is characterized by very easy mounting and installation. A new connection method was developed specially for AS-Interface.

The stations are connected using the AS-Interface cable. This two-wire AS-Interface shaped cable has a trapezoidal shape, thus ruling out polarity reversal.

Connection is effected by the insulation piercing method. In other words, male contacts pierce the shaped AS-Interface cable and make reliable contact with the two wires. Cutting to length and stripping are superfluous. Consequently, AS-Interface stations (e.g. I/O modules, intelligent devices) can be connected in the shortest possible time and exchanging devices is quick.

To enable use in the most varied ambient conditions (e.g. in an oily environment), the AS-Interface cable is available in different materials (rubber, TPE, PUR).

For special applications it is also possible to use an unshielded standard round cable H05VV-F 2 x 1.5 mm² according to AS-i Specification. With AS-Interface, data and energy for the sensors (e.g. proximity switches) and actuators (e.g. indicator lights) are transmitted over the yellow AS-Interface cable.

The black AS-Interface cable must be used for actuators with a 24 V DC supply (e.g. solenoid valves) and a high power requirement.

Suitable for operation in tow chains

The use of the AS-Interface shaped cables with TPE and PUR outer sheath was checked in a tow chain test with the following conditions:

Chain length	m	6
Travel	m	10
Bending radius	mm	75
Travel speed	m/s	4
Acceleration	m/s²	4
Number of cycles		10 million
Duration of test		approx. 3 years (11 000 cycles per day)

After termination of the 10 million cycles, only slight wear was visible due to the lugs of the tow chain. No damage to the cores and core insulation could be detected.

Note:

When using a tow chain, the cables must be installed in such a way that they are not subject to tensile forces. On no account may the cables be twisted, but they must be routed flat through the tow chain.

Selection and ordering data

3RX90..-0AA00

Version			Article No.
AS-Interface shaped cables			
Material	Color	Quantity	
Rubber	Yellow (AS-Interface)	100-m roll	**3RX9010-0AA00**
	Yellow (AS-Interface)	1-km drum	**3RX9012-0AA00**
	Black (24 V DC)	100-m roll	**3RX9020-0AA00**
	Black (24 V DC)	1-km drum	**3RX9022-0AA00**
TPE	Yellow (AS-Interface)	100-m roll	**3RX9013-0AA00**
	Yellow (AS-Interface)	1-km drum	**3RX9014-0AA00**
	Black (24 V DC)	100-m roll	**3RX9023-0AA00**
	Black (24 V DC)	1-km drum	**3RX9024-0AA00**
TPE special version according to UL Class 2	Yellow (AS-Interface)	100-m roll	**3RX9017-0AA00**
	Black (24 V DC)	100-m roll	**3RX9027-0AA00**
PUR	Yellow (AS-Interface)	100-m roll	**3RX9015-0AA00**
	Yellow (AS-Interface)	1-km drum	**3RX9016-0AA00**
	Black (24 V DC)	100-m roll	**3RX9025-0AA00**
	Black (24 V DC)	1-km drum	**3RX9026-0AA00**

© Siemens AG 2014

Overview

AS-Interface repeater

The AS-Interface repeater is used to extend the AS-Interface cable.

- In its basic version, an AS-i network comprises one segment with a maximum cable length of 100 m. An extension plug (see next page) can be used to increase the cable length for a segment to a maximum of 200 m.
- If this is insufficient, however, you can use one or more repeaters.
- A repeater adds an extra segment to an existing segment. The extra segment can have a cable length of up to 100 m (without extension plug) or up to 200 m (with an extension plug in the extra segment).
- Each segment requires a separate AS-i power supply unit.
- Electrical separation of the two AS-Interface shaped cable lines
- Slaves can be used on both sides of the repeater.
- The additional power supply can increase the current infeed for slaves/sensors and lower the voltage drop on the AS-i cable.
- Separate display of the correct AS-Interface voltage for each segment.
- Installed in K45 module enclosure IP67 with mounting plate
- Easy mounting

Design of an AS-Interface network with repeaters

- Parallel switching of several repeaters possible (star configuration)
- Combination of series and parallel switching possible

The following conditions apply:

- When used without an extension plug no more than two repeaters are permitted between AS-i master and slave (repeaters connected in series).
- When used with an extension plug no more than one repeater is permitted between AS-i master and slave.

In safety-related applications the following also applies:

- When used without an extension plug, no more than two repeaters are permitted between evaluation unit (e.g. MSS ASIsafe Modular Safety System) and ASIsafe input slave or safe output module.
- When used with an extension plug, no more than one repeater is permitted between evaluation unit (e.g. MSS ASIsafe Modular Safety System) and ASIsafe input slave or safe output module.

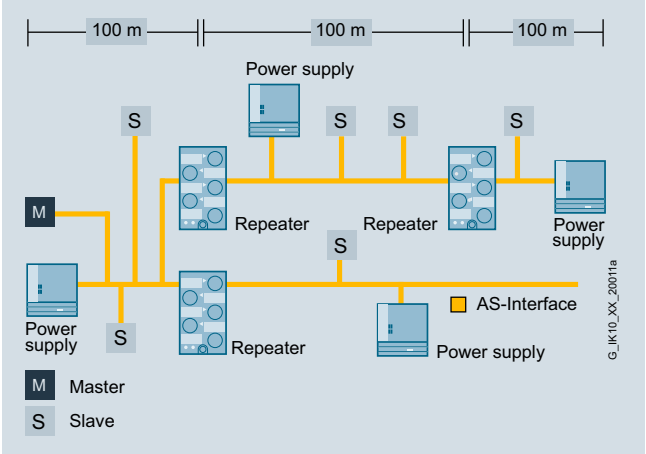

Design of an example AS-Interface network with repeaters (without extension plug)

Note:

The AS-Interface repeater is not suitable for AS-i Power24V networks. It is recommended for use in AS-Interface networks with AS-Interface power supply units (e.g. 3RX9501-0BA00).

Benefits

- More possibilities of use and greater freedom for plant planning through extension of the AS-Interface network
- Reduced downtime and servicing times in the event of a fault thanks to separate display of the correct AS-Interface voltage for each side

Application

The repeater is used to extend the AS-Interface network. In this case there are AS-Interface slaves and one AS-Interface power supply unit on each side of the repeater.

In the case of a line topology with two repeaters and three extension plugs, the AS-Interface network can be extended by 600 m overall, see example design with extension plug on the next page.

Selection and ordering data

	Version	Article No.
6GK1 210-0SA01	**Repeaters for AS-Interface** For cable extension, scope of supply includes mounting plate (for wall and standard rail mounting)	**6GK1210-0SA01**

© Siemens AG 2014

Extension plug

Overview

AS-Interface extension plug:
Picture left: extension plug compact, picture right: extension plug plus

With the extension plug, it is possible to double the cable length possible in an AS-Interface segment from 100 to 200 m.

Only one power supply unit is needed to supply power to the slaves on the up to 200 m long segment.

The following versions of the extension plug are available:
- Extension plug Compact: a passive component that can be connected directly to the AS-Interface shaped cable
- Extension plug plus: The Extension plug plus has an integrated A/B slave that enables any undervoltage supply to be signaled to the AS-Interface master. It has an M12 plug and can be connected to the AS-Interface M12 feeder with degree of protection IP67.

Design of an AS-Interface segment with an extension plug

With an AS-Interface segment with a cable length of more than 100 m and up to a maximum of 200 m, the extension plug is installed in a radius of approx. ± 10 m at that point of the network which is furthest from the power supply unit. The extension plug is not allowed to be used in AS-Interface networks smaller than 100 m. As with all AS-Interface networks, any network structure (line, tree, star) is possible when using the extension plug. Only one extension plug is required per 200 m segment, even with a tree or star structure.

Note:

With the compact extension plug and the M12 feeder 3RK1901-1NR10 (4 A), the AS-Interface shaped cable has to be terminated using the cable terminating piece, see "miscellaneous accessories", page 4/152.

The AS-Interface extension plug is not suitable for AS-i Power24V networks.

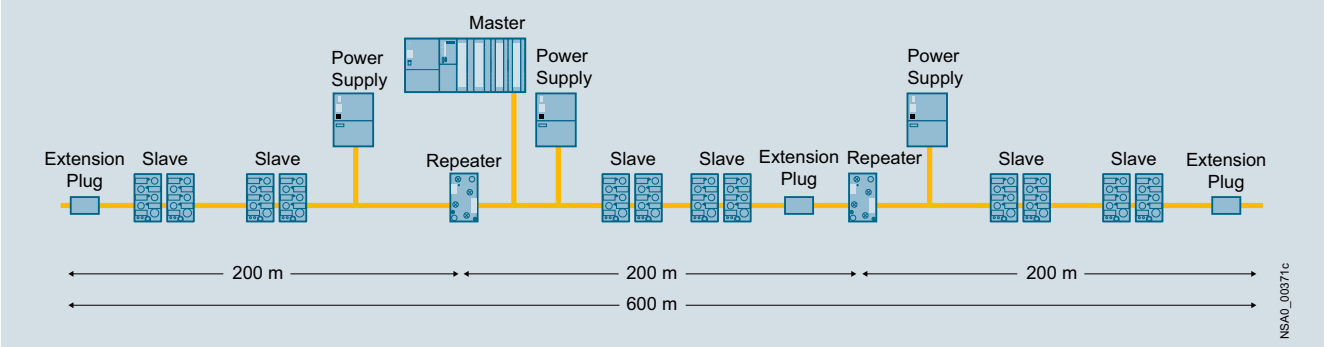

Maximum network size with repeaters and extension plug (master at center of network)

Selection and ordering data

	Version	Article No.
3RK1901-1MX02	**AS-Interface extension plug compact** • Doubling of the cable length to 200 m per AS-Interface segment • With direct connection to AS-Interface shaped cable	**3RK1901-1MX02**
3RK1901-1MX01	**AS-Interface extension plug plus** • Doubling of the cable length to 200 m per AS-Interface segment • Mounting on AS-Interface M12 feeders (to be ordered separately) • Undervoltage monitoring signal through integrated AS-Interface slave to AS-Interface master	**3RK1901-1MX01**
Accessories		
3RX9801-0AA00	**AS-Interface M12 feeders** • Transition of shaped AS-Interface cable to a standard round cable • Current carrying capacity up to 2 A • Degree of protection IP67	**3RX9801-0AA00**
3RK1901-1NR10	**AS-Interface M12 feeders** • Transition of AS-Interface cable without U_{aux}, with M12 socket • Max. 4 A • Degree of protection IP67/IP68/IP69K	**3RK1901-1NR10**

© Siemens AG 2014

Overview

The innovated addressing unit for AS-Interface of the AS-i Specification V3.0

The addressing unit is used to assign an address during commissioning to each AS-Interface slave. The device detects a connected slave module or a complete AS-i network and displays the found module in the LCD display. Via the Up/Down keys can each address can be individually set. By turning the rotary switch, further commissioning functions are selected intuitively. The innovative device has been adapted to the current AS-i Specification V3.0 and can now also handle the I/O data of the latest slaves.

Functionality

- Reading out and adjusting the slave address 0 to 31 or 1A to 31A, 1B to 31B, with automatic addressing aid and prevention of double addresses
- Reading out the slave profile (IO, ID, ID2)
- Reading out and adjusting the ID1 code
- Input/output test when commissioning the slaves:
  Read input signals and write outputs
  with all digital and analog slaves according to AS-Interface Specification V3.0, including safe input slaves and complex CTT2 slaves
- Measuring the voltage on the AS-Interface cable (measuring range from 2 to 35 V)
- Display of the operational current in case of direct connection of an AS-i slave (measuring range from 0 to 150 mA)
- Storage of complete network configurations (profiles of all slaves) to simplify the addressing
- Adjusting the slave parameters for commissioning
- Reading out the identification and diagnostics of CTT2 slaves
- Reading out the code table of safe input slaves (ASIsafe)

Note:

For operation of the addressing unit on an AS-Interface cable with connected power supply unit, the following applies:
The AS-Interface addressing unit is suitable for standard AS-i networks and AS-i Power24V networks (operational voltage on the AS-Interface cable min. 19 V).

Benefits

- Increased power supply to the slaves to 150 mA
- Better utilization of the battery capacity thanks to improved circuitry
- Support for the current AS-i Specification V3.0
- Expanded display for simultaneously displaying input and output states
- Clearly recognizable display of status of digital inputs/outputs in binary format (0 / 1), optionally also available as hexadecimal values
- Intuitive display of analog data either as decimal, hexadecimal or as a percentage (e.g. 100 % corresponds to input/output value 20 mA)
- I/O data of complex slaves (CTT2 profile) can be displayed
- Decoded display of the input data of safe input slaves, including code table
- Simplification of the operating steps when setting the slave address with automatic read back of the set address
- Addressing cable, ready for operation even without screwing in tight into the M12 socket, thus faster availability of the addressing unit
- Proven compact housing with smooth keys and rotary switch
- Connection of standard AS-i networks possible with 30 V as well as Power24V networks
- Complex slaves with high operating current can be addressed without external supply
- Longer operating time per battery pack
- Can be used with all types of digital and analog slaves
- Comprehensive and fast input/output test of plants, even for A/B modules with 4 DI / 4 DO and current analog modules with an A/B address
- Faster and more reliable commissioning of the AS-Interface modules
- One-hand operation possible, with unique selection of the functions
- Universal applicability for all AS-i networks

© Siemens AG 2014

Technical specifications

		3RK1904-2AB02 AS-Interface addressing unit
Parameters		
Measuring range		
• Voltage	V	2 ... 35
• Current (for slaves)	A	0 ... 0.150
Measuring accuracy in % of the measured value		
• Voltage	%	± 3.5 + 2 digits
• Current (for slaves)	%	± 5 + 2 digits
Input resistance for voltage measurement	kΩ	300
Power supply		
Standard power supply		4 batteries 1.5 V type AA, IEC LR6 (NEDA15) or corresponding batteries (preferably NiMH)
Recommendation for current-intensive application		4 high-grade alkaline manganese batteries 1.5 V type AA
Automatic disconnection for a longer battery life		Approx. 5 minutes (or approx. 1 minute when data exchange is active) after last operation
Ambient conditions		
Ambient temperature	°C	0 ... +50
Storage temperature	°C	-20 ... +75 without batteries
Relative air humidity, max.	%	75, condensation not permitted
Altitude above sea level, max.	m	2000
Location		Only indoors
Mechanical design		
Degree of protection		IP40
Dimensions, W x H x D	mm	84 x 195 x 35
Connection		M12 socket: Pin 1: ASI+; Pin 3: ASI–; Pin 2, 4, 5: Not used
Weight with batteries	kg	0.450

Selection and ordering data

	Version	Article No.
3RK1904-2AB02	**AS-Interface addressing unit V 3.0** • For AS-Interface modules and sensors and actuators with integrated AS-Interface in accordance with AS-i Specification V3.0 • For setting the AS-i address of standard slaves, and slaves with extended addressing mode (A/B slaves) • With input/output test function and many other commissioning functions • Battery operation with 4 batteries type AA (IEC LR6, NEDA 15) • Scope of supply: - Addressing unit with 4 batteries - Addressing cable, with M12 plug to addressing plug (hollow plug), length 1.5 m	**3RK1904-2AB02**
Accessories		
3RK1902-4PB15-3AA0	**Addressing cable, with M12 plug to M12 socket**[2)] • For addressing slaves with M12 connection, e.g. K20 or K60R modules or light curtains • Length 1.5 m, 3-pole, 3 x 0.34 mm²	**3RK1902-4PB15-3AA0**
3RX9801-0AA00	**AS-Interface M12 feeders** • Transition of AS-Interface cable to a standard round cable • Insulation piercing method for connection of AS-Interface cable • M12 socket for connection of standard round cable • Current carrying capacity up to 2 A	**3RX9801-0AA00**
3RK1901-1NR10	**AS-Interface M12 feeders** • Transition of AS-Interface cable without U_{aux}, with M12 socket • Insulation piercing method for connection of AS-Interface cable • M12 socket for connection of standard round cable	**3RK1901-1NR10**
3RK1902-4HB50-5AA0	**M12 cable plug**[3)] • Extruded M12 plug (angled cable feeder 90°), other cable end open • Length: 5 m, 5-pole, color: Black	**3RK1902-4HB50-5AA0**
3RK1902-4BA00-5AA0	**M12 plug straight**[3)] • For screw fixing, 5-pole screw terminal, max. 0.75 mm² • A-coded, max. 4 A	**3RK1902-4BA00-5AA0**
	Addressing cable, with M12 plug to addressing plug (hollow plug)[1)] • Included in the scope of supply of the addressing unit • Length 1.5 m	**Z236A**

[1)] Can be ordered only via GMC-I Messtechnik GmbH, see Catalog IC 10, Chapter 16 "Appendix ⇒ "External Partners"

[2)] Not included in scope of supply of the 3RK1904-2AB02 addressing unit.

[3)] For connecting the addressing unit to an AS-i network via AS-Interface M12 feeder, a connecting cable (M12 plug to M12 connector) must be produced and requires the following wiring:
- M12 cable plug: Pin 1 / core brown ↔ M12 plug: Pin 1
- M12 cable plug: Pin 3 / core blue ↔ M12 plug: Pin 3
- Pin 2, 4, 5 not connected.

© Siemens AG 2014

Overview

AS-Interface analyzer

The AS-Interface analyzer is used to test AS-Interface networks.

Installation errors, e. g. loose contacts or EMC interference under extreme loads, can be revealed by this device.

Thanks to the easy-to-use software the user can assess the quality of complete networks even if he lacks detailed specialist knowledge of AS-Interface. In addition it is an easy matter with the AS-Interface analyzer to create test logs from the records produced, thus providing documentation for startups and service assignments.

For advanced AS-Interface users there are trigger functions for detailed diagnostics.

Connection

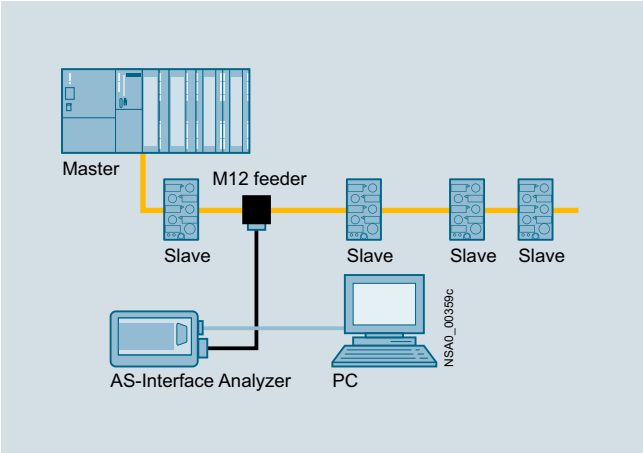

Connection of AS-Interface analyzer to PC and AS-Interface network

The AS-Interface analyzer follows the communication on the AS-Interface network as a passive station. The unit is supplied simultaneously from the AS-Interface cable.

This analyzer interprets the physical signals on the AS-Interface network and records the communication.

The data thus obtained are transferred through an RS 232 interface to a PC such as a notebook, for evaluation with the supplied diagnostics software.

Benefits

- Simple and user-friendly operation enables diagnostics of AS-Interface networks without help from specialists
- Speedy troubleshooting thanks to intuitive display in statistics mode
- Test logs provide verification of the state and quality of the installation for service and approval
- Recorded logs facilitate remote diagnostics by technical assistance
- Comprehensive trigger functions enable exact analysis
- Process data can be monitored online

Application

Online statistics

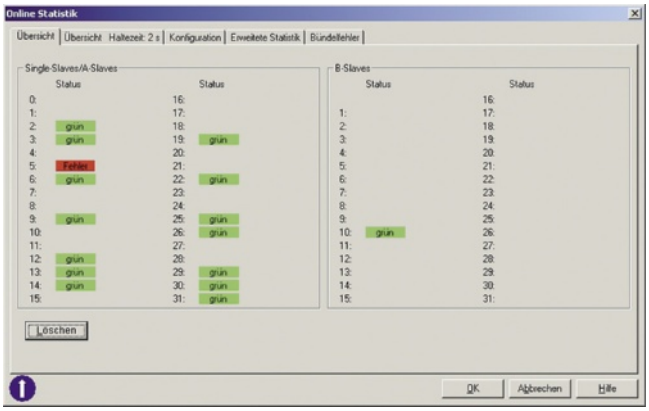

Online statistics, overview

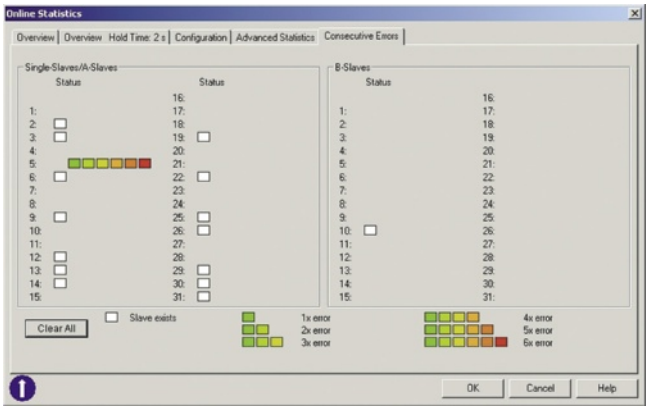

Online statistics, details, e.g. here a fault on slave 5

This mode provides a quick overview of the existing AS-Interface system. The error rates are displayed per slave in a traffic-light function (green, yellow, red).

The bus configuration and the currently transmitted data of the slaves are shown in a well arranged presentation.

With the expanded statistics function, it is possible to determine the error rates as the number of transmitted or faulty bus message frames.

The bundle error overview shows in steps how many multiple repetitions of message frames occurred in order to enable a selective and look-ahead assessment of the transmission quality.

© Siemens AG 2014

Data mode

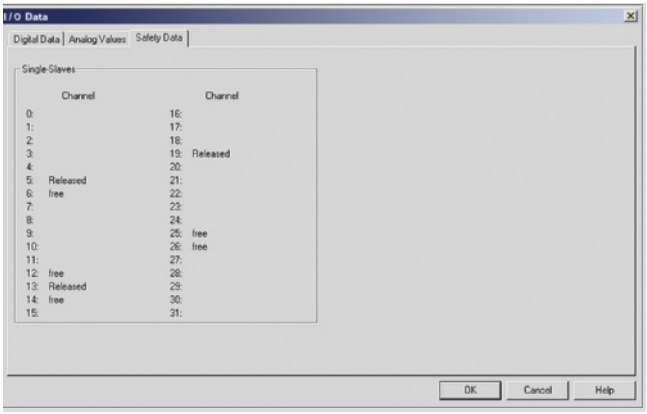

Presentation of the I/O data: Safety data

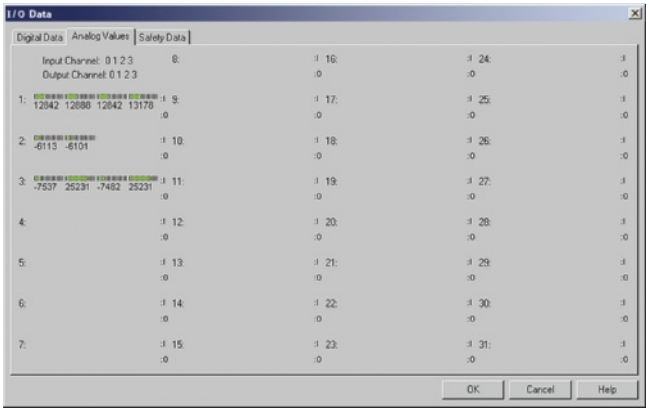

Presentation of the I/O data: Analog values

In this mode, the analyzer shows not only the digital input/output values but also the current analog values and the input status of the safety slaves.

Trace mode

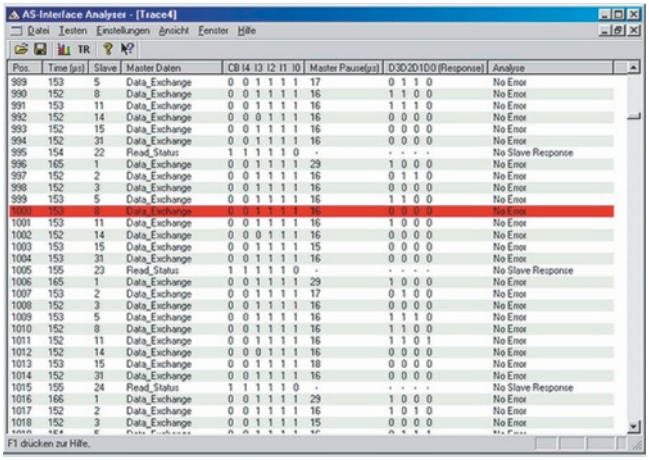

Presentation of message frames in trace mode

The presentation of message frames in the style of a classic fieldbus analyzer is indispensable for complex troubleshooting. Extensive trigger functions and recording and viewing filters are available for this purpose.
An external trigger input and trigger output round off the scope of functions in order to find even the most difficult errors.

For troubleshooting in connection with ASIsafe applications, changes of status in the code tables of safety slaves are identified and assessed.

Test log

Example of a test log

The recorded data of the online statistics are easy to output and document using a test log. Verification of the state of the plant can thus be provided for approvals or service assignments.

The integrated measurement assistant records the bus signals for a variable duration, thereby triggering creation of an automatic test log. A standardized quality test of AS-i plants is thus possible.

Note:

The AS-Interface analyzer is suitable for standard AS-i networks and AS-i Power24V networks (operational voltage min. 20 V).

© Siemens AG 2014

Selection and ordering data

	Version	Article No.
 3RK1904-3AB01	**AS-Interface analyzers** • For testing AS-Interface actuator/sensor interface systems • For troubleshooting and service assignments in installations and networks with AS-Interface systems • Dimensions (W x H x D): 145 x 30 x 92 mm • Scope of supply: • AS-Interface analyzers • RS 232 cable for connecting to PC • USB-to-serial/RS 232 adapter • Screwdriver - Magnetic adhesive tape for fastening the analyzer to metal surfaces - Service case with foam insert, dimensions (W x H x D / mm): approx. 260 x 70 x 200 - Diagnostics software (CD-ROM) for PC (Windows 95/98, ME, 2000, NT, XP, Vista Home Basic, Home Premium, Business, Ultimate, Windows 7)	**3RK1904-3AB01**
Accessories		
 3RX9801-0AA00	**AS-Interface M12 feeders** • Transition of shaped AS-Interface cable to a standard round cable • Insulation piercing method for connection of AS-Interface cable • M12 socket for connection of standard round cable • Current carrying capacity up to 2 A • Degree of protection IP67	**3RX9801-0AA00**
 3RK1901-1NR10	**AS-Interface M12 feeders** • Transition of AS-Interface cable without U_{aux}, with M12 socket • Insulation piercing method for connection of AS-Interface cable • M12 socket for connection of standard round cable • Max. 4 A • Degree of protection IP67/IP68/IP69K	**3RK1901-1NR10**
 3RK1902-4HB50-5AA0	**M12 cable plugs** • Cable: PUR, 5-pole • Length: 5 m • Color: Black • Extruded M12 plug (angled cable feeder 90°), other cable end open	**3RK1902-4HB50-5AA0**

© Siemens AG 2014

Selection and ordering data

	Version				Article No.
3RK2703-3AB02-1AA1	**AS-Interface system manual** Free download of technical information and overview of the AS-Interface product range from Siemens, scope: approx. 600 pages • For German version, see http://support.automation.siemens.com/WW/view/de/26250840 • For English version, see http://support.automation.siemens.com/WW/view/en/26250840				
3RK1901-1NN10	**AS-Interface compact distributors, for AS-Interface flat cable** • Current carrying capacity up to 8 A • Degree of protection IP67/IP68/IP69K				**3RK1901-1NN10**
3RX9801-0AA00	**AS-Interface M12 feeders** • Degree of protection IP67 • Current carrying capacity up to 2 A				
	For flat cable	For	Cable length	Cable end in feeder	
	AS-i	M12 socket	--	Available	**3RX9801-0AA00**
3RK1901-1NR10	**AS-Interface M12 feeders** • Degree of protection IP67/IP68/IP69K • Current carrying capacity up to 4 A				
	For flat cable	For	Cable length	Cable end in feeder	
	AS-i	M12 socket	--	Not available	**3RK1901-1NR10**
3RK1901-1NR11	AS-i	M12 cable box	1 m	Not available	**3RK1901-1NR11**
	AS-i	M12 cable box	2 m	Not available	**3RK1901-1NR12**
	AS-i/U_{aux}	M12 socket	--	Not available	**3RK1901-1NR20**
	AS-i/U_{aux}	M12 cable box	1 m	Not available	**3RK1901-1NR21**
	AS-i/U_{aux}	M12 cable box	2 m	Not available	**3RK1901-1NR22**
3RK1901-1NR04	**AS-Interface M12 feeders, 4-fold** • Degree of protection IP67 • Current carrying capacity up to 4 A				
	For flat cable	For	Cable length	Cable end in feeder	
	AS-i/U_{aux}	4-fold M12 socket, delivery includes mounting plate (for wall and standard rail mounting)	--	Not available	**3RK1901-1NR04**
3RK1901-1TR00	**M12 T distributors** • IP68 • 1 x M12 plug • 2 x M12 box				**3RK1901-1TR00**
6ES7194-1KA01-0XA0	**M12 Y-shaped coupler plugs** For connection of two sensors to one M12 socket with Y assignment				**6ES7194-1KA01-0XA0**

© Siemens AG 2014

Selection and ordering data (continued)

	Version	Article No.
3RK1901-1KA00	**AS-Interface M12 sealing caps** For free M12 sockets	**3RK1901-1KA00**
3RK1901-1KA01	**AS-Interface M12 sealing caps, tamper-proof** For free M12 sockets	**3RK1901-1KA01**
3RK1901-1PN00	**AS-Interface M8 sealing caps** For free M8 sockets	**3RK1901-1PN00**
3RK1901-1MD00	**AS-Interface M20 seals** • For AS-Interface cable, shaped • For insertion in M20 glands	**3RK1901-1MD00**
3RK1901-3QM00	**Cable adapters for flat cables** Connection of AS-Interface cable to metric gland with insulation piercing method • Continuation using standard cable - For M16 gland - For M20 gland • Continuation using pins - For M16 gland - For M20 gland	 **3RK1901-3QM00** **3RK1901-3QM10** **3RK1901-3QM01** **3RK1901-3QM11**
3RK1901-3QA00	**Cable clips for cable adapters**	**3RK1901-3QA00**
3RK1901-1MN00	**Cable terminating pieces** For sealing of open cable ends (shaped AS-Interface cable) in IP67	**3RK1901-1MN00**
3RK1901-2EA00	**K45 mounting plates** • For wall mounting • For standard rail mounting	 **3RK1901-2EA00** **3RK1901-2DA00**
3RK1901-0CA00	**K60 mounting plates** Suitable for all K60 compact modules • For wall mounting • For standard rail mounting	 **3RK1901-0CA00** **3RK1901-0CB01**

© Siemens AG 2014

Selection and ordering data (continued)

	Version	Article No.
3RK1902-0AR00	**Sealing sets** • For K60 mounting plate and standard distributor • Cannot be used for K45 mounting plate • One set contains one straight and one shaped seal.	**3RK1902-0AR00**
	Labels • For K45 and K60 compact modules • 20 x 9 mm, pastel turquoise • 19 frames with 20 labels each	**3RT1900-1SB50**
3RK1902-4GB50-4AA0	**Control cables, assembled at one end** Angular M12 socket for screw fixing, 4-pole, 4 x 0.34 mm^2, A-coded, black PUR sheath, max. 4 A • Cable length 5 m	**3RK1902-4GB50-4AA0**
3RK1902-4CA00-4AA0	**Angular M12 socket** for screw fixing, 4-pole screw terminals, max. 0.75 mm^2, A-coded, max. 4 A	**3RK1902-4CA00-4AA0**
3RK1902-4BA00-5AA0	**M12 plugs, straight** For screw fixing, 5-pole screw terminals, max. 0.75 mm^2, A-coded, max. 4 A	**3RK1902-4BA00-5AA0**
3RK1902-4DA00-5AA0	**M12 plugs, angled** For screw fixing, 5-pole screw terminals, max. 0.75 mm^2, A-coded, max. 4 A	**3RK1902-4DA00-5AA0**
3RK1902-4H...-5AA0	**Control cables, assembled at one end** M12 plugs, angled, for screw fixing, 5-pole, 5 x 0.34 mm^2, A-coded, black PUR sheath, max. 4 A • Cable length 1.5 m • Cable length 5 m • Cable length 10 m	 **3RK1902-4HB15-5AA0** **3RK1902-4HB50-5AA0** **3RK1902-4HC01-5AA0**
3RK1902-4PB15-3AA0	**Control cable, assembled at both ends** Straight M12 plug, straight M12 socket, for screw fixing, 3-pole, 3 x 0.34 mm^2, A-coded, black PUR sheath, max. 4 A • Cable length 1.5 m • Also for addressing AS-i slaves with M12 bus connection (e.g. K20, K60R compact modules, M200D motor starters)	**3RK1902-4PB15-3AA0**

© Siemens AG 2014

Overview

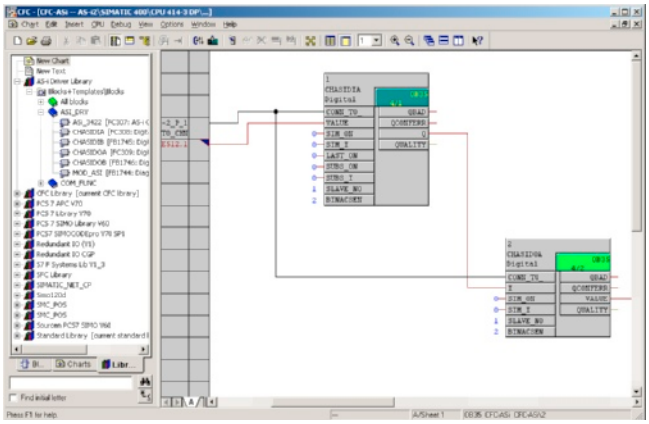

AS-Interface function block library for SIMATIC PCS 7: User interface

The AS-Interface block library for PCS 7 is integrated in the SIMATIC PCS 7 process control system and expands it for integration of the AS-Interface system.

As the result, the advantages of AS-Interface such as the considerable reduction of wiring outlay for distributed actuators/sensors and very simple installation can also be used in a system based on PCS 7.

The library contains modules for accessing the I/O data of AS-i slaves, modules for diagnostics of the AS-i system, and a faceplate for the PCS 7 Maintenance Station.

Supported AS-Interface modules

The AS-Interface block library for PCS 7 can be used with the following AS-i master and link modules:

- CP 343-2 (in ET 200M station) 6GK7343-2AH01-0XA0
- CP 343-2P (in ET 200M station) 6GK7343-2AH11-0XA0
- DP/AS-i LINK Advanced single master 6GK1415-2BA10
- DP/AS-i LINK Advanced double master 6GK1415-2BA20
- IE/AS-i LINK PN IO single master 6GK1411-2AB10 (only for block library for PCS 7 V8 with APL)
- IE/AS-i LINK PN IO double master 6GK1411-2AB20 (only for block library for PCS 7 V8 with APL)

The AS-i CP 343-2 and CP 343-2P masters are supported within an ET 200M station connected through PROFIBUS.

For direct connection to PROFIBUS it is possible to use DP/AS-i LINK Advanced as an AS-i single master and double master.

Digital AS-i standard slaves and A/B slaves (according to AS-Interface Specification V 3.0) can be used on the CP 343-2 and CP 343-2P.

In combination with the IE/AS-i LINK PN IO (for PCS 7 V8 with APL) and the DP/AS-i LINK Advanced, it is also possible to integrate analog AS-i slaves.

Hardware and software requirements

The libraries require the following PCS 7 versions:

- Engineering software V8: PCS 7 version V8.0 SP1 and higher
- Engineering software migration V7-V8: PCS 7 version V8.0 and higher
- Engineering software V7: PCS 7 version V6.1, V7.0 or V7.1

The engineering software migration V7-V8 comprises the same interconnection logic of the CFC blocks as the engineering software V7 and is recommended for the switch to PCS 7 V8 with only a few adjustments required in the CFC editor.

The engineering software V8 uses APL interconnection logic and is recommended for new PCS 7 projects.

Types of delivery and license

The block library supplied on CD-ROM allows the user to run the required engineering software on the engineering station (single license) including the runtime software for executing the AS modules in an automation system (single license).

If the AS modules are to be used in additional automation systems, the corresponding number of runtime licenses are required which are supplied without a data carrier.

No additional licenses are required in order to use the faceplates on further operator stations.

Benefits

- Easy connection of AS-Interface to PCS 7
- Engineering work reduced to positioning and connecting the blocks in the CFC
- With no additional configuring steps required for connection to the PCS 7 Maintenance Station, diagnostics for the AS-i system is optimally guaranteed.

Application

The AS-Interface block library for PCS 7 is used in systems based on PCS 7 where the actuators and sensors are to be connected using AS-Interface.

© Siemens AG 2014

Selection and ordering data

	Version	Article No.
AS-Interface block library for SIMATIC PCS 7 version V8 with Advanced Process Library (APL)		
3ZS1635-1XX02-0YA0	**Engineering software V8** For one engineering station (single license) including runtime software for execution of the AS blocks in an automation system (single license), German/English Scope of supply: AS blocks and faceplates for integrating AS-Interface into the PCS 7 process control system with Advanced Process Library (APL), for PCS 7 version V8.0, SP1, and higher Type of delivery: Software and documentation on CD, one license for one engineering station, one license for one automation system	**3ZS1635-1XX02-0YA0**
	Runtime license V8 For execution of the AS blocks in an automation system (single license) Required for using the AS blocks of the engineering software V8 on an additional automation system within a plant Type of delivery: One license for one automation system, without software and documentation	**3ZS1635-2XX02-0YB0**
AS-Interface block library for SIMATIC PCS 7 version V6.1/V7/V8 (Migration)		
3ZS1635-1XX01-0YA0	**Engineering software V7** For one engineering station (single license) including runtime software for execution of the AS blocks in an automation system (single license), German/English Scope of supply: AS blocks and faceplates for integrating AS-Interface into the PCS 7 process control system, for PCS 7 version V6.1, V7.0 or V7.1 Type of delivery: Software and documentation on CD, one license for one engineering station, one license for one automation system	**3ZS1635-1XX01-0YA0**
	Runtime license V7 For execution of the AS blocks in an automation system (single license) Required for using the AS blocks of the engineering software V7 or the engineering software migration V7-V8 on an additional automation system within a plant Type of delivery: One license for one automation system, without software and documentation	**3ZS1635-2XX01-0YB0**
	Engineering software migration V7-V8 For upgrading (migrating) an existing engineering software V7 of the AS-Interface block library for PCS 7 Conditions of use: Availability of the engineering software V7 (license) of the AS-Interface block library for PCS 7 for the PCS 7 version V6.1, V7.0 or V7.1 The engineering software migration V7-V8 can be installed directly onto a system with PCS 7 version V8.0; installation of the previous version is unnecessary. For one engineering station (single license) including runtime software for execution of the AS blocks in an automation system (single license), German/English Scope of supply: AS blocks and faceplates for integrating AS-Interface into the PCS 7 process control system, for PCS 7 version V 8.0 Type of delivery: software and documentation on CD, license for upgrading an existing license for one engineering station and a plant's assigned runtime licenses	**3ZS1635-1XX11-0YE0**

More information

Programming manual for AS-Interface block library for SIMATIC PCS 7 version V8 with Advanced Process Library (APL) see http://support.automation.siemens.com/WW/view/en/37432054/133300.

Programming manual for AS-Interface block library for SIMATIC PCS 7 version V6.1/V7/V8 (Migration) see http://support.automation.siemens.com/WW/view/en/46504691.

Notes:

The associated service pack SP1 of the block library is included in the scope of delivery of engineering software V7 and engineering software migration V7-V8.

Service Pack SP1 can also be downloaded from the Internet, see http://support.automation.siemens.com/WW/view/en/37432054/133100.