© Siemens 2019

SIEMENS



SENTRON • SIVACON • ALPHA

Low-Voltage Power Distribution and Electrical Installation Technology

Switch Disconnectors

Catalog Extract LV 10

Edition 04/2019

siemens.com/lowvoltage

© Siemens 2019

Related catalogs

Low-Voltage Power Distribution and Electrical Installation Technology LV 10
SENTRON • SIVACON • ALPHA
Protection, Switching, Measuring and Monitoring Devices, Switchboards and Distribution Systems

PDF (E86060-K8280-A101-A9-7600)
Print (E86060-K8280-A101-A6-7600)



Air Circuit Breakers and Molded Case Circuit Breakers with UL Certification LV 18
SENTRON

PDF (E86060-K8280-E347-A2-7600)



Industrial Controls IC 10
SIRIUS

PDF (E86060-K1010-A101-A9-7600)



Industrial Communication IK PI
SIMATIC NET

E86060-K6710-A101-B8-7600



DELTA ET D1
Switches and Socket Outlets

PDF



SITRAIN
Training for Industry

www.siemens.com/sitrain



Catalog PDF / Contact

Catalog PDF
Digital versions of the catalogs are available in the Siemens Industry Online Support.

www.siemens.com/lowvoltage/catalogs



Contact
Your personal contact can be found in our Contacts Database at:

www.siemens.com/automation-contact



Industry Mall / TIA ST / CA 01

Industry Mall
Information and Ordering Platform on the Internet:

www.siemens.com/industrymall



Siemens TIA Selection Tool
for the selection, configuration and ordering of TIA products and devices

www.siemens.com/tst

Products for Automation and Drives CA 01
Interactive Catalog
Download

www.siemens.com/ca01download



Trademarks

All product designations may be registered trademarks or product names of Siemens AG or other supplying companies. Third parties using these trademarks or product names for their own purposes may infringe upon the rights of the trademark owners. Further information about low-voltage power distribution and electrical installation technology is available on the Internet at:

www.siemens.com/lowvoltage

Technical Support



Expert advice on technical questions with a wide range of demand-optimized services for all our products and systems.

www.siemens.com/lowvoltage/support-request

© Siemens 2019

Low-Voltage Power Distribution and Electrical Installation Technology

Protection, Switching, Measuring and Monitoring Devices, Switchboards and Distribution Systems

SENTRON · SIVACON · ALPHA

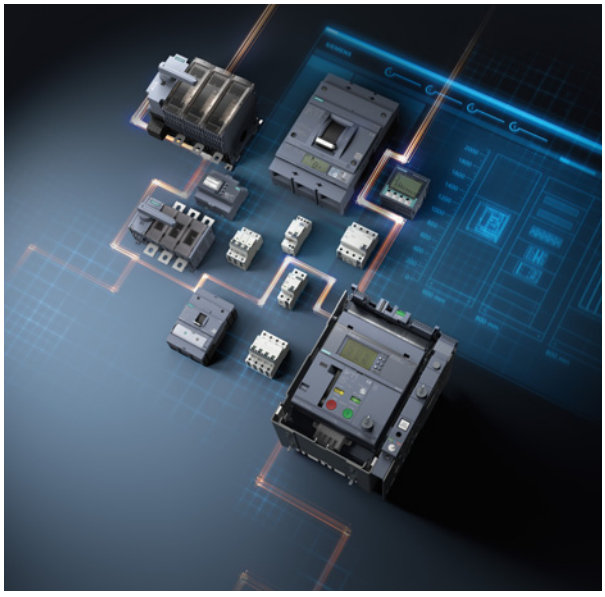

Catalog LV 10 · 04/2019

You can find the updated catalog valid from October 2019 in the Siemens Industry Online Support under www.siemens.com/lowvoltage/catalogs

Supersedes:
Catalog LV 10 · 10/2018

Refer to the Industry Mall for current prices:
www.siemens.com/industrymall

The products in this catalog can also be found in the Interactive Catalog CA 01:
www.siemens.com/ca01download

Please contact your local Siemens branch.

© Siemens AG 2019

The products and systems listed in this catalog are developed and manufactured using a certified quality management system in accordance with EN ISO 9001:2008.

Protection, Switching, Measuring and Monitoring Devices

- Air Circuit Breakers 1
- Molded Case Circuit Breakers 2
- Miniature Circuit Breakers 3
- Residual Current Protective Devices / Arc-Fault Detection Devices (AFDDs) 4
- Fuse Systems 5
- Overvoltage Protection Devices 6
- **Switch Disconnectors 7**
- Transfer Switching Equipment and Load Transfer Switches 8
- Switching Devices 9
- Transformers, Power Supply Units and Socket Outlets 10
- Busbar Systems 11
- Measuring Devices and Power Monitoring 12
- Monitoring Devices 13
- Terminal Blocks 14
- Software 15

Switchboards and Distribution Systems

- Switchboards 16
- Busbar Trunking Systems 17
- System Cubicles, System Lighting and System Air-Conditioning 18
- Power Distribution Boards / Distribution Boards 19

- Appendix 20

© Siemens 2019

Opening Information

Ordering notes

Overview

Ordering special versions

When ordering products that differ from the standard versions listed in the catalog, **"–Z"** must be added to the Article No. indicated and the required features must be specified using alphanumeric order codes or plain text.

Ordering very small quantities

When very small orders are placed, the costs associated with order processing are greater than the order value. We therefore recommend that you combine several small orders. Where this is not possible, we regret that we are obliged to make a small processing charge: for orders with a net goods value of less than € 250 we charge a € 20 supplement to cover our order processing and invoicing costs.

Explanations of Selection and ordering data

Standard delivery time (SD)

► Preferred type — Preferred types are device types that can be delivered immediately ex works, i.e. they are dispatched within 24 hours.

Price units (PU)

The price unit defines the number of units, sets or meters to which the specified price applies.

Packaging size (PS)

The packaging size defines the number of units, sets or meters, for example, for outer packaging.

Only the quantity defined by the packaging size or a multiple thereof can be ordered.

Price group (PG)

Each product is allocated to a price group.

Example

5TT3400

SD: Preferred type
PG: 13C
Ordering quantity 1 unit or a multiple thereof

8US1923-5CA02

PG: 14O
Ordering quantity 10 units or a multiple thereof

8WH9000-1GA00

PG: 12X
Ordering quantity 50 units or a multiple thereof

SD d	Article No.	Price per PU	PU (UNIT, SET, M)	PS*	PG
►	**5TT3400**		1	1 unit	1BK
	8US1923-5CA02		1	10 units	1CU
	8WH9000-1GA00		100	50 units	1BT

Note:

The article numbers shown here and the specifications regarding selection and ordering data are examples only. When ordering, always use the selection and ordering data in the product chapters.

Metal surcharges/export markings

To compensate fluctuating prices of raw materials (for example silver, copper, aluminum, lead, gold, dysprosium and neodymium), surcharges are calculated on a daily basis for products containing these raw materials using the metal factor.
A surcharge for the particular raw material is added to the price of a product if the basic quotations for this raw material are exceeded.

Each product's metal factor dictates for which raw materials the metal surcharges are calculated, from which quotation and with which calculation method (weight or percentage method).

An exact explanation of the metal factor can be found at:
www.siemens.com/automation/salesmaterial-as/catalog/en/terms_of_trade_en.pdf

A product's export markings/metal surcharges are updated daily at www.siemens.com/industrymall.

© Siemens 2019



7/2 **Introduction**

Fuseless switch disconnectors

3LD main control and EMERGENCY-STOP switches from 16 to 250 A

7/6 General data

3LD3 main control and EMERGENCY-STOP switches from 16 to 63 A

7/8 - Introduction
7/11 - Front mounting
7/14 - Floor mounting
7/16 - Distribution board mounting
7/18 - Accessories

3LD2 main control and EMERGENCY-STOP switches from 16 to 250 A

7/21 - Introduction
7/25 - Front mounting
7/30 - Floor mounting
7/36 - Distribution board mounting
7/38 - Molded-plastic enclosures
7/40 - DC applications
7/41 - Accessories

3KD switch disconnectors up to 1600 A

7/46 Introduction
7/47 General data
7/54 Technical features
7/67 Complete assemblies
7/68 Basic units
7/72 Accessories and spare parts

5TE1 switch disconnectors up to 200 A

7/82 Introduction
7/83 General data

Ch.2 3VA switch disconnectors up to 250 A
3VT switch disconnectors up to 1600 A

Product discontinuation

7/87 Introduction
7/89 3VT1 switch disconnectors up to 160 A
7/94 3VT2 switch disconnectors up to 250 A
7/100 3VT3 switch disconnectors up to 630 A
7/106 3VT4 switch disconnectors up to 1000 A
7/107 3VT5 switch disconnectors up to 1600 A

Switch disconnectors with fuses

3KF Switch Disconnectors with Fuses up to 800 A

7/111 General data
7/122 Technical features
7/123 Introduction
7/124 Complete assemblies
7/125 Basic units
7/130 Accessories and spare parts
7/141 Fuses

3NJ62 in-line switch disconnectors with fuses up to 630 A

7/148 Introduction
7/153 For LV HRC fuse links
7/155 For BS fuse links
7/157 For LV HRC and BS fuse links
7/166 Accessories

Door-coupling rotary operating mechanisms

8UD1 door-coupling rotary operating mechanisms

7/174 For 3KD and 3KF switch disconnectors

Fuse switch disconnectors

3NP1 fuse switch disconnectors up to 630 A

7/180 Introduction
7/197 Introduction (order part)
7/198 Floor mounting
7/200 For 40 mm busbar system
7/201 For 60 mm busbar system
7/203 Accessories
7/210 Fuses

3NP5 fuse switch disconnectors up to 630 A

7/213 Introduction
7/215 Floor mounting
7/216 For 40 mm busbar system
7/217 For 60 mm busbar system
7/218 With fuse monitoring
7/222 Accessories
7/224 Fuses

3NJ4, 3NJ5 in-line fuse switch disconnectors up to 2000 A

7/227 Introduction
7/230 1-pole switchable
7/231 3-pole switchable
7/232 Accessories

For further technical product information:

Configuration Manual

Switch disconnectors
Article No.: 3ZW1012-3NP11-0AC1

Siemens Industry Online Support:
www.siemens.com/lowvoltage/product-support

→ Entry type:
Application example
Certificate
Characteristic
Download
FAQ
Manual
Product note
Software archive
Technical data

© Siemens 2019

Introduction

Overview

		Article No.	Page
Fuseless switch disconnectors			
 3LD3	**Main control and EMERGENCY-STOP switches from 16 A to 250 A** Main control and EMERGENCY-STOP switches from 16 A to 63 A • Front/floor mounting, door-coupling rotary operating mechanism and mounting in distribution boards • Front mounting via center hole mounting • 3 and 4-pole versions Main control and EMERGENCY-STOP switches from 16 A to 250 A • Front/floor mounting, door-coupling rotary operating mechanism, distribution board mounting and in molded-plastic enclosures • Front mounting with four-hole and center hole arrangement • 3, 4 and 6-pole versions • 3 and 4-pole load transfer switches, see chapter "Transfer Switching Equipment and Load Transfer Switches" • DC isolators 800 V DC	**3LD** 3LD3 3LD2	7/6
 3LD2			
	**Switch disconnectors up to 1600 A** • Compact design allowing it to be used where space is limited. • Complete assemblies: 3- and 4-pole switch disconnectors with front operating mechanisms, connections in form of box terminal or flat terminal including direct operating mechanism with gray handle • Basic units for individual configuration, with front operating mechanism without handle, 3- and 4-pole variants, connection by box terminal or flat terminal, operating mechanism module in center or on left-hand side of switch disconnector	**3KD**	7/46
	**Switch disconnectors from 100 A to 200 A** • For floor and distribution board mounting • 2, 3 and 4-pole versions	**5TE1**	7/82
	**Switch disconnectors from 160 A to 1600 A** Product discontinuation • Compact design allowing it to be used where space is limited. • 3 and 4-pole versions • Coordinated, comprehensive range of accessories for greater functionality, e.g. • Motorized operating mechanisms - Shunt and undervoltage releases for remote control - Switching state interrogation by means of auxiliary and alarm switches	**3VT**	7/87

7

Minimum order quantity (PS) or a multiple thereof can be ordered.

© Siemens 2019

		Article No.	Page
Switch disconnectors with fuses			
	**Switch disconnectors with fuses up to 800 A** • Devices for floor mounting and for mounting in control cabinet side panels • 3 and 4-pole versions • Complete assemblies: Connections by box terminal or flat terminal including direct operating mechanism • Basic units for individual configuration, with front operating mechanism without handle, door-coupling rotary operating mechanism, connection by box terminal or flat terminal, operating mechanism module in center or on left-hand side of switch disconnector • Suitable for LV HRC and SITOR fuses NEW	3KF	7/111
	**In-line switch disconnectors with fuses, plug-in type, up to 630 A** • 2, 3 and 4-pole versions • Suitable for LV HRC and BS 88 fuses • Manually operated or with motorized operating mechanism • Optionally with integrated current transformers, auxiliary switches, and electronic fuse monitoring	3NJ62	7/148
Fuse switch disconnectors			
	**3NP fuse switch disconnectors** • Rated current up to 630 A • Connection components are available for flat terminal connection, saddle terminal connection, prism terminal connection and box terminal connection • Electromechanical and electronic fuse monitoring with/without network monitoring function • Mounting versions for floor mounting and 40/60 mm busbar system	3NP1, 3NP5	7/180
	**In-line fuse switch disconnectors up to 2000 A** • 1 and 3-pole switchable versions • Versions for secondary-side protection of transformers • In-line incoming block versions up to 2000 A with isolating blades • Connection components are available for flat terminal connection, stud bolt connection, saddle terminal connection, prism terminal connection and box terminal connection • Versions with/without integratable current transformers • Versions with/without electronic fuse monitoring	3NJ4, 3NJ5	7/227

7

© Siemens 2019

Introduction

Application

The ideal line protection for every requirement

The protective separation of electrical installations from the power supply is essential for the protection of persons and the installations themselves. We offer you an integrated portfolio of SENTRON switching devices for safely and efficiently switching electrical equipment in a standard-compliant way.

Persons are protected against accidents and electrical installations reliably safeguarded against damage. In addition, you benefit from a high level of flexibility and productivity in the engineering process.

	Fuseless switch disconnectors		
Graphical symbols	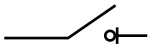		
	3LD	**3KD**	**3VA**
		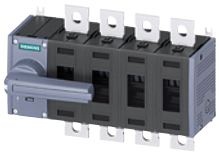	
Rated current	**16 ... 250 A**	**16 ... 1600 A**	**16 ... 250 A**
Number of poles	3, 4, 6	3, 4, 6	3, 4
Connection	Box terminal	Box terminal, flat terminal	Box terminal, flat terminal
Switching frequency			
• for infrequent operation	✓	✓	✓
• for frequent or functional operation	✓	✓	✓
suitable for fuse links	--	--	--
Mounting type	Front mounting, standard mounting rail, floor mounting	Standard mounting rail, floor mounting	Standard mounting rail, floor mounting
Function	Switching without protection function If protection occurs in the higher-level distribution		
Application example	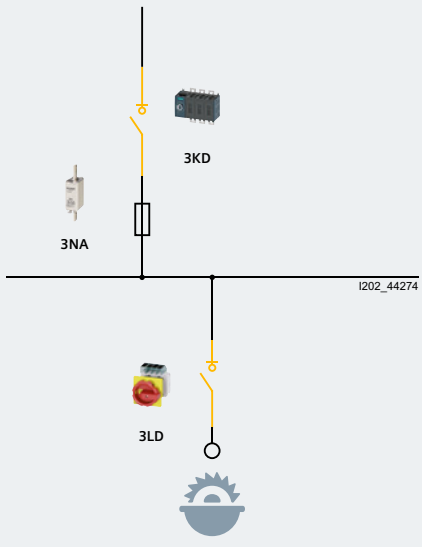		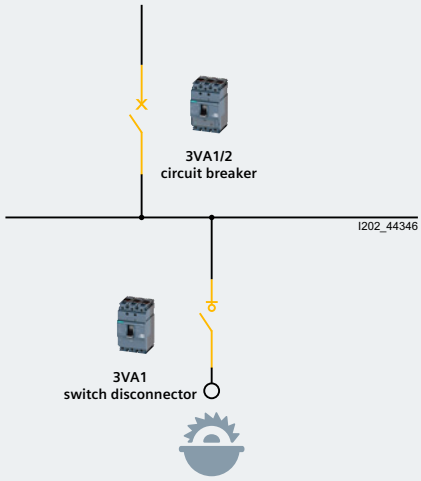
Typical application areas	Switching of mobile machines (e.g. woodworking machines)		
Other typical applications	OEMs and machine building Line disconnector for maintenance purposes		

✓ Available
-- Not available

Minimum order quantity (PS) or a multiple thereof can be ordered.

© Siemens 2019

Switch disconnectors with fuses		Fuse switch disconnectors	
			
3KF LV HRC and 3KF SITOR	**3NJ6**	**3NP1**	**3NJ4**
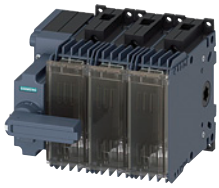			
32 ... 800 A	**160 ... 630 A**	**100 ... 630 A**	**160 ... 2000 A**
3, 4	2, 3, 4	1, 3, 4	1, 3
Box terminal, flat terminal	Box terminal, flat terminal	Box terminal, flat terminal	Box terminal, flat terminal
✓	✓	✓	✓
✓	✓	--	--
NH000 ... NH3	NH000 ... NH3, BS A3 ... BS B4 (3T)	NH000 ... NH3	NH000 ... NH4
Standard mounting rail, floor mounting	Withdrawable unit design for 185 mm busbar system	Standard mounting rail, floor mounting, mounting on 40 mm and 60 mm busbar systems	Mounting on 60 mm, 100 mm or 185 mm busbar systems
Switching (double-break) with protection function Frequent switching and protection in one device		Switching (single-break) with protection function Infrequent switching and protection in one device	
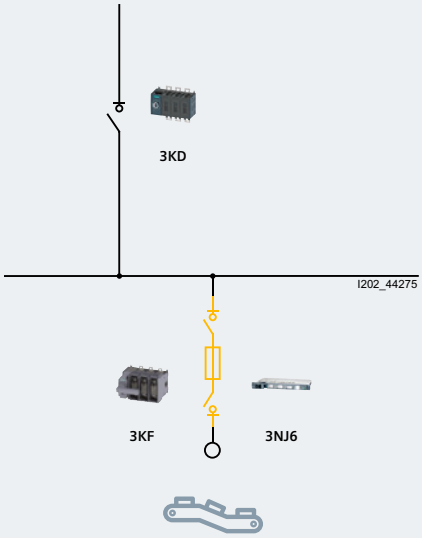		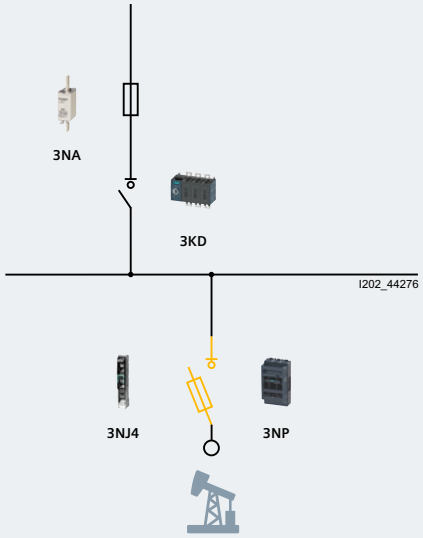	
Protection and switching of series machines		Protection of auxiliary units for non-functional switching (e.g. oil pumps)	
Outgoing energy feeders in motor control centers Airports and railway stations		Infeed of a control cabinet Main fuse in machine terminal boxes	

✓ Available
-- Not available

Minimum order quantity (PS) or a multiple thereof can be ordered.

© Siemens 2019

General data

Overview

The 3LD3 main control and EMERGENCY-STOP switches are manually operated switch disconnectors according to IEC 60947-3/VDE 0660 Part 107 (EN 60947-3) and comply with the conditions for switch disconnectors according to EN 60204-1 (VDE 0113 Part 1).

In EN 60204-1 (VDE 0113 Part 1), main control and EMERGENCY-STOP switches are called "disconnector units", while EMERGENCY-STOP switches are termed "devices for emergency shutdown".

Type (rated current I_n)		**3LD30 (16 A)**	**3LD20 (16 A)**	**3LD31 (25 A)**	**3LD21 (25 A)**	**3LD32 (32 A)**
Operating mechanism, red/yellow			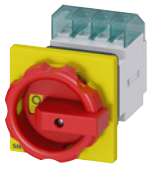			
Operating mechanism, black						
Mounting type						
Front mounting						
• Center-hole mounting		✓	✓	✓	✓	✓
• Four-hole mounting		--	✓	--	✓	--
Floor mounting						
• Center-hole mounting		✓	✓	✓	✓	✓
• Four-hole mounting		--	✓	--	✓	--
Types of use						
Distribution board mounting		✓	✓	✓	✓	✓
Molded-plastic enclosure		--	✓	--	✓	--
DC isolator		--	--	--	--	--
Transfer switch, see chapter "Transfer Switching Equipment and Load Transfer Switches"		--	--	--	✓	--
Technical features						
Number of poles						
• 3-pole		✓	✓	✓	✓	✓
• 4-pole		✓	✓	✓	✓	✓
• 6-pole		--	--	--	✓	--
Short-circuit behavior						
• Rated conditional short-circuit current with upstream fuses at AC 50/60 Hz, 690 V	kA rms	6	50	6	50	6
• Rated short-time withstand current (1 s current, rms value)	A	500	340	500	640	500
Endurance mechanical (operating cycles)		100000	100000	100000	100000	100000
Switching frequency	1/h	50	50	50	50	50
Conductor cross-sections for main conductors [1]						
• Solid or stranded	mm^2	1x (2.5 ... 16 mm^2)	1 ... 6	1x (2.5 ... 16 mm^2)	1.5 ... 16	1x (2.5 ... 16 mm^2)
• Finely stranded with end sleeve (max.)	mm^2	1x (2.5 ... 16 mm^2)	4	1x (2.5 ... 16 mm^2)	10	1x (2.5 ... 16 mm^2)
• Conductor cross-sections	AWG	14 ... 6	18 ... 10	14 ... 6	14 ... 8	14 ... 6
• Torque for terminal	Nm	3	1.5 ... 2	3	2 ... 2.5	3
Accessories						
Auxiliary switches						
• 1 NO + 1 NC		✓	✓	✓	✓	✓
• 2 NO		--	✓	--	✓	--
Further accessories						
• 4th pole		✓	--	✓	✓	✓
• N or PE terminals		✓	✓	✓	✓	✓

[1] Depending on the cable infeed, only small cross-sections are possible with 3LD2 devices in molded-plastic enclosures.

✓ Available

-- Not available

Minimum order quantity (PS) or a multiple thereof can be ordered.

© Siemens 2019

Maintenance personnel can protect themselves against unauthorized startup with padlocks (up to three can be fitted).

The 3LD switches can be used in any mounting position.

3LD22 (32 A)	3LD33 (40 A)	3LD34 (63 A)	3LD25 (63 A)	3LD27 (100 A)	3LD28 (125 A)	3LD23 (160 A)	3LD24 (250 A)
							
							
✓	✓	✓	✓	--	--	--	--
✓	--	--	✓	✓	✓	✓	✓
✓	--	✓	✓	--	--	--	--
✓	--	--	✓	✓	✓	✓	✓
✓	✓	✓	✓	✓	✓	✓	✓
✓	--	--	✓	✓	✓	--	--
✓	--	--	--	--	--	--	--
✓	--	--	✓	✓	--	✓	✓
✓	✓	✓	✓	✓	✓	✓	✓
✓	✓	✓	✓	--	--	✓	✓
✓	--	--	✓	--	--	✓	✓
50	6	6	50	50	20	50	50
640	1000	1000	1260	2000	2000	4000	4000
100000	100000	100000	100000	100000	100000	100000	100000
50	50	50	50	50	50	50	50
1.5 ... 16	1x (2.5 ... 16 mm²)	1x (2.5 ... 16 mm²)	2.5 ... 35	4 ... 50	4 ... 50	16 ... 185	16 ... 185
10	1x (2.5 ... 16 mm²)	1x (2.5 ... 16 mm²)	16	35	35	150	150
14 ... 8	14 ... 6	14 ... 6	14 ... 6	12 ...1	12 ...1		
2 ... 2.5	3	3	2.5 ... 3	2.5 ... 3	2.5 ... 3	9.5 ... 10	9.5 ... 10
✓	✓	✓	✓	✓	✓	✓	✓
✓	--	--	✓	✓	✓	✓	✓
✓	✓	✓	✓	✓	✓	✓	✓
✓	✓	✓	✓	✓	✓	✓	✓

✓ Available
-- Not available

Minimum order quantity (PS) or a multiple thereof can be ordered.

Siemens LV 10 · 04/2019

7/7

© Siemens 2019

Overview

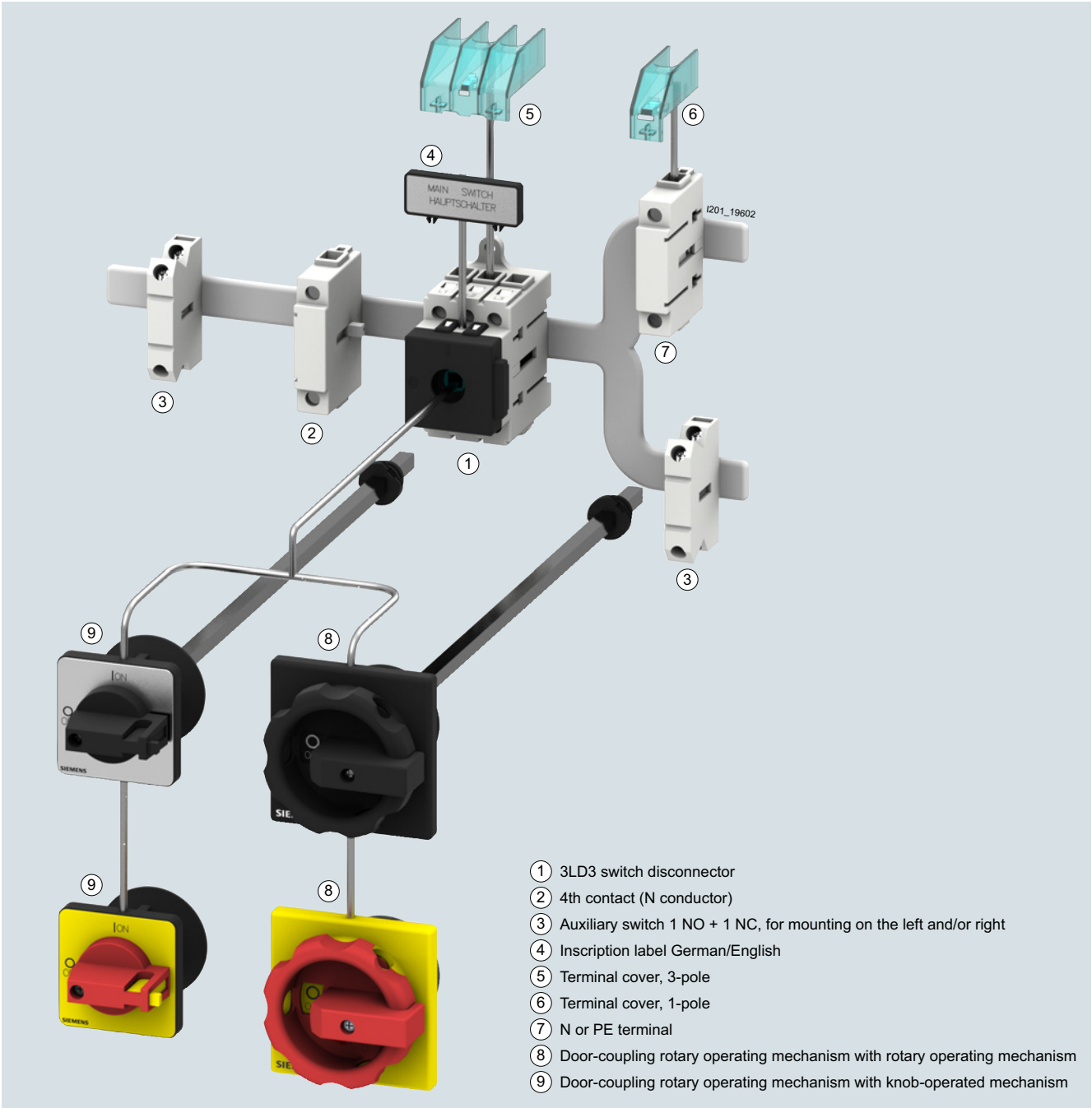

The 3LD3 main control and EMERGENCY-STOP switches are suitable for a current range from 16 to 63 A. They can be used as main control switches for small tools, as load EMERGENCY-STOP switches and as load maintenance switches.

The 3LD3 main control and EMERGENCY-STOP switches are manually operated switch disconnectors according to IEC 60947-3/VDE 0660 Part 107 (EN 60947-3) and comply with the conditions for switch disconnectors according to EN 60204-1 (VDE 0113 Part 1). In EN 60204-1 (VDE 0113 Part 1), these are called "disconnector units", while EMERGENCY-STOP switches are termed "devices for emergency shutdown".

Versions and accessories

- One size with box terminal in 3 and 4-pole version
- Installation via front and floor mounting or distribution board mounting
- Auxiliary switches for querying the switch positions
- Door-coupling rotary operating mechanism for operation of switch disconnector outside the control cabinet door

Minimum order quantity (PS) or a multiple thereof can be ordered.

© Siemens 2019

Benefits

- Compact, narrow design saves space
- Flexibility thanks to numerous application options
- Locking capability during maintenance work
- A wide range of accessories available
- Comprehensive support through provision of CAx data

Application

The 3LD3 switches are used for switching machines as well as three-phase motors and other loads in cases of maintenance and repair.

The 3LD3 switches can be used as follows:

- ON-OFF switches
- EMERGENCY-STOP switches

Design

Design of the contacts

Each switch has three adjacent contact elements. A 4th leading contact for switching the N conductor, a continuous PE terminal, an auxiliary switch (1 NO + 1 NC) can be fitted to each side of the switch. The auxiliary switches operate as leading contacts on opening. On opening, the NO contact opens before the main contacts, so that a contactor carries the switching capacity in the circuit and the maintenance or safety switch switches at zero current. On closing, the auxiliary switch switches later than or at the same time as the main contacts.

Design of rotary operating mechanisms

The rotary operating mechanisms of the switches for front or floor mounting are mounted on control cabinet doors, or on front or side panels via center-hole mounting with a standard diameter of 22.5 mm and are operated from the outside. In their OFF position, they can be locked with 1 to 3 padlocks with a hasp thickness of 4 to 8 mm.

- Switch position indicator:
  The switch position is clearly marked with direction arrows and an "O" for OFF and an "I" for ON at the front.
- Switches for front mounting:
  The switches for front mounting are connected directly to the rotary operating mechanism through the fixing screws or – in the case of center-hole mounting – a special-purpose coupling.
- Switches for floor mounting:
  The switches for floor mounting are snapped onto 35 mm standard mounting rails according to EN 60715 or screw-mounted on mounting plates. The actuators are connected to the lower section of the switch through a door coupling, which can be released in its zero position, and a 300 mm long switch shaft. When the control cabinet door is open, the switch can be protected against inadvertent operation by removing the switch shaft from the lower section of the switch.
  The overall depth can be adapted to individual requirements by adjusting the switch shaft length.
- Switches for distribution board mounting:
  The switches for distribution board mounting are suited for operation in distribution boards and for switching inside control cabinets or distribution boards. They have cap and mounting dimensions to DIN 43880 and can be fitted under the same cover together with miniature circuit breakers. The selector switches can be locked in their OFF position with no more than one padlock with a hasp thickness of 4 to 6 mm.

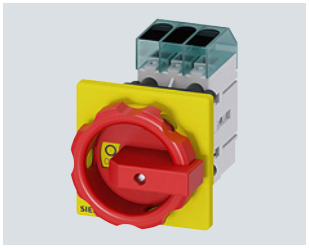

3LD3054-0TK53 switch for front mounting with rotary operating mechanism

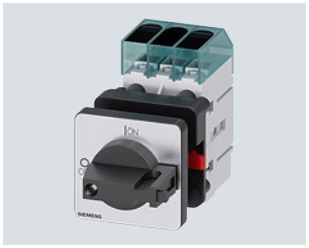

3LD3050-0TK11 switch for front mounting with knob

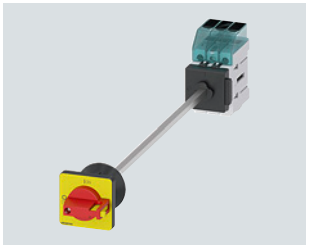

3LD3040-0TK13 switch for floor mounting with knob and door coupling



3LD3030-0TK11 switch for distribution board mounting with knob



3LD3048-0TK51 switch for floor mounting with rotary operating mechanism and door coupling

© Siemens 2019

Technical specifications

Standards		**IEC 60947-3 (DIN VDE 0660-107), EN 60204-1 (VDE 0113-1)**				
Article number		**3LD30...**	**3LD31...**	**3LD32...**	**3LD33...**	**3LD34...**
Continuous current rated value	A	16	25	32	40	63
Insulation voltage rated value	V	690	690	690	690	690
Operational voltage for AC at 50/60 Hz, rated value	V	690	690	690	690	690
Operating frequency	Hz	50 ... 60	50 ... 60	50 ... 60	50 ... 60	50 ... 60
Impulse withstand voltage rated value	kV	6	6	6	6	6
Short-time withstand current (I_{cw}) limited to 1 s, rated value	kA	0.5	0.5	0.5	1	1
Design of fuse link required for short-circuit protection of the main circuit		Fuse gL/gG: 16 A	Fuse gL/gG: 25 A	Fuse gL/gG: 32 A	Fuse gL/gG: 40 A	Fuse gL/gG: 63 A
Conditional short-circuit current with line-side fuse at 690 V via gG fuse, rated value	kA	6	6	6	6	6
Let-through current with closed switch at 690 V for combination switch + gG fuse, maximum permissible	kA	3	3.5	4.5	5	6
Operational power						
• At AC-3 at 240 V, rated value	kW	3	4	5.5	7.5	11
• At AC-3 at 440 V, rated value	kW	5.5	7.5	9.5	11.5	18.5
• At AC-3 at 400 V, rated value	kW	5.5	7.5	9.5	11.5	18.5
• At AC-3 at 690 V, rated value	kW	5.5	7.5	9.5	11.5	15
• At AC-23 A at 400 V, rated value	kW	7.5	9.5	11.5	18.5	22
• At AC-23 A at 690 V, rated value	kW	7.5	9	11.5	15	18.5
• At AC-23 A at 240 V, rated value	kW	3	4	6	7.5	11
• At AC-23 A at 440 V, rated value	kW	7.5	9	11.5	15	22
Typical power loss for each conductor	W	0.5	1.1	1.1	1.8	4.5
Typical mechanical endurance (operating cycles)		100 000				
Electrical endurance (operating cycles) at AC-23 A at 690 V at 50/60 Hz		6 000				
Ambient temperature						
• During operation		-25 ... +55				
• During storage		-25 ... +55				
Type of connectable conductor cross-sections						
• Solid for auxiliary contacts		2x (0.75 ... 2.5 mm²), 1x 4 mm²				
• Finely stranded with end sleeve for auxiliary contacts		2x (0.75 ... 1.5 mm²), 1x 2.5 mm²				
• Stranded for auxiliary contacts		2x (0.75 ... 2.5 mm²), 1x 4 mm²				
• Solid for copper conductors		1x (2.5 ... 16 mm²)				
• Stranded for copper conductors		1x (2.5 ... 16 mm²)				
• Finely stranded with end sleeve for copper conductors		1x (2.5 ... 16 mm²)				
Design of electrical connection						
• For main circuit		Box terminal				
• For auxiliary contacts		Terminals				
Auxiliary switches						
Design of fuse link required for short-circuit protection of the auxiliary switch		Fuse gL/gG: 10 A				
Insulation voltage for the auxiliary switch, rated value	V	500				

Minimum order quantity (PS) or a multiple thereof can be ordered.

© Siemens 2019

Selection and ordering data

Number and version of the contacts		Rated data at 50 ... 60 Hz, 380 ... 400 V		Color of the operating mechanism	SD	Article No. www.siemens.com/product?Article No.	Price per PU	PU (UNIT, SET, M)	PS	PG
Main contact elements	Auxiliary contact elements	P/AC-23A	I_u/ AC-21A							
		kW	A		d					
Main control and EMERGENCY-STOP switches with direct operating mechanism (rotary operating mechanism) • Lockable in O position with up to 3 padlocks with a hasp thickness of 4 to 8 mm • Degree of protection at front side IP65 • All versions with rotary operating mechanism • Including terminal cover for the infeed side • Front plate 66 x 66 mm										
3	--	7.5	16	Black		**3LD3054-0TK51**		1	1 unit	1CL
	--	7.5	16	Red/yellow		**3LD3054-0TK53**		1	1 unit	1CL
	--	9.0	25	Black		**3LD3154-0TK51**		1	1 unit	1CL
	--	9.0	25	Red/yellow		**3LD3154-0TK53**		1	1 unit	1CL
	--	11.5	32	Black		**3LD3254-0TK51**		1	1 unit	1CL
	--	11.5	32	Red/yellow		**3LD3254-0TK53**		1	1 unit	1CL
	--	15.0	40	Black		**3LD3354-0TK51**		1	1 unit	1CL
	--	15.0	40	Red/yellow		**3LD3354-0TK53**		1	1 unit	1CL
	--	22.0	63	Black		**3LD3454-0TK51**		1	1 unit	1CL
	--	22.0	63	Red/yellow		**3LD3454-0TK53**		1	1 unit	1CL
	1 NC + 1 NO	7.5	16	Black		**3LD3054-1TK51**		1	1 unit	1CL
		7.5	16	Red/yellow		**3LD3054-1TK53**		1	1 unit	1CL
		9.0	25	Black		**3LD3154-1TK51**		1	1 unit	1CL
		9.0	25	Red/yellow		**3LD3154-1TK53**		1	1 unit	1CL
		11.5	32	Black		**3LD3254-1TK51**		1	1 unit	1CL
		11.5	32	Red/yellow		**3LD3254-1TK53**		1	1 unit	1CL
		15.0	40	Black		**3LD3354-1TK51**		1	1 unit	1CL
		15.0	40	Red/yellow		**3LD3354-1TK53**		1	1 unit	1CL
		22.0	63	Black		**3LD3454-1TK51**		1	1 unit	1CL
		22.0	63	Red/yellow		**3LD3454-1TK53**		1	1 unit	1CL
3 + N	--	7.5	16	Black		**3LD3054-0TL51**		1	1 unit	1CL
	--	7.5	16	Red/yellow		**3LD3054-0TL53**		1	1 unit	1CL
	--	9.0	25	Black		**3LD3154-0TL51**		1	1 unit	1CL
	--	9.0	25	Red/yellow		**3LD3154-0TL53**		1	1 unit	1CL
	--	11.5	32	Black		**3LD3254-0TL51**		1	1 unit	1CL
	--	11.5	32	Red/yellow		**3LD3254-0TL53**		1	1 unit	1CL
	--	15.0	40	Black		**3LD3354-0TL51**		1	1 unit	1CL
	--	15.0	40	Red/yellow		**3LD3354-0TL53**		1	1 unit	1CL
	--	22.0	63	Black		**3LD3454-0TL51**		1	1 unit	1CL
	--	22.0	63	Red/yellow		**3LD3454-0TL53**		1	1 unit	1CL
	1 NC + 1 NO	7.5	16	Black		**3LD3054-1TL51**		1	1 unit	1CL
		7.5	16	Red/yellow		**3LD3054-1TL53**		1	1 unit	1CL
		9.0	25	Black		**3LD3154-1TL51**		1	1 unit	1CL
		9.0	25	Red/yellow		**3LD3154-1TL53**		1	1 unit	1CL
		11.5	32	Black		**3LD3254-1TL51**		1	1 unit	1CL
		11.5	32	Red/yellow		**3LD3254-1TL53**		1	1 unit	1CL
		15.0	40	Black		**3LD3354-1TL51**		1	1 unit	1CL
		15.0	40	Red/yellow		**3LD3354-1TL53**		1	1 unit	1CL
		22.0	63	Black		**3LD3454-1TL51**		1	1 unit	1CL
		22.0	63	Red/yellow		**3LD3454-1TL53**		1	1 unit	1CL


3LD3054-1TK51


3LD3054-0TK53


3LD3054-1TL51

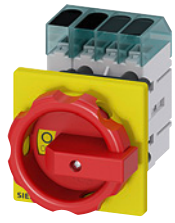
3LD3054-0TL53

© Siemens 2019

3LD3 main control and EMERGENCY-STOP switches from 16 to 63 A > Front mounting

Number and version of the contacts		Rated data at 50 ... 60 Hz, 400 V		Size of front plate	Color of the operating mechanism	SD	Article No. www.siemens.com/product?Article No.	Price per PU	PU (UNIT, SET, M)	PS	PG
Main contact elements	Auxiliary contact elements	P/AC-23A kW	I_u A	mm		d					
Main control and EMERGENCY-STOP switches with direct operating mechanism (knob-operated mechanism) • Lockable in 0 position (can be modified to I position) with max. 2 padlocks with a hasp thickness of 4 to 6 mm • Degree of protection at front side IP65 • Including terminal cover for the infeed side • Front plate: 48 x 48 mm or 66 x 66 mm											
Center-hole mounting Ø 22.5 mm											
3	--	7.5	16	48x48	Black		**3LD3050-0TK11**		1	1 unit	1CL
	--	7.5	16	48x48	Red/yellow		**3LD3050-0TK13**		1	1 unit	1CL
	--	9.0	25	48x48	Black		**3LD3150-0TK11**		1	1 unit	1CL
	--	9.0	25	48x48	Red/yellow		**3LD3150-0TK13**		1	1 unit	1CL
	--	11.5	32	48x48	Black		**3LD3250-0TK11**		1	1 unit	1CL
	--	11.5	32	48x48	Red/yellow		**3LD3250-0TK13**		1	1 unit	1CL
	--	15.0	40	48x48	Black		**3LD3350-0TK11**		1	1 unit	1CL
	--	15.0	40	48x48	Red/yellow		**3LD3350-0TK13**		1	1 unit	1CL
	--	22.0	63	48x48	Black		**3LD3450-0TK11**		1	1 unit	1CL
	--	22.0	63	48x48	Red/yellow		**3LD3450-0TK13**		1	1 unit	1CL
	1 NC + 1 NO	7.5	16	48x48	Black		**3LD3050-1TK11**		1	1 unit	1CL
		7.5	16	48x48	Red/yellow		**3LD3050-1TK13**		1	1 unit	1CL
		9.0	25	48x48	Black		**3LD3150-1TK11**		1	1 unit	1CL
		9.0	25	48x48	Red/yellow		**3LD3150-1TK13**		1	1 unit	1CL
		11.5	32	48x48	Black		**3LD3250-1TK11**		1	1 unit	1CL
		11.5	32	48x48	Red/yellow		**3LD3250-1TK13**		1	1 unit	1CL
		15.0	40	48x48	Black		**3LD3350-1TK11**		1	1 unit	1CL
		15.0	40	48x48	Red/yellow		**3LD3350-1TK13**		1	1 unit	1CL
		22.0	63	48x48	Black		**3LD3450-1TK11**		1	1 unit	1CL
		22.0	63	48x48	Red/yellow		**3LD3450-1TK13**		1	1 unit	1CL



3LD3050-0TK11



3LD3050-0TK13

Minimum order quantity (PS) or a multiple thereof can be ordered.

© Siemens 2019

	Number and version of the contacts		Rated data at 50 ... 60 Hz, 400 V		Size of front plate	Color of the operating mechanism	SD	Article No. www.siemens.com/product?Article No.	Price per PU	PU (UNIT, SET, M)	PS	PG
	Main contact elements	Auxiliary contact elements	P/AC-23A	I_u								
			kW	A	mm		d					
 3LD3050-0TL11	3+N	--	7.5	16	48x48	Black		**3LD3050-0TL11**		1	1 unit	1CL
		--	7.5	16	48x48	Red/yellow		**3LD3050-0TL13**		1	1 unit	1CL
		--	9.0	25	48x48	Black		**3LD3150-0TL11**		1	1 unit	1CL
		--	9.0	25	48x48	Red/yellow		**3LD3150-0TL13**		1	1 unit	1CL
		--	11.5	32	48x48	Black		**3LD3250-0TL11**		1	1 unit	1CL
		--	11.5	32	48x48	Red/yellow		**3LD3250-0TL13**		1	1 unit	1CL
		--	15.0	40	48x48	Black		**3LD3350-0TL11**		1	1 unit	1CL
		--	15.0	40	48x48	Red/yellow		**3LD3350-0TL13**		1	1 unit	1CL
		--	22.0	63	48x48	Black		**3LD3450-0TL11**		1	1 unit	1CL
		--	22.0	63	48x48	Red/yellow		**3LD3450-0TL13**		1	1 unit	1CL
 3LD3050-0TL13		1 NC + 1 NO	7.5	16	48x48	Black		**3LD3050-1TL11**		1	1 unit	1CL
			7.5	16	48x48	Red/yellow		**3LD3050-1TL13**		1	1 unit	1CL
			9.0	25	48x48	Black		**3LD3150-1TL11**		1	1 unit	1CL
			9.0	25	48x48	Red/yellow		**3LD3150-1TL13**		1	1 unit	1CL
			9.0	25	66x66	Black		**3LD3154-1TL51**		1	1 unit	1CL
			9.0	25	66x66	Red/yellow		**3LD3154-1TL53**		1	1 unit	1CL
			11.5	32	48x48	Black		**3LD3250-1TL11**		1	1 unit	1CL
			11.5	32	48x48	Red/yellow		**3LD3250-1TL13**		1	1 unit	1CL
			15.0	40	48x48	Black		**3LD3350-1TL11**		1	1 unit	1CL
			15.0	40	48x48	Red/yellow		**3LD3350-1TL13**		1	1 unit	1CL
			22.0	63	48x48	Black		**3LD3450-1TL11**		1	1 unit	1CL
			22.0	63	48x48	Red/yellow		**3LD3450-1TL13**		1	1 unit	1CL

© Siemens 2019

Selection and ordering data

	Number and version of the contacts		Rated data at 50 ... 60 Hz, 380 ... 440 V		Color of the operating mechanism	SD	Article No. www.siemens.com/product?Article No.	Price per PU	PU (UNIT, SET, M)	PS	PG
	Main contact elements	Auxiliary contact elements	P/AC-23A kW	I_u/ AC-21A A		d					
	Main control and EMERGENCY-STOP switches with door-coupling (rotary operating mechanism) • Lockable in 0 position with up to 3 padlocks with a hasp thickness of 4 to 8 mm • Degree of protection at front side IP65 • All versions with rotary operating mechanism • Including terminal cover for the infeed side • Front plate 66 x 66 mm										
Center-hole mounting Ø 22.5 mm											
 3LD3048-0TK51	3	--	7.5	16	Black		**3LD3048-0TK51**		1	1 unit	1CL
			7.5	16	Red/yellow		**3LD3048-0TK53**		1	1 unit	1CL
			9.0	25	Black		**3LD3148-0TK51**		1	1 unit	1CL
			9.0	25	Red/yellow		**3LD3148-0TK53**		1	1 unit	1CL
			11.5	32	Black		**3LD3248-0TK51**		1	1 unit	1CL
			11.5	32	Red/yellow		**3LD3248-0TK53**		1	1 unit	1CL
			15.0	40	Black		**3LD3348-0TK51**		1	1 unit	1CL
			15.0	40	Red/yellow		**3LD3348-0TK53**		1	1 unit	1CL
			22.0	63	Black		**3LD3448-0TK51**		1	1 unit	1CL
			22.0	63	Red/yellow		**3LD3448-0TK53**		1	1 unit	1CL
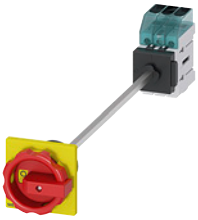 3LD3048-0TK53		1 NC + 1 NO	7.5	16	Black		**3LD3048-1TK51**		1	1 unit	1CL
			7.5	16	Red/yellow		**3LD3048-1TK53**		1	1 unit	1CL
			9.0	25	Black		**3LD3148-1TK51**		1	1 unit	1CL
			9.0	25	Red/yellow		**3LD3148-1TK53**		1	1 unit	1CL
			11.5	32	Black		**3LD3248-1TK51**		1	1 unit	1CL
			11.5	32	Red/yellow		**3LD3248-1TK53**		1	1 unit	1CL
			15.0	40	Black		**3LD3348-1TK51**		1	1 unit	1CL
			15.0	40	Red/yellow		**3LD3348-1TK53**		1	1 unit	1CL
			22.0	63	Black		**3LD3448-1TK51**		1	1 unit	1CL
			22.0	63	Red/yellow		**3LD3448-1TK53**		1	1 unit	1CL
 3LD3048-0TL51	3 + N	--	7.5	16	Black		**3LD3048-0TL51**		1	1 unit	1CL
			7.5	16	Red/yellow		**3LD3048-0TL53**		1	1 unit	1CL
			9.0	25	Black		**3LD3148-0TL51**		1	1 unit	1CL
			9.0	25	Red/yellow		**3LD3148-0TL53**		1	1 unit	1CL
			11.5	32	Black		**3LD3248-0TL51**		1	1 unit	1CL
			11.5	32	Red/yellow		**3LD3248-0TL53**		1	1 unit	1CL
			15.0	40	Black		**3LD3348-0TL51**		1	1 unit	1CL
			15.0	40	Red/yellow		**3LD3348-0TL53**		1	1 unit	1CL
			22.0	63	Black		**3LD3448-0TL51**		1	1 unit	1CL
			22.0	63	Red/yellow		**3LD3448-0TL53**		1	1 unit	1CL
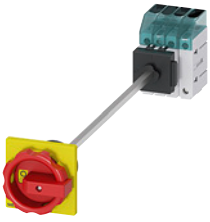 3LD3048-0TL53		1 NC + 1 NO	7.5	16	Black		**3LD3048-1TL51**		1	1 unit	1CL
			7.5	16	Red/yellow		**3LD3048-1TL53**		1	1 unit	1CL
			9.0	25	Black		**3LD3148-1TL51**		1	1 unit	1CL
			9.0	25	Red/yellow		**3LD3148-1TL53**		1	1 unit	1CL
			11.5	32	Black		**3LD3248-1TL51**		1	1 unit	1CL
			11.5	32	Red/yellow		**3LD3248-1TL53**		1	1 unit	1CL
			15.0	40	Black		**3LD3348-1TL51**		1	1 unit	1CL
			15.0	40	Red/yellow		**3LD3348-1TL53**		1	1 unit	1CL
			22.0	63	Black		**3LD3448-1TL51**		1	1 unit	1CL
			22.0	63	Red/yellow		**3LD3448-1TL53**		1	1 unit	1CL

Minimum order quantity (PS) or a multiple thereof can be ordered.

© Siemens 2019

	Number and version of the contacts		Rated data at 50 ... 60 Hz, 400 V		Color of the operating mechanism	SD	Article No. www.siemens.com/product?Article No.	Price per PU	PU (UNIT, SET, M)	PS	PG
	Main contact elements	Auxiliary contact elements	P/ AC-23A	I_u/ AC-21A							
			kW	A		d					
	Main control and EMERGENCY-STOP switches with door-coupling (knob-operated mechanism) • Lockable in 0 position with up to 2 padlocks with a hasp thickness of 4 to 6 mm • Degree of protection at front side IP65 • All versions with rotary operating mechanism • Including terminal cover for the infeed side • Front plate 48 x 48 mm										
Center-hole mounting Ø 22.5 mm											
 3LD3040-0TK51	3	--	7.5	16	Black		**3LD3040-0TK11**		1	1 unit	1CL
		--	7.5	16	Red/yellow		**3LD3040-0TK13**		1	1 unit	1CL
		--	9.0	25	Black		**3LD3140-0TK11**		1	1 unit	1CL
		--	9.0	25	Red/yellow		**3LD3140-0TK13**		1	1 unit	1CL
		--	11.5	32	Black		**3LD3240-0TK11**		1	1 unit	1CL
		--	11.5	32	Red/yellow		**3LD3240-0TK13**		1	1 unit	1CL
		--	15.0	40	Black		**3LD3340-0TK11**		1	1 unit	1CL
		--	15.0	40	Red/yellow		**3LD3340-0TK13**		1	1 unit	1CL
		--	22.0	63	Black		**3LD3440-0TK11**		1	1 unit	1CL
		--	22.0	63	Red/yellow		**3LD3440-0TK13**		1	1 unit	1CL
 3LD3040-0TK53		1 NC + 1 NO	7.5	16	Black		**3LD3040-1TK11**		1	1 unit	1CL
			7.5	16	Red/yellow		**3LD3040-1TK13**		1	1 unit	1CL
			9.0	25	Black		**3LD3140-1TK11**		1	1 unit	1CL
			9.0	25	Red/yellow		**3LD3140-1TK13**		1	1 unit	1CL
			11.5	32	Black		**3LD3240-1TK11**		1	1 unit	1CL
			11.5	32	Red/yellow		**3LD3240-1TK13**		1	1 unit	1CL
			15.0	40	Black		**3LD3340-1TK11**		1	1 unit	1CL
			15.0	40	Red/yellow		**3LD3340-1TK13**		1	1 unit	1CL
			22.0	63	Black		**3LD3440-1TK11**		1	1 unit	1CL
			22.0	63	Red/yellow		**3LD3440-1TK13**		1	1 unit	1CL
 3LD3040-0TL11	3 + N	--	7.5	16	Black		**3LD3040-0TL11**		1	1 unit	1CL
		--	7.5	16	Red/yellow		**3LD3040-0TL13**		1	1 unit	1CL
		--	9.0	25	Black		**3LD3140-0TL11**		1	1 unit	1CL
		--	9.0	25	Red/yellow		**3LD3140-0TL13**		1	1 unit	1CL
		--	11.5	32	Black		**3LD3240-0TL11**		1	1 unit	1CL
		--	11.5	32	Red/yellow		**3LD3240-0TL13**		1	1 unit	1CL
		--	15.0	40	Black		**3LD3340-0TL11**		1	1 unit	1CL
		--	15.0	40	Red/yellow		**3LD3340-0TL13**		1	1 unit	1CL
		--	22.0	63	Black		**3LD3440-0TL11**		1	1 unit	1CL
		--	22.0	63	Red/yellow		**3LD3440-0TL13**		1	1 unit	1CL
 3LD3040-0TL13		1 NC + 1 NO	7.5	16	Black		**3LD3040-1TL11**		1	1 unit	1CL
			7.5	16	Red/yellow		**3LD3040-1TL13**		1	1 unit	1CL
			9.0	25	Black		**3LD3140-1TL11**		1	1 unit	1CL
			9.0	25	Red/yellow		**3LD3140-1TL13**		1	1 unit	1CL
			11.5	32	Black		**3LD3240-1TL11**		1	1 unit	1CL
			11.5	32	Red/yellow		**3LD3240-1TL13**		1	1 unit	1CL
			15.0	40	Black		**3LD3340-1TL11**		1	1 unit	1CL
			15.0	40	Red/yellow		**3LD3340-1TL13**		1	1 unit	1CL
			22.0	63	Black		**3LD3440-1TL11**		1	1 unit	1CL
			22.0	63	Red/yellow		**3LD3440-1TL13**		1	1 unit	1CL

7

© Siemens 2019

Selection and ordering data

ON/OFF and EMERGENCY-STOP switches, basic switch, with masking plate and selector knob

- Lockable in 0 position with max. one padlock with a hasp thickness of 4 to 6 mm
- With screw fixing
- With snap-on mounting on 35 mm standard mounting rail
- Lockable in 0 position with up to 2 padlocks with a hasp thickness of 4 to 6 mm
- Degree of protection at front side IP40
- Including terminal cover for the infeed side

Number and version of the contacts		Rated data at 50 ... 60 Hz, 400 V		Color of the operating mechanism	SD	Article No. www.siemens.com/product?Article No.	Price per PU	PU (UNIT, SET, M)	PS	PG
Main contact elements	Auxiliary contact elements	P/AC-23A kW	I_u A		d					
Distribution board mounting, standard rail mounting										
 3LD3030-0TK11										
3	--	7.5	16	Black		**3LD3030-0TK11**		1	1 unit	1CL
	--	7.5	16	Red/yellow		**3LD3030-0TK13**		1	1 unit	1CL
	--	9.0	25	Black		**3LD3130-0TK11**		1	1 unit	1CL
	--	9.0	25	Red/yellow		**3LD3130-0TK13**		1	1 unit	1CL
	--	11.5	32	Black		**3LD3230-0TK11**		1	1 unit	1CL
	--	11.5	32	Red/yellow		**3LD3230-0TK13**		1	1 unit	1CL
	--	15.0	40	Black		**3LD3330-0TK11**		1	1 unit	1CL
	--	15.0	40	Red/yellow		**3LD3330-0TK13**		1	1 unit	1CL
	--	22.0	63	Black		**3LD3430-0TK11**		1	1 unit	1CL
	--	22.0	63	Red/yellow		**3LD3430-0TK13**		1	1 unit	1CL
 3LD3030-0TK13										
	1 NC + 1 NO	7.5	16	Black		**3LD3030-1TK11**		1	1 unit	1CL
		7.5	16	Red/yellow		**3LD3030-1TK13**		1	1 unit	1CL
		9.0	25	Black		**3LD3130-1TK11**		1	1 unit	1CL
		9.0	25	Red/yellow		**3LD3130-1TK13**		1	1 unit	1CL
		11.5	32	Black		**3LD3230-1TK11**		1	1 unit	1CL
		11.5	32	Red/yellow		**3LD3230-1TK13**		1	1 unit	1CL
		15.0	40	Black		**3LD3330-1TK11**		1	1 unit	1CL
		15.0	40	Red/yellow		**3LD3330-1TK13**		1	1 unit	1CL
		22.0	63	Black		**3LD3430-1TK11**		1	1 unit	1CL
		22.0	63	Red/yellow		**3LD3430-1TK13**		1	1 unit	1CL
 3LD3030-0TL11										
3 + N	--	7.5	16	Black		**3LD3030-0TL11**		1	1 unit	1CL
	--	7.5	16	Red/yellow		**3LD3030-0TL13**		1	1 unit	1CL
	--	9.0	25	Black		**3LD3130-0TL11**		1	1 unit	1CL
	--	9.0	25	Red/yellow		**3LD3130-0TL13**		1	1 unit	1CL
	--	11.5	32	Black		**3LD3230-0TL11**		1	1 unit	1CL
	--	11.5	32	Red/yellow		**3LD3230-0TL13**		1	1 unit	1CL
	--	15.0	40	Black		**3LD3330-0TL11**		1	1 unit	1CL
	--	15.0	40	Red/yellow		**3LD3330-0TL13**		1	1 unit	1CL
	--	22.0	63	Black		**3LD3430-0TL11**		1	1 unit	1CL
	--	22.0	63	Red/yellow		**3LD3430-0TL13**		1	1 unit	1CL
 3LD3030-0TL13										
	1 NC + 1 NO	7.5	16	Black		**3LD3030-1TL11**		1	1 unit	1CL
		7.5	16	Red/yellow		**3LD3030-1TL13**		1	1 unit	1CL
		9.0	25	Black		**3LD3130-1TL11**		1	1 unit	1CL
		9.0	25	Red/yellow		**3LD3130-1TL13**		1	1 unit	1CL
		11.5	32	Black		**3LD3230-1TL11**		1	1 unit	1CL
		11.5	32	Red/yellow		**3LD3230-1TL13**		1	1 unit	1CL
		15.0	40	Black		**3LD3330-1TL11**		1	1 unit	1CL
		15.0	40	Red/yellow		**3LD3330-1TL13**		1	1 unit	1CL
		22.0	63	Black		**3LD3430-1TL11**		1	1 unit	1CL
		22.0	63	Red/yellow		**3LD3430-1TL13**		1	1 unit	1CL

Minimum order quantity (PS) or a multiple thereof can be ordered.

© Siemens 2019

	Number and version of the contacts		Rated data at 50 ... 60 Hz, 380 ... 440 V		SD	Article No. www.siemens.com/product?Article No.	Price per PU	PU (UNIT, SET, M)	PS	PG
	Main contact elements	Auxiliary contact elements	P/ AC-23A	I_u/ AC-21A						
			kW	A	d					
	Main control and EMERGENCY-STOP switches, basic switch without knob-operated mechanism • Degree of protection at front side IP20 • Including terminal cover for the infeed side • Front plate									
Center-hole mounting Ø 22.5 mm										
 3LD3010-0TK05	3	--	7.5	16		**3LD3010-0TK05**		1	1 unit	1CL
		--	9.0	25		**3LD3110-0TK05**		1	1 unit	1CL
		--	11.5	32		**3LD3210-0TK05**		1	1 unit	1CL
		--	15.0	40		**3LD3310-0TK05**		1	1 unit	1CL
		--	22.0	63		**3LD3410-0TK05**		1	1 unit	1CL
		1 NC + 1 NO	7.5	16		**3LD3010-1TK05**		1	1 unit	1CL
			9.0	25		**3LD3110-1TK05**		1	1 unit	1CL
			11.5	32		**3LD3210-1TK05**		1	1 unit	1CL
			15.0	40		**3LD3310-1TK05**		1	1 unit	1CL
			22.0	63		**3LD3410-1TK05**		1	1 unit	1CL
 3LD3010-0TL05	3 + N	--	7.5	16		**3LD3010-0TL05**		1	1 unit	1CL
		--	9.0	25		**3LD3110-0TL05**		1	1 unit	1CL
		--	11.5	32		**3LD3210-0TL05**		1	1 unit	1CL
		--	15.0	40		**3LD3310-0TL05**		1	1 unit	1CL
		--	22.0	63		**3LD3410-0TL05**		1	1 unit	1CL
		1 NC + 1 NO	7.5	16		**3LD3010-1TL05**		1	1 unit	1CL
			9.0	25		**3LD3110-1TL05**		1	1 unit	1CL
			11.5	32		**3LD3210-1TL05**		1	1 unit	1CL
			15.0	40		**3LD3310-1TL05**		1	1 unit	1CL
			22.0	63		**3LD3410-1TL05**		1	1 unit	1CL

© Siemens 2019

Selection and ordering data

	Accessory part	Version	SD d	Article No. www.siemens.com/product?Article No.	Price per PU	PU (UNIT, SET, M)	PS	PG
 3LD9340-0B (left) 3LD9340-0C (right)	**N switching contacts**	• Front mounting, leading		**3LD9340-0B**		1	1 unit	1CL
		• Floor mounting, leading		**3LD9340-0C**		1	1 unit	1CL
 3LD9340-2B (left) 3LD9340-2C (right)	**N terminals**	• Front mounting, through-type		**3LD9340-2B**		1	1 unit	1CL
		• Floor mounting, through-type		**3LD9340-2C**		1	1 unit	1CL
 3LD9340-3B (left) 3LD9340-3C (right)	**PE terminals**	• Front mounting, through-type		**3LD9340-3B**		1	1 unit	1CL
		• Floor mounting, through-type		**3LD9340-3C**		1	1 unit	1CL
 3LD9340-6B (left) 3LD9340-6C (right)	**Auxiliary switches**	• Front mounting, 1 NC + 1 NO		**3LD9340-6B**		1	1 unit	1CL
		• Floor mounting, 1 NC + 1 NO		**3LD9340-6C**		1	1 unit	1CL
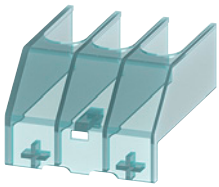	**Terminal covers**	For 3LD3 3-pole switch disconnectors		**3LD9341-0A**		1	4 units	1CL
		For N switching contact or for N terminal or for PE terminal		**3LD9341-2A**		1	4 units	1CL

7

Minimum order quantity (PS) or a multiple thereof can be ordered.

© Siemens 2019

	Accessory part	Version	SD d	Article No. www.siemens.com/product?Article No.	Price per PU	PU (UNIT, SET, M)	PS	PG
	**Rotary operating mechanisms**	Black Center-hole mounting 22.5 mm, front mounting with 66 x 66 mm masking plate, floor mounting for 3LD3.40 and 3LD3.48 For 6 x 6 mm shaft		**3LD9344-2C**		1	1 unit	1CL
		Red/yellow Center-hole mounting 22.5 mm, front mounting with 66 x 66 mm masking plate, floor mounting for 3LD3.40 and 3LD3.48 For 6 x 6 mm shaft		**3LD9344-3C**		1	1 unit	1CL
		Black Center-hole mounting 22.5 mm, front mounting for 3LD3.50 For 6 x 6 mm shaft		**3LD9344-4C**		1	1 unit	1CL
		Red/yellow Center-hole mounting 22.5 mm, front mounting for 3LD3.50 For 6 x 6 mm shaft		**3LD9344-5C**		1	1 unit	1CL
	**Knob-operated mechanisms**	Black, front mounting 48 x 48 mm, with coupling element		**3LD9343-4C**		1	1 unit	1CL
		Red/yellow, front mounting 48 x 48 mm, with coupling element		**3LD9343-5C**		1	1 unit	1CL
		Black, front mounting 48 x 48 mm, for shaft		**3LD9343-6C**		1	1 unit	1CL
		Red/yellow, front mounting 48 x 48 mm, for shaft		**3LD9343-7C**		1	1 unit	1CL

Minimum order quantity (PS) or a multiple thereof can be ordered.

© Siemens 2019

	Accessory part	Version	SD	Article No. www.siemens.com/product?Article No.	Price per PU	PU (UNIT, SET, M)	PS	PG
			d					
	**Door mounted rotary operators**	Red/yellow, knob-operated mechanism 48 x 48 mm, front mounting, with coupling element and shaft		**3LD9343-5CA**		1	1 unit	1CL
		Black, knob-operated mechanism 48 x 48 mm, front mounting, with coupling element and shaft		**3LD9343-4CA**		1	1 unit	1CL
		Red/yellow, rotary operating mechanism 66 x 66 mm, front mounting, with coupling element and shaft		**3LD9344-3CA**		1	1 unit	1CL
		Black, rotary operating mechanism 66 x 66 mm, front mounting, with coupling element and shaft		**3LD9344-2CA**		1	1 unit	1CL
	**Additional labels**	German/English, "Hauptschalter/Main Switch" (10 units in package)		**3LD9346-1A**		1	10 units	1CL
		French/Spanish "Interrupteur/Principal" (10 units in package)		**3LD9346-2A**		1	10 units	1CL
		Without inscription (10 units in package)		**3LD9346-3A**		1	10 units	1CL

7

Minimum order quantity (PS) or a multiple thereof can be ordered.

© Siemens 2019

Overview

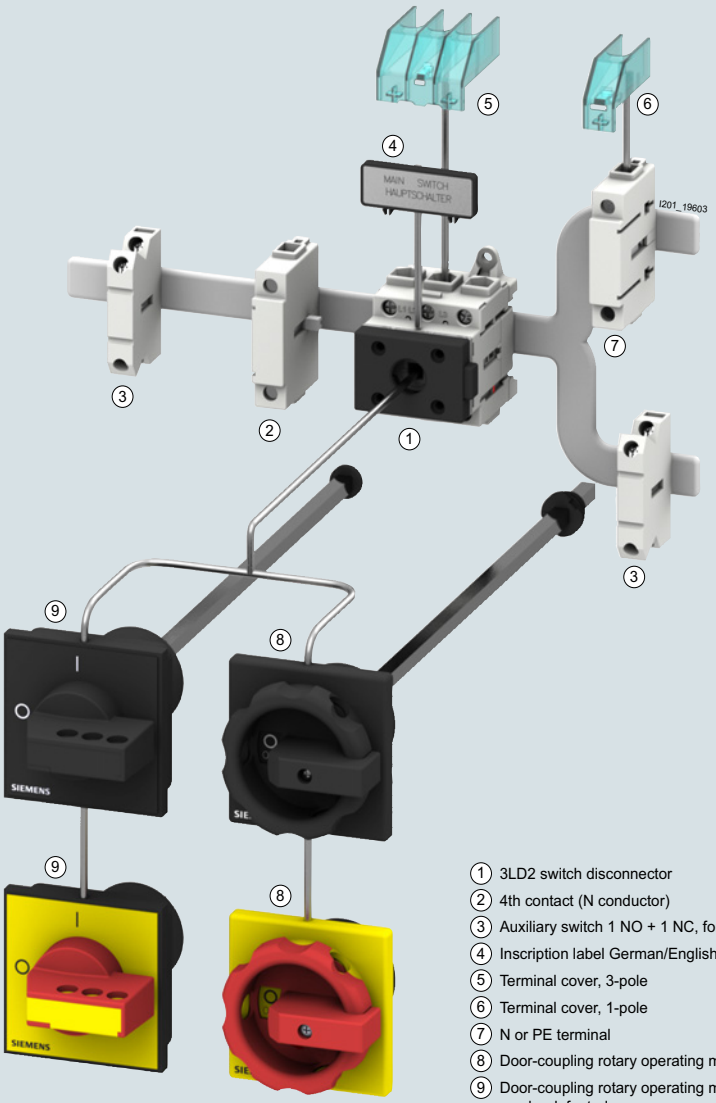

The 3LD2 main control and EMERGENCY-STOP switches are manually operated switch disconnectors according to IEC 60947-3/ VDE 0660 Part 107 (EN 60947-3) and comply with the conditions for switch disconnectors according to EN 60204-1 (VDE 0113 Part 1). In EN 60204-1 (VDE 0113 Part 1), these are called "disconnector units", while EMERGENCY-STOP switches are termed "devices for emergency shutdown".

The 3LD2 switches for 16 to 250 A are approved according to UL 508 and can be used as "manual motor controllers" and "motor disconnects". In addition, the 3LD switch disconnectors have CCC certification.

The 3LD2 main control and EMERGENCY-STOP switches are suitable for a current range from 16 to 250 A. These are suitable for main control, EMERGENCY-STOP, or repair switches and thus fulfill a wide range of requirements.

They are approved in line with IEC, UL, EAC, CSA, and CCC, as well as for use in shipbuilding.

Versions

- Five sizes with box terminal in 3, 4, and 6-pole version
- Front-mounting and floor mounting or distribution board mounting
- Front mounting by means of four-hole or center-hole mounting
- Switches in molded-plastic enclosure with degree of protection IP65
- DC isolators 800 V DC for PV installations
- Door-coupling rotary operating mechanism for operation of switch disconnector outside the control cabinet door
- Auxiliary switches for querying the switch positions, pre-installed or retrofittable

Benefits

- Compact design saves space
- High rated short-circuit currents
- Locking capability during maintenance work
- Comprehensive range of retrofittable accessories
- Comprehensive support through provision of CAx data

Minimum order quantity (PS) or a multiple thereof can be ordered.

© Siemens 2019

Application

The 3LD2 switches are used in almost all power distribution systems for industry and infrastructure, but particularly those in main and auxiliary power distribution systems of commercial buildings and in domestic power supplies upstream of meters (e.g. SIPRO system).

Particularly for processing machines in mechanical and conveyor system engineering and in the chemical or food and beverage industries, these switches are now an essential part of the hardware architecture as main control and EMERGENCY-STOP switches.

The 3LD2 switches can be used as:

- ON-OFF switches
- EMERGENCY-STOP switches
- Main control switches according to EN 60204-1

Design

Design of the contacts

Each switch has three adjacent contact elements[1]. A fourth leading contact element for switching the N conductor, a continuous PE terminal, an auxiliary switch (1 NO + 1 NC) can be fitted to each side of the switch. The auxiliary switches operate as leading contacts on opening. On opening, the NO contact opens before the main contacts, so that a contactor carries the switching power in the circuit and the maintenance or safety switch switches at zero current. On closing, the auxiliary switch switches later than or at the same time as the main contacts.

Design of rotary operating mechanisms

The rotary operating mechanisms of the switches for front or floor mounting are mounted on control cabinet doors, or on front or side panels with four-hole or center-hole mounting with a standard diameter of 22.5 mm and are operated from the outside. In their OFF position, they can be locked with up to three padlocks with a hasp thickness of 4 to 8 mm. Switching devices with defeatable door-coupling rotary operating mechanism are available in addition.

- Switch position indicator:
  The switch position is clearly marked with direction arrows and an "O" for OFF and a "I" for ON at the front.
- Switches for front mounting:
  The switches for front mounting are connected directly to the rotary operating mechanism through the fixing screws or – in the case of center-hole mounting – a special-purpose coupling.
- Switches for floor mounting:
  The switches for floor mounting are snapped onto 35 mm standard mounting rails according to EN 60715 or screw-mounted on mounting plates. The actuators are connected to the lower section of the switch through a door coupling, which can be released in its zero position, and a 300 mm long switch shaft. When the control cabinet door is open, the switch can be protected against inadvertent operation by removing the switch shaft from the lower section of the switch.
  The overall depth can be adapted to individual requirements by adjusting the switch shaft length.
- Switches for distribution board mounting:
  The switches for distribution board mounting are suited for operation in distribution boards and for switching inside control cabinets or distribution boards. They have cap and mounting dimensions to DIN 43880 and can be fitted under the same cover together with miniature circuit breakers. The selector switches can be locked in their OFF position with up to two padlocks with a hasp thickness of 4 to 6 mm.
- Switches in molded-plastic enclosure:
  For surface mounting of individual main control and EMERGENCY-STOP switches, molded plastic-enclosed switches to degree of protection IP65 are used. The actuators can be locked in their OFF position with three padlocks with a hasp thickness of 4 to 8 mm. The molded-plastic enclosures each contain an N and/or a PE terminal.

[1] 16 A versions have four contact elements, 3-pole transfer switches, see chapter "Transfer Switching Equipment and Load Transfer Switches" and six 6-pole contact elements.


3LD2704-0TK53 switch for front mounting with rotary operating mechanism


3LD2222-0TK1 switch for front mounting with knob


3LD2122-7UK01 3-pole transfer switch for front mounting with knob, see chapter "Transfer Switching Equipment and Load Transfer Switches"

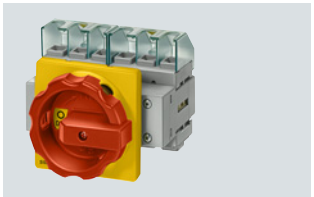
3LD2103-3VK53 6-pole switch for front mounting with rotary operating mechanism

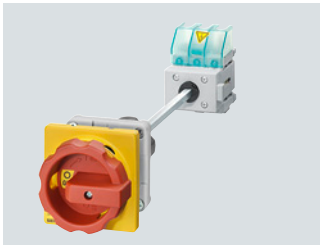
3LD2144-0TK53 switch for floor mounting with rotary operating mechanism and door coupling


3LD2530-0TK11 switch for distribution board mounting with knob


3LD2264-0TB5. switch in molded-plastic enclosure


3LD2217-1TL13 switch for floor mounting with rotary operating mechanism and defeatable door coupling


3LD2265-8VQ51-0AF6 DC isolator


3LD2418-0TK13 switch for floor mounting, 250 A, with rotary operating mechanism and door coupling

Minimum order quantity (PS) or a multiple thereof can be ordered.

© Siemens 2019

Technical specifications

Standards			**IEC 60947-3 (DIN VDE 0660-107), EN 60204-1 (VDE 0113-1)**							
Switches		Type	**3LD20**	**3LD21**	**3LD22**	**3LD25**	**3LD27**	**3LD28**	**3LD23**	**3LD24**
Rated insulation voltage U_i		V	690							
Rated operational voltage U_e		V AC	690							
Rated frequency		Hz	50 ... 60							
Rated impulse withstand voltage U_{imp}		kV	6	6	6	6	6	6	6	6
Rated short-time withstand current (1 s current, rms value)		A	340	640	640	1260	2000	2000	4000	4000
Short-circuit protection, max. back-up fuse (gL)		A	20	25	40	63	100	125	160	250
Rated conditional short-circuit current with upstream fuses at AC 50/60 Hz, 690 V		kArms	50	50	50	50	50	20	50	50
Maximum permissible let-through I^2t value		kA^2s	2.5	4	9	21	64	104	185	557
Permissible let-through current of the fuse		kA	3	3.5	4.5	6	10	10	15	15
Rated uninterrupted current I_u		A	16	25	32	63	100	125	160	250
AC-21A load-break switch	Rated operational current I_e	A	16	25	32	63	100	125	160	250
AC-3 motor load switches	Rated operational power									
Operational switching	At 220 ... 240 V	kW	3.0	4.0	5.5	11.0	18.5	22.0	35.0	55.0
of individual motors	At 380 ... 440 V	kW	5.5	7.5	9.5	18.5	30.0	37.0	50.0	110.0
	At 660/690 V	kW	5.5	7.5	9.5	15.0	22.0	30.0	37.0	45.0
AC-23A main control switch	Rated operational power									
Repair switch	At 220 ... 240 V	kW	4.0	5.0	6.0	11.0	18.5	22.0	45.0	75.0
Frequent, but not operational	At 380 ... 440 V	kW	7.5	9.5	11.5	22.0	37.0	45.0	75.0	132.0
switching of individual motors	At 660/690 V	kW	7.5	9.5	11.5	18.5	30.0	37.0	45.0	55.0
Power loss per current path at I_e		W	0.5	1.1	1.8	4.5	7.5	12.0	36.0	36.0
Endurance mechanical	Operating cycles		100 000							
Switching frequency		1/h	50							
Permissible ambient temperature		°C	-25 ... +55							
Isolating features	Up to max.	V	690							
Conductor cross-sections for main conductors [1]										
Solid or stranded		mm^2	1 ... 6	1.5 ... 16	1.5 ... 16	2.5 ... 35	4 ... 50	4 ... 50	16 ...185	16 ... 185
Finely stranded with end sleeve (max.)		mm^2	4	10	10	16	35	35	150	150
Conductor cross-sections	Copper cable	AWG	18 ... 10	14 ... 8	14 ... 8	14 ... 6	12 ... 1	12 ... 1		
Torque for terminal		Nm	1.5 ... 2	2 ... 2.5	2 ... 2.5	2.5 ... 3	2.5 ... 3	2.5 ... 3	9.5 ... 10	9.5 ... 10
Touch protection according to EN 50274			Yes							
Auxiliary switches										
Rated insulation voltage U_i		V	500							
Rated operational voltage U_e		V AC	500							
Rated uninterrupted current I_u		A	10							
Rated operational current I_e, AC-15	At 120 V	A	6							
	At 220 ... 240 V	A	3							
	At 380 ... 415 V	A	1.8							
	At 500 V	A	1.4							
Short-circuit protection, aux. switch, max. back-up fuse (gL/gG)		A	10							
Conductor cross-sections for auxiliary conductors										
Connection type			Screw terminals							
Solid or stranded		mm^2	2 × (0.75 ... 2.5), 1 × 4							
Finely stranded with end sleeve		mm^2	2 × (0.75 ... 1.5), 1 x 2.5							
Torque for terminal		Nm	0.8							

[1] Depending on the cable infeed, only small cross-sections are possible with devices in molded-plastic enclosures.

© Siemens 2019

3LD switches for UL/CSA as "manual motor controllers" [1]

Standards			**UL/CSA**							
Switches		Type	**3LD20**	**3LD21**	**3LD22**	**3LD25**	**3LD27**	**3LD28**	**3LD23**	**3LD24**
Rated operational voltage U_e		V AC	600	600	600	600	600	600	600	600
Rated uninterrupted current I_u		A	10	20	30	60	100	125	160	250
	Current rating		A 600	A 600	A 600	--	--	--	--	--
	Pilot duty		P 600	P 600	P 600	--	--	--	--	--
Conventional thermal current I_{th}		A	16	25	32	63	100	125	160	250
Maximum rated power (AC-3)	3 ~ 120 V	HP	1	3	3	5	10	15	--	--
Alternating current motors 40 ... 60 Hz	240 V	HP	3	7.5	10 (7.5)[2]	15	30	40	40	50
(HP = PS)	480 V	HP	7.5	10	20 (15)[2]	40	60	75	75	100
	600 V	HP	10	15	30 (20)[2]	50	75	100	75	75
	1 ~ 120 V	HP	0.5	2	2	3	--	--	--	--
	240 V	HP	1.5	3	3	10	--	--	--	--
Conductor cross-sections	Cu cable	AWG	18 ... 10	14 ... 8	14 ... 8	14 ... 6	12 ... 1	12 ... 1	1 ... MCM400	
Torque		Nm	1.5 ... 2	2 ... 2.5	2 ... 2.5	2.5 ... 3	2.5 ... 3	2.5 ... 3	10	10

1) The 3LD switches for UL/CSA are approved in accordance with UL/CSA as "manual motor controllers", and they can be used as repair switches in the molded-plastic enclosure, for example. However, they do not have UL approval as main control switches.

2) Values in brackets apply to devices in molded-plastic enclosure.

7

Minimum order quantity (PS) or a multiple thereof can be ordered.

© Siemens 2019

Selection and ordering data

Number and version of the contacts		Rated data at 50 ... 60 Hz, 380 ... 440 V			SD	Article No. www.siemens.com/product?Article No.	Price per PU	PU (UNIT, SET, M)	PS	PG
Main contact elements	Auxiliary contact elements	P/AC-3 kW	P/AC-23A kW	I_u/AC-21A A	d					
Main control and EMERGENCY-STOP switches with rotary operating mechanism/knob-operated mechanism • Lockable in 0 position with up to 3 padlocks: - 3LD20 to 3LD28: Hasp thickness from 4 to 8 mm - 3LD23 and 3LD24: Hasp thickness from 4 to 6 mm • Degree of protection at front side IP65 • All versions with rotary operating mechanism, exception: 3LD23, 3LD24 with knob-operated mechanism • Including terminal cover for the infeed side • Front plate: - 3LD20, 3LD21, 3LD22: 67 x 67 mm - 3LD25 to 3LD28: 90 × 90 mm - 3LD23 to 3LD24: 96 x 96 mm										
Four-hole mounting										
 3LD2203-0TK51										
3	--	5.5	7.5	16		**3LD2003-0TK5☐**		1 1 unit		1CL
		7.5	9.5	25		**3LD2103-0TK5☐**		1 1 unit		1CL
		9.5	11.5	32		**3LD2203-0TK5☐**		1 1 unit		1CL
		18.5	22.0	63		**3LD2504-0TK5☐**		1 1 unit		1CL
		30	37.0	100		**3LD2704-0TK5☐**		1 1 unit		1CL
		37	45.0	125		**3LD2804-0TK5☐**		1 1 unit		1CL
		50	75.0	160		**3LD2305-0TK1☐**		1 1 unit		1CL
		110	132.0	250		**3LD2405-0TK1☐**		1 1 unit		1CL
3 + N	--	5.5	7.5	16		**3LD2003-1TL5☐**		1 1 unit		1CL
		7.5	9.5	25		**3LD2103-1TL5☐**		1 1 unit		1CL
		9.5	11.5	32		**3LD2203-1TL5☐**		1 1 unit		1CL
		18.5	22.0	63		**3LD2504-1TL5☐**		1 1 unit		1CL
		30.0	37.0	100		**3LD2704-0TK5☐** +[1]		1 1 unit		1CL
						3LD9280-0B		1 1 unit		1CL
		37.0	45.0	125		**3LD2804-0TK5☐** +[1]		1 1 unit		1CL
						3LD9280-0B		1 1 unit		1CL
		50	75.0	160		**3LD2305-1TL1☐**		1 1 unit		1CL
		110	132.0	250		**3LD2405-1TL1☐**		1 1 unit		1CL
 3LD2704-0TK53										
3	1 NO + 1 NC	5.5	7.5	16		**3LD2003-1TP5☐**		1 1 unit		1CL
		7.5	9.5	25		**3LD2103-1TP5☐**		1 1 unit		1CL
		9.5	11.5	32		**3LD2203-1TP5☐**		1 1 unit		1CL
		18.5	22.0	63		**3LD2504-1TP5☐**		1 1 unit		1CL
		30.0	37.0	100		**3LD2704-1TP5☐**		1 1 unit		1CL
		37	45.0	125		**3LD2804-1TP5☐**		1 1 unit		1CL
		50.0	75.0	160		**3LD2305-0TK1☐** +[2]		1 1 unit		1CL
						3LD9200-5B		1 1 unit		1CL
		110.0	132.0	250		**3LD2405-0TK1☐** +[2]		1 1 unit		1CL
						3LD9200-5B		1 1 unit		1CL
3 + N	1 NO + 1 NC	5.5	7.5	16		**3LD2003-2EP5☐**		1 1 unit		1CL
		7.5	9.5	25		**3LD2103-2EP5☐**		1 1 unit		1CL
		9.5	11.5	32		**3LD2203-1TL5☐** +[2]		1 1 unit		1CL
						3LD9200-5B		1 1 unit		1CL
		18.5	22.0	63		**3LD2504-1TP5☐** +[1]		1 1 unit		1CL
						3LD9250-0BA		1 1 unit		1CL
		30.0	37.0	100		**3LD2704-0TK5☐** +[1]		1 1 unit		1CL
						3LD9280-0B +[2]		1 1 unit		1CL
						3LD9200-5B		1 1 unit		1CL
		37.0	45.0	125		**3LD2804-0TK5☐** +[1]		1 1 unit		1CL
						3LD9280-0B +[2]		1 1 unit		1CL
						3LD9200-5B		1 1 unit		1CL
		50.0	75.0	160		**3LD2305-1TL1☐** +[2]		1 1 unit		1CL
						3LD9200-5B		1 1 unit		1CL
		110.0	132.0	250		**3LD2405-1TL1☐** +[2]		1 1 unit		1CL
						3LD9200-5B		1 1 unit		1CL

Actuator color
Black **1**
Red/yellow (EMERGENCY-STOP) **3**

[1] 4th contact element as N conductor ordered separately, see page 7/41, Accessories.

[2] Auxiliary switches 1 NO + 1 NC to be ordered separately, see page 7/41, Accessories.

Minimum order quantity (PS) or a multiple thereof can be ordered.

© Siemens 2019

3LD2 main control and EMERGENCY-STOP switches from 16 to 250 A > Front mounting

	Number and version of the contacts		Rated data at 50 ... 60 Hz, 380 ... 440 V			SD	Article No. www.siemens.com/product?Article No.	Price per PU	PU (UNIT, SET, M)	PS	PG
	Main contact elements	Auxiliary contact elements	P/AC-3	P/AC-23A	I_u/ AC-21A						
			kW	kW	A	d					
	Main control and EMERGENCY-STOP switches with direct operating mechanism (rotary operating mechanism) • Lockable in 0 position with up to 3 padlocks with a hasp thickness of 4 to 8 mm • Degree of protection at front side IP65 • All versions with rotary operating mechanism • Including terminal cover for the infeed side • Front plate - 3LD20, 3LD21, 3LD22: 67 x 67 mm - 3LD25: 90 x 90 mm										
	Center-hole mounting Ø 22.5 mm										
 3LD2254-0TK53	3	--	5.5	7.5	16		**3LD2054-0TK5☐**		1	1 unit	1CL
			7.5	9.5	25		**3LD2154-0TK5☐**		1	1 unit	1CL
			9.5	11.5	32		**3LD2254-0TK5☐**		1	1 unit	1CL
			18.5	22	63		**3LD2555-0TK5☐**		1	1 unit	1CL
	3 + N	--	5.5	7.5	16		**3LD2054-1TL5☐**		1	1 unit	1CL
			7.5	9.5	25		**3LD2154-1TL5☐**		1	1 unit	1CL
			9.5	11.5	32		**3LD2254-1TL5☐**		1	1 unit	1CL
			18.5	22	63		**3LD2555-0TK5☐** + [1]		1	1 unit	1CL
							3LD9250-0BA		1	1 unit	1CL
	3	1 NO + 1 NC	5.5	7.5	16		**3LD2054-1TP5☐**		1	1 unit	1CL
			7.5	9.5	25		**3LD2154-1TP5☐**		1	1 unit	1CL
			9.5	11.5	32		**3LD2254-0TK5☐** + [2]		1	1 unit	1CL
							3LD9200-5B		1	1 unit	1CL
			18.5	22	63		**3LD2555-0TK5☐** + [2]		1	1 unit	1CL
							3LD9200-5B		1	1 unit	1CL
	3 + N	1 NO + 1 NC	5.5	7.5	16		**3LD2054-2EP5☐**		1	1 unit	1CL
			7.5	9.5	25		**3LD2154-2EP5☐**		1	1 unit	1CL
			9.5	11.5	32		**3LD2254-1TL5☐** + [2]		1	1 unit	1CL
							3LD9200-5B		1	1 unit	1CL
			18.5	22	63		**3LD2555-0TK5☐** + [1]		1	1 unit	1CL
							3LD9250-0BA + [2]		1	1 unit	1CL
							3LD9200-5B		1	1 unit	1CL

Actuator color	
Black	**1**
Red/yellow (EMERGENCY-STOP)	**3**

[1] 4th contact element as N conductor to be ordered separately, see page 7/41, Accessories.

[2] Auxiliary switches 1 NO + 1 NC to be ordered separately, see page 7/41, Accessories.

Minimum order quantity (PS) or a multiple thereof can be ordered.

© Siemens 2019

	Number and version of the contacts		Rated data 50 ... 60 Hz, 380 ... 440 V		SD	Article No. www.siemens.com/product?Article No.	Price per PU	PU (UNIT, SET, M)	PS	PG
	Main contact elements	Auxiliary contact elements	P/AC-23A kW	I_u A	d					
	Main control and EMERGENCY-STOP switches with direct operating mechanism (knob-operated mechanism) • Lockable in 0 position (can be modified to I position) with max. 2 padlocks with a hasp thickness of 4 to 6 mm • Degree of protection at front side IP65 • Including terminal cover for the infeed side • Front plate - 48 x 48 mm									
Four-hole mounting										
 3LD2222-0TK11	3	--	7.5	16		**3LD2022-0TK1☐**		1	1 unit	1CL
			9.5	25		**3LD2122-0TK1☐**		1	1 unit	1CL
			11.5	32		**3LD2222-0TK1☐**		1	1 unit	1CL
	3 + N	--	7.5	16		**3LD2022-1TL1☐**		1	1 unit	1CL
			9.5	25		**3LD2122-1TL1☐**		1	1 unit	1CL
			11.5	32		**3LD2222-0TK1☐** + [1]		1	1 unit	1CL
						3LD9220-0B		1	1 unit	1CL
	3	1 NO + 1 NC	7.5	16		**3LD2022-0TK1☐** + [2]		1	1 unit	1CL
						3LD9200-5B		1	1 unit	1CL
			9.5	25		**3LD2122-0TK1☐** + [2]		1	1 unit	1CL
						3LD9200-5B		1	1 unit	1CL
			11.5	32		**3LD2222-0TK1☐** + [2]		1	1 unit	1CL
						3LD9200-5B		1	1 unit	1CL
	3 + N	1 NO + 1 NC	7.5	16		**3LD2022-1TL1☐** + [2]		1	1 unit	1CL
						3LD9200-5B		1	1 unit	1CL
			9.5	25		**3LD2122-1TL1☐** + [2]		1	1 unit	1CL
						3LD9200-5B		1	1 unit	1CL
			11.5	32		**3LD2222-0TK1☐** + [1]		1	1 unit	1CL
						3LD9220-0B + [2]		1	1 unit	1CL
						3LD9200-5B		1	1 unit	1CL

Actuator color	
Black	**1**
Red/yellow (EMERGENCY-STOP)	**3**

[1] 4th contact element as N conductor to be ordered separately, see page 7/41, Accessories.

[2] Auxiliary switches 1 NO + 1 NC to be ordered separately, see page 7/41, Accessories.

© Siemens 2019

3LD2 main control and EMERGENCY-STOP switches from 16 to 250 A > Front mounting

Number and version of the contacts		Rated data at 50 ... 60 Hz, 380 ... 440 V		SD	Article No. www.siemens.com/product?Article No.	Price per PU	PU (UNIT, SET, M)	PS	PG
Main contact elements	Auxiliary contact elements	P/AC-23A	I_u						
		kW	A	d					
Main control and EMERGENCY-STOP switches with direct operating mechanism (knob-operated mechanism) • Lockable in 0 position (can be modified to I position) with max. 2 padlocks with a hasp thickness of 4 to 6 mm • Degree of protection at front side IP65 • Including terminal cover for the infeed side • Front plate: 48 x 48 mm									
Center-hole mounting Ø 22.5 mm									
3	--	7.5	16		**3LD2050-0TK1☐**		1	1 unit	1CL
		9.5	25		**3LD2150-0TK1☐**		1	1 unit	1CL
		11.5	32		**3LD2250-0TK1☐**		1	1 unit	1CL
3 + N	--	7.5	16		**3LD2050-1TL1☐**		1	1 unit	1CL
		9.5	25		**3LD2150-0TK1☐**		1	1 unit	1CL
					+ [2] **3LD9220-0B**		1	1 unit	1CL
		11.5	32		**3LD2250-0TK1☐**		1	1 unit	1CL
					+ [2] **3LD9220-0B**		1	1 unit	1CL
3	1 NO + 1 NC	7.5	16		**3LD2050-0TK1☐**		1	1 unit	1CL
					+ [2] **3LD9200-5B**		1	1 unit	1CL
		9.5	25		**3LD2150-0TK1☐**		1	1 unit	1CL
					+ [2] **3LD9200-5B**		1	1 unit	1CL
		11.5	32		**3LD2250-0TK1☐**		1	1 unit	1CL
					+ [2] **3LD9200-5B**		1	1 unit	1CL
3 + N	1 NO + 1 NC	7.5	16		**3LD2050-1TL1☐**		1	1 unit	1CL
					+ [2] **3LD9200-5B**		1	1 unit	1CL
		9.5	25		**3LD2150-0TK1☐**		1	1 unit	1CL
					+ [1] **3LD9220-0B**		1	1 unit	1CL
					+ [2] **3LD9200-5B**		1	1 unit	1CL
		11.5	32		**3LD2250-0TK1☐**		1	1 unit	1CL
					+ [1] **3LD9220-0B**		1	1 unit	1CL
					+ [2] **3LD9200-5B**		1	1 unit	1CL



3LD2150-0TK13

Actuator color

Black	**1**
Red/yellow (EMERGENCY-STOP)	**3**

[1] 4th contact element as N conductor to be ordered separately, see page 7/41, Accessories.

[2] Auxiliary switches 1 NO + 1 NC to be ordered separately, see page 7/41, Accessories.

Minimum order quantity (PS) or a multiple thereof can be ordered.

© Siemens 2019

	Number and version of the contacts		Rated data at 50 ... 60 Hz, 380 ... 440 V			SD	Article No. www.siemens.com/product?Article No.	Price per PU	PU (UNIT, SET, M)	PS	PG
	Main contact elements	Auxiliary contact elements	P/AC-3	P/AC-23A	I_u						
			kW	kW	A	d					
	Main control and EMERGENCY-STOP switches with direct operating mechanism (rotary operating mechanism/knob-operated mechanism), 6-pole • Lockable in 0 position with up to 3 padlocks: - 3LD20 to 3LD28: Hasp thickness from 4 to 8 mm - 3LD23 and 3LD24: Hasp thickness from 4 to 6 mm • Degree of protection at front side IP65 • All versions with rotary operating mechanism Exception: 3LD23 and 3LD24 with knob-operated mechanism • Including terminal cover for the infeed side • Front plate - 3LD20, 3LD21, 3LD22: 67 x 67 mm - 3LD25: 90 x 90 mm - 3LD23 to 3LD24: 96 x 96 mm										
Four-hole mounting											
 3LD2103-3VK53	6	--	7.5	9.5	25		**3LD2103-3VK5☐**		1	1 unit	1CL
			9.5	11.5	32		**3LD2203-3VK5☐**		1	1 unit	1CL
			18.5	22.0	63		**3LD2504-3VK5☐**		1	1 unit	1CL
			50	75	160		**3LD2305-3VK1☐**		1	1 unit	1CL
			110	132	250		**3LD2405-3VK1☐**		1	1 unit	1CL
	6	1 NO + 1 NC	7.5	9.5	25		**3LD2103-4VP5☐**		1	1 unit	1CL

Actuator color	
Black	**1**
Red/yellow (EMERGENCY-STOP)	**3**

© Siemens 2019

Selection and ordering data

Number and version of the contacts		Rated data at 50 ... 60 Hz, 380 ... 440 V		SD	Article No. www.siemens.com/product?Article No.	Price per PU	PU (UNIT, SET, M)	PS	PG
Main contact elements	Auxiliary contact elements	P/AC-23A kW	I_u A	d					
Main control and EMERGENCY-STOP switches with door-coupling rotary operating mechanism • With shaft • Lockable in 0 position with up to 3 padlocks: - 3LD20 to 3LD28: Hasp thickness from 4 to 8 mm - 3LD23 and 3LD24: Hasp thickness from 4 to 6 mm • Degree of protection at front side IP65 • Door-coupling rotary operating mechanism with integrated tolerance compensation (16 to 125 A) • All versions with rotary operating mechanism Exception: 3LD23 and 3LD24 with knob-operated mechanism • Mounting using screws or snap-on mounting on 35 mm standard mounting rail (16 to 125 A) • Including terminal cover for the infeed side • Front plate - 3LD20, 3LD21, 3LD22: 67 x 67 mm - 3LD25 to 3LD28: 90 x 90 mm - 3LD23 to 3LD24: 96 x 96 mm • Mounting dimensions - 3LD20, 3LD21, 3LD22: 380 mm - 3LD25 to 3LD28: 390 mm - 3LD23 to 3LD24: 600 mm								
Four-hole mounting									
3	--	7.5	16		**3LD2013-0TK5☐**		1	1 unit	1CL
		9.5	25		**3LD2113-0TK5☐**		1	1 unit	1CL
		11.5	32		**3LD2213-0TK5☐**		1	1 unit	1CL
		22	63		**3LD2514-0TK5☐**		1	1 unit	1CL
		37	100		**3LD2714-0TK5☐**		1	1 unit	1CL
		45	125		**3LD2814-0TK5☐**		1	1 unit	1CL
		75	160		**3LD2318-0TK1☐**		1	1 unit	1CL
		132	250		**3LD2418-0TK1☐**		1	1 unit	1CL
3 + N	--	7.5	16		**3LD2013-1TL5☐**		1	1 unit	1CL
		9.5	25		**3LD2113-1TL5☐**		1	1 unit	1CL
		11.5	32		**3LD2213-1TL5☐**		1	1 unit	1CL
		22	63		**3LD2514-1TL5☐**		1	1 unit	1CL
		37	100		**3LD2714-0TK5☐** + [1]		1	1 unit	1CL
					3LD9280-0C		1	1 unit	1CL
		45	125		**3LD2814-0TK5☐** + [1]		1	1 unit	1CL
					3LD9280-0C		1	1 unit	1CL
		75	160		**3LD2318-1TL1☐**		1	1 unit	1CL
		132	250		**3LD2418-1TL1☐**		1	1 unit	1CL



3LD2213-0TK53

Actuator color

Black	**1**
Red/yellow (EMERGENCY-STOP)	**3**

[1] 4th contact element as N conductor to be ordered separately, see page 7/41, Accessories.

Minimum order quantity (PS) or a multiple thereof can be ordered.

© Siemens 2019


3LD2213-0TK53

Number and version of the contacts		Rated data at 50 ... 60 Hz, 380 .... 440 V		SD	Article No. www.siemens.com/product?Article No.	Price per PU	PU (UNIT, SET, M)	PS	PG
Main contact elements	Auxiliary contact elements	P/AC-23A	I_u						
		kW	A	d					
3	1 NO + 1 NC	7.5	16		**3LD2013-0TK5☐**		1	1 unit	1CL
					+ [2] **3LD9200-5C**		1	1 unit	1CL
		9.5	25		**3LD2113-0TK5☐**		1	1 unit	1CL
					+ [2] **3LD9200-5C**		1	1 unit	1CL
		11.5	32		**3LD2213-0TK5☐**		1	1 unit	1CL
					+ [2] **3LD9200-5C**		1	1 unit	1CL
		22	63		**3LD2514-0TK5☐**		1	1 unit	1CL
					+ [2] **3LD9200-5C**		1	1 unit	1CL
		37	100		**3LD2714-0TK5☐**		1	1 unit	1CL
					+ [2] **3LD9200-5C**		1	1 unit	1CL
		45	125		**3LD2814-0TK5☐**		1	1 unit	1CL
					+ [2] **3LD9200-5C**		1	1 unit	1CL
		75	160		**3LD2318-0TK1☐**		1	1 unit	1CL
					+ [2] **3LD9200-5C**		1	1 unit	1CL
		132	250		**3LD2418-0TK1☐**		1	1 unit	1CL
					+ [2] **3LD9200-5C**		1	1 unit	1CL
3 + N	1 NO + 1 NC	7.5	16		**3LD2013-1TL5☐**		1	1 unit	1CL
					+ [2] **3LD9200-5C**		1	1 unit	1CL
		9.5	25		**3LD2113-1TL5☐**		1	1 unit	1CL
					+ [2] **3LD9200-5C**		1	1 unit	1CL
		11.5	32		**3LD2213-1TL5☐**		1	1 unit	1CL
					+ [2] **3LD9200-5C**		1	1 unit	1CL
		22	63		**3LD2514-1TL5☐**		1	1 unit	1CL
					+ [2] **3LD9200-5C**		1	1 unit	1CL
		37	100		**3LD2714-0TK5☐**		1	1 unit	1CL
					+ [1] **3LD9280-0C**		1	1 unit	1CL
					+ [2] **3LD9200-5C**		1	1 unit	1CL
		45	125		**3LD2814-0TK5☐**		1	1 unit	1CL
					+ [1] **3LD9280-0C**		1	1 unit	1CL
					+ [2] **3LD9200-5C**		1	1 unit	1CL
		75	160		**3LD2318-1TL1☐**		1	1 unit	1CL
					+ [2] **3LD9200-5C**		1	1 unit	1CL
		132	250		**3LD2418-1TL1☐**		1	1 unit	1CL
					+ [2] **3LD9200-5C**		1	1 unit	1CL

Actuator color

Black	**1**
Red/yellow (EMERGENCY-STOP)	**3**

[1] 4th contact element as N conductor to be ordered separately, see page 7/41, Accessories.

[2] Auxiliary switches 1 NO + 1 NC to be ordered separately, see page 7/41, Accessories.

© Siemens 2019

3LD2 main control and EMERGENCY-STOP switches from 16 to 250 A > Floor mounting

Number and version of the contacts		Rated data at 50 ... 60 Hz, 380 ... 440 V		SD	Article No. www.siemens.com/product?Article No.	Price per PU	PU (UNIT, SET, M)	PS	PG
Main contact elements	Auxiliary contact elements	P/AC-23A	I_u						
		kW	A	d					
Main control and EMERGENCY-STOP switches with door-coupling rotary operating mechanism									
• With shaft • Lockable in 0 position with up to 3 padlocks: - 3LD20 to 3LD28: Hasp thickness from 4 to 8 mm - 3LD23 and 3LD24: Hasp thickness from 4 to 6 mm • Degree of protection at front side IP65 • Door-coupling rotary operating mechanism with integrated tolerance compensation (16 to 125 A) • All versions with rotary operating mechanism • Mounting using screws or snap-on mounting on 35 mm standard mounting rail (16 to 125 A) • Including terminal cover for the infeed side • Front plate - 3LD20, 3LD21, 3LD22: 67 x 67 mm - 3LD25: 90 x 90 mm • Mounting dimensions - 3LD20, 3LD21, 3LD22: 380 mm - 3LD25: 390 mm									
Center-hole mounting Ø 22.5 mm									
3	--	7.5	16		**3LD2044-0TK5☐**		1	1 unit	1CL
		9.5	25		**3LD2144-0TK5☐**		1	1 unit	1CL
		11.5	32		**3LD2244-0TK5☐**		1	1 unit	1CL
		22	63		**3LD2545-0TK5☐**		1	1 unit	1CL
3 + N	--	7.5	16		**3LD2044-1TL5☐**		1	1 unit	1CL
		9.5	25		**3LD2144-1TL5☐**		1	1 unit	1CL
		11.5	32		**3LD2244-1TL5☐**		1	1 unit	1CL
		22	63		**3LD2545-0TK5☐** + [1]		1	1 unit	1CL
					3LD9250-0CA		1	1 unit	1CL
3	1 NO + 1 NC	7.5	16		**3LD2044-0TK5☐** + [2]		1	1 unit	1CL
					3LD9200-5C		1	1 unit	1CL
		9.5	25		**3LD2144-0TK5☐** + [2]		1	1 unit	1CL
					3LD9200-5C		1	1 unit	1CL
		11.5	32		**3LD2244-0TK5☐** + [2]		1	1 unit	1CL
					3LD9200-5C		1	1 unit	1CL
		22	63		**3LD2545-0TK5☐** + [2]		1	1 unit	1CL
					3LD9200-5C		1	1 unit	1CL
3 + N	1 NO + 1 NC	7.5	16		**3LD2044-1TL5☐** + [2]		1	1 unit	1CL
					3LD9200-5C		1	1 unit	1CL
		9.5	25		**3LD2144-1TL5☐** + [2]		1	1 unit	1CL
					3LD9200-5C		1	1 unit	1CL
		11.5	32		**3LD2244-1TL5☐** + [2]		1	1 unit	1CL
					3LD9200-5C		1	1 unit	1CL
		22	63		**3LD2545-0TK5☐** + [1]		1	1 unit	1CL
					3LD9250-0CA + [2]		1	1 unit	1CL
					3LD9200-5C		1	1 unit	1CL



3LD2144-0TK53

Actuator color	
Black	**1**
Red/yellow (EMERGENCY-STOP)	**3**

[1] 4th contact element as N conductor to be ordered separately, see page 7/41, Accessories.

[2] Auxiliary switches 1 NO + 1 NC to be ordered separately, see page 7/41, Accessories.

Minimum order quantity (PS) or a multiple thereof can be ordered.

© Siemens 2019

Number and version of the contacts		Rated data at 50 ... 60 Hz, 380 ... 440 V			SD	Article No. www.siemens.com/product?Article No.	Price per PU	PU (UNIT, SET, M)	PS	PG
Main contact elements	Auxiliary contact elements	P/AC-3	P/AC-23A	I_u						
		kW	kW	A	d					
Main control and EMERGENCY-STOP switches with door-coupling rotary operating mechanism (6-pole) • Lockable in 0 position with up to 3 padlocks with a hasp thickness of 4 to 8 mm • Degree of protection at front side IP65 • Door-coupling rotary operating mechanism with integrated tolerance compensation (for 3LD21) • All versions with rotary operating mechanism Exception: 3LD23 and 3LD24 with door-coupling rotary operating mechanism as selector switch • Mounting using screws or snap-on mounting on 35 mm standard mounting rails • Including terminal cover for the infeed side • Front plate - 3LD20, 3LD21, 3LD22: 67 x 67 mm - 3LD23, 3LD24: 96 x 96 mm										
Four-hole mounting										
6	--	7.5	9.5	25		**3LD2113-3VK5☐**		1	1 unit	1CL
6	--	50	75	160		**3LD2318-3VK1☐**		1	1 unit	1CL
6	--	110	132	250		**3LD2418-3VK1☐**		1	1 unit	1CL
6	1 NO + 1 NC	7.5	9.5	25		**3LD2113-4VP5☐**		1	1 unit	1CL



3LD2113-3VK51

Actuator color

Black	**1**
Red/yellow (EMERGENCY-STOP)	**3**

7

© Siemens 2019

3LD2 main control and EMERGENCY-STOP switches from 16 to 250 A > Floor mounting

Number and version of the contacts		Rated data at 50 ... 60 Hz, 380 ... 440 V		SD	Article No. www.siemens.com/product?Article No.	Price per PU	PU (UNIT, SET, M)	PS	PG
Main contact elements	Auxiliary contact elements	P/AC-23A	I_u						
		kW	A	d					

Main control and EMERGENCY-STOP switches with defeatable door-coupling rotary operating mechanism (as knob-operated mechanism)

The 3LD main control and EMERGENCY-STOP switch with defeatable door-coupling rotary operating mechanism enables you to conduct repairs, maintenance work or tests on electrical plants and machines without having to interrupt their operation. With the help of the defeatable door-coupling rotary operating mechanism, an electrician can bypass locking in the ON position and open the control cabinet door with the plant activated.

3LD main control and EMERGENCY-STOP switches with defeatable door-coupling rotary operating mechanism are approved according to UL 508.

- With 300 mm switch shaft
- Lockable in 0 position with up to 3 padlocks with a hasp thickness of 4 to 6 mm
- Degree of protection at front side IP65
- Door-coupling rotary operating mechanism as knob-operated mechanism with integrated tolerance compensation
- Mounting using screws or snap-on mounting on 35 mm standard mounting rails
- Including terminal cover for the infeed side
- Front plate 65 x 65 mm

Four-hole mounting



3LD2017-0TK..

3	--	7.5	16		**3LD2017-0TK1☐**	1	1 unit	1CL
		11.5	32		**3LD2217-0TK1☐**	1	1 unit	1CL
		22	63		**3LD2517-0TK1☐**	1	1 unit	1CL
3 + N	--	7.5	16		**3LD2017-1TL1☐**	1	1 unit	1CL
		11.5	32		**3LD2217-1TL1☐**	1	1 unit	1CL
		22	63		**3LD2517-1TL1☐**	1	1 unit	1CL

Actuator color

Black	**1**
Red/yellow (EMERGENCY-STOP)	**3**

Minimum order quantity (PS) or a multiple thereof can be ordered.

© Siemens 2019

Accessories

Defeatable door-coupling rotary operating mechanisms from 100 A to 250 A

For switch disconnectors with door-coupling rotary operating mechanisms, a defeatable door-coupling rotary operating mechanism can be assembled with the following components from the 8UC7 series.

The following components are to be used for this purpose:

- For switch disconnectors with 3LD27 and 3LD28 door-coupling rotary operating mechanisms:
  - 8UC7110-1BB
  - 8UC7120-3BB
  - 8UC6011
- For switch disconnectors with 3LD23 and 3LD24 door-coupling rotary operating mechanisms:
  - 8UC7210-1BB
  - 8UC7220-3BB
  - 8UC6012

	Rotary operating mechanisms Type	Size	Cross-section of the actuating shaft mm x mm	Version [2] d	SD	Individual parts for 8UC7 door-coupling rotary operating mechanisms Article No. www.siemens.com/product?Article No. Price per PU	PU (UNIT, SET, M)	PS	PG
Components for 3LD27, 3LD28									
 8UC7110-1BB	8UC71	1	6 x 6	Standard EMERGENCY-STOP		**8UC7110-1BB** **8UC7120-3BB**	1 1	1 unit 1 unit	1CL 1CL
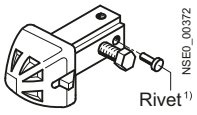 8UC6011	8UC71	1	6 x 6	--		**8UC6011**	1	1 unit	1CL
Components for 3LD23, 3LD24									
 8UC7210-1BB	8UC72	2	8 x 8	Standard EMERGENCY-STOP		**8UC7210-1BB** **8UC7220-3BB**	1 1	1 unit 1 unit	1CL 1CL
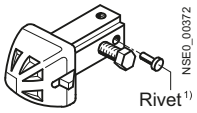 8UC6012	8UC72	2	8 x 8	--		**8UC6012**	1	1 unit	1CL

[1] Non-interchangeability features.

[2] Standard: Ti-gray handle, light-gray masking plate;
EMERGENCY-STOP: Red handle, yellow masking plate.

© Siemens 2019

Selection and ordering data

Number and version of the contacts		Rated data at 50 ... 60 Hz, 380 ... 440 V		SD	Article No. www.siemens.com/product?Article No.	Price per PU	PU (UNIT, SET, M)	PS	PG
Main contact elements	Auxiliary contact elements	P/AC-23A kW	I_u A	d					
ON/OFF and EMERGENCY-STOP switches with masking plate and selector knob • With screw fixing • With snap-on mounting on 35 mm standard mounting rail (16 to 125 A) • Lockable in 0 position with up to 2 padlocks with a hasp thickness of 4 to 6 mm (160 A) or up to 3 padlocks with a hasp thickness of 4 to 6 mm (250 A) • Degree of protection at front side IP40 • Including terminal cover for the infeed side (160 A and 250 A only)									
3	--	7.5	16		**3LD2030-0TK1☐**		1	1 unit	1CL
		9.5	25		**3LD2130-0TK1☐**		1	1 unit	1CL
		11.5	32		**3LD2230-0TK1☐**		1	1 unit	1CL
		22	63		**3LD2530-0TK1☐**		1	1 unit	1CL
		37	100		**3LD2730-0TK1☐**		1	1 unit	1CL
		45	125		**3LD2830-0TK1☐**		1	1 unit	1CL
		75	160		**3LD2330-0TK1☐**		1	1 unit	1CL
		132	250		**3LD2430-0TK1☐**		1	1 unit	1CL
3 + N	--	7.5	16		**3LD2030-1TL1☐**		1	1 unit	1CL
		9.5	25		**3LD2130-0TK1☐** + [1]		1	1 unit	1CL
					3LD9220-0C		1	1 unit	1CL
		11.5	32		**3LD2230-0TK1☐** + [1]		1	1 unit	1CL
					3LD9220-0C		1	1 unit	1CL
		22	63		**3LD2530-0TK1☐** + [1]		1	1 unit	1CL
					3LD9250-0CA		1	1 unit	1CL
		37	100		**3LD2730-0TK1☐** + [1]		1	1 unit	1CL
					3LD9280-0C		1	1 unit	1CL
		45	125		**3LD2830-0TK1☐** + [1]		1	1 unit	1CL
					3LD9280-0C		1	1 unit	1CL
		75	160		**3LD2330-0TK1☐** + [1]		1	1 unit	1CL
					3LD9240-0C		1	1 unit	1CL
		132	250		**3LD2430-0TK1☐** + [1]		1	1 unit	1CL
					3LD9240-0C		1	1 unit	1CL



3LD2530-0TK13



3LD2330-0TK11

Actuator color

Black	**1**
Red/yellow (EMERGENCY-STOP)	**3**

[1] 4th contact element as N conductor to be ordered separately, see page 7/41, Accessories, accessories for floor mounting.

Minimum order quantity (PS) or a multiple thereof can be ordered.

© Siemens 2019

	Number and version of the contacts		Rated data at 50 ... 60 Hz, 380 ... 440 V		SD	Article No. www.siemens.com/product?Article No.	Price per PU	PU (UNIT, SET, M)	PS	PG
	Main contact elements	Auxiliary contact elements	P/AC-23A	I_u						
			kW	A	d					
 3LD2530-0TK11	3	1 NO + 1 NC	7.5	16		**3LD2030-0TK1☐**		1	1 unit	1CL
						+ [2]				
						3LD9200-5C		1	1 unit	1CL
			9.5	25		**3LD2130-0TK1☐**		1	1 unit	1CL
						+ [2]				
						3LD9200-5C		1	1 unit	1CL
			11.5	32		**3LD2230-0TK1☐**		1	1 unit	1CL
						+ [2]				
						3LD9200-5C		1	1 unit	1CL
			22	63		**3LD2530-0TK1☐**		1	1 unit	1CL
						+ [2]				
						3LD9200-5C		1	1 unit	1CL
			37	100		**3LD2730-0TK1☐**		1	1 unit	1CL
						+ [2]				
						3LD9200-5C		1	1 unit	1CL
			45	125		**3LD2830-0TK1☐**		1	1 unit	1CL
						+ [2]				
						3LD9200-5C		1	1 unit	1CL
			75	160		**3LD2330-0TK1☐**		1	1 unit	1CL
						+ [2]				
						3LD9200-5C		1	1 unit	1CL
			132	250		**3LD2430-0TK1☐**		1	1 unit	1CL
						+ [2]				
						3LD9200-5C		1	1 unit	1CL
	3 + N	1 NO + 1 NC	7.5	16		**3LD2030-1TL1☐**		1	1 unit	1CL
						+ [2]				
						3LD9200-5C		1	1 unit	1CL
			9.5	25		**3LD2130-0TK1☐**		1	1 unit	1CL
						+ [2]				
						3LD9200-5C		1	1 unit	1CL
						+ [1]				
						3LD9220-0C		1	1 unit	1CL
			11.5	32		**3LD2230-0TK1☐**		1	1 unit	1CL
						+ [2]				
						3LD9200-5C		1	1 unit	1CL
						+ [1]				
						3LD9220-0C		1	1 unit	1CL
			22	63		**3LD2530-0TK1☐**		1	1 unit	1CL
						+ [2]				
						3LD9200-5C		1	1 unit	1CL
						+ [1]				
						3LD9250-0CA		1	1 unit	1CL
			37	100		**3LD2730-0TK1☐**		1	1 unit	1CL
						+ [2]				
						3LD9200-5C		1	1 unit	1CL
						+ [1]				
						3LD9280-0C		1	1 unit	1CL
			45	125		**3LD2830-0TK1☐**		1	1 unit	1CL
						+ [2]				
						3LD9200-5C		1	1 unit	1CL
						+ [1]				
						3LD9280-0C		1	1 unit	1CL
			75	160		**3LD2330-0TK1☐**		1	1 unit	1CL
						+ [2]				
						3LD9200-5C		1	1 unit	1CL
						+ [1]				
						3LD9240-0C		1	1 unit	1CL
			132	250		**3LD2430-0TK1☐**		1	1 unit	1CL
						+ [2]				
						3LD9200-5C		1	1 unit	1CL
						+ [1]				
						3LD9240-0C		1	1 unit	1CL

Actuator color

Black	**1**
Red/yellow (EMERGENCY-STOP)	**3**

[1] 4th contact element as N conductor to be ordered separately, see page 7/41, Accessories for floor mounting.

[2] Auxiliary switches 1 NO + 1 NC to be ordered separately, see page 7/41, Accessories.

Minimum order quantity (PS) or a multiple thereof can be ordered.

© Siemens 2019

Selection and ordering data

Number and version of the contacts		Base terminal	Rated data at 50 ... 60 Hz, 380 ... 440 V		SD	Article No. www.siemens.com/product?Article No.	Price per PU	PU (UNIT, SET, M)	PS	PG
Main contact elements	Auxiliary contact elements		P/AC-23A	I_u						
			kW	A	d					
Main control and EMERGENCY-STOP switches										
• With N and/or PE base terminals										
• Lockable in 0 position with up to 3 padlocks with a hasp thickness of 4 to 8 mm										
• Degree of protection IP65										
• Rotary operating mechanisms with center-hole mounting										
• For floor-mounted auxiliary switches										
• Metric screw connection										
3	--	PE + N	7.5	16		**3LD2064-0TB5☐**		1	1 unit	1CL
		PE + N	9.5	25		**3LD2164-0TB5☐**		1	1 unit	1CL
		PE + N	11.5	32		**3LD2264-0TB5☐**		1	1 unit	1CL
		PE + N	22	63		**3LD2565-0TB5☐**		1	1 unit	1CL
		PE + N	37	100		**3LD2766-0TB5☐**		1	1 unit	1CL
		PE + N	45	125		**3LD2866-0TB5☐**		1	1 unit	1CL
3 + N	--	PE	7.5	16		**3LD2064-1TC5☐**		1	1 unit	1CL
		PE	9.5	25		**3LD2164-1TC5☐**		1	1 unit	1CL
		PE	11.5	32		**3LD2264-1TC5☐**		1	1 unit	1CL
		PE	22	63		**3LD2565-1TC5☐**		1	1 unit	1CL
		PE + N	37	100		**3LD2766-0TB5☐** + [1] **3LD9280-0C**		1 1	1 unit 1 unit	1CL 1CL
		PE + N	45	125		**3LD2866-0TB5☐** + [1] **3LD9280-0C**		1 1	1 unit 1 unit	1CL 1CL
3	1 NO + 1 NC	N	7.5	16		**3LD2064-1GP5☐**		1	1 unit	1CL
		N	9.5	25		**3LD2164-1GP5☐**		1	1 unit	1CL
		N	11.5	32		**3LD2264-1GP5☐**		1	1 unit	1CL
		N	22	63		**3LD2565-1GP5☐**		1	1 unit	1CL
		N	37	100		**3LD2766-1GP5☐**		1	1 unit	1CL
		N	45	125		**3LD2866-1GP5☐**		1	1 unit	1CL
3 + N	1 NO + 1 NC	PE	7.5	16		**3LD2064-1TC5☐** + [2] **3LD9200-5C**		1 1	1 unit 1 unit	1CL 1CL
		PE	9.5	25		**3LD2164-1TC5☐** + [2] **3LD9200-5C**		1 1	1 unit 1 unit	1CL 1CL
		PE	11.5	32		**3LD2264-1TC5☐** + [2] **3LD9200-5C**		1 1	1 unit 1 unit	1CL 1CL
		PE	22	63		**3LD2565-1TC5☐** + [2] **3LD9200-5C**		1 1	1 unit 1 unit	1CL 1CL
		N	37	100		**3LD2766-1GP5☐** + [1] **3LD9280-0C**		1 1	1 unit 1 unit	1CL 1CL
		N	45	125		**3LD2866-1GP5☐** + [1] **3LD9280-0C**		1 1	1 unit 1 unit	1CL 1CL



3LD2164-0TB53

Actuator color

Black	**1**
Red/yellow (EMERGENCY-STOP)	**3**

[1] 4th contact element as N conductor to be ordered separately, see page 7/41, Accessories for floor mounting.

[2] Auxiliary switches 1 NO + 1 NC to be ordered separately, see page 7/41, Accessories.

Minimum order quantity (PS) or a multiple thereof can be ordered.

© Siemens 2019

Number and version of the contacts		Base terminal	Rated data at 50 ... 60 Hz, 380 ... 440 V			SD	Article No. www.siemens.com/product?Article No.	Price per PU	PU (UNIT, SET, M)	PS	PG
Main contact elements	Auxiliary contact elements		P/AC-3	P/AC-23A	I_u						
			kW	kW	A	d					
Main control and EMERGENCY-STOP switches with rotary operating mechanism (6-pole) • With N and/or PE base terminals • Degree of protection IP65 • Metric screw connection											
6	--	PE + N	7.5	9.5	25		**3LD2165-3VB5☐**		1	1 unit	1CL
		PE + N	9.5	11.5	32		**3LD2265-3VB5☐**		1	1 unit	1CL
		PE + N	18.5	22.0	63		**3LD2566-3VB5☐**		1	1 unit	1CL
6	1 NO + 1 NC	N	7.5	9.5	25		**3LD2165-4VD5☐**		1	1 unit	1CL
		N	9.5	11.5	32		**3LD2265-4VD5☐**		1	1 unit	1CL
		PE + N	18.5	22.0	63		**3LD2566-4VD5☐**		1	1 unit	1CL



3LD2165-3VB53

Actuator color

Black	**1**
Red/yellow (EMERGENCY-STOP)	**3**

7

© Siemens 2019

Selection and ordering data

	Mains voltage	Rated current I_e at 800 V DC		SD	Article No. www.siemens.com/product?Article No.	Price per PU	PU (UNIT, SET, M)	PS	PG
	Max.	DC-21A	DC-22A						
	V DC	A	A	d					
	DC isolators in molded-plastic enclosure • Molded-plastic enclosure IP65 • Metric screw connection • (W x H x D) 146 x 199 x 136 mm • Conductor cross-sections: - Solid and stranded 1.5 … 16 mm² - Finely stranded with end sleeve max. 10 mm² • Lockable								
 3LD2265-8VQ51-0AF6	800	32	16		**3LD2265-8VQ5□-0AF6**		1	1 unit	1CL

Actuator color

Black	**1**
Red/yellow (EMERGENCY-STOP)	**3**

	Mains voltage	Rated current I_e at 800 V DC		SD	Article No. www.siemens.com/product?Article No.	Price per PU	PU (UNIT, SET, M)	PS	PG
	Max.	DC-21A	DC-22A						
	V DC	A	A	d					
	DC isolators for distribution board mounting • Conductor cross-sections: - Solid and stranded 1.5 … 16 mm² - Finely stranded with end sleeve max. 10 mm² • Actuator color: Black								
 3LD2265-8VQ11-0AF6	800	32	16		**3LD2230-8VQ11-0AF6**		1	1 unit	1CL

Minimum order quantity (PS) or a multiple thereof can be ordered.

© Siemens 2019

Selection and ordering data

	Version	SD	3LD20		PU (UNIT, SET, M)	PS	PG
		d	Article No. www.siemens.com/product?Article No.	Price per PU			
For front mounting							
 3LD9200-2B	**N or PE terminals** Through-type		**3LD9200-2B**		1	1 unit	1CL
 3LD9200-5B	**Auxiliary switches** For mounting on the left and/or right, lagging switch-on, leading switch-off						
	• 1 NO + 1 NC		**3LD9200-5B**		1	1 unit	1CL
	For mounting on the left and/or right, lagging switch-on, with gold-plated contacts for requesting electronic information, leading switch-off						
	• 1 NO + 1 NC		**3LD9200-5BF**		1	1 unit	1CL
For floor mounting, distribution board mounting or molded-plastic enclosures							
 3LD9200-2C	**N or PE terminals** Through-type		**3LD9200-2C**		1	1 unit	1CL
 3LD9200-5C (left) 3LD9200-6C (right)	**Auxiliary switches** For mounting on the left and/or right, lagging switch-on, leading switch-off						
	• 1 NO + 1 NC		**3LD9200-5C**		1	1 unit	1CL
	• 2 NO		**3LD9200-6C**		1	1 unit	1CL
	For mounting on the left and/or right, lagging switch-on, with gold-plated contacts for requesting electronic information, leading switch-off						
	• 1 NO + 1 NC		**3LD9200-5CF**		1	1 unit	1CL
For front and floor mounting							
 3LD9224-1B	**Rotary operating mechanisms** Lockable in 0 position with up to 3 padlocks						
	• For four-hole mounting, including seal						
	- Black		**3LD9224-1B**		1	1 unit	1CL
	- Red/yellow		**3LD9224-3B**		1	1 unit	1CL
	• For center-hole mounting, including seal and nut						
 3LD9224-3D	- Black		**3LD9224-1D**		1	1 unit	1CL
	- Red/yellow		**3LD9224-3D**		1	1 unit	1CL
 3LD9256-0A	**Mounting tools** For center-hole mounting with nut		**3LD9256-0A**		1	5 units	1CL
	Switching shafts 6 x 6 mm						
	Length 300 mm		**3LD9205-0C**		1	5 units	1CL
	Length 600 mm		**3LD9205-2C**		1	5 units	1CL
 3LD9286-1A	**Inscription labels** With English/German inscription (MAIN SWITCH/HAUPTSCHALTER)		**3LD9286-1A**		1	10 units	1CL
	Without inscription		**3LD9286-4A**		1	10 units	1CL
 3LD9201-2A	**Terminal covers as additional touch protection (also for distribution board mounting)** Can be snapped on at top and bottom						
	• 1-pole		**3LD9201-2A**		100	4 units	1CL
	• 4-pole		**3LD9201-1A**		1	4 units	1CL

Minimum order quantity (PS) or a multiple thereof can be ordered.

© Siemens 2019

	Version	SD	3LD21 and 3LD22		PU (UNIT, SET, M)	PS	PG
		d	Article No. www.siemens.com/product?Article No.	Price per PU			
For front mounting							
 3LD9220-0B (left) 3LD9220-2B (right)	**4th contact element (N conductor)** Leading switch-on, lagging switch-off		**3LD9220-0B**		1	1 unit	1CL
	N or PE terminals Through-type		**3LD9220-2B**		1	1 unit	1CL
 3LD9200-5B	**Auxiliary switches** For mounting on the left and/or right, lagging switch-on, leading switch-off • 1 NO + 1 NC		**3LD9200-5B**		1	1 unit	1CL
	For mounting on the left and/or right, lagging switch-on, leading switch-off, with gold-plated contacts for requesting electronic information • 1 NO + 1 NC		**3LD9200-5BF**		1	1 unit	1CL
For floor mounting, distribution board mounting or molded-plastic enclosures							
 3LD9220-0C	**4th contact element (N conductor)** Leading switch-on, lagging switch-off		**3LD9220-0C**		1	1 unit	1CL
	N or PE terminals Through-type		**3LD9220-2C**		1	1 unit	1CL
 3LD9200-5C (left) 3LD9200-6C (right)	**Auxiliary switches** For mounting on the left and/or right, lagging switch-on, leading switch-off • 1 NO + 1 NC		**3LD9200-5C**		1	1 unit	1CL
	• 2 NO		**3LD9200-6C**		1	1 unit	1CL
	For mounting on the left and/or right, lagging switch-on, leading switch-off, with gold-plated contacts for requesting electronic information • 1 NO + 1 NC		**3LD9200-5CF**		1	1 unit	1CL
For front and floor mounting							
 3LD9224-1B	**Rotary operating mechanisms** Lockable in 0 position with up to 3 padlocks						
	• For four-hole mounting including seal						
	- Black		**3LD9224-1B**		1	1 unit	1CL
	- Red/yellow		**3LD9224-3B**		1	1 unit	1CL
 3LD9224-3D	• For center-hole mounting, including seal and nut						
	- Black		**3LD9224-1D**		1	1 unit	1CL
	- Red/yellow		**3LD9224-3D**		1	1 unit	1CL
 3LD9256-0A	**Mounting tools** For center-hole mounting with nut		**3LD9256-0A**		1	5 units	1CL
	Switching shafts 6 x 6 mm						
	Length 300 mm		**3LD9205-0C**		1	5 units	1CL
	Length 600 mm		**3LD9205-2C**		1	5 units	1CL
 3LD9286-1A	**Inscription labels** With English/German inscription (MAIN SWITCH/HAUPTSCHALTER)		**3LD9286-1A**		1	10 units	1CL
	Without inscription		**3LD9286-4A**		1	10 units	1CL
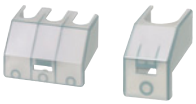 3LD9221-2A (left) 3LD9221-0A (right)	**Terminal covers as additional touch protection (also for distribution board mounting)** Can be snapped on at top and bottom						
	• 1-pole		**3LD9221-2A**		100	4 units	1CL
	• 3-pole		**3LD9221-0A**		1	4 units	1CL

Minimum order quantity (PS) or a multiple thereof can be ordered.

© Siemens 2019

	Version	SD	3LD25		PU (UNIT, SET, M)	PS	PG
		d	Article No. www.siemens.com/product?Article No.	Price per PU			
For front mounting							
 3LD9250-0BA (left) 3LD9250-2BA (right)	**4th contact element (N conductor)**		**3LD9250-0BA**		1	1 unit	1CL
	Leading switch-on, lagging switch-off						
	N or PE terminals		**3LD9250-2BA**		1	1 unit	1CL
	Through-type						
 3LD9200-5B	**Auxiliary switches**						
	For mounting on the left and/or right, lagging switch-on, leading switch-off						
	• 1 NO + 1 NC		**3LD9200-5B**		1	1 unit	1CL
	For mounting on the left and/or right, lagging switch-on, leading switch-off, with gold-plated contacts for requesting electronic information						
	• 1 NO + 1 NC		**3LD9200-5BF**		1	1 unit	1CL
For floor mounting, distribution board mounting or molded-plastic enclosures							
 3LD9250-0CA (left) 3LD9250-2CA (right)	**4th contact element (N conductor)**		**3LD9250-0CA**		1	1 unit	1CL
	Leading switch-on, lagging switch-off						
	N or PE terminals		**3LD9250-2CA**		1	1 unit	1CL
	Through-type						
 3LD9200-5C (left) 3LD9200-6C (right)	**Auxiliary switches**						
	For mounting on the left and/or right, lagging switch-on, leading switch-off						
	• 1 NO + 1 NC		**3LD9200-5C**		1	1 unit	1CL
	• 2 NO		**3LD9200-6C**		1	1 unit	1CL
	For mounting on the left and/or right, lagging switch-on, leading switch-off, with gold-plated contacts for requesting electronic information						
	• 1 NO + 1 NC		**3LD9200-5CF**		1	1 unit	1CL
For front and floor mounting							
 3LD9284-1B	**Rotary operating mechanisms**						
	Lockable in 0 position with up to 3 padlocks						
	• For four-hole mounting, including seal						
	- Black		**3LD9284-1B**		1	1 unit	1CL
	- Red/yellow		**3LD9284-3B**		1	1 unit	1CL
 3LD9284-3D	• For center-hole mounting, including seal and nut						
	- Black		**3LD9284-1D**		1	1 unit	1CL
	- Red/yellow		**3LD9284-3D**		1	1 unit	1CL
 3LD9256-0A	**Mounting tools**						
	For center-hole mounting with nut		**3LD9256-0A**		1	5 units	1CL
	Switching shafts 6 x 6 mm						
	Length 300 mm		**3LD9205-0C**		1	5 units	1CL
	Length 600 mm		**3LD9205-2C**		1	5 units	1CL
 3LD9286-1A	**Inscription labels**						
	With English/German inscription (MAIN SWITCH/HAUPTSCHALTER)		**3LD9286-1A**		1	10 units	1CL
	Without inscription		**3LD9286-4A**		1	10 units	1CL
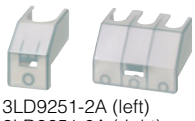 3LD9251-2A (left) 3LD9251-0A (right)	**Terminal covers as additional touch protection (also for distribution board mounting)**						
	Can be snapped on at top and bottom						
	• 1-pole		**3LD9251-2A**		100	4 units	1CL
	• 3-pole		**3LD9251-0A**		1	4 units	1CL

Minimum order quantity (PS) or a multiple thereof can be ordered.

© Siemens 2019

	Version	SD	3LD27 and 3LD28		PU (UNIT, SET, M)	PS	PG
		d	Article No. www.siemens.com/product?Article No.	Price per PU			
For front mounting							
 3LD9280-0B (left) 3LD9280-2B (right)	**4th contact element (N conductor)** Leading switch-on, lagging switch-off		**3LD9280-0B**		1	1 unit	1CL
	N or PE terminals Through-type		**3LD9280-2B**		1	1 unit	1CL
 3LD9200-5B	**Auxiliary switches** For mounting on the left and/or right, lagging switch-on, leading switch-off						
	• 1 NO + 1 NC		**3LD9200-5B**		1	1 unit	1CL
	For mounting on the left and/or right, lagging switch-on, leading switch-off, with gold-plated contacts for requesting electronic information						
	• 1 NO + 1 NC		**3LD9200-5BF**		1	1 unit	1CL
For floor mounting, distribution board mounting or molded-plastic enclosures							
 3LD9280-0C (left) 3LD9280-2C (right)	**4th contact element (N conductor)** Leading switch-on, lagging switch-off		**3LD9280-0C**		1	1 unit	1CL
	N or PE terminals Through-type		**3LD9280-2C**		1	1 unit	1CL
 3LD9200-5C (left) 3LD9200-6C (right)	**Auxiliary switches** For mounting on the left and/or right, lagging switch-on, leading switch-off						
	• 1 NO + 1 NC		**3LD9200-5C**		1	1 unit	1CL
	• 2 NO		**3LD9200-6C**		1	1 unit	1CL
	For mounting on the left and/or right, lagging switch-on, leading switch-off, with gold-plated contacts for requesting electronic information						
	• 1 NO + 1 NC		**3LD9200-5CF**		1	1 unit	1CL
For front and floor mounting							
 3LD9284-1B	**Rotary operating mechanisms** Lockable in 0 position with up to 3 padlocks						
	• For four-hole mounting, including seal						
	- Black		**3LD9284-1B**		1	1 unit	1CL
	- Red/yellow		**3LD9284-3B**		1	1 unit	1CL
 3LD9284-3D	• For center-hole mounting, including seal and nut						
	- Black		**3LD9284-1D**		1	1 unit	1CL
	- Red/yellow		**3LD9284-3D**		1	1 unit	1CL
	Switching shafts 6 x 6 mm						
	Length 300 mm		**3LD9205-0C**		1	5 units	1CL
	Length 600 mm		**3LD9205-2C**		1	5 units	1CL
 3LD9286-1A	**Inscription labels** With English/German inscription (MAIN SWITCH/HAUPTSCHALTER)		**3LD9286-1A**		1	10 units	1CL
	Without inscription		**3LD9286-4A**		1	10 units	1CL
 3LD9281-2A	**Terminal covers as additional touch protection (also for distribution board mounting)** Can be snapped on at top and bottom						
	• 1-pole (1 pack = 4 units)		**3LD9281-2A**		1	4 units	1CL

7

Minimum order quantity (PS) or a multiple thereof can be ordered.

© Siemens 2019

	Version	SD	3LD23 and 3LD24		PU (UNIT, SET, M)	PS	PG
		d	Article No. www.siemens.com/product?Article No.	Price per PU			
For front mounting							
 3LD9240-0B (left) 3LD9240-2B (right)	**4th contact element (N conductor)**		**3LD9240-0B**		1	1 unit	1CL
	Leading switch-on, lagging switch-off						
	N or PE terminals		**3LD9240-2B**		1	1 unit	1CL
	Through-type						
 3LD9200-5B	**Auxiliary switches**						
	For mounting on the left and/or right, lagging switch-on, leading switch-off						
	• 1 NO + 1 NC		**3LD9200-5B**		1	1 unit	1CL
	• For mounting on the left and/or right, lagging switch-on, leading switch-off, with gold-plated contacts for requesting electronic information						
	• 1 NO + 1 NC		**3LD9200-5BF**		1	1 unit	1CL
For floor and distribution board mounting							
 3LD9242-4F	**Coupling piece**						
	Without ON-lock		**3LD9242-4F**		1	5 units	1CL
 3LD9240-0C (left) 3LD9240-2C (right)	**4th contact element (N conductor)**		**3LD9240-0C**		1	1 unit	1CL
	Leading switch-on, lagging switch-off						
	N or PE terminals		**3LD9240-2C**		1	1 unit	1CL
	Through-type						
 3LD9200-5C (left) 3LD9200-6C (right)	**Auxiliary switches**						
	For mounting on the left and/or right, lagging switch-on, leading switch-off						
	• 1 NO + 1 NC		**3LD9200-5C**		1	1 unit	1CL
	• 2 NO		**3LD9200-6C**		1	1 unit	1CL
	For mounting on the left and/or right, lagging switch-on, leading switch-off, with gold-plated contacts for requesting electronic information						
	• 1 NO + 1 NC		**3LD9200-5CF**		1	1 unit	1CL
For front and floor mounting							
 3LD9243-1B	**Knob-operated mechanism (also for distribution board mounting)**						
	Lockable in 0 position with up to 3 padlocks						
	• For four-hole mounting, including seal						
	- Black		**3LD9243-1B**		1	1 unit	1CL
	- Red/yellow		**3LD9243-3B**		1	1 unit	1CL
	Switching shafts 8 x 8 mm						
	Length 300 mm		**3LD9245-0C**		1	5 units	1CL
	Length 600 mm		**3LD9245-2C**		1	5 units	1CL
 3LD9241-2A	**Terminal covers as additional touch protection (also for distribution board mounting)**						
	Can be snapped on at top and bottom						
	• 1-pole		**3LD9241-2A**		1	4 units	1CL

7

© Siemens 2019

Introduction

Overview

Devices		Description	Page
Complete assemblies			
	**Complete assemblies with direct operating mechanisms**	Ready-to-install combinations comprising switch disconnectors and operating mechanisms • 3 and 4-pole switch disconnectors with front operating mechanisms • Connections in form of box terminal or flat terminal incl. direct operating mechanism with gray handle	7/67
Basic units			
	**Front operating mechanism** 3/4-pole up to 690 V AC / 440 V DC	Switch disconnectors with front operating mechanisms without handle • 3 and 4-pole versions • Connections in form of flat terminal (sizes 2 to 5) or box terminal (sizes 1 and 2) • Operating mechanism module in center or on left-hand side of switch disconnector	7/68
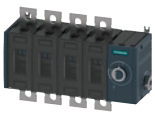	**Lateral operating mechanisms**	Switch disconnectors with lateral operating mechanisms • 3 and 4-pole versions • Connections in form of flat terminal (sizes 2 to 5) or box terminal (sizes 1 and 2) • Operating mechanism module on right or left-hand side of switch disconnector	7/69
	**DC applications, front operating mechanisms** 6-pole up to 1200 V DC	Switch disconnectors with front operating mechanisms without handle • 6-pole versions for DC applications • Connections in form of flat terminal (sizes 2 to 5) or box terminal (sizes 1 and 2) • Operating mechanism module in center of switch disconnector	7/71
Accessories and spare parts			
 Left: Box terminals Right: Flat terminals	**Additional poles**	Additional poles for enhanced functionality • 4th contact element (switching pole) • N terminal (neutral conductor terminal with removable jumper) • N/PE terminal (with permanent jumper)	7/72
	**Direct operating mechanisms**	Different handles for mounting on basic units • Direct operating mechanisms for direct mounting on switch disconnector • Handles available in colors gray or red/yellow	7/73
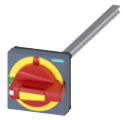	**Door-coupling rotary operating mechanisms**	Different handles for mounting on basic units • Door-coupling rotary operating mechanisms for operation of switch disconnector outside the control cabinet door • Handles available in colors gray or red/yellow	7/74
	**Auxiliary switches**	Auxiliary switches • For querying the switch position • Optionally available with leading NO contacts (auxiliary switch contacts open before the main contacts of the 3KD switch disconnector) • Optionally available with test function (switch can be tested without closure of main contacts)	7/78
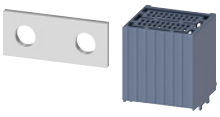	**Accessories for DC applications**	• Connecting bridge for series connection of two poles • Cable connection cover for connecting bridge	7/78
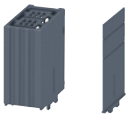	**Other accessories**	• Phase barriers • Cable connection cover as touch protection for termination area • Mounting bracket for wall mounting (spare part)	7/79

Minimum order quantity (PS) or a multiple thereof can be ordered.

© Siemens 2019

Overview



3KD switch disconnector, complete assembly, 3-pole

Features

- 5 sizes in 3, 4 and 6-pole versions
- Supplied as a complete assembly including direct operating mechanism or as a basic unit without a handle
- Direct operating mechanism with handle on switch disconnector
- Door-coupling rotary operating mechanism for operation of switch disconnector outside the control cabinet door
- Versions with lateral operating mechanisms
- Connections in form of box terminal or flat terminal
- Floor mounting or mounting on a standard mounting rail (sizes 1 and 2)
- Additional poles can be retrofitted: 4th contact element, N or N/PE terminals
- Auxiliary switches for querying the switch positions
- Suitable for AC applications up to 690 V + 10% (wind power)
- Suitable for DC applications up to 1200 V
- The 3KD offers high reliability thanks to the double break technology

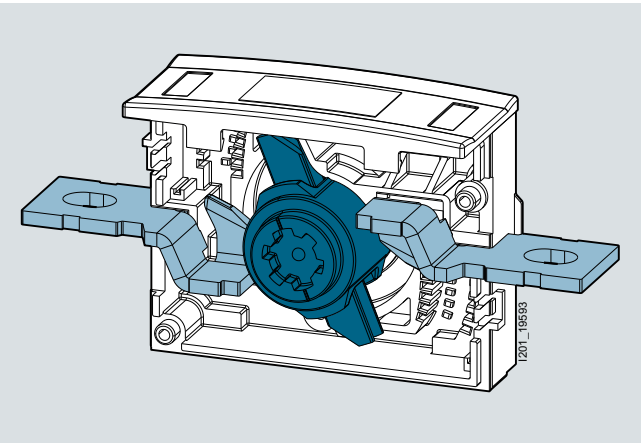

Double contact break principle

Benefits

- Enhanced touch protection
- Contact position is clearly visible
- Locking functions help to prevent unauthorized operation
- Enhanced protection against inter-phase arcing
- Safe use in wind farms
- Compact design saves space
- Wide variety of applications thanks to a range of different operating mechanism designs
- Supplementary functions can be retrofitted
- Various service positions are possible thanks to optimized heat dissipation
- Test function to ensure safe commissioning
- Comprehensive support through provision of CAx data

Application

3KD switch disconnectors are designed for applications with exacting requirements. They are deployed as main control switches, EMERGENCY-STOP switches and repair switches in industrial plants, infrastructure and buildings. 3KD switch disconnectors are designed to switch the specified rated current on and off under load. At the same time, they constitute a safety isolating function and isolating distance in all low-voltage circuits.

All 3KD switch disconnectors are climate-proof and meet the requirements of IEC 60947-1, IEC 60947-3 and VDE 0660-107.

© Siemens 2019

General data

Design

A 3KD switch disconnector consists of an operating mechanism module, three, four or six switching poles and a handle to operate the switch disconnector.

Handles

The direct operating mechanism version of the handle is mounted directly on the switch disconnector. It can also be supplied in the form of a door-coupling rotary operating mechanism for actuation of the switch disconnector outside the control cabinet door. The handle is available in gray, or colored red/yellow for use as an EMERGENCY-STOP switch.

Commonly used switch disconnector variants comprising basic unit and handle are available as complete assemblies.

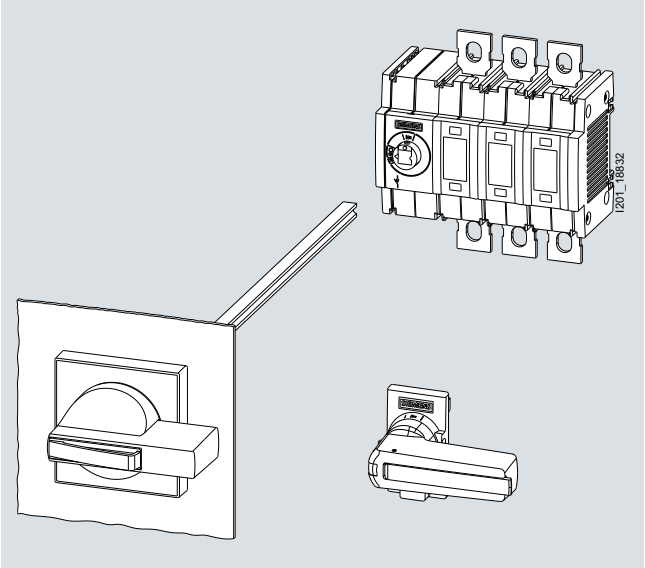

Handle either as direct operating mechanism or door-coupling rotary operating mechanism

Position of operating mechanism modules

To allow optimum utilization of the available installation space, units with front operating mechanisms can be supplied with the operating mechanism module in various positions – mounted on the left-hand side of the 3KD switch disconnector or in the center between the switching poles.

On units with lateral operating mechanisms, the operating mehanism module is positioned on the right or left-hand side of the 3KD switch disconnector.

Number of poles/application	Front operating mechanism on side	Front operating mechanism in center	Lateral operating mechanism, left	Lateral operating mechanism, right
3-pole	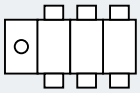	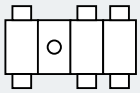	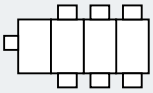	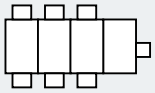
4-pole	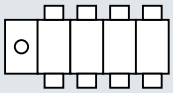	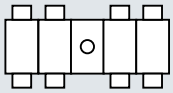	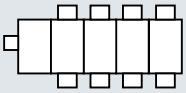	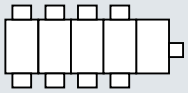
For 1200 V DC	--	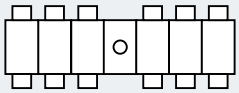	--	--

Minimum order quantity (PS) or a multiple thereof can be ordered.

© Siemens 2019

Additional poles

All sizes of the 3KD switch disconnectors can be retrofitted with additional poles on a modular basis.

When installing additional poles, it is important to note that only a 3-pole 3KD switch disconnector may be retrofitted with an additional switching pole with contact system (4th contact element).

Additional poles (4th contact element, N or N/PE terminal) must always be mounted directly adjacent to the switch disconnector on the left or right. Accordingly, an auxiliary switch module must not be mounted between the basic unit and an additional pole on sizes 1 and 2.

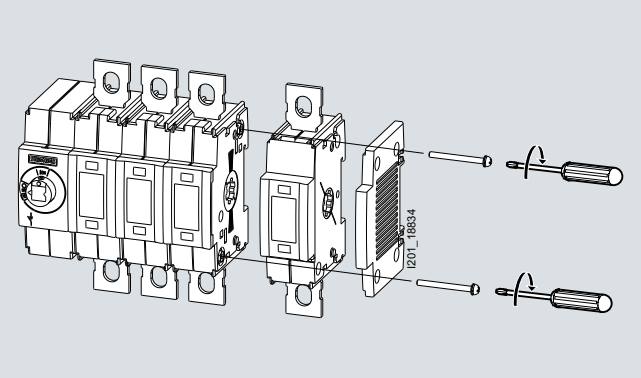

Installation of an additional pole

Available versions:

4th contact element:
The 4th contact element includes a contact system and is identical to the poles installed at the factory. It can be installed to upgrade a 3-pole switch disconnector to a disconnector with 4 poles.

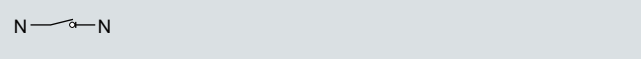

4th contact element as an additional pole

N terminal (neutral conductor terminal):
The N terminal does not include a contact system. A jumper can be removed in order to interrupt the electrical connection between the two terminals. An N terminal can be installed to add a non-switching N pole to a 3-pole disconnector.



N terminal as non-switching pole

N/PE terminal:
The N/PE terminal is identical to the neutral conductor terminal. However, the electrical connection between the two terminals is permanent and cannot be interrupted by removal of a jumper. The N/PE terminal is normally deployed for applications in which it is vital to ensure that this connection can never be interrupted.

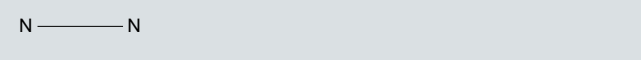

N/PE terminal with permanent connections

Auxiliary switches

Auxiliary switches allow remote interrogation of the contact poition of the switch disconnector.

Installation of auxiliary switches for sizes 1 and 2

The auxiliary switches used for sizes 1 and 2 are microswitches (changeover contacts) which can be snapped into an auxiliary switch module. This auxiliary switch module is mounted on the side of the switch disconnector in the same way as an additional pole. A maximum of two microswitches can be installed in each auxiliary switch module.

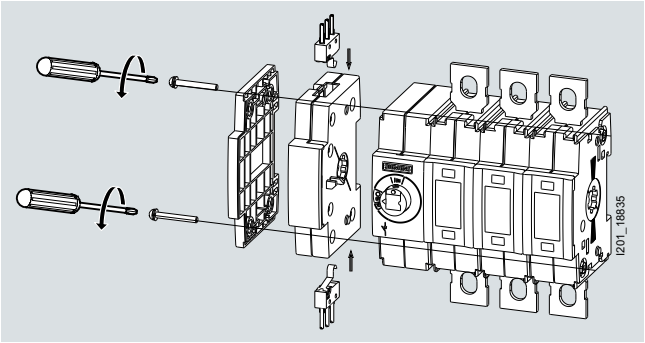

Auxiliary switches with auxiliary switch module for sizes 1 and 2

Installation of auxiliary switches for sizes 3 to 5

With sizes 3 to 5, the auxiliary switches are directly attached to the operating mechanism module. The auxiliary switch with the leading switch function is always installed in the right-hand mounting location. The other locations are provided for simultaneously switching with the main contacts.

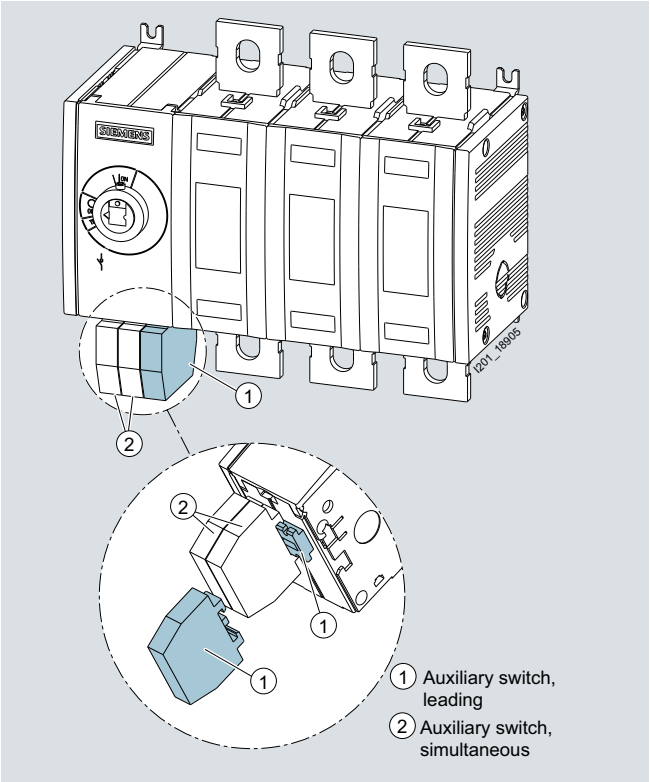

Auxiliary switches directly attached to the operating mechanism module with sizes 3 to 5. The leading auxiliary switch is highlighted in the drawing.

© Siemens 2019

General data

Switching instants of auxiliary switches

The auxiliary switches can operate either simultaneously with the main contacts or function as leading switches with all sizes.

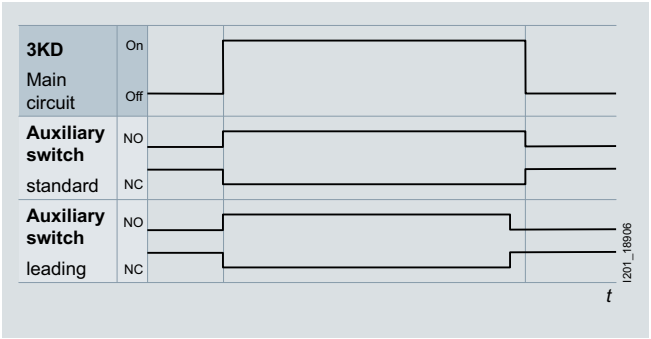

One of the possible functions of leading auxiliary switches is to disconnect the circuit with the assistance of a higher-level switching device, such as a circuit breaker, before the main contacts of the 3KD switch disconnector open.

With sizes 1 and 2, the selection of the appropriate auxiliary switch module determines whether the switching instant will be leading or simultaneous.

With sizes 3, 4 and 5, the switching instant is determined by the selection of the mounting location for the auxiliary switch on the operating mechanism module.

Test function for auxiliary switches

The test function allows a wiring check to be performed on the auxiliary switches without necessitating closure of the main contacts of the 3KD switch disconnector. The test function can be used as part of the commissioning process.

The test function is activated by turning the handle of a direct operating mechanism in the OFF position by 25° in the counter-clockwise direction. The handle must be turned 90° in the clockwise direction in order to switch the main contacts.

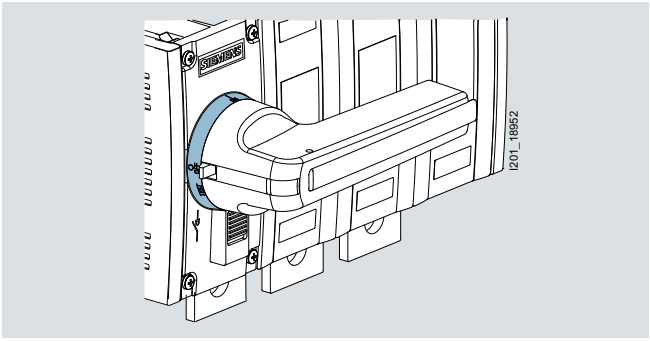

The auxiliary switch module including test function must be used for sizes 1 and 2. With sizes 3, 4 and 5, all installed auxiliary switches are switched when the test function is activated.

Minimum order quantity (PS) or a multiple thereof can be ordered.

© Siemens 2019

Types of mounting

All 3KD switch disconnectors are designed for floor mounting. To ensure that the switch can be flexibly adapted to the relevant installation conditions, the mounting bracket can be rotated through 90° with size 3 or larger.

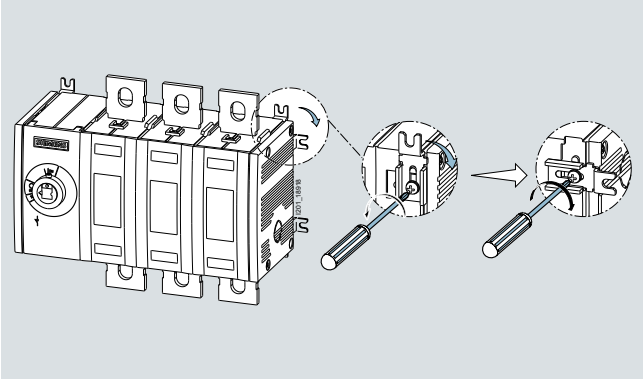

Floor mounting method

Sizes 1 and 2 can be snapped onto a standard mounting rail (TH35 according to EN 60715) as an alternative mounting method.

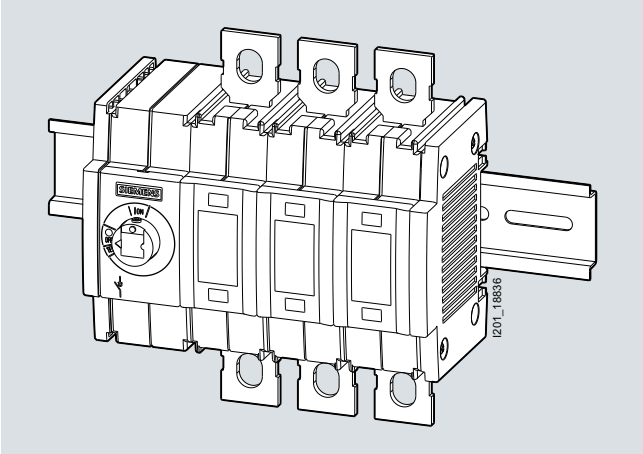

Mounting on a standard mounting rail

Locking functions

3KD switch disconnectors can be locked by up to three padlocks in order to prevent unauthorized switch operation. A flat version of the direct operating mechanisms is available for use in confined installation spaces. This can be secured with a lock without increasing the required mounting depth.

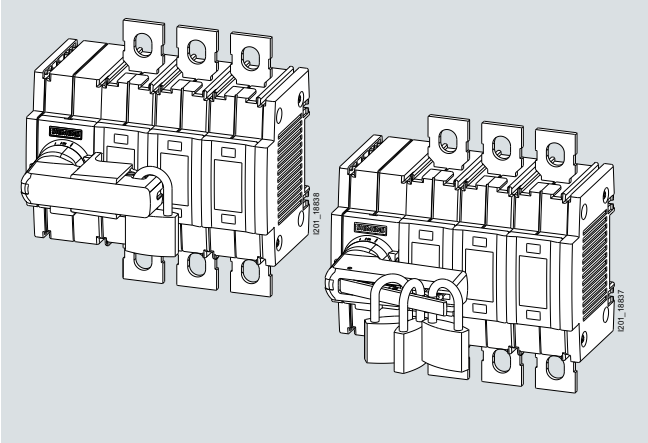

Locking functions involving one or more padlocks

7

© Siemens 2019

General data

Electrical connection

3KD switch disconnectors are available with a number of different terminal types.

Box terminals

Box terminals for sizes 1 and 2 (rated currents 16 A to 160 A) are designed to allow the speedy connection of stripped conductors.

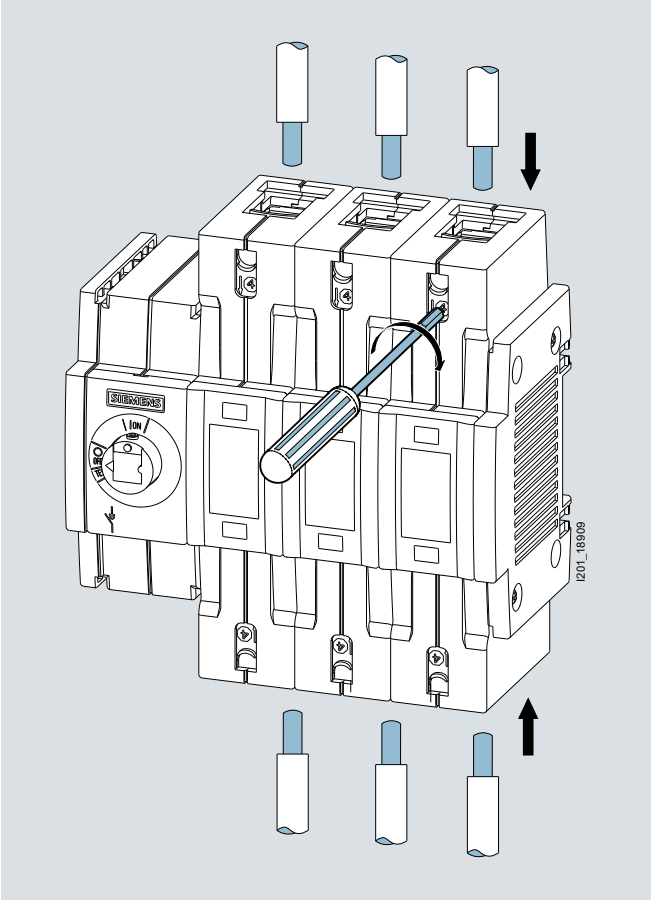

Connection via box terminals

Flat terminals

Sizes 2 to 5 (rated currents 80 A to 1600 A) are available with flat terminals □ for the connection of cable lugs or busbar systems.

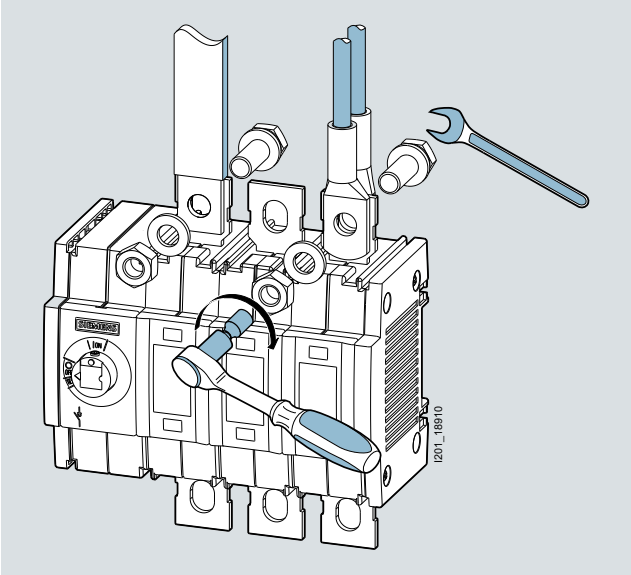

Connection via flat terminals

Terminal covers and phase barriers can be supplied for 3KD switch disconnectors with flat terminals.

Minimum order quantity (PS) or a multiple thereof can be ordered.

© Siemens 2019

Terminal covers

Terminal covers can be installed to provide touch protection for all terminals.

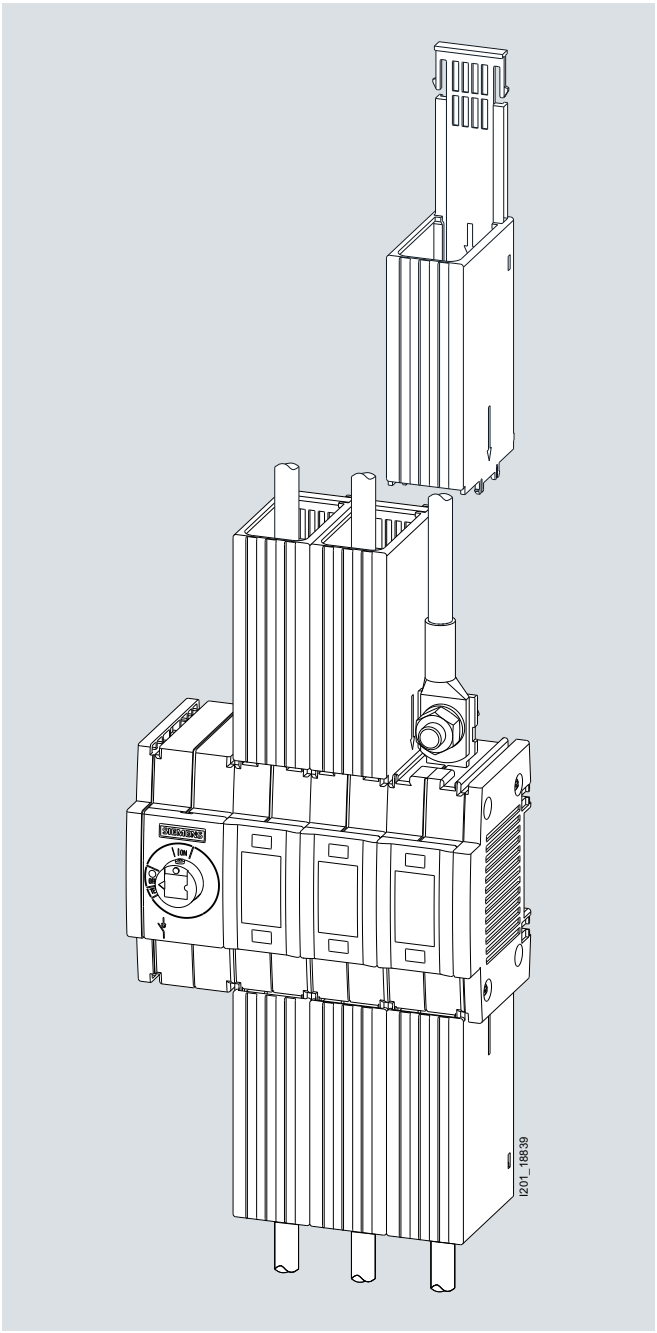

Terminal covers

Phase barriers

When long, non-insulated cable lugs are used, phase barriers provide enhanced protection against arcing.

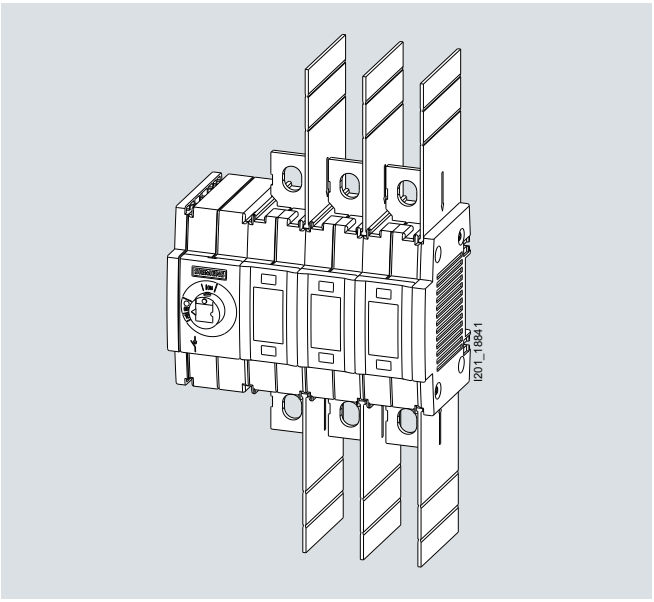

Phase barriers

7

© Siemens 2019

Technical features

Overview

3LD main control and EMERGENCY-STOP switches																
3KD switch disconnectors: Box terminals																
3KD switch disconnectors: Flat terminals																
Size						**1**						**2**				
Type		**3LD20**	**3LD21**	**3LD22**	**3LD25**	**3KD....-.M**			**3LD27**	**3LD28**	**3LD23**	**3KD....-.N**				
		3LD main control and EMERGENCY-STOP switches				**3KD switch disconnectors**			**3LD main control and EMERGENCY-STOP switches**			**3KD switch disconnectors**				
Rated current I_n	A	16	25	32	63	16	32	63	100	125	160	80	100	125	160	200
Number of poles																
• 3		✓	✓	✓	✓	✓	✓	✓	✓	✓	✓	✓	✓	✓	✓	✓
• 4		✓	✓	✓	✓	✓	✓	✓	✓	✓	✓	✓	✓	✓	✓	✓
• 6		✓	✓	✓	✓	✓	✓	✓	✓	✓	✓	✓	✓	✓	✓	✓
Connection																
• Flat terminals		--	--	--	--	--	--	--	--	--	--	✓	✓	✓	✓	✓
• Box terminals		✓	✓	✓	✓	✓	✓	✓	✓	✓	✓	✓	✓	✓	✓	--
Operating mechanisms																
• Front operating mechanism		✓	✓	✓	✓	✓	✓	✓	✓	✓	✓	✓	✓	✓	✓	✓
• Lateral operating mechanism		--	--	--	--	✓	✓	✓	--	--	--	✓	✓	✓	✓	✓
Operating and short-circuit behavior																
• Rated short-time withstand current I_{cw} (1 s current, rms value)	kA	0.34	0.64	0.64	1.26	3	3	3	2	2	4	4	4	4	4	4
• Rated conditional short-circuit current with upstream fuses at 690 V[1)]	kA_{rms}	50	50	50	50	100	100	100	50	20	50	65	65	65	65	50

1) Valid for the combination of 3KD switch disconnector and fuse type 3NA…, characteristic gG

✓ Available

-- Not available

For further information about 3LD main control and EMERGENCY-STOP switches,

- see page 7/6
- see the Industry Mall, section "Energy --> Power Distribution (Low-Voltage)" --> "Low-Voltage Components" --> "SENTRON Protection, Switching, Measuring and Monitoring Devices" --> "Switching Devices" --> "Switch Disconnectors" --> "3LD Main Control and EMERGENCY-STOP Switches up to 250 A"

Minimum order quantity (PS) or a multiple thereof can be ordered.

© Siemens 2019

Overview (continued)

3LD main control and EMERGENCY-STOP switches												
3KD switch disconnectors: Box terminals												
3KD switch disconnectors: Flat terminals			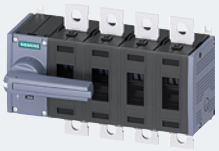				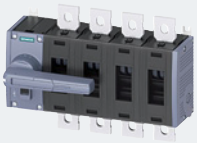			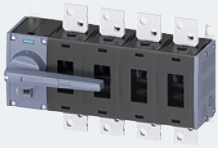		
Size		**3LD24**	**3**				**4**			**5**		
Type		**3LD24**	**3KD....-.P**				**3KD....-.Q**			**3KD....-.R**		
		3LD main control and EMERGENCY-STOP switches	**3KD switch disconnectors**									
Rated current I_n	A	250	200	250	315	400	500	630	800	1000	1250	1600
Number of poles												
• 3		✓	✓	✓	✓	✓	✓	✓	✓	✓	✓	✓
• 4		✓	✓	✓	✓	✓	✓	✓	✓	✓	✓	✓
• 6		✓	✓	✓	✓	✓	✓	✓	✓	✓	✓	✓
Connection												
• Flat terminals		--	✓	✓	✓	✓	✓	✓	✓	✓	✓	✓
• Box terminals		✓	--	--	--	--	--	--	--	--	--	--
Operating mechanisms												
• Front operating mechanism		✓	✓	✓	✓	✓	✓	✓	✓	✓	✓	✓
• Lateral operating mechanism		--	✓	✓	✓	✓	✓	✓	✓	✓	✓	✓
Operating and short-circuit behavior												
• Rated short-time withstand current I_{cw} (1 s current, rms value)	kA	4	13	13	13	13	30	30	30	50	50	50
• Rated conditional short-circuit current with upstream fuses at 690 V[1)]	kA_{rms}	50	65	65	35	35	65	65	50	--	--	--

1) Valid for the combination of 3KD switch disconnector and fuse type 3NA…, characteristic gG

✓ Available

-- Not available

For further information about 3LD main control and EMERGENCY-STOP switches,

- see page 7/6
- see the Industry Mall, section
  "Energy --> Power Distribution (Low-Voltage)"
  --> "Low-Voltage Components"
  --> "SENTRON Protection, Switching, Measuring and Monitoring Devices"
  --> "Switching Devices"
  --> "Switch Disconnectors"
  --> "3LD Main Control and EMERGENCY-STOP Switches up to 250 A"

© Siemens 2019

Technical features

Overview of components and accessories: 3KD switch disconnectors, 3/4-pole, sizes 1 and 2, box terminal

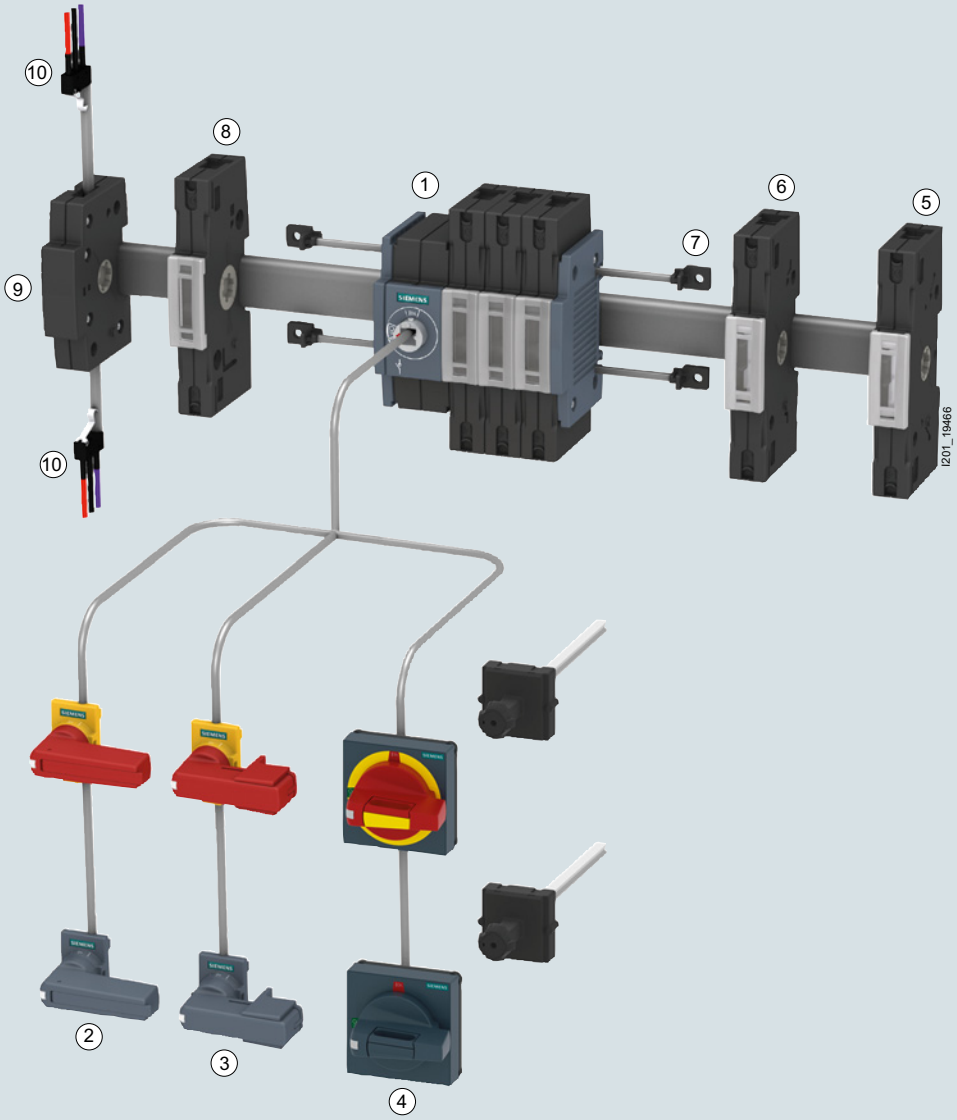

1 3KD switch disconnectors
2 Direct operating mechanism (standard version)
3 Direct operating mechanism (suitable for distribution boards)
4 8UD1 door-coupling rotary operating mechanism
5 N/PE terminal (with permanent jumper)
6 Neutral conductor terminal (with removable jumper)
7 Mounting bracket (spare part)
8 4th contact element
9 Auxiliary switch module
10 Auxiliary switch

Minimum order quantity (PS) or a multiple thereof can be ordered.

© Siemens 2019

Overview of components and accessories: 3KD switch disconnectors, 6-pole for DC applications, sizes 1 and 2, box terminal

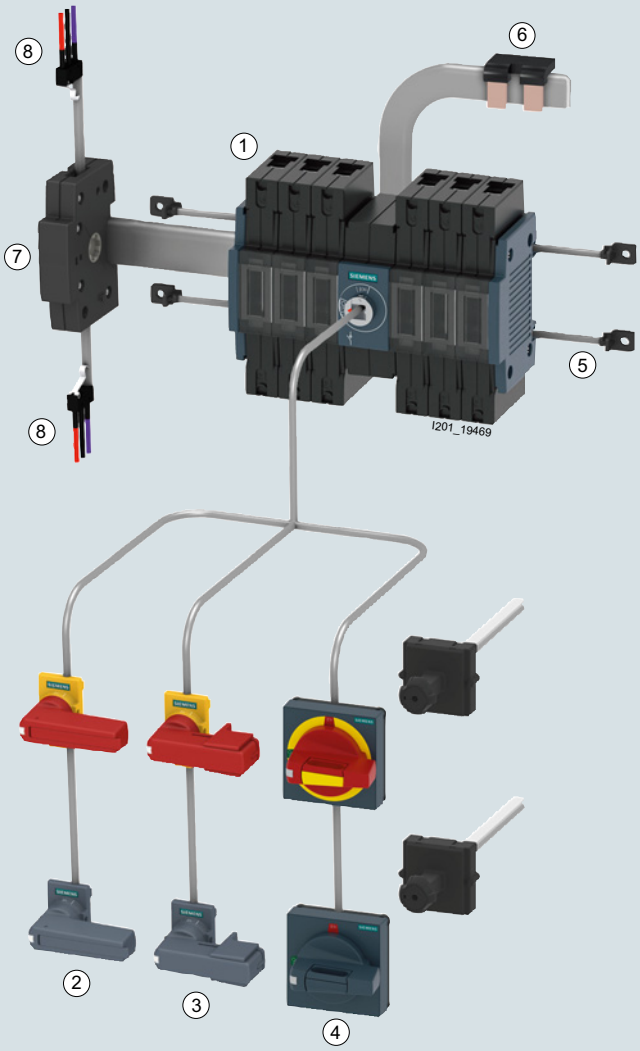

1 3KD switch disconnectors
2 Direct operating mechanism (standard version)
3 Direct operating mechanism (suitable for distribution boards)
4 8UD1 door-coupling rotary operating mechanism
5 Mounting bracket (spare part)
6 Bridging bar
7 Auxiliary switch module
8 Auxiliary switch

© Siemens 2019

Technical features

Overview of components and accessories: 3KD switch disconnectors, 3/4-pole, size 2, flat terminal

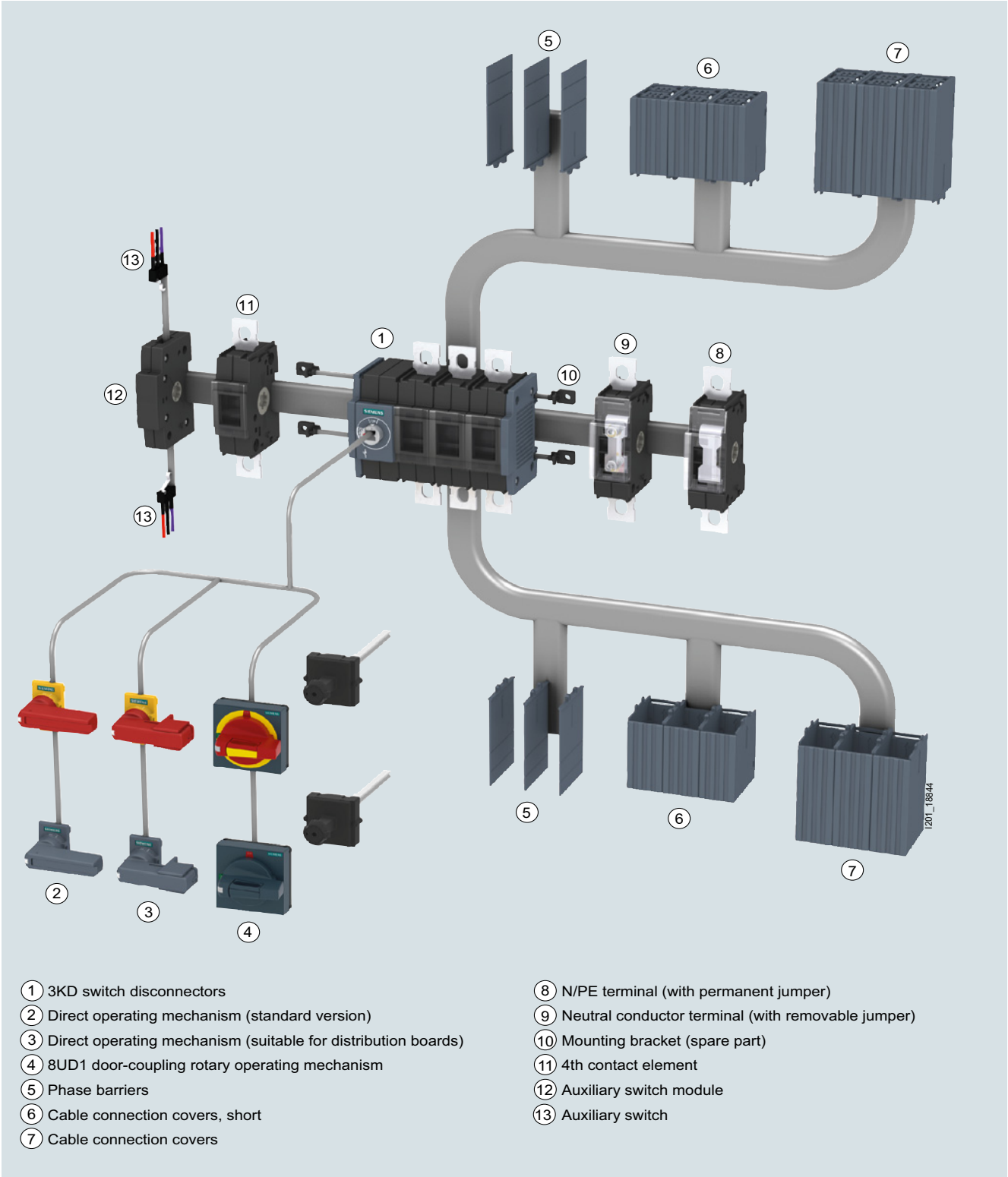

1 3KD switch disconnectors
2 Direct operating mechanism (standard version)
3 Direct operating mechanism (suitable for distribution boards)
4 8UD1 door-coupling rotary operating mechanism
5 Phase barriers
6 Cable connection covers, short
7 Cable connection covers
8 N/PE terminal (with permanent jumper)
9 Neutral conductor terminal (with removable jumper)
10 Mounting bracket (spare part)
11 4th contact element
12 Auxiliary switch module
13 Auxiliary switch

Minimum order quantity (PS) or a multiple thereof can be ordered.

© Siemens 2019

Overview of components and accessories: 3KD switch disconnectors, 6-pole, size 2, flat terminal

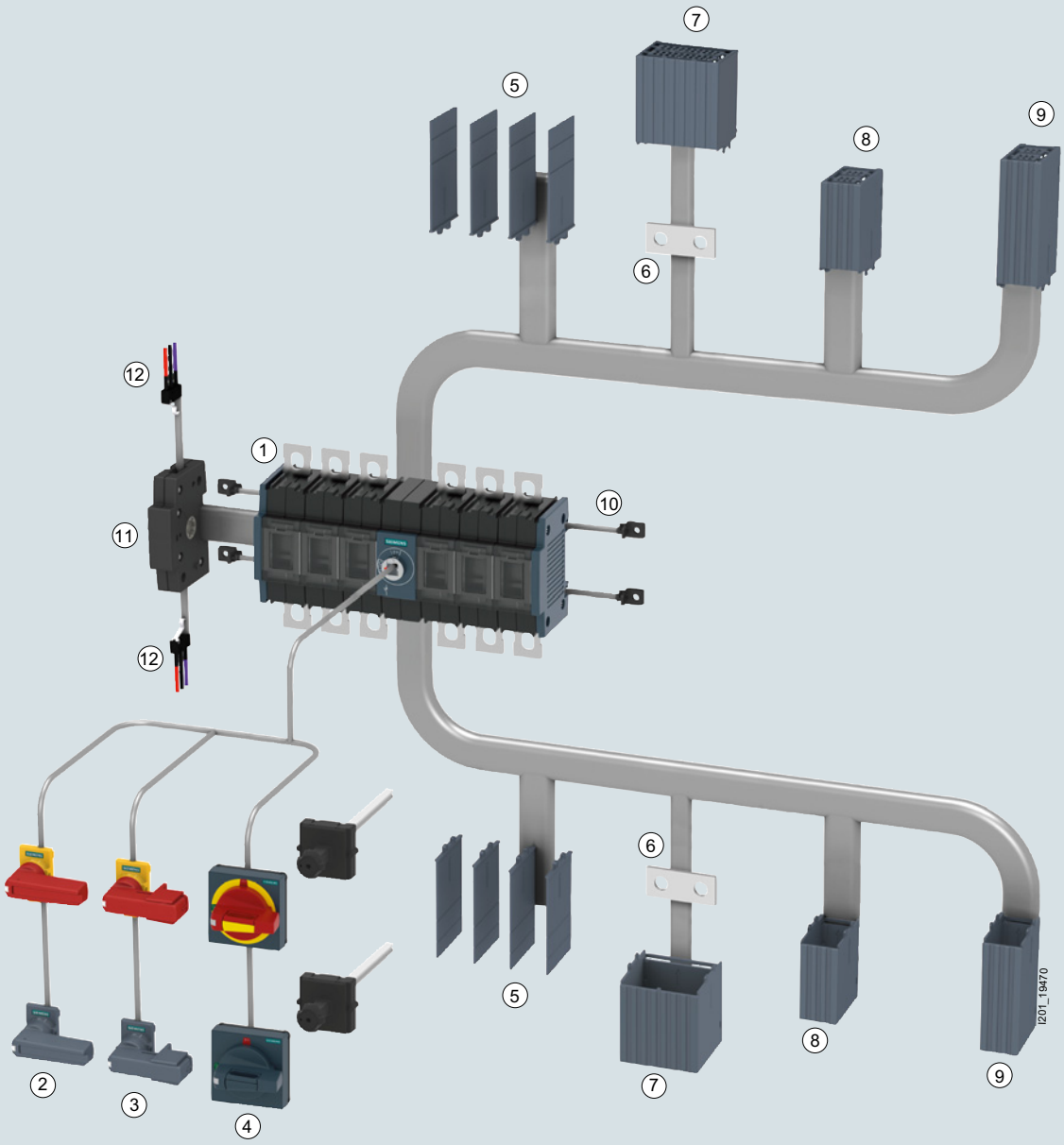

1 3KD switch disconnectors
2 Direct operating mechanism (standard version)
3 Direct operating mechanism (suitable for distribution boards)
4 8UD1 door-coupling rotary operating mechanism
5 Phase barriers
6 Bridging bar
7 Cable connection cover for bridging bars
8 Cable connection cover, short
9 Cable connection cover
10 Mounting bracket (spare part)
11 Auxiliary switch module
12 Auxiliary switch

© Siemens 2019

Technical features

Overview of components and accessories: 3KD switch disconnectors, 3/4-pole, sizes 3 to 5, flat terminal

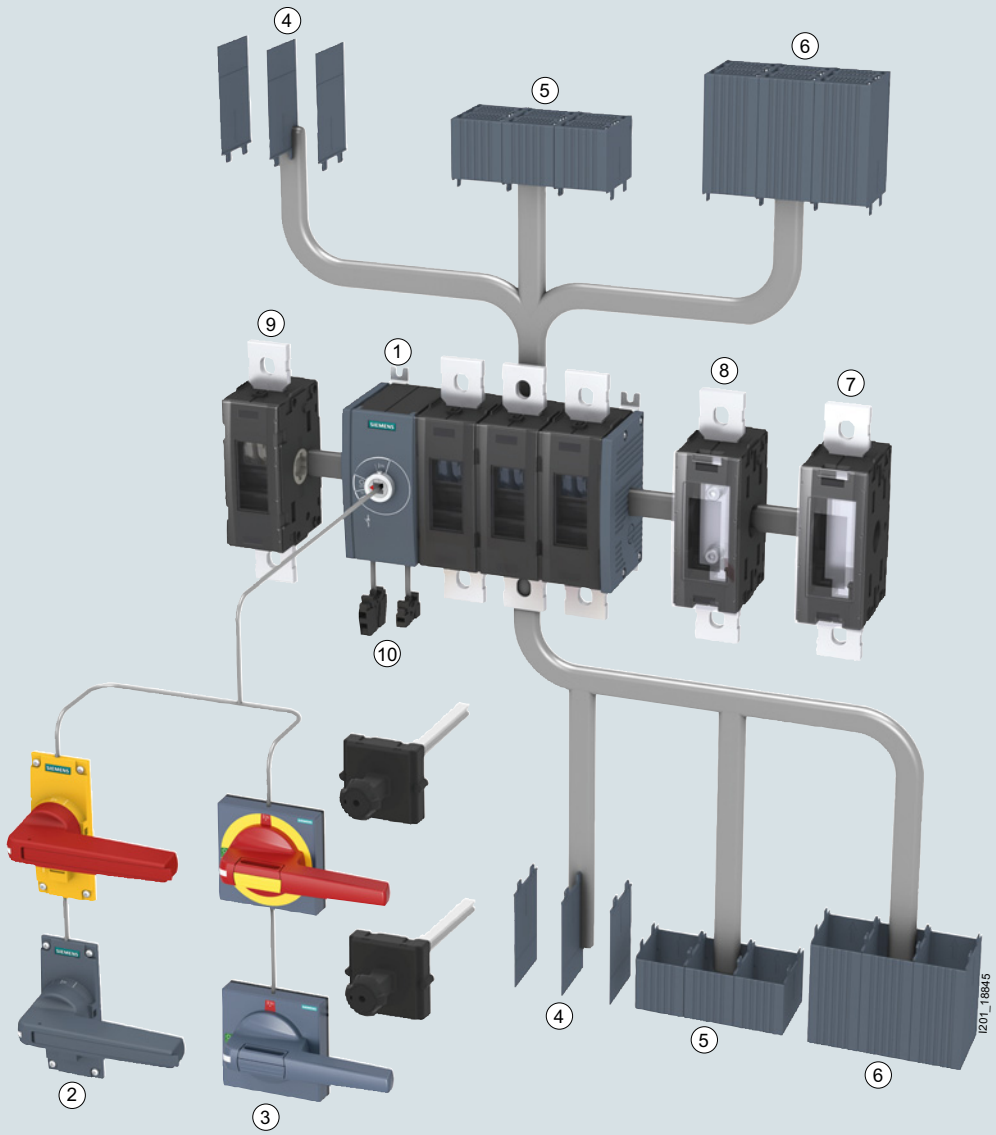

1 3KD switch disconnectors
2 Direct operating mechanism
3 8UD1 door-coupling rotary operating mechanism
4 Phase barriers
5 Cable connection covers, short
6 Cable connection covers
7 N/PE terminal (with permanent jumper)
8 Neutral conductor (with removable jumper)
9 4th contact element
10 Auxiliary switch

Minimum order quantity (PS) or a multiple thereof can be ordered.

© Siemens 2019

Overview of components and accessories: 3KD switch disconnectors, 6-pole for DC applications, sizes 3 to 5, flat terminal

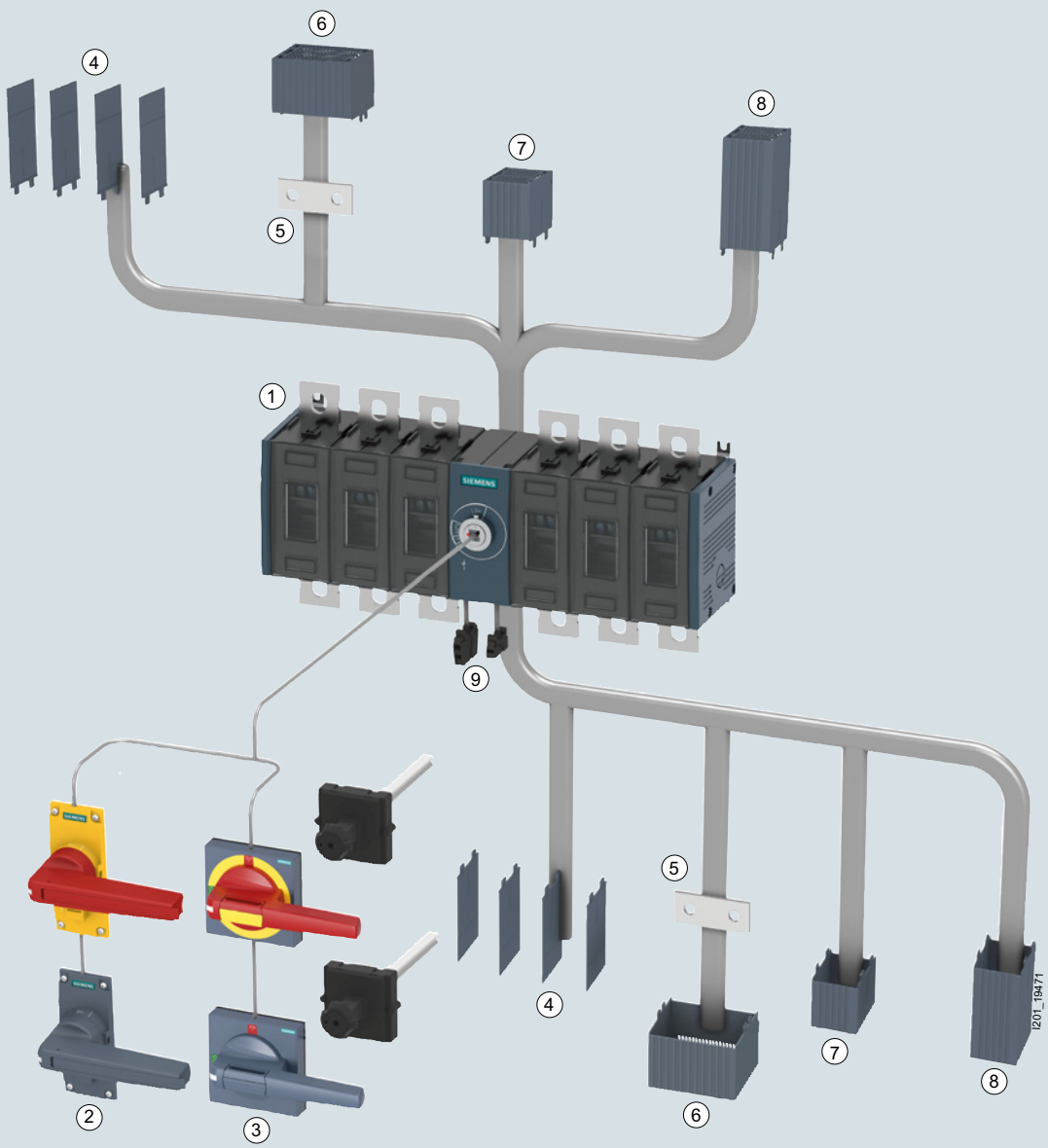

1. 3KD switch disconnectors
2. Direct operating mechanism
3. 8UD1 door-coupling rotary operating mechanism
4. Phase barriers
5. Bridging bar
6. Cable connection cover for bridging bars
7. Cable connection cover, short
8. Cable connection cover
9. Auxiliary switch

© Siemens 2019

Technical features

Technical specifications

3KD switch disconnectors, 3/4-pole, sizes 1 and 2

Standards		**IEC 60947-1, IEC 60947-3**							
Type		**3KD16**	**3KD22**	**3KD26**	**3KD28**	**3KD30**	**3KD32**	**3KD34**	**3KD36..-.N**
Size		**1**	**1**	**1**	**2**	**2**	**2**	**2**	**2**
General technical details									
Rated uninterrupted current I_u	A	16	32	63	80	100	125	160	200
Conventional free air thermal current I_{th}[1]	A	16	32	63	80	100	125	160	200
Rated operational voltage U_e									
• At 50/60 Hz AC (tolerance up to +10% permissible)	V	690							
• At DC - 2 conducting paths series-connected	V	220							
• At DC - 3 conducting paths series-connected	V	440							
Rated insulation voltage U_i	V	1000							
Rated impulse withstand voltage U_{imp}	kV	8	8	8	8	8	8	8	8
Overvoltage category		III	III	III	III	III	III	III	III
Pollution degree		3	3	3	3	3	3	3	3
Operating and short-circuit behavior									
Rated operational current I_e									
• At AC-21A, AC-22A, 400 ... 690 V	A	16	32	63	80	100	125	160	200
• At AC-23, 400 V	A	16	32	63	80	100	125	160	160
• At AC-23, 500 V	A	16	32	63	80	100	125	160	160
• At AC-23, 690 V	A	16	32	63	80	100	125	125	125
• At DC-21A, 220/440 V	A	16	32	63	80	100	125	160	160
• At DC-22A, 220/440 V	A	16	32	63	80	100	125	160	160
• At DC-23A, 220/440 V	A	16	32	63	80	100	125	160	160
Motor switching capacity AC-23A[2]									
• At 400 V	kW	7.5	15	30	45	55	55	90	90
• At 500 V	kW	7.5	18.5	37	55	55	75	110	110
• At 690 V	kW	11	30	55	75	90	110	110	110
Rated short-time withstand current I_{cw} (with t = 1 s, rms value, 690 V AC/440 V DC)	kA	3	3	3	4	4	4	4	4
Rated short-circuit making capacity I_{cm}	kA	7	7	7	12	12	12	12	12
Rated current of upstream fuse[3) 4)]	A	63	63	63	160	160	160	160	200
Rated conditional short-circuit current with upstream fuses[3]									
• At 400/500 V AC	kA	100	100	100	100	100	100	100	50
• At 690 V AC	kA	100	100	100	65	65	65	65	50
Let-through current combined with upstream fuse[3]									
• At 400/500 V AC	kA	7	7	7	17.9	17.9	17.9	17.9	18
• At 690 V AC	kA	7.5	7.5	7.5	18.7	18.7	18.7	18.7	19
Let-through I^2t value combined with upstream fuse[3]									
• At 400/500 V	kA^2s	13.3	13.3	13.3	135.6	135.6	135.6	135.6	211
• At 690 V	kA^2s	13.7	13.7	13.7	178.3	178.3	178.3	178.3	226
Power loss per pole with thermal current I_{th}	W	0.1	0.4	1	1.1	1.8	3.2	4.6	6.4
Service life, operating cycles									
• Mechanical		15000	15000	15000	15000	15000	15000	15000	15000
• Electrical, at AC-23A, 690 V/50 ... 60 Hz		6000	6000	6000	1500	1500	1500	1500	1500
• Electrical, at DC-23A, 220/440 V		1500	1500	1500	1500	1500	1000	1000	1000
Degree of protection									
• With masking plate or cable connection cover		IP20	IP20	IP20	IP20	IP20	IP20	IP20	IP20
• Without masking plate or terminal cover		IP20	IP20	IP20	IP00[5]/IP20				IP00
Ambient conditions									
• Ambient temperature during operation	°C	-25 ... +70 (no derating of I_{th} at -5 ... +55 °C)							
• Ambient temperature during storage	°C	-50 ... +80							
• Mounting position[6]		Any							
Main conductor connections									
Conductor cross-section, max.	mm^2	35	35	35	70 (95)[7]	70 (95)[7]	70 (95)[7]	70 (95)[7]	95
Busbar systems, max. dimensions (number x width x thickness)									
• Flat terminals	mm	--			1 x 20 x 3[8]				
• Box terminals	mm	1 x 9 x 2			1 x 14 x 3				
Tightening torque									
• Flat terminals	Nm	--			15 ... 22				
• Box terminals	Nm	5 ... 6.5			6.5 ... 8				

1) Configuring note: Max. permissible operating temperature at connections 125 °C.

2) Values are provided as a guide only and may vary depending on the make of motor.

3) Valid for the combination of 3KD and fuse type 3NA38 for I_u = 16 ... 160 A; 3NA31 for I_u = 200 A, characteristic gG.

4) Maximum rated current of the upstream fuse; a fuse with a lower rated current can also be used.

5) Relevant only for devices with flat terminals.

6) With mounting positions other than the vertical, please contact Technical Support.

7) 95 mm^2 valid for variants with flat terminals.

8) When using busbars that are 20 mm wide, these must be insulated.

Minimum order quantity (PS) or a multiple thereof can be ordered.

© Siemens 2019

Technical specifications (continued)

3KD switch disconnectors, 3/4-pole, sizes 3 to 5

Standards		**IEC 60947-1, IEC 60947-3**									
Type		**3KD36..-.P**	**3KD38**	**3KD40**	**3KD42**	**3KD44**	**3KD46**	**3KD48**	**3KD50**	**3KD52**	**3KD54**
Size		**3**	**3**	**3**	**3**	**4**	**4**	**4**	**5**	**5**	**5**
General technical details											
Rated uninterrupted current I_u	A	200	250	315	400	500	630	800	1000	1250	1600
Conventional free air thermal current I_{th}[1]	A	200	250	315	400	500	630	800	1000	1250	1600
Rated operational voltage U_e											
• At 50/60 Hz AC (tolerance up to +10% permissible)	V	690									
• At DC - 2 conducting paths series-connected	V	220									
• At DC - 3 conducting paths series-connected	V	440									
Rated insulation voltage U_i	V	1000									
Rated impulse withstand voltage U_{imp}	kV	12	12	12	12	12	12	12	12	12	12
Overvoltage category		IV	IV	IV	IV	IV	IV	IV	IV	IV	IV
Pollution degree		3	3	3	3	3	3	3	3	3	3
Operating and short-circuit behavior											
Rated operational current I_e[2] [3]											
• At AC-21A, AC-22A, 400 ... 690 V	A	200	250	315	400	500	630	800	1000	1250	1600
• At AC-23, 400 V	A	200	250	315	400	500	630	800	1000	1250	1600
• At AC-23, 500 V	A	200	250	315	350	500	630	800	1000	1250	1600
• At AC-23, 690 V	A	200	250	315	315	500	630	800	1000	1250	1600
• At DC-21A, 220/440 V	A	200	250	315	400	500	630	800	1000	1250	1600
• At DC-22A, 220/440 V	A	200	250	315	400	500	630	800	--	--	--
• At DC-23A, 220/440 V	A	200	250	315	400	500	630	800	--	--	--
Motor switching capacity AC-23A[4]											
• At 400 V	kW	110	132	160	200	250	355	400	560	710	900
• At 500 V	kW	132	160	200	250	355	400	560	710	900	1000
• At 690 V	kW	185	220	315	315	500	630	800	1000	1000	1000
Rated short-time withstand current I_{cw} (with t = 1 s, rms value, 690 V AC/440 V DC)	kA	13	13	13	13	30	30	30	50	50	50
Rated short-circuit making capacity I_{cm} (at 690 V AC/440 V DC)	kA	26	26	26	26	63	63	63	105	105	105
Rated current of upstream fuse[5] [6]	A	250	250	400	400	630	630	800	1000	1250	1600
Rated conditional short-circuit current with upstream fuses[5]											
• At 400/500 V AC	kA	100	100	65	65	100	100	100	100	80	80
• At 690 V AC	kA	65	65	35	35	65	65	50	--	--	--
Let-through current combined with upstream fuse[5]											
• At 400/500 V AC	kA	25.1	25.1	35.2	35.2	61.6	61.6	63.7	95.9	103.4	110
• At 690 V AC	kA	22.7	22.7	27.96	27.96	54.5	54.5	70.4	--	--	--
Let-through I^2t value combined with upstream fuse[5]											
• At 400/500 V	kA^2s	427	427	1165	1165	3687	3687	7471	15400	25960	30900
• At 690 V	kA^2s	348	348	1157	1157	4450	4450	10300	--	--	--
Power loss per pole with thermal current I_{th}	W	4	6	10	14	12	17	25	20	32	57
Service life, operating cycles											
• Mechanical		10000	10000	10000	10000	8000	8000	8000	6000	6000	6000
• Electrical, at AC-23A, 690 V/50 ... 60 Hz		1000	1000	1000	1000	1000	1000	500	500	500	500
• Electrical, at DC-23A, 220/440 V		1000	1000	1000	1000	1000	1000	500	500	500	500
Degree of protection											
• With masking plate or cable connection cover		IP20	IP20	IP20	IP20	IP20	IP20	IP20	IP20	IP20	IP20
• Without masking plate or terminal cover		IP00	IP00	IP00	IP00	IP00	IP00	IP00	IP00	IP00	IP00
Ambient conditions											
• Ambient temperature during operation	°C	-25 ... +70 (no derating of I_{th} at -5 ... +55 °C)									
• Ambient temperature during storage	°C	-50 ... +80									
• Mounting position[7]		Any									
Main conductor connections											
Conductor cross-section, max.	mm^2	240				2 x 240			2 x 240		
Busbar systems, max. dimensions (number x width x thickness)											
• Flat terminals	mm	1 x 30 x 10				2 x 40 x 5			2 x 60 x 10		
• Box terminals	mm	1 x 30 x 10				2 x 40 x 5			2 x 60 x 10		
Tightening torque											
• Flat terminals	Nm	30 ... 44				50 ... 75			50 ... 75		
• Box terminals	Nm	--				--			--		

1) Max. permissible operating temperature at connections 125 °C

2) For size 3, phase barriers or contact connection covers (accessories) are required for busbar systems (AC-21A, AC-22A, and U_e > 400 V, AC-23A) and when connecting cable lugs.

3) With size 4 at AC-23A, phase barriers or terminal covers must be installed (accessories).

4) Values are provided as a guide only and may vary depending on the make of motor.

5) Valid for the combination of 3KD and fuse type 3NA…, characteristic gG.

6) Maximum rated current of the upstream fuse; a fuse with a lower rated current can also be used.

7) Contact Technical Support for other mounting positions.

© Siemens 2019

Technical specifications (continued)

3KD switch disconnectors, 6-pole for DC applications up to 1200 V, sizes 1 and 2

Standards		**IEC 60947-1, IEC 60947-3**						
Type		**3KD16**	**3KD22**	**3KD26**	**3KD28**	**3KD30**	**3KD32**	**3KD34**
Size		**1**	**1**	**1**	**2**	**2**	**2**	**2**
General technical details								
Rated uninterrupted current I_u	A	16	32	63	80	100	125	160
Conventional free air thermal current I_{th}[1]	A	16	32	63	80	100	125	160
Rated operational voltage U_e								
• At DC - with pollution degree 2	V	1200	1200	1200	1200	1200	1200	1200
• At DC - with pollution degree 3	V	1000	1000	1000	1000[2]	1000[2]	1000[2]	1000[2]
Rated insulation voltage U_i								
• At DC - with pollution degree 2	V	1250	1250	1250	1250	1250	1250	1250
• At DC - with pollution degree 3	V	1000	1000	1000	1000[3]	1000[3]	1000[3]	1000[3]
Rated impulse withstand voltage U_{imp}	kV	8	8	8	8	8	8	8
Overvoltage category		III	III	III	III	III	III	III
Operating and short-circuit behavior								
Rated operational current I_e								
• At DC-21A, 1200 V	A	16	32	63	80	100	125	160
• At DC-21B, 1200 V	A	16	32	63	80	100	125	160
Rated short-time withstand current I_{cw}								
• With t = 1 s, rms value, 1200 V DC	kA	3	3	3	4	4	4	4
Rated short-circuit making capacity I_{cm}								
• At 1200 V DC	kA	4.3	4.3	4.3	5.7	5.7	5.7	5.7
Power loss per pole with thermal current I_{th}	W	0.1	0.4	1	1.1	1.8	3.2	4.6
Service life, operating cycles								
• Mechanical		15000	15000	15000	15000	15000	15000	15000
• Electrical, at DC-21, 1200 V		1500	1500	1500	1500	1500	1500	1500
Degree of protection								
• With masking plate or cable connection cover		IP20	IP20	IP20	IP20	IP20	IP20	IP20
• Without masking plate or terminal cover		IP20	IP20	IP20	IP00[4] / IP20			
Ambient conditions								
• Ambient temperature during operation	°C	-25 ... +70 (no derating of I_{th} at -5 ... +40 °C)						
• Ambient temperature during storage	°C	-50 ... +80						
• Mounting position		Any						
Main conductor connections								
Conductor cross-section, max.	mm^2	35	35	35	70	70	70	70
Busbar systems, max. dimensions (number x width x thickness)								
• Flat terminals	mm	--			1 x 20 x 3[5]			
• Box terminals	mm	1 x 9 x 2			1 x 14 x 3			
Tightening torque								
• Flat terminals	Nm	--			15 ... 22			
• Box terminals	Nm	5 ... 6.5			6.5 ... 8			

1) Configuring note: Max. permissible operating temperature at connections 110 °C.

2) Valid for version with box terminal, version with flat terminal max. 1200 V.

3) Valid for version with box terminal, version with flat terminal max. 1250 V.

4) Relevant only for devices with flat terminals.

5) When using busbars that are 20 mm wide, these must be insulated.

Minimum order quantity (PS) or a multiple thereof can be ordered.

© Siemens 2019

Technical specifications (continued)

3KD switch disconnectors, 6-pole for DC applications up to 1200 V, sizes 3 to 5

Standards		**IEC 60947-1, IEC 60947-3**									
Type		**3KD36**	**3KD38**	**3KD40**	**3KD42**	**3KD44**	**3KD46**	**3KD48**	**3KD50**	**3KD52**	**3KD54**
Size		**3**	**3**	**3**	**3**	**4**	**4**	**4**	**5**	**5**	**5**
General technical details											
Rated uninterrupted current I_u	A	200	250	315	400	500	630	800	1000	1250	1600
Conventional free air thermal current I_{th} [1]	A	200	250	315	400	500	630	800	1000	1250	1600
Rated operational voltage U_e											
• At DC - with pollution degree 2	V	1200	1200	1200	1200	1200	1200	1200	1200	1200	1200
• At DC - with pollution degree 3	V	1200	1200	1200	1200	1000	1000	1000	1200	1200	1200
Rated insulation voltage U_i											
• At DC - with pollution degree 2	V	1250	1250	1250	1250	1250	1250	1250	1250	1250	1250
• At DC - with pollution degree 3	V	1250	1250	1250	1250	1000	1000	1000	1250	1250	1250
Rated impulse withstand voltage U_{imp}	kV	12	12	12	12	12	12	12	12	12	12
Overvoltage category		IV	IV	IV	IV	IV	IV	IV	IV	IV	IV
Operating and short-circuit behavior											
Rated operational current I_e [2]											
• At DC-21A, 1200 V	A	--	--	--	--	--	--	--	--	--	--
• At DC-21B, 1200 V	A	200	250	315	400	500	630	800	1000	1250	1600
Rated short-time withstand current I_{cw}											
• With t = 1 s, rms value, 1200 V DC	kA	10	10	10	10	20	20	20	20	20	20
Rated short-circuit making capacity I_{cm}											
• At 1200 V DC	kA	14.2	14.2	14.2	14.2	28.4	28.4	28.4	28.4	28.4	28.4
Power loss per pole with thermal current I_{th}	W	4	6	10	14	12	17	25	20	32	57
Service life, operating cycles											
• Mechanical		10000	10000	10000	10000	8000	8000	8000	6000	6000	6000
• Electrical, at DC-21, 1200 V		200	200	200	200	100	100	100	100	100	100
Degree of protection											
• With masking plate or cable connection cover		IP20	IP20	IP20	IP20	IP20	IP20	IP20	IP20	IP20	IP20
• Without masking plate or terminal cover		IP00	IP00	IP00	IP00	IP00	IP00	IP00	IP00	IP00	IP00
Ambient conditions											
• Ambient temperature during operation	°C	-25 ... +70 (no derating of I_{th} at -5 ... +40 °C)									
• Ambient temperature during storage	°C	-50 ... +80									
• Mounting position		Any									
Main conductor connections											
Conductor cross-section, max.	mm^2	240				2 x 240			2 x 240		
Busbar systems, max. dimensions (number x width x thickness)											
• Flat terminals	mm	1 x 30 x 10				2 x 40 x 5			2 x 60 x 10		
• Box terminals	mm	--				--			--		
Tightening torque											
• Flat terminals	Nm	30 ... 44				50 ... 75			50 ... 75		
• Box terminals	Nm	--				--			--		

[1] Configuring note: Max. permissible operating temperature at connections 110 °C.

[2] For sizes 3 and 4, phase barriers or contact connection covers (accessories) are required when connecting cable lugs.

7

© Siemens 2019

Circuit diagrams

3KD switch disconnectors, 6-pole for DC applications up to 1200 V, all sizes

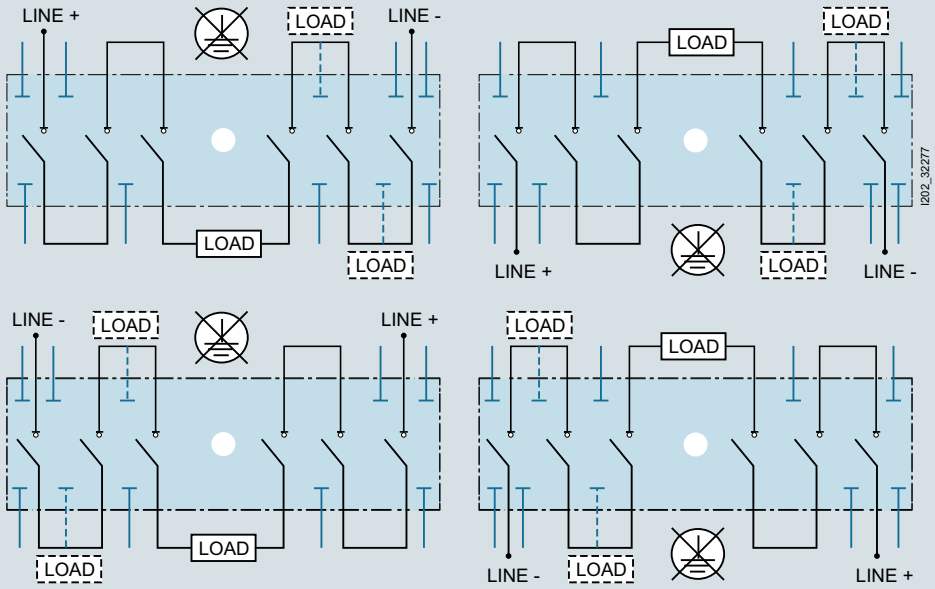

Typical circuit diagrams for 3KD 6-pole for DC applications up to 1200 V, all sizes in which 3 of the 6 poles in each case are to be connected in series using the connecting bridges, see page 7/78.

Minimum order quantity (PS) or a multiple thereof can be ordered.

© Siemens 2019

Selection and ordering data

	Rated uninterrupted current I_u	Size	SD	Article No. www.siemens.com/product?Article No.	Price per PU	PU (UNIT, SET, M)	PS	PG
	A		d					
Complete assemblies with direct operating mechanism, gray, front operating mechanism								
• The switch disconnectors are designed for floor mounting; sizes 1 and 2 can optionally be mounted on standard mounting rails. • The complete assemblies are not suitable for conversion to door-coupling rotary operating mechanisms; the basic units are to be used for this purpose.								
	3-pole							
 3KD2832-0NE10-0	**Flat terminals**[1]							
	80	2		**3KD2832-0NE10-0**		1	1 unit	1CL
	100			**3KD3032-0NE10-0**		1	1 unit	1CL
	125			**3KD3232-0NE10-0**		1	1 unit	1CL
	160			**3KD3432-0NE10-0**		1	1 unit	1CL
	200			**3KD3632-0NE10-0**		1	1 unit	1CL
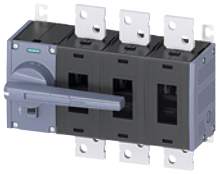 3KD3632-0PE10-0	200	3		**3KD3632-0PE10-0**		1	1 unit	1CL
	250			**3KD3832-0PE10-0**		1	1 unit	1CL
	315			**3KD4032-0PE10-0**		1	1 unit	1CL
	400			**3KD4232-0PE10-0**		1	1 unit	1CL
	500	4		**3KD4432-0QE10-0**		1	1 unit	1CL
	630			**3KD4632-0QE10-0**		1	1 unit	1CL
	800			**3KD4832-0QE10-0**		1	1 unit	1CL
	1000	5		**3KD5032-0RE10-0**		1	1 unit	1CL
	1250			**3KD5232-0RE10-0**		1	1 unit	1CL
	1600			**3KD5432-0RE10-0**		1	1 unit	1CL
 3KD2832-2NE10-0	**Box terminals**							
	16	1		**3KD1632-2ME10-0**		1	1 unit	1CL
	32			**3KD2232-2ME10-0**		1	1 unit	1CL
	63			**3KD2632-2ME10-0**		1	1 unit	1CL
	80	2		**3KD2832-2NE10-0**		1	1 unit	1CL
	100			**3KD3032-2NE10-0**		1	1 unit	1CL
	125			**3KD3232-2NE10-0**		1	1 unit	1CL
	160			**3KD3432-2NE10-0**		1	1 unit	1CL
	4-pole							
 3KD2842-0NE10-0	**Flat terminals**[1]							
	80	2		**3KD2842-0NE10-0**		1	1 unit	1CL
	100			**3KD3042-0NE10-0**		1	1 unit	1CL
	125			**3KD3242-0NE10-0**		1	1 unit	1CL
	160			**3KD3442-0NE10-0**		1	1 unit	1CL
	200			**3KD3642-0NE10-0**		1	1 unit	1CL
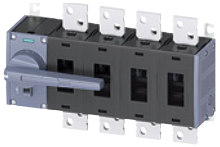 3KD5042-0RE10-0	200	3		**3KD3642-0PE10-0**		1	1 unit	1CL
	250			**3KD3842-0PE10-0**		1	1 unit	1CL
	315			**3KD4042-0PE10-0**		1	1 unit	1CL
	400			**3KD4242-0PE10-0**		1	1 unit	1CL
	500	4		**3KD4442-0QE10-0**		1	1 unit	1CL
	630			**3KD4642-0QE10-0**		1	1 unit	1CL
	800			**3KD4842-0QE10-0**		1	1 unit	1CL
	1000	5		**3KD5042-0RE10-0**		1	1 unit	1CL
	1250			**3KD5242-0RE10-0**		1	1 unit	1CL
	1600			**3KD5442-0RE10-0**		1	1 unit	1CL
 3KD2842-2NE10-0	**Box terminals**							
	16	1		**3KD1642-2ME10-0**		1	1 unit	1CL
	32			**3KD2242-2ME10-0**		1	1 unit	1CL
	63			**3KD2642-2ME10-0**		1	1 unit	1CL
	80	2		**3KD2842-2NE10-0**		1	1 unit	1CL
	100			**3KD3042-2NE10-0**		1	1 unit	1CL
	125			**3KD3242-2NE10-0**		1	1 unit	1CL
	160			**3KD3442-2NE10-0**		1	1 unit	1CL

[1] Cable connection covers must be provided for switch disconnectors with flat terminals and direct operating mechanisms.

Minimum order quantity (PS) or a multiple thereof can be ordered.

© Siemens 2019

Basic units

Selection and ordering data

Rated uninterrupted current I_u	Size	SD	Operating mechanism on left: Article No. www.siemens.com/product?Article No.	Price per PU	PU (UNIT, SET)	PS	PG	SD	Operating mechanism in center: Article No. www.siemens.com/product?Article No.	Price per PU	PU (UNIT, SET)	PS	PG
A		d						d					
Basic units without handle, front operating mechanisms													

- The switch disconnectors are designed for floor mounting; sizes 1 and 2 can optionally be mounted on standard mounting rails.
- The basic units without handles are suitable for use with door coupling rotary operating mechanisms or with direct operating mechanisms.

3-pole


3KD2830-0NE10-0


3KD5030-0RE20-0


3KD2830-2NE10-0

Flat terminals[1)]

80	2		**3KD2830-0NE10-0**	1	1 unit	1CL			**3KD2830-0NE20-0**	1	1 unit	1CL	
100			**3KD3030-0NE10-0**	1	1 unit	1CL			**3KD3030-0NE20-0**	1	1 unit	1CL	
125			**3KD3230-0NE10-0**	1	1 unit	1CL			**3KD3230-0NE20-0**	1	1 unit	1CL	
160			**3KD3430-0NE10-0**	1	1 unit	1CL			**3KD3430-0NE20-0**	1	1 unit	1CL	
200			**3KD3630-0NE10-0**	1	1 unit	1CL			**3KD3630-0NE20-0**	1	1 unit	1CL	
200	3		**3KD3630-0PE10-0**	1	1 unit	1CL			**3KD3630-0PE20-0**	1	1 unit	1CL	
250			**3KD3830-0PE10-0**	1	1 unit	1CL			**3KD3830-0PE20-0**	1	1 unit	1CL	
315			**3KD4030-0PE10-0**	1	1 unit	1CL			**3KD4030-0PE20-0**	1	1 unit	1CL	
400			**3KD4230-0PE10-0**	1	1 unit	1CL			**3KD4230-0PE20-0**	1	1 unit	1CL	
500	4		**3KD4430-0QE10-0**	1	1 unit	1CL			**3KD4430-0QE20-0**	1	1 unit	1CL	
630			**3KD4630-0QE10-0**	1	1 unit	1CL			**3KD4630-0QE20-0**	1	1 unit	1CL	
800			**3KD4830-0QE10-0**	1	1 unit	1CL			**3KD4830-0QE20-0**	1	1 unit	1CL	
1000	5		**3KD5030-0RE10-0**	1	1 unit	1CL			**3KD5030-0RE20-0**	1	1 unit	1CL	
1250			**3KD5230-0RE10-0**	1	1 unit	1CL			**3KD5230-0RE20-0**	1	1 unit	1CL	
1600			**3KD5430-0RE10-0**	1	1 unit	1CL			**3KD5430-0RE20-0**	1	1 unit	1CL	
Box terminals													
16	1		**3KD1630-2ME10-0**	1	1 unit	1CL			**3KD1630-2ME20-0**	1	1 unit	1CL	
32			**3KD2230-2ME10-0**	1	1 unit	1CL			**3KD2230-2ME20-0**	1	1 unit	1CL	
63			**3KD2630-2ME10-0**	1	1 unit	1CL			**3KD2630-2ME20-0**	1	1 unit	1CL	
80	2		**3KD2830-2NE10-0**	1	1 unit	1CL			**3KD2830-2NE20-0**	1	1 unit	1CL	
100			**3KD3030-2NE10-0**	1	1 unit	1CL			**3KD3030-2NE20-0**	1	1 unit	1CL	
125			**3KD3230-2NE10-0**	1	1 unit	1CL			**3KD3230-2NE20-0**	1	1 unit	1CL	
160			**3KD3430-2NE10-0**	1	1 unit	1CL			**3KD3430-2NE20-0**	1	1 unit	1CL	

4-pole


3KD2840-0NE10-0


3KD5440-0RE20-0


3KD2840-2NE10-0

Flat terminals[1)]

80	2		**3KD2840-0NE10-0**	1	1 unit	1CL			**3KD2840-0NE20-0**	1	1 unit	1CL	
100			**3KD3040-0NE10-0**	1	1 unit	1CL			**3KD3040-0NE20-0**	1	1 unit	1CL	
125			**3KD3240-0NE10-0**	1	1 unit	1CL			**3KD3240-0NE20-0**	1	1 unit	1CL	
160			**3KD3440-0NE10-0**	1	1 unit	1CL			**3KD3440-0NE20-0**	1	1 unit	1CL	
200			**3KD3640-0NE10-0**	1	1 unit	1CL			**3KD3640-0NE20-0**	1	1 unit	1CL	
200	3		**3KD3640-0PE10-0**	1	1 unit	1CL			**3KD3640-0PE20-0**	1	1 unit	1CL	
250			**3KD3840-0PE10-0**	1	1 unit	1CL			**3KD3840-0PE20-0**	1	1 unit	1CL	
315			**3KD4040-0PE10-0**	1	1 unit	1CL			**3KD4040-0PE20-0**	1	1 unit	1CL	
400			**3KD4240-0PE10-0**	1	1 unit	1CL			**3KD4240-0PE20-0**	1	1 unit	1CL	
500	4		**3KD4440-0QE10-0**	1	1 unit	1CL			**3KD4440-0QE20-0**	1	1 unit	1CL	
630			**3KD4640-0QE10-0**	1	1 unit	1CL			**3KD4640-0QE20-0**	1	1 unit	1CL	
800			**3KD4840-0QE10-0**	1	1 unit	1CL			**3KD4840-0QE20-0**	1	1 unit	1CL	
1000	5		**3KD5040-0RE10-0**	1	1 unit	1CL			**3KD5040-0RE20-0**	1	1 unit	1CL	
1250			**3KD5240-0RE10-0**	1	1 unit	1CL			**3KD5240-0RE20-0**	1	1 unit	1CL	
1600			**3KD5440-0RE10-0**	1	1 unit	1CL			**3KD5440-0RE20-0**	1	1 unit	1CL	
Box terminals													
16	1		**3KD1640-2ME10-0**	1	1 unit	1CL			**3KD1640-2ME20-0**	1	1 unit	1CL	
32			**3KD2240-2ME10-0**	1	1 unit	1CL			**3KD2240-2ME20-0**	1	1 unit	1CL	
63			**3KD2640-2ME10-0**	1	1 unit	1CL			**3KD2640-2ME20-0**	1	1 unit	1CL	
80	2		**3KD2840-2NE10-0**	1	1 unit	1CL			**3KD2840-2NE20-0**	1	1 unit	1CL	
100			**3KD3040-2NE10-0**	1	1 unit	1CL			**3KD3040-2NE20-0**	1	1 unit	1CL	
125			**3KD3240-2NE10-0**	1	1 unit	1CL			**3KD3240-2NE20-0**	1	1 unit	1CL	
160			**3KD3440-2NE10-0**	1	1 unit	1CL			**3KD3440-2NE20-0**	1	1 unit	1CL	

[1)] Phase barriers for size 2 included in scope of supply

Minimum order quantity (PS) or a multiple thereof can be ordered.

© Siemens 2019

Basic units without handle, lateral operating mechanism

The switch disconnectors with lateral operating mechanism are suitable for door-coupling rotary operating mechanisms.

Rated uninterrupted current I_u	Size	SD	Operating mechanism on left: Article No. www.siemens.com/product?Article No.	Price per PU	PU (UNIT, SET)	PS	PG	SD	Operating mechanism on right: Article No. www.siemens.com/product?Article No.	Price per PU	PU (UNIT, SET)	PS	PG
A		d						d					
3-pole													
Flat terminals													
80	2		**3KD2834-0NE10-0**		1	1 unit	1CL		**3KD2834-0NE40-0**		1	1 unit	1CL
100	2		**3KD3034-0NE10-0**		1	1 unit	1CL		**3KD3034-0NE40-0**		1	1 unit	1CL
125	2		**3KD3234-0NE10-0**		1	1 unit	1CL		**3KD3234-0NE40-0**		1	1 unit	1CL
160	2		**3KD3434-0NE10-0**		1	1 unit	1CL		**3KD3434-0NE40-0**		1	1 unit	1CL
200	2		**3KD3634-0NE10-0**		1	1 unit	1CL		**3KD3634-0NE40-0**		1	1 unit	1CL
200	3		**3KD3634-0PE10-0**		1	1 unit	1CL		**3KD3634-0PE40-0**		1	1 unit	1CL
250	3		**3KD3834-0PE10-0**		1	1 unit	1CL		**3KD3834-0PE40-0**		1	1 unit	1CL
315	3		**3KD4034-0PE10-0**		1	1 unit	1CL		**3KD4034-0PE40-0**		1	1 unit	1CL
400	3		**3KD4234-0PE10-0**		1	1 unit	1CL		**3KD4234-0PE40-0**		1	1 unit	1CL
500	4		**3KD4434-0QE10-0**		1	1 unit	1CL		**3KD4434-0QE40-0**		1	1 unit	1CL
630	4		**3KD4634-0QE10-0**		1	1 unit	1CL		**3KD4634-0QE40-0**		1	1 unit	1CL
800	4		**3KD4834-0QE10-0**		1	1 unit	1CL		**3KD4834-0QE40-0**		1	1 unit	1CL
1000	5		**3KD5034-0RE10-0**		1	1 unit	1CL		**3KD5034-0RE40-0**		1	1 unit	1CL
1250	5		**3KD5234-0RE10-0**		1	1 unit	1CL		**3KD5234-0RE40-0**		1	1 unit	1CL
1600	5		**3KD5434-0RE10-0**		1	1 unit	1CL		**3KD5434-0RE40-0**		1	1 unit	1CL
Box terminals													
16	1		**3KD1634-2ME10-0**		1	1 unit	1CL		**3KD1634-2ME40-0**		1	1 unit	1CL
32	1		**3KD2234-2ME10-0**		1	1 unit	1CL		**3KD2234-2ME40-0**		1	1 unit	1CL
63	1		**3KD2634-2ME10-0**		1	1 unit	1CL		**3KD2634-2ME40-0**		1	1 unit	1CL
80	2		**3KD2834-2NE10-0**		1	1 unit	1CL		**3KD2834-2NE40-0**		1	1 unit	1CL
100	2		**3KD3034-2NE10-0**		1	1 unit	1CL		**3KD3034-2NE40-0**		1	1 unit	1CL
125	2		**3KD3234-2NE10-0**		1	1 unit	1CL		**3KD3234-2NE40-0**		1	1 unit	1CL
160	2		**3KD3434-2NE10-0**		1	1 unit	1CL		**3KD3434-2NE40-0**		1	1 unit	1CL


3KD2834-0NE40-0


3KD3634-0PE10-0


3KD4434-0QE40-0


o
3KD5034-0RE10-0


3KD1634-2ME40-0


3KD2834-2NE10-0

© Siemens 2019

Basic units

Basic units without handle, lateral operating mechanism (continued)

The switch disconnectors with lateral operating mechanism are suitable for door-coupling rotary operating mechanisms.

Rated uninterrupted current I_u	Size	SD	Operating mechanism on left: Article No. www.siemens.com/product?Article No.	Price per PU	PU (UNIT, SET)	PS	PG	SD	Operating mechanism on right: Article No. www.siemens.com/product?Article No.	Price per PU	PU (UNIT, SET)	PS	PG
A		d						d					
4-pole													
Flat terminals													
80	2		**3KD2844-0NE10-0**		1	1 unit	1CL		**3KD2844-0NE40-0**		1	1 unit	1CL
100	2		**3KD3044-0NE10-0**		1	1 unit	1CL		**3KD3044-0NE40-0**		1	1 unit	1CL
125	2		**3KD3244-0NE10-0**		1	1 unit	1CL		**3KD3244-0NE40-0**		1	1 unit	1CL
160	2		**3KD3444-0NE10-0**		1	1 unit	1CL		**3KD3444-0NE40-0**		1	1 unit	1CL
200	2		**3KD3644-0NE10-0**		1	1 unit	1CL		**3KD3644-0NE40-0**		1	1 unit	1CL
200	3		**3KD3644-0PE10-0**		1	1 unit	1CL		**3KD3644-0PE40-0**		1	1 unit	1CL
250	3		**3KD3844-0PE10-0**		1	1 unit	1CL		**3KD3844-0PE40-0**		1	1 unit	1CL
315	3		**3KD4044-0PE10-0**		1	1 unit	1CL		**3KD4044-0PE40-0**		1	1 unit	1CL
400	3		**3KD4244-0PE10-0**		1	1 unit	1CL		**3KD4244-0PE40-0**		1	1 unit	1CL
500	4		**3KD4444-0QE10-0**		1	1 unit	1CL		**3KD4444-0QE40-0**		1	1 unit	1CL
630	4		**3KD4644-0QE10-0**		1	1 unit	1CL		**3KD4644-0QE40-0**		1	1 unit	1CL
800	4		**3KD4844-0QE10-0**		1	1 unit	1CL		**3KD4844-0QE40-0**		1	1 unit	1CL
1000	5		**3KD5044-0RE10-0**		1	1 unit	1CL		**3KD5044-0RE40-0**		1	1 unit	1CL
1250	5		**3KD5244-0RE10-0**		1	1 unit	1CL		**3KD5244-0RE40-0**		1	1 unit	1CL
1600	5		**3KD5444-0RE10-0**		1	1 unit	1CL		**3KD5444-0RE40-0**		1	1 unit	1CL
Box terminals													
16	1		**3KD1644-2ME10-0**		1	1 unit	1CL		**3KD1644-2ME40-0**		1	1 unit	1CL
32	1		**3KD2244-2ME10-0**		1	1 unit	1CL		**3KD2244-2ME40-0**		1	1 unit	1CL
63	1		**3KD2644-2ME10-0**		1	1 unit	1CL		**3KD2644-2ME40-0**		1	1 unit	1CL
80	2		**3KD2844-2NE10-0**		1	1 unit	1CL		**3KD2844-2NE40-0**		1	1 unit	1CL
100	2		**3KD3044-2NE10-0**		1	1 unit	1CL		**3KD3044-2NE40-0**		1	1 unit	1CL
125	2		**3KD3244-2NE10-0**		1	1 unit	1CL		**3KD3244-2NE40-0**		1	1 unit	1CL
160	2		**3KD3444-2NE10-0**		1	1 unit	1CL		**3KD3444-2NE40-0**		1	1 unit	1CL


3KD2844-0NE40-0


3KD3644-0PE10-0

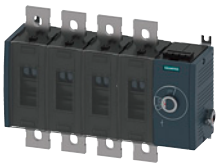
3KD4444-0QE40-0

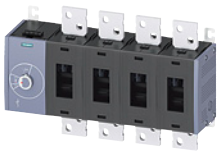
3KD5044-0RE10-0


3KD1644-2ME40-0


3KD2844-2NE10-0

Minimum order quantity (PS) or a multiple thereof can be ordered.

© Siemens 2019

Basic units without handle, front operating mechanisms

- The switch disconnectors are designed for floor mounting. Sizes 1 and 2 can optionally also be mounted on standard mounting rails.
- The basic units without handles are suitable for use with door-coupling rotary operating mechanisms or with direct operating mechanisms.

Up to 1200 V DC

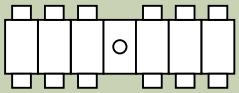

Rated uninterrupted current I_u	Size	SD	Article No. www.siemens.com/product?Article No.	Price per PU	PU (UNIT, SET, M)	PS	PG
A		d					
Flat terminals							
80	2		**3KD2860-0NE20-0**		1	1 unit	1CL
100	2		**3KD3060-0NE20-0**		1	1 unit	1CL
125	2		**3KD3260-0NE20-0**		1	1 unit	1CL
160	2		**3KD3460-0NE20-0**		1	1 unit	1CL
200	3		**3KD3660-0PE20-0**		1	1 unit	1CL
250	3		**3KD3860-0PE20-0**		1	1 unit	1CL
315	3		**3KD4060-0PE20-0**		1	1 unit	1CL
400	3		**3KD4260-0PE20-0**		1	1 unit	1CL
500	4		**3KD4460-0QE20-0**		1	1 unit	1CL
630	4		**3KD4660-0QE20-0**		1	1 unit	1CL
800	4		**3KD4860-0QE20-0**		1	1 unit	1CL
1000	5		**3KD5060-0RE20-0**		1	1 unit	1CL
1250	5		**3KD5260-0RE20-0**		1	1 unit	1CL
1600	5		**3KD5460-0RE20-0**		1	1 unit	1CL
Box terminals							
16	1		**3KD1660-2ME20-0**		1	1 unit	1CL
32	1		**3KD2260-2ME20-0**		1	1 unit	1CL
63	1		**3KD2660-2ME20-0**		1	1 unit	1CL
80	2		**3KD2860-2NE20-0**		1	1 unit	1CL
100	2		**3KD3060-2NE20-0**		1	1 unit	1CL
125	2		**3KD3260-2NE20-0**		1	1 unit	1CL
160	2		**3KD3460-2NE20-0**		1	1 unit	1CL



3KD2860-0NE20-0



3KD3660-0PE20-0



3KD4460-0QE20-0



3KD5060-0RE20-0



3KD1660-2ME20-0



3KD2860-2NE20-0

© Siemens 2019

Selection and ordering data

Additional poles

	Version	Circuit symbol	SD	Article No. www.siemens.com/product?Article No.	Price per PU	PU (UNIT, SET, M)	PS	PG
		mm	d					
	4th contact element (switching pole)	N—N						
 4th contact element, flat terminal, for frame size 2	**Flat terminals**							
	• For size 2; 3KD....-.N	--		**3KD9205-0**		1	1 unit	1CL
	• For size 3; 3KD....-.P			**3KD9305-0**		1	1 unit	1CL
	• For size 4; 3KD....-.Q			**3KD9405-0**		1	1 unit	1CL
	• For size 5; 3KD....-.R			**3KD9505-0**		1	1 unit	1CL
 4th contact element, box terminal, for size 2	**Box terminals**							
	• For size 1; 3KD....-.M			**3KD9105-2**		1	1 unit	1CL
	• For size 2; 3KD....-.N			**3KD9205-2**		1	1 unit	1CL
	Neutral conductor terminals with removable jumper							
 Neutral conductor terminal, flat terminal, for size 2	**Flat terminals**							
	• For size 2; 3KD....-.N			**3KD9206-0**		1	1 unit	1CL
	• For size 3; 3KD....-.P			**3KD9306-0**		1	1 unit	1CL
	• For size 4; 3KD....-.Q			**3KD9406-0**		1	1 unit	1CL
	• For size 5; 3KD....-.R			**3KD9506-0**		1	1 unit	1CL
 Neutral conductor terminal, box terminal, for size 2	**Box terminals**							
	• For size 1; 3KD....-.M			**3KD9106-2**		1	1 unit	1CL
	• For size 2; 3KD....-.N			**3KD9206-2**		1	1 unit	1CL
	N/PE terminals with permanent jumper							
 N/PE terminal, flat terminal, for size 2	**Flat terminals**							
	• For size 2; 3KD....-.N			**3KD9206-7**		1	1 unit	1CL
	• For size 3; 3KD....-.P			**3KD9306-7**		1	1 unit	1CL
	• For size 4; 3KD....-.Q			**3KD9406-7**		1	1 unit	1CL
	• For size 5; 3KD....-.R			**3KD9506-7**		1	1 unit	1CL
 N/PE terminal, box terminal, for size 2	**Box terminals**							
	• For size 1; 3KD....-.M			**3KD9106-8**		1	1 unit	1CL
	• For size 2; 3KD....-.N			**3KD9206-8**		1	1 unit	1CL

7

Minimum order quantity (PS) or a multiple thereof can be ordered.

© Siemens 2019

Direct operating mechanisms

	Version	SD	Article No. www.siemens.com/product?Article No.	Price per PU	PU (UNIT, SET, M)	PS	PG
		d					
Direct operating mechanisms in standard version and flat version							
	Standard version, labeling Test - 0 - I						
	• Can be locked with up to max. 3 padlocks						
	• Requires additional mounting depth in locked state						
	• Labeling Test - 0 - I						
 Direct operating mechanism, gray, for size 2	**Gray**						
	• For size 1; 3KD....-.M		**3KD9101-1**		1	1 unit	1CL
	• For size 2; 3KD....-.N		**3KD9201-1**		1	1 unit	1CL
	• For size 3; 3KD....-.P		**3KD9301-1**		1	1 unit	1CL
	• For size 4; 3KD....-.Q		**3KD9401-1**		1	1 unit	1CL
	• For size 5; 3KD....-.R		**3KD9501-1**		1	1 unit	1CL
 Direct operating mechanism, red/yellow, for size 2	**Red/yellow**						
	• For size 1; 3KD....-.M		**3KD9101-2**		1	1 unit	1CL
	• For size 2; 3KD....-.N		**3KD9201-2**		1	1 unit	1CL
	• For size 3; 3KD....-.P		**3KD9301-2**		1	1 unit	1CL
	• For size 4; 3KD....-.Q		**3KD9401-2**		1	1 unit	1CL
	• For size 5; 3KD....-.R		**3KD9501-2**		1	1 unit	1CL
	Flat version, labeling Test - 0 - I (suitable for distribution boards)						
 Direct operating mechanism, flat version, gray, for size 2	• Can be locked with 1 padlock						
	• No additional mounting depth in locked state						
	• Labeling Test - 0 - I						
	Gray						
	• For size 1; 3KD....-.M		**3KD9101-0**		1	1 unit	1CL
	• For size 2; 3KD....-.N		**3KD9201-0**		1	1 unit	1CL
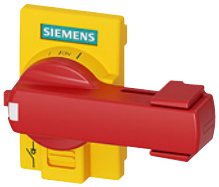 Direct operating mechanism, flat version, red/yellow, for size 2	**Red/yellow**						
	• For size 1; 3KD....-.M		**3KD9101-8**		1	1 unit	1CL
	• For size 2; 3KD....-.N		**3KD9201-8**		1	1 unit	1CL

7

© Siemens 2019

Accessories and spare parts

Door-coupling rotary operating mechanisms

Note

For 3KD switch disconnectors with lateral operating mechanism (left or right), only door-coupling rotary operating mechanisms without "Test" can be used.

If door-coupling rotary operating mechanisms without "Test" are used on 3KD, the test function must be mechanically blocked on the switch. The blocking pin required for this is included in the scope of supply of the 3KD.

	Version	Handle length	Shaft size	SD	Article No. www.siemens.com/product?Article No.	Price per PU	PU (UNIT, SET, M)	PS	PG
		mm	mm x mm	d					
Door-coupling rotary operating mechanisms, complete, 8UD1 series									
	Door-coupling rotary operating mechanism, complete, labeling 0 - I • Handle with masking plate • Coupling driver without tolerance compensation • Shaft 300 mm • Can be locked with up to max. 3 padlocks • Labeling 0 - I								
	**Gray**								
	For sizes 1/2; 3KD....-.M/N	45	8 x 8		**8UD1171-2AD11**		1	1 unit	1CL
	**Red/yellow**								
	For sizes 1/2; 3KD....-.M/N	45	8 x 8		**8UD1171-2AD15**		1	1 unit	1CL
	Door-coupling rotary operating mechanism, complete, labeling Test - 0 - I • Handle with masking plate • Mounting tolerance compensation • Shaft 300 mm • Can be locked with up to max. 3 padlocks • Labeling Test - 0 - I								
	**Gray**								
	• For sizes 1/2; 3KD....-.M/N	45	8 x 8		**8UD1171-2AF21**		1	1 unit	1CL
	• For size 3; 3KD....-.P	100	8 x 8		**8UD1141-2AF21**		1	1 unit	1CL
	• For size 4; 3KD....-.Q	140	10 x 10		**8UD1151-3AF21**		1	1 unit	1CL
	• For size 5; 3KD....-.R	200	12 x 12		**8UD1161-4AF21**		1	1 unit	1CL
	**Red/yellow**								
	• For sizes 1/2; 3KD....-.M/N	45	8 x 8		**8UD1171-2AF25**		1	1 unit	1CL
	• For size 3; 3KD....-.P	100	8 x 8		**8UD1141-2AF25**		1	1 unit	1CL
	• For size 4; 3KD....-.Q	140	10 x 10		**8UD1151-3AF25**		1	1 unit	1CL
	• For size 5; 3KD....-.R	200	12 x 12		**8UD1161-4AF25**		1	1 unit	1CL

Minimum order quantity (PS) or a multiple thereof can be ordered.

© Siemens 2019

	Version	Handle length	Shaft size	SD	Article No. www.siemens.com/product?Article No.	Price per PU	PU (UNIT, SET, M)	PS	PG
		mm	mm x mm	d					
Handles for door-coupling rotary operating mechanisms, 8UD1 series									
	Handles without extension shaft and coupling driver, labeling 0 - I								
	• With masking plate								
	• Can be locked with up to max. 3 padlocks								
	• Labeling 0 - I								
 Handle without extension shaft, gray, for sizes 1/2	**Gray**								
	• For sizes 1/2; 3KD....-.M/N	45	8 x 8		**8UD1771-2AD01**		1	1 unit	1CL
	• For size 3; 3KD....-.P	100	8 x 8		**8UD1841-2AD01**		1	1 unit	1CL
	• For size 4; 3KD....-.Q	140	10 x 10		**8UD1851-3AD01**		1	1 unit	1CL
	• For size 5; 3KD....-.R	200	12 x 12		**8UD1861-4AD01**		1	1 unit	1CL
 Handle without extension shaft, red/yellow, for sizes 1/2	**Red/yellow**								
	• For sizes 1/2; 3KD....-.M/N	45	8 x 8		**8UD1771-2AD05**		1	1 unit	1CL
	• For size 3; 3KD....-.P	100	8 x 8		**8UD1841-2AD05**		1	1 unit	1CL
	• For size 4; 3KD....-.Q	140	10 x 10		**8UD1851-3AD05**		1	1 unit	1CL
	• For size 5; 3KD....-.R	200	12 x 12		**8UD1861-4AD05**		1	1 unit	1CL
	Handles without extension shaft and coupling driver, labeling Test - 0 - I								
	• With masking plate								
	• Can be locked with up to max. 3 padlocks								
	• Labeling Test - 0 - I								
 Handle without extension shaft, gray, for sizes 1/2	**Gray**								
	• For sizes 1/2; 3KD....-.M/N	45	8 x 8		**8UD1771-2AF01**		1	1 unit	1CL
	• For size 3; 3KD....-.P	100	8 x 8		**8UD1841-2AF01**		1	1 unit	1CL
	• For size 4; 3KD....-.Q	140	10 x 10		**8UD1851-3AF01**		1	1 unit	1CL
	• For size 5; 3KD....-.R	200	12 x 12		**8UD1861-4AF01**		1	1 unit	1CL
 Handle without extension shaft, red/yellow, for sizes 1/2	**Red/yellow**								
	• For sizes 1/2; 3KD....-.M/N	45	8 x 8		**8UD1771-2AF05**		1	1 unit	1CL
	• For size 3; 3KD....-.P	100	8 x 8		**8UD1841-2AF05**		1	1 unit	1CL
	• For size 4; 3KD....-.Q	140	10 x 10		**8UD1851-3AF05**		1	1 unit	1CL
	• For size 5; 3KD....-.R	200	12 x 12		**8UD1861-4AF05**		1	1 unit	1CL

© Siemens 2019

Accessories and spare parts

	Version	Handle length	Shaft size	SD	Article No. www.siemens.com/product?Article No.	Price per PU	PU (UNIT, SET, M)	PS	PG
		mm	mm x mm	d					
	Handles, illuminated, without extension shaft and coupling driver, labeling 0 - I								
	• With masking plate								
	• Illuminated								
	• Can be locked with up to max. 3 padlocks								
	• Labeling 0 - I								
 Handle without extension shaft, gray, for sizes 1/2	**Gray**								
	• For sizes 1/2; 3KD....-.M/N	45	8 x 8		**8UD1771-2CD01**		1	1 unit	1CL
	• For size 3; 3KD....-.P	100	8 x 8		**8UD1841-2CD01**		1	1 unit	1CL
	• For size 4; 3KD....-.Q	140	10 x 10		**8UD1851-3CD01**		1	1 unit	1CL
	• For size 5; 3KD....-.R	200	12 x 12		**8UD1861-4CD01**		1	1 unit	1CL
 Handle without extension shaft, red/yellow, for sizes 1/2	**Red/yellow**								
	• For sizes 1/2; 3KD....-.M/N	45	8 x 8		**8UD1771-2CD05**		1	1 unit	1CL
	• For size 3; 3KD....-.P	100	8 x 8		**8UD1841-2CD05**		1	1 unit	1CL
	• For size 4; 3KD....-.Q	140	10 x 10		**8UD1851-3CD05**		1	1 unit	1CL
	• For size 5; 3KD....-.R	200	12 x 12		**8UD1861-4CD05**		1	1 unit	1CL
	Handles, illuminated, without extension shaft and coupling driver, labeling Test - 0 - I								
	• With masking plate								
	• Illuminated								
	• Can be locked with up to max. 3 padlocks								
	• Labeling Test - 0 - I								
 Handle without extension shaft, gray, for sizes 1/2	**Gray**								
	• For sizes 1/2; 3KD....-.M/N	45	8 x 8		**8UD1771-2CF01**		1	1 unit	1CL
	• For size 3; 3KD....-.P	100	8 x 8		**8UD1841-2CF01**		1	1 unit	1CL
	• For size 4; 3KD....-.Q	140	10 x 10		**8UD1851-3CF01**		1	1 unit	1CL
	• For size 5; 3KD....-.R	200	12 x 12		**8UD1861-4CF01**		1	1 unit	1CL
 Handle without extension shaft, red/yellow, for sizes 1/2	**Red/yellow**								
	• For sizes 1/2; 3KD....-.M/N	45	8 x 8		**8UD1771-2CF05**		1	1 unit	1CL
	• For size 3; 3KD....-.P	100	8 x 8		**8UD1841-2CF05**		1	1 unit	1CL
	• For size 4; 3KD....-.Q	140	10 x 10		**8UD1851-3CF05**		1	1 unit	1CL
	• For size 5; 3KD....-.R	200	12 x 12		**8UD1861-4CF05**		1	1 unit	1CL

Minimum order quantity (PS) or a multiple thereof can be ordered.

© Siemens 2019

	Version	Handle length	Shaft size	SD	Article No. www.siemens.com/product?Article No.	Price per PU	PU (UNIT, SET, M)	PS	PG
		mm	mm x mm	d					
Other accessories for door-coupling rotary operating mechanisms, 8UD1 series									
	Extension shafts								
 8UC6032	**300 mm long**								
	• For sizes 1/2/3, 3KD....-.M/N/P	--	8 x 8		**8UC6032**		1	1 unit	1CL
	• For size 4; 3KD....-.Q	--	10 x 10		**8UC6033**		1	1 unit	1CL
	• For size 5; 3KD....-.R	--	12 x 12		**8UC6034**		1	1 unit	1CL
 8UC6082	**600 mm long**								
	A shaft jack is required for the 8UD1 handle when the 600 mm long shaft is used and for sizes 1/2.								
	• For sizes 1/2/3, 3KD....-.M/N/P	--	8 x 8		**8UC6082**		1	1 unit	1CL
	• For size 4; 3KD....-.Q	--	10 x 10		**8UC6083**		1	1 unit	1CL
	• For size 5; 3KD....-.R	--	12 x 12		**8UC6084**		1	1 unit	1CL
 8UD1900-0FA00	**Shaft jack for 8UD1 handle for shaft, 600 mm**								
	For sizes 1/2, 3KD....-.M/N	--	8 x 8		**8UD1900-0FA00**		1	1 unit	1CL
	Coupling drivers with tolerance compensation								
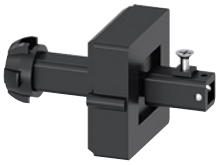 8UD1900-2GA00	• For sizes 1/2, 3KD....-.M/N	--	8 x 8		**8UD1900-2GA00**		1	1 unit	1CB
	• For size 3; 3KD....-.P		8 x 8		**8UD1900-6GA00**		1	1 unit	1CL
	• For size 4; 3KD....-.Q		10 x 10		**8UD1900-3GA00**		1	1 unit	1CL
	• For size 5; 3KD....-.R		12 x 12		**8UD1900-4GA00**		1	1 unit	1CL
	Coupling drivers without tolerance compensation								
 8UD1900-2HA00	• For sizes 1/2, 3KD....-.M/N	--	8 x 8		**8UD1900-2HA00**		1	1 unit	1CB
	• For size 3; 3KD....-.P		8 x 8		**8UD1900-6HA00**		1	1 unit	1CL
	• For size 4; 3KD....-.Q		10 x 10		**8UD1900-3HA00**		1	1 unit	1CL
	• For size 5; 3KD....-.R		12 x 12		**8UD1900-4HA00**		1	1 unit	1CL
	Shaft couplings								
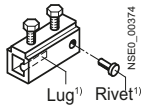 8UC6021 to 8UC6024	• For sizes 1/2/3, 3KD....-.M/N/P	--	8 x 8		**8UC6022**		1	1 unit	1CL
	• For size 4; 3KD....-.Q	--	10 x 10		**8UC6023**		1	1 unit	1CL
	• For size 5; 3KD....-.R	--	12 x 12		**8UC6024**		1	1 unit	1CL

[1] Non-interchangeability features.

7

© Siemens 2019

Accessories and spare parts

Auxiliary switches

	Version	SD	Article No. www.siemens.com/product?Article No.	Price per PU	PU (UNIT, SET, M)	PS	PG
		d					
 Auxiliary switch module, standard version	**Auxiliary switch modules for sizes 1 and 2**						
	Unit is supplied without auxiliary switches, a maximum of 2 auxiliary switches can be installed.						
	• Standard version		**3KD9103-5**		1	1 unit	1CL
	• Version with test function[1)]		**3KD9103-6**		1	1 unit	1CL
	• Version with leading NO contact + test function[1)]		**3KD9103-7**		1	1 unit	1CL
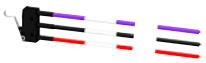 3KD9103-3	**Auxiliary switches for sizes 1 and 2**						
	With soldered-on 50 cm connecting cables						
	• 1 CO contact		**3KD9103-1**		1	1 unit	1CL
	• 1 CO contact, solid-state compatible		**3KD9103-3**		1	1 unit	1CL
 3KD9103-2	**Auxiliary switches for sizes 1 and 2**						
	Without soldered-on connecting cables						
	• 1 CO contact		**3KD9103-2**		1	1 unit	1CL
	• 1 CO contact, solid-state compatible		**3KD9103-4**		1	1 unit	1CL
	**Auxiliary switches for sizes 3 to 5**						
	Auxiliary switches with screw terminals for installation on operating mechanism module. Auxiliary switches with spring-type terminals from the 3SU1 range can also be used						
	All auxiliary switches for sizes 3 to 5 can be used as leading auxiliary switches, depending on the mounting position of the auxiliary switch (see page 7/49)						
	• 1 NO	▶	**3SU1400-1AA10-1BA0**		1	1 unit	41J
	• 1 NO with gold-plated contacts		**3SU1400-1AA10-1LA0**		1	1 unit	41J
	• 1 NC	▶	**3SU1400-1AA10-1CA0**		1	1 unit	41J
	• 1 NC with gold-plated contacts		**3SU1400-1AA10-1MA0**		1	1 unit	41J
	• 1 NO + 1 NC	▶	**3SU1400-1AA10-1FA0**		1	1 unit	41J
	• 1 NO + 1 NC with gold-plated contacts		**3SU1400-1AA10-1QA0**		1	1 unit	41J
	• 2 NO	▶	**3SU1400-1AA10-1DA0**		1	1 unit	41J
	• 2 NO with gold-plated contacts		**3SU1400-1AA10-1NA0**		1	1 unit	41J
	• 2 NC	▶	**3SU1400-1AA10-1EA0**		1	1 unit	41J
	• 2 NC with gold-plated contacts		**3SU1400-1AA10-1PA0**		1	1 unit	41J

[1)] Can only be used with 3KD with front and left operating mechanism.

Accessories for DC applications

	Version	For size	SD	Article No. www.siemens.com/product?Article No.	Price per PU	PU (UNIT, SET, M)	PS	PG
			d					
Connecting bridges								
	For connecting two poles							
	Flat terminals							
 3KD9218-0		2; 3KD....-.N		**3KD9218-0**		1	1 unit	1CL
	For 400 A, two units are required	3; 3KD....-.P		**3KD9318-0**		1	1 unit	1CL
	For 800 A, two units are required	4; 3KD....-.Q		**3KD9418-0**		1	1 unit	1CL
	For 1250 A and 1600 A, two units are required	5; 3KD....-.R		**3KD9518-0**		1	1 unit	1CL
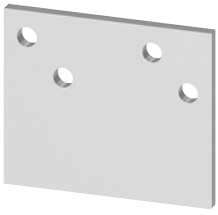 3KD9518-0								

Minimum order quantity (PS) or a multiple thereof can be ordered.

© Siemens 2019

	Version	For size	SD d	Article No. www.siemens.com/product?Article No.	Price per PU	PU (UNIT, SET, M)	PS	PG
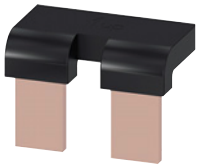 3KD9118-1	***Box terminals***							
		1; 3KD....-.M		**3KD9118-1**		1	1 unit	1CL
		2; 3KD....-.N		**3KD9218-1**		1	1 unit	1CL
Cable connection covers for connecting bridges								
 3KD9204-0	As touch protection for flat terminals							
		2; 3KD....-.N		**3KD9204-0**		1	1 unit	1CL
		3; 3KD....-.P		**3KD9304-0**		1	1 unit	1CL
		4; 3KD....-.Q		**3KD9404-0**		1	1 unit	1CL
		5; 3KD....-.R		**3KD9504-0**		1	1 unit	1CL

Other accessories

	Version	For size	SD d	Article No. www.siemens.com/product?Article No.	Price per PU	PU (UNIT, SET, M)	PS	PG
Phase barriers								
	For 3KD with flat terminals							
 Phase barrier for size 2 devices with 3 or 4 poles	***For 3-pole devices (6 units)***							
		2; 3KD....-.N		**3KD9108-6**		1	1 unit	1CL
		3; 3KD....-.P		**3KD9308-6**		1	1 unit	1CL
		4; 3KD....-.Q		**3KD9408-6**		1	1 unit	1CL
		5; 3KD....-.R		**3KD9508-6**		1	1 unit	1CL
	For 4-pole devices (8 units)							
		2; 3KD....-.N		**3KD9108-8**		1	1 unit	1CL
		3; 3KD....-.P		**3KD9308-8**		1	1 unit	1CL
		4; 3KD....-.Q		**3KD9408-8**		1	1 unit	1CL
		5; 3KD....-.R		**3KD9508-8**		1	1 unit	1CL
Cable connection covers								
	For 3KD with flat terminals							
 3KD9204-6	***For 3-pole devices (6 units)***							
	Standard length							
		2; 3KD....-.N		**3KD9204-6**		1	1 unit	1CL
		3; 3KD....-.P		**3KD9304-6**		1	1 unit	1CL
		4; 3KD....-.Q		**3KD9404-6**		1	1 unit	1CL
		5; 3KD....-.R		**3KD9504-6**		1	1 unit	1CL
 3KD9204-7	**Short version**							
		2; 3KD....-.N		**3KD9204-7**		1	1 unit	1CL
		3; 3KD....-.P		**3KD9304-7**		1	1 unit	1CL
		4; 3KD....-.Q		**3KD9404-7**		1	1 unit	1CL

7

© Siemens 2019

Accessories and spare parts

	Version	For size	SD d	Article No. www.siemens.com/product?Article No.	Price per PU	PU (UNIT, SET, M)	PS	PG
	For 4-pole devices (8 units)							
	Standard length							
 3KD9204-8		2; 3KD....-.N		**3KD9204-8**		1	1 unit	1CL
		3; 3KD....-.P		**3KD9304-8**		1	1 unit	1CL
		4; 3KD....-.Q		**3KD9404-8**		1	1 unit	1CL
		5; 3KD....-.R		**3KD9504-8**		1	1 unit	1CL
	Short version							
 3KD9204-5		2; 3KD....-.N		**3KD9204-5**		1	1 unit	1CL
		3; 3KD....-.P		**3KD9304-5**		1	1 unit	1CL
		4; 3KD....-.Q		**3KD9404-5**		1	1 unit	1CL
	Spare cable connection cover (1 unit)							
	Standard length							
		5; 3KD....-.R		**3KD9504-1**		1	1 unit	1CL
	Short version							
		2; 3KD....-.N		**3KD9204-1**		1	1 unit	1CL
		3; 3KD....-.P		**3KD9304-1**		1	1 unit	1CL
		4; 3KD....-.Q		**3KD9404-1**		1	1 unit	1CL
Blocking pin test function								
	Spare part, is included in the scope of supply of the 3KD.							
	Enables permanent deactivation of the test function for auxiliary switches; it is installed in the operating mechanism module of the 3KD switch disconnector							
	Scope of supply: Blocking pins for 10 3KD switch disconnectors							
		1 and 2		**3KF9112-1AA00**		1	1 unit	1DL
		3 and 4		**3KF9412-1AA00**		1	1 unit	1DL
		5		**3KF9512-1AA00**		1	1 unit	1DL

Minimum order quantity (PS) or a multiple thereof can be ordered.

© Siemens 2019

Spare parts

	Version	For size	SD d	Article No. www.siemens.com/product?Article No.	Price per PU	PU (UNIT, SET, M)	PS	PG
Mounting brackets (4 units)								
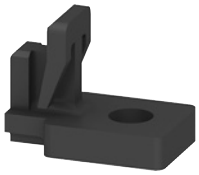	**Mounting brackets** Spare part, is included in the scope of supply of the 3KD.	1 and 2		**3KD9120-1**		1	1 unit	1CL
		3		**3KF9212-0AA00**		1	1 unit	1DL
		4		**3KF9412-0AA00**		1	1 unit	1DL
		5		**3KF9512-0AA00**		1	1 unit	1DL
Slide for mounting on a standard mounting rail								
	Spare part, is included in the scope of supply of the 3KD. Contains 5 parts	1 and 2		**3KF9112-0BA00**		1	1 unit	1DL

© Siemens 2019

Introduction

Overview

The 5TE1 switch disconnectors are available from 100 A to 200 A in 3 and 4-pole versions and can be used as main control switches, repair switches, outgoing feeder switches and emergency mains switching off device.

The series corresponds to the requirements of IEC/EN 60947-3 and its key features are its compact and robust design, high short-circuit strength, high DC breaking capacity and comprehensive accessories.

Its small footprint means it is easy to install in all types of enclosures, distribution boards and control cabinets.

The devices are approved to UL 508 and KEMA certified.

Benefits

- Transparent enclosures ensure that the contact position is always visible
- Contacts with double breaks ensure reliable insulation characteristics
- Can be locked in the OFF position to allow for maintenance work
- With a red knob and yellow cap, it can also be used as an emergency switching off device.

Technical specifications

					5TE1.1	5TE1.2	5TE1.3	5TE1.4
Standards **Approvals**					IEC/EN 60947-3, UL 508 UL 508 for the following types: 5TE1320, 5TE1330, 5TE1340, 5TE1420, 5TE1430 and 5TE1440. UL File No. E302554			
Rated operational current I_e With utilization category AC-21A	Per conduct. path	At U_e =	400 V 415 V 500 V 690 V	A A A A	100 100 100 100	125 125 125 125	160 160 160 160	200 200 200 200
Rated operational current I_e With utilization category AC-22A	Per conduct. path	At U_e =	400 V 415 V 500 V 690 V	A A A A	100 100 100 63	125 125 100 63	160 160 160 160	200 200 200 200
Rated operational current I_e With utilization category AC-23A	Per conduct. path	At U_e =	400 V 415 V 500 V 690 V	A A A A	80 80 50 40		125 125 125 63	160 160 125 80
Rated operational current I_e With utilization category DC-23A	2 poles in series 2 poles in series 4 poles in series		110 V 220 V 220 V	A A A	100 -- 100		160 100 160	
Rated operational voltage U_e				V AC	According to UL: 480, acc. to IEC: 690			
Rated insulation voltage U_i				V AC	690			
Rated impulse withstand voltage U_{imp}	2000 m			kV	8			
Impulse test voltage	At sea level			kV	12.3			
Max. rated operational power With utilization category AC-23A		At U_e =	400 V 415 V 500 V 690 V	kW kW kW kW	44 46 35 36		69 72 86 60	88 92 86 76
Thermal rated current I_{th}	At 40 °C, 50 °C and 60 °C			A	100	125	160	200
Rated making capacity	At 415 V AC-23A			A	1875		3200	4000
Rated breaking capacity	At 415 V AC-23A			A	1000		1920	2400
Rated ultimate short-circuit making capacity I_{cm}	Per conduct. path	At U_e =	400 V 415 V 500 V 690 V	kA kA kA kA	10 10 6.7 6.7			
Rated short-time withstand current I_{cw} (peak value)	Per conduct. path		0.25 s 1 s	kA kA	5 2.5		6 3	
Rated conditional short-circuit current With back-up protection with back-up fuse with identical rated current		At U_e =	400 V 415 V 500 V 690 V	kA kA kA kA	50 50 50 33	33	20	18
Capacitive load	At 400 V			kVar	50	60	77	97
Number of poles					2/3/4			
Rated power dissipation P_v	Per pole			VA	2.9	4.5	6.5	10
Frequency				Hz	50/60			
Conductor cross-sections • Solid and stranded • AWG cables • Copper busbars				 mm^2 AWG mm^2	 6 ... 50 10 ... 1/0 --		 -- 8 max. 20 × 6	
Service life	Electrical Mechanical			Switching cycles	1500 20000		1000 10000	
Acc. to UL 508 **UL 508 General Use 480 V** **UL 508 Manual Motor Controller 230 V** **UL 508 Manual Motor Controller 480 V** **UL 508 Short-circuit at 480 V**	I_n FLA (full load amperes) Power Power With Class H or K5 fuses With J fuses			A A hp hp kA kA	-- -- -- -- -- --	80 28 10 20 10 50	100 34 25 15	125 40 30 15

Minimum order quantity (PS) or a multiple thereof can be ordered.

© Siemens 2019

Selection and ordering data

	Version	I_e	U_e	Mounting width	SD	Article No. www.siemens.com/product?Article No.	Price per PU	PU (UNIT, SET, M)	PS	PG
		A AC	V AC	MW	d					
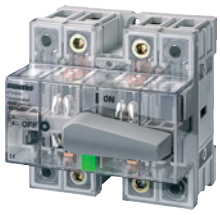	**Switch disconnectors, lockable, with gray knob and transparent enclosure, mounting depth 92 mm**									
	2 NO									
		100	690	5		**5TE1210**		1	1 unit	1BK
		125				**5TE1220**		1	1 unit	1BK
		160		8		**5TE1230**		1	1 unit	1BK
		200				**5TE1240**		1	1 unit	1BK
	3 NO									
		100	690	5		**5TE1310**		1	1 unit	1BK
		125				**5TE1320**		1	1 unit	1BK
		160		8		**5TE1330**		1	1 unit	1BK
		200				**5TE1340**		1	1 unit	1BK
	4 NO									
		100	690	5		**5TE1410**		1	1 unit	1BK
		125				**5TE1420**		1	1 unit	1BK
		160		8		**5TE1430**		1	1 unit	1BK
		200				**5TE1440**		1	1 unit	1BK
	3 NO with N conductor through-type terminal									
		100	690	5		**5TE1610**		1	1 unit	1BK
		125				**5TE1620**		1	1 unit	1BK
		160		8		**5TE1630**		1	1 unit	1BK
		200				**5TE1640**		1	1 unit	1BK
	**Switch disconnectors with red knob and yellow cap, can be used as emergency mains switching off device acc. to IEC 60204-1, EN 60204-1 (VDE 0113-1) if switch is easily accessible, mounting depth 92 mm**									
	3 NO									
		100	690	5		**5TE1315**		1	1 unit	1BK
		125				**5TE1325**		1	1 unit	1BK
		160		8		**5TE1335**		1	1 unit	1BK
		200				**5TE1345**		1	1 unit	1BK
	4 NO									
		100	690	5		**5TE1415**		1	1 unit	1BK
		125				**5TE1425**		1	1 unit	1BK
		160		8		**5TE1435**		1	1 unit	1BK
		200				**5TE1445**		1	1 unit	1BK

7

Minimum order quantity (PS) or a multiple thereof can be ordered.

© Siemens 2019

General data

Accessories

	Version	I_e	U_e	SD	Article No. www.siemens.com/product?Article No.	Price per PU	PU (UNIT, SET, M)	PS	PG
		A AC	V AC	d					
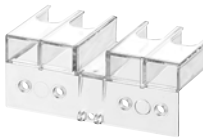 5TE9000	**Terminal covers** Sealable								
	For 100 A and 125 A switch disconnectors				**5TE9000**		1	1 unit	1BK
	For 160 A and 200 A switch disconnectors				**5TE9001**		1	1 unit	1BK
 5TE9001									
	**Cage terminals** For 160 A and 200 A switch disconnectors, 14.5 mm terminal diameter for 35 mm^2 cables, hexagonal socket head screw 5 mm								
	1 set = 3 units				**5TE9003**		1	1 set	1BK
	1 set = 4 units				**5TE9004**		1	1 set	1BK
	**Auxiliary switches** Can be mounted optionally left or right or both sides (2 units); minimum contact load 24 V, 50 mA								
	1 CO	6	230		**5TE9005**		1	1 unit	1BK
	2 CO	6	230		**5TE9006**		1	1 unit	1BK
	**Locking units**								
	For up to three padlocks with max. ∅ 8 mm				**5TE9014**		1	1 unit	1BK
	**Conversion kits, 4-pole, for 100 A and 125 A for the connection of busbars or cables with cable lugs**								
	For busbars max. 15 mm wide including terminal cover				**5TE9015**		1	1 set	1BK
 5TE9010	**Rotary operating mechanisms with extension shafts for mounting on hinged doors or enclosure lids, lockable, IP65**								
	Black knob								
	Shaft length 200 mm				**5TE9010**		1	1 unit	1BK
	Shaft length 400 mm				**5TE9011**		1	1 unit	1BK
	Red knob								
	Shaft length 200 mm				**5TE9012**		1	1 unit	1BK
	Shaft length 400 mm				**5TE9013**		1	1 unit	1BK

Minimum order quantity (PS) or a multiple thereof can be ordered.

© Siemens 2019

Dimensional drawings

5TE1 switch disconnectors, 100 A and 125 A

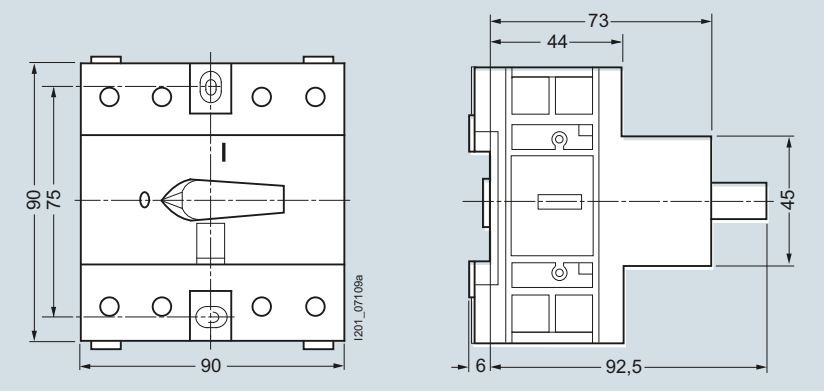

5TE1210 5TE1310 5TE1410 5TE1610
5TE1220 5TE1315 5TE1415 5TE1620
5TE1320 5TE1420
5TE1325 5TE1425

5TE9 auxiliary switches

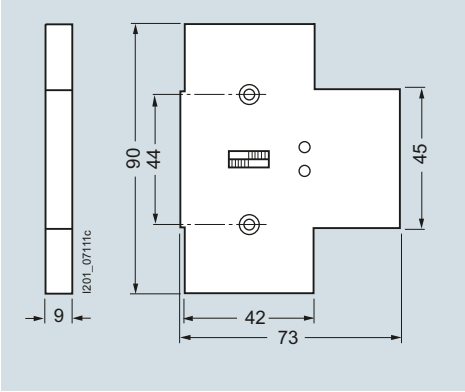

5TE9005
5TE9006

5TE1 switch disconnectors, 160 A and 200 A

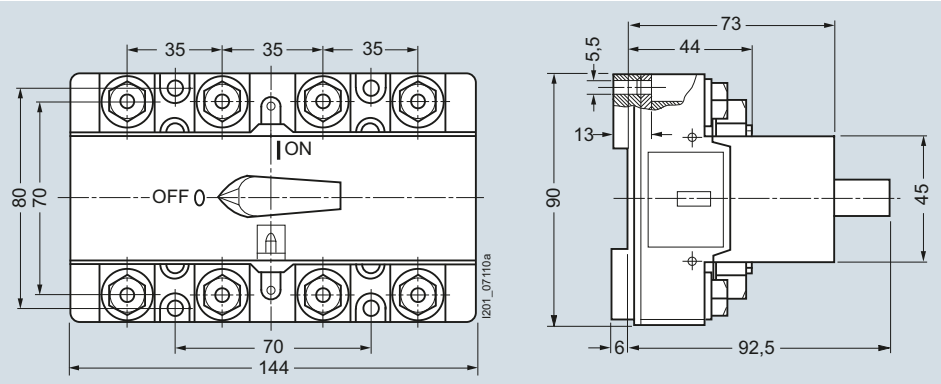

5TE1230 5TE1330 5TE1430 5TE1630
5TE1240 5TE1335 5TE1435 5TE1640
5TE1340 5TE1440
5TE1345 5TE1445

5TE9014 locking units

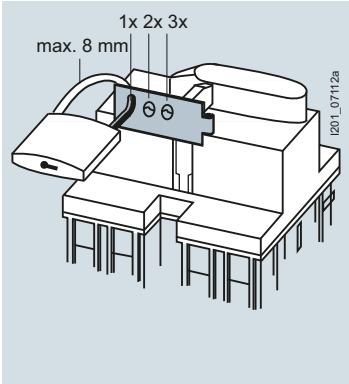

5TE9 rotary actuators with extension shaft

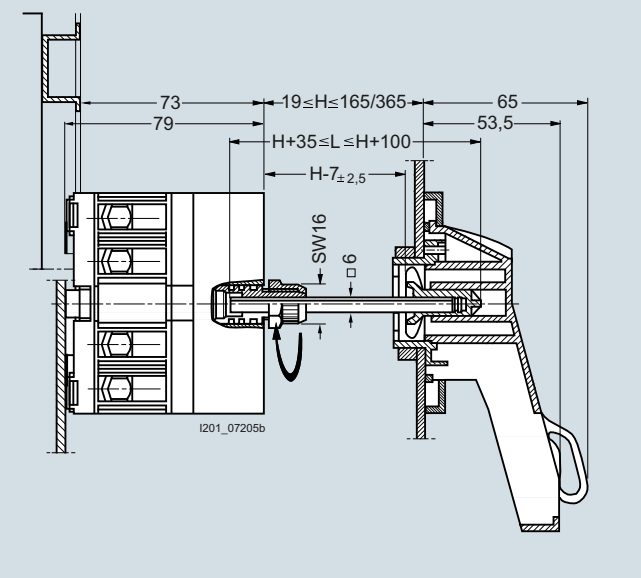

With switch disconnectors 100 A and 125 A
5TE9010, 5TE9011,
5TE9012, 5TE9013

It is possible to open the door in a disconnected state.

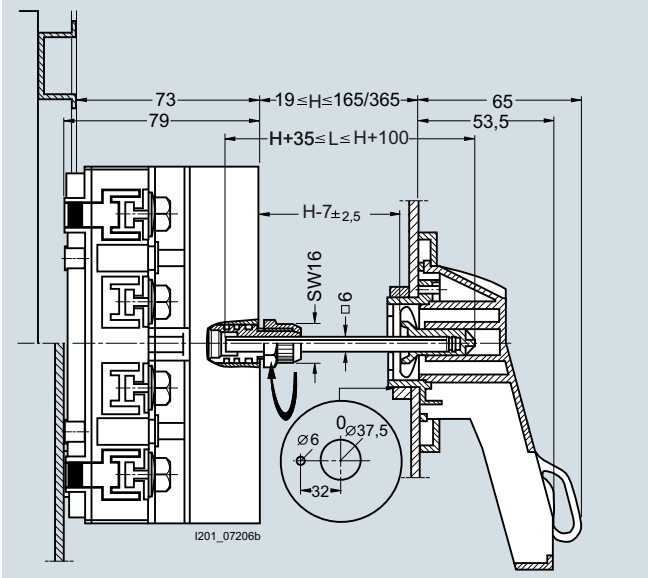

With switch disconnectors 160 A and 200 A
5TE9010, 5TE9011,
5TE9012, 5TE9013

It is possible to open the door in a disconnected state.

Minimum order quantity (PS) or a multiple thereof can be ordered.

© Siemens 2019

General data

Circuit diagrams

Graphical symbols

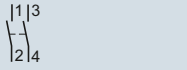

5TE1210
5TE1220
5TE1230
5TE1240

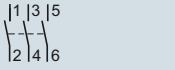

5TE1310
5TE1320
5TE1330
5TE1340

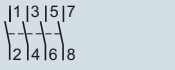

5TE1410
5TE1420
5TE1430
5TE1440

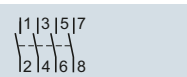

5TE1610
5TE1620
5TE1630
5TE1640



5TE1315
5TE1325
5TE1335
5TE1345

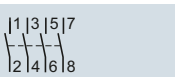

5TE1415
5TE1425
5TE1435
5TE1445

5TE9 auxiliary switches

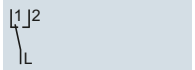

5TE9005

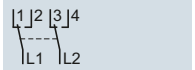

5TE9006

More information

Connection of 5TE1.3 and 5TE1.4 switches, 160 A and 200 A

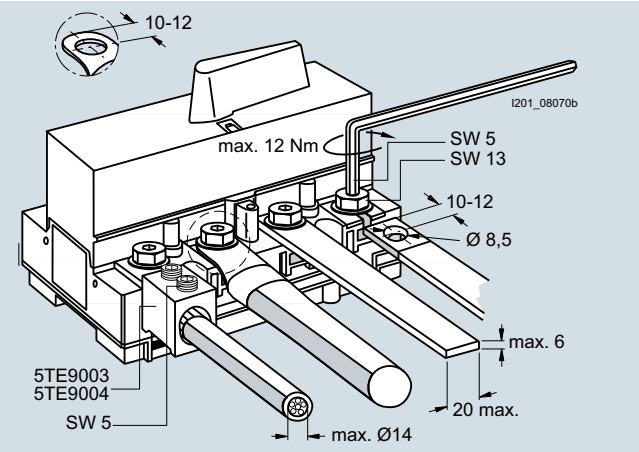

Design

- From 160 A: Supplied with one terminal cover
- 160 A and 200 A: Version for connection with cable lug
- Screw fixing on base plate
- Installation on standard mounting rail to EN 60715, which is raised at least 5 mm from the base plate.

Minimum order quantity (PS) or a multiple thereof can be ordered.

© Siemens 2019

Overview

Note

The 3VT1 switch disconnectors are currently still available, but in the foreseeable future they will no longer be able to be ordered.

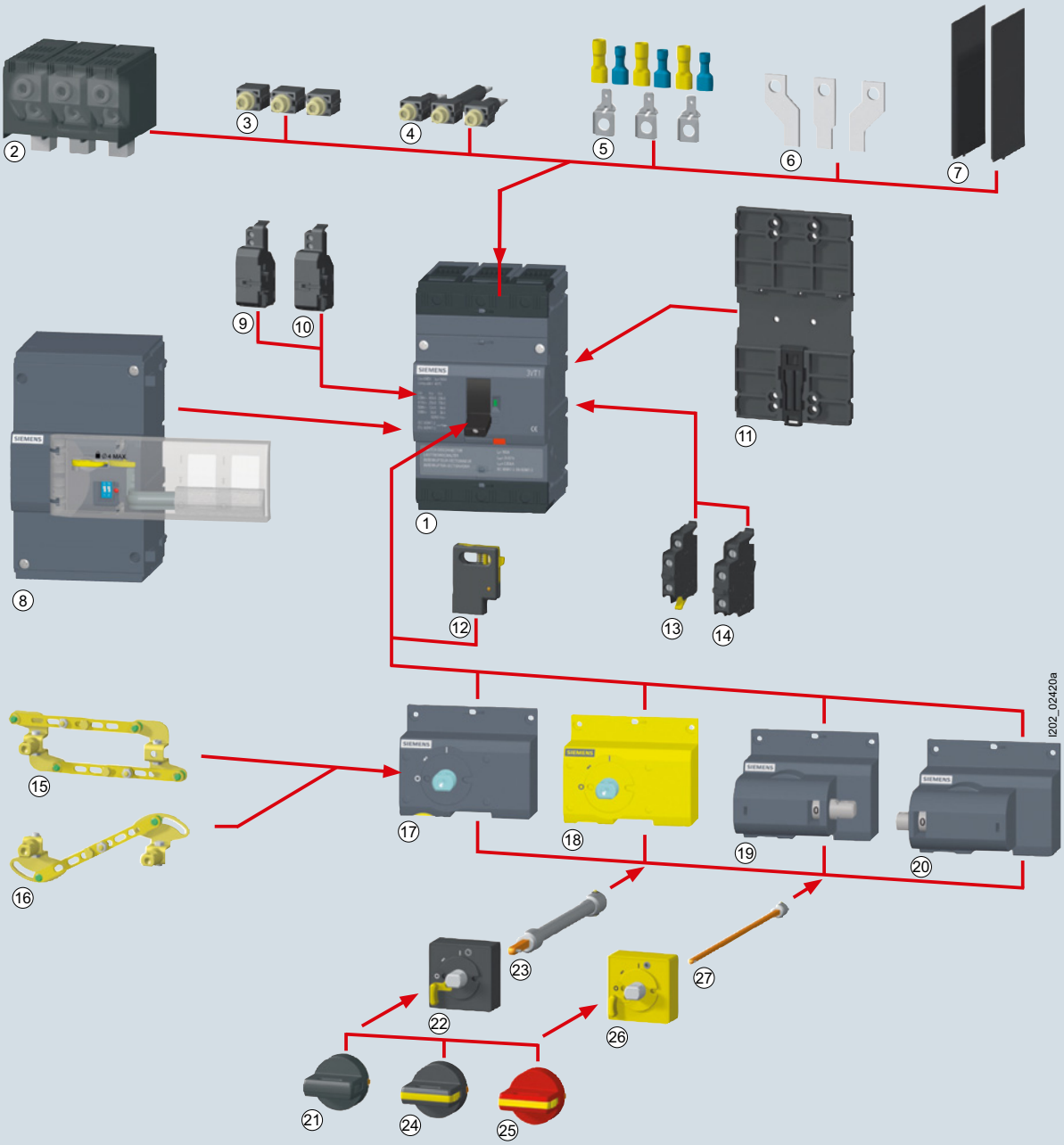

1 Switch disconnector
2 Circular conductor terminal
3 Front connection
4 Rear connection
5 Auxiliary conductor terminal
6 Front connecting bus with increased pole spacing
7 Phase barriers
8 Lateral rotary operating mechanism
9 Shunt release
10 Undervoltage release
11 Adapter to install on 35 mm DIN rail
12 Locking device type lever
13 Signal switch
14 Auxiliary switch
15 Mechanical parallel switching
16 Mechanical interlocking
17 Front rotary operating mechanism
18 Front rotary operating mechanism
19 Lateral rotary operating mechanism (right)
20 Lateral rotary operating mechanism (left)
21 Non lockable knob
22 Coupling driver
23 Extension shaft, extendable
24 Lockable knob
25 Lockable knob
26 Coupling driver
27 Extension shaft

© Siemens 2019

Application

3VT switch disconnectors can be used as main control switches for sub-distribution boards, repair and transfer switches for cables, busbars or unit combinations.

As three and four-pole versions, they ensure making and breaking of the specified rated current under load. At the same time, they constitute a safety isolating function and isolating distance in all low-voltage circuits.

The position of the locking device type lever always matches that of the contacts (positive operation).

All 3VT switch disconnectors meet the requirements of IEC 60947-1 and IEC 60947-3.

Technical specifications

Type		3VT1	3VT2	3VT3	3VT4	3VT5
Standards		**IEC 60947-1, IEC 60947-3**				
						
Rated uninterrupted current I_u	A	160	250	630	1000	1600
Number of poles		3 and 4	3 and 4	3 and 4	3	3
Rated insulation voltage U_i	V	690				
Utilization category						
• 690 V AC		AC-23A	AC-23B			
• 440 V DC		DC-22A	DC-23B			
Rated operational voltage U_e						
• 50/60 Hz AC	V	690				
• DC		440 (3 conducting paths series-connected)				
Rated short-time withstand current I_{cw}	kA_{rms}	2/1 s	3/5 s	7.5/5 s	15/1 s	20/1 s
Rated impulse withstand voltage U_{imp}	kV	8				
Rated short-circuit making capacity I_{cm}						
• At 415 V AC	kA	2.8	4	14	30	40
• At 440 V DC	kA	2.8	4	14	30	40
Service life						
• Mechanical	Operating cycles	20000	30000	20000	10000	10000
• Electrical at 415 V AC	Operating cycles	6000	3000	5000	4000	4000
Switching frequency	Operating cycles/h	120	120	120	120	120
Power loss per pole	W	15	18	75	100	120

Minimum order quantity (PS) or a multiple thereof can be ordered.

© Siemens 2019

Selection and ordering data

	Version	Rated uninterrupted current I_u	SD	Article No. www.siemens.com/product?Article No.	Price per PU	PU (UNIT, SET, M)	PS	PG
		A	d					
3VT1 switch disconnectors								
	3-pole	160		**3VT1716-2DE36-0AA0**		1	1 unit	1CC
	4-pole	160		**3VT1716-2EE46-0AA0**		1	1 unit	1CC

Accessories

Auxiliary switches and auxiliary releases

	Rated operational voltage U_s	Frequency	SD	Article No. www.siemens.com/product?Article No.	Price per PU	PU (UNIT, SET, M)	PS	PG
	V	Hz	d					
Auxiliary switches								
	**Changeover contact (1 CO)**							
	• 60 ... 250 AC/DC	50/60		**3VT9100-2AB10**		1	1 unit	1CC
	• 5 ... 60 AC/DC	50/60		**3VT9100-2AB20**		1	1 unit	1CC
Alarm switches								
	**Changeover contact (1 CO)**							
	• 60 ... 250 AC/DC	50/60		**3VT9100-2AH10**		1	1 unit	1CC
	• 5 ... 60 AC/DC	50/60		**3VT9100-2AH20**		1	1 unit	1CC
Shunt releases								
	• 12 DC	--		**3VT9100-1SB00**		1	1 unit	1CC
	• 24, 48 AC/DC	50/60		**3VT9100-1SC00**		1	1 unit	1CC
	• 110, 230 AC 110, 220 DC	50/60		**3VT9100-1SD00**		1	1 unit	1CC
	• 230, 400 AC 220 DC	50/60		**3VT9100-1SE00**		1	1 unit	1CC
Undervoltage releases								
	• 24, 48 AC	50/60		**3VT9100-1UC00**		1	1 unit	1CC
	• 110, 230 AC	50/60		**3VT9100-1UD00**		1	1 unit	1CC
	• 230, 400 AC	50/60		**3VT9100-1UE00**		1	1 unit	1CC
	• 24, 48 DC	--		**3VT9100-1UU00**		1	1 unit	1CC
	• 110, 220 DC	--		**3VT9100-1UV00**		1	1 unit	1CC

Minimum order quantity (PS) or a multiple thereof can be ordered.

© Siemens 2019

3VT1 switch disconnectors up to 160 A

Manual operating mechanisms

	Version	Color	SD d	Article No. www.siemens.com/product?Article No.	Price per PU	PU (UNIT, SET, M)	PS	PG
Rotary operating mechanisms								
	Manual rotary operating mechanisms							
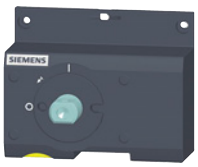	• Not lockable	Gray		**3VT9100-3HA10**		1	1 unit	1CC
	• Lockable with padlock	Gray		**3VT9100-3HA20**		1	1 unit	1CC
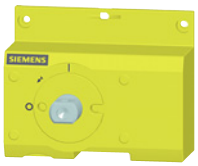	• Lockable with padlock	Yellow		**3VT9100-3HB20**		1	1 unit	1CC
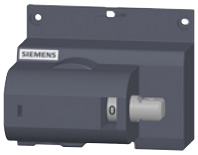	• For lateral operation, mounted on left side, not lockable	Gray		**3VT9100-3HC10**		1	1 unit	1CC
	• For lateral operation, mounted on right side, not lockable	Gray		**3VT9100-3HD10**		1	1 unit	1CC
	Handle for manual rotary operating mechanisms							
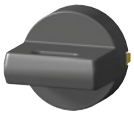	• Not lockable	Black		**3VT9100-3HE10**		1	1 unit	1CC
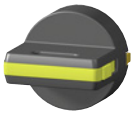	• Lockable with padlock	Black		**3VT9100-3HE20**		1	1 unit	1CC
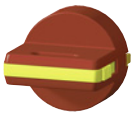	• Lockable with padlock	Red		**3VT9100-3HF20**		1	1 unit	1CC
	Masking plates for door-coupling rotary operating mechanism, defeatable							
	For use with black handle 3VT9100-3HE..							
	• Degree of protection IP40	Black		**3VT9100-3HG10**		1	1 unit	1CC
	• Degree of protection IP66	Black		**3VT9100-3HG20**		1	1 unit	1CC
	For use with red handle 3VT9100-3HF20							
	• Degree of protection IP40	Yellow		**3VT9100-3HH10**		1	1 unit	1CC
	• Degree of protection IP66	Yellow		**3VT9100-3HH20**		1	1 unit	1CC

Minimum order quantity (PS) or a multiple thereof can be ordered.

© Siemens 2019

	Version	Color	SD	Article No. www.siemens.com/product?Article No.	Price per PU	PU (UNIT, SET, M)	PS	PG
			d					
	Extension shafts							
	• Length 361 mm, can be shortened			**3VT9100-3HJ10**		1	1 unit	1CC
	• Length 215 ... 363 mm, extendable			**3VT9100-3HJ20**		1	1 unit	1CC
Mechanical interlocks								
	**Mechanical interlocks**			**3VT9100-8LA00**		1	1 unit	1CC
Mechanical link for paralleling								
	**Mechanical link for paralleling**			**3VT9100-8LB00**		1	1 unit	1CC

Motorized operating mechanisms

	Rated operational voltage U_s	Frequency	SD	Article No. www.siemens.com/product?Article No.	Price per PU	PU (UNIT, SET, M)	PS	PG
	V	Hz	d					
Motorized operating mechanisms, lateral mounting								
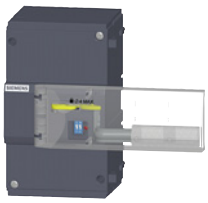	**With locking mechanism for 3 padlocks**							
	24 AC/DC	50/60		**3VT9100-3MA00**		1	1 unit	1CC
	48 AC/DC	50/60		**3VT9100-3MB00**		1	1 unit	1CC
	110 AC/DC	50/60		**3VT9100-3MD00**		1	1 unit	1CC
	230 AC/220 DC	50/60		**3VT9100-3ME00**		1	1 unit	1CC
Accessories for motorized operating mechanisms								
	**Extension cables for motorized operating mechanism** 12 cables, length 60 cm			**3VT9100-3MF00**		1	1 unit	1CC

7

© Siemens 2019

3VT1 switch disconnectors up to 160 A

Connection accessories

	Version	Conductor cross-sections	Connection type	SD	Article No. www.siemens.com/product?Article No.	Price per PU	PU (UNIT, SET, M)	PS	PG
		mm^2		d					
Connection methods									
	3-pole								
	**Front connecting bars** For increased pole spacing (1 set = 3 units)	--	Cu/Al busbars, cable lugs		**3VT9100-4ED30**		1	1 unit	1CC
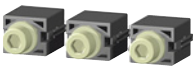	**Front terminals** (1 set = 3 units)	--	Cu/Al busbars, cable lugs		**3VT9100-4TA30**		1	1 unit	1CC
	**Rear terminals** (1 set = 3 units)	--	Cu/Al busbars, cable lugs		**3VT9100-4RC30**		1	1 unit	1CC
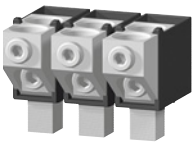 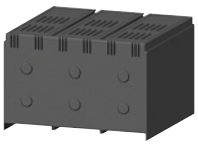	**Multiple feed-in terminals** Terminal covers, degree of protection IP20 (included in scope of supply) (1 set = 3 units)	2 x 25 ... 120	Cu/Al cables		**3VT9100-4TF30**		1	1 unit	1CC
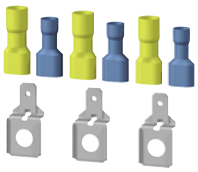	**Auxiliary conductor terminals** (1 set = 3 units)	1.5 ... 2.5; 4 ... 6	Flexible Cu conductors		**3VT9100-4TN30**		1	1 unit	1CC
	4-pole								
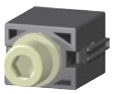	**Front terminals** For 4th pole (for use with 3VT9100-4TA30 connection method) (1 set = 1 unit)	--	Cu/Al busbars, cable lugs		**3VT9100-4TA00**		1	1 unit	1CC
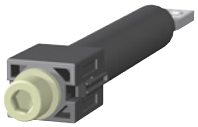	**Rear terminals** For 4th pole (for use with 3VT9100-4RC30 connection method) (1 set = 1 unit)	--	Cu/Al busbars, cable lugs		**3VT9100-4RC00**		1	1 unit	1CC
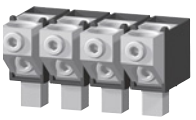 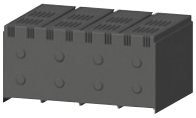	**Multiple feed-in terminals** Terminal covers, degree of protection IP20 (included in scope of supply) (1 set = 1 unit)	2 x 25 ... 120	Cu/Al cables		**3VT9100-4TF40**		1	1 unit	1CC
	**Auxiliary conductor terminals** For 4th pole (for use with 3VT9100-4TN30 connection method) (1 set = 1 unit)	1.5 ... 2.5; 4 ... 6	Flexible Cu conductors		**3VT9100-4TN00**		1	1 unit	1CC

7

Minimum order quantity (PS) or a multiple thereof can be ordered.

© Siemens 2019

Further accessories

	Version	SD d	Article No. www.siemens.com/product?Article No.	Price per PU	PU (UNIT, SET, M)	PS	PG
Phase barriers, covers, locking devices							
	**Phase barriers** Included in scope of supply of switch disconnector. If infeed is from below, the switch disconnectors must also be fitted on the sides of terminals 2, 4 and 6 with these phase barriers.						
	• For 3-pole version, 2 units		**3VT9100-8CE30**		1	1 unit	1CC
	• For 4-pole version, 1 unit (for use with 3VT9100-8CE30)		**3VT9100-8CE00**		1	1 unit	1CC
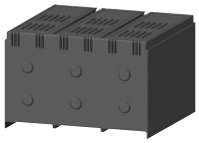	**Terminal covers, degree of protection IP20** Increases degree of protection of connection point to IP20, e.g. when used with cable lugs.						
	• 3-pole version		**3VT9100-8CA30**		1	1 unit	1CC
	• 4-pole version		**3VT9100-8CA40**		1	1 unit	1CC
	**Locking devices for toggle levers** • Allows the switch disconnector to be locked in the "manual off" position. • Locking is by means of a padlock with a diameter of 3 ... 4 mm.		**3VT9100-3HL00**		1	1 unit	1CC
Mounting adapters							
	3/4-pole version						
	**Mounting adapters for mounting on a 35 mm standard mounting rail**		**3VT9100-4PP30**		1	1 unit	1CC

© Siemens 2019

Selection and ordering data

	Version	Rated uninterrupted current I_u	SD	Article No. www.siemens.com/product?Article No.	Price per PU	PU (UNIT, SET, M)	PS	PG
		A	d					
3VT2 switch disconnectors								
	3-pole	250		**3VT2725-2DE36-0AA0**		1	1 unit	1CC
	4-pole	250		**3VT2725-2EE46-0AA0**		1	1 unit	1CC

Accessories

Auxiliary switches and auxiliary releases

	Rated operational voltage U_s	Frequency	SD	Article No. www.siemens.com/product?Article No.	Price per PU	PU (UNIT, SET, M)	PS	PG
	V	Hz	d					
Auxiliary switches and alarm switches								
	With NO contact (1 NO)							
	60 ... 500 AC/DC	50/60		**3VT9300-2AC10**		1	1 unit	1CC
	5 ... 60 AC/DC	50/60		**3VT9300-2AC20**		1	1 unit	1CC
	With NC contact (1 NC)							
	60 ... 500 AC/DC	50/60		**3VT9300-2AD10**		1	1 unit	1CC
	5 ... 60 AC/DC	50/60		**3VT9300-2AD20**		1	1 unit	1CC
	With double contact (2 NC)							
	60 ... 500 AC/DC	50/60		**3VT9300-2AE10**		1	1 unit	1CC
	5 ... 60 AC/DC	50/60		**3VT9300-2AE20**		1	1 unit	1CC
	With double contact (1 NO and 1 NC)							
	60 ... 500 AC/DC	50/60		**3VT9300-2AF10**		1	1 unit	1CC
	5 ... 60 AC/DC	50/60		**3VT9300-2AF20**		1	1 unit	1CC
	With double contact (2 NO)							
	60 ... 500 AC/DC	50/60		**3VT9300-2AG10**		1	1 unit	1CC
	5 ... 60 AC/DC	50/60		**3VT9300-2AG20**		1	1 unit	1CC
	Changeover contact (1 CO)							
	60 ... 250 AC/DC	50/60		**3VT9300-2AH10**		1	1 unit	1CC
	5 ... 60 AC/DC	50/60		**3VT9300-2AH20**		1	1 unit	1CC
	Leading contacts Leading against the main contacts when switching off (70 ... 150 ms)							
	250 AC	50/60		**3VT9300-2AJ00**		1	1 unit	1CC

Minimum order quantity (PS) or a multiple thereof can be ordered.

© Siemens 2019

	Rated operational voltage U_s	Frequency	SD	Article No. www.siemens.com/product?Article No.	Price per PU	PU (UNIT, SET, M)	PS	PG
	V	Hz	d					
Shunt releases								
	12 DC	--		**3VT9300-1SB00**		1	1 unit	1CC
	24, 40, 48 AC/DC	50/60		**3VT9300-1SC00**		1	1 unit	1CC
	110 AC/DC	50/60		**3VT9300-1SD00**		1	1 unit	1CC
	230, 400, 500 AC/220 DC	50/60		**3VT9300-1SE00**		1	1 unit	1CC
Undervoltage releases								
	24, 40, 48 AC/DC	50/60		**3VT9300-1UC00**		1	1 unit	1CC
	110 AC/DC	50/60		**3VT9300-1UD00**		1	1 unit	1CC
	230, 400, 500 AC/220 DC	50/60		**3VT9300-1UE00**		1	1 unit	1CC
	With leading contact • Leading against the main contacts when switching on (70 ... 150 ms) • Not suitable for 3VT9200-3M..0 motorized operating mechanism							
	24, 40, 48 AC/DC	50/60		**3VT9300-1UC10**		1	1 unit	1CC
	110 AC/DC	50/60		**3VT9300-1UD10**		1	1 unit	1CC
	230, 400, 500 AC/220 DC	50/60		**3VT9300-1UE10**		1	1 unit	1CC

Manual operating mechanisms

	Version	Color	SD	Article No. www.siemens.com/product?Article No.	Price per PU	PU (UNIT, SET, M)	PS	PG
			d					
Rotary operating mechanisms								
	Manual rotary operating mechanisms							
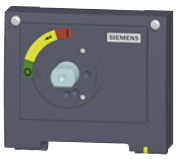	• Not lockable	Gray		**3VT9200-3HA10**		1	1 unit	1CC
	• Lockable with padlock	Gray		**3VT9200-3HA20**		1	1 unit	1CC
	• Lockable with padlock	Yellow label		**3VT9200-3HB20**		1	1 unit	1CC
	• For lateral operation, mounted on left side, not lockable	Gray		**3VT9200-3HC10**		1	1 unit	1CC
	• For lateral operation, mounted on right side, not lockable	Gray		**3VT9200-3HD10**		1	1 unit	1CC
	Handle for manual rotary operating mechanisms							
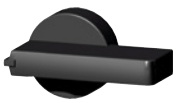	• Not lockable	Black		**3VT9300-3HE10**		1	1 unit	1CC
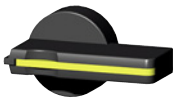	• Lockable with padlock	Black		**3VT9300-3HE20**		1	1 unit	1CC
	• Lockable with padlock	Red		**3VT9300-3HF20**		1	1 unit	1CC

© Siemens 2019

3VT2 switch disconnectors up to 250 A

	Version	Color	SD d	Article No. www.siemens.com/product?Article No.	Price per PU	PU (UNIT, SET, M)	PS	PG
	Masking plates for door-coupling rotary operating mechanism							
	For use with black handle 3VT9300-3HE..							
	• Degree of protection IP40	Black		**3VT9300-3HG10**		1	1 unit	1CC
	• Degree of protection IP66	Black		**3VT9300-3HG20**		1	1 unit	1CC
	For use with red handle 3VT9300-3HF20							
	• Degree of protection IP40	Yellow		**3VT9300-3HH10**		1	1 unit	1CC
	• Degree of protection IP66	Yellow		**3VT9300-3HH20**		1	1 unit	1CC
	Masking plates for door-coupling rotary operating mechanism, defeatable							
	For use with black handle 3VT9300-3HE..							
	• Degree of protection IP40	Black		**3VT9300-3HG30**		1	1 unit	1CC
	For use with red handle 3VT9300-3HF20							
	• Degree of protection IP40	Yellow		**3VT9300-3HH30**		1	1 unit	1CC
	Extension shafts							
	• Length 365 mm, can be shortened			**3VT9300-3HJ10**		1	1 unit	1CC
	• Length 252 ... 416 mm, extendable			**3VT9300-3HJ20**		1	1 unit	1CC

7

Minimum order quantity (PS) or a multiple thereof can be ordered.

© Siemens 2019

Motorized operating mechanisms

	Rated operational voltage U_s	Frequency	SD	Article No. www.siemens.com/product?Article No.	Price per PU	PU (UNIT, SET, M)	PS	PG
	V	Hz	d					
Motorized operating mechanisms with stored-energy mechanism								
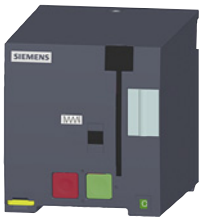	**With locking mechanism for 3 padlocks, degree of protection IP00**							
	24 AC/DC	50/60		**3VT9200-3MJ00**		1	1 unit	1CC
	48 AC/DC	50/60		**3VT9200-3ML00**		1	1 unit	1CC
	110 AC/DC	50/60		**3VT9200-3MN00**		1	1 unit	1CC
	230 AC/220 DC	50/60		**3VT9200-3MQ00**		1	1 unit	1CC
	Motorized operating mechanism with operating cycle counter							
	24 AC/DC	50/60		**3VT9200-3MJ10**		1	1 unit	1CC
	48 AC/DC	50/60		**3VT9200-3ML10**		1	1 unit	1CC
	110 AC/DC	50/60		**3VT9200-3MN10**		1	1 unit	1CC
	230 AC/220 DC	50/60		**3VT9200-3MQ10**		1	1 unit	1CC
Accessories for motorized operating mechanisms								
	**Operating cycle counter with cable** Length 110 cm			**3VT9300-3MF10**		1	1 unit	1CC
	**Extension cables for motorized operating mechanism** 12 conductors, length 60 cm			**3VT9300-3MF00**		1	1 unit	1CC

Mounting accessories

	Version	SD	Article No. www.siemens.com/product?Article No.	Price per PU	PU (UNIT, SET, M)	PS	PG
		d					
Plug-in base assembly kits							
	**3-pole**		**3VT9200-4PA30**		1	1 unit	1CC
	4-pole		**3VT9200-4PA40**		1	1 unit	1CC
Withdrawable unit kits							
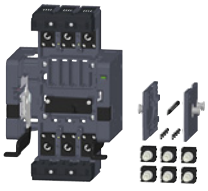	**3-pole**		**3VT9200-4WA30**		1	1 unit	1CC
	4-pole		**3VT9200-4WA40**		1	1 unit	1CC

7

© Siemens 2019

Connection accessories

	Version	Conductor cross-sections	Connection type	SD	Article No. www.siemens.com/product?Article No.	Price per PU	PU (UNIT, SET, M)	PS	PG
		mm^2		d					
Connection methods									
	3-pole								
	Front connecting bars								
	For increased pole spacing, short (1 set = 3 units)	--	Cu/Al busbars, cable lugs, flexibars		**3VT9200-4ED30**		1	1 unit	1CC
	For increased pole spacing, long (1 set = 3 units)	--	Cu/Al busbars, cable lugs, flexibars		**3VT9200-4EE30**		1	1 unit	1CC
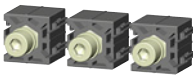	Front terminals Included in scope of supply of all switch disconnectors (1 set = 3 units)	--	Cu/Al busbars, cable lugs, flexibars		**3VT9200-4TA30**		1	1 unit	1CC
	**Rear terminals** (1 set = 3 units)	--	Cu/Al busbars, cable lugs		**3VT9200-4RC30**		1	1 unit	1CC
	Multiple feed-in terminals[1]								
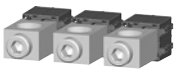	For 1 cable	1 x 25 ... 150	Cu/Al cables		**3VT9215-4TD30**		1	1 unit	1CC
	(1 set = 3 units)	1 x 150 ... 240	Cu/Al cables		**3VT9224-4TD30**		1	1 unit	1CC
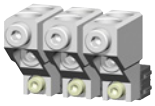	For 2 cables	2 x 25 ... 150	Cu/Al cables		**3VT9215-4TF30**		1	1 unit	1CC
	(1 set = 3 units)	2 x 150 ... 240	Cu/Al cables		**3VT9224-4TF30**		1	1 unit	1CC
	For 6 cables (1 set = 3 units)	6 x 6 ... 35	Cu/Al cables		**3VT9203-4TF30**		1	1 unit	1CC
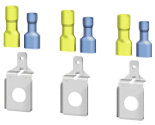	**Auxiliary conductor terminals** (1 set = 3 units)	1.5 ... 2.5; 4 ... 6	Flexible Cu conductors		**3VT9200-4TN30**		1	1 unit	1CC
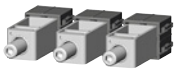	**Box terminals** (1 set = 3 units)	16 ... 150	Cu cables, flexibars		**3VT9200-4TC30**		1	1 unit	1CC
	4-pole								
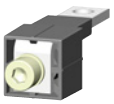	**Rear connections for the 4th pole** Use with 3VT9200-4RC30 connection method (1 set = 1 unit)	--	Cu/Al busbars/ cable lugs		**3VT9200-4RC00**		1	1 unit	1CC
	Multiple feed-in terminals for the 4th pole								
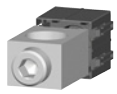	Use with 3VT9215-4TD30 or 3VT9224-4TD30 connection method, for 1 cable	1 x 25 ... 150	Cu/Al cables		**3VT9215-4TD00**		1	1 unit	1CC
	(1 set = 1 unit)	1 x 150 ... 240	Cu/Al cables		**3VT9224-4TD00**		1	1 unit	1CC
	Use with 3VT9215-4TF30 or 3VT9224-4TF30 connection method, for 2 cables	2 x 25 ... 150	Cu/Al cables		**3VT9215-4TF00**		1	1 unit	1CC
	(1 set = 1 unit)	2 x 150 ... 240	Cu/Al cables		**3VT9224-4TF00**		1	1 unit	1CC
	Use with 3VT9203-4TF30 connection method, for 6 cables (1 set = 1 unit)	6 x 6 ... 35	Cu/Al cables		**3VT9203-4TF00**		1	1 unit	1CC
	Box terminals for the 4th pole								
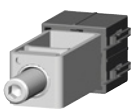	Use with 3VT9200-4TC30 connection method (1 set = 1 unit)	16 ... 150	Cu cables, flexibars		**3VT9200-4TC00**		1	1 unit	1CC

[1] Use terminal cover 3VT9200-8CB30 to increase termination point protection to IP20.

Minimum order quantity (PS) or a multiple thereof can be ordered.

© Siemens 2019

Further accessories

	Version	SD d	Article No. www.siemens.com/product?Article No.	Price per PU	PU (UNIT, SET, M)	PS	PG
Phase barriers, covers, locking devices							
	**Phase barriers** Included in scope of supply of switch disconnector If infeed is from below, the switch disconnectors must also be fitted on the sides of terminals 2, 4 and 6 with these phase barriers. • For 3-pole version, 2 units • For 4-pole version, 1 unit for use with 3VT9300-8CE30		**3VT9300-8CE30** **3VT9300-8CE00**		1 1	1 unit 1 unit	1CC 1CC
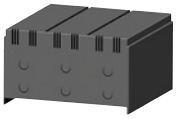	**Terminal covers, degree of protection IP20** Increases degree of protection of termination point to IP20, e.g. when used with circular conductor terminals, intended for fixed mounting, plug-in and withdrawable versions • 3-pole version • 4-pole version		**3VT9200-8CB30** **3VT9200-8CB40**		1 1	1 unit 1 unit	1CC 1CC
	**Locking devices for toggle levers** • Allows the switch disconnector to be locked in the "manual off" position. • Locking is by means of up to 3 padlocks with a diameter of 4 ... 6 mm.		**3VT9200-3HL00**		1	1 unit	1CC
	**Sealing devices** Sealing for: • Overcurrent releases • Accessory compartment covers • Terminal covers • Manual operating mechanisms • Motorized operating mechanisms		**3VT9200-8BN00**		1	2 units	1CC
	**Connecting cables** For connecting switch disconnector accessories for withdrawable versions (can also be used for plug-in and fixed-mounted versions)		**3VT9300-4PL00**		1	1 unit	1CC
	**Position signaling switches** For indicating the position of the switch disconnector in plug-in or withdrawable devices		**3VT9300-4WL00**		1	1 unit	1CC
	**Coding sets** Prevents use of the wrong switching unit in plug-in or withdrawable devices		**3VT9200-4WN00**		1	1 unit	1CC
	**Covers for pushbuttons** For motorized operating mechanisms; the cover may be equipped with a sealing device.		**3VT9300-3MF20**		1	1 unit	1CC

© Siemens 2019

Selection and ordering data

	Version	Rated uninterrupted current I_u	SD	Article No. www.siemens.com/product?Article No.	Price per PU	PU (UNIT, SET, M)	PS	PG
		A	d					
3VT3 switch disconnectors								
	3-pole	630		**3VT3763-2DE36-0AA0**		1	1 unit	1CC
	4-pole	630		**3VT3763-2EE46-0AA0**		1	1 unit	1CC

Accessories

Auxiliary switches and auxiliary releases

	Rated operational voltage U_s	Frequency	SD	Article No. www.siemens.com/product?Article No.	Price per PU	PU (UNIT, SET, M)	PS	PG
	V	Hz	d					
Auxiliary switches and alarm switches								
	With NO contact (1 NO)							
	60 ... 500 AC/DC	50/60		**3VT9300-2AC10**		1	1 unit	1CC
	5 ... 60 AC/DC	50/60		**3VT9300-2AC20**		1	1 unit	1CC
	With NC contact (1 NC)							
	60 ... 500 AC/DC	50/60		**3VT9300-2AD10**		1	1 unit	1CC
	5 ... 60 AC/DC	50/60		**3VT9300-2AD20**		1	1 unit	1CC
	With double contact (2 NC)							
	60 ... 500 AC/DC	50/60		**3VT9300-2AE10**		1	1 unit	1CC
	5 ... 60 AC/DC	50/60		**3VT9300-2AE20**		1	1 unit	1CC
	With double contact (1 NO + 1 NC)							
	60 ... 500 AC/DC	50/60		**3VT9300-2AF10**		1	1 unit	1CC
	5 ... 60 AC/DC	50/60		**3VT9300-2AF20**		1	1 unit	1CC
	With double contact (2 NO)							
	60 ... 500 AC/DC	50/60		**3VT9300-2AG10**		1	1 unit	1CC
	5 ... 60 AC/DC	50/60		**3VT9300-2AG20**		1	1 unit	1CC
	Changeover contact (1 CO)							
	60 ... 250 AC/DC	50/60		**3VT9300-2AH10**		1	1 unit	1CC
	5 ... 60 AC/DC	50/60		**3VT9300-2AH20**		1	1 unit	1CC
	Leading contacts Leading against the main contacts when switching off (70 ... 150 ms)							
	250 AC	50/60		**3VT9300-2AJ00**		1	1 unit	1CC

Minimum order quantity (PS) or a multiple thereof can be ordered.

© Siemens 2019

	Rated operational voltage U_s	Frequency	SD	Article No. www.siemens.com/product?Article No.	Price per PU	PU (UNIT, SET, M)	PS	PG
	V	Hz	d					
Shunt releases								
	12 DC	--		**3VT9300-1SB00**		1	1 unit	1CC
	24, 40, 48 AC/DC	50/60		**3VT9300-1SC00**		1	1 unit	1CC
	110 AC/DC	50/60		**3VT9300-1SD00**		1	1 unit	1CC
	230, 400, 500 AC/220 DC	50/60		**3VT9300-1SE00**		1	1 unit	1CC
Undervoltage releases								
	24, 40, 48 AC/DC	50/60		**3VT9300-1UC00**		1	1 unit	1CC
	110 AC/DC	50/60		**3VT9300-1UD00**		1	1 unit	1CC
	230, 400, 500 AC/220 DC	50/60		**3VT9300-1UE00**		1	1 unit	1CC
	With leading contact • Leading against the main contacts when switching on (70 ... 150 ms) • Not suitable for 3VT9200-3M..0 motorized operating mechanism							
	24, 40, 48 AC/DC	50/60		**3VT9300-1UC10**		1	1 unit	1CC
	110 AC/DC	50/60		**3VT9300-1UD10**		1	1 unit	1CC
	230, 400, 500 AC/220 DC	50/60		**3VT9300-1UE10**		1	1 unit	1CC

Manual operating mechanisms

	Version	Color	SD	Article No. www.siemens.com/product?Article No.	Price per PU	PU (UNIT, SET, M)	PS	PG
			d					
Rotary operating mechanisms								
	Manual rotary operating mechanisms							
	• Not lockable	Gray		**3VT9300-3HA10**		1	1 unit	1CC
	• Lockable with padlock	Gray		**3VT9300-3HA20**		1	1 unit	1CC
	• Lockable with padlock	Yellow label		**3VT9300-3HB20**		1	1 unit	1CC
	• For lateral operation, mounted on left side, not lockable	Gray		**3VT9300-3HC10**		1	1 unit	1CC
	• For lateral operation, mounted on right side, not lockable	Gray		**3VT9300-3HD10**		1	1 unit	1CC
	Handle for manual rotary operating mechanisms							
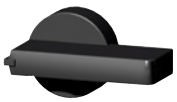	• Not lockable	Black		**3VT9300-3HE10**		1	1 unit	1CC
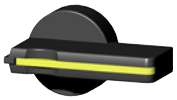	• Lockable with padlock	Black		**3VT9300-3HE20**		1	1 unit	1CC
	• Lockable with padlock	Red		**3VT9300-3HF20**		1	1 unit	1CC

7

© Siemens 2019

3VT3 switch disconnectors up to 630 A

	Version	Color	SD d	Article No. www.siemens.com/product?Article No.	Price per PU	PU (UNIT, SET, M)	PS	PG
	Masking plates for door-coupling rotary operating mechanism							
	For use with black handle 3VT9300-3HE...							
	• Degree of protection IP40	Black		**3VT9300-3HG10**		1	1 unit	1CC
	• Degree of protection IP66	Black		**3VT9300-3HG20**		1	1 unit	1CC
	For use with red handle 3VT9300-3HF20							
	• Degree of protection IP40	Yellow		**3VT9300-3HH10**		1	1 unit	1CC
	• Degree of protection IP66	Yellow		**3VT9300-3HH20**		1	1 unit	1CC
	Masking plates for door-coupling rotary operating mechanism, defeatable							
	For use with black handle 3VT9300-3HE..							
	• Degree of protection IP40	Black		**3VT9300-3HG30**		1	1 unit	1CC
	For use with red handle 3VT9300-3HF20							
	• Degree of protection IP40	Yellow		**3VT9300-3HH30**		1	1 unit	1CC
	Extension shafts							
	• Length 365 mm, can be shortened			**3VT9300-3HJ10**		1	1 unit	1CC
	• Length 252 ... 416 mm, extendable			**3VT9300-3HJ20**		1	1 unit	1CC

7

Minimum order quantity (PS) or a multiple thereof can be ordered.

© Siemens 2019

Motorized operating mechanisms

	Rated operational voltage U_s	Frequency (with AC)	SD	Article No. www.siemens.com/product?Article No.	Price per PU	PU (UNIT, SET, M)	PS	PG
	V	Hz	d					
Motorized operating mechanism with stored energy mechanism								
	**With locking mechanism for 3 padlocks, degree of protection IP00**							
	24 V AC/DC	50/60		**3VT9300-3MJ00**		1	1 unit	1CC
	48 V AC/DC	50/60		**3VT9300-3ML00**		1	1 unit	1CC
	110 V AC/DC	50/60		**3VT9300-3MN00**		1	1 unit	1CC
	230 V AC/220 V DC	50/60		**3VT9300-3MQ00**		1	1 unit	1CC
	Motorized operating mechanism with operating cycle counter							
	24 V AC/DC	50/60		**3VT9300-3MJ10**		1	1 unit	1CC
	48 V AC/DC	50/60		**3VT9300-3ML10**		1	1 unit	1CC
	110 V AC/DC	50/60		**3VT9300-3MN10**		1	1 unit	1CC
	230 V AC/220 V DC	50/60		**3VT9300-3MQ10**		1	1 unit	1CC
Accessories for motorized operating mechanisms								
	**Operating cycle counter with cable** Length 110 cm			**3VT9300-3MF10**		1	1 unit	1CC
	**Extension cable for motorized operating mechanism** 12 conductors, length 60 cm			**3VT9300-3MF00**		1	1 unit	1CC

Mounting accessories

	Version	SD	Article No. www.siemens.com/product?Article No.	Price per PU	PU (UNIT, SET, M)	PS	PG
		d					
Plug-in base assembly kits							
	**3-pole**		**3VT9300-4PA30**		1	1 unit	1CC
	**4-pole**		**3VT9300-4PA40**		1	1 unit	1CC
Withdrawable unit kits							
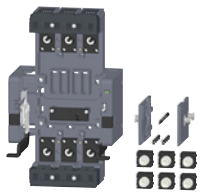	**3-pole**		**3VT9300-4WA30**		1	1 unit	1CC
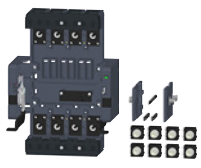	**4-pole**		**3VT9300-4WA40**		1	1 unit	1CC

7

© Siemens 2019

3VT3 switch disconnectors up to 630 A

Connection accessories

	Version	Conductor cross-sections	Connection type	SD	Article No. www.siemens.com/product?Article No.	Price per PU	PU (UNIT, SET, M)	PS	PG
		mm^2		d					
Connection methods									
	3-pole								
	Front connecting bars[1]								
	For increased pole spacing, short (1 set = 3 units)	--	Cu/Al busbars, cable lugs, flexibars		**3VT9300-4ED30**		1	1 unit	1CC
	For increased pole spacing, long (1 set = 3 units)	--	Cu/Al busbars, cable lugs, flexibars		**3VT9300-4EE30**		1	1 unit	1CC
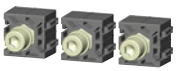	Front terminals Included in scope of supply of all switch disconnectors (1 set = 3 units)	--	Cu/Al busbars, cable lugs, flexibars		**3VT9300-4TA30**		1	1 unit	1CC
	**Rear terminals** (1 set = 3 units)	--	Cu/Al busbars, cable lugs		**3VT9300-4RC30**		1	1 unit	1CC
	Multiple feed-in terminals[2]								
	For 1 cable (1 set = 3 units)	1 x 25 ... 150	Cu/Al cables		**3VT9315-4TD30**		1	1 unit	1CC
		1 x 150 ... 240	Cu/Al cables		**3VT9324-4TD30**		1	1 unit	1CC
	For 2 cables [3] (1 set = 3 units)	2 x 25 ... 150	Cu/Al cables		**3VT9315-4TF30**		1	1 unit	1CC
		2 x 150 ... 240	Cu/Al cables		**3VT9324-4TF30**		1	1 unit	1CC
	For 6 cables (1 set = 3 units)	6 x 6 ... 35	Cu/Al cables		**3VT9303-4TF30**		1	1 unit	1CC
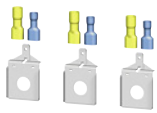	**Auxiliary conductor terminals** (1 set = 3 units)	1.5 ... 2.5; 4 ... 6	Flexible Cu conductors		**3VT9300-4TN30**		1	1 unit	1CC
	**Box terminals** (1 set = 3 units)	35 ... 240	Cu cables, flexibars		**3VT9300-4TC30**		1	1 unit	1CC
	4-pole								
	**Rear connections for the 4th pole**								
	Use with 3VT9300-4RC30 connection method (1 set = 1 unit)	--	Cu/Al busbars, cable lugs		**3VT9300-4RC00**		1	1 unit	1CC
	Multiple feed-in terminals for the 4th pole								
	Use with 3VT9315-4TD30 or 3VT9324-4TD30 connection method, for 1 cable (1 set = 1 unit)	1 x 25 ... 150	Cu/Al cables		**3VT9315-4TD00**		1	1 unit	1CC
		1 x 150 ... 240	Cu/Al cables		**3VT9324-4TD00**		1	1 unit	1CC
	Use with 3VT9315-4TF30 or 3VT9324-4TF30 connection method, for 2 cables (1 set = 1 unit) [3]	2 x 25 ... 150	Cu/Al cables		**3VT9315-4TF00**		1	1 unit	1CC
		2 x 150 ... 240	Cu/Al cables		**3VT9324-4TF00**		1	1 unit	1CC
	Use with 3VT9303-4TF30 connection method, for 6 cables (1 set = 1 unit)	6 x 6 ... 35	Cu/Al cables		**3VT9303-4TF00**		1	1 unit	1CC
	Box terminals for the 4th pole								
	Use with 3VT9300-4TC30 connection method (1 set = 1 unit)	35 ... 240	Cu cables, flexibars		**3VT9300-4TC00**		1	1 unit	1CC

[1] For use in IT systems U_e = 690 V AC, the insulation film 3VT9300-8CJ00 must be used, see next page.

[2] Use terminal cover 3VT9300-8CB30 to increase terminal point protection to IP20, see next page.

[3] For use in IT systems $U_e \geq$ 500 V AC, the insulation film 3VT9300-8CJ00 must be used, see next page.

Minimum order quantity (PS) or a multiple thereof can be ordered.

© Siemens 2019

Further accessories

	Version	SD d	Article No. www.siemens.com/product?Article No.	Price per PU	PU (UNIT, SET, M)	PS	PG
Phase barriers, covers, locking devices							
	**Phase barriers** Included in scope of supply of switch disconnector. If infeed is from below, the switch disconnectors must also be fitted on the sides of terminals 2, 4 and 6 with these phase barriers. • For 3-pole version, 2 units • For 4-pole version, 1 unit for use with 3VT9300-8CE30		**3VT9300-8CE30** **3VT9300-8CE00**		1 1	1 unit 1 unit	1CC 1CC
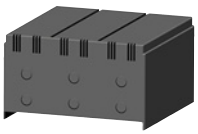	**Terminal covers, degree of protection IP20** Increases degree of protection of termination point to IP20, e.g. when used with circular conductor terminals. Intended for fixed-mounted, plug-in and withdrawable versions. • 3-pole version • 4-pole version		**3VT9300-8CB30** **3VT9300-8CB40**		1 1	1 unit 1 unit	1CC 1CC
	**Locking devices for toggle levers** • Allows the switch disconnector to be locked in the "manual off" position. • Locking is by means of up to 3 padlocks with a diameter of 4 ... 6 mm.		**3VT9300-3HL00**		1	1 unit	1CC
	**Sealing devices** Sealing for: • Overcurrent releases • Accessory compartment covers • Terminal covers • Manual operating mechanisms • Motorized operating mechanisms		**3VT9300-8BN00**		1	2 units	1CC
	**Connecting cables** For connecting switch disconnector accessories for withdrawable versions (can also be used for plug-in and fixed-mounted versions)		**3VT9300-4PL00**		1	1 unit	1CC
	**Position signaling switches** For indicating the position of the switch disconnector in plug-in or withdrawable versions		**3VT9300-4WL00**		1	1 unit	1CC
	**Coding sets** Prevents use of the wrong switching unit in plug-in or withdrawable devices		**3VT9300-4WN00**		1	1 unit	1CC
	**Covers for pushbuttons** For motorized operating mechanisms; the cover may be equipped with a sealing device		**3VT9300-3MF20**		1	1 unit	1CC
	**Insulation film** For use in IT systems for • Busbar connection (for U_e = 690 V AC) • Multiple feed-in terminals (for $U_e \geq$ 500 V AC): 3VT9315-4TF30, 3VT9315-4TF00 3VT9324-4TF30, 3VT9324-4TF00 For 0 mm clearance between the switch disconnector and the grounded control cabinet panel		**3VT9300-8CJ00**		1	1 unit	1CC

7

© Siemens 2019

Selection and ordering data

	Version	Rated uninterrupted current I_u	SD	Article No. www.siemens.com/product?Article No.	Price per PU	PU (UNIT, SET, M)	PS	PG
		A	d					
3VT4 switch disconnectors								
	3-pole	1000		**3VT4710-2DE36-0AA0**		1	1 unit	1CC

For accessories, see "3VT5 switch disconnectors up to 1600 A", next page.

7

Minimum order quantity (PS) or a multiple thereof can be ordered.

© Siemens 2019

Selection and ordering data

	Version	Rated uninterrupted current I_u	SD	Article No. www.siemens.com/product?Article No.	Price per PU	PU (UNIT, SET, M)	PS	PG
		A	d					
3VT5 switch disconnectors								
	3-pole	1600		**3VT5716-2DE36-0AA0**		1	1 unit	1CC

Accessories

Auxiliary switches and auxiliary releases

	Rated operational voltage U_s	Frequency	SD	Article No. www.siemens.com/product?Article No.	Price per PU	PU (UNIT, SET, M)	PS	PG
	V	Hz	d					
Auxiliary switches and alarm switches								
	2 x NC, 2 x NO							
	60 ... 500 AC / 60 ... 240 DC	50/60		**3VT9500-2AF10**		1	1 unit	1CC
	5 ... 60 AC/DC	50/60		**3VT9500-2AF20**		1	1 unit	1CC
Shunt releases								
	24 AC/DC	50/60		**3VT9500-1SF00**		1	1 unit	1CC
	48 AC/DC	50/60		**3VT9500-1SG00**		1	1 unit	1CC
	110 AC/DC	50/60		**3VT9500-1SH00**		1	1 unit	1CC
	230 AC/220 DC	50/60		**3VT9500-1SJ00**		1	1 unit	1CC
	400 AC	50/60		**3VT9500-1SK00**		1	1 unit	1CC
	500 AC	50/60		**3VT9500-1SL00**		1	1 unit	1CC
Undervoltage releases								
	24 AC/DC	50/60		**3VT9500-1UF00**		1	1 unit	1CC
	48 AC/DC	50/60		**3VT9500-1UG00**		1	1 unit	1CC
	110 AC/DC	50/60		**3VT9500-1UH00**		1	1 unit	1CC
	230 AC/220 DC	50/60		**3VT9500-1UJ00**		1	1 unit	1CC
	400 AC	50/60		**3VT9500-1UK00**		1	1 unit	1CC
	500 AC	50/60		**3VT9500-1UL00**		1	1 unit	1CC

© Siemens 2019

Product discontinuation

3VT5 switch disconnectors up to 1600 A

Manual operating mechanisms

	Version	Color	SD	Article No. www.siemens.com/product?Article No.	Price per PU	PU (UNIT, SET, M)	PS	PG
			d					
Rotary operating mechanisms								
	**Manual rotary operating mechanisms**							
	• Lockable with padlock	Gray		**3VT9500-3HA10**		1	1 unit	1CC
	**Handle for manual rotary operating mechanisms**							
	• Lockable with padlock	Black		**3VT9500-3HE10**		1	1 unit	1CC
	• Lockable with padlock	Red		**3VT9500-3HF10**		1	1 unit	1CC
	**Masking plates for door-coupling rotary operating mechanism**							
	• Degree of protection IP44			**3VT9500-3HG10**		1	1 unit	1CC
	• Degree of protection IP66			**3VT9500-3HG20**		1	1 unit	1CC
	**Extension shafts**							
	• Length 315 mm, can be shortened			**3VT9500-3HJ10**		1	1 unit	1CC
Mechanical interlocks								
	**Mechanical interlocks** • For manual operating mechanisms • For switch disconnectors, fixed-mounted versions • Both switch disconnectors must be equipped with at least one rotary operating mechanism and one handle			**3VT9500-8LA00**		1	1 unit	1CC
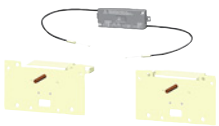	**Mechanical interlocks** by means of Bowden wire							
	• For switch disconnectors, fixed-mounted versions			**3VT9500-8LC10**		1	1 unit	1CC

Motorized operating mechanisms

	Rated operational voltage U_s	Frequency	SD	Article No. www.siemens.com/product?Article No.	Price per PU	PU (UNIT, SET, M)	PS	PG
	V	Hz	d					
Motorized operating mechanisms								
	**Motorized operating mechanisms**							
	110 AC/DC	50/60		**3VT9500-3MN00**		1	1 unit	1CC
	230 AC/220 DC	50/60		**3VT9500-3MQ00**		1	1 unit	1CC
	Motorized operating mechanism with operating cycle counter							
	110 AC/DC	50/60		**3VT9500-3MN10**		1	1 unit	1CC
	230 AC/220 DC	50/60		**3VT9500-3MQ10**		1	1 unit	1CC

Minimum order quantity (PS) or a multiple thereof can be ordered.

© Siemens 2019

Connection accessories

	Version	Max. permissible cross-section *S*	Cable type	SD	Article No. www.siemens.com/product?Article No.	Price per PU	PU (UNIT, SET, M)	PS	PG
		mm²		d					
Connection methods									
	3-pole								
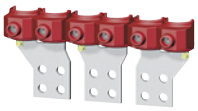	**Box terminals, double** Two 3VT9524-4TG30 methods can be used to connect 4 x 70 ... 240 mm². 1 set = 3 units	2 x 70 ... 240	Cu/Al cables		**3VT9524-4TG30**		1	1 unit	1CC
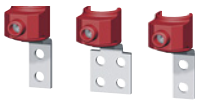	**Box terminals** It is possible to combine the connection methods 3VT9524-4TG30 and 3VT9524-4TF30 to connect 3 x 70 ... 240 mm² cables for each pole. 1 set = 3 units	70 ... 240 mm	Cu/Al cables		**3VT9524-4TF30**		1	1 unit	1CC
	Rear terminals								
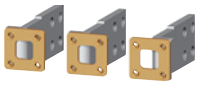	• Up to 1000 A (1 set = 3 units)	--	Busbars		**3VT9400-4RC30**		1	1 unit	1CC
	• Up to 1600 A (1 set = 3 units)	--	Busbars		**3VT9500-4RC30**		1	1 unit	1CC
	**Front terminals**[1] For withdrawable version (1 set = 3 units)	--	Busbars		**3VT9500-4EF30**		1	1 unit	1CC
	**Rear terminals** For withdrawable version (1 set = 3 units)	--	Busbars		**3VT9500-4RD30**		1	1 unit	1CC
	Multiple feed-in terminals [1) 2) 3)]								
	• For 2 cables (1 set = 3 units)	150 ... 300	Cu/Al cables		**3VT9532-4TF30**		1	1 unit	1CC
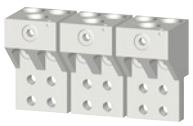	• For 3 cables (1 set = 3 units)	150 ... 300	Cu/Al cables		**3VT9533-4TF30**		1	1 unit	1CC
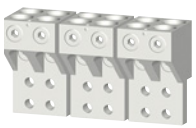	• For 4 cables (1 set = 3 units)	150 ... 300	Cu/Al cables		**3VT9534-4TF30**		1	1 unit	1CC

1) For use in IT systems U_e = 500 V AC, the insulation film 3VT9400-8CJ00 must be used, see next page.

2) Has auxiliary conductor terminals, 1.5 ... 6 mm².

3) It is necessary to use phase barriers or terminal covers (not included in the scope of supply).

© Siemens 2019

3VT5 switch disconnectors up to 1600 A

Further accessories

	Version	SD d	Article No. www.siemens.com/product?Article No.	Price per PU	PU (UNIT, SET, M)	PS	PG
Phase barriers, covers, locking devices							
 Left: 3VT9500-8CE30 Right: 3VT9500-8CF30	**Phase barriers** If infeed is from below, the switch disconnectors must also be fitted on the sides of terminals 2, 4 and 6 with these phase barriers. Not included in scope of supply of switch disconnector.						
	• For fixed-mounted versions		**3VT9500-8CE30**		1	1 unit	1CC
	• For withdrawable versions		**3VT9500-8CF30**		1	1 unit	1CC
	**Insulation film** For insulation when used in IT systems for 3VT4: • Busbar connection (for U_e = 500 V AC) • Multiple feed-in terminals (for U_e = 500 V AC): 3VT9532-4TF30, 3VT9533-4TF30, 3VT9534-4TF30 For 0 mm clearance between the switch disconnector and the grounded control cabinet panel		**3VT9400-8CJ00**		1	1 unit	1CC
	Terminal covers Increases degree of protection of terminal point to IP20. To improve safety during maintenance of the switch disconnector, we recommend installation of a terminal cover on both sides of the withdrawable device.						
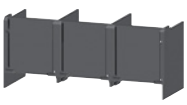	• For fixed-mounted versions with rear terminals		**3VT9500-8CD30**		1	1 unit	1CC
	• For withdrawable versions with front terminals		**3VT9500-8CC30**		1	1 unit	1CC
	• For fixed-mounted versions with rear terminals		**3VT9500-8CH30**		1	1 unit	1CC
	**Insulation seals** Designed for fixed-mounted and withdrawable versions of switch disconnectors with rear terminals. The insulation seals are used to insulate the connection methods for rear connection of the switchboard. Use of the insulation seals is recommended for all connection methods with rear terminals.						
	• For rear terminals		**3VT9500-8CG30**		1	1 unit	1CC
	**Locking devices for toggle levers** • Allows the switch disconnector to be locked in the "manual off" position. • Locking is by means of up to 3 padlocks with a diameter of 4 ... 6 mm.		**3VT9500-3HL00**		1	1 unit	1CC
	**Sealing devices** Sealing for: • Overcurrent releases • Accessory compartment covers		**3VT9500-8BN00**		1	2 units	1CC
	**Fixing screws** • For withdrawable versions		**3VT9500-4SA40**		1	1 unit	1CC
	**Covers for pushbuttons** • For motorized operating mechanism • The cover may be equipped with a sealing device		**3VT9500-3MF20**		1	1 unit	1CC

Minimum order quantity (PS) or a multiple thereof can be ordered.

© Siemens 2019

Overview

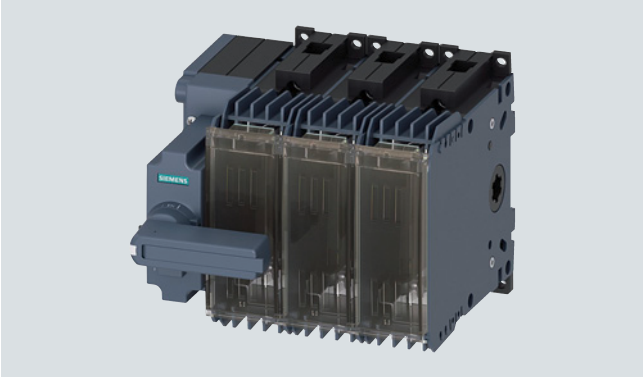

3KF LV HRC switch disconnector with fuses, complete assembly, 3-pole



3KF SITOR switch disconnector NEW, basic unit, 3-pole, front operating mechanism, operating mechanism on right, size 1, box terminals



3KF SITOR switch disconnector NEW, basic unit, 3-pole, front operating mechanism, operating mechanism in center, size 2, flat terminals

Features

- 3KF LV HRC for standard applications and 3KF SITOR for protection of semiconductors
- 5 sizes in 3 and 4-pole versions (4-pole versions for 3KF LV HRC series only)
- Supplied as a complete assembly including direct operating mechanism or as a basic unit without a handle
- Direct operating mechanism with handle on switch disconnector
- Door-coupling rotary operating mechanism for operation of switch disconnector outside the control cabinet door
- Versions with lateral operating mechanism left and right
- Connections in form of box terminal or flat terminal
- Floor mounting or mounting on a standard mounting rail (size 1)
- Additional poles can be retrofitted: 4th contact element, N or N/PE terminals
- Auxiliary switches for querying the switch positions
- Suitable for AC applications up to 690 V + 10% (wind power)
- Suitable for DC applications up to 440 V
- Suitable LV HRC fuse links up to 800 A
- Double contact interruption

Benefits

- Enhanced touch protection
- Locking function helps to prevent unauthorized operation
- Enhanced protection against inter-phase arcing
- Safe use in wind farms
- Compact design saves space
- Wide variety of applications thanks to a range of different operating mechanism designs
- Supplementary functions can be retrofitted
- Various service positions are possible thanks to optimized heat dissipation
- Test function to ensure safe commissioning
- Comprehensive support through provision of CAx data
- Protection against short-circuit and overload

© Siemens 2019

Application

3KF switch disconnectors with fuses protect against overload and short-circuits as main control and EMERGENCY-STOP switches of switchboard assemblies, power distribution boards, power supply and motor outgoing feeders.

3KF switch disconnectors with fuses are designed to switch the specified rated current on and off under load. At the same time, they constitute a safety isolating function and isolating distance in all low-voltage circuits.

All 3KF switch disconnectors with fuses are climate-proof and meet the requirements of IEC 60947-1, IEC 60947-3 and VDE 0660-107.

Semiconductor protection with 3KF SITOR

Switch disconnectors with fuses protect the load from overload and short-circuit by means of the fuses and are used to switch the specified rated current on and off under load. At the same time, they provide a safety isolating function and isolating dstance in all low-voltage circuits.

Conventional fuse switching devices, such as 3KF, 3NP1 are designed to use LV HRC fuses that comply with the fuse standard IEC 60269-2. This standard describes the technical constraints on fuses for the protection of cables and motor feeders, including the maximum permitted power loss of the fuses.
Conventional fuse switching devices are designed in accordance with the maximum values permitted according to this fuse standard with respect to the possible heat dissipation.

Fuses for semiconductor protection (SIEMENS trade name SITOR) must disconnect much faster than standard fuses to protect the semiconductor load as reliably as possible and by virtue of their design have power loss values that in some cases significantly exceed the limit values permitted in IEC 60269-2.

To permit simple installation, not only are many application-specific special designs available but also very many fuses for semiconductor protection in the standard-compliant designs, such as the LV HRC design.

If a fuse of this kind is used in a conventional fuse switching device for standard-compliant fuses for semiconductor protection, the maximum permissible fuse power loss defined by the switching device must be complied with. If the rated power loss of the fuse for semiconductor protection is above that permitted by the switching device, the fuse can only be operated in the partial load range, i.e. the load current must be reduced until the actual power loss is within the limit values defined by the switching device. The fuse manufacturer provides the data required for this (power loss as a function of the load current).

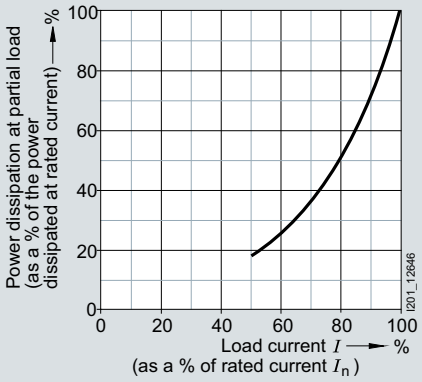

Power losses depending on the operational current for SIEMENS fuses for semiconductor protection

If the maximum power losses of the fuse defined by the switching device are not complied with, the switching device may overheat or, in the worst case, even cause a fire in the switchgear.

3KF SITOR is a variation of the proven 3KF LV HRC fuse switch disconnector, provides optimized heat dissipation and permits the use of fuses with substantially higher power losses. In this way, fuses for semiconductor protection can be loaded with higher currents than conventional fuse switching devices.

For use of SIEMENS fuses for semiconductor protection in 3KF SITOR and 3KF LV HRC, the possible load values are available for each possible combination of a fuse and circuit breaker type (see page 7/141)

Fuses from third-party manufacturers can also be used, in which case the possible load values must be determined based on the technical data of the fuse.

Minimum order quantity (PS) or a multiple thereof can be ordered.

© Siemens 2019

Design

A 3KF switch disconnector with fuses consists of an operating mechanism module, three or four switching poles and a handle to operate the switch disconnector.

Handles

The direct operating mechanism version of the handle is mounted directly on the switch disconnector. It can also be supplied in the form of a door-coupling rotary operating mechanism for actuation of the switch disconnector outside the control cabinet door. The handle is available in gray, or colored red/yellow for use as an EMERGENCY-STOP switch.

Commonly used switch disconnector variants comprising basic unit and handle are available as complete assemblies.

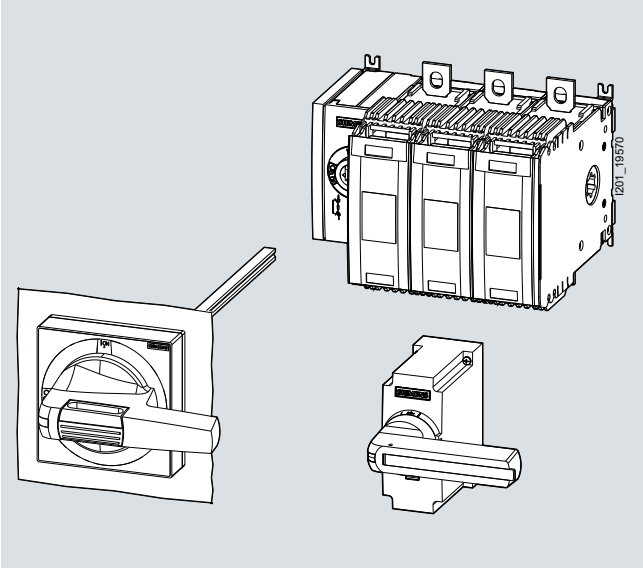

Handle either as direct operating mechanism or door-coupling rotary operating mechanism

Position of operating mechanism modules

To allow optimum utilization of the available installation space, units with front operating mechanisms can be supplied with the operating mechanism module in various positions – mounted on the left-hand side of the 3KF switch disconnector with fuses or in the center between the switching poles.

On units with lateral operating mechanisms, the operating mechanism module is positioned on the right or left-hand side of the 3KF switch disconnector with fuses.

Number of poles	Front operating mechanism on side	Front operating mechanism in center	Lateral operating mechanism, left	Lateral operating mechanism, right
3-pole	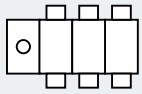	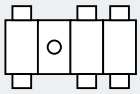	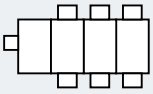	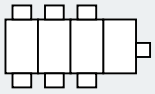
4-pole	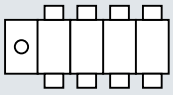	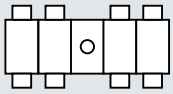	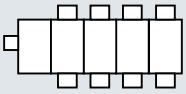	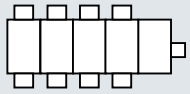

© Siemens 2019

General data

Additional poles

All sizes of the 3KF switch disconnectors with fuses can be retrofitted with additional poles on a modular basis.

When installing additional poles, it is important to note that only a 3-pole 3KF switch disconnector with fuses may be retrofitted with an additional switching pole with contact system (4th contact element).

Additional poles (4th contact element, N or N/PE terminal) must always be mounted directly adjacent to the switch disconnector on the left or right, therefore, it is not permissible to install an auxiliary switch module between the basic unit and an additional pole for size 1.

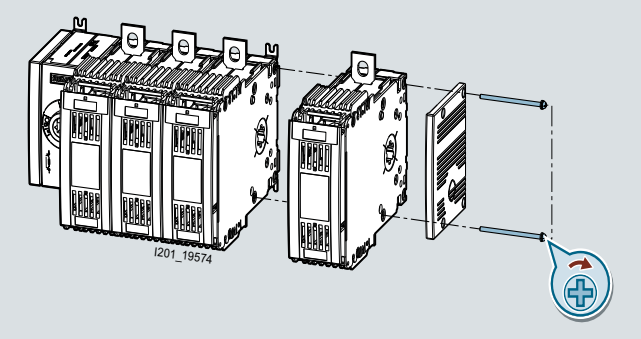

Installation of an additional pole

Available versions:

4th contact element:
The 4th contact element includes a contact system and is identical to the poles installed at the factory. It can be installed to upgrade a 3-pole switch disconnector to a disconnector with 4 poles.

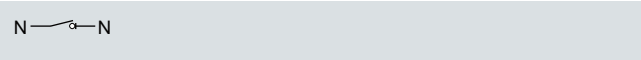

4th contact element as an additional pole

N terminal (neutral conductor terminal):
The N terminal does not include a contact system. A jumper can be removed in order to interrupt the electrical connection between the two terminals. An N terminal can be installed to add a non-switching N pole to a 3-pole disconnector.

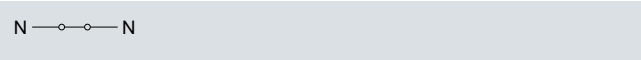

N terminal as non-switching pole

N/PE terminal:
The N/PE terminal is identical to the neutral conductor terminal. However, the electrical connection between the two terminals is permanent and cannot be interrupted by removal of a jumper. The N/PE terminal is normally deployed for applications in which it is vital to ensure that this connection can never be interrupted.

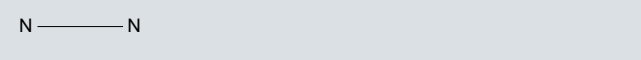

N/PE terminal with permanent connections

Auxiliary switches

Auxiliary switches allow remote interrogation of the contact position of the 3KF switch disconnector with fuses.

Installation of auxiliary switches for size 1

The auxiliary switches used for size 1 are microswitches (changeover contacts), which can be snapped into an auxiliary switch module. This auxiliary switch module is mounted on the side of the switch disconnector with fuses in the same way as an additional pole. A maximum of two microswitches can be installed in each auxiliary switch module.

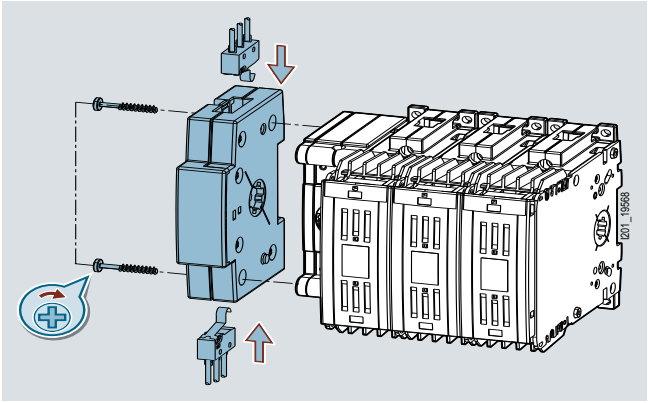

Auxiliary switch with auxiliary switch module for size 1

Installation of auxiliary switches for sizes 2 to 5

With sizes 2 to 5, the auxiliary switches are directly attached to the operating mechanism module. The auxiliary switch with the leading switch function is always installed in the right-hand mounting location. The other locations are provided for simultaneously switching with the main contacts.

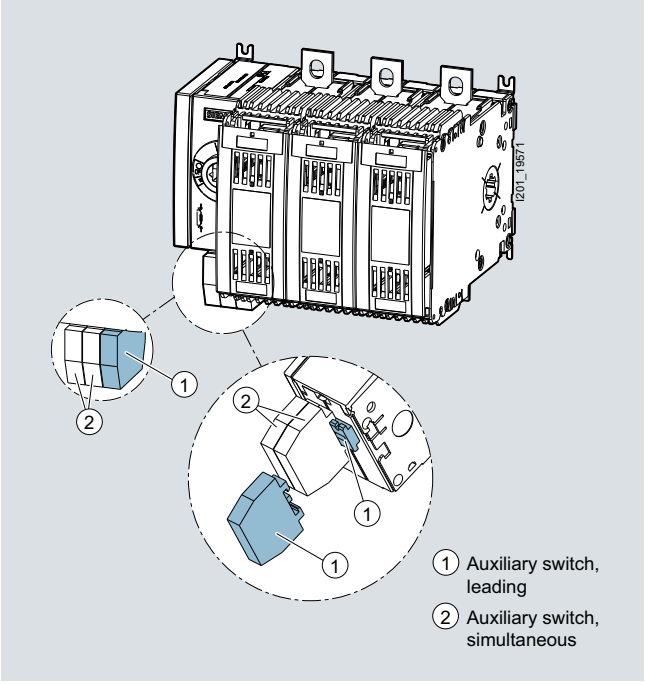

Auxiliary switches directly attached to the operating mechanism module with sizes 2 to 5. The leading auxiliary switch is highlighted in the drawing.

Minimum order quantity (PS) or a multiple thereof can be ordered.

© Siemens 2019

Switching instants of auxiliary switches

The auxiliary switches can operate either simultaneously with the main contacts or function as leading switches with all sizes.

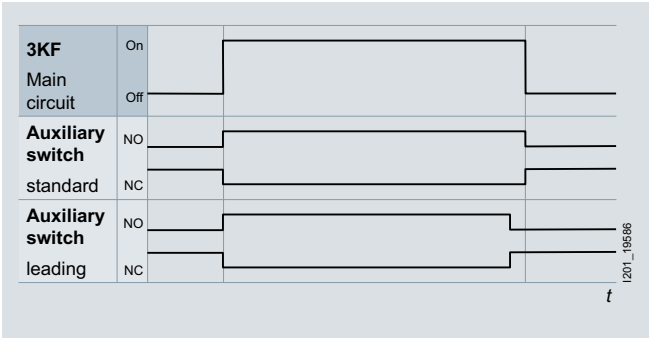

One of the possible functions of leading auxiliary switches is to disconnect the circuit with the assistance of a higher-level switching device, such as a circuit breaker, before the main contacts of the 3KF switch disconnector with fuses open.

With size 1, the selection of the appropriate auxiliary switch module determines whether the switching instant will be leading or simultaneous.

With sizes 2 to 5, the switching instant is determined by the selection of the mounting location for the auxiliary switch on the operating mechanism module.

Test function for auxiliary switches

The test function allows a wiring check to be performed on the auxiliary switches without necessitating closure of the main contacts of the 3KF switch disconnector with fuses. The test function can be used as part of the commissioning process.

The test function is activated by turning the handle of a direct operating mechanism in the OFF position by 25° in the counter-clockwise direction. The handle must be turned 90° in the clckwise direction in order to switch the main contacts.

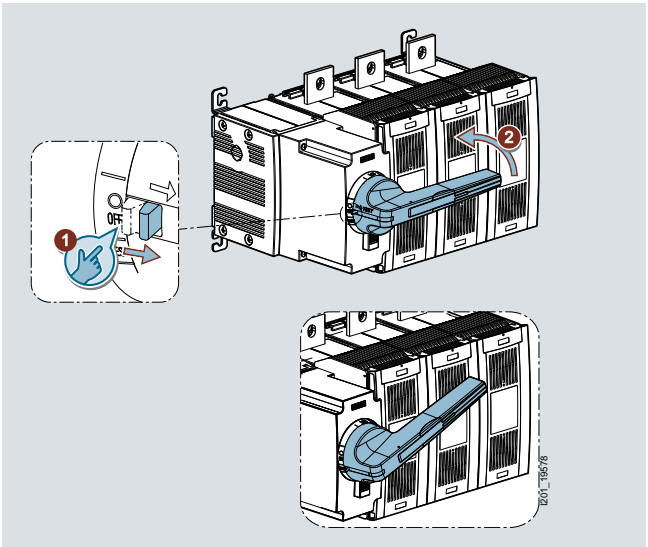

The auxiliary switch module including test function must be used for size 1. With sizes 2 to 5, all installed auxiliary switches are switched when the test function is activated.

Types of mounting

All 3KF switch disconnectors with fuses are designed for floor mounting. To ensure that the switch can be flexibly adapted to the relevant installation conditions, the mounting bracket can be rotated through 90° with size 2 or larger.

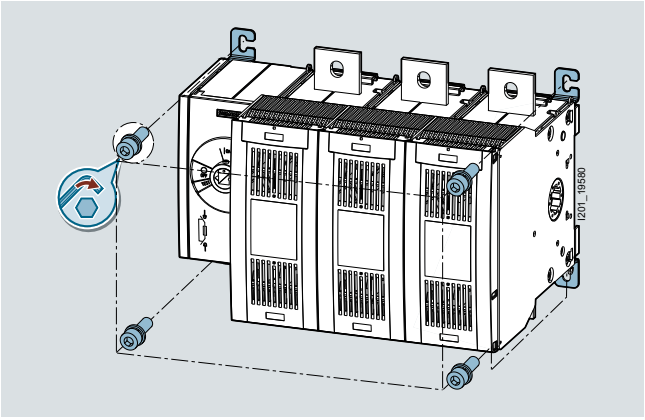

Floor mounting method

Size 1 can be snapped onto a standard mounting rail (TH35 according to EN 60715) as an alternative mounting method.

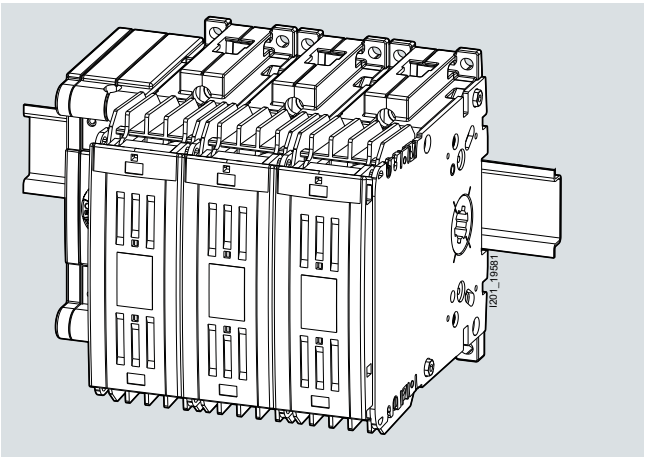

Mounting on a standard mounting rail

Locking functions

3KF switch disconnectors with fuses can be locked by up to three padlocks to prevent unauthorized switch operation.

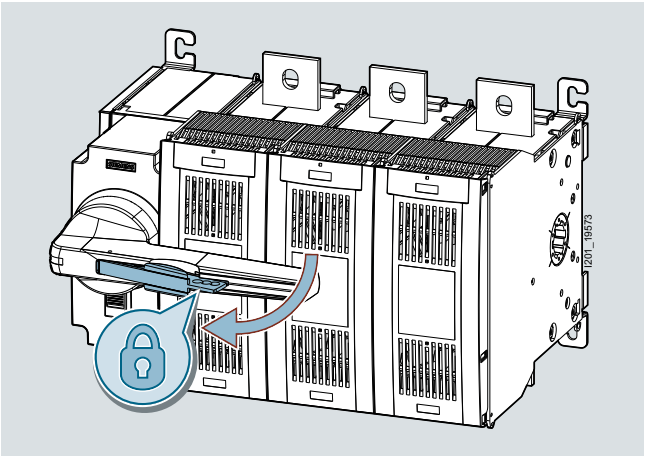

Locking functions involving one or more padlocks

© Siemens 2019

General data

Electrical connection

3KF switch disconnectors with fuses feature different connection options.

Box terminals

Box terminals for size 1 (rated currents 32 A to 80 A) are designed to allow the speedy connection of stripped conductors.

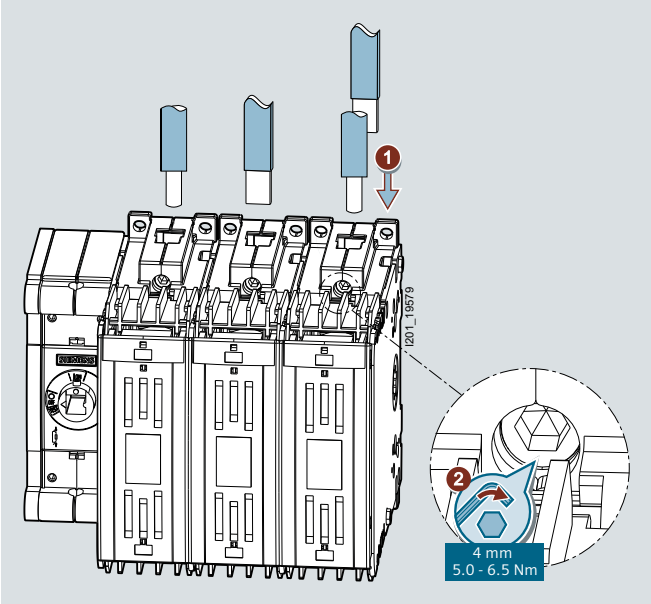

Connection via box terminals

Flat terminals

Sizes 2 to 5 (rated currents 125 to 800 A) are available with flat terminals – for the connection of cable lugs or busbar systems.

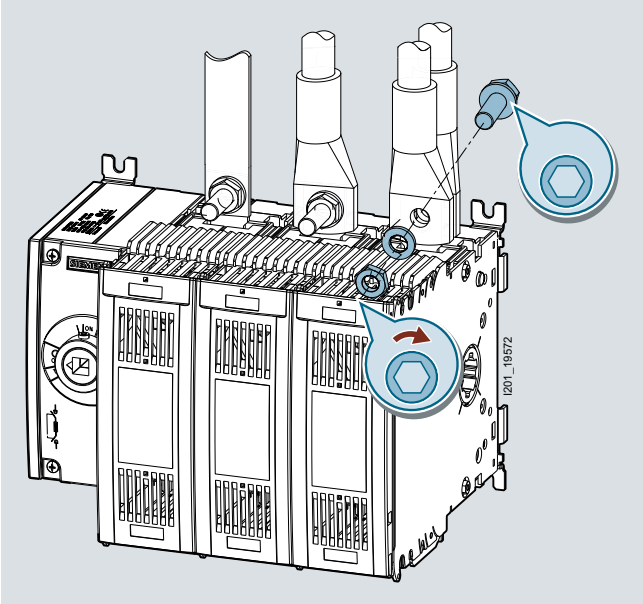

Connection via flat terminals

Flat terminals at rear

Sizes 1 to 2 (rated currents up to 125 A) are available with rear flat terminals for the connection of cable lugs or busbar systems.

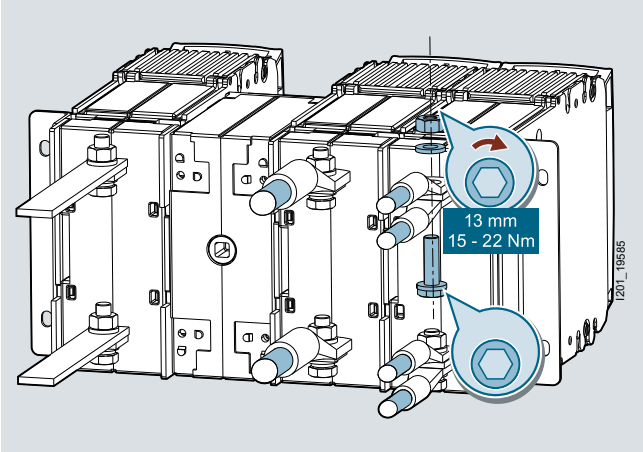

Connection via rear flat terminals

Minimum order quantity (PS) or a multiple thereof can be ordered.

© Siemens 2019

Terminal covers and phase barriers

Terminal covers and phase barriers can be supplied for 3KF switch disconnectors with fuses with flat terminals.

Terminal covers

Terminal covers can be installed to provide touch protection for all terminals.

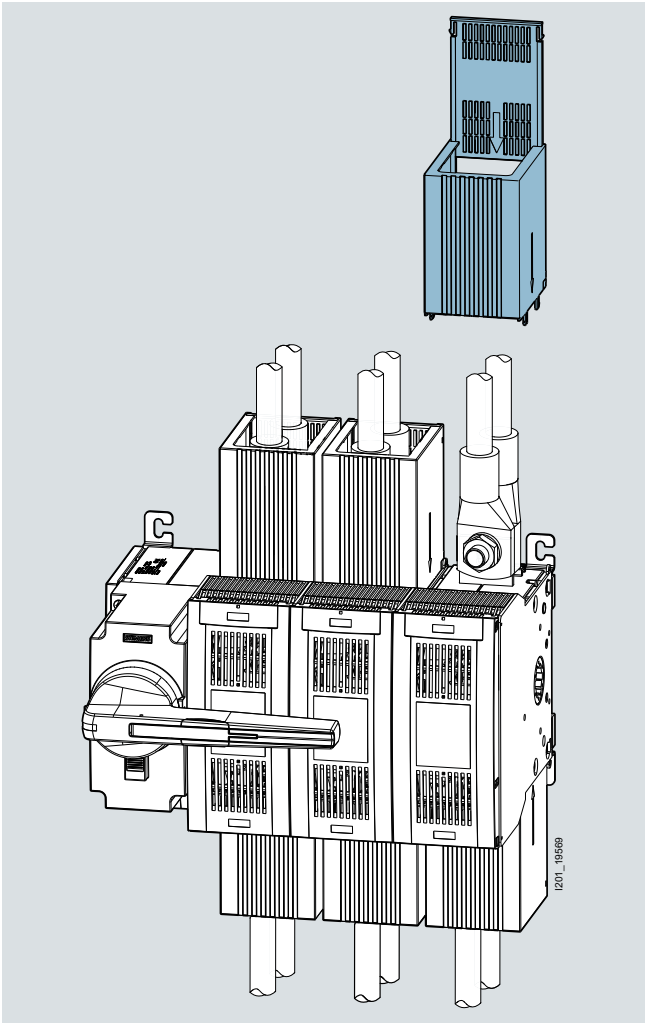

Terminal covers

Phase barriers

When long, non-insulated cable lugs are used, phase barriers provide enhanced protection against arcing.

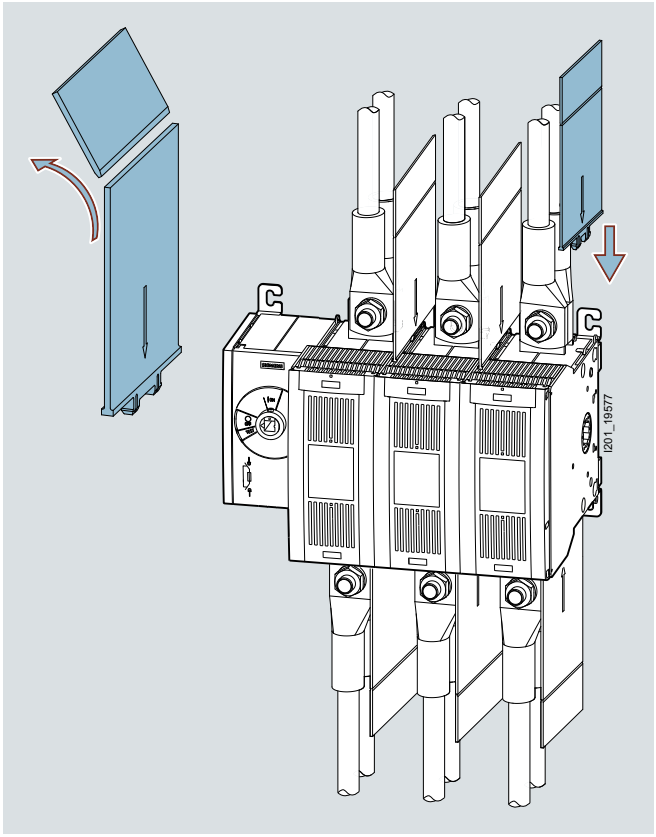

Phase barriers

Fuse monitoring

Fuse monitoring is used to detect, indicate and report faults. The fuse monitoring can be mounted on the side of each 3KF switch disconnector with fuse and away from the 3KF on a standard mounting rail or mounting plate.

The fuse monitoring is equipped with a floating changeover contact for remote signaling of tripped fuses. Locally, the tripped fuse is displayed for each phase by LEDs.



Fuse monitoring on the 3KF

© Siemens 2019

General data

Overview of components and accessories: 3KF LV HRC switch disconnectors with fuses in size 1

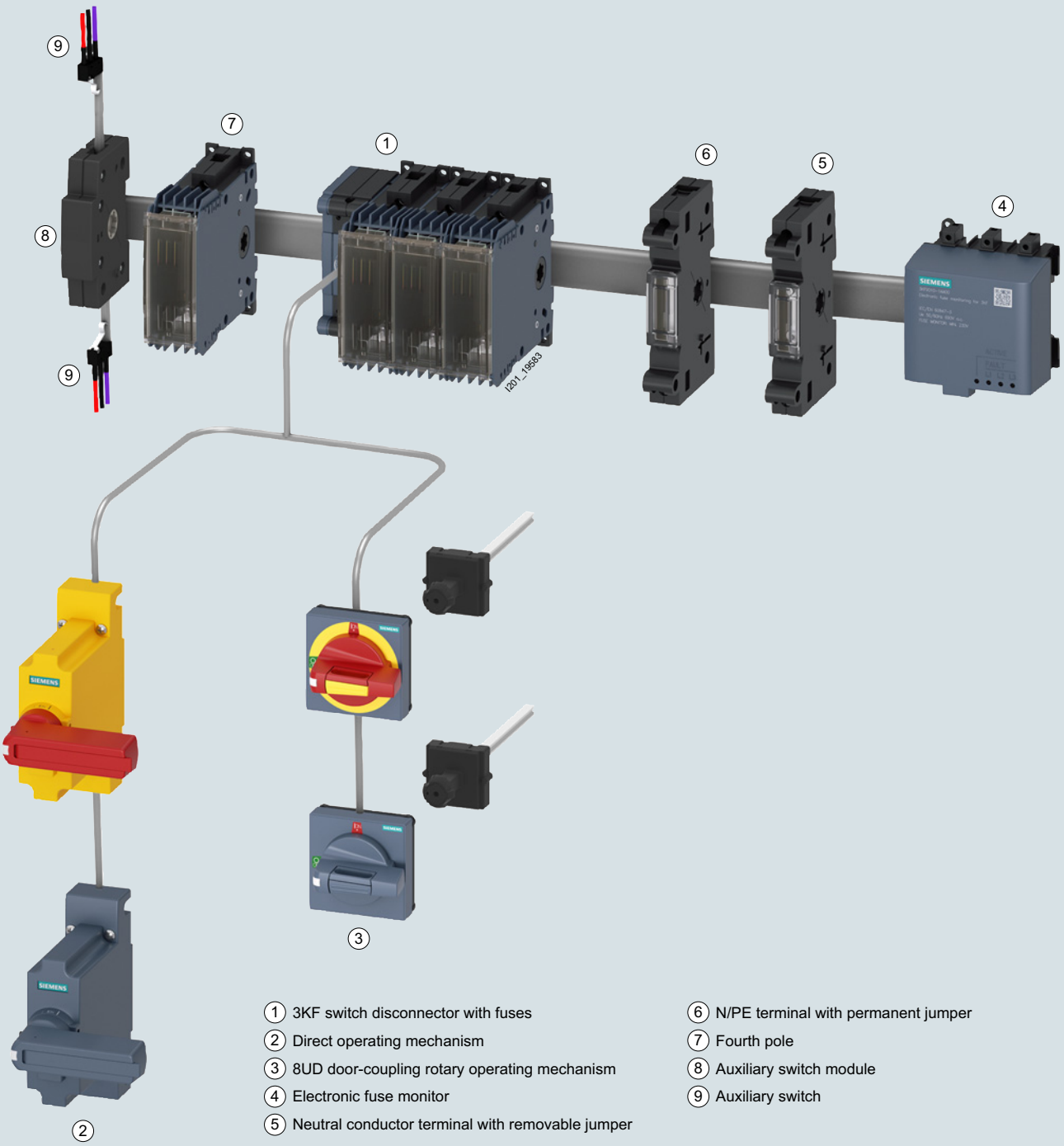

1. 3KF switch disconnector with fuses
2. Direct operating mechanism
3. 8UD door-coupling rotary operating mechanism
4. Electronic fuse monitor
5. Neutral conductor terminal with removable jumper
6. N/PE terminal with permanent jumper
7. Fourth pole
8. Auxiliary switch module
9. Auxiliary switch

Minimum order quantity (PS) or a multiple thereof can be ordered.

© Siemens 2019

Overview of components and accessories: 3KF SITOR switch disconnectors with fuses in size 1

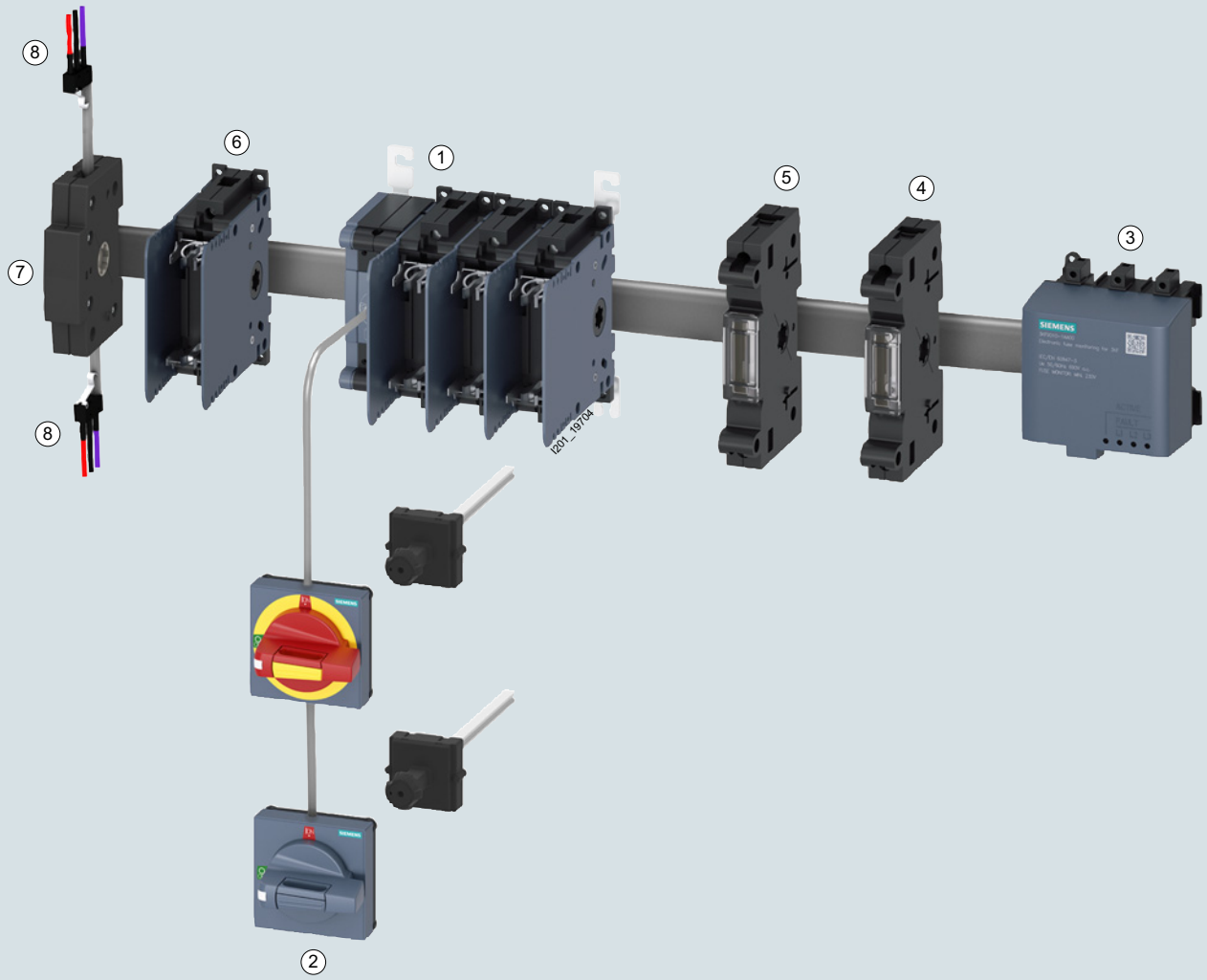

1. 3KF SITOR switch disconnector with fuses
2. 8UD door-coupling rotary operating mechanism
3. Electronic fuse monitor
4. Neutral conductor terminal with removable jumper
5. N/PE terminal with permanent jumper
6. Fourth pole
7. Auxiliary switch module
8. Auxiliary switch

© Siemens 2019

General data

Overview of components and accessories: 3KF LV HRC switch disconnectors with fuses in sizes 2 to 5

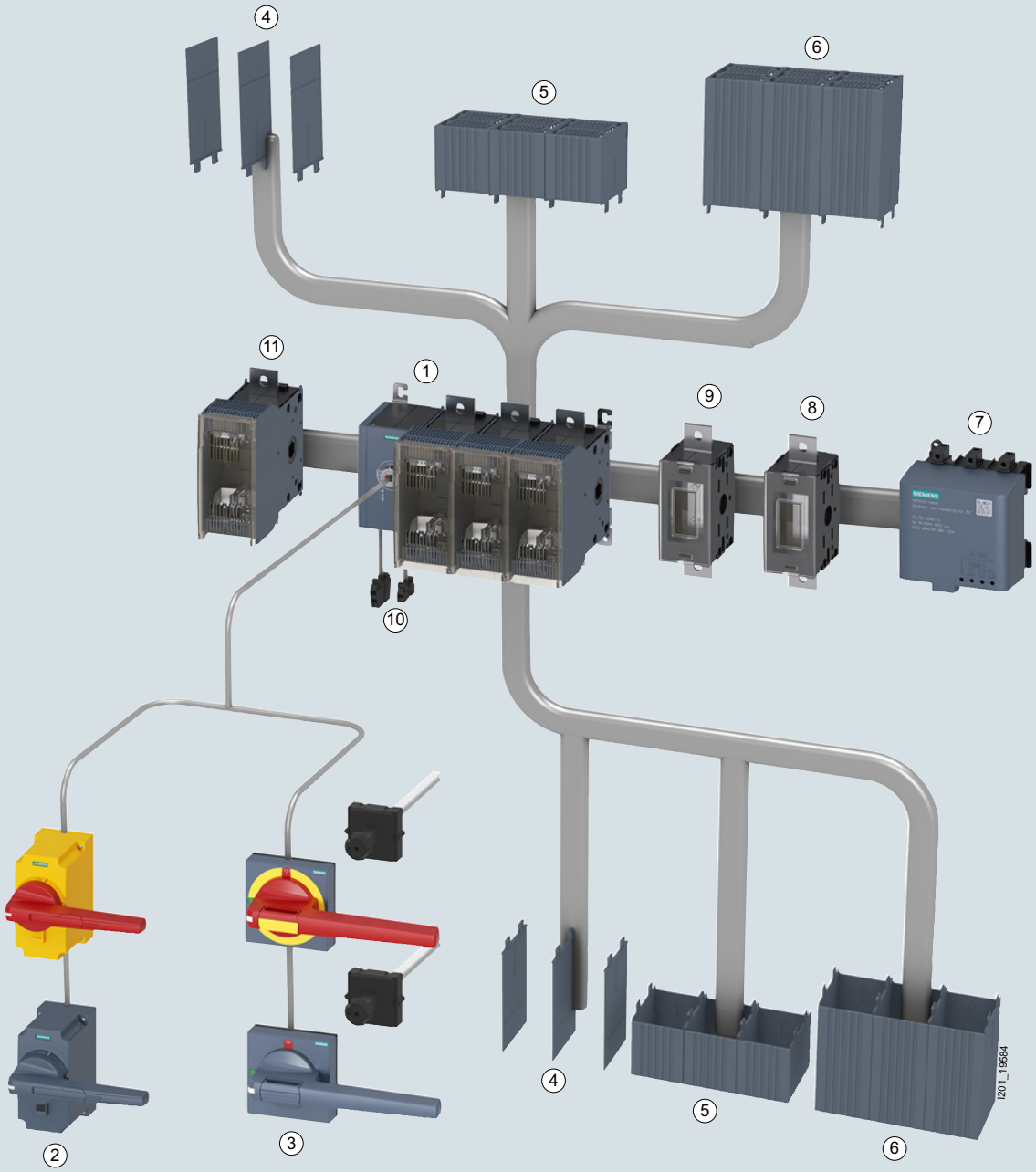

1. 3KF switch disconnector with fuses
2. Direct operating mechanism
3. 8UD door-coupling rotary operating mechanism
4. Phase barriers
5. Cable connection cover, short
6. Cable connection cover
7. Electronic fuse monitor
8. N/PE terminal (with permanent jumper)
9. Neutral conductor terminal (with removable jumper)
10. Auxiliary switch
11. Fourth pole

Minimum order quantity (PS) or a multiple thereof can be ordered.

© Siemens 2019

Overview of components and accessories: 3KF SITOR switch disconnectors with fuses in sizes 2 to 5

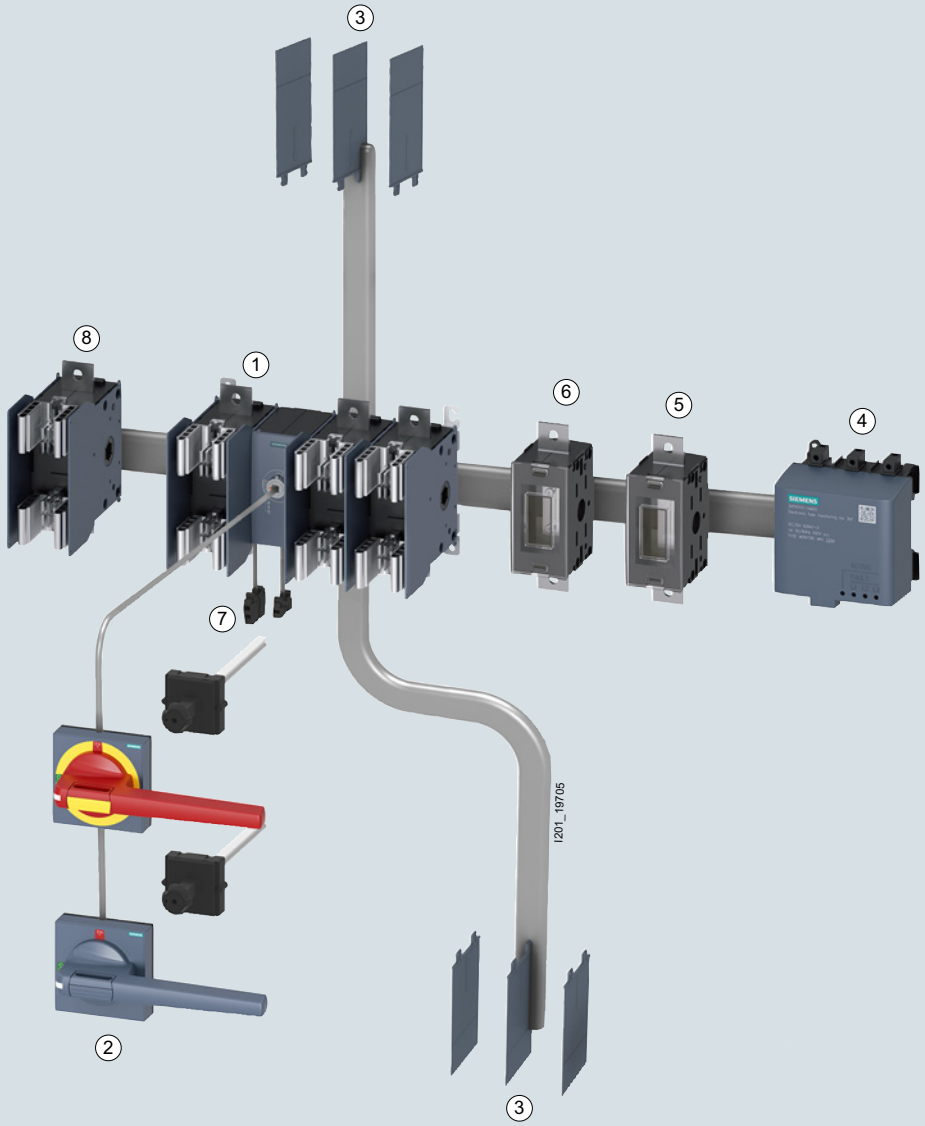

1 3KF SITOR switch disconnector with fuses
2 8UD door-coupling rotary operating mechanism
3 Phase barriers
4 Electronic fuse monitor
5 N/PE terminal (with permanent jumper)
6 Neutral conductor terminal (with removable jumper)
7 Auxiliary switch
8 Fourth pole

© Siemens 2019

Technical features

Technical specifications

To some extent, values do not apply to 3KF with rear flat terminals – For details, see Siemens Industry Online Support

Standards		**IEC 60947-1, IEC 60947-3, VDE 0660 Part 107**								
Size		**1**			**2**		**3**	**4**	**5**	
General technical details										
Rated uninterrupted current I_u	A	32	63	80	125	160	250	400	630	800
Conventional free air thermal current I_{th}[1]	A	32	63	80	125	160	250	400	630	800
For fuse links acc. to IEC 60269-2		00 and 000					1 and 0	2 and 1	3 and 2	
Rated operational voltage U_e										
• At 50 Hz/60 Hz AC (tolerance up to +10% permissible)	V	690								
• At DC (3 conducting paths series-connected)	V	440								
• At DC (2 conducting paths series-connected)	V	220								
Rated insulation voltage U_i	V	1000								
Rated impulse withstand voltage U_{imp}	kV	12								
Overvoltage category		IV								
Operating and short-circuit behavior										
Rated operational current I_e[2]										
• At AC-21A, AC-22A, AC-23A, 400 … 690 V	A	32	63	80	125	160	250	400	630	800
• At DC-21A, DC-22A, DC-23A, 220 …440 V	A	32	63	80	125	160	250	400	630	800
Motor switching capacity AC-23A[3]										
• At 400 V	kW	15	30	37	55	90	132	220	355	400
• At 500 V	kW	18.5	37	55	75	110	160	280	400	560
• At 690 V	kW	30	55	75	110	132	250	400	630	800
Rated short-time withstand current I_{cw} (with t = 1 s, rms value, 690 V AC/440 V DC)	kA	2.5			5		8	12	22	
Rated short-circuit making capacity I_{cm} (at 690 V AC/440 V DC)	kA	3.55			7.65		13.6	24	44	
Rated conditional short-circuit current with fuse[4]										
• At 400/500 V AC	kA	100								
• At 690 V AC	kA	100							80	
Let-through current I_c combined with fuse[4]										
• At 400/500 V AC	kA	10.4			18.2		28.7	39.4	58.5	
• At 690 V AC	kA	11.2			16.87		30.31	41.14	49.95	
Let-through I^2t value combined with fuse[4]										
• At 400/500 V AC	kA²s	33.2			150.6		437.0	1205	4100	
• At 690 V AC	kA²s	40.7			89.64		490.1	1300	2050	
Let-through current I_c of usable fuses, max.										
• At 400/500 V AC	kA	11.8			18		33.7	37.1	77.4	
• At 690 V AC	kA	11.5			25.5		37.7	47	65	
Let-through I^2t value of usable fuses, max.										
• At 400/500 V AC	kA²s	34			223		1500	2150	10400	
• At 690 V AC	kA²s	55			360		940	2600	7000	
Power loss per pole of the switch at I_{th} (plus fuses)	W	0.4	1.7	2.8	4.2	7.2	15	26	40	50
Maximum power loss of the usable fuses (per fuse)										
• For 3KF LV HRC	W	6.5	7.5	8.5	11	12	25.5	34	48	60
• For 3KF SITOR	W	7	8	12	20	26	36	55	68	85
Service life, operating cycles										
• Mechanical		15000			12000		10000	8000	6000	
• Electrical, at AC-23A, 690 V/50 … 60 Hz		6000			5000		4000	2000	1000	
• Electrical, at AC-23A, 440 V/50 … 60 Hz		10000			8000		5000	3000	1500	
• Electrical, at DC-23A, 440 V		1500			1000					500
Degree of protection (operator side)										
Degree of protection for 3KF LV HRC										
• With masking plate or cable connection cover		IP20								
• Without masking plate or terminal cover		IP20			IP00					
Degree of protection for 3KF SITOR										
• With masking plate or cable connection cover		IP00								
Ambient conditions										
• Ambient temperature during operation	°C	-25 … +70								
• Ambient temperature during storage	°C	-50 … +80								
• Mounting position		Any								
Main conductor connections										
Conductor cross-section, max.	mm²	25			95		240	2 x 150	2 x 300	
Busbar systems, max. dimensions (number x width x thickness)	mm	1 x 9 x 2			1 x 20 x 3		1 x 25 x 3	1 x 30 x 10	1 x 50 x 10	
Tightening torque	Nm	5 … 6.5			15 … 22		30 … 44	30 … 44	50 … 75	

1) Max. permissible operating temperature at connections 125 °C

2) Values valid even at +10% line voltage tolerance in case of AC

3) Values are provided as a guide only and may vary depending on the make of motor

4) Valid for combination of 3KF and fuse type 3NA/3ND, characteristic gG/aM

Minimum order quantity (PS) or a multiple thereof can be ordered.

© Siemens 2019

Overview

Devices		Description	Page
Complete assemblies			
	**Direct operating mechanism** 3KF LV HRC only	Ready-to-install combinations comprising switch disconnectors and operating mechanisms • 3 and 4-pole switch disconnectors with front operating mechanisms • Connections in form of box terminal or flat terminal incl. direct operating mechanism with gray handle	7/124
Basic units			
 	**Front operating mechanism** 3KF LV HRC and 3KF SITOR *NEW*	Switch disconnectors with front operating mechanisms without handle • 3-pole and 4-pole (3KF LV HRC only) up to 690 V AC / 440 V DC • Connections in form of flat terminal (sizes 2 to 5) or box terminal (sizes 1 and 2) • Operating mechanism module in center or on left-hand side of switch disconnector	7/125
	**Lateral operating mechanisms** 3KF LV HRC only	Switch disconnectors with lateral operating mechanisms • 3 and 4-pole versions • Connections in form of flat terminal (sizes 2 to 5) or box terminal (sizes 1 and 2) • Operating mechanism module on the right or left-hand side of switch disconnector	7/128
Accessories and spare parts			
 Left: Box terminals Right: Flat terminals	**Additional poles** For 3KF LV HRC and 3KF SITOR	Additional poles for enhanced functionality • 4th contact element (switching pole) Different variants for 3KF LV HRC and 3KF SITOR • N terminal (neutral conductor terminal with removable jumper) Can be used for 3KF LV HRC and 3KF SITOR • N/PE terminal (with permanent jumper) Can be used for 3KF LV HRC and 3KF SITOR	7/130
	**Direct operating mechanisms** For 3KF LV HRC only	Different handles for mounting on basic units • Direct operating mechanisms for direct mounting on switch-disconnector • Handles available in colors gray or red/yellow	7/132
	**Door-coupling rotary operating mechanisms** For 3KF LV HRC and 3KF SITOR	Different handles for mounting on basic units • Door-coupling rotary operating mechanisms for operation of switch disconnector outside the control cabinet door • Handles available in colors gray or red/yellow	7/132
	**Auxiliary switches** For 3KF LV HRC and 3KF SITOR	• For querying the switch position • Optionally available with leading NO contacts (auxiliary switch contacts open before the main contacts of the 3KD switch disconnector) • Optionally available with test function (switch can be tested without closure of main contacts)	7/136
	**Fuse monitoring** For 3KF LV HRC and 3KF SITOR	• Remote display by auxiliary contact (1 CO) • Local detection by integrated LED	7/136
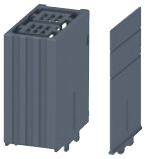 Left: cable connection cover Right: phase barrier	**Other accessories** Phase barriers Cable connection covers LV HRC isolating blades Blocking pin test function Spare parts, mounting brackets Slides for mounting on a standard mounting rail Fuse covers	• Phase barriers (for 3KF LV HRC and 3KF SITOR) • Cable connection cover (for 3KF LV HRC only) As touch protection for termination area • Mounting bracket for wall mounting (spare part) • Fuse covers (for 3KF LV HRC only)	7/137

Minimum order quantity (PS) or a multiple thereof can be ordered.

© Siemens 2019

Complete assemblies

Selection and ordering data

3KF LV HRC, complete assemblies with direct operating mechanism, gray, front operating mechanism

The switch disconnectors are designed for floor mounting;
size 1 can optionally be mounted on standard mounting rails



3KF2312-2LF11
3KF2316-2LF11

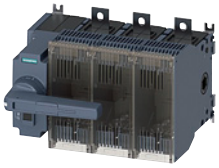

3KF4340-2LF11



3KF5363-2LF11
3KF5380-2LF11

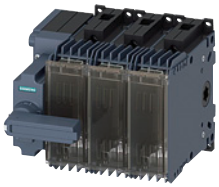

3KF1303/6/8-2LB11

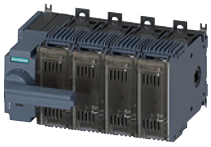

3KF2412-2LF11
3KF2416-2LF11

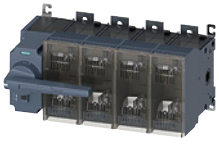

3KF5463-2LF11
3KF5480-2LF11

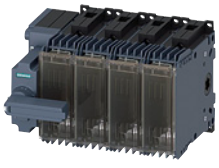

3KF1403/6/8-2LB11

	Rated uninterrupted current I_u	For LV HRC fuse	Size	SD	Article No. www.siemens.com/product?Article No.	Price per PU	PU (UNIT, SET, M)	PS	PG
	A			d					
3-pole					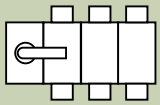				
Flat terminals									
	125	00/000	2		**3KF2312-2LF11**		1	1 unit	1DL
	160	00/000	2		**3KF2316-2LF11**		1	1 unit	1DL
	250	1/0	3		**3KF3325-2LF11**		1	1 unit	1DL
	400	2/1	4		**3KF4340-2LF11**		1	1 unit	1DL
	630	3/2	5		**3KF5363-2LF11**		1	1 unit	1DL
	800	3/2	5		**3KF5380-2LF11**		1	1 unit	1DL
Box terminals									
	32	00/000	1		**3KF1303-2LB11**		1	1 unit	1DL
	63	00/000	1		**3KF1306-2LB11**		1	1 unit	1DL
	80	00/000	1		**3KF1308-2LB11**		1	1 unit	1DL
4-pole					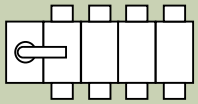				
Flat terminals									
	125	00/000	2		**3KF2412-2LF11**		1	1 unit	1DL
	160	00/000	2		**3KF2416-2LF11**		1	1 unit	1DL
	250	1/0	3		**3KF3425-2LF11**		1	1 unit	1DL
	400	2/1	4		**3KF4440-2LF11**		1	1 unit	1DL
	630	3/2	5		**3KF5463-2LF11**		1	1 unit	1DL
	800	3/2	5		**3KF5480-2LF11**		1	1 unit	1DL
Box terminals									
	32	00/000	1		**3KF1403-2LB11**		1	1 unit	1DL
	63	00/000	1		**3KF1406-2LB11**		1	1 unit	1DL
	80	00/000	1		**3KF1408-2LB11**		1	1 unit	1DL

Minimum order quantity (PS) or a multiple thereof can be ordered.

© Siemens 2019

3KF LV HRC, basic units without handle, front operating mechanisms

The switch disconnectors are designed for floor mounting; size 1 can optionally be mounted on standard mounting rails

3-pole



3KF2312-0LF11, 3KF2316-0LF11



3KF5363-0LF11, 3KF5380-0LF11



3KF2312-0MF11, 3KF2316-0MF11



3KF5363-0MF11, 3KF5380-0MF11



3KF2312-0MR11



3KF1303/6/8-0LB11



3KF1303/6/8-0MB11

			Operating mechanism on left						Operating mechanism in center					
Rated uninterrupted current I_u	For LV HRC fuse	Size	SD	Article No. www.siemens.com/product?Article No.	Price per PU	PU (UNIT, SET, M)	PS	PG	SD	Article No. www.siemens.com/product?Article No.	Price per PU	PU (UNIT, SET, M)	PS	PG
A			d						d					
Flat terminals														
125	00/000	2		**3KF2312-0LF11**		1	1 unit	1DL		**3KF2312-0MF11**		1	1 unit	1DL
160	00/000	2		**3KF2316-0LF11**		1	1 unit	1DL		**3KF2316-0MF11**		1	1 unit	1DL
250	1/0	3		**3KF3325-0LF11**		1	1 unit	1DL		**3KF3325-0MF11**		1	1 unit	1DL
400	2/1	4		**3KF4340-0LF11**		1	1 unit	1DL		**3KF4340-0MF11**		1	1 unit	1DL
630	3/2	5		**3KF5363-0LF11**		1	1 unit	1DL		**3KF5363-0MF11**		1	1 unit	1DL
800	3/2	5		**3KF5380-0LF11**		1	1 unit	1DL		**3KF5380-0MF11**		1	1 unit	1DL
Flat terminals at rear														
32	00/000	1		---		1	1 unit	12S		**3KF1303-0MR11**		1	1 unit	1DL
63	00/000	1		---		1	1 unit	12S		**3KF1306-0MR11**		1	1 unit	1DL
125	00/000	2		---		1	1 unit	12S		**3KF2312-0MR11**		1	1 unit	1DL
Box terminals														
32	00/000	1		**3KF1303-0LB11**		1	1 unit	1DL		**3KF1303-0MB11**		1	1 unit	1DL
63	00/000	1		**3KF1306-0LB11**		1	1 unit	1DL		**3KF1306-0MB11**		1	1 unit	1DL
80	00/000	1		**3KF1308-0LB11**		1	1 unit	1DL		**3KF1308-0MB11**		1	1 unit	1DL

© Siemens 2019

Basic units

	Rated uninterrupted current I_u	For LV HRC fuse	Size	SD	Operating mechanism on left: Article No. www.siemens.com/product?Article No.	Price per PU	PU (UNIT, SET, M)	PS	PG	SD	Operating mechanism in center: Article No. www.siemens.com/product?Article No.	Price per PU	PU (UNIT, SET, M)	PS	PG
	A			d						d					
	4-pole				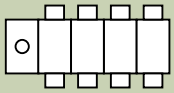						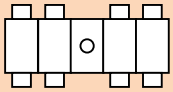				
 3KF2412-0LF11, 3KF2416-0LF11	**Flat terminals**														
	125	00/000	2		**3KF2412-0LF11**		1	1 unit	1DL		**3KF2412-0MF11**		1	1 unit	1DL
	160	00/000	2		**3KF2416-0LF11**		1	1 unit	1DL		**3KF2416-0MF11**		1	1 unit	1DL
	250	1/0	3		**3KF3425-0LF11**		1	1 unit	1DL		**3KF3425-0MF11**		1	1 unit	1DL
	400	2/1	4		**3KF4440-0LF11**		1	1 unit	1DL		**3KF4440-0MF11**		1	1 unit	1DL
	630	3/2	5		**3KF5463-0LF11**		1	1 unit	1DL		**3KF5463-0MF11**		1	1 unit	1DL
 3KF5463-0LF11, 3KF5480-0LF11	800	3/2	5		**3KF5480-0LF11**		1	1 unit	1DL		**3KF5480-0MF11**		1	1 unit	1DL
 3KF2412-0MF11, 3KF2416-0MF11															
 3KF5463-0MF11, 3KF5480-0MF11															
	Box terminals														
 3KF1403/6/8-0LB11	32	00/000	1		**3KF1403-0LB11**		1	1 unit	1DL		**3KF1403-0MB11**		1	1 unit	1DL
	63	00/000	1		**3KF1406-0LB11**		1	1 unit	1DL		**3KF1406-0MB11**		1	1 unit	1DL
	80	00/000	1		**3KF1408-0LB11**		1	1 unit	1DL		**3KF1408-0MB11**		1	1 unit	1DL
 3KF1403/6/8-0MB11															

Minimum order quantity (PS) or a multiple thereof can be ordered.

© Siemens 2019

3KF SITOR, basic units without handle, front operating mechanism NEW

3KF SITOR switch disconnectors (LV HRC design) were developed specially for the higher power losses of fuses for semiconductor protection. Fuses for semiconductor protection with LV HRC design can be used in 3KF SITOR with substantially less derating than in conventional fuse switching devices – Derating tables for the use of Siemens SITOR fuses, see page 7/141.

Use of standard LV HRC fuses gG, gL, aM in 3KF SITOR is possible without restriction

3-pole



3KF2312-0MF51, 3KF2316-0MF51



3KF3325-0MF51



3KF4340-0MF51



3KF5363-0MF51, 3KF5380-0MF51



Rated uninterrupted current I_u	For LV HRC fuse	Size	SD	Operating mechanism on left: Article No. www.siemens.com/product?Article No.	Price per PU	PU (UNIT, SET, M)	PS	PG	SD	Operating mechanism in center: Article No. www.siemens.com/product?Article No.	Price per PU	PU (UNIT, SET, M)	PS	PG
A			d						d					
Flat terminals														
125	00/000	2		--						**3KF2312-0MF51**		1	1 unit	1DL
160	00/000	2		--						**3KF2316-0MF51**		1	1 unit	1DL
250	1/0	3		--						**3KF3325-0MF51**		1	1 unit	1DL
400	2/1	4		--						**3KF4340-0MF51**		1	1 unit	1DL
630	3/2	5		--						**3KF5363-0MF51**		1	1 unit	1DL
800	3/2	5		--						**3KF5380-0MF51**		1	1 unit	1DL
Box terminals														
32	00/000	1		**3KF1303-0LB51**		1	1 unit	1DL		--				
63	00/000	1		**3KF1306-0LB51**		1	1 unit	1DL		--				
80	00/000	1		**3KF1308-0LB51**		1	1 unit	1DL		--				

© Siemens 2019

Basic units

3KF LV HRC, basic units without handle, lateral operating mechanism

The switch disconnectors with lateral operating mechanism are suitable for door-coupling rotary operating mechanisms.



3KF2312-4LF11, 3KF2316-4LF11



3KF5363-4LF11, 3KF5380-4LF11



3KF2312-4RF11, 3KF2316-4RF11



3KF5363-4RF11, 3KF5380-4RF11



3KF1303/6/8-4LB11



3KF1303/6/8-4RB11

3-pole

Rated uninterrupted current I_u	For LV HRC fuse	Size	SD	Operating mechanism on left: Article No. www.siemens.com/product?Article No.	Price per PU	PU (UNIT, SET, M)	PS	PG	SD	Operating mechanism on right: Article No. www.siemens.com/product?Article No.	Price per PU	PU (UNIT, SET, M)	PS	PG
A			d						d					
Flat terminals														
125	00/000	2		**3KF2312-4LF11**		1	1 unit	1DL		**3KF2312-4RF11**		1	1 unit	1DL
160	00/000	2		**3KF2316-4LF11**		1	1 unit	1DL		**3KF2316-4RF11**		1	1 unit	1DL
250	1/0	3		**3KF3325-4LF11**		1	1 unit	1DL		**3KF3325-4RF11**		1	1 unit	1DL
400	2/1	4		**3KF4340-4LF11**		1	1 unit	1DL		**3KF4340-4RF11**		1	1 unit	1DL
630	3/2	5		**3KF5363-4LF11**		1	1 unit	1DL		**3KF5363-4RF11**		1	1 unit	1DL
800	3/2	5		**3KF5380-4LF11**		1	1 unit	1DL		**3KF5380-4RF11**		1	1 unit	1DL
Box terminals														
32	00/000	1		**3KF1303-4LB11**		1	1 unit	1DL		**3KF1303-4RB11**		1	1 unit	1DL
63	00/000	1		**3KF1306-4LB11**		1	1 unit	1DL		**3KF1306-4RB11**		1	1 unit	1DL
80	00/000	1		**3KF1308-4LB11**		1	1 unit	1DL		**3KF1308-4RB11**		1	1 unit	1DL

Minimum order quantity (PS) or a multiple thereof can be ordered.

© Siemens 2019

	Rated uninterrupted current I_u	For LV HRC fuse	Size	SD	Article No. www.siemens.com/product?Article No.	Price per PU	PU (UNIT, SET, M)	PS	PG	SD	Article No. www.siemens.com/product?Article No.	Price per PU	PU (UNIT, SET, M)	PS	PG
					Operating mechanism on left						**Operating mechanism on right**				
	A			d						d					
	4-pole														
	Flat terminals														
 3KF2412-4LF11, 3KF2416-4LF11	125	00/000	2		**3KF2412-4LF11**		1	1 unit	1DL		**3KF2412-4RF11**		1	1 unit	1DL
	160	00/000	2		**3KF2416-4LF11**		1	1 unit	1DL		**3KF2416-4RF11**		1	1 unit	1DL
	250	1/0	3		**3KF3425-4LF11**		1	1 unit	1DL		**3KF3425-4RF11**		1	1 unit	1DL
	400	2/1	4		**3KF4440-4LF11**		1	1 unit	1DL		**3KF4440-4RF11**		1	1 unit	1DL
	630	3/2	5		**3KF5463-4LF11**		1	1 unit	1DL		**3KF5463-4RF11**		1	1 unit	1DL
	800	3/2	5		**3KF5480-4LF11**		1	1 unit	1DL		**3KF5480-4RF11**		1	1 unit	1DL
 3KF5463-4LF11, 3KF5480-4LF11															
 3KF2412-4RF11, 3KF2416-4RF11															
 3KF5463-4RF11, 3KF5480-4RF11															
	Box terminals														
 3KF1403/6/8-4RB11	32	00/000	1		**3KF1403-4LB11**		1	1 unit	1DL		**3KF1403-4RB11**		1	1 unit	1DL
	63	00/000	1		**3KF1406-4LB11**		1	1 unit	1DL		**3KF1406-4RB11**		1	1 unit	1DL
	80	00/000	1		**3KF1408-4LB11**		1	1 unit	1DL		**3KF1408-4RB11**		1	1 unit	1DL

7

© Siemens 2019

Selection and ordering data

	For size	For LV HRC fuses	For 3KF LV HRC SD	Article No. www.siemens.com/product?Article No.	Price per PU	PU (UNIT, SET, M)	PS	PG	For 3KF SITOR NEW SD	Article No. www.siemens.com/product?Article No.	Price per PU	PU (UNIT, SET, M)	PS	PG
			d						d					
Additional poles														
4th contact element (switching pole)				Circuit symbol: N — N						Circuit symbol: N — N				
If a 4th contact element is used in a three-phase four-conductor system with neutral conductor (3 + N), an isolating blade must be used with the neutral conductor.														
 3KF9205-0AA00	**Flat terminals**													
	2; 3KF2...	00/000		**3KF9205-0AA00**		1	1 unit	1DL		**3KF9205-0BA00**		1	1 unit	1DL
	3; 3KF3...	1/0		**3KF9305-0AA00**		1	1 unit	1DL		**3KF9305-0BA00**		1	1 unit	1DL
	4; 3KF4...	2/1		**3KF9405-0AA00**		1	1 unit	1DL		**3KF9405-0BA00**		1	1 unit	1DL
	5; 3KF5...	3/2		**3KF9505-0AA00**		1	1 unit	1DL		**3KF9505-0BA00**		1	1 unit	1DL
 3KF9105-1AA00	**Flat terminals at rear**													
	1; 3KF1...	00/000		**3KF9105-1AA00**		1	1 unit	1DL		--				
	2; 3KF2...	00/000		**3KF9205-1AA00**		1	1 unit	1DL		--				
 3KF9105-2AA00	**Box terminals**													
	1; 3KF1...	00/000		**3KF9105-2AA00**		1	1 unit	1DL		**3KF9105-2BA00**		1	1 unit	1DL
Neutral conductor terminals with removable jumper				Circuit symbol:						Circuit symbol:				
 3KF9206-0AA00	**Flat terminals**													
	2; 3KF2...			**3KF9206-0AA00**		1	1 unit	1DL		**3KF9206-0AA00**		1	1 unit	1DL
	3; 3KF3...			**3KF9306-0AA00**		1	1 unit	1DL		**3KF9306-0AA00**		1	1 unit	1DL
	4; 3KF4...			**3KF9406-0AA00**		1	1 unit	1DL		**3KF9406-0AA00**		1	1 unit	1DL
	5; 3KF5...			**3KF9506-0AA00**		1	1 unit	1DL		**3KF9506-0AA00**		1	1 unit	1DL
 3KF9106-1AA00	**Flat terminals at rear**													
	1; 3KF1...			**3KF9106-1AA00**		1	1 unit	1DL		--				
	2; 3KF2...			**3KF9206-1AA00**		1	1 unit	1DL		--				
 3KF9106-2AA00	**Box terminals**													
	1; 3KF1...			**3KF9106-2AA00**		1	1 unit	1DL		**3KF9106-2AA00**		1	1 unit	1DL

7

Minimum order quantity (PS) or a multiple thereof can be ordered.

© Siemens 2019

	For size	For LV HRC fuses	For 3KF LV HRC SD	Article No. www.siemens.com/product?Article No.	Price per PU	PU (UNIT, SET, M)	PS	PG	For 3KF SITOR NEW SD	Article No. www.siemens.com/product?Article No.	Price per PU	PU (UNIT, SET, M)	PS	PG
			d						d					
N/PE terminals with permanent jumper				Circuit symbol:						Circuit symbol:				
 3KF9206-7AA00	**Flat terminals**													
	2; 3KF2...			**3KF9206-7AA00**		1	1 unit	1DL		**3KF9206-7AA00**		1	1 unit	1DL
	3; 3KF3...			**3KF9306-7AA00**		1	1 unit	1DL		**3KF9306-7AA00**		1	1 unit	1DL
	4; 3KF4...			**3KF9406-7AA00**		1	1 unit	1DL		**3KF9406-7AA00**		1	1 unit	1DL
	5; 3KF5...			**3KF9506-7AA00**		1	1 unit	1DL		**3KF9506-7AA00**		1	1 unit	1DL
 3KF9106-6AA00	**Flat terminals at rear**													
	1; 3KF1...			**3KF9106-6AA00**		1	1 unit	1DL		--				
	2; 3KF2...			**3KF9206-6AA00**		1	1 unit	1DL		--				
 3KF9106-8AA00	**Box terminals**													
	1; 3KF1...			**3KF9106-8AA00**		1	1 unit	1DL		**3KF9106-8AA00**		1	1 unit	1DL

7

© Siemens 2019

Accessories and spare parts

Direct operating mechanisms

	Version	SD	Article No. www.siemens.com/product?Article No.	Price per PU	PU (UNIT, SET, M)	PS	PG
		d					
Direct operating mechanisms							
	• Can only be used on 3KF LV HRC						
	• Can be locked with up to max. 3 padlocks						
	Gray						
 3KF9101-1AA00	• For size 1; 3KF1...		**3KF9101-1AA00**		1	1 unit	1DL
	• For size 2; 3KF2...		**3KF9201-1AA00**		1	1 unit	1DL
	• For size 3; 3KF3...		**3KF9301-1AA00**		1	1 unit	1DL
	• For size 4; 3KF4...		**3KF9401-1AA00**		1	1 unit	1DL
	• For size 5; 3KF5...		**3KF9501-1AA00**		1	1 unit	1DL
	Red/yellow						
 3KF9101-2AA00	• For size 1; 3KF1...		**3KF9101-2AA00**		1	1 unit	1DL
	• For size 2; 3KF2...		**3KF9201-2AA00**		1	1 unit	1DL
	• For size 3; 3KF3...		**3KF9301-2AA00**		1	1 unit	1DL
	• For size 4; 3KF4...		**3KF9401-2AA00**		1	1 unit	1DL
	• For size 5; 3KF5...		**3KF9501-2AA00**		1	1 unit	1DL

Door-coupling rotary operating mechanisms

Door-coupling rotary operating mechanisms can be used for 3KF LV HRC and SITOR switch disconnectors.

Note

For 3KF switch disconnectors with fuses and lateral operating mechanism (left or right), only door-coupling rotary operating mechanisms without "Test" can be used.

	Version	Handle length	Shaft size	SD	Article No. www.siemens.com/product?Article No.	Price per PU	PU (UNIT, SET, M)	PS	PG
		mm	mm x mm	d					
Door-coupling rotary operating mechanisms, complete									
	Comprises a handle, coupling driver with tolerance compensation and 300 mm shaft								
	Labeling TEST - 0 - I								
	Gray								
 8UD1171-2AF21	• For size 1; 3KF1...	45	8 x 8		**8UD1171-2AF21**		1	1 unit	1CL
	• For size 2; 3KF2...	100	8 x 8		**8UD1141-2AF21**		1	1 unit	1CL
	• For size 3; 3KF3...	100	10 x 10		**8UD1141-3AF21**		1	1 unit	1CL
	• For size 4; 3KF4...	140	10 x 10		**8UD1151-3AF21**		1	1 unit	1CL
	• For size 5; 3KF5...	200	12 x 12		**8UD1161-4AF21**		1	1 unit	1CL
	Red/yellow								
 8UD1171-2AF25	• For size 1; 3KF1...	45	8 x 8		**8UD1171-2AF25**		1	1 unit	1CL
	• For size 2; 3KF2...	100	8 x 8		**8UD1141-2AF25**		1	1 unit	1CL
	• For size 3; 3KF3...	100	10 x 10		**8UD1141-3AF25**		1	1 unit	1CL
	• For size 4; 3KF4...	140	10 x 10		**8UD1151-3AF25**		1	1 unit	1CL
	• For size 5; 3KF5...	200	12 x 12		**8UD1161-4AF25**		1	1 unit	1CL

Minimum order quantity (PS) or a multiple thereof can be ordered.

© Siemens 2019

	Version	Handle length	Shaft size	SD	Article No. www.siemens.com/product?Article No.	Price per PU	PU (UNIT, SET, M)	PS	PG
		mm	mm x mm	d					
Handles for door-coupling rotary operating mechanisms									
	Labeling 0 - I non-illuminated								
	Can be used for 3KF LV HRC and 3KF SITOR								
	Note: If an 8UD is used without the "Test" inscription, the test function of the auxiliary switch must be deactivated permanently in 3KF with front operating mechanisms								
 8UD1771-2AD01	**Gray**								
	• For size 1; 3KF1..	45	--		**8UD1771-2AD01**		1	1 unit	1CL
	• For sizes 2/3; 3KF2/3...	100	--		**8UD1841-2AD01**		1	1 unit	1CL
	• For size 4; 3KF4...	140	--		**8UD1851-3AD01**		1	1 unit	1CL
	• For size 5; 3KF5...	200	--		**8UD1861-4AD01**		1	1 unit	1CL
 8UD1771-2AD05	**Red/yellow**								
	• For size 1; 3KF1..	45	--		**8UD1771-2AD05**		1	1 unit	1CL
	• For sizes 2/3; 3KF2/3...	100	--		**8UD1841-2AD05**		1	1 unit	1CL
	• For size 4; 3KF4...	140	--		**8UD1851-3AD05**		1	1 unit	1CL
	• For size 5; 3KF5...	200	--		**8UD1861-4AD05**		1	1 unit	1CL
	Labeling TEST - 0 - I non-illuminated								
	Can be used for 3KF LV HRC and 3KF SITOR								
 8UD1771-2AF01	**Gray**								
	• For size 1; 3KF1..	45	--		**8UD1771-2AF01**		1	1 unit	1CL
	• For sizes 2/3; 3KF2/3...	100	--		**8UD1841-2AF01**		1	1 unit	1CL
	• For size 4; 3KF4...	140	--		**8UD1851-3AF01**		1	1 unit	1CL
	• For size 5; 3KF5...	200	--		**8UD1861-4AF01**		1	1 unit	1CL
 8UD1771-2AF05	**Red/yellow**								
	• For size 1; 3KF1..	45	--		**8UD1771-2AF05**		1	1 unit	1CL
	• For sizes 2/3; 3KF2/3...	100	--		**8UD1841-2AF05**		1	1 unit	1CL
	• For size 4; 3KF4...	140	--		**8UD1851-3AF05**		1	1 unit	1CL
	• For size 5; 3KF5...	200	--		**8UD1861-4AF05**		1	1 unit	1CL

© Siemens 2019

Accessories and spare parts

	Version	Handle length	Shaft size	SD	Article No. www.siemens.com/product?Article No.	Price per PU	PU (UNIT, SET, M)	PS	PG
		mm	mm x mm	d					
	Labeling 0 - I illuminated								
	Can be used for 3KF LV HRC and 3KF SITOR								
	Note: If an 8UD is used without the "Test" inscription, the test function of the auxiliary switch must be deactivated permanently in 3KF with front operating mechanisms								
 8UD1771-2CD01	**Gray**								
	• For size 1; 3KF1...	45	--		**8UD1771-2CD01**		1	1 unit	1CL
	• For sizes 2/3; 3KF2/3...	100	--		**8UD1841-2CD01**		1	1 unit	1CL
	• For size 4; 3KF4...	140	--		**8UD1851-3CD01**		1	1 unit	1CL
	• For size 5; 3KF5...	200	--		**8UD1861-4CD01**		1	1 unit	1CL
 8UD1771-2CD05	**Red/yellow**								
	• For size 1; 3KF1...	45	--		**8UD1771-2CD05**		1	1 unit	1CL
	• For sizes 2/3; 3KF2/3...	100	--		**8UD1841-2CD05**		1	1 unit	1CL
	• For size 4; 3KF4...	140	--		**8UD1851-3CD05**		1	1 unit	1CL
	• For size 5; 3KF5...	200	--		**8UD1861-4CD05**		1	1 unit	1CL
	Labeling TEST - 0 - I illuminated								
	Can be used for 3KF LV HRC and 3KF SITOR								
 8UD1771-2CF01	**Gray**								
	• For size 1; 3KF1...	45	--		**8UD1771-2CF01**		1	1 unit	1CL
	• For sizes 2/3; 3KF2/3...	100	--		**8UD1841-2CF01**		1	1 unit	1CL
	• For size 4; 3KF4...	140	--		**8UD1851-3CF01**		1	1 unit	1CL
	• For size 5; 3KF5...	200	--		**8UD1861-4CF01**		1	1 unit	1CL
 8UD1771-2CF05	**Red/yellow**								
	• For size 1; 3KF1...	45	--		**8UD1771-2CF05**		1	1 unit	1CL
	• For sizes 2/3; 3KF2/3...	100	--		**8UD1841-2CF05**		1	1 unit	1CL
	• For size 4; 3KF4...	140	--		**8UD1851-3CF05**		1	1 unit	1CL
	• For size 5; 3KF5...	200	--		**8UD1861-4CF05**		1	1 unit	1CL

Minimum order quantity (PS) or a multiple thereof can be ordered.

© Siemens 2019

	Version	Handle length	Shaft size	SD	Article No. www.siemens.com/product?Article No.	Price per PU	PU (UNIT, SET, M)	PS	PG
		mm	mm x mm	d					
Other accessories for door-coupling rotary operating mechanisms, 8UD1 series									
 8UC6032	***Extension shafts***								
	300 mm long								
	• For sizes 1/2; 3KF1/2...	--	8 x 8		**8UC6032**		1	1 unit	1CL
	• For sizes 3/4; 3KF3/4...	--	10 x 10		**8UC6033**		1	1 unit	1CL
	• For size 5; 3KF5...	--	12 x 12		**8UC6034**		1	1 unit	1CL
 8UC6082	**600 mm long**								
	A shaft jack is required for the 8UD handle when the 600 mm long shaft is used and for size 1.								
	• For sizes 1/2; 3KF1/2...	--	8 x 8		**8UC6082**		1	1 unit	1CL
	• For sizes 3/4; 3KF3/4...	--	10 x 10		**8UC6083**		1	1 unit	1CL
	• For size 5; 3KF5...	--	12 x 12		**8UC6084**		1	1 unit	1CL
 8UD1900-0FA00	**Shaft jack for 8UD handle for shaft, 600 mm** NEW								
	Required when 600 mm long shaft is used								
	• For size 1; 3KF1...	--	8 x 8		**8UD1900-0FA00**		1	1 unit	1CL
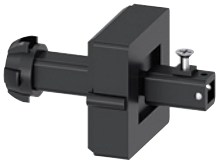 8UD1900-2GA00	***Coupling drivers with tolerance compensation***								
	For engaging the extension shaft in the handle								
	• For size 1; 3KF1...	--	8 x 8		**8UD1900-2GA00**		1	1 unit	1CB
	• For size 2; 3KF2...	--	8 x 8		**8UD1900-6GA00**		1	1 unit	1CL
	• For sizes 3/4; 3KF3/4...	--	10 x 10		**8UD1900-3GA00**		1	1 unit	1CL
	• For size 5; 3KF5...	--	12 x 12		**8UD1900-4GA00**		1	1 unit	1CL
 8UD1900-2HA00	***Coupling drivers without tolerance compensation***								
	For engaging the extension shaft in the handle								
	• For size 1; 3KF1	--	8 x 8		**8UD1900-2HA00**		1	1 unit	1CB
	• For size 2; 3KF2...	--	8 x 8		**8UD1900-6HA00**		1	1 unit	1CL
	• For sizes 3/4; 3KF3/4...	--	10 x 10		**8UD1900-3HA00**		1	1 unit	1CL
	• For size 5; 3KF5...	--	12 x 12		**8UD1900-4HA00**		1	1 unit	1CL
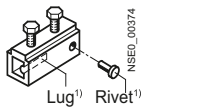 8UC6022 to 8UC6024	***Shaft couplings***								
	For connecting two shafts								
	• For size 1/2 3KF1/2...	--	8 x 8		**8UC6022**		1	1 unit	1CL
	• For sizes 3/4; 3KF3/4...	--	10 x 10		**8UC6023**		1	1 unit	1CL
	• For size 5; 3KF5...	--	12 x 12		**8UC6024**		1	1 unit	1CL

7

© Siemens 2019

Accessories and spare parts

Auxiliary switches

	Version	For size	SD	Article No. www.siemens.com/product?Article No.	Price per PU	PU (UNIT, SET, M)	PS	PG
			d					
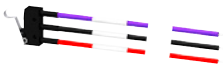 3KD9103-3	**Auxiliary switches for size 1**							
	With soldered-on 50 cm connecting cables							
	• 1 CO contact	1		**3KD9103-1**		1	1 unit	1CL
	• 1 CO contact, solid-state compatible	1		**3KD9103-3**		1	1 unit	1CL
	**Auxiliary switches for size 1**							
	Without soldered-on connecting cables							
	• 1 CO contact	1		**3KD9103-2**		1	1 unit	1CL
	• 1 CO contact, solid-state compatible	1		**3KD9103-4**		1	1 unit	1CL
 3KD9103-5/-6/-7	**Auxiliary switch modules for size 1**[1]							
	• Standard	1		**3KD9103-5**		1	1 unit	1CL
	• With test function[2]	1		**3KD9103-6**		1	1 unit	1CL
	• With leading NO contact and with test function[2]	1		**3KD9103-7**		1	1 unit	1CL
	**Mounting brackets for auxiliary switch modules**							
	• For mounting auxiliary switch modules on 3KF switch disconnectors with rear terminal	1		**3KF9112-0AB00**		1	1 unit	1DL
	**Auxiliary switches for sizes 2 to 5**							
	Auxiliary switches with screw terminals for installation on operating mechanism module. Auxiliary switches with spring-type terminals from the 3SU1 range can also be used.							
	All auxiliary switches for sizes 2 to 5 can be used as leading auxiliary switches, depending on the mounting position of the auxiliary switch (see page 7/114)							
	• 1 NO	2 to 5	▶	**3SU1400-1AA10-1BA0**		1	1 unit	41J
	• 1 NO with gold-plated contacts	2 to 5		**3SU1400-1AA10-1LA0**		1	1 unit	41J
	• 1 NC	2 to 5	▶	**3SU1400-1AA10-1CA0**		1	1 unit	41J
	• 1 NC with gold-plated contacts	2 to 5		**3SU1400-1AA10-1MA0**		1	1 unit	41J
	• 1 NO + 1 NC	2 to 5	▶	**3SU1400-1AA10-1FA0**		1	1 unit	41J
	• 1 NO + 1 NC with gold-plated contacts	2 to 5		**3SU1400-1AA10-1QA0**		1	1 unit	41J
	• 2 NO	2 to 5	▶	**3SU1400-1AA10-1DA0**		1	1 unit	41J
	• 2 NO with gold-plated contacts	2 to 5		**3SU1400-1AA10-1NA0**		1	1 unit	41J
	• 2 NC	2 to 5	▶	**3SU1400-1AA10-1EA0**		1	1 unit	41J
	• 2 NC with gold-plated contacts	2 to 5		**3SU1400-1AA10-1PA0**		1	1 unit	41J

[1] Unit is supplied without auxiliary switches; a maximum of 2 auxiliary switches can be installed. The 3KF9112-0AB00 mounting bracket is additionally required for mounting the auxiliary switch modules with rear terminal.

[2] Can only be used with 3KF with front and left operating mechanism.

Fuse monitoring

	Version	SD	Article No. www.siemens.com/product?Article No.	Price per PU	PU (UNIT, SET, M)	PS	PG
		d					
	**Electronic fuse monitoring for remote display of tripped fuses**						
	Remote display by auxiliary contact (1 CO), Local detection by integrated LED						
	• For all sizes		**3KF9010-1AA00**		1	1 unit	1DL
	• For 3KF LV HRC and 3KF SITOR						

Minimum order quantity (PS) or a multiple thereof can be ordered.

© Siemens 2019

Other accessories

	Version	For size/ for fuse LV HRC	SD	Article No. www.siemens.com/product?Article No.	Price per PU	PU (UNIT, SET, M)	PS	PG
			d					
Phase barriers								
 Phase barrier for 3/4-pole units in size 2	For 3KF LV HRC and 3KF SITOR with flat terminals							
	For 3-pole devices (6 units)							
		2		**3KD9308-6**		1	1 unit	1CL
		3...4		**3KD9408-6**		1	1 unit	1CL
		5		**3KD9508-6**		1	1 unit	1CL
	For 4-pole devices (8 units)							
		2		**3KD9308-8**		1	1 unit	1CL
		3...4		**3KD9408-8**		1	1 unit	1CL
		5		**3KD9508-8**		1	1 unit	1CL
Cable connection covers								
	• For 3KF with flat terminals • Can only be used on 3KF LV HRC							
	For 3-pole devices (6 units)							
 S3KD9304-6	**Standard length**							
		2		**3KD9304-6**		1	1 unit	1CL
		3		**3KF9304-6**		1	1 unit	1DL
		4		**3KD9404-6**		1	1 unit	1CL
		5		**3KD9504-6**		1	1 unit	1CL
 3KD9304-7	**Short version**							
		2		**3KD9304-7**		1	1 unit	1CL
		3		**3KF9304-7**		1	1 unit	1DL
		4		**3KD9404-7**		1	1 unit	1CL
	For 4-pole devices (8 units)							
 3KD9304-8	**Standard length**							
		2		**3KD9304-8**		1	1 unit	1CL
		3		**3KF9304-8**		1	1 unit	1DL
		4		**3KD9404-8**		1	1 unit	1CL
		5		**3KD9504-8**		1	1 unit	1CL
 3KD9304-5	**Short version**							
		2		**3KD9304-5**		1	1 unit	1CL
		3		**3KF9304-5**		1	1 unit	1DL
		4		**3KD9404-5**		1	1 unit	1CL

7

© Siemens 2019

Accessories and spare parts

	Version	For size/ for fuse LV HRC	SD d	Article No. www.siemens.com/product?Article No.	Price per PU	PU (UNIT, SET, M)	PS	PG
Cable connection covers (continued)								
	Spare cable connection cover (1 unit)							
	**Standard length**	5		**3KD9504-1**		1	1 unit	1CL
	**Short version**	2		**3KD9304-1**		1	1 unit	1CL
		3		**3KF9304-1**		1	1 unit	1DL
		4		**3KD9404-1**		1	1 unit	1CL
LV HRC isolating blades								
	With insulated grip lugs	LV HRC 000/00		**3NG1002**		1	3 units	1BM
		LV HRC 1		**3NG1202**		1	1 unit	1BM
		LV HRC 2		**3NG1302**		1	1 unit	1BM
		LV HRC 3		**3NG1402**		1	1 unit	1BM
Blocking pin test function								
	Enables permanent deactivation of the test function for auxiliary switches; it is installed in the operating mechanism module of the 3KF switch disconnector For 3KF LV HRC and 3KF SITOR Scope of supply: Blocking pins for 10 3KF switch disconnectors	1		**3KF9112-1AA00**		1	1 unit	1DL
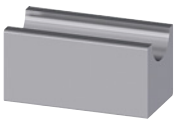		2 and 4		**3KF9412-1AA00**		1	1 unit	1DL
		5		**3KF9512-1AA00**		1	1 unit	1DL

Minimum order quantity (PS) or a multiple thereof can be ordered.

© Siemens 2019

	Version	For size/ for fuse LV HRC	SD	Article No. www.siemens.com/product?Article No.	Price per PU	PU (UNIT, SET, M)	PS	PG
			d					
	All parts are included in scope of supply of the 3KF switch disconnector.							
Spare parts, mounting bracket								
	Mounting brackets for one 3KF switch disconnector are included in the scope of supply							
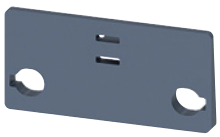	• For 3KF LV HRC	1[1]		**3KF9112-0AA00**		1	1 unit	1DL
	• For 3KF SITOR	1		**3KF9112-0AA10**		1	1 unit	1DL
	• For 3KF LV HRC	2[1]		**3KF9212-0AA00**		1	1 unit	1DL
	• For 3KF SITOR	2		**3KF9212-0AA10**		1	1 unit	1DL
	• For 3KF LV HRC and 3KF SITOR	3 and 4		**3KF9412-0AA00**		1	1 unit	1DL
	• For 3KF LV HRC and 3KF SITOR	5		**3KF9512-0AA00**		1	1 unit	1DL
	• For 3KF LV HRC with rear flat terminals	1[2] and 2		**3KF9212-0AB00**		1	1 unit	1DL
Slide for mounting on a standard mounting rail								
	• Spare part is included in the scope of supply of the 3KF • Contains 5 parts	1		**3KF9112-0BA00**		1	1 unit	1DL

[1] Cannot be used for 3KF with rear flat terminal.

[2] The 3KF9112-0AB00 mounting bracket is needed if an auxiliary switch module is mounted on a 3KF1 switch disconnector with rear flat terminal (delivered quantity: 1 unit).

© Siemens 2019

Accessories and spare parts

	Version	For size/ for fuse LV HRC	SD d	Article No. www.siemens.com/product?Article No.	Price per PU	PU (UNIT, SET, M)	PS	PG
	All parts are included in scope of supply of the 3KF switch disconnector.							
Fuse covers								
	Fuse covers can only be used for 3KF LV HRC							
		1		**3KF9112-0CA00**		1	1 unit	1DL
		2[1)]		**3KF9212-0CA00**		1	1 unit	1DL
		3		**3KF9312-0CA00**		1	1 unit	1DL
		4		**3KF9412-0CA00**		1	1 unit	1DL
		5		**3KF9512-0CA00**		1	1 unit	1DL

[1)] Use 3KF9212-0CB00 fuse cover for 3KF2 with rear terminal.

Minimum order quantity (PS) or a multiple thereof can be ordered.

© Siemens 2019

Overview

The 3KF switch disconnectors with fuses are suitable for all fuses in LV HRC design, see chapter "Fuse Systems".
When using fuses for semiconductor protection (SITOR) in LV HRC design, it must be noted that they have a higher power loss and can become considerably hotter during operation than fuses for cable protection. For this reason, the fuse must be operated below the rated current I_n of the device (derating) when installed in a closed switching device.

The 3KF SITOR series is optimized for high heat dissipation and can usually be loaded with higher current values when fuses for semiconductor protection are used.

Derating values of 3KF fuse switch disconnectors when using SITOR fuses according to IEC constraints

The following table shows the permissible load currents of the SITOR semiconductor fuses for installation in 3KF LV HRC and 3KF SITOR according to IEC constraints. The specified values apply to a 3KF mounted in accordance with the test conditions of IEC 60947-1 (open installation, length of the incoming and outgoing cables 1 m) installed vertically and with insulated cables, cross section corresponding to the rated operational current of the 3KF switch disconnector (acc. to Table 9 and 10 of the IEC 60947-1).

Further derating is necessary if a combination of 3KF and SITOR fuses is used under different conditions that impair heat dissipation.

Derating table for use of SITOR fuses IEC from 32 to 160 A

SITOR semiconductor fuse data						**Permissible load currents of fuse when installed in**									
						Type 3KF LV HRC					**Type 3KF SITOR**				
Type	Rated current I_n	Rated voltage	Operational class	Size	Power loss P_v	32 A	63 A	80 A	125 A	160 A	32 A	63 A	80 A	125 A	160 A
	A	V AC			W	A	A	A	A	A	A	A	A	A	A
3NE1802-0	40	690	gS	000	3	32.0	40.0	40.0	40.0	40.0	32.0	40.0	40.0	40.0	40.0
3NE1803-0	35	690	gS	000	3.5	32.0	35.0	35.0	35.0	35.0	32.0	35.0	35.0	35.0	35.0
3NE1813-0	16	690	gS	000	4	16.0	16.0	16.0	16.0	16.0	16.0	16.0	16.0	16.0	16.0
3NE1814-0	20	690	gS	000	5	20.0	20.0	20.0	20.0	20.0	20.0	20.0	20.0	20.0	20.0
3NE1815-0	25	690	gS	000	5	25.0	25.0	25.0	25.0	25.0	25.0	25.0	25.0	25.0	25.0
3NE1817-0	50	690	gS	000	6	32.0	50.0	50.0	50.0	50.0	32.0	50.0	50.0	50.0	50.0
3NE1818-0	63	690	gS	000	7	32.0	63.0	63.0	63.0	63.0	32.0	63.0	63.0	63.0	63.0
3NE1820-0	80	690	gS	000	8	32.0	63.0	80.0	80.0	80.0	32.0	63.0	80.0	80.0	80.0
3NE1020-2	80	690	gR	00	10	32.0	63.0	76.0	80.0	80.0	32.0	63.0	76.0	80.0	80.0
3NE1021-0	100	690	gS	00	10	32.0	63.0	80.0	100.0	100.0	32.0	63.0	80.0	100.0	100.0
3NE1021-2	100	690	gR	00	12	32.0	63.0	80.0	96.0	100.0	32.0	63.0	80.0	100.0	100.0
3NE1022-0	125	690	gS	00	11	32.0	63.0	80.0	125.0	125.0	32.0	63.0	80.0	125.0	125.0
3NE1022-2	125	690	gR	00	13	32.0	63.0	80.0	118.8	120.0	32.0	63.0	80.0	118.8	120.0
3NE8015-1	25	690	gR	00	7	24.0	25.0	25.0	25.0	25.0	25.0	25.0	25.0	25.0	25.0
3NE8003-1	35	690	gR	00	9	32.0	35.0	34.0	35.0	35.0	32.0	35.0	35.0	35.0	35.0
3NE8017-1	50	690	gR	00	14	32.0	40.0	42.5	46.0	47.5	32.0	50.0	50.0	50.0	50.0
3NE8018-1	63	690	gR	00	16	32.0	48.5	50.4	55.4	57.3	32.0	60.0	60.0	63.0	63.0
3NE8020-1	80	690	aR	00	19	32.0	57.6	60.8	66.4	68.8	32.0	63.0	68.0	80.0	80.0
3NE8021-1	100	690	aR	00	22	32.0	63.0	60.0	79.0	82.0	32.0	63.0	68.0	100.0	100.0
3NE8022-1	125	690	aR	00	28	32.0	63.0	70.0	90.0	92.5	32.0	63.0	75.0	125.0	125.0
3NE8024-1	160	690	aR	00	38	---	63.0	80.0	100.8	104.0	32.0	63.0	80.0	125.0	140.0

© Siemens 2019

Fuses

Derating table for use of SITOR fuses IEC from 250 to 800 A

SITOR semiconductor fuse data						Permissible load currents of fuse when installed in							
						Type 3KF LV HRC				Alternative type 3F SITOR			
Type	Rated current I_n	Rated voltage	Operational class	Size	Power loss P_v	250 A	400 A	630 A	800 A	250 A	400 A	630 A	800 A
	A	V AC			W	A	A	A	A	A	A	A	A
3NE4101	32	1000	gR	0	12	32.0	---	---	---	32.0	---	---	---
3NE4102	40	1000	gR	0	13	40.0	---	---	---	40.0	---	---	---
3NE4117	50	1000	gR	0	16	50.0	---	---	---	50.0	---	---	---
3NE4118	63	1000	aR	0	20	63.0	---	---	---	63.0	---	---	---
3NE4120	80	1000	aR	0	22	80.0	---	---	---	80.0	---	---	---
3NE4121	100	1000	aR	0	24	100.0	---	---	---	100.0	---	---	---
3NE4122	125	1000	aR	0	30	118.8	---	---	---	125.0	---	---	---
3NE4124	160	1000	aR	0	35	144.0	---	---	---	160.0	---	---	---
3NE1224-0	160	690	gS	1	24	160.0	160.0	---	---	160.0	160.0	---	---
3NE1224-2/-3	160	690	gR	1	32	148.8	160.0	---	---	160.0	160.0	---	---
3NE1225-0	200	690	gS	1	27	194.0	200.0	---	---	200.0	200.0	---	---
3NE1225-2/-3	200	690	gR	1	35	180.0	196.0	---	---	200.0	200.0	---	---
3NE1227-0	250	690	gS	1	30	237.5	250.0	---	---	250.0	250.0	---	---
3NE1227-2/-3	250	690	gR	1	37	220.0	240.0	---	---	240.0	250.0	---	---
3NE1230-0	315	690	gS	1	38	250.0	299.3	---	---	250.0	315.0	---	---
3NE1230-2/-3	315	690	gR	1	40	250.0	299.3	---	---	250.0	315.0	---	---
3NE3221	100	1000	aR	1	28	96.0	100.0	---	---	100.0	100.0	---	---
3NE3222	125	1000	aR	1	36	111.3	121.3	---	---	125.0	125.0	---	---
3NE3224	160	1000	aR	1	42	136.0	148.8	---	---	160.0	160.0	---	---
3NE3225	200	1000	aR	1	42	170.0	186.0	---	---	190.0	200.0	---	---
3NE3227	250	1000	aR	1	50	197.5	220.0	---	---	210.0	250.0	---	---
3NE3230-0B	315	1000	aR	1	60	185.0	261.5	---	---	225.0	315.0	---	---
3NE3231	350	1000	aR	1	75	190.0	266.0	---	---	220.0	350.0	---	---
3NE3232-0B	400	1000	aR	1	85	200.0	292.0	---	---	235.0	370.0	---	---
3NE3233	450	1000	aR	1	95	250.0	306.0	---	---	250.0	385.0	---	---
3NE1331-0	350	690	gS	2	42	---	325.5	350.0	350.0	---	350.0	350.0	350.0
3NE1331-2/-3	350	690	gR	2	43	---	322.0	350.0	350.0	---	350.0	350.0	350.0
3NE1332-0	400	690	gS	2	45	---	364.0	400.0	400.0	---	400.0	400.0	400.0
3NE1332-2/-3	400	690	gR	2	50	---	352.0	392.0	400.0	---	400.0	400.0	400.0
3NE1333-0	450	690	gS	2	53	---	387.0	432.0	450.0	---	400.0	450.0	450.0
3NE1333-2/-3	450	690	gR	2	58	---	351.0	423.0	450.0	---	400.0	450.0	450.0
3NE1334-0	500	690	gS	2	56	---	400.0	475.0	500.0	---	400.0	500.0	500.0
3NE1334-2/-3	500	690	gR	2	64	---	400.0	455.0	485.0	---	400.0	500.0	500.0
3NE3332-0B	400	1000	aR	2	80	---	296.0	340.0	364.0	---	385.0	400.0	400.0
3NE3333	450	1000	aR	2	90	---	315.0	360.0	391.5	---	350.0	450.0	450.0
3NE3334-0B	500	1000	aR	2	90	---	350.0	400.0	435.0	---	375.0	500.0	500.0
3NE3335	560	1000	aR	2	95	---	380.8	442.4	481.6	---	400.0	560.0	560.0
3NE3336	630	1000	aR	2	100	---	400.0	485.1	535.5	---	400.0	630.0	630.0
3NE3337-8	710	900	aR	2	105	---	400.0	539.6	589.3	---	400.0	630.0	710.0
3NE3338-8	800	800	aR	2	130	---	400.0	552.0	616.0	---	400.0	630.0	720.0
3NE3340-8	900	690	aR	2	165	---	---	558.0	621.0	---	400.0	630.0	760.0
3NE4327-0B	250	800	aR	2	105	---	162.5	190.0	207.5	---	200.0	250.0	250.0
3NE4330-0B	315	800	aR	2	120	---	192.2	230.0	248.9	---	285.0	315.0	315.0
3NE4333-0B	450	800	aR	2	140	---	256.5	297.0	333.0	---	285.0	370.0	370.0
3NE4334-0B	500	800	aR	2	155	---	265.0	320.0	360.0	---	300.0	450.0	450.0
3NE4337	710	800	aR	2	155	---	376.3	454.4	511.2	---	400.0	630.0	630.0
3NC2423-0C/3C	150	500	gR	3	35	---	---	150.0	150.0	---	---	150.0	150.0
3NC2425-0C/3C	200	500	gR	3	40	---	---	200.0	200.0	---	---	200.0	200.0
3NC2427-0C/3C	250	500	gR	3	50	---	---	245.0	250.0	---	---	250.0	250.0
3NC2428-0C/3C	300	500	gR	3	65	---	---	270.0	288.0	---	---	300.0	300.0
3NC2431-0C/3C	350	500	gR	3	60	---	---	325.5	350.0	---	---	350.0	350.0
3NC2432-0C/3C	400	500	aR	3	50	---	---	392.0	400.0	---	---	400.0	400.0
3NC3336-1U	630	1000	aR	3	145	---	---	409.5	466.2	---	---	570.0	570.0
3NC3337-1U	710	1000	aR	3	150	---	---	461.5	518.3	---	---	630.0	630.0
3NC3338-1U	800	1000	aR	3	155	---	---	512.0	576.0	---	---	630.0	700.0
3NC3340-1U	900	1000	aR	3	165	---	---	558.0	621.0	---	---	630.0	750.0
3NC3341-1U	1000	1000	aR	3	170	---	---	600.0	680.0	---	---	630.0	780.0

Minimum order quantity (PS) or a multiple thereof can be ordered.

© Siemens 2019

SITOR semiconductor fuse data						Permissible load currents of fuse when installed in							
						Type 3KF LV HRC				Alternative type 3F SITOR			
Type	Rated current I_n	Rated voltage	Operational class	Size	Power loss P_v	250 A	400 A	630 A	800 A	250 A	400 A	630 A	800 A
	A	V AC			W	A	A	A	A	A	A	A	A
3NC3342-1U	1100	800	aR	3	185	---	---	630.0	715.0	---	---	630.0	800.0
3NC3343-1U	1250	800	aR	3	210	---	---	630.0	725.0	---	---	630.0	800.0
3NC3430-1U	315	1250	aR	3	80	---	---	267.8	286.7	---	---	315.0	315.0
3NC3432-1U	400	1250	aR	3	95	---	---	316.0	344.0	---	---	400.0	400.0
3NC3434-1U	500	1250	aR	3	115	---	---	370.0	400.0	---	---	450.0	450.0
3NC3436-1U	630	1250	aR	3	120	---	---	459.9	497.7	---	---	630.0	630.0
3NC3438-1U	800	1100	aR	3	145	---	---	520.0	592.0	---	---	630.0	715.0
3NC8423-0C/-3C	150	690	gR	3	40	---	---	150.0	150.0	---	---	150.0	150.0
3NC8425-0C/-3C	200	690	gR	3	55	---	---	190.0	200.0	---	---	200.0	200.0
3NC8427-0C/-3C	250	690	gR	3	72	---	---	217.5	235.0	---	---	250.0	250.0
3NC8431-0C/-3C	350	690	gR	3	95	---	---	276.5	301.0	---	---	350.0	350.0
3NC8434-0C/-3C	500	690	gR	3	130	---	---	345.0	380.0	---	---	450.0	450.0
3NC8444-3C	1000	600	aR	3	140	---	---	630.0	740.0	---	---	630.0	800.0
3NE1435-0	560	690	gS	3	50	---	---	548.8	560.0	---	---	560.0	560.0
3NE1435-2/-3	560	690	gR	3	60	---	---	520.8	560.0	---	---	560.0	560.0
3NE1436-0	630	690	gS	3	55	---	---	598.5	630.0	---	---	630.0	630.0
3NE1436-2/-3	630	690	gR	3	60	---	---	585.9	630.0	---	---	630.0	630.0
3NE1437-0	710	690	gS	3	58	---	---	630.0	710.0	---	---	630.0	710.0
3NE1437-1	710	600	gR	3	65	---	---	630.0	681.6	---	---	630.0	710.0
3NE1437-2/-3	710	690	gR	3	72	---	---	617.7	667.4	---	---	630.0	710.0
3NE1438-0	800	690	gS	3	58	---	---	630.0	800.0	---	---	630.0	800.0
3NE1438-1	800	600	gR	3	72	---	---	630.0	752.0	---	---	630.0	800.0
3NE1438-2/-3	800	690	gR	3	84	---	---	630.0	712.0	---	---	630.0	800.0
3NE1447-2/-3	670	690	gR	3	64	---	---	609.7	649.9	---	---	630.0	670.0
3NE1448-2/-3	850	690	gR	3	76	---	---	630.0	782.0	---	---	630.0	850.0

Minimum order quantity (PS) or a multiple thereof can be ordered.

© Siemens 2019

Fuses

Derating values when using SITOR fuses according to UL constraints

The following table shows the permissible load currents of SITOR semiconductor fuses for installation in 3KF SITOR according to UL constraints.

The specified values apply to a 3KF mounted in accordance with the test conditions of UL 508 / UL 60947-4-1 (installation in an enclosure) and with connected insulated cables, cross section corresponding to the rated operational current of the 3KF switch disconnector. The specified values apply to use in enclosures that are larger or equal in size to the specified enclosures.

Further derating is necessary if a combination of 3KF and SITOR fuses is used under different conditions that impair heat dissipation.

Derating table for use of SITOR fuses UL from 32 to 160 A

Minimum housing sizes:

- 3KF 32 A: 278 x 500 x 196 mm
- 3KF 63 A: 278 x 500 x 196 mm
- 3KF 80 A: 278 x 500 x 196 mm
- 3KF 125 A: 459 x 500 x 242 mm
- 3KF 160 A: 459 x 500 x 242 mm

SITOR semiconductor fuse data						**Permissible load currents of fuse when installed in Type 3KF SITOR**				
Type	Rated current I_n	Rated voltage	Operational class	Size	Power loss P_v	32 A	63 A	80 A	125 A	160 A
	A	V AC			W	A	A	A	A	A
3NE1802-0	40	690	gS	000	3	32.0	40.0	40.0	40.0	40.0
3NE1803-0	35	690	gS	000	3.5	32.0	35.0	35.0	35.0	35.0
3NE1813-0	16	690	gS	000	4	16.0	16.0	16.0	16.0	16.0
3NE1814-0	20	690	gS	000	5	20.0	20.0	20.0	20.0	20.0
3NE1815-0	25	690	gS	000	5	25.0	25.0	25.0	25.0	25.0
3NE1817-0	50	690	gS	000	6	32.0	50.0	50.0	50.0	50.0
3NE1818-0	63	690	gS	000	7	32.0	60.0	60.0	63.0	63.0
3NE1820-0	80	690	gS	000	8	32.0	60.0	60.0	80.0	80.0
3NE1020-2	80	690	gR	00	10	32.0	60.0	60.0	80.0	80.0
3NE1021-0	100	690	gS	00	10	32.0	60.0	60.0	100.0	100.0
3NE1021-2	100	690	gR	00	12	32.0	60.0	60.0	100.0	100.0
3NE1022-0	125	690	gS	00	11	32.0	60.0	60.0	125.0	125.0
3NE1022-2	125	690	gR	00	13	32.0	60.0	60.0	120.0	120.0
3NE8015-1	25	690	gR	00	7	25.0	25.0	25.0	25.0	25.0
3NE8003-1	35	690	gR	00	9	29.0	29.0	29.0	35.0	35.0
3NE8017-1	50	690	gR	00	14	32.0	35.0	35.0	50.0	50.0
3NE8018-1	63	690	gR	00	16	32.0	45.0	45.0	60.0	60.0
3NE8020-1	80	690	aR	00	19	32.0	50.0	50.0	63.0	63.0
3NE8021-1	100	690	aR	00	22	32.0	60.0	60.0	90.0	90.0
3NE8022-1	125	690	aR	00	28	32.0	60.0	60.0	100.0	100.0
3NE8024-1	160	690	aR	00	38	32.0	60.0	60.0	110.0	110.0

Minimum order quantity (PS) or a multiple thereof can be ordered.

© Siemens 2019

Derating table for use of SITOR fuses UL from 250 to 800 A

Minimum housing sizes:

- 3KF 250A - 506 x 600 x 283 mm
- 3KF 400A - 581 x 600 x 309 mm
- 3KF 630A - 746 x 700 x 396 mm
- 3KF 800A - 746 x 700 x 396 mm

SITOR semiconductor fuse data						**Permissible load currents of fuse when installed in Type 3KF SITOR**			
Type	Rated current I_n	Rated voltage	Operational class	Size	Power loss P_v	250 A	400 A	630 A	800 A
	A	V AC			W	A	A	A	A
3NE4101	32	1000	gR	0	12	32.0	---	---	---
3NE4102	40	1000	gR	0	13	40.0	---	---	---
3NE4117	50	1000	gR	0	16	50.0	---	---	---
3NE4118	63	1000	aR	0	20	63.0	---	---	---
3NE4120	80	1000	aR	0	22	80.0	---	---	---
3NE4121	100	1000	aR	0	24	100.0	---	---	---
3NE4122	125	1000	aR	0	30	110.0	---	---	---
3NE4124	160	1000	aR	0	35	130.0	---	---	---
3NE1224-0	160	690	gS	1	24	140.0	160.0	---	---
3NE1224-2/-3	160	690	gR	1	32	125.0	160.0	---	---
3NE1225-0	200	690	gS	1	27	170.0	200.0	---	---
3NE1225-2/-3	200	690	gR	1	35	160.0	200.0	---	---
3NE1227-0	250	690	gS	1	30	205.0	250.0	---	---
3NE1227-2/-3	250	690	gR	1	37	190.0	250.0	---	---
3NE1230-0	315	690	gS	1	38	205.0	280.0	---	---
3NE1230-2/-3	315	690	gR	1	40	205.0	275.0	---	---
3NE3221	100	1000	aR	1	28	90.0	100.0	---	---
3NE3222	125	1000	aR	1	36	95.0	125.0	---	---
3NE3224	160	1000	aR	1	42	115.0	160.0	---	---
3NE3225	200	1000	aR	1	42	140.0	200.0	---	---
3NE3227	250	1000	aR	1	50	165.0	200.0	---	---
3NE3230-0B	315	1000	aR	1	60	190.0	225.0	---	---
3NE3231	350	1000	aR	1	75	195.0	220.0	---	---
3NE3232-0B	400	1000	aR	1	85	205.0	230.0	---	---
3NE3233	450	1000	aR	1	95	205.0	250.0	---	---
3NE1331-0	350	690	gS	2	42	---	315.0	350.0	350.0
3NE1331-2/-3	350	690	gR	2	43	---	300.0	350.0	350.0
3NE1332-0	400	690	gS	2	45	---	320.0	400.0	400.0
3NE1332-2/-3	400	690	gR	2	50	---	310.0	400.0	400.0
3NE1333-0	450	690	gS	2	53	---	320.0	450.0	450.0
3NE1333-2/-3	450	690	gR	2	58	---	320.0	440.0	440.0
3NE1334-0	500	690	gS	2	56	---	320.0	500.0	500.0
3NE1334-2/-3	500	690	gR	2	64	---	320.0	470.0	470.0
3NE3332-0B	400	1000	aR	2	80	---	260.0	350.0	350.0
3NE3333	450	1000	aR	2	90	---	285.0	380.0	380.0
3NE3334-0B	500	1000	aR	2	90	---	300.0	415.0	415.0
3NE3335	560	1000	aR	2	95	---	320.0	440.0	440.0
3NE3336	630	1000	aR	2	100	---	320.0	480.0	480.0
3NE3337-8	710	900	aR	2	105	---	320.0	515.0	515.0
3NE3338-8	800	800	aR	2	130	---	320.0	500.0	500.0
3NE3340-8	900	690	aR	2	165	---	347.0	520.0	520.0
3NE4327-0B	250	800	aR	2	105	---	160.0	205.0	205.0
3NE4330-0B	315	800	aR	2	120	---	205.0	240.0	240.0
3NE4333-0B	450	800	aR	2	140	---	225.0	310.0	310.0
3NE4334-0B	500	800	aR	2	155	---	240.0	320.0	320.0
3NE4337	710	800	aR	2	155	---	320.0	440.0	440.0
3NC2423-0C/3C	150	500	gR	3	35	---	---	150.0	150.0
3NC2425-0C/3C	200	500	gR	3	40	---	---	200.0	200.0
3NC2427-0C/3C	250	500	gR	3	50	---	---	250.0	250.0
3NC2428-0C/3C	300	500	gR	3	65	---	---	300.0	300.0
3NC2431-0C/3C	350	500	gR	3	60	---	---	350.0	350.0
3NC2432-0C/3C	400	500	aR	3	50	---	---	400.0	400.0

Minimum order quantity (PS) or a multiple thereof can be ordered.

© Siemens 2019

Fuses

SITOR semiconductor fuse data						Permissible load currents of fuse when installed in Type 3KF SITOR			
Type	Rated current I_n	Rated voltage	Operational class	Size	Power loss P_v	250 A	400 A	630 A	800 A
	A	V AC			W	A	A	A	A
3NC3336-1U	630	1000	aR	3	145	---	---	400.0	400.0
3NC3337-1U	710	1000	aR	3	150	---	---	440.0	440.0
3NC3338-1U	800	1000	aR	3	155	---	---	480.0	480.0
3NC3340-1U	900	1000	aR	3	165	---	---	510.0	510.0
3NC3341-1U	1000	1000	aR	3	170	---	---	530.0	530.0
3NC3342-1U	1100	800	aR	3	185	---	---	530.0	530.0
3NC3343-1U	1250	800	aR	3	210	---	---	530.0	530.0
3NC3430-1U	315	1250	aR	3	80	---	---	290.0	290.0
3NC3432-1U	400	1250	aR	3	95	---	---	330.0	330.0
3NC3434-1U	500	1250	aR	3	115	---	---	370.0	270.0
3NC3436-1U	630	1250	aR	3	120	---	---	440.0	440.0
3NC3438-1U	800	1100	aR	3	145	---	---	450.0	450.0
3NC8423-0C/-3C	150	690	gR	3	40	---	---	150.0	150.0
3NC8425-0C/-3C	200	690	gR	3	55	---	---	200.0	200.0
3NC8427-0C/-3C	250	690	gR	3	72	---	---	245.0	245.0
3NC8431-0C/-3C	350	690	gR	3	95	---	---	290.0	290.0
3NC8434-0C/-3C	500	690	gR	3	130	---	---	250.0	250.0
3NC8444-3C	1000	600	aR	3	140	---	---	530.0	530.0
3NE1435-0	560	690	gS	3	50	---	---	530.0	530.0
3NE1435-2/-3	560	690	gR	3	60	---	---	520.0	520.0
3NE1436-0	630	690	gS	3	55	---	---	530.0	530.0
3NE1436-2/-3	630	690	gR	3	60	---	---	530.0	530.0
3NE1437-0	710	690	gS	3	58	---	---	530.0	530.0
3NE1437-1	710	600	gR	3	65	---	---	530.0	530.0
3NE1437-2/-3	710	690	gR	3	72	---	---	530.0	530.0
3NE1438-0	800	690	gS	3	58	---	---	530.0	530.0
3NE1438-1	800	600	gR	3	72	---	---	530.0	530.0
3NE1438-2/-3	800	690	gR	3	84	---	---	530.0	530.0
3NE1447-2/-3	670	690	gR	3	64	---	---	530.0	530.0
3NE1448-2/-3	850	690	gR	3	76	---	---	530.0	530.0

Minimum order quantity (PS) or a multiple thereof can be ordered.

© Siemens 2019

© Siemens 2019

Introduction

Overview



3NJ62 switch disconnectors with fuses

All key product features at a glance

- In-line design
- Type-tested according to IEC EN 60947-3
- Voltage levels up to 690 V AC/440 V DC
- 160 A to 630 A for LV HRC and BS 88 fuse links, according to IEC 60269-1/EN 60269-1
- 2, 3 and 4-pole versions available
- 185 mm phase center distance of plug-in contacts
- Manually operated or with motorized operating mechanism
- Electronic fuse monitoring (EFM)
- Developed for switchboard in plug-in design
- Horizontal or vertical mounting position
- Front panel locked in ON position
- Degree of protection IP41

7

Overview of all components and accessory parts

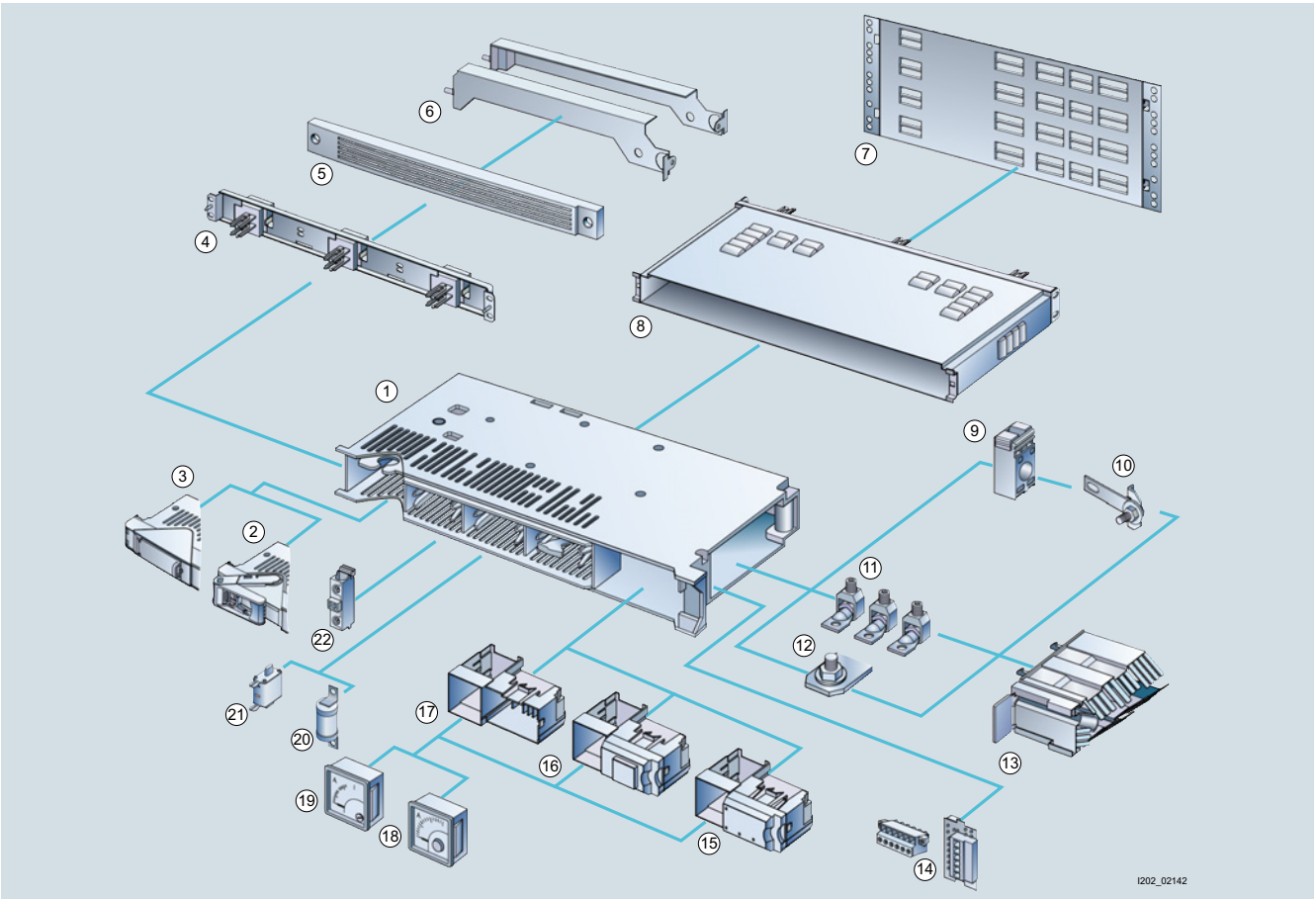

1. 3NJ62 switch disconnector basic device here in size 00, open, without front cover
2. Manual operating mechanism
3. Motorized operating mechanism
4. Connection module
5. Blanking cover
6. Guide rails
7. Busbar cover
8. Contact extension
9. Current transformer
10. Current transformer bar
11. Connection terminals
12. Stud terminal
13. Terminal cover
14. Multifunction plug
15. Holder for measuring device with electronic fuse monotoring (EFM 10)
16. Holder for measuring device with electronic fuse monotoring (EFM 20/25)
17. Holder for measuring device without EFM
18. Bimetal current measuring device
19. Moving-iron current measuring device
20. BS fuse
21. LV HRC fuse
22. Auxiliary switch

Minimum order quantity (PS) or a multiple thereof can be ordered.

© Siemens 2019

Benefits

Key advantages for switchboard manufacturers thanks to the following:

- Compact, modular design
- Simple and efficient mounting due to incoming plug-in contact
- High packing density in the field
- Cable connection with cable clamps or cable lugs
- Can be mounted in different control cabinet depths
- Comprehensive range of accessories

The advantages for users are:

- Conversion, retrofitting and replacement without switching off the switchboard
- Dead-state fuse replacement
- Maintenance-free
- High personal safety
- Operating handle can be locked in OFF position
- Clear and unambiguous switch position indicator

Application

The plug-in 3NJ62 switch disconnectors with fuses are installed in low-voltage distribution boards where a minimum amount of space is available for a maximum number of cable ducts to the power distribution. They can be easily fitted in all common control cabinets (minimum depth: 400 mm).

The plug-in 3NJ62 switch disconnectors with fuses are available for rated uninterrupted currents from 160 A to 630 A.

LV HRC fuse links according to IEC 60269-1/EN 60269-1 (sizes LV HRC 00 to LV HRC 3) or BS fuse links according to BS 88 provide overload and short-circuit protection up to 690 V AC.

The switch disconnectors can be retrofitted at any time with auxiliary switches, an ammeter (48 mm x 48 mm) and current transformers, with no extra space required. For installation in control cabinets with a depth > 400 mm, the mounting depth of the disconnectors can be increased by 200 mm using a contact extension. Further installation accessories, such as guide rails and blanking covers, complete the product range.

Function

Fuse monitoring

Fuse monitoring is used to detect, indicate and report faults. The electronic fuse monitoring devices are available in 2 versions.

EFM10 electronic fuse monitoring devices:

- For use up to 690 V AC
- Operational voltage < 20 V
- Display: Ready-to-run
- Individual fault display per phase
- 1 CO contact as centralized fault signaling unit

EFM20/25 electronic fuse monitoring and line monitoring devices:

- EFM20 for use up to 690 V AC, EFM25 for use up to 440 V DC
- Operational voltage < 13 V (EFM20) < 20 V (EFM25)
- Test function
- Closed-circuit principle or open-circuit principle
- 2 CO contacts as centralized fault signaling unit incl. line monitoring functions with phase failure detection (EFM20), undervoltage/overvoltage detection

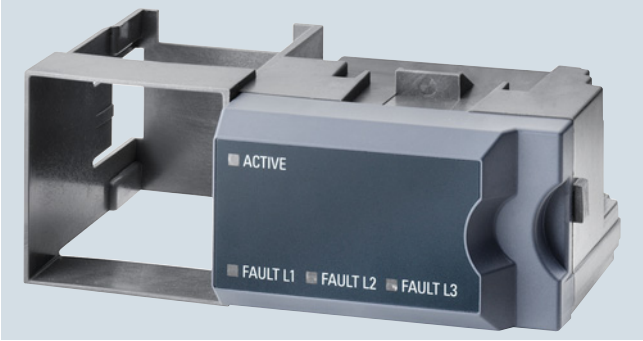

EFM10 electronic fuse monitoring device

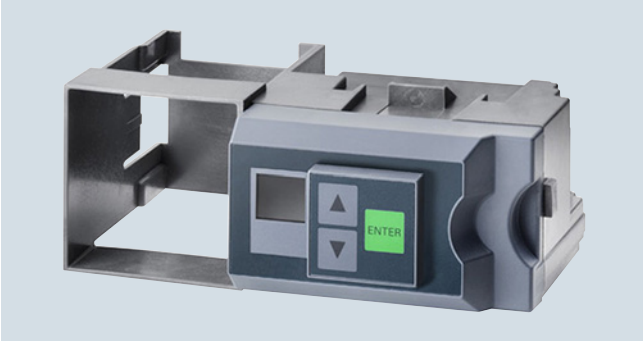

EFM20/25 electronic fuse monitoring device

7

© Siemens 2019

Technical specifications

Main devices of sizes 00 and 1

Size		**00**								**1**			
Switch disconnectors with fuses type 3NJ62...	**LV HRC**			**...02-3 ...02-4**		**...03-1 ...04-1 ...04-2**		**...03-3 ...03-4**		**...12-3 ...12-4**		**...13-1 ...14-1 ...14-2**	**...13-3 ...13-4**
	BS	**...43-3**	**...53-3**	**...62-3 ...62-4**				**...63-3 ...63-4**		**...72-3 ...72-4**		**...74-1 ...74-2**	**...73-3 ...73-4**
Breaking capacity		H	H	H		S		H		H		S	H
Rated insulation voltage U_i	V	1000											
Rated impulse withstand voltage U_{imp}	V	8000											
Rated operational current I_e	A	63	100	160	-	160	125	160	125	250			
For LV HRC fuse links acc. to IEC 60269		-	-	for 00 and 000						1			
For BS fuse links acc. to BS 88		A3	A3	00T[1)]						B2			
Rated operational voltage U_e													
• At 50/60 Hz rated frequency	V	690		--	--	500	690	500	690	690			
• At DC	V	--	--	230	440	--	--	--	--	230	440	--	--
Utilization category		AC-23B		DC-23B	DC-21B	AC-22B		AC-23B		DC-23B	DC-21B	AC-22B	AC-23B
Rated conditional short-circuit current													
• Short-circuit strength (rms value)	kA	100		60		100		100		60		100	
• Short-circuit making capacity (rms value)	kA	66		60		55		66		60		55	66
Rated making capacity													
• p.f. = 0.65	A	--	--	--	--	480	375	--	--	--	--	750	--
• p.f. = 0.45	A	630	1000	--	--	--	--	--	--	--	--	--	--
• p.f. = 0.35	A	--	--	--	--	--	--	1600	1250	--	--	--	2500
Rated breaking capacity													
• p.f. = 0.65	A	--	--	--	--	480	375	--	--	--	--	750	--
• p.f. = 0.45	A	504	800	--	--	--	--	--	--	--	--	--	--
• p.f. = 0.35	A	--	--	--	--	--	--	1280	1000	--	--	--	2000
Service life													
Operating cycles total		2000		1600						1600			
• Electrical (690 V, p.f. = 0.65)		300		200						200			
Power loss (no fuse links)	W	7	17	43						78			
Permissible ambient temperature	°C	-5 ... +55											
Permissible mounting position		Horizontal and vertical with bottom connection											
Degree of protection (in operating state)		IP41											
Connection type		Main conductor connections											
Cable lug connection													
• Conductor cross-section (Al/Cu, solid or stranded) according to DIN 46235 (Cu) and DIN 46239 (Al)	mm^2	1x 10-95 2x 16-70								1x 25-240 2x 25-70			
• Screw size		M8								M12			
• Torque	Nm	15								30			
Terminal connection													
• Conductor cross-section (Al/Cu), rm	mm^2	1x 10-50								1x 16-185			
• Conductor cross-section (Al/Cu), re	mm^2	1x 10-50								1x 16-150			
• Conductor cross-section (Al/Cu), sm	mm^2	1x 16-95								1x 35-240			
• Conductor cross-section (Al/Cu), se	mm^2	1x 16-95								1x 35-300			
• Required torque	Nm	15								25			

[1)] The fuse is available from Lawson Fuses (UK) and does not correspond to BS 88.

Minimum order quantity (PS) or a multiple thereof can be ordered.

© Siemens 2019

Main devices of sizes 2 and 3

Size		**2**				**3**					
Switch disconnectors with fuses type 3NJ62...	**LV HRC**	**...22-3 ...22-4**		**...23-1 ...24-1 ...24-2**	**...23-3 ...23-4**	**...32-3 ...32-4**		**...33-1 ...34-1 ...34-2**		**...33-3 ...33-4**	
	BS	**...82-3 ...82-4**			**...83-3 ...83-4**	**...92-3 ...92-4**		**...94-1 ...94-2**		**...93-3 ...93-4 ...33-3 ...33-4**	
Breaking capacity		H		S	H	H		S		H	
Rated insulation voltage U_i	V	1000									
Rated impulse withstand voltage U_{imp}	V	8000									
Rated operational current I_e											
• For fuse links acc. to IEC 60269/ BS88	A	400				630			500	630	500
For fuse links acc. to IEC 60269		2 and 1				3 and 2					
For BS fuse links acc. to BS 88		B4				3T[1)]					
Rated operational voltage U_e											
• At 50/60 Hz rated frequency	V	--	--	690		230	440	500	690	500	690
• At DC	V	230	440	--		--	--	--	--	--	--
Utilization category		DC-23B	DC-21B	AC-22B	AC-23B	DC-23B	DC-21B	AC-22B		AC-23B	
Rated conditional short-circuit current											
• Short-circuit strength (rms value)	kA	60		100		60		100			
• Short-circuit making capacity (rms value)	kA	60		55	66	60		55		66	
Rated making capacity											
• p.f. = 0.65	A	--	--	1200	--	--	--	1890	1500	--	--
• p.f. = 0.45	A	--	--	--	--	--	--	--	--	--	--
• p.f. = 0.35	A	--	--	--	4000	--	--	--	--	6300	5000
Rated breaking capacity											
• p.f. = 0.65	A	--	--	1200	--	--	--	1890	1500	--	--
• p.f. = 0.45	A	--	--	--	--	--	--	--	--	--	--
• p.f. = 0.35	A	--	--	--	3200	--	--	--	--	5040	4000
Service life											
Operating cycles total		1000				1000					
• Electrical (690 V, p.f. = 0.65)		200				200					
Power loss (no fuse links)	W	158				357					
Permissible ambient temperature	°C	-5 ... +55									
Permissible mounting position		Horizontal and vertical with bottom connection									
Degree of protection (in operating state)		IP41									
Connection type		Main conductor connections									
Cable lug connection											
Conductor cross-section	mm^2	1x 25-300				1x 25-300					
• Conductor cross-section (Al/Cu, solid or stranded) according to DIN 46235 (Cu) and DIN 46239 (Al)		2x 25-240				2x 25-240					
• Screw size		2x M12				2x M12					
• Torque	Nm	30				30					
Terminal connection											
• Conductor cross-section (Al/Cu), rm	mm^2	2x 16-185				2x 16-185					
• Conductor cross-section (Al/Cu), re	mm^2	2x 16-150				2x 16-150					
• Conductor cross-section (Al/Cu), sm	mm^2	2x 35-240				2x 35-240					
• Conductor cross-section (Al/Cu), se	mm^2	2x 35-300				2x 35-300					
• Required torque	Nm	25				25					

1) The fuse is available from Lawson Fuses (UK) and does not correspond to BS 88.

© Siemens 2019

Introduction

Auxiliary switches

Acc. to IEC 60947-5-1		
Rated insulation voltage U_i	V	690
Rated impulse withstand voltage U_{imp}	V	8000
Rated operational current I_e		
• At AC-15, U_e = 120 V	A	8
• At AC-15, U_e = 230 V	A	6
• At AC-15, U_e = 400 V	A	4
• At AC-15, U_e = 690 V	A	2

Electronic fuse monitoring devices, AC version (EFM 10)

Size		00	1	2/3
Apparent power consumption *S*	VA	Approx. 2.5		
Internal resist. of measurement circuit	MΩ	R_{in} > 6		
Storage temperature	°C	- 20 ... + 80		
Operating temperature	°C	- 5 ... + 55		
Operating temperature (500 V or 500 A)	°C	- 5 ... + 35		
Degree of protection in closed in-line connector		IP40		
Rated operating voltage of the main control switching devices	V AC Hz	230 ... 690 50/60		
Voltage limits	%	±15		
Signaling relay acc. to IEC 60947-5-1	A kV V	I_{th} = 1.5 U_{imp} = 4 U_i = 250		
Load capacity of the signaling relay				
• U_e	V	24	125	240
• DC-13; I_e	A	1	0.2	0.1
• AC-15; I_e	A	1.5		
Short-circuit protection		Max. fuse protection DIAZED 2 A gLgG		

Electronic fuse monitoring devices, AC version (EFM 20)

Size		00	1	2/3
Apparent power consumption *S*	VA	Approx. 2.5		
Internal resist. of measurement circuit	MΩ	R_{in} > 6		
Storage temperature	°C	- 20 ... + 80		
Operating temperature	°C	- 5 ... + 55		
Operating temperature (500 V or 500 A)	°C	- 5 ... + 35		
Degree of protection in closed in-line connector		IP40		
Rated operating voltage of the main control switching devices	V AC Hz	230 ... 690 50/60		
Voltage limits	%	±15		
Undervoltage	V	375		
Overvoltage	V	425		
Voltage drop for faulty fuses	V	> 13		
Delay time	s	0.1		
Relay 2		As relay 1 (fuse monitoring)		
Storage function		Off		
Open/closed-circuit principle		Closed-circuit principle		
Mode		Run mode		
Menu option		Display of voltage values / signals		
Signaling relay acc. to IEC 60947-5-1	A kV V	I_{th} = 1.5 U_{imp} = 4 U_i = 250		
Signaling relay 1 **Signaling relay 2**		1 changeover contact for fuse monitoring only 1 changeover contact as output for central fault OR as signaling relay 1 (presetting)		
Load capacity of the signaling relay				
• U_e	V	24	125	240
• DC-13; I_e	A	1	0.2	0.1
• AC-15; I_e	A	1.5		
Short-circuit protection		Max. fuse protection DIAZED 2 A gLgG		

Electronic fuse monitoring devices, DC version (EFM 25)

Size		00	1	2/3
Apparent power consumption *S*	VA	Approx. 2.5		
Internal resist. of measurement circuit	MΩ	R_{in} > 6		
Storage temperature	°C	- 20 ... + 80		
Operating temperature	°C	- 5 ... + 55		
Operating temperature (500 V or 500 A)	°C	- 5 ... + 35		
Degree of protection in closed in-line connector		IP40		
Rated operating voltage of the main control switching devices	V DC	220 ... 440		
Voltage limits	%	±15		
Undervoltage	V	200		
Overvoltage	V	240		
Voltage drop for faulty fuses	V	> 20		
Delay time	s	0.1		
Relay 2		As relay 1 (fuse monitoring)		
Storage function		Off		
Open/closed-circuit principle		Closed-circuit principle		
Mode		Run mode		
Menu option		Display of voltage values / signals		
Signaling relay acc. to IEC 60947-5-1	A kV V	I_{th} = 1.5 U_{imp} = 4 U_i = 250		
Signaling relay 1 **Signaling relay 2**		1 changeover contact for fuse monitoring only 1 changeover contact as output for central fault OR as signaling relay 1 (presetting)		
Load capacity of the signaling relay				
• U_e	V	24	125	240
• DC-13; I_e	A	1	0.2	0.1
• AC-15; I_e	A	1.5		
Short-circuit protection		Max. fuse protection DIAZED 2 A gLgG		

Ammeters

Inputs		x/1 A or x/5 A
Overload		
• Moving-iron measuring instruments		1.2 times
• Bi-metal measuring instruments		Double
Slave pointer		
• Moving-iron measuring instruments	min	--
• Bi-metal measuring instruments	min	15
Power consumption		
• Moving-iron measuring instruments	VA	0.6
• Bi-metal measuring instruments	VA	1

Motorized operating mechanism

Size		00	1	2/3
Control supply voltage	V DC	24 ± 2		
Power consumption	A	1.1	1.3	2.8
Service life (no limitation of switch disconnector according to IEC 60947-3)				
Operating cycles total		1600		
Operating cycles under load		200		
Signal duration	s	Min. 0.5 or continuous signal		

Minimum order quantity (PS) or a multiple thereof can be ordered.

© Siemens 2019

Selection and ordering data

Rated current I_n	Size	SD	Article No. www.siemens.com/product?Article No.	Price per PU	PU (UNIT, SET, M)	PS	PG
A		d					
2-pole, high breaking capacity H							
							
Manually operated							
160	00		**3NJ6202-3AA0□-0AA0**		1	1 unit	1DL
250	1		**3NJ6212-3AA0□-0AA0**		1	1 unit	1DL
400	2		**3NJ6222-3AA0□-0AA0**		1	1 unit	1DL
630	3		**3NJ6232-3AA0□-0AA0**		1	1 unit	1DL
Manually operated, EFM 25							
160	00		**3NJ6202-3AE0□-0AA0**		1	1 unit	1DL
250	1		**3NJ6212-3AE0□-0AA0**		1	1 unit	1DL
400	2		**3NJ6222-3AE0□-0AA0**		1	1 unit	1DL
630	3		**3NJ6232-3AE0□-0AA0**		1	1 unit	1DL
Motorized operating mechanism							
160	00		**3NJ6202-4AA0□-0AA0**		1	1 unit	1DL
250	1		**3NJ6212-4AA0□-0AA0**		1	1 unit	1DL
400	2		**3NJ6222-4AA0□-0AA0**		1	1 unit	1DL
630	3		**3NJ6232-4AA0□-0AA0**		1	1 unit	1DL
Motorized operating mechanism, EFM 25							
160	00		**3NJ6202-4AE0□-0AA0**		1	1 unit	1DL
250	1		**3NJ6212-4AE0□-0AA0**		1	1 unit	1DL
400	2		**3NJ6222-4AE0□-0AA0**		1	1 unit	1DL
630	3		**3NJ6232-4AE0□-0AA0**		1	1 unit	1DL
3-pole, standard breaking capacity S							
							
Manually operated							
160	00		**3NJ6203-1AA0□-□□□□**		1	1 unit	1DL
250	1		**3NJ6213-1AA0□-□□□□**		1	1 unit	1DL
400	2		**3NJ6223-1AA0□-□□□□**		1	1 unit	1DL
630	3		**3NJ6233-1AA0□-□□□□**		1	1 unit	1DL
Manually operated, EFM 10							
160	00		**3NJ6203-1AB0□-□□□□**		1	1 unit	1DL
250	1		**3NJ6213-1AB0□-□□□□**		1	1 unit	1DL
400	2		**3NJ6223-1AB0□-□□□□**		1	1 unit	1DL
630	3		**3NJ6233-1AB0□-□□□□**		1	1 unit	1DL
Manually operated, EFM 20							
160	00		**3NJ6203-1AC0□-□□□□**		1	1 unit	1DL
250	1		**3NJ6213-1AC0□-□□□□**		1	1 unit	1DL
400	2		**3NJ6223-1AC0□-□□□□**		1	1 unit	1DL
630	3		**3NJ6233-1AC0□-□□□□**		1	1 unit	1DL
3-pole, high breaking capacity H							
							
Manually operated							
160	00		**3NJ6203-3AA0□-□□□□**		1	1 unit	1DL
250	1		**3NJ6213-3AA0□-□□□□**		1	1 unit	1DL
400	2		**3NJ6223-3AA0□-□□□□**		1	1 unit	1DL
630	3		**3NJ6233-3AA0□-□□□□**		1	1 unit	1DL
Manually operated, EFM 10							
160	00		**3NJ6203-3AB0□-□□□□**		1	1 unit	1DL
250	1		**3NJ6213-3AB0□-□□□□**		1	1 unit	1DL
400	2		**3NJ6223-3AB0□-□□□□**		1	1 unit	1DL
630	3		**3NJ6233-3AB0□-□□□□**		1	1 unit	1DL
Manually operated, EFM 20							
160	00		**3NJ6203-3AC0□-□□□□**		1	1 unit	1DL
250	1		**3NJ6213-3AC0□-□□□□**		1	1 unit	1DL
400	2		**3NJ6223-3AC0□-□□□□**		1	1 unit	1DL
630	3		**3NJ6233-3AC0□-□□□□**		1	1 unit	1DL
Motorized operating mechanism							
160	00		**3NJ6203-4AA0□-□□□□**		1	1 unit	1DL
250	1		**3NJ6213-4AA0□-□□□□**		1	1 unit	1DL
400	2		**3NJ6223-4AA0□-□□□□**		1	1 unit	1DL
630	3		**3NJ6233-4AA0□-□□□□**		1	1 unit	1DL
Motorized operating mechanism, EFM 10							
160	00		**3NJ6203-4AB0□-□□□□**		1	1 unit	1DL
250	1		**3NJ6213-4AB0□-□□□□**		1	1 unit	1DL
400	2		**3NJ6223-4AB0□-□□□□**		1	1 unit	1DL
630	3		**3NJ6233-4AB0□-□□□□**		1	1 unit	1DL
Motorized operating mechanism, EFM 20							
160	00		**3NJ6203-4AC0□-□□□□**		1	1 unit	1DL
250	1		**3NJ6213-4AC0□-□□□□**		1	1 unit	1DL
400	2		**3NJ6223-4AC0□-□□□□**		1	1 unit	1DL
630	3		**3NJ6233-4AC0□-□□□□**		1	1 unit	1DL

Article No. supplement	Add. price
0 0AA0	None

Standard Article No. supplement
(for more Article No. supplements, see page 7/157)
Without auxiliary switches, ammeters or current transformers ►

Minimum order quantity (PS) or a multiple thereof can be ordered.

© Siemens 2019

For LV HRC fuse links

4-pole, standard breaking capacity S

Rated current I_n A	Size	SD d	Article No. www.siemens.com/product?Article No.	Price per PU	PU (UNIT, SET, M)	PS	PG
Manually operated							
160	00		**3NJ6204-1AA0□-□□□□**		1	1 unit	1DL
250	1		**3NJ6214-1AA0□-□□□□**		1	1 unit	1DL
400	2		**3NJ6224-1AA0□-□□□□**		1	1 unit	1DL
630	3		**3NJ6234-1AA0□-□□□□**		1	1 unit	1DL
Manually operated, EFM 10							
160	00		**3NJ6204-1AB0□-□□□□**		1	1 unit	1DL
250	1		**3NJ6214-1AB0□-□□□□**		1	1 unit	1DL
400	2		**3NJ6224-1AB0□-□□□□**		1	1 unit	1DL
630	3		**3NJ6234-1AB0□-□□□□**		1	1 unit	1DL
Manually operated, EFM 20							
160	00		**3NJ6204-1AC0□-□□□□**		1	1 unit	1DL
250	1		**3NJ6214-1AC0□-□□□□**		1	1 unit	1DL
400	2		**3NJ6224-1AC0□-□□□□**		1	1 unit	1DL
630	3		**3NJ6234-1AC0□-□□□□**		1	1 unit	1DL
Motorized operating mechanism							
160	00		**3NJ6204-2AA0□-□□□□**		1	1 unit	1DL
250	1		**3NJ6214-2AA0□-□□□□**		1	1 unit	1DL
400	2		**3NJ6224-2AA0□-□□□□**		1	1 unit	1DL
630	3		**3NJ6234-2AA0□-□□□□**		1	1 unit	1DL
Motorized operating mechanism, EFM 10							
160	00		**3NJ6204-2AB0□-□□□□**		1	1 unit	1DL
250	1		**3NJ6214-2AB0□-□□□□**		1	1 unit	1DL
400	2		**3NJ6224-2AB0□-□□□□**		1	1 unit	1DL
630	3		**3NJ6234-2AB0□-□□□□**		1	1 unit	1DL
Motorized operating mechanism, EFM 20							
160	00		**3NJ6204-2AC0□-□□□□**		1	1 unit	1DL
250	1		**3NJ6214-2AC0□-□□□□**		1	1 unit	1DL
400	2		**3NJ6224-2AC0□-□□□□**		1	1 unit	1DL
630	3		**3NJ6234-2AC0□-□□□□**		1	1 unit	1DL

	Article No. supplement	Additional price
Standard Article No. supplement (for more Article No. supplements, see page 7/157)		
Without auxiliary switches, ammeters or current transformers ►	**0 0AA0**	None

Minimum order quantity (PS) or a multiple thereof can be ordered.

© Siemens 2019

Selection and ordering data

Rated current I_n	Size	SD	Article No. www.siemens.com/product?Article No.	Price per PU	PU (UNIT, SET, M)	PS	PG
A		d					
2-pole, high breaking capacity H							
Manually operated							
160	00T[1]		**3NJ6262-3AA0□-0AA0**		1	1 unit	1DL
250	B2		**3NJ6272-3AA0□-0AA0**		1	1 unit	1DL
400	B4		**3NJ6282-3AA0□-0AA0**		1	1 unit	1DL
630	3T[1]		**3NJ6292-3AA0□-0AA0**		1	1 unit	1DL
Manually operated, EFM 25							
160	00T[1]		**3NJ6262-3AE0□-0AA0**		1	1 unit	1DL
250	B2		**3NJ6272-3AE0□-0AA0**		1	1 unit	1DL
400	B4		**3NJ6282-3AE0□-0AA0**		1	1 unit	1DL
630	3T[1]		**3NJ6292-3AE0□-0AA0**		1	1 unit	1DL
Motorized operating mechanism							
160	00T[1]		**3NJ6262-4AA0□-0AA0**		1	1 unit	1DL
250	B2		**3NJ6272-4AA0□-0AA0**		1	1 unit	1DL
400	B4		**3NJ6282-4AA0□-0AA0**		1	1 unit	1DL
630	3T[1]		**3NJ6292-4AA0□-0AA0**		1	1 unit	1DL
Motorized operating mechanism, EFM 25							
160	00T[1]		**3NJ6262-4AE0□-0AA0**		1	1 unit	1DL
250	B2		**3NJ6272-4AE0□-0AA0**		1	1 unit	1DL
400	B4		**3NJ6282-4AE0□-0AA0**		1	1 unit	1DL
630	3T[1]		**3NJ6292-4AE0□-0AA0**		1	1 unit	1DL
3-pole, high breaking capacity H							
Manually operated							
63	A3		**3NJ6243-3AA0□-□□□□**		1	1 unit	1DL
100	A3		**3NJ6253-3AA0□-□□□□**		1	1 unit	1DL
160	00T[1]		**3NJ6263-3AA0□-□□□□**		1	1 unit	1DL
250	B2		**3NJ6273-3AA0□-□□□□**		1	1 unit	1DL
400	B4		**3NJ6283-3AA0□-□□□□**		1	1 unit	1DL
630	3T[1]		**3NJ6293-3AA0□-□□□□**		1	1 unit	1DL
Manually operated, EFM 10							
160	00T[1]		**3NJ6263-3AB0□-□□□□**		1	1 unit	1DL
250	B2		**3NJ6273-3AB0□-□□□□**		1	1 unit	1DL
400	B4		**3NJ6283-3AB0□-□□□□**		1	1 unit	1DL
630	3T[1]		**3NJ6293-3AB0□-□□□□**		1	1 unit	1DL
Manually operated, EFM 20							
160	00T[1]		**3NJ6263-3AC0□-□□□□**		1	1 unit	1DL
250	B2		**3NJ6273-3AC0□-□□□□**		1	1 unit	1DL
400	B4		**3NJ6283-3AC0□-□□□□**		1	1 unit	1DL
630	3T[1]		**3NJ6293-3AC0□-□□□□**		1	1 unit	1DL
Motorized operating mechanism							
160	00T[1]		**3NJ6263-4AA0□-□□□□**		1	1 unit	1DL
250	B2		**3NJ6273-4AA0□-□□□□**		1	1 unit	1DL
400	B4		**3NJ6283-4AA0□-□□□□**		1	1 unit	1DL
630	3T[1]		**3NJ6293-4AA0□-□□□□**		1	1 unit	1DL
Motorized operating mechanism, EFM 10							
160	00T[1]		**3NJ6263-4AB0□-□□□□**		1	1 unit	1DL
250	B2		**3NJ6273-4AB0□-□□□□**		1	1 unit	1DL
400	B4		**3NJ6283-4AB0□-□□□□**		1	1 unit	1DL
630	3T[1]		**3NJ6293-4AB0□-□□□□**		1	1 unit	1DL
Motorized operating mechanism, EFM 20							
160	00T[1]		**3NJ6263-4AC0□-□□□□**		1	1 unit	1DL
250	B2		**3NJ6273-4AC0□-□□□□**		1	1 unit	1DL
400	B4		**3NJ6283-4AC0□-□□□□**		1	1 unit	1DL
630	3T[1]		**3NJ6293-4AC0□-□□□□**		1	1 unit	1DL

	Article No. supplement	Additional price
Standard Article No. supplement (for more Article No. supplements, see page 7/157)		
Without auxiliary switches, ammeters or current transformers ►	**0 0AA0**	None

[1] The fuse is available from Lawson Fuses (UK) and does not correspond to BS 88.

© Siemens 2019

For BS fuse links

4-pole, standard breaking capacity S

Rated current I_n A	Size	SD d	Article No. www.siemens.com/product?Article No.	Price per PU	PU (UNIT, SET, M)	PS	PG
Manually operated							
160	00T[1]		**3NJ6264-1AA0□-□□□□**		1	1 unit	1DL
250	B2		**3NJ6274-1AA0□-□□□□**		1	1 unit	1DL
400	B4		**3NJ6284-1AA0□-□□□□**		1	1 unit	1DL
630	3T[1]		**3NJ6294-1AA0□-□□□□**		1	1 unit	1DL
Manually operated, EFM 10							
160	00T[1]		**3NJ6264-1AB0□-□□□□**		1	1 unit	1DL
250	B2		**3NJ6274-1AB0□-□□□□**		1	1 unit	1DL
400	B4		**3NJ6284-1AB0□-□□□□**		1	1 unit	1DL
630	3T[1]		**3NJ6294-1AB0□-□□□□**		1	1 unit	1DL
Manually operated, EFM 20							
160	00T[1]		**3NJ6264-1AC0□-□□□□**		1	1 unit	1DL
250	B2		**3NJ6274-1AC0□-□□□□**		1	1 unit	1DL
400	B4		**3NJ6284-1AC0□-□□□□**		1	1 unit	1DL
630	3T[1]		**3NJ6294-1AC0□-□□□□**		1	1 unit	1DL
Motorized operating mechanism							
160	00T[1]		**3NJ6264-2AA0□-□□□□**		1	1 unit	1DL
250	B2		**3NJ6274-2AA0□-□□□□**		1	1 unit	1DL
400	B4		**3NJ6284-2AA0□-□□□□**		1	1 unit	1DL
630	3T[1]		**3NJ6294-2AA0□-□□□□**		1	1 unit	1DL
Motorized operating mechanism, EFM 10							
160	00T[1]		**3NJ6264-2AB0□-□□□□**		1	1 unit	1DL
250	B2		**3NJ6274-2AB0□-□□□□**		1	1 unit	1DL
400	B4		**3NJ6284-2AB0□-□□□□**		1	1 unit	1DL
630	3T[1]		**3NJ6294-2AB0□-□□□□**		1	1 unit	1DL
Motorized operating mechanism, EFM 20							
160	00T[1]		**3NJ6264-2AC0□-□□□□**		1	1 unit	1DL
250	B2		**3NJ6274-2AC0□-□□□□**		1	1 unit	1DL
400	B4		**3NJ6284-2AC0□-□□□□**		1	1 unit	1DL
630	3T[1]		**3NJ6294-2AC0□-□□□□**		1	1 unit	1DL

	Article No. supplement	Additional price
Standard Article No. supplement (for more Article No. supplements, see page 7/157)		
Without auxiliary switches, ammeters or current transformers ►	**0 0AA0**	None

[1] The fuse is available from Lawson Fuses (UK) and does not correspond to BS 88.

Minimum order quantity (PS) or a multiple thereof can be ordered.

© Siemens 2019

Options

1st Article No. supplement: Auxiliary switch wired to multi-function plug

		SD	Article No. supplement 3NJ62 ..-....□-....	Additional price	PS
		d			
	Without	▶	**0**	**None**	1 unit
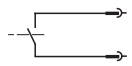	1 NO contact		**1**	✓	1 unit
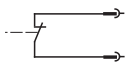	1 NC contact		**2**	✓	1 unit
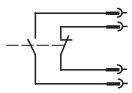	1 NO contact + 1 NC contact		**3**	✓	1 unit

2nd Article No. supplement: Ammeter and current transformer wired

	Ammeters	Current transformers			SD	Article No. supplement 3NJ62 ..-.....-□□□□	Additional price	PS
		Primary current	Secondary current	Accuracy class				
		A	A		d			
For sizes 00 and 00T								
	Without	Without	Without	Without	▶	**0AA0**	**None**	1 unit
	1 current transformer to 1 ammeter							
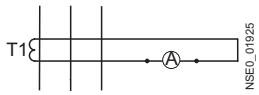	Moving iron	50	1	1		**1DB1**	✓	1 unit
	Moving iron	50	5	1		**1DB4**	✓	1 unit
	Moving iron	100	1	1		**1DD1**	✓	1 unit
	Moving iron	100	5	1		**1DD4**	✓	1 unit
	Moving iron	150	1	1		**1DE1**	✓	1 unit
	Moving iron	150	5	1		**1DE4**	✓	1 unit
	Bi-metal	50	1	1		**2DB1**	✓	1 unit
	Bi-metal	50	5	1		**2DB4**	✓	1 unit
	Bi-metal	100	1	1		**2DD1**	✓	1 unit
	Bi-metal	100	5	1		**2DD4**	✓	1 unit
	Bi-metal	150	1	1		**2DE1**	✓	1 unit
	Bi-metal	150	5	1		**2DE4**	✓	1 unit
	1 current transformer to multi-function plug							
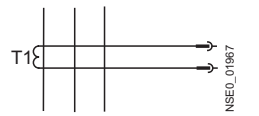	Without	50	1	1		**0BB1**	✓	1 unit
	Without	50	5	1		**0BB4**	✓	1 unit
	Without	100	1	1		**0BD1**	✓	1 unit
	Without	100	1	0.5		**0BD2**	✓	1 unit
	Without	100	1	0.5 calibrated		**0BD3**	✓	1 unit
	Without	100	5	1		**0BD4**	✓	1 unit
	Without	100	5	0.5		**0BD5**	✓	1 unit
	Without	100	5	0.5 calibrated		**0BD6**	✓	1 unit
	Without	150	1	1		**0BE1**	✓	1 unit
	Without	150	1	0.5		**0BE2**	✓	1 unit
	Without	150	1	0.5 calibrated		**0BE3**	✓	1 unit
	Without	150	5	1		**0BE4**	✓	1 unit
	Without	150	5	0.5		**0BE5**	✓	1 unit
	Without	150	5	0.5 calibrated		**0BE6**	✓	1 unit
	3 current transformers to multi-function plug							
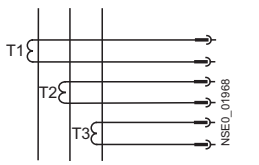	Without	50	1	1		**0CB1**	✓	1 unit
	Without	50	5	1		**0CB4**	✓	1 unit
	Without	100	1	1		**0CD1**	✓	1 unit
	Without	100	1	0.5		**0CD2**	✓	1 unit
	Without	100	1	0.5 calibrated		**0CD3**	✓	1 unit
	Without	100	5	1		**0CD4**	✓	1 unit
	Without	100	5	0.5		**0CD5**	✓	1 unit
	Without	100	5	0.5 calibrated		**0CD6**	✓	1 unit
	Without	150	1	1		**0CE1**	✓	1 unit
	Without	150	1	0.5		**0CE2**	✓	1 unit
	Without	150	1	0.5 calibrated		**0CE3**	✓	1 unit
	Without	150	5	1		**0CE4**	✓	1 unit
	Without	150	5	0.5		**0CE5**	✓	1 unit
	Without	150	5	0.5 calibrated		**0CE6**	✓	1 unit

Minimum order quantity (PS) or a multiple thereof can be ordered.

© Siemens 2019

For LV HRC and BS fuse links

For sizes 00 and 00T (continued)

Ammeters	Current transformers: Primary current	Current transformers: Secondary current	Current transformers: Accuracy class	SD	Article No. supplement 3NJ62 ..-.....-□□□□	Additional price	PS
	A	A		d			
1 current transformer to 1 ammeter and multi-function plug							
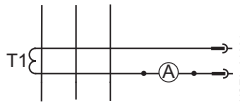							
Moving iron	50	1	1		**1EB1**	✓	1 unit
Moving iron	50	5	1		**1EB4**	✓	1 unit
Moving iron	100	1	1		**1ED1**	✓	1 unit
Moving iron	100	1	0.5		**1ED2**	✓	1 unit
Moving iron	100	1	0.5 calibrated		**1ED3**	✓	1 unit
Moving iron	100	5	1		**1ED4**	✓	1 unit
Moving iron	100	5	0.5		**1ED5**	✓	1 unit
Moving iron	100	5	0.5 calibrated		**1ED6**	✓	1 unit
Moving iron	150	1	1		**1EE1**	✓	1 unit
Moving iron	150	1	0.5		**1EE2**	✓	1 unit
Moving iron	150	1	0.5 calibrated		**1EE3**	✓	1 unit
Moving iron	150	5	1		**1EE4**	✓	1 unit
Moving iron	150	5	0.5		**1EE5**	✓	1 unit
Moving iron	150	5	0.5 calibrated		**1EE6**	✓	1 unit
Bi-metal	50	1	1		**2EB1**	✓	1 unit
Bi-metal	50	5	1		**2EB4**	✓	1 unit
Bi-metal	100	1	1		**2ED1**	✓	1 unit
Bi-metal	100	1	0.5		**2ED2**	✓	1 unit
Bi-metal	100	1	0.5 calibrated		**2ED3**	✓	1 unit
Bi-metal	100	5	1		**2ED4**	✓	1 unit
Bi-metal	100	5	0.5		**2ED5**	✓	1 unit
Bi-metal	100	5	0.5 calibrated		**2ED6**	✓	1 unit
Bi-metal	150	1	1		**2EE1**	✓	1 unit
Bi-metal	150	1	0.5		**2EE2**	✓	1 unit
Bi-metal	150	1	0.5 calibrated		**2EE3**	✓	1 unit
Bi-metal	150	5	1		**2EE4**	✓	1 unit
Bi-metal	150	5	0.5		**2EE5**	✓	1 unit
Bi-metal	150	5	0.5 calibrated		**2EE6**	✓	1 unit
3 current transformers to 1 ammeter and multi-function plug							
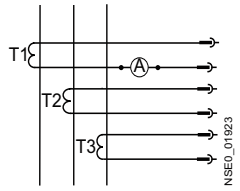							
Moving iron	50	1	1		**1FB1**	✓	1 unit
Moving iron	50	5	1		**1FB4**	✓	1 unit
Moving iron	100	1	1		**1FD1**	✓	1 unit
Moving iron	100	1	0.5		**1FD2**	✓	1 unit
Moving iron	100	1	0.5 calibrated		**1FD3**	✓	1 unit
Moving iron	100	5	1		**1FD4**	✓	1 unit
Moving iron	100	5	0.5		**1FD5**	✓	1 unit
Moving iron	100	5	0.5 calibrated		**1FD6**	✓	1 unit
Moving iron	150	1	1		**1FE1**	✓	1 unit
Moving iron	150	1	0.5		**1FE2**	✓	1 unit
Moving iron	150	1	0.5 calibrated		**1FE3**	✓	1 unit
Moving iron	150	5	1		**1FE4**	✓	1 unit
Moving iron	150	5	0.5		**1FE5**	✓	1 unit
Moving iron	150	5	0.5 calibrated		**1FE6**	✓	1 unit
Bi-metal	50	1	1		**2FB1**	✓	1 unit
Bi-metal	50	5	1		**2FB4**	✓	1 unit
Bi-metal	100	1	1		**2FD1**	✓	1 unit
Bi-metal	100	1	0.5		**2FD2**	✓	1 unit
Bi-metal	100	1	0.5 calibrated		**2FD3**	✓	1 unit
Bi-metal	100	5	1		**2FD4**	✓	1 unit
Bi-metal	100	5	0.5		**2FD5**	✓	1 unit
Bi-metal	100	5	0.5 calibrated		**2FD6**	✓	1 unit
Bi-metal	150	1	1		**2FE1**	✓	1 unit
Bi-metal	150	1	0.5		**2FE2**	✓	1 unit
Bi-metal	150	1	0.5 calibrated		**2FE3**	✓	1 unit
Bi-metal	150	5	1		**2FE4**	✓	1 unit
Bi-metal	150	5	0.5		**2FE5**	✓	1 unit
Bi-metal	150	5	0.5 calibrated		**2FE6**	✓	1 unit

Minimum order quantity (PS) or a multiple thereof can be ordered.

© Siemens 2019

	Ammeters	Current transformers			SD	Article No. supplement 3NJ62 ..-.....-□□□□	Additional price	PS
		Primary current	Secondary current	Accuracy class				
		A	A		d			
For sizes 1 and B2								
	Without	Without	Without	Without	▶	**0AA0**		1 unit
	1 current transformer to 1 ammeter							
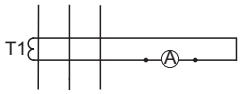	Moving iron	50	1	1		**1DB1**	✓	1 unit
	Moving iron	50	5	1		**1DB4**	✓	1 unit
	Moving iron	100	1	1		**1DD1**	✓	1 unit
	Moving iron	100	5	1		**1DD4**	✓	1 unit
	Moving iron	150	1	1		**1DE1**	✓	1 unit
	Moving iron	150	5	1		**1DE4**	✓	1 unit
	Moving iron	200	1	1		**1DF1**	✓	1 unit
	Moving iron	200	5	1		**1DF4**	✓	1 unit
	Moving iron	250	1	1		**1DG1**	✓	1 unit
	Moving iron	250	5	1		**1DG4**	✓	1 unit
	Bi-metal	50	1	1		**2DB1**	✓	1 unit
	Bi-metal	50	5	1		**2DB4**	✓	1 unit
	Bi-metal	100	1	1		**2DD1**	✓	1 unit
	Bi-metal	100	5	1		**2DD4**	✓	1 unit
	Bi-metal	150	1	1		**2DE1**	✓	1 unit
	Bi-metal	150	5	1		**2DE4**	✓	1 unit
	Bi-metal	200	1	1		**2DF1**	✓	1 unit
	Bi-metal	200	5	1		**2DF4**	✓	1 unit
	Bi-metal	250	1	1		**2DG1**	✓	1 unit
	Bi-metal	250	5	1		**2DG4**	✓	1 unit
	1 current transformer to multi-function plug							
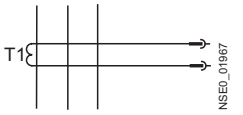	Without	50	1	1		**0BB1**	✓	1 unit
	Without	50	5	1		**0BB4**	✓	1 unit
	Without	100	1	1		**0BD1**	✓	1 unit
	Without	100	1	0.5		**0BD2**	✓	1 unit
	Without	100	5	1		**0BD4**	✓	1 unit
	Without	100	5	0.5		**0BD5**	✓	1 unit
	Without	150	1	1		**0BE1**	✓	1 unit
	Without	150	1	0.5		**0BE2**	✓	1 unit
	Without	150	5	1		**0BE4**	✓	1 unit
	Without	150	5	0.5		**0BE5**	✓	1 unit
	Without	200	1	1		**0BF1**	✓	1 unit
	Without	200	1	0.5		**0BF2**	✓	1 unit
	Without	200	5	1		**0BF4**	✓	1 unit
	Without	200	5	0.5		**0BF5**	✓	1 unit
	Without	250	1	1		**0BG1**	✓	1 unit
	Without	250	1	0.5		**0BG2**	✓	1 unit
	Without	250	5	1		**0BG4**	✓	1 unit
	Without	250	5	0.5		**0BG5**	✓	1 unit
	3 current transformers to multi-function plug							
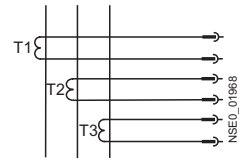	Without	50	1	1		**0CB1**	✓	1 unit
	Without	50	5	1		**0CB4**	✓	1 unit
	Without	100	1	1		**0CD1**	✓	1 unit
	Without	100	1	0.5		**0CD2**	✓	1 unit
	Without	100	5	1		**0CD4**	✓	1 unit
	Without	100	5	0.5		**0CD5**	✓	1 unit
	Without	150	1	1		**0CE1**	✓	1 unit
	Without	150	1	0.5		**0CE2**	✓	1 unit
	Without	150	5	1		**0CE4**	✓	1 unit
	Without	150	5	0.5		**0CE5**	✓	1 unit
	Without	200	1	1		**0CF1**	✓	1 unit
	Without	200	1	0.5		**0CF2**	✓	1 unit
	Without	200	5	1		**0CF4**	✓	1 unit
	Without	200	5	0.5		**0CF5**	✓	1 unit
	Without	250	1	1		**0CG1**	✓	1 unit
	Without	250	1	0.5		**0CG2**	✓	1 unit
	Without	250	5	1		**0CG4**	✓	1 unit
	Without	250	5	0.5		**0CG5**	✓	1 unit

© Siemens 2019

For LV HRC and BS fuse links

For sizes 1 and B2 (continued)

	Ammeters	Current transformers: Primary current	Current transformers: Secondary current	Current transformers: Accuracy class	SD	Article No. supplement 3NJ62 ..-.....-□□□□	Additional price	PS
		A	A		d			
	1 current transformer to 1 ammeter and multi-function plug							
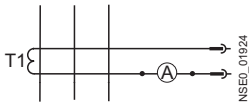	Moving iron	50	1	1		1EB1	✓	1 unit
	Moving iron	50	5	1		1EB4	✓	1 unit
	Moving iron	100	1	1		1ED1	✓	1 unit
	Moving iron	100	1	0.5		1ED2	✓	1 unit
	Moving iron	100	5	1		1ED4	✓	1 unit
	Moving iron	100	5	0.5		1ED5	✓	1 unit
	Moving iron	150	1	1		1EE1	✓	1 unit
	Moving iron	150	1	0.5		1EE2	✓	1 unit
	Moving iron	150	5	1		1EE4	✓	1 unit
	Moving iron	150	5	0.5		1EE5	✓	1 unit
	Moving iron	200	1	1		1EF1	✓	1 unit
	Moving iron	200	1	0.5		1EF2	✓	1 unit
	Moving iron	200	5	1		1EF4	✓	1 unit
	Moving iron	200	5	0.5		1EF5	✓	1 unit
	Moving iron	250	1	1		1EG1	✓	1 unit
	Moving iron	250	1	0.5		1EG2	✓	1 unit
	Moving iron	250	5	1		1EG4	✓	1 unit
	Moving iron	250	5	0.5		1EG5	✓	1 unit
	Bi-metal	50	1	1		2EB1	✓	1 unit
	Bi-metal	50	5	1		2EB4	✓	1 unit
	Bi-metal	100	1	1		2ED1	✓	1 unit
	Bi-metal	100	1	0.5		2ED2	✓	1 unit
	Bi-metal	100	5	1		2ED4	✓	1 unit
	Bi-metal	100	5	0.5		2ED5	✓	1 unit
	Bi-metal	150	1	1		2EE1	✓	1 unit
	Bi-metal	150	1	0.5		2EE2	✓	1 unit
	Bi-metal	150	5	1		2EE4	✓	1 unit
	Bi-metal	150	5	0.5		2EE5	✓	1 unit
	Bi-metal	200	1	1		2EF1	✓	1 unit
	Bi-metal	200	1	0.5		2EF2	✓	1 unit
	Bi-metal	200	5	1		2EF4	✓	1 unit
	Bi-metal	200	5	0.5		2EF5	✓	1 unit
	Bi-metal	250	1	1		2EG1	✓	1 unit
	Bi-metal	250	1	0.5		2EG2	✓	1 unit
	Bi-metal	250	5	1		2EG4	✓	1 unit
	Bi-metal	250	5	0.5		2EG5	✓	1 unit
	3 current transformers to 1 ammeter and multi-function plug							
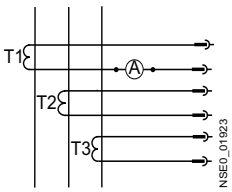	Moving iron	50	1	1		1FB1	✓	1 unit
	Moving iron	50	5	1		1FB4	✓	1 unit
	Moving iron	100	1	1		1FD1	✓	1 unit
	Moving iron	100	1	0.5		1FD2	✓	1 unit
	Moving iron	100	5	1		1FD4	✓	1 unit
	Moving iron	100	5	0.5		1FD5	✓	1 unit
	Moving iron	150	1	1		1FE1	✓	1 unit
	Moving iron	150	1	0.5		1FE2	✓	1 unit
	Moving iron	150	5	1		1FE4	✓	1 unit
	Moving iron	150	5	0.5		1FE5	✓	1 unit
	Moving iron	200	1	1		1FF1	✓	1 unit
	Moving iron	200	1	0.5		1FF2	✓	1 unit
	Moving iron	200	5	1		1FF4	✓	1 unit
	Moving iron	200	5	0.5		1FF5	✓	1 unit
	Moving iron	250	1	1		1FG1	✓	1 unit
	Moving iron	250	1	0.5		1FG2	✓	1 unit
	Moving iron	250	5	1		1FG4	✓	1 unit
	Moving iron	250	5	0.5		1FG5	✓	1 unit
	Bi-metal	50	1	1		2FB1	✓	1 unit
	Bi-metal	50	5	1		2FB4	✓	1 unit
	Bi-metal	100	1	1		2FD1	✓	1 unit
	Bi-metal	100	1	0.5		2FD2	✓	1 unit
	Bi-metal	100	5	1		2FD4	✓	1 unit
	Bi-metal	100	5	0.5		2FD5	✓	1 unit
	Bi-metal	150	1	1		2FE1	✓	1 unit
	Bi-metal	150	1	0.5		2FE2	✓	1 unit
	Bi-metal	150	5	1		2FE4	✓	1 unit
	Bi-metal	150	5	0.5		2FE5	✓	1 unit
	Bi-metal	200	1	1		2FF1	✓	1 unit
	Bi-metal	200	1	0.5		2FF2	✓	1 unit
	Bi-metal	200	5	1		2FF4	✓	1 unit
	Bi-metal	200	5	0.5		2FF5	✓	1 unit
	Bi-metal	250	1	1		2FG1	✓	1 unit
	Bi-metal	250	1	0.5		2FG2	✓	1 unit
	Bi-metal	250	5	1		2FG4	✓	1 unit
	Bi-metal	250	5	0.5		2FG5		1 unit

Minimum order quantity (PS) or a multiple thereof can be ordered.

© Siemens 2019

	Ammeters	Current transformers			SD	Article No. supplement 3NJ62 ..-.....-□□□□	Additional price	PS
		Primary current	Secondary current	Accuracy class				
		A	A		d			
For sizes 2 and B4								
	Without	Without	Without		▶	**0AA0**		1 unit
	1 current transformer to 1 ammeter							
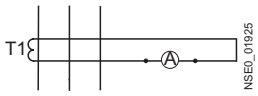	Moving iron	300	1	1		**1DH1**	✓	1 unit
	Moving iron	300	5	1		**1DH4**	✓	1 unit
	Moving iron	400	1	1		**1DJ1**	✓	1 unit
	Moving iron	400	5	1		**1DJ4**	✓	1 unit
	Bi-metal	300	1	1		**2DH1**	✓	1 unit
	Bi-metal	300	5	1		**2DH4**	✓	1 unit
	Bi-metal	400	1	1		**2DJ1**	✓	1 unit
	Bi-metal	400	5	1		**2DJ4**	✓	1 unit
	1 current transformer to multi-function plug							
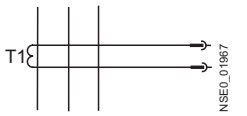	Without	300	1	1		**0BH1**	✓	1 unit
	Without	300	1	0.5		**0BH2**	✓	1 unit
	Without	300	1	0.5 calibrated		**0BH3**	✓	1 unit
	Without	300	5	1		**0BH4**	✓	1 unit
	Without	300	5	0.5		**0BH5**	✓	1 unit
	Without	300	5	0.5 calibrated		**0BH6**	✓	1 unit
	Without	400	1	1		**0BJ1**	✓	1 unit
	Without	400	1	0.5		**0BJ2**	✓	1 unit
	Without	400	1	0.5 calibrated		**0BJ3**	✓	1 unit
	Without	400	5	1		**0BJ4**	✓	1 unit
	Without	400	5	0.5		**0BJ5**	✓	1 unit
	Without	400	5	0.5 calibrated		**0BJ6**	✓	1 unit
	3 current transformers to multi-function plug							
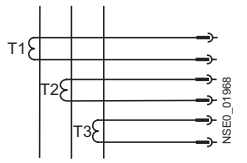	Without	300	1	1		**0CH1**	✓	1 unit
	Without	300	1	0.5		**0CH2**	✓	1 unit
	Without	300	1	0.5 calibrated		**0CH3**	✓	1 unit
	Without	300	5	1		**0CH4**	✓	1 unit
	Without	300	5	0.5		**0CH5**	✓	1 unit
	Without	300	5	0.5 calibrated		**0CH6**	✓	1 unit
	Without	400	1	1		**0CJ1**	✓	1 unit
	Without	400	1	0.5		**0CJ2**	✓	1 unit
	Without	400	1	0.5 calibrated		**0CJ3**	✓	1 unit
	Without	400	5	1		**0CJ4**	✓	1 unit
	Without	400	5	0.5		**0CJ5**	✓	1 unit
	Without	400	5	0.5 calibrated		**0CJ6**	✓	1 unit
	1 current transformer to 1 ammeter and multi-function plug							
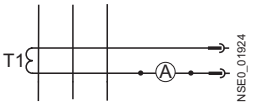	Moving iron	300	1	1		**1EH1**	✓	1 unit
	Moving iron	300	1	0.5		**1EH2**	✓	1 unit
	Moving iron	300	1	0.5 calibrated		**1EH3**	✓	1 unit
	Moving iron	300	5	1		**1EH4**	✓	1 unit
	Moving iron	300	5	0.5		**1EH5**	✓	1 unit
	Moving iron	300	5	0.5 calibrated		**1EH6**	✓	1 unit
	Moving iron	400	1	1		**1EJ1**	✓	1 unit
	Moving iron	400	1	0.5		**1EJ2**	✓	1 unit
	Moving iron	400	1	0.5 calibrated		**1EJ3**	✓	1 unit
	Moving iron	400	5	1		**1EJ4**	✓	1 unit
	Moving iron	400	5	0.5		**1EJ5**	✓	1 unit
	Moving iron	400	5	0.5 calibrated		**1EJ6**	✓	1 unit
	Bi-metal	300	1	1		**2EH1**	✓	1 unit
	Bi-metal	300	1	0.5		**2EH2**	✓	1 unit
	Bi-metal	300	1	0.5 calibrated		**2EH3**	✓	1 unit
	Bi-metal	300	5	1		**2EH4**	✓	1 unit
	Bi-metal	300	5	0.5		**2EH5**	✓	1 unit
	Bi-metal	300	5	0.5 calibrated		**2EH6**	✓	1 unit
	Bi-metal	400	1	1		**2EJ1**	✓	1 unit
	Bi-metal	400	1	0.5		**2EJ2**	✓	1 unit
	Bi-metal	400	1	0.5 calibrated		**2EJ3**	✓	1 unit
	Bi-metal	400	5	1		**2EJ4**	✓	1 unit
	Bi-metal	400	5	0.5		**2EJ5**	✓	1 unit
	Bi-metal	400	5	0.5 calibrated		**2EJ6**	✓	1 unit

© Siemens 2019

For LV HRC and BS fuse links

For sizes 2 and B4 (continued)

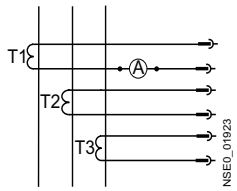

3 current transformers to 1 ammeter and multi-function plug

Ammeters	Current transformers: Primary current	Current transformers: Secondary current	Current transformers: Accuracy class	SD	Article No. supplement 3NJ62 ..-.....-□□□□	Additional price	PS
	A	A		d			
Moving iron	300	1	1		**1FH1**	✓	1 unit
Moving iron	300	1	0.5		**1FH2**	✓	1 unit
Moving iron	300	1	0.5 calibrated		**1FH3**	✓	1 unit
Moving iron	300	5	1		**1FH4**	✓	1 unit
Moving iron	300	5	0.5		**1FH5**	✓	1 unit
Moving iron	300	5	0.5 calibrated		**1FH6**	✓	1 unit
Moving iron	400	1	1		**1FJ1**	✓	1 unit
Moving iron	400	1	0.5		**1FJ2**	✓	1 unit
Moving iron	400	1	0.5 calibrated		**1FJ3**	✓	1 unit
Moving iron	400	5	1		**1FJ4**	✓	1 unit
Moving iron	400	5	0.5		**1FJ5**	✓	1 unit
Moving iron	400	5	0.5 calibrated		**1FJ6**	✓	1 unit
Bi-metal	300	1	1		**2FH1**	✓	1 unit
Bi-metal	300	1	0.5		**2FH2**	✓	1 unit
Bi-metal	300	1	0.5 calibrated		**2FH3**	✓	1 unit
Bi-metal	300	5	1		**2FH4**	✓	1 unit
Bi-metal	300	5	0.5		**2FH5**	✓	1 unit
Bi-metal	300	5	0.5 calibrated		**2FH6**	✓	1 unit
Bi-metal	400	1	1		**2FJ1**	✓	1 unit
Bi-metal	400	1	0.5		**2FJ2**	✓	1 unit
Bi-metal	400	1	0.5 calibrated		**2FJ3**	✓	1 unit
Bi-metal	400	5	1		**2FJ4**	✓	1 unit
Bi-metal	400	5	0.5		**2FJ5**	✓	1 unit
Bi-metal	400	5	0.5 calibrated		**2FJ6**	✓	1 unit

Minimum order quantity (PS) or a multiple thereof can be ordered.

© Siemens 2019

	Ammeters	Current transformers: Primary current	Current transformers: Secondary current	Current transformers: Accuracy class	SD	Article No. supplement 3NJ62 ..-.....-□□□□	Additional price	PS
		A	A		d			
For sizes 3 and 3T								
	Without	Without	Without	Without	►	**0AA0**		1 unit
	1 current transformer to 1 ammeter							
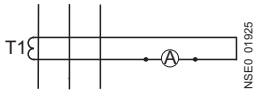	Moving iron	300	1	1		**1DH1**	✓	1 unit
	Moving iron	300	5	1		**1DH4**	✓	1 unit
	Moving iron	400	1	1		**1DJ1**	✓	1 unit
	Moving iron	400	5	1		**1DJ4**	✓	1 unit
	Moving iron	500	1	1		**1DK1**	✓	1 unit
	Moving iron	500	5	1		**1DK4**	✓	1 unit
	Moving iron	600	1	1		**1DL1**	✓	1 unit
	Moving iron	600	5	1		**1DL4**	✓	1 unit
	Bi-metal	300	1	1		**2DH1**	✓	1 unit
	Bi-metal	300	5	1		**2DH4**	✓	1 unit
	Bi-metal	400	1	1		**2DJ1**	✓	1 unit
	Bi-metal	400	5	1		**2DJ4**	✓	1 unit
	Bi-metal	500	1	1		**2DK1**	✓	1 unit
	Bi-metal	500	5	1		**2DK4**	✓	1 unit
	Bi-metal	600	1	1		**2DL1**	✓	1 unit
	Bi-metal	600	5	1		**2DL4**	✓	1 unit
	1 current transformer to multi-function plug							
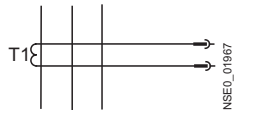	Without	300	1	1		**0BH1**	✓	1 unit
	Without	300	1	0.5		**0BH2**	✓	1 unit
	Without	300	1	0.5 calibrated		**0BH3**	✓	1 unit
	Without	300	5	1		**0BH4**	✓	1 unit
	Without	300	5	0.5		**0BH5**	✓	1 unit
	Without	300	5	0.5 calibrated		**0BH6**	✓	1 unit
	Without	400	1	1		**0BJ1**	✓	1 unit
	Without	400	1	0.5		**0BJ2**	✓	1 unit
	Without	400	1	0.5 calibrated		**0BJ3**	✓	1 unit
	Without	400	5	1		**0BJ4**	✓	1 unit
	Without	400	5	0.5		**0BJ5**	✓	1 unit
	Without	400	5	0.5 calibrated		**0BJ6**	✓	1 unit
	Without	500	1	1		**0BK1**	✓	1 unit
	Without	500	1	0.5		**0BK2**	✓	1 unit
	Without	500	1	0.5 calibrated		**0BK3**	✓	1 unit
	Without	500	5	1		**0BK4**	✓	1 unit
	Without	500	5	0.5		**0BK5**	✓	1 unit
	Without	500	5	0.5 calibrated		**0BK6**	✓	1 unit
	Without	600	1	1		**0BL1**	✓	1 unit
	Without	600	1	0.5		**0BL2**	✓	1 unit
	Without	600	1	0.5 calibrated		**0BL3**	✓	1 unit
	Without	600	5	1		**0BL4**	✓	1 unit
	Without	600	5	0.5		**0BL5**	✓	1 unit
	Without	600	5	0.5 calibrated		**0BL6**	✓	1 unit
	3 current transformers to multi-function plug							
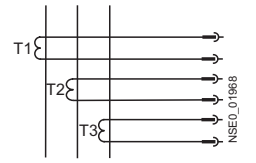	Without	300	1	1		**0CH1**	✓	1 unit
	Without	300	1	0.5		**0CH2**	✓	1 unit
	Without	300	1	0.5 calibrated		**0CH3**	✓	1 unit
	Without	300	5	1		**0CH4**	✓	1 unit
	Without	300	5	0.5		**0CH5**	✓	1 unit
	Without	300	5	0.5 calibrated		**0CH6**	✓	1 unit
	Without	400	1	1		**0CJ1**	✓	1 unit
	Without	400	1	0.5		**0CJ2**	✓	1 unit
	Without	400	1	0.5 calibrated		**0CJ3**	✓	1 unit
	Without	400	5	1		**0CJ4**	✓	1 unit
	Without	400	5	0.5		**0CJ5**	✓	1 unit
	Without	400	5	0.5 calibrated		**0CJ6**	✓	1 unit
	Without	500	1	1		**0CK1**	✓	1 unit
	Without	500	1	0.5		**0CK2**	✓	1 unit
	Without	500	1	0.5 calibrated		**0CK3**	✓	1 unit
	Without	500	5	1		**0CK4**	✓	1 unit
	Without	500	5	0.5		**0CK5**	✓	1 unit
	Without	500	5	0.5 calibrated		**0CK6**	✓	1 unit
	Without	600	1	1		**0CL1**	✓	1 unit
	Without	600	1	0.5		**0CL2**	✓	1 unit
	Without	600	1	0.5 calibrated		**0CL3**	✓	1 unit
	Without	600	5	1		**0CL4**	✓	1 unit
	Without	600	5	0.5		**0CL5**	✓	1 unit
	Without	600	5	0.5 calibrated		**0CL6**	✓	1 unit

© Siemens 2019

For LV HRC and BS fuse links

For sizes 3 and 3T (continued)

1 current transformer to 1 ammeter and multi-function plug

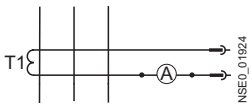

Ammeters	Current transformers: Primary current	Current transformers: Secondary current	Current transformers: Accuracy class	SD	Article No. supplement 3NJ62 ..-.....-□□□□	Additional price	PS
	A	A		d			
Moving iron	300	1	1		1EH1	✓	1 unit
Moving iron	300	1	0.5		1EH2	✓	1 unit
Moving iron	300	1	0.5 calibrated		1EH3	✓	1 unit
Moving iron	300	5	1		1EH4	✓	1 unit
Moving iron	300	5	0.5		1EH5	✓	1 unit
Moving iron	300	5	0.5 calibrated		1EH6	✓	1 unit
Moving iron	400	1	1		1EJ1	✓	1 unit
Moving iron	400	1	0.5		1EJ2	✓	1 unit
Moving iron	400	1	0.5 calibrated		1EJ3	✓	1 unit
Moving iron	400	5	1		1EJ4	✓	1 unit
Moving iron	400	5	0.5		1EJ5	✓	1 unit
Moving iron	400	5	0.5 calibrated		1EJ6	✓	1 unit
Moving iron	500	1	1		1EK1	✓	1 unit
Moving iron	500	1	0.5		1EK2	✓	1 unit
Moving iron	500	1	0.5 calibrated		1EK3	✓	1 unit
Moving iron	500	5	1		1EK4	✓	1 unit
Moving iron	500	5	0.5		1EK5	✓	1 unit
Moving iron	500	5	0.5 calibrated		1EK6	✓	1 unit
Moving iron	600	1	1		1EL1	✓	1 unit
Moving iron	600	1	0.5		1EL2	✓	1 unit
Moving iron	600	1	0.5 calibrated		1EL3	✓	1 unit
Moving iron	600	5	1		1EL4	✓	1 unit
Moving iron	600	5	0.5		1EL5	✓	1 unit
Moving iron	600	5	0.5 calibrated		1EL6	✓	1 unit
Bi-metal	300	1	1		2EH1	✓	1 unit
Bi-metal	300	1	0.5		2EH2	✓	1 unit
Bi-metal	300	1	0.5 calibrated		2EH3	✓	1 unit
Bi-metal	300	5	1		2EH4	✓	1 unit
Bi-metal	300	5	0.5		2EH5	✓	1 unit
Bi-metal	300	5	0.5 calibrated		2EH6	✓	1 unit
Bi-metal	400	1	1		2EJ1	✓	1 unit
Bi-metal	400	1	0.5		2EJ2	✓	1 unit
Bi-metal	400	1	0.5 calibrated		2EJ3	✓	1 unit
Bi-metal	400	5	1		2EJ4	✓	1 unit
Bi-metal	400	5	0.5		2EJ5	✓	1 unit
Bi-metal	400	5	0.5 calibrated		2EJ6	✓	1 unit
Bi-metal	500	1	1		2EK1	✓	1 unit
Bi-metal	500	1	0.5		2EK2	✓	1 unit
Bi-metal	500	1	0.5 calibrated		2EK3	✓	1 unit
Bi-metal	500	5	1		2EK4	✓	1 unit
Bi-metal	500	5	0.5		2EK5	✓	1 unit
Bi-metal	500	5	0.5 calibrated		2EK6	✓	1 unit
Bi-metal	600	1	1		2EL1	✓	1 unit
Bi-metal	600	1	0.5		2EL2	✓	1 unit
Bi-metal	600	1	0.5 calibrated		2EL3	✓	1 unit
Bi-metal	600	5	1		2EL4	✓	1 unit
Bi-metal	600	5	0.5		2EL5	✓	1 unit
Bi-metal	600	5	0.5 calibrated		2EL6	✓	1 unit

Minimum order quantity (PS) or a multiple thereof can be ordered.

© Siemens 2019

For sizes 3 and 3T (continued)

3 current transformers to 1 ammeter and multi-function plug

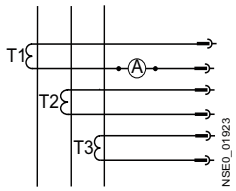

Ammeters	Current transformers: Primary current	Current transformers: Secondary current	Current transformers: Accuracy class	SD	Article No. supplement 3NJ62 ..-.....-□□□□	Additional price	PS
	A	A		d			
Moving iron	300	1	1		**1FH1**	✓	1 unit
Moving iron	300	1	0.5		**1FH2**	✓	1 unit
Moving iron	300	1	0.5 calibrated		**1FH3**	✓	1 unit
Moving iron	300	5	1		**1FH4**	✓	1 unit
Moving iron	300	5	0.5		**1FH5**	✓	1 unit
Moving iron	300	5	0.5 calibrated		**1FH6**	✓	1 unit
Moving iron	400	1	1		**1FJ1**	✓	1 unit
Moving iron	400	1	0.5		**1FJ2**	✓	1 unit
Moving iron	400	1	0.5 calibrated		**1FJ3**	✓	1 unit
Moving iron	400	5	1		**1FJ4**	✓	1 unit
Moving iron	400	5	0.5		**1FJ5**	✓	1 unit
Moving iron	400	5	0.5 calibrated		**1FJ6**	✓	1 unit
Moving iron	500	1	1		**1FK1**	✓	1 unit
Moving iron	500	1	0.5		**1FK2**	✓	1 unit
Moving iron	500	1	0.5 calibrated		**1FK3**	✓	1 unit
Moving iron	500	5	1		**1FK4**	✓	1 unit
Moving iron	500	5	0.5		**1FK5**	✓	1 unit
Moving iron	500	5	0.5 calibrated		**1FK6**	✓	1 unit
Moving iron	600	1	1		**1FL1**	✓	1 unit
Moving iron	600	1	0.5		**1FL2**	✓	1 unit
Moving iron	600	1	0.5 calibrated		**1FL3**	✓	1 unit
Moving iron	600	5	1		**1FL4**	✓	1 unit
Moving iron	600	5	0.5		**1FL5**	✓	1 unit
Moving iron	600	5	0.5 calibrated		**1FL6**	✓	1 unit
Bi-metal	300	1	1		**2FH1**	✓	1 unit
Bi-metal	300	1	0.5		**2FH2**	✓	1 unit
Bi-metal	300	1	0.5 calibrated		**2FH3**	✓	1 unit
Bi-metal	300	5	1		**2FH4**	✓	1 unit
Bi-metal	300	5	0.5		**2FH5**	✓	1 unit
Bi-metal	300	5	0.5 calibrated		**2FH6**	✓	1 unit
Bi-metal	400	1	1		**2FJ1**	✓	1 unit
Bi-metal	400	1	0.5		**2FJ2**	✓	1 unit
Bi-metal	400	1	0.5 calibrated		**2FJ3**	✓	1 unit
Bi-metal	400	5	1		**2FJ4**	✓	1 unit
Bi-metal	400	5	0.5		**2FJ5**	✓	1 unit
Bi-metal	400	5	0.5 calibrated		**2FJ6**	✓	1 unit
Bi-metal	500	1	1		**2FK1**	✓	1 unit
Bi-metal	500	1	0.5		**2FK2**	✓	1 unit
Bi-metal	500	1	0.5 calibrated		**2FK3**	✓	1 unit
Bi-metal	500	5	1		**2FK4**	✓	1 unit
Bi-metal	500	5	0.5		**2FK5**	✓	1 unit
Bi-metal	500	5	0.5 calibrated		**2FK6**	✓	1 unit
Bi-metal	600	1	1		**2FL1**	✓	1 unit
Bi-metal	600	1	0.5		**2FL2**	✓	1 unit
Bi-metal	600	1	0.5 calibrated		**2FL3**	✓	1 unit
Bi-metal	600	5	1		**2FL4**	✓	1 unit
Bi-metal	600	5	0.5		**2FL5**	✓	1 unit
Bi-metal	600	5	0.5 calibrated		**2FL6**	✓	1 unit

© Siemens 2019

Accessories

Selection and ordering data

	Version	SD	Article No. www.siemens.com/product?Article No.	Price per PU	PU (UNIT, SET, M)	PS	PG
		d					
For sizes 00, A3 and 00T							
 3NJ6923-1BA00	**Terminals**						
	Single terminal for 2/3-pole devices, 10 ... 95 mm² (1 set = 3 units)		**3NJ6923-1BA00**		1	1 unit	1DL
	Single terminal for 4-pole devices, 10 ... 95 mm² (1 set = 4 units)		**3NJ6924-1BA00**		1	1 unit	1DL
 3NJ6923-1DA00	**Terminal covers**						
	For 2/3-pole devices		**3NJ6923-1DA00**		1	1 unit	1DL
	Only for 4th pole		**3NJ6904-1DA00**		1	1 unit	1DL
 3NJ6923-1EB00	**Contact extensions**						
	3-pole		**3NJ6923-1EB00**		1	1 unit	1DL
	4-pole		**3NJ6924-1EB00**		1	1 unit	1DL
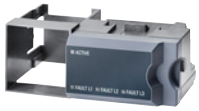 3NJ6923-3FB00	**Electronic fuse monitoring and line monitoring devices**						
	EFM 10, fuse monitoring for AC networks		**3NJ6920-3FB00**		1	1 unit	1DL
	EFM 20, fuse monitoring and line monitoring for AC networks		**3NJ6920-3FC00**		1	1 unit	1DL
	EFM 25, fuse monitoring and line monitoring for DC networks		**3NJ6920-3FE00**		1	1 unit	1DL
 3NJ6923-3FC00							
 3NJ6920-2BB00	**Auxiliary switches**						
	1 NO contact (1 NO) with cover		**3NJ6920-2BB00**		1	1 unit	1DL
	1 NO contact (1 NO)		**3NJ6900-2BC00**		1	1 unit	1DL
	1 NC contact (1 NC) with cover		**3NJ6920-2CB00**		1	1 unit	1DL
	1 NC contact (1 NC)		**3NJ6900-2CC00**		1	1 unit	1DL
 3NJ6900-2BC00							
 3NJ6920-3BD11	**Current transformers for main devices and contact extensions**						
	∅ = Feed-through opening diameter						
	The current transformers can also be used with the 7KM PAC measuring devices, see chapter "Measuring Devices and Power Monitoring".						
	50 A/1 A — Class 1 — 1 VA, ∅ 21 mm		**3NJ6920-3BB11**		1	1 unit	1DL
	50 A/5 A — Class 1 — 1 VA, ∅ 21 mm		**3NJ6920-3BB21**		1	1 unit	1DL
	100 A/1 A — Class 1 — 2.5 VA, ∅ 21 mm		**3NJ6920-3BD11**		1	1 unit	1DL
	100 A/1 A — Class 0.5 — 1.5 VA, ∅ 21 mm		**3NJ6920-3BD12**		1	1 unit	1DL
	100 A/1 A — Class 0.5 calibrated — 1.5 VA, ∅ 14 mm		**3NJ6920-3BD13**		1	1 unit	1DL
	100 A/5 A — Class 1 — 2.5 VA, ∅ 21 mm		**3NJ6920-3BD21**		1	1 unit	1DL
	100 A/5 A — Class 0.5 — 1.5 VA, ∅ 21 mm		**3NJ6920-3BD22**		1	1 unit	1DL
	100 A/5 A — Class 0.5 calibrated — 1.5 VA, ∅ 14 mm		**3NJ6920-3BD23**		1	1 unit	1DL
	150 A/1 A — Class 1 — 2.5 VA, ∅ 21 mm		**3NJ6920-3BE11**		1	1 unit	1DL
	150 A/1 A — Class 0.5 — 1.5 VA, ∅ 21 mm		**3NJ6920-3BE12**		1	1 unit	1DL
	150 A/1 A — Class 0.5 calibrated — 2.5 VA, ∅ 14 mm		**3NJ6920-3BE13**		1	1 unit	1DL
	150 A/5 A — Class 1 — 1.5 VA, ∅ 21 mm		**3NJ6920-3BE21**		1	1 unit	1DL
	150 A/5 A — Class 0.5 — 1.5 VA, ∅ 21 mm		**3NJ6920-3BE22**		1	1 unit	1DL
	150 A/5 A — Class 0.5 calibrated — 2.5 VA, ∅ 14 mm		**3NJ6920-3BE23**		1	1 unit	1DL

7

Minimum order quantity (PS) or a multiple thereof can be ordered.

© Siemens 2019

	Version	SD d	Article No. www.siemens.com/product?Article No.	Price per PU	PU (UNIT, SET, M)	PS	PG
For sizes 00, A3 and 00T (continued)							
 3NJ6920-3DB00	**Current transformer busbars for current transformers with feed-through opening ∅ 21 mm**						
	For 1 current transformer		**3NJ6920-3DB00**		1	1 unit	1DL
	For 3 current transformers		**3NJ6920-3DC00**		1	1 unit	1DL
	For 4 current transformers[1]		**3NJ6920-3DD00**		1	1 unit	1DL
 3NJ6920-3DC00	**Current transformer busbars for current transformers with feed-through opening ∅ 14 mm**						
	For 1 current transformer		**3NJ6920-3DE00**		1	1 unit	1DL
	For 3 current transformers		**3NJ6920-3DF00**		1	1 unit	1DL
 3NJ6920-3DD00	For 4 current transformers[1]		**3NJ6920-3DG00**		1	1 unit	1DL
 3NJ6900-4GA00	**Holders for ammeters** For sizes 00, 1, 2, 3		**3NJ6900-4GA00**		1	1 unit	1DL
 3NJ6900-4H...	**Ammeters** **Moving-iron measuring instruments for measurements on transformer x/1 A with double overload**						
	50 A/1 A 0.6 VA		**3NJ6900-4HB11**		1	1 unit	1DL
	100 A/1 A 0.6 VA		**3NJ6900-4HD11**		1	1 unit	1DL
	150 A/1 A 0.6 VA		**3NJ6900-4HE11**		1	1 unit	1DL
	Moving-iron measuring instruments for measurements on transformer x/5 A with double overload						
	50 A/5 A 0.6 VA		**3NJ6900-4HB21**		1	1 unit	1DL
	100 A/5 A 0.6 VA		**3NJ6900-4HD21**		1	1 unit	1DL
	150 A/5 A 0.6 VA		**3NJ6900-4HE21**		1	1 unit	1DL
 3NJ6900-4H...	**Bi-metal measuring instruments with slave pointer for measurements on transformer x/1 A with 1.2-times overload**						
	50 A/1 A 1 VA		**3NJ6900-4HB12**		1	1 unit	1DL
	100 A/1 A 1 VA		**3NJ6900-4HD12**		1	1 unit	1DL
	150 A/1 A 1 VA		**3NJ6900-4HE12**		1	1 unit	1DL
	Bi-metal measuring instruments with slave pointer for measurements on transformer x/5 A with 1.2-times overload						
	50 A/5 A 1 VA		**3NJ6900-4HB22**		1	1 unit	1DL
	100 A/5 A 1 VA		**3NJ6900-4HD22**		1	1 unit	1DL
	150 A/5 A 1 VA		**3NJ6900-4HE22**		1	1 unit	1DL
 3NJ6920-3EB01	**Multi-function plugs**						
	6 x 2.5 mm², with fixing screws		**3NJ6920-3EB01**		1	1 unit	1DL
 3NJ6920-3ED01	8 x 2.5 mm², without fixing screws		**3NJ6920-3ED01**		1	1 unit	1DL
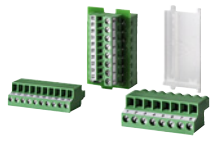 3NJ6920-3EE01	10 x 1.5 mm² and 8 x 2.5 mm², without fixing screws		**3NJ6920-3EE01**		1	1 unit	1DL
 3NJ6923-4BB00	**Front panels**						
	For NH: 3NJ6203-1AA... and 3NJ6203-3AA... without/with EFM		**3NJ6923-4BB00**		1	1 unit	1DL
	For BS: 3NJ6243-3..., 3NJ6253-3..., 3NJ6263-3... and 3NJ6264-1... without/with EFM		**3NJ6923-4BC00**		1	1 unit	1DL

[1] Not available in combination with multi-function plugs.

© Siemens 2019

Accessories

For sizes 1 and B2

	Version	SD d	Article No. www.siemens.com/product?Article No.	Price per PU	PU (UNIT, SET, M)	PS	PG
 3NJ6933-1BA00	**Terminals**						
	Single terminal for 2/3-pole devices, 16 ... 300 mm² (1 set = 3 units)		**3NJ6933-1BA00**		1	1 unit	1DL
	Single terminal for 4-pole devices, 16 ... 300 mm² (1 set = 4 units)		**3NJ6934-1BA00**		1	1 unit	1DL
 3NJ6933-1DB00	**Terminal covers**						
	For 2/3-pole devices		**3NJ6933-1DA01**		1	1 unit	1DL
	Internal terminal covers for 2/3-pole devices		**3NJ6933-1DB00**		1	1 unit	1DL
	Only for 4th pole		**3NJ6904-1DA00**		1	1 unit	1DL
 3NJ6933-1EB00	**Contact extensions**						
	3-pole		**3NJ6933-1EB00**		1	1 unit	1DL
	4-pole		**3NJ6934-1EB00**		1	1 unit	1DL
 3NJ6923-3FB00	**Electronic fuse monitoring and line monitoring devices**						
	EFM 10, fuse monitoring for AC networks		**3NJ6930-3FB00**		1	1 unit	1DL
	EFM 20, fuse monitoring and line monitoring for AC networks		**3NJ6930-3FC00**		1	1 unit	1DL
	EFM 25, fuse monitoring and line monitoring for DC networks		**3NJ6930-3FE00**		1	1 unit	1DL
 3NJ6923-3FC00							
 3NJ6930-2BB00	**Auxiliary switches**						
	1 NO contact (1 NO) with cover		**3NJ6930-2BB00**		1	1 unit	1DL
	1 NO contact (1 NO)		**3NJ6900-2BC00**		1	1 unit	1DL
	1 NC contact (1 NC) with cover		**3NJ6930-2CB00**		1	1 unit	1DL
	1 NC contact (1 NC)		**3NJ6900-2CC00**		1	1 unit	1DL
 3NJ6900-2BC00							
	Current transformers for main devices and contact extensions ∅ = Feed-through opening diameter The current transformers can also be used with the 7KM PAC measuring devices, see chapter "Measuring Devices and Power Monitoring".						
 3NJ6920-3BD11	50 A/1 A Class 1 1 VA, ∅ 21 mm		**3NJ6920-3BB11**		1	1 unit	1DL
	50 A/5 A Class 1 1 VA, ∅ 21 mm		**3NJ6920-3BB21**		1	1 unit	1DL
	100 A/1 A Class 1 2.5 VA, ∅ 21 mm		**3NJ6920-3BD11**		1	1 unit	1DL
	100 A/1 A Class 0.5 1.5 VA, ∅ 21 mm		**3NJ6920-3BD12**		1	1 unit	1DL
	100 A/5 A Class 1 2.5 VA, ∅ 21 mm		**3NJ6920-3BD21**		1	1 unit	1DL
	100 A/5 A Class 0.5 1.5 VA, ∅ 21 mm		**3NJ6920-3BD22**		1	1 unit	1DL
	150 A/1 A Class 1 2.5 VA, ∅ 21 mm		**3NJ6920-3BE11**		1	1 unit	1DL
	150 A/1 A Class 0.5 1.5 VA, ∅ 21 mm		**3NJ6920-3BE12**		1	1 unit	1DL
	150 A/5 A Class 1 1.5 VA, ∅ 21 mm		**3NJ6920-3BE21**		1	1 unit	1DL
	150 A/5 A Class 0.5 1.5 VA, ∅ 21 mm		**3NJ6920-3BE22**		1	1 unit	1DL
	200 A/1 A Class 1 2.5 VA, ∅ 21 mm		**3NJ6930-3BF11**		1	1 unit	1DL
	200 A/1 A Class 0.5 5 VA, ∅ 21 mm		**3NJ6930-3BF12**		1	1 unit	1DL
	200 A/5 A Class 1 2.5 VA, ∅ 21 mm		**3NJ6930-3BF21**		1	1 unit	1DL
	200 A/5 A Class 0.5 2.5 VA, ∅ 21 mm		**3NJ6930-3BF22**		1	1 unit	1DL
	250 A/1 A Class 1 5 VA, ∅ 21 mm		**3NJ6930-3BG11**		1	1 unit	1DL
	250 A/1 A Class 0.5 5 VA, ∅ 21 mm		**3NJ6930-3BG12**		1	1 unit	1DL
	250 A/5 A Class 1 2.5 VA, ∅ 21 mm		**3NJ6930-3BG21**		1	1 unit	1DL
	250 A/5 A Class 0.5 2.5 VA, ∅ 21 mm		**3NJ6930-3BG22**		1	1 unit	1DL

Minimum order quantity (PS) or a multiple thereof can be ordered.

© Siemens 2019

	Version	SD d	Article No. www.siemens.com/product?Article No.	Price per PU	PU (UNIT, SET, M)	PS	PG
For sizes 1 and B2 (continued)							
 3NJ6930-3DB00	**Current transformer busbars for current transformers with feed-through opening ∅ 21 mm**						
	For 1 current transformer		**3NJ6930-3DB00**		1	1 unit	1DL
 3NJ6930-3DC00	For 3 current transformers		**3NJ6930-3DC00**		1	1 unit	1DL
 3NJ6930-3DD00	For 4 current transformers[1]		**3NJ6930-3DD00**		1	1 unit	1DL
 3NJ6900-4GA00	**Holders for ammeters** For sizes 00, 1, 2, 3		**3NJ6900-4GA00**		1	1 unit	1DL
 3NJ6900-4H...	**Ammeters** **Moving-iron measuring instruments for measurements on transformer x/1 A with double overload**						
	50 A/1 A 0.6 VA		**3NJ6900-4HB11**		1	1 unit	1DL
	100 A/1 A 0.6 VA		**3NJ6900-4HD11**		1	1 unit	1DL
	150 A/1 A 0.6 VA		**3NJ6900-4HE11**		1	1 unit	1DL
	200 A/1 A 0.6 VA		**3NJ6900-4HF11**		1	1 unit	1DL
	250 A/1 A 0.6 VA		**3NJ6900-4HG11**		1	1 unit	1DL
	Moving-iron measuring instruments for measurements on transformer x/5 A with double overload						
	50 A/5 A 0.6 VA		**3NJ6900-4HB21**		1	1 unit	1DL
	100 A/5 A 0.6 VA		**3NJ6900-4HD21**		1	1 unit	1DL
	150 A/5 A 0.6 VA		**3NJ6900-4HE21**		1	1 unit	1DL
	200 A/5 A 0.6 VA		**3NJ6900-4HF21**		1	1 unit	1DL
	250 A/5 A 0.6 VA		**3NJ6900-4HG21**		1	1 unit	1DL
 3NJ6900-4H...	**Bi-metal measuring instruments with slave pointer for measurements on transformer x/1 A with 1.2-times overload**						
	50 A/1 A 1 VA		**3NJ6900-4HB12**		1	1 unit	1DL
	100 A/1 A 1 VA		**3NJ6900-4HD12**		1	1 unit	1DL
	150 A/1 A 1 VA		**3NJ6900-4HE12**		1	1 unit	1DL
	200 A/1 A 1 VA		**3NJ6900-4HF12**		1	1 unit	1DL
	250 A/1 A 1 VA		**3NJ6900-4HG12**		1	1 unit	1DL
	Bi-metal measuring instruments with slave pointer for measurements on transformer x/5 A with 1.2-times overload						
	50 A/5 A 1 VA		**3NJ6900-4HB22**		1	1 unit	1DL
	100 A/5 A 1 VA		**3NJ6900-4HD22**		1	1 unit	1DL
	150 A/5 A 1 VA		**3NJ6900-4HE22**		1	1 unit	1DL
	200 A/5 A 1 VA		**3NJ6900-4HF22**		1	1 unit	1DL
	250 A/5 A 1 VA		**3NJ6900-4HG22**		1	1 unit	1DL
 3NJ6920-3EB01	**Multi-function plugs**						
	6 x 2.5 mm², with fixing screws		**3NJ6920-3EB01**		1	1 unit	1DL
	8 x 2.5 mm², without fixing screws		**3NJ6920-3ED01**		1	1 unit	1DL
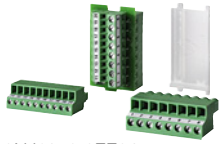 3NJ6940-3EE01	10 x 1.5 mm² and 8 x 2.5 mm², without fixing screws		**3NJ6920-3EE01**		1	1 unit	1DL
 3NJ6933-4BB00	**Front panels**						
	For NH: 3NJ6213-1AA... and 3NJ6213-3AA... without/with EFM		**3NJ6933-4BB00**		1	1 unit	1DL
	For BS: 3NJ6213-1AA... and 3NJ6213-3AA... without/with EFM		**3NJ6933-4BC00**		1	1 unit	1DL

[1] Not available in combination with multi-function plugs.

© Siemens 2019

Accessories

For sizes 2, 3, B4 and 3T

	Version	SD d	Article No. www.siemens.com/product?Article No.	Price per PU	PU (UNIT, SET, M)	PS	PG
 3NJ6943-1CA00	**Terminals**						
	Double terminals for 2/3-pole devices, 2 x (16 mm^2 ... 300 mm^2, 1 set = 6 units)		**3NJ6943-1CA00**		1	1 unit	1DL
	Double terminals for 4-pole devices, 2 x (16 mm^2 ... 300 mm^2, 1 set = 8 units)		**3NJ6944-1CA00**		1	1 unit	1DL
 3NJ6943-1DA00	**Terminal covers**						
	For 2/3-pole devices		**3NJ6943-1DA00**		1	1 unit	1DL
	Only for 4th pole		**3NJ6904-1DA00**		1	1 unit	1DL
 3NJ6944-1EB00	**Contact extensions**						
	3-pole		**3NJ6943-1EB00**		1	1 unit	1DL
	4-pole		**3NJ6944-1EB00**		1	1 unit	1DL
 3NJ6923-3FB00	**Electronic fuse monitoring and line monitoring devices**						
	EFM 10, fuse monitoring for AC networks		**3NJ6940-3FB00**		1	1 unit	1DL
	EFM 20, fuse monitoring and line monitoring for AC networks		**3NJ6940-3FC00**		1	1 unit	1DL
	EFM 25, fuse monitoring and line monitoring for DC networks		**3NJ6940-3FE00**		1	1 unit	1DL
 3NJ6923-3FC00							
 3NJ6940-2BB00	**Auxiliary switches**						
	1 NO contact (1 NO) with cover		**3NJ6940-2BB00**		1	1 unit	1DL
	1 NO contact (1 NO)		**3NJ6900-2BC00**		1	1 unit	1DL
	1 NC contact (1 NC) with cover		**3NJ6940-2CB00**		1	1 unit	1DL
	1 NC contact (1 NC)		**3NJ6900-2CC00**		1	1 unit	1DL
 3NJ6900-2BC00							
	Current transformers for main devices and contact extensions						
 3NJ6940-3B...	300 A/1 A	Class 1	5 VA	**3NJ6940-3BH11**	1	1 unit	1DL
	300 A/1 A	Class 0.5	5 VA	**3NJ6940-3BH12**	1	1 unit	1DL
	300 A/1 A	Class 0.5 calibrated	5 VA	**3NJ6940-3BH13**	1	1 unit	1DL
	300 A/5 A	Class 1	5 VA	**3NJ6940-3BH21**	1	1 unit	1DL
	300 A/5 A	Class 0.5	5 VA	**3NJ6940-3BH22**	1	1 unit	1DL
	300 A/5 A	Class 0.5 calibrated	5 VA	**3NJ6940-3BH23**	1	1 unit	1DL
	400 A/1 A	Class 1	5 VA	**3NJ6940-3BJ11**	1	1 unit	1DL
	400 A/1 A	Class 0.5	5 VA	**3NJ6940-3BJ12**	1	1 unit	1DL
	400 A/1 A	Class 0.5 calibrated	5 VA	**3NJ6940-3BJ13**	1	1 unit	1DL
	400 A/5 A	Class 1	5 VA	**3NJ6940-3BJ21**	1	1 unit	1DL
	400 A/5 A	Class 0.5	5 VA	**3NJ6940-3BJ22**	1	1 unit	1DL
	400 A/5 A	Class 0.5 calibrated	5 VA	**3NJ6940-3BJ23**	1	1 unit	1DL
	500 A/1 A	Class 1	5 VA	**3NJ6940-3BK11**	1	1 unit	1DL
	500 A/1 A	Class 0.5	5 VA	**3NJ6940-3BK12**	1	1 unit	1DL
	500 A/1 A	Class 0.5 calibrated	5 VA	**3NJ6940-3BK13**	1	1 unit	1DL
	500 A/5 A	Class 1	5 VA	**3NJ6940-3BK21**	1	1 unit	1DL
	500 A/5 A	Class 0.5	5 VA	**3NJ6940-3BK22**	1	1 unit	1DL
	500 A/5 A	Class 0.5 calibrated	5 VA	**3NJ6940-3BK23**	1	1 unit	1DL
	600 A/1 A	Class 1	5 VA	**3NJ6940-3BL11**	1	1 unit	1DL
	600 A/1 A	Class 0.5	5 VA	**3NJ6940-3BL12**	1	1 unit	1DL
	600 A/1 A	Class 0.5 calibrated	5 VA	**3NJ6940-3BL13**	1	1 unit	1DL
	600 A/5 A	Class 1	5 VA	**3NJ6940-3BL21**	1	1 unit	1DL
	600 A/5 A	Class 0.5	5 VA	**3NJ6940-3BL22**	1	1 unit	1DL
	600 A/5 A	Class 0.5 calibrated	5 VA	**3NJ6940-3BL23**	1	1 unit	1DL

The current transformers can also be used with the 7KM PAC measuring devices, see chapter "Measuring Devices and Power Monitoring".

Minimum order quantity (PS) or a multiple thereof can be ordered.

© Siemens 2019

	Version	SD	Article No. www.siemens.com/product?Article No.	Price per PU	PU (UNIT, SET, M)	PS	PG
		d					
For sizes 2, 3, B4 and 3T (continued)							
 3NJ6900-4GA00	**Holders for ammeters** For sizes 00, 1, 2, 3		**3NJ6900-4GA00**		1	1 unit	1DL
 3NJ6900-4H...	**Ammeters** **Moving-iron measuring instruments for measuring input on transformer x/1 A with double overload**						
	300 A/1 A 0.6 VA		**3NJ6900-4HH11**		1	1 unit	1DL
	400 A/1 A 0.6 VA		**3NJ6900-4HJ11**		1	1 unit	1DL
	500 A/1 A 0.6 VA		**3NJ6900-4HK11**		1	1 unit	1DL
	600 A/1 A 0.6 VA		**3NJ6900-4HL11**		1	1 unit	1DL
	Moving-iron measuring instruments for measuring input on transformer x/5 A with double overload						
	300 A/5 A 0.6 VA		**3NJ6900-4HH21**		1	1 unit	1DL
	400 A/5 A 0.6 VA		**3NJ6900-4HJ21**		1	1 unit	1DL
	500 A/5 A 0.6 VA		**3NJ6900-4HK21**		1	1 unit	1DL
	600 A/5 A 0.6 VA		**3NJ6900-4HL21**		1	1 unit	1DL
 3NJ6900-4H...	**Bi-metal measuring instruments with slave pointer for measurements on transformer x/1 A with 1.2-times overload**						
	300 A/1 A 1 VA		**3NJ6900-4HH12**		1	1 unit	1DL
	400 A/1 A 1 VA		**3NJ6900-4HJ12**		1	1 unit	1DL
	500 A/1 A 1 VA		**3NJ6900-4HK12**		1	1 unit	1DL
	600 A/1 A 1 VA		**3NJ6900-4HL12**		1	1 unit	1DL
	Bi-metal measuring instruments with slave pointer for measurements on transformer x/5 A with 1.2-times overload						
	300 A/5 A 1 VA		**3NJ6900-4HH22**		1	1 unit	1DL
	400 A/5 A 1 VA		**3NJ6900-4HJ22**		1	1 unit	1DL
	500 A/5 A 1 VA		**3NJ6900-4HK22**		1	1 unit	1DL
	600 A/5 A 1 VA		**3NJ6900-4HL22**		1	1 unit	1DL
 3NJ6940-3EC00	**Multi-function plugs**						
	8 x 2.5 mm^2, with fixing screws		**3NJ6940-3EC00**		1	1 unit	1DL
 3NJ6940-3ED00	8 x 2.5 mm^2, without fixing screws		**3NJ6940-3ED00**		1	1 unit	1DL
 3NJ6940-3EF00	12 x 1.5 mm^2 and 8 x 2.5 mm^2, without fixing screws		**3NJ6940-3EF00**		1	1 unit	1DL
	Front panels						
 3NJ6943-4BB00	For NH: 3NJ6223-1AA... and 3NJ6223-3AA... without/with EFM		**3NJ6943-4BB00**		1	1 unit	1DL
	For BS: 3NJ6283-3... and 3NJ6284-1... without/with EFM		**3NJ6943-4BC00**		1	1 unit	1DL
	For NH: 3NJ6233-1AA... and 3NJ6233-3AA... without/with EFM		**3NJ6953-4BB00**		1	1 unit	1DL
	For BS: 3NJ6293-3... and 3NJ6294-1...		**3NJ6953-4BC00**		1	1 unit	1DL

7

© Siemens 2019

Accessories

	Version	SD d	Article No. www.siemens.com/product?Article No.	Price per PU	PU (UNIT, SET, M)	PS	PG
Common accessories							
 3NJ6916-4EA00	**Busbar covers**						
	Mounting height 200 mm, IP20		**3NJ6916-4EA00**		1	1 unit	1CL
 3NJ6900-4CB00	**Blanking covers**						
	Mounting height 50 mm, IP41		**3NJ6900-4CB00**		1	1 unit	1DL
 3NJ6915-3BA00	**Connection modules**						
	For power takeoff from field distribution bus up to 400 A		**3NJ6915-3BA00**		1	1 unit	1CL
 3NJ6900-4FB00	**Guide rails**						
	Overall depth 200 mm (1 x left and 1 x right)		**3NJ6900-4FB00**		1	1 unit	1DL
	Overall depth 400 mm (1 x left and 1 x right)		**3NJ6900-4FC00**		1	1 unit	1DL
 3NJ6900-4FC00							
	LV HRC fuse puller tongs						
	For NH00		**XPT:8PT9624**		1	1 unit	1EA
	For NH1, 2, 3		**XPT:8PT9625**		1	1 unit	1EA
	Locking devices for padlocks						
	For all sizes		**3NJ6900-4LL**		1	1 unit	1DL

7

Minimum order quantity (PS) or a multiple thereof can be ordered.

© Siemens 2019

© Siemens 2019

For 3KD and 3KF switch disconnectors

Overview

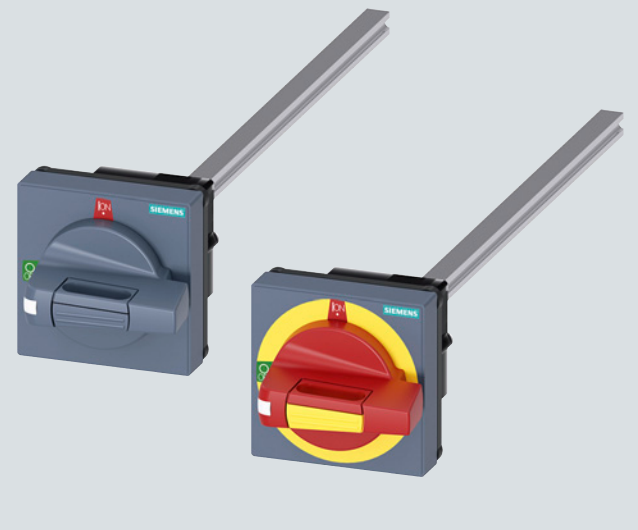

8UD1 rotary operating mechanisms in STANDARD version in gray (ti-gray, left) and EMERGENCY-STOP version in red/yellow (right)

With door-coupling rotary operating mechanisms it is also possible to operate switch disconnectors from the outside with the control cabinet doors closed.

The 8UD1 door-coupling rotary operating mechanisms can be used for

- 3KD and 3KF switch disconnectors, see the following pages
- 3KC0 manual transfer switching equipment (MTSE), see chapter "Transfer Switching Equipment and Load Transfer Switches"

The rotary operating mechanisms are available in "STANDARD" and "EMERGENCY-STOP" versions with the following differences:

- STANDARD version: Masking plate and handle in gray (ti-gray)
- EMERGENCY-STOP version: Masking plate in gray and yellow, handle in red and yellow

Degree of protection

Degree of protection when installed is IP65.

Standards

8UD1 door-coupling rotary operating mechanisms are in line with the following standards, for example:

Standard	Title
IEC 60204-1, EN 60204-1 (VDE 0113 Part 1)	Safety of machinery; electrical equipment of machines
IEC 60439-1, EN 60439-1 (VDE 0660 Part 500)	Low-voltage switchgear and controlgear assemblies
IEC 60947-3, EN 60947-3 (VDE 0660 Part 107)	Low-voltage switchgear and controlgear; Switches, disconnectors, switch disconnectors and fuse-combination units

Benefits

Lockability

The retractable locking device integrated in the handles is suitable for padlocks with shackle diameters of 4.5 mm to 9.5 mm (locks according to DIN 7465).

Up to three padlocks with a shackle diameter of 9.5 mm can be fitted simultaneously.

Non-interchangeability

In order to ensure that, when installing switches and door-coupling operating mechanisms, all components are assembled in the correct position with respect to one another, the components are provided with non-interchangeability features (rivet and lug).

Stops

Stops are used to prevent damage occurring as the result of excessive torque. These stops are supplied loose with the rotary operating mechanisms and can be fitted as required. Stops are fitted at the factory to size 1 and 2 rotary operating mechanisms with a 90° operating angle (exception: 3RV motor starter protectors/circuit breakers).

Tolerance compensation

8UD1 rotary operating mechanisms are capable of taking up a radial eccentricity of max. 8 mm between the actuating shaft of the switching device and the door-coupling rotary operating mechanism. Supporting the extension shaft is recommended with greater tolerances.

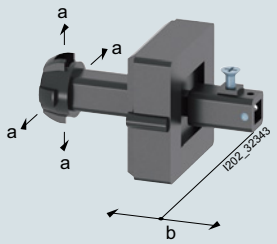

Coupling drivers	a	b	Shaft length
With tolerance compensation	± 8	± 5	x
Without tolerance compensation	+ 1.5	± 2.5	x + 23.5

Permissible radial eccentricity and axial tolerance compensation in mm

Pull-out strength

The pull-out strength of interlocked operating mechanisms, e.g. pulling off the shaft or destruction of the operating mechanism, amounts to 800 N when the pulling force acts directly onto the operating mechanism in the direction of the shaft.

Minimum order quantity (PS) or a multiple thereof can be ordered.

© Siemens 2019

Application

8UD1 door-coupling rotary operating mechanisms can be used in electrical controls, distribution boards and switchboards in cases where switches have to be mounted behind covers, end plates and doors that must be opened and where they are to be operated manually from outside.

Interlocking conditions

The basic versions of the rotary operating mechanisms comply with the following interlocking conditions:

- Operating mechanism and switch in "0" (OFF) position: The control cabinet door can be opened. With padlocks fitted, the control cabinet door remains locked however.
- Operating mechanism and switch in "I" (ON) position: The control cabinet door cannot be opened in this position. However, the lock can be overridden and the control cabinet door opened by trained personnel for performing checks. No padlocks can be fitted in "I" position.

Other interlocking conditions:

- If no door interlock is desired, it can be deactivated.

Operating conditions and ambient conditions

The temperature range for operation of the rotary operating mechanisms is between -25 °C and +60 °C.

Thanks to the use of glass fiber-reinforced molded plastic for handles and masking plates as well as metal components with surface protection, the rotary operating mechanisms are suitable for rough conditions, high air humidity and aggressive atmospheres.

Design

Components

The rotary operating mechanisms consist of a masking plate with handle, including seal and fixing screws for door installation, an extension shaft (300 mm) and a coupling driver to be mounted onto the switch shaft.

The shaft coupling is only required if the 300 mm shaft needs to be extended by an additional shaft. Shafts with a length of 600 mm are also available as an alternative.

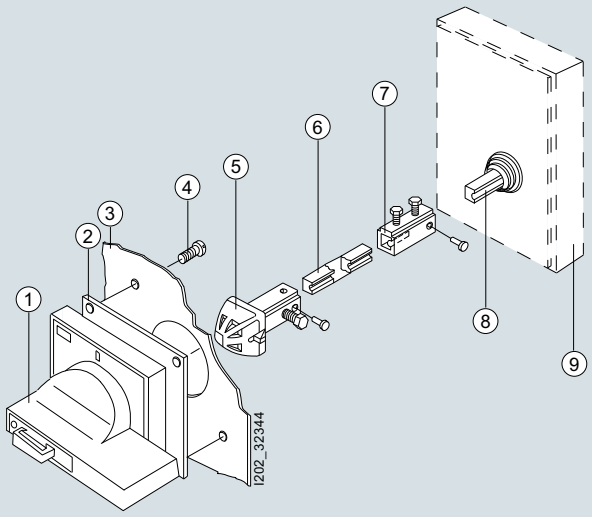

1 Handle with masking frame
2 Seal
3 Door
4 Fixing screws
5 Coupling driver
6 Extension shaft
7 Adapter
8 Operating shaft of switching device
9 Switching device

Design, schematic representation

Switch position

In order to ensure compliance with locking and interlocking conditions, the controls and operating mechanisms must be installed such that, with two-position switches the "0" position lies at 9 o'clock and the "I" position at 12 o'clock.

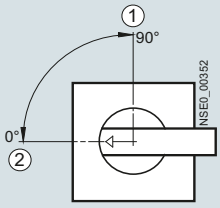

1 12 o'clock position
2 9 o'clock position

Positions for two-position switches with 90° operating angle

© Siemens 2019

For 3KD switch disconnectors

Selection and ordering data

Door-coupling rotary operating mechanisms, fully lockable with padlocks, with door interlock, supplied with seal and fixing screws

Switching device	Rated current	Cross-section of the actuating shaft	Torque	Illustrated: Handle, masking plate and handle length
Type	A	mm	Nm	

8UD1 for 3KD switch disconnectors sizes 1 and 2

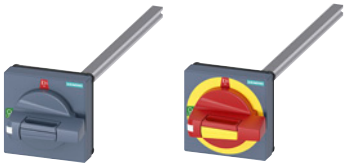

Labeling 0-I

3KD....-.M/N	16 ... 200	8 x 8	3	

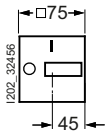

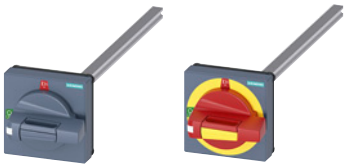

Labeling TEST-0-I

3KD....-.M/N	16 ... 200	8 x 8	3	

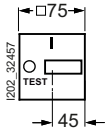

8UD1 for 3KD switch disconnectors size 3

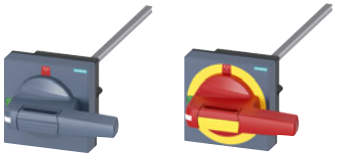

Labeling TEST-0-I

3KD....-.P	200 ... 400	8 x 8	7.5	

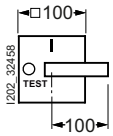

8UD1 for 3KD switch disconnectors size 4

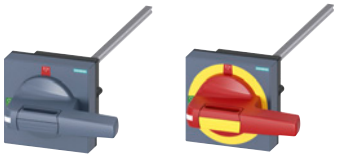

Labeling TEST-0-I

3KD....-.Q	500 ... 800	10 x 10	16	

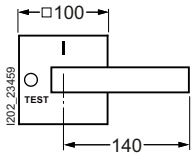

8UD1 for 3KD switch disconnectors size 5

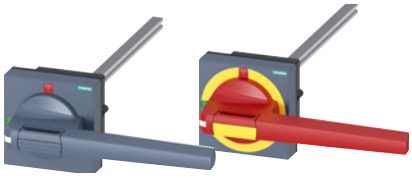

Labeling TEST-0-I

3KD....-.R	1000 ... 1600	12 x 12	30	

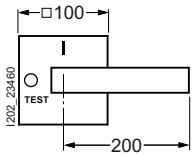

Minimum order quantity (PS) or a multiple thereof can be ordered.

© Siemens 2019

Version	SD	Rotary operating mechanisms, complete		PU (UNIT, SET, M)	PS	PG	Individual parts: Handles illuminated/ without illumination Other handles see page 7/75	Coupling drivers with tolerance compensation/ without tolerance compensation	Extension shaft length 300 mm/ length 600 mm	Shaft coupling
	d	Article No. www.siemens.com/product?Article No.	Price per PU				Article No.	Article No.	Article No.	Article No.
								☐ 8 mm	**☐ 8 mm**	**☐ 8 by 8 mm**
Standard		**8UD1171-2AD11**		1	1 unit	1CL	8UD1771-2CD01/ 8UD1771-2AD01	8UD1900-2GA00 8UD1900-2HA00	8UC6032/ 8UC6082	8UC6022
EMERGENCY-STOP		**8UD1171-2AD15**		1	1 unit	1CL	8UD1771-2CD05 8UD1771-2AD05	8UD1900-2GA00 8UD1900-2HA00	8UC6032/ 8UC6082	8UC6022
								☐ 8 mm	**☐ 8 mm**	**☐ 8 by 8 mm**
Standard		**8UD1171-2AF21**		1	1 unit	1CL	8UD1771-2CF01/ 8UD1771-2AF01	8UD1900-2GA00/ 8UD1900-2HA00	8UC6032/ 8UC6082	8UC6022
EMERGENCY-STOP		**8UD1171-2AF25**		1	1 unit	1CL	8UD1771-2CF05/ 8UD1771-2AF05	8UD1900-2GA00 8UD1900-2HA00	8UC6032/ 8UC6082	8UC6022
								☐ 8 mm	**☐ 8 mm**	**☐ 8 by 8 mm**
Standard		**8UD1141-2AF21**		1	1 unit	1CL	8UD1841-2CF01/ 8UD1841-2AF01	8UD1900-6GA00/ 8UD1900-6HA00	8UC6032/ 8UC6082	8UC6022
EMERGENCY-STOP		**8UD1141-2AF25**		1	1 unit	1CL	8UD1841-2CF05/ 8UD1841-2AF05	8UD1900-6GA00/ 8UD1900-6HA00	8UC6032/ 8UC6082	8UC6022
								☐ 10 mm	**☐ 10 mm**	**☐ 10 by 10 mm**
Standard		**8UD1151-3AF21**		1	1 unit	1CL	8UD1851-3CF01/ 8UD1851-3AF01	8UD1900-3GA00/ 8UD1900-3HA00	8UC6033/ 8UC6083	8UC6023
EMERGENCY-STOP		**8UD1151-3AF25**		1	1 unit	1CL	8UD1851-3CF05/ 8UD1851-3AF05	8UD1900-3GA00/ 8UD1900-3HA00	8UC6033/ 8UC6083	8UC6023
								☐ 12 mm	**☐ 12 mm**	**☐ 12 by 12 mm**
Standard		**8UD1161-4AF21**		1	1 unit	1CL	8UD1861-4CF01/ 8UD1861-4AF01	8UD1900-4GA00/ 8UD1900-4HA00	8UC6034/ 8UC6084	8UC6024
EMERGENCY-STOP		**8UD1161-4AF25**		1	1 unit	1CL	8UD1861-4CF05/ 8UD1861-4AF05	8UD1900-4GA00/ 8UD1900-4HA00	8UC6034/ 8UC6084	8UC6024

Minimum order quantity (PS) or a multiple thereof can be ordered.

© Siemens 2019

For 3KF switch disconnectors

Selection and ordering data

Door-coupling rotary operating mechanisms, fully lockable with padlocks, with door interlock, supplied with seal and fixing screws

Switching device	Rated current	Cross-section of the actuating shaft	Torque	Illustrated: Handle, masking plate and handle length
Type	A	mm	Nm	

8UD1 for 3KF switch disconnectors size 1

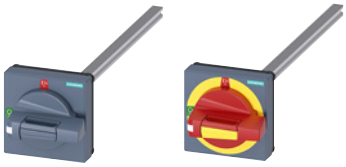

Labeling TEST-0-I				
3KF1...	32 ... 80	8 x 8	3	

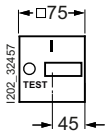

8UD1 for 3KF switch disconnectors size 2

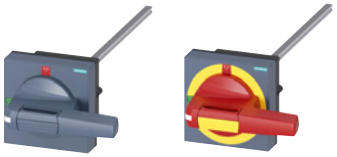

Labeling TEST-0-I				
3KF2...	125 ... 160	8 x 8	7.5	

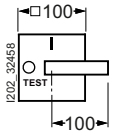

8UD1 for 3KF switch disconnectors size 3

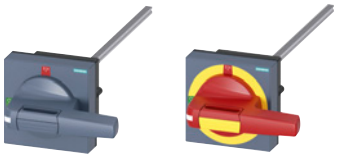

Labeling TEST-0-I				
3KF3...	250	10 x 10	7.5	

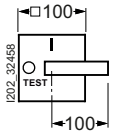

8UD1 for 3KF switch disconnectors size 4



Labeling TEST-0-I				
3KF4...	400	10 x 10	16	

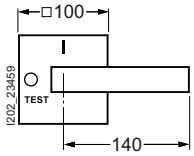

8UD1 for 3KF switch disconnectors size 5

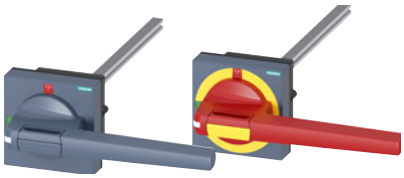

Labeling TEST-0-I				
3KF5...	630 ... 800	12 x 12	30	

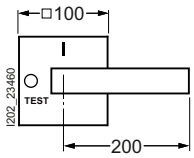

Minimum order quantity (PS) or a multiple thereof can be ordered.

© Siemens 2019

Version	SD	Rotary operating mechanisms, complete		PU (UNIT, SET, M)	PS	PG	Individual parts: Handles illuminated/ without illumination Other handles see page 7/75	Coupling drivers with tolerance compensation/ without tolerance compensation	Extension shaft length 300 mm/ length 600 mm	Shaft coupling
	d	Article No. www.siemens.com/product?Article No.	Price per PU				Article No.	Article No.	Article No.	Article No.
								☐ **8 mm**	☐ **8 mm**	☐ **8 by 8 mm**
Standard		**8UD1171-2AF21**		1	1 unit	1CL	8UD1771-2CF01/ 8UD1771-2AF01	8UD1900-2GA00/ 8UD1900-2HA00	8UC6032/ 8UC6082	8UC6022
EMERGENCY-STOP		**8UD1171-2AF25**		1	1 unit	1CL	8UD1771-2CF05/ 8UD1771-2AF05	8UD1900-2GA00 8UD1900-2HA00	8UC6032/ 8UC6082	8UC6022
								☐ **8 mm**	☐ **8 mm**	☐ **8 by 8 mm**
Standard		**8UD1141-2AF21**		1	1 unit	1CL	8UD1841-2CF01/ 8UD1841-2AF01	8UD1900-6GA00/ 8UD1900-6HA00	8UC6032/ 8UC6082	8UC6022
EMERGENCY-STOP		**8UD1141-2AF25**		1	1 unit	1CL	8UD1841-2CF05/ 8UD1841-2AF05	8UD1900-6GA00/ 8UD1900-6HA00	8UC6032/ 8UC6082	8UC6022
								☐ **8 mm**	☐ **8 mm**	☐ **8 by 8 mm**
Standard		**8UD1141-3AF21**		1	1 unit	1CL	8UD1841-2CF01/ 8UD1841-2AF01	8UD1900-6GA00/ 8UD1900-6HA00	8UC6032/ 8UC6082	8UC6022
EMERGENCY-STOP		**8UD1141-3AF25**		1	1 unit	1CL	8UD1841-2CF05/ 8UD1841-2AF05	8UD1900-6GA00/ 8UD1900-6HA00	8UC6032/ 8UC6082	8UC6022
								☐ **10 mm**	☐ **10 mm**	☐ **10 by 10 mm**
Standard		**8UD1151-3AF21**		1	1 unit	1CL	8UD1851-3CF01/ 8UD1851-3AF01	8UD1900-3GA00/ 8UD1900-3HA00	8UC6033/ 8UC6083	8UC6023
EMERGENCY-STOP		**8UD1151-3AF25**		1	1 unit	1CL	8UD1851-3CF05/ 8UD1851-3AF05	8UD1900-3GA00/ 8UD1900-3HA00	8UC6033/ 8UC6083	8UC6023
								☐ **12 mm**	☐ **12 mm**	☐ **12 by 12 mm**
Standard		**8UD1161-4AF21**		1	1 unit	1CL	8UD1861-4CF01/ 8UD1861-4AF01	8UD1900-4GA00/ 8UD1900-4HA00	8UC6034/ 8UC6084	8UC6024
EMERGENCY-STOP		**8UD1161-4AF25**		1	1 unit	1CL	8UD1861-4CF05/ 8UD1861-4AF05	8UD1900-4GA00/ 8UD1900-4HA00	8UC6034/ 8UC6084	8UC6024

Minimum order quantity (PS) or a multiple thereof can be ordered.

© Siemens 2019

General data

Overview

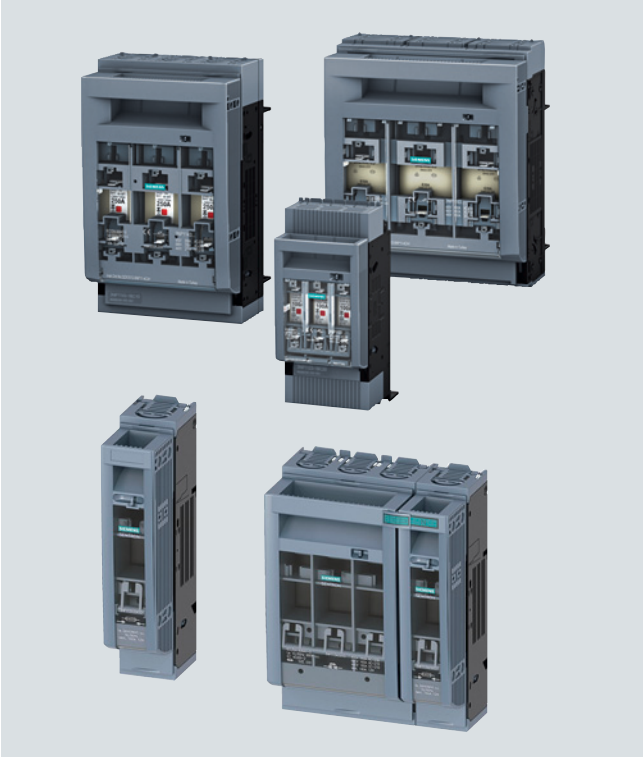

3NP1 fuse switch disconnectors,
supplemented with 4-pole and 1-pole versions (below)

Features

- Five sizes available for LV HRC fuses sizes NH000 to NH3
- 1, 3 and 4-pole devices
- Switch disconnectors can be mechanically coupled using accessories to create any type of 2 or 4-pole versions
- Connections in form of box terminal or flat terminal
- Electrical connection can be adapted to suit the application thanks to a wide variety of terminal types
- Floor mounting, standard rail mounting, or mounting on busbar systems
- Busbar supports can be built over
- Conversion of 5/10 mm thick busbars without parts which can be lost or broken off
- Convertibility of cable feeder at top/bottom for 3-pole devices for busbar
- 1-pole devices can be mounted on a busbar with free selection of the infeed busbar
- Auxiliary switches for querying the switch positions
- Fuse monitoring possible throughout
- All units can be sealed and locked

Benefits

- Enhanced touch protection
- Locking and sealing function helps to prevent unauthorized operation
- Small space requirement through compact devices and busbar supports which can be built over.
- Modular design
- One device version with very high short-circuit values dispenses with having to order and install arc splitter chutes to increase the electrical values.
- All devices feature all-round touch protection.
- Box terminals are available for all sizes and shorten the mounting time appreciably.
- Snapping the sizes 000 and 00 onto a busbar shortens the mounting time greatly compared to fixing with screws.
- Devices for busbar mounting can be converted to 5 mm or 10 mm thick busbars without parts which can be lost or broken off.

Application

Fuse switch disconnectors are used for occasional load switching and provide reliable isolation from the infeed. The ability to use fuses with LV HRC design means the system can be protected against short circuit and overload. In practice, they are generally used as main control switches or repair switches.

Standards and guidelines

The 3NP1 fuse switch disconnectors meet the requirements of the standards IEC 60947-1, IEC 60947-3 and VDE 0660-107 and are climate-proof.

Certificates

3NP1 has been awarded a large number of international certificates for global use.

For information about currently available certifications, e.g. CE, CCC, UL, shipbuilding,
see www.siemens.com/lowvoltage/certificates

In the Entry list, you can filter the view according to product and certificate type.

Minimum order quantity (PS) or a multiple thereof can be ordered.

© Siemens 2019

Design

A 3NP1 fuse switch disconnector comprises a handle into which the fuses are inserted and the base with the contacts for fuses and terminals. When the handle is closed, the blades of the LV HRC fuses are forced into the contacts and close the circuit.

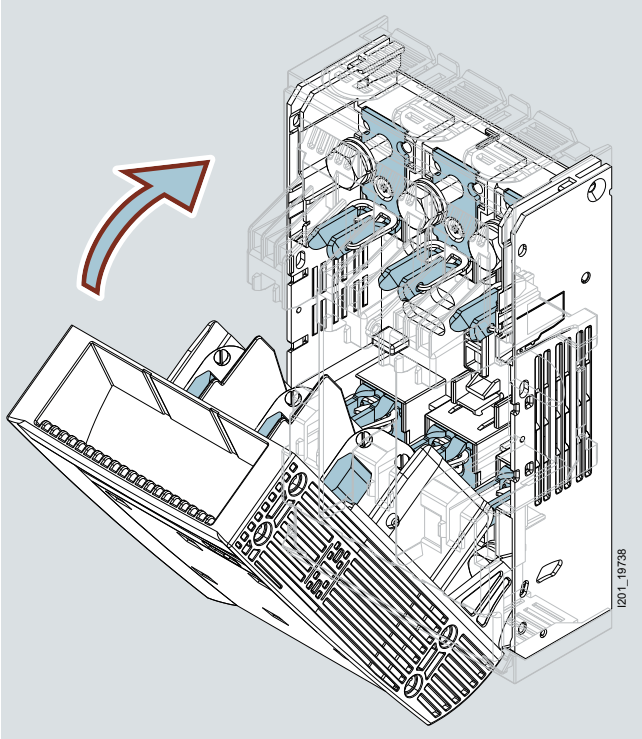

Suitable fuses

The 3NP1 fuse switch disconnector is suitable for all fuses with LV HRC design in sizes 000 to 3 which comply with IEC 60269-2.

This standard describes the technical constraints on fuses for the protection of cables and motor feeders, including the maximum permitted power loss of the fuses.

Conventional fuse switching devices are designed in accordance with the maximum values permitted according to this fuse standard with respect to possible heat dissipation.

Fuses for semiconductor protection (SIEMENS trade name SITOR) must disconnect much faster than standard fuses to protect the semiconductor load as reliably as possible and by virtue of their design have power loss values that in some cases significantly exceed the limit values permitted in IEC 60269-2.

To permit simple installation, not only are many application-specific special designs available but also very many fuses for semiconductor protection in the standard-compliant designs, such as the LV HRC design. If a fuse of this kind is used in a conventional fuse switching device for standard-compliant fuses for semiconductor protection, the maximum permissible fuse power loss defined by the switching device must be complied with. If the rated power loss of the fuse for semiconductor protection is above that permitted by the switching device, the fuse can only be operated in the partial load range, i.e. the load current must be reduced until the actual power loss is within the limit values defined by the switching device. The fuse manufacturer provides the data required for this (power loss as a function of the load current). If the maximum power losses of the fuse defined by the switching device are not complied with, the switching device may overheat or, in the worst case, even cause a fire in the switchgear.

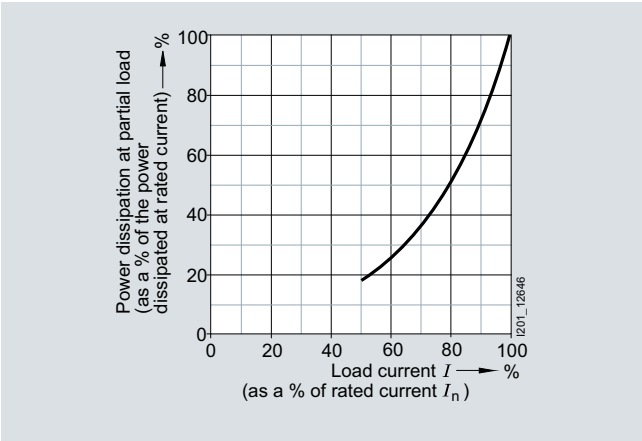

Power losses depending on the operational current for SIEMENS fuses for semiconductor protection

For use of SIEMENS fuses for semiconductor protection (SITOR) in 3NP1, the possible load values are available for each possible combination of a fuse and circuit breaker type (see page 7/210).

Fuses from third-party manufacturers can also be used, in which case the possible load values must be determined based on the technical data of the fuse.

© Siemens 2019

General data

Replacing the fuses

Fuse links can reach very high temperatures on melting. Removing them manually immediately after melting is almost impossible.

The 3NP1 fuse switch disconnector offers contact-free removal of tripped fuses, thus minimizing downtimes after a trip.

By operating the release shaft and tilting sideways, the fuse links drop out contactlessly.

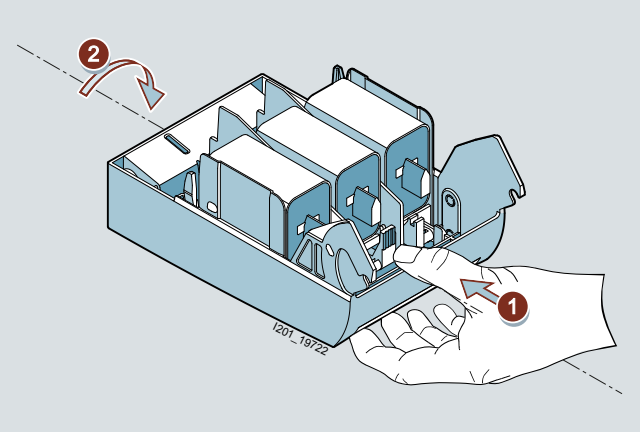

Removing the fuses

Number of poles

3NP1 fuse switch disconnectors are available in 1, 3 and 4-pole device versions. Preassembled 4-pole types in commonly used versions (without fuse monitoring, N pole on the right) are available from the factory ready for installation.

The connection kits can be used to fabricate 2-pole types and application-specific 4-pole versions (e.g. N pole on the left, with fuse monitoring).

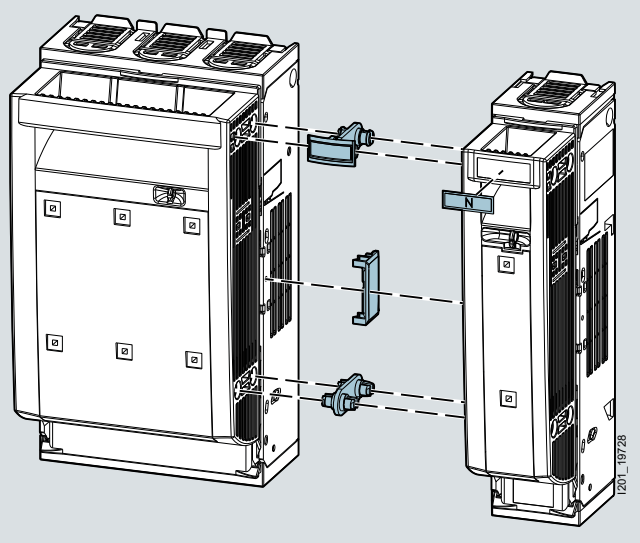

Assembly kit for mechanical connection of two 3NP1 devices, size NH00

Switching instant of N pole in 4-pole 3NP1 devices

4-pole 3NP1 devices are used in 3-phase AC networks with a switched neutral conductor. They are supplied without an isolating blade for the N pole. The switching instant is selected by the installed isolating blade:

- Simultaneous switching – the N pole switches at the same time as the main contacts
- Leading switching – the N pole switches early when the circuit breaker closes (switch-on) and late when it opens (switch-off)

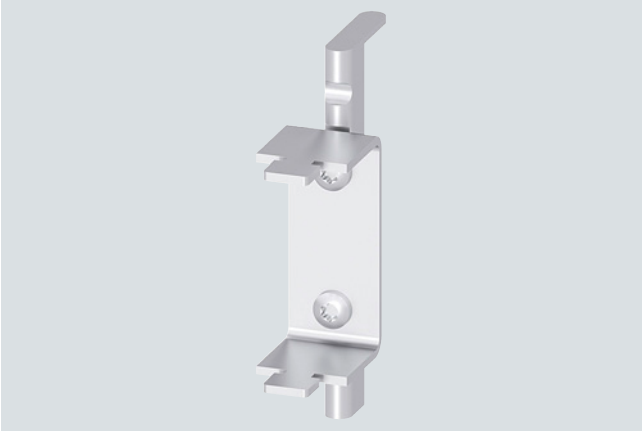

Isolating blade for leading switching of the neutral conductor

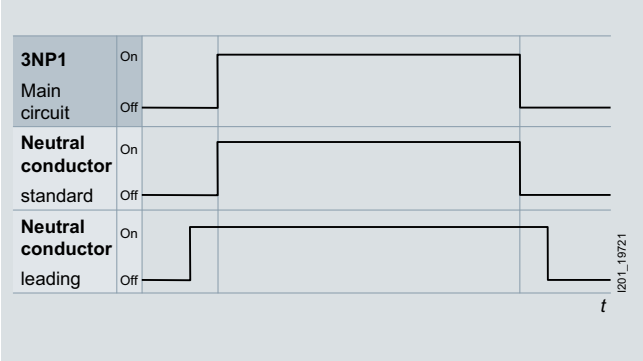

Isolating blade for leading switching of the neutral conductor

Minimum order quantity (PS) or a multiple thereof can be ordered.

© Siemens 2019

Types of mounting

Floor mounting

All sizes of the 3NP1 fuse switch disconnectors are available in floor mounting versions.

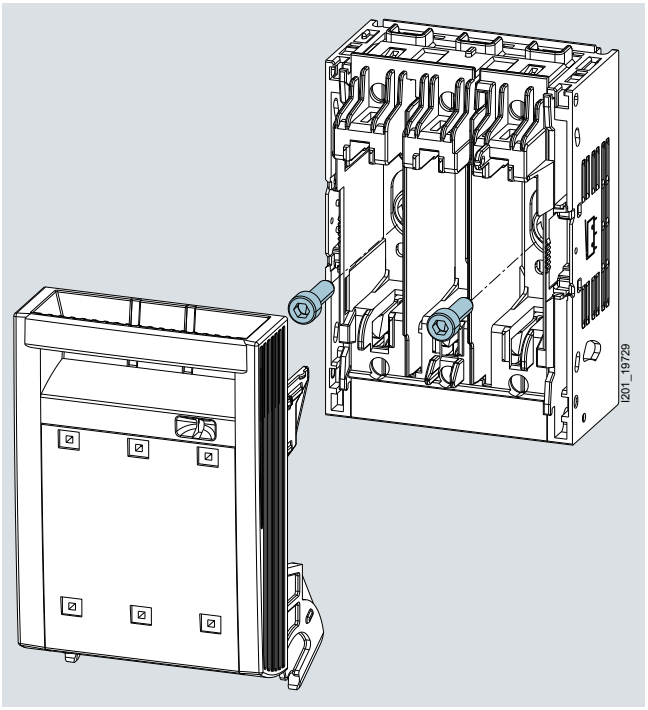

Floor mounting method

Mounting on a standard mounting rail

Sizes 000, 00 and 1 can also be snapped onto a standard mounting rail (TH35 according to EN 60715) using an accessory.

Whereas size 000 is mounted on a standard mounting rail, sizes 00 und 1 are mounted on two standard mounting rails with a spacing of 125 or 150 mm.

The spacing of the standard mounting rails can be freely selected when installing the standard mounting rail assembly kit.

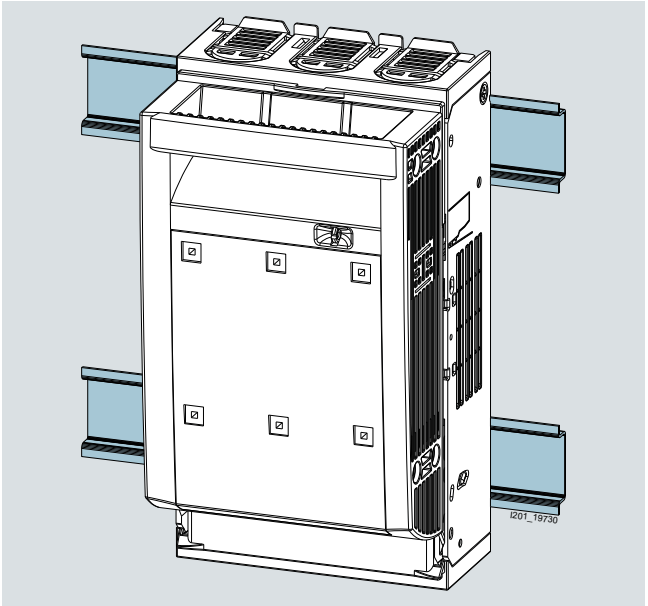

Mounting on a standard mounting rail

Mounting on busbar systems

3NP1 fuse switch disconnectors are available for mounting on Siemens and Rittal busbar systems with 60 mm (all sizes) or 40 mm spacing (sizes 000 to 00). The difference between the versions for the various busbar systems lies in the reach-around protection which is specially adapted to the system in order to provide optimum touch protection.

In the case of 4-pole devices, the infeed for the fourth pole is supplied via a bar and terminal (included in the scope of supply) from the neutral conductor bar located above the 3 phases.

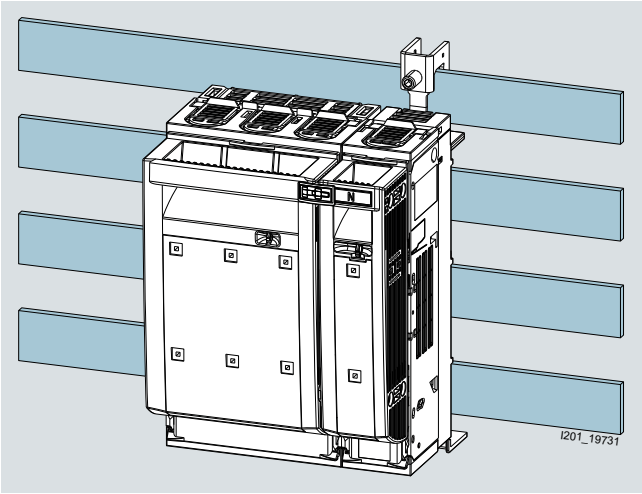

Mounting on Siemens 8US 4-pole busbar

All devices for mounting on the busbar are supplied from the factory with the cable feeder at the bottom. The 3-pole versions can be converted to cable feeder at the top. As all 3 phases are converted in a single sequence, the possibility of installation errors (e.g. one phase not converted) is almost totally excluded.

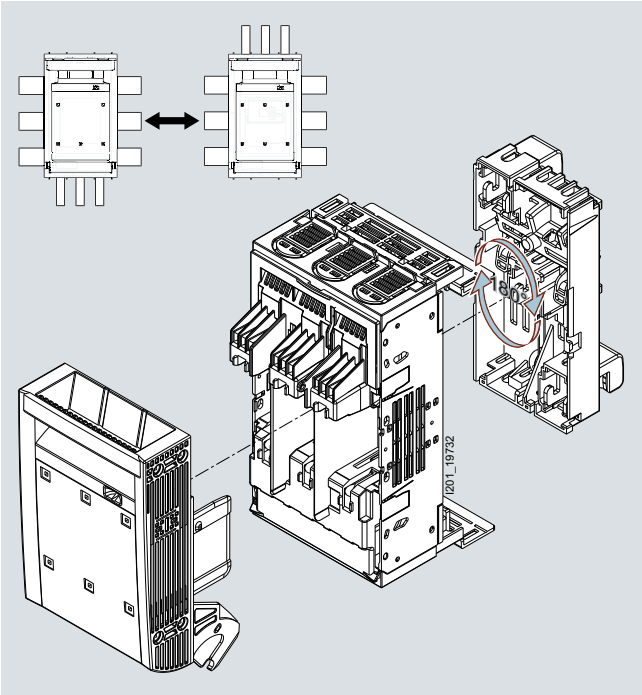

Conversion of cable feeder in devices for busbar mounting

© Siemens 2019

General data

1 and 2-pole busbar mounting

1-pole 3NP1 devices for wall mounting in sizes 000 and 00 can be adapted to the 8US 60 mm busbar system using the assembly kit for busbar mounting.

The modular design of the mounting hooks for the busbar makes it possible to freely select whether the infeed for the 3NP1 comes from L1, L2 or L3.

If two 1-pole 3NP1 devices with busbar adapters are combined using the connecting kit, 2-pole disconnectors for busbar mounting can also be fabricated.

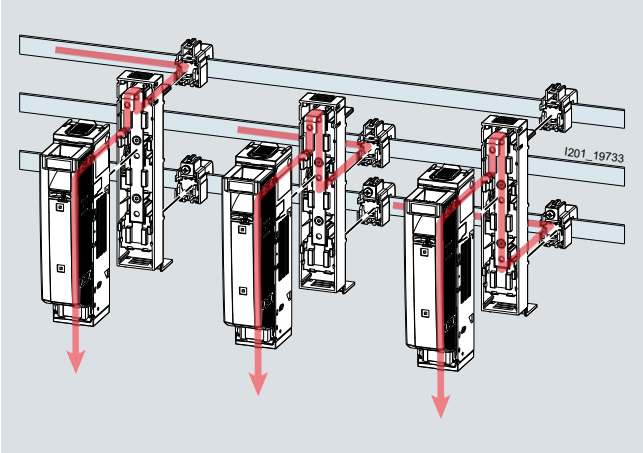

1/2-pole busbar mounting
Red lines: Current flow

7

The table below shows which version of the 3NP1 fuse switch disconnector can be mounted on busbars:

Size	000			00			1			2			3		
Number of poles	1/2	3	4	1/2	3	4	1/2	3	4	1/2	3	4	1/2	3	4
Mounting on 40 mm busbar system	--	✓	--	--	✓	--	--	--	--	--	--	--	--	--	--
Mounting on 60 mm busbar system	✓	✓	✓	✓	✓	✓	--	✓	✓	--	✓	✓	--	✓	✓
Cable feeder at the bottom	✓	✓	✓	✓	✓	✓	✓	✓	✓	✓	✓	✓	✓	✓	✓
Cable feeder at the top	--	✓	--	--	✓	--	--	✓	--	--	✓	--	--	✓	--

Electrical connection

The 3NP1 fuse switch disconnectors feature various connection options. Versions with box terminals and flat terminals are available. Further terminal types can be retrofitted as accessories so that the device can be flexibly adapted to suit any application.

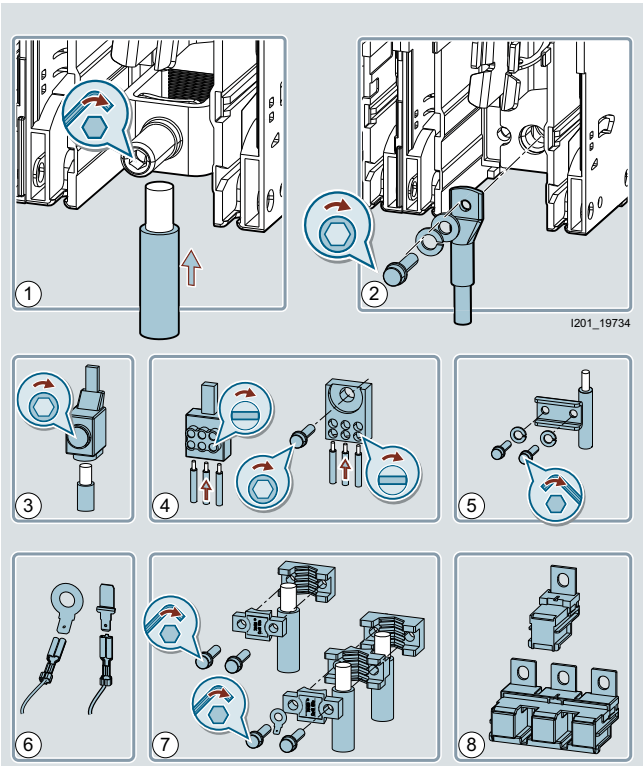

Overview of connection technology

Minimum order quantity (PS) or a multiple thereof can be ordered.

© Siemens 2019

Box terminals

All sizes of the 3NP1 device are available with box terminals, which are designed to allow the speedy connection of stripped conductors.

Flat terminals

Sizes 00 to 3 are available with flat terminals □ for the connection of cable lugs or busbar systems.

Saddle terminals

Saddle terminals can be mounted on 3NP1 devices with flat terminals □ these allow the connection of stripped circular conductors (without cable lug) or of rectangular conductors (copper bars or Flexibars) without a drill hole.

Prism terminals

Prism terminals are available in versions for the connection of one or two stripped circular conductors. They can be retrofitted on 3NP1 devices with flat terminals.

Prism terminals were specially developed for the connection of aluminum conductors. Copper conductors can also be used however.

Three-tier terminals

Three-tier terminals are available in versions for mounting on 3NP1 devices with flat terminals or box terminals in sizes 000 and 00. They make it possible to branch to three smaller feeders directly at the 3NP1 outgoing feeder.

Feeder terminals

The feeder terminal is required for 3NP1 devices in size 000 if these are to be operated with load currents above 100 A (max. permissible 160 A).It expands the connection to the cross-sections required for this purpose.

Connection module

The connection module is used for devices in size 00 for busbar mounting. A masking plate can be mounted at the 32 mm or 70 mm level in the case of devices in size 00 for busbar mounting.

The output terminals of the 3NP1 are located above the 32 mm masking plate level – the connection module moves the connection level to below the 32 mm masking plate level.

Auxiliary conductor connections

The auxiliary conductor connections are connected in the output terminals of the 3NP1 together with the main conductor.

They allow smaller loads in the control cabinet to be directly supplied using commercially available flat tab sleeves 6.4 x 0.8 mm.

3-phase busbar

The 3-phase busbar is used for the infeed-side bridge connection of several 3NP1 devices for floor mounting in size 000. Busbars are available for the connection of 2, 3 or 4 3NP1 devices. A connection bar can be used to connect two blocks of this kind. The infeed is supplied via the feeder terminals.

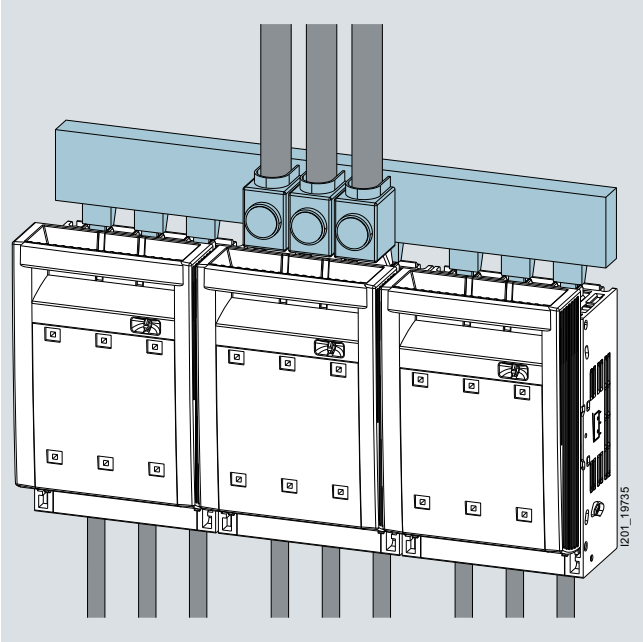

3-phase busbar

Terminal covers

Terminal covers are fitted on all 3NP1 devices at the factory. However, if long, non-insulated cable lugs are used which project outside these covers, these covers can also be extended using the terminal covers that are available as accessories. The terminal covers are also available with optional rear reach-around protection so that a high degree of protection is also provided in switchboards where access from the rear is possible.

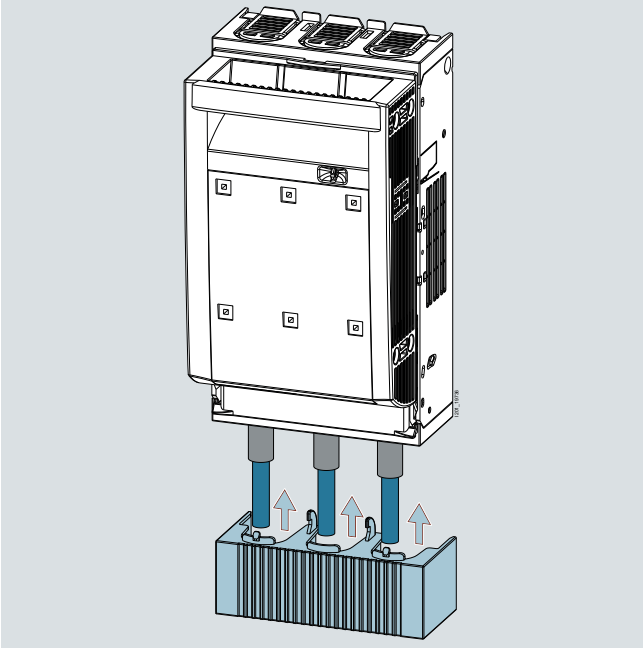

Terminal covers

© Siemens 2019

General data

Fuse monitoring

Fuse monitoring is used to detect, indicate and report faults. All the commonly used 3NP1 versions are available with factory-fitted fuse monitoring. This can also be easily retrofitted by replacing the fuse carrier if required.

Various fuse monitoring versions are available for the 3NP1 fuse switch disconnectors. These can be selected according to application-specific requirements. All versions are equipped with floating contacts for remote signaling.

With all fuse monitoring devices, the physical principle for the detection of tripped fuses is based on voltage measurement upstream and downstream of the fuse. The voltage drop across the fuse is just a few volts due to the low internal resistance of the fuse. If the fuse trips, the full line voltage is applied. Fuse monitoring picks off the voltage at the grip lugs of the fuse – fuses with insulated grip lugs cannot be used for this reason.

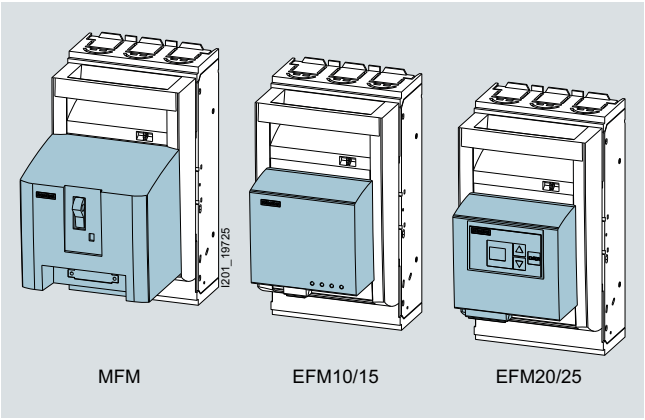

Fuse monitoring versions

MFM – electromechanical fuse monitoring

MFM monitors fuses by means of an installed SIRIUS circuit breaker

External power supply	Not required (self-powered)
Output	1 NO contact + 1 NC contact
Local indication	Toggle switch position
Versions	3-pole for • Max. 690 V AC • Max. 440 V DC

EFM10/15 – electronic fuse monitoring

The EFM10 and EFM15 monitor fuses by means of an evaluation electronics circuit.

Unlike the EFM10, the EFM15 is not self-powered. It requires infeed from a 24 V DC supply.
The absence of the built-in power supply unit makes it a cost-optimized alternative to the EFM10.

External power supply	EFM10: Not required EFM15: 24 V DC
Output	EFM10: 1 CO contact EFM15: 1 NO contact
Local indication	Indication via LEDs for each phase
EFM10 versions	3-pole for 230 ... 690 V AC
EFM15 versions	1-pole for 110 ... 690 V AC 1-pole for 24 ... 240 V AC / 24 ... 250 V DC 1-pole for 120 ... 440 V DC 3-pole for 190 ... 690 V AC 3-pole for 220 ... 440 V DC

EFM20/25 – electronic fuse monitoring with line monitoring

The EFM20 and EFM25 monitor fuses by means of an evaluation electronics circuit.
(EFM20 – version for AC / EFM25 – version for DC)
In addition to fuse tripping, they can also detect line faults, such as a phase failure (EFM20 only) and over/undervoltage. The limit values for over/undervoltage can be set.

External power supply	Not required (self-powered)
Output	2 CO contacts: 1 CO contact for fuse tripping, 1 CO contact for line fault
Local indication	Indication via display for each phase
EFM20 versions	3-pole for 230 ... 690 V AC
EFM25 versions	3-pole for 220 ... 440 V DC

Minimum order quantity (PS) or a multiple thereof can be ordered.

© Siemens 2019

Auxiliary switches

Auxiliary switches allow remote interrogation of the contact position of the 3NP1 fuse switch disconnector. Up to two auxiliary switches can be installed in each 3NP1.

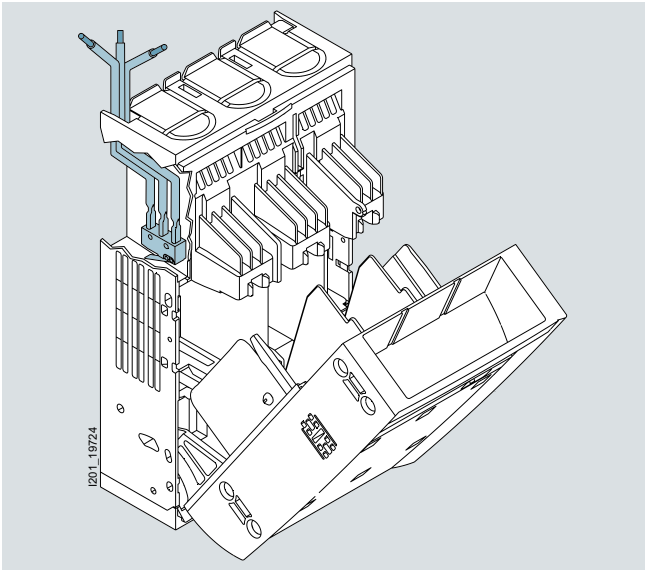

Auxiliary switches for remote interrogation of the contact position of the 3NP1

Switching instants of auxiliary switches

With size 00 and larger, the switching instants of the auxiliary switches can be selected during installation – simultaneously with the main circuit or lagging switch-on/leading switch-off.

One of the possible functions of leading auxiliary switches is to disconnect the circuit with the assistance of a higher-level switching device, such as a circuit breaker, before the main contacts of the 3NP1 fuse switch disconnector open.

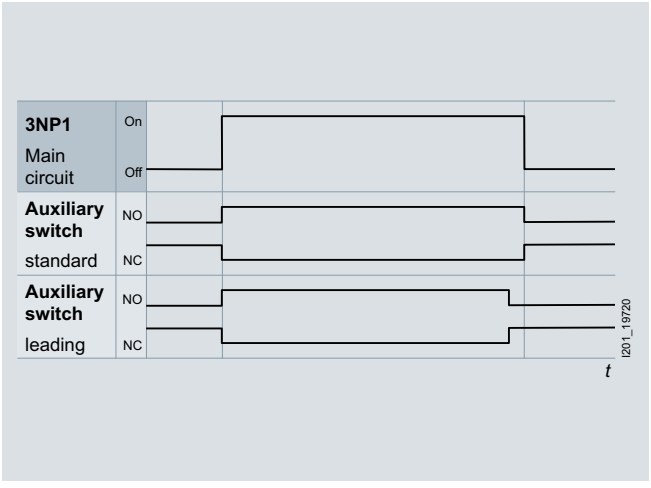

Switching instants of auxiliary switches

Locking and sealing

The 3NP1 fuse switch disconnectors can be sealed and locked with padlocks in order to prevent unauthorized access or operation.

The sealing function is integrated in all versions. The locking function can be retrofitted in 3-pole switch disconnectors as an accessory (the locking function is already included in 1-pole 3NP1 disconnectors).

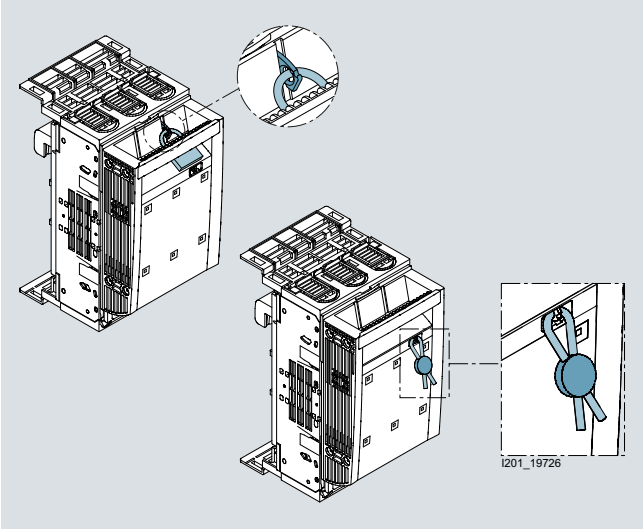

Locking and sealing of 3NP1

Protection against power theft

A frequently occurring requirement for fuse switch disconnectors in infrastructure applications is protection against power theft. This is provided when no unauthorized access to the live parts of a locked or sealed device is possible without causing visible damage to the switch disconnector.

This function can be retrofitted with 3NP1 fuse switch disconnectors – the holes for voltage testing in the front window are closed off and the window itself is protected against disassembly.

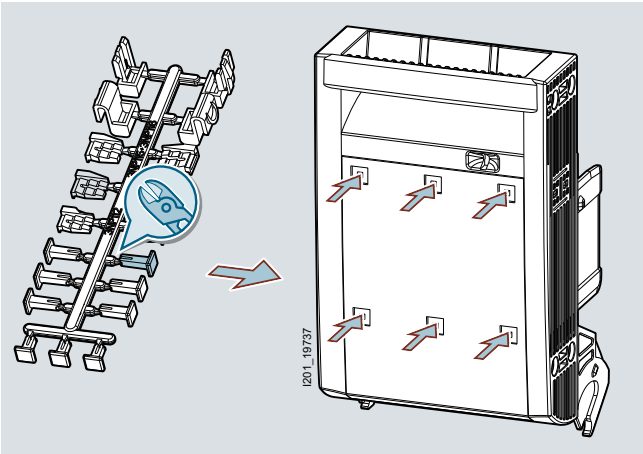

Protection against power theft

© Siemens 2019

General data

Overview of components and accessories: 3NP1 fuse switch disconnector for floor mounting, size 000

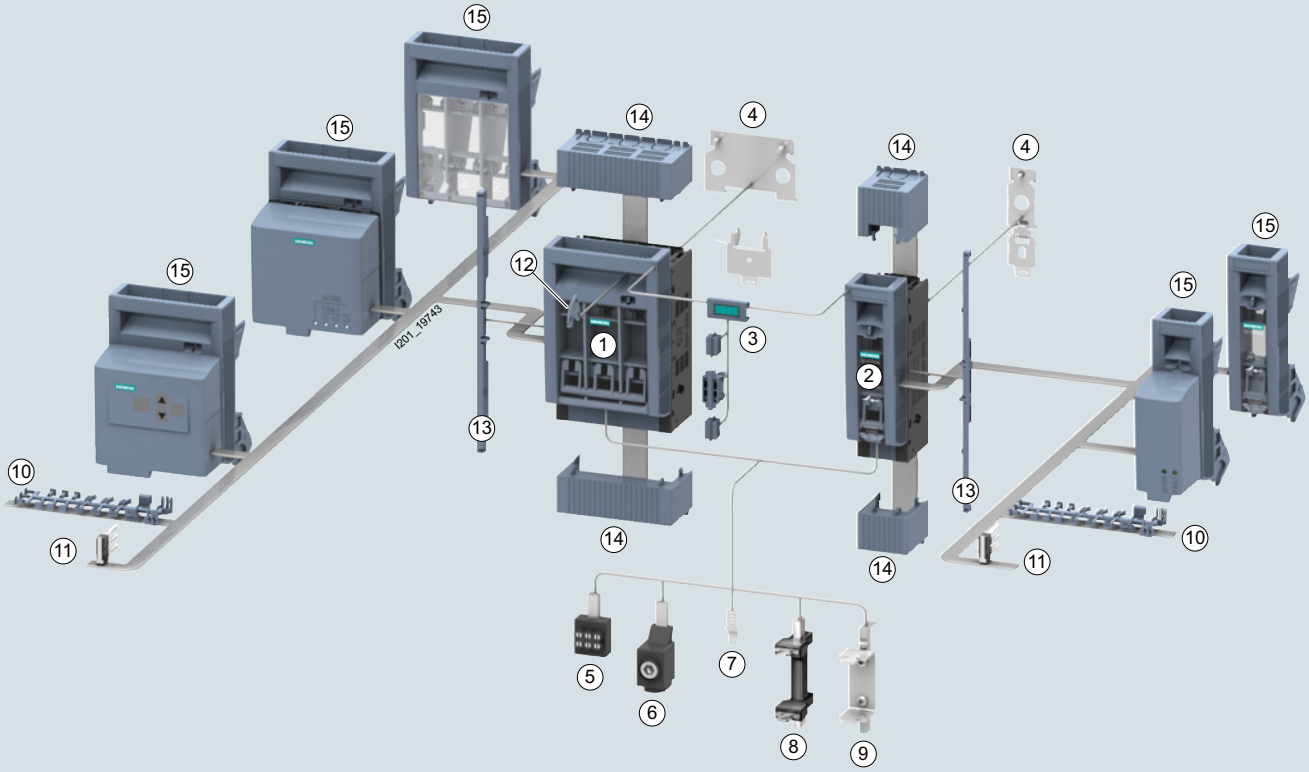

1. 3NP1 fuse switch disconnector, 3-pole, for wall mounting
2. 3NP1 fuse switch disconnector, 1-pole, for wall mounting
3. Assembly kit for mechanical connection of two 3NP1
4. Assembly kit for DIN rail mounting
5. Three-tier terminal
6. Feeder terminal
7. Auxiliary conductor terminal for box terminal
8. Isolating blade, simultaneously switching
9. Isolating blade, leading switch-on / lagging switch-off
10. Assembly kit for protection against electricity theft
11. Auxiliary switch
12. Locking device
13. Masking frame support
14. Terminal covers
15. Fuse carriers with and without fuse monitoring

Minimum order quantity (PS) or a multiple thereof can be ordered.

© Siemens 2019

Overview of components and accessories: 3NP1 fuse switch disconnector for mounting on busbar systems, size 000

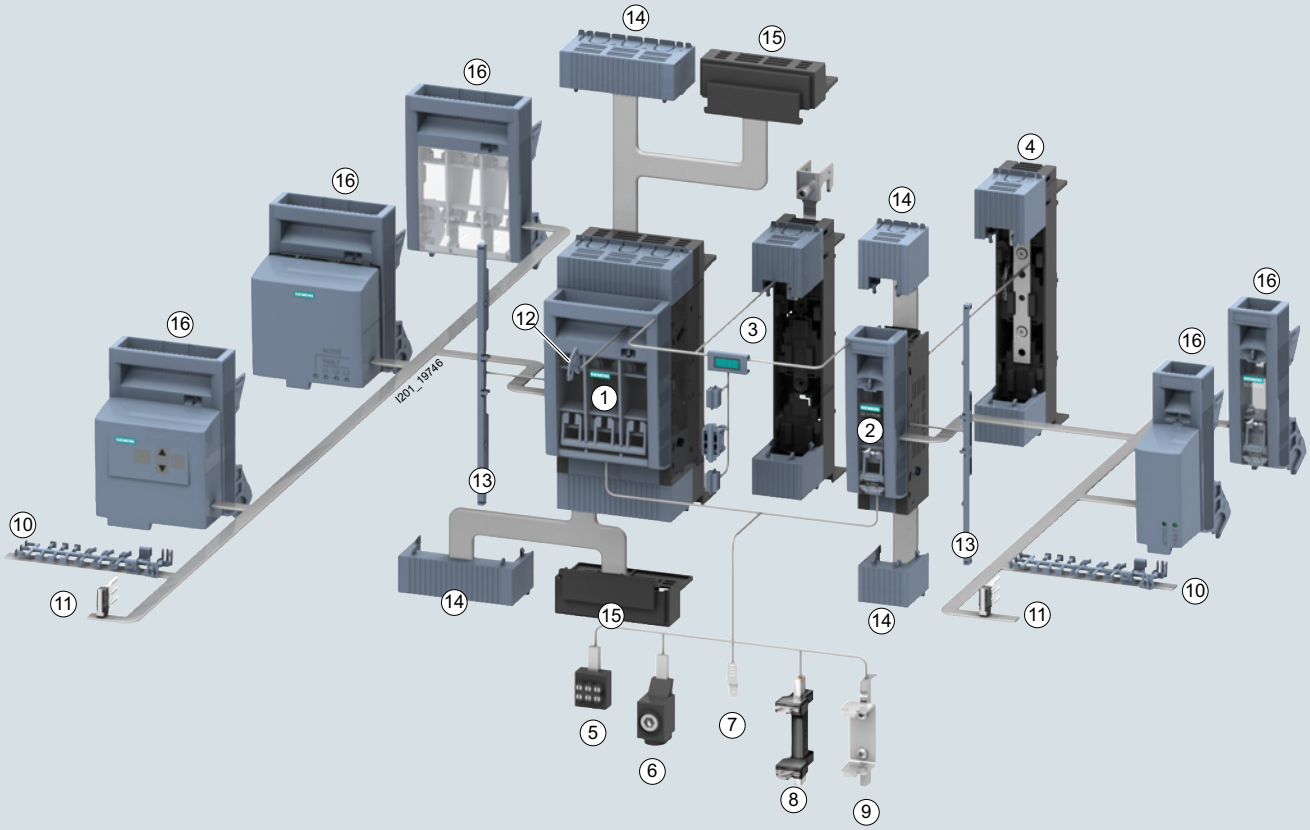

1 3NP1 fuse switch disconnector, 3-pole, for mounting on busbars
2 3NP1 fuse switch disconnector, 1-pole, for wall mounting
3 Assembly kit for 4-pole busbar mounting
4 Assembly kit for 1-pole busbar mounting
5 Three-tier terminal
6 Feeder terminal
7 Auxiliary conductor terminal for box terminal
8 Isolating blade, simultaneously switching
9 Isolating blade, leading switch-on / lagging switch-off
10 Assembly kit for protection against electricity theft
11 Auxiliary switch
12 Locking device
13 Masking frame support
14 Terminal covers
15 Reach-around protection for busbar
16 Fuse carriers with and without fuse monitoring

7

© Siemens 2019

General data

Overview of components and accessories: 3NP1 fuse switch disconnector for floor mounting, size 00

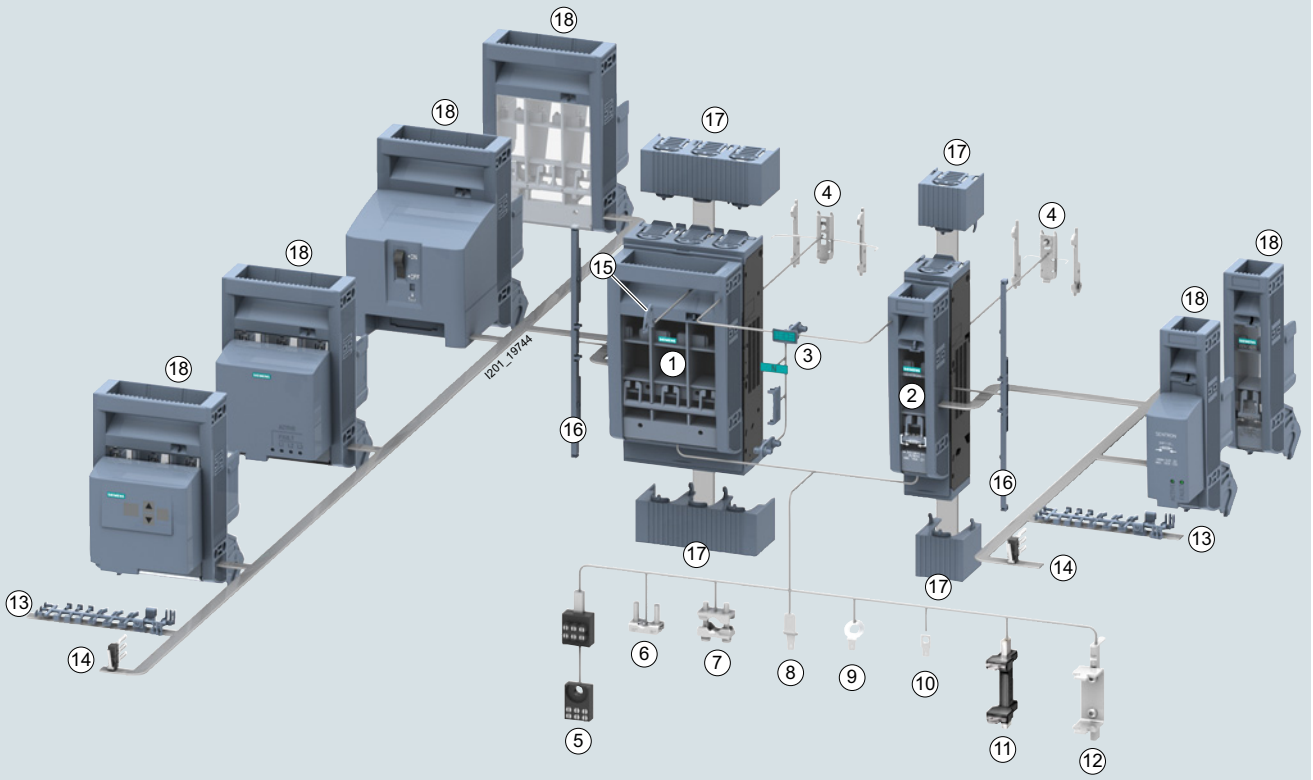

1. 3NP1 fuse switch disconnector, 3-pole, for wall mounting
2. 3NP1 fuse switch disconnector, 1-pole, for wall mounting
3. Assembly kit for mechanical connection of two 3NP1
4. Assembly kit for DIN rail mounting
5. Three-tier terminal
6. Saddle terminal
7. Prism terminal
8. Auxiliary conductor terminal for box terminal
9. Auxiliary conductor terminal for flat terminal
10. Auxiliary conductor terminal for saddle and prism terminals
11. Isolating blade, simultaneously switching
12. Isolating blade, leading switch-on / lagging switch-off
13. Assembly kit for protection against electricity theft
14. Auxiliary switch
15. Locking device
16. Masking frame support
17. Terminal covers
18. Fuse carriers with and without fuse monitoring

Minimum order quantity (PS) or a multiple thereof can be ordered.

© Siemens 2019

Overview of components and accessories: 3NP1 fuse switch disconnector for mounting on busbar systems, size 00

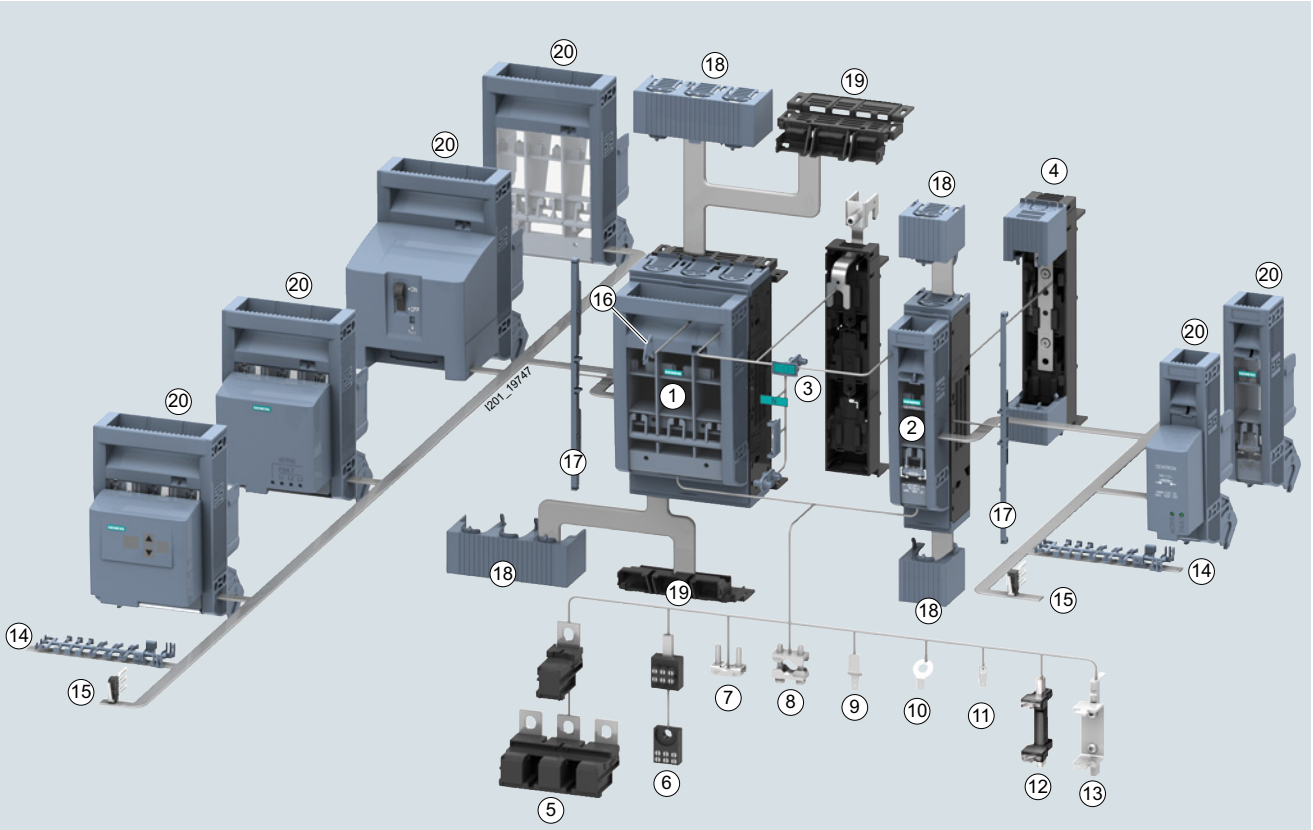

1. 3NP1 fuse switch disconnector, 3-pole, for mounting on busbars
2. 3NP1 fuse switch disconnector, 1-pole, for wall mounting
3. Assembly kit for 4-pole busbar mounting
4. Assembly kit for 1-pole busbar mounting
5. Terminal module for installation of terminals underneath 32-mm cover level
6. Three-tier terminal
7. Saddle terminal
8. Prism terminal
9. Auxiliary conductor terminal for box terminal
10. Auxiliary conductor terminal for flat terminal
11. Auxiliary conductor terminal for saddle and prism terminals
12. Isolating blade, simultaneously switching
13. Isolating blade, leading switch-on / lagging switch-off
14. Assembly kit for protection against electricity theft
15. Auxiliary switch
16. Locking device
17. Masking frame support
18. Terminal covers
19. Reach-around protection for busbar
20. Fuse carriers with and without fuse monitoring

© Siemens 2019

General data

Overview of components and accessories: 3NP1 fuse switch disconnector for floor mounting, sizes 1 to 3

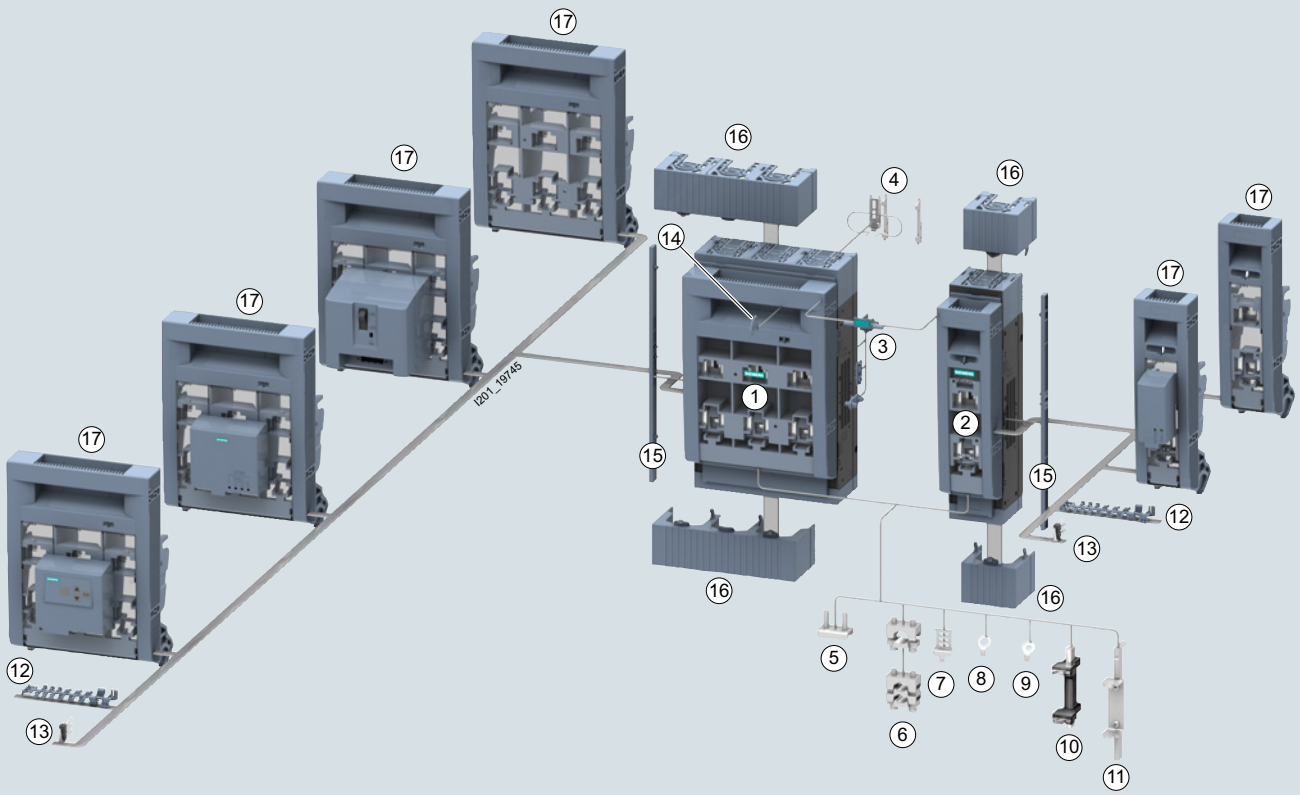

1. NP1 fuse switch disconnector, 3-pole, for wall mounting
2. NP1 fuse switch disconnector, 1-pole, for wall mounting
3. Assembly kit for mechanical connection of two 3NP1
4. Assembly kit for DIN rail mounting
5. Saddle terminal
6. Prism terminal
7. Auxiliary conductor terminal for box terminal
8. Auxiliary conductor terminal for flat terminal
9. Auxiliary conductor terminal for saddle and prism terminals
10. Isolating blade, simultaneously switching
11. Isolating blade, leading switch-on / lagging switch-off
12. Assembly kit for protection against electricity theft
13. Auxiliary switch
14. Locking device
15. Masking frame support
16. Terminal covers
17. Fuse carriers with and without fuse monitoring

Minimum order quantity (PS) or a multiple thereof can be ordered.

© Siemens 2019

Overview of components and accessories: 3NP1 fuse switch disconnector for mounting on busbar systems, sizes 1 to 3

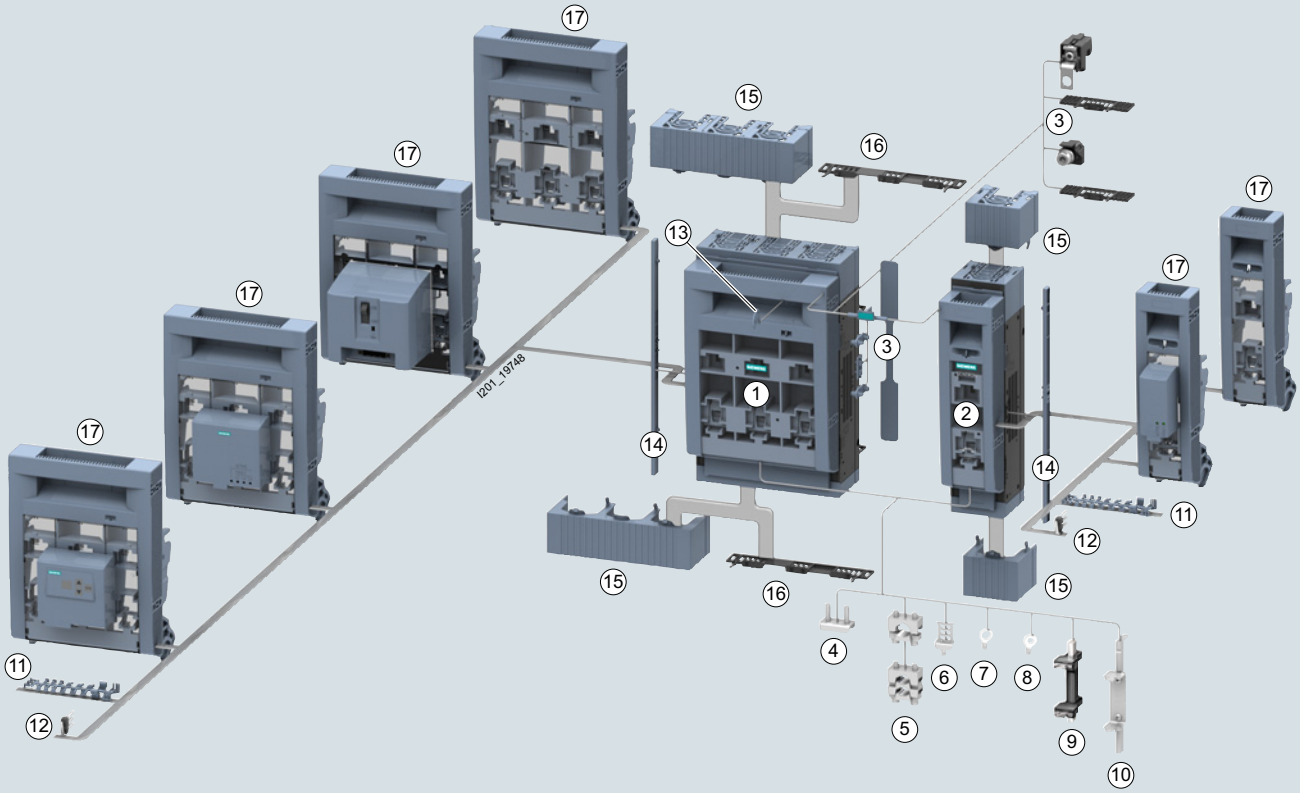

1. 3NP1 fuse switch disconnector, 3-pole, for mounting on busbars
2. 3NP1 fuse switch disconnector, 1-pole, for wall mounting
3. Assembly kit for 4-pole busbar mounting
4. Saddle terminal
5. Prism terminal
6. Auxiliary conductor terminal for box terminal
7. Auxiliary conductor terminal for flat terminal
8. Auxiliary conductor terminal for saddle and prism terminals
9. Isolating blade, simultaneously switching
10. Isolating blade, leading switch-on / lagging switch-off
11. Assembly kit for protection against electricity theft
12. Auxiliary switch
13. Locking device
14. Masking frame support
15. Terminal covers
16. Reach-around protection for busbar
17. Fuse carriers with and without fuse monitoring

© Siemens 2019

General data

Technical specifications

Technical specifications for 3-pole and 4-pole applications

Standards			**IEC / EN 60947-1, IEC / EN 60947-3, VDE 0660 Part 7**				
Size			**000**	**00**	**1**	**2**	**3**
General technical details							
Rated uninterrupted current I_u		A	160[1)]	160	250	400	630
For fuse links acc. to IEC 60269-2		Size	000	00 and 000	1 and 0	2 and 1	3 and 2
Conventional free-air thermal current I_{th}		A	160[1)]	160	250	400	630
Rated operational voltage U_e[2)]							
• At 50 Hz/60 Hz AC		V	690	690	690	690	690
• At DC (3 conducting paths series-connected)		V	440	440	440	440	440
• At DC (2 conducting paths series-connected)		V	240	240	240	240	240
• For utilization category AC-20B or DC-20B [3)]		V	1000	1000	1000	1000	1000
Rated insulation voltage U_i[3)]		V	1000	1000	1000	1000	1000
Rated impulse withstand voltage U_{imp}		kV	8	8	8	8	8
Operating and short-circuit behavior							
Rated operational current I_e							
• At AC-21B, 22B, 23B	400 V AC	A	160	160	250	400	630
• At AC-21B	500 V AC	A	160	160	250	400	630
• At AC-22B	500 V AC	A	125	160	250	400	630
• At AC-23B	500 V AC	A	40	63	200	315	500
• At AC-21B	690 V AC	A	160	160	250	400	630
• At AC-22B	690 V AC	A	50	125	250	400	500
• At AC-23B	690 V AC	A	25	35	100	125	200
• At DC-21B (2 conducting paths series-connected)	240 V DC	A	160	160	250	400	630
• At DC-22B (2 conducting paths series-connected)	240 V DC	A	100	160	250	400	630
• At DC-23B (2 conducting paths series-connected)	240 V DC	A	80	100	200	250	400
• At DC-21B (3 conducting paths series-connected)	440 V DC	A	100	160	250	400	630
• At DC-22B (3 conducting paths series-connected)	440 V DC	A	50	125	200	315	500
• At DC-23B (3 conducting paths series-connected)	440 V DC	A	25	63	100	160	250
Rated making capacity with isolating blades at 500 V AC		kA	2	6	17	17	17
Rated cond. short-circuit current with fuses (by fast switch on)							
• Rated current at 500 V/690 V		kA	80/80	80/80	80/50	80/50	50/50
• Permissible let-through current of the fuses, peak value		kA	10	15	25	40	50
Short-circuit strength with fuses (with closed disconnector)							
• Rated current at 500 V/690 V		kA	120/100	120/100	120/100	100/100	100/100
• Permissible let-through I^2t value of the fuses		kA^2s	223	223	780	2150	5400
• Permissible let-through current of the fuses, peak value		kA	15	23	32	40	60
Power loss per pole of the switch at I_{th} (without fuses)		W	5	5	8	14	30
Maximum power loss of the usable fuses (per fuse[4)])		W	7.5[5)]	12	23	34	48
Mechanical endurance, operating cycles			2000	2000	1600	1000	1000
Degree of protection							
• Without molded-plastic masking frame/cable lug cover			IP30 (switch closed)/ IP20 (switch open)				
• With molded-plastic masking frame/cable lug cover			IP40 (switch closed) / IP20 (switch open)				
Ambient conditions							
• Ambient temperature during operation[6)]		°C	-25 … +55				
• Ambient temperature during storage[6)]		°C	-50 … +80				
• Mounting position			Vertical and horizontal (no derating)				
• Pollution degree, maximum			3 (2 for versions with fuse monitoring)				
Main conductor connections							
Conductor cross-section max. for circular conductors (box terminal)		mm^2	50	70	185	300	300
Busbars or cable lugs, max. dimensions							
• Flat terminals		mm x mm	--	24 x 12	25 x 18	34 x 18	40 x 18
• Box terminals		mm x mm	8 x 8	9 x 12	20 x 10	32 x 10	32 x 20
Tightening torque							
• Flat terminals		Nm	--	10 … 12	10 … 12	10 … 12	10 … 12
• Box terminals		Nm	3.5 … 4	10	10	25	25

1) 160 A available in combination with feeder terminal 3NP1923-1BD00, otherwise max. 100 A

2) The permissible operational voltage range is restricted for versions with fuse monitoring – see page 7/196, technical specifications of fuse monitoring

3) Up to pollution degree 2, above this 690 V

4) Values are valid when using LV HRC fuses according to IEC 60269-1 (characteristics gG, gL, aM). If using fuses for semiconductor protection, please refer to the Derating table, see page 7/210.

5) For operation up to 160 A, max. 9 W

6) Temperature range may be restricted by the fuses to be used – please note the technical specifications of the fuses

Minimum order quantity (PS) or a multiple thereof can be ordered.

© Siemens 2019

Technical specifications for 1-pole and 2-pole applications

Standards			**IEC / EN 60947-1, IEC / EN 60947-3, VDE 0660 Part 7**				
Size			**000**	**00**	**1**	**2**	**3**
General technical details							
Rated uninterrupted current I_u		A	160[1]	160	250	400	630
For fuse links acc. to IEC 60269-2		Size	000	00 and 000	1 and 0	2 and 1	3 and 2
Conventional free-air thermal current I_{th}		A	160[1]	160	250	400	630
Rated operational voltage U_e[2]							
• At 50 Hz/60 Hz AC, 2-pole		V	240	240	240	240	240
• At 50 Hz/60 Hz AC, 2-pole		V	400	400	400	400	400
• At DC (1-pole)		V	120	120	120	120	120
• At DC (2-pole)		V	240	240	240	240	240
• For utilization category AC-20B or DC-20B[3]		V	1000	1000	1000	1000	1000
Rated insulation voltage U_i[3]		V	1000	1000	1000	1000	1000
Rated impulse withstand voltage U_{imp}		kV	8	8	8	8	8
Operating and short-circuit behavior							
Rated operational current I_e							
• At AC-21B, 22B, 23B (1-pole)	240 V AC	A	160	160	250	400	630
• At AC-21B, 22B, 23B (2-pole)	400 V AC	A	160	160	250	400	630
• At DC-21B (1-pole)	120 V DC	A	160	160	250	400	630
• At DC-22B (1-pole)	120 V DC	A	100	160	250	400	630
• At DC-23B (1-pole)	120 V DC	A	80	100	200	250	400
• At DC-21B (2-pole)	240 V DC	A	160	160	250	400	630
• At DC-22B (2-pole)	240 V DC	A	100	160	250	400	630
• At DC-23B (2-pole)	240 V DC	A	80	100	200	250	400
Rated making capacity with isolating blades at 400 V AC		kA	2	6	17	17	17
Rated cond. short-circuit current with fuses (by fast switch on)							
• Rated current at 240 V (1-pole) /400 V (2-pole)		kA	80/80	80/80	80/80	80/80	50/50
• Permissible let-through current of the fuses, peak value		kA	10	15	25	40	50
Short-circuit strength with fuses (with closed disconnector)							
• Rated current at 240 V (1-pole) /400 V (2-pole)		kA	120/120	120/120	120/120	100/100	100/100
• Permissible let-through I^2t value of the fuses	240 V (1-pole)	kA^2s	137	120	420	1155	3630
	400 V (2-pole)	kA^2s	166	158	551	1515	4340
• Permissible let-through current of the fuses, peak value		kA	15	23	32	40	60
Power loss per pole of the switch at I_{th} (without fuses)		W	5	5	8	14	30
Maximum power loss of the usable fuses (per fuse[4])		W	7.5[5]	12	23	34	48
Mechanical endurance, operating cycles			2000	2000	1600	1000	1000
Degree of protection							
• Without molded-plastic masking frame/cable lug cover			IP30 (switch closed)/ IP20 (switch open)				
• With molded-plastic masking frame/cable lug cover			IP40 (switch closed) / IP20 (switch open)				
Ambient conditions							
• Ambient temperature during operation[6]			-25 … +55				
• Ambient temperature during storage[6]		°C	-50 … +80				
• Mounting position		°C	Vertical and horizontal (no derating)				
• Pollution degree, maximum			3 (2 for versions with fuse monitoring)				
Main conductor connections							
Conductor cross-section max. for circular conductors (box terminal)		mm^2	50	70	185	300	300
Busbars or cable lugs, max. dimensions							
• Flat terminals		mm x mm	--	24 x 12	25 x 18	34 x 18	40 x 18
• Box terminals		mm x mm	8 x 8	9 x 12	20 x 10	32 x 10	32 x 20
Tightening torque							
• Flat terminals		Nm	--	10 … 12	10 … 12	10 … 12	10 … 12
• Box terminals		Nm	3.5 … 4	10	10	25	25

1) 160 A available in combination with feeder terminal 3NP1923-1BD00, otherwise max. 100 A

2) The permissible operational voltage range is restricted for versions with fuse monitoring – see page 7/196, technical specifications of fuse monitoring

3) Up to pollution degree 2, above this 690 V

4) Values are valid when using LV HRC fuses according to IEC 60269-1 (characteristics gG, gL, aM). If using fuses for semiconductor protection, please refer to the Derating table, see page 7/210.

5) For operation up to 160 A, max. 9 W

6) Temperature range may be restricted by the fuses to be used – please note the technical specifications of the fuses

© Siemens 2019

General data

Auxiliary switches

Version			3NP19..-1FA00	3NP19..-1FB00 (solid-state compatible)
Electrical values				
Rated operational voltage U_e				
• At 50 Hz/60 Hz AC		V	230	230
• At DC		V	230	--
Rated operational current I_e				
• At AC-12	230 V AC	A	5	---
• At AC-13	230 V AC	A	---	0.1
• At AC-15	230 V AC	A	2	---
• At DC-13	230 V DC	A	0.2	---
• At DC-14	24 V DC	A	0.45	---
Conventional free-air thermal current I_{th}		A	5	0.1
Rated insulation voltage U_i		V	250	250
Connection				
Connection type			Flat tab sleeve 2.8 x 0.5 mm	
Conductor cross-section, max.		mm^2	1	1

Fuse monitoring

Version			MFM	EFM10	EFM15					EFM20	EFM25
					3-pole		1-pole				
Version -->			AC/DC	AC	AC	DC	AC	DC	AC/DC	AC	DC
Rated operational voltage U_e of 3NP11[1]											
• At 50 Hz/60 Hz AC	Min.	V	24	230	190	--	110	--	24	230	--
	Max.	V	690	690	690	--	690	--	240	690	--
• At DC	Min.	V	24	--	--	220	--	120	24	--	220
	Max.	V	240	--	--	440	--	440	250	--	440
Signaling contacts											
Type and number of signaling contacts			1 NO + 1 NC	1 CO	1 NO	1 NO	1 NO	1 NO	1 NO	2 CO[2]	2 CO[2]
Rated operational voltage U_e											
• At 50 Hz/60 Hz AC		V	230	24	24	24	24	24	24	24	24
• At DC		V	230	24	24	24	24	24	24	24	24
Rated operational current I_e											
• At AC-15	24 V AC	A	6	1.5	1.5	1.5	1.5	1.5	1.5	1.5	1.5
	230 V AC	A	6	--	--	--	--	--	--	--	--
• At DC-13	24 V DC	A	2	1	1	1	1	1	1	1	1
	230 V DC	A	0.5	--	--	--	--	--	--	--	--
Connection of signaling contacts											
Conductor cross-section, max.		mm^2	2.5	2.5	2.5	2.5	2.5	2.5	2.5	2.5	2.5
Tightening torque		Nm	2.5 … 1.2	0.5 … 1.2	0.5 … 1.2	0.5 … 1.2	0.5 … 1.2	0.5 … 1.2	0.5 … 1.2	0.5 … 1.2	0.5 … 1.2

[1] Please note – the permissible voltage range for the main circuit of a fuse switch disconnector is restricted in versions with fuse monitoring. If the upper or lower threshold of the permissible operational voltage range for fuse monitoring is crossed, there is a risk of irreparable damage to the fuse monitoring device or fuse monitoring may malfunction.

[2] One changeover contact to signal fuse failure and one changeover contact to signal line faults (overvoltage/undervoltage and phase failure).

Minimum order quantity (PS) or a multiple thereof can be ordered.

© Siemens 2019

Overview

Devices		Description	Page
3NP1 for floor mounting			
	**Devices for mounting on mounting plate**	• 1 / 3 and 4-pole fuse switch disconnectors • Connections in form of box terminal or flat terminal (NH00 and larger) • Sizes NH000 to NH3	7/198
3NP1 for 40 mm busbar systems			
	**Devices for busbar systems with 40 mm pole center distance**	• 3-pole fuse switch disconnectors • Connections in form of box terminal or flat terminal (NH00 and larger) • Sizes NH000 to NH00	7/200
3NP1 for 60 mm busbar systems			
	**Devices for busbar systems with 60 mm pole center distance**	• 3 and 4-pole fuse switch disconnectors • Connections in form of box terminal or flat terminal (NH00 and larger) • Sizes NH000 to NH3	7/201
Accessories and spare parts			
	**Terminals**	• Saddle terminals • Prism terminals, single and double • Three-tier terminals • Connection module • Feeder terminal • Auxiliary conductor connections	7/203
	**3-phase busbar**	Busbar for bridge connection of several 3NP1 devices in size NH000 on the infeed side	7/204
	**Auxiliary switches**	Auxiliary switches for remote interrogation of the switch position of a 3NP1 device	7/204
	**Isolating blades**	• For use in 3NP1 if only the disconnector functionality is required • For 4-pole 3NP1 devices in the neutral conductor • Switch simultaneously with the fuses or leading switch-on/lagging switch-off	7/205
	**Assembly kits**	Assembly kits for • Mounting on a standard mounting rail for NH000 to NH1 • Protection against power theft • Retrofitting of locking function • Mechanical connection of 1-pole and 3-pole 3NP1 devices • 4-pole busbar mounting • 1-pole busbar mounting	7/205
	**Covers**	• Masking plates for 3-pole 3NP1 devices and masking plate support • Cable connection covers • Reach-around protection for busbar mounting	7/206
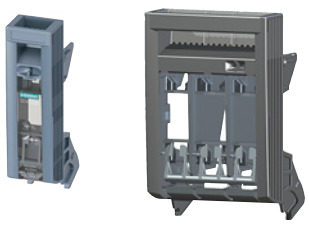	**Fuse carriers**	• Standard fuse carriers, without fuse monitoring • Fuse carriers with fuse monitoring for retrofitting	7/208

© Siemens 2019

Floor mounting

Selection and ordering data

	Size	Rated current I_u	Number of poles	SD	Article No. www.siemens.com/product?Article No.	Price per PU	PU (UNIT, SET, M)	PS	PG
		A		d					
With flat terminals									
	Basic units, without fuse monitoring								
 3NP1131-1CA10	00	160	1 NEW	▶	**3NP1131-1CA10**		1	1 unit	1DL
			3	▶	**3NP1133-1CA10**		1	1 unit	1DL
			4 NEW	▶	**3NP1134-1CA10**		1	1 unit	1DL
	1	250	1 NEW	▶	**3NP1141-1DA10**		1	1 unit	1DL
			3	▶	**3NP1143-1DA10**		1	1 unit	1DL
			4 NEW		**3NP1144-1DA10**		1	1 unit	1DL
	2	400	1 NEW	▶	**3NP1151-1DA10**		1	1 unit	1DL
			3	▶	**3NP1153-1DA10**		1	1 unit	1DL
			4 NEW		**3NP1154-1DA10**		1	1 unit	1DL
 3NP1133-1CA10	3	630	1 NEW[3]	▶	**3NP1161-1DA10**		1	1 unit	1DL
			3	▶	**3NP1163-1DA10**		1	1 unit	1DL
			4 NEW[3]		**3NP1164-1DA10**		1	1 unit	1DL
	With MFM electromechanical fuse monitoring[1]								
 3NP1133-1CA11	00	160	3		**3NP1133-1CA11**		1	1 unit	1DL
	1	250	3		**3NP1143-1DA11**		1	1 unit	1DL
	2	400	3		**3NP1153-1DA11**		1	1 unit	1DL
	3	630	3		**3NP1163-1DA11**		1	1 unit	1DL
	With EFM10 electronic fuse monitoring								
 3NP1133-1CA12	00	160	3		**3NP1133-1CA12**		1	1 unit	1DL
	1	250	3		**3NP1143-1DA12**		1	1 unit	1DL
	2	400	3		**3NP1153-1DA12**		1	1 unit	1DL
	3	630	3		**3NP1163-1DA12**		1	1 unit	1DL
	With EFM15 electronic fuse monitoring[1][2] NEW								
 3NP1131-1CA14	00	160	1		**3NP1131-1CA14**		1	1 unit	1DL
			3		**3NP1133-1CA14**		1	1 unit	1DL
	1	250	1		**3NP1141-1DA14**		1	1 unit	1DL
			3		**3NP1143-1DA14**		1	1 unit	1DL
	2	400	1		**3NP1151-1DA14**		1	1 unit	1DL
			3		**3NP1153-1DA14**		1	1 unit	1DL
	3	630	1[3]		**3NP1161-1DA14**		1	1 unit	1DL
			3[3]		**3NP1163-1DA14**		1	1 unit	1DL
	With EFM20 electronic fuse monitoring[1]								
 3NP1131-1CA13	00	160	3		**3NP1133-1CA13**		1	1 unit	1DL
	1	250	3		**3NP1143-1DA13**		1	1 unit	1DL
	2	400	3		**3NP1153-1DA13**		1	1 unit	1DL
	3	630	3		**3NP1163-1DA13**		1	1 unit	1DL

[1] For a description of the functionality of the different versions of fuse monitoring devices, see page 7/186

[2] EFM15 voltage range: 1-pole: 24 ... 240 V AC (phase to N) / 24 ... 250 V DC (L+ to L-);
3-pole: 190 ... 690 V AC (phase to phase), further voltage ranges available as accessories

[3] Start of delivery scheduled for 3rd quarter 2019

Minimum order quantity (PS) or a multiple thereof can be ordered.

© Siemens 2019

	Size	Rated current I_u	Number of poles	SD	Article No. www.siemens.com/product?Article No.	Price per PU	PU (UNIT, SET, M)	PS	PG
		A		d					
With box terminal									
	Basic units, without fuse monitoring								
 3NP1121-1CA20	000	100[1]	1 NEW	▶	**3NP1121-1CA20**		1	1 unit	1DL
			3	▶	**3NP1123-1CA20**		1	1 unit	1DL
			4 NEW	▶	**3NP1124-1CA20**		1	1 unit	1DL
	00	160	1 NEW	▶	**3NP1131-1CA20**		1	1 unit	1DL
			3	▶	**3NP1133-1CA20**		1	1 unit	1DL
			4 NEW	▶	**3NP1134-1CA20**		1	1 unit	1DL
 3NP1123-1CA20	1	250	1 NEW		**3NP1141-1DA20**		1	1 unit	1DL
			3		**3NP1143-1DA20**		1	1 unit	1DL
			4 NEW		**3NP1144-1DA20**		1	1 unit	1DL
	2	400	1 NEW		**3NP1151-1DA20**		1	1 unit	1DL
			3		**3NP1153-1DA20**		1	1 unit	1DL
			4 NEW		**3NP1154-1DA20**		1	1 unit	1DL
	3	630	1 NEW[4]		**3NP1161-1DA20**		1	1 unit	1DL
			3		**3NP1163-1DA20**		1	1 unit	1DL
			4 NEW[4]		**3NP1164-1DA20**		1	1 unit	1DL
	With MFM electromechanical fuse monitoring[2]								
 3NP1133-1DA21	00	160	3		**3NP1133-1CA21**		1	1 unit	1DL
	1	250	3		**3NP1143-1DA21**		1	1 unit	1DL
	2	400	3		**3NP1153-1DA21**		1	1 unit	1DL
	3	630	3		**3NP1163-1DA21**		1	1 unit	1DL
	With EFM10 electronic fuse monitoring[2]								
 3NP1133-1CA22	000	100[1]	3		**3NP1123-1CA22**		1	1 unit	1DL
	00	160	3		**3NP1133-1CA22**		1	1 unit	1DL
	1	250	3		**3NP1143-1DA22**		1	1 unit	1DL
	2	400	3		**3NP1153-1DA22**		1	1 unit	1DL
	3	630	3		**3NP1163-1DA22**		1	1 unit	1DL
	With EFM15 electronic fuse monitoring[2][3] NEW								
 3NP1131-1CA24	000	100[1]	1		**3NP1121-1CA24**		1	1 unit	1DL
			3		**3NP1123-1CA24**		1	1 unit	1DL
	00	160	1		**3NP1131-1CA24**		1	1 unit	1DL
			3		**3NP1133-1CA24**		1	1 unit	1DL
	1	250	1		**3NP1141-1DA24**		1	1 unit	1DL
			3		**3NP1143-1DA24**		1	1 unit	1DL
	2	400	1		**3NP1151-1DA24**		1	1 unit	1DL
			3		**3NP1153-1DA24**		1	1 unit	1DL
	3	630	1[4]		**3NP1161-1DA24**		1	1 unit	1DL
			3[4]		**3NP1163-1DA24**		1	1 unit	1DL
	With EFM20 electronic fuse monitoring[2]								
 3NP1133-1CA23	000	100[1]	3		**3NP1123-1CA23**		1	1 unit	1DL
	00	160	3		**3NP1133-1CA23**		1	1 unit	1DL
	1	250	3		**3NP1143-1DA23**		1	1 unit	1DL
	2	400	3		**3NP1153-1DA23**		1	1 unit	1DL
	3	630	3		**3NP1163-1DA23**		1	1 unit	1DL

[1] 160 A available in combination with feeder terminal 3NP1123-1BD00

[2] For a description of the functionality of the different versions of fuse monitoring devices, see page 7/186

[3] EFM15 voltage range: 1-pole: 24 ... 240 V AC (phase to N) / 24 ... 250 V DC (L+ to L-);
3-pole: 190 ... 690 V AC (phase to phase), further voltage ranges available as accessories

[4] Start of delivery scheduled for 3rd quarter 2019

© Siemens 2019

For 40 mm busbar system

Selection and ordering data

	Size	Rated current I_u	Number of poles	SD	For SIEMENS 8US busbar system[1] Article No. www.siemens.com/product?Article No.	Price per PU	PU (UNIT, SET, M)	PS	PG	SD	For Rittal RiLine 60 busbar system[2] Article No. www.siemens.com/product?Article No.	Price per PU	PU (UNIT, SET, M)	PS	PG
		A		d						d					
With flat terminals															
 3NP1133-1BB10	***Basic units, without fuse monitoring***														
	00	160	3		**3NP1133-1BB10**		1	1 unit	1DL		**3NP1133-1JB10**		1	1 unit	1DL
	With MFM electromechanical fuse monitoring[3]														
	00	160	3		**3NP1133-1BB11**		1	1 unit	1DL		**3NP1133-1JB11**		1	1 unit	1DL
	With EFM10 electronic fuse monitoring[3]														
	00	160	3		**3NP1133-1BB12**		1	1 unit	1DL		**3NP1133-1JB12**		1	1 unit	1DL
	With EFM20 electronic fuse monitoring[3]														
	00	160	3		**3NP1133-1BB13**		1	1 unit	1DL		**3NP1133-1JB13**		1	1 unit	1DL
With box terminal															
 3NP1123-1JB22	***Basic units, without fuse monitoring***														
	000	100[4]	3		**3NP1123-1BB20**		1	1 unit	1DL		**3NP1123-1JB20**		1	1 unit	1DL
	00	160	3		**3NP1133-1BB20**		1	1 unit	1DL		**3NP1133-1JB20**		1	1 unit	1DL
	With MFM electromechanical fuse monitoring[3]														
	00	160	3		**3NP1133-1BB21**		1	1 unit	1DL		**3NP1133-1JB21**		1	1 unit	1DL
	With EFM10 electronic fuse monitoring[3]														
	000	100[4]	3		**3NP1123-1BB22**		1	1 unit	1DL		**3NP1123-1JB22**		1	1 unit	1DL
	00	160	3		**3NP1133-1BB22**		1	1 unit	1DL		**3NP1133-1JB22**		1	1 unit	1DL
	With EFM20 electronic fuse monitoring[3]														
	000	100[4]	3		**3NP1123-1BB23**		1	1 unit	1DL		**3NP1123-1JB23**		1	1 unit	1DL
	00	160	3		**3NP1133-1BB23**		1	1 unit	1DL		**3NP1133-1JB23**		1	1 unit	1DL

[1] With reach-around protection suitable for Siemens 8US 40 mm and Rittal 40 mm busbar systems without base; cannot be used with T profile rails; supplied with cable feeder factory-fitted at the bottom, can be converted by the customer

[2] With reach-around protection suitable for Rittal 40 mm busbar system with base; cannot be used with T profile rails; supplied with cable feeder factory-fitted at the bottom, can be converted by the customer

[3] For a description of the functionality of the different versions of fuse monitoring devices, see page 7/186

[4] 160 A available in combination with feeder terminal 3NP1123-1BD00

Minimum order quantity (PS) or a multiple thereof can be ordered.

© Siemens 2019

Selection and ordering data

	Size	Rated current I_n	Number of poles	SD	For SIEMENS 8US busbar system[1] Article No. www.siemens.com/product?Article No.	Price per PU	PU (UNIT, SET, M)	PS	PG	SD	For Rittal RiLine 60 busbar system[2] Article No. www.siemens.com/product?Article No.	Price per PU	PU (UNIT, SET, M)	PS	PG
		A		d						d					
With flat terminals															
	Basic units, without fuse monitoring														
 3NP1133-1BC10	00	160	3	▶	**3NP1133-1BC10**		1	1 unit	1DL		**3NP1133-1JC10**		1	1 unit	1DL
			4 NEW	▶	**3NP1134-1BC10**		1	1 unit	1DL		---				
	1	250	3	▶	**3NP1143-1BC10**		1	1 unit	1DL		**3NP1143-1JC10**		1	1 unit	1DL
			4 NEW	▶	**3NP1144-1BC10**		1	1 unit	1DL		---				
	2	400	3		**3NP1153-1BC10**		1	1 unit	1DL		**3NP1153-1JC10**		1	1 unit	1DL
			4 NEW		**3NP1154-1BC10**		1	1 unit	1DL		---				
	3	630	3		**3NP1163-1BC10**		1	1 unit	1DL		**3NP1163-1JC10**		1	1 unit	1DL
			4 NEW[5]		**3NP1164-1BC10**		1	1 unit	1DL		---				
	With MFM electromechanical fuse monitoring[3]														
 3NP1133-1JC11	00	160	3		**3NP1133-1BC11**		1	1 unit	1DL		**3NP1133-1JC11**		1	1 unit	1DL
	1	250	3		**3NP1143-1BC11**		1	1 unit	1DL		**3NP1143-1JC11**		1	1 unit	1DL
	2	400	3		**3NP1153-1BC11**		1	1 unit	1DL		**3NP1153-1JC11**		1	1 unit	1DL
	3	630	3		**3NP1163-1BC11**		1	1 unit	1DL		**3NP1163-1JC11**		1	1 unit	1DL
	With EFM10 electronic fuse monitoring[3]														
 3NP1133-1JC12	00	160	3		**3NP1133-1BC12**		1	1 unit	1DL		**3NP1133-1JC12**		1	1 unit	1DL
	1	250	3		**3NP1143-1BC12**		1	1 unit	1DL		**3NP1143-1JC12**		1	1 unit	1DL
	2	400	3		**3NP1153-1BC12**		1	1 unit	1DL		**3NP1153-1JC12**		1	1 unit	1DL
	3	630	3		**3NP1163-1BC12**		1	1 unit	1DL		**3NP1163-1JC12**		1	1 unit	1DL
	With EFM15 electronic fuse monitoring[3][4] NEW														
 3NP1133-1BC14	00	160	3		**3NP1133-1BC14**		1	1 unit	1DL		---				
	1	250	3		**3NP1143-1BC14**		1	1 unit	1DL		---				
	2	400	3		**3NP1153-1BC14**		1	1 unit	1DL		---				
	3	630	3[5]		**3NP1163-1BC14**		1	1 unit	1DL		---				
	With EFM20 electronic fuse monitoring[3]														
 3NP1133-1JC13	00	160	3		**3NP1133-1BC13**		1	1 unit	1DL		**3NP1133-1JC13**		1	1 unit	1DL
	1	250	3		**3NP1143-1BC13**		1	1 unit	1DL		**3NP1143-1JC13**		1	1 unit	1DL
	2	400	3		**3NP1153-1BC13**		1	1 unit	1DL		**3NP1153-1JC13**		1	1 unit	1DL
	3	630	3		**3NP1163-1BC13**		1	1 unit	1DL		**3NP1163-1JC13**		1	1 unit	1DL

[1] With reach-around protection suitable for Siemens 8US 60 mm, Wöhner Classic and Rittal RiLine60 busbar systems without base; cannot be used with T profile rails; supplied with cable feeder factory-fitted at the bottom, can be converted by the customer

[2] With reach-around protection suitable for Rittal RiLine60 busbar system with base; cannot be used with T profile rails; supplied with cable feeder factory-fitted at the bottom, can be converted by the customer

[3] For a description of the functionality of the different versions of fuse monitoring devices, see page 7/186

[4] EFM15 voltage range: 3-pole: 190 ... 690 V AC (phase to phase), further voltage ranges available as accessories

[5] Start of delivery scheduled for 3rd quarter 2019

© Siemens 2019

For 60 mm busbar system

	Size	Rated current I_u	Number of poles	SD	For SIEMENS 8US busbar system[1] Article No. www.siemens.com/product?Article No.	Price per PU	PU (UNIT, SET, M)	PS	PG	SD	For Rittal RiLine 60 busbar system[2] Article No. www.siemens.com/product?Article No.	Price per PU	PU (UNIT, SET, M)	PS	PG
		A		d						d					
With box terminal															
	Basic units, without fuse monitoring														
 3NP1133-1BB23	000	100[3]	3	►	**3NP1123-1BC20**		1	1 unit	1DL		**3NP1123-1JC20**		1	1 unit	1DL
			4 NEW	►	**3NP1124-1BC20**		1	1 unit	1DL		---				
	00	160	3	►	**3NP1133-1BC20**		1	1 unit	1DL		**3NP1133-1JC20**		1	1 unit	1DL
			4 NEW	►	**3NP1134-1BC20**		1	1 unit	1DL		---				
	1	250	3	►	**3NP1143-1BC20**		1	1 unit	1DL		**3NP1143-1JC20**		1	1 unit	1DL
			4 NEW		**3NP1144-1BC20**		1	1 unit	1DL		---				
	2	400	3		**3NP1153-1BC20**		1	1 unit	1DL		**3NP1153-1JC20**		1	1 unit	1DL
			4 NEW		**3NP1154-1BC20**		1	1 unit	1DL		---				
	3	630	3		**3NP1163-1BC20**		1	1 unit	1DL		**3NP1163-1JC20**		1	1 unit	1DL
			4 NEW[6]		**3NP1164-1BC20**		1	1 unit	1DL		---				
	With MFM electromechanical fuse monitoring[4]														
 3NP1133-1BC21	00	160	3		**3NP1133-1BC21**		1	1 unit	1DL		**3NP1133-1JC21**		1	1 unit	1DL
	1	250	3		**3NP1143-1BC21**		1	1 unit	1DL		**3NP1143-1JC21**		1	1 unit	1DL
	2	400	3		**3NP1153-1BC21**		1	1 unit	1DL		**3NP1153-1JC21**		1	1 unit	1DL
	3	630	3		**3NP1163-1BC21**		1	1 unit	1DL		**3NP1163-1JC21**		1	1 unit	1DL
	With EFM10 electronic fuse monitoring[4]														
 3NP1133-1BC22	000	100[3]	3		**3NP1123-1BC22**		1	1 unit	1DL		**3NP1123-1JC22**		1	1 unit	1DL
	00	160	3		**3NP1133-1BC22**		1	1 unit	1DL		**3NP1133-1JC22**		1	1 unit	1DL
	1	250	3		**3NP1143-1BC22**		1	1 unit	1DL		**3NP1143-1JC22**		1	1 unit	1DL
	2	400	3		**3NP1153-1BC22**		1	1 unit	1DL		**3NP1153-1JC22**		1	1 unit	1DL
	3	630	3		**3NP1163-1BC22**		1	1 unit	1DL		**3NP1163-1JC22**		1	1 unit	1DL
	With EFM15 electronic fuse monitoring[5] NEW														
 3NP1133-1BC24	000	100[3]	3		**3NP1123-1BC24**		1	1 unit	1DL		---				
	00	160	3		**3NP1133-1BC24**		1	1 unit	1DL		---				
	1	250	3		**3NP1143-1BC24**		1	1 unit	1DL		---				
	2	400	3		**3NP1153-1BC24**		1	1 unit	1DL		---				
	3	630	3[6]		**3NP1163-1BC24**		1	1 unit	1DL		---				
	With EFM20 electronic fuse monitoring[4]														
 3NP1133-1BC23	000	100[3]	3		**3NP1123-1BC23**		1	1 unit	1DL		**3NP1123-1JC23**		1	1 unit	1DL
	00	160	3		**3NP1133-1BC23**		1	1 unit	1DL		**3NP1133-1JC23**		1	1 unit	1DL
	1	250	3		**3NP1143-1BC23**		1	1 unit	1DL		**3NP1143-1JC23**		1	1 unit	1DL
	2	400	3		**3NP1153-1BC23**		1	1 unit	1DL		**3NP1153-1JC23**		1	1 unit	1DL
	3	630	3		**3NP1163-1BC23**		1	1 unit	1DL		**3NP1163-1JC23**		1	1 unit	1DL

[1] With reach-around protection suitable for Siemens 8US 60 mm, Wöhner Classic and Rittal RiLine60 busbar systems without base; cannot be used with T profile rails; supplied with cable feeder factory-fitted at the bottom, can be converted by the customer

[2] With reach-around protection suitable for Rittal RiLine60 busbar system with base; cannot be used with T profile rails; supplied with cable feeder factory-fitted at the bottom, can be converted by the customer

[3] 160 A available in combination with feeder terminal 3NP1123-1BD00

[4] For a description of the functionality of the different versions of fuse monitoring devices, see page 7/186

[5] EFM15 voltage range: 3-pole: 190 ... 690 V AC (phase to phase), further voltage ranges available as accessories

[6] Start of delivery scheduled for 3rd quarter 2019

Minimum order quantity (PS) or a multiple thereof can be ordered.

© Siemens 2019

Selection and ordering data

	For size	Connectable conductor cross-section	Number of poles	SD	Article No. www.siemens.com/product?Article No.	Price per PU	PU (UNIT, SET, M)	PS	PG
		A		d					
Connection methods									
	Terminal packs contain a sufficient number of parts to retrofit one side of a 3NP1 device with terminals. If the incoming and outgoing feeders are to be retrofitted, two packs are required.								
	Saddle terminals								
 3NP1931-1BA00	For 3NP1 with flat terminal For connection of copper conductors								
	00	1.5 … 70	1 NEW		**3NP1931-1BA00**		1	1 unit	1DL
			3		**3NP1933-1BA00**		1	1 unit	1DL
	1	70 … 120	1 NEW		**3NP1941-1BA00**		1	1 unit	1DL
			3		**3NP1943-1BA00**		1	1 unit	1DL
	2	120 … 240	1 NEW		**3NP1951-1BA00**		1	1 unit	1DL
			3		**3NP1953-1BA00**		1	1 unit	1DL
	3	150 … 300	1 NEW		**3NP1961-1BA00**		1	1 unit	1DL
			3		**3NP1963-1BA00**		1	1 unit	1DL
	Prism terminals, single								
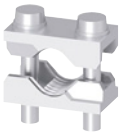 3NP1931-1BB10	For 3NP1 with flat terminal For connection of copper or aluminum conductors								
	00	35 ... 95	1 NEW		**3NP1931-1BB10**		1	1 unit	1DL
			3		**3NP1933-1BB10**		1	1 unit	1DL
	1	70 … 150	1 NEW		**3NP1941-1BB10**		1	1 unit	1DL
			3		**3NP1943-1BB10**		1	1 unit	1DL
	2	120 … 240	1 NEW		**3NP1951-1BB10**		1	1 unit	1DL
			3		**3NP1953-1BB10**		1	1 unit	1DL
	3	150 … 300	1 NEW		**3NP1961-1BB10**		1	1 unit	1DL
			3		**3NP1963-1BB10**		1	1 unit	1DL
	Prism terminals, double								
 3NP1941-1BB20	For 3NP1 with flat terminal For connection of copper or aluminum conductors								
	1	2 x 35 … 70	1 NEW		**3NP1941-1BB20**		1	1 unit	1DL
			3		**3NP1943-1BB20**		1	1 unit	1DL
	2	2 x 70 … 120	1 NEW		**3NP1951-1BB20**		1	1 unit	1DL
			3		**3NP1953-1BB20**		1	1 unit	1DL
	3	2 x 150 … 185	1 NEW		**3NP1961-1BB20**		1	1 unit	1DL
			3		**3NP1963-1BB20**		1	1 unit	1DL
	Three-tier terminals								
 3NP1931-1BE10	For 3NP1 with flat terminal For connection of copper conductors								
	00	3 x 2.5 … 16	1 NEW		**3NP1931-1BE10**		1	1 unit	1DL
			3		**3NP1933-1BE10**		1	1 unit	1DL
 3NP1921-1BE20	For 3NP1 with box terminal For connection of copper conductors								
	000 and 00	3 x 2.5 … 16	1 NEW		**3NP1921-1BE20**		1	1 unit	1DL
			3		**3NP1923-1BE20**		1	1 unit	1DL
	Connection modules								
 3NP1933-1BC00	For 32 mm cover level, with box terminal For 3NP1 with flat terminal For connection of copper conductors								
	00	3 x 6 … 70	3		**3NP1933-1BC00**		1	1 unit	1DL
			1 NEW		**3NP1931-1BC00**		1	1 unit	1DL
	Feeder terminals								
 3NP1923-1BD00	For 3NP1123 with box terminal for use up to 160 A or for infeed when using the three-phase busbar For connection of copper conductors								
	000	16 … 95	1 NEW		**3NP1921-1BD00**		1	1 unit	1DL
			3		**3NP1923-1BD00**		1	1 unit	1DL

7

Minimum order quantity (PS) or a multiple thereof can be ordered.

© Siemens 2019

Accessories

	Version	For size	SD d	Article No. www.siemens.com/product?Article No.	Price per PU	PU (UNIT, SET, M)	PS	PG
Auxiliary conductor connections								
	For connection of small loads to terminals of 3NP1. Connections in form of flat tab sleeve 6.3 x 0.8 mm, max. 5 A (1 set = 3 units)							
 3NP1933-1BG40	• For box terminal	000		**3NP1923-1BG40**		1	1 unit	1DL
		00		**3NP1933-1BG40**		1	1 unit	1DL
		1		**3NP1943-1BG40**		1	1 unit	1DL
		2, 3		**3NP1953-1BG40**		1	1 unit	1DL
	• For flat terminal	00		**3NP1933-1BG10**		1	1 unit	1DL
		1, 2, 3		**3NP1943-1BG10**		1	1 unit	1DL
	• For prism and saddle terminals	00		**3NP1933-1BG30**		1	1 unit	1DL
		1		**3NP1943-1BG30**		1	1 unit	1DL
 3NP1933-1BG10		2, 3		**3NP1953-1BG30**		1	1 unit	1DL
3-phase busbar								
	For bridge connection of 3NP1 devices in size NH000 for floor mounting on the infeed side, max. I_u of complete system 225 A							
	3-phase busbar (1 pack = 5 units)							
 3NP1923-1BF30	• For 2x 3NP1	000		**3NP1923-1BF20**		1	1 unit	1DL
	• For 3x 3NP1	000		**3NP1923-1BF30**		1	1 unit	1DL
	• For 4x 3NP1	000		**3NP1923-1BF40**		1	1 unit	1DL
	Link rail (1 pack = 3 units)							
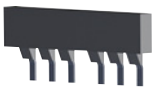 3NP1923-1BF50	• For connection of two three-phase busbars	000		**3NP1923-1BF50**		1	1 unit	1DL
	Covering caps							
 3NP1923-1BF10	• For 1 blank space on a three-phase busbar (1 set = 20 units)	000		**3NP1923-1BF10**		1	1 unit	1DL
	Feeder terminals							
 3NP1923-1BD00	• For infeed when using the three-phase busbar (1 set = 3 terminals)			**3NP1923-1BD00**		1	1 unit	1DL
Auxiliary switches								
 3NP1930-1FA00	• 1 CO contact	000	►	**3NP1920-1FA00**		1	1 unit	1DL
		00	►	**3NP1930-1FA00**		1	1 unit	1DL
		1, 2, 3	►	**3NP1940-1FA00**		1	1 unit	1DL
	• 1 CO contact, solid-state compatible	000		**3NP1920-1FB00**		1	1 unit	1DL
		00		**3NP1930-1FB00**		1	1 unit	1DL
		1, 2, 3		**3NP1940-1FB00**		1	1 unit	1DL

Minimum order quantity (PS) or a multiple thereof can be ordered.

© Siemens 2019

Isolating blades

	Version	For size	SD	Article No. www.siemens.com/product?Article No.	Price per PU	PU (UNIT, SET, M)	PS	PG
			d					
	For use in 3NP1 if only the disconnector functionality is required or as a neutral conductor in a 4-pole 3NP1							
 3NG1002, 3NG1202, 3NG1302, 3NG1402	• Simultaneous switching	000, 00		**3NG1002**		1	3 units	1BM
		1		**3NG1202**		1	1 unit	1BM
		2		**3NG1302**		1	1 unit	1BM
		3		**3NG1402**		1	1 unit	1BM
 3NP1934-1MA20	• Leading switch-on/lagging switch-off NEW	000	▶	**3NP1924-1MA20**		1	1 unit	1DL
		00	▶	**3NP1934-1MA20**		1	1 unit	1DL
		1		**3NP1944-1MA20**		1	1 unit	1DL
		2		**3NP1954-1MA20**		1	1 unit	1DL
		3		**3NP1964-1MA20**		1	1 unit	1DL

Assembly kits

	Version	For size	Number of poles	SD	Article No. www.siemens.com/product?Article No.	Price per PU	PU (UNIT, SET, M)	PS	PG
				d					
	Assembly kits for mounting on standard mounting rail								
	Size 000 is mounted on a standard mounting rail. Sizes 00 und 1 between two standard mounting rails with a spacing of either 125 or 150 mm								
		000	1 NEW	▶	**3NP1921-1EA00**		1	1 unit	1DL
			3	▶	**3NP1923-1EA00**		1	1 unit	1DL
			4 NEW		**3NP1924-1EA00**		1	1 unit	1DL
		00	1 NEW	▶	**3NP1931-1EB00**		1	1 unit	1DL
			3 or 4	▶	**3NP1933-1EB00**		1	1 unit	1DL
 3NP1923-1EA00		1	1, 3 or 4		**3NP1943-1EB00**		1	1 unit	1DL
	Assembly kit for protection against power theft NEW								
	The assembly kit closes the holes on the front of the 3NP1 (holes for voltage testing) and secures the front window such that power theft is not possible without visible damage to the 3NP1 (when the 3NP1 is locked or sealed).								
	• Contains parts for retrofitting the function on 5 3NP1 devices								
 3NP1900-1EF00		All sizes	1, 3		**3NP1900-1EF00**		1	1 unit	1DL
	Assembly kit for retrofitting of locking function								
	Not necessary for 1-pole 3NP1 devices, function is integrated								
	• Contains parts for 10 3NP1 devices								
 3NP1900-1HA00		All sizes	3		**3NP1900-1HA00**		1	1 unit	1DL

7

© Siemens 2019

Accessories

Version	For size	Number of poles	SD	Article No. www.siemens.com/product?Article No.	Price per PU	PU (UNIT, SET, M)	PS	PG
			d					
Assembly kit for mechanical connection of 1-pole and 3-pole 3NP1 devices NEW								
• For 3NP1 with floor mounting, to create 2 or 4-pole 3NP1								
	000	-	▶	**3NP1921-1EC00**		1	1 unit	1DL
	00	-	▶	**3NP1931-1EC00**		1	1 unit	1DL
	1, 2 and 3	-	▶	**3NP1941-1EC00**		1	1 unit	1DL



3NP1931-1EC00

4-pole assembly kit for mounting on 8US 60 mm busbar NEW								
Contains all parts for the mechanical connection of a 3-pole 3NP1 for busbar mounting to a 1-pole 3NP1 with floor mounting, in addition to the parts for electrical contacting of the fourth pole								
• For 3NP1 with flat terminal								
	00	-	▶	**3NP1934-1ED20**		1	1 unit	1DL
• For 3NP1 with box terminal								
	000	-	▶	**3NP1924-1ED10**		1	1 unit	1DL
	00	-	▶	**3NP1934-1ED10**		1	1 unit	1DL
• For 3NP1 with flat terminal or box terminal								
	1	-		**3NP1944-1ED00**		1	1 unit	1DL
	2 and 3	-		**3NP1954-1ED00**		1	1 unit	1DL



3NP1934-1ED20

1-pole assembly kit for mounting on 8US 60 mm busbar NEW								
With electrical connection to L1, L2 or L3 (freely selectable)								
• Contains all parts for the mounting and electrical contacting of a 1-pole 3NP1 with box terminal on an 8US 60 mm busbar								
	000	-	▶	**3NP1921-1EE10**		1	1 unit	1DL
	00	-	▶	**3NP1931-1EE10**		1	1 unit	1DL



3NP1931-1EE10

Covers

Masking plate								
	000	3		**3NP1923-1DA00**		1	1 unit	1DL
	00	3		**3NP1933-1DA00**		1	1 unit	1DL
	1	3		**3NP1943-1DA00**		1	1 unit	1DL
	2	3		**3NP1953-1DA00**		1	1 unit	1DL
	3	3		**3NP1963-1DA00**		1	1 unit	1DL

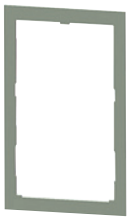

3NP1923-1DA00,
3NP1933-1DA00

Masking plate support, contains 2 units								
	000	1, 2, 3, 4		**3NP1923-1CF00**		1	1 unit	1DL
	00	1, 2, 3, 4		**3NP1933-1CF00**		1	1 unit	1DL
	1, 2, 3	1, 2, 3, 4		**3NP1943-1CF00**		1	1 unit	1DL



3NP1923-1CF00,
3NP1933-1CF00

Minimum order quantity (PS) or a multiple thereof can be ordered.

© Siemens 2019

	Version	For size	Number of poles	SD	Article No. www.siemens.com/product?Article No.	Price per PU	PU (UNIT, SET, M)	PS	PG
				d					
	Cable connection cover								
 3NP1933-1CB00	• 1 x top, 1 x bottom	000	1 NEW		**3NP1921-1CB00**		1	1 unit	1DL
			3[1]		**3NP1923-1CB00**		1	1 unit	1DL
		00	1 NEW	▶	**3NP1931-1CB00**		1	1 unit	1DL
			3[2]	▶	**3NP1933-1CB00**		1	1 unit	1DL
		1	1 NEW	▶	**3NP1941-1CB00**		1	1 unit	1DL
			3	▶	**3NP1943-1CB00**		1	1 unit	1DL
		2	1 NEW	▶	**3NP1951-1CB00**		1	1 unit	1DL
			3	▶	**3NP1953-1CB00**		1	1 unit	1DL
		3	1 NEW	▶	**3NP1961-1CB00**		1	1 unit	1DL
			3	▶	**3NP1963-1CB00**		1	1 unit	1DL
	Cable connection cover with rear reach-around protection								
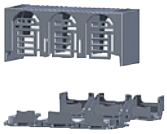 3NP1933-1CD00	• 1 x top, 1 x bottom	00	1 NEW	▶	**3NP1931-1CD00**		1	1 unit	1DL
			3[3]	▶	**3NP1933-1CD00**		1	1 unit	1DL
			3[1]	▶	**3NP1933-1CC00**		1	1 unit	1DL
		1	1 NEW	▶	**3NP1941-1CD00**		1	1 unit	1DL
			3	▶	**3NP1943-1CD00**		1	1 unit	1DL
		2	1 NEW	▶	**3NP1951-1CD00**		1	1 unit	1DL
			3	▶	**3NP1953-1CD00**		1	1 unit	1DL
		3	1 NEW	▶	**3NP1961-1CD00**		1	1 unit	1DL
			3	▶	**3NP1963-1CD00**		1	1 unit	1DL
	Reach-around protection for Siemens 8US busbar mounting								
 3NP1933-1CA10	Spare part, included in scope of supply of the 3NP1, can also be used for retrofitting to a different busbar system								
	• 1 x top, 1 x bottom	000	3		**3NP1923-1CA10**		1	1 unit	1DL
		00	3		**3NP1933-1CA10**		1	1 unit	1DL
		1	3		**3NP1943-1CA10**		1	1 unit	1DL
		2	3		**3NP1953-1CA10**		1	1 unit	1DL
		3	3		**3NP1963-1CA10**		1	1 unit	1DL
		1, 2 and 3	1 NEW		**3NP1941-1CA10**		1	1 unit	1DL
	Reach-around protection for Siemens 8US compact busbar mounting								
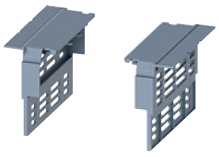 3NP1923-1CA30	For retrofitting a standard 3NP11 on the 8US compact busbar system								
	1 x top, 1 x bottom	000	3 NEW	▶	**3NP1923-1CA30**		1	1 unit	1DL
	Reach-around protection for Rittal busbar mounting								
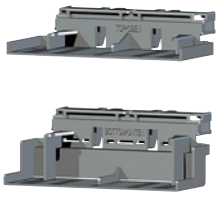 3NP1933-1CA20	Spare part, included in scope of supply of the 3NP1, can also be used for retrofitting to a different busbar system								
	• 1 x top, 1 x bottom	000	3		**3NP1923-1CA20**		1	1 unit	1DL
		00	3		**3NP1933-1CA20**		1	1 unit	1DL
		1	3		**3NP1943-1CA20**		1	1 unit	1DL
		2	3		**3NP1953-1CA20**		1	1 unit	1DL
		3	3		**3NP1963-1CA20**		1	1 unit	1DL

[1] Only for 3NP1 for mounting on busbar systems
[2] Only for 3NP1 with flat terminals
[3] Only for 3NP1 with flat terminals for floor mounting

7

© Siemens 2019

Accessories

Fuse carriers

Spare part, included in scope of supply of the 3NP1, can also be used for retrofitting fuse monitoring

Refer to the introduction for a description of the functionality of the different versions of fuse monitoring devices.

Version	For size	Number of poles	SD	Article No. www.siemens.com/product?Article No.	Price per PU	PU (UNIT, SET, M)	PS	PG
			d					
Standard - without fuse monitoring								
	000	1 NEW		**3NP1921-1GA00**		1	1 unit	1DL
		3		**3NP1923-1GA00**		1	1 unit	1DL
	00	1 NEW		**3NP1931-1GA00**		1	1 unit	1DL
		3		**3NP1933-1GA00**		1	1 unit	1DL
	1	1 NEW		**3NP1941-1GA00**		1	1 unit	1DL
		3		**3NP1943-1GA00**		1	1 unit	1DL
	2	1 NEW		**3NP1951-1GA00**		1	1 unit	1DL
		3		**3NP1953-1GA00**		1	1 unit	1DL
	3	1 NEW		**3NP1961-1GA00**		1	1 unit	1DL
		3		**3NP1963-1GA00**		1	1 unit	1DL
With MFM for max. 690 V AC (L - L) / max. 440 V DC (L+ - L-) - electromechanical fuse monitoring								
	00	3		**3NP1933-1GB10**		1	1 unit	1DL
	1	3		**3NP1943-1GB10**		1	1 unit	1DL
	2	3		**3NP1953-1GB10**		1	1 unit	1DL
	3	3		**3NP1963-1GB10**		1	1 unit	1DL
With EFM10 electronic fuse monitoring for 230 … 690 V AC (L - L)								
	000	3		**3NP1923-1GB20**		1	1 unit	1DL
	00	3		**3NP1933-1GB20**		1	1 unit	1DL
	1	3		**3NP1943-1GB20**		1	1 unit	1DL
	2	3		**3NP1953-1GB20**		1	1 unit	1DL
	3	3		**3NP1963-1GB20**		1	1 unit	1DL
With EFM15 electronic fuse monitoring for 110 … 690 V AC (L-N) NEW								
	000	1		**3NP1921-1GB41**		1	1 unit	1DL
	00	1		**3NP1931-1GB41**		1	1 unit	1DL
	1	1		**3NP1941-1GB41**		1	1 unit	1DL
	2	1		**3NP1951-1GB41**		1	1 unit	1DL
	3	1		**3NP1961-1GB41**		1	1 unit	1DL
With EFM15 electronic fuse monitoring for 190 … 690 V AC (L-L) NEW								
	000	3		**3NP1923-1GB42**		1	1 unit	1DL
	00	3		**3NP1933-1GB42**		1	1 unit	1DL
	1	3		**3NP1943-1GB42**		1	1 unit	1DL
	2	3		**3NP1953-1GB42**		1	1 unit	1DL
	3	3		**3NP1963-1GB42**		1	1 unit	1DL


3NP1923-1GA00


3NP1933-1GB10


3NP1933-1GB20


3NP1931-1GB41

7

Minimum order quantity (PS) or a multiple thereof can be ordered.

© Siemens 2019

Version	For size	Number of poles	SD d	Article No. www.siemens.com/product?Article No.	Price per PU	PU (UNIT, SET, M)	PS	PG
With EFM15 electronic fuse monitoring for 24 AC ... 240 V AC (L-N) / 24 ... 250 V DC (L+ - L-) NEW								
	000	1		**3NP1921-1GB43**		1	1 unit	1DL
	00	1		**3NP1931-1GB43**		1	1 unit	1DL
	1	1		**3NP1941-1GB43**		1	1 unit	1DL
	2	1		**3NP1951-1GB43**		1	1 unit	1DL
	3	1		**3NP1961-1GB43**		1	1 unit	1DL
With EFM15 for 120 ... 440 V DC (L+/L-) – electronic fuse monitoring NEW								
	000	1		**3NP1921-1GB44**		1	1 unit	1DL
	00	1		**3NP1931-1GB44**		1	1 unit	1DL
	1	1		**3NP1941-1GB44**		1	1 unit	1DL
	2	1		**3NP1951-1GB44**		1	1 unit	1DL
	3	1		**3NP1961-1GB44**		1	1 unit	1DL
With EFM15 electronic fuse monitoring for 220 ... 440 V DC (L+/L-) NEW								
	000	3		**3NP1923-1GB45**		1	1 unit	1DL
	00	3		**3NP1933-1GB45**		1	1 unit	1DL
	1	3		**3NP1943-1GB45**		1	1 unit	1DL
	2	3		**3NP1953-1GB45**		1	1 unit	1DL
	3	3		**3NP1963-1GB45**		1	1 unit	1DL
With EFM20 electronic fuse monitoring for 230 ... 690 V AC (L / L)								
	000	3		**3NP1923-1GB30**		1	1 unit	1DL
	00	3		**3NP1933-1GB30**		1	1 unit	1DL
	1	3		**3NP1943-1GB30**		1	1 unit	1DL
	2	3		**3NP1953-1GB30**		1	1 unit	1DL
	3	3		**3NP1963-1GB30**		1	1 unit	1DL
With EFM25 electronic fuse monitoring for 220 ... 440 V DC (L+ / L-)								
	000	3		**3NP1923-1GB50**		1	1 unit	1DL
	00	3		**3NP1933-1GB50**		1	1 unit	1DL
	1	3		**3NP1943-1GB50**		1	1 unit	1DL
	2	3		**3NP1953-1GB50**		1	1 unit	1DL
	3	3		**3NP1963-1GB50**		1	1 unit	1DL


3NP1931-1GB43


3NP1931-1GB44


3NP1923-1GB45


3NP1923-1GB30


3NP1923-1GB50

7

© Siemens 2019

Overview

The 3NP1 fuse switch disconnectors are suitable for all fuses in LV HRC design, see chapter "Fuse Systems".

SITOR semiconductor fuses in LV HRC design can also be used, although it must be noted that, compared to cable and line protection fuses, these get much hotter during operation. For this reason, the fuse must be operated below the rated current I_n of the device (derating) when installed in a closed switching device.

The following table shows the permissible load currents of the SITOR semiconductor fuses for installation in 3NP1. The values were determined using the conductor cross-sections specified in the table.

Note

If using smaller cross-sections, a considerably higher derating is required due to the lower heat dissipation.

Derating values of 3NP1 fuse switch disconnectors when using SITOR fuses

SITOR semiconductor fuse data						Permissible load currents of fuse when installed in:					
						3NP1 for floor mounting			3NP1 for busbar mounting		
Type[1) 2)]	Rated current I_n	Rated voltage[3)]	Operational class	Size	Required conductor cross-section Cu	Type	Size	Permissible load current[4)]	Type	Size	Permissible load current[4) 5)]
	A	V AC			mm²			A			A
3NC23..	150	500	gR	3	70	3NP1163	3	140	3NP1163	3	150
3NC2425..	200	500	gR	3	95	3NP1163	3	175	3NP1163	3	190
3NC2427..	250	500	gR	3	120	3NP1163	3	220	3NP1163	3	237
3NC2428..	300	500	gR	3	185	3NP1163	3	250	3NP1163	3	285
3NC2431..	350	500	gR	3	240	3NP1163	3	320	3NP1163	3	332
3NC2432..	400	500	aR	3	240	3NP1163	3	370	3NP1163	3	380
3NC3336-1	630	1000	aR	3	2x (40x5)	3NP1163	3	500	3NP1163	3	500
3NC3430-1	315	1250	aR	3	2x95	3NP1163	3	280	3NP1163	3	285
3NC3432-1	400	1250	aR	3	2x120	3NP1163	3	340	3NP1163	3	340
3NC3434-1	500	1250	aR	3	2x150	3NP1163	3	400	3NP1163	3	425
3NC3436-1	630	1250	aR	3	2x (40x5)	3NP1163	3	460	3NP1163	3	535
3NC8423..	150	660	gR	3	70	3NP1163	3	120	3NP1163	3	140
3NC8425..	200	660	gR	3	95	3NP1163	3	160	3NP1163	3	190
3NC8427..	250	660	gR	3	120	3NP1163	3	200	3NP1163	3	240
3NC8431..	350	660	gR	3	240	3NP1163	3	270	3NP1163	3	300
3NC8434..	500	660	gR	3	2x 150	3NP1163	3	385	3NP1163	3	385
3NE1020-2	80	690	gR	00	25	3NP1133	00	80	3NP1133	00	80
3NE1021-0	100	690	gS	00	35	3NP1133	00	100	3NP1133	00	100
3NE1021-2	100	690	gR	00	35	3NP1133	00	95	3NP1133	00	95
3NE1022-0	125	690	gS	00	50	3NP1133	00	120	3NP1133	00	120
3NE1022-2	125	690	gR	00	50	3NP1133	00	115	3NP1133	00	115
3NE1224-0	160	690	gS	1	70	3NP1143 3NP1153	1 2	160 160	3NP1143 3NP1153	1 2	160 160
3NE1224-2/-3	160	690	gR	1	70	3NP1143 3NP1153	1 2	150 200	3NP1143 3NP1153	1 2	152 200
3NE1224-2/-3	160	690	gR	1	70	3NP1143 3NP1153	1 2	150 160	3NP1143 3NP1153	1 2	152 160
3NE1225-2/-3	200	690	gR	1	95	3NP1143 3NP1153	1 2	180 190	3NP1143 3NP1153	1 2	180 190
3NE1227-0	250	690	gS	1	120	3NP1143 3NP1153	1 2	235 250	3NP1143 3NP1153	1 2	238 250
3NE1227-2/-3	250	690	gR	1	120	3NP1143 3NP1153	1 2	220 235	3NP1143 3NP1153	1 2	213 235
3NE1230-0	315	690	gS	1	2x 70	3NP1153	2	290	3NP1153	2	315
3NE1230-2/-3	315	690	gR	1	2x 70	3NP1153 3NP1163	2 3	278 380	3NP1153 3NP1163	2 3	315 400
3NE1331-0	350	690	gS	2	2x 95	3NP1153 3NP1163	2 3	315 340	3NP1153 3NP1163	2 3	350 350
3NE1331-2/-3	350	690	gR	2	2x 95	3NP1153 3NP1163	2 3	300 330	3NP1153 3NP1163	2 3	330 350
3NE1332-0	400	690	gS	2	2x 95	3NP1153	2	340	3NP1153	2	380
3NE1332-2/-3	400	690	gR	2	2x 95	3NP1153 3NP1163	2 3	328 370	3NP1153 3NP1163	2 3	360 400
3NE1333-0	450	690	gS	2	2x 120	3NP1163	3	450	3NP1163	3	430
3NE1333-2/-3	450	690	gR	2	2x 120	3NP1163	3	430	3NP1163	3	420

Minimum order quantity (PS) or a multiple thereof can be ordered.

© Siemens 2019

SITOR semiconductor fuse data						Permissible load currents of fuse when installed in:					
						3NP1 for floor mounting			3NP1 for busbar mounting		
Type[1) 2)]	Rated current I_n	Rated voltage[3)]	Operational class	Size	Required conductor cross-section Cu	Type	Size	Permissible load current[4)]	Type	Size	Permissible load current[4) 5)]
	A	V AC			mm²			A			A
3NE1334-0	500	690	gS	2	2x 120	3NP1163	3	500	3NP1163	3	450
3NE1334-2/-3	500	690	gR	2	2x 120	3NP1163	3	475	3NP1163	3	450
3NE1435-0	560	690	gS	3	2x 150	3NP1163	3	560	3NP1163	3	520
3NE1435-2/-3	560	690	gR	3	2x 150	3NP1163	3	555	3NP1163	3	510
3NE1436-0	630	690	gS	3	2x 185	3NP1163	3	630	3NP1163	3	585
3NE1436-2/-3	630	690	gR	3	2x 185	3NP1163	3	620	3NP1163	3	570
3NE1437-0	710	690	gS	3	2x (40x5)	--	--	--	3NP1163	3	605
3NE1437-1	710	600	gR	3	2x (40x5)	--	--	--	3NP1163	3	590
3NE1437-2/-3	710	690	gR	3	2x (40x5)	--	--	--	3NP1163	3	580
3NE1438-0	800	690	gS	3	2x (50x5)	--	--	--	3NP1163	3	630
3NE1438-1	800	600	gR	3	2x (50x5)	--	--	--	3NP1163	3	610
3NE1438-2/-3	800	690	gR	3	2x (50x5)	--	--	--	3NP1163	3	600
3NE1447-2/-3	670	690	gR	3	2x (40x5)	--	--	--	3NP1163	3	575
3NE1448-2/-3	850	690	gR	3	2x (40x8)	--	--	--	3NP1163	3	630
3NE1802-0	40	690	gS	000	10	3NP1123 3NP1133	000 00	40 40	3NP1123 3NP1133	000 00	40 40
3NE1803-0	35	690	gS	000	6	3NP1123 3NP1133	000 00	35 35	3NP1123 3NP1133	000 00	35 35
3NE1813-0	16	690	gS	000	1.5	3NP1123 3NP1133	000 00	16 16	3NP1123 3NP1133	000 00	16 16
3NE1814-0	20	690	gS	000	2.5	3NP1123 3NP1133	000 00	20 20	3NP1123 3NP1133	000 00	20 20
3NE1815-0	25	690	gS	000	4	3NP1123 3NP1133	000 00	25 25	3NP1123 3NP1133	000 00	25 25
3NE1817-0	50	690	gS	000	10	3NP1123 3NP1133	000 00	50 50	3NP1123 3NP1133	000 00	50 50
3NE1818-0	63	690	gS	000	16	3NP1123 3NP1133	000 00	63 63	3NP1123 3NP1133	000 00	63 63
3NE1820-0	80	690	gS	000	25	3NP1123 3NP1133	000 00	80 80	3NP1123 3NP1133	000 00	80 80
3NE3221	100	1000	aR	1	35	3NP1143 3NP1153	1 2	88 95	3NP1143 3NP1153	1 2	95 100
3NE3222	125	1000	aR	1	50	3NP1143 3NP1153	1 2	102 110	3NP1143 3NP1153	1 2	113 125
3NE3224	160	1000	aR	1	70	3NP1143 3NP1153	1 2	130 140	3NP1143 3NP1153	1 2	140 150
3NE3225	200	1000	aR	1	95	3NP1143 3NP1153	1 2	163 175	3NP1143 3NP1153	1 2	170 180
3NE3227	250	1000	aR	1	120	3NP1143 3NP1153	1 2	195 210	3NP1143 3NP1153	1 2	200 215
3NE3230-0B	315	1000	aR	1	185	3NP1153	2	270	3NP1153	2	265
3NE3231	350	1000	aR	1	240	3NP1153	2	290	3NP1153	2	280
3NE3232-0B	400	1000	aR	1	240	3NP1153	2	320	3NP1153	2	310
3NE3233	450	1000	aR	1	2x 150	3NP1153	2	360	3NP1153	2	330
3NE3332-0B	400	1000	aR	2	240	3NP1153 3NP1163	2 3	330 360	3NP1163 --	3 --	360 --
3NE3333	450	1000	aR	2	2x 150	3NP1163	3	375	3NP1163	3	390
3NE3334-0B	500	1000	aR	2	2x 150	3NP1163	3	420	3NP1163	3	415
3NE3335	560	1000	aR	2	2x 185	3NP1163	3	475	3NP1163	3	460
3NE3336	630	1000	aR	2	2x 185	3NP1163	3	540	3NP1163	3	500
3NE3337-8	710	900	aR	2	2x (40x5)	3NP1163	3	580	3NP1163	3	500
3NE3338-8	800	800	aR	2	2x 240	3NP1163	3	605	3NP1163	3	500
3NE3340-8	900	690	aR	2	2x (40x8)	3NP1163	3	630	3NP1163	3	500
3NE4101	32	1000	gR	0	6	3NP1143	1	30	3NP1143	1	32
3NE4102	40	1000	gR	0	10	3NP1143	1	35	3NP1143	1	40
3NE4117	50	1000	gR	0	10	3NP1143	1	42	3NP1143	1	50
3NE4118	63	1000	aR	0	16	3NP1143	1	55	3NP1143	1	60
3NE4120	80	1000	aR	0	25	3NP1143	1	71	3NP1143	1	76
3NE4121	100	1000	aR	0	35	3NP1143	1	84	3NP1143	1	93
3NE4122	125	1000	aR	0	50	3NP1143	1	107	3NP1143	1	115
3NE4124	160	1000	aR	0	70	3NP1143	1	134	3NP1143	1	144
3NE4327-0B	250	800	aR	2	150	3NP1153 3NP1163	2 3	195 215	3NP1163 3NP1163	3 3	220 220

Minimum order quantity (PS) or a multiple thereof can be ordered.

© Siemens 2019

Fuses

SITOR semiconductor fuse data						Permissible load currents of fuse when installed in:					
						3NP1 for floor mounting			3NP1 for busbar mounting		
Type[1) 2)]	Rated current I_n	Rated voltage[3)]	Operational class	Size	Required conductor cross-section Cu	Type	Size	Permissible load current[4)]	Type	Size	Permissible load current[4) 5)]
	A	V AC			mm²			A			A
3NE4330-0B	315	800	aR	2	240	3NP1153 3NP1163	2 3	240 270	3NP1163 --	3 --	255 --
3NE4333-0B	450	800	aR	2	2x (30x5)	3NP1163	3	370	3NP1163	3	355
3NE4334-0B	500	800	aR	2	2x (30x5)	3NP1163	3	410	3NP1163	3	390
3NE4337	710	800	aR	2	2x (50x5)	3NP1163	3	540	3NP1163	3	500
3NE8015-1	25	690	gR	00	4	3NP1133	00	25	3NP1133	00	25
3NE8003-1	35	690	gR	00	6	3NP1133	00	32	3NP1133	00	35
3NE8017-1	50	690	gR	00	10	3NP1133	00	43	3NP1133	00	50
3NE8018-1	63	690	gR	00	16	3NP1133	00	52	3NP1133	00	60
3NE8020-1	80	690	aR	00	25	3NP1133	00	65	3NP1133	00	72
3NE8021-1	100	690	aR	00	35	3NP1133	00	85	3NP1133	00	85
3NE8022-1	125	690	aR	00	50	3NP1133	00	100	3NP1133	00	100
3NE8024-1	160	690	aR	00	70	3NP1133	00	120	3NP1133	00	115

1) Due to the mechanical stress on the relatively long fuse blades, SITOR 3NE41 semiconductor fuses should only be switched occasionally and only at zero current.

2) For permissible load currents for 3NE8…-0MK, see Configuration Manual "Fuse Systems", or on request.

3) 3NP1 fuse switch disconnectors may be operated at up to 1000 V AC/DC with the following restrictions:
- Degree of pollution 2 (instead of 3)
- AC20 or DC20 – i.e. switching only without load

4) In the case of cyclic loads, the currents may have to be further reduced (precise values on request).

5) Values apply if used with 30 x 10 mm rails; for size 00: 12 x 5 mm and top busbar connection – values for other configurations available on request.

Minimum order quantity (PS) or a multiple thereof can be ordered.

© Siemens 2019

3Overview

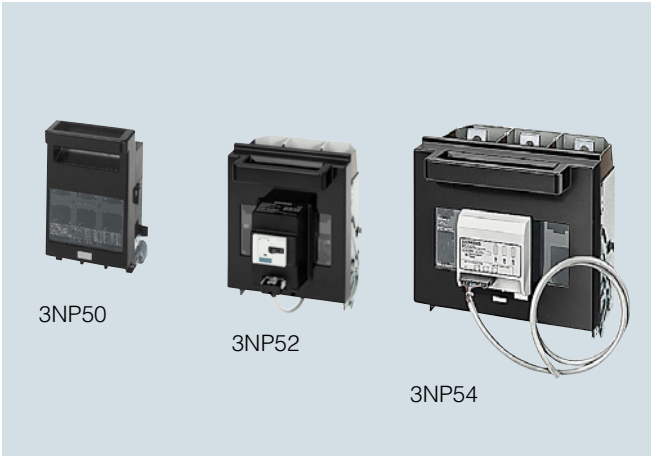

3NP5 fuse switch disconnector range

3NP5 fuse switch disconnectors are controls for the occasional manual switching/isolating of loads and distribution boards. They are able to switch on, control and switch off the specified rated current (including a specific overload).

With the 3NP5 fuse switch disconnectors, all poles of downstream electric loads can be safely disconnected from the system under load.

Application

The 3NP5 fuse switch disconnectors are ideally suited for surface mounting and installation in the ALPHA distribution boards and SIVACON sicube 8MF1 system cubicles.

The ability to mount them on a range of different busbar systems allows their very diverse implementation in switchboard cabinet and control engineering.

The 3NP5 fuse switch disconnectors are ideal for operation in combination with other switching devices, for example in capacitor modules for reactive-power compensation.

In conjunction with semiconductor protection fuses (e.g. SITOR), these are used for the effective protection of frequency converters and soft starters.

The 3NP5 fuse switch disconnectors are suitable for use in any climate and comply with standards IEC 60947-1, IEC 60947-3 and DIN VDE 0660 Part 107.

In addition, the 3NP5 series of fuse switch disconnectors complies with the requirements of BS 5419 and is also approved for operation in marine applications.

All 3NP5 fuse switch disconnectors can be sealed as standard (or can be sealed through accessories).

© Siemens 2019

Technical specifications

Standards		**IEC 60947-1, IEC 60947-3, VDE 0660 Part 107**						
Type		**3NP50**	**3NP52**		**3NP53**		**3NP54**	
Rated uninterrupted current I_u	A	160	250		400		630	
For fuse links acc. to IEC 60269-2	Size	00	1 and 0		2 and 1		3 and 2	
Conventional free-air thermal current I_{th}	A	160	250		400		630	
Rated operational voltage U_e								
• 50/60 Hz AC	V	690						
• DC	V	440 (3 conducting paths series-connected), 220 (2 conducting paths series-connected, with fuse monitoring through 3RV)						
Rated insulation voltage U_i	V	690[1]	690[1]		690[1]		690[1]	
Rated impulse withstand voltage U_{imp}	kV	6	6		6		6	
Rated cond. short-circuit current with fuses (by fast switch on)								
Rated current	Size/A	00/160	1/250		2/400		3/630	
• At 500 V AC (rms value)	kA	50	50		50		50	
Permissible let-through current of the fuses (peak value)	kA	15	25		40		50	
Short-circuit strength with fuses (with closed disconnector)								
• Rated current	Size/A	00/160	1/250		2/400		3/630	
• At 500 V AC (rms value)	kA	100	100		50		50	
• Maximum permissible let-through I^2t value	kA^2s	223	780		2150		5400	
• Permissible let-through current of the fuses (peak value)	kA	23	32		40		60	
Rated short-circuit making capacity with isolating blades[2]	Size	00	1		2		3	
• At 500 V AC (peak value)	kA	6	17		17		17	
Rated making and breaking capacity[2] (infeed from top or bottom)[3]	Size	00	1	0	2	1	3	2
Breaking current I_c								
• At p.f. = 0.35, rms value at 500 V	A	1300	2500	1600	4000	2500	5040	4000
• At p.f. = 0.35, rms value at 690 V	A	800	1280	1000	2520	1600	3200	2520
• At p.f. = 0.35 and 400 V AC, with fuse links, rms value	A	1600	2500	1600	4000	2500	5040	4000
Rated operational current I_e								
• At AC-21B, AC-22B, AC-23B at 400 V AC, with fuse links	A	160	250	160	400	250	630	400
• At AC-21B, AC-22B, AC-23B at 500 V AC, with fuse links	A	160	250	160	400	250	630	400
• At AC-21B, AC-22B at AC 690 V	A	160	250	160	400	250	630	400
• At AC-23B at AC 690 V	A	100	160	125	315	200	400	315
At 220 (440) V DC, with 2 (3) conducting paths series-connected and fuse links:								
• Breaking current I_c (L/R = 15 ms)	A	640	1000	640	1600	1600	2520	1600
• Rated operational current I_e at DC-23B	A	160	250	160	400	250	630	400
Capacitor switching capacity								
• Capacitor rating at 400 V AC	kvar	80	90		150		250	
• Rated current I_n at 525 V AC	A	116	130		216		361	
• Capacitor rating	kvar	100	125		200		300	
• Rated current I_n	A	110	137		220		330	
Permissible ambient temperature[4]	°C	-25 ... +55 for operation[5], -50 ... +80 during storage						
Mechanical endurance, operating cycles		1600						
Degree of protection								
• Without molded-plastic masking frame		IP00, for 3NP52 with terminal clamp connection, degree of protection IP10						
• With molded-plastic masking frame with closed fuse carrier on the operator side		IP30						
• With molded-plastic masking frame with open fuse carrier		IP10						
Power loss of the switch at I_{th} (without power loss of the fuse links)								
• Without busbar adapter	W	7.8 (16.3)[5]	7.5		15		39	
Maximum power loss of the usable fuses (per fuse)[6]	W	12	23		37		50	
Main conductor connections								
Flat terminal for connection of								
• Crimped cable lugs acc. to DIN 46234 (conductor cross-section, stranded)	mm^2	2.5 ... 120	6 ... 150		6 ... 240		6 ... 2 × 240	
• Pressed cable lugs acc. to DIN 46235 (conductor cross-section, stranded)	mm^2	16 ... 70	16 ... 150		16 ... 240		16 ... 2 × 240	
• Busbars (usable busbar width)	mm	16 ... 22	22 ... 30		22 ... 30		22 ... 30	
Clamp terminals	mm^2	2.5 ... 50[7]	35 ... 120		--		--	
Auxiliary switch 1 NO + 1 NC (accessories)		The same voltage potential must be applied to the NO and NC contacts						
• At 50/60 Hz to 400 V AC, rated operational current I_e at AC-12/AC-15A	A	16/6						
• Flat plug-in terminals (DIN 46244)		A 6.3 ... 0.8						
Permissible mounting position		Vertical or horizontal installation (switching capacity may be reduced with horizontal installation)						
Signaling contact for electronic fuse monitoring		1 NO + 1 NC						
• Rated operational current I_e at 250 V, DC-13	A	0.27						
• Rated operational current I_e at 240 V, AC-15	A	1.5						
• Thermal free-air rated current I_{th}	A	5						

1) When observing degree of pollution 2 (instead of 3) operation is also possible up to U_i = 1000 V.

2) Rated making and breaking current according to IEC 60947-3:
Rated making current
I = 10 × I_e (AC-23); 3 × I_e (AC-22); 1.5 × I_e (AC-21);
Rated breaking current
I_e = 8 × I_e (AC-23); 3 × I_e (AC-22); 1.5 × I_e (AC-21).

3) When electronic fuse monitoring devices are used, infeed must be from the top.

4) When using isolating blades. If using fuse links, please observe specifications of fuse manufacturer.

5) With busbar adapter.

6) Values are valid when using LV HRC fuse systems with characteristic gG. If using fuses for semiconductor protection, please refer to the Derating table, see page 7/224.

7) When connecting one conductor.
For 2 conductors max. 1 x 50 mm^2 and 1 x 35 mm^2.

Minimum order quantity (PS) or a multiple thereof can be ordered.

© Siemens 2019

Selection and ordering data

	Rated uninterrupted current I_u	Connection type	Size	Auxiliary switches at the switch disconnectors Version	SD	**Degree of protection IP00, without fuse links, without isolating blades, with terminal screws** Article No. www.siemens.com/product?Article No.	Price per PU	PU (UNIT, SET, M)	PS	PG
	A				d					
Completely compartmentalized, with high speed closing feature										
 3NP5060-0CA00	160	Flat terminals[1]	00	Without[2]	▶	**3NP5060-0CA00**		1	1 unit	1CL
				1 NO + 1 NC		**3NP5060-0CA10**		1	1 unit	1CL
		Clamp terminals	00	Without[2]		**3NP5060-0CB00**		1	1 unit	1CL
				1 NO + 1 NC		**3NP5060-0CB10**		1	1 unit	1CL
 3NP5260-0CA00	250	Flat terminals	1	Without	▶	**3NP5260-0CA00**		1	1 unit	1CL
				1 NO + 1 NC		**3NP5260-0CA10**		1	1 unit	1CL
		Clamp terminals	1	Without		**3NP5260-0CB00**		1	1 unit	1CL
				1 NO + 1 NC		**3NP5260-0CB10**		1	1 unit	1CL
 3NP5360-0CA00	400	Flat terminals	2	Without	▶	**3NP5360-0CA00**		1	1 unit	1CL
				1 NO + 1 NC		**3NP5360-0CA10**		1	1 unit	1CL
 3NP5460-0CA00	630	Flat terminals	3	Without	▶	**3NP5460-0CA00**		1	1 unit	1CL
				1 NO + 1 NC		**3NP5460-0CA10**		1	1 unit	1CL

[1] For 3NP5060 with flat terminals, appropriate 3NY1106 cable lug covers must be used to provide a finger-safe cover, according to DIN VDE 0106 Part 100, see page 7/222, Accessories.

[2] If the auxiliary switch is retrofitted, additional drill holes are required on the switch.

© Siemens 2019

For 40 mm busbar system

Selection and ordering data

Rated uninterrupted current I_u	Connection type	Size	Auxiliary switches at the switch disconnectors Version	SD	**Degree of protection IP00, without fuse links, without isolating blades, with terminal screws** Article No. www.siemens.com/product?Article No.	Price per PU	PU (UNIT, SET, M)	PS	PG
A				d					
Completely compartmentalized, with high speed closing feature[1]									
For busbars with a width of 12 mm and a thickness of 5 mm or 10 mm									
160	Flat terminals	00	Without		**3NP5065-1CF00**		1	1 unit	1CL
			1 NO + 1 NC		**3NP5065-1CF10**		1	1 unit	1CL
	Clamp terminals	00	Without		**3NP5065-1CG00**		1	1 unit	1CL
			1 NO + 1 NC		**3NP5065-1CG10**		1	1 unit	1CL

[1] For accessories and more devices on busbar systems, see page 7/222, Accessories.

Minimum order quantity (PS) or a multiple thereof can be ordered.

© Siemens 2019

Overview

Note:

For disconnector versions "for installation in any distribution board" and busbar adapters, see page 7/223.

© Siemens 2019

With fuse monitoring

Selection and ordering data

Fuse monitoring by circuit breakers

Floor mounting

Rated uninterrupted current I_u	Connection type	Size	Auxiliary switches: At switch disconnectors	Auxiliary switches: At circuit breakers	SD	**Degree of protection IP00, without fuse links, without isolating blades, with terminal screws** Article No. www.siemens.com/product?Article No.	Price per PU	PU (UNIT, SET, M)	PS	PG
A			Version	Version	d					
Completely compartmentalized, with high speed closing feature with fuse monitoring by SIRIUS circuit breakers										
With plug-in connection of the auxiliary switch connecting cable (length approx. 1 m) to the circuit breakers										
160	Flat terminals[1]	00	1 NO + 1 NC	1 NO + 1 NC	▶	**3NP5060-0EA86**		1	1 unit	1CL
			1 NO + 1 NC	2 NO		**3NP5060-0EA26**		1	1 unit	1CL
	Clamp terminals	00	1 NO + 1 NC	1 NO + 1 NC		**3NP5060-0EB86**		1	1 unit	1CL
			1 NO + 1 NC	2 NO		**3NP5060-0EB26**		1	1 unit	1CL
250	Flat terminals	1	1 NO + 1 NC	1 NO + 1 NC	▶	**3NP5260-0EA86**		1	1 unit	1CL
			1 NO + 1 NC	2 NO		**3NP5260-0EA26**		1	1 unit	1CL
	Clamp terminals	1	1 NO + 1 NC	1 NO + 1 NC		**3NP5260-0EB86**		1	1 unit	1CL
			1 NO + 1 NC	2 NO		**3NP5260-0EB26**		1	1 unit	1CL
400	Flat terminals	2	1 NO + 1 NC	1 NO + 1 NC	▶	**3NP5360-0EA86**		1	1 unit	1CL
			1 NO + 1 NC	2 NO		**3NP5360-0EA26**		1	1 unit	1CL
630	Flat terminals	3	1 NO + 1 NC	1 NO + 1 NC	▶	**3NP5460-0EA86**		1	1 unit	1CL
			1 NO + 1 NC	2 NO		**3NP5460-0EA26**		1	1 unit	1CL


3NP5260-0EA86


3NP5360-0EA86


3NP5460-0EA86

[1] For 3NP5060 with flat terminals, appropriate 3NY1106 cable lug covers must be used to provide a finger-safe cover, according to DIN VDE 0106 Part 100, see page 7/222, Accessories.

Minimum order quantity (PS) or a multiple thereof can be ordered.

© Siemens 2019

For 40 mm busbar system

Rated uninterrupted current I_u	Connection type	Size	Auxiliary switches		SD	**Degree of protection IP00, without fuse links, without isolating blades, with terminal screws**		PU (UNIT, SET, M)	PS	PG
			At switch disconnectors	At circuit breakers						
A			Version	Version	d	Article No. www.siemens.com/product?Article No.	Price per PU			
Completely compartmentalized, with high speed closing feature with fuse monitoring by SIRIUS circuit breakers[1)]										
For busbars with a width of 12 mm and a thickness of 5 mm or 10 mm										
160	Flat terminals	00	1 NO + 1 NC	1 NO + 1 NC		**3NP5065-1EF86**		1	1 unit	1CL
			1 NO + 1 NC	2 NO		**3NP5065-1EF26**		1	1 unit	1CL
	Clamp terminals	00	1 NO + 1 NC	1 NO + 1 NC		**3NP5065-1EG86**		1	1 unit	1CL
			1 NO + 1 NC	2 NO		**3NP5065-1EG26**		1	1 unit	1CL

[1)] For accessories and more devices on busbar systems, see chapter "Busbar Systems".

For 60 mm busbar system

Note:

For disconnector versions "for installation in any distribution board" and busbar adapters, see chapter "Busbar Systems".

© Siemens 2019

With fuse monitoring

Fuse monitoring by electronic fuse monitoring devices

Floor mounting

Rated uninterrupted current I_u	Connection type	Size	Auxiliary switches: At switch disconnectors	Auxiliary switches: At fuse monitoring devices	SD	**Degree of protection IP00, without fuse links, without isolating blades, with terminal screws**	PU (UNIT, SET, M)	PS	PG
A			Version	Version	d	Article No. www.siemens.com/product?Article No. / Price per PU			
Completely compartmentalized, with high-speed closing feature with EFM electronic fuse monitoring (self-powered), open-circuit principle									
For rated operational voltages U_e from 400 V to 500 V AC, infeed must come from above! With plug-in connection for connecting cables from auxiliary switches (approx. 1 m long) to the fuse monitoring device, - Status indicator: Green LED illuminated, - Fault indication: Green LED flashing, - Fuse failure: Red LED (display per phase)									
160	Flat terminals[1)]	00	1 NO + 1 NC	2 NO + 1 NC		**3NP5060-0HA13**	1	1 unit	1CL
	Clamp terminals	00	1 NO + 1 NC	2 NO + 1 NC		**3NP5060-0HB13**	1	1 unit	1CL
250	Flat terminals	1	1 NO + 1 NC	2 NO + 1 NC		**3NP5260-0HA13**	1	1 unit	1CL
400	Flat terminals	2	1 NO + 1 NC	2 NO + 1 NC		**3NP5360-0HA13**	1	1 unit	1CL
630	Flat terminals	3	1 NO + 1 NC	2 NO + 1 NC		**3NP5460-0HA13**	1	1 unit	1CL


3NP5060-0HA13


3NP5260-0HA13


3NP5360-0HA13


3NP5460-0HA13

1) For 3NP5060 with flat terminals, appropriate 3NY1106 cable lug covers must be used to provide a finger-safe cover, according to DIN VDE 0106 Part 100, see page 7/222, Accessories.

Minimum order quantity (PS) or a multiple thereof can be ordered.

© Siemens 2019

For 40 mm busbar system

Rated uninterrupted current I_u	Connection type	Size	Auxiliary switches		SD	**Degree of protection IP00, without fuse links, without isolating blades, with terminal screws**		PU (UNIT, SET, M)	PS	PG
			At switch disconnectors	At fuse monitoring devices						
A			Version	Version	d	Article No. www.siemens.com/product?Article No.	Price per PU			
Completely compartmentalized, with high-speed closing feature with EFM electronic fuse monitoring (self-powered), open-circuit principle										
For rated operational voltages U_e from 400 V to 500 V AC, infeed must come from above!										
For busbars with a width of 12 mm and thickness of 5 mm or 10 mm										
160	Flat terminals	00	1 NO + 1 NC	2 NO + 1 NC		**3NP5065-1HF13**		1	1 unit	1CL



3NP5065-1HF13

For 60 mm busbar system

Note:

For disconnector versions "for installation in any distribution board" and busbar adapters, see page 7/223.

© Siemens 2019

Selection and ordering data

	Version		For fuse switch disconnectors	SD d	Article No. www.siemens.com/product?Article No.	Price per PU	PU (UNIT, SET, M)	PS	PG
	Fuse carriers								
 3NY1074			3NP506.-.C..0		**3NY1074**		1	1 unit	1CL
			3NP5260-.C..0		**3NY1371**		1	1 unit	1CL
			3NP5360-.C..0		**3NY1372**		1	1 unit	1CL
			3NP5460-.C..0		**3NY1373**		1	1 unit	1CL
	With fuse monitoring by 3RV1 circuit breakers (with auxiliary switch 1 NO + 1 NC), with plug-in connection, without connector and connecting cable		3NP506.-.E..6		**3NY1420**		1	1 unit	1CL
			3NP5260-.E..6		**3NY1421**		1	1 unit	1CL
			3NP5360-.E..6		**3NY1422**		1	1 unit	1CL
			3NP5460-.E..6		**3NY1423**		1	1 unit	1CL
	Connector and connecting cable								
	1 m long		3NP5 with 3RV1		**3NY1910**		1	1 unit	1CL
	3 m long				**3NY1911**		1	1 unit	1CL
 3NY1513-3	With electronic fuse monitoring for 400 V ... 500 V (with auxiliary switch 1 NO + 1 NC), with plug-in connection, without connector and connecting cable		3NP506.-.H.13		**3NY1513-0**		1	1 unit	1CL
			3NP5260-.H.13		**3NY1513-2**		1	1 unit	1CL
			3NP5360-.H.13		**3NY1513-3**		1	1 unit	1CL
			3NP5460-.H.13		**3NY1513-4**		1	1 unit	1CL
 3NY1915	Connector and connecting cable (6-pole) 3 m long		3NP5 with EFM		**3NY1915**		1	1 unit	1CL
	Auxiliary switch 1 NO + 1 NC								
 3NY3033	With actuating cams, screws and washers (mounting kit)		3NP50[1)]		**3NY3033**		1	1 unit	1CL
 3NY3034	With fixing bracket and screws (mounting kit)		3NP52 ... 3NP54		**3NY3034**		1	1 unit	1CL
	Arc chutes								
 3NY4031	(3 units each are required for 3NP52, 3NP53 and 3NP54)		3NP50		**3NY4031**		1	1 unit	1CL
			3NP52		**3NY4011**		1	1 unit	1CL
 3NY4011			3NP53, 3NP54		**3NY4012**		1	1 unit	1CL
	Molded-plastic masking frames								
	As replacement for masking frames from assembly kits for flush mounting (without fixing brackets and small components)	300 x 220 mm	3NY1210		**3NY1102**		1	1 unit	1CL
		300 x 245 mm	3NY1211		**3NY1103**		1	1 unit	1CL
		300 x 290 mm	3NY1212		**3NY1104**		1	1 unit	1CL

[1)] If retrofitted, drill holes are required.

Minimum order quantity (PS) or a multiple thereof can be ordered.

© Siemens 2019

Assembly kits for distribution systems

	Version	For fuse switch disconnectors	Dimensions mm	SD d	Article No. www.siemens.com/product?Article No.	Price per PU	PU (UNIT, SET, M)	PS	PG
For installation in any distribution board									
	Molded-plastic masking frames		Height x width						
	For installation in cabinet	3NP50 with and without auxiliary switch	215 x 135		**3NY1105**		1	1 unit	1CL
		With auxiliary switch	215 x 135		**3NY1115**		1	1 unit	1CL
	For installation in metal front panels	With and without auxiliary switch	220 x 160		**3NY1125**		1	1 unit	1CL
	For covering connection terminals	3NP50 with and without auxiliary switch	265 x 135		**3NY1107**		1	1 unit	1CL
 3NY1107									
	For covering cable lug connections	3NP50 with and without auxiliary switch	290 x 135		**3NY1106**		1	1 unit	1CL
 3NY1106									
	For separate covering of top and bottom cable lug connections	With auxiliary switch	290 x 135		**3NY1116**		1	1 unit	1CL
		3NP50 with and without auxiliary switch	290 x 135		**3NY1108**		1	1 unit	1CL
	Assembly kits for flush mounting								
 3NY1212	With molded-plastic masking frame, fixing brackets and small components; for disconnectors with and without auxiliary switches	3NP5060	250 x 149		**3NY1208**		1	1 unit	1CL
		3NP5260	300 x 220		**3NY1210**		1	1 unit	1CL
		3NP5360	300 x 245		**3NY1211**		1	1 unit	1CL
		3NP5460	300 x 290		**3NY1212**		1	1 unit	1CL
	Covers for cable lug connections		Cover length						
 3TX6546-3B	Can be screwed onto free screw end to protect against accidental touch (1 set = 6 units)	3NP52	99		**3NY1241**		1	1 unit	1CL
		3NP53/3NP54	95		**3TX6546-3B**		1	1 unit	41B
			120		**3NY1245**		1	1 unit	1CL
	Clamp terminals (1 set = 3 units)		Conductor cross-section						
 3NY1907		3NP50	2.5 ... 50 mm^2 [1]		**3NY1903**		1	1 unit	1CL
		3NP52	35 ... 120 mm^2		**3NY1907**		1	1 unit	1CL
	Busbar adapters		Busbar width						
 8US1210-4AG00	For 60 mm busbar system	3NP50	108		**8US1291-4SB00**		1	1 unit	1CU
		3NP52, 3NP53, 3NP54[2]	250 (length 320 mm, M10 terminal screws, connecting cables must be manufactured)		**8US1210-4AG00**		1	1 unit	1CU

[1] Also available in 2-wire version: 1 x 2.5 ... 50 mm^2 and 1 x 2.5 ... 35 mm^2.

[2] Disconnector is wider than adapter. The adapter can, however, be expanded to 276 mm with two 8US1998-2BM00 side modules.

© Siemens 2019

Overview

3NP5 fuse switch disconnectors are suitable for all fuses in LV HRC design, see chapter "Fuse Systems".

SITOR semiconductor fuses in LV HRC design can also be used, although it must be noted that, compared to cable and line protection fuses, these get much hotter during operation. For this reason, the fuse must be operated below the rated current I_n of the device (derating) when installed in a closed switching device.

The following table shows the permissible load currents of the SITOR semiconductor fuses for installation in 3NP5. The values were determined using the conductor cross-sections specified in the table.

Note

If using smaller cross-sections, a considerably higher derating is required due to the lower heat dissipation.

Derating values of 3NP1 fuse switch disconnectors when using SITOR fuses

SITOR semiconductor fuse data						**Permissible load currents of fuse when installed in 3NP5 for floor mounting**					
						Type 3NP5			**Alternative type 3NP5**		
Type[1) 2)]	Rated current I_n	Rated voltage[3)]	Operational class	Size	Required conductor cross-section Cu	Type	Size	Permissible load current[4)]	Type	Size	Permissible load current[4)]
	A	V AC			mm²			A			A
3NC2423..	150	500	gR	3	70	3NP54	3	145	--	--	--
3NC2425..	200	500	gR	3	95	3NP54	3	180	--	--	--
3NC2427..	250	500	gR	3	120	3NP54	3	225	--	--	--
3NC2428..	300	500	gR	3	185	3NP54	3	255	--	--	--
3NC2431..	350	500	gR	3	240	3NP54	3	330	--	--	--
3NC2432..	400	500	aR	3	240	3NP54	3	400	--	--	--
3NC3336-1	630	1000	aR	3	2x (40x5)	3NP54	3	530	--	--	--
3NC3337-1	710	1000	aR	3	2x (50x5)	3NP54	3	570	--	--	--
3NC3338-1	800	1000	aR	3	2x (40x8)	3NP54	3	630	--	--	--
3NC3340-1	900	1000	aR	3	2x (40x8)	3NP54	3	700[5)]	--	--	--
3NC3341-1	1000	1000	aR	3	2x (50x8)	3NP54	3	770[5)]	--	--	--
3NC3342-1	1100	800	aR	3	2x (50x8)	3NP54	3	800[5)]	--	--	--
3NC3343-1	1250	800	aR	3	2x (50x8)	3NP54	3	850[5)]	--	--	--
3NC3430-1	315	1250	aR	3	2x95	3NP54	3	295	--	--	--
3NC3432-1	400	1250	aR	3	2x120	3NP54	3	355	--	--	--
3NC3434-1	500	1250	aR	3	2x150	3NP54	3	440	--	--	--
3NC3436-1	630	1250	aR	3	2x (40x5)	3NP54	3	520	--	--	--
3NC3438-1	800	1100	aR	3	2x (40x8)	3NP54	3	625	--	--	--
3NC8423..	150	660	gR	3	70	3NP54	3	135	--	--	--
3NC8425..	200	660	gR	3	95	3NP54	3	180	--	--	--
3NC8427..	250	660	gR	3	120	3NP54	3	225	--	--	--
3NC8431..	350	660	gR	3	240	3NP54	3	300	--	--	--
3NC8434..	500	660	gR	3	2x 150	3NP54	3	425	--	--	--
3NC8444-3C	1000	600	aR	3	2x (60x6)	3NP54	3	800[5)]	--	--	--
3NE1020-2	80	690	gR	00	25	3NP50	00	80	--	--	--
3NE1021-0	100	690	gS	00	35	3NP50	00	100	--	--	--
3NE1021-2	100	690	gR	00	35	3NP50	00	100	--	--	--
3NE1022-0	125	690	gS	00	50	3NP50	00	125	--	--	--
3NE1022-2	125	690	gR	00	50	3NP50	00	125	--	--	--
3NE1224-0	160	690	gS	1	70	3NP52	1	160	3NP53	2	160
3NE1224-2/-3	160	690	gR	1	70	3NP52	1	160	3NP53	2	160
3NE1225-0	200	690	gS	1	95	3NP52	1	200	3NP53	2	200
3NE1225-2	200	690	gR	1	95	3NP52	1	200	3NP53	2	200
3NE1225-3	200	690	gR	1	95	3NP52	1	190	3NP53	2	200
3NE1227-0	250	690	gS	1	120	3NP52	1	250	3NP53	2	250
3NE1227-2	250	690	gR	1	120	3NP52	1	250	3NP53	2	250
3NE1227-3	250	690	gR	1	120	3NP52	1	235	3NP53	2	250
3NE1230-0	315	690	gS	1	2x 70	3NP53	2	315	--	--	--
3NE1230-2/-3	315	690	gR	1	2x 70	3NP53	2	315	--	--	--
3NE1331-0	350	690	gS	2	2x 95	3NP53	2	350	3NP54	3	350
3NE1331-2/-3	350	690	gR	2	2x 95	3NP53	2	350	3NP54	3	350

Minimum order quantity (PS) or a multiple thereof can be ordered.

© Siemens 2019

SITOR semiconductor fuse data						Permissible load currents of fuse when installed in 3NP5 for floor mounting					
						Type 3NP5			Alternative type 3NP5		
Type[1) 2)]	Rated current I_n	Rated voltage[3)]	Operational class	Size	Required conductor cross-section Cu	Type	Size	Permissible load current[4)]	Type	Size	Permissible load current[4)]
	A	V AC			mm²			A			A
3NE1332-0	400	690	gS	2	2x 95	3NP53	2	400	3NP54	3	400
3NE1332-2/-3	400	690	gR	2	2x 95	3NP53	2	400	3NP54	3	400
3NE1333-0	450	690	gS	2	2x 120	3NP54	3	450	--	--	--
3NE1333-2/-3	450	690	gR	2	2x 120	3NP54	3	450	--	--	--
3NE1334-0	500	690	gS	2	2x 120	3NP54	3	500	--	--	--
3NE1334-2/-3	500	690	gR	2	2x 120	3NP54	3	500	--	--	--
3NE1435-0	560	690	gS	3	2x 150	3NP54	3	560	--	--	--
3NE1435-2/-3	560	690	gR	3	2x 150	3NP54	3	560	--	--	--
3NE1436-0	630	690	gS	3	2x 185	3NP54	3	630	--	--	--
3NE1436-2/-3	630	690	gR	3	2x 185	3NP54	3	625	--	--	--
3NE1437-0	710	690	gS	3	2x (40x5)	3NP54	3	710[5)]	--	--	--
3NE1437-1	710	600	gR	3	2x (40x5)	3NP54	3	690[5)]	--	--	--
3NE1437-2/-3	710	690	gR	3	2x (40x5)	3NP54	3	685[5)]	--	--	--
3NE1438-0	800	690	gS	3	2x (50x5)	3NP54	3	800[5)]	--	--	--
3NE1438-1	800	600	gR	3	2x (50x5)	3NP54	3	750[5)]	--	--	--
3NE1438-2/-3	800	690	gR	3	2x (50x5)	3NP54	3	770[5)]	--	--	--
3NE1447-2/-3	670	690	gR	3	2x (40x5)	3NP54	3	655[5)]	--	--	--
3NE1448-2/-3	850	690	gR	3	2x (40x8)	3NP54	3	820[5)]	--	--	--
3NE1802-0	40	690	gS	000	10	3NP50	00	40	--	--	--
3NE1803-0	35	690	gS	000	6	3NP50	00	35	--	--	--
3NE1813-0	16	690	gS	000	1.5	3NP50	00	16	--	--	--
3NE1814-0	20	690	gS	000	2.5	3NP50	00	20	--	--	--
3NE1815-0	25	690	gS	000	4	3NP50	00	25	--	--	--
3NE1817-0	50	690	gS	000	10	3NP50	00	50	--	--	--
3NE1818-0	63	690	gS	000	16	3NP50	00	63	--	--	--
3NE1820-0	80	690	gS	000	25	3NP50	00	80	--	--	--
3NE3221	100	1000	aR	1	35	3NP52	1	95	3NP53	2	100
3NE3222	125	1000	aR	1	50	3NP52	1	110	3NP53	2	120
3NE3224	160	1000	aR	1	70	3NP52	1	140	3NP53	2	150
3NE3225	200	1000	aR	1	95	3NP52	1	175	3NP53	2	190
3NE3227	250	1000	aR	1	120	3NP52	1	210	3NP53	2	230
3NE3230-0B	315	1000	aR	1	185	3NP53	2	285	--	--	--
3NE3231	350	1000	aR	1	240	3NP53	2	310	--	--	--
3NE3232-0B	400	1000	aR	1	240	3NP53	2	330	--	--	--
3NE3233	450	1000	aR	1	2x 150	3NP53	2	360	--	--	--
3NE3332-0B	400	1000	aR	2	240	3NP54	3	360	--	--	--
3NE3333	450	1000	aR	2	2x 150	3NP54	3	400	--	--	--
3NE3334-0B	500	1000	aR	2	2x 150	3NP54	3	450	--	--	--
3NE3335	560	1000	aR	2	2x 185	3NP54	3	510	--	--	--
3NE3336	630	1000	aR	2	2x 185	3NP54	3	580	--	--	--
3NE3337-8	710	900	aR	2	2x (40x5)	3NP54	3	630	--	--	--
3NE3338-8	800	800	aR	2	2x 240	3NP54	3	630	--	--	--
3NE3340-8	900	690	aR	2	2x (40x8)	3NP54	3	630	--	--	--
3NE4101	32	1000	gR	0	6	3NP52	1	32	--	--	--
3NE4102	40	1000	gR	0	10	3NP52	1	40	--	--	--
3NE4117	50	1000	gR	0	10	3NP52	1	50	--	--	--
3NE4118	63	1000	aR	0	16	3NP52	1	63	--	--	--
3NE4120	80	1000	aR	0	25	3NP52	1	80	--	--	--
3NE4121	100	1000	aR	0	35	3NP52	1	95	--	--	--
3NE4122	125	1000	aR	0	50	3NP52	1	120	--	--	--
3NE4124	160	1000	aR	0	70	3NP52	1	150	--	--	--
3NE4327-0B	250	800	aR	2	150	3NP53	2	210	3NP54	3	220
3NE4330-0B	315	800	aR	2	240	3NP53	2	270	3NP54	3	285
3NE4333-0B	450	800	aR	2	2x (30x5)	3NP53	2	400	3NP54	3	420

© Siemens 2019

Fuses

SITOR semiconductor fuse data						Permissible load currents of fuse when installed in 3NP5 for floor mounting					
						Type 3NP5			Alternative type 3NP5		
Type[1) 2)]	Rated current I_n	Rated voltage[3)]	Operational class	Size	Required conductor cross-section Cu	Type	Size	Permissible load current[4)]	Type	Size	Permissible load current[4)]
	A	V AC			mm²			A			A
3NE4334-0B	500	800	aR	2	2x (30x5)	3NP54	3	450	--	--	--
3NE4337	710	800	aR	2	2x (50x5)	3NP54	3	600	--	--	--
3NE8015-1	25	690	gR	00	4	3NP50	00	25	--	--	--
3NE8003-1	35	690	gR	00	6	3NP50	00	33	--	--	--
3NE8017-1	50	690	gR	00	10	3NP50	00	45	--	--	--
3NE8018-1	63	690	gR	00	16	3NP50	00	54	--	--	--
3NE8020-1	80	690	aR	00	25	3NP50	00	68	--	--	--
3NE8021-1	100	690	aR	00	35	3NP50	00	89	--	--	--
3NE8022-1	125	690	aR	00	50	3NP50	00	106	--	--	--
3NE8024-1	160	690	aR	00	70	3NP50	00	130	--	--	--

7

1) Due to the mechanical stress on the relatively long fuse blades, SITOR 3NE41 semiconductor fuses should only be switched occasionally and only at zero current.

2) For permissible load currents for 3NE8…-0MK, see Configuration Manual "Fuse Systems", or on request.

3) 3NP1 fuse switch disconnectors may be operated at up to 1000 V AC/DC with the following restrictions:
- Degree of pollution 2 (instead of 3)
- AC-20 or DC-20 – i.e. switching only without load.

4) In the case of cyclic loads, the currents may have to be further reduced (precise values on request).

5) The fuse can also be operated at a higher rated uninterrupted current than the 630 A current of the 3NP54. However, in this case, the 3NP54 must not be switched under load (utilization category AC-20).

Minimum order quantity (PS) or a multiple thereof can be ordered.

© Siemens 2019

Overview



3NJ4/3NJ5 fuse switch disconnectors

All key product features at a glance

- Compliant with IEC/EN 60439-1, IEC/EN 60947-3
- Voltage levels up to 690 V AC
- Rated operational current from 160 A to 2000 A
- Fuse links according to IEC 60269 Part 1 can be used – nickel-plated fuse blades are not permissible due to the high transfer resistance
- In open position safe from touch by the back of the hand (exception 3NJ56: IP00)
- Parking position for maintenance
- 1-pole or 3-pole switchable
- Vertical and horizontal mounting position
- Climate-proof
- Degree of protection IP30 with closed fuse carriers, IP10 with open fuse carriers (exception 3NJ56: IP00)

Note:

Instead of the fuse links some 3NJ4 fuse switch disconnectors can also be fitted with isolating blades. They can then switch as "fuseless switch disconnectors" but only under AC-20 conditions "switching under load".

Overview of all components and accessory parts: 3NJ4/3NJ5 in size 00

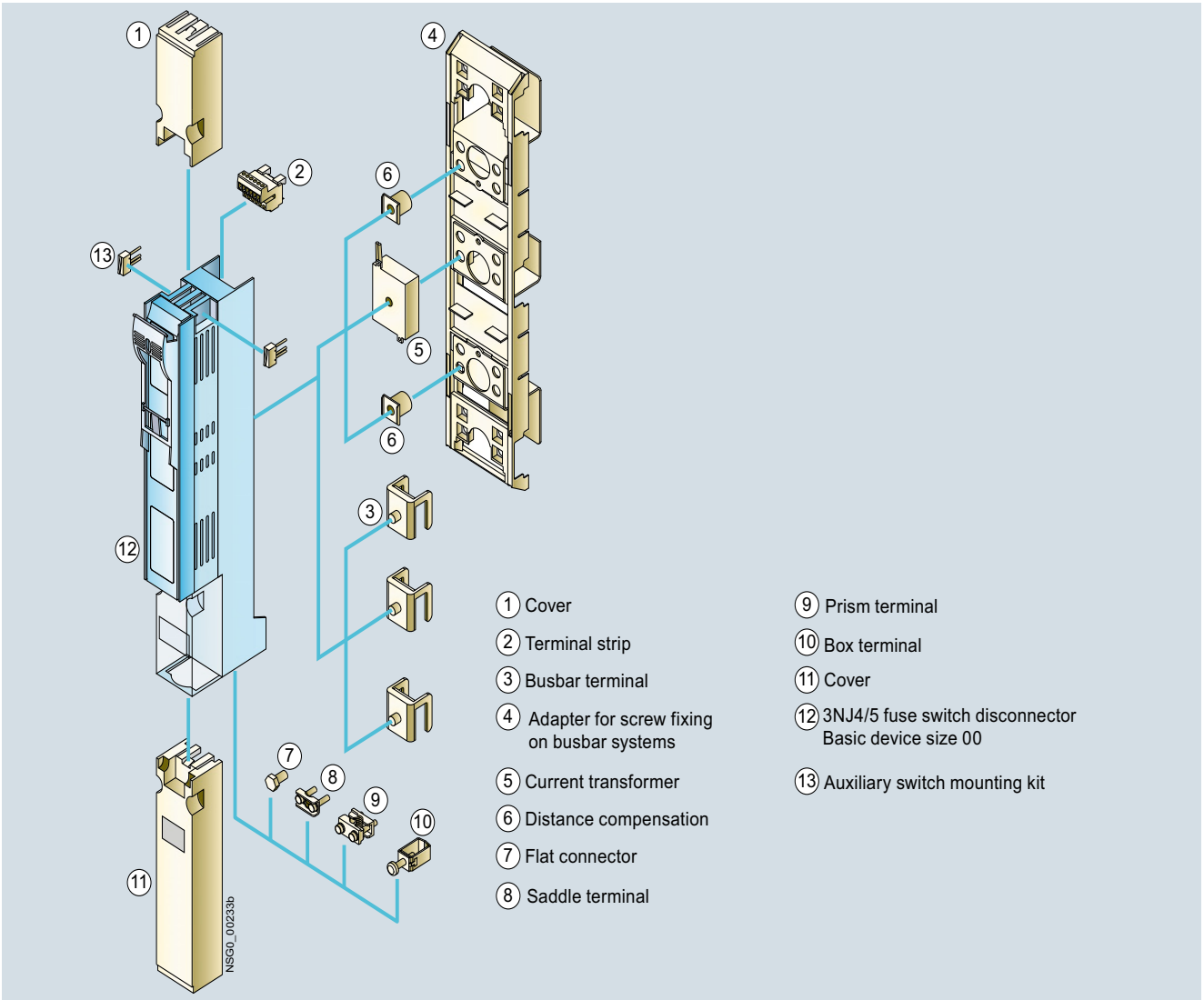

© Siemens 2019

Introduction

Overview of all components and accessory parts: 3NJ4/3NJ5 in sizes 1 to 3

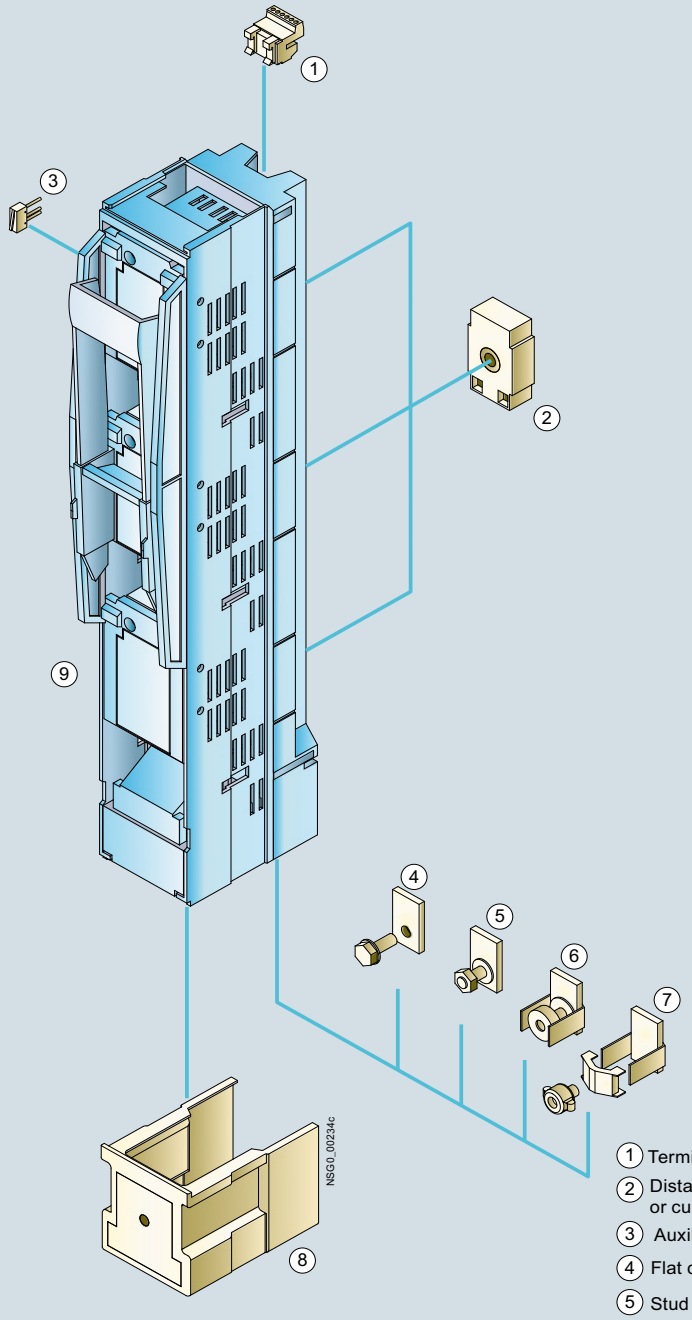

1 Terminal strip
2 Distance compensation or current transformer
3 Auxiliary switch
4 Flat connector
5 Stud terminal
6 V terminal
7 Box terminal
8 Cover
9 3NJ4/5 fuse switch disconnector Basic device sizes 1/2/3

Benefits

Parking position

For maintenance, e.g. of 1-pole switchable in-line fuse switch disconnectors – sizes 1 to 3 – and for 3-pole switchable in-line fuse switch disconnectors – size 00 – the fuse carriers can be mounted after being turned by 180° (fuse facing outwards).

This results in the following advantages:
- Visible disconnection point
- Depot for fuse links (parking position)
- No opportunity for mistakes when replacing the fuse links
- Additional touch protection in the vicinity of the lyre-shaped contacts

Application

3NJ41 and 3NJ56 1-pole and 3-pole in-line fuse switch disconnectors can be installed in low-voltage distribution boards, substations and cable distribution cubicles.

Note:

For 1-pole switchable fuse switch disconnectors the following applies acc. to EC/EN 60947-3: *These devices are intended for power distribution systems that may require the switching and/or disconnection of individual outer conductors. They should not be used for switching the primary circuits of three-phase equipment.*

Minimum order quantity (PS) or a multiple thereof can be ordered.

© Siemens 2019

Technical specifications

Standards			**IEC 60947-1, IEC 60947-3, VDE 0660 Part 107**								
Type			**3NJ410**	**3NJ412**	**3NJ413**	**3NJ414**	**3NJ56**	**3NJ415**	**3NJ418**	**3NJ416**	**3NJ417**
Conventional thermal current											
Free-air with gG fuses, I_{th}		A	160	250	400	630	1250	630	800	1260	1600
Free-air with isolating blade, I_{th}		A	--	--	--	800	--	1000	1250	1600	2000
Free-air with gTr fuses, I_{th}		A	--	--	--	--	1154	722	910	1154	1444
Rated apparent power of the transformer, S_n		kVA	--	--	--	--	800	500	630	800	1000
For fuse links and isolating blades		Size	00	1	2	3	4a	3	3	2 x 3	2 x 3
gG according to IEC 60269, I_n		A	160	250	400	630	1250	630	800	2 x 630	2 x 800
Free-air with isolating blade, I_n		A	--	--	--	--	--	1000	1250	2 x 800	2 x 1000
gTr according to VDE 0636-2011, I_{rat}		A	--	--	--	--	1154	722	909	2 x 577	2 x 722
gTr according to VDE 0636-2011, S_n		kVA	--	--	--	--	800	500	630	2 x 400	2 x 500
Rated operational voltage U_e At 40 Hz ... 60 Hz AC		V	690	690	690	690	690	690	400	690	400
Rated insulation voltage U_i		V	800	1000	1000	1000	1000	1000	690	1000	690
Rated impulse withstand voltage U_{imp}		kV	8	12	12	12	12	12	8	12	8
Rated conditional short-circuit current with fuses, at 500 V AC											
With gG fuse (rms value)		kA	80/120	120	120	120	80	120	50	80	50
With gTr fuse (rms value)		kA	--	--	--	--	--	--	50	--	--
Max. permissible power loss per fuse link		W	12	32	45	48	110	51	61	48	51
Rated short-time withstand current I_{cw} when using isolating blades in interlock position and when using isolating blades instead of fuse links ("fuseless switch disconnector") 3-pole switchable version (exception: 3NJ414: 1-pole without interlock position and 3-pole switchable), rms values		kA	--	--	--	10/15	--	15	15	25	25
Rated making and breaking capacity											
Rated operational current I_e for gG fuses											
At AC-21B	400 V AC	A	160	250	400	630	1250	630	800	2 x 630	2 x 800
AC-22B	400 V AC	A	160	250	400	630	1250	630	800	2 x 630	2 x 800
AC-23B	400 V AC	A	--	250	400	--	--	--	--	--	--
AC-21B	500 V AC	A	160	250	400	630	1250	--	--	--	--
AC-22B	500 V AC	A	160	250	400	630	1250	--	--	--	--
AC-23B	500 V AC	A	--	--	--	--	--	--	--	--	--
AC-21B	690 V AC	A	100	250	400	630	1250	--	--	--	--
AC-22B	690 V AC	A	100	250	--	--	--	--	--	--	--
AC-23B	690 V AC	A	--	--	--	--	--	--	--	--	--
Rated operational current I_e for gTr fuses											
At AC-22B	400 V AC	A	--	--	--	--	--	722	910	2 x 577	2 x 722
Rated operational current I_e for isolating blades											
At AC-22B	400 V AC	A	--	--	--	--	--	1000	1250	2 x 800	2 x 1000
Permissible ambient temperature		°C	-25 ... +55, > 35 °C with derating factors								
Mechanical endurance, operating cycles			1400	1400	800	800	500	800	500	500	500
Electrical endurance, operating cycles			200	200	200	200	100	100	100	100	100
Degree of protection											
With closed fuse carrier, with terminal cover and peripheral cover			IP30	IP30	IP30	IP30	IP10	IP30	IP30	IP30	IP30
With open fuse carrier			IP10	IP10	IP10	IP10	IP00	IP10	IP10	IP10	IP10
Power loss of the main conducting paths at I_{th}		W	18	23	54	115	190	275	155	350	375
Main conductor connections											
Terminal screws			M8	M10	M12	M12	M16	2 × M12	2 × M12	3 × M12	4 × M12
Flat bars		mm	20	30	30	30	80	80 x 10	80 x 10	--	--
Cable lug, max. conductor cross-section (stranded)		mm^2	95	240	240	240	2 × 300	2 × 300	2 × 300	3 × 300 4 x 185	4 × 300 4 x 185
Tightening torque		Nm	12 ... 15	30 ... 35	35 ... 40	35 ... 40	50 ... 60	35 ... 40	35 ... 40	35 ... 40	35 ... 40
Clamp/V terminals		mm^2	1.5 ... 70	25 ... 300	25 ... 300	25 ... 300	--	--	--	--	--
Fixing screws			M8	M12	M12	M12	M16	M12	M12	M12	M12
Required tightening torque for mounting on busbars		Nm	16 ... 18	35 ... 40	35 ... 40	35 ... 40	50 ... 60	35 ... 40	35 ... 40	35 ... 40	35 ... 40

7

Minimum order quantity (PS) or a multiple thereof can be ordered.

© Siemens 2019

1-pole switchable

Selection and ordering data

	Rated operational current I_e	For fuse links acc. to IEC 60269-1	Busbar center-to-center spacing	Connection type (terminal screws/ clamp-type terminals included in the scope of supply)[1], optionally top or bottom (rotatable!)	For conductor material	SD	Article No. www.siemens.com/product?Article No.	Price per PU	PU (UNIT, SET, M)	PS	PG
	A	Size	mm			d					
In-line fuse switch disconnectors, 1-pole switchable											
	160	00 and 000	185[2]	M8 flat connector	Cu/Al[3]		**3NJ4101-3BF01**		1	1 unit	1DL
	250	1	185	M10 flat connector	Cu/Al[3]		**3NJ4121-3BF01**		1	1 unit	1DL
	400	2 and 1	185	M12 flat connector	Cu/Al[3]		**3NJ4131-3BF01**		1	1 unit	1DL
	630	3 and 2	185	M12 flat connector	Cu/Al[3]		**3NJ4141-3BF01**		1	1 unit	1DL
	1250	4a	185	M16 × 60 stud terminal	Cu/Al[3]		**3NJ5643-0BB00**		1	1 unit	1DL

3NJ4101-3BF01



3NJ4121-3BF01

In-line fuse switch disconnectors, 1-pole switchable, for integratable current transformers											
	250	1	185	M10 flat connector	Cu/Al[3]		**3NJ4121-3BF11**		1	1 unit	1DL
	400	2 and 1	185	M12 flat connector	Cu/Al[3]		**3NJ4131-3BF11**		1	1 unit	1DL
	630	3 and 2	185	M12 flat connector	Cu/Al[3]		**3NJ4141-3BF11**		1	1 unit	1DL

3NJ4121-3BF11

[1] Fixing screws for mounting on busbars must be ordered separately.

[2] A 3NJ5930-3BB adapter is needed to compensate the height for joint fitting with device sizes NH1 to 3.

[3] Cu/Al when using suitable cable lugs or terminals.

Minimum order quantity (PS) or a multiple thereof can be ordered.

© Siemens 2019

Selection and ordering data

	Rated operational current I_e	For fuse links acc. to IEC 60269-1	Busbar center-to-center spacing	Connection type (terminal screws/ clamp-type terminals included in the scope of supply)[1] optionally top or bottom (rotatable!)	For conductor material	SD	Article No. www.siemens.com/product?Article No.	Price per PU	PU (UNIT, SET, M)	PS	PG
	A	Size	mm			d					
In-line fuse switch disconnectors, 3-pole switchable											
 Left: 3NJ4103-3BF01 Right: 3NJ4123-3BF01	160	00 and 000	100	M8 flat connector	Cu/Al[2]		**3NJ4103-3BF02**		1	1 unit	1DL
				F70 box terminal	Cu		**3NJ4103-3BR02**		1	1 unit	1DL
	160	00 and 000	185[3]	M8 flat connector	Cu/Al[2]		**3NJ4103-3BF01**		1	1 unit	1DL
	250	1	185	M10 flat connector	Cu/Al[2]		**3NJ4123-3BF01**		1	1 unit	1DL
				M12 stud terminal	Cu/Al[2]		**3NJ4123-3BJ01**		1	1 unit	1DL
				V terminal	Cu/Al[2]		**3NJ4123-3BT01**		1	1 unit	1DL
	400	2 and 1	185	M12 flat connector	Cu/Al[2]		**3NJ4133-3BF01**		1	1 unit	1DL
				M12 stud terminal	Cu/Al[2]		**3NJ4133-3BJ01**		1	1 unit	1DL
				V terminal	Cu/Al[2]		**3NJ4133-3BT01**		1	1 unit	1DL
	630	3 and 2	185	M12 flat connector	Cu/Al[2]		**3NJ4143-3BF01**		1	1 unit	1DL
				M12 stud terminal	Cu/Al[2]		**3NJ4143-3BJ01**		1	1 unit	1DL
				V terminal	Cu/Al[2]		**3NJ4143-3BT01**		1	1 unit	1DL
In-line fuse switch disconnectors, 3-pole switchable, with electronic fuse monitoring (EFM)											
 3NJ41.3-3CF..	160	00 and 000	100	M8 flat connector	Cu/Al[2]		**3NJ4103-3CF02**		1	1 unit	1DL
	250	1	185	M10 flat connector	Cu/Al[2]		**3NJ4123-3CF01**		1	1 unit	1DL
	400	2 and 1	185	M12 flat connector	Cu/Al[2]		**3NJ4133-3CF01**		1	1 unit	1DL
	630	3 and 2	185	M12 flat connector	Cu/Al[2]		**3NJ4143-3CF01**		1	1 unit	1DL
In-line fuse switch disconnectors, 3-pole switchable, for integratable current transformers											
	160	00 and 000	100	M8 flat connector	Cu/Al[2]		**3NJ4103-3BF12**		1	1 unit	1DL
	250	1	185	M10 flat connector	Cu/Al[2]		**3NJ4123-3BF11**		1	1 unit	1DL
	400	2 and 1	185	M12 flat connector	Cu/Al[2]		**3NJ4133-3BF11**		1	1 unit	1DL
	630	3 and 2	185	M12 flat connector	Cu/Al[2]		**3NJ4143-3BF11**		1	1 unit	1DL
In-line fuse switch disconnectors, 3-pole switchable, for integratable current transformers, with electronic fuse monitoring (EFM)											
	160	00 and 000	100	M8 flat connector	Cu/Al[2]		**3NJ4103-3CF12**		1	1 unit	1DL
	250	1	185	M10 flat connector	Cu/Al[2]		**3NJ4123-3CF11**		1	1 unit	1DL
	400	2 and 1	185	M12 flat connector	Cu/Al[2]		**3NJ4133-3CF11**		1	1 unit	1DL
	630	3 and 2	185	M12 flat connector	Cu/Al[2]		**3NJ4143-3CF11**		1	1 unit	1DL

	Transformer apparent power	Rated apparent power of the gTr fuses	Busbar center-to-center spacing	Rated current of gTr fuses	Rated operational current I_e with disconnecting blades 3NJ4914-8BA00		SD	Article No. www.siemens.com/product?Article No.	Price per PU	PU (UNIT, SET, M)	PS	PG
	kVA	kVA	mm	A	A		d					
In-line fuse switch disconnectors, 3-pole switchable, for secondary-side fusing of transformers and incoming block												
 3NJ4163-3BF01	500	500	185	722	1000	Cu/Al[2]		**3NJ4153-3BF01**		1	1 unit	1DL
	630	630	185	909	1250	Cu/Al[2]		**3NJ4183-3BF01**		1	1 unit	1DL
	800	2 x 400	185	2 x 577	1600	Cu/Al[2]		**3NJ4163-3BF01**		1	1 unit	1DL
	1000	2 x 500	185	2 x 722	2000	Cu/Al[2]		**3NJ4173-3BF01**		1	1 unit	1DL

[1] Fixing screws for mounting on busbars must be ordered separately.

[2] Cu/Al when using suitable cable lugs or terminals.

[3] A 3NJ5930-3BB adapter is needed to compensate the height for joint fitting with device sizes NH1 to 3.

Minimum order quantity (PS) or a multiple thereof can be ordered.

© Siemens 2019

Selection and ordering data

	Version	For in-line fuse switch disconnectors or dimensions	SD d	Article No. www.siemens.com/product?Article No.	Price per PU	PU (UNIT, SET, M)	PS	PG
	Covers							
 3NJ4912-1FA01	Size 00, additional touch protection when using cable lugs and as spacer • 100 mm for bottom	3NJ4101-3BF01, 3NJ4103-3BF01		**3NJ4912-1FA01**		1	1 unit	1DL
 3NJ4912-1FA00	Size 00, additional touch protection when using cable lugs and as spacer • 132 mm for top	3NJ4101-3BF01, 3NJ4103-3BF01		**3NJ4912-1FA00**		1	1 unit	1DL
 3NJ4912-1AA01	**Covers**[1] Sizes 1 to 3 Additional touch protection with use of cable lugs or connection from above	3NJ412 to 3NJ414, 3NJ415, 3NJ418		**3NJ4912-1AA01**		1	1 unit	1DL
 3NJ4912-1EA00	**Covers** Size 3 For double in-line disconnectors	3NJ414		**3NJ4912-1EA00**		1	1 unit	1DL
 3NJ4912-1DA02	**Covers** Size 00 (can also be used as spacer) Top and bottom To cover long cable lugs and compensate for combination of 3NJ4103 with terminals 3NJ412 to 3NJ414 (1 set = 2 units: short and long[2])	3NJ4103-3BF02		**3NJ4912-1DA02**		1	1 unit	1DL
 3NJ4912-2AA00	**Blanking covers** For panel cutout 633 mm long	50 mm wide		**3NJ4912-2AA00**		1	1 unit	1DL
 3NJ4912-2BA00	For panel cutout 633 mm long	100 mm wide		**3NJ4912-2BA00**		1	1 unit	1DL
 3NJ4912-2CA00	For panel cutout 299 mm long	50 mm wide		**3NJ4912-2CA00**		1	1 unit	1DL

[1] With cable lugs and connection from above, the terminal cover can be extended by connecting two units together.

[2] Can be shortened (in exchange for short cover, included in the scope of supply of the in-line disconnector).

Minimum order quantity (PS) or a multiple thereof can be ordered.

© Siemens 2019

	Version	For in-line fuse switch disconnectors or dimensions	SD d	Article No. www.siemens.com/product?Article No.	Price per PU	PU (UNIT, SET, M)	PS	PG
3NJ4912-2DA00	**Lateral masking frame supports** For NH00 ... NH3, 3 clips with T profile	Length 665 mm		**3NJ4912-2DA00**		1	2 units	1DL
 3NJ4918-0AA00	**Fixing clips** 2 units per side, for fixing the cover of the control panel front (1 set = 4 units, including fixing accessories)	3NJ41		**3NJ4918-0AA00**		1	1 unit	1DL
 ① ② ③	**Unequipped section covers for busbars** To be fitted directly in the drilled holes of the busbars							
	① Busbar center-to-center spacing 185 mm	50 mm wide		**3NJ4912-3AA00**		1	1 unit	1DL
	② Busbar center-to-center spacing 185 mm	100 mm wide		**3NJ4912-3BA01**		1	1 unit	1DL
	③ Busbar center-to-center spacing 100 mm	50 mm wide		**3NJ4912-3CA00**		1	1 unit	1DL
	Also for covering a blank space on 3NJ4918-0DA02 or 3NJ5930-3BB							
	Adapters for screw fixing on busbar systems							
 3NJ4918-0DA02	• For fitting two 100 mm fuse switch disconnectors onto the busbar system with 185 mm center-to-center spacing, including adaptation to sizes 1 to 3	3NJ4103-3BF02, 3NJ4103-3BR02, 3NJ4103-3CF02, 3NJ4103-3BF12, 3NJ4103-3CF12		**3NJ4918-0DA02**		1	1 unit	1DL
	• For fitting two 185 mm fuse switch disconnectors onto the busbar system with 185 mm center-to-center spacing, including adaptation to sizes 1 to 3	3NJ4103-3BF01, 3NJ4101-3BF01		**3NJ5930-3BB**		1	1 unit	1DL
	• For fitting two 100 mm fuse switch disconnectors onto the busbar system with 185 mm center-to-center spacing and **busbar terminal** including adaptation to sizes 1 to 3	3NJ4103-3BF02 3NJ4103-3BR02 3NJ4103-3CF02 3NJ4103-3BF12 3NJ4103-3CF12		**3NJ4918-0DB02**		1	1 unit	1DL
 3NJ4918-0EA00	• For fitting one fuse switch disconnector (= 3 separate brackets) onto the busbar system with 60 mm center-to-center spacing	3NJ4103-3BF02, 3NJ4103-3BR02, 3NJ4103-3CF02, 3NJ4103-3BF12, 3NJ4103-3CF12		**3NJ4918-0EA00**		1	1 unit	1DL
	Fixing screws For fitting 3NJ4103 switch disconnectors with integratable current transformers onto adapters (1 set = 3 units)	3NJ4103		**3NJ4918-0DC02**		1	1 unit	1DL

7

© Siemens 2019

Accessories

	Version	For in-line fuse switch disconnectors or dimensions	SD d	Article No. www.siemens.com/product?Article No.	Price per PU	PU (UNIT, SET, M)	PS	PG
 3NJ5974-0AB	**Busbar supports** For 100 mm and 185 mm center-to-center spacing, for screwing on of busbars	3NJ41 and 3NJ5		**3NJ5974-0AB**		1	1 unit	1DL
 3NJ4910-1AA00	**Grounding kit with connecting cable 25 mm²**	3NJ414 to 3NJ418		**3NJ4910-1AA00**		1	1 unit	1DL
 3NJ4911-3AA00	**Busbar terminals** For each fuse switch disconnector, 3 units are required; Not for devices with transformer installation	3NJ4103 3NJ4101		**3NJ4911-3AA00**		1	1 unit	1DL
 3NJ4911-3BA01	For more rapid mounting of the switch disconnectors onto the busbars (1 set = 3 units) Not for devices with transformer installation	3NJ412 to 3NJ414		**3NJ4911-3BA01**		1	1 unit	1DL
 3NJ4911-4AA00	**Saddle terminals** Cu connector 1.5 ... 70 mm² (1 set = 3 units)	3NJ4103		**3NJ4911-4AA00**		1	1 unit	1DL
 3NJ4911-1AA00	**Prism terminal assembly kits** Cu/Al connector 10 ... 70 mm² (1 set = 3 units)	3NJ4103 3NJ4101		**3NJ4911-1AA00**		1	1 unit	1DL
 3NJ4911-2BQ00	**Box terminal assembly kits** Cu/Al connector 95 ... 240 mm² (for connection to version with flat connector) (1 set = 3 units)	3NJ412 to 3NJ414		**3NJ4911-2BQ00**		1	1 unit	1DL

Minimum order quantity (PS) or a multiple thereof can be ordered.

© Siemens 2019

	Version	For in-line fuse switch disconnectors or dimensions	SD d	Article No. www.siemens.com/product?Article No.	Price per PU	PU (UNIT, SET, M)	PS	PG
	Busbar connection assembly kits for NH 1, 2, 3 With flat connector							
 3NJ4911-5AA00	2 x 240 mm^2 With M12 screws	3NJ412 to 3NJ414		**3NJ4911-5AA00**		1	1 unit	1DL
 3NJ4911-5BA00	2 x 300 mm^2 / 3 x 120 mm^2 With M12 screws	3NJ412 to 3NJ414		**3NJ4911-5BA00**		1	1 unit	1DL
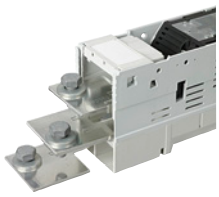 3NJ4911-5CA00	1 x 400 mm^2 With M16 screws	3NJ412 to 3NJ414		**3NJ4911-5CA00**		1	1 unit	1DL
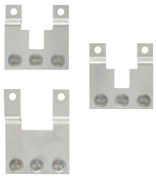 3NJ4911-6AA00	**Busbar connection assembly kits for NH3 as double in-line disconnectors** 3 x 300 mm^2 / 4 x 185 mm^2	3NJ413, 3NJ414		**3NJ4911-6AA00**		1	1 unit	1DL
 3NJ4911-6CA00	Mechanical coupling of operating handles, required in addition for coupling two switch disconnectors	3NJ413 3NJ414		**3NJ4911-6CA00**		1	1 unit	1DL
	Busbar connection assembly kits for NH3 as double in-line disconnectors							
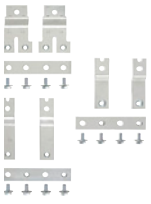 3NJ4911-6BA00	4 x 240 mm^2	3NJ413, 3NJ414		**3NJ4911-6BA00**		1	1 unit	1DL
 3NJ4911-6CA00	Mechanical coupling of operating handles, required in addition for coupling two switch disconnectors	3NJ413 3NJ414		**3NJ4911-6CA00**		1	1 unit	1DL
 3NJ4913-6AA02	**Auxiliary switch mounting kit** For sizes 00 to 3 with connecting cables, 1 CO contact, for 3-pole switchable switch disconnectors only	3NJ41		**3NJ4913-1AA01**		1	1 unit	1DL
	Fuse 630 kVA 909 A **Size NH 3** Specially for the protection of transformers (minimum order quantity 3 units)	3NJ418		**3NJ4914-8AA00**		1	3 units	1DL

Minimum order quantity (PS) or a multiple thereof can be ordered.

© Siemens 2019

Accessories

	Version	For in-line fuse switch disconnectors or dimensions	SD d	Article No. www.siemens.com/product?Article No.	Price per PU	PU (UNIT, SET, M)	PS	PG
 3NJ4914-8BA00	**Isolating blades** Size NH3, 1250 A	3NJ4153, 3NJ4163, 3NJ4173, 3NJ4183		**3NJ4914-8BA00**		1	1 unit	1DL
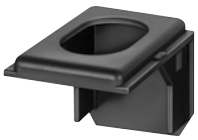 3NJ4918-1AA00	**Mounting hooks** (one per in-line disconnector required)	3NJ4121 to 3NJ4143		**3NJ4918-1AA00**		1	1 unit	1DL
 3NJ4915-1BA00	**Distance compensation**	3NJ4103		**3NJ4915-1BA00**		1	1 unit	1DL
 3NJ4915-2BA00	Distance compensation for fuse switch disconnectors with integratable current transformers if no current transformer is built in.	3NJ412 to 3NJ414		**3NJ4915-2BA00**		1	1 unit	1DL
 3NJ4915-1CA00	**Terminal strips**	3NJ4103		**3NJ4915-1CA00**		1	1 unit	1DL
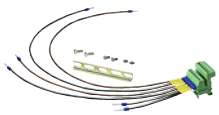 3NJ4915-2CA00		3NJ412 to 3NJ414		**3NJ4915-2CA00**		1	1 unit	1DL
 3NJ4915-1FA20	**Current transformers .../1 A**							
	100/1 A, Cl. 0.5, 1.5 VA	3NJ4103		**3NJ4915-1EA10**		1	1 unit	1DL
	100/1 A, Cl. 1, 2.0 VA	3NJ4103		**3NJ4915-1EA20**		1	1 unit	1DL
	150/1 A, Cl. 0.5, 2.5 VA	3NJ4103		**3NJ4915-1FA10**		1	1 unit	1DL
	150/1 A, Cl. 0.5 calibrated, 2.5 VA	3NJ4103		**3NJ4915-1FA11**		1	1 unit	1DL
	150/1 A, Cl. 1, 3.0 VA	3NJ4103		**3NJ4915-1FA20**		1	1 unit	1DL
	75/1 A, Cl. 1, 1.5 VA	3NJ412 to 3NJ414		**3NJ4915-2DA20**		1	1 unit	1DL
	100/1 A, Cl. 0.5, 1.5 VA	3NJ412 to 3NJ414		**3NJ4915-2EA10**		1	1 unit	1DL
	100/1 A, Cl. 1, 2.0 VA	3NJ412 to 3NJ414		**3NJ4915-2EA20**		1	1 unit	1DL
	150/1 A, Cl. 0.5, 2.5 VA	3NJ412 to 3NJ414		**3NJ4915-2FA10**		1	1 unit	1DL
	150/1 A, Cl. 1, 2.5 VA	3NJ412 to 3NJ414		**3NJ4915-2FA20**		1	1 unit	1DL
	250/1 A, Cl. 0.5, 2.5 VA	3NJ412 to 3NJ414		**3NJ4915-2GA10**		1	1 unit	1DL
	250/1 A, Cl. 0.5 calibrated, 2.5 VA	3NJ412 to 3NJ414		**3NJ4915-2GA11**		1	1 unit	1DL
	250/1 A, Cl. 1, 5.0 VA	3NJ412 to 3NJ414		**3NJ4915-2GA20**		1	1 unit	1DL
 3NJ4915-2HA20	400/1 A, Cl. 0.5, 2.5 VA	3NJ412 to 3NJ414		**3NJ4915-2HA10**		1	1 unit	1DL
	400/1 A, Cl. 0.5 calibrated, 2.5 VA	3NJ412 to 3NJ414		**3NJ4915-2HA11**		1	1 unit	1DL
	400/1 A, Cl. 1, 5.0 VA	3NJ412 to 3NJ414		**3NJ4915-2HA20**		1	1 unit	1DL
	500/1 A, Cl. 0.5, 2.5 VA	3NJ412 to 3NJ414		**3NJ4915-2JA10**		1	1 unit	1DL
	500/1 A, Cl. 1, 5.0 VA	3NJ412 to 3NJ414		**3NJ4915-2JA20**		1	1 unit	1DL
	600/1 A, Cl. 0.5, 2.5 VA	3NJ412 to 3NJ414		**3NJ4915-2KA10**		1	1 unit	1DL
	600/1 A, Cl. 0.5 calibrated, 2.5 VA	3NJ412 to 3NJ414		**3NJ4915-2KA11**		1	1 unit	1DL
	600/1 A, Cl. 1, 5.0 VA	3NJ412 to 3NJ414		**3NJ4915-2KA20**		1	1 unit	1DL

7

Minimum order quantity (PS) or a multiple thereof can be ordered.

© Siemens 2019

	Version	For in-line fuse switch disconnectors or dimensions	SD d	Article No. www.siemens.com/product?Article No.	Price per PU	PU (UNIT, SET, M)	PS	PG
	Current transformers .../5 A							
 3NJ4915-1FB20	100/5 A, Cl. 0.5, 1.0 VA	3NJ4103		**3NJ4915-1EB10**		1	1 unit	1DL
	100/5 A, Cl. 1, 1.5 VA	3NJ4103		**3NJ4915-1EB20**		1	1 unit	1DL
	150/5 A, Cl. 0.5, 1.5 VA	3NJ4103		**3NJ4915-1FB10**		1	1 unit	1DL
	150/5 A, Cl. 0.5 calibrated, 1.5 VA	3NJ4103		**3NJ4915-1FB11**		1	1 unit	1DL
	150/5 A, Cl. 1, 2.5 VA	3NJ4103		**3NJ4915-1FB20**		1	1 unit	1DL
	75/5 A, Cl. 1, 1.5 VA	3NJ412 to 3NJ414		**3NJ4915-2DB20**		1	1 unit	1DL
	100/5 A, Cl. 0.5, 1.0 VA	3NJ412 to 3NJ414		**3NJ4915-2EB10**		1	1 unit	1DL
	100/5 A, Cl. 1, 2.0 VA	3NJ412 to 3NJ414		**3NJ4915-2EB20**		1	1 unit	1DL
	150/5 A, Cl. 0.5, 1.5 VA	3NJ412 to 3NJ414		**3NJ4915-2FB10**		1	1 unit	1DL
	150/5 A, Cl. 1, 2.5 VA	3NJ412 to 3NJ414		**3NJ4915-2FB20**		1	1 unit	1DL
	250/5 A, Cl. 0.5, 2.5 VA	3NJ412 to 3NJ414		**3NJ4915-2GB10**		1	1 unit	1DL
	250/5 A, Cl. 0.5 calibrated, 2.5 VA	3NJ412 to 3NJ414		**3NJ4915-2GB11**		1	1 unit	1DL
	250/5 A, Cl. 1, 3.75 VA	3NJ412 to 3NJ414		**3NJ4915-2GB20**		1	1 unit	1DL
 3NJ4915-2HB20	400/5 A, Cl. 0.5, 2.5 VA	3NJ412 to 3NJ414		**3NJ4915-2HB10**		1	1 unit	1DL
	400/5 A, Cl. 0.5 calibrated, 2.5 VA	3NJ412 to 3NJ414		**3NJ4915-2HB11**		1	1 unit	1DL
	400/5 A, Cl. 1, 5.0 VA	3NJ412 to 3NJ414		**3NJ4915-2HB20**		1	1 unit	1DL
	500/5 A, Cl. 0.5, 2.5 VA	3NJ412 to 3NJ414		**3NJ4915-2JB10**		1	1 unit	1DL
	500/5 A, Cl. 1, 5.0 VA	3NJ412 to 3NJ414		**3NJ4915-2JB20**		1	1 unit	1DL
	600/5 A, Cl. 0.5, 2.5 VA	3NJ412 to 3NJ414		**3NJ4915-2KB10**		1	1 unit	1DL
	600/5 A, Cl. 0.5 calibrated, 2.5 VA	3NJ412 to 3NJ414		**3NJ4915-2KB11**		1	1 unit	1DL
	600/5 A, Cl. 1, 5.0 VA	3NJ412 to 3NJ414		**3NJ4915-2KB20**		1	1 unit	1DL

Note

The current transformers can also be used with the 7KM PAC measuring devices, see chapter "Measuring Devices and Power Monitoring".

© Siemens 2019

Notes

Minimum order quantity (PS) or a multiple thereof can be ordered.

© Siemens 2019

1. General standards

By using this catalog you can acquire hardware and software products described therein from Siemens AG subject to these conditions of sale and delivery (hereinafter: CSD). Please note: the scope, the quality and the conditions for supplies and services, including software products, by any Siemens group or Regional Company having a registered office outside of Germany, shall be subject exclusively to the General Terms and Conditions of the respective Siemens entity. These CSD apply exclusively for orders placed with Siemens AG, Germany.

1.1 For customers with a seat or registered office in Germany

For customers with a seat or registered office in Germany, the following shall be subordinate to these CSD

- for installation, the "Standard Terms and Conditions for Installation –Germany" and
- for Plant Analytics Services the "Standard Terms and Conditions for Plant Analytics Services – for Customers in Germany"[1)] and
- for standalone software products and software products that are part of another product or project, the "General License Conditions for Software Products for Automation and Drives for Customers with a Seat or Registered Office in Germany"[1)] and
- for other supplies and services, the "General Conditions for the Supply of Products and Services of the Electrical and Electronics Industry"[1)].
  In the event that such other supplies and services include open-source software, the conditions of which override the "General Conditions for the Supply of Products and Services of the Electrical and Electronics Industry"[1)], the product will be supplied with a notice detailing the special conditions that apply for the relevant open-source software. This applies accordingly in the case of a reference to other third-party software components.

1.2 For customers with a seat or registered office outside of Germany

For customers with a seat or registered office outside of Germany, the following shall be subordinate to these CSD

- for Plant Analytics Services the "Standard Terms and Conditions for Plant Analytics Services"[1)] (only available in English) and
- for services, the "International Terms & Conditions for Services"[1)] supplemented by the "Software Licensing Conditions"[1)] and
- for the supply of other hardware and software the "International Terms & Conditions for Products"[1)] supplemented by the "Software Licensing Conditions"[1)].

1.3 For customers with framework agreements

To the extent that our products and services are covered by an existing framework agreement, the conditions there apply instead of this CSD.

2. Prices

The prices are in € (euros) ex works, excluding packaging.

The sales tax (value added tax) is not included in the prices. It shall be debited separately at the respective rate according to the applicable legal regulations.

Prices are subject to change without prior notice. We will debit the prices valid at the time of delivery.

To compensate fluctuating prices of raw materials (for example silver, copper, aluminum, lead, gold, dysprosium and neodymium), surcharges are calculated on a daily basis for products containing these raw materials using the metal factor. A surcharge for the particular raw material is added to the price of a product if the basic quotations for this raw material are exceeded.

Each product's metal factor dictates for which raw materials the metal surcharges are calculated, from which quotation and with which calculation method (weight or percentage method).

An exact explanation of the metal factor can be found at: www.siemens.com/automation/salesmaterial-as/catalog/en/terms_of_trade_en.pdf

The surcharge will be calculated (except in the case of dysprosium and neodymium) on the basis of the official price on the day prior to receipt of the order or prior to the release order for calculation of the surcharge.

In the event of placement of an order, the relevant three-month average price from the quarter prior to order receipt or the release order shall be used with a one-month buffer to calculate the dysprosium and neodymium surcharge ("rare earths") (you will find details in the aforementioned explanation of the metal factor).

3. Additional terms and conditions

All dimensions are in mm. In Germany, according to the German law on units in metrology, data in inches only apply to devices for export.

Illustrations are not binding.

Insofar as there are no remarks on the corresponding pages of this catalog - especially with regard to data, dimensions and weights given - these are subject to change without prior notice.

[1)] You can download the text of the Siemens AG terms and conditions of trade at www.siemens.com/automation/salesmaterial-as/catalog/en/terms_of_trade_en.pdf

© Siemens 2019

4. Export regulations

We shall not be obligated to fulfill this agreement if such fulfillment is prevented by any impediments arising out of national or international foreign trade or customs requirements or any embargoes or other sanctions.

Exporting may be subject to authorization. In delivery information, we label authorization obligations according to German, European and US export lists.

Our products are controlled by the U.S. authorities (goods labeled with "ECCN" not equal to "N") and may only be supplied to the stated country of the end user for sole use by the end user. Without U.S. government approval or other approval under U.S. law, the products may not be sold, transferred or otherwise forwarded to other countries or to other persons other than the specified end user, either in their original form or after further processing into other goods. Goods labeled with an "AL" not equal to "N" are subject European/national export authorization requirements.

Please note that you can also preview the export designations in the respective product description via our "Industry Mall" online catalog system. The deciding factors, however, are the AL or ECCN export designations indicated on order confirmations, delivery notes and invoices.

Unmarked items or items marked "AL:N" / "ECCN:N" or "AL:9X9999" / "ECCN: 9X9999" may require authorization based on their intended use or ultimate destination.

If you transfer goods (hardware and/or software and/or technology as well as corresponding documentation, regardless of the mode of provision) delivered by us or works and services (including all kinds of technical support) performed by us to a third party worldwide, you shall comply with all applicable national and international (re-) export control regulations.

If required to conduct export control checks, you, at our request, shall promptly provide us with all information pertaining to particular end customers, destination and intended use of goods, works and services provided by us, as well as any relevant export control restrictions.

The products listed in this catalog may be subject to European/German and/or US export regulations. Therefore, any export requiring a license is subject to approval by the competent authorities.

Errors excepted and subject to change without prior notice.

© Siemens 2019

Catalogs
Smart Infrastructure and Digital Industries

Further information can be obtained from our branch offices listed at www.siemens.com/lowvoltage/contact

Interactive Catalog	*Catalog*
Products for Automation and Drives	**CA 01**

Building Control	
GAMMA Building Control	ET G1

Drive Systems	
SINAMICS G130 Drive Converter Chassis Units SINAMICS G150 Drive Converter Cabinet Units	D 11
Digital: SINAMICS PERFECT HARMONY GH180 Medium-Voltage Air-Cooled Drives (Germany Edition)	*D 15.1*
SINAMICS G180 Converters – Compact Units, Cabinet Systems, Cabinet Units Air-Cooled and Liquid-Cooled	D 18.1
SINAMICS S120 Chassis Format Converter Units SINAMICS S120 Cabinet Modules SINAMICS S150 Converter Cabinet Units	D 21.3
SINAMICS S120 and SIMOTICS	D 21.4
SINAMICS DCM DC Converter, Control Module	D 23.1
SINAMICS Inverters for Single-Axis Drives · Built-In Units	D 31.1
SINAMICS Inverters for Single-Axis Drives · Distributed Inverters	D 31.2
Digital: SINAMICS Converters for Single-Axis Drives · SINAMICS G120X	*D 31.5*
Digital: SINAMICS S210 Servo Drive System	*D 32*
Digital: SINAMICS V90 Basic Servo Drive System	*D 33*
Digital: SINAMICS G120P and SINAMICS G120P Cabinet pump, fan, compressor converters	*D 35*
LOHER VARIO High Voltage Motors Flameproof, Type Series 1PS4, 1PS5, 1MV4 and 1MV5 Frame Size 355 to 1000, Power Range 80 to 7100 kW	D 83.2
Digital: Three-Phase Induction Motors SIMOTICS HV, SIMOTICS TN	*D 84.1*
Digital: Three-Phase Induction Motors SIMOTICS HV	*D 84.3*
High Voltage Three-phase Induction Motors SIMOTICS HV Series A-compact PLUS	D 84.9
Digital: Modular Industrial Generators SIGENTICS M	*D 85.1*
Synchronous Motors with Permanent-Magnet Technology, HT-direct	D 86.2
DC Motors	DA 12
SIMOVERT PM Modular Converter Systems	DA 45
MICROMASTER 420/430/440 Inverters	DA 51.2
MICROMASTER 411/COMBIMASTER 411	DA 51.3
Low-Voltage Three-Phase-Motors	
SIMOTOCS S-1FG1 Servo geared motors	D 41
SIMOTICS Low-Voltage Motors	D 81.1
SIMOTICS FD Low-Voltage Motors	D 81.8
LOHER Low-Voltage Motors	D 83.1
Digital: MOTOX Geared Motors	*D 87.1*
SIMOGEAR Geared Motors	MD 50.1
SIMOGEAR Electric-monorail geared motors Light-load and heavy-load applications	MD 50.8
SIMOGEAR Gearboxes with adapter	MD 50.11
Mechanical Driving Machines	
FLENDER Standard Couplings	MD 10.1
FLENDER High Performance Couplings	MD 10.2
FLENDER Backlash-free Couplings	MD 10.3
FLENDER SIP Standard industrial planetary gear units	MD 31.1

Motion Control	
SINUMERIK 840 Equipment for Machine Tools	NC 62
SINUMERIK 808 Equipment for Machine Tools	NC 81.1
SINUMERIK 828 Equipment for Machine Tools	NC 82
SIMOTION Equipment for Production Machines	PM 21
Digital: Drive and Control Components for Cranes	*CR 1*

Process Instrumentation and Analytics	*Catalog*
Digital: Field Instruments for Process Automation	*FI 01*
Digital: Display Recorders SIREC D	*MP 20*
Digital: SIPART Controllers and Software	*MP 31*
Products for Weighing Technology	WT 10
Digital: Process Analytical Instruments	*AP 01*
Digital: Process Analytics, Components for Continuous Emission Monitoring	*AP 11*

Low-Voltage Power Distribution and Electrical Installation Technology	
SENTRON · SIVACON · ALPHA Protection, Switching, Measuring and Monitoring Devices, Switchboards and Distribution Systems	LV 10
Electrical Components for the Railway Industry	LV 12
Power Monitoring Made Simple	LV 14
Components for Industrial Control Panels according to UL Standards	LV 16
Digital: Air circuit breakers and molded case circuit breakers with UL certification	*LV 18*
3WT Air Circuit Breakers up to 4000 A	LV 35
3VT Molded Case Circuit Breakers up to 1600 A	LV 36
Digital: SIVACON System Cubicles, System Lighting and System Air-Conditioning	*LV 50*
Digital: ALPHA Distribution Systems	*LV 51*
ALPHA FIX Terminal Blocks	LV 52
SIVACON S4 Power Distribution Boards	LV 56
SIVACON 8PS Busbar Trunking Systems	LV 70
Digital: DELTA Switches and Socket Outlets	*ET D1*
Vacuum Switching Technology and Components for Medium Voltage	HG 11.01

Power Supply	
SITOP Power supply	KT 10.1

Safety Integrated	
Safety Technology for Factory Automation	SI 10

SIMATIC HMI / PC-based Automation	
Human Machine Interface Systems/ PC-based Automation	ST 80/ ST PC

SIMATIC Ident	
Industrial Identification Systems	ID 10

SIMATIC Industrial Automation Systems	
Products for Totally Integrated Automation	ST 70
SIMATIC PCS 7 Process Control System System components	ST PCS 7
SIMATIC PCS 7 Process Control System Technology components	ST PCS 7 T
Add-ons for the SIMATIC PCS 7 Process Control System	ST PCS 7 AO
SIMATIC S7-400 advanced controller	ST 400

SIMATIC NET	
Industrial Communication	IK PI

SIRIUS Industrial Controls	
Digital: SIRIUS Industrial Controls	*IC 10*

Digital: These catalogs are only available as a PDF.

Siemens Industry Online Support

Digital versions of the catalogs are available on the Internet at:
www.siemens.com/lowvoltage/catalogs

© Siemens 2019

Get more information

www.siemens.com/lowvoltage

Siemens AG
Energy Management
Low Voltage & Products
Postfach 10 09 53
93009 Regensburg
Germany

© Siemens AG 2019
Subject to change without prior notice
PDF (Extract from E86060-K8280-A101-A9-7600)
KG 0619 1802 En
Produced in Germany

The information provided in this catalog contains merely general descriptions or characteristics of performance which in case of actual use do not always apply as described or which may change as a result of further development of the products. An obligation to provide the respective characteristics shall only exist if expressly agreed in the terms of contract. Availability and technical specifications are subject to change without notice.

All product designations may be trademarks or product names of Siemens AG or supplier companies whose use by third parties for their own purposes could violate the rights of the owners.

Security information

Siemens provides products and solutions with industrial security functions that support the secure operation of plants, systems, machines and networks.

In order to protect plants, systems, machines and networks against cyber threats, it is necessary to implement – and continuously maintain – a holistic, state-of-the-art industrial security concept. Siemens' products and solutions constitute one element of such a concept.

Customers are responsible for preventing unauthorized access to their plants, systems, machines and networks. Such systems, machines and components should only be connected to an enterprise network or the internet if and to the extent such a connection is necessary and only when appropriate security measures (e.g. firewalls and/or network segmentation) are in place.

For additional information on industrial security measures that may be implemented, please visit **http://www.siemens.com/industrialsecurity**.

Siemens' products and solutions undergo continuous development to make them more secure. Siemens strongly recommends that product updates are applied as soon as they are available and that the latest product versions are used. Use of product versions that are no longer supported, and failure to apply the latest updates may increase customer's exposure to cyber threats.

To stay informed about product updates, subscribe to the Siemens Industrial Security RSS Feed under **http://www.siemens.com/industrialsecurity**.