SIEMENS

LOW VOLTAGE ELECTRICAL DISTRIBUTION PRODUCTS

Power Product **Catalogue**

siemens.ca/powerdistribution

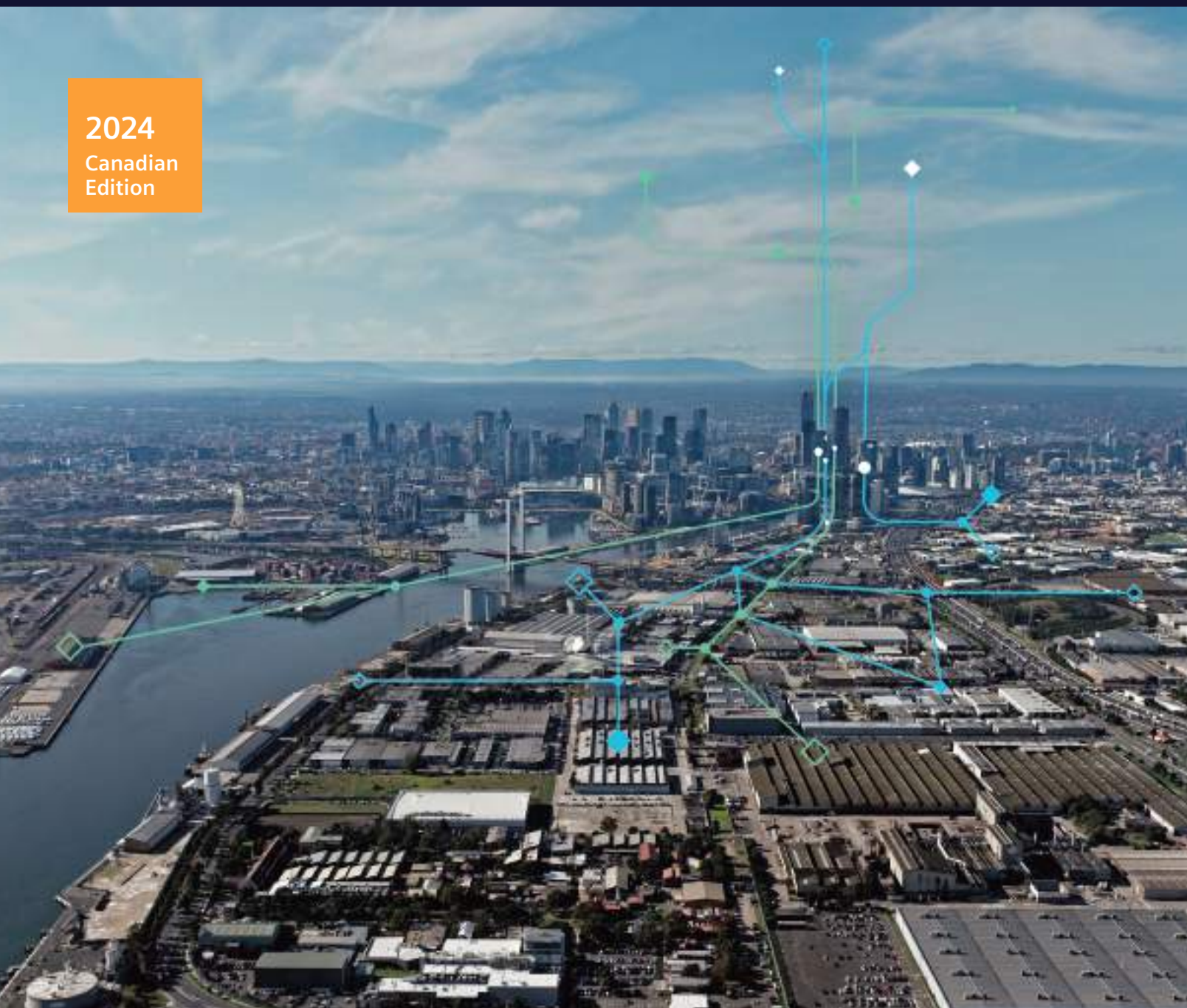

2024
Canadian
Edition



THE INDUSTRY MALL

Much more than a catalogue.

Discover the benefits

Select, order and track your product deliveries – the Industry Mall is Siemens Canada's electronic online catalog where you can also benefit from the image database, manuals, operating instructions, FAQs, software downloads, certificates, technical data sheets and much more!

siemens.com/industrymall

Reliable Products From The Technology Leader

Technology Enabling Reliability.
When it comes to ready availability, easy installation, and fewer callbacks, you need a manufacturer you can trust. Our products and systems are engineered to take on the most demanding conditions, always available day after day.

RESIDENTIAL



COMMERCIAL



INDUSTRIAL



1 Loadcentres
2 Meter Centres
3 Safety Switches
4 Disconnect Switches
5 Molded Case Circuit Breakers
6 WL Power Circuit Breakers
7 Dry Type Transformers
8 Power Monitoring
9 Surge Protection Devices (SPDs)
10 Panelboards
11 Switchboards
12 Switchgear
13 Busway Systems
14 Motor Control Centres
15 Low Voltage Motor Starters
16 Electric Vehicle Charging Products
17 Technical

Detailed Table of Contents
located at beginning of each section

Your single point of contact for general inquiries, customer service, sales office information, and product inquiries:
Siemens Customer Interaction Centre: (888) 303-3353 | email: cic.ca@siemens.com | siemens.ca/powerdistribution



Don’t get shocked.
Buy authentic.

Unsafe and counterfeit products put us all at risk.

Q: Are low-cost electrical products that appear to be certifed unsafe or counterfeit?
A: This is a “buyer beware” warning! Certification marks can be counterfeit as well as products. Do not be tempted by the low price.

Q: How do I avoid buying counterfeit and/or possibly unsafe electrical products?
A: Buy your electrical products from an authorized distributor.

Q: I suspect a product to be counterfeit, how do I verify the product’s authenticity?
A: Contact the manufacturer who will be happy to help you to verify that authenticity.

Inform and protect yourself.
Get answers.

SIEMENS

Contents

Application and Description	1-2
Product Offering and Specification Guide	1-3
Product Features and Customer Benefits	1-4
Catalogue Numbering System	1-5
EQL, SNC, & SEQ Single phase Loadcentres	
EQL Loadcentres with main lug only	1-6
SNC Loadcentres with main lug only	1-6
SEQ Service Entrance Loadcentres	1-6
EQL Loadcentres Type 3R	1-7
SEQ Service Entrance Loadcentres Type 3R	1-7
SEQ Dual Listed/cULus Loadcentres	1-8
EQ3 Single phase & EQ4 Three phase Loadcentres	1-9
SPA panel, Mini panels and Enclosed Breaker	1-10
EQG Generator Panels	
EQG 3 Pole	1-11
EQG 2 Pole	1-11
Plug in Branch Breakers Type Q	
Full Module (1" per pole)	1-12
Half Module (1/2" per pole): Twin and Quad Type	1-12
Replacement Main Breakers	1-13
Arc Fault Interrupters	1-14
Ground Fault Interrupters	1-14
Bolt-On Branch Breakers Type BQ	
Full Module (1" per pole)	1-15
Blue Line Breakers	1-15
Accessories and Replacement Parts	1-16 – 1-18
Surge Protection	
Circuit Breaker and Surge Protective Device (SPD)	1-19
Power Service Entrance Surge Protection	1-20
Telephone Service Entrance Surge Protection	1-21
Coaxial Service Entrance Surge Protection	1-21
Knockout Data for Loadcentres	1-22 - 1-23
Line Diagrams/Dimension Drawings for Breakers	1-24
Lug Data	1-24

Loadcentres

Applications and Descriptions

Description

No.	Applications	Products
1	Miscellaneous Applications	
	Standard Main Lugs Only Panel	EQL & SNC Loadcentre-Indoor & Outdoor Type
2	Single Family	SEQ Loadcentre – Indoor & Outdoor Type
3	Duplex Units, Small Apartment Building, Small Professional and Commercial Building (Two to Six Units Maximum)	a) SEQ Service Entrance Equipment – Indoor & Outdoor Type b) EQL Main Lugs Loadcentre – Indoor & Outdoor Type c) SNC Main Lugs Loadcentre - Indoor type
4	Office Building/Condo/Apartment Building (3Ø Application)	a) Switchboards b) Busways c) Modular Metering d) EQ4 Loadcentres Main Lug only or Main Breaker
5	Small Industrial/Commercial Building (3Ø Application)	a) Switchboards b) Busways c) 3Ø Modular Metering d) EQ4 Loadcentres Main Lug Only or Main Circuit Breaker

A loadcentre is a metal enclosed distribution panel containing circuit breakers which distribute, protect and control lighting and power circuits in residential and light commercial applications, including single-family homes, townhouses, apartment buildings, and small office buildings.

All Siemens loadcentres can be classified into two types: main lug or main circuit breaker. Each Siemens loadcentre consists of three basic components: the enclosure, the interior, and the trim. The enclosure is used to contain the circuit breakers which mount on the interior. The trim seals the enclosure, offering protection to personnel from the environment.

A complete line of breakers and accessories which give Siemens loadcentres flexibility. For example, Ground Fault Interrupters protect personnel, an important consideration with the stress placed on personnel protection by the CEC. Handle ties, handle blocking devices, padlocking devices and filler plates are also available. Neutral lug kits in a variety of wire range sizes.



Speeds Your Installation With Every Turn!

Included into all Loadcentres and Q Breakers

Loadcentres

Product Offering and Specification Guide

Application

Main lug loadcentre
- 1 Phase 3 W 120/240V, 60 to 200A, 2/4 - 40/80 circuits
- 3 Phase 4W 120/208V, 100 to 225A, 12 - 42 circuits
- Outdoor Type 3R, 1 Phase 3 W, 120/240V, 100 to 200A, 8/16 - 40/80 circuits

Main breaker loadcentre
- 1 Phase 3 W 120/240V, 60 to 200A, 12/24 - 60/120 circuits
- 3 Phase 4W 120/208V, 100 to 200A, 24 - 42 circuits
- Outdoor Type 3R, 1 Phase 3 W 120/240V, 100 to 200A, 16/32 - 40/80 circuits
- Dual certified loadcentre 1 Phase 3 W 120/240V, 100 to 200A, 38 circuits

Generator panel
- Generator panel 3 Pole 1 Phase 3 W 120/240V, 30 to 100A, 6/12- 34/68 circuits
- Generator panel 2 Pole 1 Phase 3 W 120/240V, 30 to 100A, 8/16 - 36/72 circuits

SPA panel
- Type 3R, 1Phase 3 W 120/240V, 125A, 4/8 circuits

Mini panel/ Enclosed breaker,
- Indoor, 1Phase 3 W 120/240V, 60 & 125A, 2 circuits
- Outdoor Type 3R, 1 Phase 3 W 120/240V, 60 & 125A, 3 & 2/4 - 4/8 circuits

Circuit breaker

Plug- in

Interrupting rating of 10kA
- Full module
  1 Pole 15-70 Amp
  2 Pole 15-200 Amp
  3 Pole 15-100 Amp
- Half module
  Twin: two single-pole, 15-15 to 40-15 Amp
  Quad: two single-pole and one 2-pole inner breaker, 15-15 to 15-40 Amp

Bolt- on

Interrupting rating of 10kA & 22kA
- Full module
  1 Pole 15-70 Amp
  2 Pole 15-125 Amp
  3 Pole 15-100 Amp

Ground fault circuit interrupter
- 1 and 2 Pole, 15- 60A, 5 and 30mA sensitivity

Arc fault circuit interrupter

Interrupting rating of 10kA & 22kA
- 1 Pole, 15 and 20 Amp

Surge arrester breakers
- Two single pole breakers and one surge arrester, 15 and 20 Amp

Surge protection device (SPD)
- Power service entrance surge protection
- Telephone service entrance surge protection
- Coaxial service entrance surge protection

Specification Guide - Loadcentres

Loadcentre enclosures and trims are formed of cold rolled, code gauge steel. All devices are finished with ANSI 61 grey paint (electro deposition painting process).

Description

The combination flush/surface trim is flat and plumb in appearance. The Siemens Type 3R loadcentre features industry exclusive gasketed door for improved weatherproof protection. The enclosures and interiors provide 4 1/4" (108 mm) side wiring gutters for branch circuits. Main bus bars are formed of cold rolled, one piece tin plated (acid bath tin, zincate process) aluminum. Copper bus is also available. Main lugs, neutral assemblies, and ground bars are suitable for copper or aluminum conductors and comply with the requirements of CSA. The extended capacity fully distributed neutrals give a neutral termination at every breaker position, and is mounted, along with bus bars, on a base part made of engineered resin. CSA listed for 60/75ϒC wiring applications; ratings are as follows: loadcentre main terminals 60/75ϒC cu/al wire; branch breaker terminals–60/75ϒC cu/al wire. All loadcentres are CSA listed under file #13069.

Individual circuit breakers are thermal magnetic, quick-make quick-break, trip free, plug-in construction. All two and three pole breakers are common trip. All circuit breakers are CSA listed under file #14374.

*Series rating labels on all loadcentres.



Loadcentres

Product Features and Customer Benefits



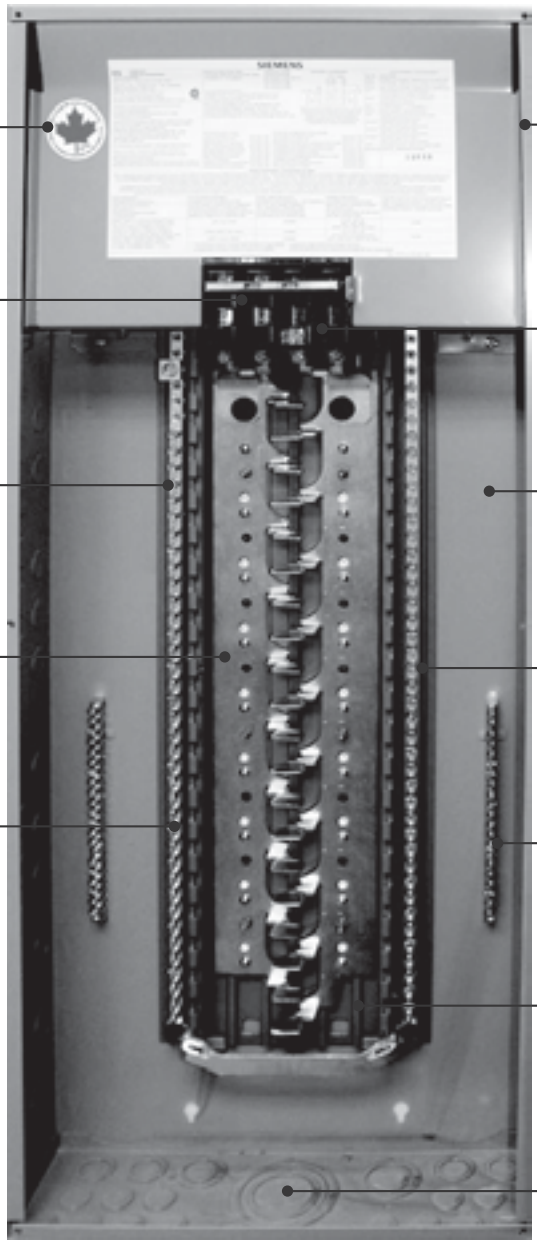

Made in Canada, for Canada: Faster delivery and better service. Buying Canadian supports Canadian manufacturing

Straight in wiring design: Helps reduce the need to bend cables and wires

Combination slot/Robertson™ neutral and ground screws: Allowing for installation flexibility, enabling simple, one-tool installation and speed wiring

Both aluminum and copper bus bars: Meets any specification and job site requirement

Extended capacity fully distributed neutrals: Easily accessible, reduces installation time and simplifies wiring

Gasketed hinge door with outdoor loadcentre: Provides easy installation and improved weatherproof protection

Indoor loadcentres (type 1) can be mounted for either top or bottom feed: Meeting job site requirements and reducing cable waste

Suitable for up to 22 kA short circuit current rating: Provides increased high fault current protection

Combination flush/surface trim in three colours: Meets any application need

Patented INSTA-WIRE™ neutrals and ground bars: Allows for faster installation as screws are backed out, ready for wire insertion

Factory installed ground bars: Reduces installation time and cost, no need to order additional ground bar kits

A flexible extruded plastic base pan: Makes breaker installation and removal quick and easy

Concentric knockouts: Makes wiring easy

Features and Benefits

Siemens provides the broadest product portfolio related to single and multifamily applications. Flexibility, innovation and quality are the hallmarks of Siemens products for single and multi-family applications providing the customer with unmatched value. One example is our quick-make quick-break circuit breakers which give homeowners peace of mind and fast acting circuit protection. Our whole house surge protection solutions, arc fault and ground fault circuit interrupters provide additional protection against the risks of electrocution, fire hazard and property damage. With the comprehensive selection of options and accessories, Siemens loadcentres and breakers are the smart choice for the conscientious customer.

Loadcentres

Catalogue Numbering System

Catalogue Numbering System①

SEQ	24	100	SM	D	-	-	W

Panel Type
EQL = 1-Phase main lug
SEQ = 1-Phase main breaker
SNC = Main Lugs Loadcentre - Indoor type
EQ4 = 3-Phase, main lug and main breaker
EQG = Generator panel
*Note: For EQG 2 Pole Generator panel, the NSN (none switched neutral) is added to the part number. Ex: EQG860NSND

Number of Circuits
Maximum number of circuits

Main Ampere Rating
Ex: 100 = 100 Amp
*Note: It comes with the type of main breaker for EQ4 3-Phase
Ex: BQ100 = 100 Amp

Main breaker mounting position for SEQ loadcentres only
Blank = Standard top mounted
SM = Side mounted

Door
Blank = Without door
D = With door
* For SEQ loadcentres only. The doors for EQL,EQ4, EQG and SEQ Type 3R loadcentres are factory installed.

Type of Bus Bar
Blank = Aluminum
C = Copper

Enclosure Type
Blank= Type 1
R= Type 3R

Colour
Blank = Grey
W = White

*Only available for EQL and SEQ loadcentres.
EQL white and SEQ white are only available with door.


EQ442225


EQG860NSND


SNC2448L1125W


SEQ24100SMDW


SEQ40200DW

① The Catalogue numbering system applies only to EQL, EQL Type 3R, SEQ, SEQ Type 3R, EQ4 and EQG loadcentres.

Loadcentres

EQL & SEQ Single Phase Main Lug & Main Breaker Loadcentres

Selection

INSTA WIRE™

Selection and Ordering Data



EQL24125D



SEQ40200

Number of Circuits	Catalogue Number	Skid Qty.	Main Amps	Dimensions - Inches (mm) H	W	D	Lug Data	Mounting Trim	Door Kit Catalogue Number	Factory Mod.
EQL Loadcentres with main lugs only 1 phase 3 wire 240 V AC max.										
2/4	**EQL260S**	330	60	7 (178)	5 (127)	$2^{3/4}$ (70)	3	surface	**N/A**	N/A
4/8	**EQL4100**	90	100	$12^{5/8}$ (322)	$6^{5/8}$ (168)	$3^{1/2}$ (90)	1	comb.	**N/A**	N/A
8/16	**EQL8100D***	72	100	$14^{7/8}$ (378)	12 (305)	$3^{3/4}$ (95)	4-2/0	comb.	**DK8-A**	N/A
12/24	**EQL12125D**③	45	125	$16^{7/8}$ (429)	12 (305)	$3^{3/4}$ (95)	4-2/0	comb.	**DK12-A**	①
16/32	**EQL16125D**③	45	125	$18^{7/8}$ (479)	12 (305)	$3^{3/4}$ (95)	4-2/0	comb.	**DK16-A**	①
24/48	**EQL24125D**③	36	125	$24^{1/8}$ (613)	$13^{1/32}$ (331)	$3^{3/4}$ (95)	4-2/0	comb.	**DK24-A**	①
32/64	**EQL32200D**③	27	200	33 (838)	$14^{1/4}$ (362)	4 (102)	6-250 MCM	comb.	**DKL32-2A**	①
40/80	**EQL40200D**③	27	200	33 (838)	$14^{1/4}$ (362)	4 (102)	6-250 MCM	comb.	**DKL40-2A**	①
Note: EQL8100D through **EQL40200D**③ are stocked complete with doors ***Neutral bar only on one side of panel.**										
12/24	**SNC1224L1125**③	28	125	18	$14^{1/4}$	$3^{7/8}$	2/0	comb.	**RSCT1224L1125**	N/A
16/32	**SNC1632L1125**③	28	125	21	$14^{1/4}$	$3^{7/8}$	2/0	comb.	**RSCT1632L1125**	N/A
24/48	**SNC2448L1125**③	28	125	24	$14^{1/4}$	$3^{7/8}$	2/0	comb.	**RSCT2448L1125**	N/A
30/48	**SNC3048L1200**③	21	200	30	$14^{1/4}$	$3^{7/8}$	300 kcmil	comb.	**RSCT3048L1200**	N/A
40/60	**SNC4060L1200**③	21	200	36	$14^{1/4}$	$3^{7/8}$	300 kcmil	comb.	**RSCT4060L1200**	N/A
Service Entrance Loadcentres with Factory installed main breaker 1 phase 3 wire 240 V AC max.										
12/24	**SEQ12060SM**	54	60	$17^{5/8}$ (448)	$13^{1/8}$ (333)	$3^{3/4}$ (95)	6-2/0	comb.	**DK1216SM-1**	①
16/32	**SEQ16060SM**②	36	60	$19^{5/8}$ (498)	$13^{1/8}$ (333)	$3^{3/4}$ (95)	6-2/0	comb.	**DK1216SM-1**	①
24/48	**SEQ24060SM**②	36	60	$24^{1/8}$ (613)	$13^{1/8}$ (333)	$3^{3/4}$ (95)	6-2/0	comb.	**DK24SM-1**	①
12/24 16/32	**SEQ12100SM** **SEQ16100SM**	54 36	100	$17^{1/2}$ (444)	$13^{1/8}$ (333)	$3^{3/4}$ (95)	4-2/0	comb.	**DK1216SM-1**	①
24/48 24/48 24/48	**SEQ24100SM**② **SEQ24100SMK**■ **SEQ24125SM**②	36	100 125	$24^{1/8}$ (613)	$13^{1/8}$ (333)	$3^{3/4}$ (95)	4-2/0	comb.	**DK24SM-1**	①
24/48	**SEQ24150**② **SEQ24200**	27	150 200	27 (686)	$14^{1/4}$ (362)	4 (102)	6-250 MCM	comb.	**DKS24-2A**	①
32/64	**SEQ32100SM** **SEQ32125SM**	27	100 125	$27^{1/8}$ (689)	$13^{1/8}$ (333)	$3^{3/4}$ (95)	4-2/0	comb.	**DK32SM-1**	①
32/64	**SEQ32150** **SEQ32200**	27	150 200	33 (838)	$14^{1/4}$ (362)	4 (102)	6-250 MCM	comb.	**DKS32-2A**	①
40/80	**SEQ40100** **SEQ40125**	27	100 125	36 (914)	$14^{1/4}$ (362)	4 (102)	6-250 MCM	comb.	**DKS40-1A**	①
40/80	**SEQ40150** **SEQ40200**②	27	150 200	36 (914)	$14^{1/4}$ (362)	4 (102)	6-250 MCM	comb.	**DKS40-2A**	①
60/120	**SEQ60200**	18	200	46 (1168)	$14^{1/4}$ (362)	4 (102)	6-250 MCM	comb.	**N/A**	N/A
■ **Standard SEQ24100SMK with additional knockouts to bottom plate**										

Note: Comb= Combination Flush/Surface mounted Certified for use with any combination of full or half module plug-in circuit breakers. Certiied for mounting vertical, horizontal or inverted and for use with CU/AL conductors including compact stranded. All neutral bar connectors are No. 14 - No.4.

Typical circuit rating (ie. 24/48) indicates the circuit capacity of the loadcentre is 24 full module (1") breaker of 48 half-module (1/2") breakers.

① Factory modification, see next page.

② For copper bus add suffix C to existing part number. 4 weeks delivery required.

③ **EQL** and **SNC** available in White paint colour. Add "W" to end of part number.

Loadcentres

EQL, SNC, & SEQ Single Phase Main Lug & Main Breaker Loadcentres

Selection and Ordering Data

Selection INSTA WIRE™



SEQ24125SM

Factory Modifications①

Type	Description	Catalogue Number	Example	Delivery
EQL	White door and trim	add suffix...**W**	EQL24125D**W**	2 weeks
SNC	White door and trim	add suffix...**W**	SNC1224L1112S**W**	
SEQ	Grey door installed White door and trim	add suffix...**D** add suffix...**DW**	SEQ24125SM**D** SEQ24125SM**DW**	
Door Kit	White Door kit	add suffix...**W**	DK24SM-1**W**	
Note: All door kits are available in Grey and White colours.				
EQL	Copper Bus	add suffix...**CR**	EQL24125DCR	4 weeks



EQL24125DCR

Weatherproof Loadcentre Main Lug Only, 1 phase 3 wire 120/240V AC max.

Number of Circuits	Catalogue Number	Skid Qty.	Main Amps	Dimensions - Inches (mm) H	W	D	Lug Data	Mounting Trim	Factory Mod.	Hubs (sold seperately) Conduit size (')	Catalogue Number
12/24	**EQL12125DCR**	35	125	$19^{7/8}$ (505)	$13^{3/4}$ (349)	5 (127)	6-2/0	surface only	**N/A**	3/4 1 1 1/4 1 1/2 2 2 1/2	**ECHS075** **ECHS100** **ECHS125** **ECHS150** **ECHS200** **ECHS250**
24/48	**EQL24125DCR**	28	125	$24^{7/8}$ (632)	$13^{3/4}$ (349)	5 (127)	6-2/0	surface only	**N/A**		
40/80	**EQL40200DCR**	21	200	$33^{5/8}$ (853)	15 (381)	5 (127)	6-250 MCM	surface only	**N/A**		

* Neutral bar only on one side of panel.



SEQ24100SMCR

SEQ Type 3R Weatherproof Loadcentre with Factory installed main breaker 1 phase 3 wire 240V AC max.

Number of Circuits	Catalogue Number	Skid Qty.	Main Amps	Dimensions - Inches (mm) H	W	D	Lug Data	Mounting Trim	Factory Mod.	Hubs (sold seperately) Conduit size (')	Catalogue Number
16/32	**SEQ16100SMCR**	35	100	$21^{5/8}$ (549)	$13^{9/16}$ (345)	5 (127)	6-2/0	surface only	**N/A**	3/4 1 1 1/4 1 1/2 2 2 1/2	**ECHS075** **ECHS100** **ECHS125** **ECHS150** **ECHS200** **ECHS250**
24/48	**SEQ24100SMCR**	28	100	$24^{5/8}$ (625)	$13^{9/16}$ (345)	5 (127)	6-2/0	surface only	**N/A**		
24/48	**SEQ24200CR**	21	200	$27^{1/2}$ (699)	15 (381)	5 (127)	6-250 MCM	surface only	**N/A**		
40/80	**SEQ40200CR**	21	200	$36^{1/2}$ (927)	15 (381)	5 (127)	6-250 MCM	surface only	**N/A**		

Note: Both SEQ and EQL weatherproof panels are stocked complete with gasketed hinged door for improved weatherproof protection. All SEQ and EQL Type 3R panels come standard with copper bus.

Loadcentres

EQL, SNC, & SEQ Single Phase Main Lug & Main Breaker Loadcentres (continued)

Selection and Ordering Data



SEQ38200U

Dual Listed/cULus Loadcentres 120/240V 1 phase 3 Wire

Number of Circuits	Catalogue Number	Skid Qty.	Main Amps	Dimensions - Inches (mm) H	W	D	Lug Data	Mounting Trim	Door Kit Catalogue Number
38	**SEQ38100U** **SEQ38125U**	27 27	100 125	36 (362)	$14^{1/4}$ (362)	4 (102)	6-250MCM	comb.	**DKS38-1A**
	SEQ38150U **SEQ38200U**	27 27	150 200						**DKS38-2A**

Branch breakers: Only 1" full module breakers that are both UL & CSA certified are allowed to be installed in this loadcentre; 1/2" twin and quad branch breakers must not be used as per NEC 384-14(a) and NEC-384-15. Consult Siemens Sales Rep. for details.

Application benefit: Allows modular home builders who have businesses in both US & Canada to carry only one line of inventory.

Loadcentres

EQ3 Single Phase & EQ4 Three Phase Loadcentres

Selection

Selection and Ordering Data



EQ424BQ100

EQ3 Single Phase Loadcentres

With Main Lugs only 1 phase 3 Wire 120/240 V AC max. 10KA

Number of Circuits	Catalogue Number	Main Amps	Dimensions - Inches (mm) H	W	D	Lug Data	Mounting Trim	Door Catalogue Number	Factory Mod.
24	**EQ324225**	225	34 (864)	$14\frac{3}{8}$ (365)	$4\frac{3}{8}$ (111)	6-300 MCM	comb.	**DKEQ2430**	①
40	**EQ340225**	225	40 (1016)					**DKEQ42**	

EQ3 Service Entrance Loadcentre

With factory Installed Main Breaker 1 phase 3 Wire 120/240 V AC max. 10KA

24	**EQ324BQ125**	125	34 (864)	$14\frac{3}{8}$ (365)	$4\frac{3}{8}$ (111)	#6 - 2/0	comb.	**DKEQ24BQ**	①
32	**EQ332BQ125**	125	40 (1016)					**DKEQ42**	

EQ Three Phase Loadcentres①

With main lugs only 3 phase 4 wire 240V AC max. 10 KA

12	**EQ412100**	100	28 (711)	$14\frac{3}{8}$ (365)	$4\frac{3}{8}$ (111)	14-2/0	comb.	**DKEQ1218**	①
18	**EQ418100**	100	28 (711)					**DKEQ1218**	
24	**EQ424225**	225	34 (864)			6-300 MCM		**DKEQ2430**	
30	**EQ430225**	225	34 (864)					**DKEQ2430**	
42	**EQ442225**	225	40 (1016)					**DKEQ42**	

Service Entrance Loadcentres

With factory installed main breaker 3 phase 4 wire 240 V AC max. 10 KA.

24	**EQ424BQ100**	100(BQ)	34 (864)	$14\frac{3}{8}$ (365)	$4\frac{3}{8}$ (111)	4-2/0	comb.	**DKEQ24BQ**	①
42	**EQ442QR100**	100(QR)	46 (1168)			6-300 MCM		**DKEQ42QR**	
42	**EQ442QR125**	125(QR)	46 (1168)						
42	**EQ442QR150**	150(QR)	46 (1168)						
42	**EQ442QR200**	200(QR)	46 (1168)						

Factory Modifications①

Type	Description	Catalogue Number	Example	Delivery
EQ4	Copper Bus	add suffix...**C**	EQ430225**C**	4 Weeks

Lug Kits For EQ Loadcentres



SFK225



TFK100

Catalogue Number	Loadcentre Amps Rating	Description
SFK100	100	Sub-feed Kit 14-2/0 (Per Phase)
SFK225	225	Sub-feed Kit 1/0-250 MCM (Per Phase)
TFK100	100	Through-feed Kit 14-2/0 (Per Phase)
TFK225	225	Through-feed Kit 6-300 MCM (Per Phase)

Note : Certified for use with either plug-in (Type Q) or bolt-on (Type BQ) branch breakers. Number of circuits can be doubled by use of plug-in (Type QT) twin breakers. Certified for mounting vertical, horizontal or inverted and for use with CU/AL conductor including compact stranded. All neutral bar connectors are No. 14 - No. 4.

①All Three Phase EQ loadcentres are stocked complete with doors. Interior only is not available.Must be ordered as a complete unit.
Note: For copper bus add suffix C to existing part number. 4 weeks delivery required

Loadcentres

SPA panel and Mini Panel/Enclosed Breaker

Selection

INSTA WIRE™

Selection and Ordering Data



W0408ML1125



2-POLE GFCI

SPA panel package, 3R enclosure 120/240V 1 Phase 3 Wire

Number of Circuits	Package Catalogue Number	Main Amps.	GFCI Included	Enclosure Dimensions - Inches (mm) H	W	D	Hubs (sold seperately) Conduit Size (")	Catalogue Number
4/8	W0408ML1125-20	125	QF220A	$12^{1/4}$ (312)	6 (153)	$4^{1/4}$ (108)	Cover	ECHS000
	W0408ML1125-30		QF230A				3/4	ECHS075
	W0408ML1125-40		QF240A				1	ECHS100
	W0408ML1125-50		QF250A				$1^{1/4}$	ECHS125
	W0408ML1125-60		QF260A				$1^{1/2}$	ECHS150
							2	ECHS200
							$2^{1/2}$	ECHS250

Each package also includes a 4-point ground bar and French instructions.



EQS260

Circuit Breaker Enclosures for Service Entrance and Commercial Use

EEMAC 1 Enclosure (Indoor) 1 phase 3 wire 240V AC Max.

Breaker Range	Catalogue Number	Main Amps.	Number of Poles	Dimensions - Inches (mm) H	W	D	Lug Data
15-60A	EQS260*①	60	1,2	$7^{3/4}$ (197)	5 (127)	$2^{3/4}$	14-4 (70)
15-125A	EQS2125*①	125	1,2	13 (330)	$6^{5/8}$ (168)	$3^{3/8}$	14-2/0 (86)

*Does not accept quad type breaker.



WEQ60-4



W0816ML1125CU

EEMAC 3R Weatherproof Enclosure, 1 phase 3 wire 240V AC Max.

Full Module Circuits	Catalogue Number	Main Amps.	Dimensions - Inches (mm) H	W	D	Weight lbs.	Hub② Type
3	WEQ60-4①③	60	$10^{1/4}$ (260)	$9^{1/2}$ (241)	$5^{5/8}$ (143)	8	HR
2/4	W0204ML1060①③	60	8 (204)	5 (127)	$4^{1/4}$ (108)	4	HA
4/8	W0408ML1125③	125	$12^{1/4}$ (312)	6 (153)	$4^{1/4}$ (108)	7	HS
8/16	W0816ML1125CU③	125	$14^{3/4}$ (375)	$12^{1/8}$ (308)	$4^{1/4}$ (108)	7	HS

Note: Package does not include a 4-point ground bar, please order: GBK4

Key Features:
Outdoor EEMAC 3R enclosure
- Accepts plug-in Q type breakers
- One piece bus bar construction
- Combination trim flush/surface

Remark:
① The panels will not accommodate a 2 pole ground fault breaker (GFCI) or breaker with shunt trip.
② Hubs sold seperately
③ Not to be used as service entrance.

Hubs

Catalogue Number	Conduit size (')	Catalogue Number	Conduit size (')
ECHA075	3/4	ECHS075	3/4
ECHA100	1	ECHS100	1
ECHA125	1 1/4	ECHS125	1 1/4
ECHR075	3/4	ECHS150	1 1/2
ECHR100	1	ECHS200	2
ECHR125	1 1/4	ECHS250	2.5
ECHR150	1 1/2		

Loadcentres

Generator panel

Selection

Selection and Ordering Data



EQG630D



EQG860NSND

Number of Circuits	Catalogue Number	Skid Qty.	Main Amps	Dimensions - Inches (mm) H	W	D	Lug Data	Mounting Trim
Generator Panel, 3 Pole 1 phase 3 wire 240V AC Max. Suitable for use with a generator having a bonded neutral conductor.								
6/12	**EQG630D** **EQG660D** **EQG680D** **EQG6100D**	63	30 60 80 100	$16^{7/8}$ (429)	12 (305)	$3^{3/4}$ (95)	14-6 6-2/0 6-2/0 6-2/0	Comb.
10/20	**EQG1030D** **EQG1060D** **EQG1080D** **EQG10100D**	45	30 60 80 100	$18^{7/8}$ (479)	12 (305)	$3^{3/4}$ (95)	14-6 6-2/0 6-2/0 6-2/0	Comb.
18/36	**EQG1830D** **EQG1860D** **EQG1880D** **EQG18100D**	36	30 60 80 100	$24^{1/8}$ (613)	$13^{1/32}$ (331)	$3^{3/4}$ (95)	14-6 6-2/0 6-2/0 6-2/0	Comb.
26/52	**EQG2630D** **EQG2660D** **EQG2680D** **EQG26100D**	27	30 60 80 100	33 (838)	$14^{1/4}$ (362)	4 (102)	14-6 6-2/0 6-2/0 6-2/0	Comb.
34/68	**EQG3430D** **EQG3460D** **EQG3480D** **EQG34100D**	27	30 60 80 100	33 (838)	$14^{1/4}$ (362)	4 (102)	14-6 6-2/0 6-2/0 8-2/0	Comb.
Generator Panel, 2 Pole 1 phase 3 wire 240V AC Max. Suitable for use with a generator having an unbonded neutral conductor.								
8/16	**EQG830NSND** **EQG860NSND** **EQG880NSND** **EQG8100NSND**	63	30 60 80 100	$16^{7/8}$ (429)	12 (305)	$3^{3/4}$ (95)	14-8 6-2/0 6-2/0 6-2/0	Comb.
12/24	**EQG1230NSND** **EQG1260NSND** **EQG1280NSND** **EQG12100NSND**	45	30 60 80 100	$18^{7/8}$ (479)	12 (305)	$3^{3/4}$ (95)	14-8 6-2/0 6-2/0 6-2/0	Comb.
20/40	**EQG2030NSND** **EQG2060NSND** **EQG2080NSND** **EQG20100NSND**	36	30 60 80 100	$24^{1/8}$ (613)	$13^{1/32}$ (331)	$3^{3/4}$ (95)	14-8 6-2/0 6-2/0 6-2/0	Comb.
28/56	**EQG2830NSND** **EQG2860NSND** **EQG2880NSND** **EQG28100NSND**	27	30 60 80 100	33 (838)	$14^{1/4}$ (362)	4 (102)	14-8 6-2/0 6-2/0 6-2/0	Comb.
36/72	**EQG3630NSND** **EQG3660NSND** **EQG3680NSND** **EQG36100NSND**	27	30 60 80 100	33 (838)	$14^{1/4}$ (362)	4 (102)	14-8 6-2/0 6-2/0 6-2/0	Comb.

Note: The EQG panels are stocked complete with doors

Key Features:

- Ensures reliable and continuous operation, allows customers to permanently connect critical loads to back up generators in cases of main power failures
- Factory ready for use in both switched and non-switched neutral applications
- Additional number of generator circuits for more flexibility

Circuit Breakers

Type Q Plug-In Breakers

Selection and Ordering Data



Q115



Q215



Q315



Q1515NC



Q21515CTNC

Full Module (1" per pole) 10,000 A.I.C			
Ampere Rating	**Catalogue Number**		**Standard Package**
Single Pole			
15 20 25 30 40 50 60 70	**Q115**③ **Q120**③ **Q125** **Q130** **Q140** **Q150** **Q160** **Q170**		48
Two Pole Common Trip			
15 20 25 30 35 40 50 60	**Q215** **Q220** **Q225** **Q230** **Q235** **Q240** **Q250** **Q260**		24
70 80 90 100 110 125	**Q270** **Q280** **Q290** **Q2100** **Q2110** **Q2125**		5
150 200	**QN2150R**④⑤ **QN2200R**④⑤		1
Three Pole Common Trip			
15 20 25 30 40 50 60 70	**Q315** **Q320** **Q325** **Q330** **Q340** **Q350** **Q360** **Q370**		3
80 90 100	**Q380** **Q390** **Q3100**		2
Half Module (1/2" per pole) 10,000 A.I.C.			
Poles	**Amps**	**Catalogue Number**①	**Standard Package**
QT Dual (Twin)	15-15 15-20 15-30 15-40 20-15 20-20 30-15 30-20 30-30 40-15	**Q1515NC** **Q1520NC** **Q1530NC** **Q1540NC** **Q2015NC** **Q2020NC** **Q3015NC** **Q2030NC** **Q3030NC** **Q4015NC**	48
Quad Type (1/2" per pole) 10,000 A.I.C. Common Trip - centre poles only.			
Poles	**Ampere Rating**	**Catalogue Number**②	**Standard Package**
QT Quad	15-15 15-20 15-25 15-30 15-40	**Q21515CTNC** **Q21520CTNC** **Q21525CTNC** **Q21530CTNC** **Q21540CTNC**	24

① Typical catalogue number (ie. Q1515NC) represents two single-pole 15A circuit breakers - total width 1".

② Typical catalogue number (ie. Q21520CTNC) represents two single-pole, outer poles (two 15A 1-pole circuit breakers) and one 2-pole inner breaker with common trip (one 20A 2-pole circuit breaker) - total width 2".

③ Typical CSA Listed for frequent switching applications (SWD). 120V AC Fluorescent Lighting.

④ Requires 4 panel circuits, 2 adjacent and 2 opposite. Two twist outs should be only removed.

⑤ Will not fit in EQ3 or EQ4 loadcenters

Surge Arrester and Replacement Main Breakers

Selection and Ordering Data



EQ9675

Replacement Main Breakers for EQ4 and EQ3 Loadcentres 22,000 A.I.C.			
Poles	**Ampere Rating**	**Catalogue Number**	**Standard Package**
N/A	60	**Q260H**	6
	100 125 150 200	**EQ9675** **EQ9677** **EQ9683** **EQ9685**	1

Loadcentres

Arc-Fault and Ground Fault Circuit Interrupters

Selection and Ordering Data



1-Pole Combination Type AFCI



2-Pole Combination



1-Pole Twin AFCI



1-Pole Dual Function AFCI/GFCI



1-Pole GFCI



2-Pole GFCI



1-Pole GFCI



2-Pole GFCI



1-Pole Plug on Neutral Arc Fault



1-Pole Plug on Neutral Ground Fault

Poles	Ampere Rating	Interrupting Rating		
		10Ka	22kA	65Ka
		Catalogue Number		
Combination Arc Fault Circuit Interupters (AFCI) Detects all three possible types of arc faults: line-to-ground, line-to-neutral, and series. **Pig Tail Version,** Full Module (1" per pole)				
1	15 20	**QA115AFCCSA** **QA120AFCCSA**	**QA115AFCH** **QA120AFCH**	**QA115AFCHH** **QA120AFCHH**
2	15 20	**Q215AFCCSA** **Q220AFCCSA**	**Q215AFCH** **Q220AFCH**	N/A N/A
Plug On Neutral Version, Full Module (1" per pole)				
1	15 20	**QA115AFCNCSA** **QA120AFCNCSA**	N/A N/A	N/A N/A
2	15 20	**Q215AFCNCSA** **Q220AFCNCSA**	N/A N/A	N/A N/A
Pig Tail Twin Version, Half Module (1/2" per pole)				
1	15 20	**Q1515AFCCSA** **Q2020AFCCSA**	N/A N/A	N/A N/A
Plug On Neutral Twin Version, Half Module (1/2" per pole)				
1	15 20	**Q1515AFCNCSA** **Q2020AFCNCSA**	N/A N/A	N/A N/A
Dual Function AFCI/GFCI The Dual Function Circuit Breaker combines Combination Type AFCI and GFCI, protecting against both Arc Faults and (5mA) Ground Faults. Includes Self Test as an added safety feature. **Pig Tail Version**, Full Module (1" per pole)				
1	15 20	**Q115DFCSA** **Q120DFCSA**	**Q115DFH** **Q120DFH**	**Q115DFHH** **Q120DFHH**
Plug On Neutral Version, Full Module (1" per pole)				
1	15 20	**Q115DFNCSA** **Q120DFNCSA**	N/A N/A	N/A N/A
Ground Fault Circuit Interrupters, Class A (5mA) Sensitivity Provides Class A (5mA) ground fault protection. Intended for personnel protection. Includes Self Test as an added safety feature. **Pig Tail Version**, Full Module (1" per pole)				
1	15 20 30	**QF115ACSA** **QF120ACSA** **QF130ACSA**	**QF115AH** **QF120AH** **QF130AH**	**QF115AHH** **QF120AHH** **QF130AHH**
2	15 20 30 40 50 60	**QF215ACSA** **QF220ACSA** **QF230ACSA** **QF240ACSA** **QF250ACSA** **QF260ACSA**	**QF215AH** **QF220AH** **QF230AH** **QF240AH** **QF250AH** **QF260AH**	N/A N/A N/A N/A N/A N/A
Plug On Neutral Version, Full Module (1" per pole)				
1	15 20 30	**QF115ANCSA** **QF120ANCSA** **QF130ANCSA**	N/A N/A N/A	N/A N/A N/A
Ground Fault Equipment Protection (QE), Full Module (1" per pole) 30mA Sensitivity Provides protection of equipment from damaging line-to-ground faults currents.				
1	15 20 30	**QE115** **QE120** **QE130**	N/A N/A N/A	N/A N/A N/A
2	15 20 30 40 50 60	**QE215** **QE220** **QE230** **QE240** **QE250** **QE260**	N/A N/A N/A N/A N/A N/A	N/A N/A N/A N/A N/A N/A

NOTE: Plug on Neutral breakers are only compatible with SNC loadcentres

Loadcentres

Type BQ Bolt-on① and Blue line Circuit Breakers

Selection

Selection and Ordering Data

INSTA WIRE™



BQ1B015



BQ2B015



BQ3B015

Ampere Rating	10,000 A.I.C. Catalogue Number	22,000 A.I.C. Catalogue Number	Std. Pkg.
Full Module BQ Breakers (1" per pole) 10,000 A.I.C & 22,000 A.I.C.			
Single Pole			
15	**BQ1B015**	**BQ1B015H**	12
20	**BQ1B020**	**BQ1B020H**	
25	**BQ1B025**	**BQ1B025H**	
30	**BQ1B030**	**BQ1B030H**	
40	**BQ1B040**	**BQ1B040H**	
50	**BQ1B050**	**BQ1B050H**	
60	**BQ1B060**	**BQ1B060H**	
70	**BQ1B070**	**BQ1B070H**	
Two Pole Common Trip			
15	**BQ2B015**	**BQ2B015H**	6
20	**BQ2B020**	**BQ2B020H**	
25	**BQ2B025**	**BQ2B025H**	
30	**BQ2B030**	**BQ2B030H**	
40	**BQ2B040**	**BQ2B040H**	
50	**BQ2B050**	**BQ2B050H**	
60	**BQ2B060**	**BQ2B060H**	
70	**BQ2B070**	**BQ2B070H**	
80	**BQ2B080**	**BQ2B080H**	
90	**BQ2B090**	**BQ2B090H**	
100	**BQ2B100**	**BQ2B100H**	
125	**BQ2B125**	–	
Three Pole Common Trip			
15	**BQ3B015**	**BQ3B015H**	4
20	**BQ3B020**	**BQ3B020H**	
30	**BQ3B030**	**BQ3B030H**	
40	**BQ3B040**	**BQ3B040H**	
50	**BQ3B050**	**BQ3B050H**	
60	**BQ3B060**	**BQ3B060H**	
70	**BQ3B070**	**BQ3B070H**	
90	**BQ3B090**	**BQ3B090H**	
100	**BQ3B100**	**BQ3B100H**	

BQ Screws are sold separately①



BL1-015

Ampere Rating	Catalogue Number	Standard Package
Type Blue line circuit breakers		
15	**BL1-015**	20
20	**BL1-020**	
30	**BL1-030**	
40	**BL1-040**	
50	**BL1-050**	
15	**BL2-015**	10
20	**BL2-020**	
30	**BL2-030**	
40	**BL2-040**	
Description	**Catalogue Number**	**Standard Package**
Tie Handle	**BLTH1**	20
6 - 1 Pole Fillers	**BLF6**	

Note: These breakers are used as replacement in old ITE Loadcentres

Loadcentres

Accessories and Replacement Parts

INSTA WIRE™

Selection and Ordering Data



ECQTH2



ECQTH3



QTH4



ECQL1



ECQLD3



ECQFL2



LK2



LK3



SL3



Truck Kit



IG21

Catalogue Number	Description	Std. Pkg.
Tie Handle		
ECQTH2	QT Dual Tie Handle-Floating	25
ECQTH3	Q 2-Pole Tie Handle	50
QTH4	QT Dual Tie Handle - Bar Type	5
Blocking Device		
ECQL1	Handle Blocking Device (1,2 or 3 Pole)	
ECQLD3	Padlocking Device (1,2 or 3 Pole) for full module breakers	10
ECPLD1	Padlocking Device (1 Pole) for Twin type breakers	
ECPLD2	Padlocking Device (2 Pole) for Quad type breakers	3
Lock		
ECQFL2	Add-A-Lock (all EQ Loadcentres)	1
Neutral Lug Kits		
LK2	No. 4-2/0 CU/AL	
LK3	No. 1-300 MCM CU/AL	1
LK4	No. 1-400 MCM CU/AL	
Lug Kit①		
ECLK2225	No. 2-300 MCM CU/AL	1
Miscellaneous		
QF3	Three 1-Pole Fillers	
SL3	Sliding Black Latch	
SL3W	Sliding White Latch	1
IG21	Insulated Ground Bar Kit	
Truck-Kit	Contractor Truck Kit	
TRIMSCK1Z	Screws for trims "Zink"	
CIRNOLA32	Circuit labels up to 32 circuits for SEQ 125A	
CIRNOLA40	Circuit labels up to 40 circuits	
CIRNOLA60	Circuit labels up to 60 circuits	
DIRLBLK-EQLSEQ	Directory labels EQL, SEQ	
DIRLBLK-SM	Directory labels SEQ side mounted NMMB	
DIRLBLKSEQ60	Directory Card "Package of 25"	
MAINLBLK-EQLSEQ	Replacement Main Label Kit SEQ-EQL	
TUP-RA236QF	White Powder Coat Spray Paint	
TUP-PL126Q	Grey Powder Coat Spray Paint	
ECTS2	LC Trim Screws for SNC Panel	6
ECTS2W	LC Trim Screws White for SNC Panel	6

① These lug kits simply plug on to the bus of any SEQ or EQL Loadcentre as sub-feed or through-feed lugs to take advantage of CEC Rule 14-100 (c).

Loadcentres

Accessories and Replacement Parts

INSTA WIRE™

SEQ Loadcentres



Door Kit



Door & Trim

# of Circuits	Catalogue Number	Door Kit		Door & Trim	
		Grey	White	Grey	White
12/24	**SEQ12060SM**	DK1216SM-1	DK1216SM-1W	DK12SM	DK12SMW
16/32	**SEQ16060SM**			DK16SM	DK16SMW
24/48	**SEQ24060SM**	DK24SM-1	DK24SM-1W	DK24SM	DK24SMW
12/24	**SEQ12100SM**	DK1216SM-1	DK1216SM-1W	DK12SM	DK12SMW
16/32	**SEQ16100SM**			DK16SM	DK16SMW
24/28	**SEQ24100SM** **SEQ24125SMK** **SEQ24125SM**	DK24SM-1	DK24SM-1W	DK24SM	DK24SMW
24/48	**SEQ24150** **SEQ24200**	N/A	N/A	DKS24-2A	DKS24-2AW
32/64	**SEQ32100SM** **SEQ32125SM**	DK32SM-1	DK32SM-1W	DK32SM	DK32SMW
32/64	**SEQ32150** **SEQ32200**	N/A	N/A	DKS32-2A	DKS32-2AW
40/80	**SEQ40100** **SEQ40125**	N/A	N/A	DKS40-1A	DKS40-1AW
40/80	**SEQ40150** **SEQ40200**	N/A	N/A	DKS40-2A	DKS40-2AW
60/120	**SEQ60200**	N/A	N/A	DKS60-2A	DKS60-2AW

SEQ Loadcentres



Main Breaker Cover



Branch Breaker Cover

# of Circuits	Catalogue Number	Main Breaker Cover		Branch Breaker Cover	
		Grey	White	Grey	White
12/24	**SEQ12060SM**	DKMCSM	DKMCSMW	SEQ12060SM-T	SEQ12060SM-TW
16/32	**SEQ16060SM**			SEQ16060SM-T	SEQ16060SM-TW
24/48	**SEQ24060SM**			SEQ24060SM-T	SEQ24060SM-TW
12/24	**SEQ12100SM**			SEQ12100SM-T	SEQ12100SM-TW
16/32	**SEQ16100SM**			SEQ16100SM-T	SEQ16100SM-TW
24/28	**SEQ24100SM** **SEQ24125SMK** **SEQ24125SM**			SEQ24100SM-T	SEQ24100SM-TW
				SEQ24125SM-T	SEQ24125SM-TW
				SEQ24125SM-T	SEQ24125SM-TW
24/48	**SEQ24150** **SEQ24200**	N/A①	N/A①	SEQ24-TA	SEQ24-TAW
32/64	**SEQ32100SM** **SEQ32125SM**	DKMCSM	DKMCSMW	SEQ32100SM-T	SEQ32100SM-TW
				SEQ32125SM-T	SEQ32125SM-TW
32/64	**SEQ32150** **SEQ32200**	N/A①	N/A①	SEQ32-T	SEQ32-TW
40/80	**SEQ40100** **SEQ40125**			SEQ40100-T	SEQ40100-TW
40/80	**SEQ40150** **SEQ40200**			SEQ40-T	SEQ40-TW
60/120	**SEQ60200**			SEQ60-T	SEQ60-TW

① Branch Breaker Cover part covers the main breaker area and branch circuits.

Loadcentres

Accessories and Replacement Parts

INSTA WIRE™

EQL Loadcentres



# of Circuits	Catalogue Number	Door Kit	
		Grey	White
2/6	**EQL260S**	N/A	N/A
4/8	**EQL4100**		
8/16	**EQL8100D**	DK8-A	DK8-AW
12/24	**EQL12125D**	DK12-A	DK12-AW
16/32	**EQL16125D**	DK16-A	DK16-AW
24/48	**EQL24125D**	DK24-A	DK24-AW
32/64	**EQL32200D**	DKL32-2A	DKL32-2AW
40/80	**EQL40200D**	DKL40-2A	DKL40-2AW

SNC Loadcentres



# of Circuits	SNC Catalogue Number	SNC Door Kit	
		Grey	White
12/24	**US2:SNC1224L1125**	US2:RSCT1224L1125	US2:RSCT1224L1125W
16/32	**US2:SNC1632L1125**	US2:RSCT1632L1125	US2:RSCT1632L1125W
24/48	**US2:SNC2448L1125**	US2:RSCT2448L1125	US2:RSCT2448L1125W
30/48	**US2:SNC3048L1200**	US2:RSCT3048L1200	US2:RSCT3048L1200W
40/60	**US2:SNC4060L1200**	US2:RSCT4060L1200	US2:RSCT4060L1200W
12/24	**US2:SNC1224L1125W**	US2:RSCT1224L1125	US2:RSCT1224L1125W
16/32	**US2:SNC1632L1125W**	US2:RSCT1632L1125	US2:RSCT1632L1125W
24/48	**US2:SNC2448L1125W**	US2:RSCT2448L1125	US2:RSCT2448L1125W
30/48	**US2:SNC3048L1200W**	US2:RSCT3048L1200	US2:RSCT3048L1200W
40/60	**US2:SNC4060L1200W**	US2:RSCT4060L1200	US2:RSCT4060L1200W

EQ3 & EQ4 Loadcentres



# of Circuits	Catalogue Number		Door Kit	
	EQ3	EQ4	Grey	White
12	N/A	**EQ412100**	DKEQ1218	N/A
18	N/A	**EQ418100**		
24	**EQ324225**	**EQ424225**	DKEQ2430	N/A
30	N/A	**EQ430225**		
40	**EQ340225**	N/A	DKEQ42	N/A
42	N/A	**EQ442225**		

EQ3 & EQ4 Service Entrance Rated



# of Circuits	Catalogue Number		Door Kit	
	EQ3	EQ4	Grey	White
24	**EQ324BQ125**	**EQ424BQ100**	DKEQ24BQ	N/A
32	**EQ332BQ125**	N/A	DKEQ42	N/A
42	N/A	**EQ442QR100**	DKEQ42QR	N/A
		EQ442QR125 **EQ442QR125C** **EQ442QR150** **EQ442QR200**	DKEQ42QR	N/A

Loadcentres Surge Protection

Circuit Breaker and Surge Protective Device (SPD)

Selection

Features

- 2 inch wide plug-on design
  - — Includes (2) 1 Pole circuits breakers
  - — No loss of loadcentre spaces
- Easy to install and perfect for retrofit
- LEDs provide protection status

Benefits

By installing a Siemens Circuit Breaker and Surge Protective Device (SPD) in the loadcentre of the residence, surge protection is provided for all branch circuits①.

Two green LED indicator lights are provided to show that surge protection is provided for all circuits connected to the loadcentre. These breakers should be used for circuit protection of frequently used household or facility circuits because the lights and devices connected to these circuits provide an effective indication that surge protection is being provided.

The circuit breaker and SPD utilize Siemens-built 150V AC, 40mm, metal oxide varistors (MOVs). The maximum impulse rating for the SPD module is 40kA. The standard interrupting rating for the circuit breakers is 10k AIC. All Type QP circuit breakers and SPD are plug-on style, with load terminals provided. The devices are rated for 120/240V AC and are calibrated for 40 degrees C maximum ambient applications.

Circuit Breaker and Surge Protective Device (SPD)



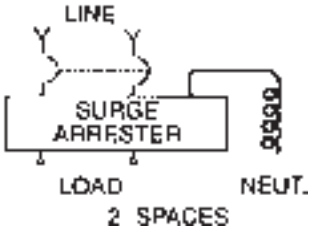

Breaker Type	Ampere Rating	Catalogue Number	Surge Type
QP **1- Pole** **120/240V AC** **10K AIC**	(2) 15	**QSA1515SPD**	SPD
	(2) 20	**QSA2020SPD**	SPD

Catalogue Number	**QSA1515SPD** **QSA2020SPD**
Amperage	15 or 20 Amp
Number of Poles	(2) 1-Pole Circuit Breakers
Initial Clamping Level	240 Volts
Transient Energy Rating	360 Joules line-to-neutral 720 Joules line-to-line
Transient Suppression	500 volts peak, line-to-neutral
Voltage Rating	1000 volts peak, line-to-line
Peak Current Rating (impulse)	40,000 amperes
Discharge Voltage Characteristic	@ 1,500A, 600 volts @ 5,000A, 800 volts (both line-to-neutral)
Discharge Current Withstand Rating	10,000 amperes line-to-neutral
Circuit Breaker Interrupting Rating	10,000A, 120/240V AC
Listings/Certifications	UL, CSA Meets UL 1449 4th Edition

① For warranty information please refer to the surge website www.usa.siemens.com/surge

Loadcentres Surge Protection

BoltShield™ Surge Protective Devices

QSPD series for loadcentres

Surge Protective Devices (SPDs) provide the best protection from both externally and internally generated surges when located as close to the building distribution system as possible. For cost and space reasons many buildings only include one SPD located at the main incoming loadcentre and do not cascade SPDs throughout the building as recommended by IEEE. The new Siemens QSPD series of SPDs are economical and easy to install in most panels throughout a building so that whole facility protection can be obtained.



Features & Benefits

- UL 1449 SPD Type 1①
- Monolithic distribution grade MOV
- Thermally protected MOV
- 65kA surge current protection per phase
- 20kA I-nominal ratings
- 200kA SCCRs
- 10 year standard warranty
- Audible Alarm

Product specifications

General specifications	
Maximum surge current rating range	65kA per phase
UL Type designation	SPD Type 1*
UL 1449 I-nominal rating	20kA
UL 1449 short circuit current rating	200kA
Repetitive impulse	5,000 hits
Response time	<1 ns

Physical specifications		
Humidity range		0-95% non-condensing
Operating frequency		0-415Hz
Operating temperature		-25°C to +60°C
Dimensions in inches (mm)	2 pole	3 (77.9) x 2 (50.4) x 2.6 (65.3)
	3 pole	3 (77.9) x 3 (75.2) x 2.6 (65.3)
Weight	2 pole	0.64 lbs (237 g)
	3 pole	0.71 lbs (335 g)
Neutral/ground connection		#14 AWG (pre-wired)

Diagnostic monitoring specifications
Green/red visual mechanical flag failure indicators
Flashing dual colour led (green/red) status indicator
Audible alarm w/ silence switch/button

Design specifications
Monolithic distribution grade MOV
Integrated optimized thermal protection
Fits in footprint of Siemens QP breaker
Modes of protection (L-N or L-G, L-L)

① Type 1 SPDs suitable for use in Type 2 applications

UL 1449 performance data and ordering information							
System voltage	L-N (L-G)	L-L	I_n	SCCR	MCOV	Catalog numbers	Siemens breaker form factor
120/240V, 1Ø, 3W**	600V	1000	20kA	200kA	150V	QSPD2A065P*	2-P, Type Q Plug-In
240/120V, 3Ø, 4W	600V/900V	1200	20kA	200kA	150V	QSPD3B065	3-P, Type Q Plug-In
208Y/120V, 3Ø, 4W	600V	1000	20kA	200kA	150V	QSPD3C065	3-P, Type Q Plug-In
240V, 3Ø, 3W	900V	1500	20kA	200kA	280V	QSPD3D065	3-P, Type Q Plug-In
*QSPD2A065P comes in retail style blister pack packaging. **Can also be used on 208Y/120V, 1Ø, 3W System.							

Standards compliance and certifications
UL 1449 5th Edition, cUL, UL 96A compliant, CSA C22.2 No 269.1 & .2, ANSI/IEEE C62.41.1-2002, C62.41.2-2002, C62.45-2002, NEC Article 285
ISO 9001:2014 quality management system, ISO 17025:2007 laboratory certification (UL DAP Program) , 100% quality tested prior to shipping

Catalogue Number Logic

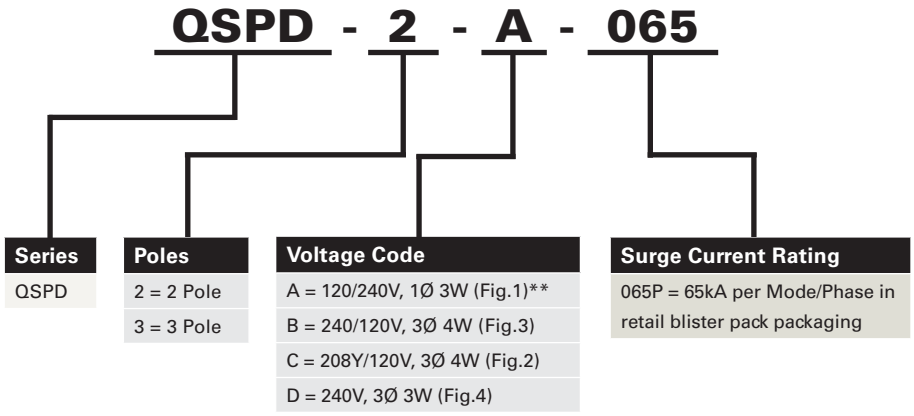

**Can also be used on 208Y/120V, 1Ø, 3W System

Benefits of installing multiple QSPDs

Adding multiple QSPDs in a single load center can increase the modes of protection and the surge capacity. See the Boltshield brochure for more details and review the example chart below:

Number of QSPDs	Connection	Modes of protection	Surge current capacity per mode	Surge current capacity per phase
1	Neutral	3	65kA	65kA
2	Neutral + Ground	6	65kA	130kA
2	Neutral	3	130kA	130kA
3	Neutral(2) + Ground(1)	6	130kA(L-N) + 65kA (L-G)	195kA
3	Ground	3	195kA	195kA
4	Neutral(2) + Ground(2)	6	130kA	260kA

Loadcentres Surge Protection

Power Service Entrance Surge Protection

Selection

Total Home Protection

Siemens believes today's residential surge protectors come up short when protecting today's modern home filled with smart appliances and electronics.

This is why we developed commercial class total home surge protectors. These electrical system surge protectors are sized for where you live. They will let you know when there is something wrong or when they are worn out.

Know You're Protected:
3 Stage Commerical Grade Notification

When there is a problem, Siemens surge protector takes the guesswork out of knowing when it is time to be replaced. What will you see and hear when this occurs?

Audible Alarm: Beeps (available in select models)
Green LED(s): Extinguish(es)
Red Service Light: Flashes (available in select models)

Ground Reference Monitoring (GRM)

Selected models of surge protectors are GRM-equipped notifying you a rare safety hazard exists due to a compromised electrical system neutral to ground bond. What will you see and hear when this occurs?

Audible Alarm: Beeps (available in select models)
Green LED(s): Remains Lit
Red Service Light: Flashes (available in select models)

BoltShield™ FSPD

FSPD's are a line of surge protective devices for residential and commercial solutions. Listed as type 2 devices, the balanced defense and robustness provide assurance to property owners that their modern homes, buildings and appliances are fully protected.

Material ID	Surge current rating
FSPD036	36kA
FSPD060	60kA
FSPD100	100kA
FSPD140	140kA

FSPD036 Specifications

Design
Custom MOV design for high energy handling in Category C locations
Thermally protected MOV's
External parallel connected for mounting to electrical gear
Reduced mode of protection (L1-n, L2-N)
Diagnostic and Monitoring
LED Protection Status Monitoring (Single LED Standard)

FSPD060, FSPD100, FSPD140 Specifications

Design
Custom MOV design for high energy handling in Category C locations
Thermally protected MOV's
External parallel connected for mounting to electrical gear
All modes of protection (L-N, L-G, N-G)
Diagnostic and Monitoring
Phase Loss Monitoring (Standard)
Audible Alarm (Standard)
Form C Dry Contact, 240V, 2A (Standard)
2 GREEN LEDs - one for each Line disconnector
1 RED LED - flashes if fault condition: GRM (Ground Reference Monitoring), N-G voltage > 20V detected.

Features & Benefits

- Surge current capacity – the FSPD offers different surge protector sizes based upon geographic location and thunderstorm activity.
- FSPD: 36kA, 60kA, 100kA and 140kA
- 3-Staged– when the device wears out, the protection status LEDs extinguish, an audible alarm beeps, and a red service light flashes to warn the property owner.
- Modes of protection – the electrical system's primary paired conductor combinations of L-N, L-G, and N-G are directly surge protected. Exception – the low cost FSPD036 has a reduced mode of protection (L1-N, L2-N).
- Ground reference monitoring – GRM diagnostics monitor the health of a unit's neutral to ground bond and alert the property owner if the bond becomes loose, preventing a potential safety issue.
- Safety – The FSPD can achieve UL1449 listed 100kA SCCR - one of the highest ratings for residential surge protection.
- Compatibility – device installs in any load center brand.
- FSPD060, FSPD100, FSPD140:
  10-year product and connected equipment warranty.



FSPD 060, FSPD 100, FSPD 140



FSPD 036

Material ID	Voltage Code	System Voltage	L-N	L-G	L-L	N-G	MCOV
FSPD036	A	120/240, 1Ø, 3W	700	—	1200	—	150
FSPD060, FSPD100, FSPD140	A		700	700	1200	700	

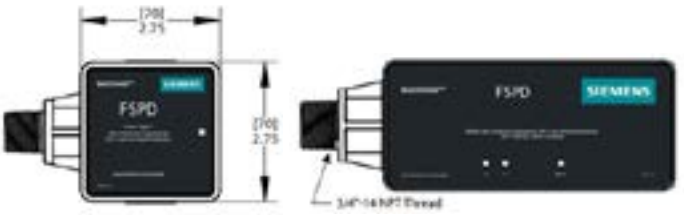

Size and Mechanical Specifications (in.)

	FSPD036	FSPD060, FSPD100, FSPD140
Dimensions	4.25" x 2.41" x 2.75"	7.95" x 3.06" x 2.75"
Weight	0.46 lbs.	1.38 lbs.
Enclosure Type	Polycarbonate NEMA 4X	
Installation Type	Indoor.Outdoor	
Mounting Method	Flush/Flange/Through-hole	

K.O. Qty					
		A	B	C	D
EQL8	Box	6	6	6	4
	Top	1	6	4	2
	Bot.	1	6	4	2
EQG 6 EQL 12 EQG 8NSND	Box	6	6	6	4
	Top	1	6	4	2
	Bot.	1	6	4	2
EQG 10 EQL 16 EQG 12NSND	Box	6	8	8	4
	Top	1	6	4	2
	Bot.	1	6	4	2

K.O. Trade Dia.	
A	3/4" - 1" - 1 1/4" - 1 1/2"
B	1/2" - 3/4"
C	1/2"
D	1/4"

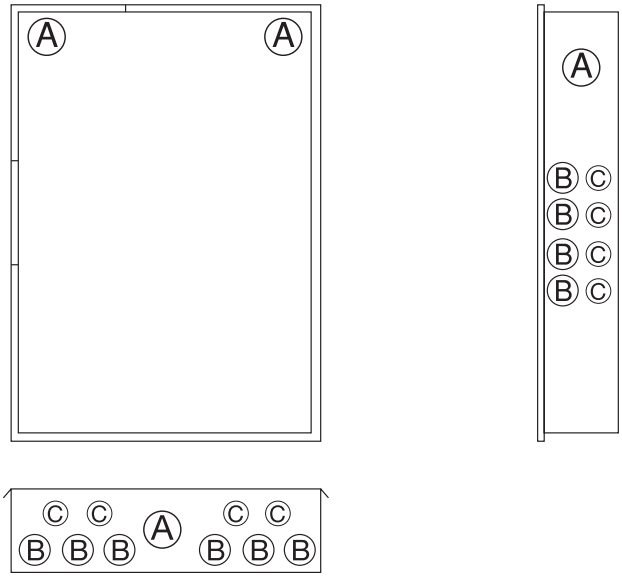

Top and Bottom

K.O. Qty.						
		A	B	C	D	E
EQG 18	Box	4	2	-	18	16
EQL 24	Top	1	-	1	6	4
EQG 20NSND	Bot.	1	-	1	6	4
EQG 24	Box	4	2	2	2	36
EQL 32	Top	1	1	1	4	13
EQG 28NSND	Bot.	1	1	1	4	13
EQL 34	Box	4	2	2	2	36
EQL 40	Top	1	1	1	4	13
EQG 36NSND	Bot.	1	1	1	4	13

K.O. Trade Dia.	
A	1 1/4" - 1 1/2" - 2" - 2 1/2"
B	3/4" - 1" - 1 1/4"
C	1/2" - 3/4" - 1"
D	1/2" - 3/4"
E	1/2"

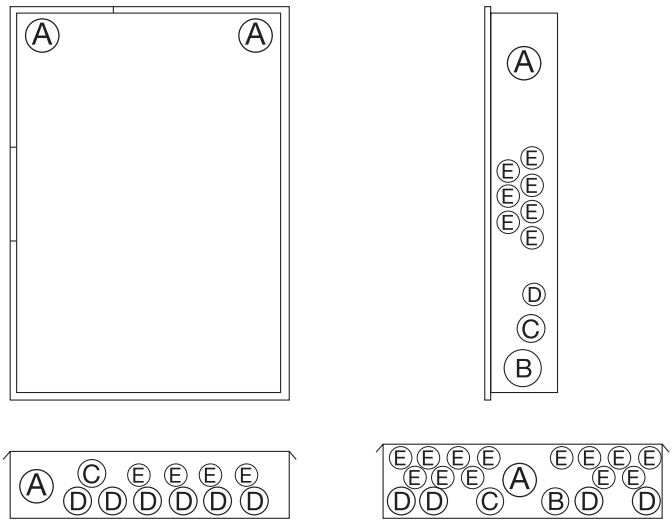

Top and Bottom for
EQL 24
EQG 18
EQG 20NSND

Top and Bottom for
EQL 32 & 40 cir.

Loadcentres

Knockout Data

Service Entrance Loadcentres with Plug-in Breakers

K.O. Qty.						
		A	B	C	D	E
SEQ 12 SM	Box	4	2	0	10	8
SEQ 16 SM	Top	3	0	0	0	2
	Bot.	1	0	1	6	4
SEQ 24 SM	Box	4	2	-	18	16
SEQ 32 SM	Top	3	-	-	-	2
	Bot.	1	-	1	6	4
	Box	4	2	2	2	22
SEQ 24	Top	1	1	1	4	13
	Bot.	1	1	1	4	13
	Box	4	2	2	2	36
SEQ 32	Top	1	1	1	4	13
	Bot.	1	1	1	4	13
	Box	4	2	2	2	36
SEQ 40	Top	1	1	1	4	13
	Bot.	1	1	1	4	13
	Box	4	2	2	2	68
SEQ60200	Top	1	1	1	4	13
	Bot.	1	1	1	4	13

K.O. Trade Dia.	
A	1 1/4" - 1 1/2" - 2" - 2 1/2"
B	3/4" - 1" - 1 1/4"
C	1/2" - 3/4" - 1"
D	1/2" - 3/4"
E	1/2"

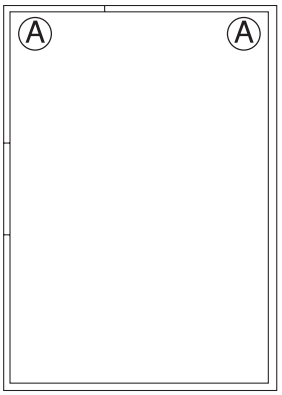



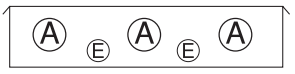

Top for SEQ 12-16-24-32 SM

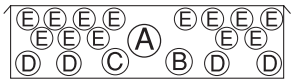

Top and Bottom for SEQ 24-32, 40,60

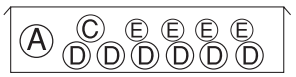

Bottom for SEQ 12-16-24-32 SM

Service Entrace Loadcentres (Type 3R) Bottom Only

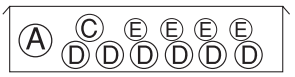

SEQ 16- 24- 32 SM

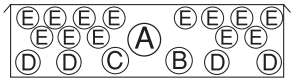

SEQ 24- 32- 40

EQ Loadcentres with Plug-in or Bolt-on Breakers

K.O. Qty.						
		A	B	C	D	E
All	Box	6	-	-	4	-
EQ 1PH	Top	1	1	1	4	13
EQ 3PH	Bot.	1	1	1	4	13

K.O. Trade Dia.	
A	1 1/4" - 1 1/2" - 2 1/2"
B	3/4" - 1" - 1 1/4"
C	1/2" - 3/4" - 1"
D	1/2" - 3/4"
E	1/2"

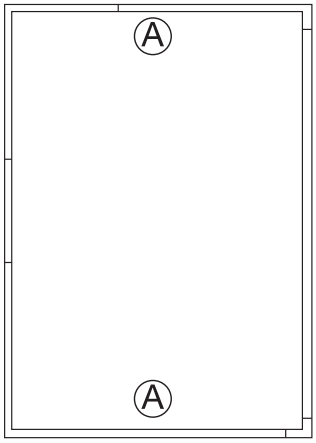

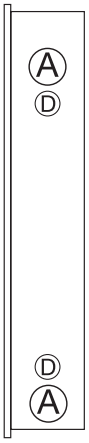

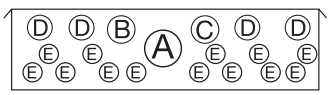

Top and Bottom

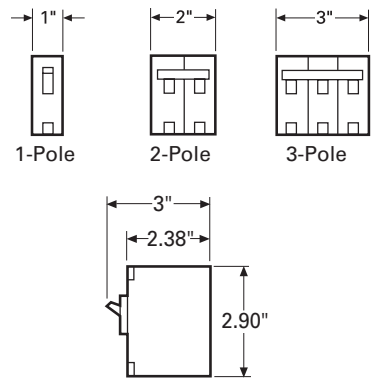

Type Q Full Module Breaker

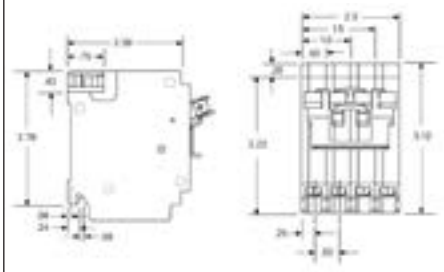

Type QT Half Module Breaker

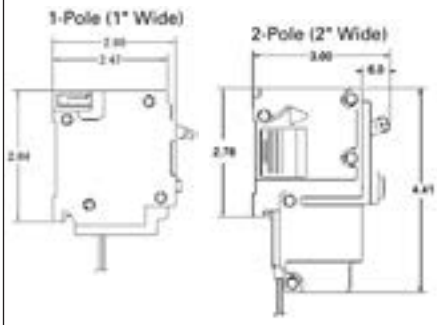

Type QF, QE, QAF, QAFH

Lug Data

Circuit Breaker Type	Circuit Breaker Ampere Rating	Cables Per Connector	Connector Wire Range
	LOAD SIDE		
Q	15–30	1 1	#14–#8 AWG Cu #12–#8 AWG Al
	40–50	1 1	#8–#6 AWG Cu #8–#4 AWG Al
	60–70	1 1	#6–#2/0 AWG Cu #6–#2/0 AWG Al
	80-125	1 1	#8-#2/0 AWG Cu #8-#2/0 AWG Al
QNR	150–200	1	#1–300kcmil Cu-Al
QT	15–30	1 1	#14–#8 AWG Cu #12–#8 AWG Al
	40	1	#8 AWG CU-Al
QF, QE	15–30	1 1	#14–#10 AWG Cu #12–#8 AWG Al
	40–60	1 1	#8–#6 AWG Cu #8–#4 AWG Al
QAF, QAFH	15–20	1 1	#14–#12 AWG Cu #12–#10 AWG Al

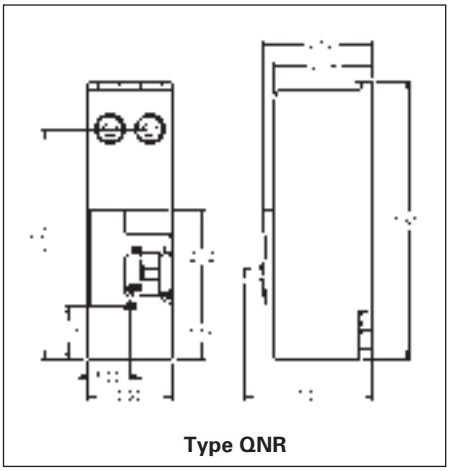

Type QNR

Notes

Contents

General Specifications 2-2
Catalogue Numbering System 2-2

240V Meter Centre
Overview - Features & Benefits 2-3
Selection Procedure 2-5
Switches and Tap Boxes 2-6
Meter Stacks 2-7
Socket Module and Main Bus Connector Kit 2-8
Sub-service Circuit Breakers and Corner Elbow Modules 2-9
Accessories 2-10
Configuration Layouts 2-11
Dimensions 2-13
Knock Out Data 2-15
240V Meter Centre Layout Example 2-16

600Y/347V Meter Centre
Overview - Features & Benefits 2-17
Meter Stacks 2-18
Sub service Circuit Breakers and Tap Boxes 2-19
Close Coupled option with SMP 2-20
Main Bus Connector Kits, Corner Elbow Modules and Accessories 2-21
Dimensions 2-22
600Y/347V Meter Centre Layout Example 2-26

Meter Centres

Introduction and General Specifications

Siemens multi-family metering includes an assortment of module types that can be configured to meet a wide range of residential, commercial or industrial group metering applications. This feature-rich product line is designed with the contractor in mind. Quality and service are keystones of Siemens meter centres. Siemens meter centres are designed and manufactured in Canada, to meet Canadian requirements.

General Specifications

Standards
CSA: C22.2 No. 229-M1988. Certified under file #153416

Meter Stack Design
Siemens meter stacks are of uniform design with flexibility in mind. All meter stacks are designed for "cold metering" in which individual subservice breakers are connected on the line side of the meter sockets thereby protecting the meter and all electrical equipment installed subsequent to it.

Meter Stack Enclosure
Type 1 enclosure. Meter stack enclosure, barriers and end plates are manufactured of galvanized steel. Front covers are fabricated of phosphatized steel finished with ASA 61 light grey paint.

Bus Bar
The main horizontal bus consists of tin plated high conductivity aluminum for maximum performance and economy. The main cross bus is installed at the bottom of metering stacks and is rated at at 600A or 1200A while the vertical bussing is rated at 800A per section.

Numbering System

Meter Stacks

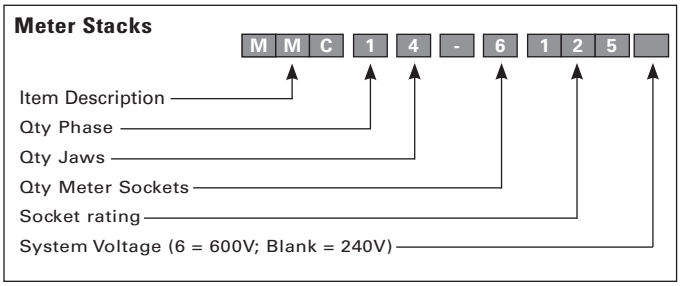

Meter Sockets

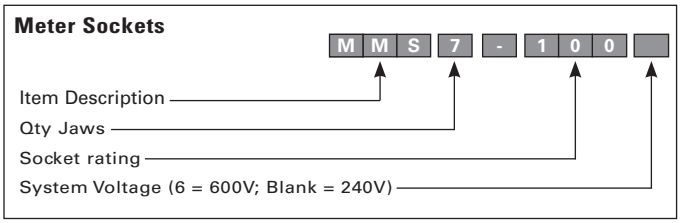

Tap Boxes

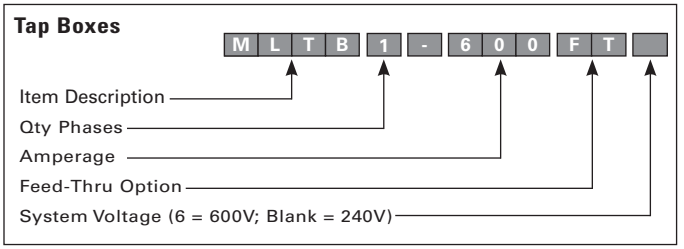

Meter Centres

240V Modular Meter Centres

Selection

The Siemens metering line offers an economical approach to virtually any metering requirement, whether it be for residential, commercial or industrial applications at 240V.

Meeting All Your Service Needs

Offering the maximum versatility to meet all your needs, Siemens 240V meter centres are designed for single phase three wire 120/240V AC or three phase four wire 120/208V AC applications with sub-service modules of 100A, 125A and 200A. Siemens 240V meter centres are designed to meet CSA requirements C22.2 No.229 and are CSA certified under file #13069. All individual metering stacks are manufactured to tight specifications and can be selected in pre-assembled units, to minimize on-site labour or as a separate plug-in module for a customized installation when required. The modular construction offers real post installation flexibility permitting on-site changes to be made with minimum down time.

Direct Tap Feature

When using Siemens' direct tap Main Lug Feed Kit for services at 600A, no tap box is required, therefore saving considerable installation room.

This custom designed Main Lug Feed Kit allows connection of main incoming cables directly to the Meter Stack main bus and eliminates the need for a sub service tap box. If more working space is required to facilitate the connection, a Transition Box can be used.

Meter Stack Design

All Siemens meter stacks are of uniform design with flexibility in mind. A combination of slide-in metering modules from 100 to 200A fit in any meter stack.

Mounting Rails

Easy to use, the mounting rails simplify installation of the modular meter centre. They enable the metering stacks to be rapidly pre-installed on the wall, automatically aligning the sections for permanent mechanical installation and electrical joining of the main bus.



Meter Stack Enclosure

Type 1 meter stack enclosure. Enclosure, barriers and end plates are manufactured of galvanized steel.. Front covers are fabricated of phosphatized steel finished with ASA 61 light grey paint. Meter socket front covers are embossed and fitted with a label to allow suite identification on the enclosure adjacent to its respective service breaker.

Bus Bar

The main horizontal bus consists of tin plated high conductivity aluminum for maximum performance and economy. The main cross bus is installed at the bottom of the metering stacks and is rated at 600 or 1200A while the vertical bussing is rated at 800A per section.

Flexibility

Siemens service entrance equipment can be top or bottom fed, depending on site requirements, for single connection or feed through applications.

Each meter stack has a convenient side wireway for branch wiring which can exit at the top or at the bottom. A user-friendly combination of knockouts is factory installed at the top to minimize installation time.

Slide-in Modular Design

Each individual slide-in module design allows for fast installation and provide flexibility for future needs. If the branch requirement changes, the module can be interchanged without changing the complete stack. By simply removing two screws from the front cover, the slide-in module can be removed for easy replacement.

Entry Plates

Main cable tap boxes can be provided with punched or unpunched aluminum or fiber entry plates.

Branch Circuit Breakers

Compact, high performance type plug-in or bolt-on circuit breakers can be selected to address site requirements. Interrupting ratings up to 100kA combine thermal and magnetic trip elements and feature: isolated pole construction with common trip bar for multiple pole devices; silver alloy contacts and high pressure straight-in load connectors.

Series rating are also available for approved combinations up to 100kA.

Meter Socket Jaws

Meter socket jaws consist of tin plated copper with steel spring reinforced clips for reliable contact pressure. Positive alignment of jaws and stabs is assured by bus straps which are bolted in place.

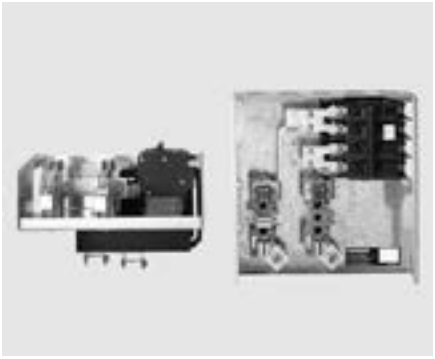

Meter Centres

240V Modular Meter Centres

Selection

Overview - Features & Benefits

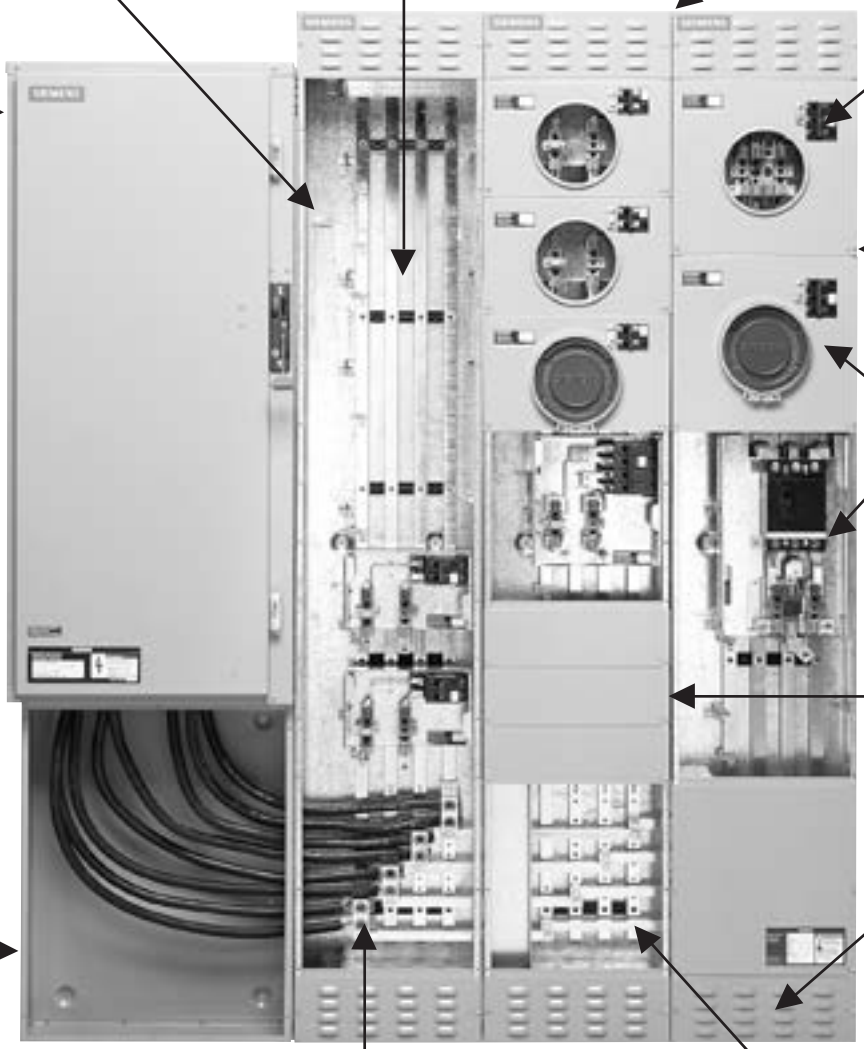

Meter Centres

240V Modular Meter Centres

Selection

Selection Procedure

1. Select service entrance equipment (ex. switch), reference p.2-6.
2. Select required Tap Box or Main Lug Feed Kit with or without a Transition Box.
3. Select type and quantity of slide-in Meter Socket Modules.
4. Select Main Bus Connector Kits to join each stack.
5. Select quantity of Blank Filler Plates as per left over empty space.

Examples - Typical 600A Main Service 120/240V 1Ø 3W c/w 16 x 100A and 1 x 200 sub-service breakers					
Option 1 c/w Tap Box & Bolt-on Breakers			**Option 2 c/w Transition Box & Plug-in Breakers**		
QTY	**Catalogue Number**	**Description**	**QTY**	**Catalogue Number**	**Description**
1	**ID226 or HFC226N**	Safety switch 600A 2p 240V	1	**ID226 or HFC226N**	Safety switch 600A 2p 240V
1	**MLTB1-600**	Standard Tap Box 600A	1	**MTB-600**	Transition Box 600A
4	**MMS4-125**	Meter socket module 125A 4 jaws	1	**MLFK1**	Main lug kit
2	**MMC14-6125**	Complete stack	4	**MMS4-125**	Meter socket module 125A 4 jaws
1	**MMC1**	Basic stack	1	**MMS4-200**	Meter socket module 200A 4 jaws
2	**MBSS1-600**	Main bus connector kit	2	**MMC14-6125**	Complete stack
1	**MBHP-2**	Blank filler plates	1	**MMC1**	Basic stack
16	**BQ2B100**	100A Bolt-on breaker	2	**MBSS1-600**	Main bus connector kit
1	**MTRK-64**	Wall mounting rail	1	**MBHP-2**	Blank filler plates
			16	**Q2100**	100A Plug-in breaker
			1	**EQ9685**	200A Plug-in breaker
			1	**MTRK-64**	Wall mounting rail

Reference Chart: Number of Blank Filler Plate Kits Required

Refer to this chart to calculate how many Blank Filler Plate Kits are needed in a meter stack after the quantity of Meter Socket Module is determined.			
Catalogue Number	**Description**	**Height in modules (1 module = $8^{7/8}$" = 125 mm)**	**Qty of kits #MBHP-2 (2 plates/kit)**
MMC1 & MMC3	Basic meter stack	6 modules	6
MMS4-125	Meter socket module 125A 4 jaws	1 module	1
MMS5-125	Meter socket module 125A 5 jaws	1 module	1
MMS4-200	Meter socket module 200A 4 jaws	1.5 modules	2
MMS5-200	Meter socket module 200A 5 jaws	1.5 modules	2
MMS7-100	Meter socket module 100A 7 jaws	1.5 modules	2

Meter Centres

240V Modular Meter Centres

Selection

Fusible Switches①

System	Ampere Rating	Catalogue Number	Cable lug size per phase - suitable for Al. and Cu.	Dimensions - Inches (mm) H	W	D	Weight - lbs.(kg)
120/240 1Ø 3W	400	**ID225**	(1) 1/0 AWG - 750 Kcmil or (2) 1/0 AWG - 250 Kcmil	40 (1016)	18 1/2 (470)	12 1/16 (306)	78 (35.4)
	600	**ID226**	(2) 1/0 AWG - 750 Kcmil or (4) 1/0 AWG - 250 Kcmil	48 (1219)	21 1/2 (546)	12 1/16 (306)	92 (41.7)
	800	**HFC227N**	(1) 1/0 AWG - 750 Kcmil	67 3/16 (1706)	39 15/16 (1015)	9 1/4 (235)	365 (65.6)
	1200	**HFC228N**	(2) 1/0 AWG - 750 Kcmil	67 3/16 (1706)	39 15/16 (1015)	9 1/4 (235)	385 (174.6)
120/208 3Ø 4W	400	**ID425**	(1) 1/0 AWG - 750 Kcmil or (2) 1/0 AWG - 250 Kcmil	40 (1016)	18 1/2 (470)	12 1/16 (306)	92 (41.7)
	600	**ID426**	(2) 1/0 AWG - 750 Kcmil or (4) 1/0 AWG - 250 Kcmil	48 (1219)	21 1/2 (546)	12 1/16 (306)	108 (49)
	800	**HFC367N**	(1) 1/0 AWG - 750 Kcmil	67 3/16 (1706)	39 15/16 (1015)	9 1/4 (235)	375 (170.1)
	1200	**HFC368N**	(2) 1/0 AWG - 750 Kcmil	67 3/16 (1706)	39 15/16 (1015)	9 1/4 (235)	395 (179.1)

Standard Tap Boxes② - Connectors included

System	Ampere Rating	Catalogue Number	Cable lug size per phase - suitable for Al. and Cu cables⑦	Dimensions - Inches (mm) H	W	D	Weight - lbs.(kg)④
120/240 1Ø 3W	400/600	**MLTB1-600**	(3) #2 AWG - 600 Kcmil	25 3/4 (655)	20 1/2 (521)	7 1/4 (184)	40 (18.2)
	800/1200	**MLTB1-1200③**	(4) 1/0 AWG - 750 Kcmil	25 3/4 (655)	20 1/2 (521)	7 1/4 (184)	45 (20.5)
120/208 3Ø 4W	400/600	**MLTB3-600**	(3) #2 AWG - 600 Kcmil	25 3/4 (655)	20 1/2 (521)	7 1/4 (184)	40 (18.2)
	800/1200	**MLTB3-1200③**	(4) 1/0 AWG - 750 Kcmil	25 3/4 (655)	20 1/2 (521)	7 1/4 (184)	45 (20.5)

Feed Through Tap Boxes②⑤ - Connectors included, use with even number of meter stacks only

120/240 1Ø 3W	400/600	**MLTB1-600FT**	LUG (4) 250-750MCM or (8) 3/0-250MCM PER PHASE	25 3/4 (655)	20 1/2 (521)	7 1/4 (184)	45 (20.5)
	800/1200	**MLTB1-1200FT⑥**	LUG (8) 1/0-750MCM PER PHASE	46 1/4 (1175)	24 (610)	7 1/4 (184)	60 (27.3)
120/208 3Ø 4W	400/600	**MLTB3-600FT**	LUG (4) 250-750MCM or (8) 3/0-250MCM PER PHASE	25 3/4 (655)	20 1/2 (521)	7 1/4 (184)	45 (20.5)
	800/1200	**MLTB3-1200FT⑥**	LUG (8) 1/0-750MCM PER PHASE	46 1/4 (1175)	24 (610)	7 1/4 (184)	60 (27.3)

Main Lug Feed Kit - For direct tap (no tap box) from safety switch to meter stack

System	Ampere Rating	Catalogue Number	Cable lug size per phase - suitable for Al. and Cu cables	Use with Meter Module Type	Weight - lbs.(kg)	
120/240 1Ø 3W	400/600	**MLFK1**	(1) 250 Kcmil - 750 Kcmil Cu/Al or (2) 3/0 AWG - 250 Kcmil Cu/AL	MMC1 or MMC14-6125	2 1/2 (1.1)	 **MLFK1**
120/208 3Ø 4W	400/600	**MLFK3**	(1) 250 Kcmil - 750 Kcmil Cu/Al or (2) 3/0 AWG - 250 Kcmil Cu/AL	MMC3 or MM35-6125	3 (1.3)	

Transition Box - Allows more working space to connect on Main Lug Feed Kit

System	Ampere Rating	Catalogue Number	Dimensions - Inches (mm) H	W	D	Weight - lbs.(kg)	
120/240 1Ø 3W 120/208 3Ø 4W	400/600	**MTB-600**	25 3/4 (655)	20 1/2 (521)	7 1/4 (184)	30 (13.7)	 **MTB-600**

① Fusible switch can be mounted directly next to metering stack with a Standard Tap Box or with a Main Lug Feed Kit (with or without Transition Box).
② Tap Box mounts directly next to the Meter Stack and is required to accommodate incoming main service cable, unless Main Lug Feed Kit is used. Suitable for left and right side entry.
③ Can be used with even and odd number of metering stacks. In addition, for odd number of stack connections, adaptor kit **#MTBK12** must be used.
④ Weight is based on 3Ø 4W system (Heaviest pcs).
⑤ Feed through tap boxes are required when the main incoming cables enter and exit at the same end of line up.
⑥ Module comes factory assembled for left hand side entry. For right hand side entry, bus bars and insulated supports must be moved at the other hole set, marked with an "R", before wall installation.
⑥ For optional lugs, please contact your Siemens sales representative.

Meter Centres

240V Modular Meter Centres

Selection

- 240V modular meter centre is built for cold metering
- Load cables can exit from the top or the bottom of the stack
- Meter stack comes standard with knock-outs on the top tub end (see p. 2-15)③

Basic Meter Stack - Meter socket modules and front blank plates must be ordered seperately

Main Service Voltage	Sub-service Voltage	Catalogue Number	Max. number of sub-service meter per stack①		Dimensions - Inches (mm)			Height - MOD	Weight - lbs.(kg)
			125A	200A	H	W	D		
120/240 1Ø3W	120/240 1Ø3W	**MMC1**	6	4	78 (1981)	14 (356)	$7^{1/4}$ (184)	6	67 (30.4)
120/208 3Ø4W	120/208 3Ø4W	**MMC3**	6	4					67 (31.8)
120/208 3Ø4W	120/208 3Ø4W	**MMC3** (with QJ/QR sub-service breaker)	4	2					

Complete Meter Stack①② - Meter socket modules included

Main Service Voltage	Sub-service Voltage	Catalogue Number	Sub-service Meter Socket included	Dimensions - Inches (mm)			Height - MOD	Weight - lbs.(kg)
				H	W	D		
120/240 1Ø3W	120/240 1Ø3W	**MMC14-6125**	6 x MMS4-125	78 (1981)	14 (356)	$7^{1/4}$ (184)	6	109 (49.6)
120/208 3Ø4W	120/208 3Ø4W	**MMC35-6125**	6 x MMS5-125					112 (50.9)



MMC3



MMC3-6125

① Provision only, breakers not included
② Complete meter stacks are factory balanced for ease of installation
③ Blank top end is also available on demand. Contact your Siemens sales representative.

Meter Centres

240V Modular Meter Centres

Selection

Meter Socket Module①

Sub-service Voltage	Meter Socket Rating	Catalogue Number	Number of Jaws	Breaker Provision type	Phase Connection	Height		Weight - lbs.(kg)
						in. (mm)	MOD	
120/240 1Ø3W	125A	**MMS4-125**	4	BQ, BQH, HBQ, Q, QP, QPH, HQP	AB	$8^{7/8}$ (225)	1	7 (3.2)
	200A	**MMS4-200**	4	EQ96XX	AB	$13^{5/16}$ (338)	1.5	11 (5)
		MMS4-200QR④	4	QR2, QRH2, HQR2				
120/208 3Ø4W	125A	**MMS5-125**	5②	BQ, BQH, HBQ, Q, QP, QPH, HQP	AB③	$8^{7/8}$ (225)	1	7 (3.2)
	200A	**MMS5-200**	5②	EQ96XX	AB③	$13^{5/16}$ (338)	1.5	11 (5)
		MMS5-200QR④	5②	QR2, QRH2, HQR2				
	100A	**MMS7-100**	7②	BQ, BQH, HBQ, Q, QP, QPH, HQP	AB③	$13^{5/16}$ (338)	1.5	10 (4.6)
	200A	**MMS7-200QR**④	7②	QR2, QRH2, HQR2 (3 phases)		$26^{5/8}$ (676)	3	16 (7.3)

Main Bus Connector Kit - Allows the connection of two meter stacks

Sub-service Voltage	Max. Ampere Rating	Catalogue Number	Use with Meter Module Type	Weight - lbs.(kg)	
120/240 1Ø3W	600A	**MBSS1-600**	MMC1 or MMC14-6125	3 (1.3)	 **MBSS1-600**
	1200A	**MBSS1-1200**		7 (3.18)	
120/208 3Ø4W	600A	**MBSS3-600**	MMC3 or MM35-6125	4 (1.82)	
	1200A	**MBSS3-1200**		10 (4.55)	

Meter Socket Modules	Cable lug size per phase - suitable for Al and Cu cables
MMS4-125	Load: (1) #14 AWG - 2/0 AWG
MMS4-200 MMS4-200QR	Load: (1) #6 AWG - 250 Kcmil
MMS5-125	Load: (1) #14 AWG - 2/0 AWG
MMS5-200 MMS5-200QR	Load: (1) #6 AWG - 250 Kcmil
MMS7-100	Load: (1) #14 AWG - 2/0 AWG
MMS7-200QR	Load: (1) #6 AWG - 250 Kcmil

① Provision only, breakers not included
② Meter socket modules with 5 and 7 jaws can be assembled in the same meter stack as long as the system is balanced.
③ MMS5-125 and MMS5-200 have AB phase connections by default. Phasing connections can be changed on the field to AC or BC to balance the load on the system.
④ Meter modules for QJ type breakers (MMS4-200QJ, MMS5-200QJ, MMS7-200) have been replaced by meter modules for QR type breakers.

Meter Centres

240V Modular Meter Centres

Selection

Sub-service Circuit Breakers - Maximum interruption rating for 240V AC

- Mounting hardware for BQ breakers must be ordered separately (#8217-6, #8217-12, #8217-100, #8217-200)

Ampere Rating	Poles	Catalogue Number					
		KAIC = 10kA		KAIC = 22kA		KAIC = 65kA	
		Plug-in	Bolt-on	Plug-in	Bolt-on	Plug-in	Bolt-on
60A[1]	2 3	**Q260** **Q360**	**BQ2B060** **BQ3B060**	**Q260H** **Q360H**	**BQ2B060H** **BQ3B060H**	**Q260HH** **Q360HH**	**HB2B060** **HB3B060**
70A	2 3	**Q270** **Q370**	**BQ2B070** **BQ3B070**	**Q270H** **Q370H**	**BQ2B070H** **BQ3B070H**	**Q270HH** **Q370HH**	**HB2B070** **HB3B070**
80A	2 3	**Q280** **Q380**	**BQ2B080** **BQ3B080**	**Q280H** **Q380H**	**BQ2B080H** **BQ3B080H**	**Q280HH** **Q380HH**	**HB2B080** **HB3B080**
90A	2 3	**Q290** **Q390**	**BQ2B090** **BQ3B090**	**Q290H** **Q390H**	**BQ2B090H** **BQ3B090H**	**Q290HH** **Q390HH**	**HB2B090** **HB3B090**
100A	2 3	**Q2100** **Q3100**	**BQ2B100** **BQ3B100**	**Q2100H or EQ9675** **Q3100H**	**BQ2B100H** **BQ3B100H**	**Q2100HH** **Q3100HH**	**HB2B100** **HB3B100**
110A	2 3	**Q2110** **Q3110**	**BQ2B110** **N/A**	**Q2110H** **Q3110H**	**BQ2B110H** **N/A**	**Q2110HH** **Q3110HH**	**N/A** **N/A**
125A	2 3	**Q2125** **N/A**	**BQ2B125** **QR23B125**	**Q2125H or EQ9677** **N/A**	**BQ2B125H** **QRH23B125**	**Q2125HH** **N/A**	**HQR23B125** **HQR23B125**
150A	2 3	**EQ9683** **N/A**	**QR22B150** **QR23B150**	**EQ9683** **N/A**	**QRH22B150** **QRH23B150**	**N/A**	**HQR22B150** **HQR23B150**
175A	2 3	**N/A**	**QR22B175** **QR23B175**	**EQ9684** **N/A**	**QRH22B175** **QRH23B175**	**N/A**	**HQR22B175** **HQR23B175**
200A	2 3	**EQ9685** **N/A**	**QR22B200** **QR23B200**	**EQ9685** **N/A**	**QRH22B200** **QRH23B200**	**N/A**	**HQR22B200** **HQR23B200**

Note: Low amperage circuit breakers (15-60A) available with installation of connector kit #**MSMK-50**

Corner Elbow Modules - Permit continuation from stack to stack around corners

System Voltage	Ampere Rating	Catalogue Number	Dimensions - Inches (mm)			Weight - lbs.(kg)
			H	W	D	
Inside Elbow Modules						
120/240 1Ø3W	600	**MEL1-IN-6**	16 (406)	12 (304)	$7^{1/4}$ (184)	45 (20)
	1200	**MEL1-IN-12**				
120/208 3Ø4W	600	**MEL3-IN-6**				50 (23)
	1200	**MEL3-IN-12**				
Outside Elbow Modules						
120/240 1Ø3W	600	**MEL1-OUT-6**	16 (406)	12 (304)	$7^{1/4}$ (184)	45 (20)
	1200	**MEL1-OUT-12**				
120/208 3Ø4W	600	**MEL3-OUT-6**				50 (23)
	1200	**MEL3-OUT-12**				

Note: To connect a Tap Box to an Elbow, order **MTBELK6** or **MTBELK12**. Connection from feed-through tap box 1200A to an elbow is not possible.

Inside

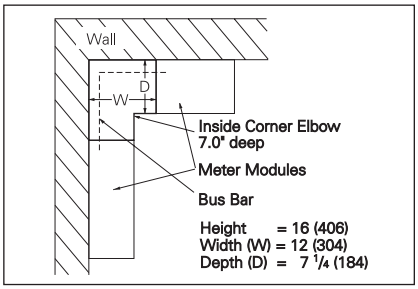

Outside

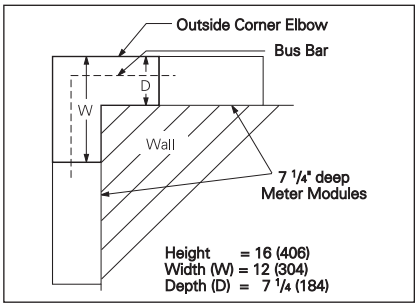

[1] Connector kit #MSMK-50 is required for 60A breaker installation.

Meter Centres

240V Modular Meter Centres

Accessories

Catalogue Number	Description	Content
MBHP-2	Blank meter socket filler plate required to cover empty space, each steel plate has a dimension of 4.3 x 14.1 in.	2 half plates (1 MOD = 1 x MBHP-2)
MLTB-L2750	Alternative lug kit for 600A standard tap boxes	4 lugs 1/0 AWG - 750 Kcmil Al/Cu
MTBK12	Connection adaptor kit for tap box MLTB1-1200 or MLTB3-1200 when used for output with an odd number of meter stacks	4 connector spacers and hardware
MTRK-64	Wall mounting rail of 64 in., meter stack is supplied with embossed hooks for this mounting rail system	1 wall mounting track 64"
MTBELK6	Bus bar kit to connect a 600A standard or feed-through tap box via a 600A corner elbow	4 Bus Bars and hardware
MTBELK12	Bus bar kit to connect a 1200A standard tap box via a 1200A corner elbow	8 Bus bars and hardware
MSSR	Meter sealing ring	1 meter ring
MUJP-5	Jumper bar 200A max, 5 jaws, to jump a metering position when the meter has temporarily been removed	2 jumper bars
MUJP-7	Jumper bar 200A max, 7 jaws, to jump a metering position when the meter has temporarily been removed	3 jumper bars
SEALSC1	Sealing screw kit	25 sealing screws
SFLK-200	Subfeed lug kit 200A max.	4 lugs 6 AWG - 300 Kcmil Al/Cu
8217-6	BQ breaker mounting hardware	6 screws
8217-12	BQ breaker mounting hardware	12 screws
8217-100	BQ breaker mounting hardware	100 screws
8217-200	BQ breaker mounting hardware	200 screws



MBHP-2

Replacement cover for Meter Socket Modules

Catalogue Number	Description	Content
MC4-125	125A 4 & 5-jaw front cover plate QP & BQ breakers	1 cover plate 1 sealing ring 1 sealing screw
MC4-200	200A 4 & 5-jaw front cover plate QP & BQ breakers	
MC4-200QR	200A 4 & 5-jaw front cover plate QR breaker	
MC7-100	100A 7-jaw front cover plate QP & BQ breakers	
MC7-200QR	200A 7-jaw front cover plate QR breaker	



MC4-125

Tap Box Modification Kits

Catalogue Number	Description	Content
MLTB-AP	Al. plate punched for standard tap boxes and MLTB 600FT	1 tap box tub end
MLTB-AU	Al. plate unpunched for standard tap boxes and MLTB 600FT	
MLTB-AUFT	Al. plate unpunched for Feed-Through Tap Box 1200A	
MLTB-FP	Fiber plate punched for standard tap boxes and MLTB 600FT	
MLTB-FPFT	Fiber plate punched for Feed-Through Tap Box 1200A	
MLTB-FU	Fiber plate unpunched for standard tap boxes and MLTB 600FT	
MLTB-FUFT	Fiber plate unpunched for Feed-Through Tap Box 1200A	

Note: Multi-stack grounding is accomplished by running a bare wire through the factory installed lay-in lugs in the bottom of each stack. No grounding kit is required except when an elbow module is used.

Configurations with switch

With Switch

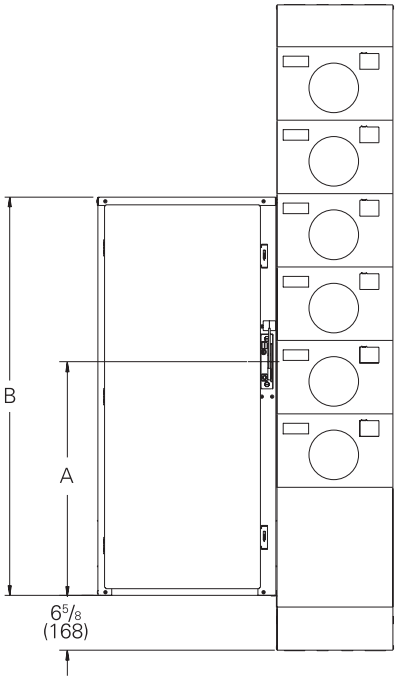

With Transition Box and Switch

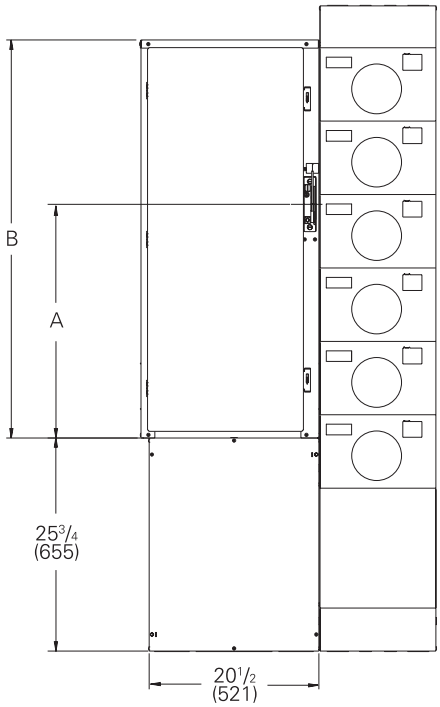

Configurations with Standard Tap Box or Transition Box

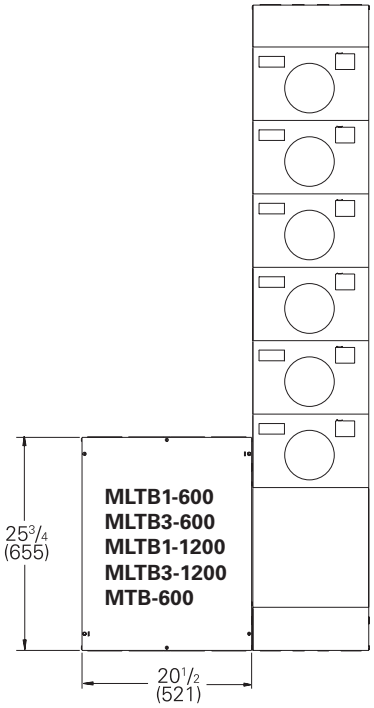

Standard Tap Box connections

MLTB1-600

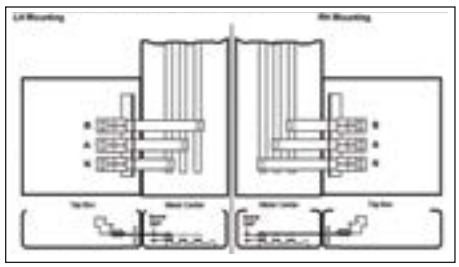

MLTB3-600

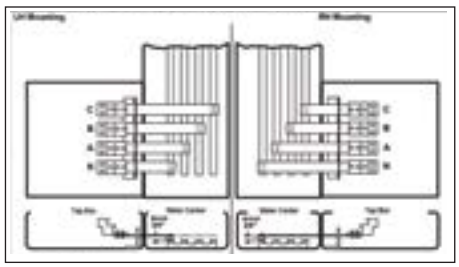

MLTB1-1200

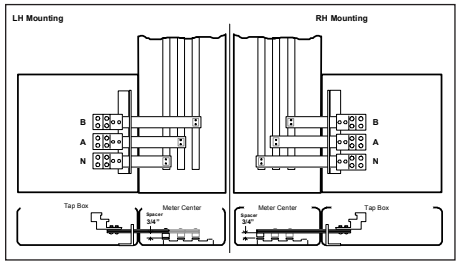

MLTB3-1200

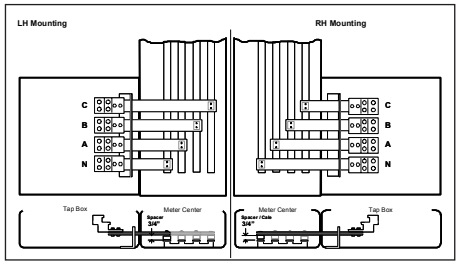

Meter Centres

240V Modular Meter Centres

Configurations with feed through Tap Box 600A

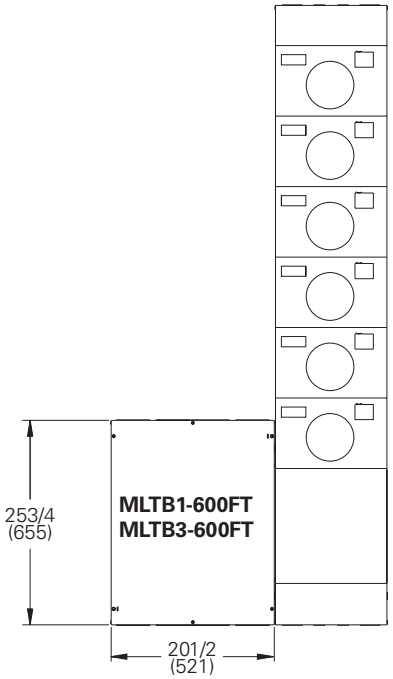

MLTB1-600FT

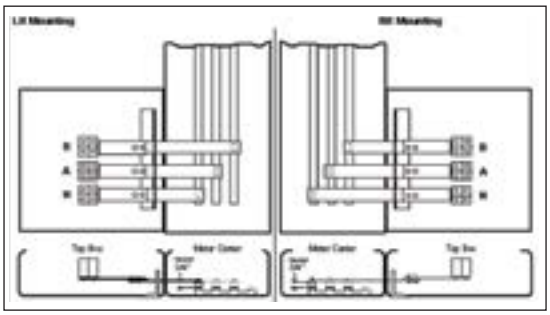

MLTB3-600FT

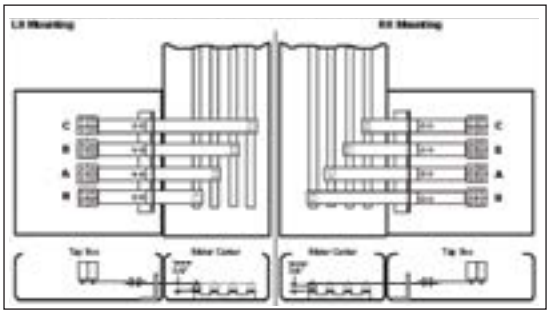

Configurations with feed through Tap Box 1200A

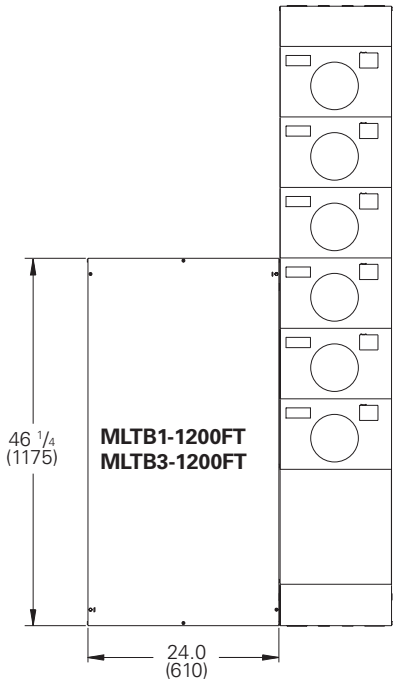

MLTB1-1200FT

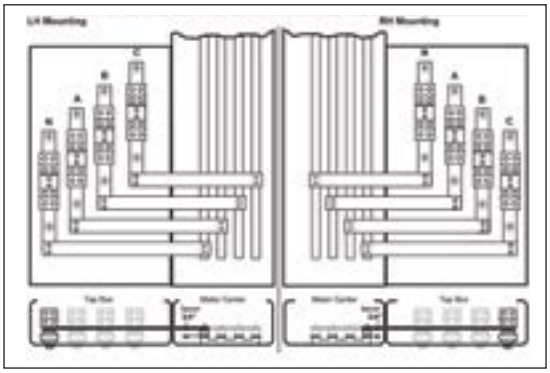

MLTB3-1200FT

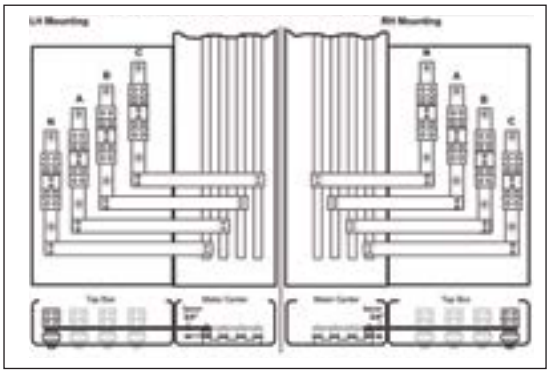

Note: For Feed-Through Tap Box 1200A, standard assembly is for left hand mounting. For right hand mounting, bus bar and insulated support must be moved at the other hole set (marked with an "R") before wall installation.

Meter Stack Mounting Dimensions - Inches (mm)

MMC1
MMC3

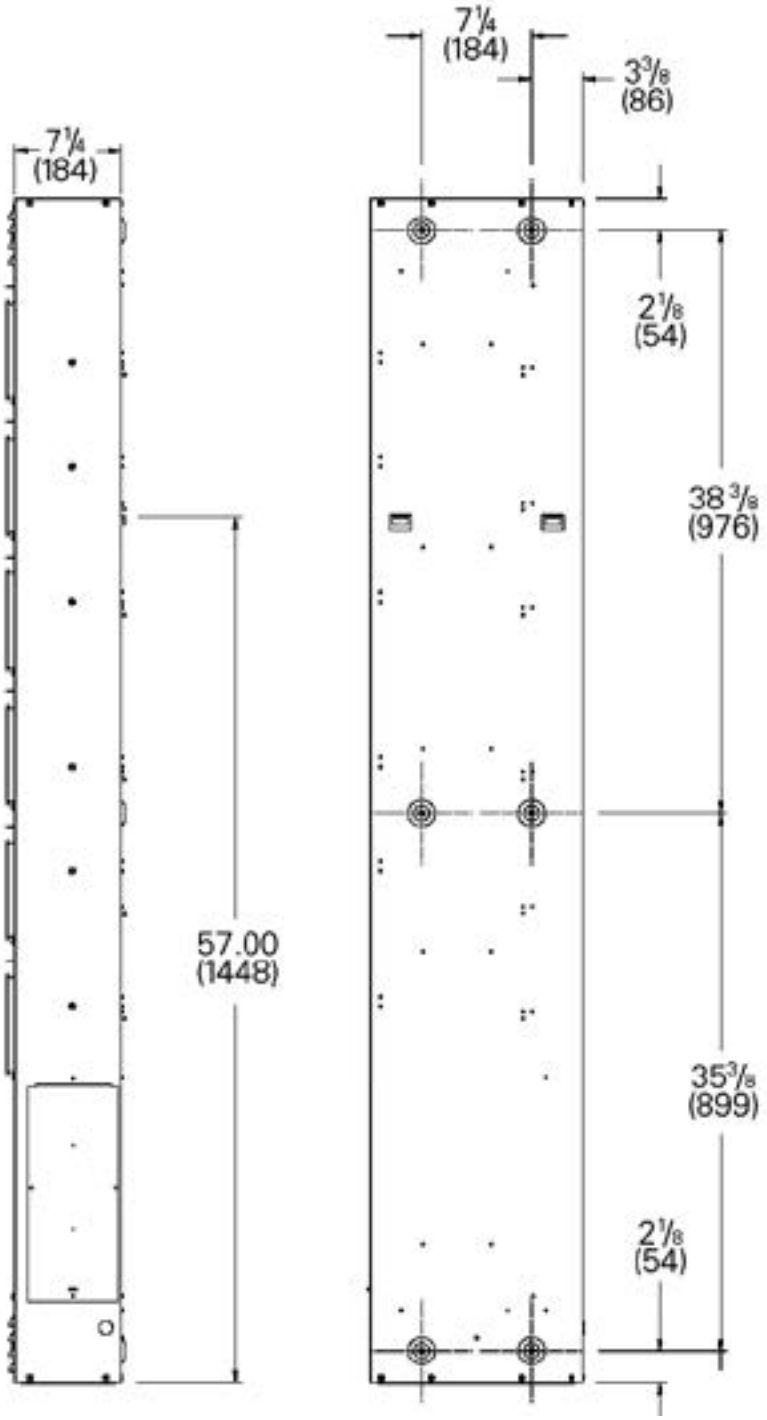

Side View

Back View

Meter Centres

240V Modular Meter Centres

Meter Modules Dimensions - Inches (mm)

Meter Socket Module:
MMS7-100

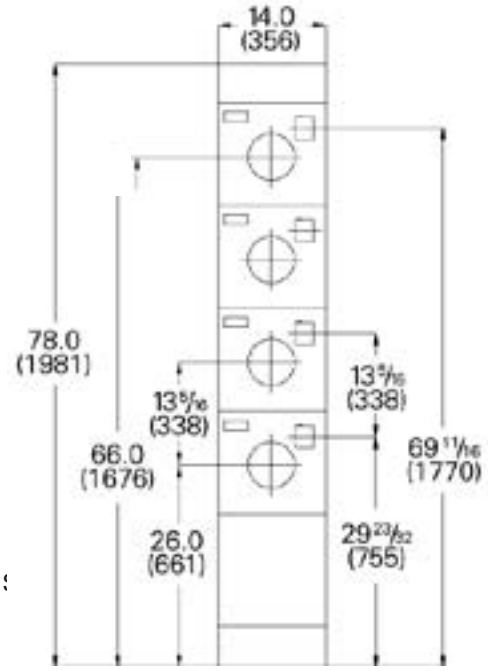

Meter Socket Modules:
MMS4-125
MMS5-125

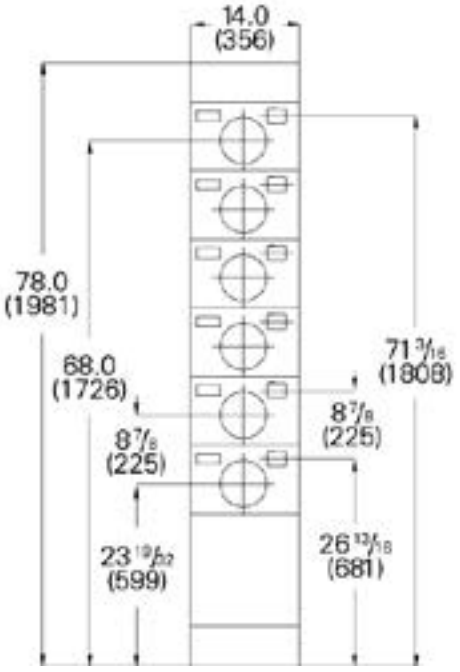

Meter Socket Modules:
MMS4-200
MMS5-200
MMS4-200QR
MMS5-200QR

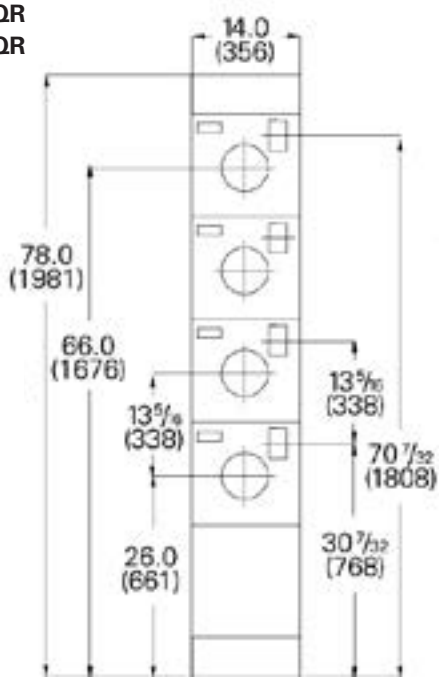

Meter Socket Module:
MMS7-200QR

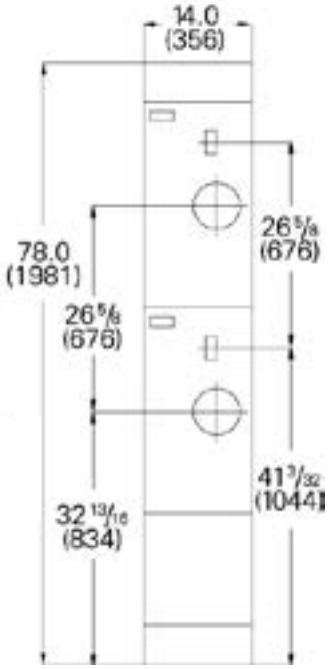

Meter Centres

240V Modular Meter Centres

Selection

Knock Out Data for tap boxes tub end - Inches (mm)

B	1 1/4 - 1 1/2 - 2
A	3 - 3 1/2
Ref.	K.O. Trade Size

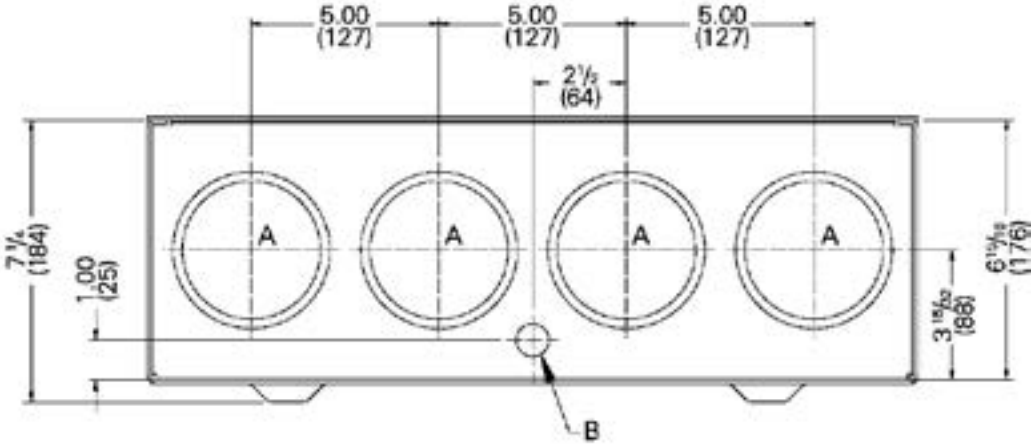

Knock Out Data for top meter stack tub end - Inches (mm)

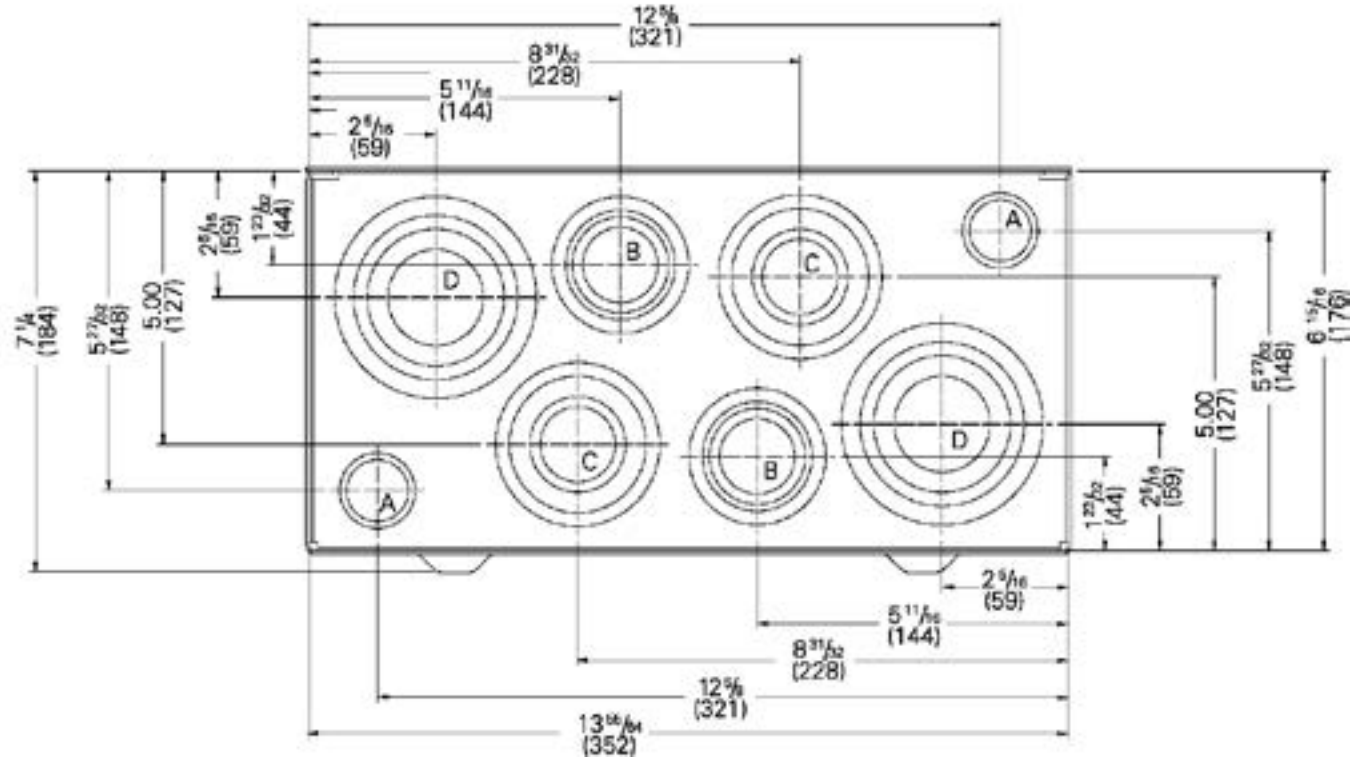

1 1/4 - 2 - 2 1/2 - 3	D
1 - 1 1/4 - 2 - 2 1/2	C
1 - 1 1/4 - 1 1/2 - 2	B
3/4 - 1	A
K.O. Trade Size	Ref.

Meter Centres

240V Modular Meter Centres

Reference

Layout example - Reference only

System: 120/240V 1Ph 3W, 10kA

Dimension of each stack:
Height: 78" (1981mm)
Width: 14" (356mm)
Depth: 7 1/4" (184mm)

Height of the modules: (24 Modules)
125A Module: 8 7/8" (225.5mm)

Overall Width: 76 1/2" (1945mm)

)

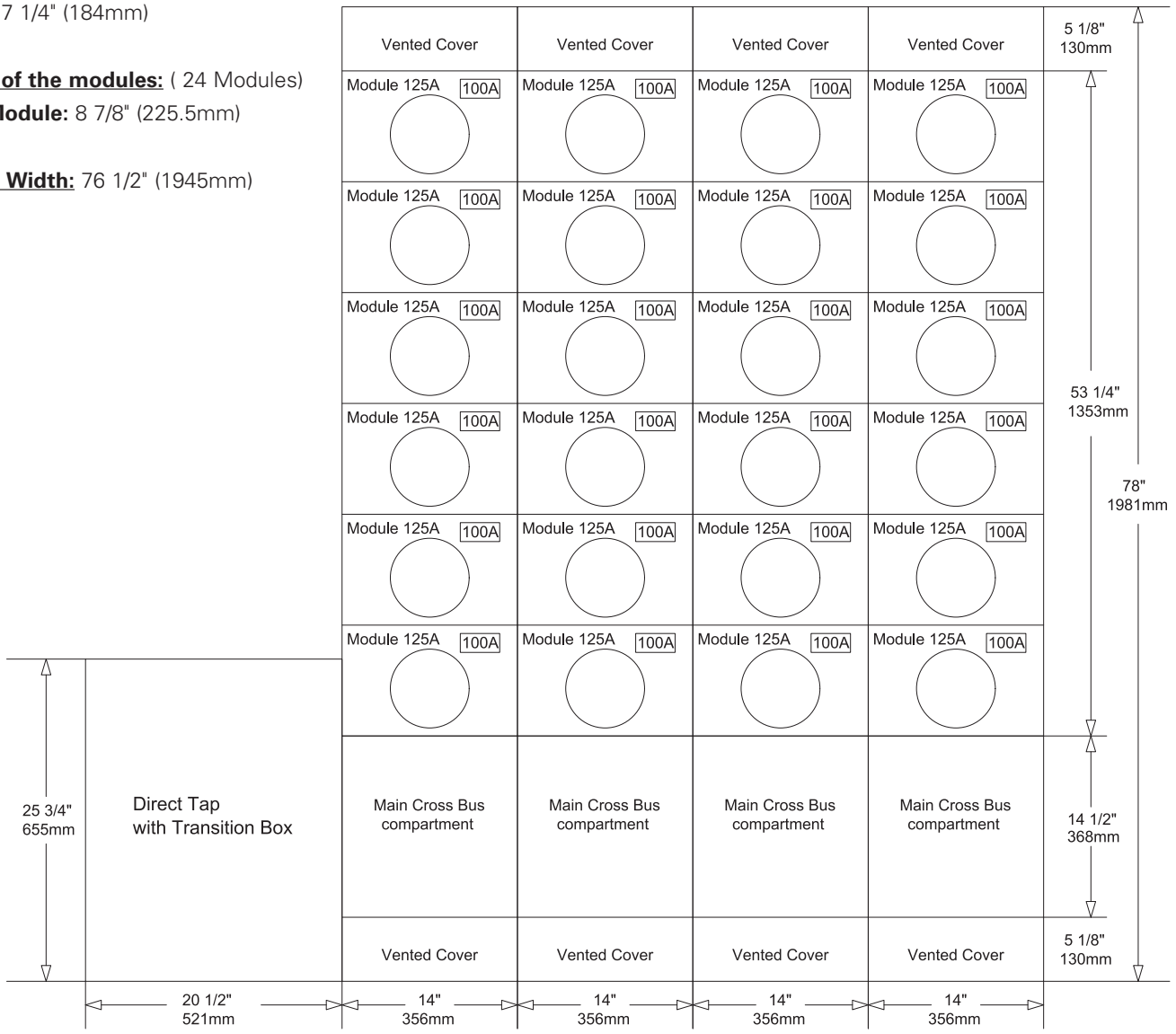

Meter Centres

600Y/347V Meter Centre

General

General Specifications
Siemens 600Y/347V metering line offers an ideal solution for restricted space projects. This metering solution for 600Y/347V applications has been designed in Canada based on contractors' feedback. Each meter stack houses features designed with the contractor in mind, to maximize productivity and minimize labour costs

Voltage
600Y/347V AC

Amperage
Horizontal bus bars rated for 1200A max.
Vertical bus bars rated for 800A max.
Meter socket rated for 200A max.

Short Circuit rating
42,000A RMS symmetrical @ 600V max. when protected by 1200A maximum HRC class L type fuse

Standard
CSA: C22.2 No. 229-M1988.
Certified under file #153416

Service
3-phase 4-wire 600Y/347Vac

Enclosure
Type 1 enclosure. Meter stack comes standard with dripshield and blank end walls (no knockout). Meter stack enclosure, barriers and end plates are manufactured of galvanized steel. Front covers are fabricated of phosphatized steel finished with ASA 61 light grey paint.

Meter Socket Jaws
Meter socket jaws consist of tin plated copper with steel spring reinforced clips for reliable contact pressure. Positive alignment of jaws and stabs is assured by bus straps factory installed.

Sub-Service Breaker
High performance bolt-on circuit breakers can be selected to address site requirements from 70 to 200A. Interrupting ratings up to 25kA combine thermal and magnetic trip elements. Series rating is also available for approved combination up to 42kA when protected by 1200A maximum HRC class L type fuse.

Breaker Provisions
Each 600V meter stack has provision for four 3-pole 200A max bolt-on type FXD6/HFXD6 circuit breaker. Non-interchangeable trip unit breakers must be used for this application. Generous gutter space allows for wiring for top or bottom of the meter module. All sub-service breaker mounting hardware is provided with each meter stack.

Neutral & Ground Provisions
Each stack includes neutral & ground provisions.

Connectors	Wire size
Neutral	#6 @ 350MCM #14 @ 2
Ground	#6 @ 250MCM



Features

- Robust and compact enclosure standard with dripshield
- Sturdy bussing connections providing durable support for each sub-service breaker
- Breaker and bus bar protection allowing screws recuperation
- Provision to padlock sub-service breaker in the "off" position
- Large wireway separated from meter area for easier connections.
- Trouble-free access to horizontal bars and easy access to cabling area
- Reliable and simple busbar to busbar connections

Meter Centres

600Y/347V Meter Centre

Selection

600Y/347V Meter Stack①② – 2 versions available

- Cold metering
- Includes 4 meter sockets 7-jaw rated for 200A max
- Load cables can exit enclosure at top and/or bottom
- Removable bottom plate to faciliate drilling holes for cable entry
- Horizontal main bus bar rated for 1200A max
- Uses Siemens breakers 200A max, type FXD6 and HFXD6 only
- Includes provisions for 4 sub-service breakers, 200A max.
- Type 1 enclosure, standard with dripshield and blank end walls
- Mounting hardware for 4 breaker is included in each stack
- "HQ" version has hinges for wireway covers

Main service voltage	Sub-service voltage	Catalogue number	Meter socket rating and number of jaws	Number of sub-service	Circuit breaker Type	Vertical Bus Bar rating (Amp)	Overall dimensions in inches (mm)			Weight - lbs (kg)
							H	W	D	
600Y/347V 3Ø4W	600Y/347V 3Ø4W	**MMC37-42006**	200A 7-Jaw	4	FXD6, HFXD6	800	$76^{1/4}$ (1937)	$20^{5/8}$ (524)	$13^{15/16}$ (354)	220 (100)
		MMC37-42006HQ								



MMC37-42006



MMC37-42006HQ

Wiring Diagram

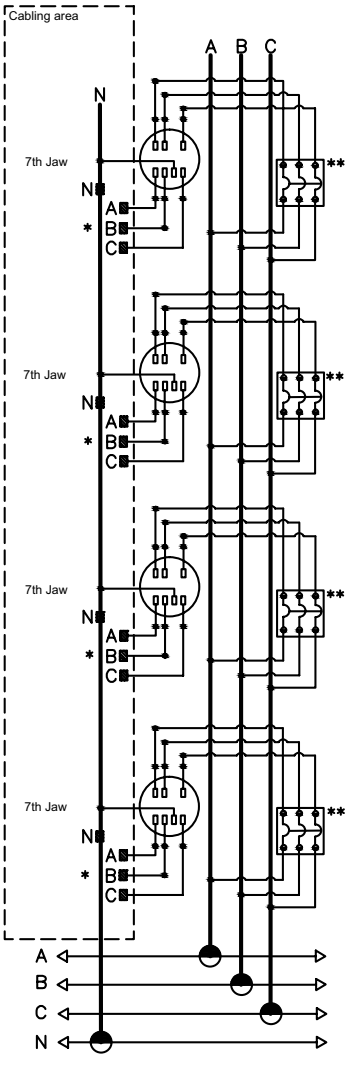

① Sub-service breakers are not to exceed meter socket rating
② Breaker provision only, breaker must be ordered separately. Breaker mounting hardware included with 600Y/347V meter stack.

Meter Centres

600Y/347V Meter Centre

Accessories

Sub-service Circuit Breakers①

- Assembled circuit breaker without lugs (lugs not required for this application)
- Non-interchangeable trip only
- Breaker mounting hardware provided with meter stack
- Additional information on breaker available in section 5 page 5-24

Amperage Rating	Number of Poles	Max. interrupting rating for 600Y/347V	
		22 kA	25 kA
		Catalogue Number	Catalogue Number
70A	3	**FXD63B070**	**HFXD63B070**
80A	3	**FXD63B080**	**HFXD63B080**
90A	3	**FXD63B090**	**HFXD63B090**
100A	3	**FXD63B100**	**HFXD63B100**
110A	3	**FXD63B110**	**HFXD63B110**
125A	3	**FXD63B125**	**HFXD63B125**
150A	3	**FXD63B150**	**HFXD63B150**
175A	3	**FXD63B175**	**HFXD63B175**
200A	3	**FXD63B200**	**HFXD63B200**



Circuit Breaker FXD6 Frame

Standard Tap Boxes

- "IN" lugs included
- Suitable for left and right hand side entry (standard configuration is left hand side)

Main service	Amperage Rating (Amp)	Catalogue Number	Cable lug size per phase - suitable for Al and Cu cables	Overall Dimensions - Inches (mm)			Weight - lbs (kg)
				H	W	D	
600Y/347V 3Ø4W	600	**MLTB3-6006**	(4) 1/0 @ 750MCM Cu/Al	$25^{1/8}$ (638)	$27^{1/4}$ (692)	$13^{15/16}$ (354)	68 (30.8)
	1200	**MLTB3-12006**	(4) 1/0 @ 750MCM Cu/Al	$25^{1/8}$ (638)	$27^{1/4}$ (692)	$13^{15/16}$ (354)	70 (31.8)

Feed Through Tap Boxes

- "IN" and "OUT" lugs included
- Feed Through tap boxes are suitable for left and right hand side entry

Main service	Amperage Rating (Amp)	Catalogue Number	Cable lug size per phase - suitable for Al. And Cu cables	Overall Dimensions - Inches (mm)			Weight - lbs (kg)
				H	W	D	
600Y/347V 3Ø4W	600	**MLTB3-600FT6**	(4) 250 @ 750 MCM Cu/Al or (8) 3/0 @ 250 MCM Cu/AL	$25^{1/8}$ (638)	$27^{1/4}$ (692)	$13^{15/16}$ (354)	74 (33.6)
	1200	**MLTB3-1200FT6**	(8) 1/0 @ 750 MCM Cu/Al	$50^{5/8}$ (1285)	$27^{1/4}$ (692)	$13^{15/16}$ (354)	145 (65.8)



MLTB3-6006



MLTB3-600FT6

① Breaker mounting hardware kit included with 600V meter stack.

Meter Centres

600Y/347V Meter Centre

Selection

Close coupled option with Siemens SMP switchboard

- SMP must have main breaker at top of the section
- Sill channel optional
- Close coupled option available for 1200A only
- Main bus connector kit required to connect stack with SMP. Main bus kit needs 15'' high of space at the bottom of the SMP distribution section. In SMP with Hydro compartment, only 7.5" available for distribution breakers, just below the Hydro compartment.
- Suitable for left and right hand side entry based on main bus connector kit selection (standard configuration is left hand side entry as displayed below)

Main Bus Connector Kit

- Kit includes optional meter centre sill channel

Main service Voltage	Amperage Rating (Amp)	Catalogue Number	Description	Weight in lbs (kg)
600Y/347V 3Ø4W	1200	**MBSMP3-12006**	SMP Connector kit 1200A Max	12 (5.4)
	1200	**MBSMP3-12006G**	SMP Connector kit 1200A Max (left)	12 (5.4)

Meter centre MMC37-42006 with bus bar joining kit MBSMP3-12006 (where Meter Centre is on the right of the SMP) and with MBSMP3-12006G (where Meter Centre is on the left of the SMP) – Inches (mm)

MBSMP3-12006

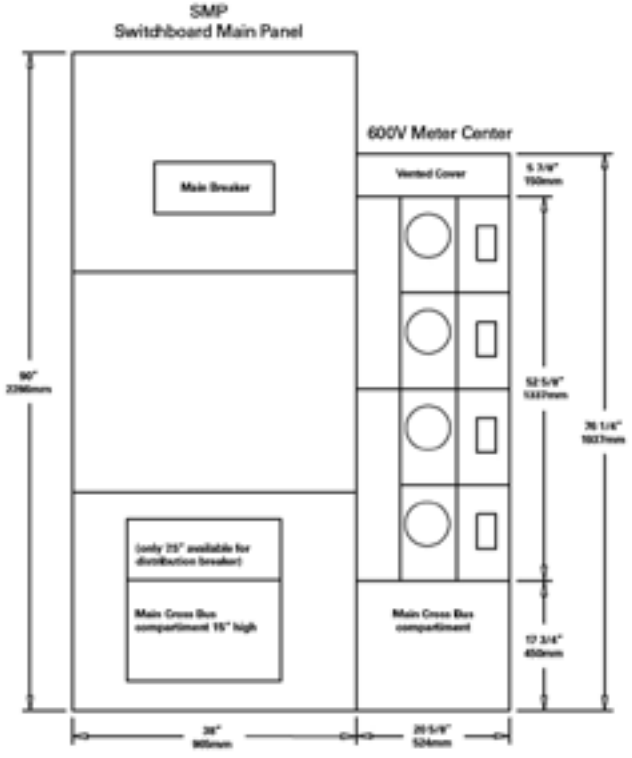

MBSMP3-12006G

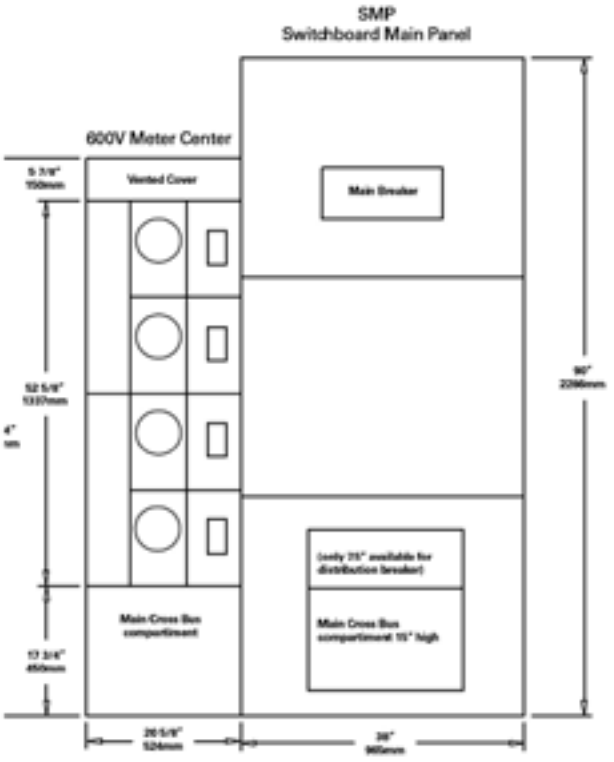

Meter Centres

600Y/347V Meter Centre

Accessories

Main Bus Link Connector Kits

- Main Bus Link Connector Kits are required for each additional stack when joining two or more meter stacks.
- The first stack installation does not require bus links when installed with a tap box (standard or Feed through). The tap box is supplied with main service lugs and bus bar link connectors.

Main service	Amperage Rating	Catalogue Number	Description	Weight - lbs (kg)
600Y/347V 3Ø4W	600	**MBSS3-6006**	Stack to stack connector kit 600A	2 (0.9)
	1200	**MBSS3-12006**	Stack to stack connector kit 1200A	4 (1.8)



MBSS3-6006

Inside Elbow Modules

- Allow the continuation from stack to stack around wall corners.
- Can be mounted on the left and right hand side of the meter centre.

Main service	Amperage Rating	Catalogue Number	Overall Dimensions - Inches (mm)			Weight - lbs (kg)
			H	W	D	
600Y/347V 3Ø4W	600	**MEL3-IN-6006**	$17^{1/2}$ (406)	$20^{1/2}$ (521)	$13^{1/2}$ (343)	65 (29.5)
	1200	**MEL3-IN-12006**	$17^{1/2}$ (406)	$20^{1/2}$ (521)	$13^{1/2}$ (343)	75 (34.0)

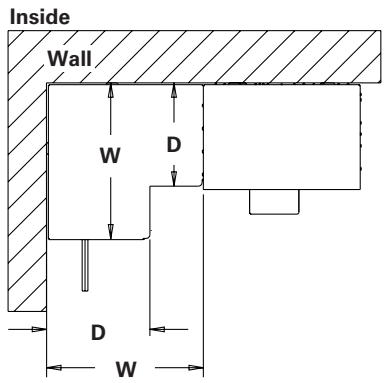

Left mounting shown. Can be mounted on the right side of the meter stack if needed.

Accessories

Catalogue Number	Description	Content
SFLK-2006	Branch sub-feed lug kit, 600V	4 lugs
MSSR	Meter sealing ring	1 meter ring
MUJP-7	Jumper bars 7 jaws 200A	3 jumper bars
MBP2006	Blank meter plate covering meter socket and breaker provision	1 blank plate



SFLK-2006

Replacement Parts

Catalogue Number	Description	Content
MC7-200WS	Repl Front cover wiring section	1 replacement plate and Mounting hardware
MC7-200WSHQ	Repl Front cover wiring section for HQ version	
MC7-200FD6	Repl Front cover breaker section	
MC7-2006TC	Repl Top cover plate	
MC7-2006BC	Repl Bottom cover plate	
MC7-2006AP	Repl Access plate	
MC7-200600	Repl Front meter socket cover	
SCR-6006	Repl screws Stack to stack conn kit 600A	12 carriage bolt screws, washers & nuts. 4 regular screws & washers
SCR-12006	Repl screws Stack to stack conn kit 1200A	
SCRFXD6	Repl breaker mounting screws	6 allen key type screws & washers. 2 long screws for breaker support



MBP2006

Meter Centres

600Y/347V Meter Centre

Configuration with standard Tap Box - Inches (mm)

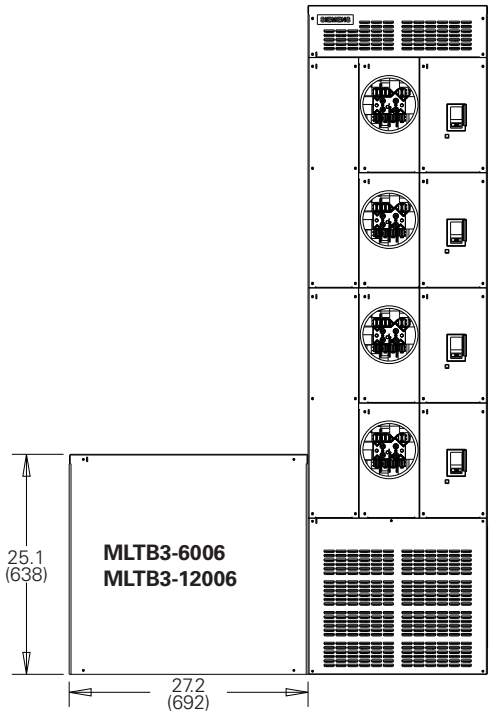

Standard tap box connections

MLTB3-6006

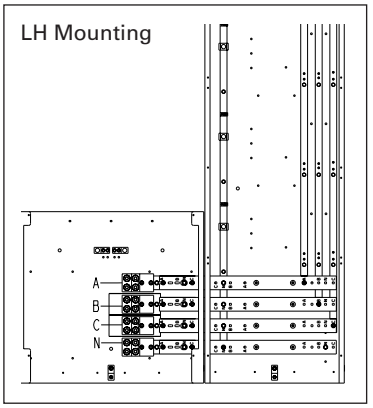

MLTB3-12006

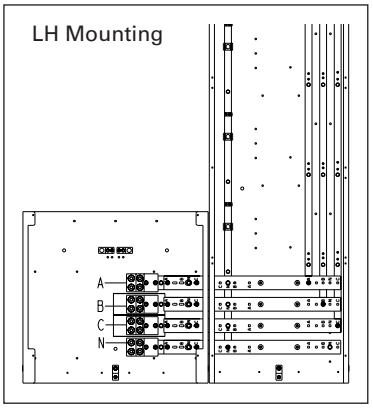

Note: Standard tap box can be mounted on the right hand side of the meter stack if needed.

Configuration with feed-through tap box 600A - Inches (mm)

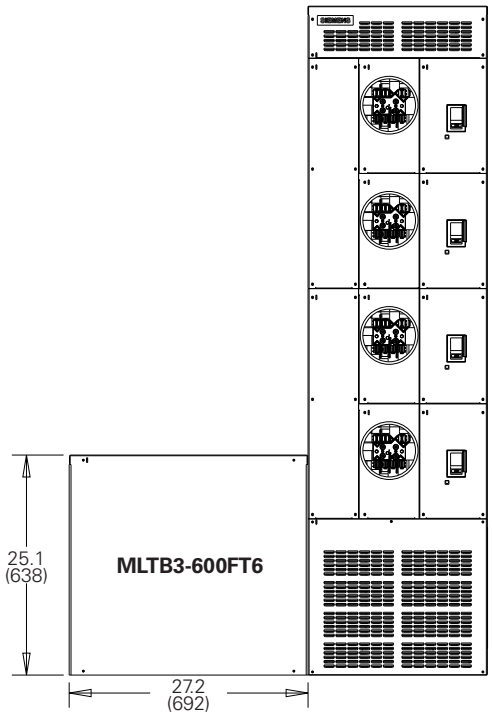

600A feed-through tap box connections

MLTB3-600FT6

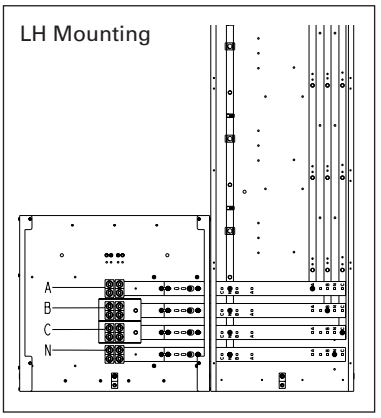

Note: 600A Feed-through tap box can be mounted on the right hand side of the meter stack if needed.

Configuration with feed-through tap box 1200A - Inches (mm)

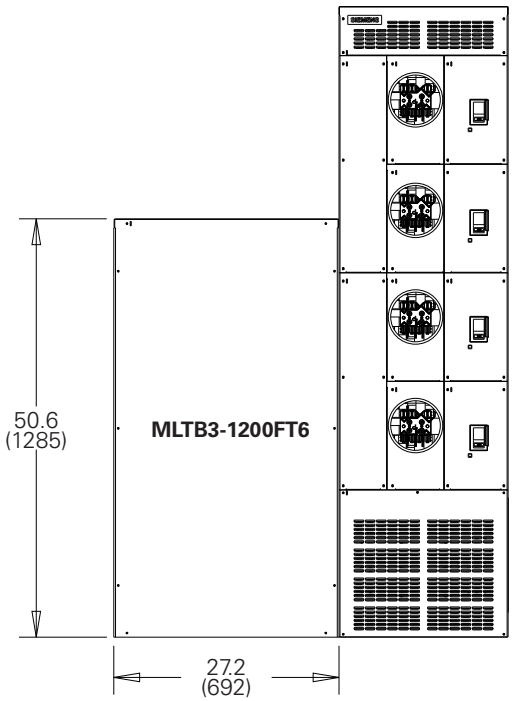

1200A feed-through tap box connections

MLTB3-1200FT6

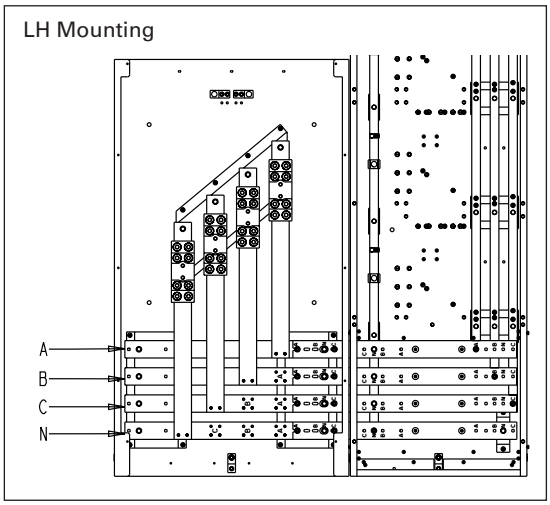

Note: 1200A feed-through tap box can be mounted on the right-hand side of the meter stack if needed.

Bottom plate for 600V Meter stack - Inches (mm)

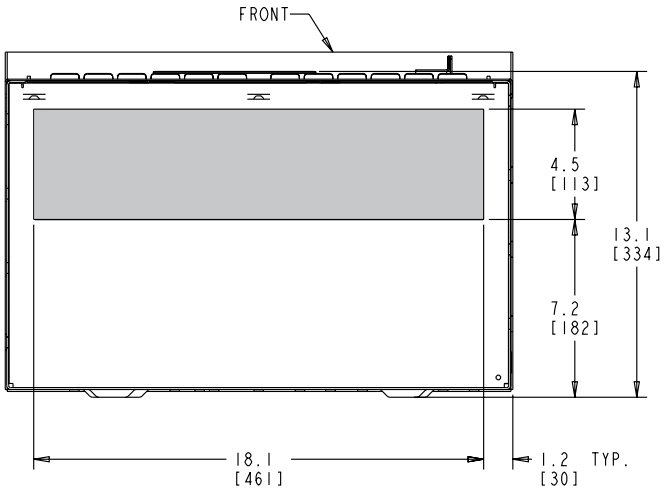

Section can be easily removed to allow contractor to drill entry hole outside the equipment.

600Y/347V Meter stack dimensions

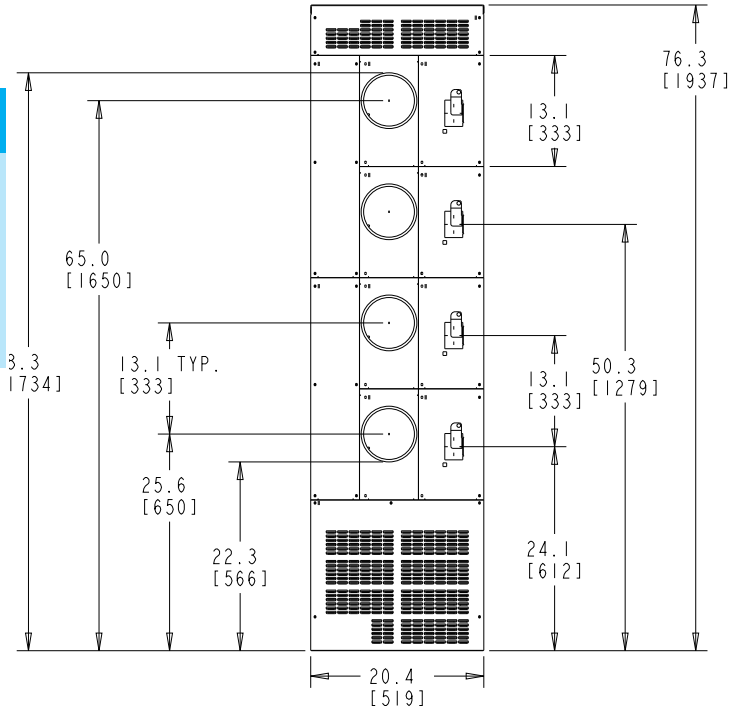

Front View

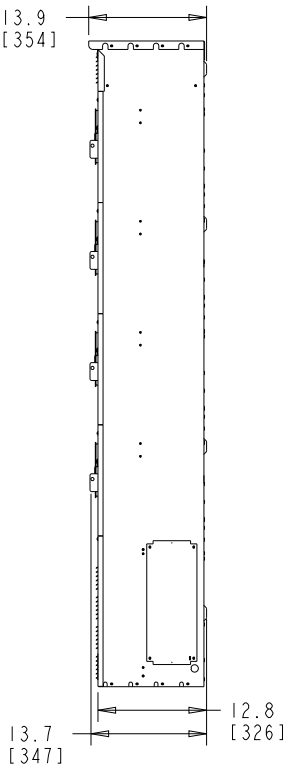

Side View

600Y/347V Meter stack mounting dimensions

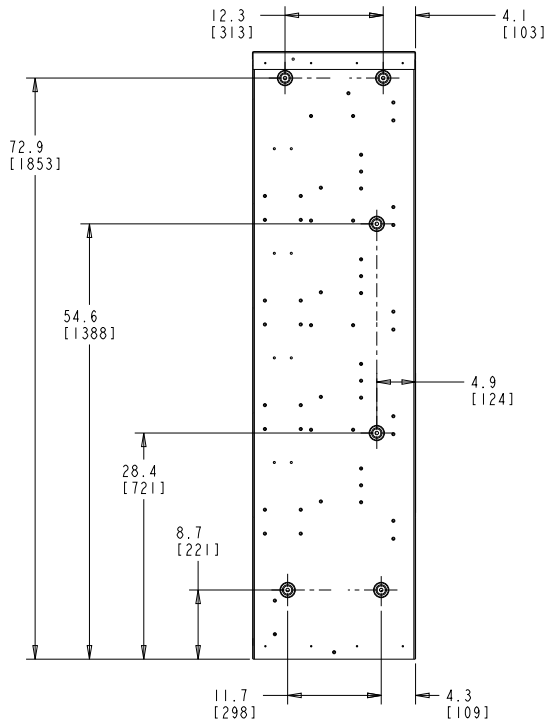

Back View

600Y/347V Meter Centre

Diagrams

600Y/347V Meter stack close coupled with SMP dimensions

Meter MMC37-42006 with bus bar joining kit MBSMP3-12006
where Meter Centre is on the right of the SMP - Inches(mm)

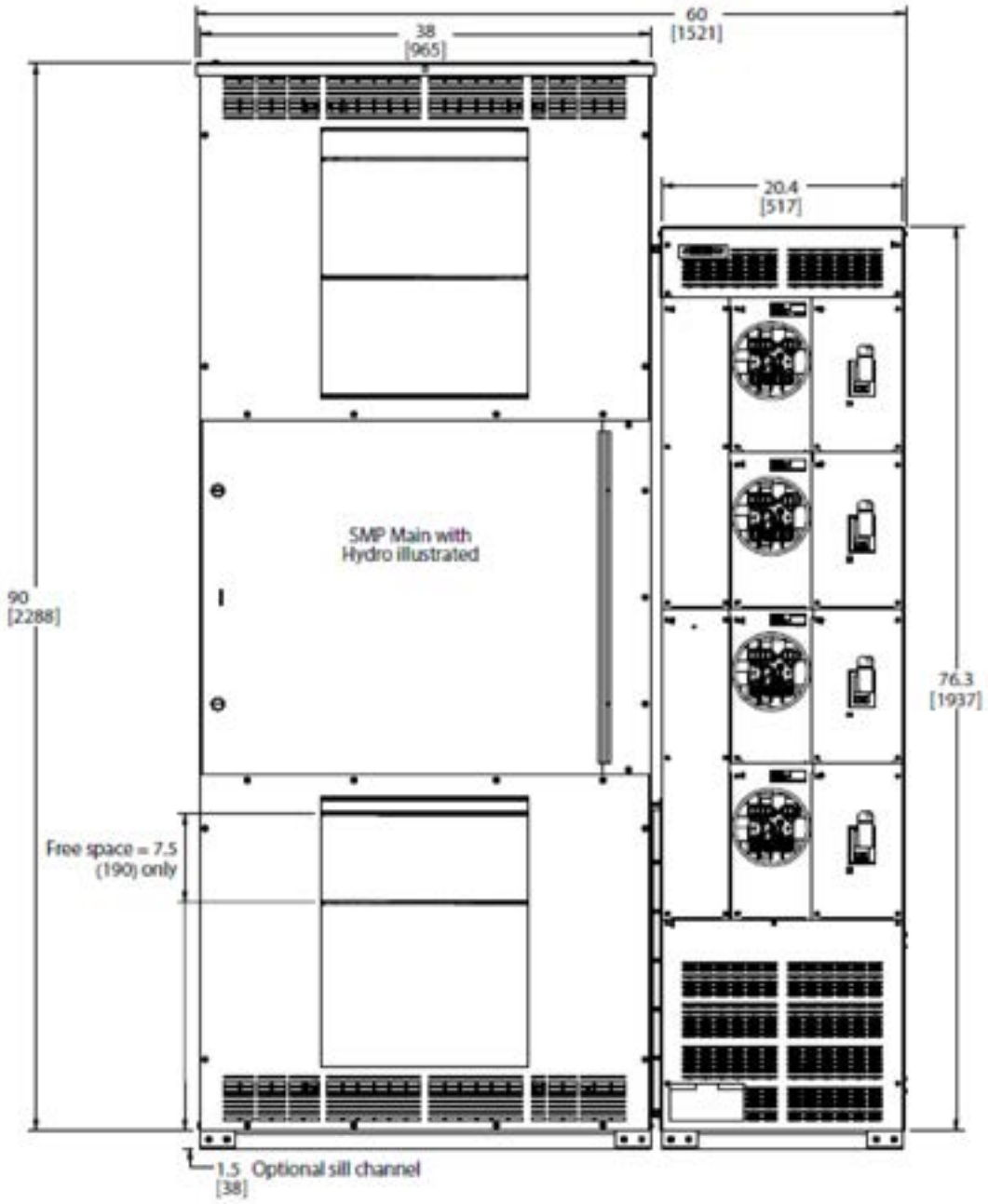

Meter Centres

600Y/347V Meter Centre

Reference

Layout example - Reference only

System: 1200A, 600Y/347V 3Ph 4W, 42kA

Dimension of each stack:
Height: 76 1/4" (1937mm)
Width: 20 5/8" (524mm)
Depth: 12 7/8" (326mm)

Height of the modules:
Module: 13 1/8" (333mm)

Overall Width: 1740mm

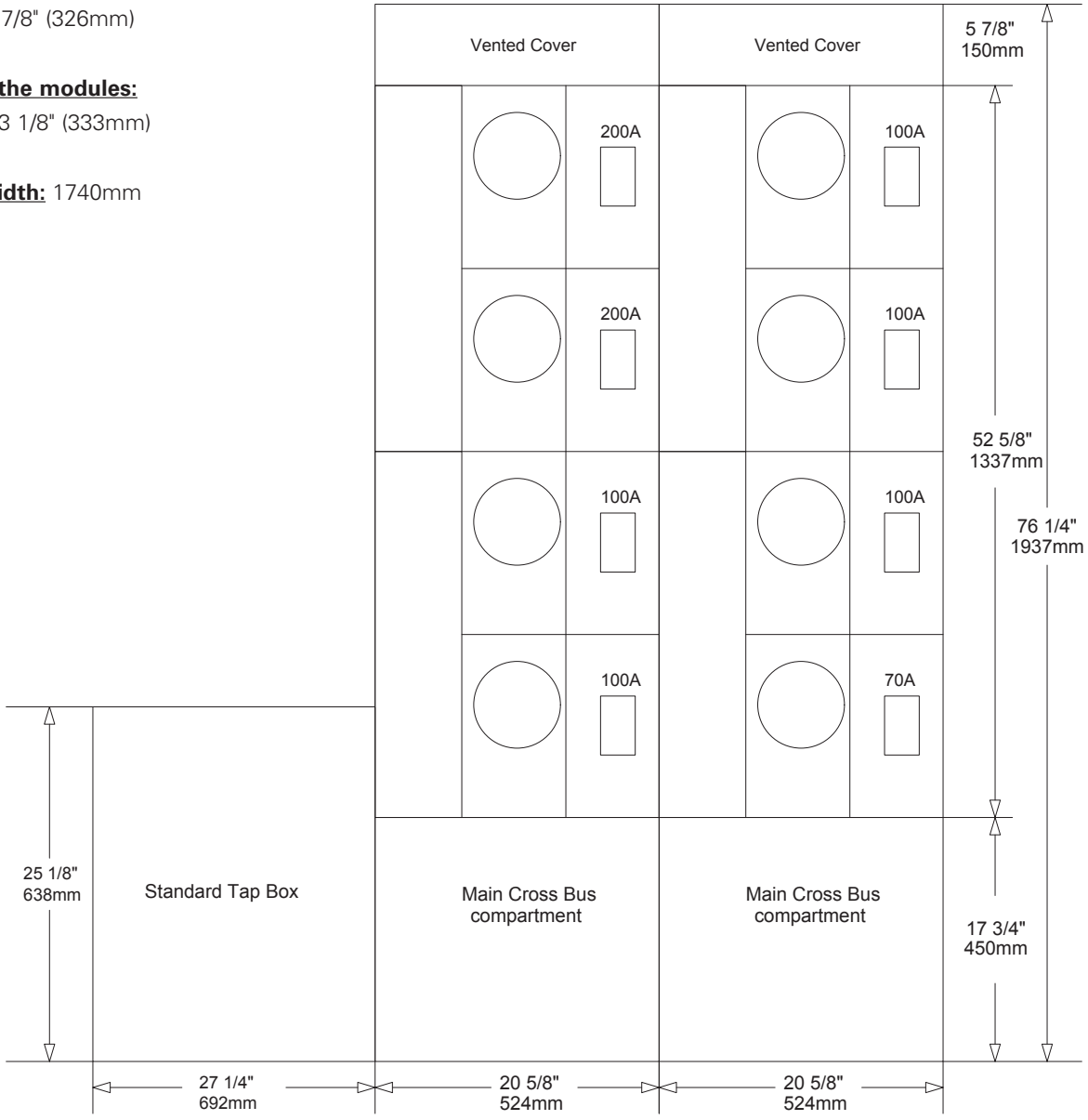



ID Switch



Heavy Duty Switch



Window Switch

Contents - Safety Switches

Air Conditioning Disconnects	3-2 – 3-3
Safety Switch Guide Form Specifications	3-4 – 3-5
Feature Comparison	3-6
Enclosure Types	3-7
Light Duty switches - Selection	3-8
ID Safety Switches	
ID Switches Catalogue Numbering System	3-9
ID Switches - Selection	3-10
Accessories - ID Switches	3-11
ID Switches Dimensions	3-12
VBII Catalogue Numbering System	
VBII Catalogue Numbering System	3-13
General Duty Safety Switches	
General Duty Switches—Features	3-14
240V Fusible and Non-Fusible—Selection	3-15
Heavy Duty Safety Switches	
Heavy Duty Switches—Features	3-16
240V Fusible—Selection	3-17
600V Fusible—Selection	3-18
600V Non-Fusible—Selection	3-19
Type 4/4X and 12 with Viewing Window—Selection	3-20
Special Applications Safety Switches	
4-Pole and 6-Pole—Selection	3-21
Interlocked Receptacle—Selection	3-22
Accessories—Heavy Duty Switches	3-23 – 3-25
VBII Safety Switch Replacement Parts	3-26
Dimensions and Weights	
Heavy Duty Switches	3-27 – 3-29
Type 1 and 3R Knockout Diagrams	3-30 – 3-32
4-Pole and 6-Pole Switch Dimensions	3-33
Double-Throw Switches	
Selection	3-34 – 3-35
Dimensions	3-36

Safety Switches

Non-Fused Air Conditioning Disconnects

Selection



240V Non-Fused Disconnect cUL listed, Type 3R enclosure

Catalogue Number	Ampere Rating	Maximum Horsepower	Disconnect Type	Std. Pkg.	Skid Qty.
WNC2060	60	10	Non-Fused Pullout	6	480

c UL

Features

- Ample Wiring Space
- Rugged Design
- Numerous Knockouts
- Raised Mounting Embosses
- Copper Conductors
- Pullout Switch
- Removable Door

Benefits

- The larger enclosure allows for ample wiring space.
- Manufactured with powder coated G90 galvanized steel for fade, scratch and corrosion resistance
- All (6) knockouts are easy to remove. The sidewall knockouts provide access from the sides of the device. Every knockout has 1/2", 3/4" and 1" provisions.
- (4) Raised mounting embosses keep the unit away from the wall, preventing dirt build-up. The upper mounting hole is shaped to be used as a hanger.
- Copper current carrying part allows for a cooler, longer lasting operation.
- The pullout switch design allows you to safely and easily de-energize the load terminals.
- The easily removable door makes it possible to wire the device with absolutely no interference.

Dimensions - Inches*

Non-Fused

Removable Door

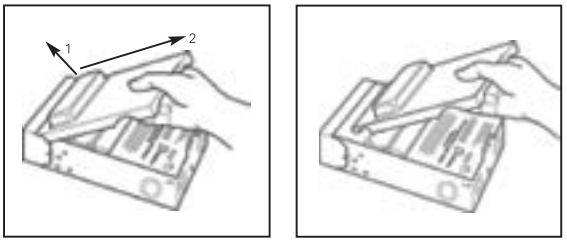

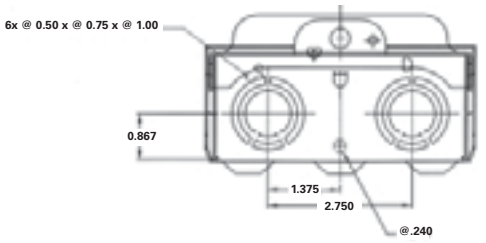

Wire Range Table

Connector	Copper		Aluminum	
	Solid	Standard	Solid	Standard
Line	#14-8	#14-3	#12-8	#12-3
Load	#14-8	#14-3	#12-8	#12-3
Neutral	#12-8	#12-2	#12-8	#12-2
Equip Grnd.	#12-8	#12-2	#12-8	#12-2

Wiring Diagram

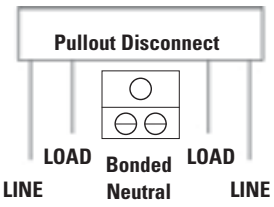

* For inches/millimeters conversion, multiply inches by 25.4.

Safety Switches

Fused Air Conditioning Disconnects

Selection





240V Fused Disconnect cUL listed, Type 3R enclosure

Catalogue Number	Ampere Rating	Maximum Horsepower	Fuse Class	Std. Pkg.	Skid Qty.
WFC2030	30	3	H	6	480
WFC2060	60	10	H	6	480

c UL

Features	Benefits
▪ Ample Wiring Space	▪ The larger enclosure allows for ample wiring space.
▪ Rugged Design	▪ Manufactured with powder coated G90 galvanized steel for fade, scratch and corrosion resistance
▪ Numerous Knockouts	▪ All (6) knockouts are easy to remove. The sidewall knockouts provide access from the sides of the device. Every knockout has 1/2", 3/4" and 1" provisions.
▪ Raised Mounting Embosses	▪ (4) Raised mounting embosses keep the unit away from the wall, preventing dirt build-up. The upper mounting hole is shaped to be used as a hanger.
▪ Copper Conductors	▪ Copper current carrying part allows for a cooler, longer lasting operation.
▪ Pullout Switch	▪ The pullout switch design allows you to safely and easily de-energize the load terminals.
▪ Removable Door	▪ The easily removable door makes it possible to wire the device with absolutely no interference.

Dimensions - Inches*

Fused

Removable Door

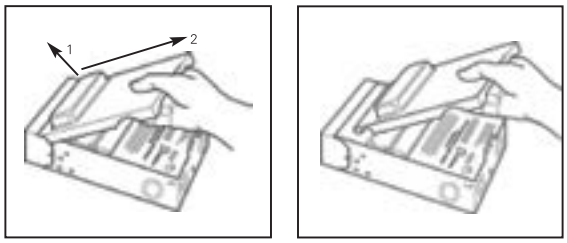

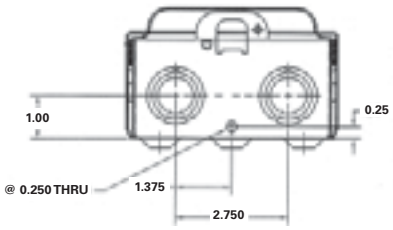

Wiring Diagram

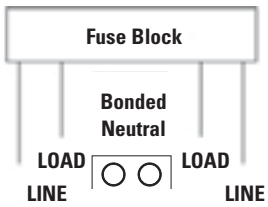

Wire Range Table				
Connector	Copper		Aluminum	
	Solid	Standard	Solid	Standard
Line	#14-8	#14-3	#12-8	#12-3
Load	#14-8	#14-3	#12-8	#12-3
Neutral	#12-8	#12-2	#12-8	#12-2
Equip Grnd.	#12-8	#12-2	#12-8	#12-2

* For inches/millimeters conversion, multiply inches by 25.4.

	ID Switches
Application	ID Switches are intended for applications where reliable performance and continuity of service are needed, but where duty requirements are not severe and usual service conditions prevail. Not suitable for Direct Current (DC) system.
Short Circuit Withstand Ratings	Suitable for use on a circuit capable of delivering not more than: 200kA RMS symetrical at 600V AC maximum for 30-200A. 100kA RMS symetrical at 600V AC maximum for 400-600A.
Fuses	Fusible switches will accept the following CSA class fuses: H.R.C. Form I Class J*, R or H & H.R.C. Form II fuses if the accepted adaptor kits are provided. If switch is used to its maximum Horse Power Rating, Time delay type fuses may be required for starting purposes. *Not applicable for switch ID321, use switch ID361.
Cover Interlocks	Voidable cover interlocks prevents cover from being opened when switch is in the "ON" position and prevents switch from being turned "ON" when door is opened.
Specifications	CSA Certified under file #13076 as enclosed switches. Fusible switches are suitable for service entrance when neutral is installed. Meets CSA C22.2 No.4 Enclosed Switches.
Seismic Qualifications	No Seismic qualification
Groundable Neutral	All ID switches (both Fusible and Non-Fusible) are either supplied with factory installed neutrals or accept field addable neutrals.
Padlocks	Padlock cover latch. Off padlock provision on handle.
HP & Load Break Ratings	ID switches are both load break and horsepower rated.

Safety Switches

Guide Form Specifications

General Duty

Application

General Duty Switches are intended for applications where reliable performance and continuity of service are needed, but where duty requirements are not severe and usual service conditions prevail. (These switches are intended for use primarily with supply circuits rated 240V AC or less where the available fault current is less than 100,000A when used with Class R or T fuses or 10,000A max. when used with Class H fuses.)

Short Circuit Withstand Ratings

Suitable for use on systems capable of delivering not more than 100,000 RMS symmetrical amperes of fault current as follows:

Sw. Rating	AIC Rating	Protective Device①
30-600A	10,000	Circuit Breaker
30-600A	10,000	Class H Fuse
30-600A	100,000	Class R Fuse
100-600A	100,000	Class J or T Fuse

Fuses

Fusible switches will accept the following CSA class fuses:

30 "LF" - 30A max plug Fuses
30-600A "GF" Class H & K, Class R with kit
100-600A "GF" Class J-move base
100-200 "GF" Class T with kit
400-600A "GF" Class T-move bases

Cover Interlocks

Voidable – cover interlocks on switches prevent the switch door from being opened when in the "ON" position. No cover interlock on 30-60A GD or on plug fuse type switches.

Specifications

CSA certified under file #24563 as enclosed switches. Fusible switches also suitable as service entrance when neutral bonded to the enclosure is installed. Meets CSA C22.2 No.4 Enclosed Switches.

Heavy Duty

Application

Heavy Duty Switches are intended for use in applications where:

1. Rugged construction, reliable performance, continuity of service and ease of maintenance are emphasized, or
2. Available fault currents higher than 10,000A are likely to be encountered, such as in manufacturing plants, mass production industries, and commercial, institution-al and other large buildings served by network systems or transformers of higher capacities.
3. System voltage is 600V AC or DC Max.
4. A Type 12 or 4 / 4X enclosure is required.

Short Circuit Withstand Ratings

Suitable for use on systems capable of delivering not more than 200,000 RMS symmetrical amperes of fault current as follows:

Sw. Rating & Tpye	AIC Rating	Protective Device①
All Heavy Duty & DT	10,000	Circuit Breaker
30-600A HD & DT	10,000	Class H Fuse
60A Compact HD	100,000	Class R, J or T Fuse
GD & 4P DT	100,000	Class R, J or T Fuse
30-600A HD	200,000	Class R, J or T Fuse
30-600A DTF & DTNF DT②	200,000	Class R, J or T Fuse
800 & 1200A HD & DT②	200,000	Class L or T Fuse

Fuses

Fusible switches will accept the following CSA class fuses:

30-600A "HF" Class H & K, Class R with kit
30-400A, 600V "HF" Class J-move base
100-600A, 240V "HF" Class J-move base
100-200A "HF" Class T with kit
400-600A "HF" Class T-move bases
800-1200A "HF" Class L, Class T③

Cover Interlocks

Voidable dual cover interlocks standard on all heavy duty switches. Prevents cover from being opened when switch is in the "ON" position and prevents switch from being turned "ON" when door is opened.

Specifications

CSA certified under file #24563 as enclosed switches. Fusible switches also suitable as service entrance when neutral bonded to the enclosure is installed. Meets CSA C22.2 No.4 Enclosed Switches.

Double Throw

Application

Double throw switches are intended to transfer loads from one power source to another. All 2 & 3 pole double throw switches are suitable for use as service equipment. All are CSA Listed. Switches are rated for use on systems with an available fault current of up to 10,000 AIC when protected with Class H fuses or either 100,000 or 200,000 AIC when protected with Class R, J or Class T fuses.

Fuses

Fusible switches will accept the following CSA class fuses:

30-200A "DT" & "F" Class H & K, Class R with kit
30 & 60A 600V "DT" Class J-move base
100-200A "DT" Class J-move base, Class T with kit
400-600A "DT" Class J-standard, Class T-move bases
400A 240v "F" Class H-standard
400A, 600V & 600A "F" Class T-Standard

Cover Interlocks

Dual cover interlocks standard on all double throw switches. Prevents cover from being opened when switch is in the "ON" position and prevents switch from being turned "ON" when door is opened.

Specifications

CSA certified under file #24563 as enclosed switches. Meets CSA C22.2 No.4 Enclosed switches.

Seismic Qualifications

100-600A GD & all HD switches and "DT" type double throw switches have been tested and comply with the 2010 California Building Code (CBC) and with the 2009 International Building Code (IBC) - Compliance Level SDS = 1.85 g

Groundable Neutral

Fusible switches have groundable neutral blocks factory installed. Non-fusible switches accept field addable neutrals.

All switches (both Fusible and Non-Fusible) are either supplied with factory installed neutrals or accept field addable neutrals.

All will accept field addable neutrals.

Padlocks

Padlockable cover latch. OFF padlock provisions on handle.

Padlockable cover latch and multiple OFF padlock provisions on handle.

Padlockable cover latch and multiple OFF padlock provisions on handle.

HP & Load Break Ratings

All General Duty, Heavy Duty and Double Throw Switches are both load break and horsepower rated.

① The protective device can either be a fuse or circuit breaker protecting a non-fusible switch. The ampere rating of the protective device must not exceed the switch ampere rating.

② 800A switches do not require an adapter kit, bases can be relocated to accommodate class-T fuses. A class-T adapter kit is required available for 240V applications on 1200A switches.

Feature Comparison

Light Duty (Plug Fuse)	ID Switches	General Duty	VBII Heavy Duty	Double Throw	Features/Ratings
—	●	●④	●	●	30 thru 600 Amps
—	—	—	●	—	800 and 1200 Amps
●	●	●	●	●	240 Volt AC
—	●	—	●	●	600 Volt AC
—	—	●	●	●	250 Volt DC
—	—	—	●	—	600 Volt DC
—	—	●	●	●	Double-break visible blade design (30-200A)
●	●	●	●	●	Quick-make, quick-break switching action
●	●	●	●	●	Highly visible ON/OFF handle indication
—	—	—	●	—	Handle design for hook stick operation
●	●	●	●	●	Padlockable cover latch
●	●	●	●	●	Padlockable handle
—	●	●	●	●	Single voidable cover interlock
—	●	—	●	●	Dual voidable cover interlock
●	●	●	●	●	Type 1 enclosure
●	—	—	●	●	Type 3R enclosure
—	—	—	●	—	Type 12 enclosure
—	—	—	●	—	Type 4/4X enclosure
●	●	●	●	●	Generous wiring gutters that meet CSA and CEC wire-bending space requirements
●	●	●	●	●	Lugs suitable for copper or aluminum at 60˚ or 75˚C
●	●	●	●	●	CU/AL wire lugs that meet CSA C22.2 No.65-03 requirements
—	—	—	●	●	"Suitable for field-convertible — compression connectors"
—	●	●⑤	●	●	All plated copper current carrying parts (except lugs)
—	●	●	●	●	Spring reinforced Fuse Clips (except 30A general duty)
—	●	—	●	●	Clear line terminal shield available
—	●	●	●	●	Replacement parts
—	—	—	●	—	Field addable 200% neutral
—	●	●②	●①②	●①②	Provisions for CSA T, R and H Fuses
—	●		●	●①	Provisions for CSA Class J and L Fuses
—	—	—	●	●	Metal nameplate
—	●	—	●	●	Aux. switch kits
—	—		●③	—	Type 4X with Stainless steel interior parts
—	—	●⑥	●	—	Rolled flange enclosure design (30-200A)

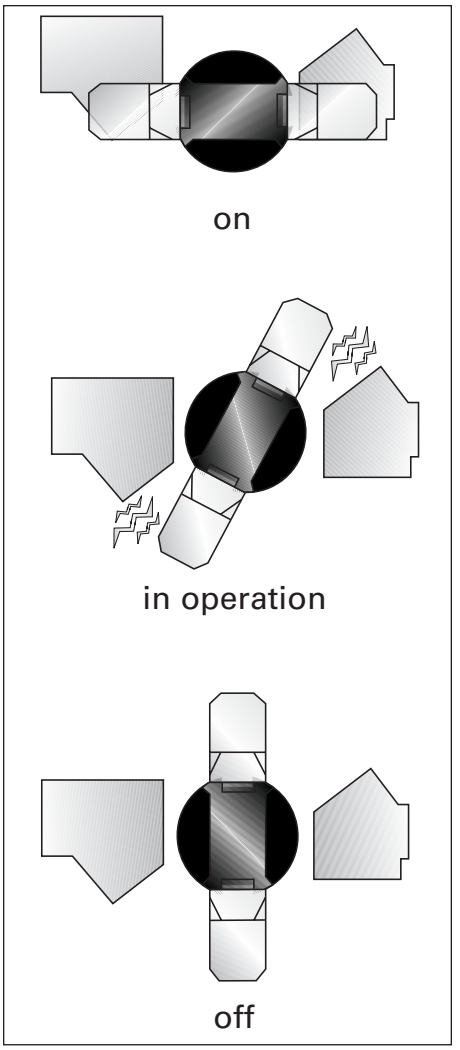

Double Break Switching Action

Like the time-proven Vacu-Break Design, the Siemens VBII double break switching action breaks the arc in two places in 30-200A ratings. This reduces heat generation and increases switching speed by doubling the breaking distance. The result is enhanced performance and increased longevity. We also provide the most visible blade design available today. Unlike conventional knife blade switches, the blades are self-aligning to ensure positive contact. In addition, they have no wear and friction point since the "electrical hinge" has been eliminated. The result is a very fast, positive and reliable switching action for even the most severe applications.

① Only 800 & 1200A HD switches will accept Class L fuses.
② 100-600A GD & DT and 100-1200A HD switches will accept Class T fuses.
③ 30-200A Type VBII in stainless steel enclosures..
④ GD switches are available in all ratings except 30 and 60A.
⑤ 200A general duty switches have aluminum neutral assemblies.
⑥ 100-200A.

Enclosure Types

A **Type 1** enclosures are intended for indoor use primarily to provide protection against contact with the enclosed equipment in locations where unusual service conditions do not exist.

B **Type 3R** enclosures are intended for outdoor use primarily to provide a degree of protection against falling rain and sleet and must remain undamaged by the formation of ice on the enclosure. They are not intended to provide protection against conditions such as dust, internal condensation, or internal icing.

C **Type 4, 4X** enclosures are intended for indoor or outdoor use primarily to provide a degree of protection against windblown dust, rain, splashing water and hose-directed water. They are not intended to provide protection against conditions such as internal condensation or internal icing. Also meets 4X definition by providing a high degree of protection against corrosion. Siemens 30-200A stainless steel 4X switches are supplied stainless interior parts and hardware as standard.

D **Type 4** enclosures are intended for indoor or outdoor use primarily to provide a degree of protection against windblown dust, rain, splashing water and hose-directed water. They are not intended to provide protection against conditions such as internal condensation or internal icing.

E **Type 12**① enclosures are intended for indoor use primarily to provide a degree of protection against dust, falling dirt and dripping water. They are not intended to provide protection against conditions such as internal condensation.


A


B


C D


E

Load Break Ratings

All Siemens safety switches are load break rated. The load break rating is assigned by UL/CSA after the switching unit has successfully performed the following tests:

Switch Ampere Rating	Number of ON/OFF Operations per Minute	Number of Operations		
		With Current	Without Current	Total
30–100	6	6000	4000	10000
200	5	6000	2000	8000
400	4	1000	5000	6000
600	3	1000	4000	5000
800	2	500	3000	3500
1200	1	500	2000	2500

Horsepower Ratings

ID and VBII safety switches, where appropriate, are horsepower rated. Ratings are approved by CSA after the switching unit has undergone testing to determine its acceptability which includes repeated interruption of the locked rotor current of the motor for which it is to be rated as follows:

Max HP Rating	Number of ON/OFF Operations per minute	Number of Cycles of Operation
100	6	50
500	1	10

① VBII Type 12 switches are also rated 3R & 3S for outdoor use. Type 3R is defined in B above. 3S rated enclosures provide a degree of protection against windblown dust and allow operation when the enclosure is ice laden.

Light Duty Enclosed Switches

Plug Fuse and 60A Special Application Type

Selection

Features

- CSA Certified under file #24563
- Compact size
- Horsepower rated
- Indoor and outdoor enclosures
- Quick make-quick break mechanism
- Visible "ON"-"OFF" indications
- Padlock-off handle feature
- Door padlock provision
- All fusible switches suitable for use as service entrance equipement
- Bondable neutral (where indicated)
- Lugs suitable for copper or aluminum wire
- Switches accept plug fuses only - fuses not included
- Hubs③ — see page 3-26
- Ground Bar Kit: **GSGK60**③
- Knockout diagrams — see page 3-31 and 3-32



Dimensions - in. (mm)

Enclosure Type	Height	Width	Depth
1	8¼ (210)	5½ (140)	3 (76)
3R	8¼ (210)	5⅜ (137)	3⅛ (79)

Wire Range Table

Switch Type	Wire Range
120/240 Volt Fusible 30 Amp	#14 AWG - #8 AWG Al/Cu④
120/240 Volt Non-Fusible 60 Amp	#14 AWG - #3 AWG Al/Cu

Ampere Rating	Indoor — Type 1		Outdoor — Type 3R		Horsepower Ratings①	
					1-Phase, 2-Wire	
	Catalogue Number	Ship. Wt. (lbs.)	Catalogue Number	Ship. Wt. (lbs.) Pkg. of 10	Standard	Maximum
120/240 Volt Fusible						
1-Pole and Solid Neutral②					**120 Volt — 1-Phase, 2-Wire**	
30	**LFC111N**	3.6	—	—	1/2	2
2-Pole and Solid Neutral②					**120/240 Volt — 2-Phase, 3-Wire**	
30	**LFC211N**	3.5	**LFC211NR**	35	1/2	2
240 Volt Non-Fused						
2-Pole Special Application Switch					**240 Volt — 1-Phase, 2-Wire**	
60	—	—	**LNFC222R**③	35	3	10

①Dual horsepower ratings:
Std. — applies when non-time delay plug fuses are installed.
Max — applies when time-delay plug fuses are installed.

②Has service entrance label. CSA certified as "Enclosed Switches" (suitable for use as service equipment where indicated).

③Bottom cable entry and exit only. No hub provision supplied. **GSGK60** is included and factory installed.

④Line lugs are CSA approved for #14 to #6 Cu/Al cable.

Catalogue Numbering System

Type ID Switches Catalogue Numbering System

	ID	3	6	4	NF

Enclosure Type

Omit = Type 1, Indoor

Switch Type

ID = ID switch

Number of Poles

2 = 2
3 = 3
4 = 3 + neutral

Voltage

2 = 240V
6 = 600V

Fused or Non-Fused

Omit = Fusible
NF = Non-Fused

Amperes

1 = 30A
2 = 60A
3 = 100A
4 = 200A
5 = 400A
6 = 600A

ID Switches

Features

- CSA Certified under file #13076
- General Duty switch designed for the canadian contruction market
- Compact size with integrated handle
- Horsepower rated
- Type 1 enclosure for indoor applications
- Quick make-quick break mechanism
- Visible "ON"-"OFF" indications
- Padlock-off handle feature
- Door padlock provision
- ID switches will accept the following CSA class fuses: Class H, Class K, Class R (Adapter kits are required) and Class T (Adapter kits are required)
- Fuse Puller included for 30-200A
- Manufactured in Canada for quick delivery and easy access to replacement parts
- Dimensions and knockout diagram — see page 3-14
- ***NEW!*** 240V, 2P & 3P, 30A-200A Service Entrance ID Switches



System	Ampere Rating	Indoor — Type 1 Catalogue Number	Unit Weight - lbs (kg)	Horsepower Ratings 240V AC 1-Phase	240V AC 3-Phase	480V AC 1-Phase	480V AC 3-Phase	600V AC 1-Phase	600V AC 3-Phase	250 Volt DC	Skid Qty.
240V Fusible											
2-Pole, 2-Fuse and Solid Neutral①											**240 Volt AC.**
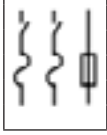	30	**ID221**	13 (5.90)	—	—	—	—	—	—	—	55
	60	**ID222**	13 (5.90)	—	—	—	—	—	—	—	55
	100	**ID223**	18 (8.17)	—	—	—	—	—	—	—	30
	200	**ID224**	32 (14.52)	—	—	—	—	—	—	—	20
	400	**ID225**	76 (34.47)	—	125	—	—	—	—	—	6
	600	**ID226**	88 (39.92)	—	200	—	—	—	—	—	6
3-Pole, 3-Fuse											**240 Volt AC.**
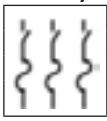	30	**ID321**	12.61 (5.72)	3	7.5	—	—	—	—	—	55
	60	**ID322**	12.61 (5.72)	10	15	—	—	—	—	—	55
	100	**ID323**	17.22 (7.81)	15	30	—	—	—	—	—	30
	200	**ID324**	31.52 (14.3)	15	60	—	—	—	—	—	20
3-Pole, 3-Fuse and Solid Neutral①											**240 Volt AC.**
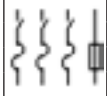	30	**ID421**	13 (5.90)	—	—	—	—	—	—	—	55
	60	**ID422**	13 (5.90)	—	—	—	—	—	—	—	55
	100	**ID423**	18 (8.17)	—	—	—	—	—	—	—	30
	200	**ID424**	32 (14.52)	—	—	—	—	—	—	—	20
	400	**ID425**	89 (40.36)	—	125	—	—	—	—	—	6
	600	**ID426**	102 (46.27)	—	200	—	—	—	—	—	6
600V Fusible											
3-Pole, 3-Fuse											**240 Volt AC / 480 Volt AC / 600 Volt AC.**
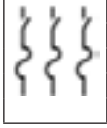	30	**ID361**	12.61 (5.72)	3	7.5	—	15	10	20	—	55
	60	**ID362**	12.61 (5.72)	10	15	—	30	25	50	—	55
	100	**ID363**	17.22 (7.81)	15	30	—	60	40	75	—	30
	200	**ID364**	31.52 (14.3)	15	60	—	125	50	150	—	20
	400	**ID365**	88 (39.62)	—	125	—	250	—	350	—	6
	600	**ID366**	101 (45.81)	—	200	—	400	—	600	—	6
600V Non-Fusible											
3-Pole, 3-Fuse											**240 Volt AC / 480 Volt AC / 600 Volt AC.**
	30	**ID361NF**	12.18 (5.52)	3	7.5	—	15	10	20	—	55
	60	**ID362NF**	12.18 (5.52)	10	15	—	30	25	50	—	55
	100	**ID363NF**	16.58 (7.52)	15	30	—	60	40	75	—	30
	200	**ID364NF**	29.64 (13.44)	15	60	—	125	50	150	—	20
	400	**ID365NF**	87 (39.46)	—	125	—	250	—	350	—	6
	600	**ID366NF**	97 (44)	—	200	—	400	—	600	—	6

① Suitable for use as service equipment when neutral is bonded to the enclosure.

ID Switches

Accessories

Neutral Kits

Standard Neutral Kits

Switch Ampere Rating	Neutral Kit Catalogue Number
30	**N60**
60	**N60**
100	**N100**
200	**N200**
400	**N400ID**
600	**N600ID**

Fuse Puller Kits

Fuse Puller are field replaceable in ID switches 30-200A (one kit required per 3-pole switch)

Switch Ampere Rating	Fuse Puller Kit Catalogue Number
30	**FP2**
60	**FP2**
100	**FP3**
200	**FP4**

Auxiliary Contacts

Switch Ampere Rating	Aux. Contact Catalogue Number
With 1 NO & 1 NC	
30-100	**MSSAK116**
200	**MSSAK126**
With 2 NO & 2 NC	
30-100	**MSSAK216**
200	**MSSAK226**

Replacement Line Shield

Line shield can be field replaced/added for ID.

Switch Ampere Rating	Line shield kit
30	**LSK1** (3 per kit)
60	**LSK1** (3 per kit)
100	**LSK3** (3 per kit)
200	**LSK3** (3 per kit)

Class R Fuse Adaptor Kits

30-600A ID switches accept Class R fuses using the appropriate adaptor kit (One kit per pole required)

Switch Ampere Rating	R Fuse Adaptor Kit Catalogue Number	
	240V	600V
30	**RFAK21**	**RFAK61**
60	**RFAK22**	**RFAK62**
100	**RFAK3**	
200	**RFAK4**	
400	**RFAK6**	
600	**RFAK6**	

Class T Fuse Adaptor Kits

100-600A ID switches accept Class T fuses using the appropriate adaptor kit (One kit per pole required)

Switch Ampere Rating	T Fuse Adaptor Kit Catalogue Number	
	240V	600V
100	**TFAK23**	**TFAK63**
200	**TFAK24**	**TFAK64**
400	**TFAK52**	**TFAK55**
600	**TFAK62**	**TFAK65**

Wire Ranges (Line, Load and Standard Neutral)

Switch Ampere Rating	Number of lugs per pole	Line, Load Lug Wire Range	Neutral Lug Wire Range
30	1	#14 - 2 AWG (Al/Cu)	#14 - 4 AWG (Al/Cu)
60	1	#14 - 2 AWG (Al/Cu)	#14 - 4 AWG (Al/Cu)
100	1	Line: # 6 - 120 AWG (Al/Cu) Load: #14 - 1/0 AWG (Al/Cu)	#14 - 2/0 AWG (Al/Cu)
200	1	#6 - 250 MCM (Al/Cu)	#6 - 300 MCM (Al/Cu)
400	1	(2) 250-1/0 or (1) 750-1/0 (Al/Cu)	(2) 250-1/0 or (1) 750-1/0 (Al/Cu)
600	2	(2) 250-1/0 or (1) 750-1/0 (Al/Cu)	(2) 250-1/0 or (1) 750-1/0 (Al/Cu)

Contact Ratings (Continuous duty 10 Amps)					
Volts (AC)	Inrush Amps	Break Amps	Volts (DC)	Inrush Amps	Break Amps
24-120	60	6	24-150	11	11
240	30	3	250	55	55
480	15	15	300	20	20
600	12	12	600	20	20

Replacement Parts

Catalogue Number	Description
CCSS1	Cover catch (20 per kit)

Switch Ampere Rating	Catalogue Number①	Description
400A	**CLOBK5**	Load Base (1 per kit)
600A	**CLOBK6**	Load Base (1 per kit)
400A	**CLIBK5**	Line Base (1 per kit)
600A	**CLIBK6**	Line Base (1 per kit)

① These kits are for replacement purpose only.



Replacement cover catch can be ordered using #CCSS1, which includes 20 cover catch per kit. (one kit required per 3-pole switch)

ID Switches

Dimensions

Catalogue Number	Dimensions - inches (mm)			Knock-out Diagram	Shipping weight - lbs (kg)
	Height	Width Including Handle	Depth Including Handle		
ID221	15 3/8 (391)	9 3/16 (233)	7 1/4 (184)	S1	12.78 (5.81)
ID222	15 3/8 (391)	9 3/16 (233)	7 1/4 (184)	S1	12.78 (5.81)
ID223	20 3/8 (518)	10 11/16 (271)	7 1/4 (184)	S2	17.45 (7.93)
ID224	30 7/8 (784)	13 3/16 (335)	8 1/4 (210)	S3	31.95 (14.52)
ID225	40 (1016)	18 1/2 (470)	12 1/16 (306)	No KO	76 (34.47)
ID226	48 (1219)	18 1/2 (470)	12 1/16 (306)	No KO	88 (39.92)
ID321	15 3/8 (391)	9 3/16 (233)	7 1/4 (184)	S1	12.61 (5.72)
ID322	15 3/8 (391)	9 3/16 (233)	7 1/4 (184)	S1	12.61 (5.72)
ID323	20 3/8 (518)	10 11/16 (271)	7 1/4 (184)	S2	17.22 (7.81)
ID324	30 7/8 (784)	13 3/16 (335)	8 1/4 (210)	S3	31.52 (14.3)
ID361	15 3/8 (391)	9 3/16 (233)	7 1/4 (184)	S1	12.61 (5.72)
ID361NF	15 3/8 (391)	9 3/16 (233)	7 1/4 (184)	S1	12.18 (5.52)
ID362	15 3/8 (391)	9 3/16 (233)	7 1/4 (184)	S1	12.61 (5.72)
ID362NF	15 3/8 (391)	9 3/16 (233)	7 1/4 (184)	S1	12.18 (5.52)
ID363	20 3/8 (518)	10 11/16 (271)	7 1/4 (184)	S2	17.22 (7.81)
ID363NF	20 3/8 (518)	10 11/16 (271)	7 1/4 (184)	S2	16.58 (7.52)
ID364	30 7/8 (784)	13 3/16 (335)	8 1/4 (210)	S3	31.52 (14.3)
ID364NF	30 7/8 (784)	13 3/16 (335)	8 1/4 (210)	S3	29.64 (13.44)
ID365	40 (1016)	21 1/2 (546)	12 1/16 (306)	No KO	88 (39.62)
ID365NF	40 (1016)	21 1/2 (546)	12 1/16 (306)	No KO	87 (38.46)
ID366	48 (1219)	21 1/2 (546)	12 1/16 (306)	No KO	101 (45.81)
ID366NF	48 (1219)	21 1/2 (546)	12 1/16 (306)	No KO	97 (44)
ID421	15 3/8 (391)	9 3/16 (233)	7 1/4 (184)	S1	12.78 (5.81)
ID422	15 3/8 (391)	9 3/16 (233)	7 1/4 (184)	S1	12.78 (5.81)
ID423	20 3/8 (518)	10 11/16 (271)	7 1/4 (184)	S2	17.45 (7.93)
ID424	30 7/8 (784)	13 3/16 (335)	8 1/4 (210)	S3	31.95 (14.52)
ID425	40 (1016)	21 1/2 (546)	12 1/16 (306)	No KO	89 (40.36)
ID426	48 (1219)	21 1/2 (546)	12 1/16 (306)	No KO	102 (46.27)

K.O. Data For EEMAC 1 Enclosure

100 Amp Enclosure Type ID

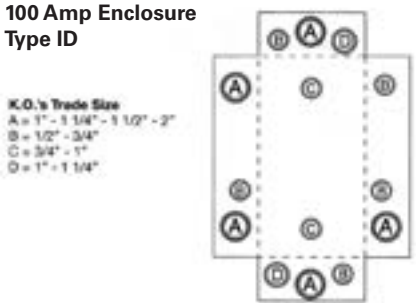

200 Amp Enclosure Type ID

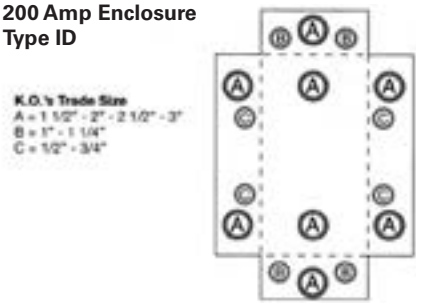

30-60 Amp Enclosure Type ID

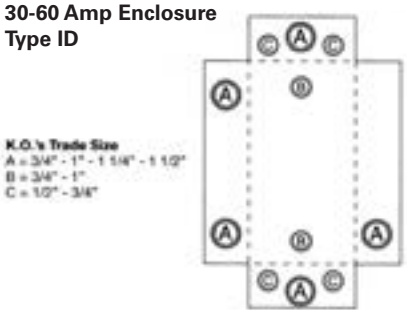

Catalogue Numbering System

Type VBII Safety Switch Catalogue Numbering System

Product Overview

H	F	C	3	6	4	N	J	W	A

Switch Type

L = General Duty 10k AIC Max. (Plug Fused & 60A Max Non-Fused)
G = Gen. Duty
H = Heavy Duty
DT = Double Throw

Fused or Non-Fused

F = Fused
NF = Non-Fused

C = CSA certified only

Number of Poles

1 = 1
2 = 2
3 = 3
4 = 4
6 = 6

Voltage

1 = 120V or 120/240V
2 = 240V
6 = 600V

Series Type

A = 400A, 600A
Omit = 30A - 200A, 800A - 1200A

Special Applications With:

CH = Crouse-Hinds Receptacle
W = Viewing Window

Enclosure Type

Omit = Type 1, Indoor
R = Type 3R, Outdoor
S = Type 4/4X, Stainless Steel
J = Type 12, Industrial

With or Without Neutral

Omit = Less Neutral
N = With Neutral - rated for service entrance

Amperes

1 = 30A
2 = 60A
3 = 100A
4 = 200A
5 = 400A
6 = 600A
7 = 800A
8 = 1200A

Type VBII Accessories Catalogue Numbering System

H	R	6	4	A

Switch Type

H = Heavy Duty
G = General Duty③

Accessory Type

A1 = Auxiliary Switch 1/NO and 1/NC
A2 = Auxiliary Switch 2/NO and 2/NC
A3 = Auxiliary Switch Low Current
CL = Compression Lug Barrier / Mounting Kit
CU = Copper Lug③
G = Ground Lug Kit
G2 = Insulated Ground Lug Kit
LC = Copper Lug Kit③
NC = Neutral
NC2 = 200% Neutral③
NCM = Field Replacement Lug Kit②
P = Fuse Puller Kit
R = Class R - Fuse Clip Kit
T = Class T - Fuse Kit

Series Type

A = 400A, 600A
Omit = 30A - 200A, 800A - 1200A

Amperes

1 = 30A
2 = 60A
12 = 30/60A
3 = 100A
23 = 60/100A
123 = 30/60/100A
1234 = 30/60/100/200A
4 = 200A
5 = 400A
6 = 600A
56 = 400/600A
5678 = 400/600/800/1200A
78 = 800/1200A

Maximum Voltage

2 = 240V Max①
6 = 600V Max

① For 400A, 600A use 600V max accessories except for T fuse kit.
② Only offered for 400A, 600A.
③ For 30A-200A, 800A-1200A.

General Duty Safety Switches

Features VBII (30-200A)



1. Cover interlock
2. Tangential knockouts through 200A for easy conduit lineup
3. Quick-make, quick-break operating mechanism that ensures positive operation
4. Provisions for T, R, J, H, and K class fuses (T & J 100-200A)
5. Generous wiring gutters that meet or exceed CEC wire-bending space requirements
6. Visible blade, double-break switch action
7. Positive 2 or 3 point mounting
8. Highly visible red handle grip
9. Informative door labeling which includes replacement parts list
10. Handle and cover padlocking provisions
11. Side-hinged door that opens 180 degrees for easier wiring
12. A unique enclosure design that adds rigidity and strength. Its rolled edge prevents cuts and scrapes to conductors and to installer's hands

General Duty Safety Switches

Selection



System	Ampere Rating	Indoor - Type 1		Outdoor - Type 3R		Horsepower Ratings①						
						240V AC						250 Volt DC
		Catalogue Number	Ship. Wt. (lbs.) Std. Pkg.	Catalogue Number	Ship. Wt. (lbs.) Std. Pkg.	1-Phase, 2-Wire		2-Phase, 4-Wire		3-Phase, 3-Wire		
						Std.	Max.	Std.	Max.	Std.	Max.	Std.

240 Volt Fusible

2-Pole, 2-Fuse, and Solid Neutral②③ — 240 Volt AC/250 Volt DC

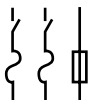	100	GFC223N	23	—	—	$7^{1/2}$	15	—	—	15	30	20
	200	GFC224N	47	—	—	15	—	—	—	25	60	40
	400	GFC225NA	91	—	—	—	—	—	—	50	125	50
	600	GFC226NA	92	—	—	—	—	—	—	75	200	50

3-Pole, 3-Fuse, and Solid Neutral② — 240 Volt AC/250 Volt DC

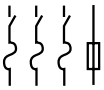	100	GFC323N	25	—	—	$7^{1/2}$	15	—	—	15	30	20
	200	GFC324N	49	—	—	15	—	—	—	25	60	40
	400	GFC325NA	94.6	—	15	—	—	—	—	50	125	50
	600	GFC326NA	95.6	—	15	—	—	—	—	75	200	—

System	Amp. Rating	Indoor - Type 1		Outdoor - Type 3R		Horsepower Ratings①															
						240V AC				480V AC				600V AC				250V DC		600V DC	
		Cat. No.	Ship. Wt. (lbs.) Std. Pkg.	Cat. No.	Ship. Wt. (lbs.) Std. Pkg.	1-Phase		3-Phase		1-Phase		3-Phase		1-Phase		3-Phase					
						Std.	Max.	Std.	Max.	Std.	Max.	Std.	Max.	Std.	Max.	Std.	Max.	Std.	Max.	Std.	Max.

600 Volt Fusible

3-Pole, 3-Fuse

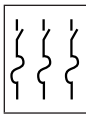	200	GFC364	44	—	—	15	—	25	60	25	50	50	125	30	50	60	150	40	—	50	—

600 Volt Non-Fusible

3-Pole, 3-Fuse

	200	GNFC364	43	—	—	—	15	—	60	—	50	—	125	—	50	—	150	—	40	—	50

① Dual horsepower ratings: Std.- applies when non-time delay fuses are installed. Max.- applies when time delay fuses are installed.
② Service entrance labeled.
③ Suitable for use on 3-phase motor loads.

Heavy Duty Safety Switches

Features

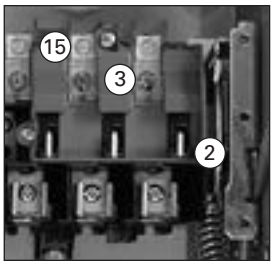

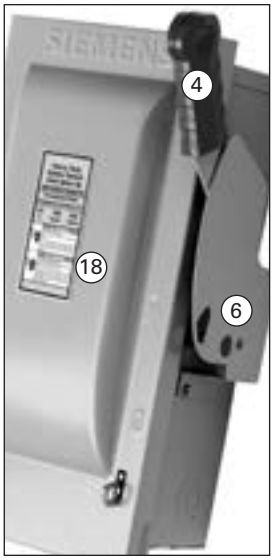

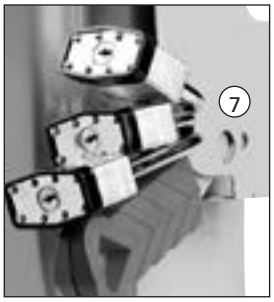

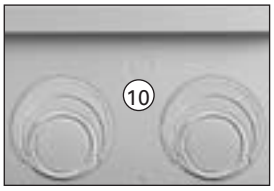



1. Quick-make, quick-break operating mechanism that ensures positive operation.
2. Visible blade, double-break switching action.
3. Arc chutes dissipate heat and prolong switch life.
4. Highly visible red handle grip. Designed for hook stick operation.
5. Defeatable dual cover interlock.
6. Center punch provided for field drilling to allow ON padlocking.
7. Handle can be padlocked in the OFF position with up to (3) padlocks with 5/16" hasps.
8. Generous top, bottom and side gutters that meet or exceed CEC wire-bending space requirements.
9. Informative door labeling which includes replacement parts list.
10. Tangential knockouts through 600A for easy conduit lineup.
11. Side-hinged door that opens past 180 degrees for easier wiring.
12. Unique enclosure design increases rigidity and prevents cuts and scrapes to conductors and installer's hands.
13. Spring reinforced fuse clips that assure reliable contact for cool operation.
14. Door latch securely holds door closed and allows cover padlocking.
15. Front removable mechanical lugs that are suitable for CU/Al 60 or 75° C conductors.
16. Lugs are field convertible to copper body and to a wide variety of compression connectors.
17. Hinged clear line terminal shield with probe holes for inspecting or testing line side terminals.
18. Embossed aluminum nameplate on Heavy Duty Switches.
19. Drawn cover for increased rigidity and resistance to abuse.
20. Top key hole and bottom mounting holes provide easy 2 or 3 point mounting.

Heavy Duty Safety Switches

Selection



System	Ampere Rating	Indoor — Type 1		Outdoor — Type 3R			Horsepower Ratings②				
							240V AC				250 Volt DC
							1-Phase, 2-Wire		3-Phase, 3-Wire		
		Catalogue Number	Ship. Wt. (lbs.) Std. Pkg.	Catalogue Number	Ship. Wt. (lbs.) Std. Pkg.	Hub Type④	Std.	Max.	Std.	Max.	

240 Volt Fusible①

2-Pole, 2-Fuse and Solid Neutral (Also used for 2-Pole, 2-Wire Applications) 240 Volt AC/250 Volt DC

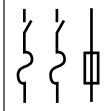

30	HFC221N	13	HFC221NR	14	ECHS	1 1/2	3	3	7 1/2	5
60	HFC222N	18	HFC222NR	19		3	10	7 1/2	15	10
100	HFC223N	23	HFC223NR	24		7 1/2	15	15	30	20
200	HFC224N	47	HFC224NR	48		15	—	25	60	40
400	HFC225NA	91.1	HFC225NRA	91.1	ECHV	15	—	50	125	50
600	HFC226NA	95.6	HFC226NRA	95.6		15	—	75	200	50
800	HFC227N	365	HFC227NR	365		—	—	100	250	50
1200	HFC228N■	385	HFC228NR■	385		—	—	100	250	50

3-Pole, 3-Fuse and Solid Neutral (Also used for 3-Pole, 3-Wire Applications) 240 Volt AC/250 Volt DC

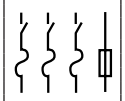

30	HFC321N	13	HFC321NR	14	ECHS	1 1/2	3	3	7½	5
60	HFC322N	18	HFC322NR	19		3	10	7½	15	10
100	HFC323N	25	HFC323NR	26		7 1/2	15	15	30	20
200	HFC324N	49	HFC324NR	50		15	—	25	60	40
400	HFC325NA	94.6	HFC325NRA	94.6	ECHV	15	—	50	125	50
600	HFC326NA	99.6	HFC326NRA	99.6		15	—	75	200	50
800	HFC327N	375	HFC327NR	375		—	—	100	250	50
1200	HFC328N	395	HFC328NR	388		—	—	100	250	50

240 Volt Fusible

2-Pole, 2-Fuse 240 Volt AC/250 Volt DC



	Type 4/4X Stainless		Type 12 Industrial⑥		Hub Type③					
100	HFC223S	24	HFC223J	24	SSH	7 1/2	15	15	30	20
200	HFC224S	48	HFC224J	48		15	—	25	60	40

3-Pole, 3-Fuse (Also used for 2-Pole, 2-Wire Applications in 400–800A Ratings) 240 Volt AC/250 Volt DC



30	HFC321S	14	HFC321J	14	SSH	1 1/2	3	3	7 1/2	5
60	HFC322S	20	HFC322J	20		3	10	7 1/2	15	10
100	HFC323S	25	HFC323J	25		7 1/2	15	15	30	20
200	HFC324S	49	HFC324J	49		15	—	25	60	40
400	HF325SA⑦	93	HF325JA⑦	93	*	15	—	50	125	50
600	HF326SA⑦	98	HF326JA⑦	98		15	—	75	200	50
800	HFC327S■	370	HFC327J■	365		—	—	100	250	50

■ Built to order.

① Suitable for use as service equipment when neutral is bonded to the enclosure.

②Dual horsepower ratings: Std.- applies when non-time delay fuses are installed. Max.- applies when time-delay fuses are installed.

③ Hub type SSH are suitable for type 4/4X and type 12 applications.

④ Hub catalogue numbers available p. 3-26

⑤ 304 grade stainless steel.

⑥ Also rated for Type 3S/3R application. Factory provided drain plug must be removed from the bottom of the enclosure for type 3S/3R application.

⑦ For equipment suitable as service entry, order HFC325NSA, HFC326NSA, HFC325NJA or HFC326NJA based on the amperage and enclosure type required.

* Consult Siemens representative.

Heavy Duty Safety Switches

Selection



System	Ampere Rating	Indoor — Type 1		Outdoor — Type 3R			Horsepower Ratings④									
							480V AC				600V AC				250 Volt DC	600 Volt DC
		Catalogue Number	Ship. Wt. (lbs.) Std. Pkg.	Catalogue Number	Ship. Wt. (lbs.) Std. Pkg.	Hub Type⑥	1-Phase, 2-Wire		3-Phase, 3-Wire		1-Phase, 2-Wire		3-Phase, 3-Wire			
							Std.	Max.	Std.	Max.	Std.	Max.	Std.	Max.		

600 Volt Fusible

2-Pole, 2-Fuse③ — 480 Volt AC/600 Volt AC/600 Volt DC



30	HFC261	13	HFC261R	14	ECHS	3	$7^{1/2}$	—	—	3	10	—	—	5	15
60	HFC262	18	HFC262R	19		10	20	—	—	10	25	—	—	10	30
100	HFC263	26	HFC263R	27		15	30	—	—	15	40	—	—	20	50

3-Pole, 3-Fuse — 480 Volt AC/600 Volt AC/250 Volt DC①



30	HFC361	13	HFC361R	14	ECHS	3	$7^{1/2}$	5	15	3	10	$7^{1/2}$	20	5	—
60	HFC362	18	HFC362R	19		5	20	15	30	10	25	15	50	10	30②
100	HFC363	24	HFC363R	25		5	20	25	60	15	40	30	75	20	50②
200	HFC364	48	HFC364R	49		25	50	50	125	30	50	60	150	40	50
400	HF365A①	93	HF365RA①	93	ECHV	—	—	100	250	—	—	125	350	50	—
600	HF366A①	98	HF366RA①	98		—	—	150	400	—	—	200	500	50	—
800	HFC367	365	HFC367R	365		—	—	200	500	—	—	250	500	50	—
1200	HFC368	383	HFC368R	385		—	—	200	500	—	—	250	500	50	—

3-Pole, 3-Fuse and Solid Neutral⑤ — 480 Volt AC/600 Volt AC/250 Volt DC①



30	HFC361N	13	HFC361NR	14	ECHS	3	$7^{1/2}$	5	15	3	10	$7^{1/2}$	20	5	—
60	HFC362N	18	HFC362NR	19		5	20	15	30	10	25	15	50	10	30②
100	HFC363N	25	HFC363NR	26		10	30	25	60	15	40	30	75	20	50②
200	HFC364N	49	HFC364NR	50		25	50	50	125	30	50	60	150	40	50
400	HFC365NA	94.6	HFC365NRA	94.6	ECHV	—	—	100	250	—	—	125	350	50	—
600	HFC366NA	99.6	HFC366NRA	99.6		—	—	150	400	—	—	200	500	50	—
800	HFC367N	375	HFC367NR	375		—	—	250	500	—	—	250	500	50	—
1200	HFC368N	395	HFC368NR	388		—	—	250	500	—	—	250	500	50	—

600 Volt Fusible⑦ (For 2-Pole Applications use outside poles of 3-Pole Switches)

2-Pole, 2-Fuse③ — 480 Volt AC/600 Volt AC/600 Volt DC



	Type 4/4X Stainless⑨		Type 12 Industrial⑦		Hub Type⑥⑩									
30	HFC261S	15	HFC261J■	15	SSH	3	$7^{1/2}$	—	—	3	10	—	—	5	15
60	HFC262S	20	HFC262J■	20		5	20	—	—	10	25	—	—	10	30
100	HFC263S■	27	HFC263J■	27		10	30	—	—	15	40	—	—	20	50

3-Pole, 3-Fuse — 480 Volt AC/600 Volt AC/250 Volt DC①



30	HFC361S	13	HFC361J	14	SSH	—	—	5	15	—	—	$7^{1/2}$	20	5	—
60	HFC362S	20	HFC362J	20		—	—	15	30	—	—	15	50	10	30②
100	HFC363S	25	HFC363J	25		—	—	25	60	—	—	30	75	20	50②
200	HFC364S	49	HFC364J	49		—	—	50	125	—	—	60	150	40	50
400	HF365SA①⑪	93	HF365JA⑪	93	*	—	—	100	250	—	—	125	350	50	—
600	HF366SA①⑪	98	HF366JA⑪	98		—	—	150	400	—	—	200	500	50	—
800	HFC367S	370	HFC367J■	365		—	—	200	500	—	—	250	500	50	—
1200	HFC368S■	388	HFC368J■	388		—	—	250	500	—	—	250	500	50	—

Built to order.

① 60-600A 3-Pole switches are also rated 600V DC.
② 600V DC & 600V DC horsepower rating shown requires (2) poles to be connected in series.
③ Use 3-Pole switch for 200A applications.
④ Dual horsepower ratings: Std.- applies when non-time delay fuses are installed. Max.- applies when time-delay fuses are installed.
⑤ Suitable for use as service equipment when neutral is bonded to the enclosure.
⑥ Hub catalogue number available p. 3-26
⑦ When a neutral is required use neutral kit displayed on p. 3-24
⑧ Also rated for Type 3S/3R application. Factory provided drain plug must be removed from the bottom of the enclosure for type 3S/3R application.
⑨ 304 grade stainless steel.
⑩ Hub type SSH are suitable for type 4/4X and type 12 applications.
⑪ For equipment suitable as service entry, order HFC365NSA, HFC366NSA, HFC365NJA or HFC366NJA based on the amperage and enclosure type required.

* Consult Siemens representative

Heavy Duty Safety Switches

Selection



System	Ampere Rating	Indoor — Type 1		Outdoor — Type 3R		Hub④ Type	Horsepower Ratings							
							240 Volt		480 Volt		600 Volt		250V DC	600V DC
		Catalogue Number	Ship. Wt. (lbs.)	Catalogue Number	Ship. Wt. (lbs.)		1-Phase	3-Phase	1-Phase	3-Phase	1-Phase	3-Phase		

600 Volt Non-Fusible

2-Pole③

480 Volt AC / 600 Volt AC / 600 Volt DC

	30	HNFC261	11	HNFC261R	12	ECHS	—	—	$7^{1/2}$	—	10	—	5	15
	60	HNFC262	17	HNFC262R	18		—	—	20	—	25	—	10	30
	100	HNFC263	24	HNFC263R	25		—	—	30	—	40	—	20	50

3-Pole

480 Volt AC / 600 Volt AC / 250 Volt DC

	30	HNFC361	11	HNFC361R	12	ECHS	5	10	$7^{1/2}$	20	10	30	5	—
	60	HNFC362①	17	HNFC362R①	18		10	20	20	50	25	60	10	30⑥
	100	HNFC363①	23	HNFC363R①	24		15	40	30	75	40	100	20	50⑥
	200	HNFC364①	46	HNFC364R①	47		15	60	50	125	50	150	40	50
	400	HNF365A	75	HNF365RA	75	ECHV	15	125	50	250	50	350	50	—
	600	HNF366A	77	HNF366RA	77		15	200	50	400	50	500	50	—
	800	HNFC367	295	HNFC367R	295		15	250	50	500	50	500	50	—
	1200	HNFC368	305	HNFC368R	307		15	250	50	500	50	500	50	—

600 Volt Non-Fusible②

2-Pole③

480 Volt AC / 600 Volt AC / 600 Volt DC

		Type 4/4X Stainless⑦		Type 12 Industrial⑤		Hub Type④⑧								
	30	HNFC261S	13	HNFC261J	13	SSH	—	—	$7^{1/2}$	—	10	—	5	15
	60	HNFC262S	20	HNFC262J	20		—	—	20	—	25	—	10	30
	100	HNFC263S■	25	HNFC263J■	25		—	—	30	—	40	—	20	50

3-Pole

480 Volt AC / 600 Volt AC / 250 Volt DC

	30	HNFC361S	13	HNFC361J	13	SSH	5	10	$7^{1/2}$	20	10	30	5	—
	60	HNFC362S①	19	HNFC362J①	19		10	20	20	50	25	60	10	30⑥
	100	HNFC363S①	24	HNFC363J①	24		15	40	30	75	40	100	20	50⑥
	200	HNFC364S①	47	HNFC364J①	47		15	60	50	125	50	150	40	50
	400	HNF365SA	75	HNF365JA	75	*	15	125	50	250	50	350	50	—
	600	HNF366SA	77	HNF366JA	77		15	200	50	400	50	500	50	—
	800	HNFC367S	295	HNFC367J■	295		15	250	50	500	50	500	50	—
	1200	—	—	HNFC368J■	310		15	250	50	500	50	500	50	—

Built to order.
① Also rated 600V DC.
② When neutral is required, use neutral kit displayed on p. 3-24
③ Use 3-Pole switch for 200A application.
④ Hub catalogue numbers available p. 3-26
⑤ Also rated for Type 3S/3R application. Factory provided drain plug must be removed from the bottom of the enclosure for type 3S/3R application.
⑥ 600V DC horsepower rating shown requires (2) poles to be connected in series.
⑦ 304 grade stainless steel.
⑧ Hub type SSH are suitable for type 4/4X and type 12 applications.
*Consult Siemens representative.

Heavy Duty Safety Switches

Type 4/4X & 12 with Viewing Window

Description

30–600A, 3-pole 600V max. in fusible and non-fusible versions in Type 4/4X stainless steel and Type 12 enclosures.

All allow viewing of visible blade position. 30–200A also allow viewing of indicating type fuses.

Features

- Rugged installer-friendly enclosure design features a gasket flange with continuously welded seams
- Tool-free cover latches
- Two, three and four point mounting
- Metal handle with large insulating grip features a positive stop in both ON and OFF position
- Ground lugs provided as standard
- Type 12 enclosures are fabricated from galvanized steel and are also rated for 3R/3S outdoor applications
- Type 4X stainless steel switches are 304 grade stainless steel and 30-200A are provided with stainless steel interior parts
- The widest range of accessories available including 200% neutrals, gold plated PLC auxiliary contacts and isolated ground kits
- Now available with limited time offering - 316 Safety Switches



System	Ampere Rating	Catalogue Number	Hub Type	Ship. Wt. (lbs.)	Maximum Horsepower Ratings② 240V AC 1-Phase, 2-Wire	240V AC 3-Phase, 3-Wire	480V AC 3-Phase, 3-Wire	600V AC 3-Phase, 3-Wire	250V DC	600V DC
3-Pole, 3-Wire Fusible, Type 12③ (For 2-Pole Applications use outside poles of 3-Pole Switches)										**600 Volt AC / 250 Volt DC①**
	30	**HF361JW**	SSH	17	3	7 1/2	15	20	5	—
	60	**HF362JW**	SSH	22	10	15	30	50	10	30⑤
	100	**HFC363JW**	SSH	26	15	30	60	75	20	30⑤
	200	**HFC364JW**	SSH	53	—	60	125	150	40	50
	400	**HF365JWA④**	*	93	—	125	250	350	50	—
	600	**HF366JWA④**	*	98	—	200	400	500	50	—
3-Pole, 3-Wire Non-Fusible, Type 12③										**600 Volt AC / 250 Volt DC①**
	30	**HNF361JW**	SSH	14	3	10	20	30	5	—
	60	**HNF362JW**	SSH	21	10	20	50	60	10	30⑤
	100	**HNFC363JW**	SSH	25	15	40	75	100	20	50⑤
	200	**HNFC364JW**	SSH	51	15	60	125	150	40	50
	400	**HNF365JWA**	*	75	15	125	250	350	50	—
3-Pole, 3-Wire Fusible, Type 4X Stainless⑥ (For 2-Pole Applications use outside poles of 3-Pole Switches)										**600 Volt AC / 250 Volt DC①**
	30	**HF361SW**	SSH	17	3	7½	15	20	5	—
	60	**HF362SW**	SSH	23	10	15	30	50	10	30⑤
	100	**HFC363SW**	SSH	28	15	30	60	75	20	50⑤
	200	**HFC364SW**	SSH	55	—	60	125	150	40	50
	400	**HF365SWA④**	*	75	15	125	250	350	50	—
	600	**HF366SWA**	*	98	—	200	400	500	50	—
3-Pole, 3-Wire Non-Fusible, Type 4X Stainless⑥										**600 Volt AC / 250 Volt DC①**
	30	**HNF361SW**	SSH	15	3	10	20	30	5	—
	60	**HNF362SW**	SSH	23	10	20	50	60	10	30⑤
	100	**HNFC363SW**	SSH	27	15	40	75	100	20	50⑤
	200	**HNFC364SW**	SSH	54	15	60	125	150	40	50
	400	**HNF365SWA**	*	75	15	125	250	350	50	—

Ampere Rating	Catalogue Number	Ship. Wt. (lbs.)	Maximum Horsepower Ratings 240V AC Std.	240V AC Max.	480V AC Std.	480V AC Max.	600V AC Std.	600V AC Max.	250V DC	600V DC
3-Pole, 3-Wire Fusible and Non-Fusible, Type 4X 316 Stainless Steel										**600 Volt AC / 250 Volt DC**
30	**HF361SSW**	17	3	7½	5	15	7½	20	5	—
60	**HF362SSW**	21	7½	15	10	30	15	50	10	30
30	**HNF361SSW**	15	—	10	—	20	—	30	5	—
60	**HNF362SSW**	21	—	20	—	50	—	60	10	30

① 200A switches are also rated 600V DC.
② Maximum HP ratings listed apply only when time delay fuses are used.
③ Also rated for Type 3S/3R application. Factory provided drain plug must be removed from the bottom of the enclosure for type 3S/3R application.
④ For equipment suitable as service entry, order HFC365NJWA, HFC366NJWA or HFC365NSWA based on the amperage and enclosure type required.
⑤ 600V DC horsepower rating shown requires (2) poles to be connected in series.
⑥ 304 grade stainless steel.
* Consult Siemens representative.

Heavy Duty Safety Switches

Type VBII 4 & 6-Pole Heavy Duty Safety Switches

Selection

Application

4 & 6-pole Switches are commonly used as a disconnecting means for two-speed, two-winding motors. Fused switches provide both over current and short circuit protection. Non-fusible switches normally provide a local disconnection means for two-speed motors which are remote from their motor controller. 4-pole switches are also used in 3-phase, 4-wire circuits when a switching neutral is required.

Description

4 & 6-pole switches are available in 30-200A ratings and in both fusible and non-fusible versions. 4-pole switches are supplied with either Type 1 or Type12/3R enclosures.
6-pole switches are available with either Type 12/3R or Type 4X stainless steel enclosures.

Standards

- cUL & UL listed under file #E4776
- Meets UL98 for enclosed switches
- Meets NEMA Standard KS-1 for enclosed switches
- Meets CEC wire bending space requirements

Features

- Visible blade, double break switching action
- Highly visible ON/OFF indication
- Defeatable dual cover interlock
- Padlock option in OFF position
- All copper current carrying parts①
- Tangenital knockouts (Type 1, 4-pole switches)



HNF663S

4-Pole Type VBII Switches①

System	Ampere Rating	Indoor Type 1 Catalogue Number	Indoor Type 1 Ship. Wt. (lbs.)	Type 12/3R Industrial④ Catalogue Number	Type 12/3R Industrial④ Ship. Wt. (lbs.)	Hub Type⑤	Horsepower Ratings② 240V, 2Ø, 4W Std.	240V, 2Ø, 4W Max.	240V 3Ø Std.	240V 3Ø Max.	480V, 3Ø Std.	480V, 3Ø Max.	600V, 3Ø Std.	600V, 3Ø Max.	250V DC
Fusible 600 Volt AC, 250 Volt DC — 4-Pole, 4 Fuse③															
	30	HF461	36	HF461J	36	SSH	3	10	3	7½	5	15	7½	20	5
	60	HF462	40	HF462J	40		7½	20	7½	15	15	30	15	50	10
	100	HF463	43	HF463J	43		15	30	15	30	25	60	30	75	20
	200	HF464■	88	HF464J■	88		25	50	25	60	50	125	60	150	40
Non-fusible 600 Volt AC, 250 Volt DC — 4-Pole															
	30	HNF461	32	HNF461J	32	SSH	—	10	—	10	—	20	—	30	5
	60	HNF462	34	HNF462J	34		—	20	—	20	—	50	—	60	10
	100	HNF463■	36	HNF463J■	36		—	30	—	40	—	75	—	100	20
	200	HNF464■	78	HNF464J■	78		—	50	—	60	—	125	—	150	4

6-Pole Type VBII Switches①④

System	Ampere Rating	Type 12 Industrial Catalogue Number	Type 12 Industrial Ship. Wt. (lbs.)	Type 4X Stainless Steel Catalogue Number	Type 4X Stainless Steel Ship. Wt. (lbs.)	Hub Type⑤⑥	Horsepower Ratings③ 240V 3Ø Std.	240V 3Ø Max.	480V, 3Ø Std.	480V, 3Ø Max.	600V, 3Ø Std.	600V, 3Ø Max.	250V DC
Fusible 600 Volt AC, 250 Volt DC — 6-Pole, 6 Fuse③													
	30	HF661J	37	HF661S	37	SSH	3	7½	5	15	7½	20	5
	60	HF662J	41	HF662S	41		7½	15	15	30	15	50	10
	100	HF663J	44	HF663S	44		15	30	25	60	30	75	20
	200	HF664J	90	HF664S	90		25	60	50	125	60	150	40
Non-fusible 600 Volt AC, 250 Volt DC — 6-Pole													
	30	HNF661J	33	HNF661S	33	SSH	—	10	—	20	—	30	5
	60	HNF662J	35	HNF662S	35		—	20	—	50	—	60	10
	100	HNF663J	37	HNF663S	37		—	40	—	75	—	100	20
	200	HNF664J	80	HNF664S	80		—	60	—	125	—	150	40

Built to order.
① Lugs are aluminum alloy as standard. Optional copper body lugs are available.
② Dual horsepower ratings: Std. – applies when non-time-delay fuses are installed. Max. – applies when time delay fuses are installed.
③Fusible switches accept Class H Fuses as the standard. Class R & J fuses can also be installed and increase the rating from 10,000 to 200,000 AIC. For Class J, the load base is moved upward. For Class R fuses, rejection kits are required.
④Supplied with factory installed ground lugs.
⑤Hub catalogue number available p. 3-26
⑥Hub type SSH are suitable for type 4/4X and type 12 applications.

Heavy Duty Safety Switches

Special Application Switches / Interlocked Receptacle Switches

Application

Receptacle Safety Switches provide cord connection protection of heavy-duty portable equipment (welders, infrared ovens, batch feeders, portable conveyors, assembly line fixtures and tools, refrigerator trucks, etc.) under load or fault conditions.

Standards

All receptacle switches with a viewing window are CSA certified under file #24563 and UL listed under file #E4776.

Description①②

Type 12 and 4/4X Receptacle Safety Switches are available with 3-phase, 4-wire grounded type Crouse-Hinds Arkite™, pre-wired and mounted with interlock linkage to the switch mechanism. Insertion or removal of the plug is prevented by the interlock linkage while the switch is in the "ON" position. Receptacle prevents operation of switch if incorrect plug is inserted.



Crouse-Hinds Interlocked Receptacle Switches

Ampere Rating③	Type 12② Catalogue Number	Type 4/4X③ Catalogue Number	Hub Type④	Shipping Wt. (lbs.) Std. Pkg.	Accepts Crouse-Hinds Arktite① Plug Catalogue Number
600V Fusible, 3-Pole, 3-Wire with Viewing Window					
30	**HF361JCHW**	**HF361SCHW**	**SSH**	24	APJ3485 & NPJ3485
60	**HF362JCHW**	**HF362SCHW**		30	APJ6485 & NPJ6485
100	**HF363JCHW**	**HF363SCHW**		36	APJ10487 & NPJ10487
600V Non-Fusible, 3-Pole, 3-Wire with Viewing Window					
30	**HNF361JCHW**	**HNF361SCHW**	**SSH**	22	APJ3485 & NPJ3485
60	**HNF362JCHW**	**HNF362SCHW**		29	APJ6485 & NPJ6485
100	**HNF363JCHW**	**HNF363SCHW**		35	APJ10487 & NPJ10487

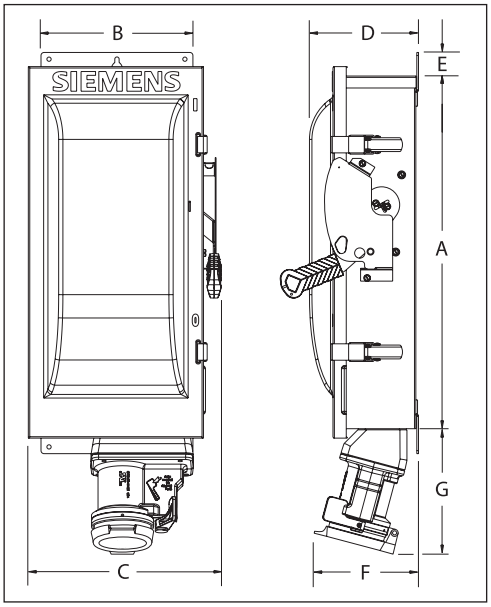

Receptacle switches dimensions

Ampere Rating	Dimensions - Inches (mm) A	B	C	D	E	F	G
Cr-H Type Fusible (240 & 600V)							
30	14.27 (363)	7.42 (188)	9.02 (229)	6.22 (158)	1.52 (39)	6.1(155)	6.0 (152)
60	16.27 (413)	9.17 (233)	11.47 291)	6.34 (161)	1.52 (39)	6.4 (163)	7.4 (188)
100	21.96 (558)	9.65 (245)	12.02 (305)	6.80 (172)	1.52 (39)	6.5 (165)	7.6 (193)
Cr-H Type Non-Fused (600V max.)							
30	14.27 (363)	7.42 (188)	9.02 (229)	6.22 (158)	1.52 (39)	6.1 (155)	6.0 (152)
60	16.27 (413)	9.17 (233)	11.47 (291)	6.34 (161)	1.52 (39)	6.4 (163)	7.4 (188)
100	21.96 (558)	9.65 (245)	12.02 (305)	6.80 (172)	1.52 (39)	6.5 (165)	7.6 (193)

① Arktite™ is a registered trademark of the Crouse-Hinds Company. Plugs are not sold or supplied by Siemens.
② Also rated Type 3R/3S.
③ Enclosure is constructed of Type 304 stainless steel.
④ Hub catalogue available p. 3-26

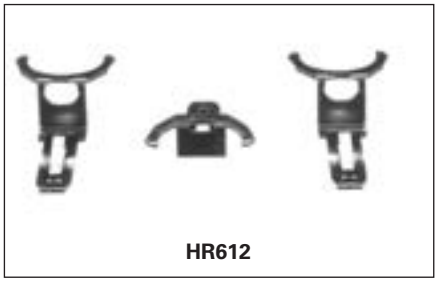

HR612

Class R Fuse Clip Kits

All Heavy Duty Switches are field convertible to accept Class R Fuse Clip Kits. The kits prevent the installation of Class H and K fuses
(one kit required per 3-pole switch).

Class R Fuse Clip Kits

Catalogue Number	Description
HR21	30A, 240V Kit (HD only)
HR612	30A, 600V Kit/ 60A, 240V Kit
HR62	60A, 600V Kit
HR63	100A Kit
HR64	200A Kit
HR65A	400A Kit③
HR656A	400A Kit③
HR66A	600A Kit③
HR656A	600A Kit③

Class J Fusing

All 30-600A, 600V and 100-600A,240V fusible Heavy Duty Switches are field convertible to accept Class J fuses by moving the load base to a pre-drilled J fuse position. 600A Heavy Duty switches require Class J fuse clip kit HJ66A to accept class J fuses.
(one kit required per 3-pole switch).

Class J Fuse Kits

Catalogue Number	Description
HJ66A	600A, 240V/600V Kit

Internal Shield Kits (for fusible switches)

Kits provide a clear plastic inner door to prevent accidental contact with live parts. Test probe holes are provided and fuses can be replaced without removal of kit. Note: All HD and 400A, 600A GD come with line-side shielding from the factory.

NEW Internal Shield Kits②

Switch Ampere Rating	Kit Catalogue Number	Coverage
30A HD②	**HSK61SSW**	Full
60A HD②	**HSK62SSW**	Full
100A GD	**HSK23B**	Line side
200A GD	**HSK24B**	Line side
100A HD②	**HSK63SSW**	Full
200A HD②	**HSK64SSW**	Full

▲ Built to order. Allow 6–8 weeks for delivery.

① One kit per pole required.



HT63

Class T Fuse Adapter Kits

All 100-200Amp and 1200Amp Heavy Duty Switches are field convertible to accept Class T fuses.800A switches are field convertible to accept Class T fuses by moving the load base to a pre-drilled T fuse position.

Class T Fuse Adapter Kits①

Catalogue Number	Description
HT23	100A, 240V Kit
HT63	100A, 600V Kit
HT24	200A, 240V Kit
HT64	200A, 600V Kit
HT25A	400A, 240V Kit
HT65A	400A, 600V Kit
HT26A	600A, 240V Kit
HT66A	600A, 600V Kit
TFAK82	1200A, 240V Kit

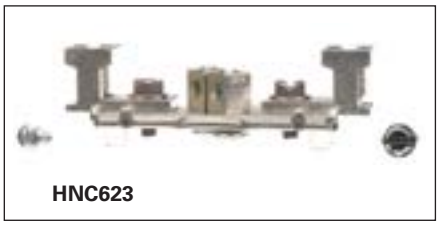

HNC623

Neutral Kits

Standard Neutral Kits can be field installed in Heavy Duty Switches.

Neutral Kits

Switch Ampere Rating	Kit Catalogue Number
30 HD	**HNC612**
60, 100 HD	**HNC623**
200	**HNC64**
400 & 600	**HN656A**
800 & 1200	**HN678A**

② Not designed for use with Auxiliary Contacts.

③ To order the correct part number, check the switch label.



HN264

200% Neutral Kits

CSA certified 200% Neutrals are available on 100-600A Heavy Duty Switches. They are typically used with non-linear transformers or where increased neutral ampacity/lug capacity is required.

200% Neutral Kits

Switch Ampere Rating	Kit Catalogue Number	Wire Range Line & Load Lugs (Cu/Al)
100	**HNC263**	(2) #14-1/0 AWG
200	**HNC264**	(2) #6 AWG-300 Kcmil
400	**HN656A**	(2) 1/0 AWG-600 Kcmil (2) #6 AWG-300 Kcmil
600	**HN678A**	(2) 1/0 AWG-600 Kcmil (2) #6 AWG-300 Kcmil

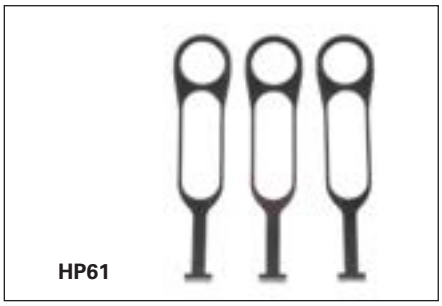

HP61

Fuse Puller Kits

Fuse Puller Kits are field installable in 30-100A Type VBII Heavy Duty Switches (one kit required per 3-pole switch).

Fuse Puller Kits

Switch Ampere Rating	Fuse Puller Kit Catalogue Number
30	**HP61**
60	**HP62▲**
100	**HP63▲**



HA261234



HA261234

HLC612



HG261234

Auxiliary Contacts

Auxiliary Contacts are available only for Heavy Duty Switches. The auxiliary contacts are available in 1 normally open and 1 normally closed or 2 normally open and 2 normally closed configurations. Siemens offers a PLC Auxiliary Switch (30-200A) that has very low resistance for low voltage and current typical in PLC circuits. All auxiliary contacts make after and break before main switch contacts.

Auxiliary Contacts

Switch Ampere	Aux. Switch Catalogue Number	Kit Ampere Rating 125V AC Max.	250V AC Max.	28V DC Max.	Horsepower Rating 125V AC Max.	250V AC Max.
With 1 NO & 1 NC Isolated Contacts						
30-600	**HA161234**	10	10	7	1/2	3/4
800-1200	**HA165678**	10	10	—	1/2	3/4
With 2 NO & 2 NC Isolated Contacts						
30-600	**HA261234**	10	10	7	1/2	3/4
800-1200	**HA265678**	10	10	7	1/2	3/4
Low Current PLC Type with 1 NO & 1 NC Gold Plated Contacts						
30-600	**HA361234**	10	10	7	1/2	3/4
800-1200	**HA365678**	10	10	—	1/2	3/4

Copper Lug Kits

Heavy duty switches are CSA certified to accept field installed copper lug kits.

Copper Lug Kits

Switch Ampere Rating	Copper Lug Catalogue Number	Description
30–60	**HLC612**	(9) Lugs/Kit #14-4 AWG Cu
100	**HLC63**	(9) Lugs/Kit #14-1/0 AWG Cu
200	**HLC64**	(9) Lugs/Kit #6 AWG-300 Kcmil Cu
400-600	**HCU656A**	(1) Lugs/Kit #1/0 AWG-600 Kcmil Cu
800–1200	**HLC65678**	(1) Lugs/Kit #1/0 AWG-600 Kcmil Cu

▲ Built to order. Allow 6–8 weeks for delivery.

■ Purchase field replacement kit along with lugs.

NEW Quick Connects

They provide two point control power take-off capability and are normally used on two poles on the line side when it is required to have control power available when the switch is in the OFF position. They provide a mounting provision for standard ¼" quick connect terminal. Installed in the line or load side. 30A VBII switches have lugs CSA certified to accept (2) wires per pole as standard so a 30A kit is not required.

Quick Connects

Catalogue Number	Description
HCQ62	60A 2 wire quick connect kit
HCQ63	100A 2 wire quick connect kit
HCQ64	200A 2 wire quick connect kit

Isolated Ground Kits

Isolated Ground Kits are available on 30-600A Heavy Duty Switches. They are normally used on circuits with a high content of computer or other electronic loading which require a ground which is isolated from the building ground and neutral circuits. The kit includes both isolated and grounded terminals as listed below.

Isolated Ground Kits

Switch Ampere Rating	Catalogue Number	Number of Terminals Isolated	Number of Terminals Grounded	Wire Range Per Terminal (Cu/Al)
30–200	**HG261234**	2	2	#14-4 AWG
400–600	**HG2656A**	4	4	2/0-14 AWG 2/0-6 AWG

Equipment Ground Kits

Equipment Ground Lug Kits are available for all Heavy Duty Switches. They are field installable in Type 1 and Type 3R Switches and are factory installed as standard in Type 4 / 4X and Type 12 and also in all VBII 4&6-pole Switches.

Equipment Ground Kits

Switch Ampere Rating	Catalogue Number	Number of Terminals	Wire Range Per Terminal (Cu/Al)
30–200 HD	**HG61234**	2	#14-4 AWG
400 & 600	**HG656A**	4	2/0-6 AWG
800–1200	**HG678**	8	#6 AWG-250 Kcmil

Hub and Lug Data

Interchangeable Hubs

Conduit hubs are available for Type 3R, 12 and 4 / 4X applications. 30-200A Type 3R Switches are provided with a conduit hub provision and a removable hub plate on their top rainshed.

Conduit Size (inches)	Catalogue Number	Used On
Type 3R①		
Cover	**ECHA000**	30A GD Only
3/4	**ECHA075**	
1	**ECHA100**	
1 1/4	**ECHA125**	
Cover	**ECHS000**	60–200A GD 30–200A HD
3/4	**ECHS075**	
1	**ECHS100**	
1 1/4	**ECHS125**	
1 1/2	**ECHS150**	
2	**ECHS200**	
2 1/2	**ECHS250**	
2 1/2	**ECHV250**	400–1200A
3	**ECHV300**	
3 1/2	**ECHV350**	
4	**ECHV400**	
Type 4/4X②		
3/4	**SSH075**	30–200A
1	**SSH100**	
1 1/4	**SSH125**	
1 1/2	**SSH150**	
2	**SSH200**	
2 1/2	**SSH250**	400–600A
3	**SSH300**	
3 1/2	**SSH350**	
4	**SSH400**	

Note: 30 thru 200A. Type 3R Switches have removable hub plates on rainshed. 400A and larger Type 3R Switches have no provisions for mounting hubs. Drill or punch hole in the field to accommodate hub size desired.

Field Replacement Kits and Neutral Barrier Kits

All Heavy Duty Switches are field convertible for (Crimp) type lugs. When compression lugs are required for 30-100A switches, a neutral barrier kit is required for 1-Phase, 3W or 3-Phase, 4W applications. When compression lugs are required on 400-1200A switches, lug mounting kits are required.

Field Replacement Kits and Neutral Barrier Kits

Switch Ampere Rating	Catalogue Number	Kit Description
30	**HCL612**	Neutral Barrier Kit
60 & 100	**HCL623**	Neutral Barrier Kit
400	**HCM65A**	240V/600V Fusible Kit
400	**HNCM65A**	240/600V Non-Fusible Kit
600	**HCM66A**	240V/600V Fusible Kit
600	**HNCM66A**	240V/600V Non-Fusible Kit
800 & 1200⑤	**HCL65678**	1 Pole, Compression Lug Mounting Kit

Lugs

30 & 60A Switches are suitable for use with 60° or 75°C wire. 100–1200A are suitable for use with 75°C rated wire.

Multiple Padlock Accessory

A tamper-proof device to provide for multiple padlocking to meet OSHA or plant requirements. Accepts up to 6 1/4" padlocks. Catalog number **SL0420**. Standard Carton-12.



SSH125



ECHV300



ECHS200



SL0420

Built to order. Allow 3-4 weeks for delivery.

Wire Ranges (Line, Load and Standard Neutral)

Switch Ampere Rating	Wire Range with Wire Bending Space Per NEC Requirements	Lug Wire Range
30GD	#14-8 AWG (Cu/Al)⑥	#14-6 AWG (Cu/Al)
30HD	#14-6 AWG (Cu/Al)	#14-2 AWG (Cu/Al)
60⑧⑩	#14-3 AWG (Cu/Al)	#14-2 AWG (Cu/Al)
100⑪	#14-1/0 AWG (Cu/Al)	#14-1/0 AWG (Cu/Al)
200⑨	#6 AWG-250 Kcmil (Cu/Al)	#6 AWG-300 Kcmil (Cu/Al)
400⑦	(1) 1/0 AWG-600 Kcmil (Cu/Al) (2) 1/0 AWG-500 Kcmil (Cu/Al)	(2) 1/0 AWG-600 Kcmil (Cu/Al)
600⑦	(1) 1/0 AWG-600 Kcmil (Cu/Al) (2) 1/0 AWG-500 Kcmil (Cu/Al)	(2) 1/0 AWG-600 Kcmil (Cu/Al)
800	(3) 1/0 AWG-750 Kcmil (Cu/Al) Line Load (4) 1/0 AWG-750 Kcmil (Cu/Al) neutral	(3) 1/0 AWG-750 Kcmil (Cu/Al) Line Load (4) 1/0 AWG-750 Kcmil (Cu/Al) neutral
1200	(4) 3/0 AWG-750 Kcmil (Cu/Al) Line Load (4) 1/0 AWG-750 Kcmil (Cu/Al) neutral	(4) 1/0 AWG-750 Kcmil (Cu/Al) Line Load (4) 1/0 AWG-750 Kcmil (Cu/Al) neutral

① Hubs suitable for 3R Switches.
② Also suitable for Type 12 applications.
③ Neutral Barrier kits are required on 30-100A switches only and only with 1-Phase / 3W or 3-Phase / 4W loads. Compression Lugs mounting kits are required on 400-1200A switches only.
④ Provides mounting for a single line or load lug.
⑤ Provides mounting for (2) compression lugs per phase on line or load.
⑥ Line base lugs (only) are CSA certified to accept #14-6 CU/Al cable.
⑦ Max. wire size for height reduced switches is 500 kcmil (Cu/Al).
⑧ All but 60A GD & Compact HD NF switches are also CSA certified for #2 Cu/Al conductors.
⑨ All 200A Heavy Duty Switches have a wire range & wire bending space for (1) #6-300 Kcmil (Cu/Al).
⑩ Also for 30A oversized heavy duty switches.
⑪ Also for 60A oversized heavy duty switches.

VBII Safety Switch Replacement Parts

Ampere Rating	Line Base Catalogue Number	Load Base Catalogue Number	Handle / Handle Guard General Duty Catalogue Number	Handle / Handle Guard Heavy Duty Catalogue Number
Fusible 2- and 3-Pole 100-600A General Duty & 30-1200A Heavy Duty⑤⑧				
30 HD 240V	**HFB21**②	**HBB21**②	—	**HH6123**⑦
60 HD 240V	**HFB22**②	**HBB22**②	—	**HH6123**⑦
30 600V	**HFB612**②	**HBB612**②	—	**HH6123**⑦
60 600V	**HFB62**②	**HBB62**②	—	**HH6123**⑦
100	**HFB63**②	**HBB63**②	**GH223**	**HH6123**⑦
200	**HFB64**②	**HBB64**②	**GH24**	**HH64**⑦
400 (Legacy)	**HFB65**③⑥	**HBB656**③⑥	**HH65678**	**HH65678**⑦
400 (Series-A)	**HFB65AB**	**HBB656AB**	**HH656A**	**HH656A**
600 (Legacy)	**HFB66**③⑥	**HBB656**③⑥	**HH65678**	**HH65678**⑦
600 (Series-A)	**HFB66AB**	**HBB656AB**	**HH656A**	**HH656A**
800	**HFB67A**②⑥	**HBB67A**②⑥	—	**HH65678**⑦
1200	**HFB68**②⑥	**HBB68**②⑥	—	**HH68**⑦
Non-Fusible 3-Pole 100-600A General Duty & 30-1200A Heavy Duty⑤⑧				
30 HD	**HNB612**②	—	—	**HH6123**⑦
60 HD	**HNB623**②	—	—	**HH6123**⑦
100	**HNB623**②	—	**GH223**	**HH6123**⑦
200	**HNB64**②	—	**GH24**	**HH64**⑦
400 (Legacy)	**HNB65**③⑥	—	**HH65678**	**HH65678**⑦
400 (Series-A)	**HNB656AB**	—	**HH656A**	**HH656A**
600 (Legacy)	**HNB66**③⑥	—	**HH65678**	**HH65678**⑦
600 (Series-A)	**HNB656AB**	—	**HH656A**	**HH656A**
800	**HNB67A**②⑥	—	—	**HH65678**⑦
1200	**HNB678**⑥	—	—	**HH68**⑦

Ampere Rating	Mechanism Assembly Catalogue Number	Line & Load Lugs Catalogue Number
Fusible 2- and 3-Pole 100-600A General Duty& 30-1200A Heavy Duty⑤⑧		
30 HD 240V	**HM6123**⑦	**HL612**①
60 GD	**HM6123**	**HL612**①
60 HD 240V	**HM6123**⑦	**HL612**①
30 600V	**HM6123**⑦	**HL612**①
60 600V	**HM6123**⑦	**HL612**①
100	**HM6123**⑦	**HL63**①
200	**HM64**⑦	**HL64**①
400 (Legacy)	**HM65**	**HL65678**⑦
400 (series-A)	**HM656A**	**HL656A**⑩
600 (Legacy)	**HM66**	**HL65678**④
600 (series-A)	**HM656A**	**HL66A**⑩
800	**HM67A**	⑨
1200	**HM678**	⑨
Non-Fusible 3-Pole 100-600A General Duty & 30-1200A Heavy Duty⑤⑧		
30 HD	**HM6123**⑦	**HL612**①
60 GD	**HM6123**	**HL612**①
60 HD	**HM6123**⑦	**HL612**①
100	**HM6123**⑦	**HL63**①
200	**HM64**⑦	**HL64**①
400 (Legacy)	**HM65**	**HL65678**④
400 (series-A)	**HM656A**	**HL56A**⑩
600 (Legacy)	**HM66**	**HL65678**④
600 (series-A)	**HM656A**	**HL56A**⑩
800	**HM67A**	⑨
1200	**HM678**	⑨

Internal Shield Kits

These kits provide an inner door on safety switches to prevent accidental contact with live parts. All kits are constructed from clear plastic, provide test probe holes and allow replacement of fuses without the removal of the kit.

Catalogue Number	Switch Ampere Rating	UPC Code 040892_ _ _ _ _
For use with Fusible Type 1, 3R, 12 and 4X Stainless Steel Enclosed Safety Switches⑩		
HSK61SSW	30	79020
HSK62SSW	60	79021
HSK63SSW	100	79002
HSK64SSW	200	79023
For use with Fusible Type VBII Disconnect Switches		
HSK61	30	79024
HSK623	60 & 100	79025
HSK64	200	79026



HF362 with HSK62SSW installed



VBFS361F with HSK61 Installed

① Three lugs included in kit.
② Includes lugs.
③ Lugs not included.
④ One lug per kit.
⑤ One per switch required unless otherwise noted.
⑥ One required per pole.
⑦ For type 4/4X stainless steel switches add "S" to end of catalog number.
⑧ For replacement door for heavy duty switches add "DOOR" to end of switch catalog number.
⑨ Lugs included with base only, not available separately.
⑩ Lug caps only—2 line side caps and 2 load side caps per kit.

Safety Switch Dimensions & Shipping Weights

Catalogue Number	**Height** - Inches (mm)			**Width** - Inches (mm)		**Depth** - Inches (mm)		Knockout Diagram①	Shipping Weight (lbs.)
	Box A	With Door B	With Rain Shed C	Box D	With Handle E	Box F	With Handle G		
HFC261J	14.27 (362)	17.33 (442)	—	6.65 (170)	9.02 (230)	5.32 (136)	10.46 (266)	—	13
HFC221N also **HFC261**	14.26 (362)	14.6 (371)	—	6.64 (170)	7.75 (197)	4.71 (120)	8.89 (226)	S6	13
HFC221NR also **HFC261R**	14.34 (364)	—	14.91 (379)	6.64 (170)	7.88 (200)	5.00 (127)	9.18 (233)	S8	13
HFC261S	14.27 (362)	17.33 (442)	—	6.65 (170)	9.02 (230)	5.32 (136)	10.46 (266)	—	13
HFC262J	16.22 (412)	19.31 (492)	—	9.17 (234)	11.47 (292)	5.33 (136)	10.46 (266)	—	19
HFC222N also **HFC262**	16.26 (414)	16.62 (422)	—	9.16 (234)	10.37 (263)	4.71 (120)	8.67 (220)	S16	18
HFC222NR also **HFC262R**	16.26 (414)	—	16.93 (430)	9.16 (234)	10.41 (264)	5.05 (130)	9.21 (234)	S17	19
HFC262S	16.22 (412)	19.31 (492)	—	9.17 (234)	11.47 (292)	5.33 (136)	10.46 (266)	—	19
HFC223J also **HFC263J**	21.96 (558)	23.16 (590)	—	9.65 (246)	12.02 (306)	5.34 (136)	10.46 (266)	—	24
HFC223N also **HFC263**	21.95 (558)	23.15 (590)	—	9.64 (246)	12.01 (306)	5.05 (130)	10.17 (260)	S10	23
HFC223NR also **HFC263R**	21.95 (558)	—	23.46 (596)	9.64 (246)	11.97 (306)	5.05 (130)	10.17 (260)	S11	24
HFC223S also HFC263S	21.96 (558)	23.16 (590)	—	9.65 (246)	12.02 (306)	5.34 (136)	10.46 (266)	—	24
GFC223N	21.95 (558)	23.15 (590)	—	9.65 (246)	11.7 (298)	5.05 (130)	8.63 (220)	S10	23
GFC224N	29.9 (760)	31.07 (790)	—	14.62 (372)	16.68 (424)	6.36 (162)	10.92 (278)	S12	47
GFC225NA	45.32 (1151)	45.81 (1164)	—	22.4 (569)	23.404 (594)	6.94 (176)	9.93 (252)	S18	91.1
GFC226NA	45.32 (1151)	45.81 (1164)	—	22.4 (569)	23.404 (594)	6.94 (176)	9.93 (252)	S18	95.6
GFC323N	21.95 (558)	23.15 (590)	—	9.65 (246)	11.7 (298)	5.05 (130)	8.63 (220)	S10	25
GFC324N	29.9 (760)	31.07 (790)	—	14.62 (372)	16.68 (424)	6.36 (162)	10.92 (278)	S12	49
GFC325NA	45.32 (1151)	45.81 (1164)	—	22.4 (569)	23.404 (594)	6.94 (176)	9.93 (252)	S18	94.6
GFC326NA	45.32 (1151)	45.81 (1164)	—	22.4 (569)	23.404 (594)	6.94 (176)	9.93 (252)	S18	99.6
GFC364	29.9 (760)	31.07 (790)	—	14.62 (372)	16.68 (424)	6.36 (162)	10.92 (278)	—	44
GNFC364	29.9 (760)	31.07 (790)	—	14.62 (372)	16.68 (424)	6.36 (162)	10.92 (278)	—	42.68

① Knocks not provided on Type 4 / 4X and 12 or on 800 & 1200A switches.

Safety Switch Dimensions & Shipping Weights

Catalogue Number	Height - Inches (mm) Box A	With Door B	With Rain Shed C	Width - Inches (mm) Box D	With Handle E	Depth - Inches (mm) Box F	With Handle G	Knockout Diagram①	Shipping Weight (lbs.)
HFC224J	29.96 (762)	31.07 (790)	—	14.62 (372)	16.95 (432)	6.63 (170)	12.58 (320)	—	48
HFC224N	29.9 (760)	31.07 (790)	—	14.62 (372)	16.98 (432)	6.36 (162)	12.33 (314)	S12	47
HFC224NR	29.9 (760)	—	31.42 (800)	14.61 (372)	16.99 (432)	6.36 (162)	12.33 (314)	S13	48
HFC224S	29.96 (762)	31.07 (790)	—	14.62 (372)	16.95 (432)	6.63 (170)	12.58 (320)	—	48
HFC225NRA	45.32 (1152)	45.81 (1164)	—	22.4 (570)	23.404 (596)	6.94 (178)	9.93 (254)	S19	91.1
HFC225NA	45.32 (1152)	45.81 (1164)	—	22.4 (570)	23.404 (596)	6.94 (178)	9.93 (254)	S18	91.1
HFC226NA	45.32 (1152)	45.81 (1164)	—	22.4 (570)	23.404 (596)	6.94 (178)	9.93 (254)	S18	95.6
HFC226NRA	45.32 (1152)	45.81 (1164)	—	22.4 (570)	23.404 (596)	6.94 (178)	9.93 (254)	S19	95.6
HFC227N	66.67 (1694)	67.16 (1706)	—	38.4 (976)	39.96 (1016)	9.24 (236)	14.68 (374)	—	360
HFC227NR	66.67 (1694)	—	67.74 (1722)	38.4 (976)	39.96 (1016)	9.24 (236)	14.68 (374)	—	362
HFC228N	66.67 (1694)	67.16 (1706)	—	38.4 (976)	39.96 (1016)	9.24 (236)	14.68 (374)	—	362
HFC228NR	66.67 (1694)	—	67.74 (1722)	38.4 (976)	39.96 (1016)	9.24 (236)	14.68 (374)	—	364
HFC321J	14.27 (362)	17.33 (442)	—	6.65 (170)	9.02 (230)	5.32 (136)	10.46 (266)	—	14
HFC321N	14.26 (362)	14.6 (371)	—	6.64 (169)	7.75 (197)	4.71 (127)	8.89 (226)	S6	14
HFC321NR	14.34 (364)	—	14.91 (379)	6.64 (169)	7.88 (200)	5.00 (127)	9.18 (233)	S8	15
HFC321S	14.27 (362)	17.33 (442)	—	6.65 (170)	9.02 (230)	5.32 (136)	10.46 (266)	—	14
HFC322J	16.27 (414)	19.31 (492)	—	9.17 (234)	11.47 (292)	5.33 (136)	10.46 (266)	—	20
HFC322N	16.26 (414)	16.62 (422)	—	9.16 (233)	10.37 (263)	5.05 (130)	9.21 (234)	S16	19
HFC322NR	16.26 (414)	—	16.93 (430)	9.16 (234)	10.41 (264)	5.05 (130)	9.21 (234)	S17	20
HFC322S	16.27 (414)	19.31 (492)	—	9.17 (234)	11.47 (292)	5.33 (136)	10.46 (266)	—	20
HFC323J	21.96 (558)	23.16 (590)	—	9.65 (246)	12.02 (306)	5.34 (136)	10.46 (266)	—	25
HFC323N	21.95 (558)	23.15 (590)	—	9.64 (246)	12.01 (306)	5.05 (130)	10.17 (260)	S10	25
HFC323NR	21.95 (558)	—	23.46 (596)	9.64 (246)	11.97 (306)	5.05 (130)	10.17 (260)	S11	26
HFC323S	21.96 (558)	23.16 (590)	—	9.65 (246)	12.02 (306)	5.34 (136)	10.46 (266)	—	25
HFC324J	29.96 (762)	31.07 (790)	—	14.62 (372)	16.95 (432)	6.63 (170)	12.58 (320)	—	49
HFC324N	29.9 (760)	31.07 (790)	—	14.62 (372)	16.98 (432)	6.36 (162)	12.33 (314)	S12	49
HFC324NR	29.9 (760)	—	31.42 (800)	14.61 (372)	16.99 (432)	6.36 (162)	12.33 (314)	S13	50
HFC324S	21.96 (558)	31.07 (790)	—	14.62 (372)	16.95 (432)	6.63 (170)	12.58 (320)	—	49
HF325JA also HFC325NJA	45.32 (1152)	45.81 (1164)	—	22.4 (570)	23.404 (596)	6.97 (178)	10.05 (256)	—	93
HFC325NA	45.32 (1152)	45.81 (1164)	—	22.4 (570)	23.404 (596)	6.94 (178)	9.93 (254)	S18	94.6
HFC325NRA	45.32 (1152)	45.81 (1164)	—	22.4 (570)	23.404 (596)	6.94 (178)	9.93 (254)	S19	94.6
HF325SA also HFC325NSA	45.32 (1152)	45.81 (1164)	—	22.4 (570)	23.404 (596)	7.34 (188)	10.347 (264)	—	93
HF326JA also HFC326NJA	45.32 (1152)	45.81 (1164)	—	22.4 (570)	23.404 (596)	6.97 (178)	10.05 (256)	—	98
HFC326NA	45.32 (1152)	45.81 (1164)	—	22.4 (570)	23.404 (596)	6.94 (178)	9.93 (254)	S18	99.6
HFC326NRA	45.32 (1152)	45.81 (1164)	—	22.4 (570)	23.404 (596)	6.94 (178)	9.93 (254)	S19	99.6
HF326SA also HFC326NSA	45.32 (1152)	45.81 (1164)	—	22.4 (570)	23.404 (596)	7.34 (188)	10.347 (264)	—	98
HFC327J	66.67 (1694)	67.16 (1706)	—	38.4 (976)	39.96 (1016)	9.24 (236)	14.68 (374)	—	367
HFC327N	66.67 (1694)	67.16 (1706)	—	38.4 (976)	39.96 (1016)	9.24 (236)	14.68 (374)	—	380
HFC327NR	66.67 (1694)	—	67.74 (1722)	38.4 (976)	40.25 (1024)	9.24 (236)	14.68 (374)	—	383
HFC327S	66.67 (1694)	67.16 (1706)	—	38.4 (976)	39.96 (1016)	9.24 (236)	14.68 (374)	—	367
HFC328N	66.67 (1694)	67.16 (1706)	—	38.4 (976)	39.96 (1016)	9.24 (236)	14.68 (374)	—	382
HFC328NR	66.67 (1694)	—	67.74 (1722)	38.4 (976)	40.25 (1024)	9.24 (236)	14.68 (374)	—	385
HFC361, N	14.26 (362)	14.6 (371)	—	6.64 (170)	7.75 (197)	4.71 (120)	8.89 (226)	S6	13
HFC361J, HF361JW	14.27 (362)	17.33 (442)	—	6.65 (170)	9.02 (230)	5.32 (136)	10.46 (266)	—	14
HFC361R, NR	14.34 (364)	—	14.91 (379)	6.64 (170)	7.88 (200)	5.00 (127)	9.18 (230)	S8	14
HFC361S. HF361SW, SSW	14.27 (362)	17.33 (442)	—	6.65 (170)	9.02 (230)	5.32 (136)	10.46 (266)	—	15

① Knocks not provided on Type 4/4X and 12 or on 800 & 1200A switches.

Safety Switch Dimensions & Shipping Weights

Catalogue Number	Height - Inches (mm) Box A	With Door B	With Rain Shed C	Width - Inches (mm) Box D	With Handle E	Depth - Inches (mm) Box F	With Handle G	Knockout Diagram①	Shipping Weight (lbs.)
HFC362, N	16.26 (414)	16.62 (422)	—	9.16 (234)	10.37 (263)	4.71 (120)	8.67 (220)	S16	18
HFC362J, HF362JW	16.27 (414)	19.31 (492)	—	9.17 (234)	11.47 (292)	5.33 (136)	10.46 (266)	—	20
HFC362R, NR	16.26 (414)	—	16.93 (430)	9.16 (234)	10.41 (264)	5.05 (130)	9.21 (234)	S17	19
HFC362S. HF362SW, SSW	16.27 (414)	19.31 (492)	—	9.17 (234)	11.47 (292)	5.33 (136)	10.46 (266)	—	20
HFC363	21.95 (558)	23.15 (590)	—	9.64 (246)	12.01 (306)	5.05 (130)	10.17 (260)	S10	24
HFC363J, JW	21.96 (558)	23.16 (590)	—	9.65 (246)	12.02 (306)	5.34 (136)	10.46 (266)	—	25
HFC363N	21.95 (558)	23.15 (590)	—	9.64 (246)	12.01 (306)	5.05 (130)	10.17 (260)	S10	25
HFC363NR	21.95 (558)	—	23.46 (596)	9.64 (246)	11.97 (306)	5.05 (130)	10.17 (260)	S11	26
HFC363R	21.95 (558)	—	23.46 (596)	9.64 (246)	11.97 (306)	5.05 (130)	10.17 (260)	S11	25
HFC363S, SW	21.96 (558)	23.16 (590)	—	9.65 (246)	12.02 (306)	5.34 (136)	10.46 (266)	—	25
HFC364	29.9 (760)	31.07 (790)	—	14.62 (372)	16.98 (432)	6.36 (162)	12.33 (314)	S12	48
HFC364J, JW	29.96 (762)	31.07 (790)	—	14.62 (372)	16.95 (432)	6.63 (170)	12.58 (320)	—	49
HFC364N	29.9 (760)	31.07 (790)	—	14.62 (372)	16.98 (432)	6.36 (162)	12.33 (314)	S12	49
HFC364NR	29.9 (760)	—	31.42 (800)	14.61 (372)	16.99 (432)	6.36 (162)	12.33 (314)	S13	48
HFC364R	29.9 (760)	—	31.42 (800)	14.61 (372)	16.99 (432)	6.36 (162)	12.33 (314)	S13	49
HFC364S, SW	29.96 (762)	31.07 (790)	—	14.62 (372)	16.95 (432)	6.63 (170)	12.58 (320)	—	49
HF365A	45.32 (1152)	45.81 (1164)	—	22.4 (570)	23.404 (596)	6.94 (178)	9.93 (254)	S18	93
HF365JA, HF365JWA	45.32 (1152)	45.81 (1164)	—	22.4 (570)	23.404 (596)	6.97 (178)	10.05 (256)	—	93
HFC365NJA, HFC365NJWA	45.32 (1152)	45.81 (1164)	—	22.4 (570)	23.404 (596)	6.97 (178)	10.05 (256)	—	94.6
HFC365NA	45.32 (1152)	45.81 (1164)	—	22.4 (570)	23.404 (596)	6.94 (178)	9.93 (254)	S18	94.6
HFC365NRA	45.32 (1152)	45.81 (1164)	—	22.4 (570)	23.404 (596)	6.94 (178)	9.93 (254)	S19	94.6
HF365RA	45.32 (1152)	45.81 (1164)	—	22.4 (570)	23.404 (596)	6.94 (178)	9.93 (254)	S19	93
HF365SA, HF365SWA	45.32 (1152)	45.81 (1164)	—	22.4 (570)	23.404 (596)	7.34 (188)	10.347 (264)	—	93
HFC365NSA, HFC365NSWA	45.32 (1152)	45.81 (1164)	—	22.4 (570)	23.404 (596)	7.34 (188)	10.347 (264)	—	94.6
HF366A	45.32 (1152)	45.81 (1164)	—	22.4 (570)	23.404 (596)	6.94 (178)	9.93 (254)	S18	98
HF366JA, HF366JWA	45.32 (1152)	45.81 (1164)	—	22.4 (570)	23.404 (596)	6.97 (178)	10.05 (256)	—	98
HFC366NJA, HFC366NJWA	45.32 (1152)	45.81 (1164)	—	22.4 (570)	23.404 (596)	6.97 (178)	10.05 (256)	—	99.6
HFC366NA	45.32 (1152)	45.81 (1164)	—	22.4 (570)	23.404 (596)	6.94 (178)	9.93 (254)	S18	99.6
HFC366NRA	45.32 (1152)	45.81 (1164)	—	22.4 (570)	23.404 (596)	6.94 (178)	9.93 (254)	S19	99.6
HF366RA	45.32 (1152)	45.81 (1164)	—	22.4 (570)	23.404 (596)	6.94 (178)	9.93 (254)	S19	98
HF366SA, HF366SWA	45.32 (1152)	45.81 (1164)	—	22.4 (570)	23.404 (596)	7.34 (188)	10.347 (264)	—	98
HFC366NSA	45.32 (1152)	45.81 (1164)	—	38.4 (976)	23.404 (596)	7.34 (188)	10.347 (264)	—	99.6
HFC367	66.67 (1694)	67.16 (1706)	—	38.4 (976)	39.96 (1016)	9.24 (236)	14.68 (374)	—	380
HFC367J	66.67 (1694)	67.16 (1706)	—	38.4 (976)	39.96 (1016)	9.24 (236)	14.68 (374)	—	380
HFC367N	66.67 (1694)	67.16 (1706)	—	38.4 (976)	39.96 (1016)	9.24 (236)	14.68 (374)	—	382
HFC367NR	66.67 (1694)	—	67.74 (1722)	38.4 (976)	40.25 (1024)	9.24 (236)	14.68 (374)	—	386
HFC367R	66.67 (1694)	—	67.74 (1722)	38.4 (976)	40.25 (1024)	9.24 (236)	14.68 (374)	—	382
HFC367S	66.67 (1694)	67.16 (1706)	—	38.4 (976)	39.96 (1016)	9.24 (236)	14.68 (374)	—	380
HFC368, J, S	66.67 (1694)	67.16 (1706)	—	38.4 (976)	39.96 (1016)	9.24 (236)	14.68 (374)	—	383
HFC368N	66.67 (1694)	67.16 (1706)	—	38.4 (976)	39.96 (1016)	9.24 (236)	14.68 (374)	—	385
HFC368NR	66.67 (1694)	—	67.74 (1722)	38.4 (976)	40.25 (1024)	9.24 (236)	14.68 (374)	—	388
HFC368R	66.67 (1694)	—	67.74 (1722)	38.4 (976)	40.25 (1024)	9.24 (236)	14.68 (374)	—	385
HNFC361 also HNFC261	11.11 (284)	11.45 (291)	—	6.64 (170)	7.72 (196)	4.70 (119)	9.15 (232)	S7	11
HNFC361J, HNF361JW also HNFC261J	11.12 (284)	14.14 (360)	—	6.65 (170)	9.02 (230)	5.56 (142)	10.46 (266)	—	13
HNFC361R also HNFC261R	11.09 (282)	—	11.76 (299)	6.64 (170)	7.88 (200)	5.00 (127)	8.91 (226)	S9	12
HNFC361S. HNF361SW, SSW also HNFC261S	11.12 (284)	14.14 (360)	—	6.65 (170)	9.02 (230)	5.56 (142)	10.46 (266)	—	13
HNFC362 also HNFC262	16.26 (414)	16.62 (422)	—	9.16 (234)	10.26 (261)	4.71 (120)	9.04 (230)	S16	17
HNFC362J, HNF362JW also HNFC262J	16.27 (414)	17.46 (444)	—	9.17 (234)	11.47 (292)	5.33 (136)	10.46 (266)	—	19
HNFC362R also HNFC262R	16.26 (414)	—	16.93 (430)	9.16 (234)	10.41 (264)	5.05 (130)	9.14 (232)	S17	18
HNFC362S. HNF362SW, SSW also HNFC262S	16.27 (414)	17.46 (444)	—	9.17 (234)	11.47 (292)	5.33 (136)	10.46 (266)	—	19
HNFC363 also HNFC263	21.95 (558)	23.15 (590)	—	9.64 (246)	12.01 (306)	5.05 (130)	10.17 (260)	S10	23
HNFC363J, JW also HNFC263J	21.96 (558)	23.16 (590)	—	9.65 (246)	12.02 (306)	5.34 (136)	10.46 (266)	—	24
HNFC363R also HNFC263R	21.95 (558)	—	23.46 (596)	9.64 (246)	11.97 (306)	5.05 (130)	10.17 (260)	S11	24
HNFC363S, SW also HNFC263S	21.96 (558)	23.16 (590)	—	9.65 (246)	12.02 (306)	5.34 (136)	10.46 (266)	—	24
HNFC364	29.9 (760)	31.07 (790)	—	14.62 (372)	16.98 (432)	6.36 (162)	12.33 (314)	S12	46
HNFC364J, JW	31.07 (790)	—	14.62 (372)	16.95 (432)	6.63 (170)	12.58 (320)	—	47	—
HNFC364R	29.9 (760)	—	31.42 (800)	14.61 (372)	16.99 (432)	6.36 (162)	12.33 (314)	S13	47
HNFC364S, SW	29.96 (762)	31.07 (790)	—	14.62 (372)	16.95 (432)	6.63 (170)	12.58 (320)	—	47

① Knocks not provided on Type 4 / 4X and 12 or on 800 & 1200A switches.

Safety Switch Dimensions & Shipping Weights

Catalogue Number	**Height** - Inches (mm)			**Width** - Inches (mm)		**Depth** - Inches (mm)		Knockout Diagram[1]	Shipping Weight (lbs.)
	Box A	With Door B	With Rain Shed C	Box D	With Handle E	Box F	With Handle G		
HNF365A, JA	45.32 (1152)	45.81 (1164)	—	22.4 (570)	23.404 (596)	6.97 (178)	10.05 (256)	—	75
HNF365JWA	45.32 (1152)	45.81 (1164)	—	22.4 (570)	23.404 (596)	6.97 (178)	10.05 (256)	—	75
HNF365RA	33.47 (852)	33.96 (864)	—	22.4 (570)	23.404 (596)	6.94 (178)	9.93 (254)	S19	75
HNF365SA, HNF365SWA	33.47 (852)	33.96 (864)	—	22.4 (570)	23.404 (596)	7.34 (188)	10.347 (264)	—	75
HNF366A, JA	45.32 (1152)	45.81 (1164)	—	22.4 (570)	23.404 (596)	6.97 (178)	10.05 (256)	—	77
HNF366RA	33.47 (852)	33.96 (864)	—	22.4 (570)	23.404 (596)	6.94 (178)	9.93 (254)	S19	77
HNF366SA	33.47 (852)	33.96 (864)	—	22.4 (570)	23.404 (596)	7.34 (188)	10.347 (264)	—	77
HNFC367, J	54.67 (1390)	55.16 (1402)	—	38.4 (976)	39.96 (1016)	9.24 (236)	14.68 (374)	—	302
HNFC367R	54.67 (1390)	—	55.7 (1416)	38.4 (976)	40.25 (1024)	9.24 (236)	14.68 (374)	—	304
HNFC367S	54.67 (1390)	55.16 (1402)	—	38.4 (976)	39.96 (1016)	9.24 (236)	14.68 (374)	—	302
HNFC368, J, S	54.67 (1390)	55.16 (1402)	—	38.4 (976)	39.96 (1016)	9.24 (236)	14.68 (374)	—	305
HNFC368R	54.67 (1390)	55.16 (1402)	—	38.4 (976)	40.25 (1024)	9.24 (236)	14.68 (374)	—	307
LFC111N	7.97 (204)	8.13 (208)	—	5.5 (140)	5.94 (152)	3 (78)	5.38 (138)	S2	35 (10)
LFC111NR	8.07 (206)	—	8.16 (208)	5.16 (132)	5.94 (152)	3.13 (80)	5.38 (138)	S3	35 (10)
LFC211N	7.97 (204)	8.13 (208)	—	5.5 (140)	5.94 (152)	3 (78)	5.38 (138)	S1	35 (10)
LFC211NR	8.07 (206)	—	8.16 (208)	5.16 (132)	5.94 (152)	3.13 (80)	5.38 (138)	S3	35 (10)
LNFC222R	8.07 (206)	—	8.16 (208)	5.16 (132)	5.94 (152)	3.13 (80)	5.38 (138)	S5	35 (10)

Type 1 or 3R
100-200A GD, 30-200A HD Type VBII

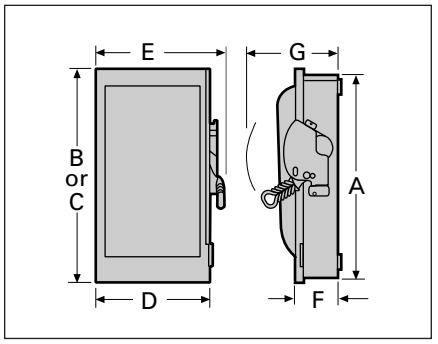

Type 1 or 3R
400-1200A Type VBII HD

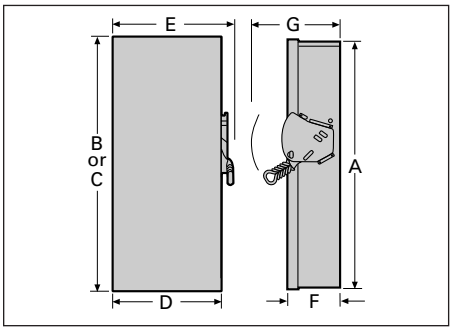

Type 4/4X or 12
30-200A HD Type VBII

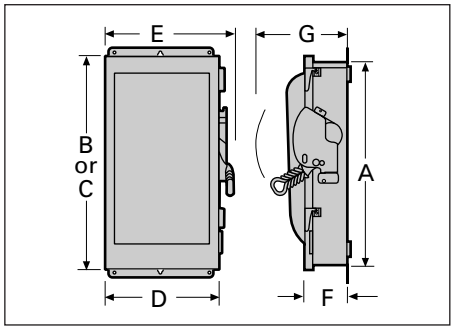

Type 4/4X or 12
400-1200A Type VBII HD

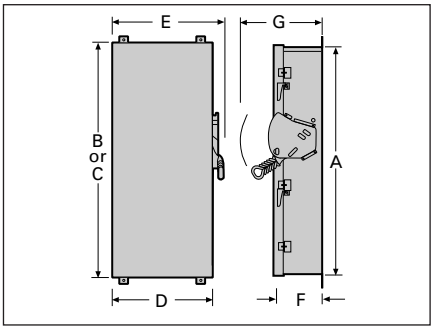

[1] Knocks not provided on Type 4 / 4X and 12 or on 800 & 1200A switches.

Type 1 & 3R Enclosures

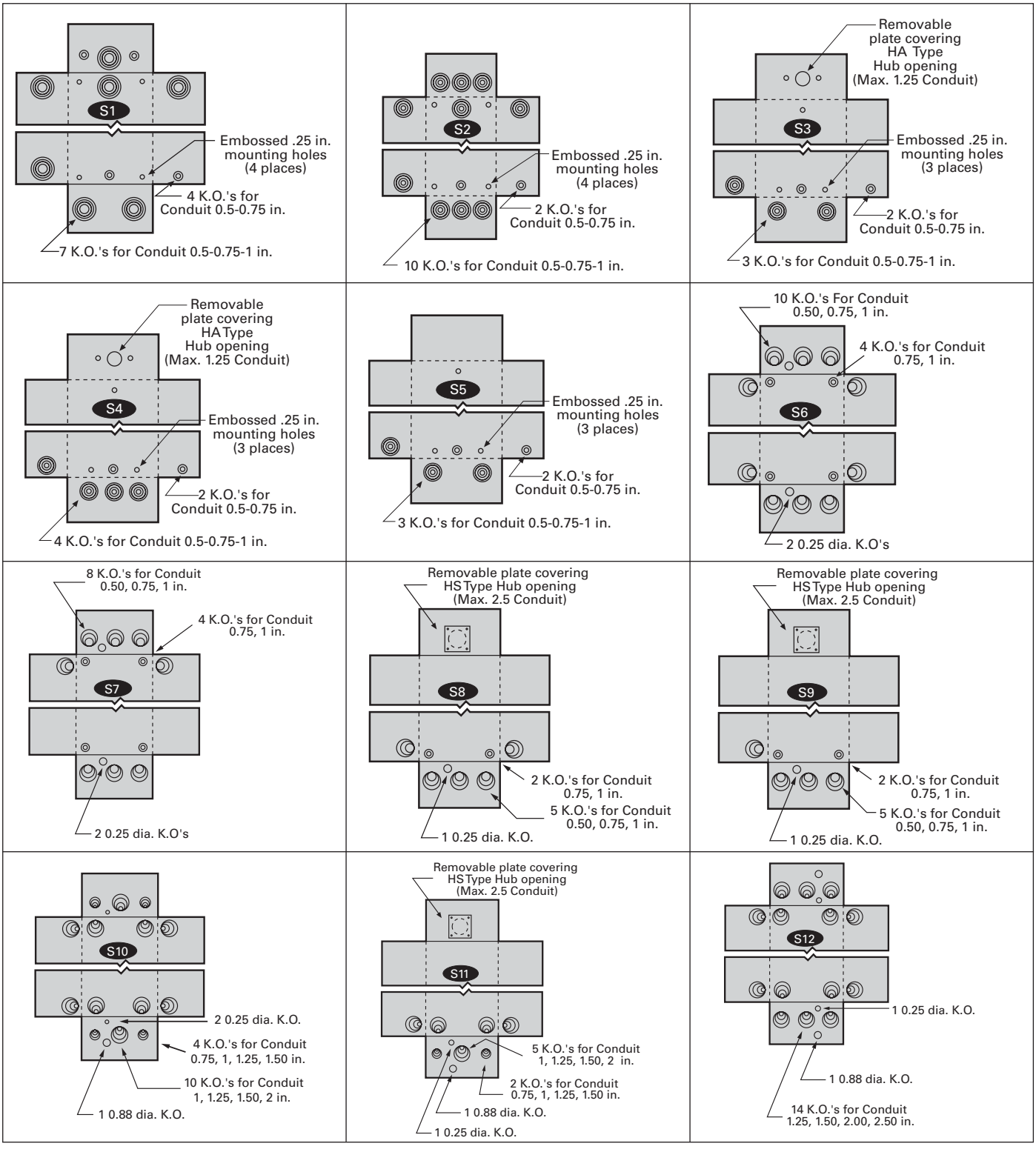

***For inches / millimeters conversion, multiply inches by 25.4.**

Heavy Duty Safety Switches

Knockout Diagrams

Type 1 & 3R Enclosures

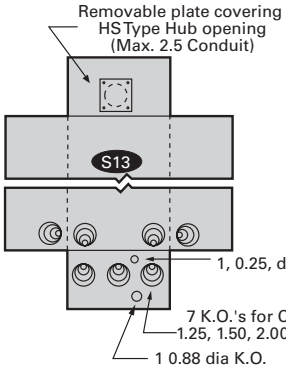

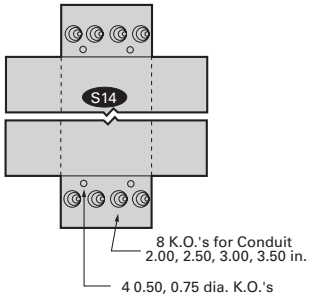

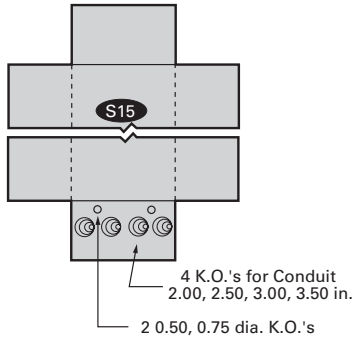

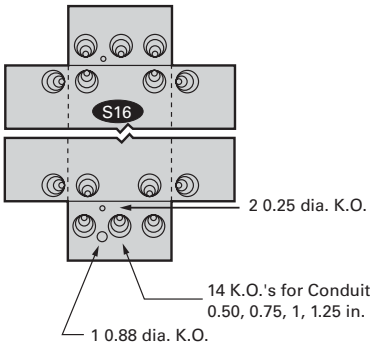

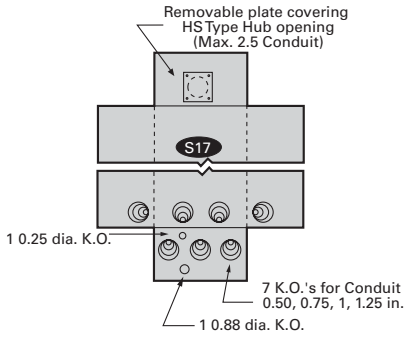

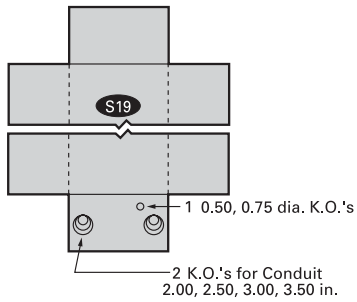

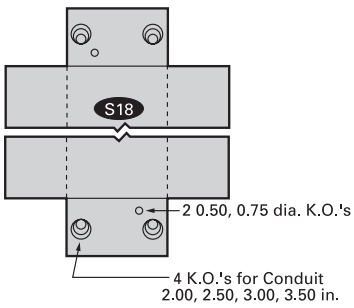

***For inches / millimeters conversion, multiply inches by 25.4.**

4 & 6-Pole Safety Switch Dimensions

Catalogue Number	**Enclosure** - Inches (mm)			**Mounting** - Inches (mm)		
	A	**B**	**C**	**D**	**E**	**F**
Figure 1, 4-Pole Fusible and Non-fusible, Type 1						
HNF461	24.50 (622)	9.53 (242)	6.09 (155)	19.00 (483)	6.75 (171)	0.268 (7)
HF461	29.12 (740)	9.53 (242)	6.09 (155)	23.50 (597)	6.75 (171)	0.268 (7)
HNF462	24.88 (632)	11.50 (292)	6.09 (155)	19.00 (483)	9.38 (238)	0.268 (7)
HF462	33.53 (852)	11.50 (292)	6.09 (155)	27.50 (699)	9.38 (238)	0.268 (7)
HNF463	27.62 (702)	12.18 (309)	6.09 (155)	19.36 (492)	8.00 (203)	0.268 (7)
HF463	36.44 (926)	12.18 (309)	6.09 (155)	28.11 (714)	8.00 (203)	0.268 (7)
HNF464	36.00 (914)	19.12 (486)	6.42 (163)	30.88 (784)	15.00 (381)	0.44 (11)
HF464	49.48 (1257)	19.12 (486)	6.42 (163)	45.50 (1130)	15.00 (381)	0.44 (11)
Figure 2, 4 & 6-Pole Fusible Type 12/3R and 4X						
HF461J, HF661J, HF661S	29.50 (622)	9.53 (242)	6.48 (165)	31.65 (804)	5.47 (139)	0.27 (7)
HF462J, HF662J, HF662S	33.53 (852)	11.50 (292)	6.48 (165)	35.69 (907)	8.00 (203)	0.27 (7)
HF463J, HF663J, HF663S	36.44 (926)	12.18 (309)	6.48 (165)	38.67 (982)	8.47 (215)	0.27 (7)
HF464J, HF664J, HF664S	49.48 (1257)	19.12 (486)	6.78 (172)	51.64 (1312)	13.44 (341)	0.33 (8)
Figure 2, 4 & 6-Pole Non-fusible Type 12/3R and 4X						
HNF461J, HNF661J, HNF661S	24.50 (622)	9.53 (242)	6.48 (165)	26.65 (667)	5.47 (139)	0.27 (7)
HNF462J, HNF662J, HNF662S	24.88 (632)	11.50 (292)	6.48 (165)	27.03 (687)	8.00 (203)	0.27 (7)
HNF463J, HNF663J, HNF663S	27.54 (700)	12.18 (309)	6.48 (165)	29.77 (756)	8.47 (215)	0.27 (7)
HNF464J, HNF664J, HNF664S	36.00 (914)	19.12 (486)	6.78 (172)	38.16 (969)	13.44 (341)	0.33 (8)

Figure 1: Type 1

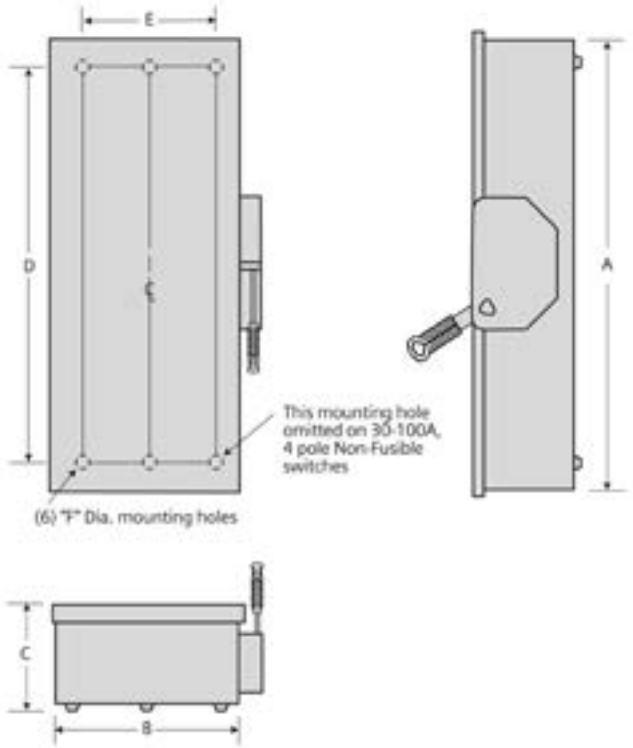

Figure 2 : Type 12/3R and 4X

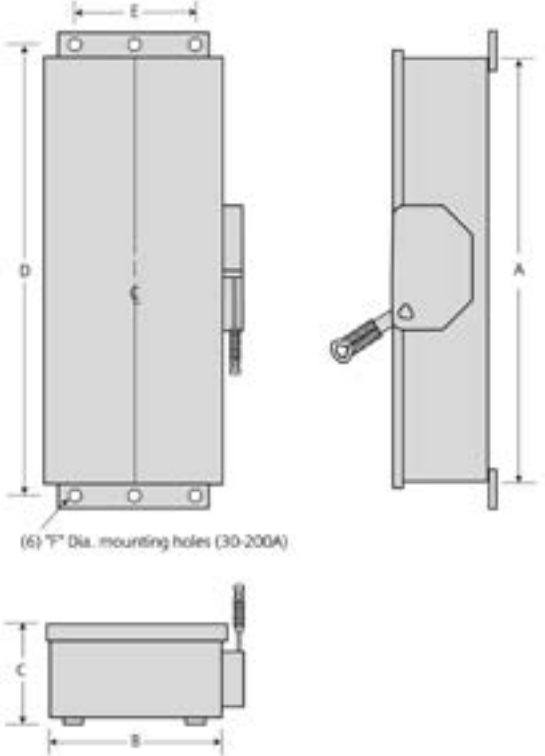

Special Application Safety Switches Dimension Drawings

Double Throw

Description

Double throw switches are intended to transfer loads from one power source to another. All 2 & 3-pole double throw switches are CSA certified and both horsepower and load break rated. Switches are rated for use on systems up to 10,000A when protected with Class H fuses or 200,000A when protected with Class R or Class T fuses②. They can also be used to connect a single source of power to either of two loads. In this application it is necessary to field modify fusible switches so that the fuses are on the load side of the switching mechanism.

A cover interlock is provided on all ampere ratings. The operating handle may be padlocked in the off position.

Fuse Capabilities of Fusible DT Switches

Amp Rating	Fuse Type			
	H	R	T	J
30 & 60A, 240V	Std	Yes (kit)	No	No
30 & 60A, 600V	Std	Yes (kit)	No	Yes③
100 & 200A	Std	Yes (kit)	Yes (kit)	Yes③



Double Throw Switches

System	Voltage	Number of Poles	Amps	Type 1 — Indoor Catalogue Number
Heavy Duty Fusible (30-200A) with Class H fuse spacings — Less Neutral②				
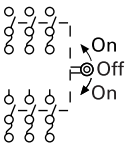	240 Volt AC or 250 Volt DC	3	30 60 100 200	**DTFC321** **DTFC322** **DTFC323** **DTFC324**
	600 Volt AC, 250 Volt DC	3	30 60 100 200	**DTFC361** **DTFC362** **DTFC363** **DTFC364**

System	Voltage	Number of Poles	Amps	Type 1 — Indoor Catalogue Number	Type 3R — Outdoor① Catalogue Number	Hub Type①
Heavy Duty Non-Fusible —Less Neutral②						
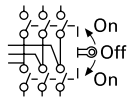	240 Volt AC or 250 Volt DC	2	30 60 100 200 400	**DTNFC221** **DTNFC222** **DTNFC323** **DTNFC224** **DTNFC225**	— — — — **DTNFC225R**	*
		3	30 60 100 200 400 600	**DTNFC321** **DTNFC322** **DTNFC323** **DTNFC324** **DTNFC325** **DTNFC326**	— — **DTNFC323R** **DTNFC324R** — —	**ECHS** *
	600 Volt AC, or 250 Volt DC	3	30 60 100 200 400 600	**DTNFC361** **DTNFC362** **DTNFC363** **DTNFC364** **DTNFC365** **DTNFC366**	**DTNFC361R** **DTNFC362R** **DTNFC363R** **DTNFC364R** **DTNFC365R** **DTNFC366R**	**ECHS** *

① Hub catalogue number available p. 3-36
② All Heavy Duty double throw switches with a catalogue number starting with "DT" are rated 200,000 AIC max. when protected by Class R, J or T fuses. Fuse ampere rating must not exceed switch ampere rating.
③ Move load base.
* Consult Siemens representative, 400A and larger Switches do not have hub provisions.

Accessories, Lug Data and Horsepower Ratings

Accessories – 2 and 3-Pole Switches Type "DT" Only①

Description		Catalogue Number
Neutral Kits	30 60 & 100A 200A 400 & 600A	**HNC612** **HNC263** **HNC264** **HNC678**
Equipment Ground Kit	30-200A (2) #14-4 AWG 400 & 600A (4) #14-2/0	**HG61234** **HG656**
Auxiliary Contacts (HD Only) (two required per switch)②	30-200A with (1) NO & (1) NC contact 30-200A with (2) NO & (2) NC contact 400-600A with (1) NO & (1) NC contact 400-600A with (2) NO & (2) NC contact	**HA161234** **HA261234** **HA165678** **HA265678**
Class R Fuse Clip Kits (two required per switch)	30A, 240V Kit 30A, 600V Kit and 60A, 240V Kit 60A, 600V Kit 100A Kit 200A Kit	**HR21** **HR612** **HR62** **HR63** **HR64**
Class T Fuse Adapter Kits (two required per pole)	100A, 240V Kit 100A, 600V Kit 200A, 240V Kit 200A, 600V Kit	**HT23** **HT63** **HT24** **HT64**
Type 3R Hubs (20-200A)	For 3/4" Conduit For 1" Conduit For 1 1/4" Conduit For 1 1/2" Conduit For 2" Conduit For 2 1/2" Conduit	**ECHS075** **ECHS100** **ECHS125** **ECHS150** **ECHS200** **ECHS250**

Maximum Horsepower Ratings

Fused

Ampere Rating	1-Phase AC	3-Phase AC			250V DC
	240V	240V	480V	600V	
30	3	$7^{1/2}$	15	20	5
60	10	15	30	50	10
100	15	30	60	75	20
200	15	60	125	150	40

Non-Fused

30	5	10	20	30	5
60	10	20	50	60	10
100	15	40	75	100	20
200	15	60	125	150	40
400-600	—	125	250	350	50

Wire Ranges (Line, Load and Neutral) per CEC Requirements

30-200A – 2 & 3-Pole Switches

Switch Ampere Rating	Wire Range (Cu/Al) DT VBII Design Line, Load and Neutral
30	(1) #14–6
60	(1) #14–2
100	(1) #14–1/0 AWG
200	(1) #6–250 kcmil

400-600A – 2 & 3-Pole Switches

Switch Ampere Rating	Wire Range (Cu/Al) DT VBII Design Line, Load and Neutral
400	(1) 1/0 AWG–750 kcmil or (2) 1/0 AWG–250 kcmil
600	(2) 1/0 AWG–500 kcmil

Replacement Parts – 2 and 3-Pole Switches Only①

Description		Catalogue Number
Type 1, 3R Replacement Handle	30-200A	**HHD61234**
Replacement Handle	400-600A	**HHD656**

① For "DT" VBII Type switches only.

② One aux. required for normal and one required for emergency switch line base.

VBII Design Double Throw Dimensions

Catalogue Number	Enclosure dimensions - Inches (mm)					
	A	B	C	D	E	F
Figure 1 (30-600A Type 1 & 3R)						
DTNFC221, DTNFC321, DTNFC361, DTNFC361R	24.50 (622)	9.53 (242)	6.09 (155)	19.00 (483)	6.75 (171)	0.268 (7)
DTFC321, DTFC321R, DTFC361	29.12 (740)	9.53 (242)	6.09 (155)	23.50 (597)	6.75 (171)	0.268 (7)
DTNFC222, DTNFC322, DTNFC362, DTNFC362R	24.88 (632)	11.50 (292)	6.09 (155)	19.00 (483)	9.38 (238)	0.268 (7)
DTFC322, DTFC362	33.45 (852)	11.50 (292)	6.09 (155)	27.50 (699)	9.38 (238)	0.268 (7)
DTNFC223, DTNFC323, DTNFC323R, DTNFC363, DTNFC363R	27.62 (702)	12.18 (309)	6.09 (155)	19.36 (492)	8.00 (203)	0.268 (7)
DTFC323, DTFC363	36.44 (926)	12.18 (309)	6.09 (155)	28.11 (714)	8.00 (203)	0.268 (7)
DTNFC224, DTNFC224R, DTNFC324, DTNFC324R, DTNFC364, DTNFC364R	36.00 (914)	19.12 (486)	6.42 (163)	31.00 (787)	15.00 (381)	0.44 (11)
DTFC324, DTFC364	49.44 (1256)	19.12 (486)	6.42 (163)	44.50 (1130)	15.00 (381)	0.44 (11)
DTNFC225, DTNFC225R, DTNFC325, DTNFC365, DTNFC365R	57.71 (1466)	28.22 (717)	9.44 (240)	49.75 (1264)	16.00 (406)	0.56 (14)
DTNFC326, DTNFC366, DTNFC366R	57.71 (1466)	28.22 (717)	9.44 (240)	49.75 (1264)	16.00 (406)	0.56 (14)

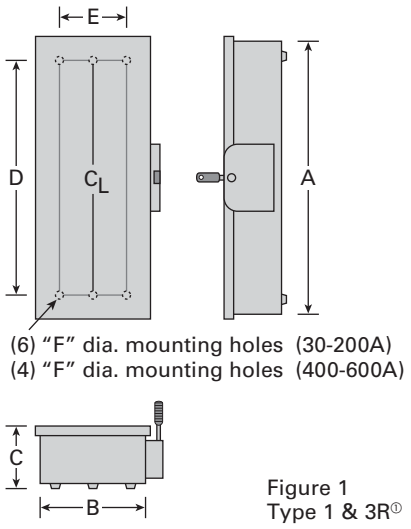

Figure 1
Type 1 & 3R①

① Drip hood not shown but provided on Type 3R enclosures.

Contents

3LD Switch Disconnectors

Quick selection guides	4-2—4-3
3LD3 Main Control and EMERGENCY_STOP switches UL508	4-4—4-13
3LD2 Main Control and EMERGENCY_STOP switches UL508	4-14—4-33
3LD5 Main Control and EMERGENCY_STOP switches UL489	4-34—4-43
Enclosed Rotary Disconnects	4-44—4-45

Type VBII (30-600A)

Features and Ordering Information	4-46
Switch and Handle Selection	4-47—4-48
Accessories	4-49
Dimensions and Lug Wire Ranges	4-50

Type MCS (30-200A)

Switches, Fuse, and No Fuse Kit—Selection	4-51
Handle Operators and Accessories	4-52
Dimensional Data for Fused Applications	4-53-4-54
Fixed Depth Handle Operator Dimensions	4-55

Type CFS Compact Fusible Switches

Features and Ordering Information	4-56
Switch and Handle—Selection	4-57
Accessories & 600-800 Handle Selection	4-58
Dimensions and Technical Characteristics	4-59

Type CNFS Compact Non-Fusible Switches

General information and catalog numbering system	4-60
General Features and ordering information	4-61
Switch, shaft and handle selection	4-62
Additional accessories	4-63

Type HCP Switchboard Units

Selection/Accessories	4-64
Dimensions	4-65



Base Mount



VBFS361

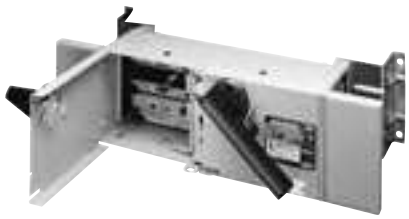

Panelboard Unit

Load switching devices for all applications

Fuseless switch disconnectors









	Type	3LD3 NEW	3LD2	3LD5 UL NEW
	Rated current I_n	16 ... 63 A	16 ... 250 A	30 ... 160 A
	Short-circuit current max.	6 kA	50 kA	50 kA
Selection acc. to utilization category	AC max.	AC-3	AC-3	AC-3
	DC max.	–	DC-22A	–
	Suitable fuses	–	–	–
Types of mounting	Panel mounting	■	■	■
	Mounting on a standard mounting rail	■	■ (up to 125 A)	■ (up to 63 A)
	Front mounting	■	■	■
	Mounting on busbar systems (spacing of the busbars)	–	–	–
	Draw-out technology	–	–	–
Methods of operation	Manual from the front	■	■	■
	Manual from the side	–	–	–
	Remote-controllable	–	–	–
Number of poles	1-pole	–	–	–
	2-pole	–	–	–
	3-pole	■	■	■
	4-pole	■	■	■
	6-pole	–	■	–
Switching function	All poles	■	■	■
	Individual poles switchable	–	–	–



3LD3 NEW



3LD2



Type			3LD30	3LD31	3LD32	3LD33	3LD34	3LD20	3LD21	3LD22	3LD25	3LD27
General technical specifications acc. to UL												
General technical specifications												
Certification according to UL standard			UL 508					UL 508				
I_n acc. to UL 508/UL60947-4-1 | UL489		A	16|–	25|–	32|–	40|–	63|–	16|–	25|–	32|–	63|–	100|–
U_e acc. to UL 508/UL60947-4-1 | UL489		V AC	600|–					600|–				
Operating and short-circuit behavior												
Operational power, 3-phase	At 480 V	hp	7.5	10	20	20	25	7.5	10	20	40	60
	At 600 V	hp	10	15	20	20	30	10	15	20	50	75
Short circuit current rating (SCCR)	At 480 V | at 600 V	kA	5|5					5|5	5|5	5|5	5|5	10|10
Upstream fuse according to UL			RK5					RK5				
For IEC ratings, reference document in Industry Mall or Global LV10 catalog												



3LD2



3LD5 UL NEW



Type			3LD28	3LD23	3LD24	3LD50	3LD52	3LD54	3LD56	3LD58
General technical specifications acc. to UL										
General technical specifications										
Certification according to UL standard			UL 508			UL60947-4-1 / UL489				
I_n acc. to UL 508/UL60947-4-1 | UL489		A	125|–	160|–	250|–	30|30	60|60	100|100	125|125	150|150
U_e acc. to UL 508/UL60947-4-1 | UL489		V AC	600|–			480|480				
Operating and short-circuit behavior										
Operational power, 3-phase	At 480 V	hp	75	75	100	20	30	60	75	100
	At 600 V	hp	100	50	75	–	–	–	–	–
Short circuit current rating (SCCR)	At 480 V | at 600 V	kA	10|10	10|10	10|10	50|–	65|–	65|–	65|–	50|–
Upstream fuse according to UL			RK5			J|CC	J	J	J	J
For IEC ratings, reference document in Industry Mall or Global LV10 catalog										

Disconnect Switches

3LD3 Main Control and EMERGENCY-STOP Switches

System Overview

Basic units for front mounting



3P rotary operating mechanisms



3P knob-operated mechanisms



3P+N rotary operating mechanisms



3P+N knob-operated mechanisms

Basic units for panel mounting



3P rotary operating mechanisms



3P knob-operated mechanisms



3P+N rotary operating mechanisms

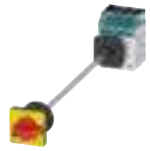

3P+N knob-operated mechanisms

Basic units for installation in distribution boards



3P knob-operated mechanisms



3P basic switches without knob-operated mechanism



3P+N knob-operated mechanisms



3P+N basic switches without knob-operated mechanism

Additional poles and auxiliary switches



N switching contacts



N/PE terminals



Auxiliary switches

Operating mechanisms





Rotary operating mechanisms for front or panel mounting (center hole)





Knob-operated mechanisms for front or panel mounting (center hole)



Door-coupling rotary operating mechanisms



Door-coupling knob-operated mechanisms

Other accessories



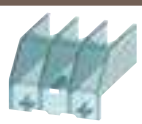

Terminal covers, 1 and 3-pole



Inscription labels



Note: You will find a detailed range of accessories with the basic units.

Disconnect Switches

3LD3 Mounting and Accessories

System Overview

Mounting concept and accessories

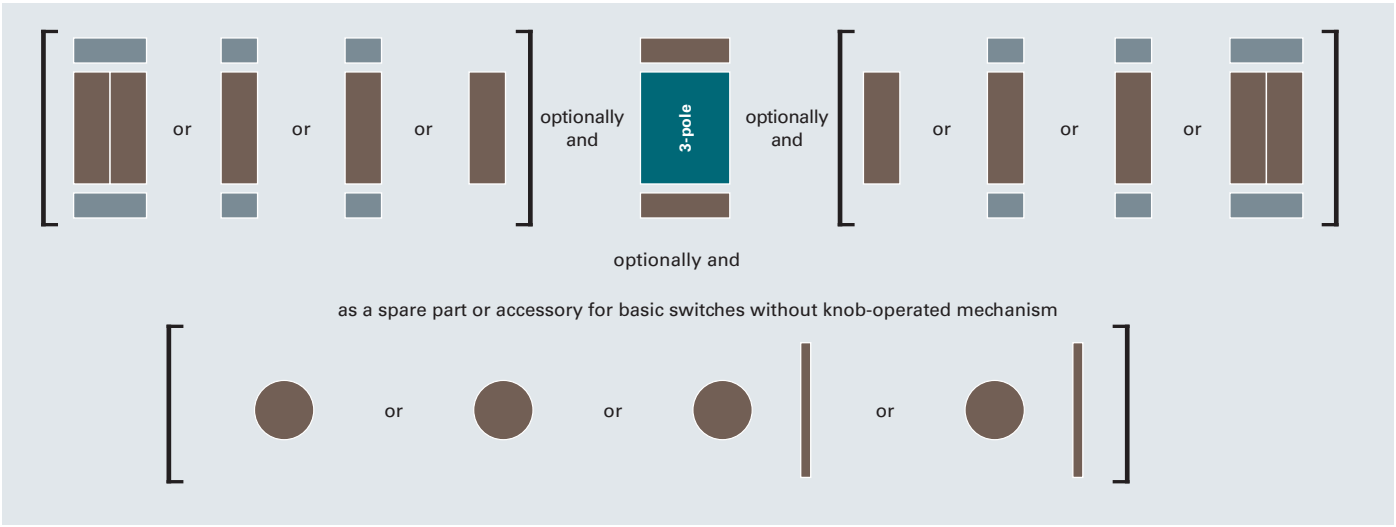

Legend

N switching contact[1]
N/PE terminal
Auxiliary switch
Terminal cover
Rotary operating mechanism, center-hole mounting
Knob-operated mechanism, center-hole mounting
Door-coupling rotary operating mechanism, center-hole mounting
Door-coupling knob-operated mechanism, center-hole mounting

[1] The N switching contact first has to be mounted on the basic unit

4 DISCONNECT SWITCHES

Mounting types

You will find further information in the configuration manual: sie.ag/2UlrAvy

Front mounting



The switches for front mounting are mounted on the inside of covers, side panels or, if applicable, control cabinet doors (depending on the applicable standard and switching function). The switches are mounted via the 22.5 mm diameter center hole.

Panel mounting



The switches for panel mounting are snapped onto 35 mm standard mounting rails according to EN 60715 or screw-mounted on mounting panels. The actuators are connected to the lower section of the switch through a door coupling, which can be released in its zero position, and a 300 mm long switch shaft. When the control cabinet door is open, the switch can be protected against inadvertent operation by removing the switch shaft from the lower section of the switch. The overall depth can be adapted to individual requirements by adjusting the switch shaft length.

Distribution board mounting



The switches for distribution board mounting are suited for operation in distribution boards and for switching inside control cabinets or distributors. They have cap and mounting dimensions acc. to DIN 43880 and can be fitted under the same cover together with miniature circuit breakers. The selector switches can be locked in their OFF position with no more than one padlock with a hasp thickness of 4 to 6 mm.

Basic switches without knob-operated mechanism



For the basic switch variant without knob-operated mechanism, the appropriate door-coupling rotary operating mechanism can be ordered separately.

Disconnect Switches

3LD3 Main Control and EMERGENCY-STOP Switches

System Overview

3LD3 main control and EMERGENCY-STOP switches, front mounting



			Operating mechanisms, black	
		Number of poles	3P	
			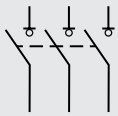	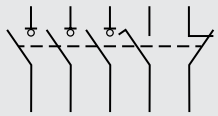
Uninterrupted current I_u At AC-21A, 380 … 440 V	**Operational power P At AC-23A, 380 … 440 V**	**Operational power P At AC-3, 380 … 440 V**	**Without auxiliary switch**	**1 NO + 1 NC**
Rotary operating mechanisms				
16 A	7.5 kW	5.5 kW	**3LD3054-0TK51**	**3LD3054-1TK51**
25 A	9 kW	7.5 kW	**3LD3154-0TK51**	**3LD3154-1TK51**
32 A	11.5 kW	9.5 kW	**3LD3254-0TK51**	**3LD3254-1TK51**
40 A	18.5 kW	11.5 kW	**3LD3354-0TK51**	**3LD3354-1TK51**
63 A	22 kW	18.5 kW	**3LD3454-0TK51**	**3LD3454-1TK51**
Knob-operated mechanisms				
16 A	7.5 kW	5.5 kW	**3LD3050-0TK11**	**3LD3050-1TK11**
25 A	9 kW	7.5 kW	**3LD3150-0TK11**	**3LD3150-1TK11**
32 A	11.5 kW	9.5 kW	**3LD3250-0TK11**	**3LD3250-1TK11**
40 A	18.5 kW	11.5 kW	**3LD3350-0TK11**	**3LD3350-1TK11**
63 A	22 kW	18.5 kW	**3LD3450-0TK11**	**3LD3450-1TK11**

Scope of supply:

- Including terminal covers for the infeed side

Accessories

				3LD30 (16 A)	3LD31 (25 A)	3LD32 (32 A)	3LD33 (40 A)	3LD34 (63 A)
Additional poles								
	**Variant**	**Contacts**	**Catalog No.**					
	Switching contact for N conductor (4th contact)	Leading switch-on, lagging switch-off	**3LD9340-0B**	■	■	■	■	■
	N terminal	Through-type	**3LD9340-2B**	■	■	■	■	■
	PE terminal	Through-type	**3LD9340-3B**	■	■	■	■	■
Auxiliary switches								
		Contacts	**Catalog No.**					
		1 NO + 1 NC	**3LD9340-6B**	■	■	■	■	■
Rotary operating mechanisms								
		Color	**Catalog No.**					
		Black	**3LD9344-4C**	■	■	■	■	■
		Red/yellow	**3LD9344-5C**	■	■	■	■	■
Knob-operated mechanisms								
		Color	**Catalog No.**					
		Black	**3LD9343-6C**	■	■	■	■	■
		Red/yellow	**3LD9343-7C**	■	■	■	■	■







Operating mechanisms, red/yellow					
3P+N		3P		3P+N	
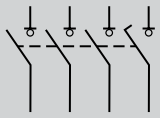	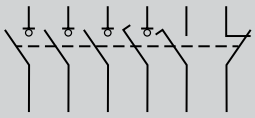	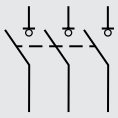	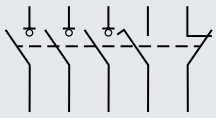	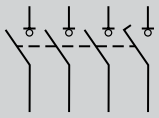	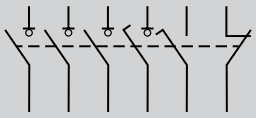
Without auxiliary switch	1 NO + 1 NC	Without auxiliary switch	1 NO + 1 NC	Without auxiliary switch	1 NO + 1 NC
3LD3054-0TL51	3LD3054-1TL51	3LD3054-0TK53	3LD3054-1TK53	3LD3054-0TL53	3LD3054-1TL53
3LD3154-0TL51	3LD3154-1TL51	3LD3154-0TK53	3LD3154-1TK53	3LD3154-0TL53	3LD3154-1TL53
3LD3254-0TL51	3LD3254-1TL51	3LD3254-0TK53	3LD3254-1TK53	3LD3254-0TL53	3LD3254-1TL53
3LD3354-0TL51	3LD3354-1TL51	3LD3354-0TK53	3LD3354-1TK53	3LD3354-0TL53	3LD3354-1TL53
3LD3454-0TL51	3LD3454-1TL51	3LD3454-0TK53	3LD3454-1TK53	3LD3454-0TL53	3LD3454-1TL53
3LD3050-0TL11	3LD3050-1TL11	3LD3050-0TK13	3LD3050-1TK13	3LD3050-0TL13	3LD3050-1TL13
3LD3150-0TL11	3LD3150-1TL11	3LD3150-0TK13	3LD3150-1TK13	3LD3150-0TL13	3LD3150-1TL13
3LD3250-0TL11	3LD3250-1TL11	3LD3250-0TK13	3LD3250-1TK13	3LD3250-0TL13	3LD3250-1TL13
3LD3350-0TL11	3LD3350-1TL11	3LD3350-0TK13	3LD3350-1TK13	3LD3350-0TL13	3LD3350-1TL13
3LD3450-0TL11	3LD3450-1TL11	3LD3450-0TK13	3LD3450-1TK13	3LD3450-0TL13	3LD3450-1TL13

			3LD30 (16 A)	3LD31 (25 A)	3LD32 (32 A)	3LD33 (40 A)	3LD34 (63 A)
Terminal covers							
	• Pack of 4 units						
	Version	**Catalog No.**					
	For N switching contacts, N terminals or PE terminals	**3LD9341-2A**	■	■	■	■	■
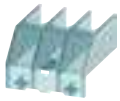	For 3-pole 3LD3 switch disconnectors	**3LD9341-0A**	■	■	■	■	■
Inscription labels							
	• Pack of 10 units						
	Inscription	**Catalog No.**					
	German / English (Hauptschalter / Main Switch)	**3LD9346-1A**	■	■	■	■	■
	French / Spanish (Interrupteur Principal / Interruptor Principal)	**3LD9346-2A**	■	■	■	■	■
	Without inscription	**3LD9346-3A**	■	■	■	■	■

Disconnect Switches

3LD3 Main Control and EMERGENCY-STOP Switches, Panel Mounting, 6 kA_{rms}

Selection

3LD3 main control and EMERGENCY-STOP switches, panel mounting



Number of poles	Operating mechanisms, black 3P	
	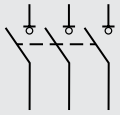	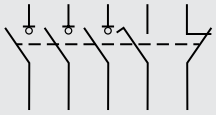
Uninterrupted current I_u At AC-21A, 380 … 440 V	**Operational power P At AC-23A, 380 … 440 V**	**Operational power P At AC-3, 380 … 440 V**	**Without auxiliary switch**	**1 NO + 1 NC**
Rotary operating mechanisms				
16 A	7.5 kW	5.5 kW	**3LD3048-0TK51**	**3LD3048-1TK51**
25 A	9 kW	7.5 kW	**3LD3148-0TK51**	**3LD3148-1TK51**
32 A	11.5 kW	9.5 kW	**3LD3248-0TK51**	**3LD3248-1TK51**
40 A	18.5 kW	11.5 kW	**3LD3348-0TK51**	**3LD3348-1TK51**
63 A	22 kW	18.5 kW	**3LD3448-0TK51**	**3LD3448-1TK51**
Knob-operated mechanisms				
16 A	7.5 kW	5.5 kW	**3LD3040-0TK11**	**3LD3040-1TK11**
25 A	9 kW	7.5 kW	**3LD3140-0TK11**	**3LD3140-1TK11**
32 A	11.5 kW	9.5 kW	**3LD3240-0TK11**	**3LD3240-1TK11**
40 A	18.5 kW	11.5 kW	**3LD3340-0TK11**	**3LD3340-1TK11**
63 A	22 kW	18.5 kW	**3LD3440-0TK11**	**3LD3440-1TK11**

Scope of supply:
- Including terminal covers for the infeed side

Mounting:
- Using screws or snap-on mounting on 35 mm mounting rails

Accessories

				3LD30 (16 A)	3LD31 (25 A)	3LD32 (32 A)	3LD33 (40 A)	3LD34 (63 A)
Additional poles								
	**Variant**	**Contacts**	**Catalog No.**					
	Switching contact for N conductor (4th contact)	**Leading switch-on, lagging switch-off**	**3LD9340-0C**	■	■	■	■	■
	N terminal	**Through-type**	**3LD9340-2C**	■	■	■	■	■
	PE terminal	**Through-type**	**3LD9340-3C**	■	■	■	■	■
Auxiliary switches								
		**Contacts**	**Catalog No.**					
		1 NO + 1 NC	**3LD9340-6C**	■	■	■	■	■
Rotary operating mechanisms								
	**Version**	**Color**	**Catalog No.**					
	Incl. funnel	**Black**	**3LD9344-2C**	■	■	■	■	■
		Red/yellow	**3LD9344-3C**	■	■	■	■	■
Knob-operated mechanisms								
	**Version**	**Color**	**Catalog No.**					
	Incl. funnel	**Black**	**3LD9343-4C**	■	■	■	■	■
		Red/yellow	**3LD9343-5C**	■	■	■	■	■

Disconnect Switches

3LD3 Main Control and EMERGENCY-STOP Switches, Panel Mounting, 6 kA_{rms}

Selection



Operating mechanisms, red/yellow					
3P+N		3P		3P+N	
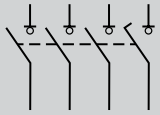	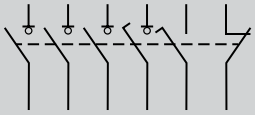	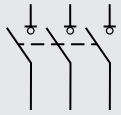	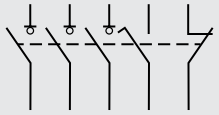	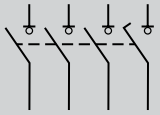	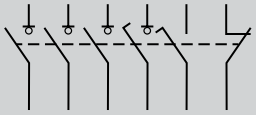
Without auxiliary switch	1 NO + 1 NC	Without auxiliary switch	1 NO + 1 NC	Without auxiliary switch	1 NO + 1 NC
3LD3048-0TL51	3LD3048-1TL51	3LD3048-0TK53	3LD3048-1TK53	3LD3048-0TL53	3LD3048-1TL53
3LD3148-0TL51	3LD3148-1TL51	3LD3148-0TK53	3LD3148-1TK53	3LD3148-0TL53	3LD3148-1TL53
3LD3248-0TL51	3LD3248-1TL51	3LD3248-0TK53	3LD3248-1TK53	3LD3248-0TL53	3LD3248-1TL53
3LD3348-0TL51	3LD3348-1TL51	3LD3348-0TK53	3LD3348-1TK53	3LD3348-0TL53	3LD3348-1TL53
3LD3448-0TL51	3LD3448-1TL51	3LD3448-0TK53	3LD3448-1TK53	3LD3448-0TL53	3LD3448-1TL53
3LD3040-0TL11	3LD3040-1TL11	3LD3040-0TK13	3LD3040-1TK13	3LD3040-0TL13	3LD3040-1TL13
3LD3140-0TL11	3LD3140-1TL11	3LD3140-0TK13	3LD3140-1TK13	3LD3140-0TL13	3LD3140-1TL13
3LD3240-0TL11	3LD3240-1TL11	3LD3240-0TK13	3LD3240-1TK13	3LD3240-0TL13	3LD3240-1TL13
3LD3340-0TL11	3LD3340-1TL11	3LD3340-0TK13	3LD3340-1TK13	3LD3340-0TL13	3LD3340-1TL13
3LD3440-0TL11	3LD3440-1TL11	3LD3440-0TK13	3LD3440-1TK13	3LD3440-0TL13	3LD3440-1TL13

				3LD30 (16 A)	3LD31 (25 A)	3LD32 (32 A)	3LD33 (40 A)	3LD34 (63 A)
Switching shafts								
	Cross-section	Length	Catalog No.					
	6 × 6 mm	600 mm	3LD93451C	■	■	■	■	■
Door-coupling rotary operating mechanisms								
	Variant	Color	Catalog No.					
	Rotary operating mechanisms 66 × 66 mm	Black	3LD9344-2CA	■	■	■	■	■
		Red/yellow	3LD9344-3CA	■	■	■	■	■
	Knob-operated mechanisms 48 × 48 mm	Black	3LD9343-4CA	■	■	■	■	■
		Red/yellow	3LD9343-5CA	■	■	■	■	■
Terminal covers								
	• Pack of 4 units							
	Version		Catalog No.					
	For N switching contacts, N terminals or PE terminals		3LD9341-2A	■	■	■	■	■
	For 3LD3 3-pole switch disconnectors		3LD9341-0A	■	■	■	■	■
Inscription labels								
	• Pack of 10 units							
	Inscription		Catalog No.					
	German / English (Hauptschalter / Main Switch)		3LD9346-1A	■	■	■	■	■
	French / Spanish (Interrupteur Principal / Interruptor Principal)		3LD9346-2A	■	■	■	■	■
	Without inscription		3LD9346-3A	■	■	■	■	■

Disconnect Switches

3LD3 Main Control and EMERGENCY-STOP Switches, Panel Mounting, 6 kA_{rms}

Selection

3LD3 main control and EMERGENCY-STOP switches, installation in distribution boards and basic switches without direct operating mechanism



Number of poles	Operating mechanisms, black 3P	
	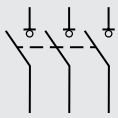	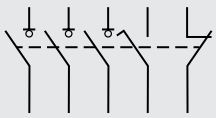
Uninterrupted current I_u At AC-21A, 380 … 440 V	**Operational power P At AC-23A, 380 … 440 V**	**Operational power P At AC-3, 380 … 440 V**	**Without auxiliary switch**	**1 NO + 1 NC**
Basic switch with masking plate and selector knob, standard rail mounting				
16 A	7.5 kW	5.5 kW	**3LD3030-0TK11**	**3LD3030-1TK11**
25 A	9 kW	7.5 kW	**3LD3130-0TK11**	**3LD3130-1TK11**
32 A	11.5 kW	9.5 kW	**3LD3230-0TK11**	**3LD3230-1TK11**
40 A	18.5 kW	11.5 kW	**3LD3330-0TK11**	**3LD3330-1TK11**
63 A	22 kW	18.5 kW	**3LD3430-0TK11**	**3LD3430-1TK11**
Basic switches without knob-operated mechanism				
16 A	7.5 kW	5.5 kW	**3LD3010-0TK05**	**3LD3010-1TK05**
25 A	9 kW	7.5 kW	**3LD3110-0TK05**	**3LD3110-1TK05**
32 A	11.5 kW	9.5 kW	**3LD3210-0TK05**	**3LD3210-1TK05**
40 A	18.5 kW	11.5 kW	**3LD3310-0TK05**	**3LD3310-1TK05**
63 A	22 kW	18.5 kW	**3LD3410-0TK05**	**3LD3410-1TK05**

Scope of supply:
- Basic switches without direct operating mechanism, incl. terminal covers for the infeed side

Mounting:
- Using screws or snap-on mounting on 35 mm mounting rails

Accessories for switches for installation in distribution boards and basic switches without knob-operated mechanism

				3LD30 (16 A)	3LD31 (25 A)	3LD32 (32 A)	3LD33 (40 A)	3LD34 (63 A)
Additional poles								
	**Variant**	**Contacts**	**Catalog No.**					
	Switching contact for N conductor (4th contact)	Leading switch-on, lagging switch-off	**3LD9340-0C**	■	■	■	■	■
	N terminal	Through-type	**3LD9340-2C**	■	■	■	■	■
	PE terminal	Through-type	**3LD9340-3C**	■	■	■	■	■
Auxiliary switches								
		**Contacts**	**Catalog No.**					
		1 NO + 1 NC	**3LD9340-6C**	■	■	■	■	■
Terminal covers								
	• Pack of 4 units							
	**Version**		**Catalog No.**					
	For N switching contacts, N terminals or PE terminals		**3LD9341-2A**	■	■	■	■	■
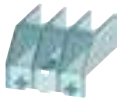	For 3LD3 3-pole switch disconnectors		**3LD9341-0A**	■	■	■	■	■
Switching shafts								
	**Cross-section**	**Length**	**Catalog No.**					
	6 × 6 mm	600 mm	**3LD93451C**	■	■	■	■	■

Disconnect Switches

3LD3 Main Control and EMERGENCY-STOP Switches, Panel Mounting, 6 kA_{rms}

Selection







Operating mechanisms, red/yellow					
3P+N		3P		3P+N	
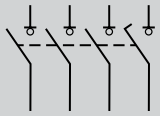	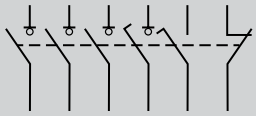	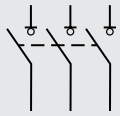	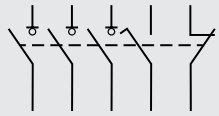	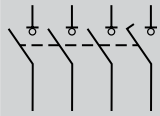	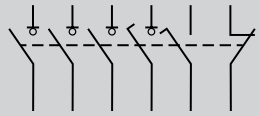
Without auxiliary switch	1 NO + 1 NC	Without auxiliary switch	1 NO + 1 NC	Without auxiliary switch	1 NO + 1 NC
3LD3030-0TL11	3LD3030-1TL11	3LD3030-0TK13	3LD3030-1TK13	3LD3030-0TL13	3LD3030-1TL13
3LD3130-0TL11	3LD3130-1TL11	3LD3130-0TK13	3LD3130-1TK13	3LD3130-0TL13	3LD3130-1TL13
3LD3230-0TL11	3LD3230-1TL11	3LD3230-0TK13	3LD3230-1TK13	3LD3230-0TL13	3LD3230-1TL13
3LD3330-0TL11	3LD3330-1TL11	3LD3330-0TK13	3LD3330-1TK13	3LD3330-0TL13	3LD3330-1TL13
3LD3430-0TL11	3LD3430-1TL11	3LD3430-0TK13	3LD3430-1TK13	3LD3430-0TL13	3LD3430-1TL13
3LD3010-0TL05	3LD3010-1TL05	–	–	–	–
3LD3110-0TL05	3LD3110-1TL05	–	–	–	–
3LD3210-0TL05	3LD3210-1TL05	–	–	–	–
3LD3310-0TL05	3LD3310-1TL05	–	–	–	–
3LD3410-0TL05	3LD3410-1TL05	–	–	–	–

Accessories for basic switches without operating mechanism			3LD30 (16 A)	3LD31 (25 A)	3LD32 (32 A)	3LD33 (40 A)	3LD34 (63 A)
Rotary operating mechanisms							
	**Version**	**Color**	**Catalog No.**				
	Incl. funnel	Black	3LD9344-2C	■	■	■	■	■
		Red/yellow	3LD9344-3C	■	■	■	■	■
Knob-operated mechanisms							
	**Version**	**Color**	**Catalog No.**				
	Incl. funnel	Black	3LD9343-4C	■	■	■	■	■
		Red/yellow	3LD9343-5C	■	■	■	■	■
Door-coupling rotary operating mechanisms							
	**Variant**	**Color**	**Catalog No.**				
	Rotary operating mechanisms 66 × 66 mm	Black	3LD9344-2CA	■	■	■	■	■
		Red/yellow	3LD9344-3CA	■	■	■	■	■
	Knob-operated mechanisms 48 × 48 mm	Black	3LD9343-4CA	■	■	■	■	■
		Red/yellow	3LD9343-5CA	■	■	■	■	■
Switching shafts							
	**Cross-section**	**Length**	**Catalog No.**				
	6 × 6 mm	600 mm	3LD93451C	■	■	■	■	■
Inscription labels							
	• Pack of 10 units						
	Inscription		**Catalog No.**				
	German / English (Hauptschalter / Main Switch)		3LD9346-1A	■	■	■	■	■
	French / Spanish (Interrupteur Principal / Interruptor Principal)		3LD9346-2A	■	■	■	■	■
	Without inscription		3LD9346-3A	■	■	■	■	■

3LD3 main control and EMERGENCY-STOP switches, accessories				3LD30 (16 A)	3LD31 (25 A)	3LD32 (32 A)	3LD33 (40 A)	3LD34 (63 A)
Switching contacts for N conductor (4th contact)								
	Version	**Contacts**	**Catalog No.**					
	For front mounting	Leading switch-on, lagging switch-off	**3LD9340-0B**	■	■	■	■	■
	For panel mounting, installation in distribution boards and basic switches without knob-operated mechanism	Leading switch-on, lagging switch-off	**3LD9340-0C**	■	■	■	■	■
N terminals								
	Version	**Contacts**	**Catalog No.**					
	For front mounting	Through-type	**3LD9340-2B**	■	■	■	■	■
	For panel mounting, installation in distribution boards and basic switches without knob-operated mechanism	Through-type	**3LD9340-2C**	■	■	■	■	■
PE terminals								
	Version	**Contacts**	**Catalog No.**					
	For front mounting	Through-type	**3LD9340-3B**	■	■	■	■	■
	For panel mounting, installation in distribution boards and basic switches without knob-operated mechanism	Through-type	**3LD9340-3C**	■	■	■	■	■
Auxiliary switches								
	Version	**Contacts**	**Catalog No.**					
	For front mounting	1 NO + 1 NC	**3LD9340-6B**	■	■	■	■	■
	For panel mounting, installation in distribution boards and basic switches without knob-operated mechanism	1 NO + 1 NC	**3LD9340-6C**	■	■	■	■	■

3LD3 main control and EMERGENCY-STOP switches, accessories				3LD30 (16 A)	3LD31 (25 A)	3LD32 (32 A)	3LD33 (40 A)	3LD34 (63 A)
Rotary operating mechanisms								
Version		**Color**	**Catalog No.**					
 For front mounting, without funnel		Black	**3LD9344-4C**	■	■	■	■	■
		Red/ yellow	**3LD9344-5C**	■	■	■	■	■
 For panel mounting and basic switches without knob-operated mechanism, with funnel		Black	**3LD9344-2C**	■	■	■	■	■
		Red/ yellow	**3LD9344-3C**	■	■	■	■	■
Knob-operated mechanisms								
Version		**Color**	**Catalog No.**					
 For front mounting, without funnel		Black	**3LD9343-6C**	■	■	■	■	■
		Red/ yellow	**3LD9343-7C**	■	■	■	■	■
 For panel mounting and basic switches without knob-operated mechanism, with funnel		Black	**3LD9343-4C**	■	■	■	■	■
		Red/ yellow	**3LD9343-5C**	■	■	■	■	■
Door-coupling rotary operating mechanisms								
Version	**Variant**	**Color**	**Catalog No.**					
 For panel mounting and basic switches without knob-operated mechanism	Rotary operating mechanisms 66 × 66 mm	Black	**3LD9344-2CA**	■	■	■	■	■
		Red/ yellow	**3LD9344-3CA**	■	■	■	■	■
	Knob-operated mechanisms 48 × 48 mm	Black	**3LD9343-4CA**	■	■	■	■	■
		Red/ yellow	**3LD9343-5CA**	■	■	■	■	■
Terminal covers								
• For front mounting, panel mounting, installation in distribution boards and basic switches without knob-operated mechanism • Pack of 4 units								
Number of poles			**Catalog No.**					
 1-pole			**3LD9341-2A**	■	■	■	■	■
 3-pole			**3LD9341-0A**	■	■	■	■	■
Switching shafts								
 **Cross-section**	**Length**		**Catalog No.**					
6 × 6 mm	600 mm		**3LD93451C**	■	■	■	■	■
Inscription labels								
 • Pack of 10 units • Not for installation in distribution boards								
Inscription			**Catalog No.**					
German / English (Hauptschalter / Main Switch)			**3LD9346-1A**	■	■	■	■	■
French / Spanish (Interrupteur Principal / Interruptor Principal)			**3LD9346-2A**	■	■	■	■	■
Without inscription			**3LD9346-3A**	■	■	■	■	■

Disconnect Switches

3LD2 Switch Disconnectors

System Overview

Basic units for front mounting


3P rotary operating mechanisms


3P knob-operated mechanisms (3LD23/3LD24)


3P knob-operated mechanisms


3P+N rotary operating mechanisms


3P+N knob-operated mechanisms (3LD23/3LD24)


3P+N knob-operated mechanisms


6P rotary operating mechanisms

Basic units for panel mounting


3P rotary operating mechanisms


3P knob-operated mechanisms (3LD23/3LD24)


3P knob-operated mechanisms, defeatable


3P+N rotary operating mechanisms


3P+N knob-operated mechanisms (3LD23/3LD24)


3P+N knob-operated mechanisms, defeatable


6P rotary operating mechanisms

Basic units for installation in distribution boards/enclosures, DC


3P knob-operated mechanisms


3P+N knob-operated mechanisms


8P DC isolators

Additional poles and auxiliary switches


N switching contacts


N/PE terminals (through-type)


Auxiliary switches (standard version)


Auxiliary switch for mounting on the front NEW

Operating mechanisms



Rotary operating mechanisms for 4-hole and center-hole mounting


Knob-operated mechanisms (3LD23/3LD24)


Switching shafts


Coupling pieces without ON-lock


Assembly tools for center-hole mounting

Other accessories


Terminal covers, 1-pole


Terminal covers, 3 and 4-pole


Inscription labels (with and without inscription)

Note: You will find a detailed range of accessories with the basic units.

Mounting concept and accessories

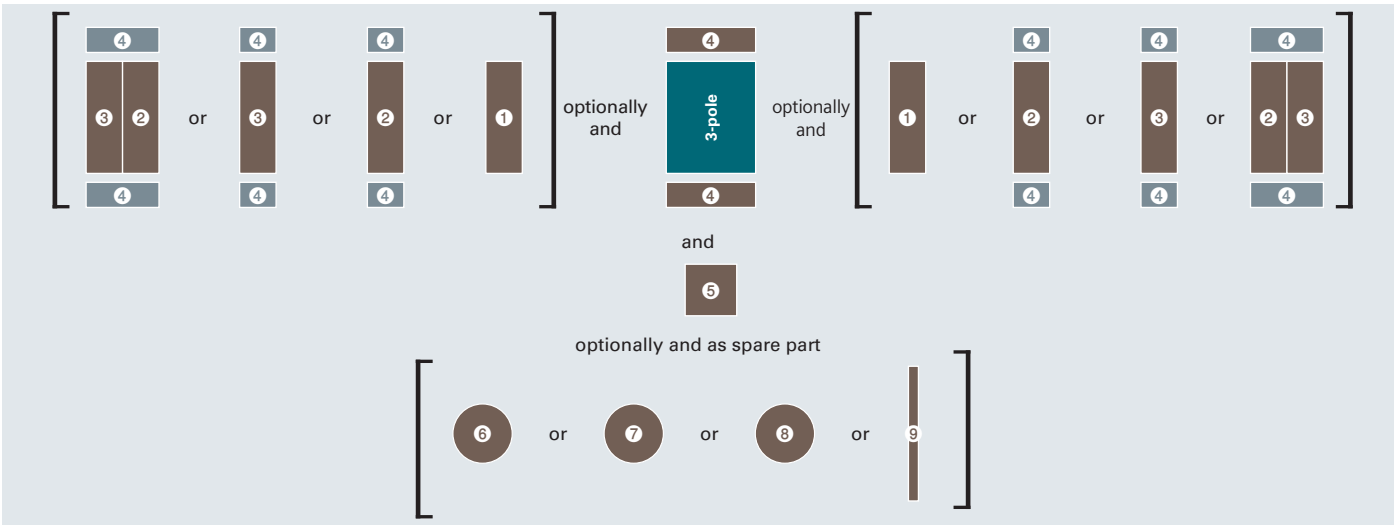

Legend

❶ Auxiliary switch
❷ N switching contact①
❸ N/PE terminal
❹ Terminal cover
❺ Auxiliary switch for mounting on the front②
❻ Rotary operating mechanism, center-hole mounting
❼ Rotary operating mechanism, four-hole mounting
❽ Knob-operated mechanism, four-hole mounting
❾ Switching shaft (300 or 600)

① The N switching contact ❷ first has to be mounted on the basic unit
② Can only be used with four-hole front mounting and panel mounting

Mounting types

You will find further information in the configuration manual: sie.ag/2UlrAvy

Front mounting



The switches for front mounting are mounted on the inside of covers, side panels or, if applicable, control cabinet doors (depending on the applicable standard and switching function). In addition to the 4-hole fastening of the handle, up to 63 A (3LD25) fastening with the 22.5 mm diameter center hole can also be chosen.

Panel mounting



The switches for panel mounting up to 125 A (3LD28) are snapped onto 35 mm standard mounting rails according to EN 60715 or screw-mounted on mounting panels. The switches for 160 and 250 A (3LD23/3LD24) are exclusively screwed onto mounting panels.
The actuators are connected to the lower section of the switch through a door coupling, which can be released in its zero position, and a 300 mm long switch shaft. When the control cabinet door is open, the switch can be protected against inadvertent operation by removing the switch shaft from the lower section of the switch. The overall depth can be adapted to individual requirements by adjusting the switch shaft length.

Distribution board mounting



The switches for distribution board mounting are suited for operation in distribution boards and for switching inside control cabinets or distributors. Up to 125 A (3LD28), they have cap and mounting dimensions acc. to DIN 43880 and can be fitted under the same cover together with miniature circuit breakers.

DC isolators



The DC isolators in the enclosure are suitable for disconnecting loads of up to 800 V DC due to their 8-pole design. To provide additional safety, the isolators can be locked in the 0 position.

3LD2 main control switches,
front mounting



Number of poles	Operating mechanisms, black 3P	
	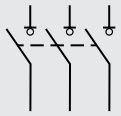	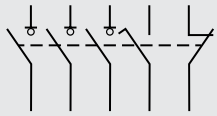
Uninterrupted current I_u At AC-21A, 380 ... 440 V	**Operational power P At AC-23A, 380 ... 440 V**	**Operational power P At AC-3A, 380 ... 440 V**	**Without auxiliary switch**	**1 NO + 1 NC (standard version)**
Rotary operating mechanism, four-hole mounting				
16 A	7.5 kW	5.5 kW	**3LD2003-0TK51**	**3LD2003-1TP51**
25 A	9.5 kW	7.5 kW	**3LD2103-0TK51**	**3LD2103-1TP51**
32 A	11.5 kW	9.5 kW	**3LD2203-0TK51**	**3LD2203-1TP51**
63 A	22 kW	18.5 kW	**3LD2504-0TK51**	**3LD2504-1TP51**
100 A	37 kW	30 kW	**3LD2704-0TK51**	**3LD2704-1TP51**
125 A	45 kW	37 kW	**3LD2804-0TK51**	**3LD2804-1TP51**
160 A	75 kW	50 kW	**3LD2305-0TK11**	**3LD2305-0TK11 + 3LD9200-5B**
250 A	132 kW	110 kW	**3LD2405-0TK11**	**3LD2405-0TK11 + 3LD9200-5B**
Rotary operating mechanism, center-hole mounting Ø 22.5 mm				
16 A	7.5 kW	5.5 kW	**3LD2054-0TK51**	**3LD2054-1TP51**
25 A	9.5 kW	7.5 kW	**3LD2154-0TK51**	**3LD2154-1TP51**
32 A	11.5 kW	9.5 kW	**3LD2254-0TK51**	**3LD2254-0TK51 + 3LD9200-5B**
63 A	22 kW	18.5 kW	**3LD2555-0TK51**	**3LD2555-0TK51 + 3LD9200-5B**
Knob-operated mechanism, four-hole mounting				
16 A	7.5 kW	5.5 kW	**3LD2022-0TK11**	**3LD2022-0TK11 + 3LD9200-5B**
25 A	9.5 kW	7.5 kW	**3LD2122-0TK11**	**3LD2122-0TK11 + 3LD9200-5B**
32 A	11.5 kW	9.5 kW	**3LD2222-0TK11**	**3LD2222-0TK11 + 3LD9200-5B**
Knob-operated mechanism, center-hole mounting Ø 22.5 mm				
16 A	7.5 kW	5.5 kW	**3LD2050-0TK11**	**3LD2050-0TK11 + 3LD9200-5B**
25 A	9.5 kW	7.5 kW	**3LD2150-0TK11**	**3LD2150-0TK11 + 3LD9200-5B**
32 A	11.5 kW	9.5 kW	**3LD2250-0TK11**	**3LD2250-0TK11 + 3LD9200-5B**

Scope of supply:
- Including terminal covers for the infeed side

Accessories, see pages 4-20 to 4-21

Disconnect Switches

3LD2 Main Control Switches, Front Mounting, 25 ... 50 kA_{eff}

Selection





3P+N			6P	
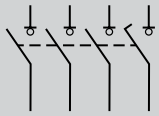	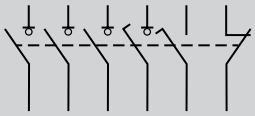		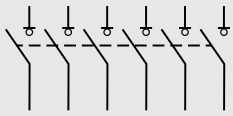	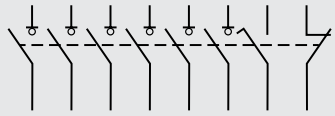
Without auxiliary switch	**1 NO + 1 NC (standard version)**		**Without auxiliary switch**	**1 NO + 1 NC (standard version)**
3LD2003-1TL51	3LD2003-2EP51		–	–
3LD2103-1TL51	3LD2103-2EP51		3LD2103-3VK51	3LD2103-4VP51
3LD2203-1TL51	3LD2203-1TL51	+ 3LD9200-5B	3LD2203-3VK51	3LD2203-3VK51 + 3LD9200-5B
3LD2504-1TL51	3LD2504-1TP51 + 3LD9250-0BA		3LD2504-3VK51	3LD2504-3VK51 + 3LD9200-5B
3LD2704-0TK51 + 3LD9280-0B	3LD2704-0TK51 + 3LD9280-0B	+ 3LD9200-5B	–	–
3LD2804-0TK51 + 3LD9280-0B	3LD2804-0TK51 + 3LD9280-0B	+ 3LD9200-5B	–	–
3LD2305-1TL11	3LD2305-1TL11	+ 3LD9200-5B	3LD2305-3VK11	3LD2305-3VK11 + 3LD9200-5B
3LD2405-1TL11	3LD2405-1TL11	+ 3LD9200-5B	3LD2405-3VK11	3LD2405-3VK11 + 3LD9200-5B
3LD2054-1TL51	3LD2054-2EP51		–	–
3LD2154-1TL51	3LD2154-2EP51		–	–
3LD2254-1TL51	3LD2254-1TL51	+ 3LD9200-5B	–	–
3LD2555-0TK51 + 3LD9250-0BA	3LD2555-0TK51 + 3LD9250-0BA	+ 3LD9200-5B	–	–
3LD2022-1TL11	3LD2022-1TL11	+ 3LD9200-5B	–	–
3LD2122-1TL11	3LD2122-1TL11	+ 3LD9200-5B	–	–
3LD2222-0TK11 + 3LD9220-0B	3LD2222-0TK11 + 3LD9220-0B	+ 3LD9200-5B	–	–
3LD2050-1TL11	3LD2050-1TL11	+ 3LD9200-5B	–	–
3LD2150-0TK11 + 3LD9220-0B	3LD2150-0TK11 + 3LD9220-0B	+ 3LD9200-5B	–	–
3LD2250-0TK11 + 3LD9220-0B	3LD2250-0TK11 + 3LD9220-0B	+ 3LD9200-5B	–	–

3LD2 EMERGENCY-STOP switches, front mounting



	Operating mechanisms, red/yellow	
Number of poles	**3P**	
	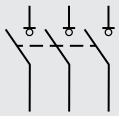	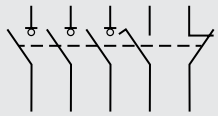
Uninterrupted current I_u At AC-21A, 380 ... 440 V	**Operational power P At AC-23A, 380 ... 440 V**	**Operational power P At AC-3A, 380 ... 440 V**	**Without auxiliary switch**	**1 NO + 1 NC (standard version)**
Rotary operating mechanism, four-hole mounting				
16 A	7.5 kW	5.5 kW	**3LD2003-0TK53**	**3LD2003-1TP53**
25 A	9.5 kW	7.5 kW	**3LD2103-0TK53**	**3LD2103-1TP53**
32 A	11.5 kW	9.5 kW	**3LD2203-0TK53**	**3LD2203-1TP53**
63 A	22 kW	18.5 kW	**3LD2504-0TK53**	**3LD2504-1TP53**
100 A	37 kW	30 kW	**3LD2704-0TK53**	**3LD2704-1TP53**
125 A	45 kW	37 kW	**3LD2804-0TK53**	**3LD2804-1TP53**
160 A	75 kW	50 kW	**3LD2305-0TK13**	**3LD2305-0TK13 + 3LD9200-5B**
250 A	132 kW	110 kW	**3LD2405-0TK13**	**3LD2405-0TK13 + 3LD9200-5B**
Rotary operating mechanism, center-hole mounting Ø 22.5 mm				
16 A	7.5 kW	5.5 kW	**3LD2054-0TK53**	**3LD2054-1TP53**
25 A	9.5 kW	7.5 kW	**3LD2154-0TK53**	**3LD2154-1TP53**
32 A	11.5 kW	9.5 kW	**3LD2254-0TK53**	**3LD2254-0TK53 + 3LD9200-5B**
63 A	22 kW	18.5 kW	**3LD2555-0TK53**	**3LD2555-0TK53 + 3LD9200-5B**
Knob-operated mechanism, four-hole mounting				
16 A	7.5 kW	5.5 kW	**3LD2022-0TK13**	**3LD2022-0TK13 + 3LD9200-5B**
25 A	9.5 kW	7.5 kW	**3LD2122-0TK13**	**3LD2122-0TK13 + 3LD9200-5B**
32 A	11.5 kW	9.5 kW	**3LD2222-0TK13**	**3LD2222-0TK13 + 3LD9200-5B**
Knob-operated mechanism, center-hole mounting Ø 22.5 mm				
16 A	7.5 kW	5.5 kW	**3LD2050-0TK13**	**3LD2050-0TK13 + 3LD9200-5B**
25 A	9.5 kW	7.5 kW	**3LD2150-0TK13**	**3LD2150-0TK13 + 3LD9200-5B**
32 A	11.5 kW	9.5 kW	**3LD2250-0TK13**	**3LD2250-0TK13 + 3LD9200-5B**

Scope of supply:
- Including terminal covers for the infeed side

Accessories, see pages 4-20 to 4-21

Disconnect Switches

3LD2 Main Control Switches, Front Mounting, 25 ... 50 kA_{eff}

Selection





3+N			6P	
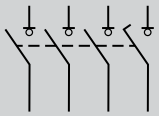	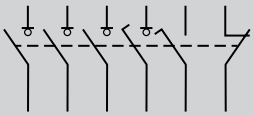		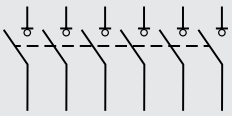	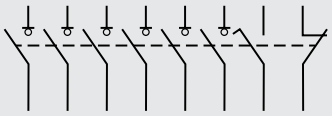
Without auxiliary switch	**1 NO + 1 NC (standard version)**		**Without auxiliary switch**	**1 NO + 1 NC (standard version)**
3LD2003-1TL53	3LD2003-2EP53		–	–
3LD2103-1TL53	3LD2103-2EP53		3LD2103-3VK53	3LD2103-4VP53
3LD2203-1TL53	3LD2203-1TL53	+ 3LD9200-5B	3LD2203-3VK53	3LD2203-3VK53 + 3LD9200-5B
3LD2504-1TL53	3LD2504-1TP53	+ 3LD9250-0BA	3LD2504-3VK53	3LD2504-3VK53 + 3LD9200-5B
3LD2704-0TK53 + 3LD9280-0B	3LD2704-0TK53 + 3LD9280-0B	+ 3LD9200-5B	–	–
3LD2804-0TK53 + 3LD9280-0B	3LD2804-0TK53 + 3LD9280-0B	+ 3LD9200-5B	–	–
3LD2305-1TL13	3LD2305-1TL13	+ 3LD9200-5B	3LD2305-3VK13	3LD2305-3VK13 + 3LD9200-5B
3LD2405-1TL13	3LD2405-1TL13	+ 3LD9200-5B	3LD2405-3VK13	3LD2405-3VK13 + 3LD9200-5B
3LD2054-1TL53	3LD2054-2EP53		–	–
3LD2154-1TL53	3LD2154-2EP53		–	–
3LD2254-1TL53	3LD2254-1TL53	+ 3LD9200-5B	–	–
3LD2555-0TK53 + 3LD9250-0BA	3LD2555-0TK53 + 3LD9250-0BA	+ 3LD9200-5B	–	–
3LD2022-1TL13	3LD2022-1TL13	+ 3LD9200-5B	–	–
3LD2122-1TL13	3LD2122-1TL13	+ 3LD9200-5B	–	–
3LD2222-0TK13 + 3LD9220-0B	3LD2222-0TK13 + 3LD9220-0B	+ 3LD9200-5B	–	–
3LD2050-1TL13	3LD2050-1TL13	+ 3LD9200-5B	–	–
3LD2150-0TK13 + 3LD9220-0B	3LD2150-0TK13 + 3LD9220-0B	+ 3LD9200-5B	–	–
3LD2250-0TK13 + 3LD9220-0B	3LD2250-0TK13 + 3LD9220-0B	+ 3LD9200-5B	–	–

Accessories for front mounting

				3LD20 (16 A)	3LD21 (25 A)	3LD22 (32 A)	3LD25 (63 A)	3LD27 (100 A)	3LD28 (125 A)	3LD23 (160 A)	3LD24 (250 A)
Switching contacts for N conductor (4th contact)											
	**Contacts**		**Catalog No.**								
	Leading switch-on, lagging switch-off		**3LD9220-0B**		■	■					
			3LD9250-0BA				■				
			3LD9280-0B					■	■		
			3LD9240-0B							■	■
N/PE terminals											
	**Contacts**		**Catalog No.**								
	Through-type		**3LD9200-2B**	■							
			3LD9220-2B		■	■					
			3LD9250-2BA				■				
			3LD9280-2B					■	■		
			3LD9240-2B							■	■
Auxiliary switches (standard version)											
	• For mounting on the left and/or right • Lagging switch-on, leading switch-off										
	Contacts	**Contact surface**	**Catalog No.**								
	1 NO + 1 NC	Standard	**3LD9200-5B**	■	■	■	■	■	■	■	■
		Gold-plated	**3LD9200-5BF**	■	■	■	■	■	■	■	■
Auxiliary switch for mounting on the front											
	• Mounted on the switch shaft • For four-hole front mounting and panel mounting only • For long leading times (20 … 150 m) • Not for 6-pole 3LD23 (160 A) and 3LD24 (250 A)										
	Contacts	**Contact surface**	**Catalog No.**								
	1 NO + 1 NC	Standard	**3LD9280-5D**	■	■	■	■	■	■		
			3LD9240-5D NEW							■	■
		Gold-plated	**3LD9280-5DF**	■	■	■	■	■	■		
			3LD9240-5DF							■	■
Rotary operating mechanisms											
	• Lockable in 0 position with up to 3 padlocks										
	Version	**Mounting**	**Catalog No.**								
	For main control switches	Center-hole mounting	**3LD9224-1D**	■	■	■					
			3LD9284-1D				■				
		Four-hole mounting	**3LD9224-1B**	■	■	■					
			3LD9284-1B				■	■	■		
	For EMERGENCY-STOP switches	Center-hole mounting	**3LD9224-3D**	■	■	■					
			3LD9284-3D				■				
		Four-hole mounting	**3LD9224-3B**	■	■	■					
			3LD9284-3B				■	■	■		

Accessories for front mounting

			3LD20 (16 A)	3LD21 (25 A)	3LD22 (32 A)	3LD25 (63 A)	3LD27 (100 A)	3LD28 (125 A)	3LD23 (160 A)	3LD24 (250 A)
Knob-operated mechanisms										
 • Lockable in 0 position with up to 3 padlocks										
Version	**Mounting**	**Catalog No.**								
For main control switches	Four-hole mounting	**3LD9243-1B**							■	■
For EMERGENCY-STOP switches	Four-hole mounting	**3LD9243-3B**							■	■
Terminal covers										
• Pack of 4 units										
Number of poles		**Catalog No.**								
 1-pole		**3LD9201-2A**	■							
		3LD9221-2A		■	■					
		3LD9251-2A				■				
		3LD9281-2A					■	■		
		3LD9241-2A							■	■
 3-pole		**3LD9221-0A**		■	■					
		3LD9251-0A				■				
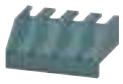 4-pole		**3LD9201-1A**	■							
Inscription labels										
 • Pack of 10 units										
Inscription		**Catalog No.**								
German / English (Hauptschalter / Main Switch)		**3LD9286-1A**	■	■	■	■	■	■		
Without inscription		**3LD9286-4A**	■	■	■	■	■	■		
Assembly tools										
 • For center-hole mounting with nut • Pack of 5 units										
Version		**Catalog No.**								
For main control switches and EMERGENCY-STOP switches		**3LD9256-0A**	■	■	■	■				

Disconnect Switches

3LD2 Main Control Switches, Panel Mounting, 25 ... 50 kA_{eff}

Selection

3LD2 main control switches,
panel mounting



			Operating mechanisms, black	
			Number of poles	3P
			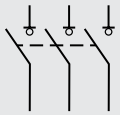	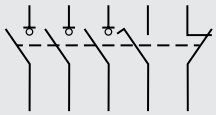
Uninterrupted current I_u At AC-21A, 380 ... 440 V	Operational power P At AC-23A, 380 ... 440 V	Operational power P At AC-3A, 380 ... 440 V	Without auxiliary switch	1 NO + 1 NC (standard version)
Door-coupling rotary operating mechanism, four-hole mounting				
16 A	7.5 kW	5.5 kW	3LD2013-0TK51	3LD2013-0TK51 + 3LD9200-5C
25 A	9.5 kW	7.5 kW	3LD2113-0TK51	3LD2113-0TK51 + 3LD9200-5C
32 A	11.5 kW	9.5 kW	3LD2213-0TK51	3LD2213-0TK51 + 3LD9200-5C
63 A	22 kW	18.5 kW	3LD2514-0TK51	3LD2514-0TK51 + 3LD9200-5C
100 A	37 kW	30 kW	3LD2714-0TK51	3LD2714-0TK51 + 3LD9200-5C
125 A	45 kW	37 kW	3LD2814-0TK51	3LD2814-0TK51 + 3LD9200-5C
160 A	75 kW	50 kW	3LD2318-0TK11	3LD2318-0TK11 + 3LD9200-5C
250 A	132 kW	110 kW	3LD2418-0TK11	3LD2418-0TK11 + 3LD9200-5C
Door-coupling rotary operating mechanism, center-hole mounting Ø 22.5 mm				
16 A	7.5 kW	5.5 kW	3LD2044-0TK51	3LD2044-0TK51 + 3LD9200-5C
25 A	9.5 kW	7.5 kW	3LD2144-0TK51	3LD2144-0TK51 + 3LD9200-5C
32 A	11.5 kW	9.5 kW	3LD2244-0TK51	3LD2244-0TK51 + 3LD9200-5C
63 A	22 kW	18.5 kW	3LD2545-0TK51	3LD2545-0TK51 + 3LD9200-5C
Defeatable door-coupling knob-operated mechanism, four-hole mounting				
16 A	7,5 kW	5,5 kW	3LD2017-0TK11	3LD2017-0TK11 + 3LD9200-5C
32 A	11,5 kW	9,5 kW	3LD2217-0TK11	3LD2217-0TK11 + 3LD9200-5C
63 A	22 kW	18,5 kW	3LD2517-0TK11	3LD2517-0TK11 + 3LD9200-5C

Scope of supply:
- Including terminal covers for the infeed side
- Up to 125 A with integrated tolerance compensation

Mounting:
- Up to 125 A using screws or snap-on mounting on 35 mm mounting rails

Accessories, see pages 4-26 to 4-27

Disconnect Switches

3LD2 Main Control Switches, Panel Mounting, 25 ... 50 kA_{eff}

Selection



3P+N			6P	
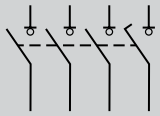	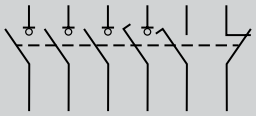		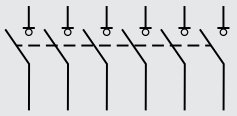	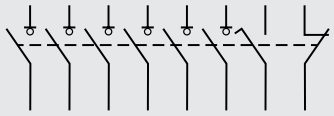
Without auxiliary switch	**1 NO + 1 NC (standard version)**		**Without auxiliary switch**	**1 NO + 1 NC (standard version)**
3LD2013-1TL51	**3LD2013-1TL51**	**+ 3LD9200-5C**	–	–
3LD2113-1TL51	**3LD2113-1TL51**	**+ 3LD9200-5C**	**3LD2113-3VK51**	**3LD2113-4VP51**
3LD2213-1TL51	**3LD2213-1TL51**	**+ 3LD9200-5C**	–	–
3LD2514-1TL51	**3LD2514-1TL51**	**+ 3LD9200-5C**	–	–
3LD2714-0TK51 + 3LD9280-0C	**3LD2714-0TK51 + 3LD9280-0C**	**+ 3LD9200-5C**	–	–
3LD2814-0TK51 + 3LD9280-0C	**3LD2814-0TK51 + 3LD9280-0C**	**+ 3LD9200-5C**	–	–
3LD2318-1TL11	**3LD2318-1TL11**	**+ 3LD9200-5C**	**3LD2318-3VK11**	**3LD2318-3VK11 + 3LD9200-5C**
3LD2418-1TL11	**3LD2418-1TL11**	**+ 3LD9200-5C**	**3LD2418-3VK11**	**3LD2418-3VK11 + 3LD9200-5C**
3LD2044-1TL51	**3LD2044-1TL51**	**+ 3LD9200-5C**	–	–
3LD2144-1TL51	**3LD2144-1TL51**	**+ 3LD9200-5C**	–	–
3LD2244-1TL51	**3LD2244-1TL51**	**+ 3LD9200-5C**	–	–
3LD2545-0TK51 + 3LD9250-0CA	**3LD2545-0TK51 + 3LD9250-0CA**	**+ 3LD9200-5C**	–	–
3LD2017-1TL11	**3LD2017-1TL11**	**+ 3LD9200-5C**	–	–
3LD2217-1TL11	**3LD2217-1TL11**	**+ 3LD9200-5C**	–	–
3LD2517-1TL11	**3LD2517-1TL11**	**+ 3LD9200-5C**	–	–

3LD2 EMERGENCY-STOP switches, panel mounting



	Operating mechanisms, red/yellow	
Number of poles	3P	
	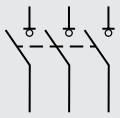	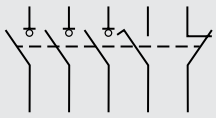
Uninterrupted current I_u At AC-21A, 380 ... 440 V	**Operational power P At AC-23A, 380 ... 440 V**	**Operational power P At AC-3A, 380 ... 440 V**	**Without auxiliary switch**	**1 NO + 1 NC (standard version)**
Door-coupling rotary operating mechanism, four-hole mounting				
16 A	7.5 kW	5.5 kW	**3LD2013-0TK53**	**3LD2013-0TK53 + 3LD9200-5C**
25 A	9.5 kW	7.5 kW	**3LD2113-0TK53**	**3LD2113-0TK53 + 3LD9200-5C**
32 A	11.5 kW	9.5 kW	**3LD2213-0TK53**	**3LD2213-0TK53 + 3LD9200-5C**
63 A	22 kW	18.5 kW	**3LD2514-0TK53**	**3LD2514-0TK53 + 3LD9200-5C**
100 A	37 kW	30 kW	**3LD2714-0TK53**	**3LD2714-0TK53 + 3LD9200-5C**
125 A	45 kW	37 kW	**3LD2814-0TK53**	**3LD2814-0TK53 + 3LD9200-5C**
160 A	75 kW	50 kW	**3LD2318-0TK13**	**3LD2318-0TK13 + 3LD9200-5C**
250 A	132 kW	110 kW	**3LD2418-0TK13**	**3LD2418-0TK13 + 3LD9200-5C**
Door-coupling rotary operating mechanism, center-hole mounting Ø 22.5 mm				
16 A	**7.5 kW**	**5.5 kW**	**3LD2044-0TK53**	**3LD2044-0TK53 + 3LD9200-5C**
25 A	**9.5 kW**	**7.5 kW**	**3LD2144-0TK53**	**3LD2144-0TK53 + 3LD9200-5C**
32 A	**11.5 kW**	**9.5 kW**	**3LD2244-0TK53**	**3LD2244-0TK53 + 3LD9200-5C**
63 A	**22 kW**	**18.5 kW**	**3LD2545-0TK53**	**3LD2545-0TK53 + 3LD9200-5C**
Defeatable door-coupling knob-operated mechanism, four-hole mounting				
16 A	7,5 kW	5,5 kW	**3LD2017-0TK13**	**3LD2017-0TK13 + 3LD9200-5C**
32 A	11,5 kW	9,5 kW	**3LD2217-0TK13**	**3LD2217-0TK13 + 3LD9200-5C**
63 A	22 kW	18,5 kW	**3LD2517-0TK13**	**3LD2517-1TL13 + 3LD9200-5C**

Scope of supply:
- Including terminal covers for the infeed side
- Up to 125 A with integrated tolerance compensation

Mounting:
- Up to 125 A using screws or snap-on mounting on 35 mm mounting rails

Accessories, see pages 4-26 to 4-27

Disconnect Switches

3LD2 Main Control Switches, Panel Mounting, 25 ... 50 kA_{eff}

Selection



3P+N			6P	
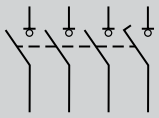	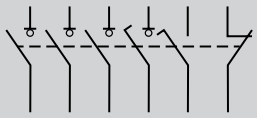		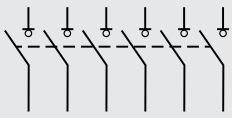	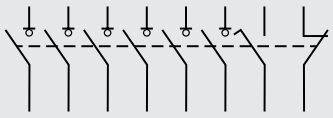
Without auxiliary switch	**1 NO + 1 NC (standard version)**		**Without auxiliary switch**	**1 NO + 1 NC (standard version)**
3LD2013-1TL53	3LD2013-1TL53	+ 3LD9200-5C	–	–
3LD2113-1TL53	3LD2113-1TL53	+ 3LD9200-5C	3LD2113-3VK53	3LD2113-4VP53
3LD2213-1TL53	3LD2213-1TL53	+ 3LD9200-5C	–	–
3LD2514-1TL53	3LD2514-1TL53	+ 3LD9200-5C	–	–
3LD2714-0TK53 + 3LD9280-0C	3LD2714-0TK53 + 3LD9280-0C	+ 3LD9200-5C	–	–
3LD2814-0TK53 + 3LD9280-0C	3LD2814-0TK53 + 3LD9280-0C	+ 3LD9200-5C	–	–
3LD2318-1TL13	3LD2318-1TL13	+ 3LD9200-5C	3LD2318-3VK13	3LD2318-3VK13 + 3LD9200-5C
3LD2418-1TL13	3LD2418-1TL13	+ 3LD9200-5C	3LD2418-3VK13	3LD2418-3VK13 + 3LD9200-5C
3LD2044-1TL53	3LD2044-1TL53	+ 3LD9200-5C	–	–
3LD2144-1TL53	3LD2144-1TL53	+ 3LD9200-5C	–	–
3LD2244-1TL53	3LD2244-1TL53	+ 3LD9200-5C	–	–
3LD2545-0TK53 + 3LD9250-0CA	3LD2545-0TK53 + 3LD9250-0CA	+ 3LD9200-5C	–	–
3LD2017-1TL13	3LD2017-1TL13 + 3LD9200-5C		–	–
3LD2217-1TL13	3LD2217-0TK13 + 3LD9200-5C		–	–
3LD2517-1TL13	3LD2517-1TL13 + 3LD9200-5C		–	–

Accessories for panel mounting

			3LD20 (16 A)	3LD21 (25 A)	3LD22 (32 A)	3LD25 (63 A)	3LD27 (100 A)	3LD28 (125 A)	3LD23 (160 A)	3LD24 (250 A)
Switching contacts for N conductor (4th contact)										
	**Contacts**	**Catalog No.**								
	Leading switch-on, lagging switch-off	**3LD9220-0C**		■	■					
		3LD9250-0CA				■				
		3LD9280-0C					■	■		
		3LD9240-0C							■	■
N/PE terminals										
	**Contacts**	**Catalog No.**								
	Through-type	**3LD9200-2C**	■							
		3LD9220-2C		■	■					
		3LD9250-2CA				■				
		3LD9280-2C					■	■		
		3LD9240-2C							■	■
Auxiliary switches (standard version)										
	• For mounting on the left and/or right • Lagging switch-on, leading switch-off									
	Contacts	Contact surface	**Catalog No.**							
	1 NO + 1 NC	Standard	**3LD9200-5C**	■	■	■	■	■	■	■	■
		Gold-plated	**3LD9200-5CF**	■	■	■	■	■	■	■	■
	2 NO	Standard	**3LD9200-6C**	■	■	■	■	■	■	■	■
Auxiliary switch for mounting on the front										
	• Mounted on the switch shaft • For long leading times (20 ... 150 ms)									
	Contacts	Contact surface	**Catalog No.**							
	1 NO + 1 NC	Standard	**3LD9280-5D**	■	■	■	■	■	■		
			3LD9240-5D							■	■
		Gold-plated	**3LD9280-5DF**	■	■	■	■	■	■		
			3LD9240-5DF							■	■
Rotary operating mechanisms										
	• Lockable in 0 position with up to 3 padlocks									
	Version	**Mounting**	**Catalog No.**							
	For main control switches	Center-hole mounting	**3LD9224-1D**	■	■	■					
			3LD9284-1D				■				
		Four-hole mounting	**3LD9224-1B**	■	■	■					
			3LD9284-1B				■	■	■		
	For EMERGENCY-STOP switches	Center-hole mounting	**3LD9224-3D**	■	■	■					
			3LD9284-3D				■				
		Four-hole mounting	**3LD9224-3B**	■	■	■					
			3LD9284-3B				■	■	■		
Knob-operated mechanisms										
	• Lockable in 0 position with up to 3 padlocks									
	Version	Mounting	**Catalog No.**							
	For main control switches	Four-hole mounting	**3LD9243-1B**						■	■
	For EMERGENCY-STOP switches	Four-hole mounting	**3LD9243-3B**						■	■

Accessories for panel mounting

				3LD20 (16 A)	3LD21 (25 A)	3LD22 (32 A)	3LD25 (63 A)	3LD27 (100 A)	3LD28 (125 A)	3LD23 (160 A)	3LD24 (250 A)
8UC7.. door-coupling rotary operating mechanisms											
	• To achieve defeatability from 3LD27 (100 A) to 3LD24 (250 A)										
	Type	**Version**	**Catalog No.**								
	8UC71	Standard	**8UC7110-1BB**					■	■		
		EMERGENCY-STOP	**8UC7120-3BB**					■	■		
	8UC72	Standard	**8UC7210-1BB**							■	■
		EMERGENCY-STOP	**8UC7220-3BB**							■	■
Coupling drivers											
	Version		**Catalog No.**								
	For 8UC71 door-coupling rotary operating mechanisms		**8UC6011**					■	■		
	For 8UC72 door-coupling rotary operating mechanisms		**8UC6012**							■	■
Switching shafts											
	**Cross-section**	**Length**	**Catalog No.**								
	6 × 6 mm	300 mm	**3LD9205-0C**	■	■	■	■	■	■		
		600 mm	**3LD9205-2C**	■	■	■	■	■	■		
	8 × 8 mm	300 mm	**3LD9245-0C**							■	■
		600 mm	**3LD9245-2C**							■	■
Coupling pieces											
	• Without ON-lock										
			Catalog No.								
			3LD9242-4F							■	■
Terminal covers											
	• Pack of 4 units										
	Number of poles		**Catalog No.**								
	1-pole		**3LD9201-2A**	■							
			3LD9221-2A		■	■					
			3LD9251-2A				■				
			3LD9281-2A					■	■		
			3LD9241-2A							■	■
	3-pole		**3LD9221-0A**		■	■					
			3LD9251-0A				■				
	4-pole		**3LD9201-1A**	■							
Inscription labels											
	• Pack of 10 units • Cannot be used with defeatable 3LD2.17 door-coupling rotary operating mechanisms										
	Inscription		**Catalog No.**								
	German / English (Hauptschalter / Main Switch)		**3LD9286-1A**	■	■	■	■	■	■		
	Without inscription		**3LD9286-4A**	■	■	■	■	■	■		
Assembly tools											
	• For center-hole mounting with nut • Pack of 5 units										
	Version		**Catalog No.**								
	For main control switches and EMERGENCY-STOP switches		**3LD9256-0A**	■	■	■	■				

Disconnect Switches

3LD2 Main Control Switches, Installation in Distribution Boards, 25 ... 50 kA_{eff} *Selection*

3LD2 main control switches,
installation in distribution boards



			Operating mechanisms, black	
		Number of poles	3P	
			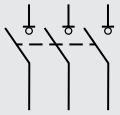	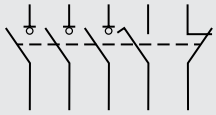
Uninterrupted current I_u At AC-21A, 380 ... 440 V	**Operational power P At AC-23A, 380 ... 440 V**	**Operational power P At AC-3A, 380 ... 440 V**	**Without auxiliary switch**	**1 NO + 1 NC (standard version)**
Knob-operated mechanisms with masking plate				
16 A	7.5 kW	5.5 kW	**3LD2030-0TK11**	**3LD2030-0TK11 + 3LD9200-5C**
25 A	9.5 kW	7.5 kW	**3LD2130-0TK11**	**3LD2130-0TK11 + 3LD9200-5C**
32 A	11.5 kW	9.5 kW	**3LD2230-0TK11**	**3LD2230-0TK11 + 3LD9200-5C**
63 A	22 kW	18.5 kW	**3LD2530-0TK11**	**3LD2530-0TK11 + 3LD9200-5C**
100 A	37 kW	30 kW	**3LD2730-0TK11**	**3LD2730-0TK11 + 3LD9200-5C**
125 A	45 kW	37 kW	**3LD2830-0TK11**	**3LD2830-0TK11 + 3LD9200-5C**
160 A	75 kW	50 kW	**3LD2330-0TK11**	**3LD2330-0TK11 + 3LD9200-5C**
250 A	132 kW	110 kW	**3LD2430-0TK11**	**3LD2430-0TK11 + 3LD9200-5C**

Scope of supply:
- 3LD23/3LD24 including terminal covers for the infeed side

Mounting:
- Up to 125 A using screws or snap-on mounting on 35 mm mounting rails
- Up to 125 A cap and mounting dimensions acc. to DIN 43880

Accessories

			3LD20 (16 A)	3LD21 (25 A)	3LD22 (32 A)	3LD25 (63 A)	3LD27 (100 A)	3LD28 (125 A)	3LD23 (160 A)	3LD24 (250 A)
Switching contacts for N conductor (4th contact)										
	**Contacts**	**Catalog No.**								
	Leading switch-on, lagging switch-off	**3LD9220-0C**		■	■					
		3LD9250-0CA				■				
		3LD9280-0C					■	■		
		3LD9240-0C							■	■
N/PE terminals										
	**Contacts**	**Catalog No.**								
	Through-type	**3LD9200-2C**	■							
		3LD9220-2C		■	■					
		3LD9250-2CA				■				
		3LD9280-2C					■	■		
		3LD9240-2C							■	■
Auxiliary switches (standard version)										
	• For mounting on the left and/or right • Lagging switch-on, leading switch-off									
	Contacts	**Contact surface**	**Catalog No.**							
	1 NO + 1 NC	Standard	**3LD9200-5C**	■	■	■	■	■	■	■	■
		Gold-plated	**3LD9200-5CF**	■	■	■	■	■	■	■	■
	2 NO	Standard	**3LD9200-6C**	■	■	■	■	■	■	■	■



3P+N

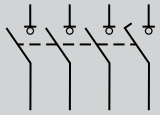

Without auxiliary switch

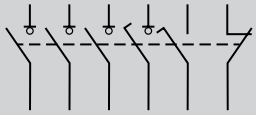

1 NO + 1 NC (standard version)

3LD2030-1TL11	**3LD2030-1TL11 + 3LD9200-5C**
3LD2130-0TK11 + 3LD9220-0C	**3LD2130-0TK11 + 3LD9220-0C + 3LD9200-5C**
3LD2230-0TK11 + 3LD9220-0C	**3LD2230-0TK11 + 3LD9220-0C + 3LD9200-5C**
3LD2530-0TK11 + 3LD9250-0CA	**3LD2530-0TK11 + 3LD9250-0CA + 3LD9200-5C**
3LD2730-0TK11 + 3LD9280-0C	**3LD2730-0TK11 + 3LD9280-0C + 3LD9200-5C**
3LD2830-0TK11 + 3LD9280-0C	**3LD2830-0TK11 + 3LD9280-0C + 3LD9200-5C**
3LD2330-0TK11 + 3LD9240-0C	**3LD2330-0TK11 + 3LD9240-0C + 3LD9200-5C**
3LD2430-0TK11 + 3LD9240-0C	**3LD2430-0TK11 + 3LD9240-0C + 3LD9200-5C**

Terminal covers

- Pack of 4 units





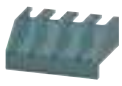

Number of poles	Catalog No.	3LD20 (16 A)	3LD21 (25 A)	3LD22 (32 A)	3LD25 (63 A)	3LD27 (100 A)	3LD28 (125 A)	3LD23 (160 A)	3LD24 (250 A)
1-pole	3LD9201-2A	■							
	3LD9221-2A		■	■					
	3LD9251-2A				■				
	3LD9281-2A					■	■		
	3LD9241-2A							■	■
3-pole	3LD9221-0A		■	■					
	3LD9251-0A				■				
4-pole	3LD9201-1A	■							

Disconnect Switches

3LD2 EMERGENCY-STOP Switches, Installation in Distribution Boards, 25 ... 50 kA_{eff} *Selection*

3LD2 EMERGENCY-STOP switches,
installation in distribution boards



	Operating mechanisms, red/yellow	
Number of poles	3P	
	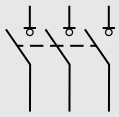	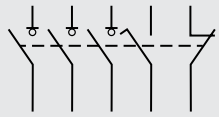
Uninterrupted current I_u At AC-21A, 380 ... 440 V	Operational power P At AC-23A, 380 ... 440 V	Operational power P At AC-3A, 380 ... 440 V	Without auxiliary switch	1 NO + 1 NC (standard version)
Knob-operated mechanisms with masking plate				
16 A	7.5 kW	5.5 kW	3LD2030-0TK13	3LD2030-0TK13 + 3LD9200-5C
25 A	9.5 kW	7.5 kW	3LD2130-0TK13	3LD2130-0TK13 + 3LD9200-5C
32 A	11.5 kW	9.5 kW	3LD2230-0TK13	3LD2230-0TK13 + 3LD9200-5C
63 A	22 kW	18.5 kW	3LD2530-0TK13	3LD2530-0TK13 + 3LD9200-5C
100 A	37 kW	30 kW	3LD2730-0TK13	3LD2730-0TK13 + 3LD9200-5C
125 A	45 kW	37 kW	3LD2830-0TK13	3LD2830-0TK13 + 3LD9200-5C
160 A	75 kW	50 kW	3LD2330-0TK13	3LD2330-0TK13 + 3LD9200-5C
250 A	132 kW	110 kW	3LD2430-0TK13	3LD2430-0TK13 + 3LD9200-5C

Scope of supply:
- 3LD23/3LD24 including terminal covers for the infeed side

Mounting:
- Up to 125 A using screws or snap-on mounting on 35 mm mounting rails
- Up to 125 A cap and mounting dimensions acc. to DIN 43880

Accessories

			3LD20 (16 A)	3LD21 (25 A)	3LD22 (32 A)	3LD25 (63 A)	3LD27 (100 A)	3LD28 (125 A)	3LD23 (160 A)	3LD24 (250 A)
Switching contacts for N conductor (4th contact)										
	**Contacts**	**Catalog No.**								
	Leading switch-on, lagging switch-off	3LD9220-0C		■	■					
		3LD9250-0CA				■				
		3LD9280-0C					■	■		
		3LD9240-0C							■	■
N/PE terminals										
	**Contacts**	**Catalog No.**								
	Through-type	3LD9200-2C	■							
		3LD9220-2C		■	■					
		3LD9250-2CA				■				
		3LD9280-2C					■	■		
		3LD9240-2C							■	■
Auxiliary switches (standard version)										
	• For mounting on the left and/or right • Lagging switch-on, leading switch-off									
	Contacts	**Contact surface**	**Catalog No.**							
	1 NO + 1 NC	Standard	3LD9200-5C	■	■	■	■	■	■	■	■
		Gold-plated	3LD9200-5CF	■	■	■	■	■	■	■	■
	2 NO	Standard	3LD9200-6C	■	■	■	■	■	■	■	■
Terminal covers										
	• Pack of 4 units									
	Number of poles		**Catalog No.**							
	1-pole		3LD9201-2A	■							
			3LD9221-2A		■	■					
			3LD9251-2A				■				
			3LD9281-2A					■	■		
			3LD9241-2A							■	■
	3-pole		3LD9221-0A		■	■					
			3LD9251-0A				■				
	4-pole		3LD9201-1A	■							

Disconnect Switches

3LD2 EMERGENCY-STOP Switches, Installation in Distribution Boards, 25 ... 50 kA_{eff} *Selection*



3+N		
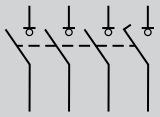	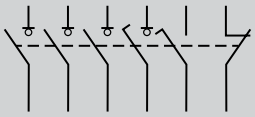	
Without auxiliary switch	**1 NO + 1 NC (standard version)**	
3LD2030-1TL13	**3LD2030-1TL13**	**+ 3LD9200-5C**
3LD2130-0TK13 + 3LD9220-0C	**3LD2130-0TK13 + 3LD9220-0C**	**+ 3LD9200-5C**
3LD2230-0TK13 + 3LD9220-0C	**3LD2230-0TK13 + 3LD9220-0C**	**+ 3LD9200-5C**
3LD2530-0TK13 + 3LD9250-0CA	**3LD2530-0TK13 + 3LD9250-0CA**	**+ 3LD9200-5C**
3LD2730-0TK13 + 3LD9280-0C	**3LD2730-0TK13 + 3LD9280-0C**	**+ 3LD9200-5C**
3LD2830-0TK13 + 3LD9280-0C	**3LD2830-0TK13 + 3LD9280-0C**	**+ 3LD9200-5C**
3LD2330-0TK13 + 3LD9240-0C	**3LD2330-0TK13 + 3LD9240-0C**	**+ 3LD9200-5C**
3LD2430-0TK13 + 3LD9240-0C	**3LD2430-0TK13 + 3LD9240-0C**	**+ 3LD9200-5C**

Disconnect Switches

3LD Switch Disconnectors *Selection*



DC isolators

Number of poles	Operating mechanisms, black
	8P
	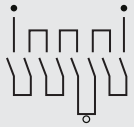

Mains voltage	Rated operational current I_e At DC-21A, 800 V DC	Rated operational current I_e At DC-22A, 800 V DC	Without auxiliary switch
Knob-operated mechanisms			
800 V DC	32 A	16 A	**3LD2230-8VQ11-0AF6**

Accessories for 3LD2 main control and EMERGENCY-STOP switches

Additional poles

Version	Contacts	Catalog No.	3LD20 (16 A)	3LD21 (25 A)	3LD22 (32 A)	3LD25 (63 A)	3LD27 (100 A)	3LD28 (125 A)	3LD23 (160 A)	3LD24 (250 A)
Switching contacts for N conductor (4th contact)										
 For front mounting	Leading switch-on, lagging switch-off	3LD9220-0B		■	■					
		3LD9250-0BA				■				
		3LD9280-0B					■	■		
		3LD9240-0B							■	■
 For panel mounting, installation in distribution boards	Leading switch-on, lagging switch-off	3LD9220-0C		■	■					
		3LD9250-0CA				■				
		3LD9280-0C					■	■		
		3LD9240-0C							■	■
N/PE terminals										
 For front mounting	Through-type	3LD9200-2B	■							
		3LD9220-2B		■	■					
		3LD9250-2BA				■				
		3LD9280-2B					■	■		
		3LD9240-2B							■	■
 For panel mounting, installation in distribution boards	Through-type	3LD9200-2C	■							
		3LD9220-2C		■	■					
		3LD9250-2CA				■				
		3LD9280-2C					■	■		
		3LD9240-2C							■	■
Auxiliary switches (standard version)										
• For mounting on the left and/or right • Lagging switch-on, leading switch-off										
 For front mounting	1 NO + 1 NC, standard	3LD9200-5B	■	■	■	■	■	■	■	■
	1 NO + 1 NC, gold-plated	3LD9200-5BF	■	■	■	■	■	■	■	■
 For panel mounting, installation in distribution boards	1 NO + 1 NC, standard	3LD9200-5C	■	■	■	■	■	■	■	■
	1 NO + 1 NC, gold-plated	3LD9200-5CF	■	■	■	■	■	■	■	■
	2 NO, standard	3LD9200-6C	■	■	■	■	■	■	■	■
Auxiliary switch for mounting on the front										
 • Mounted on the front of the switch shaft • For four-hole front mounting and panel mounting only • For long leading times (20 ... 150 ms)										
Contacts	**Contact surface**	**Catalog No.**								
1 NO + 1 NC	Standard	3LD9280-5D	■	■	■	■	■	■		
		3LD9240-5D							■	■
	Gold-plated	3LD9280-5DF	■	■	■	■	■	■		
		3LD9240-5DF							■	■

Disconnect Switches

Accessories for 3LD2 Main Control and EMERGENCY-STOP Switches

Selection

Operating mechanisms

				3LD20 (16 A)	3LD21 (25 A)	3LD22 (32 A)	3LD25 (63 A)	3LD27 (100 A)	3LD28 (125 A)	3LD23 (160 A)	3LD24 (250 A)
Rotary operating mechanisms											
• Lockable in 0 position with up to 3 padlocks • Center-hole mounting, including seal and nut • Four-hole mounting, including seal											
Switch	**Mounting**		**Catalog No.**								
For main control switches	Center-hole mounting		3LD9224-1D	■	■	■					
			3LD9284-1D				■	■	■		
	Four-hole mounting		3LD9224-1B	■	■	■					
			3LD9284-1B				■	■	■		
For EMERGENCY-STOP switches	Center-hole mounting		3LD9224-3D	■	■	■					
			3LD9284-3D				■	■	■		
	Four-hole mounting		3LD9224-3B	■	■	■					
			3LD9284-3B				■	■	■		
Knob-operated mechanisms											
• Lockable in 0 position with up to 3 padlocks • Including seal											
Switch	**Mounting**		**Catalog No.**								
For main control switches	Four-hole mounting		3LD9243-1B							■	■
For EMERGENCY-STOP switches	Four-hole mounting		3LD9243-3B							■	■
Switching shafts											
Version	**Cross-section**	**Length**	**Catalog No.**								
For panel mounting	6 × 6 mm	300 mm	3LD9205-0C	■	■	■	■	■	■		
		600 mm	3LD9205-2C	■	■	■	■	■	■		
	8 × 8 mm	300 mm	3LD9245-0C							■	■
		600 mm	3LD9245-2C							■	■
Coupling pieces											
• Without ON-lock											
Version			**Catalog No.**								
For panel mounting			3LD9242-4F							■	■

Other accessories

			3LD20 (16 A)	3LD21 (25 A)	3LD22 (32 A)	3LD25 (63 A)	3LD27 (100 A)	3LD28 (125 A)	3LD23 (160 A)	3LD24 (250 A)
Terminal covers										
• Pack of 4 units										
Number of poles		**Catalog No.**								
1-pole		3LD9201-2A	■							
		3LD9221-2A		■	■					
		3LD9251-2A				■				
		3LD9281-2A					■	■		
		3LD9241-2A							■	■
3-pole		3LD9221-0A		■	■					
		3LD9251-0A				■				
4-pole		3LD9201-1A	■							
Inscription labels										
• Pack of 10 units										
Inscription		**Catalog No.**								
German / English (Hauptschalter / Main Switch)		3LD9286-1A	■	■	■	■	■	■		
Without inscription		3LD9286-4A	■	■	■	■	■	■		
Assembly tools										
• For center-hole mounting with nut • Pack of 5 units										
Switch		**Catalog No.**								
For main control switches and EMERGENCY-STOP switches		3LD9256-0A	■	■	■	■				

Disconnect Switches

3LD5 UL Main Control and EMERGENCY-STOP Switches

System Overview

Basic units for front mounting


3LD5020 (3-pole)


3LD5020 (4-pole)


3LD5420 (3-pole)


3LD5420 (4-pole)

Basic units, panel mounting with direct operating mechanism


3LD5000 (3-pole)


3LD5000 (4-pole)


3LD5400 (3-pole)


3LD5400 (4-pole)

Basic units, panel mounting with door-coupling rotary operating mechanism


3LD5010 (3-pole)


3LD5010 (4-pole)


3LD5410 (3-pole)


3LD5410 (4-pole)

Additional poles and auxiliary switches


N switching contact


N/PE terminals (through-type)


Auxiliary switches (standard version)


Auxiliary switch for mounting on the front

Operating mechanisms


Rotary operators for four-hole mounting


Coupling heads with and without tolerance compensation


Supplementary handles for UL508A/ NFPA79


Switching shafts

Other accessories


Terminal covers, 1-pole


Terminal covers, 3 and 4-pole



Inscription labels (with and without inscription)

Note: You will find a detailed range of accessories with the basic units.

Disconnect Switches

3LD5 UL Main Control and EMERGENCY-STOP Switches

System Overview

Mounting concept and accessories

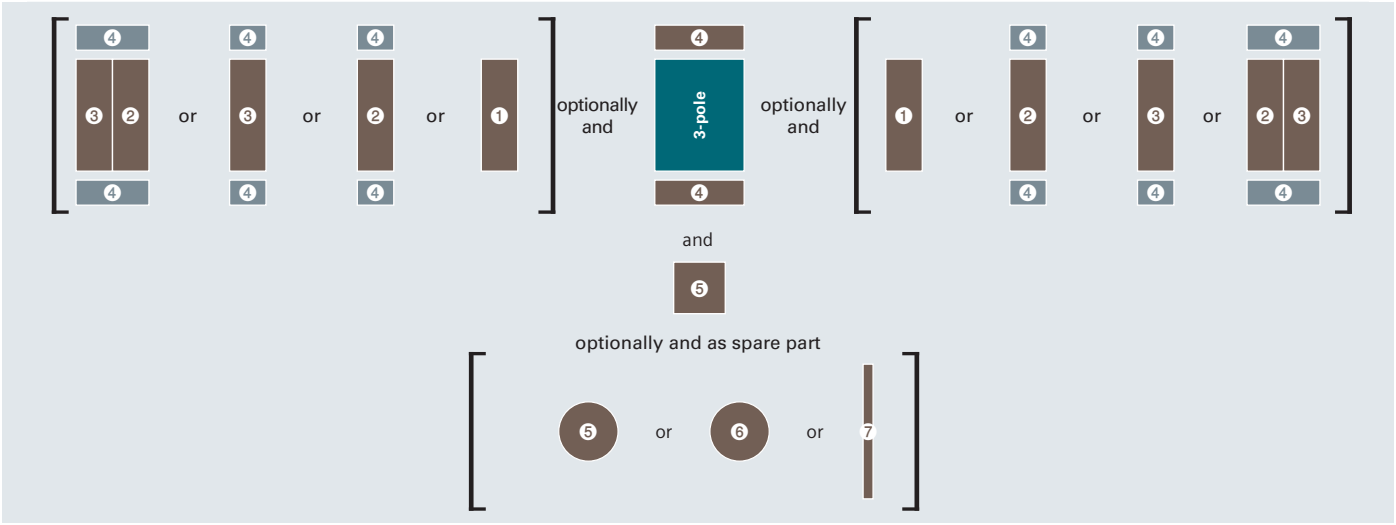

Legend

❶ Auxiliary switch
❷ N switching contact①
❸ N/PE terminal
❹ Terminal cover
❺ Rotary operating mechanism, four-hole mounting
❻ Knob-operated mechanism, four-hole mounting
❼ Switching shaft (300 oder 600 mm)

① The N switching contact ❷ first has to be mounted on the basic unit

4 DISCONNECT SWITCHES

Main control switches acc. to UL

The certification according to UL489 makes the 3LD5 UL ideal for use as a main control switch for machinery and plants for export to the NAFTA states. The variety of accessories makes it especially suitable as a main disconnect switch for industrial machinery. The switch is also certified according to UL508 and can also be used as a manual motor controller.

Mounting types

Front mounting of basic units



The switches for front mounting are mounted on the inside of covers, side panels or, if applicable, control cabinet doors (depending on the applicable standard and switching function). Installation is achieved by 4-hole mounting of the handle. This switch is especially suitable when door interlocking is not required or is implemented in a different way.

Panel mounting with direct operating mechanism



The switches for panel mounting with direct operating mechanism up to 30 A are snapped onto 35 mm standard mounting rails according to EN 60715 or screw-mounted on mounting panels. The switches for 100 to 160 A (3LD54 ... 3LD58) are exclusively screwed onto mounting panels.

Basic units, panel mounting with door-coupling rotary operating mechanism



The switches for panel mounting up to 30 A (3LD50) are snapped onto 35 mm standard mounting rails according to EN 60715 or screw-mounted on mounting panels. The switches for 100 to 160 A (3LD54 ... 3LD58) are exclusively screwed onto mounting panels. The actuators are connected to the lower section of the switch through a door coupling, which can be released in its zero position, and a 300 mm long switch shaft. The rotary operating mechanisms are also defeatable, i.e. it is possible to open the control cabinet door with a deliberate action while the switch is in the ON position. To meet the requirement acc. to UL508A/NFPA79, a supplementary handle can be mounted on the switch. Combined with the intermediate handle, the shaft can no longer be removed.

3LD5 UL main control and EMERGENCY-STOP switches, front mounting





Number of poles	Operating mechanisms, black 3P	3P+N
	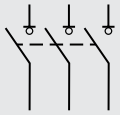	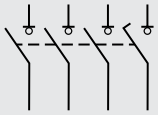

Uninterrupted current I_u At AC-21A, 380 … 440 V	General use acc. UL489/60947-4-1	Operational power P At AC-23A, 380 … 440 V		
Rotary operating mechanism, four-hole mounting				
32	30	15	3LD5020-0TK11	3LD5020-0TL11
63	60	30	3LD5220-0TK11	3LD5220-0TL11
100	100	45	3LD5420-0TK11	3LD5420-0TL11
125	125	55	3LD5620-0TK11	3LD5620-0TL11
160	150	75	3LD5820-0TK11	3LD5820-0TL11

Scope of supply:
- Including terminal covers for the infeed side

Accessories for front mounting

				3LD50	3LD52	3LD54	3LD56	3LD58
Switching contacts for N conductor (4th contact)								
	**Contacts**		**Catalog No.**					
	Leading switch-on, lagging switch-off		3LD9250-0BA	■				
			3LD9280-0B		■			
			3LD9240-0B			■	■	■
N/PE terminals								
	**Contacts**		**Catalog No.**					
	Through-type		3LD9250-2BA	■				
			3LD9280-2B		■			
			3LD9240-2B			■	■	■
Auxiliary switches (standard version)								
	• For mounting on the left and/or right • Lagging switch-on, leading switch-off							
	Contacts	**Contact surface**	**Catalog No.**					
	1 NO + 1 NC	Standard	3LD9200-5B	■	■	■	■	■
		Gold-plated	3LD9200-5BF	■	■	■	■	■
Auxiliary switch for mounting on the front								
	• Mounted on the front of the switch shaft • For long leading times (20 … 150ms)							
	Contacts	**Contact surface**	**Catalog No.**					
	1 NO + 1 NC	Standard	3LD9280-5D	■	■			
			3LD9240-5D			■	■	■
		Gold-plated	3LD9280-5DF	■	■			
			3LD9240-5DF			■	■	■
Rotary operating mechanisms								
	• Auxiliary switch for mounting on the front							
	Version		**Catalog No.**					
	For main control switches		3LD9284-1B	■	■			
	For EMERGENCY-STOP switches		3LD9284-3B	■	■			

Disconnect Switches

3LD5 UL Main Control and EMERGENCY-STOP Switches, Front Mounting, SCCR 50 - 65 kA *Selection*





Operating mechanisms, red/yellow	
3P	**3P+N**
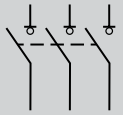	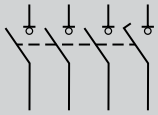
3LD5020-0TK13	**3LD5020-0TL13**
3LD5220-0TK13	**3LD5220-0TL13**
3LD5420-0TK13	**3LD5420-0TL13**
3LD5620-0TK13	**3LD5620-0TL13**
3LD5820-0TK13	**3LD5820-0TL13**

		3LD50	3LD52	3LD54	3LD56	3LD58
Knob-operated mechanisms						
	• Lockable in 0 position with up to 3 padlocks					
Version	**Catalog No.**					
For main control switches	**3LD9243-1B**			■	■	■
For EMERGENCY-STOP switches	**3LD9284-3B**			■	■	■
Terminal covers						
	• Pack of 4 units					
Number of poles	**Catalog No.**					
 1-pole	**3LD9251-2A**	■				
	3LD9281-2A		■			
	3LD9241-2A			■	■	■
 3-pole	**3LD9251-0A**	■				
Inscription labels						
	• Pack of 10 units					
Inscription	**Catalog No.**					
German / English (Hauptschalter / Main Switch)	**3LD9286-1A**	■	■	■	■	■
Without inscription	**3LD9286-4A**	■	■	■	■	■

Disconnect Switches

3LD5 UL Main Control and EMERGENCY-STOP Switches, Panel Mounting, SCCR 50 ... 65 kA *Selection*

3LD5 UL main control and EMERGENCY-STOP switches, panel mounting with direct operating mechanism





Number of poles	Operating mechanisms, black 3P	3P+N
	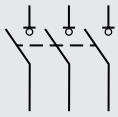	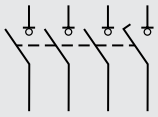
Uninterrupted current I_u At AC-21A, 380 ... 440 V	General use acc. UL489/508	Operational power P At AC-23A, 380 ... 440 V		
Rotary operating mechanism, four-hole mounting				
32	30	15	3LD5000-0TK11	3LD5000-0TL11
63	60	30	3LD5200-0TK11	3LD5200-0TL11
100	100	45	3LD5400-0TK11	3LD5400-0TL11
125	125	55	3LD5600-0TK11	3LD5600-0TL11
160	150	75	3LD5800-0TK11	3LD5800-0TL11

Scope of supply:
- Including terminal covers for the infeed side

Accessories for panel mounting with direct operating mechanisms			3LD50	3LD52	3LD54	3LD56	3LD58
Switching contacts for N conductor (4th contact)							
	**Contacts**	**Catalog No.**					
	Leading switch-on, lagging switch-off	3LD9250-0CA	■				
		3LD9280-0C		■			
		3LD9240-0C			■	■	■
N/PE terminals							
	**Contacts**	**Catalog No.**					
	Through-type	3LD9250-2CA	■				
		3LD9280-2C		■			
		3LD9240-2C			■	■	■
Auxiliary switches							
	• For mounting on the left and/or right • Lagging switch-on, leading switch-off						
	Contacts	**Contact surface** / **Catalog No.**					
	1 NO + 1 NC	Standard 3LD9200-5C	■	■	■	■	■
		Gold-plated 3LD9200-5CF	■	■	■	■	■
Terminal covers							
	• Pack of 4 units						
	Number of poles	**Catalog No.**					
	1-pole	3LD9251-2A	■				
		3LD9281-2A		■			
		3LD9241-2A			■	■	■
	3-pole	3LD9251-0A	■				

Disconnect Switches

3LD5 UL Main Control and EMERGENCY-STOP Switches, Panel Mounting, SCCR 50 ... 65 kA *Selection*





Operating mechanisms, red/yellow	
3P	**3P+N**
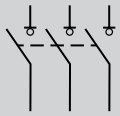	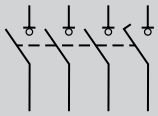
3LD5000-0TK13	**3LD5000-0TL13**
3LD5200-0TK13	**3LD5200-0TL13**
3LD5400-0TK13	**3LD5400-0TL13**
3LD5600-0TK13	**3LD5600-0TL13**
3LD5800-0TK13	**3LD5800-0TL13**

Disconnect Switches

3LD5 UL Main Control and EMERGENCY-STOP Switches, Panel Mounting, SCCR 50 ... 65 kA *Selection*

3LD5 UL main control and
EMERGENCY-STOP switches, panel mounting
with door-coupling rotary operating mechanism



Number of poles	Operating mechanisms, black 3P	3P+N
	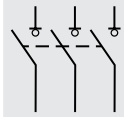	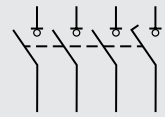
Uninterrupted current I_u At AC-21A, 380 ... 440 V / **General use acc. UL489/508** / **Operational power P At AC-23A, 380 ... 440 V**		
Rotary operating mechanism, four-hole mounting		
32 / **30** / **15**	**3LD5010-0TK11**	**3LD5010-0TL11**
63 / **60** / **30**	**3LD5210-0TK11**	**3LD5210-0TL11**
100 / **100** / **45**	**3LD5410-0TK11**	**3LD5410-0TL11**
125 / **125** / **55**	**3LD5610-0TK11**	**3LD5610-0TL11**
160 / **150** / **75**	**3LD5810-0TK11**	**3LD5810-0TL11**

Scope of supply:
- Including terminal covers for the infeed side
- Defeatable door-coupling rotary operating mechanisms
- Without tolerance compensation

Accessories for panel mounting with door mounted rotary operator			3LD50	3LD52	3LD54	3LD56	3LD58
Switching contacts for N conductor (4th contact)							
 **Contacts**		**Catalog No.**					
Leading switch-on, lagging switch-off		**3LD9250-0CA**	■				
		3LD9280-0C		■			
		3LD9240-0C			■	■	■
N/PE terminals							
 **Contacts**		**Catalog No.**					
Through-type		**3LD9250-2CA**	■				
		3LD9280-2C		■			
		3LD9240-2C			■	■	■
Auxiliary switches (standard version)							
 • For mounting on the left and/or right • Lagging switch-on, leading switch-off							
Contacts	**Contact surface**	**Catalog No.**					
1 NO + 1 NC	Standard	**3LD9200-5C**	■	■	■	■	■
	Vergoldet	**3LD9200-5CF**	■	■	■	■	■
Auxiliary switch for mounting on the front							
 • Mounted on the front of the switch shaft • For long leading times (20 ... 150ms)							
Contacts	**Contact surface**	**Catalog No.**					
1 NO + 1 NC	**Standard**	**3LD9280-5D**	■	■			
		3LD9240-5D			■	■	■
	Gold-plated	**3LD9280-5DF**	■	■			
		3LD9240-5DF			■	■	■
Handles							
 • Supplied with a masking frame, but without an extension shaft or coupling driver • Can be locked with up to 3 padlocks							
Labeling	**Color**	**Catalog No.**					
O-I	Gray	**8UD1771-2AD01**	■	■			
		8UD1731-2AD01			■	■	■
	Red/yellow	**8UD1771-2AD05**	■	■			
		8UD1731-2AD05			■	■	■

Disconnect Switches

3LD5 UL Main Control and EMERGENCY-STOP Switches, Panel Mounting, SCCR 50 ... 65 kA *Selection*




Operating mechanisms, red/yellow	
3P	**3P+N**
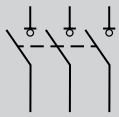	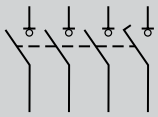
3LD5010-0TK13	**3LD5010-0TL13**
3LD5210-0TK13	**3LD5210-0TL13**
3LD5410-0TK13	**3LD5410-0TL13**
3LD5610-0TK13	**3LD5610-0TL13**
3LD5810-0TK13	**3LD5810-0TL13**

			3LD50	3LD52	3LD54	3LD56	3LD58
Supplementary handles for door-coupling rotary operating mechanism							
	• For requirements according to UL508A/NFPA79 • Can be locked with up to 1 padlocks in 0 position • Can only be switched on by deliberate action						
Labeling	**Color**	**Catalog No.**					
O-I	Gray	**3LD9287-1C**	■	■			
		3LD9247-1C			■	■	■
	Red/yellow	**3LD9287-3C**	■	■			
		3LD9247-3C			■	■	■
Coupling drivers							
	Version	**Catalog No.**					
	With tolerance compensation	**8UD1900-1GA00**	■	■			
		8UD1900-2GA00			■	■	■
	Without tolerance compensation	**8UD1900-1HA00**	■	■			
		8UD1900-2HA00			■	■	■
Terminal covers							
	• Pack of 4 units						
	Number of poles	**Catalog No.**					
	1-pole	**3LD9251-2A**	■				
		3LD9281-2A		■			
		3LD9241-2A			■	■	■
	3-pole	**3LD9251-0A**	■				
Inscription labels							
	• **Pack of 10 units**						
	Inscription	**Catalog No.**					
	German / English (Hauptschalter / Main Switch)	**3LD9286-1A**	■	■	■	■	■
	Without inscription	**3LD9286-4A**	■	■	■	■	■
Switching shafts							
	**section**	**Length**	**Catalog No.**					
	6 × 6 mm	300 mm	**3LD9205-0C**	■	■			
		600 mm	**3LD9205-2C**	■	■			
	8 × 8 mm	300 mm	**3LD9245-0C**			■	■	■
		600 mm	**3LD9245-2C**			■	■	■

Disconnect Switches

Accessories for 3LD5 UL Main Control and EMERGENCY-STOP Switches

Selection

Additional poles

			3LD50	3LD52	3LD54	3LD56	3LD58
Switching contacts for N conductor (4th contact) for front mounting							
	**Contacts**	**Catalog No.**					
	Leading switch-on, lagging switch-off	**3LD9250-0BA**	■				
		3LD9280-0B		■			
		3LD9240-0B			■	■	■
Switching contacts for N conductor (4th contact) for panel mounting							
	**Contacts**	**Catalog No.**					
	Leading switch-on, lagging switch-off	**3LD9250-0CA**	■				
		3LD9280-0C		■			
		3LD9240-0C			■	■	■
N/PE terminals for front mounting							
	**Contacts**	**Catalog No.**					
	Through-type	**3LD9250-2BA**	■				
		3LD9280-2B		■			
		3LD9240-2B			■	■	■
N/PE terminals for panel mounting							
	**Contacts**	**Catalog No.**					
	Through-type	**3LD9250-2CA**	■				
		3LD9280-2C		■			
		3LD9240-2C			■	■	■
Auxiliary switches (standard version) for front mounting							
	• For mounting on the left and/or right • Lagging switch-on, leading switch-off						
	Contacts	**Contact surface** / **Catalog No.**					
	1 NO + 1 NC	Standard **3LD9200-5B**	■	■	■	■	■
		Gold-plated **3LD9200-5BF**	■	■	■	■	■
Auxiliary switches (standard version) for panel mounting							
	• For mounting on the left and/or right • Lagging switch-on, leading switch-off						
	Contacts	**Contact surface** / **Catalog No.**					
	1 NO + 1 NC	Standard **3LD9200-5C**	■	■	■	■	■
		Gold-plated **3LD9200-5CF**	■	■	■	■	■
Auxiliary switch for mounting on the front							
	• Mounted on the front of the switch shaft • For long leading times (20 ... 150ms)						
	Contacts	**Contact surface** / **Catalog No.**					
	1 NO + 1 NC	Standard **3LD9280-5D**	■	■			
		3LD9240-5D			■	■	■
		Gold-plated **3LD9280-5DF**	■	■			
		3LD9240-5DF			■	■	■

Disconnect Switches

Accessories for 3LD5 UL Main Control and EMERGENCY-STOP Switches

Selection

Operating mechanisms

			3LD50	3LD52	3LD54	3LD56	3LD58
Rotary operating mechanism for front mounting							
 • Lockable in 0 position with up to 3 padlocks							
Version		**Catalog No.**					
For main control switches		**3LD9284-1B**	■	■			
For EMERGENCY-STOP switches		**3LD9284-3B**	■	■			
Knob-operated mechanism for front mounting							
 • Lockable in 0 position with up to 3 padlocks							
Version		**Catalog No.**					
For main control switches		**3LD9243-1B**			■	■	■
For EMERGENCY-STOP switches		**3LD9284-3B**			■	■	■
Handles for panel mounting							
 • Supplied with a masking frame, but without an extension shaft or coupling driver • Can be locked with up to 3 padlocks							
Labeling	**Color**	**Catalog No.**					
O-I	Gray	**8UD1771-2AD01**	■	■			
		8UD1731-2AD01			■	■	■
	Red/yellow	**8UD1771-2AD05**	■	■			
		8UD1731-2AD05			■	■	■
Supplementary handles for door-coupling rotary operating mechanism							
 • For requirements according to UL508A/NFPA79 • Can be locked with up to 1 padlocks in 0 position • Can only be switched on by deliberate action							
Labeling	**Color**	**Catalog No.**					
O-I	Gray	**3LD9287-1C**	■	■			
		3LD9247-1C			■	■	■
	Red/yellow	**3LD9287-3C**	■	■			
		3LD9247-3C			■	■	■
Coupling drivers for panel mounting with door-coupling rotary operating mechanism							
							
Version		**Catalog No.**					
With tolerance compensation		**8UD1900-1GA00**	■	■			
		8UD1900-2GA00			■	■	■
Without tolerance compensation		**8UD1900-1HA00**	■	■			
		8UD1900-2HA00			■	■	■

Other accessories

			3LD50	3LD52	3LD54	3LD56	3LD58
Terminal covers							
• Pack of 4 units							
Number of poles		**Catalog No.**					
 1-pole		**3LD9251-2A**	■				
		3LD9281-2A		■			
		3LD9241-2A			■	■	■
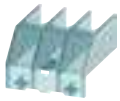 3-pole		**3LD9251-0A**	■				
Inscription labels							
 • **Pack of 10 units**							
Inscription							
German / English (Hauptschalter / Main Switch)		**3LD9286-1A**	■		■	■	■
Without inscription		**3LD9286-4A**	■		■	■	■
Switching shafts							
 **section**	**Length**	**Catalog No.**					
6 × 6 mm	300 mm	**3LD9205-0C**	■	■			
	600 mm	**3LD9205-2C**	■	■			
8 × 8 mm	300 mm	**3LD9245-0C**			■	■	■
	600 mm	**3LD9245-2C**			■	■	■

Disconnect Switches

3LD2 Rotary Disconnect Switches in Non-Metallic Enclosures

Selection

Description

16–125A non-fusible switches are available in fiberglass reinforced polycarbonate enclosures which are UL approved as Type 12 & 4X and for either indoor or outdoor use. All are horsepower and load break rated. All are panel mounted and are either supplied with factory installed aux. contacts or will accept contact kits. All are compact in size while providing ample wiring space for copper line & load conductors.

- 16–125A, Non-Fusible
- 600VAC max. rated
- Available in both Type 12 and 4X non-metallic enclosures
- Listed and marked "suitable for use as motor disconnect" per NEC Section 430-109
- Switches are UL listed under File No. E47705 and are CSA certified under File No. 203576
- IEC 60947-3 rated and CE marked (enclosures are IP65 rated)
- HP rated
- 16–63A switches have factory installed ground bars.
- Switches are provided with knockouts
- Padlockable in OFF position with up to (3) padlocks
- Enclosures are constructed from Makrolon 9425.



Amp Rating	Catalog Number		Shipping Weight①	Horsepower Ratings			
				240V AC		480V AC	600V AC
	3 Pole, 3 Wire	3 Pole, 3 Wire with (1) NO & (1) NC Aux. Contact⑤⑥		1 Phase	3 Phase	3 Phase	3 Phase
Non-Fusible, Type 1, 4X & 12K② with Black Rotary Handle 600V AC Max.							
16	**3LD2064-0TB51-0US2**	**3LD2064-1GP51-0US2**	1	1½	3	7½	10
25	**3LD2164-0TB51-0US2**	**3LD2164-1GP51-0US2**	1	3	7½	10	15
30	**3LD2264-0TB51-0US2**	**3LD2264-1GP51-0US2**	1	3	7½	15	20
30	—	**3LD2264-1TS51-0US2③▲**	1	3	7½	15	20
30	—	**3LD2264-2TW51-0US2④▲**	1	3	7½	15	20
63	**3LD2565-0TB51-0US2**	**3LD2565-1GP51-0US2▲**	3	10	15	40	50
100	**3LD2766-0TB51-0US2**	**3LD2766-1GP51-0US2▲**	6	—	30	60	75
125	**3LD2866-0TB51-0US2**	**3LD2866-1GP51-0US2▲**	6	—	40	75	100
Non-Fusible, Type 1, 4X & 12K② with Red and Yellow Rotary Handle 600V AC Max.							
16	**3LD2064-0TB53-0US2**	**3LD2064-1GP53-0US2**	1	1½	3	7½	10
25	**3LD2164-0TB53-0US2**	**3LD2164-1GP53-0US2**	1	3	7½	10	15
30	**3LD2264-0TB53-0US2**	**3LD2264-1GP53-0US2**	1	3	7½	15	20
30	—	**3LD2264-1TS53-0US2③▲**	1	3	7½	15	20
30	—	**3LD2264-2TW53-0US2④▲**	1	3	7½	15	20
63	**3LD2565-0TB53-0US2**	**3LD2565-1GP53-0US2▲**	3	10	15	40	50
100	**3LD2766-0TB53-0US2▲**	**3LD2766-1GP53-0US2▲**	6	—	30	60	75
125	**3LD2866-0TB53-0US2▲**	**3LD2866-1GP53-0US2▲**	6	—	40	75	100

▲ Built to order. Allow 6–8 weeks for delivery.
① Carton quantity of (1). Shipping weight in pounds (lbs.).
② Approved for indoor/outdoor use. No cover interlock provided.
③ Switch is supplied with (2) NO and no NC aux. contacts.
④ Switch is supplied with (4) NO and no NC aux. contacts. Ground bar is not provided or available.
⑤ Aux. contacts break about 3 Ms before and make about 3 Ms after main switch contacts.
⑥ 6P, 25A, switch with 1 NO & 1 NC aux. contacts and a black operating handle is also available. Order catalog number **3LD2165-4VD51** (Discount Code: Pilot Devices).

Enclosed Disconnect Switch Dimensions (Inches)

Catalog Number	Ampere Rating	Dimensions			
		A	B	C	D
3LD2064-	16	5.52③	3.94	3.19	4.57
3LD2164-	25	5.52③	3.94	3.19	4.57
3LD2264-	30	5.52③	3.94	3.19	4.57
3LD2565-	63	6.93③	5.75	4.10	5.87
3LD2766-	100	11.90	8.35	5.36	7.13
3LD2866-	125	11.90	8.35	5.36	7.13

Note: 3LD2 Type switches only have top and bottom end KOs as follows: 16-30A - 1/2" & 3/4", 63A - 3/4" & 1", 100 & 25A - 1" & 1 1/4"

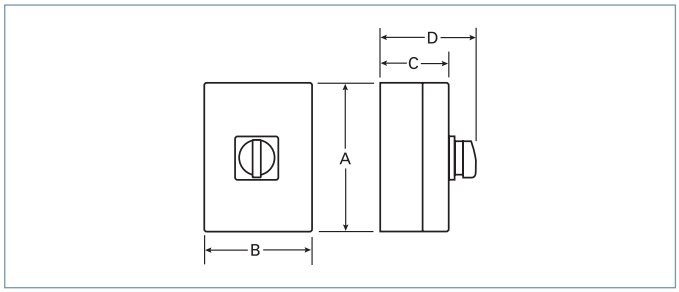

UL and CUL Short Circuit Withstand Ratings③

Ampere Rating	Short Circuit Withstand Rating and Fuse Class				
	With Line Side Fusing			With Load Side Fusing①	
	5 kA at 600V Max	10 kA at 600V Max	18 kA at 480V Max	5 kA at 480V Max	18 kA at 480V Max
16	RK5 (50A Max)	—	—	—	—
25 & 30	RK5 (80A Max)	—	—	—	—
63	RK5 (175A Max)	—	—	—	—
100 & 125	—	RK5 (200A Max)	—	—	—

16 Amps	(1) #18-10 AWG
25–30 Amps	(1) #14-10 AWG
63 Amps	(1) #14-6 AWG
100–125 Amps	(1) #12-1 AWG

IEC Fuse and Withstand Ratings

Ampere Rating	gG Fuse Size	Short Circuit Rating
16	20A	5k Arms
25	25A	10k Arms
32	50A	10k Arms
63	63A	15k Arms
100	100A	20k Arms
125	125A	20k Arms

Accessories②

Switch Ampere Rating	Catalog Number	Description
16–30A	**3LD9220-2C**	Neutral Kit
63A	**3LD9250-2CA**	Neutral Kit
100–125A	**3LD9280-2C**	Neutral Kit

① For use as supplemental protection on the load side of the branch circuit over current protective device.
② Factory installed ground lugs supplied as follows: 16-30A #14-10 Cu, 63A #14-8 Cu. Ground lug not provided and is not available on catalog numbers 3LD2264-2TW51-0US2 and 3LD2264-2TW53-0US2.
③ 6.38 inches high including mounting feet.
④ 7.85 inches high including mounting feet.
⑤ 16-63A 3LD switches are also rated 5kA at 600VAC max when protected by a 3RV type MSP of the same or lesser ampere rating.

Disconnect Switches

Type VBII (30-600A) with Flange Mounted Operating Handle

Features and Ordering Information

Features

- 30-600A, 600VAC and DC ratings
- 240 & 600V AC switches are UL Recognized under file number E121152, Vol. 3 and CSA certified under file number 154852
- Visible blade quick make and break switching action
- Panel and Flange mounted assemblies facilite installation
- Panel mounted switches are variable depth
- Short circuit rating of 10,000 AIC with class H fuse, and of 200,000 AIC with class R or J fuses.
- Flange mounted handles rated as Type 1, 3R & 12 or 4X are padlockable in the off position with up to (3) padlocks with 5/16 hasps
- Meets UL98 requirements and suitable for both main and branch circuit applications
- A complete line of aux contacts are available
- Load break and horsepower rated
- Defeatable cover interlock standard with all handles
- Meets NFPA79 requirements
- Seismic qualified — complies with the 2010 California Building Code (CBC) — and with the International Building Code (IBC) — Compliance Level SDS = 1.85 g



VBFS361, VBLK1 & VBH1



VBFS363F



VBNFS365, VBLK4 & VBH2

Ordering Information

1. Determine the ratings required (amps, volts, HP, Fusible, NF), the mounting needed (Panel or Flange), and select the appropriate switch.
2. For panel mounted switches with a rigid operating shaft (30-600A), order panel mounted switch, flange mounted operating handle & rigid linkage kit based on depth required.
3. For panel mounted switches with a Max-Flex operator, order panel mounted switch, Max-Flex Handle & Adapter Kit and drive cable.
4. Select accessories if required.

Disconnect Switches

Type VBII (30-600A) with Flange Mounted Operating Handle

Selection

Switches—for Standard 600V Max AC or DC Applications

Switch Amperage Rating	Max. AC Voltage Rating	Catalogue Number	Horsepower Rating, Switches and 3-Phased④						600 Volts DC (max)④
			240 Volts AC		480 Volts AC		600 Volts AC		
			Std.	Max.	Std.	Max.	Std.	Max.	
Fusible Panel Mounted Variable Depth Switches - 3-Pole⑤									
30	240	**VBFS321**	3	$7^{1/2}$	—	—	—	—	—①
60	240	**VBFS322**	$7^{1/2}$	15	—	—	—	—	—②
30	600	**VBFS361**	—	—	5	15	$7^{1/2}$	20	15③
60	600	**VBFS362**	—	—	15	30	15	50	30③
100	600	**VBFS363**	—	—	25	60	30	75	50③
200	600	**VBFS364**	—	—	50	125	60	150	50
400	600	**VBFS365**	—	—	100	250	125	350	—⑨
600	600	**VBFS366**	—	—	150	400	200	500	—⑨
Non-fusible Panel Mounted Variable Depth Switches - 3-Pole⑤									
30	600	**VBNFS361**	—	10	—	20	—	30	15③
60	600	**VBNFS362**	—	20	—	50	—	60	30③
100	600	**VBNFS363**	—	40	—	75	—	100	50③
200	600	**VBNFS364**	—	60	—	125	—	150	50
400	600	**VBNFS365**	—	125	—	250	—	300	—⑨
600	600	**VBNFS366**	—	200	—	400	—	500	—⑨
Fusible Flange Mounted Switches - 3-Pole⑥⑦									
30	240	**VBFS321F**	3	$7^{1/2}$	—	—	—	—	—①
60	240	**VBFS322F**	$7^{1/2}$	15	—	—	—	—	—②
30	600	**VBFS361F**	—	—	5	15	$7^{1/2}$	20	15③
60	600	**VBFS362F**	—	—	15	30	15	50	30③
100	600	**VBFS363F**	—	—	50	60	30	75	50③
200	600	**VBFS364F**	—	—	100	125	60	150	50
Non-fusible Flange Mounted Switches – 3-Pole⑥⑦									
30	600	**VBNFS361F**	—	10	—	20	—	30	15c
60	600	**VBNFS362F**	—	20	—	50	—	60	30c
100	600	**VBNFS363F**	—	40	—	75	—	100	50c
200	600	**VBNFS364F**	—	60	—	125	—	150	50

Note: Fusible switches include fuse provisions for Class H Fuses. The load base can be moved to pre-drilled holes for Class J Fuses on all 600V switches. If Class R Fuses are required, add a Class R Fuse Clip Kit.

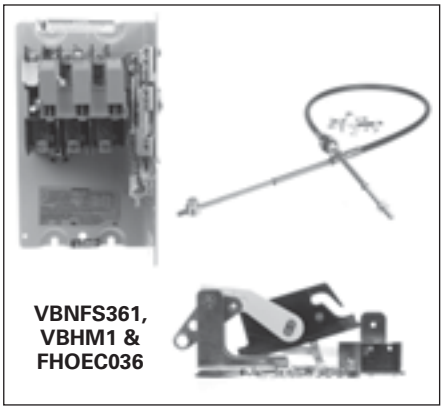

VBNFS361, VBHM1 & FHOEC036

Max-Flex™ Handle and Adapter Kit

(Type 1, 12, 3R & 4X) Use with 30-200A panel mounted switches and cable kit.

Catalogue Number	Operating Handle Description

Plastic Handles

VBHM1	30-200A Type 1, 3R, 12 and 4X

Metal Handles

VBHM2	30-200A Type 1, 3R and 12
VBHM2X	30-200A Type 4X

Cable Kit

For use with 30-200A panel mounted switches and Max-Flex handle and adapter kit.

Catalogue Number	Description
FHOEC036	36" long drive cable
FHOEC048	48" long drive cable

① Rated 5 HP at 250V DC.
② Rated 10 HP at 250V DC.
③ 600V DC & 600V DC horsepower rating shown requires (2) poles to be connected in series.
④ Std. - applies when non-time delay fuses are used. Max. - applies when time delay fuses are used.
⑥ Includes line base, load base, operating mechanism and line and load lugs. Order operating handle and linkage kits from tables on pages 4-7 or 4-8.
⑦ Please add letter "M" to the end of catalog number for metal handle.

Disconnect Switches

Type VBII (30-600A) with Flange Mounted Operating Handle

Selection & Accessories

Flange Mounted Operating Handles

For use with Panel Mounted Switches. Plastic handle is included with Flange Mounted Switches as standard.

Catalogue Number	Operating Handle Description
Plastic Handles	
VBH1	30-200A Type 1, 3R & 12
VBH14X	30-200A Type 4X
Metal Handles	
VBH112	30-200A Type 1, 3R & 12
VBH14	30-200A Type 4X
VBH2	400A Type 1 & 12
VBH2R	400 & 600A Type 1, 3R & 12
VBH24X	400 & 600A Type 4X



HR612

Class R Fuse Clip Kits

These kits prevent the installation of Class H and K fuses (one kit required per switch).

Class R Fuse Clip Kits

Catalogue Number	Description
HR21	30A, 240V Kit (HD only)
HR612	30A, 600V Kit/60A, 240V Kit
HR62	60A, 600V Kit
HR63	100A Kit
HR64	200A Kit
HR656	400A/600A Kit

Internal Door Latch Kits

For use with enclosures with door mounted latching bar. Required when a flange mounted switch is mounted in a Hoffmann or Rittal enclosure provided with an AB cutout.

Catalogue Number	Description
DKR2	2 point (for use with enclosures less than 40" high)
DKR3	3 point (for use with enclosures 40" or larger in height)

Rigid Linkage Kits

For use with Panel Mounted Switches. Not required for Flange Mounted Switches.

Catalogue Number	Switch Ampere Rating	Enclosure Depth①	
		Min	Max.
VBLK1	30-200	6.94②	6.94?
VBLK2	30-200	6.94②	19.0
VBLK3	400 & 600	9.00	8.75
VBLK4	400 & 600	9.00	19.0



HT63

Class T Fuse Adapter Kits

100-600A fusible switches are field convertible to accept Class T fuses. 400-600A switches are field convertible to accept Class T fuses by moving the load base to a pre-drilled T fuse position.

Class T Fuse Adapter Kits③

Catalogue Number	Description
HT23	100A, 240V Kit
HT63	100A, 600V Kit
HT24	200A, 240V Kit
HT64▲	200A, 600V Kit

Class J Fuse Provisions

All 30-600A, 600V fusible switches are field convertible to accept Class J fuses by moving the load base to a pre-drilled J fuse position.

Window Kits (Type 1, 12, 3R and 4x)

Allows viewing of visible blades and of indicating fuses through 200A.

Catalogue Number	Description
VBWK1	30A Window Kit
VBWK2	60 & 100A Window Kit
VBWK3	200-600A Window Kit

NEW Quick Connects

They provide two point control power take-off capability and are normally used on two poles on the line side when it is required to have control power available when the switch is in the OFF position. They provide a mounting provision for standard ¼" quick connect terminal. Installed in the line or load side. 30A VBII switches have lugs to accept (2) wires per pole as standard so a 30A kit is not required.

Catalogue Number	Description
HCQ62	60A 2 wire quick connect kit
HCQ63	100A 2 wire quick connect kit
HCQ64	200A 2 wire quick connect kit



HN612

Neutral Kits

Standard Neutral Kits can be field installed in 30-100A switches.

Neutral Kits

Switch Ampere Rating	Kit Catalogue Number
30A 600V, 60A 240V	**HNC612**
60A, 600V & 100A	**HNC623**

200% Neutral Kits

CSA listed 200% Neutrals are available on 60 & 100A switches. They are typically used with non-linear transformers or where increased neutral ampacity/lug capacity is required.

200% Neutral Kits

Switch Ampere Rating	Kit Catalogue Number	Wire Range Line & Load Lugs (Cu/Al)
60 & 100A	**HNC263**	**(2) #14-1/0 AWG**

▲ Built to order. Allow 6–8 weeks for delivery.
① Dimensions (min. & max.) from enclosure mounting pan to outside surface of enclosure handle mounting flange.
② 7.12 for 200A switches.
③ One kit per pole required.



HA161234



HA261234



HP61



HLC612



HSK61

Auxiliary Contacts

The auxiliary contacts are available in 1 normally open and 1 normally closed or 2 normally open and 2 normally closed configurations. Siemens offers a PLC Auxiliary Switch (30-200A) that has very low resistance for low voltage and current typical in PLC circuits. All auxiliary contacts make after and break before main switch contacts.

Switch Ampere Rating	Aux. Switch Catalogue Number	Kit Ampere Rating			Kit Horsepower Rating		
		125V AC	250V AC	28V DC	125V AC	250V AC	28V AC
		Max.	Max.	Max.	Max.	Max.	Max.
With 1 NO & 1 NC Isolated Contacts							
30-200	**HA161234**	10	10	—	1/2	3/4	—
400-600	**HA165678**	10	10	—	1/2	3/4	—
With 2 NO & 2 NC Isolated Contacts							
30-200	**HA261234**	10	10	7	1/2	3/4	—
400-600	**HA265678**	10	10	7	1/2	3/4	—
Low Current PLC Type with 1 NO & 1 NC Gold Plated Contacts							
30-200	**HA361234**	10	10	—	1/2	3/4	—
400-600	**HA365678**	10	10	—	1/2	3/4	—

Fuse Puller Kits

Fuse Puller Kits are field installable in 30-100A Type VBII Heavy Duty Switches (one kit required per 3-pole switch).

Switch Ampere Rating	Fuse Puller Kit Catalogue Number
030	**HP61**
060	**HP62▲**
100	**HP63▲**

Copper Lug Kits

All switches are CSA approved to accept field installed copper lug kits.

Switch Ampere Rating	Copper Lug Cat. No.	Description
30–60	**HLC612**	**(9) Lugs/Kit #14-4 AWG Cu**
100	**HLC63▲**	**(9) Lugs/Kit #14-1/0 AWG Cu**
200	**HLC64▲**	**(9) Lugs/Kit #6 AWG-300 Kcmil Cu**
400–600A	**HLC65678**	**(1) Lugs/Kit #1/0 AWG-600 Kcmil Cu**

Equipment Ground Kits

Equipment Ground Lug Kits are available for all switches.

Switch Ampere Rating	Catalogue Number	Number of Terminals	Wire Range Per Terminal (Cu/Al)
30–200	**HG61234**	2	#14-4 AWG
400 & 600	**HG656**	4	#6 AWG-250 Kcmil

NEW Internal Shield Kits (for fusible switches)

Kits provide a "skirt" that encloses the VBII switch and also a clear plastic inner door to prevent accidental contact with live parts. Test probe holes are provided and fuses can be replaced without removal of kit.

Switch Ampere Rating	Shield Kit Catalogue Number
30A	**HSK61**
60-100A	**HSK623**
200A	**HSK64**

▲ Built to order. Allow 6–8 weeks for delivery.

Lugs

30 & 60A switches are suitable for use with 60° or 75°C wire. 100–600A switches are suitable for use with 75°C rated wire. All switches are supplied with factory installed line and load lugs.

Wire Ranges (Line, Load and Standard Neutral)

Switch Ampere Rating	Lug Wire Range
30	#14-2 AWG (Cu/Al)
60	#14-2 AWG (Cu/Al)
100	#14-1/0 AWG (Cu/Al)
200	#6 AWG-300 Kcmil (Cu/Al)
400	(1) 1/0 AWG-750 Kcmil (Cu/Al) or (2) 1/0 AWG-250 Kcmil (Cu/Al)
600	(2) 1/0 AWG-750 Kcmil (Cu/Al) or (4) 1/0 AWG-250 Kcmil (Cu/Al)

Approximate Dimensions

Mounting bracket shown with handle installed is supplied with Flange Mounted Switches only. All Panel Mounted Switches have a "L" shaped mounting pan with a line base, load base (if fusible) and mechanism installed.

Catalogue Number	Dimensions				
	A	B	C①	D (min)	D (max)
Fusible, Panel Mounted					
VBFS321	11.88	N/A	7.47	6.94	19
VBFS322	13.12		8.5	6.94	19
VBFS361	11.88		7.47	6.94	19
VBFS362	13.12		8.5	6.94	19
VBFS363	13.12		8.5	6.94	19
VBFS364	17		12.33	7.12	19
VBFS365	26.25		16.5	8.63	19
VBFS366	26.25		16.5	8.63	19
Non-fusible, Panel Mounted					
VBNFS361	9.79	N/A	7.47	6.94	19
VBNFS362	9.79		8.5	6.94	19
VBNFS363	9.79		8.5	6.94	19
VBNFS364	10.77		12.33	7.12	19
VBNFS365	13		16.5	8.63	19
VBNFS366	13		16.5	8.63	19
Fusible, Flange Mounted					
VBFS321F	11.88	14.08	7.47	7.27	N/A
VBFS322F	13.12	15.83	8.85	7.27	
VBFS361F	11.88	14.08	7.47	7.27	
VBFS362F	13.12	15.83	8.85	7.27	
VBFS363F	13.12	15.83	8.85	7.27	
VBFS364F	17	18.20	12.68	7.57	
Non-fusible, Flange Mounted					
VBNFS361F	9.79	11.78	7.47	7.27	N/A
VBNFS362F	9.79	11.78	8.85	7.27	
VBNFS363F	9.79	11.78	8.85	7.27	
VBNFS364F	10.77	11.97	12.68	7.57	

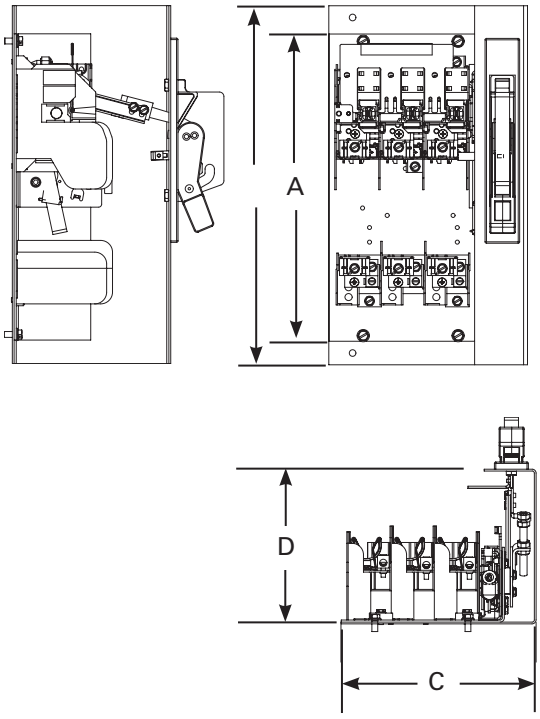

① Dimension C for panel mounted switches indicates the minimum width from the left hand edge of the switch mounting pan to the right hand inside surface of the enclosure.

Disconnect Switches

Type MCS (30-200A) — Switches, Fuse and No Fuse Kits

Selection

Features

- 30, 60, 100 and 200 Ampere Switches
- UL Recognized (file # E121152 vol. 1 & 2) and CSA Certified under file #84625
- Simple Mounting — with an integral switch and over center mechanism
- Horsepower & load break rated
- Compact Size
- Visible Blade Contacts
- Rugged Construction — with a short circuit current rating of 10,000 amps with Class H or 200,000 amps at 600V maximum AC, when fused with Class R or Class J fuses
- Available with three operator handle options, allowing flexible placement of switch
- Field Installable Auxiliary Contacts
- Flexible Fuse Class Configurations
- Flange mounted handles meet NFPA79 requirements

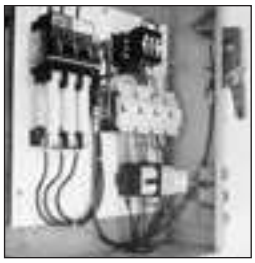

Type MCS Disconnect Switch with Max-Flex™ handle operator



Type MCS Disconnect Switch with fixed-depth, flange-mounted handle

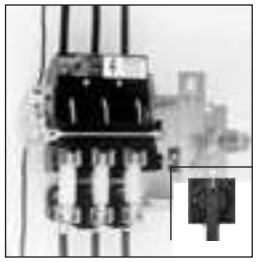

Type MCS Disconnect Switch with rotary handle

Ordering Information

1. Select the basic switch size you need (30, 60, 100 or 200 ampere).
2. Check the switch selected against the maximum horsepower rating required for our application. "L" or "R" suffix on switch catalog numbers denotes left or right-handed mechanism drive.
3. Choose either fuse or no fuse kit from chart below.
4. Check "Minimum Dimensions" on page 5-12 for installation space requirements.
5. Select from the list of handle operators, the type which best suits your application. Handle operators can be selected from the next page.

Basic Switches

Switch Ampere Rating	Max. Voltage Rating	Catalogue Number Right Hand	Catalogue Number Left Hand	Max. Horespower Rating, 3 Phase④						250 Volts (max)④
				240 Volts AC		480 Volts AC		600 Volts AC		
				Standard Fuse	Time Delay Fuse	Standard Fuse	Time Delay Fuse	Standard Fuse	Time Delay Fuse	
30	600	**MCS603R**	**MCS603L**	3	$7^{1/2}$	5	15	$7^{1/2}$	20	15
60	600	**MCS606R**	**MCS606L**	$7^{1/2}$	15	15	30	15	50	10
100	600	**MCS610R**	**MCS610L▲**	15	30	25	60	30	75	20
200	600	**MCS620R**	**MCS620L▲**	25	60	50	125	60	150	40

Fuse And No Fuse Kits (Includes load base plus line and load fuse clips)①

Basic Switch Ampere Rating	Switch Catalogue Number	Kit Description	No Fuse Kits		For Class H	For Class J	For Class R	Lug Wire Size
			Standard	Cu Only②				
			Catalogue Number	Catalogue Number	Catalogue Number ①	Catalogue Number ①	Catalogue Number ①	
30	**MCS603R** or **MCS603L**	No Fuse	**TMK606**	—	—	—	—	#14 to #4 AWG Cu/Al
		30A, 250V	—	—	**FCK203▲**	—	**FCRK203**	
		30A, 600V	—	—	**FCK206**	**FCJK603**	**FCRK206**	
		60A, 250V	—	—	**FCK206**	—	**FCRK206**	
		60A, 600V	—	—	**FCK606**	**FCJK606**	**FCRK606**	
60	**MCS606R** or **MCS606L**	No Fuse	**TMK606**	—	—	—	—	#14 to #4 AWG Cu/Al
		60A, 250V	—	—	**FCK206**	—	**FCRK206**	
		60A, 600V	—	—	**FCK606**	**FCJK606**	**FCRK606**	
		100A, 250V	—	—	**OFCK661▲**	**OFCK661▲**	③	
		100A, 600V	—	—	**OFCK661▲**	**OFCK661▲**	③	
100	**MCS610R** or **MCS610L**	No Fuse	**TMK610**	**TMK610C**	—	—	—	#14 to #2/0 AWG Cu/Al
		100A, 250V	—	—	**FCK610**	**FCK610**	③	
		100A, 600V	—	—	**FCK610**	**FCK610**	③	
		200A, 250V	—	—	**OFCK620**	**OFCK620**	③	
		200A, 600V	—	—	**OFCK620**	**OFCK620**	③	
200	**MCS620R** or **MCS620L**	No Fuse	**TMK620**	**TMK620C▲**	—	—	—	#6 to 300 kcmil
		200A, 250V	—	—	**FCK620**	**FCK620**	③	
		200A, 600V	—	—	**FCK620**	**FCK620**	③	Cu/Al

▲ Built to order. Allow 6–8 weeks for delivery.
① For "copper only" connectors, order as follows:
Fusible—order standard switch, standard fuse kit and copper only no fuse kit.
Non-Fusible—order standard switch and copper only no fuse kit.
② Includes both line and load lugs.
③ For Class R fuses order Class H kit from this table and the Class R conversion kit from the next page.
④ HP ratings for time delay fuses and for 250V DC also apply to Non-fusible switches.

Auxiliary Switch Kits

Switch Catalogue Number	Contact Arrangement	
	1 NO/1 NC Catalogue Number	2 NO/2 NC Catalogue Number
MCS603R	MCSAKR136	MCSAKR236
MCS603L	MCSAKL136	MCSAKL236▲
MCS606R	MCSAKR136	MCSAKR236
MCS606L	MCSAKL136	MCSAKL236▲
MCS610R	MCSAK116	MCSAK216
MCS610L	MCSAK116	MCSAK216
MCS620R	MCSAK126	MCSAK226
MCS620L	MCSAK126	MCSAK226

Class R Fuse Conversion Kits

Fuse Clip Rating	Catalogue Number
100A, 600V	SSRK33
200A, 600V	SSRK34

Fuse Ejector Kits

Switch Catalogue Number	Fuse Ejector Kit Catalogue Number
MCS610	FE100▲
MCS620	FE200▲

Handle Operators

Fixed Depth, Flange Mounted, Types 1, 3, 3R, 12①⑥

Switch Catalogue Number	Complete Handle Mechanism Catalogue Number	Handle Only Catalogue Number	Switch Operator Only Catalogue Number
MCS603R	FDFS06R	FDH10	FDS06R
MCS603L	FDFS06L	FDH10	FDS06L
MCS606R	FDFS06R	FDH10	FDS06R
MCS606L	FDFS06L	FDH10	FDS06L
MCS610R	FDFS06R	FDH10	FDS06R
MCS610L	FDFS06L	FDH10	FDS06L
MCS620R	FDFS20R	FDH20	FDS20R
MCS620L	FDFS20L	FDH20	FDS20L

Variable Depth, Flange Mounted Max-Flex™, Types 1, 3, 3R, 12②

Switch Catalogue Number	Complete Handle Mechanism Catalogue Number	Handle Only Catalogue Number	Switch Operator Only Catalogue Number	Cable Only③ Catalogue Number
MCS603R	FHOS06036R	FHOHS	FHOS06R	FHOEC036
MCS603L	FHOS06036L	FHOHS	FHOS06L	FHOEC036
MCS606R	FHOS06036R	FHOHS	FHOS06R	FHOEC036
MCS606L	FHOS06036L	FHOHS	FHOS06L	FHOEC036
MCS610R	FHOS06036R	FHOHS	FHOS06R	FHOEC036
MCS610L	FHOS06036L	FHOHS	FHOS06L	FHOEC036
MCS620R	FHOS20036R	FHOHS	FHOS20R	FHOJC036
MCS620L	FHOS20036L	FHOHS	FHOS20L	FHOJC036

Variable Depth Rotary, Through-The-Door-Mounted, Types 1, 12④⑤

Variable Depth				Shaft Only Variable Depth
MCS603R	CRHOS06VD	CRHOH	RHOS06	RHOSVD
MCS606R	CRHOS06VD	CRHOH	RHOS06	RHOSVD
MCS610R	CRHOS06VD	CRHOH	RHOS06	RHOSVD
MCS620R	CRHOS20VD	RHOH	RHOS20	RHOSVD

MCS Disconnect Switch Panel Space Requirements

Panel Space Requirements

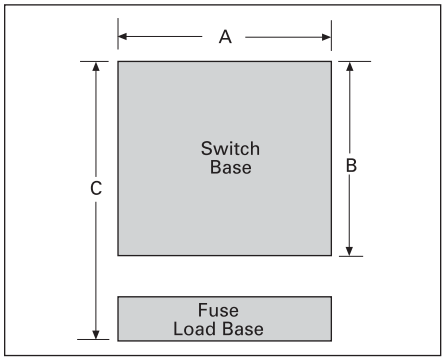

Minimum Dimensions (inches*)

Switch Catalogue Number	Size	"A"	"B"	"C"	Fuse Clases
MCS603	30A/240V	6.13	5.52	8.11	H, K, R
	30A/600V	6.13	5.52	10.11	H, K, R
	30A/600V	6.13	5.52	8.48	J
MCS606	60A/240V	6.13	5.52	7.86	H, K, R
	60A/600V	6.13	5.52	10.38	H, K, R
	60A/600V	6.13	5.52	8.35	J
MCS610	100A/240V	7.38	7.59	11.85	H, K, R
	100A/600V	7.38	7.59	13.85	H, K, R
	100A/600V	7.38	7.59	10.6	J
MCS620	200A/240V	9.17	9.00	14.7	H, K, R
	200A/600V	9.17	9.00	17.2	H, K, R
	200A/600V	9.17	9.00	13.32	J

"A" – Dimension is measured from each cross bail pin.

"B" – Dimension is measured from line side barrier to load side barrier.

"C" – Dimension is measured from line side terminal of switch to load side terminal of fuse load base.

▲ Built to order. Allow 6–8 weeks for delivery.

①For Type 4 and 4X applications, order handle only Catalogue Number
100A - **FDH104** 200A - **FDH204**

②For Type 4 and 4X applications, order handle only Catalogue Number **FHOHS4**

③Standard cable length is 36 inches. Alternate lengths are available as follows:

Length	Amps	Cat. No.
48"	30–100	**FHOEC048**
60"	30–100	**FHOEC060**
48"	200	**FHOJC048**
60"	200	**FHOJC060**

④For Type 4 and 4X applications, order handle only Catalog Number **RHOH4**

⑤For Type 3 and 3R applications, order handle only Catalog Number **RHOH**

⑥Min. enclosure depth from mounting pan to handle mounting surfaces: 30-100A 6.44 Inches
200A 10.93 Inches

*For millimeters multiply inches by 25.4.

Outline Drawing 30/60A Switch Mechanism

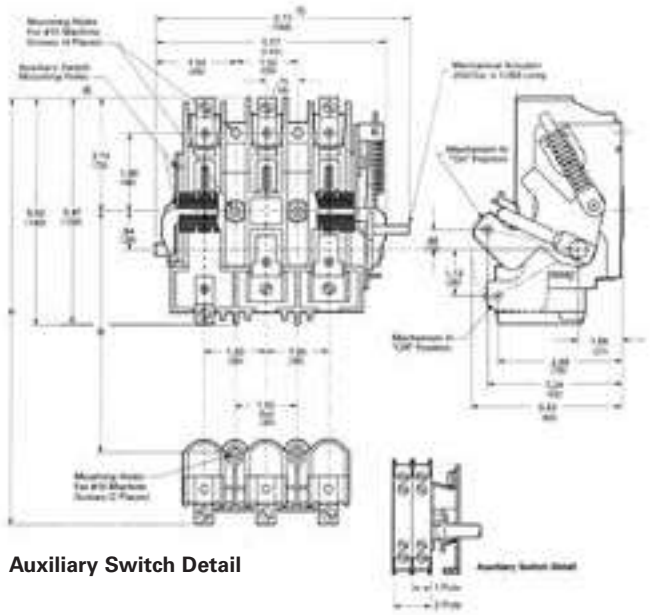

Auxiliary Switch Detail

Dimensional Data for Fused Applications - Inches (mm)

Basic Switch Catalogue Number	Size	A	B	Fuse Class
MCS603	30A/240V	8.11 (206)	3.63 (92)	H, K, R
	30A/600V	10.11 (257)	5.63 (143)	H, K, R
	30A/600V	8.48 (215)	4.00 (102)	J
MCS606	60A/240V	7.86 (200)	3.38 (86)	H, K, R
	60A/600V	10.36 (263)	5.88 (149)	H, K, R
	60A/600V	8.36 (212)	3.88 (99)	J

① Overall Width Using Auxiliary Switch
Single Pole - 7.18″ (182)
Double Pole - 7.63″ (194)
② Auxiliary switch mounts on opposite side from mechanism.

Outline Drawing 100A Switch Mechanism

Dimensional Data for Fused Applications - Inches (mm)

Basic Switch Catalogue Number	Size	A	B	C	Fuse Class
MCS610	100A/240V	11.85 (301)	11.41 (290)	6.66 (169)	H, K, R
	100A/600V	13.85 (352)	13.41 (341)	8.66 (220)	H, K, R
	100A/600V	10.60 (296)	10.16 (258)	5.41 (137)	J

① Overall Width Using Auxiliary Switch
Single Pole - 7.56″ (192)
Double Pole - 8.01″ (203)
② Auxiliary switch mounts on opposite side from mechanism.

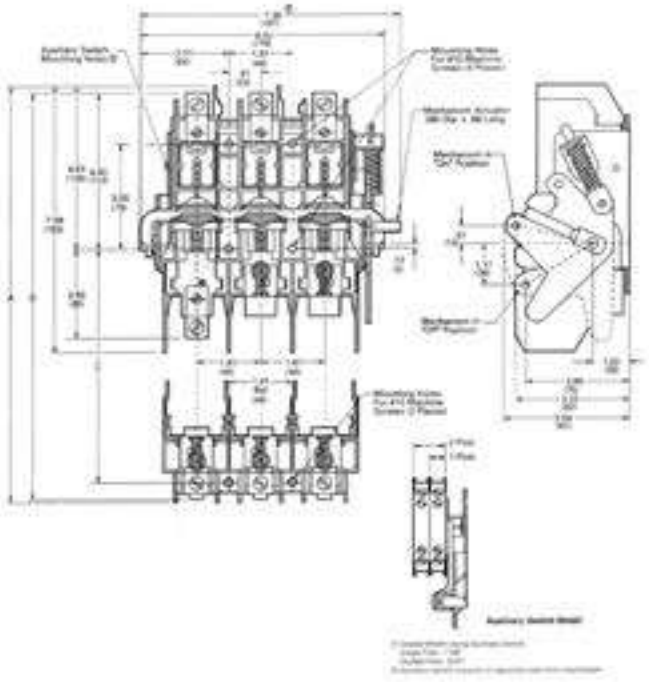

Outline Drawing 200A Switch Mechanism

Dimensional Data for Fused Applications - Inches (mm)

Basic Switch Catalogue Number	Size	A	B	Fuse Class
MCS620	200A/240V	14.70 (373)	6.00 (152)	H, K, R
	200A/600V	17.20 (437)	8.50 (216)	H, K, R
	200A/600V	13.32 (338)	4.62 (117)	J

① Overall Width Using Auxiliary Switch
Single Pole - 9.30" (236)
Double Pole - 9.75" (248)
② Auxiliary switch mounts on opposite side from mechanism.

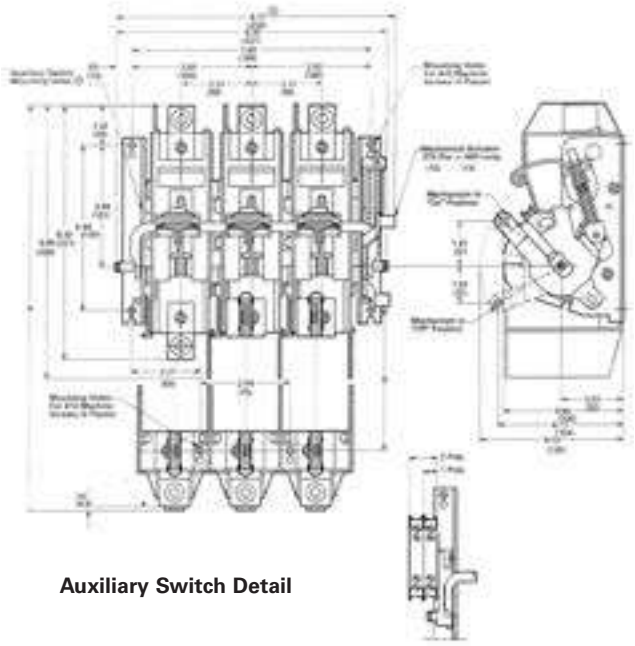

Auxiliary Switch Detail

Rotary Handle Operator

Dimensions - Inches (mm)

Catalogue Number	A	B	C	D
CRHOH	1.18 (30)	2.36 (60)	3.00 (76)	0.175 (4)
RHOH	1.59 (40)	3.18 (81)	3.50 (89)	0.281 (7)

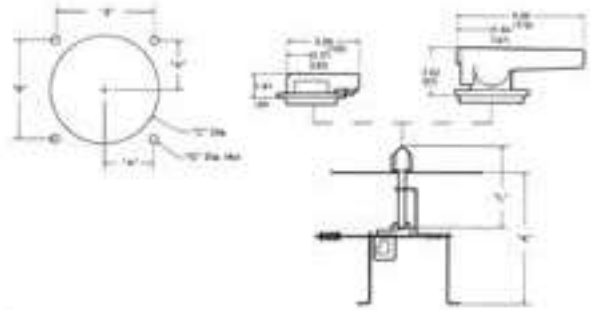

Dimensions - Inches (mm)

Catalogue Number:		CRHOS06	CRHOS20	RHOS06	RHOS20
Enclosure Depth (K)	Min.	5.42 (138)	6.17 (157)	4.75 (121)	5.50 (140)
	Max.	15.73 (400)	16.28 (414)	16.30 (419)	16.85 (428)
Shaft Length (L)		K-2.77 (70)	K-3.42 (87)	K-2.25 (57)	K-2.90 (74)

Dimensions - Inches (mm)

Catalogue Number	A	B	C	D
MCS603R, MCS606R	1.89 (48)	1.50 (38)	4.03 (102)	1.10 (28)
MCS610R	3.00 (76)	1.81 (46)	4.37 (111)	1.17 (30)
MCS620R	5.44 (138)	7.85 (199)	2.53 (64)	1.41 (36)

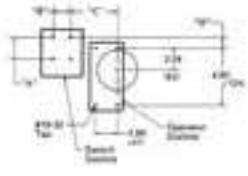

MCS603R, MCS606R, MCS610R

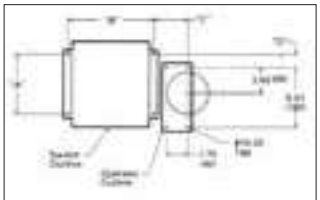

MCS620R

Motor Control Disconnect Switch

Fixed Depth Handle Operator

Dimensions - Inches (mm)

Catalogue Number	X1	X2	Y1	Y2	Z1
MCS603, MCS606	3.52 (89)	1.50 (38)	0.00 (0)	1.89 (48)	6.44 (164)
MCS610	3.91 (99)	1.81 (46)	0.13 (3)	3.00 (76)	6.44 (164)
MCS620	1.51 (38)	7.86 (200)	0.38 (10)	5.44 (138)	10.93 (278)

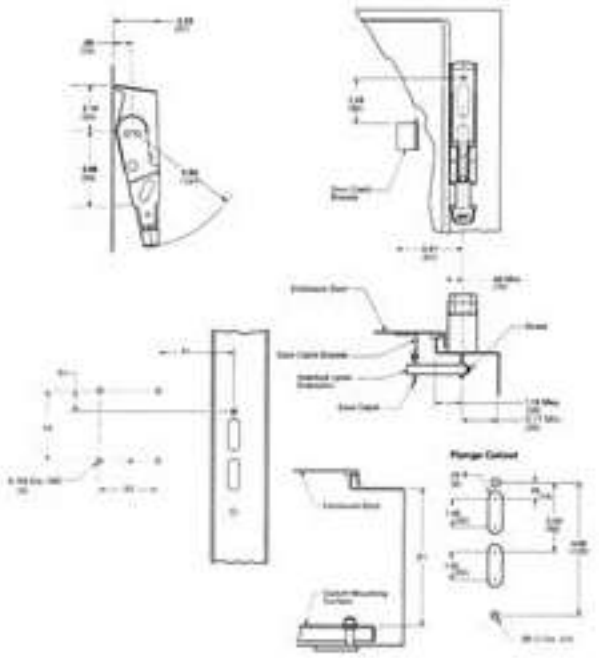

Max Flex™ Variable Depth Handle Operator

Dimensions - Inches (mm)

Catalogue Number	A	B	C	D	E	F
MCS603, MCS606	2.00 (51)	1.69 (43)	5.10 (130)	2.88 (73)	1.50 (38)	1.89 (48)
MCS610	2.00 (51)	0.82 (21)	5.10 (130)	3.21 (82)	1.81 (46)	3.00 (76)
MCS620	2.50 (64)	-1.00 (-25)	5.50 (140)	1.00 (25)	7.86 (200)	5.44 (138)

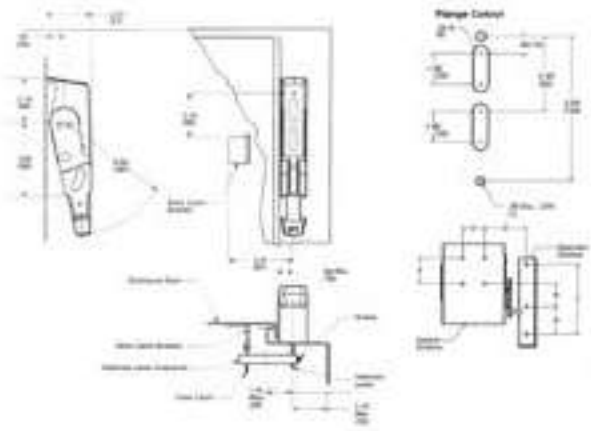

Maximum "E" Dimension①

Switch Catalogue Number	Cable Catalogue Number	Enclosure Depth inches (mm)						
		8	10	12	16	18	20	24
MCS603, MCS606	FHOEC036	16.0 (406)	13.0 (330)	13.5 (343)	8.0 (203)	—	—	—
MCS610	FHOEC048	26.0 (660)	26.0 (660)	26.0 (660)	23.0 (584)	21.0 (533)	18.0 (457)	17.0 (432)
MCS620	FHOJC036	15.0 (381)	12.0 (305)	12.5 (318)	7.0 (178)	—	—	—
	FHOJC048	25.0 (635)	25.0 (635)	25.0 (635)	22.0 (559)	20.0 (508)	17.0 (432)	16.0 (406)

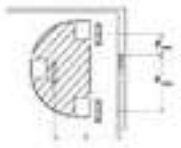

Enclosure Depth in. (mm)	36" Cable		48" Cable	
	Fmin.	Fmax.	Fmin.	Fmax.
8 (203)	7.0 (178)	14.5 (368)	16.1 (409)	23.9(607)
10 (254)	5.5 (140)	13.1 (333)	16.0 (406)	23.6(599)
12 (305)	5.0 (127)	12.0 (305)	15.9 (404)	22.8(579)
16 (406)	4.0 (102)	9.4 (239)	14.7 (373)	22.0(559)
18 (457)	—	—	14.6 (371)	21.9 (556)
20 (508)	—	—	13.3 (338)	19.9 (505)
24 (610)	—	—	12.0 (305)	16.9 (429)

①Maximum "E" Dimension only if F max = 4.6" (117)

Disconnect Switches

Type CFS Compact Fusible Switches

Features and Ordering Information

Features

- 30 - 800A ratings
- UL Listed under file #E121152 & CSA Certified under file #222227
- Door mounted rotary handles with defeatable cover interlock
- Meets UL/CSA requirements for both main and branch circuit applications
- Compact size
- 100kA with Class CC fuses or up to 200kA with Class J fuses
- Load break and horsepower rated
- Quick make and break operation
- All handles are padlockable with up to (3) padlocks with 5/16" hasps in the OFF position
- Catalogue number **CFS361C5**, **CFS361J5** and **CNFS361** can be DIN-rail mounted and can be either front or side operated with standard rotary handles.
- All CFS part numbers ending in N can be either front or side operated with standard rotary handles.
- Handles are available in Type 1, 3R, 4/4X & 12 ratings
- NFPA 79 field installed kits are available
- 30-400A, 200kA switches are provided with quick connect terminal provisions for voltage sensing or for 10A max. control circuits
- Fusible switches, 3-pole 600V AC Max. 30-100A & 600-800A switches are also rated 250V DC Max when poles are field connected in series.

Switch	Shaft	Handle	Lugs/Accessories
			
CFS363JN with (2) **CFSAUX1NO**	**CFSS10200HN**	**CFSH10BL12N**	**CFSL200**

Ordering information

1. Select the panel mounted switch required based on Ampere, HP and AIC requirements. Switches with a right hand mechanism are standard, 30-100A switches with a left hand mechanism are available.
2. Select handle based on environmental rating required.
3. Select operating shaft (200 or 400mm in length). For enclosure depths of 9.0" or less from panel mounting surface to inside of door use 200mm long shafts. For deeper enclosures use 400mm long shafts. 30A 100kA switches can be used in 10" deep enclosures (panel to inside of door) with 200mm shaft and CFSH5N handles.

Note: Be sure to check shaft and handle compatibility with the switch selected by using information provided in the selection tables.

4. Line & load lugs are provided as standard on 30-100A switches. Terminal kits are available for 200-800A switches if needed.
5. Auxiliary contact are available if needed as follows.
   A. 30A switch CFS361C5 and non-fusible 30A switch CNFS361 will accept up to (4) aux contacts
   B. 30A switch CFS361J5 will accept up to (2) aux contacts without an aux contact holder. If more than (2) aux contacts are required order aux contacts PLUS aux contact holder kit CFSAUXH1. All other switches will accept up to (4) aux contacts.
6. If non-fusible switch is required order a shorting bar for 60-600A switches or catalog number CNFS361 for 30A.
7. 30-100A switches are designed to prevent inadvertent contact with live parts and shields are not required. 200 & 400A switches are not supplied with terminal shields. They are available as field installed kits for both line and load terminals. 400-800A switches are supplied as standard with line shields and terminal shroud kits are available for the load side.

Disconnect Switches

Type CFS Compact Fusible Switches

Switch and Handle Selection

Fusible switches, 3-pole 600V AC Max. 30-100A & 600-800A switches are also rated 250V DC Max when poles are field connected in series⑤

Switch ampere rating	Catalogue Number	Fuse provisions provided	Max horsepower ratings				AC short circuit rating
			240V 3Ø AC	480V 3Ø AC	600V 3Ø AC	250V DC	
Standard – with right hand mounted mechanism							
30①	**CFS361C5**	Class CC	$7^{1/2}$	15	20	5③	100kA
30①	**CFS361J5**	Class J	$7^{1/2}$	15	20	5③	100kA
30①	**CFS361JN**	Class J	$7^{1/2}$	15	20	5③	200kA
30①	**CNFS361**⑧⑪	None	$7^{1/2}$	15	20	5③	65kA
60①	**CFS362JN1**	Class J	15	30	50	10③	100kA
60①	**CFS362JN**	Class J	15	30	50	10③	200kA
100①	**CFS363JN**		30	60	75	20③	
200②	**CFS364JN**④		60	125	150	–	
400②	**CFS365JN**④		125	250	350	–	
600②	**CFS366J**⑨⑩		200	400	500	–	
800②	**CFS367L**⑨⑩	Class L	200	400	500	–	200kA
Optional – with left hand mounted mechanism④							
30①	**CFS361JLN**	Class J	7.5	15	20	5③	200kA
60①	**CFS362JLN**		15	30	50	10③	
100①	**CFS363JLN**		30	60	75	20③	



CFS361J5

Operating shafts for 30-400A switches⑤

Catalogue Number	Shaft length in. (mm)	Switch & handle compatibility
CFSS5200N **CFSS5400N**	7.9 (200) 15.7 (400)	5mm x 5mm for use with CFS361C5, CFS361J5 &CNFS361 switches & with "CFSH5" handles only
CFSS5200HN **CFSS5400HN**	7.9 (200) 15.7 (400)	5mm x 5mm for use with all "CFSH10" handles & with CFS361C5, CFS361J5 & CNFS361 switches only
CFSS10200HN **CFSS10400HN**	7.9 (200) 15.7 (400)	10mm x 10mm for use with all "CFSH10" handles & with all 30-400A switches except CFS361C5, CFS361J5 & CNFS361



CFSS5400N

Compact rotary operating handles – door mounted (for use with CFS361C5, CFS3361J5 & CNFS361 switches only)⑥

Catalogue Number	Colour	Type	Operating shaft compatibility
CFSH5B12N **CFSH5R12N**	Blue & Black Yellow & Red	1, 3R & 12	CFSS5200N or CFSS5400N
CFSH5B4N **CFSH5R4N**	Blue & Black Yellow & Red	1, 3R, 12 & 4/4X	



CFSH5B12N

Rotary operating handles - door mounted (for use with CFSS5200HN, CFSS5400HN, CFSS10200HN & CFSS10400HN)

Catalogue Number	Colour	Description
Type 1, 3R & 12⑦		
CFSH10B12N	Blue & Black	Heavy duty pistol grip (2.75" long for use with 30A switches & CFS362JN1)
CFSH10R12N	Yellow & Red	
CFSH10BL12N	Blue & Black	Heavy duty pistol grip (4.92" long for 30-400A switches)
CFSH10RL12N	Yellow & Red	
Type 1, 3R, 4/4X & 12⑦		
CFSH10B4N	Blue & Black	Heavy duty pistol grip (2.75" long for use with 30A switches & CFS362JN1)
CFSH10R4N	Yellow & Red	
CFSH10BL4N	Blue & Black	Heavy duty pistol grip (4.92" long for 30-400A switches)
CFSH10RL4N	Yellow & Red	

① Line and load lugs included.
② Line and load lugs are not included. Order from table on next page if required.
③ DC HP rating shown requires (3) poles to be connected in series.
④ CFS364JN & CFS365JN can be rotated 180° for left hand operation as standard.
⑤ Catalog numbers CFS361C5, CFS361J5 & CNFS361 accept 5mm x 5mm operating shafts. All other 30-400A switches accept 10mm x 10mm operating shafts.
⑥ Compact pistol grip design (2.75" long) with defeatable cover interlock. Cover can be opened when handle is padlocked in the OFF position.
⑦ Defeatable cover interlock provided. Cover cannot be opened when handle is padlocked in the OFF position.
⑧ Catalog number CNFS361 is a non-fusible switch.
⑨ 4 pole 600 & 800A switches, CFS466J & CFS467L are also available.
⑩ CFS366J and CFS367L are rated 250 & 600V DC when (2) poles are connected in series.
⑪ CNFS361 is rated 65kA when protected by Class J or CC 30A max. fuses.

Disconnect Switches

Type CFS Compact Fusible Switches

Selection and Accessories

600 & 800A rotary operating handles - door mounted (8.27" long)⑦

Catalogue number	Colour	Type
CFSH12BL12	Blue & Black	1, 3R & 12
CFSH12RL12	Yellow & Red	1, 3R & 12
CFSH12BL4	Blue & Black	1, 3R, 12 & 4/4X
CFSH12RL4	Yellow & Red	1, 3R, 12 & 4/4X

600 & 800A operating shafts (cross section 12 x 12 mm)

Catalogue Number	Shaft length in. (mm)	Enclosure depth (switch mounting surface to door OD)
CFSS12200H	12.59 (320)	10.43 – 16.68 in.
CFSS12400H	15.75 (400)	10.43 – 19.84 in.

Type CFS fusible switch accessories

Catalogue Number	Description
Terminals①	
CFSL200	200A lug kit (6 lugs per kit) (1)#6-3/0
CFSL400N	400A lug kit (6 lugs per kit) (1)#2-600kcmil (for CFS365JN only)
CFSL400	600-800A lug kit (6 lugs per kit) (2)#2-600kcmil
Shorting Bars (no fuse kits)	
CFSSB60	60A shorting bar kit (3 links per kit)
CFSSB100	100A shorting bar kit (3 links per kit)
CFSSB200	200A shorting bar kit (3 links per kit)
CFSSB400	400A shorting bar kit (3 links per kit)
CFSSB680	600 & 800A shorting bar kit (1 link per kit)
Auxiliary Contacts (NEMA ratings AC A600 DC N600)	
CFSAUXH1②	Aux contact holder (CFS361J5, CFS361C5 & CNFS361)
CFSAUX1NO	Aux contact 1 NO (30-800A Sws)
CFSAUX1NC	Aux contact 1 NC (30-800A Sws)
CFS11AUX	1NO, 1NC aux contact kit (side mount for 200kA switches)
CFS22AUX	2NO, 2NC aux contact kit (side mount for 200kA switches)
Terminal Shrouds (line or load)	
CFSTS200N⑧	200A shroud kit (line or load 3-pole kit)
CFSTS400N⑧	400A shroud kit (line or load 3-pole kit for CFS365JN only)
CFSTS680⑥	600/800A 3-pole shroud kit
CFSTS6804⑥	600/800A 4-pole shroud kit
30A compact switch kits	
CFSPLK	Shaft padlocking kit for 30A compact switch when door is open③
CFSH5CDM	Direct mount handle kit for CFS361C5 & CNFS361
CFSH5JDM	Direct mount handle kit for CFS361J5

NFPA 79 kits

(if auxiliary contacts are needed, see table on page 7)

Kits provide an operating shaft suitable for use with all heavy duty handles (not for use with CFSH5 handles). Kits also provide an internal operating handle and an internal OFF padlocking provision.

CFSNFPA1④	For use with CFS361C5, CFS361J5 & CNFS361
CFSNFPA2N⑤	For use with CFS361JN, CFS361CN, CFS362JN1, CFS362JN, CFS363JN & CFS364JN
CFSNFPA3N⑤	For use with CFS365JN only



CFSL200 & 400



CFSAUX1NC



CFSSB100 - CFSSB400

① Supplied as standard on 30-100A switches
② CFS361C5 and CNFS361 will accept (4) aux contacts without an aux contact holder. CFS361J5 will accept (2) aux contacts without an aux contact holder.
③ Supplied as standard on all but 30A, 65kA & 100kA compact switches.
④ 12.6 in. (320 mm) long operating shaft included
⑤ 12.7 in. (323 mm) long operating shaft included
⑥ Line side terminal shrouds supplied with switch
⑦ Defeatable cover interlock included. Cover cannot be opened when the handle is padlocked in the OFF position.
⑧ Neither line or load terminal shrouds are supplied as standard with new style 200 & 400A switches.

UL & CSA technical characteristics and panel space requirements

Catalogue Number	Amps	Fuse Class	AC short circuit rating	Electrical endurance	Mechanical endurance	Panel space requirements - in. (mm)		
						Height	Width	Depth①
CFS361C5	30	CC	100kA	6000	10000	4.56 (116)	3.78 (96)	6.00 (152)
CFS361J5	30	J	100kA	6000	10000	4.56 (116)	4.15 (105)	6.00 (152)
CFS361JN	30	J	200kA	6000	10000	5.35 (136)	5.89 (150)	6.00 (152)
CFS361JLN	30	J	200kA	6000	10000	5.35 (136)	5.89 (150)	6.00 (152)
CNFS361	30	None	65kA②	6000	10000	4.56 (116)	3.78 (96)	6.00 (152)
CFS362JN1	60	J	100kA	6000	10000	5.35 (136)	5.89 (150)	6.00 (152)
CFS362JN	60	J	200kA	6000	10000	7.32 (186)	5.89 (150)	6.00 (152)
CFS362JLN	60	J	200kA	6000	10000	7.32 (186)	5.89 (150)	6.00 (152)
CFS363JN	100	J	200kA	6000	10000	7.32 (186)	5.89 (150)	6.00 (152)
CFS363JLN	100	J	200kA	6000	10000	7.32 (186)	5.89 (150)	6.00 (152)
CFS364JN	200	J	200kA	6000	8000	11.46 (291)	7.72 (196)	6.00 (152)
CFS365JN	400	J	200kA	1000	6000	15.35 (390)	10.19 (259)	8.00 (203)
CFS366J	600	J	200kA	1000	5000	11.81 (300)	14.33 (364)	11 (280)
CFS466J	600	J	200kA	1000	5000	11.81 (300)	18.03 (458)	11 (280)
CFS367L	800	L	200kA	500	3500	11.81 (300)	14.33 (364)	11 (280)
CFS467L	800	L	200kA	500	3500	11.81 (300)	18.03 (458)	11 (280)

Wire ranges line & load lugs

Switch	Amperage Rating	Wire size (75° C)
CFS361J5	30	(1)#14-10
CFS361C5	30	(1)#14-10
CNFS361	30	(1)#14-10
CFS361JN	30	(1)#14-6
CFS362JN1	60	(1)#14-6
CFS362JN	60	(1)#12-1
CFS363JN	100	(1)#12-1
CFS364JN	200	(1)#3/0
CFS365JN	400	(1)600MCM
CFS366J	600	(2)350 MCM
CFS367L	800	(2)600 MCM

Auxiliary contact capability when an NFPA79 kit is used

Switch	NFPA79 kit	Aux contacts that can be installed
CNFS361	CFSNFPA1	(2) Total, CFSAUX1NO or CFSAUX1NC
CFS361C5		
CFS361J5		(1) CFSAUX1NO or (1) CFSAUX1NC
CFS361JN	CFSNFPA2N	(2) Total, CFSAUX1NO or CFSAUX1NC③
CFS362JN1		
CFS362JN		
CFS363JN		
CFS364JN		
CFS365JN	CFSNFPA3N	(2) Total, CFSAUX1NO or CFSAUX1NC③

① Minimum dimensions from mounting surface to inside of cover. Dimensions shown can be decreased if aux contacts are not required.
② CNFS361 is rated 65kA when protected by 30A max. Class J or CC fuses.
③ For additional auxiliary contacts use side mounted CFS11AUX or CFS22AUX.

Type CNFS Compact Non-Fusible Switches

Description

Siemens Type CNFS compact non-fusible switches meet UL/CSA requirements for both main and branch circuit applications. They are available in 30-800A, 3-pole switches and are all rated 600VAC maximum.

All are open style, designed to be panel mounted and are UL listed under file number #E121152 or #E68312 and CSA certified under file number #222227. A variety of door mounted rotary operators are available with Type 1, 3R, 12 or 4/4X ratings.

These non-fusible switches are UL listed under file #E201138 and CSA certified under file #112964. They also conform to IEC standard 60947-3.



Catalog Numbering System

CNFS Switches
Compact Non-Fusible Switch

CNFS	3	6	1	N

- Number of poles 3 = 3
- Max. Voltage Rating 6 = 600V
- Ampere rating
  - 1 = 30A
  - 2 = 60A
  - 3 = 100A
  - 4 = 200A
  - 5 = 400A
  - 6 = 600A
  - 7 = 800A
- Design type
  - N = Compact design

Disconnect Switches

Type CNFS Compact Non-Fusible Switches

Features And Ordering Information

Features

- 30 - 800A ratings
- UL Listed under file #E201138 & CSA Certified under file #112964 or #703166
- Options to have door mounted pistol handles with defeatable cover interlock or direct mounted handles.
- Meets UL 98 requirements
- Compact size
- All short circuit protection ratings require the use of Class J fuses in the circuit.
- Load break and horsepower rated
- Quick make and break operation
- All external handles and direct handles for 600-800A switches are padlockable with up to (3) padlocks with 5/16" hasps in the OFF postition. Direct handles for 30-100A switches are padlockable with (1) padlock with 3/16" hasps in the OFF position.
- All switches are able to be panel mounted. Catalog numbers CNFS361N, CNFS362N, & CNFS363N can also be DIN-rail mounted and can either be front or side operated with standard pistol handles.
- Handles are available in Type 1, 3R, 4/4X & 12 ratings

Shaft



CFSS10200HN

Handle



CFSH10BL12N

Lugs/Accessories



CFSL200

Ordering information

1. Select the panel mounted switch required based on Ampere, HP and AIC requirements. Switches with a right hand mechanism are standard.
2. Select handle based on environmental rating required.
3. For door mounted handles, select operating shaft based on enclosure depth. For enclosure depths of 9.00" or less from panel mounting surface to inside of door use up to 200 mm long shafts. From 9.00" to 13.00" use up to 320 mm long shafts. For deeper enclosures use up to 400 mm long shafts. For direct mount handles, no shaft is needed.

Note: Be sure to check shaft and handle compatibility with the switch selected by using information provided in the selection tables.

4. Line & load lugs are provided as standard on 30-100A switches. Terminal kits are available for 200-800A switches if needed.
5. Auxiliary contacts are available if needed. Each switch will accept up to (2) aux contact modules, containing (2) contacts in each.
6. 30-100A Series N switches are designed to prevent inadvertent contact with live parts and shields are not required but are offered as terminal shrouds. 100-400A switches are not supplied with terminal shields. They are available as separate field installed kits for both line and load terminals by amperage rating. Line side terminal screens are provided for 600-800A switches.

Type CNFS compact non-fusible switches

Switch Ampere Rating	Catalog Number	Max Horsepower Ratings			Short Circuit Rating	
		240V 3Ø AC	480V 3Ø AC	600V 3Ø AC	@ 480VAC	@ 600VAC
30	**CNFS361N**①	10	20	25	100	100
60	**CNFS362N**①	20	40	50	100	100
100	**CNFS363N**①	20	50	50	100	25
200	**CNFS364N**②	75	150	200	200	200
400	**CNFS365N**②	125	250	350	200	200
600	**CNFS366N**②	200	400	350	200	200
800	**CNFS367N**②	200	500	500	100	100



CNFS363N

Direct mount rotary handles for compact non-fusible switches

Catalog Number	Color	Use with compact non-fusible switches
CNFSHD1	Blue	CNFS361N, CNFS362N, CNFS363N
CNFSHD2	Black	CNFS364N, CNFS365N
CNFSHD3	Black	CNFS366N, CNFS367N



CNFSS154003

Operating shafts for compact non-fusible switches

Catalog Number	Shaft length in. (mm)	Switch and handle compatibility
CNFSS52001	7.9 (200)	5mm x 5mm for use with CNFS361N, CNFS362N and CNFS363N switches and with "CNFSH5" handles only
CNFSS53201	12.6 (320)	
CNFSS54001	15.7 (400)	
CFSS10200HN	7.9 (200)	10mm x 10mm for use with "CFSH10" handles and with CNFS364N and CNFS365N switches only
CNFSS103202	12.6 (320)	
CFSS10400HN	15.7 (400)	
CNFSS152003	7.9 (200)	15mm x 15mm for use with "CFSH12" handles and with CNFS366N and CNFS367N switches only
CNFSS153203	12.6 (320)	
CNFSS154003	15.7 (400)	



CFSH12RL12

Compact rotary operating handles for non-fusible switches – door mounted

Catalog Number	Color	CSA/UL Type	Operating shaft compatibility	Use with non-fusible compact switches
CNFSH5BP121	Black	NEMA 1, 3R, 12	CNFSS52001, CNFSS53201, CNFSS54001	CNFS361N, CNFS362N, CNFS363N
CNFSH5RP121	Red/Yellow	NEMA 1, 3R, 12		
CNFSH5BP41	Black	NEMA 4/4X		
CNFSH5RP41	Red/Yellow	NEMA 4/4X		
CFSH10BL12N	Black	NEMA 1, 3R, 12	CFSS10200HN, CNFSS103202, CFSS10400HN	CNFS364N, CNFS365N
CFSH10RL12N	Red/Yellow	NEMA 1, 3R, 12		
CFSH10BL4N	Black	NEMA 4/4X		
CFSH10RL4N	Red/Yellow	NEMA 4/4X		
CFSH12BL12	Black	NEMA 1, 3R, 12	CNFSS152003, CNFSS153203, CNFSS154003	CNFS366N, CNFS367N
CFSH12RL12	Red/Yellow	NEMA 1, 3R, 12		
CFSH12BL4	Black	NEMA 4/4X		
CFSH12RL4	Red/Yellow	NEMA 4/4X		

① Line and load lugs are included.
② Line and load lugs are not included. Order from table on following pages if needed.
③ All switches can be rotated 180° for left hand operation as standard.
④ Compact pistol grip design (2.75" long) with defeatable cover interlock. Cover can be opened when handle is padlocked in the OFF position.
⑤ Defeatable cover interlock provided. Cover cannot be opened when handle is in the OFF position.
⑥ Flange mounting is not available for non-fusible switches.

Auxiliary contacts for use with non-fusible switches

Catalog Number	Number of Contacts	Use with Non-fusible Contact Switches
CNFS1AUX1	1 Normally Open + 1 Normally Closed	CNFS361N, CNFS362N, CNFS363N
CNFS2AUX1	2 Normally Closed	
CNFS1AUX2	1st Auxiliary Contact: 1 Normally Open + 1 Normally Closed	CNFS364N, CNFS365N, CNFS366N, CNFS367N
CNFS2AUX2	2nd Auxiliary Contact: 1 Normally Open + 1 Normally Closed	

Terminal shrouds for use with non-fusible switches

Catalog Number	Shroud Location	Use with Non-fusible Contact Switches
CNFSTS100	Top and Bottom	CNFS361N, CNFS362N, CNFS363N
CNFSTSC200T	Top	CNFS364N
CNFSTSC200B	Bottom	
CNFSTSC400T	Top	CNFS365N
CNFSTSC400B	Bottom	
CNFSTSC600B	Bottom	CNFS366N
CNFSTSC800B	Bottom	CNFS367N

Terminal lug kits for use with non-fusible switches

Catalog Number	Wire Sizes	Use with Non-fusible Contact Switches
Included	#10-2/0	CNFS361N, CNFS362N, CNFS363N
CFSL200	#6-300MCM	CNFS364N
CFSL400N	#2-600MCM	CNFS365N
CNFSL400D	#6-350MCM, 2 wires per lug	CNFS356N
CFSL400	#6-350MCM, 2 wires per lug	CNFS366N, CNFS367N①



CNFS1AUX1



CNFSTSC400T



CFSL200 & 400

① 2 kits needed for 800A, total 12 lugs to cover line and load sides.

Disconnect Switches

Type HCP Switchboard Units

Selection

Features

- CSA certified under file #24563 and UL Listed under file #E6849 Vol 1, Sect. 8
- 400-1200A ratings
- Visible contacts
- Field installable shunt trip and auxiliary switch accessory kits
- Installs in existing Siemens switchboards and power panelboards
- Suitable for use on systems with up to 200,000A available fault current, RMS symmetrical when equipped with Class J or Class L fuses
- Group mounts with other 30A through 600A switches, and 100 through 1200 amp frame breakers
- Allows 800A and 1200A switches in standard 38" wide distribution sections in either main or branch configurations
- 16¼" mounting height is the smallest 1200A design in the industry, allowing up to 4 units in one vertical section
- Field reversible horizontal mounting design for left or right hand cabling
- Handle can be padlocked in the OFF position with up to three padlocks with 5/16" hasps. A cover padlocking provision is also supplied



3-Pole, Horizontal Mount ①

Catalogue Number	Max. Ampere Rating	Max. AC Voltage Rating②	Fuse Class	Dimensions - Inches*			Horsepower Rating						
							240V		480V		600V		250V
				H	W	D	Std	Max	Std	Max	Std	Max	DC
HCP367HJ400	1400	600	J	16.25	17.22	7.38	150	125	100	250	125	350	40
HCP367HJ600	1600	600	J	16.25	17.22	7.38	175	200	150	400	200	400	40
HCP327HT	800	240	T	16.25	17.22	7.38	100	250	—	—	—	—	50
HCP367H	1800	600	L	16.25	17.22	7.38	100	250	200	500	250	500	50
HCP328HT	1200	240	T	16.25	17.22	7.38	100	250	—	—	—	—	50
HCP368H	1200	600	L	16.25	17.22	7.38	100	250	200	500	250	500	50

3-Pole, Vertical Mount

HCP367VJ400	1400	600	J	17	16.25	7.38	150	125	100	250	125	350	40
HCP367VJ600▲	1600	600	J	17	16.25	7.38	175	200	150	400	200	400	40
HCP327VT	800	240	T	17	16.25	7.38	100	250	—	—	—	—	50
HCP367V	1800	600	L	17	16.25	7.38	100	250	200	500	250	500	50
HCP328VT	1200	240	T	17	16.25	7.38	100	250	—	—	—	—	50
HCP368V	1200	600	L	17	16.25	7.38	100	250	200	500	250	500	50
HCP367HJ400	1400	600	J	16.25	17.22	7.38	150	125	100	250	125	350	40
HCP367HJ400	1400	600	J	16.25	17.22	7.38	150	125	100	250	125	350	40
HCP367HJ400	1400	600	J	16.25	17.22	7.38	150	125	100	250	125	350	40

Accessories

Terminal Connectors (one lug per kit)

Ampere Rating	Catalogue Number	Connector Wire Range
400–600A	**TA2K500**	(2) #1 AWG–500 kcmil (Cu or Al)
400–600A	**TC2K500**	(2) #1 AWG–500 kcmil (Cu only)
400–800A	**TA3K500**	(3) #1 AWG–500 kcmil (Cu or Al)
400–800A	**TC3K350**	(3) #1 AWG–350 kcmil (Cu only)
800-1200A	**TA4H500**	(4) #2 AWG–500 kcmil (Cu or Al)
800-1200A	**TA3H750**	(3) 500–750 kcmil (Cu or Al)

Auxiliary Switch Kits

Contact Ampere Rating	Maximum Voltage		Switch Mounting	Contacts	Catalog Number
	AC	DC			
15A	480	125	Left Pole	1NO/1NC	**A01HCPL4▲**
15A	480	125	Right Pole	1NO/1NC	**A01HCPR4**

Shunt Trip Kit

Control Voltage		Catalogue Number
AC	DC	
120	—	**HCPST120**
240	—	**HCPST240▲**
277	—	**HCPST277**
480	—	**HCPST480▲**

Switchboard Connection Strap Kit ①

Switch Ampere Rating	Catalog Number
400–1200A	**F6162DSCAN**

T Fuse Adapter Kits (one per pole)

Catalogue Number	Description
TFAK72	800A, 300V AC
TFAK75	800A, 600V AC
TFAK82	1200A, 300V AC

HCP Replacement Handle Kit (For use on all HCP switches)

SW Ampere Rating	Catalogue Number
400–1200A	**HCPHK**

Compression Lug Adapter Kit

The use of this kit provides for the mounting of up to four lugs per phase. Each kit accepts lugs with (2) 3/8" diameter mounting holes on 1" centers. One kit per pole line or load is required. Lugs are not provided.

Ampere Rating	Catalogue Number
400–1200A	**HCPCLP**

***For inches / millimeters conversion, multiply inches by 25.4.**

▲ Built to order. Allow 6–8 weeks for delivery.
① For horizontal mounting only in either 38" wide min switchboards or S5/F2 power panelboards.

② Both 240 and 600V AC switches are also rated 250V DC max.

Horizontal Mount Drawing

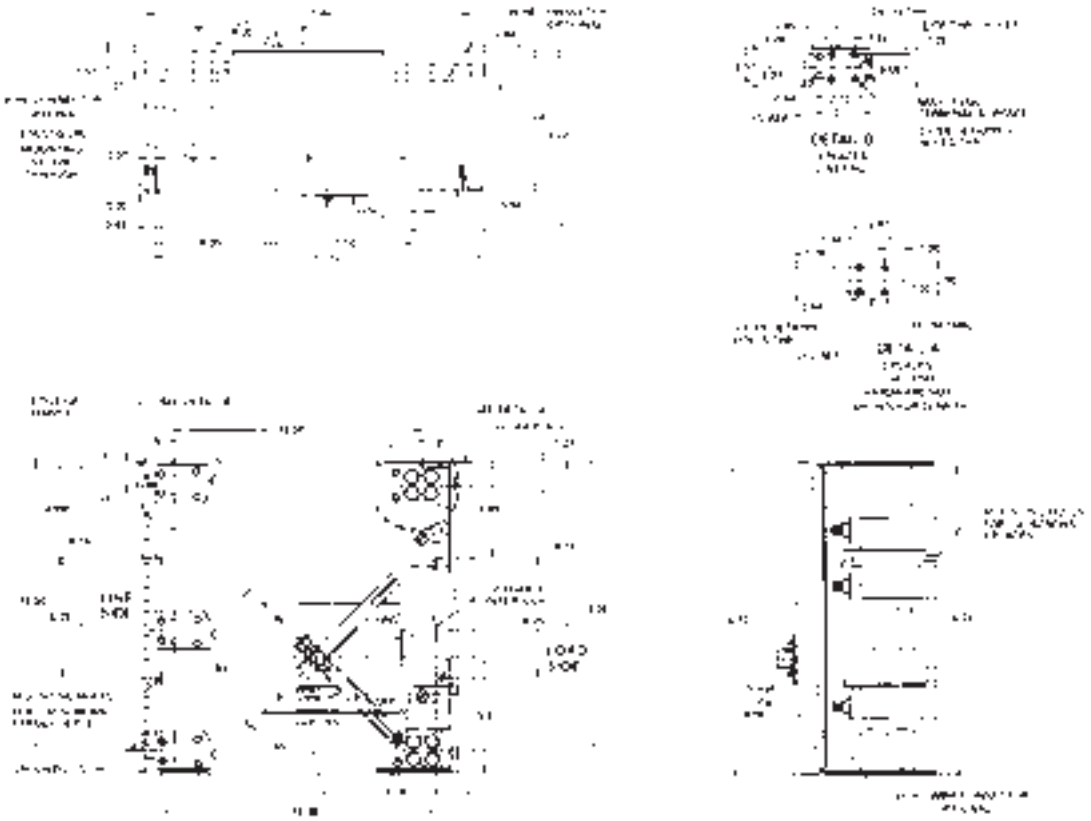

Group Mounting Assembly (Horizontal Mount Only)

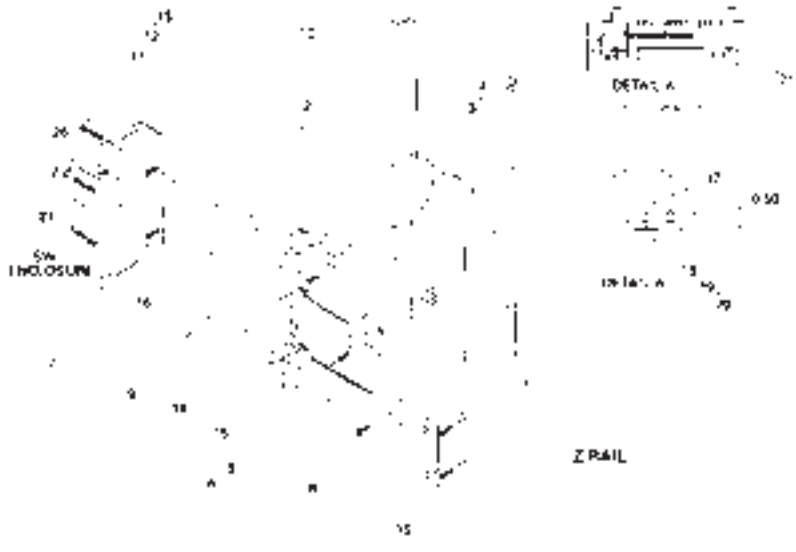

Item	Parts Supplied in Connection Strap Kit Cat. No. F6162D	Qty
1,2	A/C/D Strap-Short	1ea
3,4	3/D Strap	1ea
5,6	A/C/D Strap-Long	1ea
7,8	Switch Mounting Bracket	1ea
9	Insulation	1
10	1/3/8" Insulator	3
11	3/8-16 X 3/4" RHMS	3
12	3/8" Lock Washer	3
13	3/8" Flat Washer	3
14	3/8-16 X 3/4" RHSNB	3
15	Strap Bus Hardware Kit	2
16	1/4-20 X 3/8" SHWHSW	4
17	5/15/18 Insert	5
18	5/15/18 X 11 SRHMS	6
19	5/15/18 Flat Washer	6
20	5/16 Lock Washer	6
21	1/4-20 X 1" SRHMS	2
26	Ground Bracket	1
27	10-32 X 1/4" SHWHSW	2

Notes



Dual Function Circuit Breaker



NGB Circuit Breakers



3VA Molded Case Circuit Breakers



QR Circuit Breakers

Contents

What's New in Circuit Breakers	5-3
Introduction	5-4
Catalogue Numbering System	5-5 – 5-7
Reference Guides	5-8 – 5-19
Panelboard Mounted Circuit Breakers	
BL 240V Arc Fault and Ground Fault Breakers	5-20
BL 240V Breakers	5-21
BQD 100A Frame 480/277V Breakers	5-22
GB2 125A Frame 600/347V Breakers	5-23
GB 125A Frame 600/347V Breakers	5-24
Internal Accessories for BQD and NGB Breakers	5-25
3VA41 125A Frame 600/347V Breakers	5-26 – 5-27
General Application Circuit Breakers	
BQ 240V Breakers	5-28
BQXD 240V DIN Rail Mounting Breakers	5-29
QR250 Frame 240V Breakers	5-30
CQD 100A Frame 480/277V Breakers	5-31
GG 125A Frame 600/347V Breakers	5-32
Internal Accessories for CQD and NGG Breakers	5-33
3VA Molded Case Circuit Breakers	
Catalogue Numbering System	5-34 – 5-35
3VA51 125A Thermal-magnetic Trip Circuit Breakers	5-36 – 5-39
3VA61 150A Electronic Trip Circuit Breakers	5-40 – 5-43
3VA52 250A Thermal-magnetic Trip Circuit Breakers	5-44 – 5-47
3VA62 250A Electronic Trip Circuit Breakers	5-48 – 5-51
3VA53 400A Thermal-magnetic Trip Circuit Breakers	5-52 – 5-53
3VA63 400A Electronic Trip Circuit Breakers	5-54 – 5-57
3VA54 600A Thermal-magnetic Trip Circuit Breakers	5-58 – 5-59
3VA64 600A Electronic Trip Circuit Breakers	5-60 – 5-63
3VA55 800A Thermal-magnetic Trip Circuit Breakers	5-64
3VA65 800A Electronic Trip Circuit Breakers	5-65 – 5-67
3VA66 1000A Electronic Trip Circuit Breakers	5-68 – 5-69
3VA Molded Case Switch and Motor Circuit Protector	5-70 – 5-71
3VA Internal Accessories	5-72
3VA Breaker Operators	5-73 – 5-78
3VA Connection Technology	5-79 – 5-87
3VA Plug-in and Draw-out Technology	5-88 – 5-90
3VA Communication and Testing/Commissioning Devices	5-91 – 5-94
3VA Accessories and Electrical Requirements	5-95 – 5-100
Sentron Thermal Magnetic and Electronic Circuit Breakers	
ED 125A Frame 600V Breakers and Internal Accessories	5-101 – 5-103
FD 250A Frame 600V Breakers and Internal Accessories	5-104 – 5-106
JD/SJD 400A Frame Breakers and Internal Accessories	5-107 – 5-110
LD/SLD 600A Frame Breakers and Internal Accessories	5-111 – 5-114
LMD 800A Frame Breakers and Internal Accessories	5-115 – 5-117
MD/SMD 800A Frame Breakers and Internal Accessories	5-118 – 5-121
ND/SND 1200A Frame Breakers and Internal Accessories	5-122 – 5-125
PD/SPD 1600A Frame Breakers and Internal Accessories	5-126 – 5-128
RD 2000A Frame Breakers and Internal Accessories	5-129
Magnetic Trip Only – ETI Motor Circuit Protectors	5-130 – 5-132
Adjustable Instantaneous Magnetic Trip Settings	5-133 – 5-135
Molded Case Switch – Circuit Disconnect	5-136
Digital Solid State Sentron Sensitrip IV Series Trip Units	5-137 – 5-138
Enclosed Circuit Breakers	5-139 – 5-146

(continued on next page)

Contents

Lug Information	5-147 – 5-149
Breaker Modifications	5-150
Internal Accessories – Feature Combinations	5-151 – 5-153
External Accessories	5-154 – 5-159
Unusual Operating Conditions	5-160 – 5-161
VL Thermal Magnetic and Electronic Circuit Breakers	
Technical Overview	5-162 – 5-163
Trip Unit Overview	5-164 – 5-165
DG 150A Frame and Internal Accessories	5-166 – 5-169
FG 250A Frame and Internal Accessories	5-170 – 5-173
JG 400A Frame and Internal Accessories	5-174 – 5-177
LG 600A Frame and Internal Accessories	5-178 – 5-181
MG 800A Frame and Internal Accessories	5-182 – 5-185
NG 1200A Frame and Internal Accessories	5-186 – 5-189
PG 1600A Frame and Internal Accessories	5-190 – 5-192
Molded Case Switch	5-193
Motor Circuit Protector	5-194
External Accessories	5-195 – 5-209
Accessory Locations	5-211
Suffix for Factory Mounted Internal Accessories	5-212
Technical Data	5-213 – 5-214
Unusual Operating Conditions	5-215 – 5-216
General Technical	
Series Short Circuit Ratings	5-217 – 5-249
Sentron IEC 947-2 AC Interrupting Ratings	5-250
Superseded Circuit Breakers	5-251 - 5-253

Molded Case Circuit Breakers

What's **NEW** in molded case circuit breakers:

New Sentron Sensitrip

Sentron Sensitrip IV ETU Circuit Breakers with Integrated DAS / Maintenance Mode

Design enhancements include:

- Upgraded ETU
- Frame ratings from 400A to 1600A
- Identical footprint, kAIC ratings and accessory offering as legacy Sensitrip III ETU breakers to ease integration / retrofit
- Maintenance mode versions require customer-supplied 24V external power supply, maintenance switch and light



The Siemens GG, and xGB2 circuit breaker is a compact, industrial design thermal magnetic breaker with valuable features for the global markets. These features include a design that meets multi-national standards, is suitable for DIN rail or base mounting without the need for adapters, and includes CSA Certified / UL Listed field installable accessories. The GG, and xGB2 also has an over center toggle mechanism that is trip free and uses repulsion contact arm construction. Therefore, should a short circuit or tripping condition occur, the contacts are forced apart and the breaker cannot be held closed by means of the handle.



NGB NGG HGG LGG

The New Siemens QR Circuit Breaker

Implemented in loadcentres, panelboards, switchboards, meter centres, and modular metering, the new QR breaker is the same form-factor/mounting as QJ breaker for easy retrofit.

Design enhancements include:

- Trip unit ratings from 100A to 250A.
- Field installable internal accessories – shunt trip, aux switch or shunt/aux combo.
- Two accessory pockets in 3-pole breakers. One accessory pocket in 2-pole breakers.
- High in-rush current capability (450%).
- Push-to-trip button.





BQD and NGB, HGB, LGB handle ties are now released for use where single pole breakers are using shared neutrals and must be locked out simultaneously.

The new Siemens 3VA Molded Case Circuit Breakers



- 125A - 800A Thermal-Magnetic Circuit Breakers
- 150A - 1000A Electronic Circuit Breakers
- Extensive and flexible accessories
- Common internal accessories for the entire breaker family
- Power metering with the series-8 LCD electronic trip
- Illuminated rotary handles show switch position
- Smaller footprint than Sentron or VL breakers
- Enhanced Tools and Resources

Ordering

In the FD through RD frames, you may order molded case circuit breakers three basic ways:

1. As separately ordered frames, trip units and lugs
2. As frame, trip unit and lugs ordered as one catalogue number and shipped unassembled or assembled
3. As Frame and Trip Unit shipped assembled and with the trip unit made non-removable, in compliance with UL 489 / CSA C22.2 No. 5 requirements that to be reverse fed the circuit breaker must not have an interchangeable trip unit.

These two options are described in the following:

Components Ordered Separately

To get the components for a 3-pole, 400 Amp standard interrupting circuit breaker, you would order the frame (JD63F400), the trip unit (JD63T400) and six lugs (TA2J6500). This option is normally useful only if you stock and use large volumes of product and wish to reduce your inventory cost. You may stock, for example, a smaller number of frames (JD63F400) and a variety of trip units (JD63T300, JD63T350, etc.) and assemble breakers as you need them.

Frame, Trip Unit and Lugs Ordered Together

If you order the catalogue number JD63B400, you will receive a frame, a trip unit and 6 lugs in separate packages. By suffixing this number with "L" (e.g. JD63B400L), you will receive frame, trip unit and lugs assembled in one container. Pursuant to CSA C22.2 No. 5-13 / UL 489, a product ordered thus will have the markings "LINE" and "LOAD", and may not be "reverse fed" (with power flowing from the "OFF" end of the breaker toward the "ON" end).

Non-Interchangeable Trip Breakers

If you place an "X" after the frame size designator (e.g. JXD63B400), you will receive a frame and trip unit assembled, with the trip unit made non-removable. If you suffix an "L" to this catalogue number (e.g. JXD63B400L), you will receive the breaker, non-removable trip unit and lugs assembled. Unless you anticipate a specific need to change the breaker's ampere rating in the future, this is the preferred ordering method, as the products are assembled to Siemens' specifications in our factories. These breakers are suitable for use reverse fed according to CSA C22.2 No. 5-13 / UL 489, since the trip unit is not removable.

The smaller frames (QJ, ED and below) do not have removable trip units, and consequently are shipped only as assembled products. To add lugs, see the ordering instructions on each product's catalogue page.

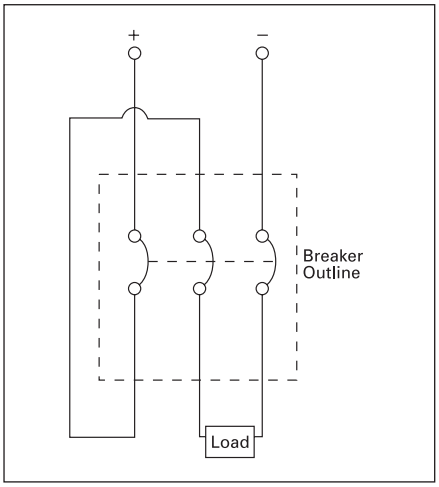

500V DC Wiring Configuration

Connecting Breakers for DC Application

Most Siemens thermal magnetic trip MCCBs are applicable on direct current (dc) systems. Generally, for 250 V dc systems a two pole breaker is used, with one pole on each leg of the supply circuit. For three pole breakers applied on 500 V undergrounded DC systems, it is important to connect the power supply "zig-zag" through the breaker as shown in the figure below. This assures that the Voltage between phases on the breaker terminals is uniformly distributed.

See below for an alternative connection diagram. For a list of Sentron breakers with the DC ratings, please refer to pages 5-8 - 5-19.

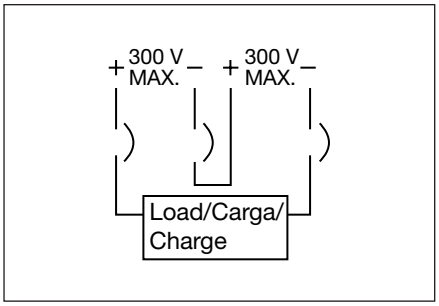

Molded Case Circuit Breakers

Catalogue Numbering System

If used on 250A frame and above means non-interchangeable trip breaker with factory assembled frame and trip. Solid state trip and current limiting (S or C in first character) are non-interchangeable only, and the "X" is omitted.

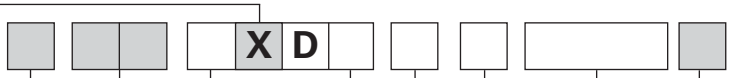

Trip Unit Type
□ — Omitted – Thermal-Magnetic
S — Sensitrip® Electronic Trip

Sentron Series Type/Interrupting Range
□ — Omitted – Standard Rating
H — High IC Rating
HH — Extra High IC Rating
C — Highest IC Rating and Current Limiting

Frame Identifier
E — Type ED
F — Type FD
J — Type JD
L — Type LD
LM — Type LMD
M — Type MD
N — Type ND
P — Type PD
R — Type RD

Maximum Voltage
2 — 240 Vac
4 — 480 Vac
6 — 600 Vac

Number of Poles
1
2
3
9 used to indicate the max. functions for an electronic trip circuit breaker (always 3 poles)

(Specific Application Type)
B — Standard 40°C Breaker
M — Calibrated for 50°C Application
F — Frame Only
T — 40°C Trip Unit Only
W — 50°C Trip Unit Only
S — Molded Case Switch
L — Low Instantaneous Range ETI Breaker
A — Standard Range ETI Breaker
H — High Instantaneous Range ETI Breaker

Maximum Continuous Current Rating
ED Frame — 015, 020, 025, 030, 035, 040, 045, 050, 060, 070, 080, 090, 100, 110, 125
FD Frame — 070, 080, 090, 100, 110, 125, 150, 175, 200, 225, 250
JD Frame — 200, 225, 250, 300, 350, 400
LD Frame — 250, 300, 350, 400, 450, 500, 600
LMD Frame — 500, 600, 700, 800
MD Frame — 500, 600, 700, 800
ND Frame — 900, 100 (1000A), 120 (1200A)
PD Frame — 120 (1200A), 140 (1400A), 160 (1600A)
RD Frame — 160 (1600A), 180 (1800A), 200 (2000A)

Suffix
L — where applicable indicates a breaker shipped with line/loads lugs installed
A — used with a switch to show automatic self protection
Y — 400 Hertz
H — 100% rated
P — Load side lugs only
NAV — Navel Ratings

NOTE: □ — Position omitted if not used.

Applicable Standards

CSA–C22.2 No. 5, C22.2 No. 14

UL489 — Molded Case Circuit Breakers and Circuit Breaker Enclosures.

UL486A — Wire Connectors and Solderless Lugs for use with copper wire

UL486B — Wire Connectors and Solderless Lugs for use with aluminum wire

UL943 — Ground Fault Interrupters (for personnel protectors)

UL1087 — Molded Case Switches

UL50 — Cabinets and Boxes

UL869 — Service Equipment

NEMA AB-1 — Molded Case Circuit Breakers and Molded Case Switches

NOTE:

(A) Molded case circuit breakers are designed and tested in accordance to applicable portions of UL 489 and CSA22.2 No. 5 and meet application requirements of the National Electric Code. Unless marked otherwise, circuit breakers are 80% duty rated.

(B) Molded case circuit breakers are to be connected with 60 or 75°C wire for circuit breakers having a rated ampacity of 100 amperes or less. Circuit breakers having a rated ampacity greater than 100 amperes shall only be cabled with 75°C cable unless otherwise indicated on the circuit breaker label. Exceptions to this rule are outlined in the article 110-14 C(1)(2) of the 2005 National Electric Code and Canadian Electric Code.

① Interrupting ratings are not limited to the values or groups of values listed. However, the values listed are minimum values for the class specified.
② Single-unit or duplex construction must be specified.
③ Use minimum frame size for ampere rating.

Molded Case Circuit Breakers

Catalogue Numbering System

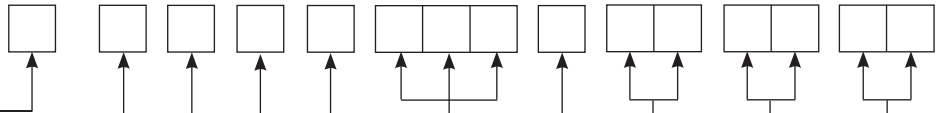

Interrupting Class
- N — Normal
- H — High
- L — Very High
- C — Trip Unit Only

Frame Family
- D — Type DG
- F — Type FG
- J — Type JG
- L — Type LG
- M — Type MG
- N — Type NG
- P — Type PG

Breaker Type
- E — Global DG, FG Frame Only 600Y/347 V
- G — Global interchangeable (UL, IEC, CE, CSA, NOM①, CCC①)
- J — 240V rated JG frame, Non-interchangeable only
- K — Global, Non-interchangeable (DG, FG, LG-frame)
- M — Motor Circuit Protector
- P — Motor Circuit Protector (DG, FG Only)
- R — Molded Case Switch (DG, FG, LG-frame)
- S — Molded Case Switch
- T — Trip Unit Only
- V — Thermal Magnetic, standard 40°C ambient, 600VAC 25kA, UL/CSA (LG frame)
- W — 100% rated, Non-interchangeable (DG, LG-frame)
- X — Global Non-interchangeable
- Y — 100% rated, Non-interchangeable

Number of Poles
2, 3

Trip Unit
- F — Frame only, without trip unit
- B — Thermal Magnetic, standard 40° C ambient
- L — Magnetic Only, Motor Circuit Protector - Low instantaneous range
- J — Magnetic Only, Motor Circuit Protector - Low instantaneous range (LG-frame)
- M — Magnetic Only, Motor Circuit Protector - Standard instantaneous range
- Y — Magnetic Only, Motor Circuit Protector - Standard instantaneous range (LG-frame)
- H — Magnetic Only, Motor Circuit Protector - High instantaneous range
- S — Molded Case Switch
- A — Electronic w/ LCD, LSI or 3P (neutral protected)
- G — Electronic w/ LCD, LSIG, 3P/4W (selectable residual or return type ground fault protection)
- K — Electronic with LCD, LSI and GF alarm only, 3P/4W (selectable residual or return type ground fault alarm)
- R — Electronic LI or 3P (neutral protected)
- T — Electronic LSI or 3P (neutral protected)
- V — Electronic, LSIG or 3P/4W, residual ground fault protection
- W — Electronic, LIG or 3P/4W, residual ground fault protection

Continuous Current Rating
For DG use 050, 060, 070, 080, 090, 100, 110, 125, 150
For FG use 100, 110, 125, 150, 175, 200, 225, 250
For JG use 250, 300, 350, 400
For LG use 400, 500, 600
For MG use 600, 700, 800
For NG use 800, 900, 100 (1000A), 120 (1200A)
For PG use 120 (1200A), 140 (1400A), 160 (1600A)

Terminations
- B — Load End Standard (cu/al) Lugs
- L — Line & Load Standard (cu/al) Lugs
- X — No Lugs (use only if accessory suffixes are to follow)

Accessories

Auxiliary and Alarm Switch Combinations

Suffix		Description
A1	—	1 Alarm (includes 1NO & 1NC switch with a 2 Aux./1 Alarm Base, for frames DG to LG)
A2	—	2 Aux (1NO & 1NC switch with a 3 Aux. Base, for frames DG to LG)
A3	—	2 Aux + 1 Alarm (2NO & 2NC switches with a 2 Aux./1 Alarm Base, for frames DG to LG)
A3	—	2 Aux + 2 Alarm (2NO & 2NC switches with a 2 Aux./2 Alarm Base, for frames MG to PG)
A4	—	4 Aux (2NO & 2NC switches with a 4 Aux. Base, for frames MG to PG)

Note: A1 and A3 include 1NO and 1NC switch for alarm purposes, only one of these switches may be used as there is only one space for an alarm.

Shunt Trips
- RB — 24 VDC
- RC — 48-60 VDC
- RD — 110-127 VDC
- RE — 250 VDC
- RM — 48-60 VAC
- RN — 110-127 VAC
- RS — 208-277 VAC
- RV — 380-600 VAC

Under Voltage Releases
- UA — 12 VDC
- UB — 24 VDC
- UC — 48 VDC
- UD — 110-127 VDC
- UE — 220-250 VDC
- UG — 60 VDC
- UK — 24 VAC
- UN — 110-127 VAC
- UP — 208 VAC
- UR — 220-250 VAC
- US — 277 VAC
- UT — 380-415 VAC
- UU — 440-480 VAC

LCD = Liquid Crystal Display
LI = Long Delay & Instantaneous trip functions
LSI = Long Delay, Short Delay, & Instantaneous trip functions
LSIG = Long Delay, Short Delay, Instantaneous, & Ground Fault trip functions
GF = Ground Fault
3P = 3-pole
4W = 4-wire

① Select Frames

If ordering factory-installed accessories or special modifications, you must order a 15-digit catalogue number. See the examples below for a detailed explanation. The 15 digit number is achieved by placing X's in positions not being occupied by an accessory/modification. Contact Siemens for circuit breakers configured with accessories.

Auxiliary Switch Example:

H F G 3 B 2 0 0 L	A 2	X X X X
Standard 9-digit	Aux. Switch	Completes Cat #

Shunt Trip / UVR Example:

H F G 3 B 2 0 0 L	X X	U N	X X
Standard 9-digit		UVR	
			Completes Cat #

Shunt Trip / Auxiliary Switch Example:

H F G 3 B 2 0 0 L	A 2	R N	X X
Standard 9-digit	Aux. Switch	Shunt Trip	Completes Cat #

Non-Interchangeable Trip Breakers Example:

H F X 3 B 2 0 0 L
Standard 9-digit

Molded Case Circuit Breakers

Reference Guide

Thermal-Magnetic Trip Breakers

						Plug-In Breakers						Panelboard Breakers						
						QT	QP	QPH	HQP	HQPPH	QPJ	BL⑩	BLH	HBL	BQD, BQD6	NGB, NGB2	HGB2	LGB2
Page						**Refer to Loadcentres Section**						**5-20**	**5-20**	**5-20**	**5-22**	**5-23 - 5-24**	**5-23**	**5-23**
Ratings	**AC**	Poles				1, 2	1, 2, 3	1, 2, 3	1, 2, 3⑦	2	2, 3	1,2,3	1,2,3	1,2,3	1,2,3	1,2,3	1,2,3	1,2,3
		Amperes				15-50	10-125③④	10-125③④	10-125③⑦	100-225	150-200	10-125	15-125	15-100	15-100	15-125	15-125	15-125
		Volts (50/60 Hz)			1 Pole	120/240	120/240	120/240	120/240	120/240	120/240	120/240	120/240	120/240	277	347	347	347
					2 Pole							120/240	120/240	120/240	480/277	600/347	600/347	600/347
					3 Pole	–	240	240	240	240	240	240	240	240	480/277	600/347	600/347	600/347
		Interrupt Ratings	CSA/UL		120V	10,000	10,000	22,000	65,000	–	–	10000	22000	65000	65000	–	–	–
					240V	10,000	10,000	22,000	65,000	100,000	10,000	10000	22000	65000	65000	100000	100000	100000
					277V	–	–	–	–	–	–	–	–	–	14000	–	–	–
					347V	–	–	–	–	–	–	–	–	–	10000	–	–	–
					480/277V	–	–	–	–	–	–	–	–	–	14000	25000	35000	65000
					480V	–	–	–	–	–	–	–	–	–	–	–	–	–
					600/347V	–	–	–	–	–	–	–	–	–	10000	14000	22000	25000
					600V	–	–	–	–	–	–	–	–	–	–	–	–	–
			IEC 947-2 50/60 Hz	220/240V	I_{cu}	–	–	–	–	–	–	–	–	–	–	–	–	–
					I_{cs}	–	–	–	–	–	–	–	–	–	–	–	–	–
				380/415V	I_{cu}	–	–	–	–	–	–	–	–	–	–	–	–	–
					I_{cs}	–	–	–	–	–	–	–	–	–	–	–	–	–
				500V	I_{cu}	–	–	–	–	–	–	–	–	–	–	–	–	–
					I_{cs}	–	–	–	–	–	–	–	–	–	–	–	–	–
	DC	125/250 V DC Interrupting Rating			2-Pole	–	–	–	–	–	–	–	–	–	14000	14000	14000	14000
					3-Pole	–	–	–	–	–	–	–	–	–	–	–	–	–
Dimensions in Inches		Height			10-50A	–	2.87	2.87	–	–	–	3.56	3.56	3.75	4.50	5.00	5.00	5.00
					10-60A	3.12	–	–	–	–	–	–	–	–	–	–	–	–
					55-125A	–	3.12	3.12	3.12	3.12	3⑨	3.75	3.75	3.75	4.50	5.00	5.50	5.50
		Width			1-Pole	1.00	1.00	1.00	1.00	–	–	1.00	1.00	1.00	1.00	1.00	1.00	1.00
					2-Pole	2.00①	2.00	2.00	2.00	4.00	⑨	2.00	2.00	2.00	2.00	2.00	2.00	2.00
					3-Pole	2.00①	3.00	3.00	3.00	–	3.00⑨	3.00	3.00	3.00	3.00	3.00	3.00	3.00
		Depth				2.06	2.37	2.37	2.37	2.37	2.34	2.37	2.37	2.37	2.69	2.71	2.71	2.71
Overcurrent Devices		Thermal and Fixed magnetic Trip				√	√	√	√	√	√	√	√	√	√	√	√	√
		Thermal and Adjustable Magnetic trip				–	–	–	–	–	–	–	–	–	–	–	–	–
		Adjustable Magnetic trip only				–	–	–	–	–	–	–	–	–	–	–	–	–
		Motor Circuit Protector				–	–	–	–	–	–	–	–	–	–	–	–	–
		Molded Case Switch				–	√⑥	–	–	–	–	–	–	–	–	–	–	–
Accessories & Modifications		Undervoltage Trip				–	–	–	–	–	–	–	–	–	√	–	√	√
		Shunt Trip				–	√⑥	√⑥	√	√⑧	–	√	√	√	√	√	√	√
		Auxilary Switch				–	–	–	–	√⑧	–	√	√	√	√	√	√	√
		Alarm Switch				–	–	–	–	–	–	–	–	–	√	√	√	√
		Mechanical Interlock				–	–	–	–	–	–	–	–	–	–	–	–	–
		Fungus Proofing (ref. page 5-160)				–	–	–	–	–	–	√	√	√	√	√	√	√



Q3100



B120



B220H



B320HH



NGB1B030B

For inches / millimeters conversion, see Technical section.
For Plug-in Breakers, see Loadcentres section.

①BQD6 CSA certified 10,000A @ 600Y/347V 15–70A only.
③Single pole breakers available in ratings 10–70A only.
④125A, 2-pole 120/240V AC only.
⑦Single pole circuit breakers available in ratings 15-70A only, 125A available as a 2-pole only.
⑩10A, 1-pole & 2-pole 120/240V AC only.

Molded Case Circuit Breakers

Reference Guide

Thermal-Magnetic Trip Breakers

				General Purpose Breakers									
				BQ	**BQH**	**HBQ**	**QR2**	**QRH2**	**HQR2**	**HQR2H**	**CQD**	**NGG**
Page				**5-28**	**5-28**	**5-28**	**5-30**	**5-30**	**5-30**	**5-30**	**5-31**	**5-32**
Ratings		Poles		1, 2, 3	1, 2, 3	1, 2, 3	2, 3	2, 3	2, 3	2, 3	1, 2, 3	1, 2, 3
	AC	Amperes, Continuous	1-Pole	15–70	15–70	15–50	—	—	—	—	15–100	15–125
			2-Pole	15–125	15–100	15–70	100–250	100–250	100–250	100–250	15–100	15–125
			3-Pole	15–100	15–100	15–100					15–100	15-125
		Volts (50/60 Hertz)	1-Pole	120/240	120/240	120/240	—	—	—	—	277	347
			2-Pole				240	240	240	240	480/277	600/347
			3-Pole	240	240	240						
		CSA/UL Interrupting Rating — Symmetrical RMS Amperes	120V	10,000	22,000	65,000	—	—	—	—	65,000	65,000
			240V	10,000	22,000	65,000	10,000	25,000	65,000	100,000	65,000	65,000
			480V	—	—	—	—	—	—	—	14,000①	25,000
			600/347V	—	—	—	—	—	—	—	10,000	14,000
	DC	Volts — 2-Pole		—	—	—	—	—	—	—	125/250	125/250
		Interrupting Rating — DC Amperes		—	—	—	—	—	—	—	14,000	14,000
Dimensions in Inches	Height		15–50A	3.75	3.75	4.00	—	—	—	—	4.50	5.40
			55–125A	4.00	4.00	4.00	—	—	—	—	4.50	5.40
			60–225A	—	—	—	7.00	7.00	7.00	7.00	—	—
	Width		1-Pole	1.00	1.00	1.00	—	—	—	—	1.00	1.00
			2-Pole	2.00	2.00	2.00	3.00	3.00	3.00	3.00	2.00	2.00
			3-Pole	3.00	3.00	3.00	4.50	4.50	4.50	4.50	3.00	3.00
	Depth			2.37	2.37	2.37	2.53	2.53	2.53	2.53	2.87	2.90
Overcurrent Devices	Thermal and Fixed Magnetic Trip			√	√	√	√	√	√	√	√	√
	Molded Case Switch			√	—	—	√	—	—	√③	—	—
Accessories & Modifications	Undervoltage Trip			—	—	—	—	—	—	—	—	—
	Shunt Trip			√	√	√	√	√	√	√	√	√
	Auxiliary Switch			√	√	√	√	√	√	√	√	√
	Alarm Switch			—	—	—	—	—	—	—	√	√
	Mechanical Interlock			—	—	—	√	√	√	√	—	—
	Fungus Proofing (ref. page 5-160)			√	√	√	√	√	√	√	√	√
Individual Enclosures	Type 1 — Indoor Surface			√	√	√	—	—	—	—	—	—
	Type 1 — Indoor, Flush			√	√	√	—	—	—	—	—	—
	Type 3R — Outdoor-Rainproof			√	√	√	—	—	—	—	—	—



BQ1B020



BQ1B020H



HB1B020



CQD115



LGG2B020L

For inches / millimeters conversion, see Technical section.

① CQD breakers are rated 14,000 KAIC at 480/277V.
③ 3-pole only.

Molded Case Circuit Breakers

3VA cULus Breakers

Reference Guide



Type		3VA51			3VA51			3VA52			3VA53			3VA54			3VA55		
Page		5-36			5-37			5-44			5-52			5-58			5-64		
Number of Poles		1			2, 3, 4			2 in 3-pole, 3, 4			2 in 3-pole, 3, 4			2 in 3-pole, 3, 4			3, 4		
3VA5 molded case circuit breakers																			
Size		125 A			125 A			250 A			400 A			600 A			800 A		
Rated current I_n	**A**	**15 … 125**			**15 … 125**			**100 … 250**			**200 … 400**			**400 … 600**			**600 … 800**		
Frequency	Hz	0 … 400			0 … 400			0 … 400			0 … 400			0 … 400			0 … 400		
Electrical characteristics according to CSA C22.2 No. 5 / UL 489																			
Rated operational voltage 50/60 Hz AC	V	347			600			600			600			600			600		
Electrical characteristics according to IEC 60947-2																			
Rated operational voltage U_e 50/60 Hz AC	V	415			690			690			690			690			690		
Rated insulation voltage U_i	**V**	**500**			**800**			**800**			**800**			**800**			**800**		
Rated impulse withstand voltage U_{imp}	kV	8			8			8			8			8			8		
Short-circuit breaking capacity according to CSA C22.2 No. 5 / UL 489 UL Breaker Type		Ⓢ SEAS	Ⓜ MEAS	Ⓗ HEAS	Ⓢ SEAS	Ⓜ MEAS	Ⓗ HEAS	Ⓜ MFAS	Ⓗ HFAS	Ⓒ CFAS	Ⓜ MJAS	Ⓗ HJAS	Ⓒ CJAS	Ⓜ MLAS	Ⓗ HLAS	Ⓒ CLAS	Ⓜ MMAS	Ⓗ HMAS	Ⓒ CMAS
120 V AC / 50/60 Hz	kA	65	85	150	—	—	—	—	—	—	—	—	—	—	—	—	—	—	—
240 V AC / 50/60 Hz	kA	—	—	—	65	85	100	85	100	200	85	100	200	85	100	200	85	100	200
277 V AC / 50/60 Hz	kA	25	35	50	—	—	—	—	—	—	—	—	—	—	—	—	—	—	—
347 V AC / 50/60 Hz	kA	14	18	18	—	—	—	—	—	—	—	—	—	—	—	—	—	—	—
480 Y/277 V AC / 50/60 Hz	kA	—	—	—	25	35	65	35	65	100	35	65	100	35	65	100	35	65	100
480 V AC / 50/60 Hz	kA	—	—	—	25	35	65	35	65	100	35	65	100	35	65	100	35	65	100
600 Y/347 V AC / 50/60 Hz	kA	—	—	—	14	18	25	18	25	35	18	25	35	18	25	35	18	25	50
600 V AC / 50/60 Hz	kA	—	—	—	—	—	—	18	25	35	18	25	35	18	25	35	18	25	50
125 V DC	kA	14	25	30	—	—	—	—	—	—	—	—	—	—	—	—	—	—	—
250 V DC	kA	—	—	—	50	85	100	50	85	100	50	85	100	50	85	100	50	85	100
500 V DC	kA	—	—	—	50	85	100	50	85	100	50	85	100	50	85	100	50	85	100
600 V DC (3-pole only)	kA	—	—	—	—	—	—	50	85	100	50	85	100	50	85	100	50	85	100
750 V DC (4-pole only)	kA	—	—	—	—	—	—	50	85	100	50	85	100	50	85	100	50	85	100
1000 V DC (4-pole only)	kA	—	—	—	—	—	—	50	85	100	6	6	10	6	6	10	18	25	50
Short-circuit breaking capacity according to IEC 60947-2		Ⓢ	Ⓜ	Ⓗ	Ⓢ	Ⓜ	Ⓗ	Ⓜ	Ⓗ	Ⓒ	Ⓜ	Ⓗ	Ⓒ	Ⓜ	Ⓗ	Ⓒ	Ⓜ	Ⓗ	Ⓒ
Rated ultimate short-circuit breaking capacity I_{cu} Rated service short-circuit breaking capacity I_{cs} rms value, according to IEC 60947-2																			
240 V AC / 50/60 Hz	kA	25/25	36/36	55/55	55/55	85/85	150/150	85/85	100/100	200/200	85/85	100/100	200/200	85/85	100/100	200/200	85	100	200
415 V AC / 50/60 Hz	kA	5/5	5/5	5/5	36/36	55/55	70/70	55/55	70/70	110/110	55/55	70/70	110/110	55/55	70/70	110/110	55	70	110
690 V AC / 50/60 Hz	kA	—	—	—	5/5	7/5	10/5	7/7	10/10	10/10	7/7	10/10	10/10	7/7	10/10	10/10	25	35	35
125 V DC	kA	14	25	30	—	—	—	—	—	—	—	—	—	—	—	—	—	—	—
250 V DC	kA	—	—	—	50	85	100	50	85	100	50	85	100	50	85	100	50	85	100
500 V DC	kA	—	—	—	50	85	100	50	85	100	50	85	100	50	85	100	50	85	100
750 V DC (3-pole only)	kA	—	—	—	—	—	—	50	85	100	50	85	100	50	85	100	50	85	100

— Not available

Applicable Standards:

- CSA C22.2 No. 5 / UL 489 - Molded Case Circuit Breakers
- UL486A - Wire connectors and solderless lugs for use with copper
- UL486B- Wire connectors and solderless lugs for use with aluminum wire
- CSA-22.2 No. 5-13 - Molded Case Circuit Breakers, Molded case switches and circuit breaker enclosures
- EN 60947-1 AMD 2 - Molded case circuit breakers
- EN 60947-2 AMD 2 2013
- EN 50581 2012 - RoHS compliant

Molded Case Circuit Breakers

3VA UL Breakers

Reference Guide








3VA57	3VA58	3VA59	3VA61	3VA62	3VA63
<?>	<?>	<?>	<?>, <?>	<?>, <?>	<?>, <?>
2, 3	3	3	3, 4	3, 4	3, 4
1200A	1600A	2000A	150 A	250 A	400 A
800, 900, 1000, 1200	1400, 1600	1800, 2000	15 ... 125	15 ... 125	100 ... 250
0 ... 400	0 ... 400	0 ... 400	50/60 Hz	50/60 Hz	50/60 Hz
600	600	600	600	600	600
690	690	690	690	690	690
800	800	800	800	800	800
8	8	8	8	8	8

Ⓜ MNAS	Ⓗ HNAS	Ⓒ CNAS	Ⓜ MPAS	Ⓗ HPAS	Ⓒ CPAS	Ⓜ MRAS	Ⓗ HRAS	Ⓒ CRAS	Ⓜ MDAE	Ⓗ HDAE	Ⓒ CDAE	Ⓛ LDAE	Ⓔ EDAE	Ⓜ MFAE	Ⓗ HFAE	Ⓒ CFAE	Ⓛ LFAE	Ⓔ EFAE	Ⓜ MJAE	Ⓗ HJAE	Ⓒ CJAE	Ⓛ LJAE	Ⓔ EJAE
—	—	—	—	—	—	—	—	—	—	—	—	—	—	—	—	—	—	—	—	—	—	—	—
85	100	200	85	100	200	85	100	200	100	100	200	200	—	100	100	200	200	—	100	100	200	200	—
—	—	—	—	—	—	—	—	—	—	—	—	—	—	—	—	—	—	—	—	—	—	—	—
—	—	—	—	—	—	—	—	—	—	—	—	—	—	—	—	—	—	—	—	—	—	—	—
35	65	100	35	65	100	35	65	100	35	65	100	150	200	35	65	100	150	200	35	65	100	150	200
35	65	100	35	65	100	35	65	100	35	65	100	150	200	35	65	100	150	200	35	65	100	150	200
25	35	65	25	35	65	25	35	65	18	22	35	50	100	18	22	35	50	100	18	22	35	50	100
25	35	65	25	35	65	25	35	65	18	22	35	50	100	18	22	35	50	100	18	22	35	50	100
—	—	—	—	—	—	—	—	—	—	—	—	—	—	—	—	—	—	—	—	—	—	—	—
50	85	100	50	85	100	50	85	100	—	—	—	—	—	—	—	—	—	—	—	—	—	—	—
—	—	—	—	—	—	—	—	—	—	—	—	—	—	—	—	—	—	—	—	—	—	—	—
50	85	100	50	85	100	50	85	100	—	—	—	—	—	—	—	—	—	—	—	—	—	—	—
50	85	100	50	85	100	50	85	100	—	—	—	—	—	—	—	—	—	—	—	—	—	—	—
—	—	—	—	—	—	—	—	—	—	—	—	—	—	—	—	—	—	—	—	—	—	—	—

Ⓜ	Ⓗ	Ⓒ	Ⓜ	Ⓗ	Ⓒ	Ⓜ	Ⓗ	Ⓒ	Ⓜ	Ⓗ	Ⓒ	Ⓛ	Ⓔ	Ⓜ	Ⓗ	Ⓒ	Ⓛ	Ⓔ	Ⓜ	Ⓗ	Ⓒ	Ⓛ	Ⓔ
65/35	100/50	200/100	65/35	100/50	200/100	—	—	—	85/85	110/110	150/150	200/200	—	85/85	110/110	150/150	200/200	—	85/85	110/110	150/150	200/200	—
50/25	70/35	100/50	50/25	70/35	100/50	—	—	—	55/55	85/85	110/110	150/150	150/150	55/55	85/85	110/110	150/150	150/150	55/55	85/85	110/110	150/150	150/110
20/10	30/15	35/17	20/10	30/15	35/17	—	—	—	2.5/2.5	2.5/2.5	2.5/2.5	2.5/2.5	3/3	3/3	3/3	3/3	3/3	3/3	5/5	5/5	5/5	5/5	6/6
—	—	—	—	—	—	—	—	—	—	—	—	—	—	—	—	—	—	—	—	—	—	—	—
30	30	30	30	30	30	—	—	—	—	—	—	—	—	—	—	—	—	—	—	—	—	—	—
—	—	—	—	—	—	—	—	—	—	—	—	—	—	—	—	—	—	—	—	—	—	—	—
—	—	—	—	—	—	—	—	—	—	—	—	—	—	—	—	—	—	—	—	—	—	—	—

UL Type Structure

Position 1	Position 2		Position 3	Position 4
KAIC @ 480V	**Frame (max amps)**		**Family**	**Trip System / Special Application**
S = 25=low **M** = 35=med low **H** = 65=med **C** = 100=med high **L** = 150=high **E** = 200=extra high	**E** = 125A **D** = 150A **F** = 250A **J** = 400A **L** = 600A	**M** = 800A **MN** = 1000A **N** = 1200A **P** = 1600A **R** = 2000A	**A** = 3VA	**S** = Standard TMTU or MCS (Molded Case Switch) **E** = High End ETU **B** = Panelboard TMTU (Bolt-on) **M** = TMTU 50°C/NAVAL (UL 489 SB) **P** = TMTU MCP (Motor Circuit Protector) **R** = ETU MCP (Motor Circuit Protector)

Molded Case Circuit Breakers

3VA cULus Breakers

Reference Guide








Type		3VA64	3VA65	3VA66	3VA67	3VA68	3VA69
Page		**<?>, <?>**	**<?>, <?>**	**<?>, <?>**	**<?>, <?>**	**<?>, <?>**	**<?>**
Number of Poles		3, 4	3, 4	3, 4	3	3	3
3VA molded case circuit breakers							
Size		600 A	800A	1000A	1200 A	1600 A	2000 A
Rated current I_n	A	200 ... 400	600-800	1000	800, 1000, 1200	1600	2000
Frequency	Hz	50/60 Hz	50/60 Hz	50/60 Hz	50/60 Hz	50/60 Hz	50/60 Hz
Electrical characteristics according to UL489							
Rated operational voltage 50/60 Hz AC	V	600	600	600	600	600	600
Electrical characteristics according to IEC 60947-2							
Rated operational voltage U_e 50/60 Hz AC	V	690	690	690	690	690	690
Rated insulation voltage U_i	V	800	800	800	800	800	800
Rated impulse withstand voltage U_{imp}	kV	8	8	8	8	8	8

Short-circuit breaking capacity according to UL 489 UL Breaker Type		Ⓜ MLAE	Ⓗ HLAE	Ⓒ CLAE	Ⓛ LLAE	Ⓔ ELAE	Ⓜ MMAE	Ⓗ HMAE	Ⓒ CMAE	Ⓜ MMNAE	Ⓗ HMNAE	Ⓒ CMNAE	Ⓜ MNAE	Ⓗ HNAE	Ⓒ CNAE	Ⓜ MPAE	Ⓗ HPAE	Ⓒ CPAE	Ⓜ MRAE	Ⓗ HRAE	Ⓒ CRAE
120 V AC / 50/60 Hz	kA	—	—	—	—	—	—	—	—	—	—	—	—	—	—	—	—	—	—	—	—
240 V AC / 50/60 Hz	kA	100	100	200	200	—	100	150	200	100	150	200	85	100	200	85	100	200	85	100	200
277 V AC / 50/60 Hz	kA	—	—	—	—	—	—	—	—	—	—	—	—	—	—	—	—	—	—	—	—
347 V AC / 50/60 Hz	kA	—	—	—	—	—	—	—	—	—	—	—	—	—	—	—	—	—	—	—	—
480 Y/277 V AC / 50/60 Hz	kA	35	65	100	150	200	35	65	100	35	65	100	—	—	—	—	—	—	—	—	—
480 V AC / 50/60 Hz	kA	35	65	100	150	200	35	65	100	35	65	100	35	65	100	35	65	100	35	65	100
600 Y/347 V AC / 50/60 Hz	kA	18	22	35	50	100	25	35	50	25	35	50	—	—	—	—	—	—	—	—	—
600 V AC / 50/60 Hz	kA	18	22	35	50	100	25	35	50	25	35	50	25	35	65	25	35	65	25	35	65
125 V DC	kA	—	—	—	—	—	—	—	—	—	—	—	—	—	—	—	—	—	—	—	—
250 V DC	kA	—	—	—	—	—	—	—	—	—	—	—	—	—	—	—	—	—	—	—	—
500 V DC	kA	—	—	—	—	—	—	—	—	—	—	—	—	—	—	—	—	—	—	—	—
600 V DC (3-pole only)	kA	—	—	—	—	—	—	—	—	—	—	—	—	—	—	—	—	—	—	—	—
750 V DC (4-pole only)	kA	—	—	—	—	—	—	—	—	—	—	—	—	—	—	—	—	—	—	—	—
1000 V DC (4-pole only)	kA	—	—	—	—	—	—	—	—	—	—	—	—	—	—	—	—	—	—	—	—

Short-circuit breaking capacity according to IEC 60947-2 **Rated ultimate short-circuit breaking capacity I_{cu}** **Rated service short-circuit breaking capacity I_{cs}** rms value, according to IEC 60947-2		Ⓜ	Ⓗ	Ⓒ	Ⓛ	Ⓔ	Ⓜ	Ⓗ	Ⓒ	Ⓜ	Ⓗ	Ⓒ	Ⓜ	Ⓗ	Ⓒ	Ⓜ	Ⓗ	Ⓒ	Ⓜ	Ⓗ	Ⓒ
240 V AC / 50/60 Hz	kA	85/85	110/110	150/150	200/200	—	85/85	110/110	200/150	85/85	110/110	200/150	65/35	100/50	200/100	65/35	100/50	200/100	—	—	—
415 V AC / 50/60 Hz	kA	55/55	85/85	110/110	150/150	150/110	55/55	85/85	110/85	55/55	85/85	110/85	50/25	70/35	100/50	50/25	70/35	100/50	—	—	—
690 V AC / 50/60 Hz	kA	6/6	6/6	6/6	6/6	6/6	25/19	35/19	35/19	25/19	35/19	35/19	20/10	30/15	35/17	20/10	30/15	35/17	—	—	—
125 V DC	kA	—	—	—	—	—	—	—	—	—	—	—	—	—	—	—	—	—	—	—	—
250 V DC	kA	—	—	—	—	—	—	—	—	—	—	—	—	—	—	—	—	—	—	—	—
500 V DC	kA	—	—	—	—	—	—	—	—	—	—	—	—	—	—	—	—	—	—	—	—
750 V DC (3-pole only)	kA	—	—	—	—	—	—	—	—	—	—	—	—	—	—	—	—	—	—	—	—

— Not available

Molded Case Circuit Breakers

Reference Guide

Thermal-Magnetic Trip Breakers

						General Purpose Breakers						
						HGG	LGG	ED2	ED4	ED6	HED4	CED6
Page						**5-32**	**5-32**	**5-101**	**5-101**	**5-101**	**5-102**	**5-102**
Ratings	**AC**	Poles				1, 2, 3	1, 2, 3	1, 2, 3	1, 2, 3	1④, 2, 3	1, 2, 3	2, 3
		Amperes, Continuous				15–125	15–125	15–100	15–125	15–125⑦	15–125	15–125
		Volts 50/60HZ			1-Pole	347	347	120	277	347	277	—
					2-Pole 3-Pole	600/347	600/347	240	480	600	480	600
		Interrupt Rating Symmetrical RMS Amperes	CSA/UL		120V	—	—	10,000	—	—	100,000	—
					240V	85,000	100,000	10,000	65,000	65,000	100,000⑤	200,000
					277V	—	—	—	22,000①	—	65,000②	—
					347V	—	—	—	—	30,000	—	—
					480V	35,000	65,000	—	18,000	25,000	42,000	200,000
					600V	14,000	14,000	—	—	18,000	—	100,000
			IEC 947-2 50/60HZ	220/240V	Icu	—	—	—		65,000	—	—
					Ics	—	—	—	—	17,000	—	—
				380/415V	Icu	—	—	—		35,000	—	—
					Ics	—	—	—	—	9,000	—	—
				500V	Icu	—	—	—	—	18,000	—	—
					Ics	—	—	—	—	5,000	—	—
	DC	2-Pole, 250V DC Interrupting Ratings				35,000	42,000	5,000	30,000	30,000	30,000	30,000
		3-Pole, 500V DC Interrupting Ratings③				—	—	—	—	18,000	—	50,000
Dimensions in inches		Height			1-Pole	5.40 1.00	5.40 1.00	6.34 1.00	6.34 1.00	6.34 1.00	6.34 1.00	9.26 —
		Width			2-Pole 3-Pole	2.00 3.00	2.00 3.00	2.00 3.00	2.00 3.00	2.00 3.00	2.00 3.00	2.00 3.00
					4-Pole	4.00	4.00	—	—	—	—	—
		Depth				2.90	2.90	4.00	4.00	4.00	4.00	4.00
Overcurrent Devices		Thermal and Fixed Magnetic Trip				√	√	√	√	√	√	√
		Thermal and Adjustable Magnetic Trip				—	—	—	—	—	—	—
		Adjustable Magnetic Trip only Motor Circuit Protector				—	—	—	—	√	—	√
		Molded Case Switch				—	—	√	√	√	√	√
Accessories & Modifications		Undervoltage Trip				—	—	√	√	√	√	√
		Shunt Trip				√	√	√	√	√	√	√
		Auxiliary Switch				√	√	√	√	√	√	√
		Alarm Switch				√	√	√	√	√	√	√
		Mechanical Interlock				—	—	—	—	—	—	—
		Rear Connection Studs				—	—	√	√	√	√	√
		Electric Motor Operator				—	—	√	√	√	√	√
		Plug-In Mounting Assembly (3 Pole Only)				—	—	√	√	√	√	√
		Fungus Proofing (ref. page 5-160)				√	√	√	√	√	√	√
Individual Enclosures		Type 1 — Indoor Surface				√	√	√	√	√	√	√
		Type 1 — Indoor, Flush				√	√	√	√	√	√	√
		Type 3R — Outdoor-Rainproof				√	√	√	√	√	√	√
		Type 12 — Lint, Fine Dust, Oils, Coolants				—	—	√	√	√	√	√

For inches / millimeters conversion, see Technical section.

① 1-pole only.
② 35-100A: 25,000 AIR at 277V AC/15-30A: 65,000 AIR at 277V AC.
③ For DC UPS system application.
④ Single pole ED6 (15–30A) 30kA, (35–100A) 18 kA. CSA Only.
⑤ Single pole HED4, 15-30A: 65,000 AIR at 240V AC; single pole HED4, 35-100A: 25,000 AIR at 240V AC.
⑥ HGG and LGG breakers are rated at 600/347V.
⑦ ED6, 2-pole available 15-125 amps only.

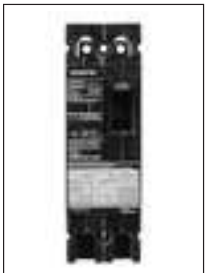

ED62B020

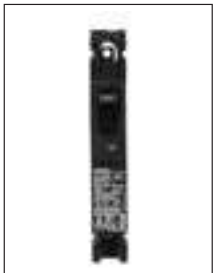

HED41B040

Thermal-Magnetic Trip Breakers

						General Purpose Breakers								
						FD6A, FXD6A	HFD6, HFXD6	HHFD6, HHFXD6	CFD6	JXD2-A	JD6-A, JXD6-A	HJD6-A, HJXD6-A	HHJD6-A, HHJXD6-A	CJD6-A
Page						5-104	5-105	5-105	5-105	5-107	5-107	5-108	5-108	5-108
Ratings	**AC**	Poles				2, 3	2, 3	2, 3	3	2, 3	2, 3	2, 3	2, 3	3
		Amperes, Continuous				70–250	70-250	70-250	70–250	200-400	200-400	200-400	200-400	200-400
		Volts 50/60HZ			2-Pole 3-Pole	600	600	600	600	240	600	600	600	600
		Interrupt Rating Symmetrical RMS Amperes	CSA/UL		240V	65,000	100,000	200,000	200,000	65,000	65,000	100,000	200,000	200,000
					480V	35,000	65,000	100,000	200,000	—	35,000	65,000	100,000	150,000
					600V	22,000	25,000	25,000	100,000	—	25,000	35,000	50,000	100,000
			IEC60947-2 50/60HZ	220/240V	Icu	65,000	100,000	—	—	—	65,000	100,000	—	—
					Ics	33,000	50,000	—	—	—	33,000	50,000	—	—
				380/415V	Icu	35,000	65,000	—	—	—	40,000	65,000	—	—
					Ics	18,000	33,000	—	—	—	20,000	33,000	—	—
				500V	Icu	—	—	—	—	—	—	—	—	—
					Ics	—	—	—	—	—	—	—	—	—
	DC	2-Pole 250V DC Interrupting Ratings				30,000	30,000	—	50,000	30,000	30,000	30,000	—	—
		3-Pole, 500V DC Interrupting Ratings①				18,000	25,000	—	50,000	—	25,000	35,000	—	50,000
Dimensions in inches		Height				9.50	9.50	14.12	14.12	11.00	11.00	11.00	11.00	17.86
		Width			2-Pole	4.50	4.50	4.50	4.50	7.50	7.50	7.50	7.50	7.50
					3-Pole									
		Depth				4.00	4.00	4.00	4.00	4.00	4.00	4.00	4.00	4.00
Overcurrent Devices		Thermal and Fixed Magnetic Trip				—	—	—	—	—	—	—	—	—
		Thermal and Adjustable Magnetic Trip				√	√	√	√	√	√	√	√	√
		Adjustable Magnetic Trip Only Motor Circuit Protector				√	—	—	√	—	—	√	√	—
		Molded Case Switch				√	—	—	√	√	√	—	—	√
Acessories & Modifications		Undervoltage Trip				√	√	√	√	√	√	√	√	√
		Shunt Trip				√	√	√	√	√	√	√	√	√
		Auxiliary Switch				√	√	√	√	√	√	√	√	√
		Auxiliary Switch				√	√	√	√	√	√	√	√	√
		Mechanical Interlock				√	√	√	√	√	√	√	√	√
		Rear Connection Studs				√	√	√	√	√	√	√	√	√
		Electric Motor Operator				√	√	√	√	√	√	√	√	√
		Plug-In Mounting Assembly				√	√	√	√	√	√	√	√	√
		Fungus Proofing (ref. page 5-160)				√	√	√	√	—	√	√	√	√
Individual Enclosures		Type 1 — Indoor Surface				√	√	√	√	√	√	√	√	√
		Type 1 — Indoor, Flush				—	√	—	√	—	—	—	—	—
		Type 3R — Outdoor-Rainproof				√	√	√	√	√	√	√	√	—
		Type 12 — Lint, Fine Dust, Oils, Coolants				√	√	√	√	√	√	√	√	√

For inches / millimeters conversion, see Technical section.

① For DC UPS application.

Molded Case Circuit Breakers

Reference Guide

Selection/Application

Thermal-Magnetic Trip Breakers

						General Purpose Breakers								
						LD6, LXD6	HLD6, HLXD6	HHLD6, HHLXD6	CLD6-A	LMD6, LMXD6	HLMD6, HLMXD6	MD6, MXD6	HMD6, HMXD6	CMD6
Page						**5-111**	**5-112**	**5-112**	**5-112**	**5-115**	**5-103**	**5-118**	**5-119**	**5-119**
Ratings	**AC**	Poles				2, 3	2, 3	2, 3	3	2, 3	2, 3	2, 3	2, 3	3
		Amperes, Continuous				250-600	250-600	250-600	450-600	500-800	500-800	500-800	500-800	400-800
		Volts 50/60 HZ			2-Pole	600	600	600	600	600	600	600	600	600
					3-Pole									
		Interrupt Rating Symmetrical RMS Amperes	CSA/UL		240V	65,000	100,000	200,000	200,000	65,000	100,000	65,000	100,000	200,000
					480V	35,000	65,000	100,000	150,000	50,000	65,000	50,000	65,000	100,000
					600V	25,000	35,000	50, 000	100,000	25,000	50,000	25,000	50,000	65,000
			IEC 947-2 50/60HZ	220/240V	Icu	65,000	100,000	—	—	65,000	100,000	65,000	100,000	—
					Ics	33,000	50,000	—	—	33,000	50,000	33,000	50,000	—
				380/415V	Icu	40,000	65,000	—	—	40,000	65,000	40,000	65,000	—
					Ics	20,000	33,000	—	—	20,000	33,000	20,000	33,000	—
				500V	Icu	—	—	—	—	—	—	—	—	—
					Ics	—	—	—	—	—	—	—	—	—
	DC	2-Pole 250V DC Interrupting Ratings				30,000	30,000	—	—	30,000	30,000	30,000	30,000	30,000
		3-Pole, 500V DC Interrupting Ratings①				35,000		—	50, 000	25,000	50,000	25,000	50,000	50,000
Dimensions in inches		Height				11.00	11.00	11.00	17.86	16.00	16.00	16.00	16.00	16.00
		Width				7.50	7.50	7.50	7.50	7.50	7.50	9.00	9.00	9.00
		Depth				4.00	4.00	4.00	4.00	4.59	4.59	6.19	6.19	6.19
Overcurrent Devices		Thermal and Adjustable Magnetic Trip				√	√	√	√	√	√	√	√	√
		Adjustable Magnetic Trip Only Motor Circuit Protector				√	—	—	√	√	√	√	—	√
		Molded Case Switch				√	—	—	√	√	—	√	—	√
Accessories & Modifications		Undervoltage Trip				√	√	√	√	√	√	√	√	√
		Shunt Trip				√	√	√	√	√	√	√	√	√
		Auxiliary Switch				√	√	√	√	√	√	√	√	√
		Alarm Switch				√	√	√	√	√	√	√	√	√
		Mechanical Interlock				√	√	√	√	√	√	√	√	√
		Rear Connection Studs				√	√	√	√	√	√	√	√	√
		Electric Motor Operator				√	√	√	√	√	√	√	√	√
		Plug-In Mounting Assembly				√	√	√	√	—	—	√	√	√
		Fungus Proofing (ref. page 5-160)				√	√	√	√	√	√	√	√	√
Individual Enclosures		Type 1 — Indoor Surface				√	√	√	√	—	—	√	√	√
		Type 1 — Indoor, Flush				—	—	—	—	—	—	—	—	—
		Type 3R — Outdoor-Rainproof				√	√	√	—	—	—	√	√	√
		Type 12 — Lint, Fine Dust, Oils, Coolants				—	—	—	—	—	—	√	√	√

For inches / millimeters conversion, see Technical section.

① For DC UPS application.

Reference Guide

Thermal-Magnetic Trip Breakers

						General Purpose Breakers					
						ND6, NXD6	HND6, HNXD6	CND6	PD6, PXD6④	HPD6④, HPXD6④	CPD6④
Page						**5-122**	**5-123**	**5-123**	**5-126**	**5-126**	**5-126**
Ratings		Poles				2, 3	2, 3	3	3	3	3
		Amperes, Continuous				800-1200	800-1200	800-1200	1200-1600	1200-1600	1200-1600
		Volts 50/60 HZ			3-Pole	600	600	600	600	600	600
	AC	Interrupt Rating Symmetrical RMS Amperes	CSA/UL		240V	65,000	100,000	200,000	65,000	100,000	200,000
					480V	50,000	65,000	100,000	50,000	65,000	100,000
					600V	25,000	50,000	65,000	25,000	50,000	65,000
			IEC 947-2 50/60HZ	220/240V	Icu	65,000	100,000	—	—	—	—
					Ics	33,000	50,000	—	—	—	—
				380/415V	Icu	40,000	65,000	—	—	—	—
					Ics	20,000	33,000	—	—	—	—
				500V	Icu	—	—	—	—	—	—
					Ics	—	—	—	—	—	—
	DC	2-Pole 250V DC Interrupting Ratings				30,000	30,000	30,000	30,000	30,000	30,000
		3-Pole, 500V DC Interrupting Ratings①				25,000	50,000	50,000	25,000	50,000	50,000
Dimensions in inches		Circuit breakers require Connect-all mounting block. Dimensions shown are for circuit breaker only.			Height	16.00	16.00	16.00	16.0	16.00	16.00
					Width	9.00	9.00	9.00	9.00	9.00	9.00
					Depth	6.19	6.19	6.19	6.19	6.19	6.19
Overcurrent Devices		Thermal and Adjustable Magnetic Trip				√	√	√	√	√	√
		Adjustable Magnetic Trip Only Motor Circuit Protector				—	—	—	—	—	—
		Molded Case Switch				√	—	√	√	—	—
Accessories & Modifications		Undervoltage Trip				√	√	√	√	√	√
		Shunt Trip				√	√	√	√	√	√
		Auxiliary Switch				√	√	√	√	√	√
		Alarm Switch				√	√	√	√	√	√
		Mechanical Interlock				√	√	√	√	√	√
		Rear Connections Studs				√	√	√	—	—	—
		Electric Motor Operator				√	√	√	√	√	√
		Plug-in Mounting Assembly				√	√	√	—	—	—
		Fungus Proofing (ref. page 5-160)				√	√	√	√	√	√
		Mounting Block (required)				—	—	—	√	√	√
Individual Enclosures		Type 1 — Indoor Surface				√	√	√	—	—	—
		Type 1 — Indoor, Flush				—	—	—	—	—	—
		Type 3R — Outdoor-Rainproof				√	√	√	—	—	—
		Type 12 — Lint, Fine Dust, Oils, Coolants				—	—	—	—	—	—

For inches / millimeters conversion, see Technical section.

① For DC UPS application.
② 2-pole design.
③ 3-pole design.
④ Requires Connect-all mounting assembly. Dimensions shown are for circuit breaker only.

Thermal-Magnetic Trip Breakers & Electronic Trip Breakers						General Purpose Breakers		Solid State Trip Circuit Breakers					
						RD6①, RXD6①	HRD6①, HRXD6①	SJD6	SHJD6	SCJD6	SLD6	SHLD6	SCLD6
Page						5-129	5-129	5-109	5-109	5-109	5-113	5-113	5-113
Ratings	AC	Poles			3-Pole	3	3	3	3	3	3	3	3
		Amperes, Continuous				1600-2000	1600-2000	200-400	200-400	200-400	300-600	300-600	300-600
		Volts 50/60 HZ			3-Pole	600	600	600	600	600	600	600	600
		Interrupt Rating Symmetrical RMS Amperes	CSA/UL		240V	65,000	100,000	65,000	100,000	200,000	65,000	100,000	200,000
					480V	50,000	65,000	35,000	65,000	150,000	35,000	65,000	150,000
					600V	25,000	50,000	25,000	35,000	100,000	25,000	35,000	100,000
			IEC60947-2 50/60HZ	220/240V	Icu	—	—	—	—	—	—	—	—
					Ics	—	—	—	—	—	—	—	—
				380/415V	Icu	—	—	—	—	—	—	—	—
					Ics	—	—	—	—	—	—	—	—
				500V	Icu	—	—	—	—	—	—	—	—
					Ics	—	—	—	—	—	—	—	—
	DC	2-Pole 250V DC Interrupting Ratings				30,000	30,000	—	—	—	—	—	—
		3-Pole, 500V DC Interrupting Ratings①				25,000	50,000	—	—	—	—	—	—
Dimensions in inches		Height				16.00	16.00	11.00	11.00	17.86	11.0	11.00	17.86
		Width			3-Pole	9.00	9.00	7.50	7.50	7.50	7.50	7.50	7.50
		Depth				6.19	6.19	4.00	4.00	4.00	4.00	4.00	4.00
Overcurrent Devices		Solid State Trip				—	—	√	√	√	√	√	√
		Thermal and Adjustable Magnetic Trip				√	√	—	—	—	—	—	—
		Adjustable Magnetic Trip Only Motor Circuit Protector				—	—	—	—	—	—	—	—
		Molded Case Switch				√	—	—	—	—	—	—	—
Accessories & Modifications		Undervoltage Trip				√	√	√	√	√	√	√	√
		Shunt Trip				√	√	√	√	√	√	√	√
		Auxiliary Switch				√	√	√	√	√	√	√	√
		Alarm Switch				√	√	√	√	√	√	√	√
		Mechanical Interlock				√	√	√	√	√	√	√	√
		Rear Connections Studs				—	—	√	√	√	√	√	√
		Electric Motor Operator				√	√	√	√	√	√	√	√
		Plug-In Mounting Assembly				—	—	√	√	√	√	√	√
		Fungus Proofing (ref. page 5-160)				√	√	√	√	√	√	√	√
		Mounting Block (required)				√	√	—	—	—	—	—	—
Individual Enclosures		Type 1 — Indoor Surface				—	—	√	√	√	√	√	√
		Type 1 — Indoor, Flush				—	—	—	—	—	—	—	—
		Type 3R — Outdoor-Rainproof				—	—	√	√	—	√	√	—
		Type 12 — Lint, Fine Dust, Oils, Coolants				—	—	√	√	√	—	—	—

For inches / millimeters conversion, see Technical section.

① Requires Connect-all mounting assembly. Dimensions shown are for circuit breaker only.

Electronic Trip Breakers

						Solid State Trip Circuit Breakers							
						SMD6	SHMD6	SCMD6	SND6	SHND6	SCND6	SPD6	SHPD6
Page						**5-120**	**5-120**	**5-120**	**5-124**	**5-124**	**5-124**	**5-127**	**5-127**
Ratings	**AC**	Poles				3	3	3	3	3	3	3	3
		Amperes, Continuous				600-800	600-800	600-800	800-1200	800-1200	800-1200	1200-600	1200-1600
		Volts 50/60HZ			3-Pole	600	600	600	600	600	600	600	600
		Interrupt Rating Symmetrical RMS Amperes	CSA/UL		240V	65,000	100,000	200,000	65,000	100,000	200,000	65,000	100,000
					480V	50,000	65,000	100,000	50,000	65,000	100,000	50,000	65,000
					600V	25,000	50,000	65,000	25,000	50,000	65,000	25,000	50,000
			IEC60947-2 50/60HZ	380/415V	Icu	—	—	—	—	—	—	—	—
					Ics	—	—	—	—	—	—	—	—
				690V	Icu	—	—	—	—	—	—	—	—
					Ics	—	—	—	—	—	—	—	—
Dimensions in inches	Height					10.00	16.00	16.00	16.00	16.00	16.00	16.00	16.00
	Width					9.00	9.00	9.00	9.00	9.00	9.00	9.00	9.00
	Depth					6.19	6.19	6.19	6.19	6.19	6.19	6.19	6.19
Overcurrent Devices	Solid State Trip					√	√	√	√	√	√	√	√
Accessories & Modifications	Undervoltage Trip					√	√	√	√	√	√	√	√
	Shunt Trip					√	√	√	√	√	√	√	√
	Auxiliary Switch					√	√	√	√	√	√	√	√
	Alarm Switch					√	√	√	√	√	√	√	√
	Mechanical Interlock					√	√	√	√	√	√	√	√
	Rear Connection Studs					√	√	√	√	√	√	—	—
	Electric Motor Operator					√	√	√	√	√	√	√	√
	Plug-In Mounting Assembly					√	√	√	√	√	√	—	—
	Fungus Proofing (ref. page 5-160)					√	√	√	√	√	√	√	√
Individual Enclosures	Type 1 — Indoor Surface					√	√	√	√	√	√	—	—
	Type 1 — Indoor, Flush					—	—	—	—	—	—	—	—
	Type 3R — Outdoor-Rainproof					√	√	√	√	√	√	—	—
	Type 12 — Lint, Fine Dust, Oils, Coolants					√	√	√	√	√	—	—	

For inches / millimeters conversion, see Technical section.

① Requires connect-all mounting block assembly. Dimensions shown are for circuit breaker.

② Breaker has rating plugs which can be changed within each frame rating.

Molded Case Circuit Breakers

Reference Guide

Selection/Application

Page				5-166			5-170			5-174		
Breaker Frame Family				**DG**			**FG**			**JG**		
	Continuous Amps			30–150A			40–250A			70–400A		
	Poles			2, 3			2, 3			2, 3		
	Max. Volts AC			600Y/347V			600Y/347V			600V		
Breaker Type				**NDGA**	**HDGA**	**LDGA**	**NFGA**	**HFGA**	**LFGA**	**NJGA**	**HJGA**	**LJGA**
Ratings	Interrupting Class			N	H	L	N	H	L	N	H	L
	Interrupting Rating RMS Symmetrical Amperes AC 50/60Hz	CSA/UL	240Vac	65	100	200	65	100	200	65	100	200
			480Vac	35	65	100	35	65	100	35	65	100
			600Vac	18	18	18	18	18	18	25	25	25
		I_{cu}/I_{cs}	220/240Vac	65/65	100/75	200/150	65/65	100/75	200/150	65/65	100/75	200/150
			380/415Vac	40/40	70/70	100/75	40/40	70/70	100/75	45/45	70/70	100/75
			690Vac	12/6	12/6	12/6	12/6	12/6	12/6	12/6	15/8	15/8
	DC Interrupting Ratings (CSA/UL)		250Vdc (2-Pole)	30	30	30	30	30	30	30	30	30
			500Vdc (3-Pole)	18	18	18	18	18	30	25	35	35
Dimensions in Inches	1-Pole			—						—		
	2-Pole			6.9H x 4.1W x 3.4D						11H x 5.5W x 4.2D		
	3-Pole			6.9H x 4.1W x 3.4D						11H x 5.5W x 4.2D		
	4-Pole			—						—		
Trip Unit Information	Thermal-Magnetic				◆			◆			◆	
	Electronic				◆			◆			◆	
	Electronic with LCD				◆			◆			◆	
	Interchangeable Trip Unit				—			—			◆	
	Reverse Feed (w/Non-Interchangeable Trip)				◆			◆			◆	
	Communications Capability				◆			◆			◆	
Specific Application Breakers	Molded Case Switch				◆			◆			◆	
	Motor Circuit Protector				◆			◆			◆	
	100% Rated				◆						◆	
	50°C Calibrated											
Accessories & Modifications	Auxiliary Switch				◆			◆			◆	
	Alarm Switch				◆			◆			◆	
	Shunt Trip				◆			◆			◆	
	Undervoltage Release				◆			◆			◆	
	Mechanical Interlocks				◆			◆			◆	
	Electric Motor or Stored Energy Operator				◆			◆			◆	
	Rear Connecting Studs				◆			◆			◆	
	Plug-In Mounting Assy. w/Trip Interlock				◆			◆			◆	
	Draw-Out Assembly				◆			◆			◆	
	Handle Mechanism Options				◆			◆			◆	
	Terminal Shields				◆			◆			◆	
	Distribution Lugs				◆			◆			◆	
	Ground Sensor (Neutral Transformer)				◆			◆			◆	

① 500Vdc nominal, for ungrounded DC UPS systems.
② DC Interrupting Ratings are not applicable to electronic circuit breakers.
③ Communications available via a COMPRO or COMMOD modules using Profibus or Modbus protocols.
④ Consult Siemens for availability.
⑥ Special version, see page 5-215 – 5-216.
GG are not VL family breakers and do not share common VL accessories.
⑦ 304 and 316 Stainless Steel

Molded Case Circuit Breakers

Reference Guide

Selection/Application

Page				5-178			5-182			5-186			5-190		
Breaker Frame Family				**LG**			**MG**			**NG**			**PG**		
	Continuous Amps			150–600A			200–800A			300–1200A			400–1600A		
	Poles			2, 3			2, 3			2, 3			3		
	Max. Volts AC			600V			600V			600V			600V		
Breaker Type				**NLGB**	**HLGB**	**LLGB**	**NMG**	**HMG**	**LMG**	**NNG**	**HNG**	**LNG**	**NPG**	**HPG**	**LPG**
Ratings	Interrupting Class			N	H	L	N	H	L	N	H	L	N	H	L
	Interrupting Rating RMS Symmetrical Amperes AC 50/60Hz	CSA/UL	240Vac	65	100	200	65	100	200	65	100	200	65	100	200
			480Vac	35	65	100	35	65	100	35	65	100	35	65	100
			600Vac	18⑥	18	18	25	35	65	25	35	65	25	35	65
		I_{cu}/I_{cs}	220/240Vac	65/65	100/75	200/150	65/35	100/50	200/150	65/65	100/75	200/100	65/35	100/50	200/100
			380/415Vac	45/45	70/70	100/75	50/50	70/70	100/75	50/25	70/35	100/50	50/25	70/35	100/50
			690Vac	12/6	15/8	15/8	20/10	30/15	35/17	20/10	30/15	35/17	20/10	30/15	35/15
	DC Interrupting Ratings (CSA/UL)③		250Vdc (2-Pole)	30	30	30	22	25	42	22	25	42	22	25	42
			500Vdc (3-Pole)②	25	35	35	35	50	65	35	50	65	35	50	65
Dimensions in Inches	2-Pole			11H x 5.5W x 4.2D			16H x 7.5W x 4.7D			16H x 9W x 6.2D			—		
	3-Pole			11H x 5.5W x 4.2D			16H x 7.5W x 4.7D			16H x 9W x 6.2D					
Trip Unit Information	Thermal-Magnetic			◆			◆			◆			◆		
	Electronic			◆			◆			◆			◆		
	Electronic with LCD			◆			◆			◆			◆		
	Interchangeable Trip Unit			◆			◆			◆			◆		
	Reverse Feed (w/Non-Interchangeable Trip)			◆			◆			◆			◆		
	Communications Capability①			◆			◆			◆			◆		
Specific Application Breakers	Molded Case Switch			◆			◆			◆			◆		
	Motor Circuit Protector			◆			◆			◆					
	100% Rated④			◆			◆			◆			◆		
Accessories and Modifications	Auxiliary Switch			◆			◆			◆			◆		
	Alarm Switch			◆			◆			◆			◆		
	Shunt Trip			◆			◆			◆			◆		
	Undervoltage Release			◆			◆			◆			◆		
	Mechanical Interlocks			◆			◆			◆			◆		
	Electric Motor or Stored Energy Operator			◆			◆			◆			◆		
	Rear Connecting Studs			◆			◆			◆			◆		
	Plug-In Mounting Assy. w/Trip Interlock			◆											
	Draw-Out Assembly			◆			◆								
	Handle Mechanism Options			◆			◆			◆			◆		
	Terminal Shields			◆			◆			◆			◆		
	Distribution Lugs														
	Ground Sensor (Neutral Transformer)			◆			◆			◆			◆		

① Communications available via COMPRO or COMMOD modules using Profibus or Modbus protocol.
② 500Vdc nominal, for ungrounded DC UPS systems.
③ DC Interrupting Ratings are not applicable to electronic circuit breakers.
④ LG frame maximum 500A.
⑤ Special version, see page 5-215 – 5-216.
⑥ Special 600Vac 25kA version available, see page 5-215 – 5-216.

Arc-Fault Circuit Interrupters (AFCI)

AFCI's detect arcing faults (an unintentional arcing condition in a circuit) that standard circuit breakers are unable to detect. The device is intended to mitigate the effects of arcing faults by functioning to de-energize the circuit when an arc-fault is detected.

Combination Type AFCI

Detects all three possible types of arc fault: line-to-ground, line-to-neutral, and series.

Breaker Type	Ampere Rating	10,000 A IR Catalogue Number	22,000 A IR Catalogue Number	65,000 A IR Catalogue Number
BAF2/BAFH2/HBAF2 1-Pole 120V AC	15	BA115AFC①	BA115AFCH	BA115AFCHH
	20	BA120AFC①	BA120AFCH	BA120AFCHH
BAF/BAFH 2-Pole 120/240V AC	15	B215AFC①	B215AFCH	—
	20	B220AFC①	B220AFCH	—

Branch-Feeder AFCI

Detects line-to-ground and line-to neutral arcs.

BAF2/BAFH2/HBAF2 1-Pole 120V AC	15	**BA115AF①**	**BA115AFH■①**	**BA115AFHH■**
	20	**BA120AF①**	**BA120AFH■①**	**BA120AFHH■**

NEW Dual Function AFCI/GFCI

The Dual Function Circuit Breaker combines Combination Type AFCI and GFCI, protecting against both Arc Faults and (5mA) Ground Faults. The device includes the Self Test feature, making it the first in class in electrical safety for homeowners.

BFGA2/BFGAH2/ HBFGA2 1-Pole 120V AC	15	**B115DF**	**B115DFH■**	**B115DFHH■**
	20	**B120DF**	**B120DFH■**	**B120DFHH■**

Ground-Fault Circuit Interrupters (GFCI)

Provides Class A (5mA) ground fault protection. Intended for personnel protection. De-energizes the circuit for all ungrounded conductors of the circuit.

Breaker Type	Amp Rating	10k A IR Cat. No.	22k A IR Cat. No.	65k A IR Cat. No.
BLF/ BLHF 1-Pole 120V AC Bolt-On	15	BF115A①	BF115AH①	BF115AHH
	20	BF120A①	BF120AH①	BF120AHH
	25	BF125A	BF125AH	—
	30	BF130A	BF130AH	BF130AHH
BLF/ BLHF 2-Pole 120/240V AC Bolt-On	15	**BF215A**	**BF215AH**	—
	20	**BF220A**	**BF220AH**	—
	30	**BF230A**	**BF230AH**	—
	40	**BF240A**	**BF240AH**	—
	50	**BF250A**	**BF250AH**	—
	60	**BF260A**	**BF260AH**	—

Ground Fault Equipment Protection (30mA)

Provides protection of equipment from damaging line-to-ground faults currents. De-energizes the circuit for all ungrounded conductors of the circuit.

Breaker Type	Amp Rating	10k A IR Cat. No.	22k A IR Cat. No.
BLE/ BLEH 1-Pole, 120V AC Bolt-On	15	**BE115①**	**BE115H■①**
	20	**BE120①**	**BE120H■①**
	30	**BE130**	**BE130H■**
BLE/ BLEH 2-Pole 120/240V AC Bolt-On	15	**BE215**	**BE215H■**
	20	**BE220**	**BE220H■**
	30	**BE230**	**BE230H■**
	40	**BE240**	**BE240H■**
	50	**BE250**	**BE250H■**
	60	**BE260**	**BE260H■**

QAF2/QPF/QE Accessories

Description	Catalogue Number
Padlocking Device 1-Pole	**ECPLD1**
Padlocking Device 2-Pole	**ECPLD2**
Handle Block	**ECBX231M**

■ Built to order. Allow 8 -10 weeks for delivery.
① CSA / UL Listed as SWD (Switching Duty) Rated, suitable for 120V AC Fluorescent Lighting.


1-Pole Combination Type AFCI


2-Pole Combination Type AFCI


1-Pole Branch Feeder AFCI


1-Pole Dual Function AFCI/GFC


1-Pole Equipment Protection


2-Pole Equipment Protection

Wiring Diagrams

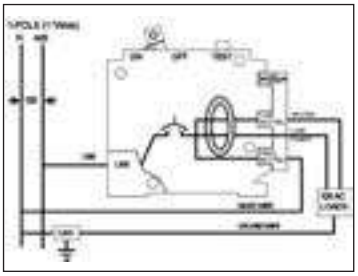

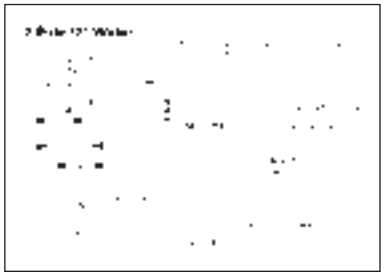

Molded Case Circuit Breakers

Panelboard Mounting with INSTA-WIRE

Selection

1-Pole Bolt-On (120V AC)⑤

Continuous Current Rating @ 40° C	Type BL①⑪ 10,000A IR Catalogue Number	Type BLH①⑪ 22,000A IR Catalogue Number	Type HBL①⑪ 65,000A IR Catalogue Number
15	B115⑫	B115H④	B115HH④
20	B12⑫	B120H④	B120HH④
25	B125	B125H	B125HH■
30	B130	B130H	B130HH
35	B135	B135H■	B135HH■
40	B140	B140H	B140HH
45	B145■	B145H■	B145HH■
50	B150	B150H	B150HH■
60	B160	B160H■	B160HH■
70	B170	B170H■	B170HH■

2-Pole Bolt-On (Common-Trip 120/240V AC)⑥

15	B215	B215H	B215HH
20	B220	B220H	B220HH
25	B225	B225H■	B225HH■
30	B230	B230H	B230HH
35	B235	B235H■	B235HH■
40	B240	B240H	B240HH
45	B245	B245H■	B245HH■
50	B250	B250H	B250HH
60	B260	B260H	B260HH
70	B270	B270H■	B270HH■
80	B280	B280H■	B280HH■
90	B290	B290H■	B290HH■
100	B2100	B2100H	B2100HH
110	B2110■	B2110H■	B2110HH■
125	B2125	B2125H	B2125HH■

2-Pole Bolt-On (Common-Trip 240V AC)③⑥⑩

15	B215R	—	—
20	B220R	—	—
30	B230R	—	—
40	B240R■	—	—
50	B250R	—	—

3-Pole Bolt-On (Common-Trip 240V AC)⑦

15	B315	B315H	B315HH
20	B320	B320H	B320HH
25	B325	B325H	B325HH■
30	B330	B330H	B330HH
35	B335	B335H■	B335HH■
40	B340	B340H	B340HH
45	B345	B345H■	B345HH■
50	B350	B350H	B350HH
60	B360	B360H	B360HH
70	B370	B370H	B370HH
80	B380	B380H■	B380HH
90	B390	B390H■	B390HH
100	B3100	B3100H	B3100HH

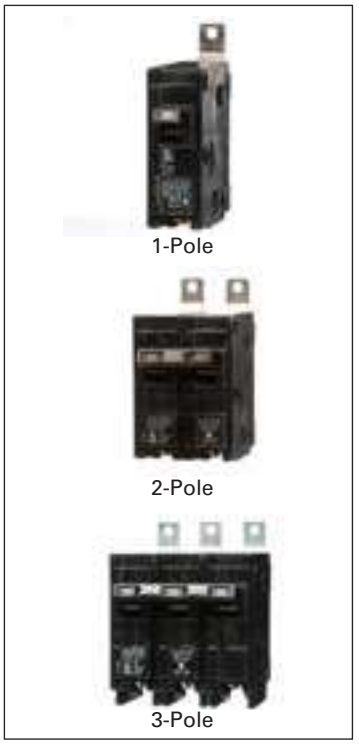

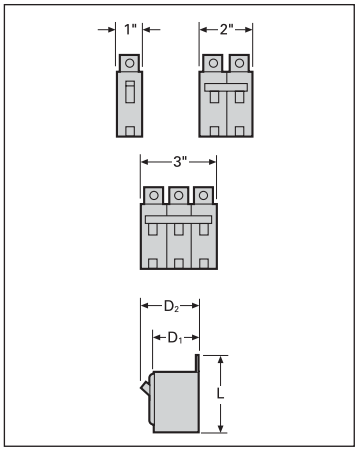

Breaker Type	Amperes	Dimensions L	D1	D2
BL, BLH	15–50	3 9/16	2 3/8	3
BL, BLH	55–125	3 3/4	2 3/8	3
HBL	15–125	3 3/4	2 3/8	3

BL/BLH/HBL Internal Accessories

Description	Catalogue Number	Field/Factory Installed
120VAC Shunt Trip	add suffix...00S01■	Factory
24VAC Shunt Trip	add suffix...00S07■	Factory
120V Auxiliary Switch	add suffix...01■②	Factory

For external accessories, please refer to page 5-154 - 5-159

■ Built to order. Allow 2-3 weeks for delivery

① CSA Certified / UL Listed for use with 60/75° wire through 40 amps, CSA Certified / UL Listed for use with 75° wire only for 50 amps and above, HACR rated. 120V AC Fluorescent Lighting.
②1A and 1B contacts.
③CSA Certified / UL Listed for use on 3-phase grounded "B" systems —10,000 for this application.
④CSA Certified / UL Listed for frequent switching applications (SWD).
⑤Shipped 12 per sleeve.
⑥Shipped 6 per sleeve.
⑦Shipped 4 per sleeve.
⑧CSA Certified / UL Listed 5KA IR.
⑨10 Amp breaker does not have INSTA-WIRE.
⑩For 3 Phase Applications.
⑪CSA Certified / UL Listed for reverse feed."
⑪ CSA Certified for frequent switching applications (SWD)

Molded Case Circuit Breakers

BQD 100A Frame Panelboard Mounting Circuit Breakers

Selection/Dimensions

BQD④

Continuous Current Rating @ 40°C	1-Pole 277V AC–125V DC Catalogue Number	2-Pole③ 480Y/277V AC– 125/250V DC Catalogue Number	3-Pole③ 480Y/277V AC Catalogue Number
15	BQD115①②	BQD215⑤	BQD315⑤
20	BQD120①②	BQD220⑤	BQD320⑤
25	BQD125②	BQD225⑤	BQD325⑤
30	BQD130②	BQD230⑤	BQD330⑤
35	BQD135②	BQD235⑤	BQD335⑤
40	BQD140②	BQD240⑤	BQD340⑤
45	BQD145②■	BQD245⑤	BQD345⑤
50	BQD150②	BQD250⑤	BQD350⑤
60	BQD160	BQD260	BQD360
70	BQD170■	BQD270	BQD370
80	BQD180■	BQD280	BQD380
90	BQD190■	BQD290	BQD390
100	BQD1100■	BQD2100	BQD3100

BQD6 CSA Certified

Continuous Current Rating @ 40°C	1-Pole 347V AC Catalogue Number	2-Pole③ 600/347V AC Catalogue Number	3-Pole③ 600/347V AC Catalogue Number
15	BQD6115①	BQD6215	BQD6315
20	BQD6120①	BQD6220	BQD6320
25	BQD6125■	BQD6225■	BQD6325■
30	BQD6130	BQD6230	BQD6330
35	BQD6135■	BQD6235■	BQD6335■
40	BQD6140■	BQD6240■	BQD6340
45	BQD6145■	BQD6245■	BQD6345■
50	BQD6150■	BQD6250■	BQD6350
60	BQD6160■	BQD6260■	BQD6360
70	BQD6170■	BQD6270■	BQD6370

Interrupting Ratings

Breaker Type	Number of Poles	RMS Symmetrical Amperes (KA)							
		Volts AC						Volts DC	
		120	240	277	480/277	347	600/277	125	125/250
BQD (CSA/UL)	1	65	—	14	—	—	—	14	—
	2	—	65	—	14	—	—	—	14
	3	—	65	—	14	—	—	—	—
BQD6 (CSA)	1	65	—	—	—	10	—	14	—
	2	—	65	—	—	—	10	—	14
	3	—	65	—	—	—	10	—	—



BQD, BQD6

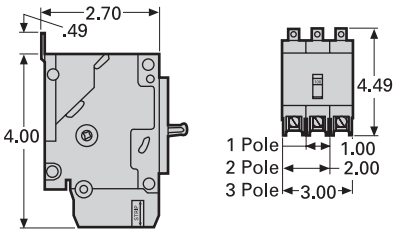

BQD, BQD6

Shipping Weights

Number of Poles	Number per Carton	Shipping Weight (lbs.) (ea.)
1	1/12/48	0.6
2	1/6/24	1.2
3	1/4/16	2.0

Lugs For 60/75°C Wire

BQD – Load End Only	
15–40	#14–#6 AWG Cu #12–#6 AWG Al
45–100	#9–#1 AWG Cu #6–#1/0 AWG Al

For inches / millimeters conversion, see Technical section.

■ Built to order. Allow 2–3 weeks for delivery.

① CSA Certified / UL Rated SWD rated for switching fluorescent lighting.
② HID rated at 277V AC.
③ Not suitable for 3-phase delta 480V applications.
④ HACR rated.

For external accessories, please refer to pages 5-154 - 5-159
For internal accessories, please refer to page 5-151 - 5-153

Molded Case Circuit Breakers

GB2 Frame

Type NGB2⑤ (Panelboard Mount)

Continuous Current Rating @ 40°C	1-Pole	2-Pole	3-Pole
	Catalogue Number	Catalogue Number	Catalogue Number
15	NGB1K015B①②	NGB2K015B②	NGB3K015B②
20	NGB1K020B①②	NGB2K020B②	NGB3K020B②
25	NGB1K025B②	NGB2K025B②	NGB3K025B②
30	NGB1K030B②	NGB2K030B②	NGB3K030B②
35	NGB1K035B②	NGB2K035B②	NGB3K035B②
40	NGB1K040B②	NGB2K040B②	NGB3K040B②
45	NGB1K045B②	NGB2K045B②	NGB3K045B②
50	NGB1K050B②	NGB2K050B②	NGB3K050B②
60	NGB1K060B	NGB2K060B	NGB3K060B
70	NGB1K070B	NGB2K070B	NGB3K070B
80	NGB1K080B	NGB2K080B	NGB3K080B
90	NGB1K090B	NGB2K090B	NGB3K090B
100	NGB1K100B	NGB2K100B	NGB3K100B
110	NGB1K110B	NGB2K110B	NGB3K110B
125	NGB1K125B	NGB2K125B	NGB3K125B

Load lugs are included as standard. HACR rated.



NGB2 series

Type HGB2⑤ (Panelboard Mount)

Continuous Current Rating @ 40°C	1-Pole	2-Pole	3-Pole
	Catalogue Number	Catalogue Number	Catalogue Number
15	HGB1K015B①②	HGB2K015B②	HGB3K015B②
20	HGB1K020B①②	HGB2K020B②	HGB3K020B②
25	HGB1K025B②	HGB2K025B②	HGB3K025B②
30	HGB1K030B②	HGB2K030B②	HGB3K030B②
35	HGB1K035B②	HGB2K035B②	HGB3K035B②
40	HGB1K040B②	HGB2K040B②	HGB3K040B②
45	HGB1K045B②	HGB2K045B②	HGB3K045B②
50	HGB1K050B②	HGB2K050B②	HGB3K050B②
60	HGB1K060B	HGB2K060B	HGB3K060B
70	HGB1K070B	HGB2K070B	HGB3K070B
80	HGB1K080B	HGB2K080B	HGB3K080B
90	HGB1K090B	HGB2K090B	HGB3K090B
100	HGB1K100B	HGB2K100B	HGB3K100B
110	HGB1K110B	HGB2K110B	HGB3K110B
125	HGB1K125B	HGB2K125B	HGB3K125B

Type LGB2⑤ (Panelboard Mount)

Continuous Current Rating @ 40°C	1-Pole	2-Pole	3-Pole
	Catalogue Number	Catalogue Number	Catalogue Number
15	LGB1K015B①②	LGB2K015B②	LGB3K015B②
20	LGB1K020B①②	LGB2K020B②	LGB3K020B②
25	LGB1K025B②	LGB2K025B②	LGB3K025B②
30	LGB1K030B②	LGB2K030B②	LGB3K030B②
35	LGB1K035B②	LGB2K035B②	LGB3K035B②
40	LGB1K040B②	LGB2K040B②	LGB3K040B②
45	LGB1K045B②	LGB2K045B②	LGB3K045B②
50	LGB1K050B②	LGB2K050B②	LGB3K050B②
60	LGB1K060B	LGB2K060B	LGB3K060B
70	LGB1K070B	LGB2K070B	LGB3K070B
80	LGB1K080B	LGB2K080B	LGB3K080B
90	LGB1K090B	LGB2K090B	LGB3K090B
100	LGB1K100B	LGB2K100B	LGB3K100B
110	LGB1K110B	LGB2K110B	LGB3K110B
125	LGB1K125B	LGB2K125B	LGB3K125B

Shipping Weights

Number of Poles	Number per Carton	Shipping Weight lbs. (kg)
1	1	.75 (.34)
2	1	1.3 (.59)
3	1	2.0 (.98)

Lugs for 60/75°C Wire

Type	Ampere Rating	Wire Size	Catalogue Number
NGB2 HGB2 LGB2	15-30A	#14-#6 AWG Cu	TC1Q1 (qty. 1) 3TC1Q1 (qty. 3)
		#12-#6 AWG Al	
	35-125A	#8-1/0 AWG Cu	3TC1GG20
		#8-2/0 AWG Al	

Interrupting Ratings (max. RMS symmetrical amperes kA)

Type	Poles	CSA 22.2 No. 5 / UL 489							
		Volts AC						Volts DC	
		120	240	277	480	347	600Y/347	125	125/250
NGB2	1	100	—	25	—	14	—	14	—
	2, 3	—	100	—	25	—	14	—	14④
HGB2	1	100	—	35	—	22	—	14	—
	2, 3	—	100	—	35	—	22	—	14④
LGB2	1	100	—	65	—	25	—	14	—
	2, 3	—	100	—	65	—	25	—	14④

① SWD rated
② HID rated
③ 2-pole only
④ 2-pole only or two outer poles of 3-pole breaker
⑤ Suitable for reverse feed applications

For external accessories, please refer to pages 5-154 - 5-159
For internal accessories, please refer to page 5-151 - 5-153

GB Frame

Type NGB Frame⑤ (Panelboard Mount)

Continuous Current Rating @ 40°C	1-Pole Catalogue Number	2-Pole Catalogue Number	3-Pole Catalogue Number
15	NGB1B015B①②	NGB2B015B②	NGB3B015B②
20	NGB1B020B①②	NGB2B020B②	NGB3B020B②
25	NGB1B025B②	NGB2B025B②	NGB3B025B②
30	NGB1B030B②	NGB2B030B②	NGB3B030B②
35	NGB1B035B②	NGB2B035B②	NGB3B035B②
40	NGB1B040B②	NGB2B040B②	NGB3B040B②
45	NGB1B045B②	NGB2B045B②	NGB3B045B②
50	NGB1B050B②	NGB2B050B②	NGB3B050B②
60	NGB1B060B	NGB2B060B	NGB3B060B
70	NGB1B070B	NGB2B070B	NGB3B070B
80	NGB1B080B	NGB2B080B	NGB3B080B
90	NGB1B090B	NGB2B090B	NGB3B090B
100	NGB1B100B	NGB2B100B	NGB3B100B
110	NGB1B110B	NGB2B110B	NGB3B110B
125	NGB1B125B	NGB2B125B	NGB3B125B

Load lugs are included as standard. HACR rated.



NGB1B030B

Shipping Weights

Number of Poles	Number per Carton	Shipping Weight (lbs.) (ea.)
1	1	0.9 (0.4)
2	1	1.9 (0.9)
3	1	2.9 (1.2)

Lugs For 60/75°C Wire

NGB		
Ampere Rating	Wire Size	Catalogue Number
15–30A	#14–#6 AWG Cu #12–#6 AWG Al	Integral with breaker
35–125A	#8–1/0 AWG Cu #8–2/0 AWG Al	Integral with breaker

Interrupting Ratings (max. RMS symmetrical amperes kA)

Breaker Type	Number of Poles	CSA 22.2 No. 5 / UL 489							
		Volts AC						Volts DC	
		120	240	277	480Y/277	347	600Y/347	125	125/250
NGB	1	100	—	25	—	14	—	14	—
	2,3	—	100	—	25	—	14	—	14④

① SWD rated.
② HID rated.
③ 2-pole only.
④ 2-pole only or two outer poles of 3-pole breaker
⑤ Suitable for reverse feed applications

For external accessories, please refer to pages 5-154 - 5-159
For internal accessories, please refer to page 5-151 - 5-153

Shunt Trip

Control Voltage		BQD, BQD6, CQD, CQD6, NGG, HGG, LGG, NGB, NGB2, HGB, HGB2, LGB2 and LGB2
V AC	V DC	
120	—	**CQDST120**
240	—	**CQDST240**
277	—	**CQDST277**
480	—	**CQDST480**
600	—	**CQDST600**
—	12	**CQDST12**
—	24	**CQDST24**
—	48	**CQDST48**
—	125	**CQDST125**



CQDST120AAS

Auxiliary Switch

Maximum Voltage		Number of Contacts	BQD, BQD6, CQD, CQD6,NGG, HGG, LGG, NGB, NGB2, HGB, HGB2, LGB2 and LGB2
AC	DC		
240	125	1A–1B	**CQDA1**
240	125	2A–2B	**CQDA2**

Alarm Switch

Maximum Voltage		BQD, BQD6, CQD, CQD6, NGG, HGG, LGG, NGB, NGB2, HGB, HGB2, LGB and LGB2
AC	DC	
240	125	**CQDBA**



CQD with Accessory Installed

Shunt Trip and Auxiliary Switch Combinations

Shunt Trip Voltage		BQD, BQD6, CQD, CQD6, NGG, HGG, LGG, NGB, NGB2, HGB, HGB2, LGB and LGB2
AC	DC	
24	—	CQDST24AAS
120	—	CQDST120AAS
240	—	CQDST240AAS
277	—	CQDST277AAS
480	—	CQDST480AAS
600	—	CQDST600AAS
—	12	CQDST12DAS
—	24	CQDST24DAS
—	48	CQDST48DAS
—	125	CQDST125DAS

Alarm and Auxiliary Switch Combinations

For Breaker	Catalogue Number
BQD, BQD6, CQD, NGG, HGG, LGG, NGB, HGB and LGB	**CQDA1BA**

①Adds 1-pole space for accessory.

Molded Case Circuit Breakers

3VA41 125A Thermal-magnetic Trip Circuit Breakers

Selection

3VA41 125A Frame, 3-Pole Thermal-Magnetic Trip Unit

Cont. Ampere Rating	S-Interrupting Class (SEAB)	M-Interrupting Class (MEAB)	H-Interrupting Class (HEAB)
	Catalogue Number	Catalogue Number	Catalogue Number
	TM210 FTFM		
15	3VA4195-4ED34-0AA0	3VA4195-5ED34-0AA0	3VA4195-6ED34-0AA0
20	3VA4120-4ED34-0AA0	3VA4120-5ED34-0AA0	3VA4120-6ED34-0AA0
25	3VA4125-4ED34-0AA0	3VA4125-5ED34-0AA0	3VA4125-6ED34-0AA0
30	3VA4130-4ED34-0AA0	3VA4130-5ED34-0AA0	3VA4130-6ED34-0AA0
35	3VA4135-4ED34-0AA0	3VA4135-5ED34-0AA0	3VA4135-6ED34-0AA0
40	3VA4140-4ED34-0AA0	3VA4140-5ED34-0AA0	3VA4140-6ED34-0AA0
45	3VA4145-4ED34-0AA0	3VA4145-5ED34-0AA0	3VA4145-6ED34-0AA0
50	3VA4150-4ED34-0AA0	3VA4150-5ED34-0AA0	3VA4150-6ED34-0AA0
60	3VA4160-4ED34-0AA0	3VA4160-5ED34-0AA0	3VA4160-6ED34-0AA0
70	3VA4170-4ED34-0AA0	3VA4170-5ED34-0AA0	3VA4170-6ED34-0AA0
80	3VA4180-4ED34-0AA0	3VA4180-5ED34-0AA0	3VA4180-6ED34-0AA0
90	3VA4190-4ED34-0AA0	3VA4190-5ED34-0AA0	3VA4190-6ED34-0AA0
100	3VA4110-4ED34-0AA0	3VA4110-5ED34-0AA0	3VA4110-6ED34-0AA0
110	3VA4111-4ED34-0AA0	3VA4111-5ED34-0AA0	3VA4111-6ED34-0AA0
125	3VA4112-4ED34-0AA0	3VA4112-5ED34-0AA0	3VA4112-6ED34-0AA0



3VA41 125A 3-Pole

Trip Settings for 3VA41

TM210 - FTFM		
I_n (A)	I_r (A)	I_i (A)
15	15	300
20	20	300
25	25	300
30	30	300
35	35	350
40	40	400
45	45	450
50	50	500
60	60	600
70	70	700
80	80	800
90	90	900
100	100	1000
110	110	1100
125	125	1250

Interrupting Ratings for 3VA41

Inter-rupting Class	Breaker Type	Poles	RMS Symmetrical Amperes (kA) Volts AC (50/60 Hz) 120	240	277	347	480Y/277V	480	600Y/347V
S	SEAB	1	65		25	14			
		2, 3		65			25	25	14
M	MEAB	1	85		35	18			
		2, 3		85			35	35	18
H	HEAB	1	150		65	25			
		2, 3		150			65	65	25

Dimensions

Breaker	Poles	W in. (mm)	H in. (mm)	D in. (mm)	lbs.	kg
3VA41	1	1 (25.4)	5.1 (129.4)	3.6 (92.2)	0.62	0.28
3VA41	1 in 2	2 (50.8)	5.1 (129.4)	3.6 (92.2)	0.94	0.43
3VA41	2	2 (50.8)	5.1 (129.4)	3.6 (92.2)	1.13	0.51
3VA41	3	3 (76.2)	5.1 (129.4)	3.6 (92.2)	1.64	0.74

Shipping Weight

Connectors for 75C Wire for 3VA41

Type	Min. cable size	Max. cable size	Catalogue No. (kit of 3 lugs)
Steel wrap around (Cu cable only), 1 cable lugs	AWG 14	3/0	3VA9133-0JA11
Aluminum body lug small (Cu/Al cable), 1 cable lug	AWG 14	AWG 10	3VA9133-0JB10
Aluminum body lug (Cu/Al cable), 1 cable lugs	AWG 14	3/0	3VA9133-0JB11
Aluminum body lug small with control wire tap (Cu/Al cable), 1 cable lug	AWG 14	AWG 10	3VA9133-0JG10
Aluminum body lug with control wire tap (Cu/Al cable), 1 cable lugs	AWG 14	3/0	3VA9133-0JG11
Copper body lug small (Cu cable only), 1 cable lugs	AWG 14	AWG 10	3VA9133-0JD10
Copper body lug (Cu cable only), 1 cable lugs	AWG 14	2/0	3VA9133-0JD11
Copper body lug small with control wire tap (Cu cable only), 1 cable lugs	AWG 14	AWG 10	3VA9133-0JK10
Copper body lug with control wire tap (Cu cable only), 1 cable lugs	AWG 14	2/0	3VA9133-0JK11

3VA4 Accessories

Description	Catalogue Number
Padlocking Device for 3VA4 breaker	3VA9038-0LB11

Internal accessories configuration		3VA4/3VA5 125 A 1 in 2-pole /2-pole				3VA5 125 A 3 & 4-pole						
Slot No.:		23	22	21	125 A	23	22	21	125 A	11	12	13
Auxiliary switch	**Type**											
Auxiliary switch	AUX_HQ	x	x	x		x	x	x		x	x	x
	AUX_HQ_el	x	x	x		x	x	x		x	x	x
	AUX_HP		x				x				x	
		x				x				x		
Leading changeover switch	LCS_HQ									x		
	LCS_HQ_el									x		
	LCS_HP										x	
Auxiliary switch	**Type**											
Trip alarm switch	TAS_HQ		x	x			x	x		x	x	
	TAS_HQ_el		x	x			x	x		x	x	
	TAS_HP		x				x			x		
Short circuit alarm switch	SAS_HQ											
	SAS_HQ_el											
Auxiliary switch	**Type**											
Shunt trip flexible	STF		x				x					
Shunt trip left	STL		x				x					
	STL_el											
Residual current release	RCR											
Undervoltage release	UVR		x				x					
Universal release	UVI		x				x					
Other												
Cylinder lock (type Ronis)											x	

3VA41 125A Frame, 1-Pole Thermal-Magnetic Trip Unit

Cont. Ampere Rating	S-Interrupting Class (SEAB)	M-Interrupting Class (MEAB)	H-Interrupting Class (HEAB)
	Catalogue Number	Catalogue Number	Catalogue Number
	TM210 FTFM		
15	3VA4195-4ED14-0AA0	3VA4195-5ED14-0AA0	3VA4195-6ED14-0AA0
20	3VA4120-4ED14-0AA0	3VA4120-5ED14-0AA0	3VA4120-6ED14-0AA0
25	3VA4125-4ED14-0AA0	3VA4125-5ED14-0AA0	3VA4125-6ED14-0AA0
30	3VA4130-4ED14-0AA0	3VA4130-5ED14-0AA0	3VA4130-6ED14-0AA0
35	3VA4135-4ED14-0AA0	3VA4135-5ED14-0AA0	3VA4135-6ED14-0AA0
40	3VA4140-4ED14-0AA0	3VA4140-5ED14-0AA0	3VA4140-6ED14-0AA0
45	3VA4145-4ED14-0AA0	3VA4145-5ED14-0AA0	3VA4145-6ED14-0AA0
50	3VA4150-4ED14-0AA0	3VA4150-5ED14-0AA0	3VA4150-6ED14-0AA0
60	3VA4160-4ED14-0AA0	3VA4160-5ED14-0AA0	3VA4160-6ED14-0AA0
70	3VA4170-4ED14-0AA0	3VA4170-5ED14-0AA0	3VA4170-6ED14-0AA0
80	3VA4180-4ED14-0AA0	3VA4180-5ED14-0AA0	3VA4180-6ED14-0AA0
90	3VA4190-4ED14-0AA0	3VA4190-5ED14-0AA0	3VA4190-6ED14-0AA0
100	3VA4110-4ED14-0AA0	3VA4110-5ED14-0AA0	3VA4110-6ED14-0AA0
110	3VA4111-4ED14-0AA0	3VA4111-5ED14-0AA0	3VA4111-6ED14-0AA0
125	3VA4112-4ED14-0AA0	3VA4112-5ED14-0AA0	3VA4112-6ED14-0AA0

3VA41 125A Frame, 1 in 2-Pole Thermal-Magnetic Trip Unit

Cont. Ampere Rating	S-Interrupting Class (SEAB)	M-Interrupting Class (MEAB)	H-Interrupting Class (HEAB)
	Catalogue Number	Catalogue Number	Catalogue Number
	TM210 FTFM①		
15	3VA4195-4ED54-0AA0	3VA4195-5ED54-0AA0	3VA4195-6ED54-0AA0
20	3VA4120-4ED54-0AA0	3VA4120-5ED54-0AA0	3VA4120-6ED54-0AA0
25	3VA4125-4ED54-0AA0	3VA4125-5ED54-0AA0	3VA4125-6ED54-0AA0
30	3VA4130-4ED54-0AA0	3VA4130-5ED54-0AA0	3VA4130-6ED54-0AA0
35	3VA4135-4ED54-0AA0	3VA4135-5ED54-0AA0	3VA4135-6ED54-0AA0
40	3VA4140-4ED54-0AA0	3VA4140-5ED54-0AA0	3VA4140-6ED54-0AA0
45	3VA4145-4ED54-0AA0	3VA4145-5ED54-0AA0	3VA4145-6ED54-0AA0
50	3VA4150-4ED54-0AA0	3VA4150-5ED54-0AA0	3VA4150-6ED54-0AA0
60	3VA4160-4ED54-0AA0	3VA4160-5ED54-0AA0	3VA4160-6ED54-0AA0
70	3VA4170-4ED54-0AA0	3VA4170-5ED54-0AA0	3VA4170-6ED54-0AA0
80	3VA4180-4ED54-0AA0	3VA4180-5ED54-0AA0	3VA4180-6ED54-0AA0
90	3VA4190-4ED54-0AA0	3VA4190-5ED54-0AA0	3VA4190-6ED54-0AA0
100	3VA4110-4ED54-0AA0	3VA4110-5ED54-0AA0	3VA4110-6ED54-0AA0
110	3VA4111-4ED54-0AA0	3VA4111-5ED54-0AA0	3VA4111-6ED54-0AA0
125	3VA4112-4ED54-0AA0	3VA4112-5ED54-0AA0	3VA4112-6ED54-0AA0

3VA41 125A Frame, 2-Pole Thermal-Magnetic Trip Unit

Cont. Ampere Rating	S-Interrupting Class (SEAB)	M-Interrupting Class (MEAB)	H-Interrupting Class (HEAB)
	Catalogue Number	Catalogue Number	Catalogue Number
	TM210 FTFM		
15	3VA4195-4ED24-0AA0	3VA4195-5ED24-0AA0	3VA4195-6ED24-0AA0
20	3VA4120-4ED24-0AA0	3VA4120-5ED24-0AA0	3VA4120-6ED24-0AA0
25	3VA4125-4ED24-0AA0	3VA4125-5ED24-0AA0	3VA4125-6ED24-0AA0
30	3VA4130-4ED24-0AA0	3VA4130-5ED24-0AA0	3VA4130-6ED24-0AA0
35	3VA4135-4ED24-0AA0	3VA4135-5ED24-0AA0	3VA4135-6ED24-0AA0
40	3VA4140-4ED24-0AA0	3VA4140-5ED24-0AA0	3VA4140-6ED24-0AA0
45	3VA4145-4ED24-0AA0	3VA4145-5ED24-0AA0	3VA4145-6ED24-0AA0
50	3VA4150-4ED24-0AA0	3VA4150-5ED24-0AA0	3VA4150-6ED24-0AA0
60	3VA4160-4ED24-0AA0	3VA4160-5ED24-0AA0	3VA4160-6ED24-0AA0
70	3VA4170-4ED24-0AA0	3VA4170-5ED24-0AA0	3VA4170-6ED24-0AA0
80	3VA4180-4ED24-0AA0	3VA4180-5ED24-0AA0	3VA4180-6ED24-0AA0
90	3VA4190-4ED24-0AA0	3VA4190-5ED24-0AA0	3VA4190-6ED24-0AA0
100	3VA4110-4ED24-0AA0	3VA4110-5ED24-0AA0	3VA4110-6ED24-0AA0
110	3VA4111-4ED24-0AA0	3VA4111-5ED24-0AA0	3VA4111-6ED24-0AA0
125	3VA4112-4ED24-0AA0	3VA4112-5ED24-0AA0	3VA4112-6ED24-0AA0



3VA41 125A 1-Pole



3VA41 125A 1 in 2-Pole



3VA41 125A 2-Pole

Ordering Information

The catalogue numbers listed here are for complete, non-interchangable trip circuit breakers breakers with load lugs installed.

All 3VA41 thermal-magnetic trip circuit breakers are cULus approved for reverse feed applications.

For NAVAL-rated 1, 2 or 3-P thermal-magnetic trip circuit breakers, change the 13th digit of the catalogue number to the number "1". (For example, a 18KA @ 600/347VAC, 40A, 3-pole, NAVAL rated 3VA41 would be catalogue number 3VA4140-5ED31-**1**AA0)

Circuit Breakers

Lug-In/Lug-Out with INSTA-WIRE

All BQ/BQH/HBQ circuit breakers are supplied with load side lugs. If line side lugs are required, add suffix "L" to catalogue number. Consult Siemens for any additional charge. All standard circuit breakers are calibrated for 40°C maximum ambient application.

Continuous Current Rating @ 40° C	Type BQ① 10,000A IR Catalogue Number	Type BQH 22,000A IR Catalogue Number	Type HBQ 65,000A IR Catalogue Number
1-Pole (120V AC)⑤			
15	BQ1B015④⑩	BQ1B015H④	HB1B015■④
20	BQ1B020④⑩	BQ1B020H④	HB1B020■④
25	BQ1B025	BQ1B025H■	HB1B025■
30	BQ1B030	BQ1B030H	HB1B030■
35	BQ1B035■	BQ1B035H■	HB1B035■
40	BQ1B040	BQ1B040H	HB1B040■
45	BQ1B045■	—	HB1B045■
50	BQ1B050	BQ1B050H	HB1B050■
60	BQ1B060■⑨	BQ1B060H■	HB1B060■
70	BQ1B070■	BQ1B070H■	HB1B070■
2-Pole (Common-Trip 120/240V AC)⑥			
15	BQ2B015	BQ2B015H	HB2B015■
20	BQ2B020	BQ2B020H	HB2B020■
25	BQ2B025	BQ2B025H■	HB2B025■
30	BQ2B030	BQ2B030H	HB2B030■
35	BQ2B035	BQ2B035H■	HB2B035■
40	BQ2B040	BQ2B040H	HB2B040■
45	BQ2B045	—	HB2B045■
50	BQ2B050	BQ2B050H	HB2B050■
60	BQ2B060⑨	BQ2B060H	HB2B060■
70	BQ2B070	BQ2B070H■	HB2B070■
80	BQ2B080	BQ2B080H■	HB2B080
90	BQ2B090	BQ2B090H■	HB2B090■
100	BQ2B100	BQ2B100H	HB2B100
110	BQ2B110	—	HB2B110■
125	BQ2B125	BQ2B125H	HB2B125
2-Pole (Common-Trip 240V AC)③⑥			
15	BQ2H015	—	—
20	BQ2H020	—	—
30	BQ2H030	—	—
40	BQ2H040■	—	—
50	BQ2H050	—	—
60	BQ2H060	—	—
70	BQ2H070■	—	—
80	BQ2H080■	—	—
90	BQ2H090■	—	—
100	BQ2H100■	—	—
3-Pole (Common-Trip 240V AC)⑦			
15	BQ3B015	BQ3B015H	HB3B015■
20	BQ3B020	BQ3B020H	HB3B020■
25	BQ3B025■	BQ3B025H■	HB3B025
30	BQ3B030	BQ3B030H	HB3B030
35	BQ3B035■	BQ3B035H	HB3B035
40	BQ3B040	BQ3B040H	HB3B040
45	BQ3B045■	BQ3B045H	HB3B045
50	BQ3B050	BQ3B050H	HB3B050
60	BQ3B060	BQ3B060H	HB3B060
70	BQ3B070	BQ3B070H	HB3B070■
80	BQ3B080	BQ3B080H■	HB3B080■
90	BQ3B090	BQ3B090H■	HB3B090■
100	BQ3B100	BQ3B100H	HB3B100



1-Pole



2-Pole



3-Pole

Factory Modifications

Description	Catalogue Number
Line Side Lugs	**add suffix...L**
Quick Connect Lug	**add suffix...QX**
400Hz Calibration	**add suffix...Y** ⑧
Marine 50˚ C Ambient Calibration	**add suffix...M**
Fungus Proofing	**add suffix...F**

BQ / BQH / HBQ Internal Accessories

Description	Catalogue Number	Field/Factory Installed
120VAC Shunt Trip	**add suffix...00S01■**	Factory
24VAC Shunt Trip	**add suffix...00S07■**	Factory
120V Auxiliary Switch	**add suffix...01■②**	Factory

For external accessories, please refer to page 5-154 - 5-159

■ Built to order. Allow 2-3 weeks for delivery

① CSA Certified / UL Listed for use with 60/75° wire through 40 amps, CSA Certified / UL Listed for use with 75° wire only for 50 amps and above, HACR rated.
② 1A and 1B contacts.
③ CSA Certified / UL Listed for use on 3-phase grounded "B" systems — 10,000 for this application.
④ CSA Certified / UL Liisted for frequent switching applications (SWD). 120V AC Fluorescent Lighting.
⑤ Shipped 12 per sleeve.
⑥ Shipped 6 per sleeve.
⑦ Shipped 4 per sleeve.
⑧ CSA Certified / UL Listed 5KA IR.
⑨ Refer to Table A on page 5-86
⑩ CSA Certified for frequent switching applications (SWD)

Molded Case Circuit Breakers

DIN Rail Mounted Circuit Breakers

Selection/Dimensions

Breaker Type	Ampere Rating	Catalogue Number	Line Side Connector	Load Side Connector	Interrupting Ratings (KA) (RMS Symmetrical Amperes) Volts AC 120	120/240
1-Pole DIN Rail (120V AC)						
BQLD 1-Pole 120V DIN Rail	10	**BQ1B010QLD**	TC1Q1	TC1Q1	10	
	15	**BQ1B015QLD**	TC1Q1	TC1Q1	10	
	20	**BQ1B020QLD**	TC1Q1	TC1Q1	10	
	25	**BQ1B025QLD**	TC1Q1	TC1Q1	10	
	30	**BQ1B030QLD**	TC1Q1	TC1Q1	10	
	35	**BQ1B035QLD**	TC1Q1	TC1Q1	10	
	40	**BQ1B040QLD**	TC1Q1	TC1Q1	10	
	45	**BQ1B045QLD**	TA1Q1	TA1Q1	10	
	50	**BQ1B050QLD**	TA1Q1	TA1Q1	10	
	60	**BQ1B060QLD**	TA1Q1	TA1Q1	10	
BQXD 1-Pole 120V DIN Rail	10	**BQ1B010QXD**	TC1Q1	Quick-Connect	10	
	15	**BQ1B015QXD**	TC1Q1	Quick-Connect	10	
	20	**BQ1B020QXD**	TC1Q1	Quick-Connect	10	
	25	**BQ1B025QXD**	TC1Q1	Quick-Connect	10	
	30	**BQ1B030QXD**	TC1Q1	Quick-Connect	10	
	35	**BQ1B035QXD**	TC1Q1	Quick-Connect	10	
	40	**BQ1B040QXD**	TC1Q1	Quick-Connect	10	
	45	**BQ1B045QXD**	TA1Q1	Quick-Connect	10	
	50	**BQ1B050QXD**	TA1Q1	Quick-Connect	10	
	60	**BQ1B060QXD**	TA1Q1	Quick-Connect	10	
2-Pole DIN Rail (120/240V AC)						
BQLD 2-Pole 120/240V DIN Rail	10	**BQ2B010QLD**	TC1Q1	TC1Q1		10
	15	**BQ2B015QLD**	TC1Q1	TC1Q1		10
	20	**BQ2B020QLD**	TC1Q1	TC1Q1		10
	25	**BQ2B025QLD**	TC1Q1	TC1Q1		10
	30	**BQ2B030QLD**	TC1Q1	TC1Q1		10
	35	**BQ2B035QLD**	TC1Q1	TC1Q1		10
	40	**BQ2B040QLD**	TC1Q1	TC1Q1		10
	45	**BQ2B045QLD**	TA1Q1	TA1Q1		10
	50	**BQ2B050QLD**	TA1Q1	TA1Q1		10
	60	**BQ2B060QLD**	TA1Q1	TA1Q1		10
BQXD 2-Pole 120/240V DIN Rail	10	**BQ2B010QXD**	TC1Q1	Quick-Connect		10
	15	**BQ2B015QXD**	TC1Q1	Quick-Connect		10
	20	**BQ2B020QXD**	TC1Q1	Quick-Connect		10
	25	**BQ2B025QXD**	TC1Q1	Quick-Connect		10
	30	**BQ2B030QXD**	TC1Q1	Quick-Connect		10
	35	**BQ2B035QXD**	TC1Q1	Quick-Connect		10
	40	**BQ2B040QXD**	TC1Q1	Quick-Connect		10
	45	**BQ2B045QXD**	TA1Q1	Quick-Connect		10
	50	**BQ2B050QXD**	TA1Q1	Quick-Connect		10
	60	**BQ2B060QXD**	TA1Q1	Quick-Connect		10



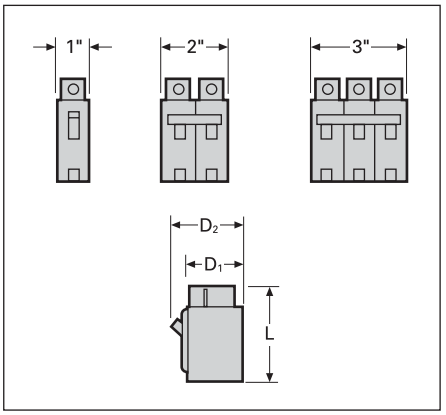

Lugs-For Use with BQXD⑥

Circuit Breaker Amp. Rtg.	Cab. Per Lug	Lug Wire Range AWG	Catalogue Number
Line Side			
10–40	1 1	#16–#6 Cu #12–#6 Al	**TC1Q1**①②
45–125	1000	#8–#1 Cu #6–#1/0 Al	**TA1Q1**

Finger Safe Terminal Shield

Protects against accidental contact with lugs–1 per lug. Fits line and load end.

Catalogue Number	Qty
BQFS2	2
BQFS1K	1000

Breaker Type	Amperes	Dimensions (inches) L	D1	D2
BQ, BQH	15–50	3¾	2⅜	3
BQ, BQH	55–125	4	2⅜	3
HBQ	15–125	4	2⅜	3
BQXD	15–60	4½	2⅜	3

Enclosures page 5-139 – 5-146
Accessories pages 5-151 - 5-159

For inches / millimeters conversion, see Technical section.

■ Built to order. Allow 2–3 weeks for delivery.

① CSA Certified / UL Listed for use with 60/75° wire through 40 amps, CSA Certified / UL listed for use with 75° wire only for 50 amps and above, HACR rated.

②Connector has steel construction.

③Surface mounted indoor. If flush mounting is required, replace suffix "S" in catalogue number with suffix "F".

④Neutral included in enclosure.

⑤Enclosure will not accept circuit breakers with shunt trips or auxiliary switches installed.

⑥Type BQXD uses TA1Q1 or TC1Q1 lugs on line side of circuit breaker.

Continuous Current Rating @ 40°C	2-Pole 240V AC Catalogue Number	3-Pole 240V AC Catalogue Number
Type QR2②		
100	**QR22B100**	**QR23B100**
125	**QR22B125**	**QR23B125**
150	**QR22B150**	**QR23B150**
175	**QR22B175**	**QR23B175**
200	**QR22B200**	**QR23B200**
225	**QR22B225**	**QR23B225**
250	**QR22B250**	**QR23B250**
Type QRH2②		
100	**QRH22B100■**	**QRH23B100**
125	**QRH22B125**	**QRH23B125**
150	**QRH22B150**	**QRH23B150**
175	**QRH22B175■**	**QRH23B175**
200	**QRH22B200**	**QRH23B200**
225	**QRH22B225**	**QRH23B225**
250	**QRH22B250**	**QRH23B250**
Type HQR2②		
100	**HQR22B100■**	**HQR23B100**
125	**HQR22B125**	**HQR23B125**
150	**HQR22B150**	**HQR23B150**
175	**HQR22B175■**	**HQR23B175**
200	**HQR22B200**	**HQR23B200**
225	**HQR22B225**	**HQR23B225**
250	**HQR22B250**	**HQR23B250**
Type HQR2H②		
100	**HQR22B100H**	**HQR23B100H**
125	**HQR22B125H**	**HQR23B125H**
150	**HQR22B150H**	**HQR23B150H**
175	**HQR22B175H**	**HQR23B175H**
200	**HQR22B200H**	**HQR23B200H**
225	**HQR22B225H**	**HQR23B225H**
250	**HQR22B250H**	**HQR22B250H**

■ Built to order. Allow 2–3 weeks for delivery.

①See **Note: A** page 5-147.
②HACR rated.
Note: Suitable for reverse feed applications

Ordering Information

Load side 3TA1QR300 lugs are mounted and included when circuit breaker is ordered. For line and load lugs (3TA1QR300) installed at no additional charge, add suffix "L" to catalogue number.

50°C Calibration - See page 5-160.
400HZ. - See page 5-160.

Shipping Weights

Number of Poles	Number per Carton	Shipping Weight (lbs.)
2	1	3.2
3	1	4.5

Lugs For 75°C Wire①

Catalogue Number	Lug Body	Lug Wire Range
3TA1QR300	Al	#3 - 300 Kcmil Al/Cu
3TC1QR250	Cu	#3 - 300 Kcmil Cu ONLY

CSA C22.2 No. 5 / UL 489 Interrupting Ratings

Breaker Type	RMS Symmetrical Amperes (kA) Volts AC (50/60 Hz)
	240
QR2	10
QRH2	25
HQR2	65
HQR2H	100

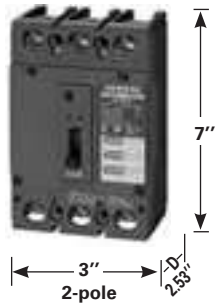

For external accessories, please refer to pages 5-154 - 5-159. For internal accessories, please refer to page 5-151 - 5-153.

Type CQD (Cable In - Cable Out) DIN Rail Mount③

Continuous Current Rating @ 40°C	1-Pole 277V AC 125V DC Catalogue Number	2-Pole 480Y/277V AC 125/250V DC Catalogue Number	3-Pole 480Y/277V AC Catalogue Number
15	CQD115①②	CQD215②	CQD315②
20	CQD120①②	CQD220②	CQD320②
25	CQD125②	CQD225②	CQD325②
30	CQD130②	CQD230②	CQD330②
35	CQD135②■	CQD235②■	CQD335②
40	CQD140②■	CQD240②	CQD340②
45	CQD145②■	CQD245②■	CQD345②■
50	CQD150②■	CQD250②	CQD350②
60	CQD160■	CQD260	CQD360
70	CQD170■	CQD270	CQD370
80	CQD180■	CQD280	CQD380
90	CQD190■	CQD290■	CQD390
100	CQD1100■	CQD2100	CQD3100

Interrupting Ratings

Breaker Type	Number of Poles	RMS Symmetrical Amperes (KA) Volts AC 120	240	277	480/277	600/277	Volts DC 125	125/250
CQD (CSA/UL)	1	65	—	14	—	—	14	—
	2	—	65	—	14	—	—	14
	3	—	65	—	14	—	—	—

Shipping Weights

Number of Poles	Number per Carton	Shipping Weight lbs. (kg)
1	1	0.5 (0)
2	1	1.0 (0)
3	1	1.5 (1)

Lugs For 60/75°C Wire

Amps	Wire Size
15–40	#14–#6 AWG Cu #12–#6 AWG Al
45–100	#8–#1 AWG Cu #8–#1/0 AWG Al



CQD

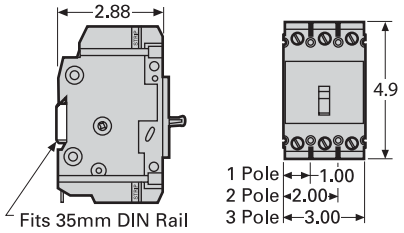

CQD

For inches / millimeters conversion, see Technical section.

■ Built to order. Allow 2–3 weeks for delivery.

① SWD rated.

Note: Suitable for reverse feed applications

② HID rated.

③ HACR rated.

Enclosures page 5-139 – 5-146
Accessories pages 5-151 - 5-159

GG 125A Frame (Cable In - Cable Out)

Continuous Current Rating @ 40°C	1-Pole	2-Pole	3-Pole
	Catalogue Number	Catalogue Number	Catalogue Number
15	NGG1B015L①②	NGG2B015L②	NGG3B015L②
20	NGG1B020L①②	NGG2B020L②	NGG3B020L②
25	NGG1B025L②	NGG2B025L②	NGG3B025L②
30	NGG1B030L②	NGG2B030L②	NGG3B030L②
35	NGG1B035L②	NGG2B035L②	NGG3B035L②
40	NGG1B040L②	NGG2B040L②	NGG3B040L②
45	NGG1B045L②	NGG2B045L②	NGG3B045L②
50	NGG1B050L②	NGG2B050L②	NGG3B050L②
60	NGG1B060L	NGG2B060L	NGG3B060L
70	NGG1B070L	NGG2B070L	NGG3B070L
80	NGG1B080L	NGG2B080L	NGG3B080L
90	NGG1B090L	NGG2B090L	NGG3B090L
100	NGG1B100L	NGG2B100L	NGG3B100L
110	NGG1B110L	NGG2B110L	NGG3B110L
125	NGG1B125L	NGG2B125L	NGG3B125L

Line and load lugs are included as standard. If no lugs are required, remove the "L" suffix.
HACR rated.
Suitable for screws or DIN rail mounting.



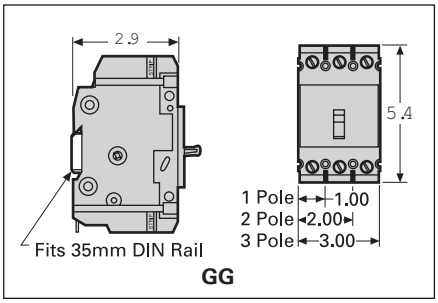

Type HGG (Cable In - Cable Out)

Continuous Current Rating @ 40°C	1-Pole	2-Pole	3-Pole
	Catalogue Number	Catalogue Number	Catalogue Number
15	HGG1B015L①②	HGG2B015L②	HGG3B015L②
20	HGG1B020L①②	HGG2B020L②	HGG3B020L②
25	HGG1B025L②	HGG2B025L②	HGG3B025L②
30	HGG1B030L②	HGG2B030L②	HGG3B030L②
35	HGG1B035L②	HGG2B035L②	HGG3B035L②
40	HGG1B040L②	HGG2B040L②	HGG3B040L②
45	HGG1B045L②	HGG2B045L②	HGG3B045L②
50	HGG1B050L②	HGG2B050L②	HGG3B050L②
60	HGG1B060L	HGG2B060L	HGG3B060L
70	HGG1B070L	HGG2B070L	HGG3B070L
80	HGG1B080L	HGG2B080L	HGG3B080L
90	HGG1B090L	HGG2B090L	HGG3B090L
100	HGG1B100L	HGG2B100L	HGG3B100L
110	HGG1B110L	HGG2B110L	HGG3B110L
125	HGG1B125L	HGG2B125L	HGG3B125L

Type LGG (Cable In - Cable Out)

Continuous Current Rating @ 40°C	1-Pole	2-Pole	3-Pole
	Catalogue Number	Catalogue Number	Catalogue Number
15	LGG1B015L①②	LGG2B015L②	LGG3B015L②
20	LGG1B020L①②	LGG2B020L②	LGG3B020L②
25	LGG1B025L②	LGG2B025L②	LGG3B025L②
30	LGG1B030L②	LGG2B030L②	LGG3B030L②
35	LGG1B035L②	LGG2B035L②	LGG3B035L②
40	LGG1B040L②	LGG2B040L②	LGG3B040L②
45	LGG1B045L②	LGG2B045L②	LGG3B045L②
50	LGG1B050L②	LGG2B050L②	LGG3B050L②
60	LGG1B060L	LGG2B060L	LGG3B060L
70	LGG1B070L	LGG2B070L	LGG3B070L
80	LGG1B080L	LGG2B080L	LGG3B080L
90	LGG1B090L	LGG2B090L	LGG3B090L
100	LGG1B100L	LGG2B100L	LGG3B100L
110	LGG1B110L	LGG2B110L	LGG3B110L
125	LGG1B125L	LGG2B125L	LGG3B125L

Shipping Weights

Number of Poles	Number per Carton	Shipping Weight lbs. (kg)
1	1	0.75 (0.34)
2	1	1.3 (0.59)
3	1	2.0 (0.98)

Lugs For 60/75°C Wire

NGG		
Ampere Rating	Wire Size	Catalogue Number
15–30A	#14–#6 AWG Cu #12–#6 AWG Al	**TC1Q1** (qty. 1) **3TC1Q1** (qty. 3)
35–125A	#8–1/0 AWG Cu #8–2/0 AWG Al	**3TC1GG20** (qty. 3)
15–125A	Nut Keeper plate w/ screw (for crimp terminals)	**TNKG3** (qty. 3)

Interrupting Ratings (max. RMS symmetrical amperes kA)

Breaker Type	Poles	CSA 22.2 No. 5 / UL 489								IEC 60947-2 (Ics = 50%Icu)		
		Volts AC						Volts DC		Volts AC		Volts DC
		120	240	277	347	480	600Y/347	125	125/250	240	415	125/250
NGG	1	65	—	25	14	—	—	14	—	25	—	—
	2,3	—	65	—	—	25	14	—	14①	65	—	14
HGG	1	85	—	35	14	—	—	14	—	—	—	—
	2,3	—	85	—	—	35	14	—	14①	—	—	—
LGG	1	100	—	65	14	—	—	14	—	—	—	—
	2,3	—	100	—	—	65	14	—	14①	—	—	—

For inches / millimeters conversion, see Technical section.

① HID rated at 15-50A 1-pole @ 277 VAC; 2 & 3-pole @ 480 VAC

Enclosures page 5-139 – 5-146
Accessories pages 5-151 - 5-159

Shunt Trip

Control Voltage		BQD, BQD6, CQD, NGG, HGG, LGG, NGB, HGB and LGB
V AC	V DC	Catalogue Number
120	—	**CQDST120**
240	—	**CQDST240▲**
277	—	**CQDST277▲**
480	—	**CQDST480▲**
600	—	**CQDST600**
—	12	**CQDST12**
—	24	**CQDST24**
—	48	**CQDST48**
—	125	**CQDST125**



CQDST120AAS

Auxiliary Switch

Maximum Voltage		Number of Contacts	BQD, BQD6, CQD, NGG, HGG, LGG, NGB, HGB and LGB
AC	DC		Catalogue Number
240	125	1A–1B	**CQDA1**
240	125	2A–2B	**CQDA2**

Alarm Switch

Maximum Voltage		BQD, BQD6, CQD, NGG, HGG, LGG, NGB, HGB and LGB
AC	DC	Catalogue Number
240	125	**CQDBA**



CQD with Accessory Installed

Shunt Trip and Auxiliary Switch Combinations

Shunt Trip Voltage		BQD, BQD6, CQD, NGG, HGG, LGG, NGB, HGB and LGB
AC	DC	Catalogue Number
24	—	**CQDST24AAS▲**
120	—	**CQDST120AAS▲**
240	—	**CQDST240AAS▲**
277	—	**CQDST277AAS▲**
480	—	**CQDST480AAS▲**
600	—	**CQDST600AAS▲**
—	12	**CQDST12DAS▲**
—	24	**CQDST24DAS▲**
—	48	**CQDST48DAS▲**
—	125	**CQDST125DAS▲**

Alarm and Auxiliary Switch Combinations

For Breaker	Catalogue Number
BQD, BQD6, CQD, NGG, HGG, LGG, NGB, HGB and LGB	**CQDA1BA▲**

▲ Built to order. Allow 6–8 weeks for delivery.

①Adds 1-pole space for accessory.

Catalogue Numbering Logic

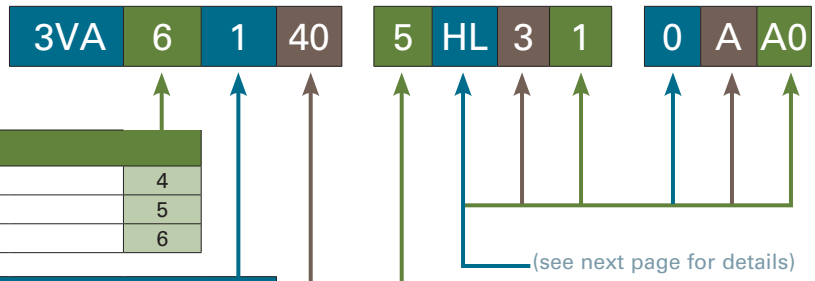

Breaker Designation	
Thermal magnetic panelboard breakers	4
Thermal magnetic (Cable-in Cable-out) breakers	5
Electronic trip breakers	6

Frame Size	
125/150A	1
250A	2
400A	3
600A	4
800A	5
1000A	6
1200A	7
1600A	8
2000A	9

Rated Current

3VA41/ 3VA51	3VA52	3VA53	3VA54	3VA55	3VA57	3VA58	3VA59	3VA61	3VA62	3VA63	3VA64	3VA65	3VA66	3VA67	3VA68	3VA69	
15A																	95
20A	200A	200A															20
	225A	225A															22
25A	250A	250A							250A	250A							25
30A		300A															30
35A		350A															35
40A	40A	400A						40A		400A	400A						40
45A	45A		450A														45
50A	50A		500A														50
60A	60A		600A	600A							600A	600A					60
70A	70A			700A													70
80A	80A			800A	800A							800A		800A			80
90A	90A				900A												90
100A	100A				1000A			100A	100A				1000A	1000A			10
110A	110A																11
125A	125A				1200A									1200A			12
						1400A											14
	150A							150A									15
						1600A									1600A		16
	175A																17
							1800A										18
							2000A									2000A	20

Interrupting Capacity @ 480V			
3VA4/3VA5	3VA6		
MCP/MCS	200K		0
MCP/MCS	MCP/MCS		1
25K			4
35K	35K		5
65K	65K		6
100K	100K		7
	150K		8

Catalogue Numbering Logic (cont.)

3VA	6	1	40	–	5	HL	3	1		0	A	A0

(see previous page for details)

Trip Unit Protection Functions

3VA4/3VA5		L	I	N					
TM230	MCCB	fix	adj						EC
TM210	MCCB	fix	fix						ED
TM240	MCCB	adj	adj						EF
TM230	MCCB	fix	adj	100%					GC
TM210	MCCB	fix	fix	100%					GD
TM240	MCCB	adj	adj	100%					GF
TM110M	MSP		fix						MG
TM120M	MSP		adj						MH
TM120M	MSP		adj						MU
MCS110	MCS		fix						BB
3VA6		L	S	I	G	N	LCD	com.	measurement values
ETU320 LI	MCCB	adj		adj		0%/50%/100%			HL
ETU330 LIG	MCCB	adj		adj	adj	0%/50%/100%			HM
ETU350 LSI	MCCB	adj	adj	fix		0%/50%/100%			HN
ETU360 LSIG	MCCB	adj	adj	adj	adj	0%/50%/100%			HQ
ETU550 LSI	MCCB	adj	adj	adj		20/40%...100/160%	yes	yes	standard JP
ETU556 LSI(G)	MCCB	adj	adj	adj	alarm	20/40%...100/160%	yes	yes	standard JT
ETU560 LSIG	MCCB	adj	adj	adj	adj	20/40%...100/160%	yes	yes	standard JQ
ETU820 LI	MCCB	adj		adj		20/40%...100/160%	yes	yes	advanced KL
ETU830 LIG	MCCB	adj		adj	adj	20/40%...100/160%	yes	yes	advanced KM
ETU850LSI	MCCB	adj	adj	adj		20/40%...100/160%	yes	yes	advanced KP
ETU856 LSI(G)	MCCB	adj	adj	adj	alarm	20/40%...100/160%	yes	yes	advanced KT
ETU860 LSIG	MCCB	adj	adj	adj	adj	20/40%...100/160%	yes	yes	advanced KQ
ETU310M	MCP			adj					MS
MCS110	MCS			fix					BB

Number of Poles

1 pole	1
2 pole	2
3 pole	3
4 pole	4
1-in-2 pole	5
2-in-3 pole	6

Connection Technology

No wire connector	1
Nut keeper kit, line and load	2
Nut keeper kit, load end only	3
Aluminum wire connector, load end only	4
Wire connector, line end only	5
Wire connector, line and load	6

Regional Specifics (as applicable)

Standard	0
NAVAL/50C	1
100% Rated (3VA6)	2

Auxiliary Releases	Without	A
Auxiliary/Alarm Switches	Without	A0

3VA51 125A Frame, 1-Pole Thermal-Magnetic Trip Unit

Cont. Ampere Rating	S-Interrupting Class (SEAS)	M-Interrupting Class (MEAS)	H-Interrupting Class (HEAS)
	Catalogue Number	Catalogue Number	Catalogue Number
	TM210 FTFM		
15	3VA5195-4ED11-0AA0	3VA5195-5ED11-0AA0	3VA5195-6ED11-0AA0
20	3VA5120-4ED11-0AA0	3VA5120-5ED11-0AA0	3VA5120-6ED11-0AA0
25	3VA5125-4ED11-0AA0	3VA5125-5ED11-0AA0	3VA5125-6ED11-0AA0
30	3VA5130-4ED11-0AA0	3VA5130-5ED11-0AA0	3VA5130-6ED11-0AA0
35	3VA5135-4ED11-0AA0	3VA5135-5ED11-0AA0	3VA5135-6ED11-0AA0
40	3VA5140-4ED11-0AA0	3VA5140-5ED11-0AA0	3VA5140-6ED11-0AA0
45	3VA5145-4ED11-0AA0	3VA5145-5ED11-0AA0	3VA5145-6ED11-0AA0
50	3VA5150-4ED11-0AA0	3VA5150-5ED11-0AA0	3VA5150-6ED11-0AA0
60	3VA5160-4ED11-0AA0	3VA5160-5ED11-0AA0	3VA5160-6ED11-0AA0
70	3VA5170-4ED11-0AA0	3VA5170-5ED11-0AA0	3VA5170-6ED11-0AA0
80	3VA5180-4ED11-0AA0	3VA5180-5ED11-0AA0	3VA5180-6ED11-0AA0
90	3VA5190-4ED11-0AA0	3VA5190-5ED11-0AA0	3VA5190-6ED11-0AA0
100	3VA5110-4ED11-0AA0	3VA5110-5ED11-0AA0	3VA5110-6ED11-0AA0
110	3VA5111-4ED11-0AA0	3VA5111-5ED11-0AA0	3VA5111-6ED11-0AA0
125	3VA5112-4ED11-0AA0	3VA5112-5ED11-0AA0	3VA5112-6ED11-0AA0

3VA51 125A Frame, 2-Pole Thermal-Magnetic Trip Unit

Cont. Ampere Rating	S-Interrupting Class (SEAS)	M-Interrupting Class (MEAS)	H-Interrupting Class (HEAS)
	Catalogue Number	Catalogue Number	Catalogue Number
	TM210 FTFM①		
15	3VA5195-4ED21-0AA0	3VA5195-5ED21-0AA0	3VA5195-6ED21-0AA0
20	3VA5120-4ED21-0AA0	3VA5120-5ED21-0AA0	3VA5120-6ED21-0AA0
25	3VA5125-4ED21-0AA0	3VA5125-5ED21-0AA0	3VA5125-6ED21-0AA0
30	3VA5130-4ED21-0AA0	3VA5130-5ED21-0AA0	3VA5130-6ED21-0AA0
35	3VA5135-4ED21-0AA0	3VA5135-5ED21-0AA0	3VA5135-6ED21-0AA0
40	3VA5140-4ED21-0AA0	3VA5140-5ED21-0AA0	3VA5140-6ED21-0AA0
45	3VA5145-4ED21-0AA0	3VA5145-5ED21-0AA0	3VA5145-6ED21-0AA0
50	3VA5150-4ED21-0AA0	3VA5150-5ED21-0AA0	3VA5150-6ED21-0AA0
60	3VA5160-4ED21-0AA0	3VA5160-5ED21-0AA0	3VA5160-6ED21-0AA0
70	3VA5170-4ED21-0AA0	3VA5170-5ED21-0AA0	3VA5170-6ED21-0AA0
80	3VA5180-4ED21-0AA0	3VA5180-5ED21-0AA0	3VA5180-6ED21-0AA0
90	3VA5190-4ED21-0AA0	3VA5190-5ED21-0AA0	3VA5190-6ED21-0AA0
100	3VA5110-4ED21-0AA0	3VA5110-5ED21-0AA0	3VA5110-6ED21-0AA0
110	3VA5111-4ED21-0AA0	3VA5111-5ED21-0AA0	3VA5111-6ED21-0AA0
125	3VA5112-4ED21-0AA0	3VA5112-5ED21-0AA0	3VA5112-6ED21-0AA0

Dimensions

Shipping Weight

Breaker	Poles	W in. (mm)	H in. (mm)	D in. (mm)	lbs.	kg
3VA51	1	1 (25.4)	5.5 (140)	3 (76.5)	0.84	0.38
3VA51	2	2 (50.8)	5.5 (140)	3 (76.5)	1.37	0.62
3VA51	3	3 (76.2)	5.5 (140)	3 (76.5)	1.73	0.78
3VA51	4	4 (101.6)	5.5 (140)	3 (76.5)	2.09	0.95



3VA51 125A 1-Pole



3VA51 125A 2-Pole

Ordering Information

The catalogue numbers listed here are for complete, non-interchangable trip circuit breakers without lugs.

Order required lugs or connection technology separately for field installation.

All 3VA51 thermal-magnetic trip circuit breakers are cULus approved for reverse feed applications.

For NAVAL-rated thermal-magnetic trip circuit breakers, change the 13th digit of the catalogue number to the number "1". (For example, a 18kA @600/347VAC, 40A, 3-pole, NAVAL rated 3VA51 would be catalogue number 3VA5140-5ED31-1AA0)

① Available with NAVAL/50C ratings.

3VA51 125A Frame, 3-Pole Thermal-Magnetic Trip Unit

Cont. Ampere Rating	S-Interrupting Class (SEAS) Catalogue Number	M-Interrupting Class (MEAS) Catalogue Number	H-Interrupting Class (HEAS) Catalogue Number
		TM210 FTFM①	
15	3VA5195-4ED31-0AA0	3VA5195-5ED31-0AA0	3VA5195-6ED31-0AA0
20	3VA5120-4ED31-0AA0	3VA5120-5ED31-0AA0	3VA5120-6ED31-0AA0
25	3VA5125-4ED31-0AA0	3VA5125-5ED31-0AA0	3VA5125-6ED31-0AA0
30	3VA5130-4ED31-0AA0	3VA5130-5ED31-0AA0	3VA5130-6ED31-0AA0
35	3VA5135-4ED31-0AA0	3VA5135-5ED31-0AA0	3VA5135-6ED31-0AA0
40	3VA5140-4ED31-0AA0	3VA5140-5ED31-0AA0	3VA5140-6ED31-0AA0
45	3VA5145-4ED31-0AA0	3VA5145-5ED31-0AA0	3VA5145-6ED31-0AA0
50	3VA5150-4ED31-0AA0	3VA5150-5ED31-0AA0	3VA5150-6ED31-0AA0
60	3VA5160-4ED31-0AA0	3VA5160-5ED31-0AA0	3VA5160-6ED31-0AA0
70	3VA5170-4ED31-0AA0	3VA5170-5ED31-0AA0	3VA5170-6ED31-0AA0
80	3VA5180-4ED31-0AA0	3VA5180-5ED31-0AA0	3VA5180-6ED31-0AA0
90	3VA5190-4ED31-0AA0	3VA5190-5ED31-0AA0	3VA5190-6ED31-0AA0
100	3VA5110-4ED31-0AA0	3VA5110-5ED31-0AA0	3VA5110-6ED31-0AA0
110	3VA5111-4ED31-0AA0	3VA5111-5ED31-0AA0	3VA5111-6ED31-0AA0
125	3VA5112-4ED31-0AA0	3VA5112-5ED31-0AA0	3VA5112-6ED31-0AA0
		TM230 FTAM①	
15	3VA5195-4EC31-0AA0	3VA5195-6EC31-0AA0	3VA5195-6EC31-0AA0
20	3VA5120-4EC31-0AA0	3VA5120-5EC31-0AA0	3VA5120-6EC31-0AA0
25	3VA5125-4EC31-0AA0	3VA5125-5EC31-0AA0	3VA5125-6EC31-0AA0
30	3VA5130-4EC31-0AA0	3VA5130-5EC31-0AA0	3VA5130-6EC31-0AA0
35	3VA5135-4EC31-0AA0	3VA5135-5EC31-0AA0	3VA5135-6EC31-0AA0
40	3VA5140-4EC31-0AA0	3VA5140-5EC31-0AA0	3VA5140-6EC31-0AA0
45	3VA5145-4EC31-0AA0	3VA5145-5EC31-0AA0	3VA5145-6EC31-0AA0
50	3VA5150-4EC31-0AA0	3VA5150-5EC31-0AA0	3VA5150-6EC31-0AA0
60	3VA5160-4EC31-0AA0	3VA5160-5EC31-0AA0	3VA5160-6EC31-0AA0
70	3VA5170-4EC31-0AA0	3VA5170-5EC31-0AA0	3VA5170-6EC31-0AA0
80	3VA5180-4EC31-0AA0	3VA5180-5EC31-0AA0	3VA5180-6EC31-0AA0
90	3VA5190-4EC31-0AA0	3VA5190-5EC31-0AA0	3VA5190-6EC31-0AA0
100	3VA5110-4EC31-0AA0	3VA5110-5EC31-0AA0	3VA5110-6EC31-0AA0
110	3VA5111-4EC31-0AA0	3VA5111-5EC31-0AA0	3VA5111-6EC31-0AA0
125	3VA5112-4EC31-0AA0	3VA5112-5EC31-0AA0	3VA5112-6EC31-0AA0
		TM240 ATAM	
15	3VA5195-4EF31-0AA0	3VA5195-5EF31-0AA0	3VA5195-6EF31-0AA0
20	3VA5120-4EF31-0AA0	3VA5120-5EF31-0AA0	3VA5120-6EF31-0AA0
30	3VA5130-4EF31-0AA0	3VA5130-5EF31-0AA0	3VA5130-6EF31-0AA0
40	3VA5140-4EF31-0AA0	3VA5140-5EF31-0AA0	3VA5140-6EF31-0AA0
50	3VA5150-4EF31-0AA0	3VA5150-5EF31-0AA0	3VA5150-6EF31-0AA0
60	3VA5160-4EF31-0AA0	3VA5160-5EF31-0AA0	3VA5160-6EF31-0AA0
70	3VA5170-4EF31-0AA0	3VA5170-5EF31-0AA0	3VA5170-6EF31-0AA0
80	3VA5180-4EF31-0AA0	3VA5180-5EF31-0AA0	3VA5180-6EF31-0AA0
100	3VA5110-4EF31-0AA0	3VA5110-5EF31-0AA0	3VA5110-6EF31-0AA0

Dimensions / Shipping Weight

Breaker	Poles	W in. (mm)	H in. (mm)	D in. (mm)	lbs.	kg
3VA51	1	1 (25.4)	5.5 (140)	3 (76.5)	0.84	0.38
3VA51	2	2 (50.8)	5.5 (140)	3 (76.5)	1.37	0.62
3VA51	3	3 (76.2)	5.5 (140)	3 (76.5)	1.73	0.78
3VA51	4	4 (101.6)	5.5 (140)	3 (76.5)	2.09	0.95



3VA51 125A 3-Pole

Ordering Information

The catalogue numbers listed here are for complete, non-interchangable trip circuit breakers without lugs.

Order required lugs or connection technology separately for field installation.

All 3VA51 thermal-magnetic trip circuit breakers are cULus approved for reverse feed applications.

For NAVAL-rated thermal-magnetic trip circuit breakers, change the 13th digit of the catalogue number to the number "1". (For example, a 18kA @600/347VAC, 40A, 3-pole, NAVAL rated 3VA51 would be catalogue number 3VA5140-5ED31-1AA0)

① Available with NAVAL/50C ratings.

3VA51 125A Frame, 4-Pole Thermal-Magnetic Trip Unit

Cont. Ampere Rating	S-Interrupting Class (SEAS)	M-Interrupting Class (MEAS)	H-Interrupting Class (HEAS)
	Catalogue Number	Catalogue Number	Catalogue Number
	TM210 FTFM Unprotected Neutral		
15	3VA5195-4ED41-0AA0	3VA5195-5ED41-0AA0	3VA5195-6ED41-0AA0
20	3VA5120-4ED41-0AA0	3VA5120-5ED41-0AA0	3VA5120-6ED41-0AA0
25	3VA5125-4ED41-0AA0	3VA5125-5ED41-0AA0	3VA5125-6ED41-0AA0
30	3VA5130-4ED41-0AA0	3VA5130-5ED41-0AA0	3VA5130-6ED41-0AA0
35	3VA5135-4ED41-0AA0	3VA5135-5ED41-0AA0	3VA5135-6ED41-0AA0
40	3VA5140-4ED41-0AA0	3VA5140-5ED41-0AA0	3VA5140-6ED41-0AA0
45	3VA5145-4ED41-0AA0	3VA5145-5ED41-0AA0	3VA5145-6ED41-0AA0
50	3VA5150-4ED41-0AA0	3VA5150-5ED41-0AA0	3VA5150-6ED41-0AA0
60	3VA5160-4ED41-0AA0	3VA5160-5ED41-0AA0	3VA5160-6ED41-0AA0
70	3VA5170-4ED41-0AA0	3VA5170-5ED41-0AA0	3VA5170-6ED41-0AA0
80	3VA5180-4ED41-0AA0	3VA5180-5ED41-0AA0	3VA5180-6ED41-0AA0
90	3VA5190-4ED41-0AA0	3VA5190-5ED41-0AA0	3VA5190-6ED41-0AA0
100	3VA5110-4ED41-0AA0	3VA5110-5ED41-0AA0	3VA5110-6ED41-0AA0
110	3VA5111-4ED41-0AA0	3VA5111-5ED41-0AA0	3VA5111-6ED41-0AA0
125	3VA5112-4ED41-0AA0	3VA5112-5ED41-0AA0	3VA5112-6ED41-0AA0
	TM210 FTFM 100% Neutral		
90	3VA5190-4GD41-0AA0	3VA5190-5GD41-0AA0	3VA5190-6GD41-0AA0
100	3VA5110-4GD41-0AA0	3VA5110-5GD41-0AA0	3VA5110-6GD41-0AA0
110	3VA5111-4GD41-0AA0	3VA5111-5GD41-0AA0	3VA5111-6GD41-0AA0
125	3VA5112-4GD41-0AA0	3VA5112-5GD41-0AA0	3VA5112-6GD41-0AA0
	TM230 FTAM Unprotected Neutral		
15	3VA5195-4EC41-0AA0	3VA5195-5EC41-0AA0	3VA5195-6EC41-0AA0
20	3VA5120-4EC41-0AA0	3VA5120-5EC41-0AA0	3VA5120-6EC41-0AA0
25	3VA5125-4EC41-0AA0	3VA5125-5EC41-0AA0	3VA5125-6EC41-0AA0
30	3VA5130-4EC41-0AA0	3VA5130-5EC41-0AA0	3VA5130-6EC41-0AA0
35	3VA5135-4EC41-0AA0	3VA5135-5EC41-0AA0	3VA5135-6EC41-0AA0
40	3VA5140-4EC41-0AA0	3VA5140-5EC41-0AA0	3VA5140-6EC41-0AA0
45	3VA5145-4EC41-0AA0	3VA5145-5EC41-0AA0	3VA5145-6EC41-0AA0
50	3VA5150-4EC41-0AA0	3VA5150-5EC41-0AA0	3VA5150-6EC41-0AA0
60	3VA5160-4EC41-0AA0	3VA5160-5EC41-0AA0	3VA5160-6EC41-0AA0
70	3VA5170-4EC41-0AA0	3VA5170-5EC41-0AA0	3VA5170-6EC41-0AA0
80	3VA5180-4EC41-0AA0	3VA5180-5EC41-0AA0	3VA5180-6EC41-0AA0
90	3VA5190-4EC41-0AA0	3VA5190-5EC41-0AA0	3VA5190-6EC41-0AA0
100	3VA5110-4EC41-0AA0	3VA5110-5EC41-0AA0	3VA5110-6EC41-0AA0
110	3VA5111-4EC41-0AA0	3VA5111-5EC41-0AA0	3VA5111-6EC41-0AA0
125	3VA5112-4EC41-0AA0	3VA5112-5EC41-0AA0	3VA5112-6EC41-0AA0
	TM230 FTFM 100% Neutral		
90	3VA5190-4GC41-0AA0	3VA5190-5GC41-0AA0	3VA5190-6GC41-0AA0
100	3VA5110-4GC41-0AA0	3VA5110-5GC41-0AA0	3VA5110-6GC41-0AA0
110	3VA5111-4GC41-0AA0	3VA5111-5GC41-0AA0	3VA5111-6GC41-0AA0
125	3VA5112-4GC41-0AA0	3VA5112-5GC41-0AA0	3VA5112-6GC41-0AA0
	TM240 ATAM Unprotected Neutral		
15	3VA5195-4EF41-0AA0	3VA5195-5EF41-0AA0	3VA5195-6EF41-0AA0
20	3VA5120-4EF41-0AA0	3VA5120-5EF41-0AA0	3VA5120-6EF41-0AA0
30	3VA5130-4EF41-0AA0	3VA5130-5EF41-0AA0	3VA5130-6EF41-0AA0
40	3VA5140-4EF41-0AA0	3VA5140-5EF41-0AA0	3VA5140-6EF41-0AA0
50	3VA5150-4EF41-0AA0	3VA5150-5EF41-0AA0	3VA5150-6EF41-0AA0
60	3VA5160-4EF41-0AA0	3VA5160-5EF41-0AA0	3VA5160-6EF41-0AA0
70	3VA5170-4EF41-0AA0	3VA5170-5EF41-0AA0	3VA5170-6EF41-0AA0
80	3VA5180-4EF41-0AA0	3VA5180-5EF41-0AA0	3VA5180-6EF41-0AA0
100	3VA5110-4EF41-0AA0	3VA5110-5EF41-0AA0	3VA5110-6EF41-0AA0
	TM240 ATAM 100% Neutral		
100	3VA5110-4GF41-0AA0	3VA5110-5GF41-0AA0	3VA5110-6GF41-0AA0



3VA51 125A 4-Pole

Ordering Information

The catalogue numbers listed here are for complete, non-interchangable trip circuit breakers without lugs.

Order required lugs or connection technology separately for field installation.

All 3VA51 thermal-magnetic trip circuit breakers are cULus approved for reverse feed applications.

For NAVAL-rated thermal-magnetic trip circuit breakers, change the 13th digit of the catalogue number to the number "1". (For example, a 18kA @600/347VAC, 40A, 3-pole, NAVAL rated 3VA51 would be catalogue number 3VA5140-5ED31-1AA0)

Interrupting Ratings for 3VA51

Interrupting Class	Breaker Type		RMS Symmetrical Amperes (kA)										
			Volts AC (50/60 Hz)							Volts DC			
			120	240	277	347	480Y/277V	480	600Y/347V	125	250	500①	600①
S	SEAS	1	65		25	14				14			
		2, 3, 4		65			25	25	14	14	50	50	50
M	MEAS	1	85		35	18				25			
		2, 3, 4		85			35	35	18	25	85	85	85
H	HEAS	1	150		50	18				30			
		2, 3, 4		150			65	65	25	30	100	100	100

① Applies to 3VA51 3-Pole

Trip Settings for 3VA51

TM210 - FTFM		
I_n (A)	I_r (A)	I_i (A)
15	15	300
20	20	300
25	25	300
30	30	300
35	35	350
40	40	400
45	45	450
50	50	500
60	60	600
70	70	700
80	80	800
90	90	900
100	100	1000
110	110	1100
125	125	1250

TM230 - FTAM							
I_n (A)	I_r (A)	I_i (A)					
15	15	150	180	210	240	270	300
20	20	150	180	210	240	270	300
25	25	150	180	210	240	270	300
30	30	150	180	210	240	270	300
35	35	175	210	245	280	315	350
40	40	200	240	280	320	360	400
45	45	225	270	315	360	405	450
50	50	250	300	350	400	450	500
60	60	300	360	420	480	540	600
70	70	350	420	490	560	630	700
80	80	400	480	560	640	720	800
90	90	450	540	630	720	810	900
100	100	500	600	700	800	900	1000
110	110	550	660	770	880	990	1100
125	125	625	750	875	1000	1125	1250

TM240 - ATAM							
I_n (A)	I_r (A)	I_i (A)					
15	12	150	180	210	240	270	300
20	16	150	180	210	240	270	300
30	24	150	180	210	240	270	300
40	32	200	240	280	320	360	400
50	40	250	300	350	400	450	500
60	48	300	360	420	480	540	600
70	56	350	420	490	560	630	700
80	64	400	480	560	640	720	800
100	80	500	600	700	800	900	1000

Connectors for 75C Wire for 3VA51

Type	Min. cable size	Max. cable size	Catalogue No. (kit of 3 lugs)	Catalogue No. (kit of 4 lugs)
Steel wrap around (Cu cable only), 1 cable lugs	AWG 14	3/0	**3VA9133-0JA11**	**3VA9134-0JA11**
Aluminum body lug small (Cu/Al cable), 1 cable lug	AWG 14	AWG 10	**3VA9133-0JB10**	**3VA9134-0JB10**
Aluminum body lug (Cu/Al cable), 1 cable lugs	AWG 14	3/0	**3VA9133-0JB11**	**3VA9134-0JB11**
Aluminum body lug small with control wire tap (Cu/Al cable), 1 cable lug	AWG 14	AWG 10	**3VA9133-0JG10**	**3VA9134-0JG10**
Aluminum body lug with control wire tap (Cu/Al cable), 1 cable lugs	AWG 14	3/0	**3VA9133-0JG11**	**3VA9134-0JG11**
Aluminum body lug large (Cu/Al cable), 1 cable lugs with 1 extended terminal cover	AWG 4	300 kcmil	**3VA9133-0JJ12**	
Aluminum body lug large with control wire tap (Cu/Al cable), 1 cable lug and 1 extended terminal cover	AWG 4	300 kcmil	**3VA9133-0JC12**	
Distribution lug, 6 cables (Cu/Al cable), 1 cable lugs with 1 extended terminal cover	AWG 14	AWG 2	**3VA9133-0JF60**	**3VA9134-0JF60**
Copper body lug small (Cu cable only), 1 cable lugs	AWG 14	AWG 10	**3VA9133-0JD10**	**3VA9134-0JD10**
Copper body lug (Cu cable only), 1 cable lugs	AWG 14	2/0	**3VA9133-0JD11**	**3VA9134-0JD11**
Copper body lug small with control wire tap (Cu cable only), 1 cable lugs	AWG 14	AWG 10	**3VA9133-0JK10**	**3VA9134-0JK10**
Copper body lug with control wire tap (Cu cable only), 1 cable lugs	AWG 14	2/0	**3VA9133-0JK11**	**3VA9134-0JK11**

Internal accessories configuration		3VA4/3VA5 125 A 1 in 2-pole /2-pole				3VA5 125 A 3 & 4-pole						
	Slot No.:	23	22	21	125 A	23	22	21	125 A	11	12	13
Auxiliary switch	**Type**											
Auxiliary switch	AUX_HQ	x	x	x		x	x	x		x	x	x
	AUX_HQ_el	x	x	x		x	x	x		x	x	x
	AUX_HP		x				x				x	
		x				x				x		
Leading changeover switch	LCS_HQ									x		
	LCS_HQ_el									x		
	LCS_HP									x		
Auxiliary switch	**Type**											
Trip alarm switch	TAS_HQ		x	x			x	x		x	x	
	TAS_HQ_el		x	x			x	x		x	x	
	TAS_HP		x				x			x		
Short circuit alarm switch	SAS_HQ											
	SAS_HQ_el											
Auxiliary switch	**Type**											
Shunt trip flexible	STF		x				x					
Shunt trip left	STL		x				x					
	STL_el											
Residual current release	RCR											
Undervoltage release	UVR		x				x					
Universal release	UVI		x				x					
Other												
Cylinder lock (type Ronis)												x



3VA61 150A 3-Pole

Ordering Information

The catalogue numbers listed below are for complete, non-interchangable trip circuit breakers without lugs.

Order required lugs or connection technology separately for field installation.

All 3VA61 electronict trip circuit breakers are cULus approved for reverse feed applications.

All 3VA61 electronic trip circuit breakers are available with 100% ratings.

For 100% rated electronic trip circuit breakers, change the 13th digit of the catalogue number to the number "2". (For example, a 18kA @600VAC, 40A, 3-pole, 100% rated 3VA61 would be catalogue number 3VA6140-5HL31-2AA0) Requires the use of copper lugs — see lug table below.

All 3VA6 circuit breakers are certified to CSA C22.2 No. 5, and UL 489 Supplement SB, are marked "Naval", and are suitable for use at 50C.

3VA61 150A Frame 3-Pole Electronic Trip Unit

Continuous Ampere	M-Interrupting Class (MDAE) Catalogue Number	H-Interrupting Class (HDAE) Catalogue Number	C-Interrupting Class (CDAE) Catalogue Number	L-Interrupting Class (LDAE) Catalogue Number	E-Interrupting Class (EDAE) Catalogue Number
ETU320 LI with dials					
40	3VA6140-5HL31-0AA0	3VA6140-6HL31-0AA0	3VA6140-7HL31-0AA0	3VA6140-8HL31-0AA0	3VA6160-0HL31-0AA0①
100	3VA6110-5HL31-0AA0	3VA6110-6HL31-0AA0	3VA6110-7HL31-0AA0	3VA6110-8HL31-0AA0	3VA6110-0HL31-0AA0
150	3VA6115-5HL31-0AA0	3VA6115-6HL31-0AA0	3VA6115-7HL31-0AA0	3VA6115-8HL31-0AA0	3VA6115-0HL31-0AA0
ETU330 LIG with dials					
40	3VA6140-5HM31-0AA0	3VA6140-6HM31-0AA0	3VA6140-7HM31-0AA0	3VA6140-8HM31-0AA0	3VA6160-0HM31-0AA0①
100	3VA6110-5HM31-0AA0	3VA6110-6HM31-0AA0	3VA6110-7HM31-0AA0	3VA6110-8HM31-0AA0	3VA6110-0HM31-0AA0
150	3VA6115-5HM31-0AA0	3VA6115-6HM31-0AA0	3VA6115-7HM31-0AA0	3VA6115-8HM31-0AA0	3VA6115-0HM31-0AA0
ETU350 LSI with dials					
40	3VA6140-5HN31-0AA0	3VA6140-6HN31-0AA0	3VA6140-7HN31-0AA0	3VA6140-8HN31-0AA0	3VA6160-0HN31-0AA0①
100	3VA6110-5HN31-0AA0	3VA6110-6HN31-0AA0	3VA6110-7HN31-0AA0	3VA6110-8HN31-0AA0	3VA6110-0HN31-0AA0
150	3VA6115-5HN31-0AA0	3VA6115-6HN31-0AA0	3VA6115-7HN31-0AA0	3VA6115-8HN31-0AA0	3VA6115-0HN31-0AA0
ETU550 LSI with LCD					
40	3VA6140-5JP31-0AA0	3VA6140-6JP31-0AA0	3VA6140-7JP31-0AA0	3VA6140-8JP31-0AA0	—
100	3VA6110-5JP31-0AA0	3VA6110-6JP31-0AA0	3VA6110-7JP31-0AA0	3VA6110-8JP31-0AA0	—
150	3VA6115-5JP31-0AA0	3VA6115-6JP31-0AA0	3VA6115-7JP31-0AA0	3VA6115-8JP31-0AA0	—
ETU556 LSI(G Alarm) with LCD					
40	3VA6140-5JT31-0AA0	3VA6140-6JT31-0AA0	3VA6140-7JT31-0AA0	3VA6140-8JT31-0AA0	—
100	3VA6110-5JT31-0AA0	3VA6110-6JT31-0AA0	3VA6110-7JT31-0AA0	3VA6110-8JT31-0AA0	—
150	3VA6115-5JT31-0AA0	3VA6115-6JT31-0AA0	3VA6115-7JT31-0AA0	3VA6115-8JT31-0AA0	—
ETU560 LSIG with LCD					
40	3VA6140-5JQ31-0AA0	3VA6140-6JQ31-0AA0	3VA6140-7JQ31-0AA0	3VA6140-8JQ31-0AA0	—
100	3VA6110-5JQ31-0AA0	3VA6110-6JQ31-0AA0	3VA6110-7JQ31-0AA0	3VA6110-8JQ31-0AA0	—
150	3VA6115-5JQ31-0AA0	3VA6115-6JQ31-0AA0	3VA6115-7JQ31-0AA0	3VA6115-8JQ31-0AA0	—
ETU820 LI LCD with Metering					
40	3VA6140-5KL31-0AA0	3VA6140-6KL31-0AA0	3VA6140-7KL31-0AA0	3VA6140-8KL31-0AA0	—
100	3VA6110-5KL31-0AA0	3VA6110-6KL31-0AA0	3VA6110-7KL31-0AA0	3VA6110-8KL31-0AA0	—
150	3VA6115-5KL31-0AA0	3VA6115-6KL31-0AA0	3VA6115-7KL31-0AA0	3VA6115-8KL31-0AA0	—
ETU830 LIG with LCD and Metering					
40	3VA6140-5KM31-0AA0	3VA6140-6KM31-0AA0	3VA6140-7KM31-0AA0	3VA6140-8KM31-0AA0	—
100	3VA6110-5KM31-0AA0	3VA6110-6KM31-0AA0	3VA6110-7KM31-0AA0	3VA6110-8KM31-0AA0	—
150	3VA6115-5KM31-0AA0	3VA6115-6KM31-0AA0	3VA6115-7KM31-0AA0	3VA6115-8KM31-0AA0	—
ETU850 LSI with LCD and Metering					
40	3VA6140-5KP31-0AA0	3VA6140-6KP31-0AA0	3VA6140-7KP31-0AA0	3VA6140-8KP31-0AA0	—
100	3VA6110-5KP31-0AA0	3VA6110-6KP31-0AA0	3VA6110-7KP31-0AA0	3VA6110-8KP31-0AA0	—
150	3VA6115-5KP31-0AA0	3VA6115-6KP31-0AA0	3VA6115-7KP31-0AA0	3VA6115-8KP31-0AA0	—
ETU856 LSI(G Alarm) with LCD and Metering					
40	3VA6140-5KT31-0AA0	3VA6140-6KT31-0AA0	3VA6140-7KT31-0AA0	3VA6140-8KT31-0AA0	3VA6160-0KT31-0AA0①
100	3VA6110-5KT31-0AA0	3VA6110-6KT31-0AA0	3VA6110-7KT31-0AA0	3VA6110-8KT31-0AA0	3VA6110-0KT31-0AA0
150	3VA6115-5KT31-0AA0	3VA6115-6KT31-0AA0	3VA6115-7KT31-0AA0	3VA6115-8KT31-0AA0	3VA6115-0KT31-0AA0
ETU860 LSIG with LCD and Metering					
40	3VA6140-5KQ31-0AA0	3VA6140-6KQ31-0AA0	3VA6140-7KQ31-0AA0	3VA6140-8KQ31-0AA0	3VA6160-0KQ31-0AA0①
100	3VA6110-5KQ31-0AA0	3VA6110-6KQ31-0AA0	3VA6110-7KQ31-0AA0	3VA6110-8KQ31-0AA0	3VA6110-0KQ31-0AA0
150	3VA6115-5KQ31-0AA0	3VA6115-6KQ31-0AA0	3VA6115-7KQ31-0AA0	3VA6115-8KQ31-0AA0	3VA6115-0KQ31-0AA0

① The lowest amperage trip unit available for the EDAE class breakers is 60 amps.



3VA61 150A 4-Pole

Ordering Information

The catalogue numbers listed below are for complete, non-interchangable trip circuit breakers without lugs.

Order required lugs or connection technology separately for field installation.

All 3VA61 electronict trip circuit breakers are cULus approved for reverse feed applications.

All 3VA61 electronic trip circuit breakers are available with 100% ratings.

For 100% rated electronic trip circuit breakers, change the 13th digit of the catalogue number to the number "2". (For example, a 18kA @600VAC, 40A, 3-pole, 100% rated 3VA61 would be catalogue number 3VA6140-5HL31-2AA0) Requires the use of copper lugs — see lug table below.

All 3VA6 circuit breakers are certified to CSA C22.2 No 5, and UL 489 listed Supplement SB, are marked "Naval", and are suitable for use at 50C.

3VA61 150A Frame 4-Pole Electronic Trip Unit

Continuous Ampere	M-Interrupting Class (MDAE) Catalogue Number	H-Interrupting Class (HDAE) Catalogue Number	C-Interrupting Class (CDAE) Catalogue Number	L-Interrupting Class (LDAE) Catalogue Number	E-Interrupting Class (EDAE) Catalogue Number
ETU320 LI with dials					
40	3VA6140-5HL41-0AA0	3VA6140-6HL41-0AA0	3VA6140-7HL41-0AA0	3VA6140-8HL41-0AA0	3VA6160-0HL41-0AA0①
100	3VA6110-5HL41-0AA0	3VA6110-6HL41-0AA0	3VA6110-7HL41-0AA0	3VA6110-8HL41-0AA0	3VA6110-0HL41-0AA0
150	3VA6115-5HL41-0AA0	3VA6115-6HL41-0AA0	3VA6115-7HL41-0AA0	3VA6115-8HL41-0AA0	3VA6115-0HL41-0AA0
ETU330 LIG with dials					
40	3VA6140-5HM41-0AA0	3VA6140-6HM41-0AA0	3VA6140-7HM41-0AA0	3VA6140-8HM41-0AA0	3VA6160-0HM41-0AA0①
100	3VA6110-5HM41-0AA0	3VA6110-6HM41-0AA0	3VA6110-7HM41-0AA0	3VA6110-8HM41-0AA0	3VA6110-0HM41-0AA0
150	3VA6115-5HM41-0AA0	3VA6115-6HM41-0AA0	3VA6115-7HM41-0AA0	3VA6115-8HM41-0AA0	3VA6115-0HM41-0AA0
ETU350 LSI with dials					
40	3VA6140-5HN41-0AA0	3VA6140-6HN41-0AA0	3VA6140-7HN41-0AA0	3VA6140-8HN41-0AA0	3VA6160-0HN41-0AA0①
100	3VA6110-5HN41-0AA0	3VA6110-6HN41-0AA0	3VA6110-7HN41-0AA0	3VA6110-8HN41-0AA0	3VA6110-0HN41-0AA0
150	3VA6115-5HN41-0AA0	3VA6115-6HN41-0AA0	3VA6115-7HN41-0AA0	3VA6115-8HN41-0AA0	3VA6115-0HN41-0AA0
ETU550 LSI with LCD					
40	3VA6140-5JP41-0AA0	3VA6140-6JP41-0AA0	3VA6140-7JP41-0AA0	3VA6140-8JP41-0AA0	—
100	3VA6110-5JP41-0AA0	3VA6110-6JP41-0AA0	3VA6110-7JP41-0AA0	3VA6110-8JP41-0AA0	—
150	3VA6115-5JP41-0AA0	3VA6115-6JP41-0AA0	3VA6115-7JP41-0AA0	3VA6115-8JP41-0AA0	—
ETU556 LSI(G Alarm) with LCD					
40	3VA6140-5JT41-0AA0	3VA6140-6JT41-0AA0	3VA6140-7JT41-0AA0	3VA6140-8JT41-0AA0	—
100	3VA6110-5JT41-0AA0	3VA6110-6JT41-0AA0	3VA6110-7JT41-0AA0	3VA6110-8JT41-0AA0	—
150	3VA6115-5JT41-0AA0	3VA6115-6JT41-0AA0	3VA6115-7JT41-0AA0	3VA6115-8JT41-0AA0	—
ETU560 LSIG with LCD					
40	3VA6140-5JQ41-0AA0	3VA6140-6JQ41-0AA0	3VA6140-7JQ41-0AA0	3VA6140-8JQ41-0AA0	—
100	3VA6110-5JQ41-0AA0	3VA6110-6JQ41-0AA0	3VA6110-7JQ41-0AA0	3VA6110-8JQ41-0AA0	—
150	3VA6115-5JQ41-0AA0	3VA6115-6JQ41-0AA0	3VA6115-7JQ41-0AA0	3VA6115-8JQ41-0AA0	—
ETU820 LI LCD with Metering					
40	3VA6140-5KL41-0AA0	3VA6140-6KL41-0AA0	3VA6140-7KL41-0AA0	3VA6140-8KL41-0AA0	—
100	3VA6110-5KL41-0AA0	3VA6110-6KL41-0AA0	3VA6110-7KL41-0AA0	3VA6110-8KL41-0AA0	—
150	3VA6115-5KL41-0AA0	3VA6115-6KL41-0AA0	3VA6115-7KL41-0AA0	3VA6115-8KL41-0AA0	—
ETU830 LIG with LCD and Metering					
40	3VA6140-5KM41-0AA0	3VA6140-6KM41-0AA0	3VA6140-7KM41-0AA0	3VA6140-8KM41-0AA0	—
100	3VA6110-5KM41-0AA0	3VA6110-6KM41-0AA0	3VA6110-7KM41-0AA0	3VA6110-8KM41-0AA0	—
150	3VA6115-5KM41-0AA0	3VA6115-6KM41-0AA0	3VA6115-7KM41-0AA0	3VA6115-8KM41-0AA0	—
ETU850 LSI with LCD and Metering					
40	3VA6140-5KP41-0AA0	3VA6140-6KP41-0AA0	3VA6140-7KP41-0AA0	3VA6140-8KP41-0AA0	—
100	3VA6110-5KP41-0AA0	3VA6110-6KP41-0AA0	3VA6110-7KP41-0AA0	3VA6110-8KP41-0AA0	—
150	3VA6115-5KP41-0AA0	3VA6115-6KP41-0AA0	3VA6115-7KP41-0AA0	3VA6115-8KP41-0AA0	—
ETU856 LSI(G Alarm) with LCD and Metering					
40	3VA6140-5KT41-0AA0	3VA6140-6KT41-0AA0	3VA6140-7KT41-0AA0	3VA6140-8KT41-0AA0	3VA6160-0KT41-0AA0①
100	3VA6110-5KT41-0AA0	3VA6110-6KT41-0AA0	3VA6110-7KT41-0AA0	3VA6110-8KT41-0AA0	3VA6110-0KT41-0AA0
150	3VA6115-5KT41-0AA0	3VA6115-6KT41-0AA0	3VA6115-7KT41-0AA0	3VA6115-8KT41-0AA0	3VA6115-0KT41-0AA0
ETU860 LSIG with LCD and Metering					
40	3VA6140-5KQ41-0AA0	3VA6140-6KQ41-0AA0	3VA6140-7KQ41-0AA0	3VA6140-8KQ41-0AA0	3VA6160-0KQ41-0AA0①
100	3VA6110-5KQ41-0AA0	3VA6110-6KQ41-0AA0	3VA6110-7KQ41-0AA0	3VA6110-8KQ41-0AA0	3VA6110-0KQ41-0AA0
150	3VA6115-5KQ41-0AA0	3VA6115-6KQ41-0AA0	3VA6115-7KQ41-0AA0	3VA6115-8KQ41-0AA0	3VA6115-0KQ41-0AA0

① The lowest amperage trip unit available for the EDAE class breakers is 60 amps.

Connectors for 75C wire for 3VA61

Type	Minimum cable size	Maximum cable size	Part Number (kit of 3 lugs)	Part Number (kit of 4 lugs)
Steel Wrap around (Cu cable only) single cable lugs	AWG 10	3/0	**3VA9143-0JA12**	**3VA9144-0JA12**
	AWG 4	350 kcmil	**3VA9243-0JA12**	**3VA9244-0JA12**
Aluminum Body Lug (Cu/Al cable) single cable lugs	AWG 14	1/0	**3VA9143-0JB11**	**3VA9144-0JB11**
	AWG 6	350 kcmil	**3VA9243-0JB12**	**3VA9244-0JB12**
Aluminum body lug with control wire tap (Cu/Al cable) single cable lugs	AWG 14	1/0	**3VA9143-0JG11**	**3VA9144-0JG11**
	AWG 6	350 kcmil	**3VA9243-0JG12**	**3VA9244-0JG12**
Aluminum body lug large (Cu/Al cable) single cable lugs and 1 ext'd terminal cover	AWG 2	350 kcmil	**3VA9243-0JJ13**	**3VA9244-0JJ13**
Aluminum body lug large with control wire tap (Cu/Al cable) single cable lugs and 1 extended terminal cover	AWG 2	350 kcmil	**3VA9243-0JC13**	**3VA9244-0JC13**
Aluminum body lug, 2 cables (Cu/Al cable) with 1 extended terminal cover	AWG 4	300 kcmil	**3VA9243-0JJ22**	**3VA9244-0JJ22**
Aluminum body lug, 2 cables (Cu/Al cable) with control wire tap and 1 extended terminal cover	AWG 4	300 kcmil	**3VA9243-0JC22**	**3VA9244-0JC22**
Distribution lug, 6 Cables (Cu/Al cable) with 1 extended terminal cover	AWG 14	AWG 2	**3VA9243-0JF60**	**3VA9244-0JF60**
Copper body lug (Cu cable only) single cable lugs kit of 3 single lugs (meets requirements for 100% rated breakers)	AWG 14	1/0	**3VA9143-0JD11**	**3VA9144-0JD11**
	AWG 6	350 kcmil	**3VA9243-0JD12**	**3VA9244-0JD12**
Copper body lug (Cu cable only) with control wire tap single cable lugs	AWG 14	1/0	**3VA9143-0JK11**	**3VA9144-0JK11**
	AWG 6	350 kcmil	**3VA9243-0JK12**	**3VA9244-0JK12**

Interrupting Ratings for 3VA61

Interrupting Class	Breaker Type	RMS Symmetrical Amperes (kA) Volts AC (50/60 Hz) 240	480Y/277V	480	600
M	MDAE	100	35	35	18
H	HDAE	100	65	65	22
C	CDAE	200	100	100	35
L	LDAE	200	150	150	50
E	EDAE	—	200	200	100

Dimensions

Shipping Weight

Breaker	Poles	W in. (mm)	H in. (mm)	D in. (mm)	lbs.	kg
3VA61	3	4.1 (105)	7.8 (198)	3.4 (86)	5.5	2.5
3VA61	4	5.5 (140)	7.8 (198)	3.4 (86)	7.1	3.2

Trip Settings for 3VA61

ETU320-LI, ETU330-LIG, ETU350-LSI

Continuous Amperage	LI, LIG, LSI			LSI		LIG	LI, LIG, LSI 4P only
I_n (Amp)	I_r(Amp) (L)	t_{rd} (sec) (L)	I_i (Amp) (I)①	I_{sd}= xIr (Amp) (S)	t_{sd} (sec) (S)	I_g (Amp) (G)	I_N=xI, (Amp)
40	15 - 40	0.5 - 17	60-480	1.5 - 10	0.08 - 0.4	15 - 40	1 / OFF
100	40 - 100	0.5 - 17	150-1200	1.5 - 10		20 - 100	0.5 - 1 / OFF
150	60 - 150	0.5 - 17	225-1500	1.5 - 10		30 - 150	0.5 - 1 / OFF

① I_i for ETU350 is fixed at 12X I_n

ETU550-LSI, ETU556 LSI(A), ETU560-LSIG, ETU820-LI, ETU830-LIG, ETU850-LSI, ETU856 LSI(A), ETU860-LSIG

Continuous Amperage	LI, LIG, LSI, LSIG, LSI(G)			LSI, LSIG, LSI(G)		LIG, LSIG, LSI(G)		LSI 3P with External CT	LI, LIG, LSI, LSIG, LSI(G) 4P only
I_n (Amp)	I_r(Amp) (L)	t_{rd} (sec) (L)	I_i (Amp) (I)	I_{sd} (Amp) (S)	t_{sd} (sec) (S)	I_g (Amp) (G)	t_g (G)	I_N=xI, (Amp)	I_N (Amp)
40	15 - 40	0.5 - 25	60-480	24 - 400	0.05 - 0.5	15 - 40	0.05 - 0.8	15 - 64 / OFF	15 - 64 / OFF
100	40 - 100	0.5 - 25	150-1200	60 - 1000		20 - 100		20 - 160 / OFF	20 - 150 / OFF
150	60 - 150	0.5 - 20	225-1500	90 - 1500		30 - 150		30 - 240 / OFF	30 - 150 / OFF

For specific trip settings refer to the Electronic Trip Unit section of the 3VA Systems Manual, which can be found in the document download center at **https://www.siemens.com/download?BTLV_50412**.

Internal accessories Optional equipment	Slot No.:	3VA6 150/250 A 3-pole								3VA6 150/250 A 4-pole							
		24	23	24	21	250 A	11	12	13	14	24	23	22	21	250 A	11	12	13	14
Auxiliary switch	**Type**																		
Auxiliary switch	AUX_HQ	x	x	x	x		x	x	x	x	x	x	x	x		x	x	x	x
	AUX_HQ_el	x	x	x	x		x	x	x	x	x	x	x	x		x	x	x	x
	AUX_HP		x		x			x		x		x		x			x		x
Leading changeover switch	LCS_HQ						x									x			
	LCS_HQ_el						x									x			
	LCS_HP							x									x		
Auxiliary switch	**Type**																		
Trip alarm switch	TAS_HQ			x	x		x	x					x	x		x	x		
	TAS_HQ_el			x	x		x	x					x	x		x	x		
	TAS_HP				x			x						x			x		
Electrical alarm switch	EAS_HQ									x									x
	EAS_HQ_el									x									x
Auxiliary switch	**Type**																		
Shunt trip flexible	STF		x					x				x					x		
Shunt trip left	STL		x									x							
Undervoltage release	UVR		x									x							
Universal release	UVI		x									x							
ETU/communication	**Type**																		
Communication module Breaker data server	COM060							x									x		
24 V module								x									x		
Other																			
Cylinder lock (type Ronis)								x									x		

See page 5-72 for internal accessory part numbers.

3VA52 250 A Frame, 2-(3)Pole Thermal-Magnetic Trip Unit

Cont. Ampere Rating	M-Interrupting Class (MFAS) Catalogue Number	H-Interrupting Class (HFAS) Catalogue Number	C-Interrupting Class (CFAS) Catalogue Number
		TM210 FTFM	
40	3VA5240-5ED61-0AA0	3VA5240-6ED61-0AA0	3VA5240-7ED61-0AA0
45	3VA5245-5ED61-0AA0	3VA5245-6ED61-0AA0	3VA5245-7ED61-0AA0
50	3VA5250-5ED61-0AA0	3VA5250-6ED61-0AA0	3VA5250-7ED61-0AA0
60	3VA5260-5ED61-0AA0	3VA5260-6ED61-0AA0	3VA5260-7ED61-0AA0
70	3VA5270-5ED61-0AA0	3VA5270-6ED61-0AA0	3VA5270-7ED61-0AA0
80	3VA5280-5ED61-0AA0	3VA5280-6ED61-0AA0	3VA5280-7ED61-0AA0
90	3VA5290-5ED61-0AA0	3VA5290-6ED61-0AA0	3VA5290-7ED61-0AA0
100	3VA5210-5ED61-0AA0	3VA5210-6ED61-0AA0	3VA5210-7ED61-0AA0
110	3VA5211-5ED61-0AA0	3VA5211-6ED61-0AA0	3VA5211-7ED61-0AA0
125	3VA5212-5ED61-0AA0	3VA5212-6ED61-0AA0	3VA5212-7ED61-0AA0
150	3VA5215-5ED61-0AA0	3VA5215-6ED61-0AA0	3VA5215-7ED61-0AA0
175	3VA5217-5ED61-0AA0	3VA5217-6ED61-0AA0	3VA5217-7ED61-0AA0
200	3VA5220-5ED61-0AA0	3VA5220-6ED61-0AA0	3VA5220-7ED61-0AA0
225	3VA5222-5ED61-0AA0	3VA5222-6ED61-0AA0	3VA5222-7ED61-0AA0
250	3VA5225-5ED61-0AA0	3VA5225-6ED61-0AA0	3VA5225-7ED61-0AA0
		TM230 FTAM	
70	3VA5270-5EC61-0AA0	3VA5270-6EC61-0AA0	3VA5270-7EC61-0AA0
80	3VA5280-5EC61-0AA0	3VA5280-6EC61-0AA0	3VA5280-7EC61-0AA0
90	3VA5290-5EC61-0AA0	3VA5290-6EC61-0AA0	3VA5290-7EC61-0AA0
100	3VA5210-5EC61-0AA0	3VA5210-6EC61-0AA0	3VA5210-7EC61-0AA0
110	3VA5211-5EC61-0AA0	3VA5211-6EC61-0AA0	3VA5211-7EC61-0AA0
125	3VA5212-5EC61-0AA0	3VA5212-6EC61-0AA0	3VA5212-7EC61-0AA0
150	3VA5215-5EC61-0AA0	3VA5215-6EC61-0AA0	3VA5215-7EC61-0AA0
175	3VA5217-5EC61-0AA0	3VA5217-6EC61-0AA0	3VA5217-7EC61-0AA0
200	3VA5220-5EC61-0AA0	3VA5220-6EC61-0AA0	3VA5220-7EC61-0AA0
225	3VA5222-5EC61-0AA0	3VA5222-6EC61-0AA0	3VA5222-7EC61-0AA0
250	3VA5225-5EC61-0AA0	3VA5225-6EC61-0AA0	3VA5225-7EC61-0AA0

Dimensions

Shipping Weight

Breaker	Poles	W in. (mm)	H in. (mm)	D in. (mm)	lbs.	kg
3VA52	2(3-) pole	4.1 (105)	7.3 (185)	3.3 (83)	4.1	1.9
3VA52	3-pole	4.1 (105)	7.3 (185)	3.3 (83)	4.5	2.1



3VA52 250A 3-Pole

Ordering Information

The catalogue numbers listed here are for complete, non-interchangable trip circuit breakers without lugs.

Order required lugs or connection technology separately for field installation.

All 3VA52 thermal-magnetic trip circuit breakers are cULus approved for reverse feed applications.

For NAVAL rated thermal-magnetic trip circuit breakers, change the 13th digit of the catalogue number to the number "1". (For example, a 18kA @600VAC, 150A, 3-pole, NAVAL rated 3VA52 would be catalogue number 3VA5215-5ED31-1AA0)

3VA52 250 A Frame, 3-Pole Thermal-Magnetic Trip Unit

Cont. Ampere Rating	M-Interrupting Class (MFAS)	H-Interrupting Class (HFAS)	C-Interrupting Class (CFAS)
	Catalogue Number	Catalogue Number	Catalogue Number
	TM210 FTFM①		
40	3VA5240-5ED31-0AA0	3VA5240-6ED31-0AA0	3VA5240-7ED31-0AA0
45	3VA5245-5ED31-0AA0	3VA5245-6ED31-0AA0	3VA5245-7ED31-0AA0
50	3VA5250-5ED31-0AA0	3VA5250-6ED31-0AA0	3VA5250-7ED31-0AA0
60	3VA5260-5ED31-0AA0	3VA5260-6ED31-0AA0	3VA5260-7ED31-0AA0
70	3VA5270-5ED31-0AA0	3VA5270-6ED31-0AA0	3VA5270-7ED31-0AA0
80	3VA5280-5ED31-0AA0	3VA5280-6ED31-0AA0	3VA5280-7ED31-0AA0
90	3VA5290-5ED31-0AA0	3VA5290-6ED31-0AA0	3VA5290-7ED31-0AA0
100	3VA5210-5ED31-0AA0	3VA5210-6ED31-0AA0	3VA5210-7ED31-0AA0
110	3VA5211-5ED31-0AA0	3VA5211-6ED31-0AA0	3VA5211-7ED31-0AA0
125	3VA5212-5ED31-0AA0	3VA5212-6ED31-0AA0	3VA5212-7ED31-0AA0
150	3VA5215-5ED31-0AA0	3VA5215-6ED31-0AA0	3VA5215-7ED31-0AA0
175	3VA5217-5ED31-0AA0	3VA5217-6ED31-0AA0	3VA5217-7ED31-0AA0
200	3VA5220-5ED31-0AA0	3VA5220-6ED31-0AA0	3VA5220-7ED31-0AA0
225	3VA5222-5ED31-0AA0	3VA5222-6ED31-0AA0	3VA5222-7ED31-0AA0
250	3VA5225-5ED31-0AA0	3VA5225-6ED31-0AA0	3VA5225-7ED31-0AA0
	TM230 FTAM①		
70	3VA5270-5EC31-0AA0	3VA5270-6EC31-0AA0	3VA5270-7EC31-0AA0
80	3VA5280-5EC31-0AA0	3VA5280-6EC31-0AA0	3VA5280-7EC31-0AA0
90	3VA5290-5EC31-0AA0	3VA5290-6EC31-0AA0	3VA5290-7EC31-0AA0
100	3VA5210-5EC31-0AA0	3VA5210-6EC31-0AA0	3VA5210-7EC31-0AA0
110	3VA5211-5EC31-0AA0	3VA5211-6EC31-0AA0	3VA5211-7EC31-0AA0
125	3VA5212-5EC31-0AA0	3VA5212-6EC31-0AA0	3VA5212-7EC31-0AA0
150	3VA5215-5EC31-0AA0	3VA5215-6EC31-0AA0	3VA5215-7EC31-0AA0
175	3VA5217-5EC31-0AA0	3VA5217-6EC31-0AA0	3VA5217-7EC31-0AA0
200	3VA5220-5EC31-0AA0	3VA5220-6EC31-0AA0	3VA5220-7EC31-0AA0
225	3VA5222-5EC31-0AA0	3VA5222-6EC31-0AA0	3VA5222-7EC31-0AA0
250	3VA5225-5EC31-0AA0	3VA5225-6EC31-0AA0	3VA5225-7EC31-0AA0
	TM240 ATAM		
70	3VA5270-5EF31-0AA0	3VA5270-6EF31-0AA0	3VA5270-7EF31-0AA0
80	3VA5280-5EF31-0AA0	3VA5280-6EF31-0AA0	3VA5280-7EF31-0AA0
100	3VA5210-5EF31-0AA0	3VA5210-6EF31-0AA0	3VA5210-7EF31-0AA0
125	3VA5212-5EF31-0AA0	3VA5212-6EF31-0AA0	3VA5212-7EF31-0AA0
150	3VA5215-5EF31-0AA0	3VA5215-6EF31-0AA0	3VA5215-7EF31-0AA0
175	3VA5217-5EF31-0AA0	3VA5217-6EF31-0AA0	3VA5217-7EF31-0AA0
200	3VA5220-5EF31-0AA0	3VA5220-6EF31-0AA0	3VA5220-7EF31-0AA0
250	3VA5225-5EF31-0AA0	3VA5225-6EF31-0AA0	3VA5225-7EF31-0AA0

Ordering Information

The catalogue numbers listed here are for complete, non-interchangable trip circuit breakers without lugs.

Order required lugs or connection technology separately for field installation.

All 3VA52 thermal-magnetic trip circuit breakers are cULus approved for reverse feed applications.

For NAVAL rated thermal-magnetic trip circuit breakers, change the 13th digit of the catalogue number to the number "1". (For example, a 18kA @600VAC, 150A, 3-pole, NAVAL rated 3VA52 would be catalogue number 3VA5215-5ED31-1AA0)

Dimensions / Shipping Weight

Breaker	Poles	W in. (mm)	H in. (mm)	D in. (mm)	lbs.	kg
3VA52	2(3-) pole	4.1 (105)	7.3 (185)	3.3 (83)	4.1	1.9
3VA52	3-pole	4.1 (105)	7.3 (185)	3.3 (83)	4.5	2.1

① Available with NAVAL/50C ratings.

3VA52 250A Frame, 4-pole Thermal-Magnetic Trip Unit

Cont. Ampere Rating	M-Interrupting Class (MFAS)	H-Interrupting Class (HFAS)	C-Interrupting Class (CFAS)
	Catalogue Number	Catalogue Number	Catalogue Number
		TM210 FTFM	
40	3VA5240-5ED41-0AA0	3VA5240-6ED41-0AA0	3VA5240-7ED41-0AA0
45	3VA5245-5ED41-0AA0	3VA5245-6ED41-0AA0	3VA5245-7ED41-0AA0
50	3VA5250-5ED41-0AA0	3VA5250-6ED41-0AA0	3VA5250-7ED41-0AA0
60	3VA5260-5ED41-0AA0	3VA5260-6ED41-0AA0	3VA5260-7ED41-0AA0
70	3VA5270-5ED41-0AA0	3VA5270-6ED41-0AA0	3VA5270-7ED41-0AA0
80	3VA5280-5ED41-0AA0	3VA5280-6ED41-0AA0	3VA5280-7ED41-0AA0
90	3VA5290-5ED41-0AA0	3VA5290-6ED41-0AA0	3VA5290-7ED41-0AA0
100	3VA5210-5ED41-0AA0	3VA5210-6ED41-0AA0	3VA5210-7ED41-0AA0
110	3VA5211-5ED41-0AA0	3VA5211-6ED41-0AA0	3VA5211-7ED41-0AA0
125	3VA5212-5ED41-0AA0	3VA5212-6ED41-0AA0	3VA5212-7ED41-0AA0
150	3VA5215-5ED41-0AA0	3VA5215-6ED41-0AA0	3VA5215-7ED41-0AA0
175	3VA5217-5ED41-0AA0	3VA5217-6ED41-0AA0	3VA5217-7ED41-0AA0
200	3VA5220-5ED41-0AA0	3VA5220-6ED41-0AA0	3VA5220-7ED41-0AA0
225	3VA5222-5ED41-0AA0	3VA5222-6ED41-0AA0	3VA5222-7ED41-0AA0
250	3VA5225-5ED41-0AA0	3VA5225-6ED41-0AA0	3VA5225-7ED41-0AA0
		TM210 FTFM 100% Neutral	
90	3VA5290-5GD41-0AA0	3VA5290-6GD41-0AA0	3VA5290-7GD41-0AA0
100	3VA5210-5GD41-0AA0	3VA5210-6GD41-0AA0	3VA5210-7GD41-0AA0
110	3VA5211-5GD41-0AA0	3VA5211-6GD41-0AA0	3VA5211-7GD41-0AA0
125	3VA5212-5GD41-0AA0	3VA5212-6GD41-0AA0	3VA5212-7GD41-0AA0
150	3VA5215-5GD41-0AA0	3VA5215-6GD41-0AA0	3VA5215-7GD41-0AA0
175	3VA5217-5GD41-0AA0	3VA5217-6GD41-0AA0	3VA5217-7GD41-0AA0
200	3VA5220-5GD41-0AA0	3VA5220-6GD41-0AA0	3VA5220-7GD41-0AA0
225	3VA5222-5GD41-0AA0	3VA5222-6GD41-0AA0	3VA5222-7GD41-0AA0
250	3VA5225-5GD41-0AA0	3VA5225-6GD41-0AA0	3VA5225-7GD41-0AA0
		TM230 FTAM	
70	3VA5270-5EC41-0AA0	3VA5270-6EC41-0AA0	3VA5270-7EC41-0AA0
80	3VA5280-5EC41-0AA0	3VA5280-6EC41-0AA0	3VA5280-7EC41-0AA0
90	3VA5290-5EC41-0AA0	3VA5290-6EC41-0AA0	3VA5290-7EC41-0AA0
100	3VA5210-5EC41-0AA0	3VA5210-6EC41-0AA0	3VA5210-7EC41-0AA0
110	3VA5211-5EC41-0AA0	3VA5211-6EC41-0AA0	3VA5211-7EC41-0AA0
125	3VA5212-5EC41-0AA0	3VA5212-6EC41-0AA0	3VA5212-7EC41-0AA0
150	3VA5215-5EC41-0AA0	3VA5215-6EC41-0AA0	3VA5215-7EC41-0AA0
175	3VA5217-5EC41-0AA0	3VA5217-6EC41-0AA0	3VA5217-7EC41-0AA0
200	3VA5220-5EC41-0AA0	3VA5220-6EC41-0AA0	3VA5220-7EC41-0AA0
225	3VA5222-5EC41-0AA0	3VA5222-6EC41-0AA0	3VA5222-7EC41-0AA0
250	3VA5225-5EC41-0AA0	3VA5225-6EC41-0AA0	3VA5225-7EC41-0AA0
		TM230 FTAM 100% Neutral	
90	3VA5290-5GC41-0AA0	3VA5290-6GC41-0AA0	3VA5290-7GC41-0AA0
100	3VA5210-5GC41-0AA0	3VA5210-6GC41-0AA0	3VA5210-7GC41-0AA0
110	3VA5211-5GC41-0AA0	3VA5211-6GC41-0AA0	3VA5211-7GC41-0AA0
125	3VA5212-5GC41-0AA0	3VA5212-6GC41-0AA0	3VA5212-7GC41-0AA0
150	3VA5215-5GC41-0AA0	3VA5215-6GC41-0AA0	3VA5215-7GC41-0AA0
175	3VA5217-5GC41-0AA0	3VA5217-6GC41-0AA0	3VA5217-7GC41-0AA0
200	3VA5220-5GC41-0AA0	3VA5220-6GC41-0AA0	3VA5220-7GC41-0AA0
225	3VA5222-5GC41-0AA0	3VA5222-6GC41-0AA0	3VA5222-7GC41-0AA0
250	3VA5225-5GC41-0AA0	3VA5225-6GC41-0AA0	3VA5225-7GC41-0AA0
		TM240 ATAM	
70	3VA5270-5EF41-0AA0	3VA5270-6EF41-0AA0	3VA5270-7EF41-0AA0
80	3VA5280-5EF41-0AA0	3VA5280-6EF41-0AA0	3VA5280-7EF41-0AA0
100	3VA5210-5EF41-0AA0	3VA5210-6EF41-0AA0	3VA5210-7EF41-0AA0
125	3VA5212-5EF41-0AA0	3VA5212-6EF41-0AA0	3VA5212-7EF41-0AA0
150	3VA5215-5EF41-0AA0	3VA5215-6EF41-0AA0	3VA5215-7EF41-0AA0
175	3VA5217-5EF41-0AA0	3VA5217-6EF41-0AA0	3VA5217-7EF41-0AA0
200	3VA5220-5EF41-0AA0	3VA5220-6EF41-0AA0	3VA5220-7EF41-0AA0
250	3VA5225-5EF41-0AA0	3VA5225-6EF41-0AA0	3VA5225-7EF41-0AA0
		TM240 ATAM 100% Neutral	
100	3VA5210-5GF41-0AA0	3VA5210-6GF41-0AA0	3VA5210-7GF41-0AA0
125	3VA5212-5GF41-0AA0	3VA5212-6GF41-0AA0	3VA5212-7GF41-0AA0
150	3VA5215-5GF41-0AA0	3VA5215-6GF41-0AA0	3VA5215-7GF41-0AA0
175	3VA5217-5GF41-0AA0	3VA5217-6GF41-0AA0	3VA5217-7GF41-0AA0
200	3VA5220-5GF41-0AA0	3VA5220-6GF41-0AA0	3VA5220-7GF41-0AA0
250	3VA5225-5GF41-0AA0	3VA5225-6GF41-0AA0	3VA5225-7GF41-0AA0

Molded Case Circuit Breakers

3VA52 250A Thermal-magnetic Trip Circuit Breakers

Technical information

Interrupting Ratings for 3VA52

Interrupting Class	Breaker Type	RMS Symmetrical Amperes (kA)							
		Volts AC (50/60 Hz)					Volts DC		
		240	480Y/277V	480	600Y/347V	600	250	500	600 (3P)
M	MFAS	85	35	35	18	18	50	50	50
H	HFAS	100	65	65	25	25	85	85	85
C	CFAS	200	100	100	35	35	100	100	100

Trip Settings for 3VA52

TM210 - FTFM		
I_n (A)	I_r (A)	I_i (A)
100	100	1000
110	110	1100
125	125	1250
150	150	1500
175	175	1750
200	200	2000
225	225	2250
250	250	2500

TM230 - FTAM							
I_n (A)	I_r (A)	I_i (A)					
100	100	500	600	700	800	900	1000
110	110	550	660	770	880	990	1100
125	125	625	750	875	1000	1125	1125
150	150	750	900	1050	1200	1350	1500
175	175	875	1050	1225	1400	1575	1750
200	200	1000	1200	1400	1600	1800	2000
225	225	1125	1350	1575	1800	2025	2250
250	250	1250	1500	1750	2000	2250	2500

Connectors for 75C Wire for 3VA52

Type	Minimum cable size	Maximum cable size	Part Number (kit of 3 lugs)
Steel wrap around (Cu cable only), single cable lugs	AWG 10	3/0	**3VA9233-0JA11**
	AWG 4	350 kcmil	**3VA9233-0JA12**
Aluminum body lug (Cu/Al cable), single cable lugs	AWG 6	350 kcmil	**3VA9233-0JB12**
Aluminum body lug (Cu/Al cable) with control wire tap, single cable lugs	AWG 6	350 kcmil	**3VA9233-0JG12**
Aluminum body lug large (Cu/Al cable) single cable lugs with 1 extended terminal cover	AWG 2	350 kcmil	**3VA9233-0JJ13**
Aluminum body lug large with control wire tap (Cu/Al cable) single cable lugs and 1 extended terminal cover	AWG 2	350 kcmil	**3VA9233-0JC13**
Aluminum body lug, 2 cables (Cu/Al cable) with control wire tap and 1 extended terminal cover	AWG 4	300 kcmil	**3VA9233-0JJ22**
Distribution lug, 6 Cables (Cu/Al cable) with 1 extended terminal cover	AWG 14	AWG 2	**3VA9233-0JF60**
Copper body lug (Cu cable only) single cable lugs	AWG 6	350 kcmil	**3VA9233-0JD12**
Copper body lug with control wire tap (Cu cable only) single cable lugs	AWG 6	350 kcmil	**3VA9233-0JK12**

Internal accessories Optional equipment		3VA5 250 A 2(3)-pole & 3-pole								
	Slot No.:	24	23	22	21	250 A	11	12	13	14
Auxiliary switch	**Type**									
Auxiliary switch	AUX_HQ	x	x	x	x		x	x	x	x
	AUX_HQ_el	x	x	x	x		x	x	x	x
	AUX_HP	x		x			x		x	
			x					x		
Leading changeover switch	LCS_HQ						x			
	LCS_HQ_el						x			
	LCS_HP						x			
Auxiliary switch	**Type**									
Trip alarm switch	TAS_HQ			x	x		x	x		
	TAS_HQ_el			x	x		x	x		
	TAS_HP			x			x			
Auxiliary switch	**Type**									
Shunt trip flexible	STF		x							
Shunt trip left	STL		x							
Undervoltage release	UVR		x							
Universal release	UVI		x							
Other										
Cylinder lock (type Ronis)							x			

See page 5-72 for internal accessory part numbers.



3VA62 250A 3-Pole

Ordering Information

The catalogue numbers listed below are for complete, non-interchangable trip circuit breakers without lugs.

Order required lugs or connection technology separately for field installation.

All 3VA62 electronic trip circuit breakers are cULus approved for reverse feed applications.

All 3VA62 electronic trip circuit breakers are available with 100% ratings.

For 100% rated electronic trip circuit breakers, change the 13th digit of the catalogue number to the number "2". (For example, a 18kA @600VAC, 100A, 3-pole, 100% rated 3VA62 would be catalogue number 3VA6210-5HL31-2AA0) Requires the use of copper lugs — see lug table below.

All 3VA6 circuit breakers are certified to CSA C22.2 No 5, and UL 489 Supplement SB, are marked "Naval", and are suitable for use at 50C.

3VA62 250A Frame 3-Pole Electronic Trip Unit

Continuous Ampere	M-Interrupting Class (MFAE-Y)	H-Interrupting Class (HFAE-Y)	C-Interrupting Class (CFAE-Y)	L-Interrupting Class (LFAE-Y)	E-Interrupting Class (EFAE)
	Catalogue Number	Catalogue Number	Catalogue Number	Catalogue Number	Catalogue Number
ETU320 LI with dials					
100	3VA6210-5HL31-0AA0	3VA6210-6HL31-0AA0	3VA6210-7HL31-0AA0	3VA6210-8HL31-0AA0	—
250	3VA6225-5HL31-0AA0	3VA6225-6HL31-0AA0	3VA6225-7HL31-0AA0	3VA6225-8HL31-0AA0	3VA6225-0HL31-0AA0
ETU330 LIG with dials					
100	3VA6210-5HM31-0AA0	3VA6210-6HM31-0AA0	3VA6210-7HM31-0AA0	3VA6210-8HM31-0AA0	—
250	3VA6225-5HM31-0AA0	3VA6225-6HM31-0AA0	3VA6225-7HM31-0AA0	3VA6225-8HM31-0AA0	3VA6225-0HM31-0AA0
ETU350 LSI with dials					
100	3VA6210-5HN31-0AA0	3VA6210-6HN31-0AA0	3VA6210-7HN31-0AA0	3VA6210-8HN31-0AA0	—
250	3VA6225-5HN31-0AA0	3VA6225-6HN31-0AA0	3VA6225-7HN31-0AA0	3VA6225-8HN31-0AA0	3VA6225-0HN31-0AA0
ETU550 LSI with LCD					
100	3VA6210-5JP31-0AA0	3VA6210-6JP31-0AA0	3VA6210-7JP31-0AA0	3VA6210-8JP31-0AA0	—
250	3VA6225-5JP31-0AA0	3VA6225-6JP31-0AA0	3VA6225-7JP31-0AA0	3VA6225-8JP31-0AA0	—
ETU556 LSI(G Alarm) with LCD					
100	3VA6210-5JT31-0AA0	3VA6210-6JT31-0AA0	3VA6210-7JT31-0AA0	3VA6210-8JT31-0AA0	—
250	3VA6225-5JT31-0AA0	3VA6225-6JT31-0AA0	3VA6225-7JT31-0AA0	3VA6225-8JT31-0AA0	—
ETU560 LSIG with LCD					
100	3VA6210-5JQ31-0AA0	3VA6210-6JQ31-0AA0	3VA6210-7JQ31-0AA0	3VA6210-8JQ31-0AA0	—
250	3VA6225-5JQ31-0AA0	3VA6225-6JQ31-0AA0	3VA6225-7JQ31-0AA0	3VA6225-8JQ31-0AA0	—
ETU820 LI with LCD and Metering					
100	3VA6210-5KL31-0AA0	3VA6210-6KL31-0AA0	3VA6210-7KL31-0AA0	3VA6210-8KL31-0AA0	—
250	3VA6225-5KL31-0AA0	3VA6225-6KL31-0AA0	3VA6225-7KL31-0AA0	3VA6225-8KL31-0AA0	—
ETU830 LIG with LCD and Metering					
100	3VA6210-5KM31-0AA0	3VA6210-6KM31-0AA0	3VA6210-7KM31-0AA0	3VA6210-8KM31-0AA0	—
250	3VA6225-5KM31-0AA0	3VA6225-6KM31-0AA0	3VA6225-7KM31-0AA0	3VA6225-8KM31-0AA0	—
ETU850 LSI with LCD and Metering					
100	3VA6210-5KP31-0AA0	3VA6210-6KP31-0AA0	3VA6210-7KP31-0AA0	3VA6210-8KP31-0AA0	—
250	3VA6225-5KP31-0AA0	3VA6225-6KP31-0AA0	3VA6225-7KP31-0AA0	3VA6225-8KP31-0AA0	—
ETU856 LSI(G Alarm) with LCD and Metering					
100	3VA6210-5KT31-0AA0	3VA6210-6KT31-0AA0	3VA6210-7KT31-0AA0	3VA6210-8KT31-0AA0	—
250	3VA6225-5KT31-0AA0	3VA6225-6KT31-0AA0	3VA6225-7KT31-0AA0	3VA6225-8KT31-0AA0	3VA6225-0KT31-0AA0
ETU860 LSIG with LCD and Metering					
100	3VA6210-5KQ31-0AA0	3VA6210-6KQ31-0AA0	3VA6210-7KQ31-0AA0	3VA6210-8KQ31-0AA0	—
250	3VA6225-5KQ31-0AA0	3VA6225-6KQ31-0AA0	3VA6225-7KQ31-0AA0	3VA6225-8KQ31-0AA0	3VA6225-0KQ31-0AA0



3VA62 250A 4-Pole

Ordering Information

The catalogue numbers listed below are for complete, non-interchangable trip circuit breakers without lugs.

Order required lugs or connection technology separately for field installation.

All 3VA62 electronict trip circuit breakers are cULus approved for reverse feed applications.

All 3VA62 electronic trip circuit breakers are available with 100% ratings.

For 100% rated electronic trip circuit breakers, change the 13th digit of the catalogue number to the number "2". (For example, a 18kA @600VAC, 100A, 3-pole, 100% rated 3VA62 would be catalogue number 3VA6210-5HL31-2AA0) Requires the use of copper lugs — see lug table below.

All 3VA6 circuit breakers are certified to CSA C22.2 No 5, and UL 489 Supplement SB, are marked "Naval", and are suitable for use at 50C.

3VA62 250A Frame 4-Pole Electronic Trip Unit

Continuous Ampere	M-Interrupting Class (MFAE-Y)	H-Interrupting Class (HFAE-Y)	C-Interrupting Class (CFAE-Y)	L-Interrupting Class (LFAE-Y)	E-Interrupting Class (EFAE)
	Catalogue Number	Catalogue Number	Catalogue Number	Catalogue Number	Catalogue Number
ETU320 LI with dials					
100	3VA6210-5HL41-0AA0	3VA6210-6HL41-0AA0	3VA6210-7HL41-0AA0	3VA6210-8HL41-0AA0	—
250	3VA6225-5HL41-0AA0	3VA6225-6HL41-0AA0	3VA6225-7HL41-0AA0	3VA6225-8HL41-0AA0	3VA6225-0HL41-0AA0
ETU330 LIG with dials					
100	3VA6210-5HM41-0AA0	3VA6210-6HM41-0AA0	3VA6210-7HM41-0AA0	3VA6210-8HM41-0AA0	—
250	3VA6225-5HM41-0AA0	3VA6225-6HM41-0AA0	3VA6225-7HM41-0AA0	3VA6225-8HM41-0AA0	3VA6225-0HM41-0AA0
ETU350 LSI with dials					
100	3VA6210-5HN41-0AA0	3VA6210-6HN41-0AA0	3VA6210-7HN41-0AA0	3VA6210-8HN41-0AA0	—
250	3VA6225-5HN41-0AA0	3VA6225-6HN41-0AA0	3VA6225-7HN41-0AA0	3VA6225-8HN41-0AA0	3VA6225-0HN41-0AA0
ETU550 LSI with LCD					
100	3VA6210-5JP41-0AA0	3VA6210-6JP41-0AA0	3VA6210-7JP41-0AA0	3VA6210-8JP41-0AA0	—
250	3VA6225-5JP41-0AA0	3VA6225-6JP41-0AA0	3VA6225-7JP41-0AA0	3VA6225-8JP41-0AA0	—
ETU556 LSI(G Alarm) with LCD					
100	3VA6210-5JT41-0AA0	3VA6210-6JT41-0AA0	3VA6210-7JT41-0AA0	3VA6210-8JT41-0AA0	—
250	3VA6225-5JT41-0AA0	3VA6225-6JT41-0AA0	3VA6225-7JT41-0AA0	3VA6225-8JT41-0AA0	—
ETU560 LSIG with LCD					
100	3VA6210-5JQ41-0AA0	3VA6210-6JQ41-0AA0	3VA6210-7JQ41-0AA0	3VA6210-8JQ41-0AA0	—
250	3VA6225-5JQ41-0AA0	3VA6225-6JQ41-0AA0	3VA6225-7JQ41-0AA0	3VA6225-8JQ41-0AA0	—
ETU820 LI with LCD and Metering					
100	3VA6210-5KL41-0AA0	3VA6210-6KL41-0AA0	3VA6210-7KL41-0AA0	3VA6210-8KL41-0AA0	—
250	3VA6225-5KL41-0AA0	3VA6225-6KL41-0AA0	3VA6225-7KL41-0AA0	3VA6225-8KL41-0AA0	—
ETU830 LIG with LCD and Metering					
100	3VA6210-5KM41-0AA0	3VA6210-6KM41-0AA0	3VA6210-7KM41-0AA0	3VA6210-8KM41-0AA0	—
250	3VA6225-5KM41-0AA0	3VA6225-6KM41-0AA0	3VA6225-7KM41-0AA0	3VA6225-8KM41-0AA0	—
ETU850 LSI with LCD and Metering					
100	3VA6210-5KP41-0AA0	3VA6210-6KP41-0AA0	3VA6210-7KP41-0AA0	3VA6210-8KP41-0AA0	—
250	3VA6225-5KP41-0AA0	3VA6225-6KP41-0AA0	3VA6225-7KP41-0AA0	3VA6225-8KP41-0AA0	—
ETU856 LSI(G Alarm) with LCD and Metering					
100	3VA6210-5KT41-0AA0	3VA6210-6KT41-0AA0	3VA6210-7KT41-0AA0	3VA6210-8KT41-0AA0	—
250	3VA6225-5KT41-0AA0	3VA6225-6KT41-0AA0	3VA6225-7KT41-0AA0	3VA6225-8KT41-0AA0	3VA6225-0KT41-0AA0
ETU860 LSIG with LCD and Metering					
100	3VA6210-5KQ41-0AA0	3VA6210-6KQ41-0AA0	3VA6210-7KQ41-0AA0	3VA6210-8KQ41-0AA0	—
250	3VA6225-5KQ41-0AA0	3VA6225-6KQ41-0AA0	3VA6225-7KQ41-0AA0	3VA6225-8KQ41-0AA0	3VA6225-0KQ41-0AA0

Connectors for 75C wire for 3VA62

Type	Minimum cable size	Maximum cable size	Part Number (kit of 3 lugs)	Part Number (kit of 4 lugs)
Steel Wrap around (Cu cable only) single cable lugs	AWG 10	3/0	**3VA9143-0JA12**	**3VA9144-0JA12**
	AWG 4	350 kcmil	**3VA9243-0JA12**	**3VA9244-0JA12**
Aluminum Body Lug (Cu/Al cable) single cable lugs	AWG 14	1/0	**3VA9143-0JB11**	**3VA9144-0JB11**
	AWG 6	350 kcmil	**3VA9243-0JB12**	**3VA9244-0JB12**
Aluminum body lug with control wire tap (Cu/Al cable) single cable lugs	AWG 14	1/0	**3VA9143-0JG11**	**3VA9144-0JG11**
	AWG 6	350 kcmil	**3VA9243-0JG12**	**3VA9244-0JG12**
Aluminum body lug large (Cu/Al cable) single cable lugs and 1 ext'd terminal cover	AWG 2	350 kcmil	**3VA9243-0JJ13**	**3VA9244-0JJ13**
Aluminum body lug large with control wire tap (Cu/Al cable) single cable lugs and 1 extended terminal cover	AWG 2	350 kcmil	**3VA9243-0JC13**	**3VA9244-0JC13**
Aluminum body lug, 2 cables (Cu/Al cable) with 1 extended terminal cover	AWG 4	300 kcmil	**3VA9243-0JJ22**	**3VA9244-0JJ22**
Aluminum body lug, 2 cables (Cu/Al cable) with control wire tap and 1 extended terminal cover	AWG 4	300 kcmil	**3VA9243-0JC22**	**3VA9244-0JC22**
Distribution lug, 6 Cables (Cu/Al cable) with 1 extended terminal cover	AWG 14	AWG 2	**3VA9243-0JF60**	**3VA9244-0JF60**
Copper body lug (Cu cable only) single cable lugs (meets requirements for 100% rated breakers)	AWG 14	1/0	**3VA9143-0JD11**	**3VA9144-0JD11**
	AWG 6	350 kcmil	**3VA9243-0JD12**	**3VA9244-0JD12**
Copper body lug (Cu cable only) with control wire tap single cable lugs	AWG 14	1/0	**3VA9143-0JK11**	**3VA9144-0JK11**
	AWG 6	350 kcmil	**3VA9243-0JK12**	**3VA9244-0JK12**

Interrupting Ratings for 3VA62

Interrupting Class	Breaker Type	RMS Symmetrical Amperes (kA) Volts AC (50/60 Hz)				
		240	480Y/277V	480	600Y/347V	600
M	MFAE-Y	100	35	35	18	—
H	HFAE-Y	100	65	65	22	—
C	CFAE-Y	200	100	100	35	—
L	LFAE-Y	200	150	150	50	—
E	EFAE-Y	—	200	200	100	—

Dimensions / Shipping Weight

Breaker	Poles	W in. (mm)	H in. (mm)	D in. (mm)	lbs.	kg
3VA62	3	4.1 (105)	7.8 (198)	3.4 (86)	5.5	2.5
3VA62	4	5.5 (140)	7.8 (198)	3.4 (86)	7.1	3.2

Trip Settings for 3VA62

ETU320-LI, ETU330-LIG, ETU350-LSI

Continuous Amperage	LI, LIG, LSI			LSI		LIG	LI, LIG, LSI 4P only
I_n (Amp)	I_r(Amp) (L)	t_{rd} (sec) (L)	I_i (Amp) (I)①	I_{sd}= xIr (Amp) (S)	t_{sd} (sec) (S)	I_g (Amp) (G)	I_N=xI$_r$ (Amp)
100	40 - 100	0.5 - 17	150-1200	1.5 - 10	0.08 - 0.4	20 - 100	0.5 - 1 / OFF
250	100 - 250	0.5 - 13	375-2500	1.5 - 10		50 - 250	0.5 - 1 / OFF

① I_i for ETU350 is fixed at 12X I_n

ETU550-LSI, ETU556 LSI(A), ETU560-LSIG, ETU820-LI, ETU830-LIG, ETU850-LSI, ETU856 LSI(A), ETU860-LSIG

Continuous Amperage	LI, LIG, LSI, LSIG, LSI(G)			LSI, LSIG, LSI(G)		LIG, LSIG, LSI(G)		LSI 3P with External CT	LI, LIG, LSI, LSIG, LSI(G) 4P only
I_n (Amp)	I_r(Amp) (L)	t_{rd} (sec) (L)	I_i (Amp) (I)	I_{sd} (Amp) (S)	t_{sd} (sec) (S)	I_g (Amp) (G)	t_g (G)	I_N=xI$_r$ (Amp)	I_N (Amp)
100	40 - 100	0.5 - 25	150-1200	60 - 1000	0.05 - 0.5	20 - 100	0.05 - 0.8	20 - 160 / OFF	20 - 160 / OFF
250	100 - 250	0.5 - 13	375-2500	150 - 2500		50 - 250		50 - 400 / OFF	50 - 250 / OFF

For specific trip settings refer to the Electronic Trip Unit section of the 3VA Systems Manual, which can be found in the document download center at **https://www.siemens.com/download?BTLV_50412**

Internal accessories Optional equipment		3VA6 150/250 A 3-pole								3VA6 150/250 A 4-pole							
Slot No.:		24	23	22	21	250 A	11	12	13	14	24	23	22	21	250 A	11	12	13	14
Auxiliary switch	**Type**																		
Auxiliary switch	AUX_HQ	x	x	x	x		x	x	x	x	x	x	x	x		x	x	x	x
	AUX_HQ_el	x	x	x	x		x	x	x	x	x	x	x	x		x	x	x	x
	AUX_HP	x		x			x		x		x		x			x		x	
			x					x				x					x		
Leading changeover switch	LCS_HQ						x									x			
	LCS_HQ_el						x									x			
	LCS_HP						x									x			
Auxiliary switch	**Type**																		
Trip alarm switch	TAS_HQ			x	x		x	x					x	x		x	x		
	TAS_HQ_el			x	x		x	x					x	x		x	x		
	TAS_HP			x			x						x			x			
Electrical alarm switch	EAS_HQ									x									x
	EAS_HQ_el									x									x
Auxiliary switch	**Type**																		
Shunt trip flexible	STF		x				x					x				x			
Shunt trip left	STL		x									x							
Undervoltage release	UVR		x									x							
Universal release	UVI		x									x							
ETU/communication	**Type**																		
Communication module Breaker data server	COM060						x									x			
24 V module							x									x			
Other																			
Cylinder lock (type Ronis)							x									x			

See page 5-72 for internal accessory part numbers.

3VA53 400A Frame, 2-(3)Pole Frame, Thermal-Magnetic Trip Unit

Cont. Ampere Rating	M-Interrupting Class (MJAS)	H-Interrupting Class (HJAS)	C-Interrupting Class (CJAS)
	Catalogue Number	Catalogue Number	Catalogue Number
	TM230 FTAM		
200	3VA5320-5EC61-0AA0	3VA5320-6EC61-0AA0	3VA5320-7EC61-0AA0
225	3VA5322-5EC61-0AA0	3VA5322-6EC61-0AA0	3VA5322-7EC61-0AA0
250	3VA5325-5EC61-0AA0	3VA5325-6EC61-0AA0	3VA5325-7EC61-0AA0
300	3VA5330-5EC61-0AA0	3VA5330-6EC61-0AA0	3VA5330-7EC61-0AA0
350	3VA5335-5EC61-0AA0	3VA5335-6EC61-0AA0	3VA5335-7EC61-0AA0
400	3VA5340-5EC61-0AA0	3VA5340-6EC61-0AA0	3VA5340-7EC61-0AA0

3VA53 400A Frame, 3-Pole Frame, Thermal-Magnetic Trip Unit

Cont. Ampere Rating	M-Interrupting Class (MJAS)	H-Interrupting Class (HJAS)	C-Interrupting Class (CJAS)
	Catalogue Number	Catalogue Number	Catalogue Number
	TM230 FTAM①		
200	3VA5320-5EC31-0AA0	3VA5320-6EC31-0AA0	3VA5320-7EC31-0AA0
225	3VA5322-5EC31-0AA0	3VA5322-6EC31-0AA0	3VA5322-7EC31-0AA0
250	3VA5325-5EC31-0AA0	3VA5325-6EC31-0AA0	3VA5325-7EC31-0AA0
300	3VA5330-5EC31-0AA0	3VA5330-6EC31-0AA0	3VA5330-7EC31-0AA0
350	3VA5335-5EC31-0AA0	3VA5335-6EC31-0AA0	3VA5335-7EC31-0AA0
400	3VA5340-5EC31-0AA0	3VA5340-6EC31-0AA0	3VA5340-7EC31-0AA0
	TM240 ATAM		
200	3VA5320-5EF31-0AA0	3VA5320-6EF31-0AA0	3VA5320-7EF31-0AA0
225	3VA5322-5EF31-0AA0	3VA5322-6EF31-0AA0	3VA5322-7EF31-0AA0
250	3VA5325-5EF31-0AA0	3VA5325-6EF31-0AA0	3VA5325-7EF31-0AA0
300	3VA5330-5EF31-0AA0	3VA5330-6EF31-0AA0	3VA5330-7EF31-0AA0
350	3VA5335-5EF31-0AA0	3VA5335-6EF31-0AA0	3VA5335-7EF31-0AA0
400	3VA5340-5EF31-0AA0	3VA5340-6EF31-0AA0	3VA5340-7EF31-0AA0

Dimensions

Shipping Weight

Breaker	Poles	W in. (mm)	H in. (mm)	D in. (mm)	lbs.	kg
3VA53	3	6.4 (162)	10.3 (262)	6.7 (170)	11.5	5.2
3VA53	4	8.2 (208)	10.3 (262)	6.7 (170)	15.0	6.8

Interrupting Ratings for 3VA53

Interrupting Class	Breaker Type	RMS Symmetrical Amperes (kA)									
		Volts AC (50/60 Hz)					Volts DC				
		240	480Y/277V	480	600Y/347V	600	250 (2P)	600 (3P)	750 (3P)	750 (4P)	1000 (4P)
M	MJAS	65	35	35	18	18	50	50	6	50	6
H	HJAS	100	65	65	25	25	85	85	6	85	6
C	CJAS	200	100	100	35	35	100	100	10	100	10

① Available with NAVAL/50C ratings.



3VA53 400A 3-Pole

Ordering Information

The catalogue numbers listed here are for complete, non-interchangable trip circuit breakers without lugs.

Order required lugs or connection technology separately for field installation.

All 3VA53 thermal-magnetic trip circuit breakers are cULus approved for reverse feed applications.

For NAVAL rated thermal-magnetic trip circuit breakers, change the 13th digit of the catalogue number to the number "1". (For example, a 18kA @600VAC, 400A, 3-pole, rated 3VA53 would be catalogue number 3VA5340-5EC31-1AA0)

3VA53 400A Frame, 4-Pole Frame, Thermal-Magnetic Trip Unit

Cont. Ampere Rating	M-Interrupting Class (MJAS) Catalogue Number	H-Interrupting Class (HJAS) Catalogue Number	C-Interrupting Class (CJAS) Catalogue Number
TM230 FTAM Unprotected Neutral			
200	3VA5320-5EC41-0AA0	3VA5320-6EC41-0AA0	3VA5320-7EC41-0AA0
225	3VA5322-5EC41-0AA0	3VA5322-6EC41-0AA0	3VA5322-7EC41-0AA0
250	3VA5325-5EC41-0AA0	3VA5325-6EC41-0AA0	3VA5325-7EC41-0AA0
300	3VA5330-5EC41-0AA0	3VA5330-6EC41-0AA0	3VA5330-7EC41-0AA0
350	3VA5335-5EC41-0AA0	3VA5335-6EC41-0AA0	3VA5335-7EC41-0AA0
400	3VA5340-5EC41-0AA0	3VA5340-6EC41-0AA0	3VA5340-7EC41-0AA0
TM240 ATAM Unprotected Neutral			
200	3VA5320-5EF41-0AA0	3VA5320-6EF41-0AA0	3VA5320-7EF41-0AA0
225	3VA5322-5EF41-0AA0	3VA5322-6EF41-0AA0	3VA5322-7EF41-0AA0
250	3VA5325-5EF41-0AA0	3VA5325-6EF41-0AA0	3VA5325-7EF41-0AA0
300	3VA5330-5EF41-0AA0	3VA5330-6EF41-0AA0	3VA5330-7EF41-0AA0
350	3VA5335-5EF41-0AA0	3VA5335-6EF41-0AA0	3VA5335-7EF41-0AA0
400	3VA5340-5EF41-0AA0	3VA5340-6EF41-0AA0	3VA5340-7EF41-0AA0
TM230 FTAM 100% Neutral			
200	3VA5320-5GC41-0AA0	3VA5320-6GC41-0AA0	3VA5320-7GC41-0AA0
225	3VA5322-5GC41-0AA0	3VA5322-6GC41-0AA0	3VA5322-7GC41-0AA0
250	3VA5325-5GC41-0AA0	3VA5325-6GC41-0AA0	3VA5325-7GC41-0AA0
300	3VA5330-5GC41-0AA0	3VA5330-6GC41-0AA0	3VA5330-7GC41-0AA0
350	3VA5335-5GC41-0AA0	3VA5335-6GC41-0AA0	3VA5335-7GC41-0AA0
400	3VA5340-5GC41-0AA0	3VA5340-6GC41-0AA0	3VA5340-7GC41-0AA0
TM240 ATAM 100% Neutral			
200	3VA5320-5GF41-0AA0	3VA5320-6GF41-0AA0	3VA5320-7GF41-0AA0
225	3VA5322-5GF41-0AA0	3VA5322-6GF41-0AA0	3VA5322-7GF41-0AA0
250	3VA5325-5GF41-0AA0	3VA5325-6GF41-0AA0	3VA5325-7GF41-0AA0
300	3VA5330-5GF41-0AA0	3VA5330-6GF41-0AA0	3VA5330-7GF41-0AA0
350	3VA5335-5GF41-0AA0	3VA5335-6GF41-0AA0	3VA5335-7GF41-0AA0
400	3VA5340-5GF41-0AA0	3VA5340-6GF41-0AA0	3VA5340-7GF41-0AA0



3VA53 400A 4-Pole

Dimensions

Shipping Weight

Breaker	Poles	W in. (mm)	H in. (mm)	D in. (mm)	lbs.	kg
3VA53	3	6.4 (162)	10.3 (262)	6.7 (170)	11.5	5.2
3VA53	4	8.2 (208)	10.3 (262)	6.7 (170)	15.0	6.8

Interrupting Ratings for 3VA53

Interrupting Class	Breaker Type	RMS Symmetrical Amperes (kA)							
		Volts AC (50/60 Hz)					Volts DC		
		240	480Y/277V	480	600Y/347V	600	250	500	600 (3P)
M	MJAS	65	35	35	18	18	50	50	50
H	HJAS	100	65	65	25	25	85	85	85
C	CJAS	200	100	100	35	35	100	100	100

Internal accessories Optional equipment	Type	Slot No.: 25	24	23	22	21	600 A	11	12	13	14	15
		3VA5 400/600 A 3 & 4-pole										
Auxiliary switch	**Type**											
Auxiliary switch	AUX_HQ	x	x	x	x	x		x	x	x	x	x
	AUX_HQ_el	x	x	x	x	x		x	x	x	x	x
	AUX_HP		x		x				x		x	
		x		x				x		x		
Leading changeover switch	LCS_HQ							x				
	LCS_HQ_el							x				
	LCS_HP							x				
Auxiliary switch	**Type**											
Trip alarm switch	TAS_HQ				x	x		x	x			
	TAS_HQ_el				x	x		x	x			
	TAS_HP				x			x				
Auxiliary switch	**Type**											
Shunt trip flexible	STF				x			x				
Shunt trip left	STL				x							
Undervoltage release	UVR				x							
Universal release	UVI				x							
Other												
Cylinder lock (type Ronis)								x				



3VA63 400A 3-Pole

Ordering Information

The catalogue numbers listed below are for complete, non-interchangable trip circuit breakers without lugs.

Order required lugs or connection technology separately for field installation.

All 3VA63 electronict trip circuit breakers are cULus approved for reverse feed applications.

3VA63 electronic trip circuit breakers are available with 100% ratings (250A only).

For 100% rated electronic trip circuit breakers, change the 13th digit of the catalogue number to the number "2". (For example, a 18kA @600VAC, 250A, 3-pole, 100% rated 3VA63 would be catalogue number 3VA6325-5HL31-2AA0) Requires the use of copper lugs — see lug table below.

All 3VA6 circuit breakers are certified to CSA C22.2 No 5, and UL 489 Supplement SB, are marked "Naval", and are suitable for use at 50C.

3VA63 400A Frame 3-Pole Electronic Trip Unit

Continuous Ampere	M-Interrupting Class (MJAE) Catalogue Number	H-Interrupting Class (HJAE) Catalogue Number	C-Interrupting Class (CJAE) Catalogue Number	L-Interrupting Class (LJAE) Catalogue Number	E-Interrupting Class (EJAE) Catalogue Number
ETU320 LI with dials					
250	3VA6325-5HL31-0AA0	3VA6325-6HL31-0AA0	3VA6325-7HL31-0AA0	3VA6325-8HL31-0AA0	3VA6325-0HL31-0AA0
400	3VA6340-5HL31-0AA0	3VA6340-6HL31-0AA0	3VA6340-7HL31-0AA0	3VA6340-8HL31-0AA0	3VA6340-0HL31-0AA0
ETU330 LIG with dials					
250	3VA6325-5HM31-0AA0	3VA6325-6HM31-0AA0	3VA6325-7HM31-0AA0	3VA6325-8HM31-0AA0	3VA6325-0HM31-0AA0
400	3VA6340-5HM31-0AA0	3VA6340-6HM31-0AA0	3VA6340-7HM31-0AA0	3VA6340-8HM31-0AA0	3VA6340-0HM31-0AA0
ETU350 LSI with dials					
250	3VA6325-5HN31-0AA0	3VA6325-6HN31-0AA0	3VA6325-7HN31-0AA0	3VA6325-8HN31-0AA0	3VA6325-0HN31-0AA0
400	3VA6340-5HN31-0AA0	3VA6340-6HN31-0AA0	3VA6340-7HN31-0AA0	3VA6340-8HN31-0AA0	3VA6340-0HN31-0AA0
ETU550 LSI with LCD					
250	3VA6325-5JP31-0AA0	3VA6325-6JP31-0AA0	3VA6325-7JP31-0AA0	3VA6325-8JP31-0AA0	—
400	3VA6340-5JP31-0AA0	3VA6340-6JP31-0AA0	3VA6340-7JP31-0AA0	3VA6340-8JP31-0AA0	—
ETU556 LSI(G Alarm) with LCD					
250	3VA6325-5JT31-0AA0	3VA6325-6JT31-0AA0	3VA6325-7JT31-0AA0	3VA6325-8JT31-0AA0	—
400	3VA6340-5JT31-0AA0	3VA6340-6JT31-0AA0	3VA6340-7JT31-0AA0	3VA6340-8JT31-0AA0	—
ETU560 LSIG with LCD					
250	3VA6325-5JQ31-0AA0	3VA6325-6JQ31-0AA0	3VA6325-7JQ31-0AA0	3VA6325-8JQ31-0AA0	—
400	3VA6340-5JQ31-0AA0	3VA6340-6JQ31-0AA0	3VA6340-7JQ31-0AA0	3VA6340-8JQ31-0AA0	—
ETU820 LI with LCD and Metering					
250	3VA6325-5KL31-0AA0	3VA6325-6KL31-0AA0	3VA6325-7KL31-0AA0	3VA6325-8KL31-0AA0	—
400	3VA6340-5KL31-0AA0	3VA6340-6KL31-0AA0	3VA6340-7KL31-0AA0	3VA6340-8KL31-0AA0	—
ETU830 LIG with LCD and Metering					
250	3VA6325-5KM31-0AA0	3VA6325-6KM31-0AA0	3VA6325-7KM31-0AA0	3VA6325-8KM31-0AA0	—
400	3VA6340-5KM31-0AA0	3VA6340-6KM31-0AA0	3VA6340-7KM31-0AA0	3VA6340-8KM31-0AA0	—
ETU850 LSI with LCD and Metering					
250	3VA6325-5KP31-0AA0	3VA6325-6KP31-0AA0	3VA6325-7KP31-0AA0	3VA6325-8KP31-0AA0	—
400	3VA6340-5KP31-0AA0	3VA6340-6KP31-0AA0	3VA6340-7KP31-0AA0	3VA6340-8KP31-0AA0	—
ETU856 LSI(G Alarm) with LCD and Metering					
250	3VA6325-5KT31-0AA0	3VA6325-6KT31-0AA0	3VA6325-7KT31-0AA0	3VA6325-8KT31-0AA0	3VA6325-0KT31-0AA0
400	3VA6340-5KT31-0AA0	3VA6340-6KT31-0AA0	3VA6340-7KT31-0AA0	3VA6340-8KT31-0AA0	3VA6340-0KT31-0AA0
ETU860 LSIG with LCD and Metering					
250	3VA6325-5KQ31-0AA0	3VA6325-6KQ31-0AA0	3VA6325-7KQ31-0AA0	3VA6325-8KQ31-0AA0	3VA6325-0KQ31-0AA0
400	3VA6340-5KQ31-0AA0	3VA6340-6KQ31-0AA0	3VA6340-7KQ31-0AA0	3VA6340-8KQ31-0AA0	3VA6340-0KQ31-0AA0



3VA63 400A 4-Pole

Ordering Information

The catalogue numbers listed below are for complete, non-interchangable trip circuit breakers without lugs.

Order required lugs or connection technology separately for field installation.

All 3VA63 electronict trip circuit breakers are cULus approved for reverse feed applications.

3VA63 electronic trip circuit breakers are available with 100% ratings (250A only).

For 100% rated electronic trip circuit breakers, change the 13th digit of the catalogue number to the number "2". (For example, a 18kA @600VAC, 250A, 3-pole, 100% rated 3VA63 would be catalogue number 3VA6325-5HL31-2AA0) Requires the use of copper lugs — see lug table below.

All 3VA6 circuit breakers are certified to CSA C22.2 No 5, and UL 489 Supplement SB, are marked "Naval", and are suitable for use at 50C.

3VA63 400A Frame 4-Pole Electronic Trip Unit

Continuous Ampere	M-Interrupting Class (MJAE)	H-Interrupting Class (HJAE)	C-Interrupting Class (CJAE)	L-Interrupting Class (LJAE)	E-Interrupting Class (EJAE)
	Catalogue Number	Catalogue Number	Catalogue Number	Catalogue Number	Catalogue Number
ETU320 LI with dials					
250	3VA6325-5HL41-0AA0	3VA6325-6HL41-0AA0	3VA6325-7HL41-0AA0	3VA6325-8HL41-0AA0	3VA6325-0HL31-0AA0
400	3VA6340-5HL41-0AA0	3VA6340-6HL41-0AA0	3VA6340-7HL41-0AA0	3VA6340-8HL41-0AA0	3VA6340-0HL31-0AA0
ETU330 LIG with dials					
250	3VA6325-5HM41-0AA0	3VA6325-6HM41-0AA0	3VA6325-7HM41-0AA0	3VA6325-8HM41-0AA0	3VA6325-0HM31-0AA0
400	3VA6340-5HM41-0AA0	3VA6340-6HM41-0AA0	3VA6340-7HM41-0AA0	3VA6340-8HM41-0AA0	3VA6340-0HM31-0AA0
ETU350 LSI with dials					
250	3VA6325-5HN41-0AA0	3VA6325-6HN41-0AA0	3VA6325-7HN41-0AA0	3VA6325-8HN41-0AA0	3VA6325-0HN31-0AA0
400	3VA6340-5HN41-0AA0	3VA6340-6HN41-0AA0	3VA6340-7HN41-0AA0	3VA6340-8HN41-0AA0	3VA6340-0HN31-0AA0
ETU550 LSI with LCD					
250	3VA6325-5JP41-0AA0	3VA6325-6JP41-0AA0	3VA6325-7JP41-0AA0	3VA6325-8JP41-0AA0	—
400	3VA6340-5JP41-0AA0	3VA6340-6JP41-0AA0	3VA6340-7JP41-0AA0	3VA6340-8JP41-0AA0	—
ETU556 LSI(G Alarm) with LCD					
250	3VA6325-5JT41-0AA0	3VA6325-6JT41-0AA0	3VA6325-7JT41-0AA0	3VA6325-8JT41-0AA0	—
400	3VA6340-5JT41-0AA0	3VA6340-6JT41-0AA0	3VA6340-7JT41-0AA0	3VA6340-8JT41-0AA0	—
ETU560 LSIG with LCD					
250	3VA6325-5JQ41-0AA0	3VA6325-6JQ41-0AA0	3VA6325-7JQ41-0AA0	3VA6325-8JQ41-0AA0	—
400	3VA6340-5JQ41-0AA0	3VA6340-6JQ41-0AA0	3VA6340-7JQ41-0AA0	3VA6340-8JQ41-0AA0	—
ETU820 LI with LCD and Metering					
250	3VA6325-5KL41-0AA0	3VA6325-6KL41-0AA0	3VA6325-7KL41-0AA0	3VA6325-8KL41-0AA0	—
400	3VA6340-5KL41-0AA0	3VA6340-6KL41-0AA0	3VA6340-7KL41-0AA0	3VA6340-8KL41-0AA0	—
ETU830 LIG with LCD and Metering					
250	3VA6325-5KM41-0AA0	3VA6325-6KM41-0AA0	3VA6325-7KM41-0AA0	3VA6325-8KM41-0AA0	—
400	3VA6340-5KM41-0AA0	3VA6340-6KM41-0AA0	3VA6340-7KM41-0AA0	3VA6340-8KM41-0AA0	—
ETU850 LSI with LCD and Metering					
250	3VA6325-5KP41-0AA0	3VA6325-6KP41-0AA0	3VA6325-7KP41-0AA0	3VA6325-8KP41-0AA0	—
400	3VA6340-5KP41-0AA0	3VA6340-6KP41-0AA0	3VA6340-7KP41-0AA0	3VA6340-8KP41-0AA0	—
ETU856 LSI(G Alarm) with LCD and Metering					
250	3VA6325-5KT41-0AA0	3VA6325-6KT41-0AA0	3VA6325-7KT41-0AA0	3VA6325-8KT41-0AA0	3VA6325-0KT31-0AA0
400	3VA6340-5KT41-0AA0	3VA6340-6KT41-0AA0	3VA6340-7KT41-0AA0	3VA6340-8KT41-0AA0	3VA6340-0KT31-0AA0
ETU860 LSIG with LCD and Metering					
250	3VA6325-5KQ41-0AA0	3VA6325-6KQ41-0AA0	3VA6325-7KQ41-0AA0	3VA6325-8KQ41-0AA0	3VA6325-0KQ31-0AA0
400	3VA6340-5KQ41-0AA0	3VA6340-6KQ41-0AA0	3VA6340-7KQ41-0AA0	3VA6340-8KQ41-0AA0	3VA6340-0KQ31-0AA0

Connectors for 75C wire for 3VA63

Type	Minimum cable size	Maximum cable size	Part Number (kit of 3 lugs)	Part Number (kit of 4 lugs)
Steel wrap around (Cu cable only) single cable lugs	1/0	500 kcmil	**3VA9473-0JA13**	**3VA9474-0JA13**
Aluminum body lug (Cu/Al cable) single cable lugs	AWG 1	600 kcmil	**3VA9373-0JB13**	**3VA9374-0JB13**
Aluminum body lug with control wire tap (Cu/Al cable) single cable lugs	AWG 1	600 kcmil	**3VA9373-0JG13**	**3VA9374-0JG13**
Aluminum body lug, 2 cables (Cu/Al cable) with 1 extended terminal cover	2/0	600 kcmil	**3VA9473-0JJ23**	**3VA9474-0JJ23**
Aluminum body lug, 2 cables (Cu/Al cable) with control wire tap and 1 extended terminal cover	2/0	600 kcmil	**3VA9473-0JC23**	**3VA9474-0JC23**
Distribution lug, 6 Cables (Cu/Al cable) with 1 extended terminal cover	AWG 14	AWG 2	**3VA9373-0JF60**	**3VA9374-0JF60**
Copper body lug (Cu cable only) single cable lugs (meets requirements for 100% rated breakers)	AWG 1	600 kcmil	**3VA9373-0JD13**	**3VA9374-0JD13**
Copper body lug (Cu cable only) with control wire tap single cable lugs	AWG 1	600 kcmil	**3VA9373-0JK13**	**3VA9374-0JK13**
Copper body lug, 2 cables (Cu cable only) with 1 extended terminal cover (meets requirements for 100% rated breakers)	2/0	600 kcmil	**3VA9473-0JE23**	**3VA9474-0JE23**
Copper body lug, 2 cables (Cu cable only) with control wire tap and 1 extended terminal cover	2/0	600 kcmil	**3VA9473-0JL23**	**3VA9474-0JL23**

Interrupting Ratings for 3VA63

Interrupting Class	Breaker Type	RMS Symmetrical Amperes (kA)				
		Volts AC (50/60 Hz)				
		240	480Y/277V	480	600Y/347V	600
M	MJAE	100	35	35	18	18
H	HJAE	100	65	65	22	22
C	CJAE	200	100	100	35	35
L	LJAE	200	150	150	50	50
E	EJAE	—	200	200	100	100

Dimensions

Shipping Weight

Breaker	Poles	W in. (mm)	H in. (mm)	D in. (mm)	lbs.	kg
3VA63	3	5.4 (138)	9.7 (248)	4.3 (110)	9.9	4.5
3VA63	4	7.2 (184)	9.7 (248)	4.3 (110)	15.2	6.9

Trip Settings for 3VA63

ETU320-LI, ETU330-LIG, ETU350-LSI

Continuous Amperage	LI, LIG, LSI			LSI		LIG	LI, LIG, LSI 4P only
I_n (Amp)	I_r(Amp) (L)	t_{sd} (sec) (L)	I_i (Amp) (I)①	I_{sd}= xIr (Amp) (S)	t_{sd} (sec) (S)	I_g (Amp) (G)	I_N=xI, (Amp)
250	100 - 250	0.5 - 17	375-3000	1.5 - 10	0.08 - 0.4	50 - 250	0.5 - 1 / OFF
400	150 - 400	0.5 - 17	600-4000	1.5 - 10		80 - 400	0.5 - 1 / OFF

① I_i for ETU350 is fixed at 12X I_n

ETU550-LSI, ETU556 LSI(A), ETU560-LSIG, ETU820-LI, ETU830-LIG, ETU850-LSI, ETU856 LSI(A), ETU860-LSIG

Continuous Amperage	LI, LIG, LSI, LSIG, LSI(G)			LSI, LSIG, LSI(G)		LIG, LSIG, LSI(G)		LSI 3P with External CT	LI, LIG, LSI, LSIG, LSI(G) 4P only
I_n (Amp)	I_r(Amp) (L)	t_{sd} (sec) (L)	I_i (Amp) (I)	I_{sd} (Amp) (S)	t_{sd} (sec) (S)	I_g (Amp) (G)	t_g (G)	I_N=xI, (Amp)	I_N (Amp)
250	100 - 250	0.5 - 25	375-3000	150 - 2500	0.05 - 0.5	50 - 250	0.05 - 0.8	50 - 400 / OFF	50 - 400 / OFF
400	150 - 400	0.5 - 17	600-4000	240 - 4000		80 - 400		80 - 640 / OFF	80 - 400 / OFF

For specific trip settings refer to the Electronic Trip Unit section of the 3VA Systems Manual, which can be found in the document download center at **https://www.siemens.com/download?BTLV_50412**

3VA54 600A Frame, 2-(3)Pole Frame, Thermal-Magnetic Trip Unit

Cont. Ampere Rating	M-Interrupting Class (MLAS)	H-Interrupting Class (HLAS)	C-Interrupting Class (CLAS)
	Catalogue Number	Catalogue Number	Catalogue Number
	TM230 FTAM		
450	–	3VA5445-6EC61-0AA0	3VA5445-7EC61-0AA0
500	3VA5450-5EC61-0AA0	3VA5450-6EC61-0AA0	3VA5450-7EC61-0AA0
600	3VA5460-5EC61-0AA0	3VA5460-6EC61-0AA0	3VA5460-7EC61-0AA0

3VA54 600A Frame, 3-Pole Frame, Thermal-Magnetic Trip Unit

Cont. Ampere Rating	M-Interrupting Class (MLAS)	H-Interrupting Class (HLAS)	C-Interrupting Class (CLAS)
	Catalogue Number	Catalogue Number	Catalogue Number
	TM230 FTAM①		
450	3VA5445-5EC31-0AA0	3VA5445-6EC31-0AA0	3VA5445-7EC31-0AA0
500	3VA5450-5EC31-0AA0	3VA5450-6EC31-0AA0	3VA5450-7EC31-0AA0
600	3VA5460-5EC31-0AA0	3VA5460-6EC31-0AA0	3VA5460-7EC31-0AA0
	TM240 ATAM		
450	3VA5445-5EF31-0AA0	3VA5445-6EF31-0AA0	3VA5445-7EF31-0AA0
500	3VA5450-5EF31-0AA0	3VA5450-6EF31-0AA0	3VA5450-7EF31-0AA0
600	3VA5460-5EF31-0AA0	3VA5460-6EF31-0AA0	3VA5460-7EF31-0AA0

3VA54 600A Frame, 4-Pole Frame, Thermal-Magnetic Trip Unit

Cont. Ampere Rating	M-Interrupting Class (MLAS)	H-Interrupting Class (HLAS)	C-Interrupting Class (CLAS)
	Catalogue Number	Catalogue Number	Catalogue Number
	TM230 FTAM Unprotected Neutral		
450	3VA5445-5EC41-0AA0	3VA5445-6EC41-0AA0	3VA5445-7EC41-0AA0
500	3VA5450-5EC41-0AA0	3VA5450-6EC41-0AA0	3VA5450-7EC41-0AA0
600	3VA5460-5EC41-0AA0	3VA5460-6EC41-0AA0	3VA5460-7EC41-0AA0
	TM240 ATAM Unprotected Neutral		
450	3VA5445-5EF41-0AA0	3VA5445-6EF41-0AA0	3VA5445-7EF41-0AA0
500	3VA5450-5EF41-0AA0	3VA5450-6EF41-0AA0	3VA5450-7EF41-0AA0
600	3VA5460-5EF41-0AA0	3VA5460-6EF41-0AA0	3VA5460-7EF41-0AA0
	TM230 FTFM 100% Neutral		
450	3VA5445-5GC41-0AA0	3VA5445-6GC41-0AA0	3VA5445-7GC41-0AA0
500	3VA5450-5GC41-0AA0	3VA5450-6GC41-0AA0	3VA5450-7GC41-0AA0
600	3VA5460-5GC41-0AA0	3VA5460-6GC41-0AA0	3VA5460-7GC41-0AA0
	TM240 ATAM 100% Neutral		
450	3VA5445-5GF41-0AA0	3VA5445-6GF41-0AA0	3VA5445-7GF41-0AA0
500	3VA5450-5GF41-0AA0	3VA5450-6GF41-0AA0	3VA5450-7GF41-0AA0
600	3VA5460-5GF41-0AA0	3VA5460-6GF41-0AA0	3VA5460-7GF41-0AA0

① Available with NAVAL/50C ratings.



3VA54 600A 3-Pole



3VA54 600A 3-Pole

Ordering Information

The catalogue numbers listed here are for complete, non-interchangable trip circuit breakers without lugs.

Order required lugs or connection technology separately for field installation.

All 3VA54 thermal-magnetic trip circuit breakers are cULus approved for reverse feed applications.

For NAVAL rated thermal-magnetic trip circuit breakers, change the 13th digit of the catalogue number to the number "1". (For example,a 18kA @600VAC, 600A, 3-pole, rated 3VA54 would be catalogue number 3VA5460-5EC31-1AA0)

Dimensions

Shipping Weight

Breaker	Poles	W in. (mm)	H in. (mm)	D in. (mm)	lbs.	kg
3VA54	3	6.4 (162)	10.3 (262)	6.7 (170)	11.5	5.2
3VA54	4	8.2 (208)	10.3 (262)	6.7 (170)	15.0	6.8

Interrupting Ratings for 3VA54

Interrupting Class	Breaker Type	RMS Symmetrical Amperes (kA)									
		Volts AC (50/60 Hz)					Volts DC				
		240	480Y/ 277V	480	600Y/ 347V	600	250 (2P)	600 (3P)	750 (3P)	750 (4P)	1000 (4P)
M	MLAS	65	35	35	20	20	50	50	6	50	6
H	HLAS	100	65	65	25	25	85	85	6	85	6
C	CLAS	200	100	100	35	35	100	100	10	100	10

Internal accessories Optional equipment		3VA5 400/600 A 3 & 4-pole										
	Slot No.:	25	24	23	22	21	600 A	11	12	13	14	15
Auxiliary switch	**Type**											
Auxiliary switch	AUX_HQ	x	x	x	x	x		x	x	x	x	x
	AUX_HQ_el	x	x	x	x	x		x	x	x	x	x
	AUX_HP		x		x				x		x	
		x		x				x		x		
Leading changeover switch	LCS_HQ							x				
	LCS_HQ_el							x				
	LCS_HP							x				
Auxiliary switch	**Type**											
Trip alarm switch	TAS_HQ				x	x		x	x			
	TAS_HQ_el				x	x		x	x			
	TAS_HP				x			x				
Auxiliary switch	**Type**											
Shunt trip flexible	STF			x					x			
Shunt trip left	STL			x								
Undervoltage release	UVR			x								
Universal release	UVI			x								
Other												
Cylinder lock (type Ronis)								x				



3VA64 600A 3-Pole

Ordering Information

The catalogue numbers listed below are for complete, non-interchangable trip circuit breakers without lugs.

Order required lugs or connection technology separately for field installation.

All 3VA64 electronict trip circuit breakers are cULus approvedfor reverse feed applications.

3VA64 electronic trip circuit breakers are available with 100% ratings (400A only).

For 100% rated electronic trip circuit breakers, change the 13th digit of the catalogue number to the number "2". (For example, a 18kA @600VAC, 400A, 3-pole, 100% rated 3VA64 would be catalogue number 3VA6440-5HL31-2AA0) Requires the use of copper lugs — see lug table below.

All 3VA6 circuit breakers are certified to CSA C22.2 No 5, and UL 489 Supplement SB, are marked "Naval", and are suitable for use at 50C.

3VA64 600A Frame 3-Pole Electronic Trip Unit

Continuous Ampere	M-Interrupting Class (MLAE)	H-Interrupting Class (HLAE)	C-Interrupting Class (CLAE)	L-Interrupting Class (LLAE)	E-Interrupting Class (ELAE)
	Catalogue Number	Catalogue Number	Catalogue Number	Catalogue Number	Catalogue Number
ETU320 LI with dials					
400	3VA6440-5HL31-0AA0	3VA6440-6HL31-0AA0	3VA6440-7HL31-0AA0	3VA6440-8HL31-0AA0	–
600	3VA6460-5HL31-0AA0	3VA6460-6HL31-0AA0	3VA6460-7HL31-0AA0	3VA6460-8HL31-0AA0	3VA6460-0HL31-0AA0
ETU330 LIG with dials					
400	3VA6440-5HM31-0AA0	3VA6440-6HM31-0AA0	3VA6440-7HM31-0AA0	3VA6440-8HM31-0AA0	–
600	3VA6460-5HM31-0AA0	3VA6460-6HM31-0AA0	3VA6460-7HM31-0AA0	3VA6460-8HM31-0AA0	3VA6460-0HM31-0AA0
ETU350 LSI with dials					
400	3VA6440-5HN31-0AA0	3VA6440-6HN31-0AA0	3VA6440-7HN31-0AA0	3VA6440-8HN31-0AA0	–
600	3VA6460-5HN31-0AA0	3VA6460-6HN31-0AA0	3VA6460-7HN31-0AA0	3VA6460-8HN31-0AA0	3VA6460-0HN31-0AA0
ETU550 LSI with LCD					
400	3VA6440-5JP31-0AA0	3VA6440-6JP31-0AA0	3VA6440-7JP31-0AA0	3VA6440-8JP31-0AA0	–
600	3VA6460-5JP31-0AA0	3VA6460-6JP31-0AA0	3VA6460-7JP31-0AA0	3VA6460-8JP31-0AA0	–
ETU556 LSI(G Alarm) with LCD					
400	3VA6440-5JT31-0AA0	3VA6440-6JT31-0AA0	3VA6440-7JT31-0AA0	3VA6440-8JT31-0AA0	–
600	3VA6460-5JT31-0AA0	3VA6460-6JT31-0AA0	3VA6460-7JT31-0AA0	3VA6460-8JT31-0AA0	–
ETU560 LSIG with LCD					
400	3VA6440-5JQ31-0AA0	3VA6440-6JQ31-0AA0	3VA6440-7JQ31-0AA0	3VA6440-8JQ31-0AA0	–
600	3VA6460-5JQ31-0AA0	3VA6460-6JQ31-0AA0	3VA6460-7JQ31-0AA0	3VA6460-8JQ31-0AA0	–
ETU820 LI with LCD and Metering					
400	3VA6440-5KL31-0AA0	3VA6440-6KL31-0AA0	3VA6440-7KL31-0AA0	3VA6440-8KL31-0AA0	–
600	3VA6460-5KL31-0AA0	3VA6460-6KL31-0AA0	3VA6460-7KL31-0AA0	3VA6460-8KL31-0AA0	–
ETU830 LIG with LCD and Metering					
400	3VA6440-5KM31-0AA0	3VA6440-6KM31-0AA0	3VA6440-7KM31-0AA0	3VA6440-8KM31-0AA0	–
600	3VA6460-5KM31-0AA0	3VA6460-6KM31-0AA0	3VA6460-7KM31-0AA0	3VA6460-8KM31-0AA0	–
ETU850 LSI with LCD and Metering					
400	3VA6440-5KP31-0AA0	3VA6440-6KP31-0AA0	3VA6440-7KP31-0AA0	3VA6440-8KP31-0AA0	–
600	3VA6460-5KP31-0AA0	3VA6460-6KP31-0AA0	3VA6460-7KP31-0AA0	3VA6460-8KP31-0AA0	–
ETU856 LSI(G Alarm) with LCD and Metering					
400	3VA6440-5KT31-0AA0	3VA6440-6KT31-0AA0	3VA6440-7KT31-0AA0	3VA6440-8KT31-0AA0	–
600	3VA6460-5KT31-0AA0	3VA6460-6KT31-0AA0	3VA6460-7KT31-0AA0	3VA6460-8KT31-0AA0	3VA6460-0KT31-0AA0
ETU860 LSIG with LCD and Metering					
400	3VA6440-5KQ31-0AA0	3VA6440-6KQ31-0AA0	3VA6440-7KQ31-0AA0	3VA6440-8KQ31-0AA0	–
600	3VA6460-5KQ31-0AA0	3VA6460-6KQ31-0AA0	3VA6460-7KQ31-0AA0	3VA6460-8KQ31-0AA0	3VA6460-0KQ31-0AA0



3VA64 600A 4-Pole

Ordering Information

The catalogue numbers listed below are for complete, non-interchangable trip circuit breakers without lugs.

Order required lugs or connection technology separately for field installation.

All 3VA64 electronict trip circuit breakers are cULus approved for reverse feed applications.

3VA64 electronic trip circuit breakers are available with 100% ratings (400A only).

For 100% rated electronic trip circuit breakers, change the 13th digit of the catalogue number to the number "2". (For example, a 18kA @600VAC, 400A, 3-pole, 100% rated 3VA64 would be catalogue number 3VA6440-5HL31-2AA0) Requires the use of copper lugs — see lug table below.

All 3VA6 circuit breakers are certified to CSA C22.2 No 5, and UL 489 Supplement SB, are marked "Naval", and are suitable for use at 50C.

3VA64 600A Frame 4-Pole Electronic Trip Unit

Continuous Ampere	M-Interrupting Class (MLAE)	H-Interrupting Class (HLAE)	C-Interrupting Class (CLAE)	L-Interrupting Class (LLAE)	E-Interrupting Class (ELAE)
	Catalogue Number	Catalogue Number	Catalogue Number	Catalogue Number	Catalogue Number
ETU320 LI with dials					
400	3VA6440-5HL41-0AA0	3VA6440-6HL41-0AA0	3VA6440-7HL41-0AA0	3VA6440-8HL41-0AA0	–
600	3VA6460-5HL41-0AA0	3VA6460-6HL41-0AA0	3VA6460-7HL41-0AA0	3VA6460-8HL41-0AA0	3VA6460-0HL41-0AA0
ETU330 LIG with dials					
400	3VA6440-5HM41-0AA0	3VA6440-6HM41-0AA0	3VA6440-7HM41-0AA0	3VA6440-8HM41-0AA0	–
600	3VA6460-5HM41-0AA0	3VA6460-6HM41-0AA0	3VA6460-7HM41-0AA0	3VA6460-8HM41-0AA0	3VA6460-0HM41-0AA0
ETU350 LSI with dials					
400	3VA6440-5HN41-0AA0	3VA6440-6HN41-0AA0	3VA6440-7HN41-0AA0	3VA6440-8HN41-0AA0	–
600	3VA6460-5HN41-0AA0	3VA6460-6HN41-0AA0	3VA6460-7HN41-0AA0	3VA6460-8HN41-0AA0	3VA6460-0HN41-0AA0
ETU550 LSI with LCD					
400	3VA6440-5JP41-0AA0	3VA6440-6JP41-0AA0	3VA6440-7JP41-0AA0	3VA6440-8JP41-0AA0	–
600	3VA6460-5JP41-0AA0	3VA6460-6JP41-0AA0	3VA6460-7JP41-0AA0	3VA6460-8JP41-0AA0	–
ETU556 LSI(G Alarm) with LCD					
400	3VA6440-5JT41-0AA0	3VA6440-6JT41-0AA0	3VA6440-7JT41-0AA0	3VA6440-8JT41-0AA0	–
600	3VA6460-5JT41-0AA0	3VA6460-6JT41-0AA0	3VA6460-7JT41-0AA0	3VA6460-8JT41-0AA0	–
ETU560 LSIG with LCD					
400	3VA6440-5JQ41-0AA0	3VA6440-6JQ41-0AA0	3VA6440-7JQ41-0AA0	3VA6440-8JQ41-0AA0	–
600	3VA6460-5JQ41-0AA0	3VA6460-6JQ41-0AA0	3VA6460-7JQ41-0AA0	3VA6460-8JQ41-0AA0	–
ETU820 LI with LCD and Metering					
400	3VA6440-5KL41-0AA0	3VA6440-6KL41-0AA0	3VA6440-7KL41-0AA0	3VA6440-8KL41-0AA0	–
600	3VA6460-5KL41-0AA0	3VA6460-6KL41-0AA0	3VA6460-7KL41-0AA0	3VA6460-8KL41-0AA0	–
ETU830 LIG with LCD and Metering					
400	3VA6440-5KM41-0AA0	3VA6440-6KM41-0AA0	3VA6440-7KM41-0AA0	3VA6440-8KM41-0AA0	–
600	3VA6460-5KM41-0AA0	3VA6460-6KM41-0AA0	3VA6460-7KM41-0AA0	3VA6460-8KM41-0AA0	–
ETU850 LSI with LCD and Metering					
400	3VA6440-5KP41-0AA0	3VA6440-6KP41-0AA0	3VA6440-7KP41-0AA0	3VA6440-8KP41-0AA0	–
600	3VA6460-5KP41-0AA0	3VA6460-6KP41-0AA0	3VA6460-7KP41-0AA0	3VA6460-8KP41-0AA0	–
ETU856 LSI(G Alarm) with LCD and Metering					
400	3VA6440-5KT41-0AA0	3VA6440-6KT41-0AA0	3VA6440-7KT41-0AA0	3VA6440-8KT41-0AA0	–
600	3VA6460-5KT41-0AA0	3VA6460-6KT41-0AA0	3VA6460-7KT41-0AA0	3VA6460-8KT41-0AA0	3VA6460-0KT41-0AA0
ETU860 LSIG with LCD and Metering					
400	3VA6440-5KQ41-0AA0	3VA6440-6KQ41-0AA0	3VA6440-7KQ41-0AA0	3VA6440-8KQ41-0AA0	–
600	3VA6460-5KQ41-0AA0	3VA6460-6KQ41-0AA0	3VA6460-7KQ41-0AA0	3VA6460-8KQ41-0AA0	3VA6460-0KQ41-0AA0

Connectors for 75C wire for 3VA64

Type	Minimum cable size	Maximum cable size	Part Number (kit of 3 lugs)	Part Number (kit of 4 lugs)
Steel Wrap around (Cu cable only) single cable lugs	1/0	500 kcmil	**3VA9473-0JA13**	**3VA9474-0JA13**
Aluminum Body Lug (Cu/Al cable) single cable lugs	AWG 1	600 kcmil	**3VA9373-0JB13**	**3VA9374-0JB13**
Aluminum body lug with control wire tap (Cu/Al cable) single cable lugs	AWG 1	600 kcmil	**3VA9373-0JG13**	**3VA9374-0JG13**
Aluminum body lug, 2 cables (Cu/Al cable) with 1 extended terminal cover	2/0	600 kcmil	**3VA9473-0JJ23**	**3VA9474-0JJ23**
Aluminum body lug, 2 cables (Cu/Al cable) with control wire tap and 1 extended terminal cover	2/0	600 kcmil	**3VA9473-0JC23**	**3VA9474-0JC23**
Distribution lug, 6 Cables (Cu/Al cable) with 1 extended terminal cover	AWG 14	AWG 2	**3VA9373-0JF60**	**3VA9374-0JF60**
Copper body lug (Cu cable only) single cable lugs (meets requirements for 100% rated breakers)	AWG 1	600 kcmil	**3VA9373-0JD13**	**3VA9374-0JD13**
Copper body lug (Cu cable only) with control wire tap single cable lugs	AWG 1	600 kcmil	**3VA9373-0JK13**	**3VA9374-0JK13**
Copper body lug, 2 cables (Cu cable only) with 1 extended terminal cover (meets requirements for 100% rated breakers)	2/0	600 kcmil	**3VA9473-0JE23**	**3VA9474-0JE23**
Copper body lug, 2 cables (Cu cable only) with control wire tap and 1 extended terminal cover	2/0	600 kcmil	**3VA9473-0JL23**	**3VA9474-0JL23**

Interrupting Ratings for 3VA64

Interrupting Class	Breaker Type	RMS Symmetrical Amperes (kA) Volts AC (50/60 Hz) 240	480Y/277V	480	600Y/347V	600
M	MLAE	100	35	35	18	18
H	HLAE	100	65	65	22	22
C	CLAE	200	100	100	35	35
L	LLAE	200	150	150	50	50
E	ELAE	—	200	200	100	100

Dimensions

Shipping Weight

Breaker	Poles	W in. (mm)	H in. (mm)	D in. (mm)	lbs.	kg
3VA64	3	5.4 (138)	9.7 (248)	4.3 (110)	11.7	5.3
3VA64	4	7.2 (184)	9.7 (248)	4.3 (110)	15.2	6.9

Trip Settings for 3VA64

ETU320-LI, ETU330-LIG, ETU350-LSI

Continuous Amperage	LI, LIG, LSI			LSI		LIG	LI, LIG, LSI 4P only
I_n (Amp)	I_r(Amp) (L)	t_{rd} (sec) (L)	I_i (Amp) (I)①	I_{sd}= xIr (Amp) (S)	t_{sd} (sec) (S)	I_g (Amp) (G)	I_N=xI, (Amp)
400	150 - 400	0.5 - 17	600-4800	1.5 - 10	0.08 - 0.4	80 - 400	0.5 - 1 / OFF
600	250 - 600	0.5 - 15	900-5400	1.5 - 9		120 - 600	0.5 - 1 / OFF

① I_i for ETU350 is fixed at 12X I_n

ETU550-LSI, ETU556 LSI(A), ETU560-LSIG, ETU820-LI, ETU830-LIG, ETU850-LSI, ETU856 LSI(A), ETU860-LSIG

Continuous Amperage	LI, LIG, LSI, LSIG, LSI(G)			LSI, LSIG, LSI(G)		LIG, LSIG, LSI(G)		LSI 3P with External CT	LI, LIG, LSI, LSIG, LSI(G) 4P only
I_n (Amp)	I_r(Amp) (L)	t_{rd} (sec) (L)	I_i (Amp) (I)	I_{sd} (Amp) (S)	t_{sd} (sec) (S)	I_g (Amp) (G)	t_g (G)	I_N=xI, (Amp)	I_N (Amp)
400	150 - 400	0.5 - 25	600-4800	240 - 4000	0.05 - 0.5	80 - 400	0.05 - 0.8	80 - 640 / OFF	80 - 600 / OFF
600	250 - 600	0.5 - 15	900-5400	360 - 5400		120 - 600		120 - 960 / OFF	120 - 600 / OFF

For specific trip settings refer to the Electronic Trip Unit section of the 3VA Systems Manual, which can be found in the document download center at **https://www.siemens.com/download?BTLV_50412**

Internal accessories Optional equipment		3VA6 400/600 A 3-pole										3VA6 400/600 A 4-pole										
Slot No.:		25	24	23	22	21	600 A	11	12	13	14	15	35	34	33	32	31	25	24	23	22	21	600 A	11	12	13	14	15
Auxiliary switch	**Type**																											
Auxiliary switch	AUX_HQ	x	x	x	x	x		x	x	x	x	x	x	x	x	x	x	x	x	x	x	x		x	x	x	x	x
	AUX_HQ_el	x	x	x	x	x		x	x	x	x	x	x	x	x	x	x	x	x	x	x	x		x	x	x	x	x
	AUX_HP		x		x				x		x			x		x			x		x			x		x	
		x		x				x		x			x		x			x		x			x		x		
Leading changeover switch	LCS_HQ							x																x				
	LCS_HQ_el							x																x				
	LCS_HP							x																x				
Auxiliary switch	**Type**																											
Trip alarm switch	TAS_HQ				x	x		x	x												x	x		x	x			
	TAS_HQ_el				x	x		x	x												x	x		x	x			
	TAS_HP				x			x													x			x				
Electrical alarm switch	EAS_HQ											x															x	
	EAS_HQ_el											x															x	
Auxiliary switch	**Type**																											
Shunt trip flexible	STF			x				x												x				x				
Shunt trip left	STL			x																x								
Undervoltage release	UVR			x																x								
Universal release	UVI			x																x								
ETU/communication	**Type**																											
Communication module Breaker data server	COM060							x																x				
24 V module								x																x				
Other																												
Cylinder lock (type Ronis)								x																x				

See page 5-72 for internal accessory part numbers.

3VA55 800A, 2-pole in 3-pole Frame, Thermal-Magnetic Trip Unit

Cont. Ampere Rating	M-Interrupting Class (MMAS)	H-Interrupting Class (HMAS)	C-Interrupting Class (CMAS)
	Catalogue Number	Catalogue Number	Catalogue Number
	TM230 FTAM		
600	3VA5560-5EC62-0AA0	3VA5560-6EC62-0AA0	3VA5560-7EC62-0AA0
700	3VA5570-5EC62-0AA0	3VA5570-6EC62-0AA0	3VA5570-7EC62-0AA0
800	3VA5580-5EC62-0AA0	3VA5580-6EC62-0AA0	3VA5580-7EC62-0AA0

3VA55 800A, 3-pole Frame, Thermal-Magnetic Trip Unit

Cont. Ampere Rating	M-Interrupting Class (MMAS)	H-Interrupting Class (HMAS)	C-Interrupting Class (CMAS)
	Catalogue Number	Catalogue Number	Catalogue Number
	TM230 FTAM		
600	3VA5560-5EC32-0AA0	3VA5560-6EC32-0AA0	3VA5560-7EC32-0AA0
700	3VA5570-5EC32-0AA0	3VA5570-6EC32-0AA0	3VA5570-7EC32-0AA0
800	3VA5580-5EC32-0AA0	3VA5580-6EC32-0AA0	3VA5580-7EC32-0AA0

3VA55 800A, 4-pole Frame, Thermal-Magnetic Trip Unit

Cont. Ampere Rating	M-Interrupting Class (MMAS)	H-Interrupting Class (HMAS)	C-Interrupting Class (CMAS)
	Catalogue Number	Catalogue Number	Catalogue Number
	TM230 FTAM Unprotected Neutral		
600	3VA5560-5EC42-0AA0	3VA5560-6EC42-0AA0	3VA5560-7EC42-0AA0
700	3VA5570-5EC42-0AA0	3VA5570-6EC42-0AA0	3VA5570-7EC42-0AA0
800	3VA5580-5EC42-0AA0	3VA5580-6EC42-0AA0	3VA5580-7EC42-0AA0
	TM230 FTAM 100% Neutral		
600	3VA5560-5GC42-0AA0	3VA5560-6GC42-0AA0	3VA5560-7GC42-0AA0
700	3VA5570-5GC42-0AA0	3VA5570-6GC42-0AA0	3VA5570-7GC42-0AA0
800	3VA5580-5GC42-0AA0	3VA5580-6GC42-0AA0	3VA5580-7GC42-0AA0

Dimensions — Shipping Weight

Breaker	Poles	W in. (mm)	H in. (mm)	D in. (mm)	lbs.	kg
3VA55	2(3)	8.3 (210)	12.5 (318)	5.8 (147)	29.3	13.3
3VA55	3	8.3 (210)	12.5 (318)	5.8 (147)	29.4	13.4
3VA55	4	11.1 (280)	12.5 (318)	5.8 (147)	37.4	17.0

Interrupting Ratings for 3VA55

Interrupting Class	Breaker Type	RMS Symmetrical Amperes (kA)									
		Volts AC (50/60 Hz)					Volts DC				
		240	480Y/ 277V	480	600Y/ 347V	600	250 (2P)	600 (3P)	750 (3P)	750 (4P)	1000 (4P)
M	MMAS	85	35	35	18	18	50	50	50	50	18
H	HMAS	100	65	65	25	25	85	85	85	85	25
C	CMAS	200	100	100	50	50	100	100	100	100	50

Trip Settings for 3VA55

TM230 - FTAM

I_n (Amp)	I_r(Amp)	I_i (Amp)					
600	600	3000	3600	4200	4800	5400	6000
700	700	3500	4200	4900	5600	6300	7000
800	800	4000	4800	5600	6400	7200	8000

TM240 - ATAM

I_n (Amp)	I_r(Amp)	I_i (Amp)					
600	480	3000	3600	4200	4800	5400	6000
700	560	3500	4200	4900	5600	6300	7000
800	640	4000	4800	5600	6400	7200	8000



3VA55 800A 3-Pole



3VA55 800A 4-Pole

Ordering Information

The catalogue numbers listed here are for complete, non-interchangable trip circuit breakers with nut keepers on both line and load ends.

Order required lugs or connection technology separately for field installation.

All 3VA55 thermal-magnetic trip circuit breakers are UL listed for reverse feed applications.

For NAVAL rated (3-pole only) thermal-magnetic trip circuit breakers, change the 13th digit of the catalogue number to the number "1". (For example, a 18KA@600V, 600A, 3-pole, rated 3VA55 would be catalogue number 3VA5580-5EC32-**1**AA0)



3VA65 800A 3-Pole

Ordering Information

The catalogue numbers listed below are for complete, non-interchangable trip circuit breakers with nut keepers on both line and load ends.

Order required lugs or connection technology separately for field installation.

All 3VA65 electronic trip circuit breakers are UL listed for reverse feed applications.

3VA65 electronic trip circuit breakers are available with 100% ratings.

For 100% rated electronic trip circuit breakers, change the 13th digit of the catalogue number to the number "2". (For example, a 25KA@600V, 600A, 3-pole, 100% rated 3VA65 would be catalogue number 3VA6560-5HL32-2AA0)

All 3VA6 circuit breakers are certified to UL 489 Supplement SB, are marked "Naval", and are suitable for use at 50C.

3VA65 800A, 3-pole Frame, Electronic Trip Unit

Continuous Ampere	M-Interrupting Class (MMAE) Catalogue Number	H-Interrupting Class (HMAE) Catalogue Number	C-Interrupting Class (CMAE) Catalogue Number
ETU320 LI with dials			
600	**3VA6560-5HL32-0AA0**	**3VA6560-6HL32-0AA0**	**3VA6560-7HL32-0AA0**
800	**3VA6580-5HL32-0AA0**	**3VA6580-6HL32-0AA0**	**3VA6580-7HL32-0AA0**
ETU330 LIG with dials			
600	**3VA6560-5HM32-0AA0**	**3VA6560-6HM32-0AA0**	**3VA6560-7HM32-0AA0**
800	**3VA6580-5HM32-0AA0**	**3VA6580-6HM32-0AA0**	**3VA6580-7HM32-0AA0**
ETU350 LSI with dials			
600	**3VA6560-5HN32-0AA0**	**3VA6560-6HN32-0AA0**	**3VA6560-7HN32-0AA0**
800	**3VA6580-5HN32-0AA0**	**3VA6580-6HN32-0AA0**	**3VA6580-7HN32-0AA0**
ETU550 LSI with LCD			
600	**3VA6560-5JP32-0AA0**	**3VA6560-6JP32-0AA0**	**3VA6560-7JP32-0AA0**
800	**3VA6580-5JP32-0AA0**	**3VA6580-6JP32-0AA0**	**3VA6580-7JP32-0AA0**
ETU556 LSI(G Alarm) with LCD			
600	**3VA6560-5JT32-0AA0**	**3VA6560-6JT32-0AA0**	**3VA6560-7JT32-0AA0**
800	**3VA6580-5JT32-0AA0**	**3VA6580-6JT32-0AA0**	**3VA6580-7JT32-0AA0**
ETU560 LSIG with LCD			
600	**3VA6560-5JQ32-0AA0**	**3VA6560-6JQ32-0AA0**	**3VA6560-7JQ32-0AA0**
800	**3VA6580-5JQ32-0AA0**	**3VA6580-6JQ32-0AA0**	**3VA6580-7JQ32-0AA0**
ETU820 LI with LCD and Metering			
600	**3VA6560-5KL32-0AA0**	**3VA6560-6KL32-0AA0**	**3VA6560-7KL32-0AA0**
800	**3VA6580-5KL32-0AA0**	**3VA6580-6KL32-0AA0**	**3VA6580-7KL32-0AA0**
ETU856 LSI(G Alarm) with LCD and Metering			
600	**3VA6560-5KT32-0AA0**	**3VA6560-6KT32-0AA0**	**3VA6560-7KT32-0AA0**
800	**3VA6580-5KT32-0AA0**	**3VA6580-6KT32-0AA0**	**3VA6580-7KT32-0AA0**
ETU860 LSIG with LCD and Metering			
600	**3VA6560-5KQ32-0AA0**	**3VA6560-6KQ32-0AA0**	**3VA6560-7KQ32-0AA0**
800	**3VA6580-5KQ32-0AA0**	**3VA6580-6KQ32-0AA0**	**3VA6580-7KQ32-0AA0**



3VA65 800A 4-Pole

Interrupting Ratings for 3VA65

Interrupting Class	Breaker Type	RMS Symmetrical Amperes (kA) Volts AC (50/60 Hz)				
		240	480Y/277V	480	600Y/347V	600
M	MMAE	100	35	35	25	25
H	HMAE	150	65	65	35	35
C	CMAE	200	100	100	50	50

Dimensions

Shipping Weight

Breaker	Poles	W in. (mm)	H in. (mm)	D in. (mm)	lbs.	kg
3VA65	3	8.3 (210)	12.5 (318)	5.8 (147)	29.4	13.4
3VA65	4	11.1 (280)	12.5 (318)	5.8 (147)	37.4	17.0

3VA65 800A, 4-pole Frame, Electronic Trip Unit

Continuous Ampere	M-Interrupting Class (MMAE) Catalogue Number	H-Interrupting Class (HMAE) Catalogue Number	C-Interrupting Class (CMAE) Catalogue Number
		ETU320 LI with dials	
600	3VA6560-5HL42-0AA0	3VA6560-6HL42-0AA0	3VA6560-7HL42-0AA0
800	3VA6580-5HL42-0AA0	3VA6580-6HL42-0AA0	3VA6580-7HL42-0AA0
		ETU330 LIG with dials	
600	3VA6560-5HM42-0AA0	3VA6560-6HM42-0AA0	3VA6560-7HM42-0AA0
800	3VA6580-5HM42-0AA0	3VA6580-6HM42-0AA0	3VA6580-7HM42-0AA0
		ETU350 LSI with dials	
600	3VA6560-5HN42-0AA0	3VA6560-6HN42-0AA0	3VA6560-7HN42-0AA0
800	3VA6580-5HN42-0AA0	3VA6580-6HN42-0AA0	3VA6580-7HN42-0AA0
		ETU550 LSI with LCD	
600	3VA6560-5JP42-0AA0	3VA6560-6JP42-0AA0	3VA6560-7JP42-0AA0
800	3VA6580-5JP42-0AA0	3VA6580-6JP42-0AA0	3VA6580-7JP42-0AA0
		ETU556 LSI(G Alarm) with LCD	
600	3VA6560-5JT42-0AA0	3VA6560-6JT42-0AA0	3VA6560-7JT42-0AA0
800	3VA6580-5JT42-0AA0	3VA6580-6JT42-0AA0	3VA6580-7JT42-0AA0
		ETU560 LSIG with LCD	
600	3VA6560-5JQ42-0AA0	3VA6560-6JQ42-0AA0	3VA6560-7JQ42-0AA0
800	3VA6580-5JQ42-0AA0	3VA6580-6JQ42-0AA0	3VA6580-7JQ42-0AA0
		ETU820 LI with LCD and Metering	
600	3VA6560-5KL42-0AA0	3VA6560-6KL42-0AA0	3VA6560-7KL42-0AA0
800	3VA6580-5KL42-0AA0	3VA6580-6KL42-0AA0	3VA6580-7KL42-0AA0
		ETU856 LSI(G Alarm) with LCD and Metering	
600	3VA6560-5KT42-0AA0	3VA6560-6KT42-0AA0	3VA6560-7KT42-0AA0
800	3VA6580-5KT42-0AA0	3VA6580-6KT42-0AA0	3VA6580-7KT42-0AA0
		ETU860 LSIG with LCD and Metering	
600	3VA6560-5KQ42-0AA0	3VA6560-6KQ42-0AA0	3VA6560-7KQ42-0AA0
800	3VA6580-5KQ42-0AA0	3VA6580-6KQ42-0AA0	3VA6580-7KQ42-0AA0

Connections for 75C wire for 3VA55, 3VA65 and 3VA66

Type	Minimum cable size	Maximum cable size	Part Number (kit of 3 lugs)	Part Number (kit of 4 lugs)
Aluminum body lug, 2 cables (Cu/Al cable)	4/0	600 kcmil	**3VA9573-0JB23**	**3VA9574-0JB23**
Aluminum body lug, 2 cables (Cu/Al cable) with control wire tap	4/0	600 kcmil	**3VA9573-0JG23**	**3VA9574-0JG23**
Aluminum body lug, 2 cables (Cu/Al cable) with1 extended terminal cover①	400 kcmil	750 kcmil	**3VA9673-0JJ24**	**3VA9674-0JJ24**
Aluminum body lug, 2 cables (Cu/Al cable) with control wire tap and 1 extended terminal cover①	400 kcmil	750 kcmil	**3VA9673-0JC24**	**3VA9674-0JC24**
Aluminum body lug, 3 cables (Cu/Al cable)	4/0	400 kcmil	**3VA9673-0JB32**	**3VA9674-0JB32**
Aluminum body lug, 3 cables (Cu/Al cable) with control wire tap	4/0	400 kcmil	**3VA9673-0JG32**	**3VA9674-0JG32**
Aluminum body lug, 3 cables (Cu/Al cable) with 1 extended terminal cover①	500 kcmil	750 kcmil	**3VA9673-0JJ34**	**3VA9674-0JJ34**
Aluminum body lug, 3 cables (Cu/Al cable) with control wire tap and 1 extended terminal cover①	500 kcmil	750 kcmil	**3VA9673-0JC34**	**3VA9674-0JC34**
Aluminum body lug, 4 cables (Cu/Al cable) with 1 extended terminal cover①	4/0	500 kcmil	**3VA9673-0JJ43**	**3VA9674-0JJ43**
Aluminum body lug, 4 cables (Cu/Al cable) with control wire tap and 1 extended terminal cover①	4/0	500 kcmil	**3VA9673-0JC43**	**3VA9674-0JC43**
Aluminum body lug, 4 cables (Cu/Al cable) with 1 extended terminal cover①	4/0	600 kcmil	**3VA9673-0JJ44**	**3VA9674-0JJ44**
Aluminum body lug, 4 cables (Cu/Al cable) with control wire tap and 1 extended terminal cover①	4/0	600 kcmil	**3VA9673-0JC44**	**3VA9674-0JC44**
Copper body lug, 3 cables (Cu/Al cable)①	4/0	400 kcmil	**3VA9673-0JD32**	**3VA9674-0JD32**
Copper body lug, 3 cables (Cu/Al cable) with control wire tap①	4/0	400 kcmil	**3VA9673-0JK32**	**3VA9674-0JK32**
Copper body lug, 4 cables (Cu/Al cable) with 1 extended terminal cover	4/0	500 kcmil	**3VA9673-0JE43**	**3VA9674-0JE43**
Copper body lug, 4 cables (Cu/Al cable) with control wire tap and 1 extended terminal cover	4/0	500 kcmil	**3VA9673-0JL43**	**3VA9674-0JL43**

① Meets requirements for 100% rated breakers up to 800A, requires the use of 90 degree wire.
Product not yet released.

Trip Settings for 3VA55

TM230 - FTAM

I_n (Amp)	I_r(Amp)	I_i (Amp)					
600	600	3000	3600	4200	4800	5400	6000
700	700	3500	4200	4900	5600	6300	7000
800	800	4000	4800	5600	6400	7200	8000

Trip Settings for 3VA65 and 3VA66

ETU320-LI, ETU330-LIG, ETU350-LSI

Cont. Amp	LI, LIG, LSI			LSI		LIG	LI, LIG, LSI 4P only
I_n (Amp)	I_r(Amp) (L)	t_{id} (sec) (L)	I_i (Amp) (I)	I_{sd}= xI_r (Amp) (S)	t_{sd} (sec) (S)	I_g (Amp) (G)	I_N=xI_r (Amp)
600	240 - 600	0.5 - 17	900 - 7200	1.5 - 12	0 - 0.4	120 - 600	0.2 - 1.0
800	320 - 800	0.5 - 17	1200 - 8000	1.5 - 10	0 - 0.4	160 - 800	0.2 - 1.0
1000	400 - 1000	0.5 - 17	1500 - 10000	1.5 - 10	0 - 0.4	200 - 1000	0.2 - 1.0

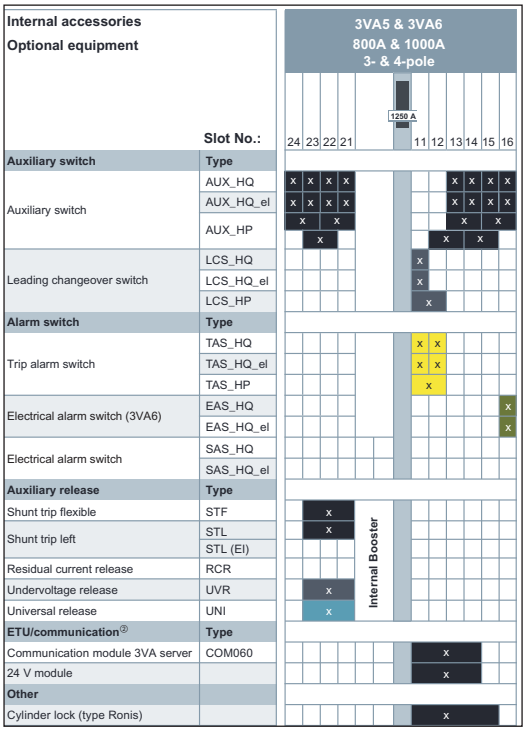

ETU550-LSI, ETU556 LSI(A), ETU560-LSIG, ETU820-LI, ETU856 LSI(A), ETU860-LSIG

Cont. Amp	LI, LIG, LSI, LSIG, LSI(G)			LSI, LSIG, LSI(G)		LIG, LSIG, LSI(G)		LSI 3P with External CT	LI, LIG, LSI, LSIG, LSI(G) 4P only
I_n (Amp)	I_r(Amp) (L)	t_{id} (sec) (L)	I_i (Amp) (I)	I_{sd} (Amp) (S)	t_{sd} (sec) (S)	I_g (Amp) (G)	t_g (G)	I_N=xI_r (Amp)	I_N (Amp)
600	240 - 600	0.5 - 25	900 - 7200	360 - 7200	0.05 - 0.5	120 - 600	0.05 - 0.8	120 - 960	120 - 600
800	320 - 800	0.5 - 25	1200 - 8000	480 - 8000	0.05 - 0.5	160 - 800	0.05 - 0.8	160 - 1280	160 - 800
1000	400 - 1000	0.5 - 25	1500 - 10000	600 - 10000	0.05 - 0.5	200 - 1000	0.05 - 0.8	200 - 1600	200 - 1000

For specific trip settings refer to the Electronic Trip Unit section of the 3VA Systems Manual, which can be found in the document download center at **https://www.siemens.com/download?BTLV_50412**



3VA66 800A 3-Pole

3VA66 1000A, 3-pole Frame, Electronic Trip Unit

Continuous Ampere	M-Interrupting Class (MMNAE) Catalogue Number	H-Interrupting Class (HMNAE) Catalogue Number	C-Interrupting Class (CMNAE) Catalogue Number
ETU320 LI with dials			
1000	**3VA6610-5HL32-0AA0**	**3VA6610-6HL32-0AA0**	**3VA6610-7HL32-0AA0**
ETU330 LIG with dials			
1000	**3VA6610-5HM32-0AA0**	**3VA6610-6HM32-0AA0**	**3VA6610-7HM32-0AA0**
ETU350 LSI with dials			
1000	**3VA6610-5HN32-0AA0**	**3VA6610-6HN32-0AA0**	**3VA6610-7HN32-0AA0**
ETU550 LSI with LCD			
1000	**3VA6610-5JP32-0AA0**	**3VA6610-6JP32-0AA0**	**3VA6610-7JP32-0AA0**
ETU556 LSI(G Alarm) with LCD			
1000	**3VA6610-5JT32-0AA0**	**3VA6610-6JT32-0AA0**	**3VA6610-7JT32-0AA0**
ETU560 LSIG with LCD			
1000	**3VA6610-5JQ32-0AA0**	**3VA6610-6JQ32-0AA0**	**3VA6610-7JQ32-0AA0**
ETU820 LI with LCD and Metering			
1000	**3VA6610-5KL32-0AA0**	**3VA6610-6KL32-0AA0**	**3VA6610-7KL32-0AA0**
ETU856 LSI(G Alarm) with LCD and Metering			
1000	**3VA6610-5KT32-0AA0**	**3VA6610-6KT32-0AA0**	**3VA6610-7KT32-0AA0**
ETU860 LSIG with LCD and Metering			
1000	**3VA6610-5KQ32-0AA0**	**3VA6610-6KQ32-0AA0**	**3VA6610-7KQ32-0AA0**



3VA66 800A 4-Pole

Interrupting Ratings for 3VA66

Interrupting Class	Breaker Type	RMS Symmetrical Amperes (kA) Volts AC (50/60 Hz)				
		240	480Y/277V	480	600Y/347V	600
M	MMNAE	100	35	35	25	25
H	HMNAE	150	65	65	35	35
C	CMNAE	200	100	100	50	50

Dimensions

Shipping Weight

Breaker	Poles	W in. (mm)	H in. (mm)	D in. (mm)	lbs.	kg
3VA66	3	8.3 (210)	12.5 (318)	5.8 (147)	29.4	13.4
3VA66	4	11.1 (280)	12.5 (318)	5.8 (147)	37.4	17.0

3VA66 1000A, 4-pole Frame, Electronic Trip Unit

Continuous Ampere	M-Interrupting Class (MMNAE) Catalogue Number	H-Interrupting Class (HMNAE) Catalogue Number	C-Interrupting Class (CMNAE) Catalogue Number
	ETU320 LI with dials		
1000	**3VA6610-5HL42-0AA0**	**3VA6610-6HL42-0AA0**	**3VA6610-7HL42-0AA0**
	ETU330 LIG with dials		
1000	**3VA6610-5HM42-0AA0**	**3VA6610-6HM42-0AA0**	**3VA6610-7HM42-0AA0**
	ETU350 LSI with dials		
1000	**3VA6610-5HN42-0AA0**	**3VA6610-6HN42-0AA0**	**3VA6610-7HN42-0AA0**
	ETU550 LSI with LCD		
1000	**3VA6610-5JP42-0AA0**	**3VA6610-6JP42-0AA0**	**3VA6610-7JP42-0AA0**
	ETU556 LSI(G Alarm) with LCD		
1000	**3VA6610-5JT42-0AA0**	**3VA6610-6JT42-0AA0**	**3VA6610-7JT42-0AA0**
	ETU560 LSIG with LCD		
1000	**3VA6610-5JQ42-0AA0**	**3VA6610-6JQ42-0AA0**	**3VA6610-7JQ42-0AA0**
	ETU820 LI with LCD and Metering		
1000	**3VA6610-5KL42-0AA0**	**3VA6610-6KL42-0AA0**	**3VA6610-7KL42-0AA0**
	ETU856 LSI(G Alarm) with LCD and Metering		
1000	**3VA6610-5KT42-0AA0**	**3VA6610-6KT42-0AA0**	**3VA6610-7KT42-0AA0**
	ETU860 LSIG with LCD and Metering		
1000	**3VA6610-5KQ42-0AA0**	**3VA6610-6KQ42-0AA0**	**3VA6610-7KQ42-0AA0**

3VA57 1200A, 2-pole in 3-pole Frame, Thermal-Magnetic Trip Unit

Cont. Ampere Rating	M-Interrupting Class (MNAS)	H-Interrupting Class (HNAS)	C-Interrupting Class (CNAS)
	Catalogue Number	Catalogue Number	Catalogue Number
		TM230 FTAM	
800	3VA5780-5EC61-0AA0	3VA5780-6EC61-0AA0	3VA5780-7EC61-0AA0
900	3VA5790-5EC61-0AA0	3VA5790-6EC61-0AA0	3VA5790-7EC61-0AA0
1000	3VA5710-5EC61-0AA0	3VA5710-6EC61-0AA0	3VA5710-7EC61-0AA0
1200	3VA5712-5EC61-0AA0	3VA5712-6EC61-0AA0	3VA5712-7EC61-0AA0

3VA57 1200A, 3-pole Frame, Thermal-Magnetic Trip Unit

Cont. Ampere Rating	M-Interrupting Class (MNAS)	H-Interrupting Class (HNAS)	C-Interrupting Class (CNAS)
	Catalogue Number	Catalogue Number	Catalogue Number
		TM230 FTAM	
800	3VA5780-5EC31-0AA0	3VA5780-6EC31-0AA0	3VA5780-7EC31-0AA0
900	3VA5790-5EC31-0AA0	3VA5790-6EC31-0AA0	3VA5790-7EC31-0AA0
1000	3VA5710-5EC31-0AA0	3VA5710-6EC31-0AA0	3VA5710-7EC31-0AA0
1200	3VA5712-5EC31-0AA0	3VA5712-6EC31-0AA0	3VA5712-7EC31-0AA0

Dimensions — Shipping Weight

Breaker	Poles	W in. (mm)	H in. (mm)	D in. (mm)	lbs.	kg
3VA57	2(3)	9.0 (229)	16.0 (406)	6.0 (152)	55.1	25.0
3VA57	3	9.0 (229)	16.0 (406)	6.0 (152)	55.1	25.0

Interrupting Ratings for 3VA57

Interrupting Class	Breaker Type	RMS Symmetrical Amperes (kA)							
		Volts AC (50/60 Hz)					Volts DC		
		240	480Y/ 277V	480	600Y/ 347V	600	250 (2P)	600 (3P)	750 (3P)
M	MNAS	85	35	35	25	25	50	50	50
H	HNAS	100	65	65	35	35	85	85	85
C	CNAS	200	100	100	65	65	100	100	100



3VA57 1200A 3-Pole

Ordering Information

The catalogue numbers listed here are for complete, non-interchangable trip circuit breakers without lugs. Order required lugs or connection technology separately for field installation.

For factory installed standard line and load lugs, change the 12th digit to 6 (standard lugs are identified in the lug table and footnotes in this section of the SpeedFax). (For example, a 35KA @480VAC, 1200A, 3-pole, 3VA57 with lugs would be catalogue number 3VA5712-5EC3**6**-0AA0). Alternate connectors can be ordered separately for field installation.

All 3VA57 thermal-magnetic trip circuit breakers are UL listed for reverse feed applications.

For NAVAL rated thermal-magnetic trip circuit breakers, change the 13th digit of the catalogue number to the number "1". (For example, a 35KA@480VAC, 1200A, 3-pole, rated 3VA57 would be catalogue number 3VA5712-5EC31-**1**AA0)

All 3VA57 thermal-magnetic trip circuit breakers can be ordered 100% rated. For 100% rated thermal-magnetic trip circuit breakers, change the 13th digit of the catalogue number to the number "2". (For example, a 35KA@480VAC, 1200A, 3-pole, rated 3VA57 would be catalogue number 3VA5712-5EC31-**2**AA0)



3VA67 1200A 3-Pole

Ordering Information

The catalogue numbers listed below are for complete, non-interchangable trip circuit breakers without lugs.

For factory installed standard line and load lugs, change the 12th digit to "6" (standard lugs are identified in the lug table and footnotes in this section of the SpeedFax). (For example, a 35KA @480VAC, 1200A, 3-pole, 3VA67 with lugs would be catalogue number 3VA6712-5HL3**6**-0AA0). Alternate connectors can be ordered separately for field installation.

All 3VA67 electronict trip circuit breakers are UL listed for reverse feed applications.

3VA67 electronic trip circuit breakers are available with 100% ratings. For 100% rated electronic trip circuit breakers, change the 13th digit of the catalogue number to the number "2". (For example, a 35KA @480VAC, 1200A, 3-pole, 100% rated 3VA67 would be catalogue number 3VA6712-5HL31-**2**AA0). See lug table below.

All 3VA6 circuit breakers are certified to UL 489 Supplement SB, are marked "Naval", and are suitable for use at 50C.

3VA67 1200A, 3-pole Frame, Electronic Trip Unit

Continuous Ampere	M-Interrupting Class (MNAE) Catalogue Number	H-Interrupting Class (HNAE) Catalogue Number	C-Interrupting Class (CNAE) Catalogue Number
		ETU320 LI with dials	
800	3VA6780-5HL31-0AA0	3VA6780-6HL31-0AA0	3VA6780-7HL31-0AA0
1000	3VA6710-5HL31-0AA0	3VA6710-6HL31-0AA0	3VA6710-7HL31-0AA0
1200	3VA6712-5HL31-0AA0	3VA6712-6HL31-0AA0	3VA6712-7HL31-0AA0
		ETU330 LIG with dials	
800	3VA6780-5HM31-0AA0	3VA6780-6HM31-0AA0	3VA6780-7HM31-0AA0
1000	3VA6710-5HM31-0AA0	3VA6710-6HM31-0AA0	3VA6710-7HM31-0AA0
1200	3VA6712-5HM31-0AA0	3VA6712-6HM31-0AA0	3VA6712-7HM31-0AA0
		ETU350 LSI with dials	
800	3VA6780-5HN31-0AA0	3VA6780-6HN31-0AA0	3VA6780-7HN31-0AA0
1000	3VA6710-5HN31-0AA0	3VA6710-6HN31-0AA0	3VA6710-7HN31-0AA0
1200	3VA6712-5HN31-0AA0	3VA6712-6HN31-0AA0	3VA6712-7HN31-0AA0
		ETU360 LSIG with dials	
800	3VA6780-5HQ31-0AA0	3VA6780-6HQ31-0AA0	3VA6780-7HQ31-0AA0
1000	3VA6710-5HQ31-0AA0	3VA6710-6HQ31-0AA0	3VA6710-7HQ31-0AA0
1200	3VA6712-5HQ31-0AA0	3VA6712-6HQ31-0AA0	3VA6712-7HQ31-0AA0
		ETU850 LSI with LCD and Metering	
800	3VA6780-5KP31-0AA0	3VA6780-6KP31-0AA0	3VA6780-7KP31-0AA0
1000	3VA6710-5KP31-0AA0	3VA6710-6KP31-0AA0	3VA6710-7KP31-0AA0
1200	3VA6712-5KP31-0AA0	3VA6712-6KP31-0AA0	3VA6712-7KP31-0AA0
		ETU856 LSI(G Alarm) with LCD and Metering	
800	3VA6780-5KT31-0AA0	3VA6780-6KT31-0AA0	3VA6780-7KT31-0AA0
1000	3VA6710-5KT31-0AA0	3VA6710-6KT31-0AA0	3VA6710-7KT31-0AA0
1200	3VA6712-5KT31-0AA0	3VA6712-6KT31-0AA0	3VA6712-7KT31-0AA0
		ETU860 LSIG with LCD and Metering	
800	3VA6780-5KQ31-0AA0	3VA6780-6KQ31-0AA0	3VA6780-7KQ31-0AA0
1000	3VA6710-5KQ31-0AA0	3VA6710-6KQ31-0AA0	3VA6710-7KQ31-0AA0
1200	3VA6712-5KQ31-0AA0	3VA6712-6KQ31-0AA0	3VA6712-7KQ31-0AA0

Dimensions / Shipping Weight

Breaker	Poles	W in. (mm)	H in. (mm)	D in. (mm)	lbs.	kg
3VA67	3	9.0 (229)	16.0 (406)	6.0 (152)	55.1	25.0

Interrupting Ratings for 3VA67

Interrupting Class	Breaker Type	RMS Symmetrical Amperes (kA) Volts AC (50/60 Hz) 240	480Y/277V	480	600Y/347V	600
M	MNAE	85	35	35	25	25
H	HNAE	100	65	65	35	35
C	CNAE	200	100	100	65	65

Trip Settings for 3VA67

ETU320-LI, ETU330-LIG, ETU350-LSI

Cont. Amp	LI, LIG, LSI, LSIG			LSI, LSIG		LIG, LSIG	
I_n (Amp)	I_r(Amp) (L)	t_{td} (sec) (L)	I_i (Amp) (I)	I_{sd}= xIr (Amp) (S)	t_{sd} (sec) (S)	I_g (Amp) (G)	t_g (sec) (S)
800	315–800	2.5 - 30	1200–9600	1.5 - 10	0 - 0.4	160–800	0.1 / 0.3
1000	400–1000	2.5 - 30	1500–12000	1.5 - 10	0 - 0.4	200–1000	
1200	500–1200	2.5 - 30	1800–12000	1.5 - 10	0 - 0.4	240–1200	

ETU850-LSI, ETU856 LSI(A), ETU860-LSIG

Cont. Amp	LSI, LSI(G), LSIG			LSI, LSI(G), LSIG		LSI(G), LSIG		LSI 3P with External CT
I_n (Amp)	I_r(Amp) (L)	t_{td} (sec) (L)	I_i (Amp) (I)	I_{sd} (Amp) (S)	t_{sd} (sec) (S)	I_g (Amp) (G)	t_g (sec) (S)	I_n=xI, (Amp)
800	315–800	2.5 - 30	1200–9600	0.6 - 10	0.05 - 0.5	160–800	0.05 - 0.8	160–1280
1000	400–1000	2.5 - 30	1500–12000	0.6 - 10	0.05 - 0.5	200–1000		200–1600
1200	500–1200	2.5 - 30	1800–12000	0.6 - 10	0.05 - 0.5	240–1200		240–1920

Connections for 75C wire for 3VA57 and 3VA67

Type	Minimum cable size	Maximum cable size	Part Number (kit of 2 lugs)	Part Number (kit of 3 lugs)	Mount Lugs to Essential Parts
TA6.1 Aluminum body lug, 3 cables (Cu/Al cable) with 1 extended terminal cover	500 kcmil	750 kcmil	3VA9772-0JJ34①	**3VA9773-0JJ34**①	
TA6.2 Aluminum body lug, 4 cables (Cu/Al cable) with 1 extended terminal cover	1/0	500 kcmil	3VA9772-0JJ43	**3VA9773-0JJ43**	
TA6.2 Aluminum body lug with CVT, 4 cables (Cu/Al cable) with control wire tap and 1 extended terminal cover	1/0	500 kcmil	—	**3VA9773-0JC43**	
TA6.3 Aluminum body lug, 4 cables (Cu/Al cable) with 1 extended terminal cover, 100% rated	1/0	500 kcmil	—	**3VA9773-0JM43**①	
TC6.2 Copper body lug (Cu cable only) 4 cable lugs	1/0	500 kcmil	—	**3VA9773-0JE43**①	
TA7.1 Aluminum body lug, 6 cables (Cu/Al cable) for lug mounting assembly	1/0	750 kcmil	—	**3VA9773-0JJ64**①②	**3VA9873-0WL00**
CL1.7 Compression lug, 12 pcs, 4 per phase line or load (Cu/Al cable),with extended terminal cover	1/0	500 kcmil	—	**3VA9773-0QK01**	

① Meets requirements for 100% rated breakers up to 1200A, requires the use of 90 degree wire, size to 75 degree ampacity.
① Lugs Require Attachment to 3VA9873-0WL00 LMAP (Sold Separately).

For specific trip settings refer to the Electronic Trip Unit section of the 3VA Systems Manual, which can be found in the document download center at **https://digitalcontentcenter.compas.siemens-info.com/SIE_IM_3VA6_Systems_Manual.pdf**

Internal Accessories[1]

Auxiliary and Alarm Switches (Form C --> 1 NO and 1 NC)

Switch Type	Width	AC 50/ 60 Hz	DC	Catalogue Number
Auxiliary Switch (AUX) HQ	1 slot	240V	250V	**3VA9978-0AA12**
		24V	24V	**3VA9978-0AA23**
Auxiliary Switch (AUX) HP	2 slots	600V	250V	**3VA9978-0AA11**
Trip/Bell Alarm Switch (TAS) HQ	1 slot	240V	250V	**3VA9978-0AB12**
		24V	24V	**3VA9978-0AB13**
Trip/Bell Alarm Switch (TAS) HP	2 slots	600V	250V	**3VA9978-0AB11**

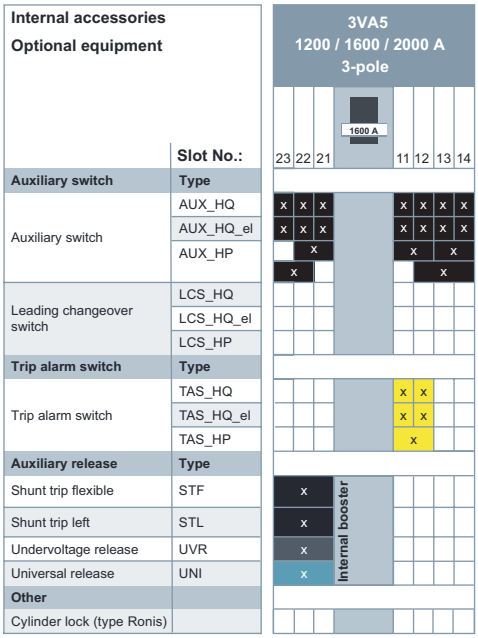

Shunt Trips

Type	VAC 50/60 Hz	VDC	Catalogue Number (3 slots)
Shunt Trip Left (STL)	380 ... 600	—	**3VA9978-0BL20**
	—	12	**3VA9978-0BL10**
	24	24 ... 30	**3V9978-0BL30**
	48 ... 60	48 ... 60	**3VA9978-0BL31**
	110 ... 127	110 ... 127	**3VA9978-0BL32**
	208 ... 277	220 ... 250	**3VA9978-0BL33**
Shunt Trip Flexible (STF)[2]	24	—	**3VA9978-0BA20**
	48 ... 60	—	**3VA9978-0BA21**
	110 ... 127	—	**3VA9978-0BA22**
	208 ... 277	—	**3VA9978-0BA23**
	380 ... 500	—	**3VA9978-0BA24**
	600	—	**3VA9978-0BA25**

Undervoltage Release

Undervoltage Release (UVR)	—	12	**3VA9978-0BB10**
	—	24	**3VA9978-0BB11**
	—	48	**3VA9978-0BB12**
	—	125 ... 127	**3VA9978-0BB14**
	—	250	**3VA9978-0BB16**
	24	—	**3VA9978-0BB20**
	120 ... 127	—	**3VA9978-0BB24**
	208 ... 230	—	**3VA9978-0BB25**
	440 ... 480	—	**3VA9978-0BB27**

Universal Release (Undervoltage and Shunt trip)

Universal Release (UNI)	—	12	**3VA9978-0BD11**
	—	24	**3VA9978-0BD12**
	—	48	**3VA9978-0BD13**

Time-delay Device for Undervoltage Release

Type	VAC 50/60 Hz	VDC	Delay Time	Catalogue Number
Time-delay Device (mounted external to circuit breaker)	230	230	Fixed – 100ms min.	**3VA9978-0BF22**
	—	24	Fixed – 100ms min.	**3VA9978-0BF23**

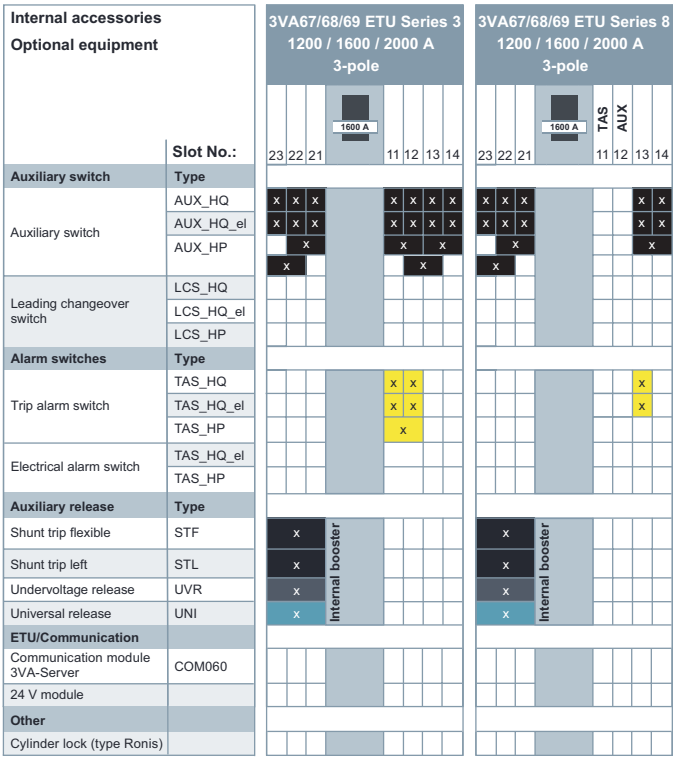

[1] Refer to pages <?> and <?> for internal accessory electrical requirements.

[2] Shunt trip flexible can be used in the left pocket of the 3VA5 breakers. They can be used in the left or right pocket of the 3VA6 breakers.

3VA58 1600A, 3-pole Frame, Thermal-Magnetic Trip Unit

Cont. Ampere Rating	M-Interrupting Class (MPAS)	H-Interrupting Class (HPAS)	C-Interrupting Class (CPAS)
	Catalogue Number	Catalogue Number	Catalogue Number
		TM230 FTAM	
1400	**3VA5814-5EC31-0AA0**	**3VA5814-6EC31-0AA0**	**3VA5814-7EC31-0AA0**
1600	**3VA5816-5EC31-0AA0**	**3VA5816-6EC31-0AA0**	**3VA5816-7EC31-0AA0**

Dimensions

Shipping Weight

Breaker	Poles	W in. (mm)	H in. (mm)	D in. (mm)	lbs.	kg
3VA58	3	9.0 (229)	16.0 (406)	6.0 (152)	69.0	31.3

Mounting Arrangement (Required for Cable Connections)

Bus connections require either "3VA9873-0QB00" or "3VA9873-0QH00"

Description	Catalogue Number
Mounting Base for front connection	**3VA9873-0WM00**
Mounting Base for rear connection	**3VA9873-0WN00**
Lug Mounting Assembly	**3VA9873-0WL00**

Interrupting Ratings for 3VA58

Interrupting Class	Breaker Type	RMS Symmetrical Amperes (kA)							
		Volts AC (50/60 Hz)					Volts DC		
		240	480Y/ 277V	480	600Y/ 347V	600	250 (2P)	600 (3P)	750 (3P)
M	MPAS	85	35	35	25	25	50	50	50
H	HPAS	100	65	65	35	35	85	85	85
C	CPAS	200	100	100	65	65	100	100	100



3VA58 1600A 3-Pole

Ordering Information

The catalogue numbers listed here are for 3VA58 1600A thermal-magnetic trip circuit breakers only. Order required mounting arrangement and necessary terminal connections as separate items.

All 3VA58 thermal-magnetic trip circuit breakers are UL listed for reverse feed applications.

For NAVAL rated thermal-magnetic trip circuit breakers, change the 13th digit of the catalogue number to the number "1". (For example, a 35KA@480VAC, 1600A, 3-pole, rated 3VA58 would be catalogue number 3VA5816-5EC31-**1**AA0).

All 3VA58 thermal-magnetic trip circuit breakers can be ordered 100% rated. For 100% rated thermal-magnetic trip circuit breakers, change the 13th digit of the catalogue number to the number "2". (For example, a 35KA@480VAC, 1600A, 3-pole, rated 3VA58 would be catalogue number 3VA5816-5EC31-**2**AA0).



3VA68 1600A 3-Pole

Ordering Information

The catalogue numbers listed below are for 3VA68 1600A Electronic trip circuit breakers only. Order required mounting arrangement and necessary terminal connectors as separate items.

All 3VA68 electronict trip circuit breakers are UL listed for reverse feed applications.

3VA68 electronic trip circuit breakers are available with 100% ratings. For 100% rated electronic trip circuit breakers, change the 13th digit of the catalogue number to the number "2". (For example, a 35KA @480VAC, 1600A, 3-pole, 100% rated 3VA68 would be catalogue number 3VA6816-5HL31-**2**AA0) Requires the use of copper lugs — see lug table below.

All 3VA6 circuit breakers are certified to UL 489 Supplement SB, are marked "Naval", and are suitable for use at 50C.

3VA68 1600A, 3-pole Frame, Electronic Trip Unit

Continuous Ampere	M-Interrupting Class (MPAE) Catalogue Number	H-Interrupting Class (HPAE) Catalogue Number	C-Interrupting Class (CPAE) Catalogue Number
		ETU320 LI with dials	
1600	**3VA6816-5HL31-0AA0**	**3VA6816-6HL31-0AA0**	**3VA6816-7HL31-0AA0**
		ETU330 LIG with dials	
1600	**3VA6816-5HM31-0AA0**	**3VA6816-6HM31-0AA0**	**3VA6816-7HM31-0AA0**
		ETU350 LSI with dials	
1600	**3VA6816-5HN31-0AA0**	**3VA6816-6HN31-0AA0**	**3VA6816-7HN31-0AA0**
		ETU360 LSIG with dials	
1600	**3VA6816-5HQ31-0AA0**	**3VA6816-6HQ31-0AA0**	**3VA6816-7HQ31-0AA0**
		ETU850 LSI with LCD and Metering	
1600	**3VA6816-5KP31-0AA0**	**3VA6816-6KP31-0AA0**	**3VA6816-7KP31-0AA0**
		ETU856 LSI (G Alarm) with LCD and Metering	
1600	**3VA6816-5KT31-0AA0**	**3VA6816-6KT31-0AA0**	**3VA6816-7KT31-0AA0**
		ETU860 LSIG with LCD and Metering	
1600	**3VA6816-5KQ31-0AA0**	**3VA6816-6KQ31-0AA0**	**3VA6816-7KQ31-0AA0**

Mounting Arrangement (Required for Cable Connections)

Bus connections require either "3VA9873-0QB00" or "3VA9873-0QH00"

Description	Catalogue Number
Mounting Base for front connection	**3VA9873-0WM00**
Mounting Base for rear connection	**3VA9873-0WN00**
Lug Mounting Assembly	**3VA9873-0WL00**

Dimensions Shipping Weight

Breaker	Poles	W in. (mm)	H in. (mm)	D in. (mm)	lbs.	kg
3VA68	3	9.0 (229)	16.0 (406)	6.0 (152)	69.0	31.3

Interrupting Ratings for 3VA68

Interrupting Class	Breaker Type	RMS Symmetrical Amperes (kA) Volts AC (50/60 Hz) 240	480Y/277V	480	600Y/347V	600
M	MPAE	85	35	35	25	25
H	HPAE	100	65	65	35	35
C	CPAE	200	100	100	65	65

Connections for 75C wire for 3VA58 and 3VA68

Type	Minimum cable size	Maximum cable size	Part Number (kit of 1 lug)	Part Number (kit of 3 lugs)	Mount Lugs to Essential Parts
TA7.2 Aluminum body lug, 4 cables (Cu/Al cable) for mounting base front connection	600 kcmil	750 kcmil	**3VA9771-0JJ44**③④	—	**3VA9873-0WM00 + 3VA9872-0WA00**
TA7.2 Aluminum body lug, 4 cables (Cu/Al cable) for mounting base rear connection	600 kcmil	750 kcmil	**3VA9771-0JJ44**③⑤	—	**3VA9873-0WN00**
TA7.3 Aluminum body lug, 5 cables (Cu/Al cable) for mounting base front connection	300 kcmil	600 kcmil	**3VA9771-0JJ53**③④	—	**3VA9873-0WM00 + 3VA9872-0WA00**
TA7.3 Aluminum body lug, 5 cables (Cu/Al cable) for mounting base rear connection	300 kcmil	600 kcmil	**3VA9771-0JJ53**③⑤	—	**3VA9873-0WN00**
TA7.4 Aluminum body lug, 6 cables (Cu/Al cable) for mounting base front connection	300 kcmil	600 kcmil	**3VA9871-0JJ63**③④	—	**3VA9873-0WM00 + 3VA9872-0WA00**
TC7.3 Copper body lug, 5 cables (Cu cable only) for mounting base front connection	300 kcmil	600 kcmil	**3VA9871-0JE53**①③④	—	**3VA9873-0WM00 + 3VA9872-0WA00**
TC7.3 Copper body lug, 5 cables (Cu cable only) for mounting base rear connection	300 kcmil	600 kcmil	**3VA9871-0JE53**①③⑤	—	**3VA9873-0WN00**
TA7.1 Aluminum body lug, 6 cables (Cu/Al cable) for lug mounting assembly	1/0	750 kcmil	—	**3VA9773-0JJ64**①②	**3VA9873-0WL00**

① Meets requirements for 100% rated breakers up to 1600A, requires the use of 90 degree wire, size to 75 degree ampacity.
② Lugs Require Attachment to 3VA9873-0WL00 LMAP (Sold Separately).
③ Part Number is for kit of 1 lug. Requires customer to purchase Qty. of 3x (kit of 1 lug).
④ Mounting Base Front Connection Requires Lugs to be installed on 3VA9873-0WM00 MBFC (Sold Separately) + 3VA9872-0WA00 Phase Barriers (Sold Separately).
⑤ Mounting Base Rear Connection Requires Lugs to be installed on 3VA9873-0WN00 MBRC (Sold Separately).

Trip Settings for 3VA68

ETU320-LI, ETU330-LIG, ETU350-LSI, ETU360-LSIG

Cont. Amp	LI, LIG, LSI, LSIG			LSI, LSIG		LIG, LSIG	
I_n (Amp)	I_r(Amp) (L)	t_{ld} (sec) (L)	I_i (Amp) (I)	I_{sd}= xIr (Amp) (S)	t_{sd} (sec) (S)	I_g (Amp) (G)	t_g (sec) (S)
1600	600–1600	2.5 - 30	2400–12000	1.5–10	0 - 0.4	250–1600	0.1 / 0.3

ETU850-LSI, ETU856 LSI(A), ETU860-LSIG

Cont. Amp	LSI, LSIG, LSI(G)			LSI, LSIG, LSI(G)		LSIG, LSI(G)		LSI 3P with External CT
I_n (Amp)	I_r(Amp) (L)	t_{ld} (sec) (L)	I_i (Amp) (I)	I_{sd} (Amp) (S)	t_{sd} (sec) (S)	I_g (Amp) (G)	t_g (sec) (S)	I_h=xI_r (Amp)
1600	600–1600	2.5 - 30	2400–12000	0.6–10	0.05 - 0.5	320–1600	0.05-0.8	320–2560

For specific trip settings refer to the Electronic Trip Unit section of the 3VA Systems Manual, which can be found in the document download center at **https://digitalcontentcenter.compas.siemens-info.com/SIE_IM_3VA6_Systems_Manual.pdf**

Internal Accessories[1]

Auxiliary and Alarm Switches (Form C --> 1 NO and 1 NC)

Switch Type	Width	AC 50/ 60 Hz	DC	Catalogue Number
Auxiliary Switch (AUX) HQ	1 slot	240V	250V	**3VA9978-0AA12**
		24V	24V	**3VA9978-0AA23**
Auxiliary Switch (AUX) HP	2 slots	600V	250V	**3VA9978-0AA11**
Trip/Bell Alarm Switch (TAS) HQ	1 slot	240V	250V	**3VA9978-0AB12**
		24V	24V	**3VA9978-0AB13**
Trip/Bell Alarm Switch (TAS) HP	2 slots	600V	250V	**3VA9978-0AB11**

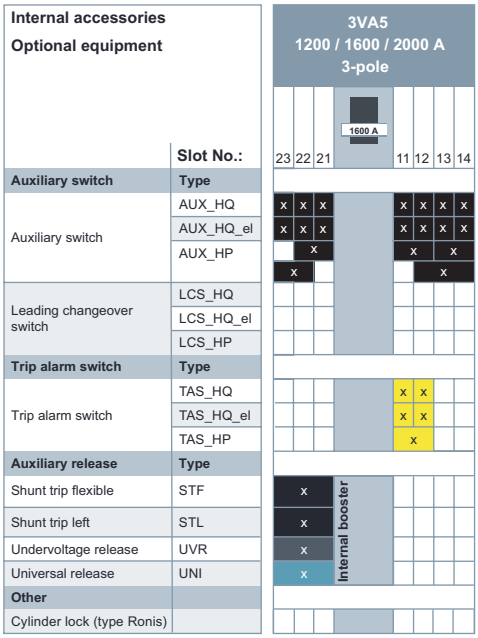

Shunt Trips

Type	VAC 50/60 Hz	VDC	Catalogue Number (3 slots)
Shunt Trip Left (STL)	380 ... 600	—	**3VA9978-0BL20**
	—	12	**3VA9978-0BL10**
	24	24 ... 30	**3V9978-0BL30**
	48 ... 60	48 ... 60	**3VA9978-0BL31**
	110 ... 127	110 ... 127	**3VA9978-0BL32**
	208 ... 277	220 ... 250	**3VA9978-0BL33**
Shunt Trip Flexible (STF)[2]	24	—	**3VA9978-0BA20**
	48 ... 60	—	**3VA9978-0BA21**
	110 ... 127	—	**3VA9978-0BA22**
	208 ... 277	—	**3VA9978-0BA23**
	380 ... 500	—	**3VA9978-0BA24**
	600	—	**3VA9978-0BA25**

Undervoltage Release

Undervoltage Release (UVR)	—	12	**3VA9978-0BB10**
	—	24	**3VA9978-0BB11**
	—	48	**3VA9978-0BB12**
	—	125 ... 127	**3VA9978-0BB14**
	—	250	**3VA9978-0BB16**
	24	—	**3VA9978-0BB20**
	120 ... 127	—	**3VA9978-0BB24**
	208 ... 230	—	**3VA9978-0BB25**
	440 ... 480	—	**3VA9978-0BB27**

Universal Release (Undervoltage and Shunt trip)

Universal Release (UNI)	—	12	**3VA9978-0BD11**
	—	24	**3VA9978-0BD12**
	—	48	**3VA9978-0BD13**

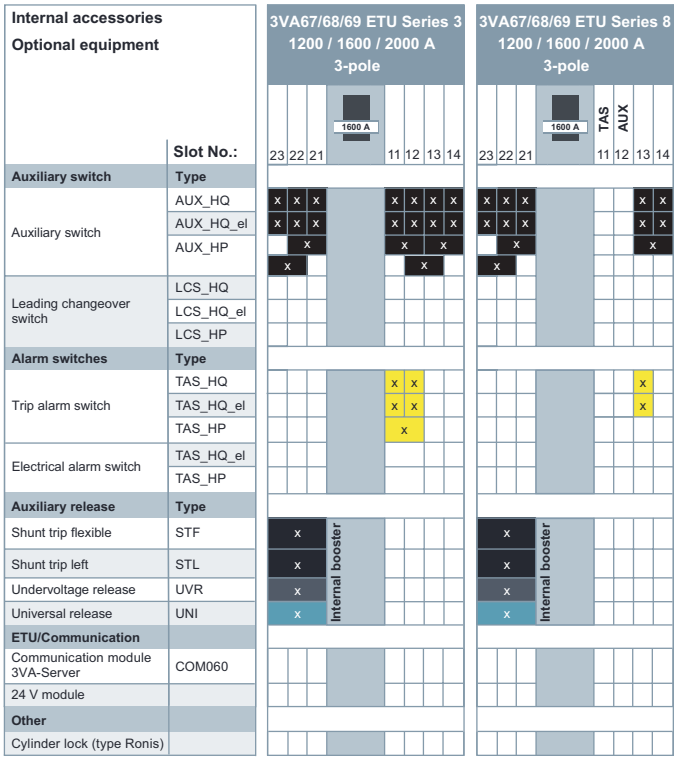

Time-delay Device for Undervoltage Release

Type	VAC 50/60 Hz	VDC	Delay Time	Catalogue Number
Time-delay Device (mounted external to circuit breaker)	230	230	Fixed – 100ms min.	**3VA9978-0BF22**
	—	24	Fixed – 100ms min.	**3VA9978-0BF23**

[1] Refer to pages <?> and <?> for internal accessory electrical requirements.

[2] Shunt trip flexible can be used in the left pocket of the 3VA5 breakers. They can be used in the left or right pocket of the 3VA6 breakers.

3VA59 2000A, 3-pole Frame, Thermal-Magnetic Trip Unit

Cont. Ampere Rating	M-Interrupting Class (MRAS)	H-Interrupting Class (HRAS)	C-Interrupting Class (CRAS)
	Catalogue Number	Catalogue Number	Catalogue Number
	TM230 FTAM		
1800	**3VA5918-5EC31-0AA0**	**3VA5918-6EC31-0AA0**	**3VA5918-7EC31-0AA0**
2000	**3VA5920-5EC31-0AA0**	**3VA5920-6EC31-0AA0**	**3VA5920-7EC31-0AA0**

Dimensions / Shipping Weight

Breaker	Poles	W in. (mm)	H in. (mm)	D in. (mm)	lbs.	kg
3VA59	3	9.0 (229)	16.0 (406)	6.0 (152)	69.0	31.3

Mounting Arrangement (Required)

Description	Catalogue Number
Mounting Base for front connection	**3VA9873-0WM00**
Mounting Base for rear connection	**3VA9873-0WN00**

Interrupting Ratings for 3VA59

Interrupting Class	Breaker Type	RMS Symmetrical Amperes (kA)							
		Volts AC (50/60 Hz)					Volts DC		
		240	480Y/ 277V	480	600Y/ 347V	600	250 (2P)	600 (3P)	750 (3P)
M	MRAS	85	35	35	25	25	50	50	50
H	HRAS	100	65	65	35	35	85	85	85
C	CRAS	200	100	100	65	65	100	100	100



3VA59 2000A 3-Pole

Ordering Information

The catalogue numbers listed here are for 3VA59 2000A thermal-magnetic trip circuit breakers only. Order required mounting base assembly and necessary terminal connections as separate items.

All 3VA59 thermal-magnetic trip circuit breakers are UL listed for reverse feed applications.

For NAVAL rated (3-pole only) thermal-magnetic trip circuit breakers, change the 13th digit of the catalogue number to the number "1". (For example, a 35KA@480VAC, 2000A, 3-pole, rated 3VA59 would be catalogue number 3VA5920-5EC31-**1**AA0)

3VA69 2000A, 3-pole Frame, Electronic Trip Unit

Continuous Ampere	M-Interrupting Class (MRAE)	H-Interrupting Class (HRAE)	C-Interrupting Class (CRAE)
	Catalogue Number	Catalogue Number	Catalogue Number
ETU850 LSI with LCD and Metering			
2000	**3VA6920-5KP31-0AA0**	**3VA6920-6KP31-0AA0**	**3VA6920-7KP31-0AA0**
ETU856 LSI (G Alarm) with LCD and Metering			
2000	**3VA6920-5KT31-0AA0**	**3VA6920-6KT31-0AA0**	**3VA6920-7KT31-0AA0**
ETU860 LSIG with LCD and Metering			
2000	**3VA6920-5KQ31-0AA0**	**3VA6920-6KQ31-0AA0**	**3VA6920-7KQ31-0AA0**



3VA69 2000A 3-Pole

Mounting Arrangement (Required)

Description	Catalogue Number
Mounting Base for front connection	**3VA9873-0WM00**
Mounting Base for rear connection	**3VA9873-0WN00**

Dimensions / Shipping Weight

Breaker	Poles	W in. (mm)	H in. (mm)	D in. (mm)	lbs.	kg
3VA69	3	9.0 (229)	16.0 (406)	6.0 (152)	69.0	31.3

Interrupting Ratings for 3VA69

Interrupting Class	Breaker Type	RMS Symmetrical Amperes (kA) Volts AC (50/60 Hz) 240	480Y/277V	480	600Y/347V	600
M	MRAE	85	35	35	25	25
H	HRAE	100	65	65	35	35
C	CRAE	200	100	100	65	65

Ordering Information

The catalogue numbers listed below are for 3VA69 2000A Electronic trip circuit breakers only. Order required mounting base assembly and necessary terminal connectors as separate items.

All 3VA69 electronict trip circuit breakers are UL listed for reverse feed applications.

ETU850-LSI, ETU856 LSI(A), ETU860-LSIG

Cont. Amp	LSI, LSIG, LSI(G)			LSI, LSIG, LSI(G)		LSIG, LSI(G)		LSI 3P with External CT
I_n (Amp)	I_r(Amp) (L)	t_{rd} (sec) (L)	I_i (Amp) (I)	I_{sd} (Amp) (S)	t_{sd} (sec) (S)	I_g (Amp) (G)	t_g (sec) (S)	I_N=xI_r (Amp)
2000	800–2000	2.5 - 30	3000–12000	0.6–10	0.05 - 0.5	400–2000	0.05–0.8	400–3200

Connections for 75C wire for 3VA59 and 3VA69

Type	Minimum cable size	Maximum cable size	Part Number (kit of 1 lugs)	Mount Lugs to Essential Parts
TA7.4 Aluminum body lug, 6 cables (Cu/Al cable) for mounting base front connection, only for UL applications	300 kcmil	600 kcmil	**3VA9871-0JJ63**	**3VA9873-0WM00 + 3VA9872-0WA00**
TC7.3 Copper body lug, 5 cables (Cu cable only) for mounting base front connection, only for UL applications	300 kcmil	600 kcmil	**3VA9871-0JE53**	**3VA9873-0WM00 + 3VA9872-0WA00**
TC7.3 Copper body lug, 5 cables (Cu cable only) for mounting base rear connection, only for UL applications	300 kcmil	600 kcmil	**3VA9871-0JE53**	**3VA9873-0WN00**

① Part Number is for kit of 1 lug. Requires customer to purchase Qty. of 3x (kit of 1 lug).
② Mounting Base Front Connection Requires Lugs to be installed on 3VA9873-0WM00 MBFC (Sold Separately) + 3VA9872-0WA00 Phase Barriers (Sold Separately).
③ Mounting Base Rear Connection Requires Lugs to be installed on 3VA9873-0WN00 MBRC (Sold Separately).

Internal Accessories[1]

Auxiliary and Alarm Switches (Form C --> 1 NO and 1 NC)

Switch Type	Width	AC 50/ 60 Hz	DC	Catalogue Number
Auxiliary Switch (AUX) HQ	1 slot	240V	250V	**3VA9978-0AA12**
		24V	24V	**3VA9978-0AA23**
Auxiliary Switch (AUX) HP	2 slots	600V	250V	**3VA9978-0AA11**
Trip/Bell Alarm Switch (TAS) HQ	1 slot	240V	250V	**3VA9978-0AB12**
		24V	24V	**3VA9978-0AB13**
Trip/Bell Alarm Switch (TAS) HP	2 slots	600V	250V	**3VA9978-0AB11**

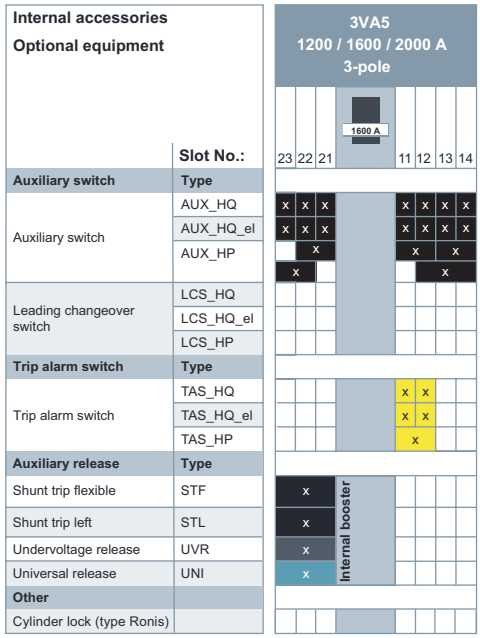

Shunt Trips

Type	VAC 50/60 Hz	VDC	Catalogue Number (3 slots)
Shunt Trip Left (STL)	380 ... 600	—	**3VA9978-0BL20**
	—	12	**3VA9978-0BL10**
	24	24 ... 30	**3V9978-0BL30**
	48 ... 60	48 ... 60	**3VA9978-0BL31**
	110 ... 127	110 ... 127	**3VA9978-0BL32**
	208 ... 277	220 ... 250	**3VA9978-0BL33**
Shunt Trip Flexible (STF)[2]	24	—	**3VA9978-0BA20**
	48 ... 60	—	**3VA9978-0BA21**
	110 ... 127	—	**3VA9978-0BA22**
	208 ... 277	—	**3VA9978-0BA23**
	380 ... 500	—	**3VA9978-0BA24**
	600	—	**3VA9978-0BA25**

Undervoltage Release

Undervoltage Release (UVR)	—	12	**3VA9978-0BB10**
	—	24	**3VA9978-0BB11**
	—	48	**3VA9978-0BB12**
	—	125 ... 127	**3VA9978-0BB14**
	—	250	**3VA9978-0BB16**
	24	—	**3VA9978-0BB20**
	120 ... 127	—	**3VA9978-0BB24**
	208 ... 230	—	**3VA9978-0BB25**
	440 ... 480	—	**3VA9978-0BB27**

Universal Release (Undervoltage and Shunt trip)

Universal Release (UNI)	—	12	**3VA9978-0BD11**
	—	24	**3VA9978-0BD12**
	—	48	**3VA9978-0BD13**

Time-delay Device for Undervoltage Release

Type	VAC 50/60 Hz	VDC	Delay Time	Catalogue Number
Time-delay Device (mounted external to circuit breaker)	230	230	Fixed – 100ms min.	**3VA9978-0BF22**
	—	24	Fixed – 100ms min.	**3VA9978-0BF23**

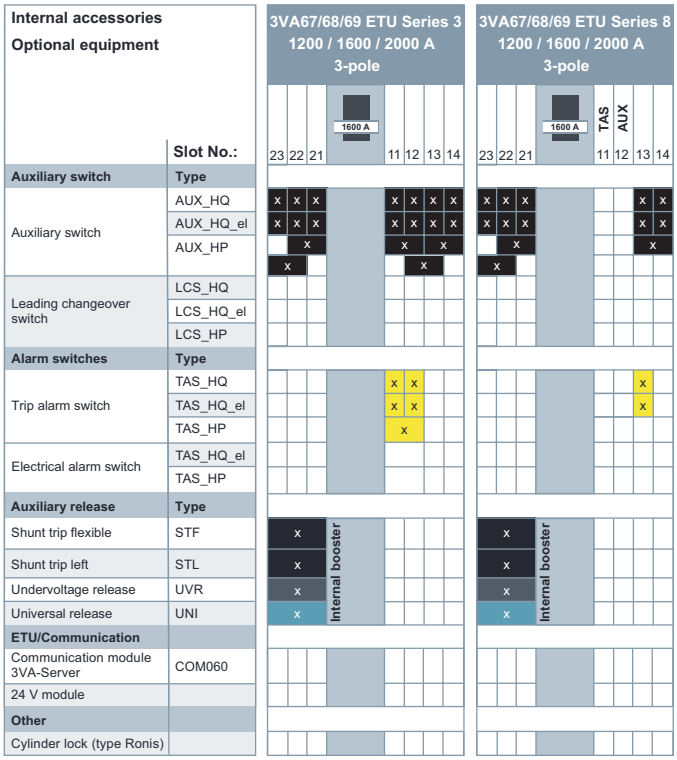

[1] Refer to pages <?> and <?> for internal accessory electrical requirements.

[2] Shunt trip flexible can be used in the left pocket of the 3VA5 breakers. They can be used in the left or right pocket of the 3VA6 breakers.

Ordering Information

Breaking capacity (the SCCR rating) is the maximum permissible short circuit current at the installation location of the MCS in combination with an appropriate overload protective device.

For factory installed nut keepers for molded case switches and motor circuit protectors, change the 12th digit of the catalogue number to "2" (required for panelboard or switchboard installation).

For factory installed standard lugs, change the 12th digit to "6" (standard lugs are identified in the lug table in the accessory section of the SpeedFax). Alternate connection technology need to be ordered separately for field installation.



Magnetic switch



Electronic Trip Unit switch

Molded Case Switch Magnetic

Frame (Breaker Type)	Max. Amp Rating	2-Pole	3-Pole	Short-Circuit Current Rating (AC)			Short-Circuit Current Rating (DC)				Instantaneous short circuit protection
		Catalogue Number	Catalogue Number	240V	480V	600V	125V	250V②	500V③	600V③	
3VA51 (HEAS)	100	3VA5110-1BB21-0AA0	3VA5110-1BB31-0AA0	150k	65k	25k①	30k	100k	100k	—	1600 A

		Catalogue Number	Catalogue Number	240V	480V	600V	250V	500V②	600V③	750V③	
3VA52 (HFAS)	150	**3VA5215-0BB61-0AA0**	**3VA5215-0BB31-0AA0**	100k	65k	25k	85k	85k	—	85k	2400 A
	250	**3VA5225-0BB61-0AA0**	**3VA5225-0BB31-0AA0**	100k	65k	25k	85k	85k	—	85k	2500 A
3VA53 (HJAS)	400	**3VA5340-0BB61-0AA0**	**3VA5340-0BB31-0AA0**	100k	65k	25k	85k	85k	85k	10k	6000 A
3VA54 (HLAS)	600	**3VA5460-0BB61-0AA0**	**3VA5460-0BB31-0AA0**	100k	65k	25k	85k	85k	85k	10k	6000 A
3VA55 (HMAS)	800	**3VA5580-0BB62-0AA0**	**3VA5580-0BB32-0AA0**	100k	65k	25k	85k	85k	85k	85k	8000 A
3VA57 (HNAS)	1000	**3VA5710-6BB61-0AA0**	**3VA5710-6BB31-0AA0**	100k	65k	25k	85k	85k	85k	85k	12000 A
	1200	**3VA5712-6BB61-0AA0**	**3VA5712-6BB31-0AA0**	100k	65k	25k	85k	85k	85k	85k	12000 A
3VA58 (HPAS)	1600	—	**3VA5816-6BB31-0AA0**	100k	65k	25k	85k	85k	85k	85k	12000 A
3VA59 (HRAS)	2000	—	**3VA5920-6BB31-0AA0**	100k	65k	25k	—	—	—	—	12000 A

Frame (Breaker Type)	Max. Amp Rating	2-Pole	3-Pole	Short-Circuit Current Rating (AC)			Short-Circuit Current Rating (DC)				Instantaneous short circuit protection
		Catalogue Number	Catalogue Number	240V	480V	600V	250V	500V②	600V③	750V③	
3VA52 (CFAS)	100	**3VA5210-1BB61-0AA0**	**3VA5210-1BB31-0AA0**	200k	100k	35k	100k	100k	—	100k	2500 A
	150	**3VA5215-1BB61-0AA0**	**3VA5215-1BB31-0AA0**	200k	100k	35k	100k	100k	—	100k	2400 A
	250	**3VA5225-1BB61-0AA0**	**3VA5225-1BB31-0AA0**	200k	100k	35k	100k	100k	—	100k	2500 A
3VA53 (CJAS)	400	**3VA5340-1BB61-0AA0**	**3VA5340-1BB31-0AA0**	200k	100k	35k	100k	100k	100k	10k	6000 A
3VA54 (CLAS)	600	**3VA5460-1BB61-0AA0**	**3VA5460-1BB31-0AA0**	200k	100k	35k	100k	100k	100k	10k	6000 A
3VA55 (CMAS)	800	**3VA5580-1BB62-0AA0**	**3VA5580-1BB32-0AA0**	100k	100k	50k	100k	100k	100k	100k	8000 A
3VA57 (CNAS)	1000	**3VA5710-7BB61-0AA0**	**3VA5710-7BB31-0AA0**	200k	100k	65k	100k	100k	100k	100k	12000 A
	1200	**3VA5712-7BB61-0AA0**	**3VA5712-7BB31-0AA0**	200k	100k	65k	100k	100k	100k	100k	12000 A
3VA58 (CPAS)	1600	—	**3VA5816-7BB31-0AA0**	200k	100k	65k	100k	100k	100k	100k	12000 A
3VA59 (CRAS)	2000	—	**3VA5920-7BB31-0AA0**	200k	100k	65k	—	—	—	—	12000 A

Molded Case Switch Electronic

Frame (Breaker Type)	Max. Ampere Rating	2-Pole	3-Pole	Short-Circuit Current Rating			Instantaneous short circuit protection
		Catalogue Number	Catalogue Number	240V	480V	600V	
3VA63 (CJAE)	400	—	3VA6340-1BB31-0AA0	200k	100k	35k	5600 A
3VA64 (CLAE)	600	—	3VA6460-1BB31-0AA0	200k	100k	35k	5400 A

① Rated at 600 Y/347 V AC.

② Two poles in series.
③ Three poles in series.

Motor circuit protector TM120M AM③

Frame (Breaker Type)	Maximum Ampere Rating	3-Pole Catalogue Number	Instantaneous short circuit protection
3VA51 (HEAP)	1	**3VA5181-1MU31-0AA0**	3 ... 7
		3VA5181-1MH31-0AA0	5 ... 12
	2	**3VA5102-1MU31-0AA0**	6 ... 14
		3VA5102-1MH31-0AA0	10 ... 24
	3	**3VA5103-1MU31-0AA0**	9 ... 21
		3VA5103-1MH31-0AA0	15 ... 36
	5	**3VA5105-1MU31-0AA0**	15 ... 35
		3VA5105-1MH31-0AA0	25 ... 60
	7	**3VA5107-1MU31-0AA0**	21 ... 49
		3VA5107-1MH31-0AA0	35 ... 84
	10	**3VA5191-1MU31-0AA0**	30 ... 70
		3VA5191-1MH31-0AA0	50 ... 120
	15	**3VA5195-1MU31-0AA0**	45 ... 105
		3VA5195-1MH31-0AA0	75 ... 180
	25	**3VA5125-1MU31-0AA0**	75 ... 175
		3VA5125-1MH31-0AA0	125 ... 300
	30	**3VA5130-1MU31-0AA0**	90 ... 210
		3VA5130-1MH31-0AA0	150 ... 360
	40	**3VA5140-1MU31-0AA0**	120 ... 280
		3VA5140-1MH31-0AA0	200 ... 480
	50	**3VA5150-1MU31-0AA0**	150 ... 350
		3VA5150-1MH31-0AA0	250 ... 600
	70	**3VA5170-1MU31-0AA0**	210 ... 490
		3VA5170-1MH31-0AA0	350 ... 840
	80	**3VA5180-1MU31-0AA0**	240 ... 560
		3VA5180-1MH31-0AA0	400 ... 960
	90	**3VA5190-1MU31-0AA0**	270 ... 630
		3VA5190-1MH31-0AA0	450 ... 1080
	100	**3VA5110-1MU31-0AA0**	300 ... 700
		3VA5110-1MH31-0AA0	500 ... 1200
	110	**3VA5111-1MU31-0AA0**	330 ... 770
		3VA5111-1MH31-0AA0	550 ... 1320
	125	**3VA5112-1MU31-0AA0**	375 ... 875
		3VA5112-1MH31-0AA0	625 ... 1500
3VA52 (HFAP)	150	**3VA5215-0MU31-0AA0**	450 ... 900
		3VA5215-0MH31-0AA0	900 ... 1800
	200	**3VA5220-0MU31-0AA0**	600 ... 1200
		3VA5220-0MH31-0AA0	1200 ... 2400
3VA53 (HJAP)	250	**3VA5325-0MU31-0AA0**	750 ... 1500
		3VA5325-0MH31-0AA0	1500 ... 3000

Motor circuit protector TM120M AM②

3VA52 (CFAP)	150	**3VA5215-1MU31-0AA0**	450 ... 900
		3VA5215-1MH31-0AA0	900 ... 1800
	200	**3VA5220-1MU31-0AA0**	600 ... 1200
		3VA5220-1MH31-0AA0	1200 ... 2400

Motor circuit protector ETU310M②

Frame (Breaker Type)	Maximum Ampere Rating	3-Pole Catalogue Number	Instantaneous short circuit protection
3VA61 (CDAR)	25	**3VA6125-1MS31-0AA0**	75 ... 375
	30	**3VA6130-1MS31-0AA0**	90 ... 450
	40	**3VA6140-1MS31-0AA0**	120 ... 600
	50	**3VA6150-1MS31-0AA0**	150 ... 750
	70	**3VA6170-1MS31-0AA0**	210 ... 1050
	80	**3VA6180-1MS31-0AA0**	240 ... 1200
	90	**3VA6190-1MS31-0AA0**	270 ... 1350
	100	**3VA6110-1MS31-0AA0**	300 ... 1500
3VA62 (CFAR-Y)	110	**3VA6211-1MS31-0AA0**	330 ... 1650
	125	**3VA6212-1MS31-0AA0**	375 ... 1875
	150	**3VA6215-1MS31-0AA0**	450 ... 2250
	200	**3VA6220-1MS31-0AA0**	600 ... 2400
3VA63 (CJAR)	200	**3VA6320-1MS31-0AA0**	600 ... 3000
	250	**3VA6325-1MS31-0AA0**	750 ... 3750
3VA64 (CLAR)	400	**3VA6440-1MS31-0AA0**	1200 ... 5200
	500	**3VA6450-1MS31-0AA0**	1500 ... 6000
3VA65 (CMAR)	800	**3VA6580-1MS31-0AA0**	2400 ... 12000

Interrupting Ratings

Frame	Breaker Type	RMS Symmetrical Amperes (kA)							
		Volts AC (50/60 Hz)				Volts DC			
		240	480	600Y/ 347V	600	125 (1P)	250 (2P)	500④ (3P)	600 (3P)
3VA51	HEAP	150	65	25	—	30	100	100	—
3VA52	HFAP	100	65	25	25			85	85
	CFAP	200	100	35	35			100	100
3VA53	HJAP	100	65	25	25	—	—	—	—
	CHAP	200	100	35	35	—	—	—	—
3VA54	HLAP	100	65	25	25	—	—	—	—
	CLAP	200	100	35	35	—	—	—	—
3VA55	HMAP	100	65	25	—	—	—	—	—
	CMAP	100	100	50	—	—	—	—	—
3VA61	CDAR	200	100	35	35	—	—	—	—
3VA62	CFAR	200	100	35	35	—	—	—	—
3VA63	CJAR	200	100	35	35	—	—	—	—
3VA64	CLAR	200	100	35	35	—	—	—	—
3VA65	CMAR	200	100	42	—	—	—	—	—



Motor Circuit Protector

① Rated at 600 Y/347 V AC.
② SCCR is 35kA at 600V. SCCR rating is the maximum permissible short circuit current of the MCP in combination with an appropriate overload protection device.
③ SCCR is 25kA at 600V. SCCR rating is the maximum permissible short circuit current of the MCP in combination with an appropriate overload protection device.
④ 2 poles required for 500VDC for breaker types HFAP and CFAP.

Internal Accessories

Auxiliary and Alarm Switches

Switch Type	Catalogue Number		
	HP High Power (2 slots)	HQ Compact (1 slot)	HQ Electronic① (1 slot)
Auxiliary Switch (AUX)	3VA9978-0AA11	**3VA9978-0AA12**	**3VA9978-0AA13**
Leading Changeover Switch (LCS)	3VA9978-0AA21	**3VA9978-0AA22**	**3VA9978-0AA23**
Trip Alarm Switch (TAS)	3VA9978-0AB11	**3VA9978-0AB12**	**3VA9978-0AB13**
Electronic Alarm (EAS)	—	**3VA9978-0AB22**	**3VA9978-0AB23**

Auxiliary switches and alarm switches HQ



Shunt Trips

Type	VAC 50/60 Hz	VDC	Catalogue Number (3 slots)
Shunt Trip Left (STL)	380 ... 600	—	**3VA9978-0BL20**
	—	12	**3VA9978-0BL10**
	24	24 ... 30	**3VA9978-0BL30**
	48 ... 60	—	**3VA9978-0BL31**
	110 ... 127	110 ... 127	**3VA9978-0BL32**
	208 ... 277	220 ... 250	**3VA9978-0BL33**
Shunt Trip Flexible (STF)②	24	—	**3VA9978-0BA20**
	48 ... 60	—	**3VA9978-0BA21**
	110 ... 127	—	**3VA9978-0BA22**
	208 ... 277	—	**3VA9978-0BA23**
	380 ... 500	—	**3VA9978-0BA24**
	600	—	**3VA9978-0BA25**

Auxiliary switches and alarm switches HP



Undervoltage Release

Undervoltage Release (UVR)	—	12	**3VA9978-0BB10**
	—	24	**3VA9978-0BB11**
	—	48	**3VA9978-0BB12**
	—	125 ... 127	**3VA9978-0BB14**
	—	250	**3VA9978-0BB16**
	24	—	**3VA9978-0BB20**
	120 ... 127	—	**3VA9978-0BB24**
	208 ... 230	—	**3VA9978-0BB25**
	440 ... 480	—	**3VA9978-0BB27**

Shunt trip left STL



Undervoltage releases UVR



Universal Release (Undervoltage and Shunt trip)

Universal Release (UNI)	—	12	**3VA9978-0BD11**
	—	24	**3VA9978-0BD12**
	—	48	**3VA9978-0BD13**

Universal release UNI



Time-delay Device for Undervoltage Release

Type	VAC 50/60 Hz	VDC	Delay Time	Catalogue Number
Time-delay Device	230	230	Fixed – 100ms minimum	**3VA9978-0BF22**
	—	24	Fixed – 100ms minimum	**3VA9978-0BF23**

Time-delay device for undervoltage releases



① Use only with 3VA6.

② Shunt trip flexible can be used in the left pocket of the 3VA5 breakers. They can be used in the left or right pocket of the 3VA6 breakers.

Front Mounted Rotary Operator



Degree of protection NEMA 1

Type	Color	3VA5 125A	3VA5 250A	3VA6 150A 250A	3VA5 3VA6 400A 600A	3VA5 3VA6 800A 1000A	3VA5 3VA6 1200A-2000A	Catalogue Number
Standard without illumination kit	Gray	√	–	–	–	–	–	3VA9137-0EK11
		–	√	√	–	–	–	3VA9277-0EK11
		–	–	–	√	–	–	3VA9447-0EK11
		–	–	–	–	√	–	3VA9677-0EK11
		–	–	–	–	–	√	3VA9877-0EK11
Standard with illumination kit	Gray	√	–	–	–	–	–	3VA9137-0EK13
		–	√	√	–	–	–	3VA9277-0EK13
		–	–	–	√	–	–	3VA9447-0EK13
EMERGENCY-OFF without illumination kit	Yellow-Red	√	–	–	–	–	–	3VA9137-0EK15
		–	√	√	–	–	–	3VA9277-0EK15
		–	–	–	√	–	–	3VA9447-0EK15
		–	–	–	–	√	–	3VA9677-0EK15
		–	–	–	–	–	√	3VA9877-0EK15
EMERGENCY-OFF with illumination kit	Yellow-Red	√	–	–	–	–	–	3VA9137-0EK17
		–	√	√	–	–	–	3VA9277-0EK17
		–	–	–	√	–	–	3VA9447-0EK17
Standard with door interlock	Gray	√	–	–	–	–	–	3VA9137-0EK21
		–	√	√	–	–	–	3VA9277-0EK21
		–	–	–	√	–	–	3VA9447-0EK21
		–	–	–	–	√	–	3VA9677-0EK21
Standard with door interlock, with illumination kit	Gray	√	–	–	–	–	–	3VA9137-0EK23
		–	√	√	–	–	–	3VA9277-0EK23
		–	–	–	√	–	–	3VA9447-0EK23
EMERGENCY-OFF with door interlock	Yellow-Red	√	–	–	–	–	–	3VA9137-0EK25
		–	√	√	–	–	–	3VA9277-0EK25
		–	–	–	√	–	–	3VA9447-0EK25
		–	–	–	–	√	–	3VA9677-0EK25
EMERGENCY-OFF with door interlock, with illumination kit	Yellow-Red	√	–	–	–	–	–	3VA9137-0EK27
		–	√	√	–	–	–	3VA9277-0EK27
		–	–	–	√	–	–	3VA9447-0EK27
Standard with door interlock, with door open function	Gray	√	–	–	–	–	–	3VA9137-0EK31
		–	√	√	–	–	–	3VA9277-0EK31
		–	–	–	√	–	–	3VA9447-0EK31
		–	–	–	–	√	–	3VA9677-0EK31
Standard with door interlock, with door open function, with illumination kit	Gray	√	–	–	–	–	–	3VA9137-0EK33
		–	√	√	–	–	–	3VA9277-0EK33
		–	–	–	√	–	–	3VA9447-0EK33
EMERGENCY-OFF with door interlock, with door open function	Yellow-Red	√	–	–	–	–	–	3VA9137-0EK35
		–	√	√	–	–	–	3VA9277-0EK35
		–	–	–	√	–	–	3VA9447-0EK35
		–	–	–	–	√	–	3VA9677-0EK35
EMERGENCY-OFF with door interlock, with door open function, with illumination kit	Yellow-Red	√	–	–	–	–	–	3VA9137-0EK37
		–	√	√	–	–	–	3VA9277-0EK37
		–	–	–	√	–	–	3VA9447-0EK37

Door Mounted Rotary Operator①②



Degree of protection
Type 1, 12, 3R and 4X

Type	Color	3VA5 125A	3VA5 250A	3VA6 150A 250A	3VA5 3VA6 400A 600A	3VA5 3VA6 800A 1000A	3VA5 3VA6 1200A - 2000A	Catalogue Number
Standard	Gray	√	—	—	—	—	—	3VA9137-0FK21
		—	√	√	—	—	—	3VA9277-0FK21
		—	—	—	√	—	—	3VA9447-0FK21
		—	—	—	—	√	—	3VA9677-0FK21
		—	—	—	—	—	√	3VA9877-0FK21
Standard with illumination kit	Gray	√	—	—	—	—	—	3VA9137-0FK23
		—	√	√	—	—	—	3VA9277-0FK23
		—	—	—	√	—	—	3VA9447-0FK23
		—	—	—	—	√	—	3VA9677-0FK23
EMERGENCY-OFF without illumination kit	Yellow-Red	√	—	—	—	—	—	3VA9137-0FK25
		—	√	√	—	—	—	3VA9277-0FK25
		—	—	—	√	—	—	3VA9447-0FK25
		—	—	—	—	√	—	3VA9677-0FK25
		—	—	—	—	—	√	3VA9877-0FK25
EMERGENCY-OFF with illumination kit	Yellow-Red	√	—	—	—	—	—	3VA9137-0FK27
		—	√	√	—	—	—	3VA9277-0FK27
		—	—	—	√	—	—	3VA9447-0FK27
		—	—	—	—	√	—	3VA9677-0FK27
Standard with door interlock, with open door function	Gray	√	—	—	—	—	—	3VA9137-0FK31
		—	√	√	—	—	—	3VA9277-0FK31
		—	—	—	√	—	—	3VA9447-0FK31
		—	—	—	—	√	—	3VA9677-0FK31
Standard with door interlock, with open door function with illumination kit	Gray	√	—	—	—	—	—	3VA9137-0FK33
		—	√	√	—	—	—	3VA9277-0FK33
		—	—	—	√	—	—	3VA9447-0FK33
		—	—	—	—	√	—	3VA9677-0FK33
EMERGENCY-OFF with door interlock, with open door function	Yellow-Red	√	—	—	—	—	—	3VA9137-0FK35
		—	√	√	—	—	—	3VA9277-0FK35
		—	—	—	√	—	—	3VA9447-0FK35
		—	—	—	—	√	—	3VA9677-0FK35
EMERGENCY-OFF with door interlock, with open door function, with illumination kit	Yellow-Red	√	—	—	—	—	—	3VA9137-0FK37
		—	√	√	—	—	—	3VA9277-0FK37
		—	—	—	√	—	—	3VA9447-0FK37
		—	—	—	—	√	—	3VA9677-0FK37
Standard	Gray	√	—	—	—	—	—	3VA9137-0GC01
		—	√	√	—	—	—	3VA9477-0GC01
		—	—	—	√	—	—	3VA9477-0GC11
		—	—	—	—	√	—	3VA9677-0GC01
		—	—	—	—	—	√	3VA9877-0GC01
EMERGENCY-OFF	Yellow-Red	√	—	—	—	—	—	3VA9137-0GC05
		—	√	√	—	—	—	3VA9477-0GC05
		—	—	—	√	—	—	3VA9477-0GC15
		—	—	—	—	√	—	3VA9677-0GC05
		—	—	—	—	—	√	3VA9877-0GC05



NFPA-79 Supplementary Handles

Lockable with up to three padlock hasps.
② All door mounted rotary operators include the tolerance compensation feature.

Side Mounted Rotary Operator①

	Type	Color	3VA5 125A	3VA5 250A	3VA6 150A 250A	3VA5 3VA6 400A 600A	3VA5 3VA6 800A 1000A	Catalogue Number
 ▪ Without mounting plate ▪ Rotary operator with shaft 300 mm ▪ Handle with masking plate 75 x 75 mm ▪ Degree of protection Type 1, 12, 3R, 4X	Standard	Gray	√	—	—	—	—	**3VA9137-0PK11**
			—	√	√	—	—	**3VA9277-0PK11**
	Standard with illumination kit	Gray	√	—	—	—	—	**3VA9137-0PK13**
			—	√	√	—	—	**3VA9277-0PK13**
	EMERGENCY-OFF	Yellow-Red	√	—	—	—	—	**3VA9137-0PK15**
			—	√	√	—	—	**3VA9277-0PK15**
	EMERGENCY-OFF with illumination kit	Yellow-Red	√	—	—	—	—	**3VA9137-0PK17**
			—	√	√	—	—	**3VA9277-0PK17**
 ▪ With mounting plate ▪ Rotary operator with short shaft ▪ Handle with masking plate 75 x 75 mm ▪ Degree of protection Type 1, 12, 3R, 4X	Standard with mounting plate	Gray	√	—	—	—	—	**3VA9137-0PK51**
			—	√	√	—	—	**3VA9277-0PK51**
	Standard with mounting plate, with illumination kit	Gray	√	—	—	—	—	**3VA9137-0PK53**
			—	√	√	—	—	**3VA9277-0PK53**
	EMERGENCY-OFF with mounting plate	Yellow-Red	√	—	—	—	—	**3VA9137-0PK55**
			—	√	√	—	—	**3VA9277-0PK55**
	EMERGENCY-OFF with mounting plate, with illumination kit	Yellow-Red	√	—	—	—	—	**3VA9137-0PK57**
			—	√	√	—	—	**3VA9277-0PK57**
 Side Mounted Rotary Operator Door Interlock	Standard for use with the side wall mounted rotary operators ▪ Without mounting plate	Gray	√	—	—	—	—	**3VA9177-0VF40**
			—	√	√	—	—	**3VA9277-0VF40**

① Lockable with up to three padlock hasps.

Breaker Operator



3VA9277-0GK00



3VA9677-0GK00

Type	Color	3VA5 125A	3VA5 250A	3VA6 150A 250A	3VA5 3VA6 400A 600A	3VA5 3VA6 800A 1000A	3VA5 3VA6 1200A–2000A	Catalogue Number
Without handle, without shaft adapter	Gray	√	–	–	–	–	–	3VA9137-0GK00
		–	√	√	–	–	–	3VA9277-0GK00
		–	–	–	√	–	–	3VA9447-0GK00
Without handle, with shaft adapter	Gray	–	–	–	–	√	–	3VA9677-0GK00
		–	–	–	–	–	√	3VA9877-0GK00

Handles with Masking Plate (Purchase breaker operator, shaft and shaft adapter separately)



- Degree of protection Type 1, 12, 3R and 4X

Type	Color	Tolerance Compen-sation	Door Open Function	3VA5 125A	3VA5 250A	3VA6 150A 250A	3VA5 3VA6 400A 600A	3VA5 3VA6 800A 1000A	Catalogue Number
Standard	Gray	Without	Without	√	√	√	–	–	8UD1721-0AB11
		With	Without	√	√	√	–	–	8UD1721-0AB21
		Without	Without	–	–	–	√	–	8UD1731-0AB11
		With	Without	–	–	–	√	–	8UD1731-0AB21
		Without	With	√	√	√	–	–	8UD1721-0AC11
		With	With	√	√	√	–	–	8UD1721-0AC21
		Without	With	–	–	–	√	–	8UD1731-0AC11
		With	With	–	–	–	√	–	8UD1731-0AC21
		Without	With	–	–	–	–	√	8UD1741-0AB11
		With	With	–	–	–	–	√	8UD1741-0AB21
Emergency	Yellow-Red	Without	Without	√	√	√	–	–	8UD1721-0AB15
		With	Without	√	√	√	–	–	8UD1721-0AB25
		Without	Without	–	–	–	√	–	8UD1731-0AB15
		With	Without	–	–	–	√	–	8UD1731-0AB25
		Without	With	√	√	√	–	–	8UD1721-0AC15
		With	With	√	√	√	–	–	8UD1721-0AC25
		Without	With	–	–	–	√	–	8UD1731-0AC15
		With	With	–	–	–	√	–	8UD1731-0AC25
		Without	With	–	–	–	–	√	8UD1741-0AB15
		With	With	–	–	–	–	√	8UD1741-0AB25

Metal Rotary Handles (Purchase breaker operator, shaft and shaft adapter separately)



▪ Large, degree of protection Type 1, 3, 3R, 12	Metal	Black	–	With	√	√	√	√	√	RHOH
▪ Large, degree of protection Type 4, 4X	Metal	Stainless	–	With	√	√	√	√	√	RHOH4
▪ Compact, degree of protection Type 1,3,3R,12	Compact	Black	–	With	√	√	√	√	–	RHOHC
▪ Compact, degree of protection Type 4, 4X	Compact	Stainless	–	With	√	√	√	√	–	RHOH4C
▪ Long, degree of protection 1,3,3R,12	Emergency	Red	–	With	√	√	√	√	√	RHVPEMH
▪ Compact, degree of protection 1,3,3R,12	Emergency	Red	–	With	√	√	√	√	–	RHVMEMH

For additional information for selecting handle and breaker operator combinations, please refer to the brochure:
https://digitalcontentcenter.compas.siemens-info.com/SIE_FL_3VA_Handles.pdf

Pistol Grip Handles (Purchase breaker operator, shaft and shaft adapter separately)

	Degree of Protection	Handle Type	Color	Tolerance Compen-sation	Door Open Function	3VA5 125A	3VA5 250A	3VA6 150A 250A	3VA5 3VA6 400A 600A	3VA5 3VA6 800A 1000A	Catalogue Number
	Type 1,3R,12	Plastic	Gray	—	With	√	√	√	√	—	**3VA9477-0FH11**
	Type 4X	Plastic (metal padlock hasp)	Gray	—	With	√	√	√	√	—	**3VA9477-0FH41**
	Type 1,3R,12	Emergency	Red	—	With	√	√	√	√	—	**3VA9477-0FH15**
	Type 4X	Emergency (metal padlock hasp)	Red	—	With	√	√	√	√	—	**3VA9477-0FH45**

Door Mounted Rotary Operator Accessories

	Type	3VA5 125A	3VA5 250A	3VA6 150A 250A	3VA5 3VA6 400A 600A	3VA5 3VA6 800A 1000A	3VA5 3VA6 1200A–2000A	Catalogue Number
	8 mm Shaft 300 mm/12 in long for 8UD plastic handles (Fixing bracket optional)	√	√	√	√	—	—	**8UD1900-2WA00**
	8 mm Shaft 600 mm/24 in long for 8UD plastic handles (Fixing bracket required)	√	√	√	√	—	—	**8UD1900-2WB00**
	12 mm Shaft 300 mm/12 in long for 8UD plastic handles	—	—	—	—	√	—	**8UD1900-4WA00**
	12 mm Shaft 600 mm/24 in long for 8UD plastic handles	—	—	—	—	√	—	**8UD1900-4WB00**
	8 mm Shaft 300 mm/12 in long for metal handles (Fixing bracket optional)	√	√	√	√	—	—	**3VA9477-0GF20**
	8 mm Shaft 600 mm/24 in long for metal handles (Fixing bracket required)	√	√	√	√	—	—	**3VA9477-0GF21**
	12 mm Shaft 300/12 in mm long for metal handles (Fixing bracket optional)	—	—	—	—	√	—	**3VA9877-0GF22**
	12 mm Shaft 600 mm/24 in long for metal handles (Fixing bracket required)	—	—	—	—	√	—	**3VA9877-0GF23**
	8 mm Shaft 300/12 in mm long for pistol grip handles (Fixing bracket optional)	√	√	√	√	—	—	**3VA9477-0GF10**
	8 mm Shaft 600 mm long/24 in for pistol grip handles (Fixing bracket required)	√	√	√	√	—	—	**3VA9477-0GF11**
	Adapter for 8 mm Shaft for door mounted operator	√	√	√	√	—	—	**8UD1900-2DA00**
	Adapter for 12 mm Shaft for door mounted operator	—	—	—	—	√	—	**8UD1900-4DA00**
	Fixing bracket for Shaft	√	—	—	—	—	—	**3VA9137-0GA80**
		—	√	√	√	—	—	**3VA9477-0GA80**
	Fixing bracket for 12 mm x 12 mm shaft	—	—	—	—	√	—	**3VA9677-0GA80**
		—	—	—	—	—	√	**3VA9877-0GA80**
	Variable depth adapter 8 x 8 mm	√	√	√	√	—	—	**3VA9487-0GB10**
	Door Coupling 8 mm x 8 mm (for 8UD plastic handles)	√	√	√	—	—	—	**8UD1900-2HA00**
	Door coupling 12 mm x 12 mm (for 8UD plastic handles)	—	—	—	√	√	—	**8UD1900-4HA00**
	Mounting tolerance compensation 8 x 8 mm (for 8UD plastic handles)	√	√	√	√	—	—	**8UD1900-2GA00**
	Mounting tolerance compensation 12 mm x 12 mm (for 8UD plastic handles)	—	—	—	—	√	—	**8UD1900-4GA00**

General Accessories for Manual Operators

	Type	Details		Part Number
	Labeling plate for manual operators	—		**3VA9087-0SX10**
	Illumination kit for manual operators 24 V DC voltage	For Molded Case Circuit Breakers		
		3VA5, 125...250 A	Front mounted rotary operators	**8UD1900-0KA10**
		3VA6, 150...600 A		**8UD1900-0KA20**
		3VA5, 3VA6, 125...600 A	Door mounted rotary operators	**8UD1900-0KA20**
		3VA5, 3VA6, 800..1000A		**8UD1900-0KA30**
	Cylinder Lock (type Kaba) ▪ For 8UD plastic door mounted rotary operators (in masking plate) ▪ Standard masking plate	Key 1		**8UD1900-0MB01**
		Key 2		**8UD1900-0NB01**
		Key 3		**8UD1900-0PB01**
		Key 4		**8UD1900-0QB01**
	Cylinder Lock (type Kaba)① ▪ For 8UD plastic door mounted rotary operators (in masking plate) ▪ Standard masking plate	Key 1		**8UD1900-0MC01**
		Key 2		**8UD1900-0NC01**
		Key 3		**8UD1900-0PC01**
		Key 4		**8UD1900-0QC01**
	Cylinder Lock (type Kaba) ▪ For 8UD plastic door mounted rotary operators (in masking plate) ▪ EMERGENCY-OFF masking plate	Key 1		**8UD1900-0MB05**
		Key 2		**8UD1900-0NB05**
		Key 3		**8UD1900-0PB05**
		Key 4		**8UD1900-0QB05**
	Cylinder Lock (type Kaba)① ▪ For 8UD plastic door mounted rotary operators (in masking plate) ▪ EMERGENCY-OFF masking plate	Key 1		**8UD1900-0MC05**
		Key 2		**8UD1900-0NC05**
		Key 3		**8UD1900-0PC05**
		Key 4		**8UD1900-0QC05**
	Cylinder Lock (type Ronis) ▪ includes 2 keys ▪ for locking or interlocking ▪ installation in all rotary operators w/ shaft stub	Key 1		**3VA9980-0VL10**
		Key 3		**3VA9980-0VL30**
		Key 4		**3VA9980-0VL40**
	Cylinder lock adapter for 8UD rotary operator ▪ to mount in rotary operator			**3VA9980-0LF20**
	Cylinder lock adaptor for front mounted rotary operator 3VA9677-0EK.. and door mounted rotary operator 3VA9677-0FK.. 3VA55/3VA65/3VA66			**3VA9670-0LF20**

① With door open function

Max Flex Operator

	Type	3VA5 125A	3VA5 250A	3VA6 150A 250A	3VA5 3VA6 400A 600A	3VA5 3VA6 800A 1000A	3VA5 3VA6 1200A 1600A 2000A	Catalogue Number
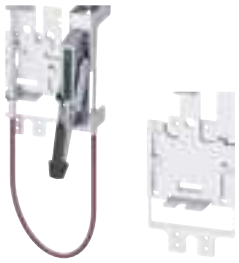 Complete kit and spare mechanism	Complete Kit Operating mechanism Plastic handle, NEMA 1/12, black=OFF, green=ON Bowden Cable 36 inches (0.9m) long	√	–	–	–	–	–	3VA9137-0CK12
		–	√	√	–	–	–	3VA9277-0CK12
		–	–	–	√	–	–	3VA9477-0CK12
	Complete Kit Operating mechanism Steel handle, epoxy coated NEMA 1/3R/12, black=OFF, red=ON, Bowden Cable 36 inches (0.9m) long The 800/1000/1200/1600/2000A kit comes with a 48" (1.2m) cable	√	–	–	–	–	–	3VA9137-0CK72
		–	√	√	–	–	–	3VA9277-0CK72
		–	–	–	√	–	–	3VA9477-0CK72
		–	–	–	–	√	–	3VA9677-0CK72
		–	–	–	–	–	√	3VA9877-0CK72
	Operating Mechanism (spare)	√	–	–	–	–	–	3VA9137-0CB10
		–	√	√	–	–	–	3VA9277-0CB10
		–	–	–	√	–	–	3VA9477-0CB10
		–	–	–	–	√	–	3VA9677-0CB10
		–	–	–	–	–	√	3VA9877-0CB10
	Handle - Plastic, NEMA 1/12, black = OFF, green = ON	√	√	√	√	–	–	3VA9977-0CH12
	Handle - Steel, Epoxy coated, NEMA 1/3R/12, black = OFF, red = ON	√	√	√	√	–	–	3VA9977-0CH72
		–	–	–	–	√	√	3VA9877-0CH72
	Handle - Steel, Epoxy coated, NEMA 1/3R/12, black = OFF, black = ON	√	√	√	√	–	–	3VA9977-0CH74
		–	–	–	–	√	√	3VA9877-0CH74
	Handle - Steel, chrome-plated, NEMA 4/4X, black = OFF, red = ON	√	√	√	√	–	–	3VA9977-0CH82
	Handle - Steel, chrome-plated, NEMA 4/4X, black = OFF, black = ON	√	√	√	√	–	–	3VA9977-0CH84
	Handle - Stainless steel, NEMA 4, 4X, red = ON, black =OFF	–	–	–	–	√	√	3VA9877-0CH82
	Bowden Cable, 36 inches (0.9m)	√	√	√	–	–	–	3VA9278-0CC10
	Bowden Cable, 48 inches (1.2m)	√	√	√	–	–	–	3VA9278-0CC20
	Bowden Cable, 60 inches (1.5m)	√	√	√	–	–	–	3VA9278-0CC30
	Bowden Cable, 72 inches (1.8m)	√	√	√	–	–	–	3VA9278-0CC40
	Bowden Cable, 84 inches (2.1m)	√	√	√	–	–	–	3VA9278-0CC50
	Bowden Cable, 96 inches (2.4m)	√	√	√	–	–	–	3VA9278-0CC60
	Bowden Cable, 120 inches (3.0m)	√	√	√	–	–	–	3VA9278-0CC70
	Bowden Cable, 144 inches (3.6m)	√	√	√	–	–	–	3VA9278-0CC80
	Bowden Cable, 36 inches (0.9m)	–	–	–	√	–	–	3VA9578-0CC10
	Bowden Cable, 48 inches (1.2m)	–	–	–	√	–	–	3VA9578-0CC20
	Bowden Cable, 60 inches (1.5m)	–	–	–	√	–	–	3VA9578-0CC30
	Bowden Cable, 72 inches (1.8m)	–	–	–	√	–	–	3VA9578-0CC40
	Bowden Cable, 84 inches (2.1m)	–	–	–	√	–	–	3VA9578-0CC50
	Bowden Cable, 96 inches (2.4m)	–	–	–	√	–	–	3VA9578-0CC60
	Bowden Cable, 120 inches (3.0m)	–	–	–	√	–	–	3VA9578-0CC70
	Bowden Cable, 144 inches (3.6m)	–	–	–	√	–	–	3VA9578-0CC80
	Bowden Cable, 48 inches (1.2m)	–	–	–	–	√	√	3VA9877-0CC20
	Bowden Cable, 60 inches (1.5m)	–	–	–	–	√	√	3VA9877-0CC30
	Bowden Cable, 72 inches (1.8m)	–	–	–	–	√	√	3VA9877-0CC40
	Bowden Cable, 96 inches (2.4m)	–	–	–	–	√	√	3VA9877-0CC60
	Bowden Cable, 120 inches (3.0m)	–	–	–	–	√	√	3VA9877-0CC70
	Bowden Cable, 144 inches (3.6m)	–	–	–	–	√	√	3VA9877-0CC80
	MaxFlex Auxiliary switch (leading from On to Off) 1 CO	√	√	√	√	√	√	3VA9478-0CX10
	MaxFlex Auxiliary switch (leading from On to Off) 2 CO	√	√	√	√	√	√	3VA9478-0CX20

Variable depth flange mounted operator kit



Type	3VA5 125A	3VA5 250A	3VA6 150A 250A	3VA5 3VA6 400A 600A	Catalogue Number
Complete kit comprising: ▪ Switching mechanism adjustable depth 200mm to 400mm ▪ Epoxy coated steel handle, NEMA 1/3R/12, black = OFF, red = ON	√	–	–	–	3VA9138-0DK72
	–	√	√	–	3VA9278-0DK72
	–	–	–	√	3VA9478-0DK72
Complete kit comprising: ▪ Switching mechanism adjustable depth 200mm to 400mm ▪ Stainless steel handle, chrome-plated NEMA 4/4X, black=OFF, red=ON	√	–	–	–	3VA9138-0DK82
	–	√	√	–	3VA9278-0DK82
	–	–	–	√	3VA9478-0DK82
Complete kit comprising: ▪ Swithching mechanism adjustable depth 200mm to 400mm ▪ Handle stainless steel, chrome-plated NEMA 4/4X, black=OFF, black=ON	√	–	–	–	3VA9138-0DK84
	–	√	√	–	3VA9278-0DK84
	–	–	–	√	3VA9478-0DK84

Motor Operators①





Type	3VA5 125 A	3VA5 250 A	3VA6 150 A 250 A	3VA5 3VA6 400A 600A	Part Number
Motor Operator without Stored Energy Feature					
24 ... 60 V DC	√	–	–	–	3VA9137-0HA10
	–	√	√	–	3VA9277-0HA10
	–	–	–	√	3VA9447-0HA10
110 ... 230 V AC 110 ... 250 V DC	√	–	–	–	3VA9137-0HA20
	–	√	√	–	3VA9277-0HA20
	–	–	–	√	3VA9447-0HA20
Motor Operator with Stored Energy Feature					
24 V DC	–	√	√	–	3VA9277-0HC10
42 ... 60 V AC/DC	–	√	√	–	3VA9277-0HC20
110 ... 230 V AC / 110 ... 250 V DC	–	√	√	–	3VA9277-0HC30
Motor Operator with Stored Energy Feature with Communication					
24 V DC	–	√	√	–	3VA9277-0HC15
110 ... 230 V AC / 110 ... 250 V DC	–	√	√	–	3VA9277-0HC35

① Lockable with up to three padlock hasps.

Box Terminals

	Type	Minimum cable cross-section (standard) Class B	Maximum cable cross-section (standard) Class B	For molded case circuit breakers/ rated current					Part Number
				3VA5 125A	3VA5 250A	3VA6 150A 250A	3VA5 3VA6 400A 600A	3VA5 3VA6 800A 1000A	
	Steel wrap-around lug (Cu cable only) kit of 3 single lugs	AWG 14	3/0	√	—	—	—	—	**3VA9133-0JA11**
		AWG 10	3/0	—	√	—	—	—	**3VA9233-0JA11**
		AWG 4	350 kcmil	—	√	—	—	—	**3VA9233-0JA12**
		AWG 10	3/0	—	—	√	—	—	**3VA9143-0JA12**
		AWG 4	350 kcmil	—	—	√	—	—	**3VA9243-0JA12**
		1/0	500 kcmil	—	—	—	√	—	**3VA9473-0JA13**
	Steel wrap-around lug (Cu cable only) kit of 4 single lugs	AWG 14	AWG 10	√	—	—	—	—	**3VA9134-0JA11**
		AWG 10	3/0	—	√	—	—	—	**3VA9234-0JA11**
		AWG 10	3/0	—	—	√	—	—	**3VA9144-0JA12**
		AWG 4	350 kcmil	—	√	—	—	—	**3VA9234-0JA12**
		AWG 4	350 kcmil	—	—	√	—	—	**3VA9244-0JA12**
		1/0	500 kcmil	—	—	—	√	—	**3VA9474-0JA13**
	Steel wrap-around lug with control wire tap (Cu cable only) kit of 3 single lugs	AWG 10	3/0	—	√	—	—	—	**3VA9233-0JH11**
		AWG 4	350 kcmil	—	√	—	—	—	**3VA9233-0JH12**
		AWG 10	3/0	—	—	√	—	—	**3VA9143-0JH12**
		AWG 4	350 kcmil	—	—	√	—	—	**3VA9243-0JH12**
		1/0	500 kcmil	—	—	—	√	—	**3VA9473-0JH13**
	Steel wrap-around lug with control wire tap (Cu cable only) kit of 4 single lugs	AWG 10	3/0	—	√	—	—	—	**3VA9234-0JH11**
		AWG 4	350 kcmil	—	√	—	—	—	**3VA9234-0JH12**
		AWG 10	3/0	—	—	√	—	—	**3VA9144-0JH12**
		AWG 4	350 kcmil	—	—	√	—	—	**3VA9244-0JH12**
		1/0	500 kcmil	—	—	—	√	—	**3VA9474-0JH13**

Aluminum Wire Connectors

	Aluminum body lug small (Cu/Al cable) kit of 3 single lugs	AWG 14	AWG 10	√	—	—	—	—	**3VA9133-0JB10**
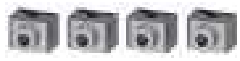	Aluminum body lug small (Cu/Al cable) kit of 4 single lugs	AWG 14	AWG 10	√	—	—	—	—	**3VA9134-0JB10**
	Aluminum body lug small with control wire tap (Cu/Al cable)	AWG 14	AWG 10	√	—	—	—	—	**3VA9133-0JG10**
	Aluminum body lug small with control wire tap (Cu/Al cable)	AWG 14	AWG 10	√	—	—	—	—	**3VA9134-0JG10**
	Aluminum body lug (Cu/Al cable) kit of 3 single lugs	AWG 14	3/0	√	—	—	—	—	**3VA9133-0JB11**
		AWG 14	1/0	—	√	—	—	—	**3VA9233-0JB11**
		AWG 6	350 kcmil	—	√	—	—	—	**3VA9233-0JB12②**
		AWG 14	1/0	—	—	√	—	—	**3VA9143-0JB11②**
		AWG 6	350 kcmil	—	—	√	—	—	**3VA9243-0JB12**
		AWG 1	600 kcmil	—	—	—	√	—	**3VA9373-0JB13①**
	Aluminum body lug (Cu/Al cable) kit of 4 single lugs	AWG 14	AWG 10	√	—	—	—	—	**3VA9134-0JB11**
		AWG 14	1/0	—	√	—	—	—	**3VA9234-0JB11**
		AWG 14	1/0	—	—	√	—	—	**3VA9144-0JB11②**
		AWG 6	350 kcmil	—	√	—	—	—	3**VA9234-0JB12**
		AWG 6	350 kcmil	—	—	√	—	—	**3VA9244-0JB12②**
		AWG 1	600 kcmil	—	—	—	√	—	**3VA9374-0JB13①**
	Aluminum body lug with control wire tap (Cu/Al cable) kit of 3 single lugs	AWG 14	3/0	√	—	—	—	—	**3VA9133-0JG11**
		AWG 14	1/0	—	√	—	—	—	**3VA9233-0JG11**
		AWG 6	350 kcmil	—	√	—	—	—	**3VA9233-0JG12**
		AWG 14	1/0	—	—	√	—	—	**3VA9143-0JG11②**
		AWG 6	350 kcmill	—	—	√	—	—	**3VA9243-0JG12②**
		AWG 1	600 kcmil	—	—	—	√	—	**3VA9373-0JG13①**
	Aluminum body lug with control wire tap (Cu/Al cable) kit of 4 single lugs	AWG 14	AWG 10	√	—	—	—	—	**3VA9134-0JG11**
		AWG 14	1/0	—	√	—	—	—	**3VA9234-0JG11**
		AWG 14	1/0	—	—	√	—	—	**3VA9144-0JG11②**
		AWG 14	1/0	—	√	—	—	—	**3VA9234-0JG12**
		AWG 6	350 kcmil	—	—	√	—	—	**3VA9244-0JG12②**
		AWG 1	600 kcmil	—	—	—	√	—	**3VA9374-0JG13①**
	Aluminum body lug two cables (Cu/Al cable) kit of 3 single lugs	4/0	600 kcmil	—	—	—	—	√	**3VA9573-0JB23**
	Aluminum body lug two cables (Cu/Al cable) kit of 4 single lugs	4/0	600 kcmil	—	—	—	—	√	**3VA9574-0JB23**

①This conductor is ampere-rated at 380A with copper wire and 310A with aluminum wire.

②Meets requirements of 100% rated breakers up to 150A.

Aluminum Wire Connectors (cont.)

	Type	Minimum cable cross-section (standard) Class B	Maximum cable cross-section (standard) Class B	For molded case circuit breakers/ rated current					Part Number
				3VA5 125A	3VA5 250A	3VA6 150A 250A	3VA5 3VA6 400A 600A	3VA5 3VA6 800A 1000A	
 3 lug kit pictured	Aluminum body lug two cables with control wire tap (Cu/Al cable) kit of 3 single lugs	4/0	600 kcmil	—	—	—	—	√	**3VA9673-0JG23**
	Aluminum body lug two cables with control wire tap (Cu/Al cable) kit of 4 single lugs	4/0	600 kcmil	—	—	—	—	√	**3VA9674-0JG23**
	Aluminum body lug three cables (Cu/Al cable) kit of 3 single lugs	4/0	400 kcmil	—	—	—	—	√	**3VA9673-0JB32**
	Aluminum body lug three cables (Cu/Al cable) kit of 4 single lugs	4/0	400 kcmil	—	—	—	—	√	**3VA9674-0JB32**
 4 lug kit pictured	Aluminum body lug three cables with control wire tap (Cu/Al cable) kit of 3 single lugs	4/0	400 kcmil	—	—	—	—	√	**3VA9673-0JG32**
	Aluminum body lug three cables with control wire tap (Cu/Al cable) kit of 4 single lugs	4/0	400 kcmil	—	—	—	—	√	**3VA9674-0JG32**

Aluminum Wire Connectors and Terminal Covers

Type	Description	Min. cable cross-section (std.) Class B	Max. cable cross-section (std.) Class B	For molded case circuit breakers/ rated current					Part Number	Terminal Cover with Probe Holes Part Number
				3VA5 125A	3VA5 250A	3VA6 150A 250A	3VA5 3VA6 400A 600A	3VA5 3VA6 800A 1000A		
Aluminum body lug large (Cu/Al cable)  2 lug 3 lug 4 lug	Kit of 2 single lugs and 1 extended terminal cover	AWG 4	300 kcmil	√	—	—	—	—	**3VA9132-0JJ12**	
	Kit of 3 single lugs and 1 extended terminal cover	AWG 4	300 kcmil	√	—	—	—	—	**3VA9133-0JJ12**	
		AWG 2	350 kcmil	—	√	—	—	—	**3VA9233-0JJ13**	
		AWG 2	350 kcmil	—	—	√	—	—	**3VA9243-0JJ13**①	
	Kit of 4 single lugs and 1 extended terminal cover	AWG 4	300 kcmil	√	—	—	—	—	**3VA9134-0JJ12**	
		AWG 2	350 kcmil	—	√	—	—	—	**3VA9234-0JJ13**	
		AWG 2	350 kcmil	—	—	√	—	—	**3VA9244-0JJ13**①	
Aluminum body lug large with control wire tap (Cu/Al cable)  2 lug 3 lug 4 lug	Kit of 2 single lugs and 1 extended terminal cover	AWG 4	300 kcmil	√	—	—	—	—	**3VA9132-0JC12**	
	Kit of 3 single lugs and 1 extended terminal cover	AWG 4	300 kcmil	√	—	—	—	—	**3VA9133-0JC12**	**3VA9133-0JC18**
		AWG 2	350 kcmil	—	√	—	—	—	**3VA9233-0JC13**	**3VA9233-0JC18**
		AWG 2	350 kcmil	—	—	√	—	—	**3VA9243-0JC13**①	**3VA9243-0JC18**
	Kit of 4 single lugs and 1 extended terminal cover	AWG 4	300 kcmil	√	—	—	—	—	**3VA9134-0JC12**	
		AWG 4	350 kcmil	—	√	—	—	—	**3VA9234-0JC13**	
		AWG 2	350 kcmil	—	—	√	—	—	**3VA9244-0JC13**①	
Aluminum body lug, 2 Cables (Cu/Al cable)  3 lug 4 lug	Kit of 3 single lugs and 1 extended terminal cover	AWG 4	300 kcmil	—	√	—	—	—	**3VA9233-0JJ22**	
		AWG 4	300 kcmil	—	—	√	—	—	**3VA9243-0JJ22**①	
		2/0	600 kcmil	—	—	—	√	—	**3VA9473-0JJ23**	
	Kit of 4 single lugs and 1 extended terminal cover	AWG 4	300 kcmil	—	—	√	—	—	**3VA9234-0JJ22**	
		AWG 4	300 kcmil	—	√	—	—	—	**3VA9244-0JJ22**①	
		2/0	600 kcmil	—	—	—	√	—	**3VA9474-0JJ23**	

① Meets requirements of 100% rated breakers up to 250A.

Aluminum Wire Connectors and Terminal Covers (cont.)

Type	Description	Min. cable cross-section (std.) Class B	Max. cable cross-section (std.) Class B	For molded case circuit breakers/ rated current					Part Number	Terminal Cover with Probe Holes Part Number
				3VA5 125A	3VA5 250A	3VA6 150A 250A	3VA5 3VA6 400A 600A	3VA5 3VA6 800A 1000A		
Aluminum body lug, 2 Cables with control wire tap (Cu/Al cable)  3 lug 4 lug	Kit of 3 single lugs and 1 extended terminal cover	AWG 4	300 kcmil	—	√	—	—		3VA9233-0JC22	3VA9233-0JC28
		AWG 4	300 kcmil	—	—	√	—		3VA9243-0JC22①	3VA9243-0JC28
		2/0	600 kcmil	—	—	—	√		3VA9473-0JC23	3VA9473-0JC28
	Kit of 4 single lugs and 1 extended terminal cover	AWG 4	300 kcmil	—	√	—	—		3VA9234-0JC22	
		AWG 4	300 kcmil	—	—	√	—		3VA9244-0JC22①	
		2/0	600 kcmil	—	—	—	√		3VA9474-0JC23	
Aluminum body lug two cables (Cu/Al cable) 3 lug kit pictured 	Kit of 3 single lugs and 1 extended terminal cover	400 kcmil	750 kcmil	—	—	—	—	√	3VA9673-0JJ24	
	Kit of 4 single lugs and 1 extended terminal cover	400 kcmil	750 kcmil	—	—	—	—	√	3VA9674-0JJ24	
Aluminum body lug two cables with control wire tap (Cu/Al cable) 3 kit lug pictured 	Kit of 3 single lugs and 1 extended terminal cover	400 kcmil	750 kcmil	—	—	—	—	√	3VA9673-0JC24	
	Kit of 4 single lugs and 1 extended terminal cover	400 kcmil	750 kcmil	—	—	—	—	√	3VA9674-0JC24	
Aluminum body lug three cables (Cu/Al cable)	Kit of 3 single lugs and 1 extended terminal cover	500 kcmil	750 kcmil	—	—	—	—	√	3VA9673-0JJ34	
	Kit of 4 single lugs and 1 extended terminal cover	500 kcmil	750 kcmil	—	—	—	—	√	3VA9674-0JJ34	
Aluminum body lug three cables with control wire tap (Cu/Al cable)	Kit of 3 single lugs and 1 extended terminal cover	500 kcmil	750 kcmil	—	—	—	—	√	3VA9673-0JC34	
	Kit of 4 single lugs and 1 extended terminal cover	500 kcmil	750 kcmil	—	—	—	—	√	3VA9674-0JC34	
Aluminum body lug four cables (Cu/Al cable) 4 lug kit pictured 	Kit of 3 single lugs and 1 extended terminal cover	4/0	500 kcmil	—	—	—	—	√	3VA9673-0JJ43	
	Kit of 4 single lugs and 1 extended terminal cover	4/0	500 kcmil	—	—	—	—	√	3VA9674-0JJ43	
Aluminum body lug four cables with control wire tap (Cu/Al cable) 4 lug kit pictured 	Kit of 3 single lugs and 1 extended terminal cover	4/0	500 kcmil	—	—	—	—	√	3VA9673-0JC43	
	Kit of 4 single lugs and 1 extended terminal cover	4/0	500 kcmil	—	—	—	—	√	3VA9674-0JC43	
Aluminum body lug four cables (Cu/Al cable)	Kit of 3 single lugs and 1 extended terminal cover	4/0	600 kcmil	—	—	—	—	√	3VA9673-0JJ44	
	Kit of 4 single lugs and 1 extended terminal cover	4/0	600 kcmil	—	—	—	—	√	3VA9674-0JJ44	
Aluminum body lug four cables with control wire tap (Cu/Al cable)	Kit of 3 single lugs and 1 extended terminal cover	4/0	600 kcmil	—	—	—	—	√	3VA9673-0JC44	
	Kit of 4 single lugs and 1 extended terminal cover	4/0	600 kcmil	—	—	—	—	√	3VA9674-0JC44	
Distribution lug, 6 Cables (Cu/Al cable) 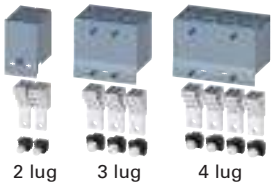 2 lug 3 lug 4 lug	Kit of 2 single lugs and 1 extended terminal cover	AWG 14	AWG 2	√	—	—	—		3VA9132-0JF60	
	Kit of 3 single lugs and 1 extended terminal cover	AWG 14	AWG 2	√	—	—	—		3VA9133-0JF60	3VA9133-0JF68
			AWG 2	—	√	—	—		3VA9233-0JF60	3VA9233-0JF68
			AWG 2	—	—	√	—		3VA9243-0JF60②	3VA9243-0JF68
			AWG 2	—	—	—	√		3VA9373-0JF60③	3VA9373-0JF68
	Kit of 4 single lugs and 1 extended terminal cover	AWG 14	AWG 2	√	—	—	—		3VA9134-0JF60	
			AWG 2	—	√	—	—		3VA9234-0JF60	
			AWG 2	—	—	√	—		3VA9244-0JF60②	
			AWG 2	—	—	—	√		3VA9374-0JF60③	

① Meets requirements of 100% rated breakers up to 250A. ② Meets requirements of 100% rated breakers up to 100A. ③ Meets requirements of 100% rated breakers up to 100A.

Aluminum & Copper Wire Connectors and Terminal Covers (cont.)

	Description	LUG Material	Number of Wires, per pole	UL 486A - 486B Cu/AL stranded	Min cable cross-section (std.) Class B	Max cable cross-section (std.) Class B	For molded case circuit breakers/rated current			Part Number
							3VA57 3VA67 1200A	3VA58 3VA68 1600A	3VA59 3VA69 2000A	
	Kit of 2 single lugs and 1 extended terminal cover	Aluminum body	3-Conductor	Cu/Al cable	500 kcmil	750 kcmil	√	—	—	**3VA9772-0JJ34**⑤
	Kit of 3 single lugs and 1 extended terminal cover	Aluminum body	3-Conductor	Cu/Al cable	500 kcmil	750 kcmil	√	—	—	**3VA9773-0JJ34**⑤
	Kit of 2 single lugs and 1 extended terminal cover	Aluminum body	4-Conductor	Cu/Al cable	1/0	500 kcmil	√	—	—	**3VA9772-0JJ43**
	Kit of 3 single lugs and 1 extended terminal cover	Aluminum body	4-Conductor	Cu/Al cable	1/0	500 kcmil	√	—	—	**3VA9773-0JJ43**
	Kit of 3 single lugs with control wire tap and 1 extended terminal cover	Aluminum body	4-Conductor with control wire tap	Cu/Al cable	1/0	500 kcmil	√	—	—	**3VA9773-0JC43**
	Kit of 3 single lugs and 1 extended terminal cover	Aluminum body	4-Conductor	Cu/Al cable	1/0	500 kcmil	√	—	—	**3VA9773-0JM43**⑤
	Kit of 1 single lug	Aluminum body	4-Conductor	Cu/Al cable	600 kcmil	750 kcmil	—	√	—	**3VA9771-0JJ44**①③
	Kit of 1 single lug	Aluminum body	5-Conductor	Cu cable only	300 kcmil	600 kcmil	—	√	—	**3VA9771-0JJ53**①③
	Kit of 1 single lug	Aluminum body	6-Conductor	Cu/Al cable	300 kcmil	600 kcmil	—	√	√	**3VA9871-0JJ63**③④
	Kit of 3 single lugs	Aluminum body	6-Conductor	Cu/Al cable	1/0	750 kcmil	√	√	—	**3VA9773-0JJ64**②⑤
	Kit of 3 single lugs and 1 extended terminal cover	Copper body	4-Conductor	Cu cable only	1/0	500 kcmil	√	—	—	**3VA9773-0JE43**⑤
	Kit of 1 single lug	Copper body	5-Conductor	Cu/Al cable	300 kcmil	600 kcmil	—	√	√	**3VA9871-0JE53**①③④
	MBFC = Mounting base: Front connection	MBFC Requires the use of Essential Parts Sold Separately: 3x Single lugs + 1x 3VA9872-0WA00 kit of 2 Phase barriers.					—	√	√	**3VA9873-0WM00**
	MBRC = Mounting base: Rear connection	MBRC Requires the use of Essential Parts Sold Separately: 3x Single lugs					—	√	√	**3VA9873-0WN00**
	LMAP = Lug mounting assembly (Essential Part 3VA9773-0JJ64 Sold Separately)	Aluminum body	6-Conductor	Cu/Al cable	1/0	750 kcmil	√	√	—	**3VA9873-0WL00**②
	Kit of 12 Compression lugs and	Aluminum body	4-Conductor	Cu/Al cable	N/A	500 kcmil	√	—	—	**3VA9773-0QK01**

① Lug Kit Require Attachment to Essential Parts: mounting base MBFC or MBRC (Sold Separately).
② 3VA9773-0JJ64 Lugs Require Attachment to 3VA9873-0WL00 LMAP (Sold Separately).
③ Part Number is for kit of 1 lug. Requires customer to purchase Qty. of 3x (kit of 1 lug).
④ Lugs Require Attachment to Essential Parts MBFC (Sold Separately).
⑤ Meets requirements for 100% rated breakers, requires the use of 90 degree wire, size to 75 degree ampacity.

Copper Wire Connectors

	Type	Minimum cable cross-section (standard) Class B	Maximum cable cross-section (standard) Class B	For molded case circuit breakers/ rated current					Part Number
				3VA5 125A	3VA5 250A	3VA6 150A 250A	3VA5 3VA6 400A 600A	3VA5 3VA6 800A 1000A	
	Copper body lug, small (Cu cable only) Kit of 3 single lugs	AWG 14	AWG 10	√	–	–	–	–	**3VA9133-0JD10**
	Copper body lug (Cu cable only) Kit of 3 single lugs	AWG 14	2/0	√	–	–	–	–	**3VA9133-0JD11**
		AWG 14	1/0	–	√	–	–	–	**3VA9233-0JD11**
		AWG 6	350 kcmil	–	√	–	–	–	**3VA9233-0JD12**
		AWG 14	1/0	–	–	√	–	–	**3VA9143-0JD11**
		AWG 6	350 kcmil	–	–	√	–	–	**3VA9243-0JD12**
		AWG 1	600 kcmil	–	–	–	√	–	**3VA9373-0JD13**
	Copper body lug, small (Cu cable only) Kit of 4 single lugs	AWG 14	AWG 10	√		–	–	–	**3VA9134-0JD10**
	Copper body lug (Cu cable only) kit of 4 single lugs	AWG 14	AWG 10	√	–	–	–	–	**3VA9134-0JD11**
		AWG 14	1/0	–	√	–	–	–	**3VA9234-0JD11**
		AWG 14	1/0	–	–	√	–	–	**3VA9144-0JD11**
		AWG 6	350 kcmil	–	√	–	–	–	**3VA9234-0JD12**
		AWG 6	350 kcmil	–	–	√	–	–	**3VA9244-0JD12**
		AWG 1	600 kcmil	–	–	–	√	–	**3VA9374-0JD13**
	Copper body lug, three cables (Cu cable) Kit of 3 single lugs	4/0	400 kcmil	–	–	–	–	√	**3VA9673-0JD32**
	Copper body lug, three cables (Cu cable) Kit of 4 single lugs	4/0	400 kcmil	–	–	–	–	√	**3VA9674-0JD32**
	Copper body lug, small with control wire tap (Cu cable only) Kit of 3 single lugs	AWG 14	AWG 10	√		–	–	–	**3VA9133-0JK10**
	Copper body lug with control wire tap (Cu cable only) Kit of 3 single lugs	AWG 14	2/0	√	–	–	–	–	**3VA9133-0JK11**
		AWG 14	1/0	–	√	–	–	–	**3VA9233-0JK11**
		AWG 6	350 kcmil	–	√	–	–	–	**3VA9233-0JK12**
		AWG 14	1/0	–	–	√	–	–	**3VA9143-0JK11**
		AWG 6	350 kcmil	–	–	√	–	–	**3VA9243-0JK12**
		AWG 1	600 kcmil	–	–	–	√	–	**3VA9373-0JK13**
	Copper body lug, small with control wire tap (Cu cable only) Kit of 4 single lugs	AWG 14	AWG 10	√		–	–	–	**3VA9134-0JK10**
	Copper body lug with control wire tap (Cu cable only) Kit of 4 single lugs	AWG 14	AWG 10	√	–	–	–	–	**3VA9134-0JK11**
		AWG 14	1/0	–	√	–	–	–	**3VA9234-0JK11**
		AWG 14	1/0	–	–	√	–	–	**3VA9144-0JK11**
		AWG 6	350 kcmil	–	√	–	–	–	**3VA9234-0JK12**
		AWG 6	350 kcmil	–	–	√	–	–	**3VA9244-0JK12**
		AWG 1	600 kcmil	–	–	–	√	–	**3VA9374-0JK13**
	Copper body lug, three cables with control wire tap (Cu cable) Kit of 3 single lugs	400 kcmil	600 kcmil	–	–	–	–	√	**3VA9673-0JK32**
	Aluminum body lug, three cables with control wire tap (Cu cable) Kit of 4 single lugs	400 kcmil	600 kcmil	–	–	–	–	√	**3VA9674-0JK32**

Copper Wire Connectors (cont.)

	Type	Minimum cable cross-section (standard) Class B	Maximum cable cross-section (standard) Class B	For molded case circuit breakers/ rated current					Part Number
				3VA5 125A	3VA5 250A	3VA6 150A 250A	3VA5 3VA6 400A 600A	3VA5 3VA6 800A 1000A	
	Copper body lug, 2 Cables (Cu cable only) Kit of 3 single lugs and 1 extended terminal cover	2/0	600 kcmil	—	—	—	√	—	**3VA9473-0JE23**
	Copper body lug 2 Cables (Cu cable only) Kit of 4 single lugs and 1 extended terminal cover	2/0	600 kcmil	—	—	—	√	—	**3VA9474-0JE23**
	Copper body lug, four cables (Cu cable) Kit of 3 single lugs and 1 extended terminal cover	4/0	500 kcmil	—	—	—	—	√	**3VA9673-0JL43**
	Copper body lug, four cables (Cu cable) Kit of 4 single lugs and 1 extended terminal cover	4/0	500 kcmil	—	—	—	—	√	**3VA9674-0JL43**

Nut Keeper Kits

	Type	Maximum terminal width	Maximum terminal thickness	For molded case circuit breakers/ rated current						Part Number
				3VA5 125A	3VA5 250A	3VA6 150A 250A	3VA5 3VA6 400A 600A	3VA5 3VA6 800A 1000A	3VA5 3VA6 1200A 1600A	
	Nut keeper kit kit of 3 single lugs	17 mm / 0.7 inch	6.5 mm /0.25 inch	√	—	—	—	—	—	**3VA9133-0QA00**
		25 mm / 1 inch	8 mm / 0.3 inch	—	√	—	—	—	—	**3VA9233-0QA00**
		25 mm / 1 inch	8 mm / 0.3 inch	—	—	√	—	—	—	**3VA9243-0QA00**
		35 mm / 1.4 inch	10 mm / 0.4 inch	—	—	—	√	—	—	**3VA9473-0QA00**
	Nut keeper kit kit of 4 single lugs	17 mm / 0.7 inch	6.5 mm /0.25 inch	√	—	—	—	—	—	**3VA9134-0QA00**
		25 mm / 1 inch	8 mm / 0.3 inch	—	√	—	—	—	—	**3VA9234-0QA00**
		25 mm / 1 inch	8 mm / 0.3 inch	—	—	√	—	—	—	**3VA9244-0QA00**
		35 mm / 1.4 inch	10 mm / 0.4 inch	—	—	—	√	—	—	**3VA9474-0QA00**
 4 lug kit pictured	Nut keeper kit kit of 3 single lug and terminal covers	50 mm / 2.0 inch	30 mm / 1.18 inch	—	—	—	—	√	—	**3VA9673-0QA00**
	Nut keeper kit kit of 4 single lug and terminal covers	50 mm / 2.0 inch	30 mm / 1.18 inch	—	—	—	—	√	—	**3VA9674-0QA00**
	Metric Nut Keeper Kit kit of 3 single lugs	50 mm/1.96 inch	15…20 mm / 0.6…0.8 inch	—	—	—	—	—	√	**3VA9803-0QA00**
	SAE Nut Keeper Kit kit of 3 single lugs	50 mm / 2.0 inch	15…20 mm / 0.6…0.8 inch	—	—	—	—	—	√	**3VA9873-0QA00**

① Nut keeper kit is for 1200A breakers only.

Bus Connector Extensions

	Type	Maximum terminal width	Maximum terminal thickness	For molded case circuit breakers/rated current							Part Number
				3VA5 125A	3VA5 250A	3VA6 150A 250A	3VA5 3VA6 400A 600A	3VA5 3VA6 800A 1000A	3VA5 3VA6 1200A	3VA5 3VA6 1600A	
	Front bus connectors, extended 1 single connector	22 mm / 0.9 inch	8 mm / 0.3 inch	√	—	—	—	—	—	—	**3VA9131-0QB00**
	Front bus connectors, extended kit of 3 single connectors, 2 phase barriers, and 1 insulating plate	22 mm / 0.9 inch	8 mm / 0.3 inch	√	—	—	—	—	—	—	**3VA9133-0QB00**
	Front bus connectors extended kit of 4 single connectors, 3 phase barriers, and 1 insulating plate	22 mm / 0.9 inch	8 mm / 0.3 inch	√	—	—	—	—	—	—	**3VA9133-0QB00**
	Front bus connectors extended kit of 3 single connectors and 1 insulating plate	32 mm / 1.3 inch	10 mm / 0.4 inch	—	√	√	—	—	—	—	**3VA9273-0QB00**
		40 mm / 1.6 inch	12.5 mm / 0.5 inch	—	—	—	√	—	—	—	**3VA9473-0QB00**
		50.8 mm / 2.0 inch	30 mm / 1.18 inch	—	—	—	—	√	—	—	**3VA9673-0QB00**
	Front bus connectors extended kit of 4 single connectors and 1 insulating plate	32 mm / 1.3 inch	10 mm / 0.4 inch	—	√	√	—	—	—	—	**3VA9274-0QB00**
		40 mm / 1.6 inch	12.5 mm / 0.5 inch	—	—	—	√	—	—	—	**3VA9474-0QB00**
		50.8 mm / 2.0 inch	30 mm / 1.18 inch	—	—	—	—	√	—	—	**3VA9674-0QB00**
	Front bus connectors offset kit of 3 single connectors. 1 insulating plate Distance between pole centers: 400/600 A = 70 mm / 2.76 inches	60 mm / 2.4 inch	12.5 mm / 0.5 inch	—	—	—	√	—	—	—	**3VA9473-0QC00**
		80 mm / 3.15 inch	30 mm / 1.18 inch	—	—	—	—	√	—	—	**3VA9673-0QC00**
	Front bus connectors offset kit of 4 single connectors, 1 insulating plate, Distance between pole centers: 400/600 A = 70 mm / 2.76 inches	60 mm / 2.4 inch	12.5 mm / 0.5 inch	—	—	—	√	—	—	—	**3VA9474-0QC00**
		80 mm / 3.15 inch	30 mm / 1.18 inch	—	—	—	—	√	—	—	**3VA9674-0QC00**
	Front bus connectors offset kit of 3 single terminals 2 phase barriers ▪ For mounting onto the circuit breaker ▪ For mounting on plug-in and withdrawable units	60 mm / 2.4 inch	12.5 mm / 0.5 inch	—	—	—		—	√	—	**3VA9603-0QC00**①
	Front bus connectors kit of 3 single connectors and 1 terminal cover Note: The bent connection brackets shown in the picture must be provided by the customer. Dimensions can be found in the manual.			—	—	—		—	√	√	**3VA9873-0QB00**
	Front bus connectors, for 100% rated MCCB kit of 3 single connectors and 1 terminal cover Note: The bent connection brackets shown in the picture must be provided by the customer. Dimensions can be found in the manual.			—	—	—		—	√	√	**3VA9873-0QH00**

① IEC only.

Rear connection studs flat

	Type	For molded case circuit breakers/ rated current						Part Number
		3VA5 125A	3VA5 250A	3VA6 150A 250A	3VA5 3VA6 400A 600A	3VA5 3VA6 800A 1000A	3VA5 3VA6 1200A	
	Rear connection studs flat kit of 2 short flat studs and 1 long flat stud	√	–	–	–	–	–	3VA9133-0QE00
		–	√	–	–	–	–	3VA9233-0QE00
		–	–	√	–	–	–	3VA9243-0QE00
		–	–	–	√	–	–	3VA9473-0QE00
	Rear connection studs flat kit of 2 short flat studs and 2 long flat studs	√	–	–	–	–	–	3VA9134-0QE00
		–	√	–	–	–	–	3VA9234-0QE00
		–	–	√	–	–	–	3VA9244-0QE00
		–	–	–	√	–	–	3VA9474-0QE00
	Rear connection studs flat 1 short flat stud	√	–	–	–	–	–	3VA9131-0QE10
		–	√	–	–	–	–	3VA9231-0QE10
		–	–	√	–	–	–	3VA9241-0QE10
		–	–	–	√	–	–	3VA9471-0QE10
	Rear connection studs flat 1 long flat stud	√	–	–	–	–	–	3VA9131-0QE20
		–	√	–	–	–	–	3VA9231-0QE20
		–	–	√	–	–	–	3VA9241-0QE20
		–	–	–	√	–	–	3VA9471-0QE20
	Rear connectors vertical 1 pole, 1 rear connector	–	–	–	–	–	√	3VA9773-0QE10
	Rear connectors vertical 3 pole, 3 rear connectors	–	–	–	–	–	√	3VA9773-0QE00

Rear connection studs round

	Rear connection studs round kit of 1 long round stud and 2 short round studs	√	–	–	–	–	–	3VA9133-0QF00
		–	√	–	–	–	–	3VA9233-0QF00
		–	–	√	–	–	–	3VA9243-0QF00
		–	–	–	√	–	–	3VA9473-0QF00
	Rear connection studs round kit of 2 long round studs and 2 short round studs	√	–	–	–	–	–	3VA9134-0QF00
		–	√	–	–	–	–	3VA9234-0QF00
		–	–	√	–	–	–	3VA9244-0QF00
		–	–	–	√	–	–	3VA9474-0QF00
	Rear connection studs round 1 short round studs	√	–	–	–	–	–	3VA9131-0QF10
		–	√	–	–	–	–	3VA9231-0QF10
		–	–	√	–	–	–	3VA9241-0QF10
		–	–	–	√	–	–	3VA9471-0QF10
	Rear connection studs round 1 long round stud	√	–	–	–	–	–	3VA9131-0QF20
		–	√	–	–	–	–	3VA9231-0QF20
		–	–	√	–	–	–	3VA9241-0QF20
		–	–	–	√	–	–	3VA9471-0QF20
	Rear horizontal bus connections, 3-pole, 3VA65 and 3VA66	–	–	–	–	√	–	3VA9673-0QE60
	Rear horizontal bus connections, 4-pole, 3VA65 and 3VA66	–	–	–	–	√	–	3VA9674-0QE60
	Rear vertical bus connections, 3-pole, 3VA65 and 3VA66	–	–	–	–	√	–	3VA9673-0QE00
	Rear vertical bus connections, 4-pole, 3VA65 and 3VA66	–	–	–	–	√	–	3VA9674-0QE00

Phase barriers, terminal covers, and insulating plates

	Type	For molded case circuit breakers/ rated current								Part Number	Terminal Cover with Probe Holes Part Number
		3VA5 125A	3VA5 250A	3VA6 150A 250A	3VA5 3VA6 400A 600A	3VA5 3VA6 800A 1000A	3VA5 3VA6 1200A	3VA5 3VA6 1600A	3VA5 3VA6 2000A		
	Phase barriers kit of 2 phase barriers	√	–	–	–	–	–	–	–	3VA9132-0WA00	
		–	√	√	–	–	–	–	–	3VA9272-0WA00	
		–	–	–	√	–	–	–	–	3VA9472-0WA00	
		–	–	–	–	√	–	–	–	3VA9672-0WA00	
		–	–	–	–	–	√	√	√	3VA9872-0WA00	
	Terminal cover for 1-pole breakers	√	–	–	–	–	–	–	–	3VA9131-0WD10	
	Terminal cover for 2-pole breakers	√	–	–	–	–	–	–	–	3VA9131-0WD20	
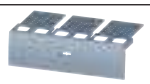	Terminal cover for 3-pole breakers	√	–	–	–	–	–	–	–	3VA9131-0WD30	3VA9131-0WD31
		–	√	√	–	–	–	–	–	3VA9271-0WD30	3VA9271-0WD31
		–	–	–	√	–	–	–	–	3VA9471-0WD30	3VA9471-0WD31
		–	–	–	–	√	–	–	–	3VA9671-0WD30	
		–	–	–	–	–	√	√	√	3VA9871-0WD30	
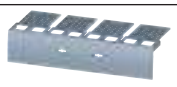	Terminal cover for 4-pole breakers	√	–	–	–	–	–	–	–	3VA9131-0WD40	
		–	–	√	–	–	–	–	–	3VA9271-0WD40	
		–	–	–	√	–	–	–	–	3VA9471-0WD40	
		–	–	–	–	√	–	–	–	3VA9671-0WD40	
	Terminal cover intermediate for 3-pole breakers	–	–	–	–	√	–	–	–	3VA9671-0WE30	
	Terminal cover intermediate for 4-pole breakers	–	–	–	–	√	–	–	–	3VA9671-0WE40	
	Terminal cover extended for 2-pole breakers	√	–	–	–	–	–	–	–	3VA9131-0WF20	
	Terminal cover extended for 3-pole breakers	√	–	–	–	–	–	–	–	3VA9131-0WF30	3VA9131-0WF31
		–	√	√	–	–	–	–	–	3VA9271-0WF30	3VA9271-0WF31
		–	–	–	√	–	–	–	–	3VA9471-0WF30	3VA9471-0WF31
		–	–	–	–	√	–	–	–	3VA9671-0WF30	
	Terminal cover extended for 4-pole breakers	√	–	–	–	–				3VA9131-0WF40	
		–	√	√	–	–				3VA9271-0WF40	
		–	–	–	√	–				3VA9471-0WF40	
		–	–	–	–	√				3VA9671-0WF40	
	Terminal cover offset for 3-pole breakers	–	–	–	√	–				3VA9471-0WG30	
	Terminal cover offset for 4-pole breakers	–	–	–	√	–				3VA9471-0WG40	
	Terminal cover extended for 3-pole breakers	–	–	–	–	–	√	–	–	3VA9771-0WP30	
		–	–	–	–	–	√	√	–	3VA9871-0WP30	
		–	–	–	–	–	√	√	–	3VA9871-0WF30	

Phase barriers, terminal covers, and insulating plates

	Type	For molded case circuit breakers / rated current				Part Number
		3VA5 125A	3VA5 250A	3VA6 150A 250A	3VA5 3VA6 400A 600A	
	Rear insulating plate extended for 2-pole breakers	√	–	–	–	**3VA9131-0WJ20**
	Rear insulating plate extended for 3-pole breakers	√	–	–	–	**3VA9131-0WJ30**
		–	√	√	–	**3VA9271-0WJ30**
		–	–	–	√	**3VA9471-0WJ30**
	Rear insulating plate extended for 4-pole breakers	√	–	–	–	**3VA9131-0WJ40**
		–	–	√	–	**3VA9271-0WJ40**
		–	–	–	√	**3VA9471-0WJ40**
	Rear insulating plate offset for 3-pole breakers	–	–	–	√	**3VA9471-0WK30**
	Rear insulating plate offset for 4-pole breakers	–	–	–	√	**3VA9471-0WK40**
	Control wire tap for busbar (for fixed mounting)	–	√	√	–	**3VA9270-0WC00**
		–	–	–	√	**3VA9470-0WC00**

Plug-in socket

	Type	For molded case circuit breakers / rated current			Part Number
		3VA61/62 150A/250A	3VA63 400A	3VA64 600A	
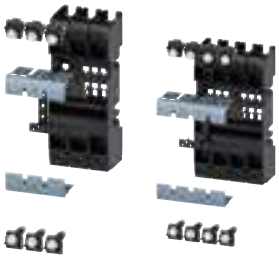 3 pole 4 pole	Plug-in unit, 3-pole, complete kit Consists of: Plug-in socket, Plug-in unit, conversion kit, Mounting screw kit	√	–	–	3VA9143-0KP00
		–	√	–	3VA9343-0KP00
		–	–	√	3VA9443-0KP00
	Plug-in unit, 4-pole, complete kit Consists of: Plug-in socket, Plug-in unit, conversion kit, Mounting screw kit	√	–	–	3VA9144-0KP00
		–	√	–	3VA9344-0KP00
		–	–	√	3VA9444-0KP00
 3 pole 4 pole	Plug-in unit, 3-pole, conversion kit Consists of: Screw-fastened terminal covers for molded case circuit breakers, Plug-in contacts, Cable cage, Autotrip plunger	√	–	–	3VA9143-0KP10
		–	√	√	3VA9343-0KP10
	Plug-in unit, 4-pole, conversion kit Consists of: Screw-fastened terminal covers for molded case circuit breakers, Plug-in contacts, Cable cage, Autotrip plunger	√	–	–	3VA9144-0KP10
		–	√	√	3VA9344-0KP10

Draw-out units

	Type	For molded case circuit breakers / rated current			Part Number
		3VA61/62 150A/250A	3VA63 400A	3VA64 600A	
	Draw-out unit, 3-pole, complete kit Consists of: Draw-out socket, Draw-out unit, conversion kit, Mounting screw kit	√	–	–	3VA9143-0KD00
		–	√	–	3VA9343-0KD00
		–	–	√	3VA9443-0KD00
	Draw-out unit, 4-pole, complete kit Consists of: Draw-out socket, Draw-out unit, conversion kit, Mounting screw kit	√	–	–	3VA9144-0KD00
		–	√	–	3VA9344-0KD00
		–	–	√	3VA9444-0KD00
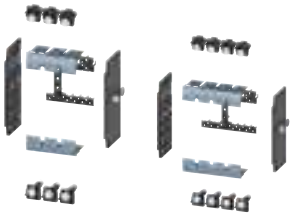 3 pole 4 pole	Draw-out unit, 3-pole, conversion kit Consists of: Screw-fastened terminal covers, Side wall, Plug-in contacts, Cable cage, Autotrip plunger	√	–	–	3VA9143-0KD10
		–	√	√	3VA9343-0KD10
	Draw-out unit, 4-pole, conversion kit Consists of: Screw-fastened terminal covers, Side wall, Plug-in contacts, Cable cage, Autotrip plunger	√	–	–	3VA9144-0KD10
		–	√	√	3VA9344-0KD10

Note: Crank handle for the drawout unit must be ordered seperately.

Accessories

	Type	For molded case circuit breakers / rated current		Part Number
		3VA61/62 150A/250A	3VA63/64 400A/600A	
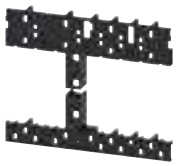	Cable cage for plug-in/draw-out unit 3-/4-pole (spare part) Cable duct for routing of the required cables from the internal acc. on the back of the breaker.	√	–	**3VA9167-0KB02**
		–	√	**3VA9367-0KB02**
	Door feedthrough	√	–	**3VA9147-0KT00**
		–	√	**3VA9347-0KT00**
	Autotrip plunger Plug-in unit	√	–	**3VA9267-0KP81**
		–	√	**3VA9457-0KP81**
	Autotrip plunger Draw-out unit	√	–	**3VA9267-0KD81**
		–	√	**3VA9457-0KD81**
	Terminal cover for plug-in/draw-out unit, 3-pole (spare part) To provide circuit breaker touch protection, for mounting on the molded case cicuit breaker	√	–	**3VA9143-0KB01**
		–	√	**3VA9343-0KB01**
	Terminal cover for plug-in/draw-out unit, 4-pole (spare part) To provide circuit breaker touch protection, for mounting on the molded case cicuit breaker	√	–	**3VA9144-0KB01**
		–	√	**3VA9344-0KB01**
	Crank handle for draw-out unit Insulated, including crank holder			**3VA9987-0KD81**

Other Accessories

	Type	Part Number
	Communication link for draw-out unit Consists of: Cable kit with 3 special position signaling switches, connecting cable 3VA9987-0KC10	**3VA9977-0KC00**
	Position signaling switches For draw-out unit	**3VA9977-0KB00**
	Spare connecting cable To connect the position signaling switches for communication with the COM060	**3VA9987-0KC10**
	Auxiliary circuit connector ▪ For draw-out units	**3VA9977-0KD80**
	Auxiliary circuit connector ▪ For plug-in units	**3VA9977-0KP80**
	Cylinder lock (type Ronis) ▪ Includes a lock with 2 keys ▪ For locking ▪ For installation in all rotary operators with shaft stub ▪ For mounting in the adapter kit for the accessories component	**3VA9980-0VL10** **3VA9980-0VL30** **3VA9980-0VL40**
	Cylinder lock adapter for draw-out unit ▪ For fitting a cylinder lock in the right-hand side wall of the draw-out unit ▪ To prevent unauthorized withdrawl or insertion of the circuit breaker; ▪ Circuit breaker can be locked in the CONNECT, TEST, or DISCONNECT position	**3VA9970-0LF40**

Communications overview

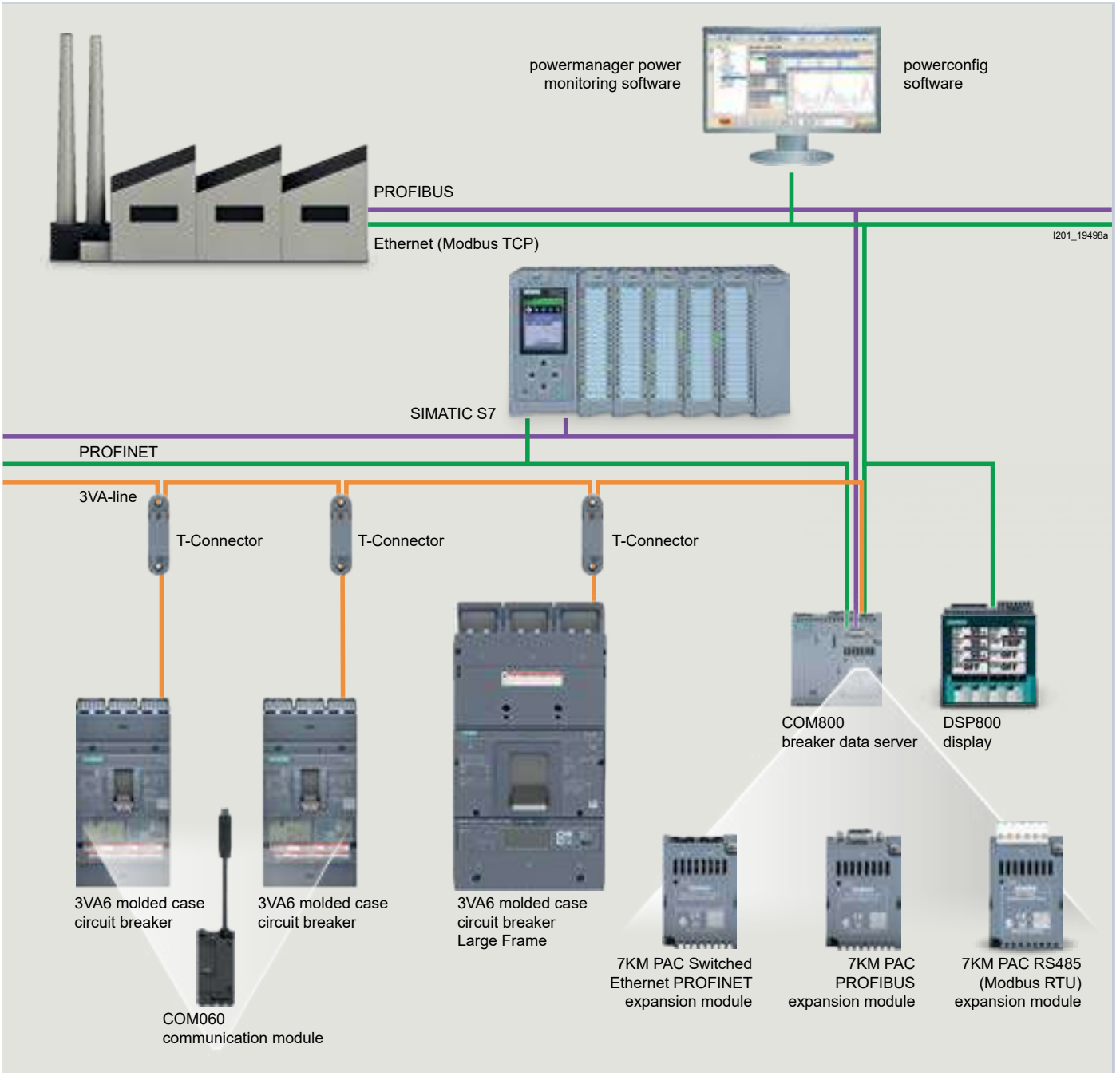

Modules

	Type	For molded case circuit breakers / rated current		Part Number
		3VA61/62 150A/250 A	3VA63/64/65/66 400A/600A 800A/1000A	
	24 V Module ▪ 24 V DC ▪ For mounting in the right-hand accessories compartment of the 3VA6 ▪ Optional energy supply for the ETU, also includes contiunous operation of the ETU display and the metering function of the ETU 8-series	√	–	**3VA9177-0TB50**
		–	√	**3VA9377-0TB50**
	COM060 communication module ▪ For mounting in the right-hand accessories compartment of the 3VA6 molded case circuit breaker (including ETU power supply) ▪ Communication with the COM800/COM100 breaker data server via the 3VA-line ▪ Including a T-Connector	√	–	**3VA9177-0TB10**
		–	√	**3VA9377-0TB10**
	Spare SLC adapter COM060, 24 V module accessory for: ▪ 3VA61/62 100/150/250	√	–	**3VA9187-0TB60**
	Spare SLC adapter COM060, 24 V module accessory for: ▪ 3VA63/64 400/600	–	√	**3VA9387-0TB60**

Breaker data server

	Type	Part Number
	COM800 breaker data server ▪ 2 terminating resistors ▪ Central communication module for connecting up to eight 3VA6 molded case circuit breakers via the 3VA-line ▪ Ethernet 10/100 Mbit/s interface ▪ Module slot for plugging on an optional PROFIBUS DP, PROFINET or RS485 module	**3VA9977-0TA10**
	COM100 breaker data server ▪ 2 terminating resistors ▪ Central communication module for connecting one 3VA6 molded case circuit breaker ▪ Ethernet 10/100 Mbit/s interface ▪ Module slot for plugging on an optional PROFIBUS DP, PROFINET or RS485 module	**3VA9977-0TA20**
	7KM PAC PROFIBUS DP expansion module ▪ The 7KM PAC PROFIBUS DP expansion module is used for connecting the COM800/COM100 breaker data server, and the 3VA molded case circuit breakers conneccted to it, to PROFIBUS DPV1 ▪ The 7KM PAC PROFIBUS DP expansion module provides the status and measured quantities of the 3VA molded case circuit breaker for the PROFIBUS DP master. It receives information (e.g. commands) from the PROFIBUS DP master, and forwards this information to the 3VA molded case circuit breaker	**7KM9300-0AB01-0AA0**
	7KM PAC Switched Ethernet PROFINET expansion module ▪ The 7KM PAC Switched Ethernet PROFINET expansion module is used to connect the COM800/COM100 breaker data server, and the connected 3VA molded case circuit breaker, to PROFINET via two Ethernet interfaces ▪ The 7KM PAC Switched Ethernet PROFINET expansion module provides the status and measured quantities of the 3VA molded case circuit breaker to PROFINET via the PROFINET IO, PROFIenergy and Modbus TCP protocols	**7KM9300-0AE01-0AA0**
	7KM PAC RS485 Modbus RTU expansion module ▪ The 7KM PAC RS485 Modbus expansion module is used to connect the COM800/COM100 breaker data server, and the 3VA molded case circuit breaker connected to it, to Modbus RTU ▪ The 7KM PAC RS485 Modbus expansion module provides the status and measured quantities of the 3VA molded case circuit breaker for the Modbus RTU master. It receives information (e.g. commands) from the Modbus RTU master, and forwards this information to the 3VA molded case circuit breaker	**7KM9300-0AM00-0AA0**

Accessories for Communication

	Type	Part Number
	T-Connector ▪ Spare part ▪ Provides spur line feeder to COM060 and loops to the nextcircuit breaker ▪ Includes a connection adapter for mounting on the 3VA6 breaker enclosure	**3VA9987-0TG10**
	DIN rail adapter For snapping the T-Connector onto a DIN rail	**3VA9987-0TG11**
	Preassembled T-Connector-to-T-Connector or T-Connector-to-COM800/ COM100 connecting cable ▪ 0.4 m long	**3VA9987-0TC10**
	▪ 1 m long	**3VA9987-0TC20**
	▪ 2 m long	**3VA9987-0TC30**
	▪ 4 m long	**3VA9987-0TC40**
	Preassembled connecting cable for extending the COM060-to-T-Connector spur line connection ▪ 0.4 m long	**3VA9987-0TF20**
	▪ 0.8 m long	**3VA9987-0TF10**
	Additional bus terminating resistors	**3VA9987-0TE10**
	Voltage tap to external N conductor Cable for connecting the neutral point for the metering function of the 8-Series ETU, length 1.5 m	**3VA9987-0UC10**
	External current transformer as straight-through transformer. Connection of an external current transformer for the N conductor for 3-pole 3VA6 molded case circuit breakers for 5-series and 8-series ETUs (ETU850, ETU856, ETU860), including connecting cable ▪ In = 25 ... 150A	**3VA9077-0NA10**
	▪ In = 160 ... 350 A	**3VA9177-0NA10**
	▪ In = 400 ... 630 A	**3VA9377-0NA10**
	▪ In = 600 ... 1000 A	**3VA9677-0NA10**
	DSP800 display ▪ For displaying the status, measured values and parameters of up to 8 3VA6 molded cases circuit breakers ▪ Connection to the COM800/COM100 via Ethernet for displaying information of the COM800/COM100 and the connected 3VA6 molded case circuit breaker	**3VA9977-0TD10**
	EFB300 ▪ External function box for connection to the ETU of the 3VA6 molded case circuit breaker ▪ 4 digital outputs for information output, 1 digital input ▪ ZSI functionality ▪ S0 interface ▪ Including cable 1.5 m in length	**3VA9977-0UA10**
	Connecting cable for EFB300 and MMB300. Spare part ▪ 1.5 m long	**3VA9987-0UB10**
	▪ 3.0 m long	**3VA9987-0UB20**
	▪ 3.0 m long for 3VA with EFB and RCD820	**3VA9987-0UB30**

Test devices

	Type	Part Number
	TD300 ▪ Connection to the front interface of the ETU ▪ Test device for activating the ETU and triggering a test trip	**3VA9977-0MA10**
	TD500 ▪ Connection to the front interface of the ETU ▪ Initiation of various test trips (LSING) ▪ USB interface for connection of a PC using powerconfig ▪ ETU parameterization ▪ Including external power supply unit with adapter for Europe, UL and GB ▪ Including connecting cable to the 3VA6 molded case circuit breaker	**3VA9977-0MB10**
	Spare part: External power supply for TD500 110 ... 240 V AC	**3VA9987-0MX10**
	Spare part: Cable for connecting to the TD500 to the 3VA6 molded case circuit breaker	**3VA9977-0MY10**

Maintenance Mode Box

	MMB300 ▪ Realization of the NEC 240.87 (Arc Energy Reduction) -> personal protection during maintenance work ▪ Switch into maintenance mode by changing the I- and G-protection to the lowest possible value through an external signal (e.g. door contact) ▪ Available for all 3VA6 circuit breakers with electronic trip unit ▪ Daisy chain up to 8 circuit breakers equipped with MMB300 ▪ Additional digital output (D01) for ETU signals available ▪ Capable of DIN rail mounting ▪ Includes cable 1.5m in length	**3VA9977-0UF10**

Locking, Blocking, & Interlocking

	Type	For molded case circuit breakers/ rated current							Part Number
		3VA4 125A	3VA5 125A	3VA5 250A	3VA6 150A 250A	3VA5 3VA6 400A 600A	3VA5 3VA6 800A 1000A	3VA5 3VA6 1200A 2000A	
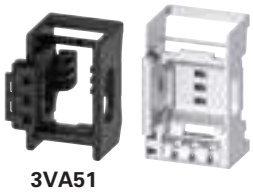 3VA51	Blocking device for the handle	–	√	–	–	–	–	–	3VA9038-0LB10
		–	–	√	√	√	–	–	3VA9378-0LB10
		–	–	–	–	–	–	√	3VA9877-0LB10
 3VA5/3VA6 3VA4	Padlock device for the handle	–	√	–	–	–	–	–	3VA9037-0LB11
		√	–	–	–	–	–	–	3VA9038-0LB11
		–	–	√	√	–	–	–	3VA9138-0LB11
		–	–	–	–	√	–	–	3VA9338-0LB11
		–	–	–	–	–	√	–	3VA9578-0LB10
		–	–	–	–	–	–	√	3VA9877-0LB11
 2 pole 3 pole	3VA4 Handle tie & padlock 2-inch	√	–	–	–	–	–	–	3VA9032-0LB20
	3VA4 Handle tie & padlock 3-inch	√	–	–	–	–	–	–	3VA9033-0LB20
	Adapter kit for mounting the cylinder lock (type Ronis) in the accessories compartment of the molded case circuit breaker Comprising 2 cylinder lock casings (one for locking and one for interlocking) and the appropriate mounting module ▪ To implement an interlock or a lock: select suitable cylinder lock(s) ▪ For an interlock: select the same cylinder lock number	–	√	–	–	–	–	–	3VA9137-0LF10
		–	–	√	–	–	–	–	3VA9237-0LF10
		–	–	–	√	–	–	–	3VA9147-0LF10
		–	–	–	–	√	–	–	3VA9347-0LF10
		–	–	–	–	–	√	–	3VA9577-0LF10
	Cylinder lock (type Ronis) ▪ Includes a lock with 2 keys ▪ For locking or interlocking ▪ For installation in all rotary operators with shaft stub ▪ For mounting in the adapter kit for the accessories compartment							–	
	▪ Key 1 (lock number 1)	–	√	√	√	√	–	–	3VA9980-0VL10
	▪ Key 3 (lock number 3)	–	√	√	√	√	–	–	3VA9980-0VL30
	▪ Key 4 (lock number 4)	–	√	√	√	√	–	–	3VA9980-0VL40
	Sliding bar Complete kit for interlocking 2 circuit breakers ▪ The article number must be ordered 2X to implement an interlock between 3 breakers of the same size	–	√	–	–	–	–	–	3VA9138-0VF30
		–	–	√	–	–	–	–	3VA9238-0VF30
		–	–	–	√	–	–	–	3VA9148-0VF30
		–	–	–	–	√	–	–	3VA9348-0VF30
	Module for handle interlock using a bowden cable ▪ A separate handle interlock module is required for each switching device ▪ A Bowden cable must be ordered separately	–	√	–	–	–	–	–	3VA9137-0VF10
		–	–	√	–	–	–	–	3VA9237-0VF10
		–	–	–	√	–	–	–	3VA9147-0VF10
		–	–	–	–	√	–	–	3VA9347-0VF10
		–	–	–	–	–	√	–	3VA9577-0VF10
		–	–	–	–	–	–	√	3VA9877-0VF10
	Rear interlock with rod Complete Kit ▪ Mounting frames are not included in scope of supply	–	√	√	√	√	–	–	3VA9078-0VM10

Locking, Blocking, & Interlocking

	Type	For molded case circuit breakers/rated current						Part Number
		3VA5 125A	3VA5 250A	3VA6 150A 250A	3VA5 3VA6 400A 600A	3VA5 3VA6 800A 1000A	3VA5 3VA6 1200A 2000A	
	Rear interlock with rod Complete Kit ▪ Mounting frames are included in scope of supply	–	–	–	–	√	–	**3VA9578-0VM10**
	Rear interlock with rod Complete Kit for plug-in/draw-out unit ▪ Mounting frames are not included in scope of supply	√	√	√	√	–	–	**3VA9078-0VM30**
	Rear interlock with rod Complete Kit for Circuit breaker, fixed-mounted	–	–	–	–	–	√	**3VA9873-0VM10**
	Bowden cable ▪ Length 0.6 m	√	√	√	√	√	–	**3VA9980-0VC10**
	▪ Length 1.0 m	√	√	√	√	√	–	**3VA9980-0VC20**
	▪ Length 1.5 m	√	√	√	√	√	–	**3VA9980-0VC30**
	Mounting frame for rear interlock with rod①② Required for the complete mounting frame kit: ▪ Profile poles	√	√	√	√	–	–	**3VA9078-0VK10**
	▪ Mounting Plates	√	–	–	–	–	–	**3VA9138-0VK20**
		–	√	–	–	–	–	**3VA9238-0VK20**
		–	–	√	–	–	–	**3VA9248-0VK20**
		–	–	–	√	–	–	**3VA9448-0VK20**

Cover frame for door cut-out

	Cover frame for door cut-out for molded case circuit breaker ▪ 3-pole, door cut-out without trip unit	√	–	–	–	–	–	**3VA9033-0SB10**
		–	√	√	–	–	–	**3VA9143-0SB10**
		–	–	–	√	–	–	**3VA9373-0SB10**
		–	–	–	–	√	–	**3VA9583-0SB10**
		–	–	–	–	–	√	**3VA9877-0SB10**
	Cover frame for door cut-out for molded case circuit breaker ▪ 3-pole, door cut-out with trip unit	√	–	–	–	–	–	**3VA9033-0SB20**
		–	√	–	–	–	–	**3VA9233-0SB20**
		–	–	√	–	–	–	**3VA9143-0SB20**
		–	–	–	√	–	–	**3VA9343-0SB20**
		–	–	–	–	√	–	**3VA9583-0SB20**
		–	–	–	–	–	√	**3VA9877-0SB20**
	▪ 3-pole, door cut-out with trip unit and connection area	–	–	–	–	–	√	**3VA9877-0SB60**
	Cover frame for door cut-out for molded case circuit breaker ▪ 4-pole, door cut-out without trip unit	√	–	–	–	–	–	**3VA9034-0SB10**
		–	√	√	–	–	–	**3VA9144-0SB10**
		–	–	–	√	–	–	**3VA9374-0SB10**
		–	–	–	–	√	–	**3VA9584-0SB10**
	Cover frame for door cut-out for molded case circuit breaker ▪ 4-pole, door cut-out with trip unit	√	–	–	–	–	–	**3VA9034-0SB20**
		–	√	–	–	–	–	**3VA9234-0SB20**
		–	–	√	–	–	–	**3VA9144-0SB20**
		–	–	–	√	–	–	**3VA9344-0SB20**
		–	–	–	–	√	–	**3VA9584-0SB20**
	Cover frame for door cut-out for MO320 motor operators	√	–	–	–	–	–	**3VA9033-0SB10**
		–	√	√	–	–	–	**3VA9237-0SB30**
		–	–	–	√	–	–	**3VA9377-0SB30**
	Cover frame for door cut-out for front mounted rotary operators	√	–	–	–	–	–	**3VA9033-0SB10**
		–	√	√	–	–	–	**3VA9143-0SB10**
		–	–	–	√	–	–	**3VA9373-0SB10**
	Cover frame for door cut-out for front mounted rotary operator with door interlock	–	–	–	√	–	–	**3VA9377-0SB30**
		–	–	–	–	√	–	**3VA9583-0SB50**
		–	–	–	–	–	√	**3VA9877-0SB30**
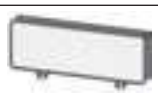	Cover frame for door cut-out for door feedthrough	–	√	√	–	–	–	**3VA9233-0SB20**
		–	–	–	√	–	–	**3VA9333-0SB20**
	Labeling plate for cover frame							**3VA9087-0SX10**

① 2 mounting plates are required. They are screwed onto the profile rail that can be ordered above. Different breakers can be mutually interlocked.

② Breakers with plug-in unit can be mounted on the mounting plates, but the profile rails cannot be used.

Other accessories

	Type	For molded case circuit breakers/rated current						Part Number
		3VA5 125A	3VA5 250A	3VA6 150A 250A	3VA5 3VA6 400A 600A	3VA5 3VA6 800A 1000A	3VA5 3VA6 1200A 2000A	
	Busbar adapter system with 60 mm busbar center-to-center spacing 3-pole	√	–	–	–	–	–	**8US1211-4SS00**
		–	√	√	–	–	–	**8US1213-4AP03**
		–	–	–	√	–	–	**8US1213-4AH04**
	Busbar adapter system with 60 mm busbar center to center spacing, bottom connection, 3-pole Busbar adapter designed for 3VA breaker used as a main	√	–	–	–	–	–	**8US1215-4SS00**
	Metric mounting screw kit For fixed mounted breakers 1-pole	√	–	–	–	–	–	**3VA9151-0SS10**
	Metric mounting screw kit (2 pcs) For fixed mounted breakers 2-pole	√	–	–	–	–	–	**3VA9116-0SS10**
	Metric mounting screw kit (4 pcs) For fixed mounted breakers 3-,4-pole	√	√	–	–	–	–	**3VA9114-0SS10**
	Metric mounting screw kit For fixed mounted breakers 3-pole	–	–	√	–	–	–	**3VA9126-0SS10**
	Metric mounting screw kit For fixed mounted breakers 4-pole	–	–	√	–	–	–	**3VA9124-0SS10**
	Metric mounting screw kit For fixed mounted breakers 3-,4-pole	–	–	–	√	–	–	**3VA9328-0SS10**
	Metric mounting screw kit For plug-in and draw-out unit	–	–	√	–	–	–	**3VA9124-0SS10**
	Metric mounting screw kit For plug-in and draw-out unit	–	–	–	–	–	√	**3VA9874-0SS10**
	SAE mounting screw kit (2 pcs) For fixed mounted breakers 1-pole	√	–	–	–	–	–	**3VA9151-0SS00**
	SAE Mounting screw kit (2 pcs) For fixed mounted breakers 2-,3-pole	√	–	–	–	–	–	**3VA9156-0SS00**
	SAE Mounting screw kit (4 pcs) For fixed mounting breakers 4-pole	√	–	–	–	–	–	**3VA9154-0SS00**
	SAE Mounting screw kit (4 pcs) For fixed mounted breakers 3-,4-pole and 3VA6 150/250 plug-in and draw-out units	–	√	√	–	–	–	**3VA9164-0SS00**
	SAE Mounting screw kit (2 pcs) For fixed mounted breakers 2-,3-pole	–	√	√	–	–	–	**3VA9166-0SS00**
	SAE Mounting screw kit (4 pcs) For fixed mounted breakers 2-,3-,4-pole and 3VA6 400/600 plug-in and draw-out units	–	–	–	√	–	–	**3VA9368-0SS00**
	SAE mounting screw kit For plug-in and draw-out unit	–	–	–	–	–	√	**3VA9874-0SS00**
	Replacement handle extension accessory	–	–	–	√	–	–	**3VA9487-0SC10**
		–	–	–	–	√	–	**3VA9987-0SC10**
		–	–	–	–	–	√	**3VA9877-0SC10**

① Busbar adapter designed for 3VA breaker used as a feeder.

② Busbar adapter designed for 3VA breaker used as either a main or feeder.

Auxiliary switches electrical requirements

				Auxiliary switches and alarm switches HQ				Auxiliary switches and alarm switches HQ_electronic				Auxiliary switches and alarm switches HP		
														
				AUX	LCS	TAS	EAS	AUX	LCS	TAS	EAS	AUX	LCS	TAS
Rated operational voltage		U_e	V AC 50 Hz	240				24				600		
			V DC	250				24				250		
Conventional free-air thermal current		$I_{th} = I_e$	A	6				0.3				10		
IEC Ratings Listed	AC-12	12 V	A	6				0.3				10		
		24 V	A	6				0.3				10		
		48 V	A	6				--				10		
		125 V	A	6				--				10		
		220/240 V	A	6				--				10		
		380/440 V	A	--				--				6		
		600 V	A	--				--				2		
	AC-15	12 V	A	3				0.3				6		
		2/4 V	A	3				0.3				6		
		48 V	A	3				--				6		
		125 V	A	3				--				6		
		220/240 V	A	3				--				6		
		380/440 V	A	--				--				2		
		600 V	A	--				--				0.6		
	DC-12	12 V	A	6				0.1				6		
		24 V	A	4				0.1				6		
		48 V	A	2				--				2		
		110 V	A	0.5				--				0.6		
		250 V	A	0.25				--				0.3		
	DC-13	12 V	A	1				0.07				3		
		24 V	A	0.8				0.07				3		
		48 V	A	0.4				--				0.8		
		110 V	A	0.2				--				0.2		
		250 V	A	0.1				--				0.1		
Max. rated current (cULus)	Inductive load (0.75-0.8 AC)	24 V	A	3				0.3				6		
		300 V	A	3				--				6		
		600 V	A	--				--				6		
	Pilot duty (AC)	24 V	A	3				--				6		
		127 V	A	3				--				6		
		240 V	A	3				--				3		
		480 V	A	--				--				1.5		
		600 V	A	--				--				1.2		
	Resistive load (DC)	24 V	A	0.25				0.1				0.3		
		250 V	A	0.25				--				0.3		
	Resistive load - pilot duty sequence (DC)	125 V	A	0.6				--				0.9		
		250 V	A	0.3				--				0.55		
Minimum load		At 24 V DC	mA	70				0.5				70		
		At 5 V DC	mA	--				1				--		

Shunt trip/undervoltage electrical requirements

				Shunt trip left STL 	Shunt trip flexible STF 	Undervoltage releases UVR 	Universal release UNI 
Power consumption U_e	12	V DC	W	50	--	--	--
	24	50 V AC/60 Hz	VA	50	--	--	--
	24 ... 30	V DC	W	7 ... 50	--	--	--
	48 ... 60	50 V AC/60 Hz	VA	15 ... 20	--	--	--
	48 ... 60	V DC	W	20 ... 30	--	--	--
	110 ... 127	50 V AC/60 Hz	VA	30 ... 40	--	--	--
	110 ... 127	V DC	W	30 ... 40	--	--	--
	208 ... 277	50 V AC/60 Hz	VA	16 ... 35	--	--	--
	220 ... 250	V DC	W	28 ... 35	--	--	--
	380 ... 600	50 V AC/60 Hz	VA	10 ... 30	--	--	--
	24	50 V AC/60 Hz	VA	--	300	--	--
	48 ... 60	50 V AC/60 Hz	VA	--	340 ... 600	--	--
	110 ... 127	50 V AC/60 Hz	VA	--	500 ... 650	--	--
	208 ... 277	50 V AC/60 Hz	VA	--	360 ... 650	--	--
	380 ... 500	50 V AC/60 Hz	VA	--	330 ... 600	--	--
	600	50 V AC/60 Hz	VA	--	300	--	--
	12	V DC	W	--	--	< 2.5	--
	24	V DC	W	--	--	< 2.5	--
	48	V DC	W	--	--	< 2.5	--
	60	V DC	W	--	--	< 2.5	--
	125 ... 127	V DC	W	--	--	< 2.5	--
	220 ... 230	V DC	W	--	--	< 2.5	--
	250	V DC	W	--	--	< 2.5	--
	24	50 V AC/60 Hz	VA	--	--	< 2	--
	48	50 V AC/60 Hz	VA	--	--	< 2	--
	60	50 V AC/60 Hz	VA	--	--	< 2	--
	110	50 V AC/60 Hz	VA	--	--	< 2	--
	120 ... 127	50 V AC/60 Hz	VA	--	--	< 2	--
	208 ... 230	50 V AC/60 Hz	VA	--	--	< 2	--
	380 ... 400	50 V AC/60 Hz	VA	--	--	< 2.5	--
	440 ... 480	50 V AC/60 Hz	VA	--	--	< 2.5	--
	12	V DC (Cat II; PELV/SELV)	W	--	--	--	UVR: < 2.5 SHT: 20
	24	V DC (Cat II; PELV/SELV)	W	--	--	--	UVR: < 2.5 SHT: 20
	48	V DC (Cat II; PELV/SELV)	W	--	--	--	UVR: < 2.5 SHT: 20

Shunt trip/undervoltage electrical requirements

				Shunt trip left STL	Shunt trip flexible STF	Undervoltage releases UVR	Universal release UNI
							
Rated impulse withstand voltage		U_{imp}	kV	6		4	0.5
Making current		I_{max}	at V	1.5 A/24 V AC	18 A/24 V AC	5 mA/480 V	1.5 A/24 V
Maximum tripping time			ms	< 10			
Service life	Electrical trips			8500			
	Mechanical switching cycles of the circuit breaker			25000			
Priority over other control signals				Given			
Degree of protection	Lid of the accessories compartment closed			IP40			
	Lid of the accessories compartment open			IP 20			
Minimum signal duration			ms	40	40	--	40
Response voltage shunt trip	Pick-up (circuit breaker trips)	Us/V	%	70 ... 110		--	70 ... 110
Undervoltage release response voltage	Pick-up (circuit breaker can be switched on)	Us/V	%	--	--	85 ... 110	
	Pick-up (circuit breaker trips)	Us/V	%	--	--	35 ... 70	
Tripping frequency	Trips per hour			Unlimited	120	Unlimited	
Can be used for electrical interlocking of molded case circuit breakers				No	No	Yes	

Motor operator electrical requirements

MO320 motor operator	**3VA5** 125 A	**3VA5** 250 A	**3VA6** 150 A/ 250 A	**3VA5 3VA6** 400 A/ 600 A
Degree of protection	NEMA 1			
Rated control supply voltage (operating range of control supply voltage)	24 V ... 60 V DC (0.85 ... 1.26) 110 V ... 230 V AC/ 110 V ... 250 V DC (0.85 ... 1.1)			
Rating	250 W, max. 500 W (60 ms)			
Make time, typically	< 800 ms	< 1000 ms		< 1700 ms
Break time, typically	< 800 ms	< 1000 ms		< 1400 ms



Molded Case Circuit Breakers

ED 125A Frame Sentron Series

Selection

Ordering Instructions

- All ED Frame Sentron circuit breakers are supplied with load side lugs. If line side lugs are required, add "L" suffix to catalogue number. Consult Siemens sales office for any additional charge.
- 50°C Calibration, 400HZ - see page 5-150. All ED frame circuit breakers may be reverse connected.

Type ED2⑤

Blue Label

Continuous Current Rating @ 40°C	1-Pole 120V AC 125V DC Catalogue Number	2-Pole 240V AC 125V DC 250V DC Catalogue Number	3-Pole 240V AC Catalogue Number
15	ED21B015④	—	ED23B015
20	ED21B020④	ED22B020	ED23B020
25	ED21B025	ED22B025	ED23B025
30	ED21B030	ED22B030	ED23B030
35	ED21B035	ED22B035	ED23B035
40	ED21B040	ED22B040	ED23B040
45	ED21B045	ED22B045	ED23B045
50	ED21B050	ED22B050	ED23B050
60	ED21B060	ED22B060	ED23B060
70	ED21B070	ED22B070	ED23B070
80	ED21B080	ED22B080	ED23B080
90	ED21B090	ED22B090	ED23B090
100	ED21B100	ED22B100	ED23B100

Type ED4⑤

Blue Label

Continuous Current Rating @ 40°C	1-Pole 120V AC 277V AC 125V DC Catalogue Number	2-Pole 480V AC 250V DC Catalogue Number	3-Pole 480V AC Catalogue Number
15	ED41B015④	—	ED43B015
20	ED41B020④	ED42B020	ED43B020
25	ED41B025	ED42B025	ED43B025
30	ED41B030	ED42B030	ED43B030
35	ED41B035	ED42B035	ED43B035
40	ED41B040	ED42B040	ED43B040
45	ED41B045	ED42B045	ED43B045
50	ED41B050	ED42B050	ED43B050
60	ED41B060	ED42B060	ED43B060
70	ED41B070	ED42B070	ED43B070
80	ED41B080	ED42B080	ED43B080
90	ED41B090	ED42B090	ED43B090
100	ED41B100	ED42B100	ED43B100
110	—	ED42B110	ED43B110
125	—	ED42B125	ED43B125

Type ED6⑤

Blue Label

Continuous Current Rating @ 40°C	1-Pole 347V AC Catalogue Number	2-Pole 600V AC 250V DC Catalogue Number	3-Pole 600V AC 500V DC Catalogue Number
15	ED61B015	—	ED63B015
20	ED61B020	ED62B020	ED63B020
25	ED61B025	ED62B025	ED63B025
30	ED61B030	ED62B030	ED63B030
35	ED61B035	ED62B035	ED63B035
40	ED61B040	ED62B040	ED63B040
45	ED61B045	ED62B045	ED63B045
50	ED61B050	ED62B050	ED63B050
60	ED61B060	—	ED63B060
70	ED61B070	—	ED63B070
80	ED61B080	—	ED63B080
90	ED61B090	—	ED63B090
100	ED61B100	—	ED63B100
110	—	—	ED63B110
125	—	—	ED63B125

Note: ED frame circuit breakers qualified to UL 489 Supplement SB "Naval" — See page 5-137 for additional information

①CSA Certified only (Not UL)
②For CED types and all 110–125 ampere ED frames.
③See **Note: A,** page 5-150.
④SWD rated.
⑤HACR rated.

Shipping Weights

Number of Poles	Number per Carton	Shipping Weight (lbs.)
ED2, ED4, ED6, HED4		
1	30	38
2	10	25
3	10	38
CED6		
2	5	20
3	5	30

Lugs

Ampere Rating	No. of Poles	Catalogue Number	Wire Range
Aluminum Body Lugs			
All 15–25A	1, 2, 3	Line/Load **SA1E025**	#14–#10 Cu #12–#10 Al
All 30–100A	1, 2, 3	Line Side **LN1E100**	#10–1/0 Cu/Al
ED2, 4, CED6 30–60A	1	Load Side **LD1E060**	#10–#4 Cu/Al
ED2, 4, CED6 70–100A	1	Load Side **LD1E100**	#6–#1/0 Cu/Al
ED2, 4, 6, HED4 30–100A	2, 3	Load Side **LN1E100**	#10–1/0 Cu/Al
All 110, 125A	2, 3	Line/Load **TA1E6125**	#3–3/0 Cu #1–2/0 Al
Copper Body Lugs			
All 30–125A only	1, 2, 3	Line/Load **TC1ED6150**③	#10–1/0 Cu
Compression Lugs			
All ED, CED		**CCE125**	2/0

Modifications page 5-147
Accessories page 5-151 - 5-159

Type HED4⑥

Black Label

Continuous Current Rating @ 40°C	1-Pole 277V AC 125V DC Catalogue Number	2-Pole 480V AC 250V DC Catalogue Number	3-Pole 480V AC Catalogue Number
15	HED41B015①	HED42B015	HED43B015
20	HED41B020①	HED42B020	HED43B020
25	HED41B025	HED42B025	HED43B025
30	HED41B030	HED42B030	HED43B030
35	HED41B035	HED42B035	HED43B035
40	HED41B040	HED42B040	HED43B040
45	HED41B045	HED42B045	HED43B045
50	HED41B050	HED42B050	HED43B050
60	HED41B060	HED42B060	HED43B060
70	HED41B070	HED42B070	HED43B070
80	HED41B080	HED42B080	HED43B080
90	HED41B090	HED42B090	HED43B090
100	HED41B100	HED42B100	HED43B100
110	—	HED42B110	HED43B110
125	—	HED42B125	HED43B125

FIGURE1 - ED, HED, HHED

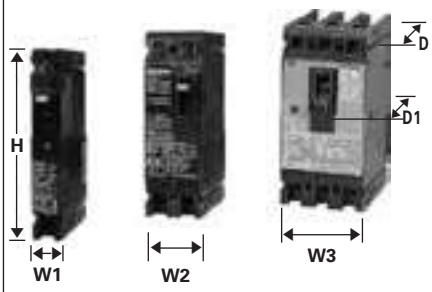

1-POLE 2-POLE 3-POLE

FIGURE 2 - CED (3-Pole shown)

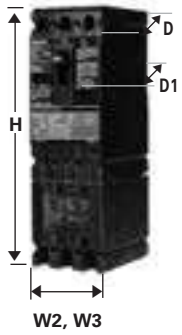

Fuseless Current Limiting Type CED6

Red Label

Continuous Current Rating @ 40°C	2-Pole 600V AC, 250V DC Catalogue Number	3-Pole 600V AC, 500V DC② Catalogue Number
15	—	CED63B015
20	CED62B020	CED63B020
25	—	—
30	CED62B030	CED63B030
35	—	—
40	CED62B040	CED63B040
45	—	—
50	CED62B050	CED63B050
60	CED62B060	CED63B060
70	CED62B070	CED63B070
80	CED62B080	CED63B080
90	CED62B090	CED63B090
100	CED62B100	CED63B100
110	—	CED63B110
125	CED62B125	CED63B125

Dimensions (in inches)

Breaker Type	W1	W2	W3	H	D	D1
Figure 1 ED2, ED4, ED6, HED4, ED6 ETI	1	2	3	6.35	3.92	4.56
Figure 2 CED6, CED6 ETI	—	2	3	9.58	3.92	4.56

Interrupting Ratings

Breaker Type	CSA C22.2 No.5-02 / UL 489 AIR (File #E10848) RMS Symmetrical Amperes (KA) Volts AC 120	240	277	347	480	600	Volts DC 125	250	500②	IEC 947-2 Volts AC (50/60Hz) 220/240 Icu	Ics	380/415 Icu	Ics	500 Icu	Ics
ED2 (1-P)	10	—	—	—	—	—	5	—	—	—	—	—	—	—	—
ED2 (2, 3-P)	—	10	—	—	—	—	—	5 (2-P)	—	—	—	—	—	—	—
ED4 (1-P)	65	—	22	—	— 18	—	30	—	—	—	—	—	—	—	—
ED4 (2, 3-P)	—	65	—	—		—	—	30 (2-P)	—	—	—	—	—	—	—
ED6 (1P)	—	—	—	30⑤	— 25	—	—	—	—	—	—	—	—	—	—
ED6 (2, 3-P)	—	65	—	—		18	—	30 (2-P)	18 (3-P)	65	17	35	9	18	5
HED4 (1-P) (15–30A)	100	—	65	—	—	—	30	—	—	—	—	—	—	—	—
HED4 (1-P) (15–30A)	100	— 100	25	—	—	—	30	—	—	—	—	—	—	—	—
HED4 (1-P) (35–100A)	—		—	—	42		—	30 (2-P)		—	—	—	—	—	—
HED4 (2, 3-P)③															
CED6 (2, 3-P)	—	200	—	—	200	100	—	30 (2-P)	50 (3-P)	—	—	—	—	—	—

①SWD rated.

②When wired as shown on page 5-4, this circuit breaker is CSA Certified / UL listed and rated for use on 500V DC ungrounded UPS systems.

③HED4 type circuit breakers meet the CSA / UL criteria for "current limiting" at 240V AC.

④ED6-ETI, CED6-ETI, see page 5-101 for ordering information.

⑤Single Pole 15-30A 30KA @ 347V CSA only.
35-100A 18KA @ 347V CSA only.

⑥HACR rated.

Accessories for:

ED 125A Frame



Combinations

Available only when ordered together. **Only one module can be added to a breaker.** Additional accessories, which always attach to the left pole, cannot be added to the combination later. Adds 1 inch pole space.

Equipment Ground Sensing

A field addable kit containing 30mA or 5 mA ground fault accessory module, current transformer with 24 inch leads, and current transformer mounting equipment. Current transformer to mount in gutter of lighting panel or any control panel. **Accessory module operates from separate 120V control power source**.

Both 30MA and 5MA devices are equipment protection devices only. **Do not use for personnel protection.**



Shunt Trip Combinations

Control Voltage		1 Shunt Trip	1 Shunt Trip and 1 Auxiliary Switch	1 Shunt Trip 1 Auxiliary Switch and 1 Alarm Switch	1 Shunt Trip and 1 Alarm Switch	1 Shunt Trip and 2 Auxiliary Switches
AC	DC	Catalogue Number	Catalogue Number	Catalogue Number	Catalogue Number	Catalogue Number
24	—	S17ED60	—	—	—	—
48	—	S18ED60	—	—	—	—
120	—	S01ED60	S01ED62A	S01ED62AB	S01ED62B	S01ED62AA
208	—	—	S02ED62A	S02ED62AB	S02ED62B	S02ED62AA
240	—	S03ED60	S03ED62A	S03ED62AB	S03ED62B	S03ED62AA
277	—	S15ED60	S15ED64A	S15ED64AB	S15ED64B	—
480	—	S04ED60	S04ED64A	S04ED64AB	S04ED64B	—
—	12	S16ED60	S16ED62A	—	—	—
—	24	S07ED60	S07ED62A	S07ED62AB	S07ED62B	S07ED62AA
—	48	S09ED60	S09ED62A	S09ED62AB	S09ED62B	S09ED62AA
—	125	S11ED60	S11ED62A	S11ED62AB	S11ED62B	S11ED62AA
—	250	S13ED60	S13ED62A	S13ED62AB	S13ED62B	S13ED62AA

Undervoltage Trip Combinations

Control Voltage		1 Undervoltage Trip	1 Undervoltage Trip and 1 Auxiliary Switch	1 Undervoltage Trip and 1 Auxiliary Switch and 1 Alarm Switch	1 Undervoltage Trip and 1 Alarm Switch"	1 Undervoltage Trip and 2 Auxiliary Switches
AC	DC	Catalogue Number	Catalogue Number	Catalogue Number	Catalogue Number	Catalogue Number
120	—	U01ED60	U01ED62A	U01ED62AB	U01ED62B	U01ED62AA
208	—	U02ED60	U02ED62A	U02ED62AB	U02ED62B	U02ED62AA
240	—	U03ED60	U03ED62A	U03ED62AB	U03ED62B	U03ED62AA
277	—	U16ED60	U16ED64A	U16ED64AB	U16ED64B	—
480	—	U06ED60	U06ED64A	U06ED64AB	U06ED64B	—
600	—	U08ED60	—	—	—	—
—	24	U13ED60	U13ED62A	U13ED62AB	U13ED62B	U13ED62AA
—	48	U14ED60	U14ED62A	U14ED62AB	U14ED62B	U14ED62AA
—	125	U10ED60	U10ED62A	U10ED62AB	U10ED62B	U10ED62AA
—	250	U12ED60	U12ED62A	—	—	U12ED62AA

Auxiliary and Alarm Switch Combinations

Maximum Voltage		1 Auxiliary Switch*	1 Alarm Switch	Alarm Switch and 1 Auxiliary Switch	2 Auxiliary Switches	1 Alarm Switch and 2 Auxiliary Switches
AC	DC	Catalogue Number	Catalogue Number	Catalogue Number	Catalogue Number	Catalogue Number
240	250	A01ED62	B00ED62	A01ED62B	A02ED62	A02ED62B
480	—	A01ED64	B00ED64	A01ED64B	—	—
—	12	A01EDLV*	Gold Plated Contacts—for PLC use			

Alarm Switch Only

Maximum Voltage		1 Alarm Switch
AC	DC	Catalogue Number
240	250	B00ED62
480		B00ED64

Ground Fault Sensing Relay Kit — Equipment Protection Only

For Use With Breaker Frame	Number of Poles	Description	Catalogue Number	
		30mA	30mA	5mA
ED2, ED4, ED6, HED4, CED6	1, 2, 3	Basic Kit	GF01ED60	GF01ED65
		Basic Kit with Normally Open Bell Alarm	GF01ED60B0	GF01ED65B0
		Basic Kit with Normally Closed Bell Alarm	GF01ED60BC	GF01ED65BC

Type FXD6-A[1][7]

Blue Label

Non-Interchangeable Trip (Assembled Circuit Breaker – Without Lugs)

Continuous Current Rating @ 40°C	2-Pole[2] Catalogue Number	3-Pole Catalogue Number
70	FXD62B070	FXD63B070
80	FXD62B080	FXD63B080
90	FXD62B090	FXD63B090
100	FXD62B100	FXD63B100
110	FXD62B110	FXD63B110
125	FXD62B125	FXD63B125
150	FXD62B150	FXD63B150
175	FXD62B175	FXD63B175
200	FXD62B200	FXD63B200
225	FXD62B225	FXD63B225
250	FXD62B250	FXD63B250

Type FD6-A[7]

Blue Label

Interchangeable Trip

Continuous Current Rating @ 40°C	Complete Breaker Unassembled with Lugs Catalogue Number	Frame Only Catalogue Number	Trip Unit Only Catalogue Number
2-Pole 600V AC, 250V DC[2]			
70	FD62B070	FD62F250	FD62T070
80	FD62B080		FD62T080
90	FD62B090		FD62T090
100	FD62B100		FD62T100
110	FD62B110		FD62T110
125	FD62B125		FD62T125
150	FD62B150		FD62T150
175	FD62B175		FD62T175
200	FD62B200		FD62T200
225	FD62B225		FD62T225
250	FD62B250		FD62T250
3-Pole 600V AC, 500V DC[3]			
70	FD63B070	FD63F250	FD63T070
80	FD63B080		FD63T080
90	FD63B090		FD63T090
100	FD63B100		FD63T100
110	FD63B110		FD63T110
125	FD63B125		FD63T125
150	FD63B150		FD63T150
175	FD63B175		FD63T175
200	FD63B200		FD63T200
225	FD63B225		FD63T225
250	FD63B250		FD63T250

Interrupting Ratings

Breaker Type	RMS Symmetrical Amperes (KA) CSA / UL 489 AIR (File E10848) Volts AC (50/60Hz) 240	480	600	Volts DC 250	500[3]	IEC 947-2 Volts AC (50/60Hz) 220/240 Icu	Ics	380/415 Icu	Ics	500 Icu	Ics
FXD6-A, FD6-A	65	35	22	30 (2-P)	18 (3-P)	65	33	35	9	20	10
HFXD6[5], HFD6[5]	100	65	25	30 (2-P)	25 (3-P)	100	50	65	33	42	21
HHFD6[5], HHFXD6[5]	200	100	25	—	—	200	100	100	50	65	33
CFD6	200	200	100	50 (2-P)	50 (3-P)	—	—	—	—	—	—

Instantaneous Adjustment Trip Range

Breaker Ampere Rating	Nominal Instantaneous Values Low[7]	2	3	4	5	6	7	High[7]
70-90	600	640	690	730	770	810	850	900
100-110	700	770	840	920	990	1060	1140	1200
125-150	800	900	1000	1100	1200	1300	1400	1500
175-200	900	1060	1210	1370	1520	1780	1930	2000
225-250	1100	1300	1500	1700	1900	2100	2300	2500

Note: FD frame qualified to UL489 supplement SB "NAVAL". See page 5-137 for additional information.

Ordering Information

Complete Breaker Unassembled with Lugs

Prices of FD6, HFD6, and HHFD6 breakers includes frame, trip and both line and load lugs (TA1FD350A). When ordered by these catalogue numbers, the customer will receive the frame, trip, and lugs separately packaged. For applications requiring different lugs, order individual items as needed.

Complete Breaker Assembled without Lugs

Prices of FXD6, HFXD6, HHFXD6, and CFD6 includes frame with non-interchangeable trip unit installed only. Order required lugs separately. For line and load lugs (TA1FD350A) installed, add suffix "L" to catalogue number (add 2 times list price of lugs for each pole).

50°C Applications see page 5-137.

400 Hz Applications see page 5-137.

Lugs For 75°C Wire[4]

Catalogue Number	Wire Range
TA1FD350A	#6—350 kcmil Cu #4—350 kcmil Al
TC1FD350	#6—350 kcmil Cu
Compression Lug	
CCF250	350 kcmil Cu/Al

[1] Type FXD6-A circuit breakers are CSA / UL Listed for reverse fed applications.

[2] 2-pole units are 3-pole width.

[3] When wired as shown on page 5-4, this circuit breaker is CSA Certified / UL 489 listed and rated for use on 500V DC ungrounded UPS systems only.

[4] See **Note: A**, page 5-147.

[5] HFD6 and HHFD6 type circuit breakers meet the UL criteria for "current limiting" at 240 and 480V AC.

[6] HACR rated.

[7] +/- 20% Tolerance.

Modifications page 5-150
Accessories page 5-151 - 5-159

Molded Case Circuit Breakers

FD 250A Frame Sentron Series

Type HFD6[5], Type HFXD6[3][4][5][6]

Black Label

Interchangeable Trip

Continuous Current Rating @ 40°C	Complete Breaker Unassembled with Lugs Catalogue Number	Frame Only Catalogue Number	Trip Unit Only Catalogue Number
2-Pole 600V AC, 250V DC (3 Pole Width)			
70	HFD62B070		FD62T070
80	HFD62B080		FD62T080
90	HFD62B090		FD62T090
100	HFD62B100		FD62T100
110	HFD62B110		FD62T110
125	HFD62B125	HFD62F250	FD62T125
150	HFD62B150		FD62T150
175	HFD62B175		FD62T175
200	HFD62B200		FD62T200
225	HFD62B225		FD62T225
250	HFD62B250		FD62T250
3-Pole 600V AC, 500V DC[1]			
70	HFD63B070		FD63T070
80	HFD63B080		FD63T080
90	HFD63B090		FD63T090
100	HFD63B100		FD63T100
110	HFD63B110		FD63T110
125	HFD63B125	HFD63F250	FD63T125
150	HFD63B150		FD63T150
175	HFD63B175		FD63T175
200	HFD63B200		FD63T200
225	HFD63B225		FD63T225
250	HFD63B250		FD63T250

Type HHFD[4], HHFXD6[2][3][4][6]

3-Pole 600V AC, Extra High Interrupting

70	HHFD63B070		FD63T070
80	HHFD63B080		FD63T080
90	HHFD63B090		FD63T090
100	HHFD63B100		FD63T100
110	HHFD63B110		FD63T110
125	HHFD63B125	HHFD63F250	FD63T125
150	HHFD63B150		FD63T150
175	HHFD63B175		FD63T175
200	HHFD63B200		FD63T200
225	HHFD63B225		FD63T225
250	HHFD63B250		FD63T250

Type CFD6[3][6]

Red Label

Fuseless Current Limiting

Non-Interchangeable Trip (Assembled Circuit Breaker Without Lugs)

Continuous Current Rating @ 40°C	3-Pole 600V AC/500V DC Catalogue Number
70	CFD63B070
80	CFD63B080
90	CFD63B090
100	CFD63B100
110	CFD63B110
125	CFD63B125
150	CFD63B150
175	CFD63B175
200	CFD63B200
225	CFD63B225
250	CFD63B250

[1] When wired as shown on page 5-4, this circuit breaker is CSA Certified / UL listed and rated for use on 500V DC ungrounded UPS systems.

[2] For non-interchangeable trip 3-pole HFD6 type circuit breaker, change prefix identifier from HFD6 to HFXD6. Price equals frame and trip prices combined, e.g. price of HFXD63B250 equals price of HFD63F250 plus price of FD63T250. Order lugs separately.

[3] Type HFXD6, HHFXD6, CFD6 are CSA Certified / UL Listed for reverse feed applications.

[4] Type HFXD6, HFD6, HHFD6, HHFXD6 meet the CSA Certified / UL criteria for "Current Limiting" at 240 VAC and 480V AC.

[5] FXD6, ETI, CFD6, ETI — See page 5-59 for ordering information.

[6] HACR rated.

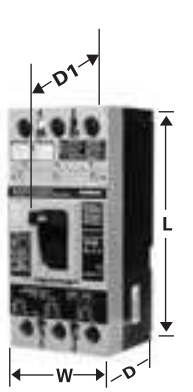

Figure 1

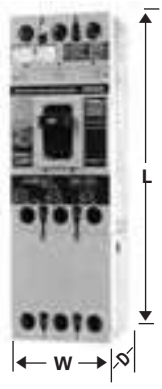

Figure 2

Dimensions (in inches)

Breaker Type	W	L	D	D1 (to handle)
Figure 1 FXD6-A, FD6-A, HFD6, HFXD6, HHFD6, FD6-ETI[5]	4.50	9.50	4	5.25
Figure 2 CFD6, CFD6-ETI[5]	4.50	14.25	4	5.25

Shipping Weights

Number of Poles	Number per Carton	Shipping Weight (lbs.)
FD6-A, HFD6, HHFD6, FXD6-A Assembled Circuit Breaker (less connectors)		
2	1	8.6
3	1	10
FD6-A, HFD6, HHFD6 Frame Only		
2	1	7.5
3	1	8.7
FD6 Trip Unit Only		
2	1	1.1
3	1	1.3
CFD6 Assembled Circuit Breaker (less terminals)		
2	1	31
3	1	34

Accessories:
FD 250A Frame



Shunt Trip Combinations

Control Voltage		1 Shunt Trip
AC	DC	Catalogue Number
24	—	**S17FD60**
120	—	**S01FD60**
240	—	**S03FD60**
277	—	**S15FD60**
480	—	**S04FD60**
600	—	**S06FD60**
—	12	**S16FD60**
—	24	**S07FD60**
—	48	**S09FD60**
—	125	**S11FD60**
—	250	**S13FD60**

Undervoltage Trip Combinations

Control Voltage		1 Undervoltage Trip	1 Undervoltage Trip and 1 Auxiliary Switch
AC	DC	Catalogue Number	Catalogue Number
120	—	**U01FD60**	**W01FD64**
208	—	**U02FD60**	**W02FD64**
240	—	**U03FD60**	**W03FD64**
277	—	**U16FD60**	**W16FD64**
480	—	**U06FD60**	**W06FD64**
600	—	**U08FD60**	**W08FD64**
—	24	**U13FD60**	**W13FD64**
—	48	**U14FD60**	**W14FD64**
—	125	**U10FD60**	**W10FD64**
—	250	**U12FD60**	**W12FD64**

Auxiliary Switch Combinations

Voltage		1 Auxiliary Switch	2 Auxiliary Switches
AC	DC	Catalogue Number	Catalogue Number
240	—	**A01FD62**	**A02FD62**
480	—	**A01FD64**	**A02FD64**
—	12	**A01FDLV**	Gold Plated Contacts - for PLC use

Alarm Switch Combinations

Maximum Voltage		1 Alarm Switch	1 Alarm Switch and 1 Auxiliary Switch
AC	DC	Catalogue Number	Catalogue Number
480	250	**B00FD64**	**C01FD64**

①Auxiliary switch application is for 480V AC maximum.
Note: Old F-frame accessories cannot be used in new Sentron line. Likewise, new FD-frame accessories cannot be used on old F-frame circuit breakers.

Type JXD2-A⑤

Blue Label

240V AC, 2-pole 250V DC only

Non-Interchangeable Trip (Assembled Circuit Breaker without Lugs)		
Continuous Current Rating @ 40°C	**2-Pole (3 Pole Width)**	**3-Pole**
	Catalogue Number	**Catalogue Number**
200	**JXD22B200**	**JXD23B200**
225	**JXD22B225**	**JXD23B225**
250	**JXD22B250**	**JXD23B250**
300	**JXD22B300**	**JXD23B300**
350	**JXD22B350**	**JXD23B350**
400	**JXD22B400**	**JXD23B400**

Type JXD6-A①⑤

Blue Label

600V AC, 2-pole 250V DC, 3-pole 500V DC

Non-Interchangeable Trip (Assembled Circuit Breaker without Lugs)		
Continuous Current Rating @ 40°C	**2-Pole (3 Pole Width)**	**3-Pole**
	Catalogue Number	**Catalogue Number**
200	**JXD62B200**	**JXD63B2003366.0**
225	**JXD62B225**	**JXD63B225**
250	**JXD62B250**	**JXD63B250**
300	**JXD62B300**	**JXD63B300**
350	**JXD62B350**	**JXD63B3503366.0**
400	**JXD62B400**	**JXD63B400**

Type JD6-A⑤

Blue Label

Interchangeable Trip			
Continuous Current Rating @ 40°C	**Complete Breaker Unassembled with Lugs**	**Frame Only**	**Trip Unit Only**
	Catalogue Number	**Catalogue Number**	**Catalogue Number**
2-Pole 600V AC, 250V DC (3 Pole Width)			
200	**JD62B200**	**JD62F400**	**JD62T200**
225	**JD62B225**		**JD62T225**
250	**JD62B250**		**JD62T250**
300	**JD62B300**		**JD62T300**
350	**JD62B350**		**JD62T350**
400	**JD62B400**		**JD62T400**
3-Pole 600V AC, 500V DC②			
200	**JD63B200**	**JD63F400**	**JD63T200**
225	**JD63B225**		**JD63T225**
250	**JD63B250**		**JD63T250**
300	**JD63B300**		**JD63T300**
350	**JD63B350**		**JD63T350**
400	**JD63B400**		**JD63T400**

Interrupting Ratings

	RMS Symmetrical Amperes (KA)											
	CSA / UL 489 AIR (File E10848)					IEC 947-2						
	Volts AC (50/60Hz)			Volts DC		Volts AC (50/60Hz)						
						220/240		380/415		500	
Breaker Type	**240**	**480**	**600**	**250**	**500③**	**Icu**	**Ics**	**Icu**	**Ics**	**Icu**	**Ics**
JXD2-2	65	—	—	30 (2-P)	—	—	—	—	—	—	—
JXD6-2, JD6-A	65	35	25	30 (2-P)	25 (3-P)	65	33	40	20	30	15
HJD6-A, HJXD6-A	100	65	35	30 (2-P)	35 (3-P)	100	50	65	33	42	21
HHJD6-A, HJXD6④	200	100	50	—	—	200	100	100	50	65	33
CJD6	200	150	100	50 (2-P)	50 (3-P)	—	—	—	—	—	—

Instantaneous Adjustment Trip Range

Breaker Ampere Rating	Nominal Instantaneous Values							
	Low⑥	**2**	**3**	**4**	**5**	**6**	**7**	**High⑥**
200-300	1250	1430	1610	1790	1960	2140	2320	2500
350-400	2000	2290	2570	2860	3140	3430	3710	4000

Ordering Information

Complete Breaker Unassembled with Lugs

Prices of JD6, HJD6, and HHJD6 breakers include frame, trip and both line and load lugs (TA2J6500). When ordered by these catalogue numbers, the customer will receive the frame, trip, and lugs separately packaged. For applications requiring different lugs, order individual items as needed.

Complete Breaker Assembled without Lugs

Prices of JXD6, HJXD6, HHJXD6, and CJD6 include frame with non-interchangeable trip unit installed only. Order required lugs separately. For line and load lugs (TA2J6500) installed, add suffix "L" to catalogue number (add 2 times list price of lugs for each pole).

100% Rated

Types JXD6 and HJXD6 breakers are available with 100% ratings. To order add suffix "H" to catalogue number, and 10% to list price.

100% rated JD breakers require the use of 90°C Cu cable and lugs TC1J6600 or TC2J6500.

50°C Applications see page 5-137.

400Hz Applications see page 5-137.

Lugs For 75°C Wire③

Catalogue Number	Cables per Lug	Wire Range
TA2J6500	1, 2 2	#3/0-500 kcmil Cu #4/0-500 kcmil Al
TA1L6750	1 1	500-750 kcmil Al 500-600 kcmil Cu
TC1J6600	1	#3/0-600 kcmil Cu
TC2J6500	1, 2	#3/0-500 kcmil Cu
Compression Lug		
CCL600	1	500 kcmil Cu/Al

① Type JXD2 and JXD6 circuit breakers are CSA Certified / UL Listed for reverse feed applications.

② When wired as shown on page 5-4, this circuit breaker is CSA Certified / UL Listed and rated for use on 500V DC ungrounded UPS systems only.

③ See **Note: A**, page 5-147.

④ HHJD6 type circuit breakers meet the CSA / UL criteria for "current limiting" at 240 and 480V AC.

⑤ HACR rated.

⑥ +/- 20% Tolerance.

Note: JD frame qualified to UL489 supplement B "NAVAL." See page 5-137 for additional information.

Modifications page 5-150
Accessories page 5-151 - 5-159

Type HJD6-A, HJXD6-A②④⑥

Black Label

Interchangeable Trip			
Continuous Current Rating @ 40°C	Complete Breaker Unassembled with Lugs	Frame Only	Trip Unit Only
	Catalogue Number	Catalogue Number	Catalogue Number
2-Pole 600V AC, 250V DC (3 Pole Width)			
200	**HJD62B200**	**HJD62F400**	**JD62T200**
225	**HJD62B225**		**JD62T225**
250	**HJD62B250**		**JD62T250**
300	**HJD62B300**		**JD62T300**
350	**HJD62B350**		**JD62T350**
400	**HJD62B400**		**JD62T400**
3-Pole 600V AC, 500V DC①②⑤			
200	**HJD63B200**	**HJD63F400**	**JD63T200**
225	**HJD63B225**		**JD63T225**
250	**HJD63B250**		**JD63T250**
300	**HJD63B300**		**JD63T300**
350	**HJD63B350**		**JD63T350**
400	**HJD63B400**		**JD63T400**

Type HHJD6, HHJXD6-A②④⑥

2-Pole 600V AC (3 Pole Width)			
200	**HHJD62B200**	**HHJD62F400**	**JD62T200**
225	**HHJD62B225**		**JD62T225**
250	**HHJD62B250**		**JD62T250**
300	**HHJD62B300**		**JD62T300**
350	**HHJD62B350**		**JD62T350**
400	**HHJD62B400**		**JD62T400**
3-Pole 600V AC			
200	**HHJD63B200**	**HHJD63F400**	**JD63T200**
225	**HHJD63B225**		**JD63T225**
250	**HHJD63B250**		**JD63T250**
300	**HHJD63B300**		**JD63T300**
350	**HHJD63B350**		**JD63T350**
400	**HHJD63B400**		**JD63T400**

Type CJD6

Red Label

Fuseless Current Limiting

Non-Interchangeable Trip (Assembled Circuit Breaker Without Lugs)		
Continuous Current Rating @ 40°C	2-Pole 600V AC/250V DC	3-Pole 600V AC/500V DC Catalogue Number
200	For 2-pole application use outside poles of 3-pole circuit breaker	**CJD63B200**
225		**CJD63B225**
250		**CJD63B250**
300		**CJD63B300**
350		**CJD63B350**
400		**CJD63B400**

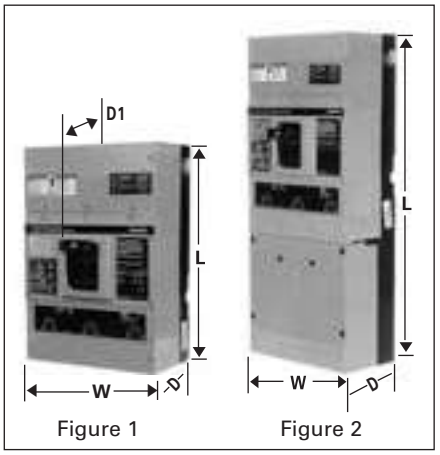

Figure 1 Figure 2

Dimensions (in inches)

Breaker Type	W	L	D	D1 (to handle)
Figure 1 JXD2-A, JXD6-A, JD6-A HJD6-A, HJXD6-A, HHJD6, HJD6, HJXD6, HHJXD6, JXD6-ETI⑤	7.5	11	4	5.44
Figure 2 CJD6, CJD6-ETI⑤	7.5	17.86	4	5.44

Shipping Weights

Number of Poles	Number per Carton	Shipping Weight (lbs.)
JXD2, JXD6, JD6, HJD6, HHJD6 Assembled Breaker (less terminals)		
2	1	"17.5
3	1	19.5"
JD6, HJD6, HHJD6 Frame Only		
2	1	14
3	1	15.5
JD6 Trip Unit Only		
2	1	3.5
3	1	4
CJD6 Complete Assembled Breaker (less terminals)		
2	1	29.5
3	1	31.5

For inches / millimeters conversion, see Technical section.

2-pole units available in 3-pole construction.

① When wired as shown on page 5-4, this circuit breaker is CSA Certified / UL Listed and rated for use on 500V DC ungrounded UPS systems only.

② For non-interchangeable 3-pole HJD6 or HHJD6 type circuit breaker change the prefix identifier to HJXD6 or HHJXD6. Order lugs separately.

③ JXD6-ETI, CJD6-ETI see page 5-117 for ordering information.

④ Type HJXD6, HHJXD6 Circuit Breakers are CSA Certified / UL Listed for reverse fed applications.

⑤ CE applies to non-interchangeable type HJXD only.

⑥ HACR rated.

Molded Case Circuit Breakers

SJD 400A Frame Digital Solid State Sentron Sensitrip IV Series

Selection

Type SJD6-B — Blue Label

Type SHJD6-B — Black Label

Current Limiting
Type SCJD6-B — Red Label

Max Current Rating	3-Pole, 600V AC		3-Pole, 600V AC		3-Pole, 600V AC	
	Catalogue Number (Advanced trip unit)③	Catalogue Number (Basic trip unit)	Catalogue Number (Advanced trip unit)③	Catalogue Number (Basic trip unit)	Catalogue Number (Advanced trip unit)③	Catalogue Number (Basic trip unit)
200	SJD6A200LI	SJD6B200LI	SHJD6A200LI	SHJD6B200LI	SCJD6A200LI	SCJD6B200LI
300	SJD6A300LI	SJD6B300LI	SHJD6A300LI	SHJD6B300LI	SCJD6A300LI	SCJD6B300LI
400	SJD6A400LI	SJD6B400LI	SHJD6A400LI	SHJD6B400LI	SCJD6A400LI	SCJD6B400LI
200	SJD6A200LIG	SJD6B200LIG	SHJD6A200LIG	SHJD6B200LIG	SCJD6A200LIG	SCJD6B200LIG
300	SJD6A300LIG	SJD6B300LIG	SHJD6A300LIG	SHJD6B300LIG	SCJD6A300LIG	SCJD6B300LIG
400	SJD6A400LIG	SJD6B400LIG	SHJD6A400LIG	SHJD6B400LIG	SCJD6A400LIG	SCJD6B400LIG
200	SJD6A200LSI	SJD6B200LSI	SHJD6A200LSI	SHJD6B200LSI	SCJD6A200LSI	SCJD6B200LSI
300	SJD6A300LSI	SJD6B300LSI	SHJD6A300LSI	SHJD6B300LSI	SCJD6A300LSI	SCJD6B300LSI
400	SJD6A400LSI	SJD6B400LSI	SHJD6A400LSI	SHJD6B400LSI	SCJD6A400LSI	SCJD6B400LSI
200	SJD6A200LSIG	SJD6B200LSIG	SHJD6A200LSIG	SHJD6B200LSIG	SCJD6A200LSIG	SCJD6B200LSIG
300	SJD6A300LSIG	SJD6B300LSIG	SHJD6A300LSIG	SHJD6B300LSIG	SCJD6A300LSIG	SCJD6B300LSIG
400	SJD6A400LSIG	SJD6B400LSIG	SHJD6A400LSIG	SHJD6B400LSIG	SCJD6A400LSIG	SCJD6B400LSIG

SJD 400A Frame – 100% Rated②

Blue Label — Black Label

Max Current Rating	3-Pole, 600V AC		3-Pole, 600V AC	
	Catalogue Number (Advanced trip unit)③	Catalogue Number (Basic trip unit)	Catalogue Number (Advanced trip unit)③	Catalogue Number (Basic trip unit)
200	SJD6A200LIH	SJD6B200LIH	SHJD6A200LIH	SHJD6B200LIH
300	SJD6A300LIH	SJD6B300LIH	SHJD6A300LIH	SHJD6B300LIH
400	SJD6A400LIH	SJD6B400LIH	SHJD6A400LIH	SHJD6B400LIH
200	SJD6A200LIGH	SJD6B200LIGH	SHJD6A200LIGH	SHJD6B200LIGH
300	SJD6A300LIGH	SJD6B300LIGH	SHJD6A300LIGH	SHJD6B300LIGH
400	SJD6A400LIGH	SJD6B400LIGH	SHJD6A400LIGH	SHJD6B400LIGH
200	SJD6A200LSIH	SJD6B200LSIH	SHJD6A200LSIH	SHJD6B200LSIH
300	SJD6A300LSIH	SJD6B300LSIH	SHJD6A300LSIH	SHJD6B300LSIH
400	SJD6A400LSIH	SJD6B400LSIH	SHJD6A400LSIH	SHJD6B400LSIH
200	SJD6A200LSIGH	SJD6B200LSIGH	SHJD6A200LSIGH	SHJD6B200LSIGH
300	SJD6A300LSIGH	SJD6B300LSIGH	SHJD6A300LSIGH	SHJD6B300LSIGH
400	SJD6A400LSIGH	SJD6B400LSIGH	SHJD6A400LSIGH	SHJD6B400LSIGH

Ordering Information

Pricing information for all Digital Sentron Series SJD Frames is for complete breaker only - price required lugs as separate items - lugs are suitable for 75°C Wire.

Trip Unit Adjustable Functions

Suffix Letter Code	Trip Type	Cont Current Setting	Long Time Delay	Instan-taneous Pick Up	Short Time Pick Up	Short Time Fixed Delay	Short Time I^2t Delay	Ground Fault Pick Up	Ground Fault Delay
LI	LI	✓	✓	✓					
LIG	LIG	✓	✓	✓				✓	✓
LSI	LSI	✓	✓	✓	✓	✓	✓		
LSIG	LSIG	✓	✓	✓	✓	✓	✓	✓	✓

Shipping Weights

Breaker Type	Number per Carton	Shipping Weight (lbs)
SJD6-B	1	20
SHJD6-B	1	20
SCJD6-B	1	33

Interrupting Ratings

Breaker Type	RMS Symmetrical kA UL 489 (File E10848)		
	240V AC	480V AC	600V AC
SJD6-B	65	35	25
SHJD6-B	100	65	35
SCJD6-B	200	150	100

Neutral Transformers

Ampere Rating	Catalogue Number
200	N02SJD
300	N03SJD
400	N04SJD

Lugs for 75° C Wire①

Catalogue Number	No. of cables per con-nector	Wire Range
TA2J6500	2	#3/0-500 kcmil Cu
	2	#4/0-500 kcmil Al
TA1L6750	1	500-750 kcmil Al
	1	500-600 kcmil Cu
TC1J6600	1	#3/0-600 kcmil Cu
TC2J6500	2	#3/0-500 kcmil Cu
TA2J630	2	#4-#3/0 Cu/Al
Compression Lug		
CCL600	1 (pc.)	#1/0-500 kcmil Cu/Al

Note: "G" suffix in catalogue number denotes circuit breaker for 3-phase, 3-wire systems. For 3-phase, 4-wire, order correct 4th wire (neutral) transformer as separate and additional item.

All breakers built to order. Allow 2–3 weeks for delivery.

①For additional information, see **Note: A,** page 5-147.
② Refer to the NEC for proper application of 100% rated devices.
③ Advanced trip unit equipped with DAS / Maintenance Mode. Requires customer-supplied 24V external power supply, maintenance switch and light.

Enclosures page 5-139 – 5-146
Accessories pages 5-151 - 5-159

Accessories for:

JD 400A Frame
LD 600A Frame
LMD 800A Frame
SJD 400A Frame
SLD 600A Frame



Shunt Trip Combinations

Control Voltage		1 Shunt Trip	1 Shunt Trip and 1 Auxiliary Switch
AC	DC	Catalogue Number	Catalogue Number
24	—	S17JLD6	—
48	—	S18JLD6	—
120	—	S01JLD6	S01JLD62A
240	—	S03JLD6	S03JLD62A
277	—	S15JLD6	S15JLD64A
480	—	S04JLD6	—
—	12	S16JLD6	S16JLD62A
—	24	S07JLD6	S07JLD62A
—	48	S09JLD6	S09JLD62A
—	125	S11JLD6	S11JLD62A
—	250	S13JLD6	S13JLD62A

Undervoltage Trip Combinations

Control Voltage		1 Undervoltage Trip	1 Undervoltage Trip and 1 Auxiliary Switch	1 Undervoltage Trip and 2 Auxiliary Switches
AC	DC	Catalogue Number	Catalogue Number	Catalogue Number
120	—	U01JLD6	U01JLD62A	U01JLD62AA
208	—	U02JLD6	U02JLD62A	U02JLD62AA1
240	—	U03JLD6	U03JLD62A	U03JLD62AA1
480	—	U06JLD6	U06JLD64A	U06JLD64AA1
—	24	U13JLD6	U13JLD62A	U13JLD62AA1
—	48	U14JLD6	U14JLD62A	U14JLD62AA1
—	125	U10JLD6	U10JLD62A	U10JLD62AA
—	250	U12JLD6	U12JLD62A	U12JLD62AA1

Auxiliary Switch Combinations

Maximun Voltage		1 Form C	2 Form C
AC	DC	Catalogue Number	Catalogue Number
480	250	A01JLD64	A02JLD64
—	12	A01JLDLV	A02JIDLV

Alarm Switch Combinations

Maximum Voltage		1 Alarm Switch	1 Alarm Switch and 1 Auxiliary Switch	1 Alarm Switch and 2 Auxiliary Switches
AC	DC	Catalogue Number	Catalogue Number	Catalogue Number
480	250	B01JLD64	A01JLD64B	A02JLD64B

ETU Testing Unit

Breaker Type	Description	Catalogue Number
SJD, SLD, SMD, SND, SPD	Power Stick	EPSP18V
	Spare cable for Power Stick	COMPCA

The EPSP18V Power Stick is a hand-held, battery-operated power supply that can be used for trip testing the Sensitrip IV electronic trip units. Requires two 9V batteries.

Note: Accessory **modules can only be added to right side pole** of solid state SJD and SLD frame circuit breakers. All accessories on this page are useable on superseded JD2, JJ6, JL6, HJ6, SJL, LJ6, LL6, HL6 and SLL circuit breakers.

No accessories can be added if mechanical interlock is used.

Type LXD6-A①④

Blue Label

Non-Interchangeable Trip (Assembled Circuit Breaker without Lugs)

Continuous Current Rating @ 40°C	2-Pole (3 Pole Width)	3-Pole
	600V AC 250V DC	600V AC 500V DC
	Catalogue Number	Catalogue Number
450	LXD62B450	LXD63B450
500	LXD62B500	LXD63B500
600	LXD62B600	LXD63B600

Type JD6-A⑤

Blue Label

Interchangeable Trip

Continuous Current Rating @ 40°C	Complete Breaker Unassembled with Lugs	Frame Only	Trip Unit Only
	Catalogue Number	Catalogue Number	Catalogue Number
2-Pole 600V AC, 250V DC (3 Pole Width)			
250	LD62B250	LD62F600	JD62T250
300	LD62B300		JD62T300
350	LD62B350		JD62T350
400	LD62B400		JD62T400
450	LD62B450		LD62T450
500	LD62B500		LD62T500
600	LD62B600		LD62T600
3-Pole 600V AC, 500V DC②			
250	LD63B250	LD63F600	JD63T250
300	LD63B300		JD63T300
350	LD63B350		JD63T350
400	LD63B400		JD63T400
450	LD63B450		LD63T450
500	LD63B500		LD63T500
600	LD63B600		LD63T600

Interrupting Ratings

	RMS Symmetrical Amperes (KA)											
	CSA / UL 489 AIR (File E10848)					IEC 947-2						
	Volts AC (50/60Hz)			Volts DC		Volts AC (50/60Hz)						
						220/240		380/415		500	
Breaker Type	240	480	600	250	500③	(Icu)	(Ics)	(Icu)	(Ics)	(Icu)	(Ics)
LXD6, LD6	65	35	25	30 (2-P)	25 (3-P)	65	33	40	20	30	15
HLD6, HLXD6	100	65	35	30 (2-P)	35 (3-P)	100	50	65	33	42	21
HHLD6, HHLXD6	200	100	50	—	—	200	100	100	50	65	33
CLD6	200	150	100	30 (2-P)	50 (3-P)	—	—	—	—	—	—

Instantaneous Adjustment Trip Range

Breaker Ampere Rating	Nominal Instantaneous Values							
	Low⑤	2	3	4	5	6	7	High⑤
250-300	1250	1430	1610	1790	1960	2140	2320	2500
350-450	2000	2290	2570	2860	3140	3430	3710	4000
500-600	3000	3430	3800	4290	4710	5140	5570	6000

① Type LXD6A circuit breakers are CSA Certified / UL Listed for reverse fed applications.
② When wired as shown on page 5-4, this circuit breaker is CSA Certified / UL Listed and rated for use on 500V DC ungrounded UPS systems only.
③ See **Note: A**, page 5-147.
④ HACR rated.
⑤ +/- 20% Tolerance

Note: LD frame qualified to UL489 supplement SB "NAVAL" See page 5-137 for additional information.

Ordering Information

Complete Breaker Unassembled with Lugs
Prices of LD6, HLD6, and HHLD6 breakers include frame, trip, and both line and load lugs (TA2J6500). When ordered by these catalogue numbers, the customer will receive the frame, trip and lugs separately packaged. For applications requiring different lugs, order individual items as needed.

Complete Breaker Assembled without Lugs
Prices of LXD6, HLXD6, HHLXD6, and CLD6 include frame with non-interchangeable trip unit installed only. Order required lugs separately. For line and load lugs (TA2J6500) installed, add suffix "L" to catalogue number (add 2 times list price of lugs for each pole).

100% Rated (3-pole only)
Types, LXD6 and HLXD6 breakers are available with 100% ratings. To order add suffix "H" to catalogue number, and 10% to list price. 100% rated LD breakers require the use of 90°C Cu cable and lugs TC1J6600 or TC2J6500.

50°C Applications see page 5-137.

400Hz Applications see page 5-137.

Shipping Weights

Number of Poles	Number per Carton	Shipping Weight (lbs.)
LXD6, LD6, HLD6, HHLD6 Assembled Breaker (less terminals)		
2	1	17.5
3	1	19.5
LD6, HLD6, HHLD6 Frame Only		
2	1	14
3	1	15.5
LD6, HHLD6 Trip Unit Only		
2	1	3.5
3	1	4
CLD6 Complete Assembled Breaker (less terminals)		
2	1	29.5
3	1	31.5

Lugs for 75° C Wire③

Catalogue Number	No. of cables per con-nector	Wire Range
TA2J6500	1, 2 2	#3/0 500 kcmil Cu #4/0 500 kcmil Al
TC2J6500	2	#3/0-500 kcmil Cu
TA1L6750	1 1	500-750 kcmil Al 500-600 kcmil Cu
TC1J6600	1	#3/0-600 kcmil Cu
Compression Lug		
CCL600	1	500 kcmil Cu/Al

Modifications page 5-150
Accessories page 5-151 - 5-159

Type HLD6-A, HLXD6②⑤⑥

Black Label

Interchangeable Trip

Continuous Current Rating @ 40°C	Complete Breaker Unassembled with Lugs Catalogue Number	Frame Only Catalogue Number	Trip Unit Only Catalogue Number
2-Pole 600V AC, 250V DC (3 Pole Width)			
250	**HLD62B250**	**HLD62F600**	**JD62T250**
300	**HLD62B300**		**JD62T300**
350	**HLD62B350**		**JD62T350**
400	**HLD62B400**		**JD62T400**
450	**HLD62B450**		**LD62T450**
500	**HLD62B500**		**LD62T500**
600	**HLD62B600**		**LD62T600**
3-Pole 600V AC, 500V DC①⑤			
250	**HLD63B250**	**HLD63F600**	**JD63T250**
300	**HLD63B300**		**JD63T300**
350	**HLD63B350**		**JD63T350**
400	**HLD63B400**		**JD63T400**
450	**HLD63B450**		**LD63T450**
500	**HLD63B500**		**LD63T500**
600	**HLD63B600**		**LD63T600**

Type HHLD6, HHLXD6②⑤⑥

2-Pole 600V AC (3 Pole Width)

250	**HHLD62B250**	**HHLD62F600**	**JD62T250**
300	**HHLD62B300**		**JD62T300**
350	**HHLD62B350**		**JD62T350**
400	**HHLD62B400**		**JD62T400**
450	**HHLD62B450**		**HHLD62T450**
500	**HHLD62B500**		**HHLD62T500**
600	**HHLD62B600**		**HHLD62T600**

3-Pole 600V AC

250	**HHLD63B250**	**HHLD63F600**	**JD63T250**
300	**HHLD63B300**		**JD63T300**
350	**HHLD63B350**		**JD63T350**
400	**HHLD63B400**		**JD63T400**
450	**HHLD63B450**		**HHLD63T450**
500	**HHLD63B500**		**HHLD63T500**
600	**HHLD63B600**		**HHLD63T600**

Type CLD6⑥

Red Label

Fuseless Current Limiting

Non-Interchangeable Trip (Assembled Circuit Breaker Without Lugs)

Continuous Current Rating @ 40°C	2-Pole 600V AC/250V DC	3-Pole 600V AC/500V DC Catalogue Number
450	For 2-pole application use outside poles of 3-pole circuit breaker	**CLD63B450**
500		**CLD63B500**
600		**CLD63B600**

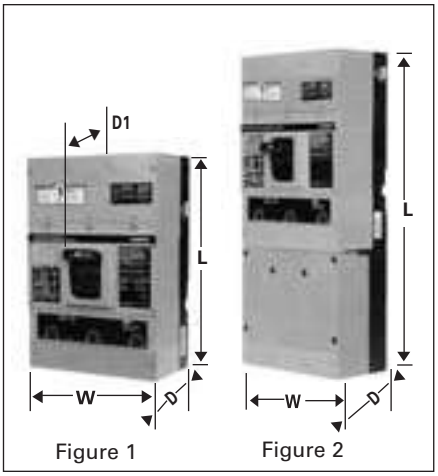

Figure 1 Figure 2

Dimensions (in inches)

Breaker Type	W	L	D	D1 (to handle)
Figure 1 LXD6-A, LD6-A HLD6-A HHLD6, HHLXD6, LXD6–ETI⑨	7.5	11	4	5.44
Figure 2 CLD6, CLD6-ETI④	7.5	17.86	4	5.44

For inches / millimeters conversion, see Technical section

① When wired as shown on page 5-4, this circuit breaker is CSA Certified / UL Listed and rated for use on 500V DC ungrounded UPS systems only.

② For complete assembled 3 pole HLD6 or HHLD6 type circuit breaker change the prefix identifier HLD6 or HHLD6 to HLXD6 or HHLXD6. Price is sum of frame and trip units prices, e.g. price of HLXD63B400 is the price of HLD63F600 plus the price of LD63T600. Order the terminal connectors separately.

③ Type HLXD6, HHLXD6 Circuit Breakers are CSA Certified / UL Listed for reverse feed applications.
④ LXD6-ETI, CLD6-ETI see page 5-117 for ordering information.
⑤ CE Applies to non-interchangable type HLXD only.
⑥ HACR rated.

Molded Case Circuit Breakers

SLD 600A Frame Digital Solid State Sentron Sensitrip IV Series

Selection

Current Limiting

Type SLD6-B — Blue Label

Type SHLD6-B — Black Label

Type SCLD6-B — Red Label

Max Current Rating	3-Pole, 600V AC		3-Pole, 600V AC		3-Pole, 600V AC	
	Catalogue Number (Advanced trip unit)①	Catalogue Number (Basic trip unit)	Catalogue Number (Advanced trip unit)①	Catalogue Number (Basic trip unit)	Catalogue Number (Advanced trip unit)①	Catalogue Number (Basic trip unit)
300	**SLD6A300LI**	**SLD6B300LI**	**SHLD6A300LI**	**SHLD6B300LI**	**SCLD6A300LI**	**SCLD6B300LI**
400	**SLD6A400LI**	**SLD6B400LI**	**SHLD6A400LI**	**SHLD6B400LI**	**SCLD6A400LI**	**SCLD6B400LI**
500	**SLD6A500LI**	**SLD6B500LI**	**SHLD6A500LI**	**SHLD6B500LI**	**SCLD6A500LI**	**SCLD6B500LI**
600	**SLD6A600LI**	**SLD6B600LI**	**SHLD6A600LI**	**SHLD6B600LI**	**SCLD6A600LI**	**SCLD6B600LI**
300	**SLD6A300LIG**	**SLD6B300LIG**	**SHLD6A300LIG**	**SHLD6B300LIG**	**SCLD6A300LIG**	**SCLD6B300LIG**
400	**SLD6A400LIG**	**SLD6B400LIG**	**SHLD6A400LIG**	**SHLD6B400LIG**	**SCLD6A400LIG**	**SCLD6B400LIG**
500	**SLD6A500LIG**	**SLD6B500LIG**	**SHLD6A500LIG**	**SHLD6B500LIG**	**SCLD6A500LIG**	**SCLD6B500LIG**
600	**SLD6A600LIG**	**SLD6B600LIG**	**SHLD6A600LIG**	**SHLD6B600LIG**	**SCLD6A600LIG**	**SCLD6B600LIG**
300	**SLD6A300LSI**	**SLD6B300LSI**	**SHLD6A300LSI**	**SHLD6B300LSI**	**SCLD6A300LSI**	**SCLD6B300LSI**
400	**SLD6A400LSI**	**SLD6B400LSI**	**SHLD6A400LSI**	**SHLD6B400LSI**	**SCLD6A400LSI**	**SCLD6B400LSI**
500	**SLD6A500LSI**	**SLD6B500LSI**	**SHLD6A500LSI**	**SHLD6B500LSI**	**SCLD6A500LSI**	**SCLD6B500LSI**
600	**SLD6A600LSI**	**SLD6B600LSI**	**SHLD6A600LSI**	**SHLD6B600LSI**	**SCLD6A600LSI**	**SCLD6B600LSI**
300	**SLD6A300LSIG**	**SLD6B300LSIG**	**SHLD6A300LSIG**	**SHLD6B300LSIG**	**SCLD6A300LSIG**	**SCLD6B300LSIG**
400	**SLD6A400LSIG**	**SLD6B400LSIG**	**SHLD6A400LSIG**	**SHLD6B400LSIG**	**SCLD6A400LSIG**	**SCLD6B400LSIG**
500	**SLD6A500LSIG**	**SLD6B500LSIG**	**SHLD6A500LSIG**	**SHLD6B500LSIG**	**SCLD6A500LSIG**	**SCLD6B500LSIG**
600	**SLD6A600LSIG**	**SLD6B600LSIG**	**SHLD6A600LSIG**	**SHLD6B600LSIG**	**SCLD6A600LSIG**	**SCLD6B600LSIG**

Trip Unit Adjustable Functions

Suffix Letter Code	Trip Type	Cont Current Setting	Long Time Delay	Instan-taneous Pick Up	Short Time Pick Up	Short Time Fixed Delay	Short Time I^2t Delay	Ground Fault Pick Up	Ground Fault Delay
LI	LI	√	√	√					
LIG	LIG	√	√	√				√	√
LSI	LSI	√	√	√	√	√	√		
LSIG	LSIG	√	√	√	√	√	√	√	√

Ordering Information

Pricing information for all Digital Sentron Series SLD Frames is for complete breaker only – price required lugs as separate items – lugs are suitable for 75°C Wire.

Interrupting Ratings

Breaker Type	RMS Symmetrical kA UL 489 (File E10848)		
	240V AC	480V AC	600V AC
SLD6-B	65	35	25
SHLD6-B	100	65	35
SCLD6-B	200	150	100

Neutral Transformers

Ampere Rating	Catalogue Number
300	**N03SJD**
400	**N04SJD**
500	**N05SLD**
600	**N06SLD**

Shipping Weights

Breaker Type	Number per Carton	Shipping Weight (lbs)
SLD6-B	1	20
SHLD6-B	1	20
SCLD6-B	1	33

Note: "G" suffix in catalogue number denotes circuit breaker for 3-phase, 3-wire circuits. For 3-phase, 4-wire, order correct 4th wire (neutral) transformer as separate and additional item.

For ordering information to terminal connectors see page 5-147 - 5-149; for enclosures, see page 5-139 – 5-146.

100% Rated – Not available in SLD6 Frame.

All breakers built to order. Allow 2-3 weeks for delivery.

① Advanced trip unit equipped with DAS / Maintenance Mode. Requires customer-supplied 24V external power supply, maintenance switch and light.

Accessories for:

JD 400A Frame
LD 600A Frame
LMD 800A Frame
SJD 400A Frame
SLD 600A Frame



Shunt Trip Combinations

Control Voltage		1 Shunt Trip	1 Shunt Trip and 1 Auxiliary Switch
AC	DC	Catalogue Number	Catalogue Number
24	—	S17JLD6	—
48	—	S18JLD6	—
120	—	S01JLD6	S01JLD62A
240	—	S03JLD6	S03JLD62A
277	—	S15JLD6	S15JLD64A
480	—	S04JLD6	—
—	12	S16JLD6	S16JLD62A
—	24	S07JLD6	S07JLD62A
—	48	S09JLD6	S09JLD62A
—	125	S11JLD6	S11JLD62A
—	250	S13JLD6	S13JLD62A

Auxiliary Switch Combinations

Maximun Voltage		1 Form C	2 Form C
AC	DC	Catalogue Number	Catalogue Number
480	250	A01JLD64	A02JLD64
—	12	A01JLDLV	A02JIDLV

Alarm Switch Combinations

Maximum Voltage		1 Alarm Switch	1 Alarm Switch and 1 Auxiliary Switch	1 Alarm Switch and 2 Auxiliary Switches
AC	DC	Catalogue Number	Catalogue Number	Catalogue Number
480	250	B01JLD64	A01JLD64B	A02JLD64B

ETU Testing Unit

Breaker Type	Description	Catalogue Number
SJD, SLD, SMD, SND, SPD	Power Stick	EPSP18V
	Spare cable for Power Stick	COMPCA

The EPSP18V Power Stick is a hand-held, battery-operated power supply that can be used for trip testing the Sensitrip IV electronic trip units. Requires two 9V batteries.

Note: Accessory **modules can only be added to right side pole of solid state** SJD and SLD frame circuit breakers. All accessories on this page are useable on superseded JD2, JJ6, JL6, HJ6, SJL, LJ6, LL6, HL6 and SLL circuit breakers.

No accessories can be added if mechanical interlock is used.

Type LMXD6[1][5]

Blue Label

Non-Interchangeable Trip (Assembled Circuit Breaker without Lugs)

Continuous Current Rating @ 40°C	2-Pole (3 Pole Width) Catalogue Number	3-Pole Catalogue Number
500	—	**LMXD63B500**
600	**LMXD62B600**	**LMXD63B600**
700	**LMXD62B700**	**LMXD63B700**
800	**LMXD62B800**	**LMXD63B800**

Type LMD6[5]

Blue Label

Interchangeable Trip

Continuous Current Rating @ 40°C	Complete Breaker Unassembled with Lugs Catalogue Number	Frame Only Catalogue Number	Trip Unit Only Catalogue Number
2-Pole 600V AC, 250V DC (3 Pole Width)			
500	**LMD62B500**	**LMD62F800**	**LMD62T500**
600	**LMD62B600**		**LMD62T600**
700	**LMD62B700**		**LMD62T700**
800	**LMD62B800**		**LMD62T800**
3-Pole 600V AC, 500V DC[5]			
500	**LMD63B500**	**LMD63F800**	**LMD63T500**
600	**LMD63B600**		**LMD63T600**
700	**LMD63B700**		**LMD63T700**
800	**LMD63B800**		**LMD63T800**

Instantaneous Adjustment Trip Range

Breaker Ampere Rating	Nominal Instantaneous Values Low[6]	2	3	4	5	6	7	High[6]
500-600	3000	3430	3860	4290	4710	5140	5570	6000
700-800	3200	3500	3700	4200	4700	6400	7300	8000

Ordering Information

Complete Breaker Unassembled with Lugs
Prices of LMD6 and HLMD6 breakers include frame, trip, and both line and load lugs (TA3K500). These catalogue numbers include the frame, trip and lugs separately packaged. For applications requiring different lugs, order individual items as needed.

Complete Breaker Assembled without Lugs
Prices of LMXD6 and HLMXD6 include frame with non-interchangeable trip unit installed only. Order required lugs separately. For line and load lugs (TA3K500) installed, add suffix "L" to catalogue number (add 2 times list price of lugs for each pole).

50°C Applications see page 5-137.

400Hz Applications see page 5-137.

Shipping Weights

Number of Poles	Number per Carton	Shipping Weight (lbs.)
LMD6, HLMD6, LMXD6, HLMXD6 Complete Breaker (less terminals)		
2	1	53
3	1	61.5
LMD6, HLMD6 Frame Only		
2	1	42.25
3	1	46
LMD6, HLMD6 Trip Unit Only		
2	1	4.5
3	1	6.5

Lugs for 75° C Wire[3]

Catalogue Number	No. of cables per connector	Wire Range
TA2K500	1, 2	#1-500 kcmil Cu/ Al
TA3K500	1-3	#1/0-500 kcmil Cu/ Al
TA2N750	1, 2	500-750 kcmil Cu/ Al

[1] LMXD6 circuit breakers are CSA Certified / UL Listed for reverse connected applications.
[2] Use 6 lugs for 3-pole, use 4 connectors for 2-pole.
[3] When wired as shown on page 5-4, this circuit breaker is CSA Certified / UL Listed and rated for use on 500UDC ungrounded UPS systems only.
[4] See **Note: A**, page 5-147.
[5] HACR rated.
[6] +/- 20% Tolerance

Modifications page 5-150
Accessories page 5-151-159

Type HLMXD6[1][4]

Black Label

Non-Interchangeable Trip (Assembled Circuit Breaker without Lugs)

Continuous Current Rating @ 40°C	2-Pole 600V AC/ 250V DC	3-Pole 600V AC/ 500V DC
		Catalogue Number
500	For 2-Pole application useoutside poles of 3-Pole circuit breaker.	HLMXD63B500
600		HLMXD63B600
700		HLMXD63B700
800		HLMXD63B800

Type HLMD6[4]

Black Label

Interchangeable Trip

Continuous Current Rating @ 40°C	Complete Breaker Unassembled with Lugs	Frame Only	Trip Unit Only
	Catalogue Number	Catalogue Number	Catalogue Number
2-Pole 600V AC, 250V DC (3 Pole Width)			
500	HLMD62B500	HLMD62F800	LMD62T500
600	HLMD62B600		LMD62T600
700	HLMD62B700		LMD62T700
800	HLMD62B800		LMD62T800
3-Pole 600V AC, 500V DC[5]			
500	HLMD63B500	HLMD63F800	LMD63T500
600	HLMD63B600		LMD63T600
700	HLMD63B700		LMD63T700
800	HLMD63B800		LMD63T800

Interrupting Ratings

	RMS Symmetrical Amperes (KA)											
	CSA / UL 489 AIR (File E10848)					IEC 947-2						
	Volts AC (50/60Hz)			Volts DC		Volts AC (50/60Hz)						
						220/240		380/415		500		
Breaker Type	240	480	600	250	500[3]	(Icu)	(Ics)	(Icu)	(Ics)	(Icu)	(Ics)	
LMD6, LMXD6	65	50	25	30 (2-P)	25 (3-P)	65	33	40	20	30	15	
HLMD6, HLMXD6	100	65	50	30 (2-P)	50 (3-P)	100	50	65	33	42	21	



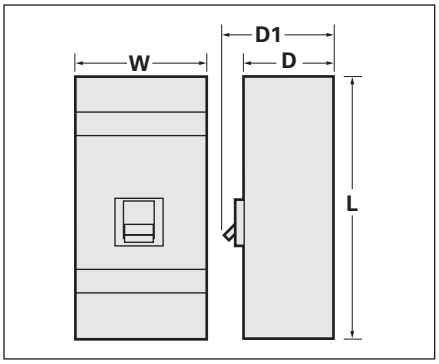

Dimensions (in inches)

Breaker Type	W	L	D	D1
LMD6, LMXD6, HLMD6, HLMXD6 LMXD6-ETI[2]	7.5	16	4.5	5.93

For inches / millimeters conversion, see Technical section.

[1] HLMXD6 circuit breakers are CSA Certified / UL Listed for reverse connection applications.
[2] LMXD6-ETI, see page 5-117 for catalogue information.
[3] When wired as shown on page 5-4, this circuit breaker is CSA Certified / UL Listed and rated for use on 500VDC ungrounded UPS systems only.
[4] HACR rated.

Accessories for:

JD 400A Frame
LD 600A Frame
LMD 800A Frame
SJD 400A Frame
SLD 600A Frame



Shunt Trip Combinations

Control Voltage		1 Shunt Trip	1 Shunt Trip and 1 Auxiliary Switch
AC	DC	Catalogue Number	Catalogue Number
24	—	**S17JLD6**	—
48	—	**S18JLD6**	—
120	—	**S01JLD6**	**S01JLD62A**
240	—	**S03JLD6**	**S03JLD62A**
277	—	**S15JLD6**	**S15JLD64A**
480	—	**S04JLD6**	—
—	12	**S16JLD6**	**S16JLD62A**
—	24	**S07JLD6**	**S07JLD62A**
—	48	**S09JLD6**	**S09JLD62A**
—	125	**S11JLD6**	**S11JLD62A**
—	250	**S13JLD6**	**S13JLD62A**

Undervoltage Trip Combinations

Control Voltage		1 Undervoltage Trip	1 Undervoltage Trip and 1 Auxiliary Switch	1 Undervoltage Trip and 2 Auxiliary Switches
AC	DC	Catalogue Number	Catalogue Number	Catalogue Number
120	—	**U01JLD6**	**U01JLD62A**	**U01JLD62AA**
208	—	**U02JLD6**	**U02JLD62A**	**U02JLD62AA**
240	—	**U03JLD6**	**U03JLD62A**	**U03JLD62AA**
277	—	**U16JLD6**	**U16JLD64A**	**U16JLD62AA**
480	—	**U06JLD6**	**U06JLD64A**	**U06JLD64AA**
600	—	**U08JLD6**	—	—
—	24	**U13JLD6**	**U13JLD62A**	**U13JLD62AA**
—	48	**U14JLD6**	**U14JLD62A**	**U14JLD62AA**
—	125	**U10JLD6**	**U10JLD62A**	**U10JLD62AA**
—	250	**U12JLD6**	**U12JLD62A**	**U12JLD62AA**

Auxiliary Switch Combinations

Maximum Voltage		1 Form C*	2 Form C
AC	DC	Catalogue Number	Catalogue Number
480	250	**A01JLD64**	**A02JLD64**
—	12	**A01JLDLV**	**A02JLDLV**

Alarm Switch Combinations

Maximum Voltage		1 Alarm Switch	1 Alarm Switch and 1 Auxiliary Switch	1 Alarm Switch and 2 Auxiliary Switches
AC	DC	Catalogue Number	Catalogue Number	Catalogue Number
480	250	**B01JLD64**	**A01JLD64B**	**A02JLD64B**

ETU Testing Unit

Breaker Type	Description	Catalogue Number
SJD, SLD, SMD, SND, SPD	Power Stick	**EPSP18V**
	Spare cable for Power Stick	**COMPCA**

The EPSP18V Power Stick is a hand-held, battery-operated power supply that can be used for trip testing the Sensitrip IV electronic trip units. Requires two 9V batteries.

Note: Accessory modules can only be added to right side pole of solid state SJD and SLD frame circuit breakers. All accessories on this page are useable on superseded JD2, JJ6, JL6, HJ6, SJL, LJ6, LL6, HL6 and SLL circuit breakers.

No accessories can be added if mechanical interlock is used.

Type MXD6[1][7]

Blue Label

Non-Interchangeable Trip (Assembled Circuit Breaker Without Lugs)

Continuous Current Rating @ 40°C	2-Pole	3-Pole
	Catalogue Number	Catalogue Number
600	MXD62B600	MXD63B600
700	MXD62B700	MXD63B700
800	MXD62B800	MXD63B800

Type MD6[7]

Blue Label

Non-Interchangeable Trip (Assembled Circuit Breaker Without Lugs)

Continuous Current Rating @ 40°C	Complete Breaker Unassembled with Lugs	Frame Only	Trip Unit Only
	Catalogue Number	Catalogue Number	Catalogue Number
2-Pole 600V AC, 250V DC[2]			
500	MD62B500	MD62F800	MD62T500
600	MD62B600		MD62T600
700	MD62B700		MD62T700
800	MD62B800		MD62T800
3-Pole 600V AC, 500V DC[4]			
500	MD63B500	MD63F800	MD63T500
600	MD63B600		MD63T600
700	MD63B700		MD63T700
800	MD63B800		MD63T800

Lugs[5]

Catalogue Number	Cables per Lug	Lugs Per Kit	Wire Range
TA2K500	1-2	1	#1-500 kcmil Cu/ Al
TA3K500	1-3	1	1/0-500 kcmil Cu/ Al
TC2K500	1-2	1	#1-500 kcmil Cu
TC3K350	1-3	1	#1-350 kcmil Cu
Kits			
2TA2N8750 3TA2N8750	1-2	2 3	600-750 kcmil Cu/ Al
2TA3N8750 3TA3N8750	1-3	2 3	500-750 kcmil Cu/ Al
2TA4N8500 3TA4N8500	1-4	2 3	250-500 kcmil Cu/ Al
2TA4P8500 3TA4P8500	1-4	2 3	250-500 kcmil Cu/Al

Instantaneous Adjustment Trip Range

Breaker Ampere Rating	Nominal Instantaneous Values							
	Low[8]	2	3	4	5	6	7	High[8]
500–600	3000	3430	3860	4280	4710	5140	5570	6000
700–800	4000	4570	5140	5710	6280	6850	7420	8000

Ordering Information

Complete Breaker Unassembled with Lugs
Pricing information for MD6 and HMD6 breakers includes frame, trip, and both line and load lugs (TA3K500). When ordered by these catalogue numbers, the customer will receive the frame, trip and lugs separately packaged. For applications requiring different lugs, order individual items as needed.

Complete Breaker Assembled without Lugs
Prices of MXD6, HMXD6 and CMD6 include frame with non-interchangeable trip units installed only. Order required lugs separately. For line and load lugs (TA3K500) installed, add suffix "L" to catalogue number (add 2 times list price of lugs for each pole).

100% Rated[6]
Types MXD6, HMXD6 and CMD6 breakers are available with 100% ratings. To order add suffix "H" to catalogue number, and 10% to list price. 100% rated MD breakers require the use of 90°C Cu cable and lugs 2TA4P8500 or 2TA2N8750 for 2-pole; 3TA4P8500 or 3TA2N8750 for 3-pole.

50°C Applications see page 5-137.

400Hz Applications see page 5-137.

Shipping Weights

Number of Poles	Number per Carton	Shipping Weight (lbs.)
MD6, HMD6, HMXD6, CMD6 Complete Breaker Assembled (less lugs)		
2	1	53
3	1	61.5
MD6, HMD6 Frame Only		
2	1	42.25
3	1	46
MD6, HMD6 Trip Unit Only		
2	1	4.5
3	1	6.5

[1] MXD6 circuit breakers are CSA Certified / UL Listed for reverse connection applications.
[2] 2-pole units available in 3-pole width only.
[3] Use 6 connectors for 3-pole, use 4 connectors for 2-pole.
[4] When wired as shown on page 5-4, this circuit breaker is CSA Certified / UL Listed and rated for use on 500V DC ungrounded UPS systems.
[5] See **Note: A**, page 5-147.
[6] 80% rated breakers with the CE mark will also be marked in the 100% rated version.
[7] HACR rated.
[8] +/- 20% Tolerance.
Note: MD frame qualified to UL489 supplement B "NAVAL" See page 5-150 for additional information.

Modifications page 5-150
Accessories page 5-151 - 5-159

Molded Case Circuit Breakers

MD 800A Frame Sentron Series

Selection/Dimensions

Type HMXD6①⑤

Black Label

Non-Interchangeable Trip (Assembled Circuit Breaker without Lugs)		
Continuous Current Rating @ 40°C	2-Pole 600V AC/250V DC	3-Pole 600V AC/500V DC
		Catalogue Number
600 700 800	For 2-pole application use outside poles of 3-pole circuit breaker	HMXD63B600 HMXD63B700 HMXD63B800

Type HMD6⑤

Black Label

Interchangeable Trip			
Continuous Current Rating @ 40°C	Complete Breaker Unassembled with Lugs	Frame Only	Trip Unit Only
	Catalogue Number	Catalogue Number	Catalogue Number
2-Pole 600V AC, 250V DC②			
500 600 700 800	HMD62B500 HMD62B600 HMD62B700 HMD62B800	HMD62F800	MD62T500 MD62T600 MD62T700 MD62T800
3-Pole 600V AC, 500V DC④			
500 600 700 800	HMD63B500 HMD63B600 HMD63B700 HMD63B800	HMD63F800	MD63T500 MD63T600 MD63T700 MD63T800

Type CMD6⑤

Red Label

Fuseless Current Limiting

Non-Interchangeable Trip (Assembled Circuit Breaker Without Lugs)		
Continuous Current Rating @ 40°C	2-Pole 600V AC/250V DC	3-Pole 600V AC/500V DC
		Catalogue Number
500 600 700 800	For 2-pole application use outside poles of 3-pole circuit breaker	CMD63B500 CMD63B600 CMD63B700 CMD63B800

Interrupting Ratings

Breaker Type	RMS Symmetrical Amperes (KA)											
	CSA / UL 489 AIR (File E10848)					IEC 947-2						
	Volts AC (50/60Hz)			Volts DC		Volts AC (50/60Hz)						
						220/240		380/415		500		
	240	480	600	250	500④	(Icu)	(Ics)	(Icu)	(Ics)	(Icu)	(Ics)
MD6, MXD6	65	50	25	30 (2-P)	25 (3-P)	65	33	40	20	30	15
HMD6, HMXD6	100	65	50	30 (2-P)	50 (3-P)	100	50	65	33	42	21
CMD6	200	100	65	30 (2-P)	50 (3-P)	200	100	100	50	65	33



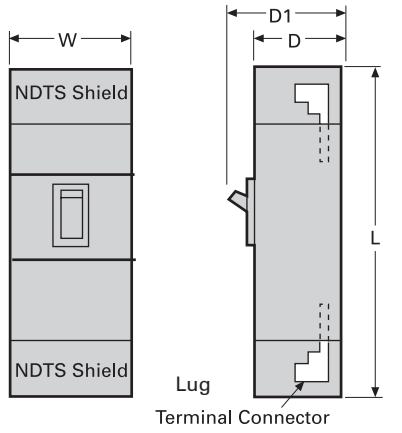

When wire lug shield NDTS is used.

Note: NDTS lug shields are required when oversized lugs are used. The kits include the NDTS shield.

Dimensions (in inches)

Breaker Type	W	L	D	D1
MD6, MXD6, HMD6, HMXD6, CMD6, MXD6-ETI, CMD6-ETI	9	16	6	8.25
with lug shields	9	24	6	8.25

For inches / millimeters conversion, see Technical section.

①HMXD6 circuit breakers are CSA Certified / UL Listed for reverse connection applications.
②2-pole units available in 3-pole width only.
③MXD6-ETI, CMD6-ETI see page 5-117 for catalogue information.
④When wired as shown on page 5-4, this circuit breaker is CSA Certified / UL Listed and rated for use on 500V DC ungrounded UPS systems only.
⑤HACR rated.

Type SMD6 — Blue Label | Type SHMD6-B — Black Label | Current Limiting Type SCMD6-B — Red Label

Max Current Rating	3-Pole, 600V AC		3-Pole, 600V AC		3-Pole, 600V AC	
	Catalogue Number (Advanced trip unit)③	Catalogue Number (Basic trip unit)	Catalogue Number (Advanced trip unit)③	Catalogue Number (Basic trip unit)	Catalogue Number (Advanced trip unit)③	Catalogue Number (Basic trip unit)
600	**SMD6A600LI**	**SMD6B600LI**	**SHMD6A600LI**	**SHMD6B600LI**	**SCMD6A600LI**	**SCMD6B600LI**
700	**SMD6A700LI**	**SMD6B700LI**	**SHMD6A700LI**	**SHMD6B700LI**	**SCMD6A700LI**	**SCMD6B700LI**
800	**SMD6A800LI**	**SMD6B800LI**	**SHMD6A800LI**	**SHMD6B800LI**	**SCMD6A800LI**	**SCMD6B800LI**
600	**SMD6A600LIG**	**SMD6B600LIG**	**SHMD6A600LIG**	**SHMD6B600LIG**	**SCMD6A600LIG**	**SCMD6B600LIG**
700	**SMD6A700LIG**	**SMD6B700LIG**	**SHMD6A700LIG**	**SHMD6B700LIG**	**SCMD6A700LIG**	**SCMD6B700LIG**
800	**SMD6A800LIG**	**SMD6B800LIG**	**SHMD6A800LIG**	**SHMD6B800LIG**	**SCMD6A800LIG**	**SCMD6B800LIG**
600	**SMD6A600LSI**	**SMD6B600LSI**	**SHMD6A600LSI**	**SHMD6B600LSI**	**SCMD6A600LSI**	**SCMD6B600LSI**
700	**SMD6A700LSI**	**SMD6B700LSI**	**SHMD6A700LSI**	**SHMD6B700LSI**	**SCMD6A700LSI**	**SCMD6B700LSI**
800	**SMD6A800LSI**	**SMD6B800LSI**	**SHMD6A800LSI**	**SHMD6B800LSI**	**SCMD6A800LSI**	**SCMD6B800LSI**
600	**SMD6A600LSIG**	**SMD6B600LSIG**	**SHMD6A600LSIG**	**SHMD6B600LSIG**	**SCMD6A600LSIG**	**SCMD6B600LSIG**
700	**SMD6A700LSIG**	**SMD6B700LSIG**	**SHMD6A700LSIG**	**SHMD6B700LSIG**	**SCMD6A700LSIG**	**SCMD6B700LSIG**
800	**SMD6A800LSIG**	**SMD6B800LSIG**	**SHMD6A800LSIG**	**SHMD6B800LSIG**	**SCMD6A800LSIG**	**SCMD6B800LSIG**

SMD 800A Frame – 100% Rated①

Blue Label | Black Label | Current Limiting Red Label

Max Current Rating	3-Pole, 600V AC		3-Pole, 600V AC		3-Pole, 600V AC	
	Catalogue Number (Advanced trip unit)③	Catalogue Number (Basic trip unit)	Catalogue Number (Advanced trip unit)③	Catalogue Number (Basic trip unit)	Catalogue Number (Advanced trip unit)③	Catalogue Number (Basic trip unit)
600	**SMD6A600LIH**	**SMD6B600LIH**	**SHMD6A600LIH**	**SHMD6B600LIH**	**SCMD6A600LIH**	**SCMD6B600LIH**
700	**SMD6A700LIH**	**SMD6B700LIH**	**SHMD6A700LIH**	**SHMD6B700LIH**	**SCMD6A700LIH**	**SCMD6B700LIH**
800	**SMD6A800LIH**	**SMD6B800LIH**	**SHMD6A800LIH**	**SHMD6B800LIH**	**SCMD6A800LIH**	**SCMD6B800LIH**
600	**SMD6A600LIGH**	**SMD6B600LIGH**	**SHMD6A600LIGH**	**SHMD6B600LIGH**	**SCMD6A600LIGH**	**SCMD6B600LIGH**
700	**SMD6A700LIGH**	**SMD6B700LIGH**	**SHMD6A700LIGH**	**SHMD6B700LIGH**	**SCMD6A700LIGH**	**SCMD6B700LIGH**
800	**SMD6A800LIGH**	**SMD6B800LIGH**	**SHMD6A800LIGH**	**SHMD6B800LIGH**	**SCMD6A800LIGH**	**SCMD6B800LIGH**
600	**SMD6A600LSIH**	**SMD6B600LSIH**	**SHMD6A600LSIH**	**SHMD6B600LSIH**	**SCMD6A600LSIH**	**SCMD6B600LSIH**
700	**SMD6A700LSIH**	**SMD6B700LSIH**	**SHMD6A700LSIH**	**SHMD6B700LSIH**	**SCMD6A700LSIH**	**SCMD6B700LSIH**
800	**SMD6A800LSIH**	**SMD6B800LSIH**	**SHMD6A800LSIH**	**SHMD6B800LSIH**	**SCMD6A800LSIH**	**SCMD6B800LSIH**
600	**SMD6A600LSIGH**	**SMD6B600LSIGH**	**SHMD6A600LSIGH**	**SHMD6B600LSIGH**	**SCMD6A600LSIGH**	**SCMD6B600LSIGH**
700	**SMD6A700LSIGH**	**SMD6B700LSIGH**	**SHMD6A700LSIGH**	**SHMD6B700LSIGH**	**SCMD6A700LSIGH**	**SCMD6B700LSIGH**
800	**SMD6A800LSIGH**	**SMD6B800LSIGH**	**SHMD6A800LSIGH**	**SHMD6B800LSIGH**	**SCMD6A800LSIGH**	**SCMD6B800LSIGH**

Ordering Information

Pricing information for all Digital Sentron Series MD frames is for complete breaker only. Price requires lugs or lug kits as separate items. Lugs are suitable for 75°C wire or as noted. Connector wire ranges and cavities are established in conjunction with Table 6.1.4.2.1 of UL 489 standards. Choose actual connector for circuit breakers based on customer requirements.

Recommended Terminal Connectors

Breaker Frame	Ampere Rating	Connector or Connector Kit
MD	500-600	TA2K500
MD	700-800	TA3K500

Types SMD6-B, SHMD6-B and SCMD6-B are acceptable for reverse connection applications

Lugs for 75° C Wire②

Catalogue Number	Cables per Lug	Wire Range
TA2K500	2	#1-500 kcmil Cu/Al
TA3K500	3	#1-500 kcmil Cu/Al
TC2K500	2	#1-500 kcmil Cu
TC3K350	3	#1-350 kcmil Cu
Kits (3 lugs/kit)		
3TA4N8500	4	250-500 kcmil Cu/Al
3TA4P8500	4	250-500 kcmil Cu/Al
3TA2N8750	2	500-750 kcmil Cu/Al
3TA3N8750	3	500-750 kcmil Cu/Al

Each kit contains the following:

3TA4P8500 - 3 connectors plus 1 NDTS end barrier

3TA3N8750 - 3 connectors plus 1 NDTS end barrier

3TA2N8750 - 3 connectors plus 1 NDTS end barrier

Trip Unit Adjustable Functions

Suffix Letter Code	Trip Type	Cont Current Setting	Long Time Delay	Instan-taneous Pick Up	Short Time Pick Up	Short Time Delay	Ground Fault Pick Up	Ground Fault Delay
LI	LI	√	√	√				
LIG	LIG	√	√	√			√	√
LSI	LSI	√	√	√	√	√		
LSIG	LSIG	√	√	√	√	√	√	√

Interrupting Ratings

Breaker Type	RMS Symmetrical kA UL 489 (File E10848)		
	240V AC	480V AC	600V AC
SMD6-B	65	50	25
SHMD6-B	100	65	50
SCMD6-B	200	100	65

Neutral Transformers

Ampere Rating	Catalogue Number
600	N06SMDA
700	N07SMDA
800	N08SMDA

Note: "G" suffix in catalogue number denotes circuit breaker for 3-phase, 3-wire circuits. For 3-phase, 4-wire, order correct 4th wire (neutral) transformer as separate and additional item.

All breakers built to order. Allow 2-3 weeks for delivery.

① Use 2-3TA4P8500 for 3-pole. These kits are rated for 90°C wire. 90°C Cu only cable must be used, and sized per 75°C ampacity.

② For additional information, see **Note: A,** page 5-147.

③ Advanced trip unit equipped with DAS / Maintenance Mode. Requires customer-supplied 24V external power supply, maintenance switch and light.

Enclosures page 5-139 – 5-146
Accessories pages 5-151 - 5-159

Accessories for:

MD/SMD 800A Frame
ND/SND 1200A Frame
PD/SPD 1600A Frame
RD 2000A Frame



Accessory modules can mount in either left hand or right hand poles of all circuit breakers, including solid state. Exception: when mechanical interlock is used accessories cannot be mounted in left pole.

Shunt Trip Combinations

Control Voltage		1 Shunt Trip	1 Shunt Trip and 1 Auxiliary Switch
AC	DC	Catalogue Number	Catalogue Number
120	—	S01MN6	S01MN64A
208	—	S02MN6	S02MN64A
240	—	S03MN6	S03MN64A
277	—	S15MN6	S15MN64A
480	—	S04MN6	S04MN64A
600	—	S06MN6	—
—	12	S16MN6	S16MN64A
—	24	S07MN6	S07MN64A
—	48	S09MN6	—
—	125	S11MN6	S11MN64A
—	250	S13MN6	S13MN64A

Undervoltage Trip Combinations

Control Voltage		1 Undervoltage Trip	1 Undervoltage Trip and 1 Auxiliary Switch	1 Undervoltage Trip and 2 Auxiliary Switches
AC	DC	Catalogue Number	Catalogue Number	Catalogue Number
120	—	U01MN6	U01MN64A	U01MN64AA
208	—	U02MN6	U02MN64A	U02MN64AA
240	—	U03MN6	U03MN64A	U03MN64AA
277	—	U15MN6	U15MN64A	U15MN64AA
480	—	U04MN6	U04MN64A	U04MN64AA
600	—	U06MN6	—	—
—	24	U07MN6	U07MN64A	U07MN64AA
—	48	U09MN6	U09MN64A	U09MN64AA
—	125	U11MN6	U11MN64A	U11MN64AA
—	250	U13MN6	U13MN64A	U13MN64AA

Auxiliary Switch Combinations

Maximum Voltage		1 Form C	2 Form C
AC	DC	Catalogue Number	Catalogue Number
480	250	A01MN64	A02MN64
—	12	A01MNDLV	A02MNDLV

Alarm Switch Combinations

Maximum Voltage		1 Alarm Switch	1 Alarm Switch and 1 Auxiliary Switch	1 Alarm Switch and 2 Auxiliary Switches
AC	DC	Catalogue Number	Catalogue Number	Catalogue Number
480	250	B00MN64	A01MN64B	A02MN64B

ETU Testing Unit

Breaker Type	Description	Catalogue Number
SJD, SLD, SMD, SND, SPD	Power Stick	EPSP18V
	Spare cable for Power Stick	COMPCA

The EPSP18V Power Stick is a hand-held, battery-operated power supply that can be used for trip testing the Sensitrip IV electronic trip units. Requires two 9V batteries.

Type NXD6①⑨

Blue Label

Non-Interchangeable Trip (Assembled Circuit Breaker without Lugs)

Continuous Current Rating @ 40°C	2-Pole 600V AC/ 250V DC	3-Pole 600V AC/500V DC
	Catalogue Number	Catalogue Number
900	NXD62B900	NXD63B900
1000	NXD62B100	NXD63B100
1200	NXD62B120	NXD63B120

Type ND6⑨

Blue Label

Interchangeable Trip

Continuous Current Rating @ 40°C	Complete Breaker Unassembled with Lugs	Frame Only	Trip Unit Only
	Catalogue Number	Catalogue Number	Catalogue Number
2-Pole 600V AC, 250V DC②			
800	ND62B800	ND62F120	MD62T800
900	ND62B900		ND62T900
1000	ND62B100		ND62T100
1200	ND62B120		ND62T120
3-Pole 600V AC, 500V DC⑤			
800	ND63B800	ND63F120	MD63T800
900	ND63B900		ND63T900
1000	ND63B100		ND63T100
1200	ND63B120		ND63T120

Interrupting Ratings

Breaker Type	RMS Symmetrical Amperes (KA)											
	CSA / UL 489 AIR (File E10848)					IEC 947-2						
	Volts AC (50/60Hz)			Volts DC		Volts AC (50/60Hz)						
						220/240		380/415		500		
	240	480	600	250	500③	(Icu)	(Ics)	(Icu)	(Ics)	(Icu)	(Ics)	
ND6, NXD6	65	50	25	30 (2-P)	25 (3-P)	65	33	40	20	—	—	
HND6, HNXD6	100	65	50	30 (2-P)	50 (3-P)	100	50	65	33	—	—	
CND6	200	100	65	—	50 (3-P)	—	—	—	—	—	—	

Instantaneous Adjustment Trip Range

Breaker Ampere Rating	Nominal Instantaneous Values							
	Low⑩	2	3	4	5	6	7	High⑩
800	4000	4570	5140	5710	6280	6850	7420	8000
900-1200	5000	5715	6430	7145	7860	8575	9290	10000

Ordering Information

Complete Breaker Unassembled with Lugs
Prices of ND6 and HND6 breakers include frame, trip, and both line and load lugs (3TA4N8500). These catalogue numbers are the frame, trip and lugs separately packaged. For applications requiring different lugs, order individual items as needed.

Complete Breaker Assembled without Lugs
Prices of NXD6, HNXD6, and CND6 include frame with non-interchangeable trip units installed only. Order required terminal connectors separately.
For line and load lugs (3TA4N8500) installed, add suffix "L" to catalogue number (add 2 times list price of lug kit).

100% Rated⑧
Types NXD6, HNXD6 and CND6 breakers are available with 100% ratings. To order, suffix "H" to catalogue number, and add 10% to list price. 100% rated ND breakers require 90°C Cu cable and lug kit 3TA4P8500 or 3TA3N8750.

50°C Applications see page 5-137.

400Hz Applications see page 5-137.

Lugs⑦

Catalogue Number	Cables per Lug	Wire Range
TA2K500	2	#1-500 kcmil Cu/ Al
TA3K500	3	#1-500 kcmil Cu/ Al
TC2K500	2	#1-500 kcmil Cu
TC3K350	3	#1-350 kcmil Cu
Kits (2 Kits required per breaker)		
2TA4P8500④ **3TA4P8500④**	4	250-500 kcmil Cu/ Al
2TA4N8500⑥ **3TA4N8500⑥**	4	250-500 kcmil Cu/ Al
2TA2N8750 **3TA2N8750**	2	500-750 kcmil Cu/ Al
2TA3N8750 **3TA3N8750**	3	500-750 kcmil Cu/ Al

① NXD6 circuit breakers are CSA Certified / UL Listed for reverse connection applications.
② 2-pole units available in 3-pole width only.
③ When wired as shown on page 5-4, this circuit breaker is CSA Certified / UL Listed and rated for use on 500VDC ungrounded UPS systems only.
④ Use 6 connectors for 3-pole, use 4 connectors for 2-pole.
⑤ Use 2 – 3TA4P8500 kits for 3-pole, or 2 – 2TA4P8500 kits for 2-pole. Rated for 90°C cable. Use for 100% rated breakers.
⑥ Use 2 – 3TA4N8500 for 3-pole or 2 – 2TA4N8500 for 2-pole. Rated for 75°C cable.
⑦ See **Note: A**, page 5-147.
⑧ 80% rated breakers with the CE mark will also be marked in the 100% rated version.
⑨ HACR rated.
⑩ +/- 20% Tolerance.
Note: ND frame qualified to UL489 supplement B "NAVAL" See page 5-150 for additional information.

Modifications page 5-150
Accessories page 5-151 - 5-159

Molded Case Circuit Breakers

ND 1200A Frame Sentron Series

Type HNXD6

Black Label

Non-Interchangeable Trip (Assembled Circuit Breaker without Lugs)		
Continuous Current Rating @ 40°C	**2-Pole 600V AC/250V DC**	**3-Pole 600V AC/500V DC Catalogue Number**
900 1000 1200	For 2-pole application use outside poles of 3-pole circuit breaker	**HNXD63B900** **HNXD63B100** **HNXD63B120**

Type HND6④

Black Label

Interchangeable Trip			
Continuous Current Rating @ 40°C	**Complete Breaker Unassembled with Lugs Catalogue Number**	**Frame Only Catalogue Number**	**Trip Unit Only Catalogue Number**
2-Pole 600V AC, 250V DC②			
800 900 1000 1200	For 2-pole application use outside poles of 3-pole circuit breaker		
3-Pole 600V AC, 500V DC⑤			
800 900 1000 1200	**HND63B800** **HND63B900** **HND63B100** **HND63B120**	**HND63F120**	**MD63T800** **ND63T900** **ND63T100** **ND63T120**

Type CND6①④

Red Label

Fuseless Current Limiting

Non-Interchangeable Trip (Assembled Circuit Breaker)		
Continuous Current Rating @ 40°C	**2-Pole**	**3-Pole Catalogue Number**
900 1000 1200	For 2-pole application, use outside poles of 3-pole circuit breaker	**CND63B900** **CND63B100** **CND63B120**

Shipping Weights

Number of Poles	Number per Carton	Shipping Weight (lbs.)
ND6, HND6, NXD6, HNXD6, CND6 Assembled Breaker (less terminals)		
2	1	53
3	1	61.5
ND6, HND6 Frame Only		
2	1	42.25
3	1	46
ND6, HND6 Trip Unit Only		
2	1	4.5
3	1	6.5



NXD63B120

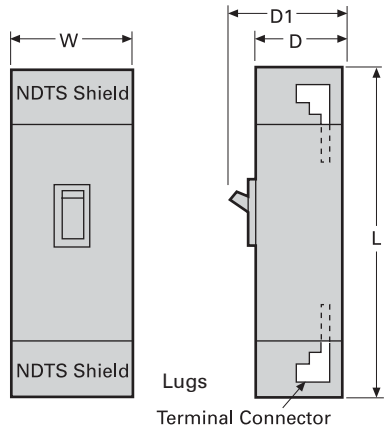

When lugs shield NDTS is used.

Note: NDTS lug shields are required when oversized lugs (TA4P8500 or TA4N8500) are used. The kits include the NDTS shield.

Dimensions (in inches)

Breaker Type	W	L	D	D1
ND6, NXD6, HND6, HNXD6, CND6	9	16	6	8.25
with NDTS lug shield	9	29	6	8.25

For inches / millimeters conversion, see Technical section.

① HNXD6 and CND6 circuit breakers are CSA Certified / UL Listed for reverse connection applications.
② 2-pole units available in 3-pole width only.
③ When wired as shown on page 5-4, this circuit breaker is CSA Certified / UL Listed and rated for use on 500V DC ungrounded UPS systems only.
④ HACR rated.

SND 1200A Frame Digital Solid State Sentron Sensitrip IV Series②

Type SND6-B — Blue Label

Type SHND6-B — Black Label

Current Limiting
Type SCND6-B — Red Label

Max Current Rating	3-Pole, 600V AC		3-Pole, 600V AC		3-Pole, 600V AC	
	Catalogue Number (Advanced trip unit)③	Catalogue Number (Basic trip unit)	Catalogue Number (Advanced trip unit)③	Catalogue Number (Basic trip unit)	Catalogue Number (Advanced trip unit)③	Catalogue Number (Basic trip unit)
800	SND6A800LI	SND6B800LI	SHND6A800LI	SHND6B800LI	SCND6A800LI	SCND6B800LI
1000	SND6A100LI	SND6B100LI	SHND6A100LI	SHND6B100LI	SCND6A100LI	SCND6B100LI
1200	SND6A120LI	SND6B120LI	SHND6A120LI	SHND6B120LI	SCND6A120LI	SCND6B120LI
800	SND6A800LIG	SND6B800LIG	SHND6A800LIG	SHND6B800LIG	SCND6A800LIG	SCND6B800LIG
1000	SND6A100LIG	SND6B100LIG	SHND6A100LIG	SHND6B100LIG	SCND6A100LIG	SCND6B100LIG
1200	SND6A120LIG	SND6B120LIG	SHND6A120LIG	SHND6B120LIG	SCND6A120LIG	SCND6B120LIG
800	SND6A800LSI	SND6B800LSI	SHND6A800LSI	SHND6B800LSI	SCND6A800LSI	SCND6B800LSI
1000	SND6A100LSI	SND6B100LSI	SHND6A100LSI	SHND6B100LSI	SCND6A100LSI	SCND6B100LSI
1200	SND6A120LSI	SND6B120LSI	SHND6A120LSI	SHND6B120LSI	SCND6A120LSI	SCND6B120LSI
800	SND6A800LSIG	SND6B800LSIG	SHND6A800LSIG	SHND6B800LSIG	SCND6A800LSIG	SCND6B800LSIG
1000	SND6A100LSIG	SND6B100LSIG	SHND6A100LSIG	SHND6B100LSIG	SCND6A100LSIG	SCND6B100LSIG
1200	SND6A120LSIG	SND6B120LSIG	SHND6A120LSIG	SHND6B120LSIG	SCND6A120LSIG	SCND6B120LSIG

SND 1200A Frame – 100% Rated①

Type SND6-B — Blue Label

Type SHND6-B — Black Label

Current Limiting
Type SCND6-B — Red Label

Max Current Rating	3-Pole, 600V AC		3-Pole, 600V AC		3-Pole, 600V AC	
	Catalogue Number (Advanced trip unit)③	Catalogue Number (Basic trip unit)	Catalogue Number (Advanced trip unit)③	Catalogue Number (Basic trip unit)	Catalogue Number (Advanced trip unit)③	Catalogue Number (Basic trip unit)
800	SND6A800LIH	SND6B800LIH	SHND6A800LIH	SHND6B800LIH	SCND6A800LIH	SCND6B800LIH
1000	SND6A100LIH	SND6B100LIH	SHND6A100LIH	SHND6B100LIH	SCND6A100LIH	SCND6B100LIH
1200	SND6A120LIH	SND6B120LIH	SHND6A120LIH	SHND6B120LIH	SCND6A120LIH	SCND6B120LIH
800	SND6A800LIGH	SND6B800LIGH	SHND6A800LIGH	SHND6B800LIGH	SCND6A800LIGH	SCND6B800LIGH
1000	SND6A100LIGH	SND6B100LIGH	SHND6A100LIGH	SHND6B100LIGH	SCND6A100LIGH	SCND6B100LIGH
1200	SND6A120LIGH	SND6B120LIGH	SHND6A120LIGH	SHND6B120LIGH	SCND6A120LIGH	SCND6B120LIGH
800	SND6A800LSIH	SND6B800LSIH	SHND6A800LSIH	SHND6B800LSIH	SCND6A800LSIH	SCND6B800LSIH
1000	SND6A100LSIH	SND6B100LSIH	SHND6A100LSIH	SHND6B100LSIH	SCND6A100LSIH	SCND6B100LSIH
1200	SND6A120LSIH	SND6B120LSIH	SHND6A120LSIH	SHND6B120LSIH	SCND6A120LSIH	SCND6B120LSIH
800	SND6A800LSIGH	SND6B800LSIGH	SHND6A800LSIGH	SHND6B800LSIGH	SCND6A800LSIGH	SCND6B800LSIGH
1000	SND6A100LSIGH	SND6B100LSIGH	SHND6A100LSIGH	SHND6B100LSIGH	SCND6A100LSIGH	SCND6B100LSIGH
1200	SND6A120LSIGH	SND6B120LSIGH	SHND6A120LSIGH	SHND6B120LSIGH	SCND6A120LSIGH	SCND6B120LSIGH

Trip Unit Adjustable Functions

Suffix Letter Code	Trip Type	Cont Current Setting	Long Time Delay	Instan-taneous Pick Up	Short Time Pick Up	Short Time Fixed Pick Up	Short Time I^2t Delay	Ground Fault Pick Up	Ground Fault Delay
LI	LI	√	√	√					
LIG	LIG	√	√	√				√	√
LSI	LSI	√	√	√	√	√	√		
LSIG	LSIG	√	√	√	√	√	√	√	√

Interrupting Ratings

Breaker Type	RMS Symmetrical kA UL 489 (File E10848)		
	240V AC	480V AC	600V AC
SND6-B	65	50	25
SHND6-B	100	65	50
SCND6-B	200	100	65

Neutral Transformers

Ampere Rating	Catalogue Number
800	N08SMDA
1000	N10SNDA
1200	N12SNDA

For inches / millimeters conversion, see Technical Data section.

For ordering information to terminal connectors see page 5-147 - 5-149; for enclosures, see page 5-139 – 5-146.
Note: "G" suffix in catalogue number denotes circuit breaker for 3-phase, 3-wire circuits.
For 3-phase, 4-wire, order correct 4th wire (neutral) transformer as separate and additional item.
All breakers built to order. Allow 2–3 weeks for delivery.

① Use 2-3TA4P8500 for 3-pole. These kits are rated for 90°C wire. 90°C Cu only cable must be used, and sized per 75°C ampacity.
② SND6, SHND6 and SCND6 circuit breakers are UL Listed for reverse connection applications.
③ Advanced trip unit equipped with DAS / Maintenance Mode. Requires customer-supplied 24V external power supply, maintenance switch and light.

Accessories for:

MD/SMD 800A Frame
ND/SND 1200A Frame
PD/SPD 1600A Frame
RD 2000A Frame



Accessory modules can mount in either left hand or right hand poles of all circuit breakers, including solid state. Exception: when mechanical interlock is used accessories cannot be mounted in left pole.

Shunt Trip Combinations

Control Voltage		1 Shunt Trip	1 Shunt Trip and 1 Auxiliary Switch
AC	DC	Catalogue Number	Catalogue Number
120	—	**S01MN6**	**S01MN64A**
208	—	**S02MN6**	**S02MN64A**
240	—	**S03MN6**	**S03MN64A**
277	—	**S15MN6**	**S15MN64A**
480	—	**S04MN6**	**S04MN64A**
600	—	**S06MN6**	—
—	12	**S16MN6**	**S16MN64A**
—	24	**S07MN6**	**S07MN64A**
—	48	**S09MN6**	—
—	125	**S11MN6**	**S11MN64A**
—	250	**S13MN6**	**S13MN64A**

Undervoltage Trip Combinations

Control Voltage		1 Undervoltage Trip	1 Undervoltage Trip and 1 Auxiliary Switch	1 Undervoltage Trip and 2 Auxiliary Switches
AC	DC	Catalogue Number	Catalogue Number	Catalogue Number
120	—	**U01MN6**	**U01MN64A**	**U01MN64AA**
208	—	**U02MN6**	**U02MN64A**	**U02MN64AA**
240	—	**U03MN6**	**U03MN64A**	**U03MN64AA**
277	—	**U15MN6**	**U15MN64A**	**U15MN64AA**
480	—	**U04MN6**	**U04MN64A**	**U04MN64AA**
600	—	**U06MN6**	—	—
—	24	**U07MN6**	**U07MN64A**	**U07MN64AA**
—	48	**U09MN6**	**U09MN64A**	**U09MN64AA**
—	125	**U11MN6**	**U11MN64A**	**U11MN64AA**
—	250	**U13MN6**	**U13MN64A**	**U13MN64AA**

Auxiliary Switch Combinations

Maximum Voltage		1 Form C	2 Form C
AC	DC	Catalogue Number	Catalogue Number
480	250	**A01MN64**	**A02MN64**
—	12	**A01MNDLV**	**A02MNDLV**

Alarm Switch Combinations

Maximum Voltage		1 Alarm Switch	1 Alarm Switch and 1 Auxiliary Switch	1 Alarm Switch and 2 Auxiliary Switches
AC	DC	Catalogue Number	Catalogue Number	Catalogue Number
480	250	**B00MN64**	**A01MN64B**	**A02MN64B**

ETU Testing Unit

Breaker Type	Description	Catalogue Number
SJD, SLD, SMD, SND, SPD	Power Stick	**EPSP18V**
	Spare cable for Power Stick	**COMPCA**

The EPSP18V Power Stick is a hand-held, battery-operated power supply that can be used for trip testing the Sensitrip IV electronic trip units. Requires two 9V batteries.

Type PXD6② Non-Interchangeable Trip⑤

3-Pole 600V AC, 250-500V DC①

Blue Label

Continuous Current Rating @ 40°C	Complete Breaker Assembled (Frame/Trip Unit Only) Catalogue Number	Mounting Assembly Catalogue Number	Lugs (6 required) Catalogue Number
1200	PXD63B120	MB9301	TA5P600
1400	PXD63B140	-or-	
1600	PXD63B160	MBR9302	

Type PD6 Interchangeable Trip⑤

3-Pole 600V AC, 250-500V DC①

Blue Label

Continuous Current Rating @ 40°C	Complete Breaker Unassembled Catalogue Number	Frame Only Catalogue Number	Trip Unit Only Catalogue Number	Mounting Assembly Catalogue Number	Lugs (6 required) Catalogue Number
1200	PD63B120	PD63F160	PD63T120	MB9301	TA5P600
1400	PD63B140		PD63T140	-or-	
1600	PD63B160		PD63T160	MBR9302	

Type HPXD6② Non-Interchangeable Trip⑤

3-Pole 600V AC, 250-500V DC①

Blue Label

Continuous Current Rating @ 40°C	Complete Breaker Assembled (Frame/Trip Unit Only) Catalogue Number
1200	HPXD63B120
1400	HPXD63B140
1600	HPXD63B160

Type HPD6 Interchangeable Trip⑤

3-Pole 600V AC, 250-500V DC①

Black Label

Continuous Current Rating @ 40°C	Complete Breaker Unassembled Catalogue Number	Frame Only Catalogue Number	Trip Unit Only Catalogue Number	Mounting Assembly Catalogue Number	Lugs (6 required) Catalogue Number
1200	HPD63B120	HPD63F160	PD63T120	MB9301	TA5P600
1400	HPD63B140		PD63T140	-or-	
1600	HPD63B160		PD63T160	MBR9302	

Type CPD6 Non-Interchangeable Trip⑤

Fuseless Current Limiting
3-Pole 600V AC, 250-500V DC①

Red Label

Continuous Current Rating @ 40°C	Complete Breaker Assembled (Frame/Trip Unit Only) Catalogue Number
1200	CPD63B120
1400	CPD63B140
1600	CPD63B160

Ordering Instructions

Complete Breaker Unassembled with Lugs

Prices of PD6, HPD6, RD6, and HRD6 type breakers include frame, trip, mounting base (MB9301), and both line and load lugs (PD Frame – TA5P600, RD Frame – TC5R600). When ordered by these catalogue numbers, the customer will receive the frame, trip, mounting assembly and lugs separately packaged. For applications requiring different mounting base or lugs, order individual items as needed.

Complete Breaker Assembled without Lugs

Prices of PXD6, HPXD6, RXD6, HRXD6 and CPD6 type breakers include frame with non-interchangeable trip unit installed only. Order required mounting base and lugs separately.

100% Rated (3-Pole only)

Types PXD6, HPXD6 breakers are available with 100% ratings. To order add suffix "H" to catalogue number, and 10% to list price. 100% PD breakers require 90° C cable sized at 75° C ampacity and TC5R600 lugs. RD 2000A Frames not available with 100% ratings.

50°C Applications see page 5-137.

400HZ Applications see page 5-137.

Lugs (6 required per breaker)④

Catalogue Number	No of Cables per Connector	Wire Range
TA5P600	1-5	300-600 kcmil Cu/Al
TC5R600	1-5	300-600 kcmil Cu only
TA4P750	1-4	500-750 kcmil Cu/Al
TA6R600	1-6	300-600 kcmil Cu/Al

Interrupting Ratings

Breaker Type	CSA 22.2 No. 5 / UL 489 A IR RMS Symmetrical KA				
	Volts AC			Volts DC①	
	240	480	600	250	500
PD6, PXD6	65	50	25	30 (2P)	25 (3P)
HPD6, HPXD6	100	65	50	30 (2P)	50 (3P)
CPD6	200	100	65	30 (2P)	50 (3P)

Mounting Bases for PD & RD

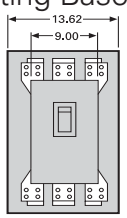

MB9301

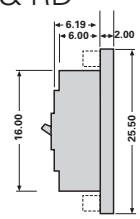

MB9301


MB9301

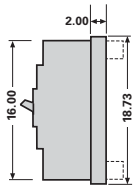

MBR9302

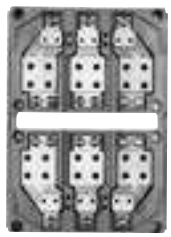
MBR9302

① Use two outside poles of a 3-pole circuit breaker for 250V
② When wired as shown on page 5-4, this circuit breaker is CSA Certified / UL Listed and rated for use on 500V DC ungrounded UPS systems only.
③ PXD6, HPXD6 and CPD6 type circuit breakers are CSA Certified / UL Listed for reverse feed applications.
④ For additional information See **Note: A**, page 5-147.
⑤ HACR rated.

Note: PD frame qualified to UL489 supplement B "NAVAL". See page 5-150 for additional information.

Type SPD6-B — Blue Label

Type SHPD6-B — Black Label

Max Current Rating	3-Pole, 600V AC		3-Pole, 600V AC	
	Catalogue Number (Advanced trip unit)③	Catalogue Number (Basic trip unit)	Catalogue Number (Advanced trip unit)③	Catalogue Number (Basic trip unit)
1400	**SPD6A140LI**	**SPD6B140LI**	**SHPD6A140LI**	**SHPD6B140LI**
1600	**SPD6A160LI**	**SPD6B160LI**	**SHPD6A160LI**	**SHPD6B160LI**
1400	**SPD6A140LIG**	**SPD6B140LIG**	**SHPD6A140LIG**	**SHPD6B140LIG**
1600	**SPD6A160LIG**	**SPD6B160LIG**	**SHPD6A160LIG**	**SHPD6B160LIG**
1400	**SPD6A140LSI**	**SPD6B140LSI**	**SHPD6A140LSI**	**SHPD6B140LSI**
1600	**SPD6A160LSI**	**SPD6B160LSI**	**SHPD6A160LSI**	**SHPD6B160LSI**
1400	**SPD6A140LSIG**	**SPD6B140LSIG**	**SHPD6A140LSIG**	**SHPD6B140LSIG**
1600	**SPD6A160LSIG**	**SPD6B160LSIG**	**SHPD6A160LSIG**	**SHPD6B160LSIG**

Ordering Information

Pricing information for all Digital Sentron Series PD frame unit is for breaker only. Price required mounting block assembly and necessary terminal connectors as separate items.

Trip Unit Adjustable Functions

Suffix Letter Code	Trip Type	Cont Current Setting	Long Time Delay	Instan-taneous Pick Up	Short Time Pick Up	Short Time Fixed Delay	Short Time I^2t Delay	Ground Fault Pick Up	Ground Fault Delay
LI	LI	✓	✓	✓					
LIG	LIG	✓	✓	✓				✓	✓
LSI	LSI	✓	✓	✓	✓	✓	✓		
LSIG	LSIG	✓	✓	✓	✓	✓	✓	✓	✓

Neutral Transformers

Ampere Rating	Catalogue Number
1400	**N14SPD**
1600	**N16SPD**

Interrupting Ratings

Breaker Type	RMS Symmetrical kA CSA 22.2 No. 5 / UL 489		
	240V AC	480V AC	600V AC
SPD6-B	65	50	25
SHPD6-B	100	65	50

Mounting Block (Required)②

Catalogue Number
MB9301
MBR9302

All PD, RD Frames:

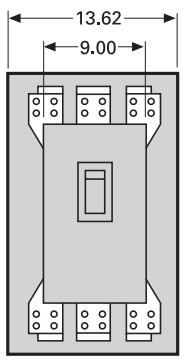

MB9301 (shown)
MBR9302

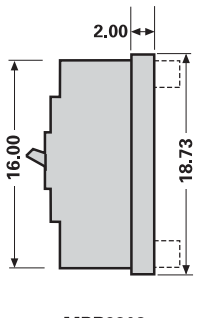

MBR9302

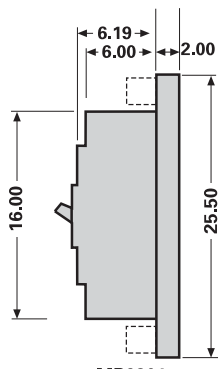

MB9301



MBR9302

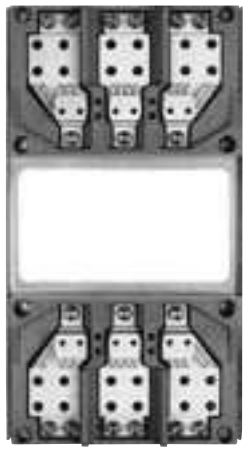

MB9301

For inches / millimeters conversion, see Technical Data section.

Note: "G" suffix in catalogue number denotes circuit breaker for 3-phase, 3-wire circuits. For 3-phase, 4-wire, order correct 4th wire (neutral) transformer as separate and additional item.

All breakers built to order. Allow 2–3 weeks for delivery.
① For additional information, see **Note: A**, page 5-147.
② The PD frame circuit breaker requires the use of a connect-all mounting assembly to allow for placing into service.

③ Advanced trip unit equipped with DAS / Maintenance Mode. Requires customer-supplied 24V external power supply, maintenance switch and light.

Accessories for:

MD/SMD 800A Frame
ND/SND 1200A Frame
PD/SPD 1600A Frame
RD 2000A Frame



Accessory modules can mount in either left hand or right hand poles of all circuit breakers, including solid state. Exception: when mechanical interlock is used accessories cannot be mounted in left pole.

Shunt Trip Combinations

Control Voltage		1 Shunt Trip	1 Shunt Trip and 1 Auxiliary Switch
AC	DC	Catalogue Number	Catalogue Number
120	—	**S01MN6**	**S01MN64A**
208	—	**S02MN6**	**S02MN64A**
240	—	**S03MN6**	**S03MN64A**
277	—	**S15MN6**	**S15MN64A**
480	—	**S04MN6**	**S04MN64A**
600	—	**S06MN6**	—
—	12	**S16MN6**	**S16MN64A**
—	24	**S07MN6**	**S07MN64A**
—	48	**S09MN6**	—
—	125	**S11MN6**	**S11MN64A**
—	250	**S13MN6**	**S13MN64A**

Undervoltage Trip Combinations

Control Voltage		1 Undervoltage Trip	1 Undervoltage Trip and 1 Auxiliary Switch	1 Undervoltage Trip and 2 Auxiliary Switches
AC	DC	Catalogue Number	Catalogue Number	Catalogue Number
120	—	**U01MN6**	**U01MN64A**	**U01MN64AA**
208	—	**U02MN6**	**U02MN64A**	**U02MN64AA**
240	—	**U03MN6**	**U03MN64A**	**U03MN64AA**
277	—	**U15MN6**	**U15MN64A**	**U15MN64AA**
480	—	**U04MN6**	**U04MN64A**	**U04MN64AA**
600	—	**U06MN6**	—	—
—	24	**U07MN6**	**U07MN64A**	**U07MN64AA**
—	48	**U09MN6**	**U09MN64A**	**U09MN64AA**
—	125	**U11MN6**	**U11MN64A**	**U11MN64AA1**
—	250	**U13MN6**	**U13MN64A**	**U13MN64AA**

Auxiliary Switch Combinations

Maximum Voltage		1 Form C*	2 Form C
AC	DC	Catalogue Number	Catalogue Number
480	250	**A01MN64**	**A02MN64**
—	12	**A01MNDLV**	**A02MNDLV**

Alarm Switch Combinations

Maximum Voltage		1 Alarm Switch	1 Alarm Switch and 1 Auxiliary Switch	1 Alarm Switch and 2 Auxiliary Switches
AC	DC	Catalogue Number	Catalogue Number	Catalogue Number
480	250	**B00MN64**	**A01MN64B**	**A02MN64B**

ETU Testing Unit

Breaker Type	Description	Catalogue Number
SJD, SLD, SMD, SND, SPD	Power Stick	**EPSP18V**
	Spare cable for Power Stick	**COMPCA**

The EPSP18V Power Stick is a hand-held, battery-operated power supply that can be used for trip testing the Sensitrip IV electronic trip units. Requires two 9V batteries.

Molded Case Circuit Breakers

RD 2000A Frame Sentron Series

Selection

Type RXD6④

3-Pole 600V AC, 250-500V DC① — Blue Label

Non-Interchangeable Trip (Assembled Circuit Breaker Only Without Lugs)

Continuous Current Rating @ 40°C	Complete Breaker Assembled (Frame/Trip Unit Only) Catalogue Number	Mounting Assembly Catalogue Number	Lugs (6 required) Catalogue Number
1600	RXD63B160	MB9301	
1800	RXD63B180	-or-	TC5R600
2000	RXD63B200	MBR9302	

Type RD6④

3-Pole 600V AC, 250-500V DC① — Blue Label

Interchangeable Trip (Unassembled Circuit Breaker with Lugs)

Continuous Current Rating @ 40°C	Complete Breaker Unassembled Catalogue Number	Frame Only Catalogue Number	Trip Unit Only Catalogue Number	Mounting Assembly Catalogue Number	Lugs (6 required) Catalogue Number
1600	RD63B160		RD63T160	MB9301	
1800	RD63B180	RD63F200	RD63T180	-or-	TC5R600
2000	RD63B200		RD63T200	MBR9302	

Type HRXD6④

Continuous Current Rating @ 40°C	Complete Breaker Assembled (Frame/Trip Unit Only) Catalogue Number
1600	HRXD63B160
1800	HRXD63B180
2000	HRXD63B200

Type HRD6④

Black Label

Continuous Current Rating @ 40°C	Complete Breaker Unassembled Catalogue Number	Frame Only Catalogue Number	Trip Unit Only Catalogue Number	Mounting Assembly Catalogue Number	Lugs (6 required) Catalogue Number
1600	HRD63B160		RD63T160	MB9301	
1800	HRD63B180	HRD63F200	RD63T180	-or-	TC5R600
2000	HRD63B200		RD63T200	MBR9302	

Interrupting Ratings

Breaker Type	CSA 22.2 No. 5 / UL 489 A IR RMS Symmetrical KA Volts AC 240	480	600	Volts DC① 250	500
RD6, RXD6	65	50	25	30 (2P)	25 (3P)
HRD6, HRXD6	100	65	50	30 (2P)	50 (3P)

Instantaneous Adjustment Trip Range (PD / RD Frames)

Breaker Ampere Rating	Nominal Instantaneous Values ±25% Tolerance Low	2	3	4	5	6	7	±20% Tolerance High
1200-2000	5000	5715	6430	7145	7860	8575	9790	10,000



RXD63B200

Mounting Block⑥

Catalogue Number	Connection Points
MB9301	Front
MBR9302	Rear

Shipping Weights

Number of Poles	Number per Carton	Shipping Weight (lbs.)
PXD6, HPXD6, RXD6, HRXD6, CPD6 Assembled Breakers		
3	1	61.5
PD6, HPD6, RD6, HRD6 Frame Only		
3	1	55.0
PD6, RD6 Trip Unit Only		
3	1	6.5
Mounting Assembly		
MB9301	1	53.0
MBR9302	1	50.9

Lugs (6 required per breaker)⑤

Catalogue Number	No of Cables per Connector	Wire Range
TA5P600	1-5	300-600 kcmil Cu/Al
TC5R600	1-5	300-600 kcmil Cu only
TA6R600	1-6	300-600 kcmil Cu/Al

①Use two outside poles of a 3-pole circuit breaker for 250V DC applications.
②When wired as shown on page 5-4, this circuit breaker is CSA Certified / UL Listed and rated for use on 500V DC ungrounded UPS systems only.
③RXD6 and HRXD6 type circuit breakers are CSA Certified / UL Listed for reverse feed applications.
④HACR rated.
⑤For additional information See **Note: A**, page 5-147.
Note: RD frame qualified to UL489 supplement B "NAVAL". See page 5-150 for additional information.
⑥For required mounting base (MB9301 or MBR9302) see page 5-117.

Molded Case Circuit Breakers

Magnetic Trip Only — ETI Motor Circuit Protector

Selection

Breaker Type	Ampere Rating	Instantaneous Trip Range②		Complete Circuit Breaker Without Lugs⑤	
		Minimum③	Maximum③	Catalogue Number 2-Pole	Catalogue Number 3-Pole
HEM	3	9	33	—	**HEM3M003L**
	7	21	77	—	**HEM3M007L**
	15	45	165	—	**HEM3M015L**
	30	90	330	—	**HEM3M030L**
	50	150	550	—	**HEM3M050L**
	70	210	770	—	**HEM3M070L**
	100	300	1100	—	**HEM3M100L**
	SHIPPING:				3.7 lbs. each
ED6-A 600V AC 250V DC	1	2.6	9	—	**ED63A001**
	2	7	22	—	**ED63A002**
	3	10	35	—	**ED63A003**
	5	16	54	—	**ED63A005**
	10	30	100	—	**ED63A010**
	25	55	180	—	**ED63A025**
	30	80	270	—	**ED63A030**
	40	115	375	—	**ED63A040**
	50	180	600	—	**ED63A050**
	100	315	1000	—	**ED63A100**
	125	500	1250	—	**ED63A125**
	SHIPPING:				3.8 lbs. each
CED6-A 600V AC 250V DC	1	2.6	9	—	**CED63A001**
	2	7	22	—	**CED63A002**
	3	10	35	—	**CED63A003**
	5	16	54	—	**CED63A005**
	10	30	100	—	**CED63A010**
	25	55	180	—	**CED63A025**
	30	80	270	—	**CED63A030**
	40	115	375	—	**CED63A040**
	50	180	600	—	**CED63A050**
	100	315	1000	—	**CED63A100**
	125	500	1250	—	**CED63A125**
	SHIPPING:				6 lbs. each
FXD6④ 600V AC 250V DC	150	400	800	—	**FXD63L150**
	150	800	1500	—	**FXD63A150**
	150	1100	2500	—	**FXD63H150**
	250	1100	2500	—	**FXD63A250**
	SHIPPING:				9 lbs. each
CFD6④ 600V AC 250V DC	150	400	800	—	**CFD63L150**
	150	800	1500	—	**CFD63A150**
	150	1100	2500	—	**CFD63H150**
	250	1100	2500	—	**CFD63A250**
	SHIPPING:			12 lbs. each	12 lbs. each
JXD6(A)① 600V AC 250V DC	400	1250	2500	—	**JXD63L400**
	400	2000	4000	**JXD62H400**	**JXD63H400**
	SHIPPING:			16 lbs. each	20 lbs. each
CJD6① 600V AC 250V DC	400	1250	2500	—	**CJD63L400**
	400	2000	4000	—	**CJD63H400**
	SHIPPING:			29.5 lbs. each	31.5 lbs. each
LXD6(A)① 600V AC 250V DC	600	2000	4000	**LXD62L600**	**LXD63L600**
	600	3000	6000	—	**LXD63H600**
	SHIPPING:			16 lbs. each	20 lbs. each
CLD6① 600V AC 250V DC	600	2000	4000	—	**CLD63L600**
	600	3000	6000	—	**CLD63H600**
	SHIPPING:				31.5 lbs. each
LMXD6④ 600V AC 250V DC	800	2800	6000	—	**LMXD63L800**
	800	3200	8000	—	**LMXD63A800**
	SHIPPING:				35 lbs. each
MXD6④ 600V AC 250V DC	800	3000	6000	—	**MXD63L800**
	800	4000	8000	—	**MXD63A800**
	800	5000	10000	—	**MXD63H800**
	SHIPPING:				33 lbs. each
CMD6④ 600V AC 250V DC	800	3000	6000	—	**CMD63L800**
	800	4000	8000	—	**CMD63A800**
	800	5000	10000	—	**CMD63H800**
	SHIPPING:				80 lbs. each

Important Information

ETI interrupting ratings are determined through combination tests with properly sized overload relays and contactors.

⑤ **Connectors included when ordering by circuit breaker catalogue number for HEM, ED and CED6 ETIs. Order ETI circuit breaker and lugs (2 per pole) separately for the FXD6, CFD6, MXD6, CMD6, JXD6, CJD6, LXD6 and CLD6 ETI's.**

① 2-pole available in 3-pole width only.
② When applied on DC Circuits — Trip levels will increase approximately +15 to 20%.
③ Tolerance -20%/+30% for lowest setting. All other settings are -20%/+20%
④ For 2-pole application use outside poles of 3-pole circuit breaker.

Lug Information pages 5-147 - 5-149
Enclosures page 5-139 – 5-146
Accessories pages 5-151 - 5-159

Molded Case Circuit Breakers

Motor Circuits

Application

General

Protection of Motor Circuits

Molded case circuit breakers are used in motor circuits as a disconnecting means and for short-circuit protection. They should be used in conjunction with motor-running, over-current-protection devices, and should permit the motor to start without nuisance tripping from motor-inrush current. The circuit breaker should have a continuous-current rating of not less than 115% of the motor full-load current.

The recommended motor circuit protectors (Siemens ETI instantaneous only circuit breakers) listed have continuous-current ratings of at least 115% of motor full-load currents. The trip-setting positions are approximately 11 times motor full-load currents. The suggested trip settings may have to be adjusted upward to no higher than 1300% of full-load current for non-design E type motors, and no greater than 1700% of full load current for design B & E energy efficient motors, to allow for motor start-up due to inrush currents.

Breaker Mounted Immediately Ahead of Motor Starter

Siemens ETI motor circuit protectors are recommended for use in combination motor starters to provide selective short-circuit protection for the motor branch circuit. The adjustable instantaneous-trip feature of the Siemens ETI motor circuit protector provides for a trip setting slightly above the peak motor-inrush current. With this setting, no delay is introduced in opening the circuit when a fault occurs. This circuit breaker has no time-delay trip element. Therefore it must be used in conjunction with, and immediately ahead of, the motor-running overcurrent protective device.

Important: The information below does not apply to all motor applications: it is recommended that the user refer to the National Electrical Code (NEC) for specific needs.

Table 1 (When Breaker is Mounted Immediately Ahead of Motor Starter)

3 Phase Induction Type Motors (Siemens ETI motor circuit protectors for branch circuit use with alternating-current combination, full voltage motor starters).

Motor Full Load Amperes	Catalogue Number	ETI Trip Setting	
		Adjustment	Amperes
.20 – .33	ED63A001 CED63A001	Low	2.6
.34 – .45		2	4.5
.46 – .56		3	6
.57 – .68		4	7.5
.69 – .81		High	9
.53 – .83	ED63A002 CED63A002	Low	7
.84 – 1.14		2	11
1.15 – 1.45		3	15
1.46 – 1.68		4	19
1.69 – 2.00		High	22
.76 – 1.29	ED63A003 CED63A003	Low	10
1.30 – 1.75		2	17
1.76 – 2.29		3	23
2.30 – 2.68		4	30
2.69 – 3.18		High	35
1.23 – 1.99	ED63A005 CED63A005	Low	16
2.00 – 2.75		2	26
2.76 – 3.52		3	36
3.53 – 4.14		4	46
4.15 – 4.90		High	54
2.30 – 3.83	ED63A010 CED63A010	Low	30
3.84 – 5.37		2	50
5.38 – 6.52		3	70
6.53 – 7.68		4	85
7.69 – 9.10		High	100
4.23 – 6.91	ED63A025 CED63A025	Low	55
6.92 – 9.61		2	90
9.62 – 11.91		3	125
11.92 – 13.83		4	155
13.84 – 16.40		High	180
6.15 – 10.37	ED63A030 CED63A030	Low	80
10.38 – 14.22		2	135
14.23 – 18.06		3	185
18.07 – 20.75		4	235
20.76 – 24.50		High	270
8.84 – 14.22	ED63A040 CED63A040	Low	115
14.23 – 19.60		2	185
19.61 – 24.99		3	255
25.00 – 28.83		4	325
28.84 – 34.00		High	375
13.84 – 23.06	ED63A050 CED63A050	Low	180
23.07 – 31.52		2	300
31.53 – 39.99		3	410
40.00 – 46.14		4	520
46.15 – 54.50		High	600
24.23 – 41.52	ED63A100 CED63A100	Low	315
41.53 – 56.91		2	540
56.92 – 68.45		3	740
68.46 – 76.91		4	890
76.92 – 90.90		High	1000

Motor Full Load Amperes	Catalogue Number	ETI Trip Setting	
		Adjustment	Amperes
38.46 – 55.37	ED63A125 CED63A125	Low	500
55.38 – 70.75		2	720
70.76 – 84.60		3	920
84.61 – 96.14		4	1100
96.15 – 113.60		High	1250
30.76 – 35.37	FXD63L150 CFD63L150	Low	400
35.38 – 39.99		2	460
44.51 – 49.23		4	580
53.84 – 58.45		6	700
58.46 – 63.06		7	760
63.07 – 74.50		High	820
61.53 – 69.22	FXD63A150 CFD63A150	Low	800
69.23 – 76.91		2	900
84.61 – 92.29		4	1100
100.00– 108.00		6	1300
108.00– 115.00		7	1400
115.00– 136.00		High	1500
85.00– 100.00	FXD63A250 CFD63A250	Low	1100
100.00– 115.00		2	1300
131.00– 146.00		4	1700
162.00– 177.00		6	2100
177.00– 192.00		7	2300
192.00– 227.00		High	2500
95.00– 110.00	JXD63L400 CJD63L400	Low	1250
110.00– 124.00		2	1430
138.00– 151.00		4	1790
165.00– 178.00		6	2140
178.00– 192.00		7	2320
192.00– 227.00		High	2500
154.00– 176.00	JXD63H400 CJD63H400	Low	2000
176.00– 198.00		2	2290
220.00– 242.00		4	2860
264.00– 285.00		6	3430
285.00– 308.00		7	3710
308.00– 326.00		High	4000
155.00– 176.00	LXD63L600 CLD63L600	Low	2000
176.00– 198.00		2	2290
220.00– 242.00		4	2860
264.00– 285.00		6	3430
285.00– 308.00		7	3710
308.00– 326.00		High	4000

Motor Full Load Ampres	Catalogue Number	ETI Trip Setting	
		Adjustment	Amperes
231.00 – 264.00	LXD63H600 CLD63H600	Low	3000
264.00 – 292.00		2	3430
330.00 – 362.00		4	4290
395.00 – 428.00		6	5140
428.99 – 462.00		7	5570
462.00 – 490.00		High	6000
215.00 – 238.00	LMXD63L800	Low	2800
238.00 – 261.00		2	3100
261.00 – 284.00		3	3400
308.00 – 369.00		5	4000
369.00 – 423.00		6	4800
423.00 – 462.00		7	5500
462.00 – 490.00		High	6000
246.00 – 269.00	LMXD63A800	Low	3200
269.00 – 284.00		2	3500
284.00 – 323.00		3	3700
362.00 – 492.00		5	4700
492.00 – 562.00		6	6400
562.00 – 616.00		7	7300
616.00 – 660.00		High	8000
231.00 – 264.00	MXD63L800 CMD63L800	Low	3000
264.00 – 292.00		2	3430
292.00 – 330.00		3	3800
362.00 – 395.00		5	4710
428.00 – 462.00		7	5570
462.00 – 490.00		High	6000
308.00 – 352.00	MXD63A800 CMD63A800	Low	4000
352.00 – 442.00		2	4570
442.00 – 447.00		3	5740
483.00 – 527.00		5	6280
571.00 – 616.00		7	7240
616.00 – 660.00		High	8000
385.00 – 440.00	MXD63H800 CMD63H800	Low	5000
495.00 – 550.00		3	6430
605.00 – 660.00		5	7860
660.00 – 695.00		6	8575

Note: Lowest instantaneous settings have a -20%/+30% tolerance and all other settings have a -20%/+20% tolerance.

Breaker Mounted at a Distance From Motor Starter

ET thermal-magnetic circuit breakers conform to the National Electrical Code (2002) table 430-52 requirements for motor branch and feeder circuit protection when properly applied in conjunction with motor-running overcurrent protective devices. The recommended circuit-breaker ratings in Table 2 provide adequate time delay for starting the majority of three-phase induction motors.

To determine the ampere ratings of the ET breaker to protect a motor feeder, add the rating of the ET breaker used to protect the largest motor branch circuit in the group to the full-load currents of the remaining motors in the group.

Interrupt Ratings

For normal commercial purposes, available fault current can conveniently be obtained in the Interrupting Selector Tables.

Table 2 (When Breaker is Mounted at a Distance From Motor Starter)

3 Phase Induction Type Motors (EQ and ET circuit breakers (thermal-magnetic trip) for branch breaker use with alternating-current combination motor starters).

Motor Horse-power Rating	200 and 208V Motors 240V Circuit Breaker Data①			230V Motors 240V Circuit Breaker Data①			460V Motors 480V Circuit Breaker Data①			575V Motors 600V Circuit Breaker Data①		
	Breaker Type	Catalogue Number	Ampere Rating	Breaker Type	Catalogue Number	Ampere Rating	Breaker Type	Catalogue Number	Ampere Rating	Breaker Type	Catalogue Number	Ampere Rating
½ ¾ 1 1½ 2 3	BQ②	**BQ3B015** **BQ3B015** **BQ3B015** **BQ3B015** **BQ3B020** **BQ3B030**	15 15 15 15 20 30	BQ②	**BQ3B015** **BQ3B015** **BQ3B015** **BQ3B015** **BQ3B015** **BQ3B020**	15 15 15 15 15 20	ED4	**ED43B015** **ED43B015** **ED43B015** **ED43B015** **ED43B015** **ED43B015**	15 15 15 15 15 15	ED6	**ED63B015** **ED63B015** **ED63B015** **ED63B015** **ED63B015** **ED63B015**	15 15 15 15 15 15
5 71⁄2 10 15 20	BQ②	**BQ3B040** **BQ3B060** **BQ3B070** **BQ3B100**	40 60 70 100	BQ②	**BQ3B030** **BQ3B050** **BQ3B070** **BQ3B090** **BQ3B100**	30 50 70 90 100	ED4	**ED43B015** **ED43B030** **ED43B030** **ED43B040** **ED43B050**	15 30 30 40 50	ED6	**ED63B015** **ED63B020** **ED63B030** **ED63B035** **ED63B050**	15 20 30 35 50
25 30 40 50	FXD6	**FXD63B125** **FXD63B150** **FXD63B175** **FXD63B200** **FXD63B225**	125 150 175 200 225	FXD6	**FXD63B125** **FXD63B150** **FXD63B175** **FXD63B200**	125 150 175 200	FXD6	**FXD63B090** **FXD63B100** **FXD63B125** **FXD63B150**	90 100 125 150	FXD6	**FXD63B060** **FXD63B070** **FXD63B090** **FDX63B100**	60 70 90 100
60	JXD2	**JXD23B300**	300	—	—	—	FXD6, FD6	**FXD63B150**	150	FXD6	**FXD63B100**	100
75	JXD2	**JXD23B400**	400	JXD2	**JXD23B350**	350	FXD6, FD6	**FXD63B200**	200	FXD6, FD6	**FXD63B125**	125
100	JXD2	**JXD23B400**	400	JXD2	**JXD23B400**	400	FD6③ JD6③	**FD63B250** **JD63B250**	250 250	FXD6, FD6	**FD63B175**	175
125	LD6③ or LMD6	**LD63B600** **LMD63B600**	600	LD6③ or LMD6	**LD63B500 or LMD63B500**	500	JD6③	**JD63B300**	300	FXD6, FD6 OR JD6③	**FXD63B200** **JD63B200**	200 200
150	LD6③or LMD6	**LD63B600 or LMD63B600**	600	LMD6	**LD63B600 or LMD63B600**	600	JD6③	**JD63B300**	300	FXD6 or JD6③	**FXD63B225** **JD63B225**	225 225
200 250 300 350 400 500	LMD6 — — — — —	**LMD63B800** — — — — —	800 — — — — —	LMD6 — — — — —	**LMD63B800** — — — — —	800 — — — — —	JD6③ JD6③ LD6③ or LMD6 LMD6 LMD6 —	**JD63B350** **JD63B400** **LD63B600 or LMD63B600** **LMD63B700** **LMD63B800** —	350 400 600 700 800 —	JD6③ JD6③ JD6③ LD6③ or LMD6 LD6③ or LMD6 LMD6	**JD63B300** **JD63B400** **JD63B400** **LD63B500 or LMD63B500** **LD63B600 or LMD63B600** **LMD63B800**	300 400 400 500 600 800

①The selection of breakers for this table is in accordance with Article 430, 2002 National Electric Code. The Canadian electrical code should also be referred to for rating information. Recommended circuit breakers are for full voltage starting, special consideration is necessary for reduced voltage starting.

②For panelboard applications, substitute the BL breaker for the BQ, ED2 circuit breakers may also be used.

③For non-interchangeable trip applications, substitute the FXD6 for the FD6, the JXD6 for the JD6, or the LXD6 for the LD6.

Molded Case Circuit Breakers

Adjustable Instantaneous Magnetic Trip Settings

Application

Breaker Type	Maximum Continuous Amperes	Nominal AC Adjustable Trip Range								ETI Motor Circuit Protector Catalogue Number	Thermal Magnetic Catalogue Number	
		Low	2	3	4	5	6	7	High	3-Pole	2-Pole	3-Pole
HEM	3	9	15	21	27	30	—	—	33	**HEM3M003L**	—	—
	7	21	35	49	63	70	—	—	77	**HEM3M007L**	—	—
	15	45	75	100	135	150	—	—	165	**HEM3M015L**	—	—
	30	90	150	210	270	300	—	—	330	**HEM3M030L**	—	—
	50	150	250	350	450	500	—	—	550	**HEM3M050L**	—	—
	70	210	350	490	630	700	—	—	770	**HEM3M070L**	—	—
	100	300	500	700	900	1000	—	—	1100	**HEM3M100L**	—	—
ED6	1	2.6	4.5	6	7.5	—	—	—	9	**ED63A001**	—	—
	2	7	11	15	19	—	—	—	22	**ED63A002**	—	—
	3	10	17	23	30	—	—	—	35	**ED63A003**	—	—
	5	16	26	36	46	—	—	—	54	**ED63A005**	—	—
	10	30	50	70	85	—	—	—	100	**ED63A010**	—	—
	25	55	90	125	155	—	—	—	180	**ED63A025**	—	—
	30	80	135	185	235	—	—	—	270	**ED63A030**	—	—
	40	115	185	255	325	—	—	—	375	**ED63A040**	—	—
	50	180	300	410	520	—	—	—	600	**ED63A050**	—	—
	100	315	540	740	890	—	—	—	1000	**ED63A100**	—	—
	125	500	720	920	1100	—	—	—	1250	**ED63A125**	—	—
CED6	1	2.6	4.5	6	7.5	—	—	—	9	**CED63A001**	—	—
	2	7	11	15	19	—	—	—	22	**CED63A002**	—	—
	3	10	17	23	30	—	—	—	35	**CED63A003**	—	—
	5	16	26	36	46	—	—	—	54	**CED63A005**	—	—
	10	30	50	70	85	—	—	—	100	**CED63A010**	—	—
	25	55	90	125	155	—	—	—	180	**CED63A025**	—	—
	30	80	135	185	235	—	—	—	270	**CED63A030**	—	—
	40	115	185	255	325	—	—	—	375	**CED63A040**	—	—
	50	180	300	410	520	—	—	—	600	**CED63A050**	—	—
	100	315	540	740	890	—	—	—	1000	**CED63A100**	—	—
	125	500	720	920	1100	—	—	—	1250	**CED63A125**	—	—
FXD6-A	70	600	640	690	730	770	810	850	900	—	**FXD62B070**	**FXD63B070**
	80	600	640	690	730	770	810	850	900	—	**FXD62B080**	**FXD63B080**
	90	600	640	690	730	770	810	850	900	—	**FXD62B090**	**FXD63B090**
	100	700	770	840	920	990	1060	1140	1200	—	**FXD62B100**	**FXD63B100**
	110	700	770	840	920	990	1060	1140	1200	—	**FXD62B110**	**FXD63B110**
	125	800	900	1000	1100	1200	1300	1400	1500	—	**FXD62B125**	**FXD63B125**
	150	400	460	520	580	640	700	760	820	**FXD63L150**	—	—
	150	800	900	1000	1100	1200	1300	1400	1500	**FXD63A150**	**FXD62B150**	**FXD63B150**
	150	1100	1300	1500	1700	1900	2100	2300	2500	**FXD63H150**	—	—
	175	900	1060	1210	1370	1520	1780	1930	2000	—	**FXD62B175**	**FXD63B175**
	200	900	1060	1210	1370	1520	1780	1930	2000	—	**FXD62B200**	**FXD63B200**
	225	1100	1300	1500	1700	1900	2100	2300	2500	—	**FXD62B225**	**FXD63B225**
	250	1100	1300	1500	1700	1900	2100	2300	2500	**FXD63A250**	**FXD62B250**	**FXD63B250**
FD6-A	70	600	640	690	730	770	810	850	900	—	**FD62B070**	**FD63B070**
	80	600	640	690	730	770	810	850	900	—	**FD62B080**	**FD63B080**
	90	600	640	690	730	770	810	850	900	—	**FD62B090**	**FD63B090**
	100	700	770	840	920	990	1060	1140	1200	—	**FD62B100**	**FD63B100**
	110	700	770	840	920	990	1060	1140	1200	—	**FD62B110**	**FD63B110**
	125	800	900	1000	1100	1200	1300	1400	1500	—	**FD62B125**	**FD63B125**
	150	800	900	1000	1100	1200	1300	1400	1500	—	**FD62B150**	**FD63B150**
	175	900	1060	1210	1370	1520	1780	1930	2000	—	**FD62B175**	**FD63B175**
	200	900	1060	1210	1370	1520	1780	1930	2000	—	**FD62B200**	**FD63B200**
	225	1100	1300	1500	1700	1900	2100	2300	2500	—	**FD62B225**	**FD63B225**
	250	1100	1300	1500	1700	1900	2100	2300	2500	—	**FD62B250**	**FD63B250**
HFD6	70	600	640	690	730	770	810	850	900	—	**HFD62B070**	**HFD63B070**
	80	600	640	690	730	770	810	850	900	—	**HFD62B080**	**HFD63B080**
	90	600	640	690	730	770	810	850	900	—	**HFD62B090**	**HFD63B090**
	100	700	770	840	920	990	1060	1140	1200	—	**HFD62B100**	**HFD63B100**
	110	700	770	840	920	990	1060	1140	1200	—	**HFD62B110**	**HFD63B110**
	125	800	900	1000	1100	1200	1300	1400	1500	—	**HFD62B125**	**HFD63B125**
	150	800	900	1000	1100	1200	1300	1400	1500	—	**HFD62B150**	**HFD63B150**
	175	900	1060	1210	1370	1520	1780	1930	2000	—	**HFD62B175**	**HFD63B175**
	200	900	1060	1210	1370	1520	1780	1930	2000	—	**HFD62B200**	**HFD63B200**
	225	1100	1300	1500	1700	1900	2100	2300	2500	—	**HFD62B225**	**HFD63B225**
	250	1100	1300	1500	1700	1900	2100	2300	2500	—	**HFD62B250**	**HFD63B250**
HHFD6	70	600	640	690	730	770	810	850	900	—	—	**HHFD63B070**
	80	600	640	690	730	770	810	850	900	—	—	**HHFD63B080**
	90	600	640	690	730	770	810	850	900	—	—	**HHFD63B090**
	100	700	770	840	920	990	1060	1140	1200	—	—	**HHFD63B100**
	110	700	770	840	920	990	1060	1140	1200	—	—	**HHFD63B110**
	125	800	900	1000	1100	1200	1300	1400	1500	—	—	**HHFD63B125**
	150	800	900	1000	1100	1200	1300	1400	1500	—	—	**HHFD63B150**
	175	900	1060	1210	1370	1520	1780	1930	2000	—	—	**HHFD63B175**
	200	900	1060	1210	1370	1520	1780	1930	2000	—	—	**HHFD63B200**
	225	1100	1300	1500	1700	1900	2100	2300	2500	—	—	**HHFD63B225**
	250	1100	1300	1500	1700	1900	2100	2300	2500	—	—	**HHFD63B250**
CFD6	70	600	640	690	730	770	810	850	900	—	**CFD62B070**	**CFD63B070**
	80	600	640	690	730	770	810	850	900	—	**CFD62B080**	**CFD63B080**
	90	600	640	690	730	770	810	850	900	—	**CFD62B090**	**CFD63B090**
	100	700	770	840	920	990	1060	1140	1200	—	**CFD62B100**	**CFD63B100**
	110	700	770	840	920	990	1060	1140	1200	—	**CFD62B110**	**CFD63B110**
	125	800	900	1000	1100	1200	1300	1400	1500	—	**CFD62B125**	**CFD63B125**
	150	400	460	520	580	640	700	760	820	**CFD63L150**	—	—
	150	800	900	1000	1100	1200	1300	1400	1500	**CFD63A150**	**CFD62B150**	**CFD63B150**
	150	1100	1300	1500	1700	1900	2100	2300	2500	**CFD63H150**	—	—
	175	900	1060	1210	1370	1520	1780	1930	2000	—	**CFD62B175**	**CFD63B175**
	200	900	1060	1210	1370	1520	1780	1930	2000	—	**CFD62B200**	**CFD63B200**
	225	1100	1300	1500	1700	1900	2100	2300	2500	—	**CFD62B225**	**CFD63B225**
	250	1100	1300	1500	1700	1900	2100	2300	2500	**CFD63A250**	**CFD62B250**	**CFD63B250**

Note: Tolerances for instantaneous trip points meet CSA C22.2 NO.5 / UL 489(7.3). Nominal AC instantaneous trip points are given in the tables. For DC instantaneous trip points, add 15% to nominal values. Instantaneous trip adjustment is made through the breaker cover on all frame breakers. To change instantaneous trip point on circuit breaker, depress indicating knob, then rotate to desired position.

Built to order. Allow 2–3 weeks for delivery.

Molded Case Circuit Breakers

Adjustable Instantaneous Magnetic Trip Settings

Application

Breaker Type	Maximum Continuous Amperes	Nominal AC Adjustable Trip Range								ETI Motor Circuit Protector Catalogue Number	Thermal Magnetic Catalogue Number	
		Low	2	3	4	5	6	7	High	3-Pole	2-Pole	3-Pole
JXD2(A)	200	1250	1430	1610	1790	1960	2140	2320	2500	—	JXD22B200	JXD23B200
	225	1250	1430	1610	1790	1960	2140	2320	2500	—	JXD22B225	JXD23B225
	250	1250	1430	1610	1790	1960	2140	2320	2500	—	JXD22B250	JXD23B250
	300	1250	1430	1610	1790	1960	2140	2320	2500	—	JXD22B300	JXD23B300
	350	2000	2290	2570	2860	3140	3430	3710	4000	—	JXD22B350	JXD23B350
	400	2000	2290	2570	2860	3140	3430	3710	4000	—	JXD22B400	JXD23B400
JXD6(A)	200	1250	1430	1610	1790	1960	2140	2320	2500	—	JXD62B200	JXD63B200
	225	1250	1430	1610	1790	1960	2140	2320	2500	—	JXD62B225	JXD63B225
	250	1250	1430	1610	1790	1960	2140	2320	2500	—	JXD62B250	JXD63B250
	300	1250	1430	1610	1790	1960	2140	2320	2500	—	JXD62B300	JXD62B300
	350	2000	2290	2570	2860	3140	3430	3710	4000	—	JXD62B350	JXD23B350
	400	2000	2290	2570	2860	3140	3430	3710	4000	—	JXD62B400	JXD23B400
JD6(A)	200	1250	1430	1610	1790	1960	2140	2320	2500	—	JD62B200	JD63B200
	225	1250	1430	1610	1790	1960	2140	2320	2500	—	JD62B225	JD63B225
	250	1250	1430	1610	1790	1960	2140	2320	2500	—	JD62B250	JD63B250
	300	1250	1430	1610	1790	1960	2140	2320	2500	—	JD62B300	JD63B300
	350	2000	2290	2570	2860	3140	3430	3710	4000	—	JD62B350	JD63B350
	400	1250	1430	1610	1790	1960	2140	2320	2500	JXD63L400	—	—
	400	2000	2290	2570	2860	3140	3430	3710	4000	JXD63H400	JD62B400	JD63B400
HJD6(A)	200	1250	1430	1610	1790	1960	2140	2320	2500	—	HJD62B200	HJD63B200
	225	1250	1430	1610	1790	1960	2140	2320	2500	—	HJD62B225	HJD63B225
	250	1250	1430	1610	1790	1960	2140	2320	2500	—	HJD62B250	HJD63H250
	300	1250	1430	1610	1790	1960	2140	2320	2500	—	HJD62B300	HJD63B300
	350	2000	2290	2570	2860	3140	3430	3710	4000	—	HJD62B350	HJD63B350
	400	2000	2290	2570	2860	3140	3430	3710	4000	—	HJD62H400	HJD63B400
HHJD6	200	1250	1430	1610	1790	1960	2140	2320	2500	—	HHJD62B200	HHJD63B200
	225	1250	1430	1610	1790	1960	2140	2320	2500	—	HHJD62B225	HHJD63B225
	250	1250	1430	1610	1790	1960	2140	2320	2500	—	HHJD62B250	HHJD63B250
	300	1250	1430	1610	1790	1960	2140	2320	2500	—	HHJD62B300	HHJD63B300
	350	2000	2290	2570	2860	3140	3430	3710	4000	—	HHJD62B350	HHJD63B350
	400	2000	2290	2570	2860	3140	3430	3710	4000	—	HHJD62B400	HHJD63B400
CJD6	200	1250	1430	1610	1790	1960	2140	2320	2500	—	—	CJD63B200
	225	1250	1430	1610	1790	1960	2140	2320	2500	—	—	CJD63B225
	250	1250	1430	1610	1790	1960	2140	2320	2500	—	—	CJD63B250
	300	1250	1430	1610	1790	1960	2140	2320	2500	—	—	CJD63B300
	350	2000	2290	2570	2860	3140	3430	3710	4000	—	—	CJD63B350
	400	2000	2290	2570	2860	3140	3430	3710	4000	CJD63H400	—	CHD63B400
	400	1250	1450	1610	1790	1960	2140	2320	2500	CJD63L400	—	—
LXD6(A)	450	2000	2290	2570	2860	3140	3430	3710	4000	—	LXD62B450	LXD63B450
	500	3000	3430	3860	4290	4710	5140	5570	6000	—	LXD62B500	LXD63B500
	600	3000	3430	3860	4290	4710	5140	5570	6000	—	LXD62B600	LXD63B600
LD6(A)	250	1250	1430	1610	1790	1960	2140	2320	2500	—	LD62B250	LD63B250
	300	1250	1430	1610	1790	1960	2140	2320	2500	—	LD62B300	LD63B300
	350	2000	2290	2570	2860	3140	3430	3710	4000	—	LD62B350	LD63B350
	400	2000	2290	2570	2860	3140	3430	3710	4000	—	LD62B400	LD63B400
	450	2000	2290	2570	2860	3140	3430	3710	4000	—	LD62B450	LD63B450
	500	3000	3430	3800	4290	4710	5140	5570	6000	—	LD62B500	LD63B500
	600	2000	2290	2570	2860	3140	3430	3710	4000	LXD63L600	—	—
	600	3000	3430	3800	4290	4710	5140	5570	6000	LXD63H600	LD62B600	LD63B600
HLD6(A)	250	1250	1430	1610	1790	1960	2140	2320	2500	—	HLD62B250	HLD63B250
	300	1250	1430	1610	1790	1960	2140	2320	2500	—	HLD62B300	HLD63B300
	350	2000	2290	2570	2860	3140	3430	3710	4000	—	HLD62B350	HLD63B350
	400	2000	2290	2570	2860	3140	3430	3710	4000	—	HLD62B400	HLD63B400
	450	2000	2290	2570	2860	3140	3430	3710	4000	—	HLD62B450	HLD63B450
	500	3000	3430	3860	4290	4710	5140	5570	6000	—	HLD62B500	HLD63B500
	600	3000	3430	3860	4290	4710	5140	5570	6000	—	HLD62B600	HLD63B600
HHLD6	250	1250	1430	1610	1790	1960	2140	2320	2500	—	HHLD62B250	HHLD63B250
	300	1250	1430	1610	1790	1960	2140	2320	2500	—	HHLD62B300	HHLD63B300
	350	2000	2290	2570	2860	3140	3430	3710	4000	—	HHLD62B350	HHLD63B350
	400	2000	2290	2570	2860	3140	3430	3710	4000	—	HHLD62B400	HHLD63B400
	450	2000	2290	2570	2860	3140	3430	3710	4000	—	HHLD62B450	HHLD63B450
	500	3000	3430	3860	4290	4710	5140	5570	6000	—	HHLD62B500	HHLD63B500
	600	3000	3430	3860	4290	4710	5140	5570	6000	—	HHLD62B600	HHLD63B600
CLD6	250	1250	1430	1610	1790	1960	2140	2320	2500	—	—	CLD63B250
	300	1250	1430	1610	1790	1960	2140	2320	2500	—	—	CLD63B300
	350	2000	2290	2570	2860	3140	3430	3710	4000	—	—	CLD63B359
	400	2000	2290	2570	2860	3140	3430	3710	4000	—	—	CLD63B400
	450	2000	2290	2570	2860	3140	3430	3710	4000	—	—	CLD63B450
	500	3000	3430	3860	4290	4710	5140	5570	6000	—	—	CLD63B500
	600	2000	2290	2570	2860	3140	3430	3710	4000	CLD63L600	—	—
	600	3000	3430	3860	4290	4710	5140	5570	6000	CLD63H600	—	CLD63B600
LMXD6	500	3000	3430	3860	4290	4710	5140	5570	6000	—	—	LMXD63B500
	600	3000	3430	3860	4290	4710	5140	5570	6000	—	LMXD62B600	LMXD63B600
	700	3200	3500	3700	4200	4700	6400	7300	8000	—	LMXD62B700	LMXD63B700
	800	2800	3100	3400	3700	4000	4800	5500	6000	LMXD63L800	—	—
	800	3200	3500	3700	4200	4700	6400	7300	8000	LMXD63A800	LMXD62B800	LMXD63B800
LMD6	500	3000	3430	3860	4290	4710	5140	5570	6000	—	LMD62B500	LMD63B500
	600	3000	3430	3860	4290	4710	5140	5570	6000	—	LMD62B600	LMD63B600
	700	3200	3500	3700	4200	4700	6400	7300	8000	—	LMD62B700	LMD63B700
	800	3200	3500	3700	4200	4700	6400	7300	8000	—	LMD62B800	LMD63B800

Molded Case Circuit Breakers

Adjustable Instantaneous Magnetic Trip Settings

Application

Breaker Type	Maximum Continuous Amperes	Nominal AC Adjustable Trip Range								ETI Motor Circuit Protector Catalogue Number	Thermal Magnetic Catalogue Number	
		Low	2	3	4	5	6	7	High	3-Pole	2-Pole	3-Pole
HLMXD6	500	3000	3430	3860	4290	4710	5140	5570	6000	—	—	**HLMXD63B500**
	600	3000	3430	3860	4290	4710	5140	5570	6000	—	—	**HLMXD63B600**
	700	3200	3500	3700	4200	4700	6400	7300	8000	—	—	**HLMXD63B700**
	800	3200	3500	3700	4200	4700	6400	7300	8000	—	—	**HLMXD63B800**
HLMD6	500	3000	3430	3860	4290	4710	5140	5570	6000	—	**HLMD62B500**	**HLMD63B500**
	600	3000	3430	3860	4290	4710	5140	5570	6000	—	**HLMD62B600**	**HLMD63B600**
	700	3200	3500	3700	4200	4700	6400	7300	8000	—	**HLMD62B700**	**HLMD63B700**
	800	3200	3500	3700	4200	4700	6400	7300	8000	—	**HLMD62B800**	**HLMD63B800**
MD6	500	3000	3430	3860	4290	4710	5140	5570	6000	—	**MD62B500**	**MD63B500**
	600	3000	3430	3860	4290	4710	5140	5570	6000	—	**MD62B600**	**MD63B600**
	700	4000	4570	5140	5710	6280	6850	7420	8000	—	**MD62B700**	**MD63B700**
	800	3000	3430	3860	4280	4710	5140	5570	6000	**MXD63L800**	—	—
	800	4000	4570	5140	5710	6280	6850	7420	8000	**MXD63A800**	**MD62B800**	**MD63B800**
	800	5000	5715	6430	7145	7860	8575	9290	10000	**MXD63H800**	—	—
MXD6	500	3000	3430	3860	4280	4710	5140	5570	6000	—	**MXD62B500**	**MXD63B500**
	600	3000	3430	3860	4280	4710	5140	5570	6000	—	**MXD62B600**	**MXD63B600**
	700	4000	4570	5140	5710	6280	6850	7420	8000	—	**MXD62B700**	**MXD63B700**
	800	3000	3430	3860	4280	4710	5140	5570	6000	**MXD63L800**	—	—
	800	4000	4570	5140	5710	6280	6850	7420	8000	**MXD63A800**	**MXD62B800**	**MXD63B800**
	800	5000	5715	6430	7145	7860	8575	9290	10000	**MXD63H800**	—	—
HMD6	500	3000	3430	3860	4280	4710	5140	5570	6000	—	**HMD62B500**	**HMD63B500**
	600	3000	3430	3860	4280	4710	5140	5570	6000	—	**HMD62B500**	**HMD63B600**
	700	4000	4570	5140	5710	6280	6850	7420	8000	—	**HMD62B700**	**HMD63B700**
	800	4000	4570	5140	5710	6280	6850	7420	8000	—	**HMD62B800**	**HMD63B800**
HMXD6	500	3000	3430	3860	4280	4710	5140	5570	6000	—	—	**HMXD63B500**
	600	3000	3430	3860	4280	4710	5140	5570	6000	—	—	**HMXD63B600**
	700	4000	4570	5140	5710	6280	6850	7420	8000	—	—	**HMXD63B700**
	800	4000	4570	5140	5710	6280	6850	7420	8000	—	—	**HMXD63B800**
CMD6	400	3000	3430	3860	4280	4710	5140	5570	6000	—	—	**CMD63B400**
	500	3000	3430	3860	4280	4710	5140	5570	6000	—	—	**CMD63B500**
	600	3000	3430	3860	4280	4710	5140	5570	6000	—	—	**CMD63B600**
	700	4000	4570	5140	5710	6280	6850	7420	8000	—	—	**CMD63B700**
	800	3000	3430	3860	4280	4710	5140	5570	6000	**CMD63L800**	—	—
	800	4000	4570	5140	5710	6280	6850	7420	8000	**CMD63A800**	—	**CMD63B800**
	800	5000	5715	6430	7145	7860	8575	9290	10000	**CMD63H800**	—	—
ND6	800	4000	4570	5140	5710	6280	6850	7420	8000	—	**ND62B800**	**ND63B800**
	900	5000	5715	6430	7145	7860	8575	9290	10000	—	**ND62B900**	**ND63B900**
	1000	5000	5715	6430	7145	7860	8575	9290	10000	—	**ND62B100**	**ND63B100**
	1200	5000	5715	6430	7145	7860	8575	9290	10000	—	**ND62B120**	**ND63B120**
NXD6	900	5000	5715	6430	7145	7860	8575	9290	10000	—	**NXD62B900**	**NXD63B900**
	1000	5000	5715	6430	7145	7860	8575	9290	10000	—	**NXD62B100**	**NXD63B100**
	1200	5000	5715	6430	7145	7860	8575	9290	10000	—	**NXD62B120**	**NXD63B120**
HND6	800	4000	4570	5140	5710	6280	6850	7420	8000	—	**HND62B800**	**HND63B800**
	900	5000	5715	6430	7145	7860	8575	9290	10000	—	**HND62B900**	**HND63B900**
	1000	5000	5715	6430	7145	7860	8575	9290	10000	—	**HND62B100**	**HND63B100**
	1200	5000	5715	6430	7145	7860	8575	9290	10000	—	**HND62B120**	**HND63B120**
HNXD6	900	5000	5715	6430	7145	7860	8575	9290	10000	—	—	**HNXD63B900**
	1000	5000	5715	6430	7145	7860	8575	9290	10000	—	—	**HNXD63B100**
	1200	5000	5715	6430	7145	7860	8575	9290	10000	—	—	**HNXD63B120**
CND6	800	4000	4570	5140	5710	6280	6850	7420	8000	—	—	**CND63B800**
	900	5000	5715	6430	7145	7860	8575	9290	10000	—	—	**CND63B900**
	1000	5000	5715	6430	7145	7860	8575	9290	10000	—	—	**CND63B100**
	1200	5000	5715	6430	7145	7860	8575	9290	10000	—	—	**CND63B120**
PD6	1200	5000	5715	6430	7145	7860	8575	9290	10000	—	—	**PD63B120**
	1400	5000	5715	6430	7145	7860	8575	9290	10000	—	—	**PD63B140**
	1600	5000	5715	6430	7145	7860	8575	9290	10000	—	—	**PD63B160**
PXD6	1200	5000	5715	6430	7145	7860	8575	9290	10000	—	—	**PXD63B120**
	1400	5000	5715	6430	7145	7860	8575	9290	10000	—	—	**PXD63B140**
	1600	5000	5715	6430	7145	7860	8575	9290	10000	—	—	**PXD63B160**
HPD6	1200	5000	5715	6430	7145	7860	8575	9290	10000	—	—	**HPD63B120**
	1400	5000	5715	6430	7145	7860	8575	9290	10000	—	—	**HPD63B140**
	1600	5000	5715	6430	7145	7860	8575	9290	10000	—	—	**HPD63B160**
HPXD6	1200	5000	5715	6430	7145	7860	8575	9290	10000	—	—	**HPXD63B120**
	1400	5000	5715	6430	7145	7860	8575	9290	10000	—	—	**HPXD63B140**
	1600	5000	5715	6430	7145	7860	8575	9290	10000	—	—	**HPXD63B160**
CPD6	1200	5000	5715	6430	7145	7860	8575	9290	10000	—	—	**CPD63B120**
	1400	5000	5715	6430	7145	7860	8575	9290	10000	—	—	**CPD63B140**
	1600	5000	5715	6430	7145	7860	8575	9290	10000	—	—	**CPD63B160**
RD6	1800	5000	5715	6430	7145	7860	8575	9290	10000	—	—	**RD63B180**
	2000	5000	5715	6430	7145	7860	8575	9290	10000	—	—	**RD63B200**
RXD6	1800	5000	5715	6430	7145	7860	8575	9290	10000	—	—	**RXD63B180**
	2000	5000	5715	6430	7145	7860	8575	9290	10000	—	—	**RXD63B200**
HRD6	1800	5000	5715	6430	7145	7860	8575	9290	10000	—	—	**HRD63B180**
	2000	5000	5715	6430	7145	7860	8575	9290	10000	—	—	**HRD63B200**

Maximum Frame Amp Rating	2-Pole Catalogue Number	3-Pole Catalogue Number	Self-Protective Instantaneous Override±20%c
100	**BQ2S060** **BQ2S100**	**BQ3S060** **BQ3S100**	1000 1000
125	**ED22S100A** **ED42S100A** **ED42S125A** **ED62S100A** — **CED62S100A CED62S125A**	**ED23S100A** **ED43S100A** **ED43S125A** **ED63S100A** **ED63S125A** **CED63S100A** **CED63S125A**	1000 1000 1000 1000 1000 1000 1000
225	**QJ22S225A**	**QJ23S225A**	2000
250	**FXD62S250A** **HFXD62S250A**	**FXD63S250A** **HFXD63S250A** **CFD63S250A**	3200 3200 3200
400	**JXD22S400A** — —	**JXD23S400A** **JXD63S400A** **HJXD63S400A** **CJD63S400A**	6000 6000 6000 6000
600	— —	**LXD63S600A** **HLXD63S600A** **CLD63S600A**	6000 6000 6000
800	— —	**LMXD63S800A** **MXD63S800A** **CMD63S800A**	8000 8000 8000
1200	—	**NXD63S120A** **CND63S120A**	10000 10000
1600		**PXD63S160A**	10000
2000		**RXD63S200A**	10000

Ordering Information

Order by catalogue number. Switches include frame and self protective trip unit only. Order lugs separately from page 5-134 - 5-136.

① For 2-pole application use outside poles of 3-pole circuit breaker.
② For additional lugs see page 5-134.
③ Molded case switches up to R frame contain a self protecting instantaneous element, which may open circuit above their override set point.
⑤ Requires mounting block MB9301 or MBR9302.

Lugs pages 5-134 - 5-136
Accessories page 5-138 - 5-146

Molded Case Circuit Breakers

Digital Solid State Sentron Sensitrip IV Series

Technical

The Sentron Sensitrip IV circuit breaker is a true RMS current sensing device. Digital microprocessor circuitry within the electronic trip unit provides more precise control over the circuit breaker functions. This control allows circuit coordination flexibility not available with thermal magnetic circuit breakers.

Functions available in Sentron Sensitrip circuit breakers

Catalogue Number Suffix	Trip Type	Cont Current Setting	Long Time Delay	Instan-taneous Pickup	Short Time Pickup	Short Time Fixed Delay	Short Time I2t Delay	Ground Fault Pickup	Ground Fault Delay
LI	LI	√	√	√					
LIG	LIG	√	√	√				√	√
LSI	LSI	√	√	√	√	√	√		
LSIG	LSIG	√	√	√	√	√	√	√	√

Typical Trip Unit Labeling and Adjustment Positions for the Sentron Sensitrip Circuit Breaker.

LI Trip Units①

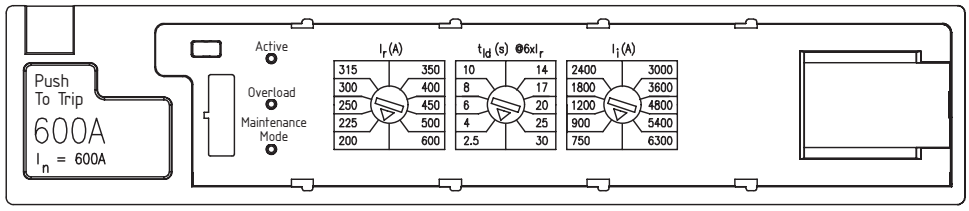

LIG Trip Units①

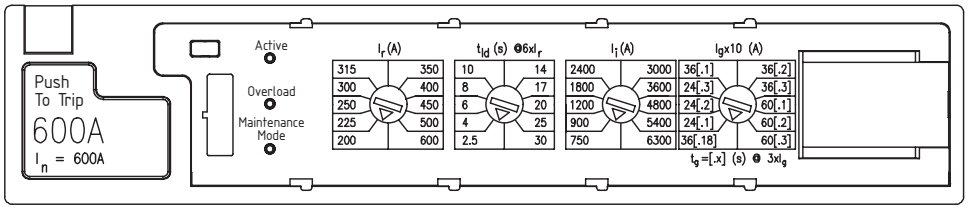

LSI Trip Units①

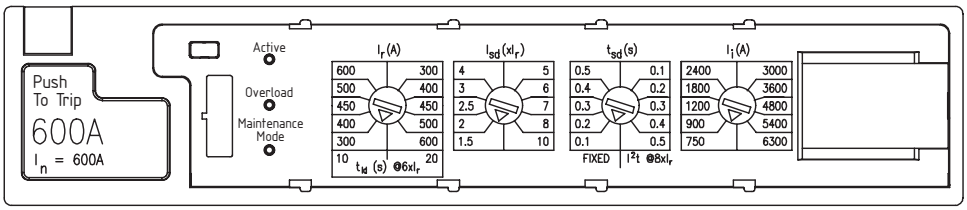

LSIG Trip Units①

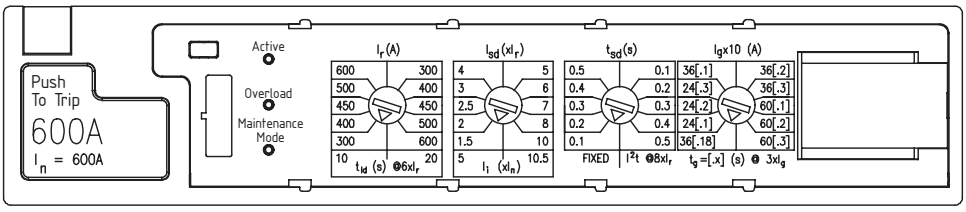

I_n = Maximum circuit breaker ampere rating
I_r = Continuous current rating expressed in amperes
I_i = Instantaneous pickup expressed in amperes
I_{sd} = Short time pickup expressed in multiples of I_r
I_g = Ground fault pickup expressed in amperes
t_{sd} = Short time delay - either fixed or I^2t time delay function
t_{ld} = Long time delay - I^2t time delay function
t_g = Ground fault delay - I^2t time delay function

NOTE: Frame rating (In) of 600A shown as an example. Trip unit settings will vary based on the specific frame rating (In) of the device.

① Schematic of advanced trip unit shown. Basic trip units are identical but do not include DAS / Maintenance Mode functionality.

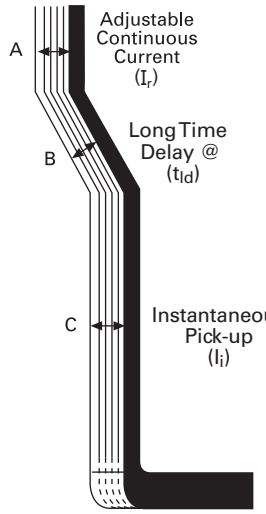

A. Adjustable "Continuous Amps" Rating Switch

All Sensitrip IV solid state molded case circuit breakers have an adjustable ampere rating switch. Adjustments made to this switch change the continuous current rating of the breaker.

B. Adjustable "Long Time Delay" Switch

All Sensitrip IV circuit breakers have an adjustable long time delay switch to allow for selection of long time delays of fixed time intervals at six times the setting of the adjustable "continuous amps" rating switch.

C. Adjustable "Instantaneous Pick-Up" Switch

Sensitrip IV circuit breakers with an adjustable instantaneous pick up switch allow selection of a specific instantaneous trip setting.

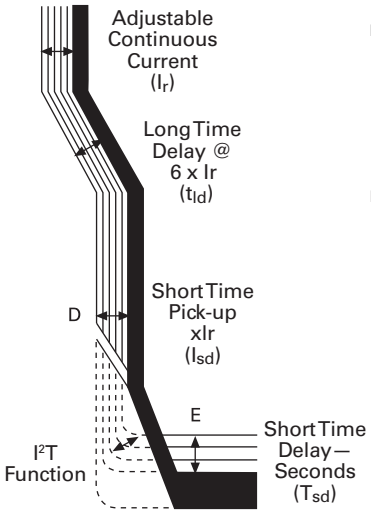

D. Adjustable "Short Time Pick-Up" Switch (Optional)

Sensitrip IV circuit breakers with an adjustable short time pick-up switch allow for selection of short time pick-up in a range from 1.5 to 10 times the setting of the maximum current rating.

E. Adjustable "Short Time Delay" Switch (Optional)

Sensitrip IV circuit breakers with an adjustable short time pick-up switch also contain a switch for adjustment in time delay. The adjustable short time delay switch allows for either of two modes of short time delays. One range of settings enables the breaker to be set for fixed time delays and the other range of settings enables the breaker to be set for short time delays based on I^2t curves.

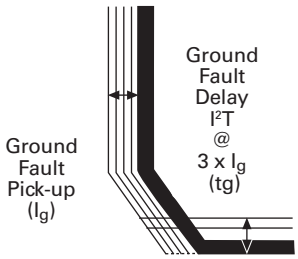

Adjustable "Ground Fault Pick-Up" Switch

Sensitrip IV circuit breakers containing the optional equipment ground fault protection have a ground fault pick-up setting. The ground fault pick-up settings allow for one of three time delays based on I^2t curves.

For 3-phase, 4-wire systems, an external neutral transformer is required with an ampere rating equal to the trip unit ampere rating.

- I_n = Maximum circuit breaker ampere rating
- I_r = Continuous current rating expressed in amperes
- I_i = Instantaneous pickup expressed in amperes
- I_{sd} = Short time pickup expressed in multiples of I_r
- I_g = Ground fault pickup expressed in amperes
- t_{sd} = Short time delay - either fixed or I^2t time delay function
- t_{ld} = Long time delay - I^2t time delay function
- t_g = Ground fault delay - I^2t time delay function

Examples of Adjustment Settings

Catalogue Number SLD6A600LI

	Frame Rating (I_n)	Switch 1	Switch 2	Switch 3
		Continuous Current Setting (I_r)	Long Time Delay Setting (t_{ld})	Instantaneous Pickup Setting (I_i)
Setting	600A	200	2.5	750
Description	600A max current rating	200A	2.5 sec to trip @ 6 x I_r [6 x 200A = 1200A]	750A

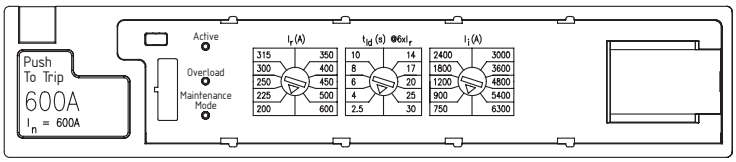

Catalogue Number SLD6A600LSIG

	Frame Rating (I_n)	Switch 1		Switch 2		Switch 3	Switch 4	
		Cont. Current Setting (I_r)	Long Time Delay Setting (t_{ld})	Short Time Pickup Setting (I_{sd})	Instantaneous Pickup Setting (I_i)	Short Time Delay Setting (t_{sd})	Ground Fault Pickup Setting (Ig)	Ground Fault Delay Setting (tg)
Setting	600A	300	10	1.5	5	0.1	36 [.18]	36 [.18]
Description	600A max current rating	300A	10 sec @ 6 x Ir [6 x 300A = 1800A]	1.5 x Ir [1.5 x 200A = 300A]	5 x In [5 x 600A = 3,000A]	0.1 sec	Ig = 36 x 10 [36 x 10 = 360A]	0.18 sec @ 3 x Ig [3 x 360 = 1,080A]

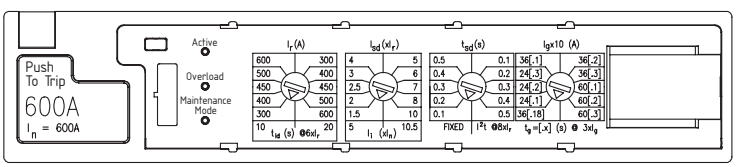

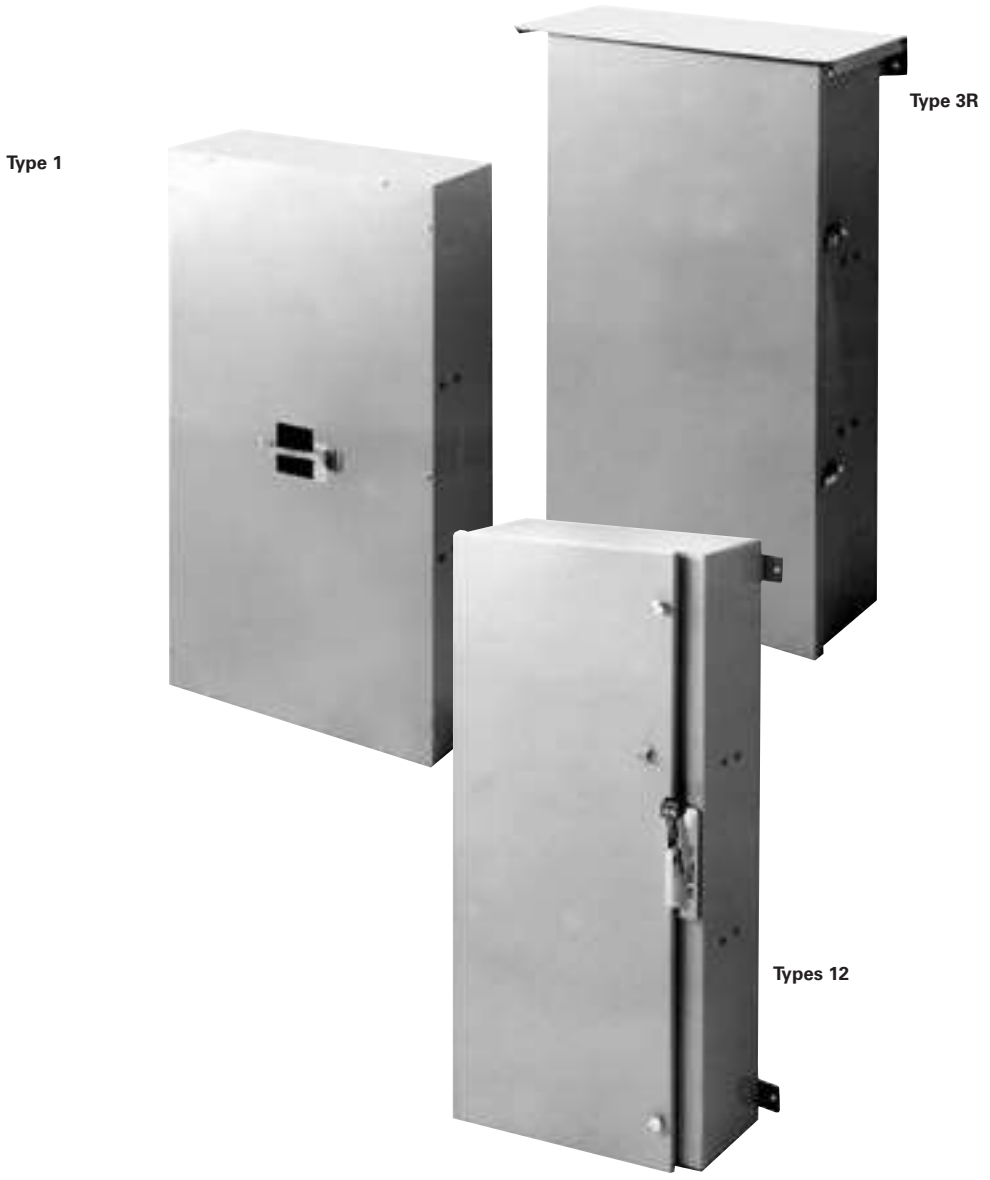

Type 1 — A general indoor, sheet-steel enclosure for use in normal atmospheres.

Type 3R — An outdoor, sheet-steel enclosure providing protection against driving rain, sleet or snow. Listed as service entrance equipment.

Types 12 — A special-industry, sheet-steel enclosure for use in atmospheres containing particles of lint, dust, dirt, sawdust and other foreign matter.

Enclosed Circuit Breakers

Enclosed Breaker Nomenclature

Sample Part Numbers:	E	3R	ED	6	2	B	060	—	NC
	I	II	III	IV	V	VI+	VII	VIII+	IX+
	E	12	JXD	6	3	B*	200	—	NC
	I	II	III	IV	V	VI+	VII	VIII+	IX+
	E	1S	SHJD	6	B	—	400	LSIG	NC
	I	II	III	IV	V	VI+	VII	VIII+	IX+

I	**Base model Start with E**		
Placeholder Position Options			
II	May be replaced by 1S, 1F, 12, or 3R		
III	May be replaced by BQ, BQH, HBQ		
	May be replaced by QR, QRH, or HQR		
	May be replaced by ED, HED, HHED, CED		
	May be replaced by FD, FXD HFXD, HFD, HHFD, HHFXD, CFD		
	May be replaced by JD, JXD, HJD, HJXD, HHJD, HHJXD. CJD		
	May be replaced by FD, FXD JD, JXD, SJD, SHJD, SCJD		
	May be replaced by LD, LXD, HLD, HLXD. HHLD, HHLCD, CLD, SLD, SHLD, SCLD		
	May be replaced by MD, MXD, HMD, HMXD, CMD, SMD, SHMD, SCMD		
	May be replaced by ND, NXD, HND, HNXD, CND, SND, SHND, SCND		
IV	May be replaced by 2, 4, 6		
V	May be replaced by 2, 3, B		
VI+	May be replaced by B, * If option not present omitted		
VII	May be replaced by :		
	QR		100, 125, 150, 175, 200, 225
	ED		015, 020, 025, 030, 040, 045, 050, 060, 070, 080, 090, 100, 110, 125
	FD		070, 080, 090, 100, 110, 125, 150, 175, 200, 225, 250
	JD		200, 225, 250, 300, 350, 400
	LD		300, 400, 450, 500, 600
	MD		600, 700, 800
	ND		900, 1000, 1200
VIII+	May be replaced by "LI, LIG, LSI, LSIG, if option+ not present position omitted		
IX*	NC: Suitable for service entrance,+ If option not present position omitted		

The enclosed breakers are factory assembled. Each enclosed breakers assembly includes the selected type of enclosures, circuit breakers, standard lugs, and Neutral.

Enclosed Circuit Breakers

Enclosures — Type 1

Dimensions

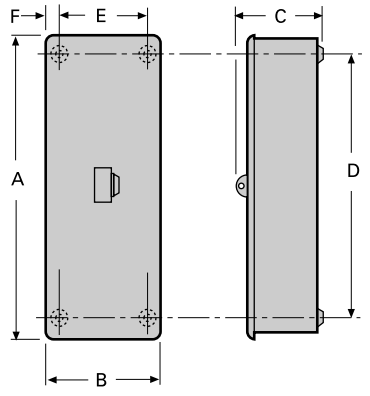

Figure 1

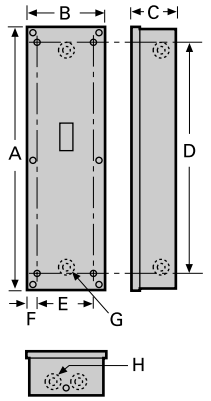

Figure 2

Type 1

Fig. No.	Breaker Type	Number of Poles	Maximum Current Rating	Catalogue⑨ Number	Weight Lb./Ship. Package	Dimensions (inches)						K.O. Dimensions	
												6 Plcs.	2 Plcs.
						A	B	C	D	E	F	G	H
1	BQ, BQH, HBQ	3	100	**EB3100S**①④⑦	32	17 1/8	7 1/8	4 3/4	14 1/6	1 5/16	1 5/16	—	—
2	ED2, ED4, ED6, HED4, HED6	2–3	100	**E2N1S**④ **E2N1F**④	8 8	16 23/32 17 1/2	7 1/2 8 1/2	5 1/16	13 45/64	5 1/4	1	7/8, 11/8, 13/8, 13/4,2	
	ED4, ED6, HED4, HED6, CED6		125	**CED6N1S**④⑥ **CED6N1F**④⑥	14 14	21 15/32 22 1/4	7 19/32 8 1/2	5 7/64	18 1/4				
	FXD6, FD6, FXD6-A, FD6-A, HFD6, HFXD6, HHFD6, CFD6		250	**F6N1S**③ **F6N1F**③	33	38 13/32	11 15/32	5 1/16	33	8	13 3/64	11/8, 13/8, 13/4, 2, 21/2, 3	
3	JXD2(A), JD6(A), JXD6(A), HJD6(A), HJXD6(A), HHJD6, HHJXD6, SJD6(A), SHJD6(A), SXD6H		400	**J6N1**③	120	40 13/64	22 27/64	10 45/64	36	18 1/4	2 5/64	—	—
	LD6(A), LXD6(A), HLD6(A), HLXD6(A), HHLD6, HHLXD6, SLD6(A), SHLD6(A), SCJD6, SCLD6, LXD6H		600	**LD6N1**③ **(L6N1)**③	101	46			42			—	—
	MD6, MXD6, SMD6, HMD6, HMXD6, SHMD6, ND6, NXD6, SND6, HND6, HNXD6, SHND6, CMD6, SCMD6, CND6, SCND6		1200	**MND61**③	132	60		10	55 7/8			—	—

For inches / millimeters conversion, see Technical section.

①Surface mounted, indoor. If flush mounting is required, replace suffix "S" in catalogue number with suffix "F". Also, if outdoor model required, use prefix "W" instead of "E".
② Does not include circuit breaker. Order circuit breaker separately.
③ Neutral not included. Order as separate item from table on next page.
④ Neutral included in enclosure.
⑤ Surface mounted, indoor. If outdoor model is required, use prefix "W" instead of "E". Not available in flush ("F") model.
⑥ Use for 110-125 ampere ED4, ED6, HED4 or HED6 circuit breakers.
⑦ Will not accept breaker with shunt trip.
⑧ Will not accept 2-pole GFCI or breaker with shunt trip.
⑨ Items cannot be ordered separately. See configuration.

Built to order. Consult sales office for factory lead time and prices.

Dimensions

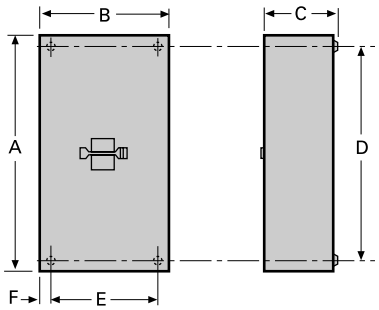

Figure 3

Fig. No.	Breaker Type	Number of Poles	Maximum Current Rating	Catalogue③ Number	Weight Lb./Ship. Package	Dimensions (inches)							
						A	B	C	D	E	F	G	H
1	BQ, BQH, HBQ	3	100	**EB3100S**①④⑦	32	17 1/8	7 1/8	4 3/4	14 1/6	1 5/16	1 5/16	—	—

Neutrals

Enclosure Catalogue Number	Neutral Catalogue Number	Neutral Cable Capacity and Wire Range
E2N1(S)(F) **CED6N1**(S)(F)	**W53045**③	(1 pc.) #14–2 Cu/Al Grd. Lug (1 pc.) #14–8 Cu/Al
F6N1(S)(F)	**N250 (NFD)**	(1 pc.) #6–350 kcmil Grd. Lug (1 pc.) #14–2/0 Cu/Al
J6N1	**W60992 (NJD)**	(1 pc.) #1/0–750 kcmil Cu/Al or (2 pcs.) #1/0–300 kcmil Cu/Al Grd. Lug (1 pc.) #6–250 kcmil Cu/Al
LD6N1	**W60993 (NLD)**	(2 pcs.) #1/0–600 kcmil Grd. Lug (1 pc.) #6–250 kcmil Cu/Al
MND61	**W63623 (NMND)**	(8 pcs.) 250 kcmil–500 kcmil Cu/Al Grd. Lug (1 pc.) #6–300 kcmil Cu/Al

For inches / millimeters conversion, see Technical section.

① Does not include circuit breaker. Order circuit breaker separately.
② Neutral included in enclosure.
③ Items cannot be ordered separately. See configuration.

Built to order. Consult sales office for factory lead time and prices.

Dimensions

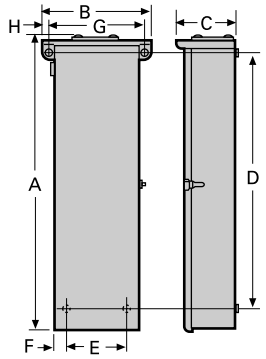

Figure 1

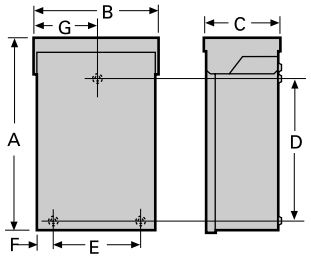

Figure 2

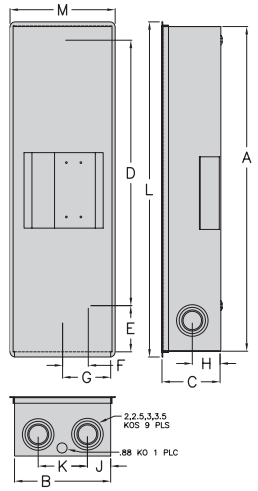

Figure 3

Type 3R

Fig. No.	Breaker Type	Number of Poles	Maximum Current Rating	Catalogue⑤ Number	Weight Lb./Ship. Package	Dimensions (inches)							
						A	B	C	D	E	F	G	H
2	BQ, BQH, HBQ	3	50 100	**WB3100**④	9	17 1/8	7 3/8	4 5/16	14 1/8	4 1/2	1 1/8	3 11/16	—
5	ED2, ED4, ED6, HED4, HED6 CED6	2–3	100 125	**E2N3R**③ **CED6N3R**③	12 16	17 9/16 22 21/64	7 1/4	5 1/4	12 39/64 17 3/8	5 1/4	1	3	—
1	FXD6, FD6, FXD6-A, FD6-A, HFD6, HFXD6, HHFD6, CFD6		250	**F6N3R**②	45	38 1/8	14 1/16	7 3/4	33 9/32	8	13⁄16	13 1/2	13⁄16
	JXD2(A), JD6(A), JXD6(A), HJD6(A), HJXD6(A), HHJD6, HHJXD6, SJD6(A), SHJD6(A), SXD6H		400	**J6N3R**②	126	40 63/64	26 3/4	11 23/32	35 3/4	18 1/4	2 1/8	24 1⁄2	1 1/8
	LD6(A), LXD6(A), LXD6H, HLD6(A), HLXD6(A), HHLD6, CLD6, SCJD6(A), SLD6(A), SHLD6(A)		600	**LD6N3R**②	127	45 63/64			40 3/4				
	MD6, MXD6, SMD6, HMD6, HMXD6, SHMD6, ND6, NXD6, SND6, HND6, HNXD6, SHND6, CMD6, SCMD6, CND6, SCND6		1200	**MND63**②	210	61 31/64			57 17/32			24 5/8	1 1/16

For inches / millimeters conversion, see Technical section.

① Does not include circuit breaker. Order circuit breaker separately.
② Neutral not included. Order as separate item from table on next page.
③ Neutral included in enclosure.
④ Will not accept breaker with shunt trip.
⑤ Items cannot be ordered separately. See configuration.

Dimensions

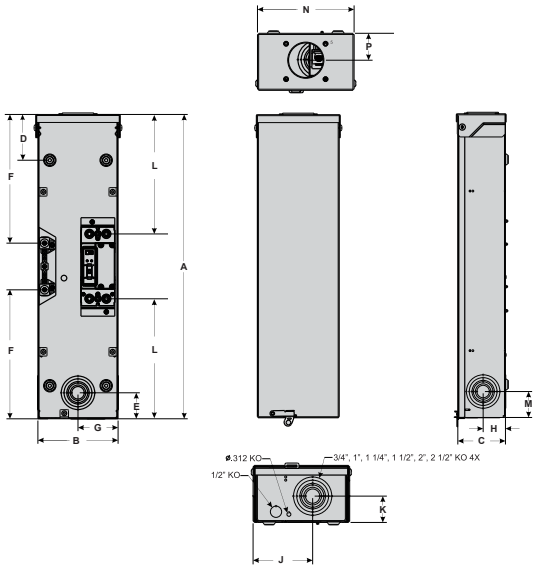

Figure 4

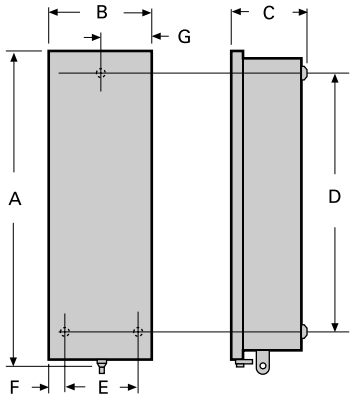

Figure 5

Fig. No.	Breaker Type	Number of Poles	Maximum Current Rating	Weight Lb./Ship. Package	Dimensions (inches)												
					A	B	C	D	E	F	G	H	J	K	L	M	N	P
3	QR2, QR2H, HQR2, QR2H	3	225A	40	31.4	9.1	5.6	25.3	6.1	2.4	4.6	2.2	2.1	4.9	32.2	9.6	—	—
4	QR2, QR2H, HQR2, QR2H	2	225A	40	27	7.1	4.2	4.1	2.3	11 1/2	3.6	2	4.6	2	10.7	2.3	7 1/2	2.1

Neutrals

Enclosure Catalogue Number	Neutral Catalogue Number	Neutral Cable Capacity and Wire Range
E2N3R③	**W53045**③	(1 pc.) #14–2 Cu/Al Grd. Lug (1 pc.) #14–8 Cu/Al
CED6N3R④		
F6N3R②	**N250**	(1 pc.) #6–350 kcmil Grd. Lug (1 pc.) #14–2/0 Cu/Al
JD6N3R②	**W60992**	(1 pc.) #1/0–750 kcmil Cu/Al or (2 pcs.) #1/0–300 kcmil Cu/Al Grd. Lug (1 pc.) #6–250 kcmil Cu/Al
LD6N3R②	**W60993**	(2 pcs.) #1/0–600 kcmil Grd. Lug (1 pc.) #6–250 kcmil Cu/Al
MND63②	**W63623**	(8 pcs.) 250 kcmil–500 kcmil Cu/Al Grd. Lug (1 pc.) #6–300 kcmil Cu/Al

Hubs — see page 5-146

For inches / millimeters conversion, see Technical section.

① Does not include circuit breaker. Order circuit breaker separately.
② Neutral not included. Order as separate item from table on next page.
③ Neutral included in enclosure.
④ Use CED enclosure for all ED-frame 110-125 ampere units.
⑤ Items cannot be ordered separately. See configuration.

Enclosed Circuit Breakers

Enclosures — Type 12

Selection/Dimensions

Fig. No.	Breaker Type	Number of Poles	Maximum Current Rating	Catalogue⑤ Number	Weight Lb./Ship. Package	Dimensions (inches)					
						A	B	C	D	E	F
2	ED2, ED4, ED6, HED4, HED6	2–3	100	**E2N12**③	12	18 5/8	8 11/32	7 1/16	18	6 1/16	1/2
5	CED6		125	**CED6N12**③	16	22 5/8			22		5/8
1	FXD6, FD6, FXD6-A, FD6-A, HFD6, CFD6		250	**F6N12**②	40	38 19/32	14 29/64	8 1/8	34	13	22/32
	JXD2(A), JD6(A), JXD6(A), HJD6(A), HJXD6(A), HHJD6, HHJXD6, SJD6(A), SHJD6(A)		400	**J6N12**②	104	40	25 35/64	11 7/8	36	25 35/64	—
	LD6(A), LXD6(A), HLD6(A), HLXD6(A), HHLD6, HHLXD6, SLD6(A), SHLD6(A), CJD6, CLD6, SCJD6(A), SCLD6(A)		600	**LD6N12**② **(L6N12)**		45			41		—
	MD6, MXD6, SMD6, HMD6, HMXD6, SHMD6, ND6, NXD6, SND6, HND6, HNXD6, SHND6, CMD6, SCMD6, CND6, SCND6		1200	**MND612**②	220	60	37 3/8	10	5/8	3	2

Dimensions

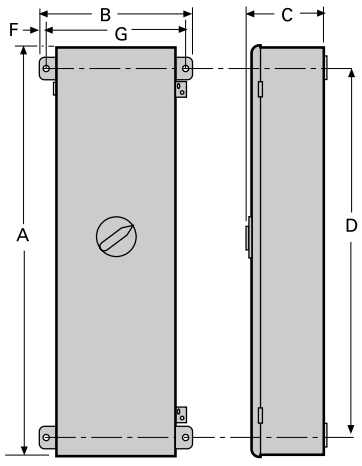

Figure 1

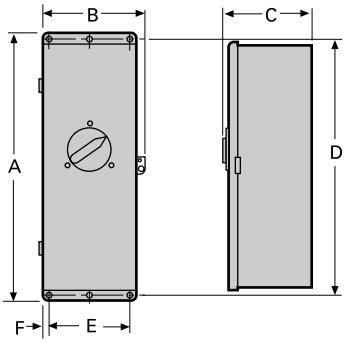

Figure 2

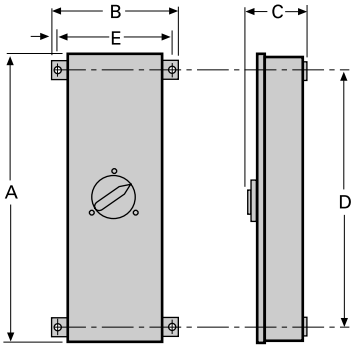

Figure 3

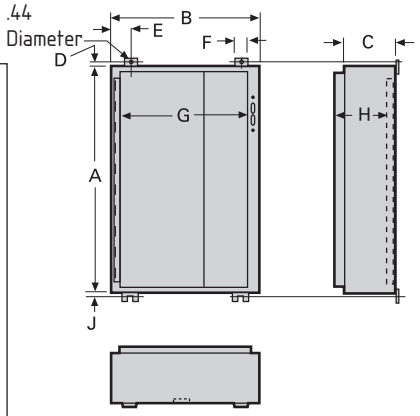

Figure 4

Neutrals

Enclosure Catalogue Number	Neutral Catalogue Number	Neutral Cable Capacity and Wire Range
E2N12③	**W53045**③	(1 pc.) #14–2 Cu/Al
CED6N12④		(1 pc.) #14–2 Cu/Al
F6N12②	**N250**②	(1 pc.) #6–350 kcmil Grd. Lug (1 pc.) #14–2/0 Cu/Al
J6N12②	**W60992**②	(1 pc.) #1/0–750 kcmil Cu/Al or (2 pc.) #1/0–300 kcmil Cu/Al Grd. Lug (1 pc.) #6–250 kcmil Cu/Al
L6N12②	**W60993**②	(2 pcs.) #1/0–600 kcmil Grd. Lug (1 pc.) #6–250 kcmil Cu/Al
MND612②	**W63623**②	(8 pcs.) 250 kcmil–500 kcmil Cu/Al Grd. Lug (1 pc.) #6–300 kcmil Cu/Al

For inches / millimeters conversion, see Technical section.

① Does not include circuit breaker. Order circuit breaker separately.
② Neutral not included. Order as separate item.
③ Neutral included in enclosure.
④ Use CED enclosure for all ED-frame 88-90 ampere units.
⑤ Items cannot be ordered separately. See configuration.

Knockouts & Wire Bending Space

Breaker Type	Conduit Range Per Knockout Outside Dimensions (inches)	Types 1, 12				Type 3R				Maximum Cable Sizes Recommended (Cu/Al) for Type 1, 3R, 4, 4X, 12 & 12K Enclosures③②
		Number of Knockouts Per Panel (type 12 have no KO's)								
		Top	Bottom	Side	Back	Bottom	Side	Back	Maximum Hub Size (inches) Type 3R	
BQ, BQH, HBQ 70–100A	3/4, 1, 1 1/4	1	1	2	2	8	1	3	2	②
ED2, ED4, ED6, HED4	7/8, 1 1/8, 1 3/8, 1 3/4, 2	2	2	2	2	2	1	1	2	②
CED6	7/8, 1 1/8, 1 3/8, 1 3/4, 2 7/8, 1 1/8, 1 3/8, 1 3/4, 2, 2 1/2	— 2	— 2	— 2	— 2	2 —	— 1	— 1	2	(CFD6 only 300 kcmil)②
FXD6, FD6, FXD6-A, FD6-A, HFD6, CFD6	1 1/8, 1 3/8, 1 3/4, 2, 2 1/2, 3	1 1	1 1	2 —	2 —	1 1	1 —	— —	④	②
JXD2(A), JXD6(A), JD6(A), HJD6(A), HJXD6(A), HHJD6, HHJXD6, SJD6(A), SHJD6(A)	1 1/2, 2, 2 1/2, 3, 3 1/2, 4	1	1	2	④	—	—	—	④	(2) 500 kcmil
LXD6(A), LD6(A), HLXD6(A), HLD6(A), HHLD6, HHLXD6, SLD6(A), SHLD6(A)	1 1/2, 2, 2 1/2, 3, 3 1/2, 4	1	1	2	4	—	—	—	④	(2) 500 kcmil
MD6, SMD6, HMD6, ND6, SND6, HND6	—	—	—	—	—	—	—	—	④	(3) 600 kcmil or (4) 500 kcmil

Hubs (Type 3R)

Breaker Type	Conduit Size (inches)	Catalogue Number
BQ, BQH, HBQ, ED2, ED4, ED6, HED4, HED6, CED6	3/4 1 1/4 1 1/2 2	**ECHR075** **ECHR100** **ECHR125** **ECHR150** **ECHR200**
FXD6-A, FD6-A, HFD6, HFXD6, CFD6, JXD2(A), JD6(A), JXD6(A), HJD6(A), HJXD6(A), LD6(A), LXD6(A),HLD6(A), HLXD6(A)	2 1/2 3 3 1/2 4	**ECHV250** **ECHV300** **ECHV350** **ECHV400**



Note: Enclosures for 250A max breakers have a hub provision on the rainshed. Enclosures for larger breakers (J, L, M & N frame) have blank top rainsheds. Drill or punch hole in the field to accommodate hub size desired.

For inches / millimeters conversion, see Technical section.

① 17 1/8" high enclosure provides sufficient wire bending space for all available CB lugs.
② Sufficient wire bending space is provided for all available mechanical type CB lugs.
③ The use of cables larger than those listed below may violate NEC & CSA wire bending space requirements.
④ The use of compression type connectors will violate NEC and CSA wire bending space requirements.

Lug Information

Mechanical Lug

Selection

For Use With Type(s)	Circuit Breaker Ampere Rating	Cables Per Lug	Lug Wire Range	Catalogue Number
BQ, BQH, BQHF BQE, BQF, BL, BLH, HBL, HBQ Switching Neutrals BG, BLG	**Line Side**			
	15–40	1 1	#14–#6 AWG Cu #12–#6 AWG Al"	**TC1Q1**①②
	45–125	1 1	#8–#1 AWG Cu #6–#1/0 AWG Al	**TA1Q1**②
	Load Side			
	15–20	1 1	#14–#10 AWG Cu #12–#10 AWG Al	Lugs are integral to Circuit Breaker
	25–35	1 1	#14–#6 AWG Cu #12–#6 AWG Al	
	40–50	1 1	#8–#6 AWG Cu #8–#4 AWG Al	
	55–70 *exceptions in Table A	1 1	#8–#4 AWG Cu #8–#2 AWG Al	
	80–100	1 1	#4–#1/0 AWG Cu #2–#1/0 AWG Al	
	110–125	1 1	#2–#1/0 AWG Cu #1/0–#2/0 AWG Al	
BQD, CQD BQD6	**Line Side (CQD) & Load Side**			
	15–40	1	#14–#6 AWG Cu #12–#6 AWG Al	Integral
	45–100	1	#8–#1 AWG Cu #6–#1/0 AWG Al	Integral
NGG, HGG, LGG	15–30	1	#14–#6 AWG Cu #12–#6 AWG Al	**TC1Q1**
	15–30	1	#14–#6 AWG Cu #12–#6 AWG Al	**3TC1Q1 (pkg. of 3)**
	35–125	1	#8–#1/0 AWG Cu #8–#2/0 AWG Al	**3TC1GG20 (pkg. of 3)**
	15–125	—	NUT KEEPER PLATE	**TNKG3c (pkg. of 3)**

Connector wire ranges and cavities are established in conjunction with Table 6.1.4.2.1 of UL 489 standards.

Table A

For Use With Type(s)	Circuit Breaker Ampere Rating	Cables Per Lug	Lug Wire Range	Number of Poles
BQ, BL, QP	**Load Side**			
	55-60	1	#8–#4 AWG Cu-Al #3 AWG requires 22 or 65 kAIC	This exception is applicable to 1- and 2-pole only

Note:

(A) Molded case circuit breakers having a rated ampacity of 125 amperes or less are to be connected with 60 or 75°C wire. Circuit breakers having a rated ampacity greater than 125 amperes shall only be cabled with 75°C cable unless otherwise indicated on the circuit breaker label. Exceptions to this rule are outlined in article 110-14 C(1)(2) of the 2005 National Electric Code and table 6.1.4.2.1 per CSA C22.2 No5.02 standard.

(B) Connector wire ranges and cavities are established in conjunction with Table 6.1.4.2.1 of UL 489 standards.

① Lug is steel.

② Sold in package of six.

③ One nut keeper plate is required with each lug on the NGG breaker.

Lug Information

Aluminum Body Lugs for Copper or Aluminum Wire

Selection

For Use With Type(s)	Circuit Breaker Ampere Rating	Cables Per Lug	Lug Wire Range	Catalogue Number
QJ2, QJH2 QJ2H, HQJ2H	60–225	1	#6 AWG–300 kcmil (Cu) #4 AWG–300 kcmil (Al)	**TA1Q300 (pkg of 3)**
All 2, 3 pole ED2, ED4, ED6, ED6 ETI, HED4,	15–25	1	"#14–#10 AWG (Cu) #12–#10 AWG (Al)"	**SA1E025**
	30–100	1	#10–#1/0 (Cu or Al)	**LN1E100**
	110–125	1	#3-3/0 (Cu) #1-2/0 (Al)	**TA1E6125**
CED6 All 1 pole ED, HED	30–60	1	#10–4 (Cu or Al)	**LD1E060 (Load Side)**
	70–100	1	#4–#1/0 (Cu or Al)	**LD1E100 (Load Side)**
FXD6-A, FD6-A, HFD6, CFD6 HHFD6	70–250	1	#6 AWG–350 kcmil (Cu) #4 AWG–350 kcmil (Al)	**TA1FD350A**
SJD6(A), SHJD6(A) SCJD6	65-200	1–2	#4 AWG–310 kcmil (Cu or Al)	**TA2J630**
JXD2(A), JXD6(A), JD6(A), SJD6(A), HJD6(A), HHJXD6, HHJD6, SHJD6(A), CJD6, SCJD6	200–400	1–2	3/0–500 kcmil (Cu) 4/0–500 kcmil (Al)	**TA2J6500**
LXD6(A), LD6(A), SLD6(A), HLD6(A), HHLXD6, HHLD6, SHLD6(A), CLD6, SCLD6	250–600	1–2	3/0–500 kcmil (Cu) 4/0–500 kcmil (Al)	**TA2J6500**
LMD6①, LMXD6①, HLMD6①, HLMXD6①, MD6, MXD6, SMD6, HMD6, HMXD6, SHMD6, CMD6, SCMD6	500–600	1–2	#1–500 kcmil (Cu or Al)	**TA2K500**
		1–3	1/0–500 kcmil (Cu or Al)	**TA3K500**
ND6, NXD6, SND6, HND6, HNXD6, SHND6, CND6, SCND6	800–1200	1–4	250–500 kcmil (Cu or Al)	**2TA4P8500②③** **3TA4P8500④**
			250–500 kcmil (Cu or Al)	**2TA4N8500③** **3TA4N8500④**
PD6, HPD6, CPD6 PXD6, HPXD6, SPD6, SHPD6	1200–1600	1–5	300–600 kcmil (Cu or Al)	**TA5P600**
PD6, PXD6, HPD6, HPXD6, SPD6, SHPD6, RD6, RXD6, HRD6, HRXD6	1200–2000	1–6	300–600 kcmil (Cu or Al)	**TA6R600**

① Use TA2K500 or TA3K500 only.
② Contains 2 connectors plus 1 NDTS end barrier.
③ Contains 3 connectors plus 1 NDTS end barrier.

Lug information

Optional Mechanical Lugs

Selection

For Use With Type	Circuit Breaker Ampere Rating	Cables Per Lug	Lug Material	Lug Wire Range	Qty per Cat. #	Catalogue Number
QJ2, QJH2, QJ2H, HQJ2H	60–225	1	Cu	#6 AWG–250 kcmil (Cu)	1	**TC1Q250**
ED, HED 2&3 pole	2–3 pole 30-125	1	Cu	#10–#1/0 (Cu)	1	**TC1ED6150**
HFD6, HHFD6, CFD6, F(X)D6-A	70–250	1	Cu	#6 AWG–350 kcmil (Cu)	1	**TC1FD350**
J(X)D2(A), J(X)D6(A), HJD6(A), HHJD6, SHJD6(A), L(X)D6(A), HHLD6, SCD6, HLD6(A), SHLD6(A), CJD6, CLD6, SCJD6, SCLD6	200–600	1 1–2	Cu	3/0–600 kcmil (Cu) 3/0–500 kcmil (Cu)	1 1	**TC1J6600**① **TC2J6500**①
	250–600	1 1	Al	500–750 kcmil (Al) 500–600 kcmil (Cu)	1	**TA1L6750**
SMD6, M(X)D6, HM(X)D6, HMD6, CMD6, SCMD6, SND6, N(X)D6, HN(X)D6, SHND6, CND6, SCND6	500–600	1–2	Cu	#1 AWG–500 kcmil (Cu)	1	**TC2K500**
	700–800	1–3	Cu	#1 AWG–350 kcmil (Cu)	1	**TC3K350**
		1–2	Al	500–750 kcmil (Cu) 500–750 kcmil (Al)	2 3	**2TA2N8750** **3TA2N8750**
	800–1200	1–3	Al	500–750 kcmil (Cu) 500–750 kcmil (Al)	2 3	**2TA3N8750** **3TA3N8750**
R(X)D6, HR(X)D6	1600–2000	1–5	Cu	300–600 kcmil (Cu)	1	**TC5R600**
P(X)D6, HP(X)D6, CPD6, SPD6, SHPD6	1200–1600	1–4	Al	600–750 kcmil (Cu/Al)	1	**TA4P750**

Compression Lugs

For Circuit Breaker Types	Ampere Rating	Poles	Lugs Per Kit	Lug Wire Size	Catalogue Number
Lugs (contains indicated number of lugs and necessary hardware per kit)					
ED2, ED4, ED6, HED4, CED4	15–125	1, 2, 3	1	#2/0 AWG Cu/AL	**CCE125**
QJ2, QJH2, QJ2-H	125–225	2, 3	1	350 kcmil Cu/AL	**CCQ225**
F(X)D6-A, HF(X)D6, HHF(X)D6, CFD6	125–250	2, 3	1	350 kcmil	**CCF250**
JXD2-A, J(X)D6-A, HJ(X)D6-A, HHJ(X)D6-A, CJD6, SJD6-A, SHJD6-A, SCJD6, L(X)D6-A, HL(X)D6-A, CLD6, SLD6-A, SHLD6-A, SCLD6	200–600	2, 3	1	500 kcmil	**CCL600**
Kits (contain lugs and hardware for complete line or load end of 2 or 3 pole breaker)					
M(X)D6, HM(X)D6, CMD6, SMD6, SHMD6, SCMD6	500–800	2	6	500 kcmil	**CCM800K2**
		3	9		**CCM800K3**
N(X)D6, HN(X)D6, CND6, SND6, SHND6, SCND6	900–1200	2	8		**CCN1200K2**
		3	12		**CCN1200K3**

Distribution Lugs②

For Circuit Breaker Types	Ampere Rating	Poles	Lugs Per kit	Wires Per Lug	Lug Wire Size	Catalogue Number
NGG, HGG, LGG	15-125	1,2,3	1	6	#6-#4 AL #14-#4 Cu	**TA6GG04**
ED2, ED4, ED6, HED4, HHED6, CED6	15-125	1,2,3	1	6	#14-#4 AWG Cu #6-#4 AWG Al	**TA6ED06**
F(X)D6-A, HF(X)D6, HHF(X)D6, CFD6	70-250	2,3	1	6	#14-#4 AWG Cu #6-#4 AWG Al	**TA6FD04**
XD2-A, J(X)D6-A, HJ(X)D6-A, HHJ(X)D6-A, CJD6-A, JD6, L(X)D6-A, HL(X)D6-A, CLD6-A, LD6-A, SCLD6	200-600	2,3	1	6	14-2/0 AWG Cu #6-2/0 AWG Al	**TA6JD20**

①Used for 100% rated JD/LD frame circuit breakers.

② Special purpose wire connectors, not for general use.

A variety of internal and external accessories, as well as modifications, are available to adapt Siemens circuit breakers to special installation requirements.CSA approved / UL listed internal accessories for 100 through 2000A circuit breakers are field-addable.

Internal accessories fine tune an electrical distribution system, allowing control of the circuit breakers to meet special application requirements. For example, emergency situations may dictate tripping critically placed circuit breakers quickly. Shunt trips accomplish this conveniently and efficiently. Or, when voltage drops are a concern, undervoltage trips automatically open the circuit breaker at a predetermined voltage level.

A wide range of external operating and mounting accessories is also available. For example, face, shallow, and back mounting plates are ideal for tailoring BQ circuit breakers to OEM applications. A complete line of operating handles and handle-blocking devices meet switchboard, enclosure and safety needs. Plug-in mounting assemblies, which simplify switchboard mounting of circuit breakers and permit breaker removal without disconnecting bus or cable connections, are available.

Modifications①

50°C Ambient Calibration — Not CSA approved / UL listed and not available for solid state, 100% rated breakers or 400HZ calibrated breakers.

For BL Type Circuit Breakers
— Add suffix 'M' to catalogue number (Example: B120M)

For BQ, QJ2, and ED Frame Circuit Breakers
— Replace 'B' in catalogue number with 'M' (Example: BQ3M060, QJ23M200, ED63M060)

For FD, JD, LD, LMD, MD, ND, PD, and RD Frame Circuit Breakers
Non-Interchangeable Trip (3–pole only)
— Replace 'B' in catalogue number with 'M' (Example: FXD63M225, JXD63M400)
Interchangeable Trip (trip unit only, 3–pole only)
— Replace 'T' in catalogue number with 'W' (Example: FD63W200, JD63W400)

400 HZ Calibration

CSA approved / UL Listed (5KA IR)
For BQ, BL, and QJ Type Circuit Breakers (200A max.)
— Add suffix 'Y' to catalogue number

Not CSA approved / UL Listed
For all other Circuit Breakers — Add suffix 'Y' to catalogue number

Fungus Proofing — In accordance with MIL-T-152.

All BQD, CQD, NGG, ED, FD, JD, LD, LMD, MD, ND, PD, and RD, Frame Circuit Breakers are inherently fungus resistant and do not require special treatment.

Fungus proofing in accordance with MIL-T-152
For BL, and BQ Type Circuit Breakers
— Order must be placed directly with the factory by the sales office.

For all other Circuit Breaker Types
— Order must be placed directly with the factory by the sales office.

Certificate of Compliance
Certificate of compliance testing must be performed on the actual device being shipped. The certificate cannot be provided after initial shipment. Order for devices with COC requirement must be placed directly with the factory by the sales office.

UL 489 Supplement SB Naval Use Breakers

Breakers tested to UL 489 Supplement SB are qualified for use on non combat and auxiliary naval vessels.

Siemens' molded case breakers from the ED frame through the 2000 Amp SB frame can be labeled "Naval" in compliance with Supplement SB.

Supplement SB testing comprises two sets of vibration tests. The first is to find mechanical resonances in the product and to subject the breaker to extreme testing at each resonant frequency. The second is a swept frequency test, in which the frequency of excitation is changed in intervals of 1Hz, and held at each frequency for five minutes. The excitation frequencies run from 4 to 33Hz, and the test is conducted in each of the three orthogonal axes of the breaker.

During these tests, the breaker must not trip from the closed position, nor may the contacts touch from the open position. Calibration and insulation resistance are also verified during the test.

For detailed information, refer to UL 489, Supplement SB.

Ordering Information①

For "NAVAL" label, order must be placed directly with the factory by Siemens Sales Office.

Types	UL File
ED2, ED4, ED6, HED4	E10848, Vol 4, Sec 11
CED6	E10848, Vol 4, Sec 13
FD6, FXD6, HFD6, HFXD6	E10848, Vol 4, Sec 17
CFD6	E10848, Vol 4, Sec 18
JXD2, JD6, JXD6, LXD6, LD6, HJD6, HJXD6, HLD6, HLXD6	E10848, Vol 4, Sec 8
HHJD6, HHJXD6, HHLD6, HHLXD6	E10848, Vol 4, Sec 20
CJD6, CLD6	E10848, Vol 4, Sec 14
MD6, MXD6, HMD6, HMXD6, CMD6, ND6, NXD6, HND6, HNXD6, CND6	E10848, Vol 4, Sec 15
PD6, PXD6, HPD6, HPXD6, CPD6, RD6, RXD6, HRD6, HRXD6	E10848, Vol 4, Sec 19

① Consult sales office for pricing.

Feature Combinations

The available feature combinations are shown in the chart below. For applications requiring combinations of features not listed in this chart, consult the sales office for availability.

Breakers	Modules/ Breaker	Avail. On Breaker Poles	ST	ST/ AUX	ST/ ALSW	ST/ AUX/ ALSW	UVT	UVT/ AUX	UTV/ ALSW	UVT/ ST/ ALSW	AUX	AUX/ ALSW	ALSW	Elect. Bell Alarm	Ground Fault	Ground Fault w/Bell
QP, BQ, BL①	1	1, 2, 3	1	—	—	—	—	—	—	—	1, 2	—	—	—	—	—
BQD, CQD, NGG	1	2, 3	1	1/1	—	—	—	—	—	—	1, 2	1/1	1	—	—	—
QR⑤	1	2, 3	1, 2	1/1, 2/2	—	—	—	—	—	—	2	—	—	—	—	—
All ED, EF	1	1, 2, 3	1	1/1	1/1	1/1/1	1	1/1, 1/2	1/1	1/1/1	1, 2	1/1, 2/1	1	—	1	1
All FD, FF	2	2, 3	1	—	—	—	1	1	—	—	1, 2	1/1	1	—	—	—
All JD, LD, LMD②	2	2,3	1	1	—	—	1	1/1, 1/2	—	—	1, 2	—	1, 2	—	—	—
SJD6, SHJD6, SCJD6, SLD6, SHLD6, SCLD6③	1	3	1	1	—	—	1	1/1, 1/2	—	—	1, 2	—	1, 2	—	—	—
All MD, ND, PD, RD Including Electronic trip④	2	2,3	1	1/1	—	—	1	1/1, 1/2	—	—	1, 2	1/1, 2/1	1, 2	—	—	—

Shunt Trip (ST)

One or all critical circuit breakers may be tripped from a distant control point by use of a shunt trip device. A shunt trip operates through an auxiliary switch contact; when the breaker opens, current is not maintained on the shunt trip coil.

Undervoltage Trip (UVT)

When voltage drops to a value below 35% of the nominal coil rating, the undervoltage trip device automatically opens the breaker. The operation is instantaneous, and the circuit breaker cannot be reclosed until the voltage returns to 85% of line voltage. The undervoltage trip, which is continuously energized, must be energized before the circuit breaker can be closed.

Auxiliary Switch (AUX)

For applications requiring remote "on" or "off" indication (or electrical interlocking), auxiliary switches are available. Each switch comprises an "A" (open when circuit breaker is open) and a "B" (closed when circuit breaker is open) contact with a common connection. (Form C)

Alarm Switch (ALSW)

The alarm switch contact is closed when the circuit breaker is opened automatically by an overload, short circuit, shunt trip or undervoltage trip. The alarm switch contact is open when the circuit breaker is reset.



For ED Frames



For FD Frames



For JD and LD Frames

① Factory assembled only
② If mechanical interlock is installed, no accessory module can be installed in the right pocket.
③ If mechanical interlock is installed, no accessory module can be installed.
④ If mechanical interlock is installed, no accessory module can be installed in the left pocket.
⑤ Two accessory pockets in 3-pole breakers. One accessory pocket in 2-pole breakers

Circuit Breaker Accessories ④⑤⑥⑦⑧⑨

Catalogue Number	For Use With Breaker Type	Number of Poles	Standard Package
Padlocking Device For locking breaker in "OFF" position. Note "ON" position does not affect breaker fuctionally			
ECPLD1	Type QP, BL, QAF2, QPF2, QE, QT-Duplex, BQ, BQXD	1P	3 Pieces
ECPLD1R	Type QP, BL, QAF2, QPF, QE, QT-Duplex, BQ, BQXD (Red Color)	1P	3 Pieces
ECPLD2	Type QP, BL, QAF2, QPF, QE, BQ, BQXD	2P	3 Pieces
ECPLD2R	Type QP, BL, QAF2, QPF, QE, BQ, BQXD (Red Color)	2P	3 Pieces
ECPLD3	Type QP, BL, QAF2, QPF, QE, BQ	3P	1 Piece
US2:ECPLD3R	Type QP, BL, QAF2, QPF, QE, BQ (Red Color)	3P	1 Piece
ECQLD3	Type QP, BL, BQ, BQXD	1P	10 Pieces
ECQLN3②	150-225 MBKA, QN, QNR	n/a	1 Piece
ECQTH4	Type QP, BL, BQH	Designed for (3) 1P Breakers	1 Piece
Handle Tie Provide simultaneous swiching of 2 adjacent handles.			
ECQTH3	Type QP, BL	2P	50 Pieces
Mechanical Interlock①			
ECQML12	Type QP, BL, BQ Interlock Bracket	Designed for 1" Breaker	10 Pieces
Handle Blocking Device For holding breaker in "ON" or "OFF" position. Not a lockout/tagout device			
ECQL1	Type QP, BL, BQ, BQXD	1P	10 Pieces
Main Breaker Retainer			
ECMBR1③	EQ Load Centers		1 Piece
Mounting Accessories			
MB120	Type BQ, BQH Mounting Clips	1P	20 Pieces
FP9508	Type BQ, BQH FACE MOUNT PLATE	1P	10 Pieces
FP9555	Type BQ, BQH FACE MOUNT PLATE	2P	10 Pieces
FP9556	Type BQ, BQH FACE MOUNT PLATE	3P	10 Pieces
SMB6R	Type BQ MOUNTING BRACKET	1P, 2P, 3P	6 Pieces
TCH65K	Type BQ MOUNTING ADAPTER		500 Pieces
BR2	Type BQ, BQH, BQXD Back Mounting Plates	2P	10 Pieces
BR3	Type BQ, BQH, BQXD Back Mounting Plates	3P	10 Pieces
BR4	Type BQ, BQH, BQXD Back Mounting Plates	4P	10 Pieces
I0204ML1125CU	Type QP Back Mounting Plates	1P, 2P	10 Pieces
I0303ML3100CU	Type QP Back Mounting Plates	3P	10 Pieces
Replacement Lugs			
TA1Q1	Type BQ, NGG 100A Al Cu LGS	n/a	6 Pieces
TC1Q1	Type BQ, NGG 40A Al Cu LUGS	n/a	6 Pieces
Finger Shield			
BQFS1K	Type BQXD Finger Shield (Bulk Pack)	n/a	1000 Pieces
BQFS2	Type BQXD Finger Shield	n/a	2 Pieces
Filler Plate			
ECQF3	1" Filler Plate	n/a	5 Pieces

① For a complete list of standby power mechanical interlock kits, see page 1-25
② For use with Ultimate Load Center Main Breakers
③ Not suitable for use on 15-50A, 10 AIC Type QP Circuit Breakers
⑤ BL Type includes BLH, HBL
⑥ BQ Type includes BQH, HBQ
⑦ QAF2 Type includes QAFH2, BAF2, BAFH2, QFGA2, QFGAH2, BFGA2, BFGAH2
⑧ QPF Type includes QPHF, BLF, BLHF
⑨ QE Type includes QEH, BLE, BLEH

Padlocking Device



ECPLD1



ECPLD2



ECPLD1R/2R/3R (Single pole pictured. 2-/3-pole available)



ECQLD3



ECQLD4



ECQTH4

Handle Tie



ECQTH2



ECQTH3

Handle Blocking Device

ECQL1



ECBX231M



Main Breaker Retainer



ECMBR1



ECMBR2

Mechanical Interlock



ECQML12

Mounting Accessories



MB120



SMB6R



I0204ML1125



FP9508



FP9555



FP9556

Handle Ties with Padlock Device

Provide simultaneous switching of 2 or 3 adjacent handles.
Do not provide common trip.

For Use With Breaker Frame(s)	Catalogue Number	Standard Package	Wt Lb/ Std Pkg
BQD, NGB, HGB, LGB	**BQDHT2**	10	½
	BQDHT3	10	½

Padlocking Devices

For locking breaker in "OFF" position.

All QR	**HPLQR**	1	¼
All BQD, CQD, NGB, HGB, LGB	**BQDPLD**	1	⅛
NGG, HGG, LGG	**HPLG**	1	¼
EB, 1- thru 3-pole	**HPLEB**	1	⅛
All ED	**ED2HPL**	1	¼
All FD	**FD6PL1**	1	¼
All JD, LD, LMD	**JD6HPL**	1	¼
All MD, ND, PD, RD	**MN6PLD**	1	¼



FD Padlocking Device
FD6PLI

Handle Blocking Devices

For holding breaker in "ON" or "OFF" position.
Not a lockout/tagout device.

All QR	**HBLQR**	1	1
All BQD, CQD, GG, GB	**BQDHBD**	1	¼
All ED	**E2HBL**	1	¼
All FD	**FD6HB1**	1	½
All JD, LD, LMD	**JD6HBL**	1	½
All MD, ND, PD, RD	**MN6BL**	1	½



FD Handle Blocking Device
FD6HB1

Handle Extensions

For replacement. One extension shipped with breaker.

All MD, ND, PD, RD	**EX11**	1	2

Terminal Shields

Breaker Type	Poles	Catalogue Number	Standard Package
NGG	3	TSSG3A	1
HGG, LGG	1	TSSG61	1
	2	TSSG62	1
	3	TSSG63	1



Handle Extension
EX11

① Sold only in standard package quantities.

Face Mounting Plates

For Use With Breaker Frame(s)	Number of Poles	Catalogue Number	Standard Package	Wt Lb/ Std Pkg
CQD	1 2 3	**CQDFMB1** **CQDFMB2** **CQDFMB3**	1 1 1	¼ ¼ ¼
NGG, HGG, LGG	1 2 3	**FMPG1** **FMPG2** **FMPG3**	1 1 1	¼ ¼ ¼

Back Mounting Plates

ED2, ED4, ED6, HED4, HED6	1	**E2BMB**	1	¼

Mounting Screw Kits

CQD	**CQDSMK**①	1	1¼
NGG, HGG, LGG	**MSKG4**	1	¼
All QR	**MSQR3**	1	⅕
All ED (CED6 requires 2 kits)	**MSE6**① **MSE6100**②	1 100⑥	¼ 1
All FD (CFD6 requires 2 kits)	**MSF6**① **MSF650**③	1 50⑥	¼ 1
All JD, LD	**MSJ6**①	1	¼
All LMD	**MSLMD**	1	¼
All MD, ND,	**MSMN**	1	¼
All PD, RD	**MSPR6**	1	2

"MI" Mechanical Interlocks

For Use With Breaker Type(s)	Panel⑦ Mounted	Plug-in Mounted	Standard Package	Wt Lb Std Pkg
All QR (Sliding Bar)	**SBMIQR**	—	1	1½
All FD	**MI5444**	**MI5444**	1	—
All JD, LD	**MI5413**④	—	1	1
All LMD	**MI5406**④	—	1	1
All MD	**MI5404**⑤	—	1	3
All ND	**MI5404**⑤	—	1	3
All PD, RD	**MI5405**⑤	—	—	—



Mounting Screw Kit
MSE6



Mechanical Interlock
MI5444

①Kit consists of 4 screws and washers.
②Consists of 1 screw and washers (order 100).
③Consists of 1 screw and washers (order 50).
④With mechanical interlock in place, no accessory can be installed into circuit breaker right pole.
⑤Addition of the mechanical interlock will prevent accessory installation in the left pole.
⑥Sold only in standard package quantities. Multiply List Price Each times package quantity for full price.
⑦Mechanical interlock is not designed for use within Siemens panelboards.

Rotary Door Mounted Operating Handles
Types 1, 3, 3R , 12, 4 4X

For Use With Breaker Frames	Complete Mechanism Catalogue Number		Handle Only	Breaker Operator	Shaft Only	
	Standard Depth	Variable Depth	Catalogue Number	Catalogue Number	Length (inches)	Catalogue Number
ED①	CRHOESD	CRHOEVD	CRHOH②	RHOEBO	2	RHOSSD
FD	CRHOFSD	CRHOFVD		RHOFBO	12	RHOSVD
JD, LD	CRHOJSD	CRHOJVD		RHOJBO	16	RHOSXD
LMD	CRHOLMSD	CRHOLMVD		RHOLMBO		
MD, ND PD, RD	RHONSD	RHONVD	RHOH③	RHONBO④	3 12 24	RHONSSD RHONSVD RHONSXD



RHOH

Rotary Door Mounted Operating Handles
Types 1 & 12

For Use With Breaker Frames	Standard Depth Catalogue Number	Variable Depth Catalogue Number	Handle and Shaft Catalogue Number	Breaker Operator Catalogue Number
CQD, NGG, HGG, LGG	—	RHOCQVD	RHOH62⑤	CQDOP
ED	D11CEU1	D11CEU2	—	—
FD	D11CFU1	D11CFU2	—	—
JD, LD	—	D11CJU2	—	—

For CQD, NGG, HGG and LGG red emergency handle, order assembly **RHOCQVDE** (includes handle and operator).
For CQD, NGG, HGG and LGG in a NEMA 3R enclosure, order **CQDOP34** operator, **RHOH** handle and **RHOSVD** shaft.
For CQD, NGG, HGG and LGG in a NEMA 4 or 4X enclosure, order **CQDOP34** operator, **RHOH4** handle and **RHOSVD** shaft.



CRHOH

Through Door Mounted Operating Handles②
Types 1 & 12

For Use With Breaker Frames	Standard Depth Catalogue Number	Variable Depth Catalogue Number
CQD, NGG, HGG, LGG	FMHOS	—
ED	E2RH1	E2RHV9
FD	F6RH1	F6RHV9

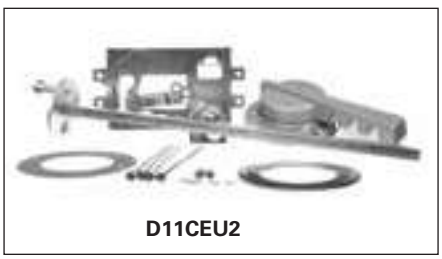

D11CEU2

Door Latch Kits

Type	Catalogue Number Right Hand	Catalogue Number Left Hand
2 point latch	DKR2	DKL2
3 point latch	DKR3	DKL3

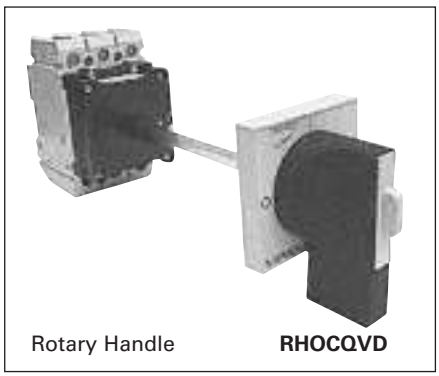

Rotary Handle **RHOCQVD**



Standard Depth **F6RH1**

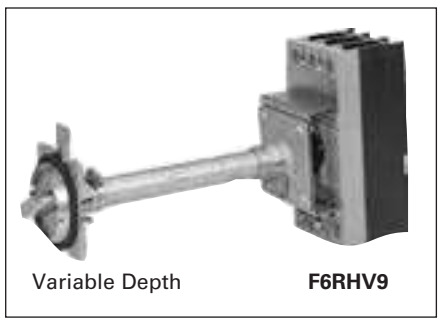

Variable Depth **F6RHV9**

① For use on 3-pole ED frame only.

② Meets the requirements of NFPA 79, section 5.3.3.1 for locking external operator disconnecting devices.

③ For 3 or 3R, order shaft and breaker operator as shown, and handle RHOH. For 4 & 4X, order handle **RHOH4**. Consult sales office for additional EG operator shaft lengths.

④ For extended shaft support order catalogue number **RHONSB2**.

⑤ Length of shaft is 300mm (11.8 inches).

Max-Flex™, Flange Mounted Variable Depth Operators[3]

Frames	NEMA Type	Complete Kit Catalogue Number	Handle Only Catalogue Number	Breaker Operator Catalogue Number	36" Cable Catalogue Number
GG	1, 3 (R), 12	MFKG3R3	MFHG3R	MFMG	MFCF036
	4 (x)	MFKG4X3	MFHG4X		
ED	1, 3 (R), 12	FHOE036[1]	FHOH	FHOEBO[1]	FHOEC036
	4 (x)	—	FHOH4		
FD	1, 3 (R), 12	FHOF036	FHOH	FHOFBO	FHOFC036
	4 (x)	—	FHOH4		
JD, LD, SJD, SLD	1, 3 (R), 12	FHOJ036	FHOH	FHOJBO	FHOJC036
	4 (x)	—	FHOH4		
LMD	1, 3 (R), 12	FHOLM036[6]	FHOH	FHOLMBO	FHOJC036
	4 (x)	—	FHOH4		
MD, ND, PD, RD, SMD, SND, SPD	1, 3 (R), 12	FHON048	FHOHN	FHONBO	FHONC048[2]
	4 (x)	—	FHOHN4		

Max-Flex™ handles are available with solid black handles instead of the customary "red for on" flange handle. These are preferred for use in IECmarkets, where red handles have specific meaning. Order components separately, appending the letter "i" to the catalogue number (e.g. FHOHI).





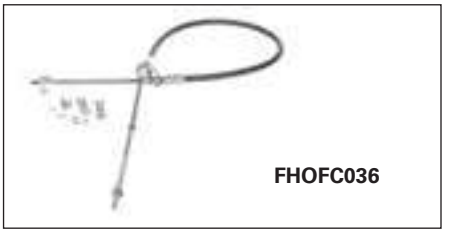

Alternate Length Cable Only

Inches	ED Catalogue Number	FD Catalogue Number	JD/LD/LMD Catalogue Number	MD/ND/PD/RD Catalogue Number
48	FHOEC048	FHOFC048	FHOJC048	FHONC048
60	FHOEC060	FHOFC060	FHOJC060	FHONC060
72	FHOEC072	FHOFC072	FHOJC072	FHONC072
96	FHOEC096	FHOFC096	FHOJC096	FHONC096
120	FHOEC120	FHOFC120	FHOJC120	FHONC120
144	FHOEC144	FHOFC144	FHOJC144	FHONC144

Handle Auxiliary Switch

For use with Max-Flex and Rotary Door operators (FHOH and RHOH). 1 NO and 1 NC contact (Form C).

For Use With	Catalogue Number
ED, FD, JD, LD, LMD, ND, PD, RD, SD, Max Flex	HAS1

Fixed Depth Flange Mounting

Frames	Minimum Enclosure Depth	NEMA Type	Left Hand Mount Catalogue Number	Right Hand Mount Catalogue Number
ED	6.44	1, 3R, 12	FDFBEL	FDFBER
		4, 4X	FDFBEL4	FDFBER4
FD	6.44	1, 3R, 12	FDFBFL	FDFBFR
		4, 4X	FDFBFL4	FDFBFR4

Max-Flex™ handles are available with solid black handles instead of the customary "Red for On" flange handle. These are preferred for use in IECmarkets, where red handles have specific meaning. Order components separately, appending the letter "i" to the catalogue number (e.g. FHOHI).

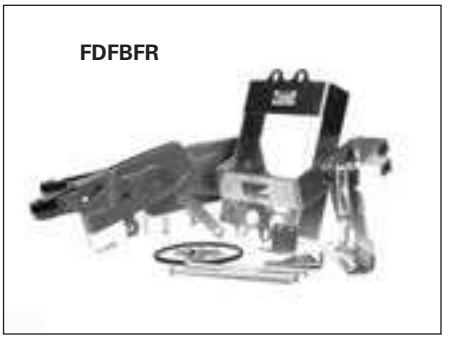

[1] For 1- or 2-pole breaker order FHOED036 complete kit or FHOEDBO breaker operator only. Use MFHM3R handle.
[2] 48 inch cable is standard length for M through R frame Max-Flex operators.
[3] Meets requirements of NFPA 79, section 5.3.3.1 for locking external operator disconnecting devices
[4] Consult sales office for additional cable lengths for EG Flex Shaft Operators. For 3-Pole only.
[5] 3-Pole ED only.
[6] FHOLM048 is available for a 48 inch handle kit.

Telemand® Motor Operator

Breaker Frame	AC Voltage	Hinged to Open Down
ED except CED	120	**MOE6120**
	120	**MOE6240**

ED motor operator opens downward.

Breaker Frame	DC Voltage	Hinged to Open Right	AC Voltage	Hinged to Open Right
FD	24 48 125	**MOF6024DC** **MOF6048DC** **MOF6125DC**	120 240 —	**MOF6120** **MOF6240** —
JD, LD	24 48 125	**MOJ6024DC** **MOJ6048DC** **MOJ6125DC**	120 240 —	**MOJ6120** **MOJ6240** —
LMD	24 48 125	**MOLMD6024DC** **MOLMD6048DC** **MOLMD6125DC**	120 240 —	**MOLMD6120** **MOLMD6240** —
MD, ND, PD, RD	— —	— —	120 240	**EMOPL120MN** **EMOPL240MN**

To order FD through RD motor operators with Left side hinges, add "L" to catalogue number (e.g. MOF6120L).

Dimensions

Frame	A	B	C	D	E	F
ED	7.04	4.31	—	4.31	13.84	8.84
FD	9.50	4.55	1.60	6.84	9.70	7.58
JD, LD, LMD	11.00	7.50	0.79	8.34	9.85	7.74
MD, ND, PD, RD	16.00	9.00	—	9.83	13.13	10.13

Operating Currents

Catalogue Number	On			Off			Reset (Amps)
	In-Rush (Amps)	Running (Amps)	Time (msec)	In-Rush (Amps)	Running (Amps)	Time (msec)	
MOE6120 **MOE6240**	10.25 5.2	2.3 1.1	550 500	10.0 5.0	2.3 1.0	400 330	2.3 1.1
MOF6120/L **MOF6240/L**	10.0 4.7	5.5 2.5	200 200	10.0 4.7	5.5 2.5	175 185	5.5 2.5
MOLMD6120/L	15.2	6.0	210	15.2	6.0	185	6.0
MOJ6120/L **MOJ6240/L**	15.2 5.0	6.0 2.5	210 217	15.2 5.0	6.0 2.5	185 185	6.0 2.5
MOMN6120/L	22.7	13.9	240	22.7	13.9	210	13.9
MOMN6240/L	12.6	4.6	260	12.6	4.6	230	12.6



FD, JD, LD, LMD, MD, ND, PD, RD Frames

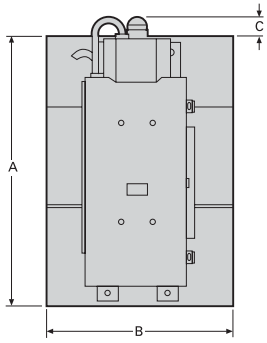

Front View

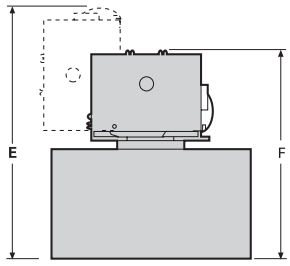

Bottom View

For inches / millimeters conversion, see Technical section.

Plug-In Mounting Assemblies, Including Base and Tulip Assemblies

For Use With Breaker Frames	Poles	Line Side Catalogue Number[2]	Load Side Catalogue Number[2]	Steel Switchboard Mounting Plate[1] Catalogue Number
All ED except CED	2	PC2637	PC2638	PL2616
	3	PC2657	PC2658	
CED	2	PC2637	PC2638	PL2617
	3	PC2657	PC2658	
All FD except CFD	2	PC4753	PC4753	PL4762
	3	PC4754	PC4754	
CFD	2	PC4753	PC4753	PL4763
	3	PC4754	PC4754	
All JD except CJD	2	PC5777	PC5777	PL5796
	3	PC5778	PC5778	
Kit CJD, SCJD	3	PCCJD	PCCJD	PL5797
All LD except CLD	2	PC5660	PC5660	PL5696
	3	PC5661	PC5661	
Kit CLD, SCLD	3	PCCLD	PCCLD	PL5797
All MD	2	PC5662	PC5662	PL9698
	3	PC5663	PC5663	
All ND	2	PC5664[3]	PC5664c	PL9699
	3	PC5666[3]	PC5666[3]	

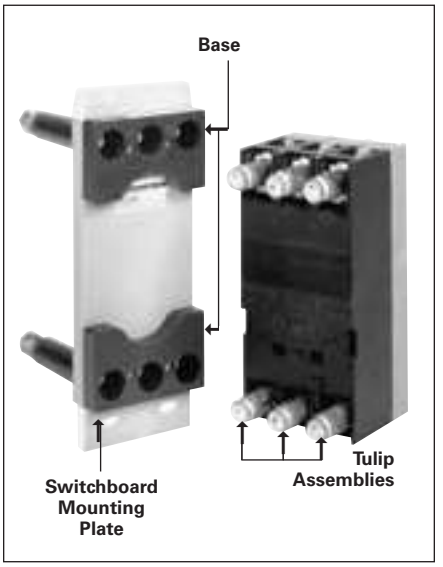

Tulip Assemblies Separately

For Frame	2 Pole Catalogue Number	3 Pole Catalogue Number
ED	TCE2	TCE3
FD	TCF2	TCF3
JD	TCJ2	TCJ3
LD	TCL2	TCL3
MD	TCM2	TCM3
ND	TCN2	TCN3

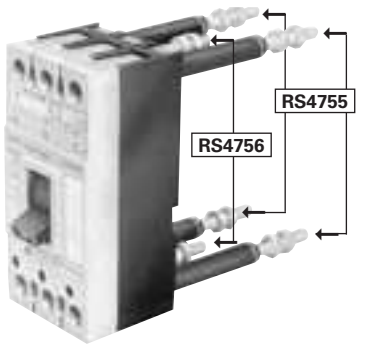

Circuit Breaker
With Rear-Connecting Studs

Rear-Connecting Studs

For Use With Breaker Frames	Ampere Rating	Description	Extension Behind Breaker (inches)	Line Side Catalogue Number	Load Side Catalogue Number
All ED	100 100 100 100	Line Side (Short) Load Side (Short) Line Side (Long) Load Side (Long)	2.38 2.38 4.88 4.88	RS2643[5] — RS2641[5] —	— RS2644[5] — RS2642[5]
All FD	250 250	Short Long	3.12 7.06	RS4756[5] RS4755[5]	RS4756[5] RS4755[5]
All JD	400 400	Short Long	5.85 11.20	RS5774 RS5773	RS5774 RS5773
All LD	600 600	Short Long	5.85 11.20	RS5784 RS5783	RS5784 RS5783
CJD, SCJD CLD, SCLD	Add required shield kit.			—	CLRSJL3
LM(X)D6, HLM(X)D6	800	Short Long	5.85 11.20	RS5788 RS5787	RS5788 RS5787
All MD, ND	1200 1200	Short Long	5.50 8.00	RS5786 RS5785	RS5786 RS5785

① Furnished at no extra charge when ordered with plug-in mounting assembly.
② Each piece catalogue number consists of (1) mounting block assembly and required tulip assemblies (2) for 2-pole, (3) for 3-pole
③ For vertical bus mounting — for horizontal, substitute PC5665 for PC5664 and PC5667 for PC5666.
④ Price includes one current stud, insulating tube, stud nuts and terminal shields, when required.
⑤ For proper electrical clearance, studs must alternate between short and long stud lengths on circuit breaker poles (e.g. SLSLSL or LSLSLS).

Note: The information provided on this and the next page is intended for reference and recommendation only. Because several variables can act on a circuit breaker's performance at the same time, the data below is based less on controlled testing, than on experience and engineering judgment. Contact Siemens for further information on special conditions and treatment.

High Ambient Temperatures

Because thermal-magnetic trip breakers are temperature sensitive and calibrated for a specific ambient of 40° C (104° F) (average enclosure temperature), a higher ambient will cause the breaker to trip at lower current than its nameplate rating, in other words, causing the breaker to "derate" (see Table 1). Similarly, the current carrying capacity of a circuit conductor is based upon a certain ambient temperature, a higher ambient will reduce its current carrying capacity, causing it to "derate." Thus, with a fluctuating temperature, a thermal-magnetic breaker will derate nearly parallel with its connected circuit conductors and maintain close circuit protection. If the application temperature exceeds 40° C (104° F) and is known, either a breaker specially calibrated for the higher ambient or one oversized according to Table 1 may be selected. In a case such as this, the circuit conductors should be oversized as well.

Siemens Sensitrip® III and Type SB Encased Systems Breakers are insensitive to temperature changes. However, they do include circuitry to protect the components from abnormally high temperatures.

Moisture — Corrosion

For atmospheres having high moisture content and / or where fungus growth is prevalent, a special preventive treatment may be required.

Where the air is heavily laden with corrosive elements, breakers made with special corrosion-resistant finishes may be required.

Altitude

Reduced air density at altitudes greater than 6600 ft. (2000 meters) affects the ability of a molded case circuit breaker to transfer heat and interrupt faults. Therefore, circuit breakers applied at these altitudes should have interrupting, insulation and continuous currents derated as indicated in Figure 1.

Table 1 — Temperature Derating Data for Thermal-Magnetic Breakers

Reference Ampere Rating at 40° C (104° F)	Ampere Rating at: 25° C (77° F)	50° C (122° F)	60° C (140° F)	Siemens Breaker Frames
15	17	13	11	ED
20	22	18	16	
25	28	23	21	
30	33	28	26	
35	39	30	25	
40	44	37	34	
50	55	46	42	
60	66	56	52	QJ
70	77	65	60	
90	99	84	78	FD
100	110	94	87	
125	137	114	100	
150	165	136	120	JD
175	192	159	140	
200	220	182	160	
225	247	205	180	LD
250	275	235	220	
300	330	276	252	
350	385	325	301	MD
400	440	372	340	
500	550	468	435	
600	660	564	525	ND
700	770	658	613	
800	880	754	704	
900	990	828	749	PD
1000	1100	900	825	
1200	1320	1090	1000	
1400	1540	1304	1148	RD
1600	1760	1500	1320	
1800	1980	1690	1485	
2000	2200	1880	1650	

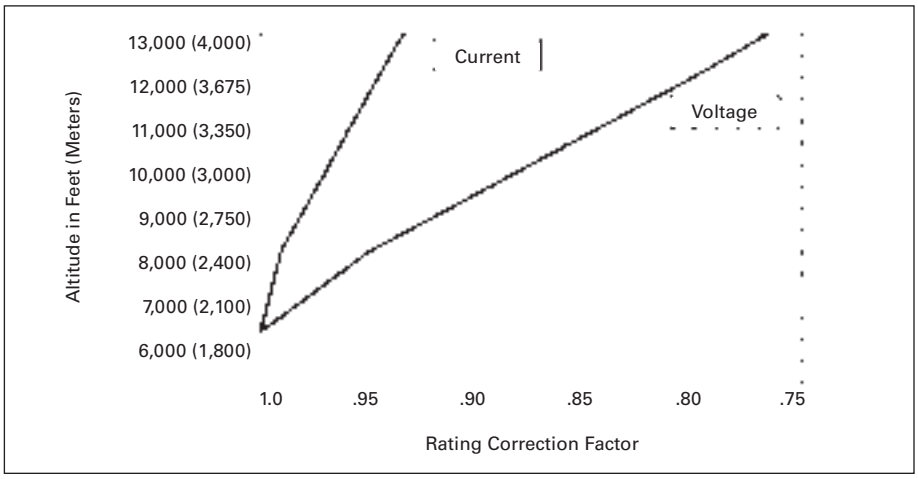

Figure 1 — Altitude Adjustment

Unusual Operating Conditions

400 Hz Systems①

Siemens molded case circuit breakers can be applied for overcurrent protection on 400Hz systems, commonly used to power computer installations, aircraft, military and other specialty equipment. Below are basic guidelines.

Circuit Breaker Derating Required

This table lists the maximum continuous current carrying capacity for Siemens breakers at 400Hz. Due to the increased resistance of the copper sections resulting from the skin effect produced by eddy currents at these frequencies, circuit breakers in many cases require derating. The thermal derating on these devices is based upon 100%, three-phase application in open air in a maximum of 40° C (104° F) with 48 in. (1219 mm) of the specified cable or bus at the line and load side. Additional derating of not less than 20% will be required if the circuit breaker is to be utilized in an enclosure. Further derating may be required if the enclosure ambient temperature exceeds 40° C (104° F).

Cable and Bus Sizing

The cable and bus sizes to be utilized at 400Hz are not based on standard National Electric Codes tables for 60Hz application. Larger cross sections are necessary at 400Hz. All bus bars specified are based upon mounting the bars in the vertical plane to allow maximum air flow. All bus bars are spaced at a minimum of 0.25 in. (6mm) apart. Mounting of bus bars in the horizontal plane will necessitate additional drafting. Edgewise orientation of the bus may change the maximum ratings indicated. If additional information is required for other connections of cable or bus, contact Siemens for information.

Application Recommendations

It is recommended that temperatures be measured on the line and load terminals or T-connectors of the center pole. These are usually the hottest terminals with a balanced load. A maximum temperature of 75° C (35° C over a maximum ambient of 40° C) would verify the particular application. Temperature profiles taken on these breakers can be correlated to ensure that the hottest points within the breaker are within the required temperature limits.

Factory Configuration

When required, molded case circuit breakers may be factory calibrated for 400Hz application. These breakers are specially labeled for 400Hz usage and their nameplate current rating will include the necessary derating factory. The highest "Maximum Continuous Amperes" rating at 400Hz, found in the table below approximates the highest specially calibrated 400Hz nameplate ampere rating available for a given frame size. Contact Siemens for ordering information on other breakers applied in 400Hz systems.

400Hz Breakers

Siemens Breaker Type	Maximum Continuous Ampere Rating At 40° C (104° F)② 60HZ Open Air	400HZ Open Air③	400HZ Enclosed After Derating	75° C (167° F) Copper Cable per Pole No of Pieces	Wire Size
ED2, ED4, ED6, HED4, CED6	15	15	12	1	#14
	20	20	16	1	#12
	25	25	20	1	#10
	30	30	24	1	#10
	35	35	28	1	#10
	40	40	32	1	#8
	45	43	34	1	#8
	50	48	38	1	#8
	60	57	46	1	#6
	70	67	54	1	#4
	80	76	61	1	#4
	90	86	69	1	#3
	100	95	76	1	#3
	110	105	84	1	#2
	125	119	95	1	#1
FD6, FXD6, HFD6,HFXD6, CFD6	70	63	50	1	#4
	80	72	58	1	#4
	90	80	64	1	#3
	100	90	72	1	#3
	110	95	75	1	#2
	125	105	84	1	#1
	150	125	100	1	#1/0
	175	140	112	1	#2/0
	200	160	128	1	#3/0
	225	180	144	1	#4/0
	250	200	160	1	250 kcmil
JXD2, JD6, JXD6, HJD6, HJXD6, HHJD6, HHJXD6, CJD6	200	170	136	1	#3/0
	225	190	152	1	#4/0
	250	210	168	1	250 kcmil
	300	240	192	1	350 kcmil
	350	260	208	1	500 kcmil
	400	300	240	2	#3/0
JD6, JXD6, HJD6, HJXD6 100% Rated	200	170	170	2	#3/0
	225	190	190	2	#4/0
	250	210	210	1	250 kcmil
	300	240	240	1	350 kcmil
	350	260	260	1	500 kcmil
	400	300	300	2	#3/0

Siemens Breaker Type	Maximum Continuous Ampere Rating At 40° C (104° F)② 60HZ Open Air	400/415HZ Open Air③	400/415HZ Enclosed After Derating	75° C (167° F) Copper Cable per Pole No of Pieces	Wire Size
LD6, LXD6, HLD6, HLXD6, HHLD6, HHLXD6, CLD6	250	210	168	1	250 kcmil
	300	240	192	1	350 kcmil
	350	260	208	1	500 kcmil
	400	300	240	2	#3/0
	450	340	272	2	#4/0
	500	375	300	2	250 kcmil
	600	420	336	2	350 kcmil
LD6, LXD6, HLD6, HLXD6, 100% Rated	250	210	210	1	250 kcmil
	300	240	240	1	350 kcmil
	350	260	260	1	500 kcmil
	400	300	300	2	#3/0
	450	340	340	2	#4/0
	500	375	375	2	250 kcmil
	600	420	420	2	350 kcmil
MD6, MXD6, HMD6, HMXD6, CMD6	500	400	320	2	250 kcmil
	600	430	360	2	350 kcmil
	700	500	400	3	250 kcmil
	800	560	448	3	300 kcmil
MD6, MXD6, HMD6, HMXD6, CMD6 100% Rated	500	400	400	2	250 kcmil
	600	430	430	2	350 kcmil
	700	500	500	3	250 kcmil
	800	560	560	3	300 kcmil
ND6, NXD6 HND6, HNXD6, CND6	800	560	448	3	300 kcmil
	900	600	480	3	350 kcmil
	1000	650	520	3	400 kcmil
	1200	780	624	4	350 kcmil
ND6, NXD6 HND6, HNXD6, CND6	900	600	600	3	350 kcmil
	1000	650	650	3	400 kcmil
	1200	780	780	4	350 kcmil
PD6, PXD6, HPD6 HPXD6,CPD6, 100% Rated	1200	780	624	4	400 kcmil
	1400	850	680	4	500 kcmil
	1600	960	768	5	500 kcmil
PD6, PXD6, HPD6, HPXD6, CPD6	1200	780	780	4	400 kcmil
	1400	850	850	4	500 kcmil
	1600	960	960	5	500 kcmil
RD6, RXD6, HRD6, HRXD6 80% Rated	1600	960	768	5	500 kcmil
	1800	1080	864	5	500 kcmil
	2000	1200	960	6	500 kcmil

①The information provided on this page is intended for reference and recommendation only. Because several variables can act on a circuit breaker's performance at the same time, the data above is based less on controlled testing, than on experience and engineering judgment. Contact Siemens for further information on special conditions and treatment.

②Additional derating may be required if the ambient temperature is greater than 40°C (104°F).

③Calculated after derating to compensate for the heating of the copper conductor, caused by the skin effect generated by eddy currents produced at 400/415HZ.

Frame Summary and Ratings Table

Frame Family		DG	FG	JG
				
Continuous Ampere Range		30 to 150A	40 to 250A	70 to 400A
Number of Poles		2, 3	2, 3	2, 3
Maximum Voltage Rating		600Y/347	600Y/347	600Y/347
Type of Protection				
Thermal-Magnetic		◆	◆	◆
Electronic		◆	◆	◆
Electronic with LCD		◆	◆	◆
Motor Circuit Protector		◆	◆	◆
Molded Case Switch		◆	◆	◆
100% Rated 400/500 Amp Interchangeable Trip Unit		ETU only —	— —	◆ ◆
	W In.(mm) H D D1	4.1 (105) 7.3 (175) 3.4 (81) 4.2 (107)		5.5 (139) 11 (279) 4.2 (102) 5.4 (138)
Type N – Normal Interrupting Rating①, RMS Symmetrical Amperes (kA)				
CSA / UL	240Vac 480Vac 600Vac④	65 35 18	65 35 18	65 35 25
IEC (I_{CU}/I_{CS})	240Vac 415Vac 690Vac	65/65 40/40 12/6	65/65 40/40 12/6	65/65 45/45 12/6
DC Voltages – Interrupting Rating (kA)④				
	250Vdc - 2p 500Vdc - 3p②	30 18	30 18	30 25
Type H – High Interrupting Rating①, RMS Symmetrical Amperes (kA)				
CSA / UL	240Vac 480Vac 600Vac④	100 65 18	100 65 18	100 65 25
IEC (I_{CU}/I_{CS})	240Vac 415Vac 690Vac	100/75 70/70 12/6	100/75 70/70 12/6	100/75 70/35 15/8
DC Voltages – Interrupting Rating (kA)④				
	250Vdc - 2p 500Vdc - 3p②	30 35	25 50	25 50
Type H – Very High Interrupting Rating①, RMS Symmetrical Amperes (kA)				
CSA / UL	240Vac 480Vac 600Vac④	200 100 18	200 100 18	200 100 25
IEC (I_{CU}/I_{CS})	240Vac 415Vac 690Vac	200/150 100/75 12/6	200/150 100/75 12/6	200/150 100/75 15/8
DC Voltages – Interrupting Rating (kA)④				
	250Vdc - 2p 500Vdc - 3p②	30 35	30 30	30 35

① CSA / UL does not recognize AIC ratings for Molded Case Switches or Motor Circuit Protectors.
② 500Vdc nominal, for ungrounded DC UPS systems.
④ DC Interruption Ratings do not apply to electronic trip circuit breakers.
⑤ DG & FG breakers are 600Y/347V.

Frame Summary and Ratings Table — Continued

Frame Family		LG	MG	NG	PG
					
Continuous Ampere Range		150 to 600A	200 to 800A	300 to 1200A	400 to 1600A
Number of Poles		2, 3	2, 3	2, 3	3
Maximum Voltage Rating		600V	600V	600V	600V
Type of Protection					
Thermal-Magnetic		◆	◆	◆	◆
Electronic		◆	◆	◆	◆
Electronic with LCD		◆	◆	◆	◆
Motor Circuit Protector		◆	◆	◆	—
Molded Case Switch		◆	◆	◆	◆
100% Rated 400/500 Amp		400/500 Amp	◆	◆	◆
Interchangeable Trip Unit		—	◆	◆	◆⑥
	W In.(mm)	5.5 (139)	7.5 (190)	9 (229)	
	H	11 (279)⑦	16 (406)	16 (406)	
	D	4.2 (102)	4.7 (114)	6.2 (157)	
	D1	5.4 (138	5.9 (151	8.1 (207	
Type N – Normal Interrupting Rating①, RMS Symmetrical Amperes (kA)					
CSA / UL	240Vac	65	65	65	65
	480Vac	35	35	35	35
	600Vac	18	25	25	25
IEC (I_{CU}/I_{CS})	240Vac	65/65	65/65	65/65	65/65
	415Vac	45/45	50/50	50/25	50/25
	690Vac	12/6	20/10	20/10	20/10
DC Voltages – Interrupting Rating (kA)④					
	250Vdc - 2p	30	22	22	22
	500Vdc - 3p③	25	35	35	35
Type H – High Interrupting Rating①, RMS Symmetrical Amperes (kA)					
CSA / UL	240Vac	100	100	100	100
	480Vac	65	65	65	65
	600Vac	18②	35	35	35
IEC (I_{CU}/I_{CS})	240Vac	100/75	100/75	100/75	100/50
	415Vac	70/70	70/70	70/35	70/35
	690Vac	15/8	30/15	30/15	30/15
DC Voltages – Interrupting Rating (kA)④					
	250Vdc - 2p	30	25	25	25
	500Vdc - 3p③	35	50	50	50
Type H – Very High Interrupting Rating①, RMS Symmetrical Amperes (kA)					
CSA / UL	240Vac	200	200	200	200
	480Vac	100	100	100	100
	600Vac	18	50	65	65
IEC (I_{CU}/I_{CS})	240Vac	200/150	200/150	200/150	200/150
	415Vac	100/75	100/75	100/75	100/75
	690Vac	15/8	35/17	35/17	35/17
DC Voltages – Interrupting Rating (kA)④					
	250Vdc - 2p	30	42	42	42
	500Vdc - 3p③	35	65	65	65

① CSA / UL does not recognize AIC ratings for Molded Case Switches or Motor Circuit Protectors.
② 25kA available in a special version. Standard breakers rated 18kA. See page 5-213.
③ 500Vdc nominal, for ungrounded DC UPS systems.
④ DC Interruption Ratings do not apply to electronic trip circuit breakers.
⑤ Thermal-magnetic available non-interchangeable only.
⑥ 13.6" with extended shields.

VL Circuit Breakers

Trip Unit Overview

Selection

The interchangeability of the VL circuit breaker trip units allow for easy conversion from any of 3 types of protection. They are thermal-magnetic, electronic, or electronic with a built-in LCD display. The thermal-magnetic trip unit features an adjustable magnetic trip setting. The electronic trip units are microprocessor based true RMS sensing devices and are available with a variety of adjustable trip settings, configurations, and information menus.

With precise control over the circuit beaker functions and access to system status, diagnostics, and information, these trip units allow for unsurpassed flexibility in circuit coordination.

An example of coordination is the out of the box Ground Fault function on the Model 555 trip units. The pick-up and time delay settings are set at the factory for each frame and do not overlap with the settings on the other frames. Therefore, when VL breakers are used together in a system the GF protection is automatically coordinated.

The user also has the ability to program a custom coordination scheme with adjustable settings on both the 555 and 586 trip units.

Trip Unit Functions	VL Trip Units							
	Model 525	Model 555				Model 586		
	Thermal-magnetic	Electronic LI	Electronic LIG	Electronic LSI	Electronic LSIG	Electronic with LCD LSI	Electronic with LCD LSIG	Electronic with LCD LSI + G alarm only
Continuous Current Setting (I_r)	Fixed	◆	◆	◆	◆	◆	◆	◆
Long Time Delay (t_r)	□	◆	◆	◆	◆	◆	◆	◆
Instantaneous Function	●	●	●	●	●	(ON/OFF)	(ON/OFF)	(ON/OFF)
Instantaneous Pickup (I_i)	◆	◆	◆	◆	◆	◆	◆	◆
Short Time Function	□	□	□	●	●	(ON/OFF)	(ON/OFF)	(ON/OFF)
Short Time Pick-up (I_{sd})	□	□	□	◆	◆	◆	◆	◆
Short Time Delay (t_{sd})	□	□	□	◆	◆	◆	◆	◆
Ground Fault Pick-up (I_g)	□	□	◆	□	◆	□	◆	□
Ground Fault Delay (t_g)	□	□	◆	□	◆	□	◆	□
Ground Fault Alarm Pick-up	□	□	□	□	□	□	◆	◆
Ground Fault Alarm Delay	□	□	□	□	□	□	◆	◆
Alarm & Status Indicator	□	●	●	●	●	●	●	●
Built-in Display (LCD)	□	□	□	□	□	●	●	●
Pre-Trip Alarma	□	●	●	●	●	●	●	●
Last Trip Information①	□	●	●	●	●	●	●	●
Zone Selective①	□	●	●	●	●	●	●	●
Communications①	□	●	●	●	●	●	●	●

◆ Adjustable setting
● This feature is included
□ Feature is not included.
① Requires a **COMPRO20** or **COMMOD21** module in a communication system.

Continuous Amps Rating (I_r)

This setting is the continuous current that the breaker will carry without tripping. It can be set up to 100% of the trip unit's nominal rating (In).

Long Time Delay (t_r)

Sometimes referred to as the "overload" position, this function controls the breaker's "pause-in-tripping" time. It allows low level, temporary inrush currents such as those encountered when starting a motor to pass without tripping. The time delay begins when the current reaches 6 x Ir.

Instantaneous Pick-up (I_i)

This function sets the breaker to trip instantaneously during high fault conditions. This function may be turned off on Model 586 trip units.

Short Time Pick-Up (I_{sd})

This function controls the level of fault current the breaker will carry for a short time without tripping, thus allowing downstream devices to clear short circuits ahead of up-stream protection. It may be defeated (turned-off) on Model 586 trip units.

Short Time Delay (t_{sd})

This controls the interval of time the breaker will remain closed against a fault (at the Short Time Pick-up current level) without tripping. The time delay may be set at fixed points or at short time intervals based on I^2t curves. This function is used with the Short Time Pick-up to achieve selectivity and better system coordination.

Ground Fault Pick-Up (I_g)

This setting controls the level of ground fault current that will cause the breaker to trip. Model 555 Electronic Trip Units act on the residual current to sense ground current. The Model 586 Electronic Trip Unit is programmable and allows the user to select either the residual current method or direct detection (via a separate current transformer) to detect ground current.

Ground Fault Time Delay (t_g)

This controls the interval of time the breaker will remain closed after a ground fault is detected (at the Ground Fault Pick-up current level) without tripping.

Thermal-Magnetic trip units, Model 525, combine the inverse time element design for low level overloads, and instantaneous magnetic action for short circuit protection. The standard unit has preset overload protection and an adjustable instantaneous trip setting, with 6 set points. Thermal-Magnetic trip units are available throughout the VL family, from 30 to 1600A.

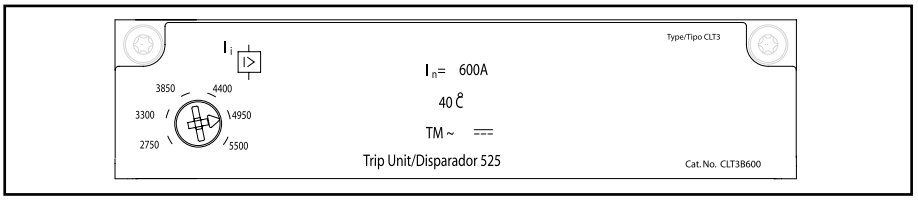

Electronic Trip Units

Electronic trip units are available through the VL family, from 60A (which can be set as low as 30A) up through 1600A . They are also available in four trip configurations (LI, LIG, LSI, LSIG) and features can include a built-in LCD display.

On the Model 555 Electronic Trip Unit a flashing LED confirms that the microprocessor is in operating and another indicates an overload condition. For ease-of-use and to insure proper coordination, the set points for the continuous current are shown on the face of these trip units in amps.

On the Model 586, the LCD version, the current in each phase is continuously shown on the display. Unlike many displays, no secondary or auxiliary voltage is required as long as the breaker is energized and a minimal load current is present. These trip units can also indicate the "last trip" status (date, time, amps) when they're connected to a PC via one of our communications modules. Without being connected via a communication module, the last trip status can be viewed on Model 586 trip units (no time stamp).

Typical Trip Unit Labeling and Adjustment Positions

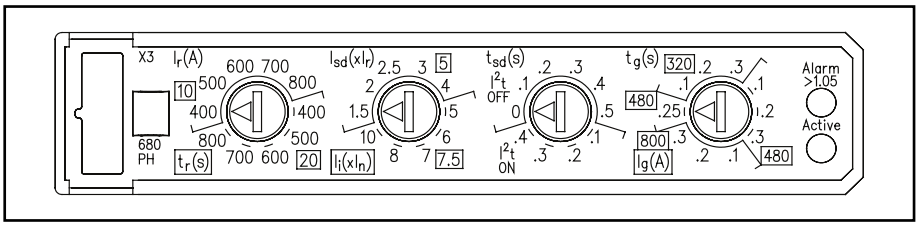

Model 555 Electronic Trip Unit with LSIG trip functions

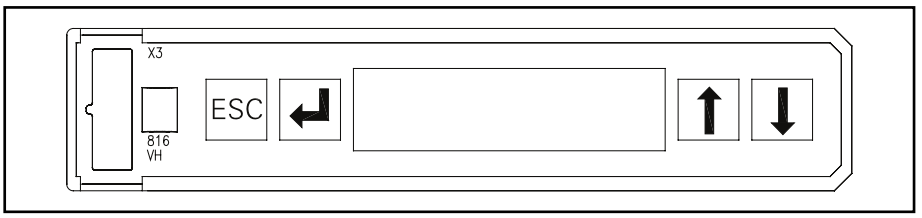

Model 586 Electronic Trip Unit has an LCD display

Ordering Information

Complete Assembled Breaker

A complete factory assembled DG breaker includes the frame, trip unit, and standard line and load connectors, all factory installed and shipped as a complete breaker. Assembled breakers are only available with standard connectors.

For any other configuration, order the frame, trip unit, and terminals as separate items.

For DC applications, use thermal magnetic trip unit only.

For reverse feed applications, select non-interchangeable trip breakers only. For non-interchangeable trip breakers, change the third digit of the catalogue number to "X" for standard breakers.

For special applications, refer to page 5-216.

Mounting hardware is included with each frame or complete breaker.

For 100% rated breakers with a non-interchangeable trip unit, change the 3rd character of the catalogue number to "Y". Available in electronic and electronic with LCD only.

HACR rated.



Interrupting Ratings

Breaker Type	RMS Symmetrical Amperes (KA)											
	UL 489					IEC 60947-2						
	Volts AC (50/60 Hz)			Volts DC		Volts AC (50/60 Hz)						
						220/240		380/415		690	
	240	480	600	250	500	ICU	ICS	ICU	ICS	ICU	ICS
NDGA	65	35	18	30	18	65	65	40	40	12	6
HDGA	100	65	20	30	18	100	75	70	70	12	6
LDGA	200	100	25	30	18	200	150	100	75	12	6

Connectors for 75°C Wire

Construction	Ampere Rating	Wire Range	No. of cables per connector	Catalogue Number
Steel	30-150	#8–1/0 Cu	1	**3TW1DG20**②
Aluminum	30-150	#6–3/0 Al/Cu	1	**3TA1DG30**①②
Copper	30-150	#6–3/0 Cu	1	**3TC1DG30**②④
Distribution Lugs				
	30-150	#14–#2 Cu (3pcs. Max)	3	**3TA3DG02**②
	30-150	#14–#4 Cu	6	**3TA6DG04**②
Compression Lugs				
	30-150	#14–2/0 kcmil Al/Cu	–	**2CLD20**③
	30-150	#14–2/0 kcmil Al/Cu	–	**3CLD20**②

① Standard connector supplied with complete breakers.
② Kit consists of 3 terminal connectors.
③ 2 Lugs for 2-pole breakers.
④ Required for 100% rated DG breakers. Requires 90°C cable sized at 75°C ampacity

DG Thermal-Magnetic, Instantaneous Trip Adjustment Range

Trip Unit Continuous Amp Rating (I_n)	Instantaneous Overcurrent Setting (I_i)	
	Min.	Max.
50	450	700
60	450	700
70	450	700
80	450	800
90	500	1000
100	500	1000
110	550	1100
125	625	1250
150	800	1600

Note: Each breaker has 6 trip settings in this range.

Dimensions - Inches (mm)

Number of Poles	W	L	D	To Handle D1
2, 3	4.1 (105)	6.9 (175)	3.4 (81)	4.2 (107)

Approx. Shipping Weight, lbs. (kg)

Poles	Frame	Trip Unit		Complete Breaker
		Thermal-Mag.	Electronic	
2, 3	3.7 (1.7)	2.2 (1.0)	2.6 (1.2)	5.9 (2.7)

External Accessories page 5-195 - 5-209

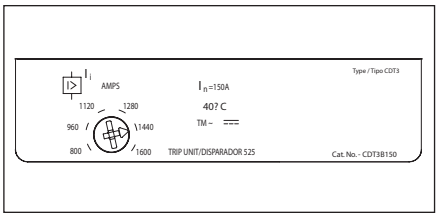

Model 525 Trip Unit

DG 150A Frame 2-Pole with Thermal-Magnetic Trip Unit

Continuous Ampere Rating	N-Interrupting Class Catalogue Number	H-Interrupting Class Catalogue Number	L-Interrupting Class Catalogue Number	Catalogue Number
	FRAME ONLY			
	NDG2F150	HDG2F150	LDG2F150	
	COMPLETE FACTORY ASSEMBLED CIRCUIT BREAKER			TRIP UNIT ONLY
50	NDG2B050L	HDG2B050L	LDG2B050L	CDT2B050
60	NDG2B060L	HDG2B060L	LDG2B060L	CDT2B060
70	NDG2B070L	HDG2B070L	LDG2B070L	CDT2B070
80	NDG2B080L	HDG2B080L	LDG2B080L	CDT2B080
90	NDG2B090L	HDG2B090L	LDG2B090L	CDT2B090
100	NDG2B100L	HDG2B100L	LDG2B100L	CDT2B100
110	NDG2B110L	HDG2B110L	LDG2B110L	CDT2B110
125	NDG2B125L	HDG2B125L	LDG2B125L	CDT2B125
150	NDG2B150L	HDG2B150L	LDG2B150L	CDT2B150

DG 150A Frame 3-Pole with Thermal-Magnetic Trip Unit

Continuous Ampere Rating	N-Interrupting Class Catalogue Number	H-Interrupting Class Catalogue Number	L-Interrupting Class Catalogue Number	Catalogue Number
	FRAME ONLY			
	NDG3F150	HDG3F150	LDG3F150	
	COMPLETE FACTORY ASSEMBLED CIRCUIT BREAKER			TRIP UNIT ONLY
50	NDG3B050L	HDG3B050L	LDG3B050L	CDT3B050
60	NDG3B060L	HDG3B060L	LDG3B060L	CDT3B060
70	NDG3B070L	HDG3B070L	LDG3B070L	CDT3B070
80	NDG3B080L	HDG3B080L	LDG3B080L	CDT3B080
90	NDG3B090L	HDG3B090L	LDG3B090L	CDT3B090
100	NDG3B100L	HDG3B100L	LDG3B100L	CDT3B100
110	NDG3B110L	HDG3B110L	LDG3B110L	CDT3B110
125	NDG3B125L	HDG3B125L	LDG3B125L	CDT3B125
150	NDG3B150L	HDG3B150L	LDG3B150L	CDT3B150

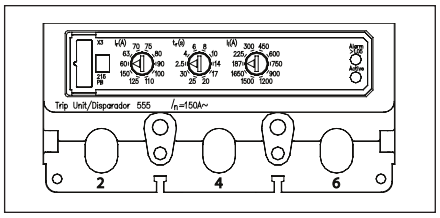

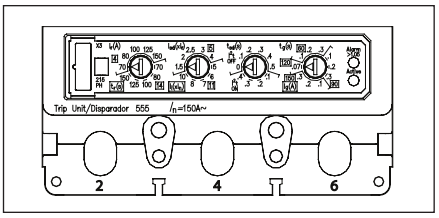

Model 555 Trip Units

DG 150A Frame 3-Pole Electronic Trip Unit①

Continuous Ampere Rating	N-Interrupting Class Catalogue Number	H-Interrupting Class Catalogue Number	L-Interrupting Class Catalogue Number	Catalogue Number
	FRAME ONLY			
	NDG3F150	HDG3F150	LDG3F150	
	COMPLETE FACTORY ASSEMBLED CIRCUIT BREAKER			TRIP UNIT ONLY
ELECTRONIC LI TRIP				
60	NDG3R060L	HDG3R060L	LDG3R060L	CDT3R060
100	NDG3R100L	HDG3R100L	LDG3R100L	CDT3R100
150	NDG3R150L	HDG3R150L	LDG3R150L	CDT3R150
ELECTRONIC LSI TRIP				
60	NDG3T060L	HDG3T060L	LDG3T060L	CDT3T060
100	NDG3T100L	HDG3T100L	LDG3T100L	CDT3T100
150	NDG3T150L	HDG3T150L	LDG3T150L	CDT3T150
ELECTRONIC LSIG TRIP				
60	NDG3V060L	HDG3V060L	LDG3V060L	CDT3V060
100	NDG3V100L	HDG3V100L	LDG3V100L	CDT3V100
150	NDG3V150L	HDG3V150L	LDG3V150L	CDT3V150
ELECTRONIC LIG TRIP				
60	NDG3W060L	HDG3W060L	LDG3W060L	CDT3W060
100	NDG3W100L	HDG3W100L	LDG3W100L	CDT3W100
150	NDG3W150L	HDG3W150L	LDG3W150L	CDT3W150

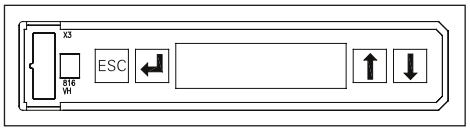

Model 586 Trip Unit

DG 150A Frame 3-Pole Electronic LCD Trip Unit①

Continuous Ampere Rating	N-Interrupting Class Catalogue Number	H-Interrupting Class Catalogue Number	L-Interrupting Class Catalogue Number	Catalogue Number
	FRAME ONLY			
	NDG3F150	HDG3F150	LDG3F150	
	COMPLETE FACTORY ASSEMBLED CIRCUIT BREAKER			TRIP UNIT ONLY
LCD ELECTRONIC LSI TRIP				
60	NDG3A060L	HDG3A060L	LDG3A060L	CDT3A060
100	NDG3A100L	HDG3A100L	LDG3A100L	CDT3A100
150	NDG3A150L	HDG3A150L	LDG3A150L	CDT3A150
LCD ELECTRONIC LSIG TRIP				
100	NDG3G060L	HDG3G060L	LDG3G060L	CDT3G060
150	NDG3G100L	HDG3G100L	LDG3G100L	CDT3G100
250	NDG3G150L	HDG3G150L	LDG3G150L	CDT3G150
LCD ELECTRONIC LSI TRIP + GF ALARM ONLY				
100	NDG3K060L	HDG3K060L	LDG3K060L	CDT3K060
150	NDG3K100L	HDG3K100L	LDG3K100L	CDT3K100
250	NDG3K150L	HDG3K150L	LDG3K150L	CDT3K150

① Due to the location of the magnetic tripping solenoid, the left accessory pocket is not available for accessories.

Auxiliary Switch and Alarm Switch Combination Kits

Description	Mounting Pocket①	Catalogue Number
1 Alarm Switch 1A/B③ Bases AMBL2 & AMBL3	Left, Right②	**ASKL1**
2 Aux. Switches 1A + 1B Bases AMBL1	Left, Right	**ASKL2**
2 Aux. + 1 Alarm Switches 1A + 1B, 1A/B③ Bases AMBL2 & AMBL3	Left, Right②	**ASKL3**

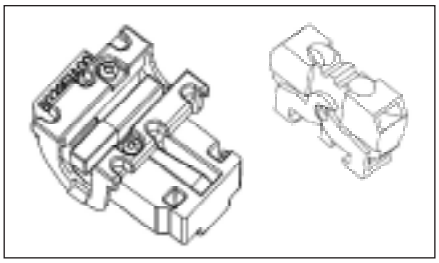

Auxiliary/Alarm Switch Mounting Base Only

Description	Mounting Pocket	Catalogue Number
Up to 3 Auxiliary Switches	Left, Right	**AMBL1**
2 Aux. + 1 Alarm Switch	Left Pocket Only	**AMBL2**
2 Aux. + 1 Alarm Switch	Right Pocket Only	**AMBL3**

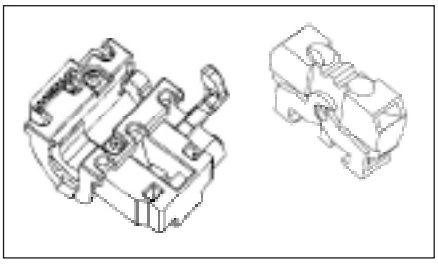

Auxiliary/Alarm Switch Only

Common to DG - PG Frames

Description	Catalogue Number
1 Normally Open Contact (1A)	**ASWPA**
1 Normally Closed Contact (1B)	**ASWPB**

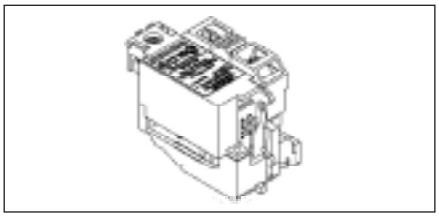

Shunt Trips

Description	Mounting Pocket	Catalogue Number
24 VDC	Right Pocket Only	**STRLB24DC**
48-60 VDC		**STRLC60DC**
110-127 VDC		**STRLD125DC**
220-250 VDC		**STRLE250DC**
48-60 VAC		**STRLM60**
110-127 VAC		**STRLN120**
208-277 VAC		**STRLS277**
380-600 VAC		**STRLV600**

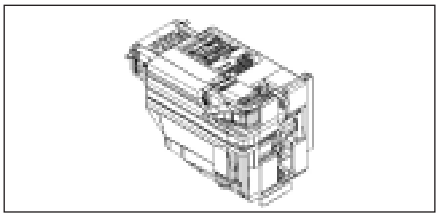

Undervoltage Release

Description	Mounting Pocket	Catalogue Number
12 VDC	Right Pocket Only	**UVRLA12DC**
24 VDC		**UVRLB24DC**
48 VDC		**UVRLC48DC**
60 VDC		**UVRLG60DC**
110-127 VDC		**UVRLD125DC**
220-250 VDC		**UVRLE250DC**
24 VAC		**UVRLL24**
110-127 VAC		**UVRLN120**
220-240 VAC		**UVRLR240**
208 VAC		**UVRLP208**
277 VAC		**UVRLS277**
380-415 VAC		**UVRLT415**
440-480 VAC		**UVRLU480**

'A' refers to a normally open contact (open when the breaker contacts are open).
'B' refers to a normally closed contact (closed when the breaker contacts are open).
① Refer to the "Accessory Locations" chart for guidelines and limitations about which pockets may be used for accessory combinations.
② These kits include two bases, one for mounting switches in the left pocket and another for mounting in the right.
③ Includes 1A and 1B contact for alarm purposes, only one of which may be installed at any time.

External Accessories page 5-195 - 5-209

VL Circuit Breakers

FG 250A Frame, VL Series

Selection/Dimensions

Ordering Information

Complete Assembled Breaker

A complete factory assembled FG breaker includes the frame, trip unit, and standard line and load connectors, all factory installed and shipped as a complete breaker. Assembled breakers are available only with standard connectors.

For any other configuration, order the frame, trip unit, and terminals as separate items.

For DC applications, use thermal magnetic trip unit only.

For reverse feed applications, select non-interchangeable trip breakers only. For non-interchangeable trip breakers, change the third digit of the catalogue number to "X" for standard breakers.

For special applications, refer to page 5-216.

Mounting hardware is included with each frame or complete breaker.

HACR rated.



Dimensions - Inches (mm)

Number of Poles	W	L	D	To Handle D1
2, 3	4.1 (105)	6.9 (175)	3.4 (81)	4.2 (107)

Shipping Weight, lbs. (kg)

Poles	Frame	Trip Unit		Complete Breaker
		Thermal-Mag.	Electronic	
2, 3	4.0 (1.8)	2.2 (1.0)	2.6 (1.2)	6.2 (2.8)

Interrupting Ratings

Interrupting Class	Breaker Type	RMS Symmetrical Amperes (KA)											
		CSA C22.2 NO.5 / UL 489					IEC 60947-2						
		Volts AC (50/60 Hz)			Volts DC		Volts AC (50/60 Hz)						
							220/240		380/415		690		
		240	480	600	250	500	I_{cu}	I_{cs}	I_{cu}	I_{cs}	I_{cu}	I_{cs}
N	NFGA	65	35	18	30	18	65	65	40	40	12	6
H	HFGA	100	65	20	30	25	100	75	70	70	12	6
L	LFGA	200	100	25	30	30	200	150	100	75	12	6

Connectors for 75°C Wire

Construction	Ampere Rating	Wire Range	No. of cables per phase	Catalogue Number
Steel	50-250	#4–350 kcmil Cu	1	**3TW1FG350**②
Aluminum	50-250	#4–350 kcmil Al/Cu	1	**3TAW1FG350**①②
Copper	50-250	#4–350 kcmil Cu	1	**3TCW1FG350**②
Distribution Lugs				
	50-250	#14–2/0 Cu	3	**3TA3FG20**②
	50-250	#14–#4 Cu	6	**3TA6FG04**②
Compression Lugs				
	50-250	#4-350 Al/Cu	1	**3CLF350**②

① Standard connector supplied with complete breakers.
② Kit consists of 3 terminal connectors.

FG Thermal-Magnetic, Instantaneous Trip Adjustment Range

Trip Unit Continuous Amp Rating (I_n)	Instantaneous Overcurrent Setting (I_i)	
	Min.	Max.
100	625	1250
110	800	1600
125	800	1600
150	800	1600
175	1000	2000
200	1000	2000
225	1250	2500
250	1250	2500

Note: Each breaker has 6 trip settings in this range.

External Accessories page 5-195 - 5-209

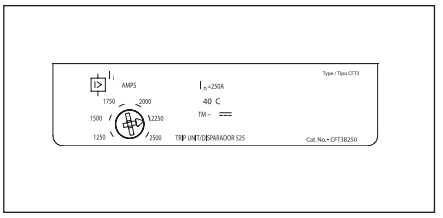

Model 525 Trip Unit

FG 250A Frame 2-Pole with Thermal-Magnetic Trip Unit

Continuous Ampere Rating	N-Interrupting Class Catalogue Number	H-Interrupting Class Catalogue Number	L-Interrupting Class Catalogue Number	Catalogue Number
	FRAME ONLY			
	NFG2F250	HFG2F250	LFG2F250	
	COMPLETE FACTORY ASSEMBLED CIRCUIT BREAKER			TRIP UNIT ONLY
100	NFG2B100L	HFG2B100L	LFG2B100L	CFT2B100
110	NFG2B110L	HFG2B110L	LFG2B110L	CFT2B110
125	NFG2B125L	HFG2B125L	LFG2B125L	CFT2B125
150	NFG2B150L	HFG2B150L	LFG2B150L	CFT2B150
175	NFG2B175L	HFG2B175L	LFG2B175L	CFT2B175
200	NFG2B200L	HFG2B200L	LFG2B200L	CFT2B200
225	NFG2B225L	HFG2B225L	LFG2B225L	CFT2B225
250	NFG2B250L	HFG2B250L	LFG2B250L	CFT2B250

FG 250A Frame 3-Pole with Thermal-Magnetic Trip Unit

Continuous Ampere Rating	N-Interrupting Class Catalogue Number	H-Interrupting Class Catalogue Number	L-Interrupting Class Catalogue Number	Catalogue Number
	FRAME ONLY			
	NFG3F250	HFG3F250	LFG3F250	
	COMPLETE FACTORY ASSEMBLED CIRCUIT BREAKER			TRIP UNIT ONLY
100	NFG3B100L	HFG3B100L	LFG3B100L	CFT3B100
110	NFG3B110L	HFG3B110L	LFG3B110L	CFT3B110
125	NFG3B125L	HFG3B125L	LFG3B125L	CFT3B125
150	NFG3B150L	HFG3B150L	LFG3B150L	CFT3B150
175	NFG3B175L	HFG3B175L	LFG3B175L	CFT3B175
200	NFG3B200L	HFG3B200L	LFG3B200L	CFT3B200
225	NFG3B225L	HFG3B225L	LFG3B225L	CFT3B225
250	NFG3B250L	HFG3B250L	LFG3B250L	CFT3B250

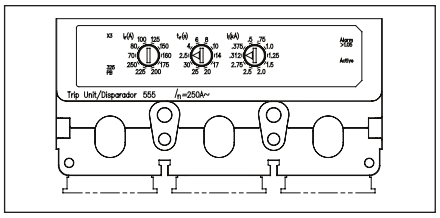

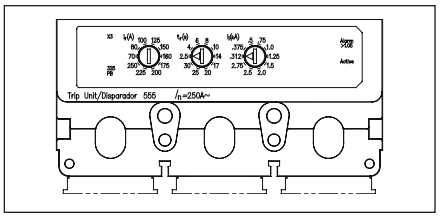

Model 555 Trip Units

FG 250A Frame 3-Pole Electronic Trip Unit①

Continuous Ampere Rating	N-Interrupting Class Catalogue Number	H-Interrupting Class Catalogue Number	L-Interrupting Class Catalogue Number	Catalogue Number
	FRAME ONLY			
	NFG3F250	HFG3F250	LFG3F250	
	COMPLETE FACTORY ASSEMBLED CIRCUIT BREAKER			TRIP UNIT ONLY
ELECTRONIC LI TRIP				
100	NFG3R100L	HFG3R100L	LFG3R100L	CFT3R100
150	NFG3R150L	HFG3R150L	LFG3R150L	CFT3R150
250	NFG3R250L	HFG3R250L	LFG3R250L	CFT3R250
ELECTRONIC LSI TRIP				
100	NFG3T100L	HFG3T100L	LFG3T100L	CFT3T100
150	NFG3T150L	HFG3T150L	LFG3T150L	CFT3T150
250	NFG3T250L	HFG3T250L	LFG3T250L	CFT3T250
ELECTRONIC LSIG TRIP				
100	NFG3V100L	HFG3V100L	LFG3V100L	CFT3V100
150	NFG3V150L	HFG3V150L	LFG3V150L	CFT3V150
250	NFG3V250L	HFG3V250L	LFG3V250L	CFT3V250
ELECTRONIC LIG TRIP				
100	NFG3W100L	HFG3W100L	LFG3W100L	CFT3W100
150	NFG3W150L	HFG3W150L	LFG3W150L	CFT3W150
250	NFG3W250L	HFG3W250L	LFG3W250L	CFT3W250

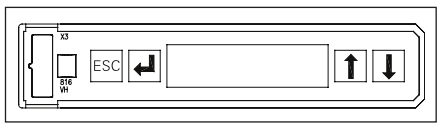

Model 586 Trip Unit

FG 250A Frame 3-Pole Electronic LCD Trip Unit①

Continuous Ampere Rating	N-Interrupting Class Catalogue Number	H-Interrupting Class Catalogue Number	L-Interrupting Class Catalogue Number	Catalogue Number
	FRAME ONLY			
	NFG3F250	HFG3F250	LFG3F250	
	COMPLETE FACTORY ASSEMBLED CIRCUIT BREAKER			TRIP UNIT ONLY
LCD ELECTRONIC LSI TRIP				
100	NFG3A100L	HFG3A100	LFG3A100L	CFT3A100
150	NFG3A150L	HFG3A150L	LFG3A150L	CFT3A150
250	NFG3A250L	HFG3A250L	LFG3A250L	CFT3A250
LCD ELECTRONIC LSIG TRIP				
100	NFG3G100L	HFG3G100	LFG3G100L	CFT3G100
150	NFG3G150L	HFG3G150L	LFG3G150L	CFT3G150
250	NFG3G250L	HFG3G250L	LFG3G250L	CFT3G250
LCD ELECTRONIC LSI TRIP + GF ALARM ONLY				
100	NFG3K100L	HFG3K100	LFG3K100L	CFT3K100
150	NFG3K150L	HFG3K150L	LFG3K150L	CFT3K150
250	NFG3K250L	HFG3K250L	LFG3K250L	CFT3K250

① Due to the location of the magnetic tripping solenoid, the left accessory pocket is not available for accessories.

Internal Accessories for DG 150A and FG 250A Frames

Auxiliary Switch and Alarm Switch Combination Kits

Description	Mounting Pocket①	Catalogue Number
1 Alarm Switch 1A/B③ Bases AMBL2 & AMBL3	Left, Right②	**ASKL1**
2 Aux. Switches 1A + 1B Bases AMBL1	Left, Right	**ASKL2**
2 Aux. + 1 Alarm Switches 1A + 1B, 1A/B③ Bases AMBL2 & AMBL3	Left, Right②	**ASKL3**

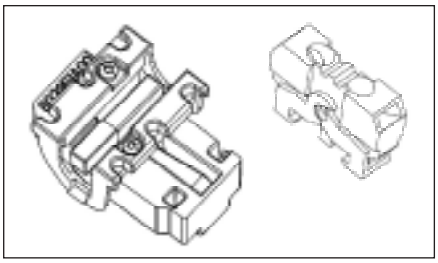

Auxiliary/Alarm Switch Mounting Base Only

Description	Mounting Pocket	Catalogue Number
Up to 3 Auxiliary Switches	Left, Right	**AMBL1**
2 Aux. + 1 Alarm Switch	Left Pocket Only	**AMBL2**
2 Aux. + 1 Alarm Switch	Right Pocket Only	**AMBL3**

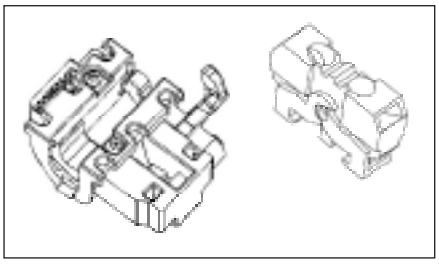

Auxiliary/Alarm Switch Only

Common to DG - PG Frames

Description	Catalogue Number
1 Normally Open Contact (1A)	**ASWPA**
1 Normally Closed Contact (1B)	**ASWPB**

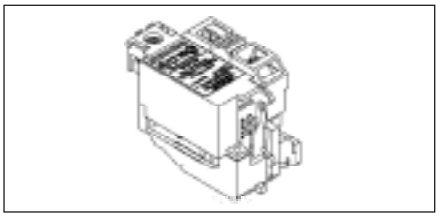

Shunt Trips

Description	Mounting Pocket	Catalogue Number
24 VDC	Right Pocket Only	**STRLB24DC**
48-60 VDC		**STRLC60DC**
110-127 VDC		**STRLD125DC**
220-250 VDC		**STRLE250DC**
48-60 VAC		**STRLM60**
110-127 VAC		**STRLN120**
208-277 VAC		**STRLS277**
380-600 VAC		**STRLV600**

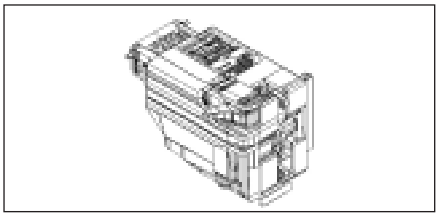

Undervoltage Release

Description	Mounting Pocket	Catalogue Number
12 VDC	Right Pocket Only	**UVRLA12DC**
24 VDC		**UVRLB24DC**
48 VDC		**UVRLC48DC**
60 VDC		**UVRLG60DC**
110-127 VDC		**UVRLD125DC**
220-250 VDC		**UVRLE250DC**
24 VAC		**UVRLL24**
110-127 VAC		**UVRLN120**
220-240 VAC		**UVRLR240**
208 VAC		**UVRLP208**
277 VAC		**UVRLS277**
380-415 VAC		**UVRLT415**
440-480 VAC		**UVRLU480**

① Refer to the "Accessory Locations" chart for guidelines and limitations about which pockets may be used for accessory combinations.
② These kits include two bases, one for mounting switches in the left pocket and another for mounting in the right.
③ Includes 1A and 1B contact for alarm purposes, only one of which may be installed at any time.
'A' refers to a normally open contact (open when the breaker contacts are open).
'B' refers to a normally closed contact (closed when the breaker contacts are open).

External Accessories page 5-195 - 5-209

Ordering Information

Complete Assembled Breaker

A complete factory assembled JG breaker includes the frame, trip unit, and standard line and load connectors, all factory installed and shipped as a complete breaker. Assembled breakers are available only with standard connectors.

For any other configuration, order the frame, trip unit, and terminals as separate items.

For DC applications, use thermal magnetic trip unit only.

For reverse feed applications, select non-interchangeable trip breakers only. For non-interchangeable trip breakers, change the third digit of the catalogue number to "X" for standard breakers.

For 100% rated breakers with a non-interchangeable trip unit, change the 3rd character of the catalogue number to "Y".

For special applications, refer to page 5-216.

Mounting hardware is included with each frame or complete breaker.

HACR rated.



Interrupting Ratings

Interrupting Class	Breaker Type	RMS Symmetrical Amperes (KA)											
		UL 489 AIR (File E10848)					IEC 60947-2					
		Volts AC (50/60 Hz)			Volts DC		Volts AC (50/60 Hz)					
							220/240		380/415		690	
		240	480	600	250	500	I_{cu}	I_{cs}	I_{cu}	I_{cs}	I_{cu}	I_{cs}
N	NJGA	65	35	25	30	25	65	65	45	45	12	6
H	HJGA	100	65	25	30	35	100	75	70	70	15	8
L	LJGA	200	100	25	30	35	200	150	100	75	15	8

Connectors for 75°C Wire

Construction	Ampere Rating	Wire Range	No. of cables per phase	Catalogue Number
Steel	70-400	1/0–600 kcmil Cu	1	**3TW1JG600**②
Aluminum	70-400	3/0–250 kcmil Al/Cu	2	**3TA2JG250**①②
Aluminum	70-400	250–750 kcmil Al	1	**3TA1JG750**②
Aluminum	70-400	3/0–600 kcmil Cu	1	**3TA1JG750**②
Copper	70-400	3/0–750 kcmil Cu	1	**TC1JG750**③
Copper	70-400	3/0–250 kcmil Cu	2	**TC2JG250**③
Distribution Lugs				
	70-400	#14–4 Cu	12	**3TA12JG04**②
	70-400	#14–2/0 Cu	6	**3TA6JG20**②
Compression Lugs				
	70-400	#6–350 kcmil	—	**3CLJ350**②
	70-400	250-600 kcmil	—	**3CLJ600**②
	70-400	250-750 kcmil	—	**3CLJ750**②

① Standard construction supplied for each breaker.
② Kit consists of 3 terminal connectors.
③ Required for 100% rated JG breakers. Requires 90°C cable sized at 75°C ampacity.

JG Thermal-Magnetic, Instantaneous Trip Adjustment Range

Trip Unit Continuous Amp Rating (I_n)	Instantaneous Overcurrent Setting (I_i)	
	Min.	Max.
250	1250	2500
300	1500	3000
350	1750	3500
400	2000	4000

Note: Each breaker has 6 trip settings in this range.

Dimensions - Inches (mm)

Number of Poles	W	L	D	To Handle D1
2, 3	5.5 (139)	11 (279)	4.2 (102)	5.4 (138)

Shipping Weight, lbs. (kg)

Poles	Frame	Trip Unit		Complete Breaker
		Thermal-Mag.	Electronic	
2, 3	9.3 (7.9)	4.0 (1.8)	4.0 (1.8)	12.6 (5.7)

External Accessories page 5-195 - 5-209

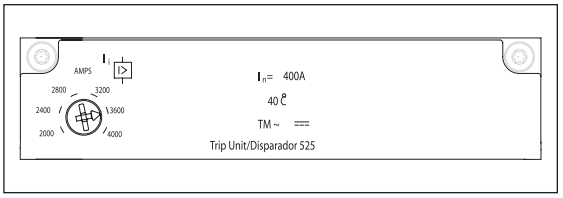

Model 525 Trip Unit

JG 400A Frame 2-Pole with Thermal-Magnetic Trip Unit

Continuous Ampere Rating	N-Interrupting Class Catalogue Number	H-Interrupting Class Catalogue Number	L-Interrupting Class Catalogue Number	Catalogue Number
	FRAME ONLY			
	NJG2F400	HJG2F400	LJG2F400	
	COMPLETE FACTORY ASSEMBLED CIRCUIT BREAKER			TRIP UNIT ONLY
250	NJG2B250L	HJG2B250L	LJG2B250L	CJT2B250
300	NJG2B300L	HJG2B300L	LJG2B300L	CJT2B300
350	NJG2B350L	HJG2B350L	LJG2B350L	CJT2B350
400	NJG2B400L	HJG2B400L	LJG2B400L	CJT2B400

JG 400A Frame 3-Pole with Thermal-Magnetic Trip Unit

Continuous Ampere Rating	N-Interrupting Class Catalogue Number	H-Interrupting Class Catalogue Number	L-Interrupting Class Catalogue Number	Catalogue Number
	FRAME ONLY			
	NJG3F400	HJG3F400	LJG3F400	
	COMPLETE FACTORY ASSEMBLED CIRCUIT BREAKER			TRIP UNIT ONLY
250	NJG3B250L	HJG3B250L	LJG3B250L	CJT3B250
300	NJG3B300L	HJG3B300L	LJG3B300L	CJT3B300
350	NJG3B350L	HJG3B350L	LJG3B350L	CJT3B350
400	NJG3B400L	HJG3B400L	LJG3B400L	CJT3B400

JJ 400A Frame 240V max., 2-pole with Thermal-Magnetic Non-Interchangeable Trip Unit①

Continuous Ampere Rating	N-Interrupting Class Catalogue Number COMPLETE BREAKER
250	NJJ2B250
300	NJJ2B300
350	NJJ2B350
400	NJJ2B400

JJ 400A Frame 240V max., 3-pole with Thermal-Magnetic Non-Interchangeable Trip Unit①

Continuous Ampere Rating	N-Interrupting Class Catalogue Number COMPLETE BREAKER
250	NJJ3B250
300	NJJ3B300
350	NJJ3B350
400	NJJ3B400

① Terminal connectors must be ordered separately. Breaker Type NJJA.

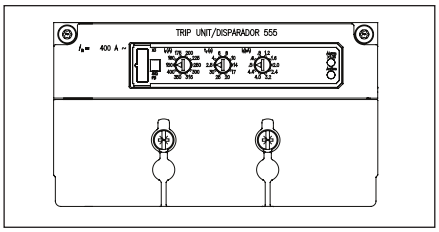

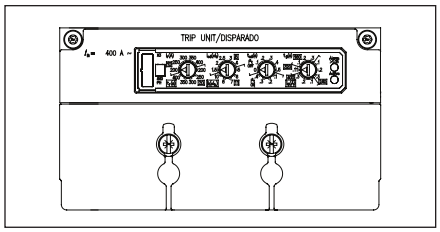

Model 555 Trip Units

JG 400A Frame 3-Pole Electronic Trip Unit

Continuous Ampere Rating	N-Interrupting Class Catalogue Number	H-Interrupting Class Catalogue Number	L-Interrupting Class Catalogue Number	Catalogue Number
	FRAME ONLY			
	NJG3F400	HJG3F400	LJG3F400	
	COMPLETE FACTORY ASSEMBLED CIRCUIT BREAKER			TRIP UNIT ONLY
ELECTRONIC LI TRIP				
250 400	NJG3R250L NJG3R400L	HJG3R250L HJG3R400L	LJG3R250L LJG3R400L	CJT3R250 CJT3R400
ELECTRONIC LSI TRIP				
250 400	NJG3T250L NJG3T400L	HJG3T250L HJG3T400L	LJG3T250L LJG3T400L	CJT3T250 CJT3T400
ELECTRONIC LSIG TRIP				
250 400	NJG3V250L NJG3V400L	HJG3V250L HJG3V400L	LJG3V250L LJG3V400L	CJT3V250 CJT3V400
ELECTRONIC LIG TRIP				
250 400	NJG3W250L NJG3W400L	HJG3W250L HJG3W400L	LJG3W250L LJG3W400L	CJT3W250 CJT3W400

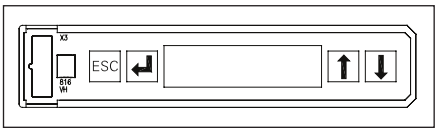

Model 586 Trip Unit

JG 400A Frame 3-Pole Electronic LCD Trip Unit

Continuous Ampere Rating	N-Interrupting Class Catalogue Number	H-Interrupting Class Catalogue Number	L-Interrupting Class Catalogue Number	Catalogue Number
	FRAME ONLY			
	NJG3F400	HJG3F400	LJG3F400	
	COMPLETE FACTORY ASSEMBLED CIRCUIT BREAKER			TRIP UNIT ONLY
LCD ELECTRONIC LSI TRIP				
250 400	NJG3A250L NJG3A400L	HJG3A250L HJG3A400L	LJG3A250L LJG3A400L	CJT3A250 CJT3A400
LCD ELECTRONIC LSIG TRIP				
250 400	NJG3G250L NJG3G400L	HJG3G250L HJG3G400L	LJG3G250L LJG3G400L	CJT3G250 CJT3G400
LCD ELECTRONIC LSI TRIP + GF ALARM ONLY				
250 400	NJG3K250L NJG3K400L	HJG3K250L HJG3K400L	LJG3K250L LJG3K400L	CJT3K250 CJT3K400

Internal Accessories for JG 400A and LG 600A Frames

Auxiliary Switch and Alarm Switch Combination Kits

Description	Mounting Pocket①	Catalogue Number
1 Alarm Switch 1A/B③ Bases AMBL2 & AMBL3	Left, Right②	**ASKL1**
2 Aux. Switches 1A + 1B Bases AMBL1	Left, Right	**ASKL2**
2 Aux. + 1 Alarm Switches 1A + 1B, 1A/B③ Bases AMBL2 & AMBL3	Left, Right②	**ASKL3**

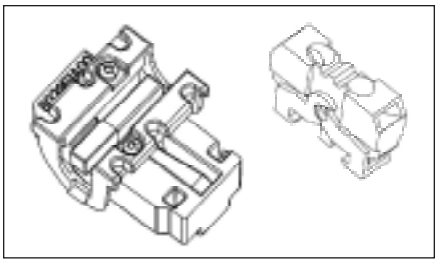

Auxiliary/Alarm Switch Mounting Base Only

Description	Mounting Pocket	Catalogue Number
Up to 3 Auxiliary Switches	Left, Right	**AMBL1**
2 Aux. + 1 Alarm Switch	Left Pocket Only	**AMBL2**
2 Aux. + 1 Alarm Switch	Right Pocket Only	**AMBL3**

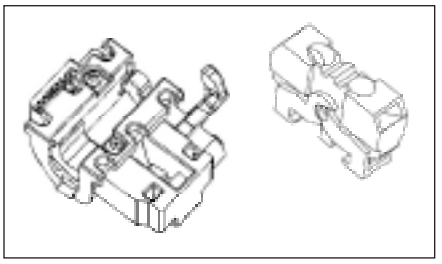

Auxiliary/Alarm Switch Only

Common to DG - PG Frames

Description	Catalogue Number
1 Normally Open Contact (1A)	**ASWPA**
1 Normally Closed Contact (1B)	**ASWPB**

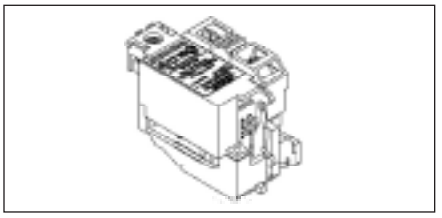

Shunt Trips

Description	Mounting Pocket	Catalogue Number
24 VDC	Right Pocket Only	**STRLB24DC**
48-60 VDC		**STRLC60DC**
110-127 VDC		**STRLD125DC**
220-250 VDC		**STRLE250DC**
48-60 VAC		**STRLM60**
110-127 VAC		**STRLN120**
208-277 VAC		**STRLS277**
380-600 VAC		**STRLV600**

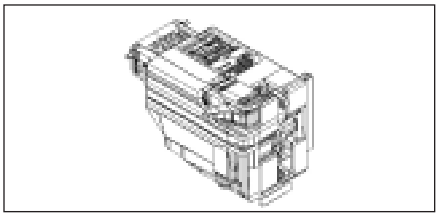

Undervoltage Release

Description	Mounting Pocket	Catalogue Number
12 VDC	Right Pocket Only	**UVRLA12DC**
24 VDC		**UVRLB24DC**
48 VDC		**UVRLC48DC**
60 VDC		**UVRLG60DC**
110-127 VDC		**UVRLD125DC**
220-250 VDC		**UVRLE250DC**
24 VAC		**UVRLL24**
110-127 VAC		**UVRLN120**
220-240 VAC		**UVRLR240**
208 VAC		**UVRLP208**
277 VAC		**UVRLS277**
380-415 VAC		**UVRLT415**
440-480 VAC		**UVRLU480**

① Refer to the "Accessory Locations" chart for guidelines and limitations about which pockets may be used for accessory combinations.
② Includes 1A and 1B contact for alarm purposes, only one of which may be installed at any time.
'A' refers to a normally open contact (open when the breaker contacts are open).
'B' refers to a normally closed contact (closed when the breaker contacts are open).

External Accessories page 5-195 - 5-209

Ordering Information

Complete Assembled Breaker

A complete factory assembled LG breaker includes the frame, trip unit, and standard line and load lugs, all factory installed and shipped as a complete breaker. Assembled breakers are available only with standard connectors.

For DC applications, use thermal magnetic trip unit only.

Breakers are suitable for reverse feed applications.

For special applications, refer to page 5-216.

Mounting hardware is included with each breaker.

For 100% rated breakers, change the 3rd character of the catalogue number to "W". Available on 400/500 Amp only.

HACR rated.



Interrupting Ratings

Interrupting Class	Breaker Type	RMS Symmetrical Amperes (KA)											
		CSA C22.2 NO.5 / UL 489					IEC 60947-2						
		Volts AC (50/60 Hz)			Volts DC		Volts AC (50/60 Hz)						
		240	480	600	250	500	220/240		380/415		690		
							I_{cu}	I_{cs}	I_{cu}	I_{cs}	I_{cu}	I_{cs}
N	NLGB	65	35	18	30	25	65	65	45	45	12	6
H	HLGB	100	65	18	30	35	100	75	70	70	15	8
L	LLGB	200	100	18	30	35	200	150	100	75	15	8

Connectors for 75°C Wire

Construction	Ampere Rating	Wire Range	No. of cables per phase	Catalogue Number②
Aluminum	150-600	#2/0–600 kcmil Al/Cu	2 (load side)	**3TA2LG600LD**①
Aluminum	150-600	#2/0–600 kcmil Al/Cu	2 (line side)	**3TA2LG600LN**①
Copper	150-600	#2/0–600 kcmil Cu	2 (load side)	**3TC2LG600LD**④
Copper	150-600	#2/0–600 kcmil Cu	2 (line side)	**3TC2LG600LN**④
Compression Lugs				
	150-600	#6–350 kcmil Al/Cu	—	**6CLL350**③
	150-600	250-750 kcmil Al/Cu	—	**3CLL750**②
	150-600	250-600 kcmil Al/Cu	—	**6CLL600**③

① Standard construction supplied for each breaker.
② Kit consists of 3 terminal connectors.
③ Kit consists of 6 lugs for Line or Load end.
④ Required for 100% rated LG breakers. Requires 90°C cable sized at 75°C ampacity.

LG Thermal-Magnetic, Instantaneous Trip Adjustment Range

Trip Unit Continuous Amp Rating (I_n)	Instantaneous Overcurrent Setting (I_i)	
	Min.	Max.
400	2000	4000
500	2500	5000
600	2750	5500

Note: Each breaker has 6 trip settings.

Dimensions - Inches (mm)

Number of Poles	W	L	D	To Handle D1
2, 3	5.5 (139)	11 (279)	4.2 (102)	5.4 (138)
Ext. Shield		13.6 (345.5)		

Shipping Weight, lbs. (kg)

Poles	Frame	Trip Unit		Complete Breaker
		Thermal-Mag.	Electronic	
2, 3	17.4 (7.9)	3.5 (1.6)	4.2 (1.9)	20.9 (9.5)

External Accessories page 5-195 - 5-209

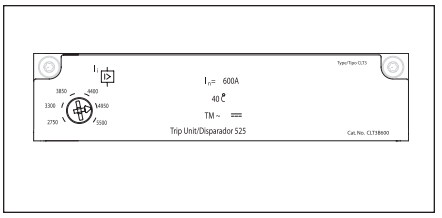

Model 525 Trip Unit

LG 600A Frame 2-Pole with Thermal-Magnetic Trip Unit

Continuous Ampere Rating	N-Interrupting Class	H-Interrupting Class	L-Interrupting Class
	Catalogue Number	Catalogue Number	Catalogue Number
	COMPLETE FACTORY ASSEMBLED CIRCUIT BREAKER		
400	**NLK2B400L**	**HLK2B400L**	**LLK2B400L**
500	**NLK2B500L**	**HLK2B500L**	**LLK2B500L**
600	**NLK2B600L**	**HLK2B600L**	**LLK2B600L**

LG 600A Frame 3-Pole with Thermal-Magnetic Trip Unit

Continuous Ampere Rating	N-Interrupting Class	H-Interrupting Class	L-Interrupting Class
	Catalogue Number	Catalogue Number	Catalogue Number
	COMPLETE FACTORY ASSEMBLED CIRCUIT BREAKER		
400	**NLK3B400L**	**HLK3B400L**	**LLK3B400L**
500	**NLK3B500L**	**HLK3B500L**	**LLK3B500L**
600	**NLK3B600L**	**HLK3B600L**	**LLK3B600L**

① For 100% rated 400A or 500A versions, change the third character of the catalogue number to "Z".
① Please consult Siemens sales office for availability.

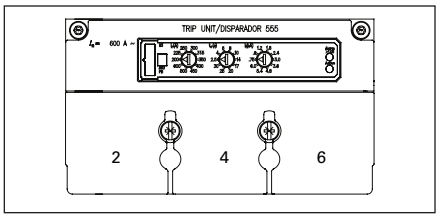

Model 555 Trip Unit

LG 600A Frame 3-Pole Electronic Trip Unit

Continuous Ampere Rating	N-Interrupting Class	H-Interrupting Class	L-Interrupting Class
	Catalogue Number	Catalogue Number	Catalogue Number
	COMPLETE FACTORY ASSEMBLED CIRCUIT BREAKER		
ELECTRONIC LI TRIP			
400 600	NLK3R400L NLK3R600L	HLK3R400L HLK3R600L	LLK3R400L LLK3R600L
ELECTRONIC LSI TRIP			
400 600	NLK3T400L NLK3T600L	HLK3T400L HLK3T600L	LLK3T400L LLK3T600L
ELECTRONIC LSIG TRIP			
400 600	NLK3V400L NLK3V600L	HLK3V400L HLK3V600L	LLK3V400L LLK3V600L
ELECTRONIC LIG TRIP			
400 600	NLK3W400L NLK3W600L	HLK3W400L HLK3W600L	LLK3W400L LLK3W600L

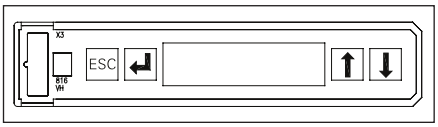

Model 586 Trip Unit

LG 600A Frame 3-Pole Electronic LCD Trip Unit

Continuous Ampere Rating	N-Interrupting Class	H-Interrupting Class	L-Interrupting Class
	Catalogue Number	Catalogue Number	Catalogue Number
	COMPLETE FACTORY ASSEMBLED CIRCUIT BREAKER		
ELECTRONIC LSI TRIP			
400 600	NLK3A400L NLK3A600L	HLK3A400L HLK3A600L	LLK3A400L LLK3A600L
ELECTRONIC LSIG TRIP			
400 600	NLK3G400L NLK3G600L	HLK3G400L HLK3G600L	LLK3G400L LLK3G600L
ELECTRONIC LSIG TRIP + GFG ALARM ONLY			
400 600	NLK3K400L NLK3K600L	HLK3K400L HLK3K600L	LLK3K400L LLK3K600L

Internal Accessories for JG 400A and LG 600A Frames

Auxiliary Switch and Alarm Switch Combination Kits

Description	Mounting Pocket①	Catalogue Number
1 Alarm Switch 1A/B③ Bases AMBL2 & AMBL3	Left, Right②	**ASKL1**
2 Aux. Switches 1A + 1B Bases AMBL1	Left, Right	**ASKL2**
2 Aux. + 1 Alarm Switches 1A + 1B, 1A/B③ Bases AMBL2 & AMBL3	Left, Right②	**ASKL3**

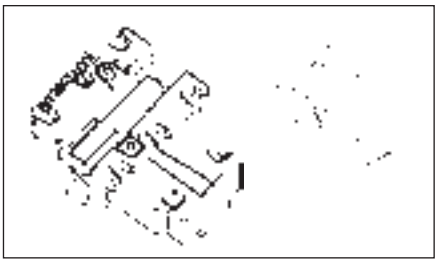

Auxiliary/Alarm Switch Mounting Base Only

Description	Mounting Pocket	Catalogue Number
Up to 3 Auxiliary Switches	Left, Right	**AMBL1**
2 Aux. + 1 Alarm Switch	Left Pocket Only	**AMBL2**
2 Aux. + 1 Alarm Switch	Right Pocket Only	**AMBL3**



Auxiliary/Alarm Switch Only

Common to DG - PG Frames

Description	Catalogue Number
1 Normally Open Contact (1A)	**ASWPA**
1 Normally Closed Contact (1B)	**ASWPB**



Shunt Trips

Description	Mounting Pocket	Catalogue Number
24 VDC	Right Pocket Only	**STRLB24DC**
48-60 VDC		**STRLC60DC**
110-127 VDC		**STRLD125DC**
220-250 VDC		**STRLE250DC**
48-60 VAC		**STRLM60**
110-127 VAC		**STRLN120**
208-277 VAC		**STRLS277**
380-600 VAC		**STRLV600**

Undervoltage Release

Description	Mounting Pocket	Catalogue Number
12 VDC	Right Pocket Only	**UVRLA12DC**
24 VDC		**UVRLB24DC**
48 VDC		**UVRLC48DC**
60 VDC		**UVRLG60DC**
110-127 VDC		**UVRLD125DC**
220-250 VDC		**UVRLE250DC**
24 VAC		**UVRLL24**
110-127 VAC		**UVRLN120**
220-240 VAC		**UVRLR240**
208 VAC		**UVRLP208**
277 VAC		**UVRLS277**
380-415 VAC		**UVRLT415**
440-480 VAC		**UVRLU480**



① Refer to the "Accessory Locations" chart for guidelines and limitations about which pockets may be used for accessory combinations.
② Includes 1A and 1B contact for alarm purposes, only one of which may be installed at any time.
'A' refers to a normally open contact (open when the breaker contacts are open).
'B' refers to a normally closed contact (closed when the breaker contacts are open).

External Accessories page 5-195 - 5-209

Ordering Information

Complete Assembled Breaker

A complete factory assembled MG breaker includes the frame, trip unit, and standard line and load lugs, all factory installed and shipped as a complete breaker. Assembled breakers are available only with standard connectors.

For any other configuration, order the frame, trip unit, and terminals as separate items.

For DC applications, use thermal magnetic trip unit only.

For reverse feed applications, select non-interchangeable trip breakers only. For non-interchangeable trip breakers, change the third digit of the catalogue number to "X" for standard breakers.

For 100% rated breakers with a non-interchangeable trip unit, change the 3rd character of the catalogue number to "Y".

For special applications, refer to page 5-216.

Mounting hardware is included with each frame or complete breaker.

HACR rated.



Dimensions - Inches (mm)

Number of Poles	W	L	D	To Handle D1
2, 3	7.5 (190)	16 (406)	4.7 (119)	5.9 (151)

Shipping Weight, lbs. (kg)

Poles	Frame	Trip Unit	Complete Breaker
2, 3	31.3 (14.2)	4.0 (1.8)	35.3 (16.0)

Interrupting Ratings

Interrupting Class	Breaker Type	RMS Symmetrical Amperes (KA)											
		CSA C22.2 NO.5 / UL 489					IEC 60947-2						
		Volts AC (50/60 Hz)			Volts DC		Volts AC (50/60 Hz)						
							220/240		380/415		690		
		240	480	600	250	500	I_{cu}	I_{cs}	I_{cu}	I_{cs}	I_{cu}	I_{cs}
N	NMG	65	35	25	22	35	65	65	50	50	20	10
H	HMG	100	65	35	25	50	100	75	70	70	30	15
L	LMG	200	100	50	42	65	200	150	100	75	35	17

Connectors for 75°C Wire

Construction	Ampere Rating	Wire Range	No. of cables per phase	Catalogue Number
Aluminum	200-800A	1/0–500 kcmil Al/Cu	3	**3TA3MG500**①②
Aluminum	200-800A	500-750 kcmil Al/Cu	2	**3TA2MG750**②
Copper	200-800A	1/0–500 kcmil Cu	3	**TC3MG500**③⑤
Aluminum	200-800A	#2–600 kcmil Al/Cu	3	**3TA3MG600**②④

① Standard connector supplied with complete breakers.
② Kit consists of 3 terminal connectors.
③ Consists of one terminal.
④ Includes extended terminal cover.
⑤ Required for 100% rated MG breakers. Requires 90°C cable sized at 75°C ampacity.

MG Thermal-Magnetic, Instantaneous Trip Adjustment Range

Trip Unit Continuous Amp Rating (I_n)	Instantaneous Overcurrent Setting (I_i)	
	Min.	Max.
600	3000	6000
700	3250	6500
800	3250	6500

Note: Each breaker has 6 trip settings.

External Accessories page 5-195 - 5-209

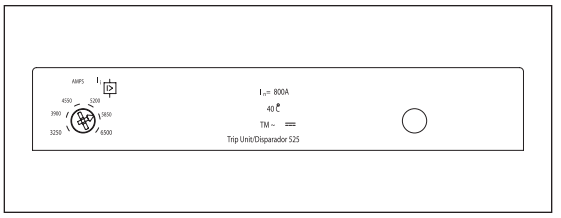

Model 525 Trip Unit

MG 800A Frame 2-Pole with Thermal-Magnetic Trip Unit

Continuous Ampere Rating	N-Interrupting Class Catalogue Number	H-Interrupting Class Catalogue Number	L-Interrupting Class Catalogue Number	Catalogue Number
	FRAME ONLY			
	NMG2F800	HMG2F800	LMG2F800	
	COMPLETE FACTORY ASSEMBLED CIRCUIT BREAKER			TRIP UNIT ONLY
600	NMG2B600L	HMG2B600L	LMG2B600L	CMT2B600
700	NMG2B700L	HMG2B700L	LMG2B700L	CMT2B700
800	NMG2B800L	HMG2B800L	LMG2B800L	CMT2B800

MG 800A Frame 3-Pole with Thermal-Magnetic Trip Unit

Continuous Ampere Rating	N-Interrupting Class Catalogue Number	H-Interrupting Class Catalogue Number	L-Interrupting Class Catalogue Number	Catalogue Number
	FRAME ONLY			
	NMG3F800	HMG3F800	LMG3F800	
	COMPLETE FACTORY ASSEMBLED CIRCUIT BREAKER			TRIP UNIT ONLY
600	NMG3B600L	HMG3B600L	LMG3B600L	CMT3B600
700	NMG3B700L	HMG3B700L	LMG3B700L	CMT3B700
800	NMG3B800L	HMG3B800L	LMG3B800L	CMT3B800

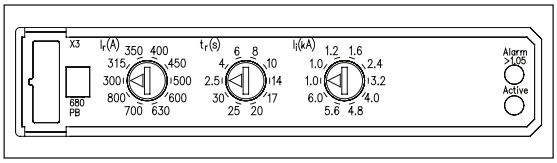

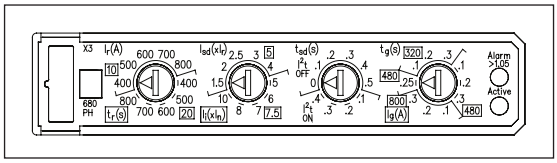

Model 555 Trip Units

MG 800A Frame 3-Pole Electronic Trip Unit

Continuous Ampere Rating	N-Interrupting Class Catalogue Number	H-Interrupting Class Catalogue Number	L-Interrupting Class Catalogue Number	Catalogue Number
	FRAME ONLY			
	NMG3F800	HMG3F800	LMG3F800	
	COMPLETE FACTORY ASSEMBLED CIRCUIT BREAKER			TRIP UNIT ONLY
ELECTRONIC LI TRIP				
600 800	NMG3R600L NMG3R800L	HMG3R600L HMG3R800L	LMG3R600L LMG3R800L	CMT3R600 CMT3R800
ELECTRONIC LSI TRIP				
600 800	NMG3T600L NMG3T800L	HMG3T600L HMG3T800L	LMG3T600L LMG3T800L	CMT3T600 CMT3T800
ELECTRONIC LSIG TRIP				
600 800	NMG3V600L NMG3V800L	HMG3V600L HMG3V800L	LMG3V600L LMG3V800L	CMT3V600 CMT3V800
ELECTRONIC LIG TRIP				
600 800	NMG3W600L NMG3W800L	HMG3W600L HMG3W800L	LMG3W600L LMG3W800L	CMT3W600 CMT3W800

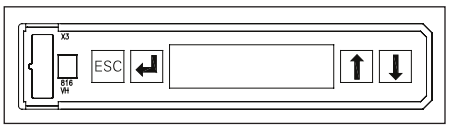

Model 586 Trip Unit

MG 800A Frame 3-Pole Electronic LCD Trip Unit

Continuous Ampere Rating	N-Interrupting Class Catalogue Number	H-Interrupting Class Catalogue Number	L-Interrupting Class Catalogue Number	Catalogue Number
	FRAME ONLY			
	NMG3F800	HMG3F800	LMG3F800	
	COMPLETE FACTORY ASSEMBLED CIRCUIT BREAKER			TRIP UNIT ONLY
LCD ELECTRONIC LSI TRIP				
600 800	NMG3A600L NMG3A800L	HMG3A600L HMG3A800L	LMG3A600L LMG3A800L	CMT3A600 CMT3A800
LCD ELECTRONIC LSIG TRIP				
600 800	NMG3G600L NMG3G800L	HMG3G600L HMG3G800L	LMG3G600L LMG3G800L	CMT3G600 CMT3G800
LCD ELECTRONIC LSIG TRIP + GF ALARM ONLY				
600 800	NMG3K600L NMG3K800L	HMG3K600L HMG3K800L	LMG3K600L LMG3K800L	CMT3K600 CMT3K800

Auxiliary Switch and Alarm Switch Combination Kits

Description	Mounting Pocket	Catalogue Number
2 Aux. + 2 Alarm Switches 2A + 2B Base AMBP2	Left Pocket Only	**ASKP3**
4 Aux. Switches 2A + 2B Base AMBP1	Left, Right	**ASKP4**

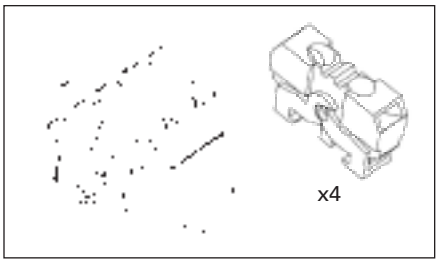

Auxiliary/Alarm Switch Mounting Base Only

Description	Mounting Pocket①	Catalogue Number
Up to 4 Auxiliary Switches 2 Aux. + 2 Alarm Switches	Left, Right Left Pocket Only	**AMBP1** **AMBP2**

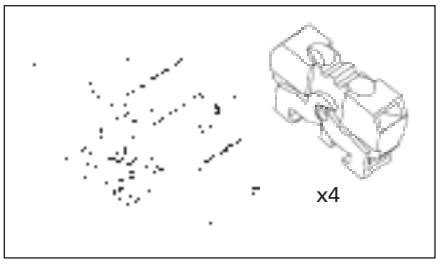

Auxiliary/Alarm Switch Only

Common to DG - PG Frames

Description	Catalogue Number
1 Normally Open Contact (1A)	**ASWPA**
1 Normally Closed Contact (1B)	**ASWPB**

Shunt Trips

Description	Mounting Pocket	Catalogue Number
24 VDC	Right Pocket Only	**STRPB24DC**
48-60 VDC		**STRPC60DC**
110-127 VDC		**STRPD125DC**
220-250 VDC		**STRPE250DC**
48-60 VAC		**STRPM60**
110-127 VAC		**STRPN120**
208-277 VAC		**STRPS277**
380-600 VAC		**STRPV600**

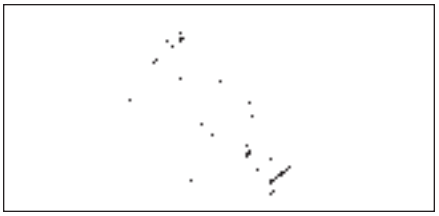

Undervoltage Release

Description	Mounting Pocket	Catalogue Number
12 VDC	Right Pocket Only	**UVRPA12DC**
24 VDC		**UVRPB24DC**
48 VDC		**UVRPC48DC**
60 VDC		**UVRPG60DC**
110-127 VDC		**UVRPD125DC**
220-250 VDC		**UVRPE250DC**
110-127 VAC		**UVRPN120**
220-240 VAC		**UVRPR240**
208 VAC		**UVRPP208**
277 VAC		**UVRPS277**
380-415 VAC		**UVRPT415**
440-480 VAC		**UVRPU480**

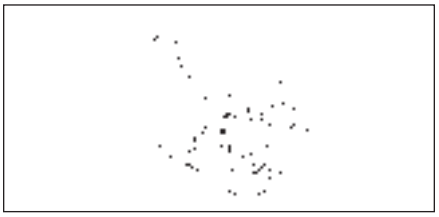

① Refer to the "Accessory Locations" chart for guidelines and limitations about which pockets may be used for accessory combinations.
'A' refers to a normally open contact (open when the breaker contacts are open).
'B' refers to a normally closed contact (closed when the breaker contacts are open).

5 MOLDED CASE CIRCUIT BREAKERS

External Accessories page 5-195 - 5-209

Ordering Information

Complete Assembled Breaker with Lugs

A complete factory assembled NG breaker includes the frame, trip unit, and standard line and load lugs, all factory installed and shipped as a complete breaker. Assembled breakers are available only with standard connectors.

For any other configuration, order the frame, trip unit, and terminals as separate items.

For DC applications, use thermal magnetic trip unit only.

For reverse feed applications, select non-interchangeable trip breakers only. For non-interchangeable trip breakers, change the third digit of the catalogue number to "X" for standard breakers.

For 100% rated breakers with a non-interchangeable trip unit, change the 3rd character of the catalogue number to "Y".

For special applications, refer to page 5-216.

Mounting hardware is included with each frame or complete breaker.

A Toggle Handle Extension is included with each frame or complete breaker.

HACR rated.



Dimensions - Inches (mm)

Number of Poles	W	L	D	To Handle D1
2, 3	9 (229)	16 (406)	6 (152)	8.1 (207)

Shipping Weight, lbs. (kg)

Poles	Frame	Trip Unit	Complete Breaker
2, 3	46.3 (21.0)	8.8 (4.0)	55.1 (25.0)

Interrupting Ratings

Interrupting Class	Breaker Type	RMS Symmetrical Amperes (KA)											
		CSA C22.2 NO.5 / UL 489					IEC 60947-2						
		Volts AC (50/60 Hz)			Volts DC		Volts AC (50/60 Hz)						
							220/240		380/415		690		
		240	480	600	250	500	I_{cu}	I_{cs}	I_{cu}	I_{cs}	I_{cu}	I_{cs}
N	NNG	65	35	25	22	35	65	35	50	25	20	10
H	HNG	100	65	35	25	50	100	50	70	35	30	15
L	LNG	200	100	65	42	65	200	100	100	50	35	17

Connectors for 75°C Wire

Construction	Ampere Rating	Wire Range	No. of cables per phase	Catalogue Number
Aluminum	300-1200A	1/0–500 kcmil Al/Cu	4	3TA4NG500③④
Aluminum	300-1200A	500-750 kcmil Al/Cu	3	3TA3NG750④
Copper	300-1200A	1/0–500 kcmil Cu	4	3TC4NG500③③
Aluminum	300-1200A	1/0–500 kcmil Al/Cu	4	3TA4NG500H④
Compression Lugs				
	300-1200A	1/0-500 kcmil Al/Cu	—	12CLN500①

① Total of 12 connectors (4 per phase Line or Load).
② For 100% rated NG breakers. Requires 90°C cable sized at 75°C ampacity.
③ Standard connector provided with complete breakers.
④ Kit consists of 3 terminal connectors.

NG Thermal-Magnetic, Instantaneous Trip Adjustment Range

Trip Unit Continuous Amp Rating (I_n)	Instantaneous Overcurrent Setting (I_i)	
	Min.	Max.
800	4000	8000
900	5000	10000
1000	5000	10000
1200	7000	12000

Note: Each breaker has 6 trip settings.

External Accessories page 5-195 - 5-209

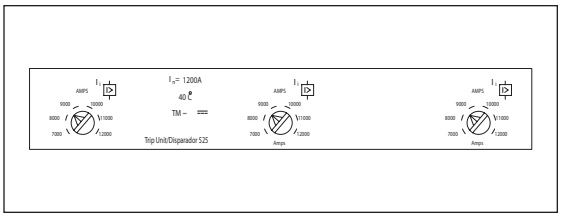

Model 525 Trip Unit

NG 1200A Frame 2-Pole with Thermal-Magnetic Trip Unit

Continuous Ampere Rating	N-Interrupting Class Catalogue Number	H-Interrupting Class Catalogue Number	L-Interrupting Class Catalogue Number	Catalogue Number
	FRAME ONLY			
	NNG2F120	HNG2F120	LNG2F120	
	COMPLETE FACTORY ASSEMBLED CIRCUIT BREAKER			TRIP UNIT ONLY
800	NNG2B800L	HNG2B800L	LNG2B800L	CNT2B800
900	NNG2B900L	HNG2B900L	LNG2B900L	CNT2B900
1000	NNG2B100L	HNG2B100L	LNG2B100L	CNT2B100
1200	NNG2B120L	HNG2B120L	LNG2B120L	CNT2B120

NG 1200A Frame 3-Pole with Thermal-Magnetic Trip Unit

Continuous Ampere Rating	N-Interrupting Class Catalogue Number	H-Interrupting Class Catalogue Number	L-Interrupting Class Catalogue Number	Catalogue Number
	FRAME ONLY			
	NNG3F120	HNG3F120	LNG3F120	
	COMPLETE FACTORY ASSEMBLED CIRCUIT BREAKER			TRIP UNIT ONLY
800	NNG3B800L	HNG3B800L	LNG3B800L	CNT3B800
900	NNG3B900L	HNG3B900L	LNG3B900L	CNT3B900
1000	NNG3B100L	HNG3B100L	LNG3B100L	CNT3B100
1200	NNG3B120L	HNG3B120L	LNG3B120L	CNT3B120

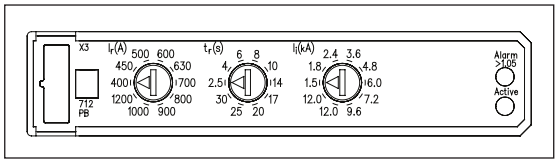

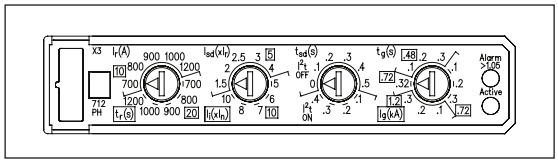

Model 555 Trip Units

NG 1200A Frame 3-Pole Electronic Trip Unit

Continuous Ampere Rating	N-Interrupting Class Catalogue Number	H-Interrupting Class Catalogue Number	L-Interrupting Class Catalogue Number	Catalogue Number
	FRAME ONLY			
	NNG3F120	HNG3F120	LNG3F120	
	COMPLETE FACTORY ASSEMBLED CIRCUIT BREAKER			TRIP UNIT ONLY
ELECTRONIC LI TRIP				
800	NNG3R800L	HNG3R800L	LNG3R800L	CNT3R800
1000	NNG3R100L	HNG3R100L	LNG3R100L	CNT3R100
1200	NNG3R120L	HNG3R120L	LNG3R120L	CNT3R120
ELECTRONIC LSI TRIP				
800	NNG3T800L	HNG3T800L	LNG3T800L	CNT3T800
1000	NNG3T100L	HNG3T100L	LNG3T100L	CNT3T100
1200	NNG3T120L	HNG3T120L	LNG3T120L	CNT3T120
ELECTRONIC LSIG TRIP				
800	NNG3V800L	HNG3V800L	LNG3V800L	CNT3V800
1000	NNG3V100L	HNG3V100L	LNG3V100L	CNT3V100
1200	NNG3V120L	HNG3V120L	LNG3V120L	CNT3V120
ELECTRONIC LIG TRIP				
800	NNG3W800L	HNG3W800L	LNG3W800L	CNT3W800
1000	NNG3W100L	HNG3W100L	LNG3W100L	CNT3W100
1200	NNG3W120L	HNG3W120L	LNG3W120L	CNT3W120

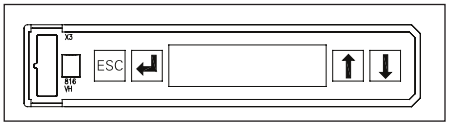

Model 586 Trip Unit

NG 1200A Frame 3-Pole Electronic LCD Trip Unit

Continuous Ampere Rating	N-Interrupting Class Catalogue Number	H-Interrupting Class Catalogue Number	L-Interrupting Class Catalogue Number	Catalogue Number
	FRAME ONLY			
	NNG3F120	HNG3F120	LNG3F120	
	COMPLETE FACTORY ASSEMBLED CIRCUIT BREAKER			TRIP UNIT ONLY
LCD ELECTRONIC LSI TRIP				
800	NNG3A800L	HNG3A800L	LNG3A800L	CNT3A800
1000	NNG3A100L	HNG3A100L	LNG3A100L	CNT3A100
1200	NNG3A120L	HNG3A120L	LNG3A120L	CNT3A120
LCD ELECTRONIC LSIG TRIP				
800	NNG3G800L	HNG3G800L	LNG3G800L	CNT3G800
1000	NNG3G100L	HNG3G100L	LNG3G100L	CNT3G100
1200	NNG3G120L	HNG3G120L	LNG3G120L	CNT3G120
LCD ELECTRONIC LSIG TRIP + GF ALARM ONLY				
800	NNG3K800L	HNG3K800L	LNG3K800L	CNT3K800
1000	NNG3K100L	HNG3K100L	LNG3K100L	CNT3K100
1200	NNG3K120L	HNG3K120L	LNG3K120L	CNT3K120

Auxiliary Switch and Alarm Switch Combination Kits

Description	Mounting Pocket①	Catalogue Number
2 Aux. + 2 Alarm Switches 2A + 2B Base AMBP2	Left Pocket Only	**ASKP3**
4 Aux. Switches 2A + 2B Base AMBP1	Left, Right	**ASKP4**

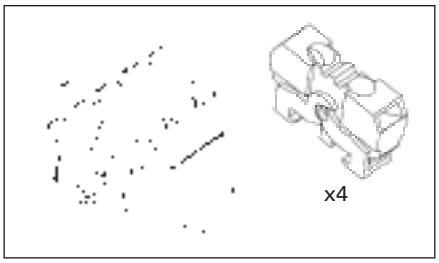

Auxiliary/Alarm Switch Mounting Base Only

Description	Mounting Pocket①	Catalogue Number
Up to 4 Auxiliary Switches 2 Aux. + 2 Alarm Switches	Left, Right Left Pocket Only	**AMBP1** **AMBP2**

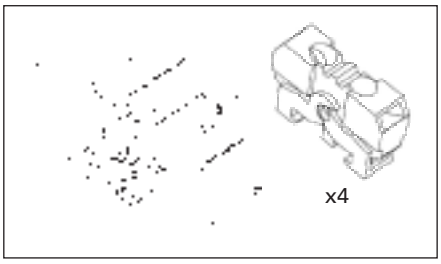

Auxiliary/Alarm Switch Only

Common to DG-PG Frames

Description	Catalogue Number
1 Normally Open Contact (1A)	**ASWPA**
1 Normally Closed Contact (1B)	**ASWPB**

Shunt Trips

Description	Mounting Pocket	Catalogue Number
24 VDC	Right Pocket Only	**STRPB24DC**
48-60 VDC		**STRPC60DC**
110-127 VDC		**STRPD125DC**
220-250 VDC		**STRPE250DC**
48-60 VAC		**STRPM60**
110-127 VAC		**STRPN120**
208-277 VAC		**STRPS277**
380-600 VAC		**STRPV600**

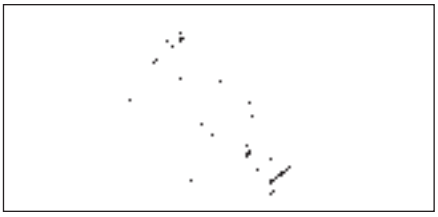

Undervoltage Release

Description	Mounting Pocket	Catalogue Number
12 VDC	Right Pocket Only	**UVRPA12DC**
24 VDC		**UVRPB24DC**
48 VDC		**UVRPC48DC**
60 VDC		**UVRPG60DC**
110-127 VDC		**UVRPD125DC**
220-250 VDC		**UVRPE250DC**
110-127 VAC		**UVRPN120**
220-240 VAC		**UVRPR240**
208 VAC		**UVRPP208**
277 VAC		**UVRPS277**
380-415 VAC		**UVRPT415**
440-480 VAC		**UVRPU480**

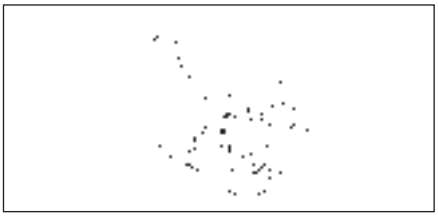

① Refer to the "Accessory Locations" chart for guidelines and limitations about which pockets may be used for accessory combinations.
'A' refers to a normally open contact (open when the breaker contacts are open).
'B' refers to a normally closed contact (closed when the breaker contacts are open).

External Accessories page 5-195 - 5-209

Ordering Information

A complete factory assembled PG breaker includes the frame and trip unit only. The connectors must be ordered as separate items.

PG thermal-magnetic breakers sold as non-interchangeable only.

For any other configuration, order the frame, trip unit, and connectors as separate items.

Connectors require a Breaker Lug Mounting Assembly or Breaker Mounting Base and must be ordered as a seperate item.

For DC applications, use Thermal magnetic trip unit only.

For reverse feed applications select non-interchangeable trip breakers only. Change the third digit of the catalogue number to "X" for non-interchangeable trip breakers.

For 100% rated breakers with a non-interchangeable trip unit, change the 3rd character of the catalogue number to "Y".

For special applications, refer to page 5-216.

Mounting hardware is included with each frame or complete breaker.

A Toggle Handle Extension is included with each frame or complete breaker.



Interrupting Ratings

Interrupting Class	Breaker Type	RMS Symmetrical Amperes (KA)											
		CSA C22.2 NO.5 / UL 489					IEC 60947-2						
		Volts AC (50/60 Hz)			Volts DC		Volts AC (50/60 Hz)						
							220/240		380/415		690	
		240	480	600	250	500	I_{cu}	I_{cs}	I_{cu}	I_{cs}	I_{cu}	I_{cs}
N	NPG	65	35	25	22	35	65	35	50	25	20	10
H	HPG	100	65	35	25	50	100	50	70	35	30	15
L	LPG	200	100	65	42	65	200	100	100	50	35	17

Connectors for 75°C Wire

Construction	Ampere Rating	Wire Range	No. of cables per phase	Catalogue Number
Aluminum	1200-1600A	1/0–750 kcmil Al/Cu	6	**3TA6PG750**①③
Aluminum	1200-1600A	300–600 kcmil	5	**TA5P600**②④
Aluminum	1200-1600A	600–750 kcmil	4	**TA4P750**②④
Aluminum	1200-1600A	300–600 kcmil	6	**TA6R600**②④
Copper	1200-1600A	300–600 kcmil	5	**TC5R600**②④⑤

① Requires Lug Mounting Assembly LMAP1600.
② Requires Breaker Mounting Base MBPG1600 Kit or MBPG1601.
③ Consists of 3 connectors.
④ Consists of 1 connector.
⑤ For 100% rated PG breakers. Requires 90°C cable sized at 75°C ampacity.

Mounting Arrangement

Description	Catalogue Number
Lug Mounting Assembly	**LMAP1600**
Breaker Mounting Base (Front Connect)	**MBPG1600**
Breaker Mounting Base (Rear Connect)	**MBPG1601**

Dimensions - Inches (mm)

Number of Poles	W	L	D	To Handle D1
2, 3	9 (229)	16 (406)	6 (152)	8.1 (207)

Shipping Weight, lbs. (kg)

Poles	Frame	Trip Unit	Complete Breaker
2, 3	60.2 (27.3)	8.8 (4.0)	69.0 (31.3)

PG Thermal-Magnetic, Instantaneous Trip Adjustment Range

Trip Unit Continuous Amp Rating (I_n)	Instantaneous Overcurrent Setting (I_i)	
	Min.	Max.
1200	7000	12000
1400	7000	12000
1600	7000	12000

Note: Each breaker has 6 trip settings in this range.

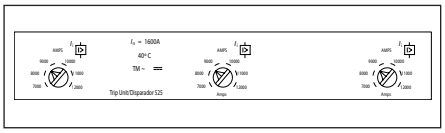

Model 525 Trip Unit

PG 1600A Frame 3-Pole with Thermal-Magnetic Trip Unit

Continuous Ampere Rating	N-Interrupting Class Catalogue Number	H-Interrupting Class Catalogue Number	L-Interrupting Class Catalogue Number
	COMPLETE FACTORY ASSEMBLED CIRCUIT BREAKER		
1200	**NPX3B120**	**HPX3B120**	**LPX3B120**
1400	**NPX3B140**	**HPX3B140**	**LPX3B140**
1600	**NPX3B160**	**HPX3B160**	**LPX3B160**

External Accessories page 5-195 - 5-209

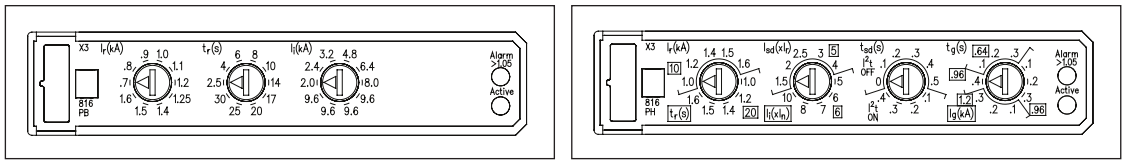

Model 555 Trip Unit

PG 1600A Frame 3-Pole Electronic Trip Unit

Continuous Ampere Rating	N-Interrupting Class Catalogue Number	H-Interrupting Class Catalogue Number	L-Interrupting Class Catalogue Number	Catalogue Number
	FRAME ONLY			
	NPG3F160	HPG3F160	LPG3F160	
	COMPLETE FACTORY ASSEMBLED CIRCUIT BREAKER			TRIP UNIT ONLY
ELECTRONIC LI TRIP				
1200 1600	NPG3R120 NPG3R160	HPG3R120 HPG3R160	LPG3R120 LPG3R160	CPT3R120 CPT3R160
ELECTRONIC LSI TRIP				
1200 1600	NPG3T120 NPG3T160	HPG3T120 HPG3T160	LPG3T120 LPG3T160	CPT3T120 CPT3T160
ELECTRONIC LSIG TRIP				
1200 1600	NPG3V120 NPG3V160	HPG3V120 HPG3V160	LPG3V120 LPG3V160	CPT3V120 CPT3V160
ELECTRONIC LIG TRIP				
1200 1600	NPG3W120 NPG3W160	HPG3W120 HPG3W160	LPG3W120 LPG3W160	CPT3W120 CPT3W160

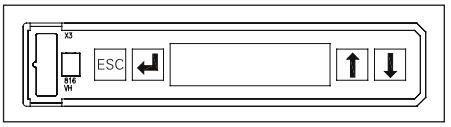

Model 586 Trip Unit

PG 1600A Frame 3-Pole Electronic LCD Trip Unit

Continuous Ampere Rating	N-Interrupting Class Catalogue Number	H-Interrupting Class Catalogue Number	L-Interrupting Class Catalogue Number	Catalogue Number
	FRAME ONLY			
	NPG3F160	HPG3F160	LPG3F160	
	COMPLETE FACTORY ASSEMBLED CIRCUIT BREAKER			TRIP UNIT ONLY
LCD ELECTRONIC LSI TRIP				
1200 1600	NPG3A120 NPG3A160	HPG3A120 HPG3A160	LPG3A120 LPG3A160	CPT3A120 CPT3A160
LCD ELECTRONIC LSIG TRIP				
1200 1600	NPG3G120 NPG3G160	HPG3G120 HPG3G160	LPG3G120 LPG3G160	CPT3G120 CPT3G160
LCD ELECTRONIC LSIG TRIP + GF ALARM ONLY				
1200 1600	NPG3K120 NPG3K160	HPG3K120 HPG3K160	LPG3K120 LPG3K160	CPT3K120 CPT3K160

Auxiliary Switch and Alarm Switch Combination Kits

Description	Mounting Pocket①	Catalogue Number
2 Aux. + 2 Alarm Switches 2A + 2B Base AMBP2	Left Pocket Only	**ASKP3**
4 Aux. Switches 2A + 2B Base AMBP1	Left, Right	**ASKP4**

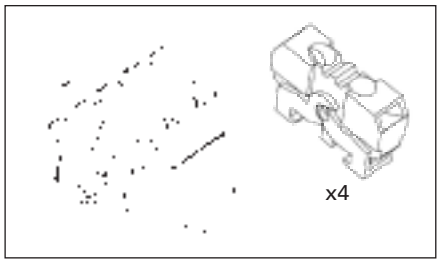

Auxiliary/Alarm Switch Mounting Base Only

Description	Mounting Pocket①	Catalogue Number
Up to 4 Auxiliary Switches	Left, Right	**AMBP1**
2 Aux. + 2 Alarm Switches	Left Pocket Only	**AMBP2**

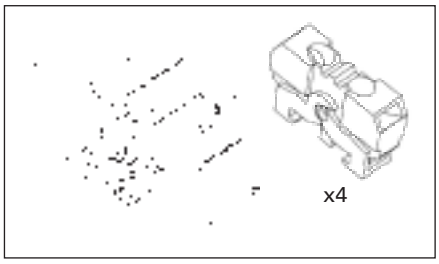

Auxiliary/Alarm Switch Only

Common to DG-PG Frames

Description	Catalogue Number
1 Normally Open Contact (1A)	**ASWPA**
1 Normally Closed Contact (1B)	**ASWPB**

Shunt Trips

Description	Mounting Pocket	Catalogue Number
24 VDC	Right Pocket Only	**STRPB24DC**
48-60 VDC		**STRPC60DC**
110-127 VDC		**STRPD125DC**
220-250 VDC		**STRPE250DC**
48-60 VAC		**STRPM60**
110-127 VAC		**STRPN120**
208-277 VAC		**STRPS277**
380-600 VAC		**STRPV600**

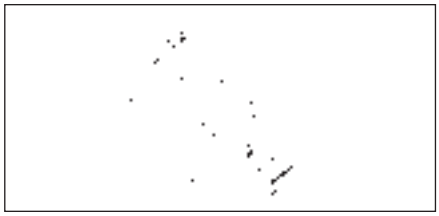

Undervoltage Release

Description	Mounting Pocket	Catalogue Number
12 VDC	Right Pocket Only	**UVRPA12DC**
24 VDC		**UVRPB24DC**
48 VDC		**UVRPC48DC**
60 VDC		**UVRPG60DC**
110-127 VDC		**UVRPD125DC**
220-250 VDC		**UVRPE250DC**
110-127 VAC		**UVRPN120**
220-240 VAC		**UVRPR240**
208 VAC		**UVRPP208**
277 VAC		**UVRPS277**
380-415 VAC		**UVRPT415**
440-480 VAC		**UVRPU480**

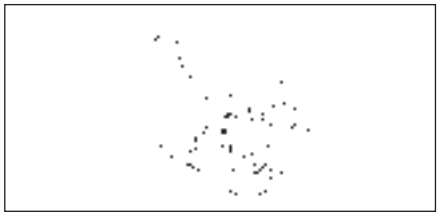

① Refer to the "Accessory Locations" chart for guidelines and limitations about which pockets may be used for accessory combinations.
'A' refers to a normally open contact (open when the breaker contacts are open).
'B' refers to a normally closed contact (closed when the breaker contacts are open).

External Accessories page 5-195 - 5-209

General

Typically a molded case switch is used when a compact load-break switch is needed for disconnect purposes. The VL line of molded case switches from Siemens is made of the same materials and components as the VL circuit breakers but do not provide overcurrent protection. Each molded case switch has a fixed instantaneous self-protecting trip element which may open the switch under high fault conditions.

Application Note

Overcurrent protection must be provided by an appropriate overcurrent protective device located upstream from the molded case switch. Also, the short-circuit current rating of the switch is limited to the interrupting rating of the upstream protective device or the ratings in the table below, **whichever is less.**

Ordering Information

Each type VL molded case switch accepts the same terminals and accessories as the equivalent VL circuit breakers.

All type VL molded case switches are suitable for reverse feed applications.

Mounting hardware and standard line and load terminals are included on ratings through 250A. For 400 – 1600A ratings, order the lugs separately.

All ratings are cULus approved.

Molded Case Switch

Maximum Ampere Rating / Frame	2-Pole	3-Pole	Short-Circuit Current Rating①			Self Protective Instantaneous Override
	Catalogue Number	Catalogue Number	240V	480V	600V	
150A / DG	**HDS2S150L**	**HDS3S150L**	100k	65k	20k	2,500A
250A / FG	**HFS2S250L**	**HFS3S250L**	100k	65k	20k	3,500A
400A / JG	**HJS2S400**	**HJS3S400**	100k	65k	25k	4,400A
600A / LG	**HLR2S600**	**HLR3S600**	100k	65k	18k	5,500A
800A / MG	**HMS2S800**	**HMS3S800**	100k	65k	35k	6,500A
1200A / NG	**HNS2S120**	**HNS3S120**	100k	65k	35k	12,000A
1600A / PG	_	**HPS3S160**	100k	65k	35k	14,000A

Maximum Ampere Rating / Frame	3-Pole	Short-Circuit Current Rating①			Self Protective Instantaneous Override
	Catalogue Number	240V	480V	600V	
250A / FG	**LFS3S250L**	200k	100k	25k	3,500A
400A / JG	**LJS3S400**	200k	100k	25k	4,400A
600A / LG	**LLR3S600**	200k	100k	18k	5,500A
800A / MG	**LMS3S800**	200k	100k	65k	6,500A
1200A / NG	**LNS3S120**	200k	100k	65k	12,000A
1600A / PG	**LPS3S160**	200k	100k	65k	14,000A

①The Short-Circuit Current Rating is the maximum available current of the circuit where the switch is used, when protected by an appropriate overcurrent protective device.

General

Protection of Motor Circuits

Molded case circuit breakers are used in motor circuits as a disconnecting means and for short-circuit protection. They should be used in conjunction with motor-running, over-current protection devices, and should permit the motor to start without nuisance tripping from motor-inrush current. The circuit breaker should have a continuous current rating of not less than 115% of the motor full-load current.

The recommended motor circuit protectors listed have continuous-current ratings of at least 115% of motor full-load currents. The trip setting positions are approximately 11 times motor full-load current. The suggested trip settings may need to be adjusted upward to no higher than 1300% of full-load current for non-design E type motors, and no greater than 1700% of full-load current for design E motors, to allow for motor startup due to in-rush current.

Breaker Mounted Immediately Ahead of Motor Starter

Siemens motor circuit protectors are recommended for use in combination motor starters to provide selective short-circuit protection for the motor branch circuit. The adjustable instantaneous trip feature of the Siemens motor circuit protector provides for a trip setting slightly above the peak motor in-rush current. With this setting, no delay is introduced in opening the circuit when a fault occurs. This circuit breaker has no time-delay trip element. Therefore it must be used in conjunction with, and immediately ahead of, the motor-running overcurrent protection device.

Important: The information below does not apply to all motor applications: it is recommended that the user refer to the National Electrical Code (NEC) for specific needs.

Table 1 (When Breaker is Mounted Immediately Ahead of Motor Starter)

3-Phase Induction Type Motors (Siemens motor circuit protectors for branch circuit use with alternating-current combination, full voltage motor starters)

Motor Full Load Amperes	Trip Setting (A)	Catalogue Number①
35-50	450	HDM3L150L
42-60	540	
48-70	630	
55-80	720	
62-90	810	
69-100	900	
58-83	750	HDM3M150L
69-100	900	
81-117	1050	
92-133	1200	
104-150	1350	
115-150②	1500	
96-139	1250	HDM3H150L
115-150②	1500	
135-150②	1750	
135-150②	2000	
135-150②	2250	
135-150②	2500	
46-67	600	HFM3L250L
55-80	720	
65-93	840	
74-107	960	
83-120	1080	
92-133	1200	
77-111	1000	HFM3M250L
92-133	1200	
108-156	1400	
123-178	1600	
138-200	1800	
154-222	2000	
135-194	1750	HFM3H250L
162-210	2100	
188-220	2450	
215-241	2800	
242-250②	3150	
242-250②	3500	

Motor Full Load Amperes	Trip Setting (A)	Catalogue Number①
96-139	1250	HJM3L400
115-167	1500	
135-194	1750	
154-222	2000	
173-250	2250	
192-278	2500	
154-222	2000	HJM3M400
185-267	2400	
215-311	2800	
246-356	3200	
277-400	3600	
308-400②	4000	
154-222	2000	HLM3J600
185-267	2400	
215-311	2800	
246-356	3200	
277-400	3600	
308-444	4000	
212-306	2750	HLM3Y600
254-367	3300	
296-428	3850	
338-489	4400	
381-550	4950	
423-600	5500	
250-361	3250	HMM3M800
292-422	3800	
335-483	4350	
385-556	5000	
442-638	5740	
500-722	6500	
385-556	5000	HNM3M120
462-667	6000	
538-778	7000	
615-889	8000	
692-1000	9000	
769-1111	10,000	

① Motor circuit protectors rated 150A and 250A are supplied with line and load lugs installed. If lugs are required on 400A to 1200A motor circuit breakers, order required lugs separately.

② These settings are provided for starting currents greater than 11X but not to exceed 17X. Full Load Amps (FLA) not to exceed ampere rating of MCP.

Modularity To Support All Your Application Needs

Modules and More: VL Circuit Breakers with Optional Accessories

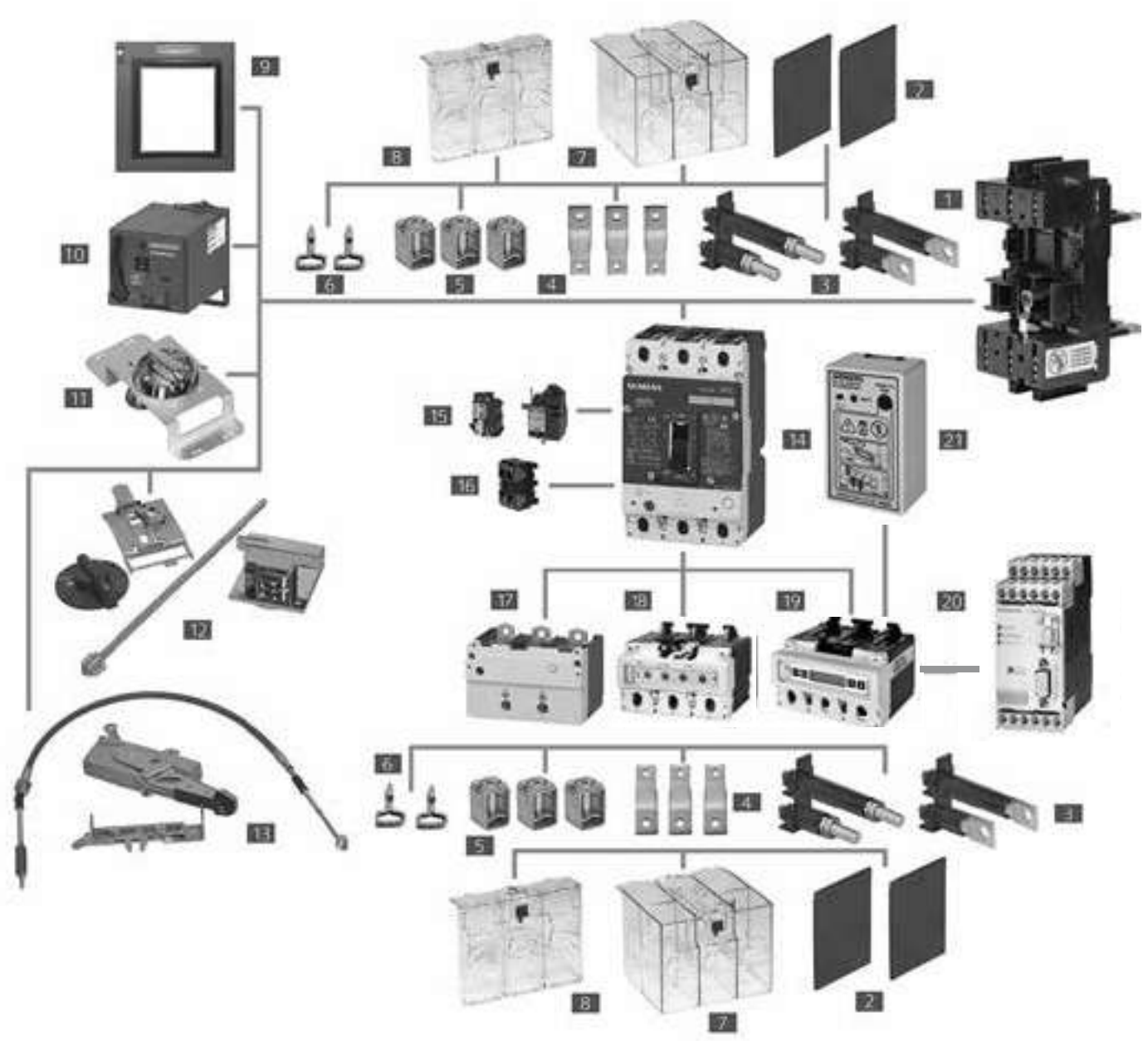

1 Base for Plug-In or Draw-Out
2 Interphase Barriers
3 Rear Terminals – Flat and Round
4 Bus Extensions
5 Terminal Connectors
6 Plug-In Terminal Blades
7 Extended Terminal Shield
8 Standard Terminal Shield
9 Cover Frame for Door Cutout
10 Stored Energy Operator
11 Rotary Handle Operator
12 Variable Depth Rotary Operator
13 Max Flex Operator
14 Circuit Breaker
15 Shunt Trip or Undervoltage Releases
16 Auxiliary/Alarm Switches
17 Thermal Magnetic Trip Unit (525)
18 Electronic Trip Unit (555)
19 Elec. Trip Unit with LCD (586)
20 Communication Module with ZSI
21 Electronic Trip Unit Tester and LCB Power Supply

VL External Accessories

Operating Mechanisms

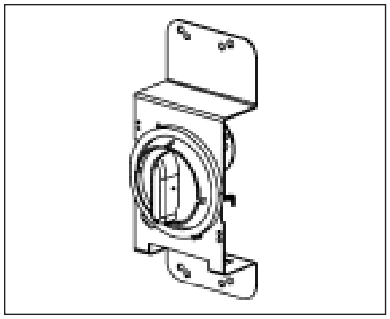

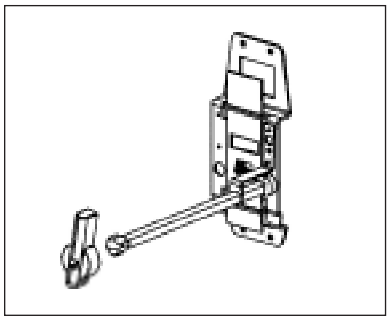

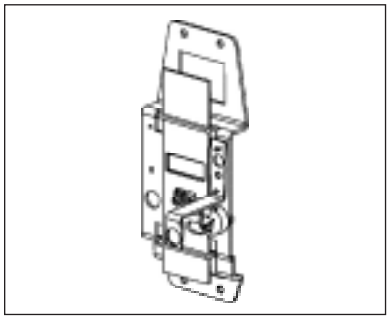

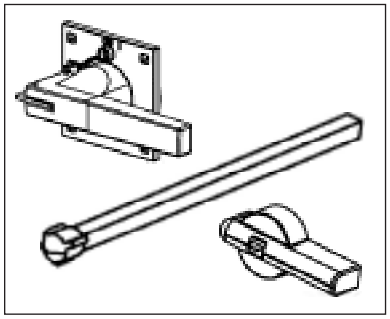

Description	For DG to FG Frame 150 to 250 A Catalogue Number	For JG to LG Frame 400 A to 600 A Catalogue Number
Through-Door Rotary Handle Operator Kit		
Fixed depth and the handle is mounted directly on the circuit breaker.		
Lockable knob (for up to 3 padlocks).		
NEMA 1, 12	**RHFF**	**RHFL**
Red Handle Version with red knob, yellow indicator plate		
NEMA 1, 12	**RHFFEM**	**RHFLEM**
Door-Mounted Rotary Handle Operator Kit		
Variable depth, door mounted handle. Includes knob with masking frame, indicator plate, detachable door coupling, 12″ shaft, and breaker mounted rotary operator. Lockable knob (for up to 3 padlocks).		
NEMA 1, 12	**RHVF12**	**RHVL12**
Auxiliary Switch Kits		
For Direct or Extended Rotary Handle Operators (RHF and RHV).		
Form C, Early Break type2 Aux. Switch Kit①		
Includes 1 switch with 5′ wire		
For Door-Mounted Operator	—	**RHSLA1**
For Through-Door Operator	**RHSFA1F**	**RHSLA1F**
Includes 2 switches with 5′ wire		
For Door-Mounted Operator	—	**RHSLA2**
For Through-Door Operator	**RHSFA2F**	**RHSLA2F**
Door-Mounted Rotary Operator Mechanism		
Breaker mechanism only	**RHVFBM**	**RHVLBM**
Door-Mounted Rotary Handle Only		
Standard version NEMA 1, 12	**RHVM12H**	**RHVM12H**
NEMA 3R	**RHVM3RH**	**RHVM3RH**
NEMA 4X	**RHVM4XH**	**RHVM4XH**
Red Handle version	**RHVMEMH**	**RHVMEMH**
NFPA-79 Handle Kit		
Intermediate handle for NFPA-79 compliance with door-mounted rotary operator	**RHVF79H**	**RHVM79H**
Extension Shaft Only, for Door Mounted Operator		
2 inches (50.8mm)	**RHVMS02**	**RHVMS02**
3 inches (76.2mm)	—	—
12 inches (304.8 mm)	**RHVMS12**	**RHVMS12**
16 inches (406.4 mm)	**RHVMS16**	**RHVMS16**
24 inches (609.6mm) w/ support bracket	**RHVMS24**	**RHVMS24**

① During manual operation, Early Break auxiliary switch contacts open before the breaker opens.

Description	For MG Frame 800 A Catalogue Number	For NG to PG Frame 1200 to 1600 A Catalogue Number
Through-Door Rotary Handle Operator Kit		
Fixed depth, breaker mounted.		
For direct fitting to the circuit breaker.		
Lockable with up to 3 padlocks.		
NEMA 1, 12	**RHFM**	—
Red Handle Version		
with red knob, yellow indicator plate		
NEMA 1, 12	—	—
Door-Mounted Rotary Handle Operator Kit		
Variable depth, door mounted handle. Includes knob with masking frame, indicator plate, detachable door coupling, 12" shaft, and breaker mounted rotary operator. Lockable knob (for up to 3 padlocks).		
NEMA 1, 12	**RHVM12**	—
Auxiliary Switch Kits		
For Direct or Extended Rotary Handle Operators (RHF and RHV).		
Early Break type2 Aux. Switch Kit		
Includes 1 switch with 5' wire		
For Door-Mounted Operator	**RHSMA1**	**RHSPA1**
For Through-Door Operator	—	—
Includes 2 switches with 5' wire		
For Door-Mounted Operator	**RHSMA2**	**RHSPA2**
For Through-Door Operator	—	—
Door-Mounted Rotary Operator Mechanism		
Breaker mechanism only	**RHVMBM**	**RHVPBM**
Door-Mounted Rotary Handle Only		
Standard version NEMA 1, 12	**RHVM12H**	**RHVP12H**
NEMA 3R	**RHVM3RH**	**RHVP3RH**
NEMA 4X	**RHVM4XH**	**RHVP4XH**
Red Handle version	**RHVMEMH**	**RHVPEMH**
NFPA-79 Handle Kit		
Intermediate handle for NFPA-79 compliance with door-mounted rotary operator	**RHVM79H**	**RHVP79H**
Extension Shaft Only, for Door Mounted Operator		
2 inches (50.8mm)	**RHVMS02**	—
3 inches (76.2mm)	—	**RHVPS03**
12 inches (304.8 mm)	**RHVMS12**	**RHVPS12**
16 inches (406.4 mm)	**RHVMS16**	—
24 inches (609.6mm) w/ support bracket	**RHVMS24**	**RHVPS24**

VL External Accessories

Operating Mechanisms

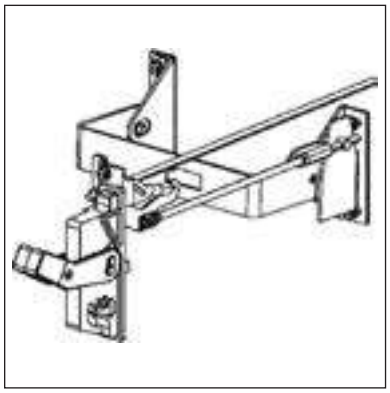

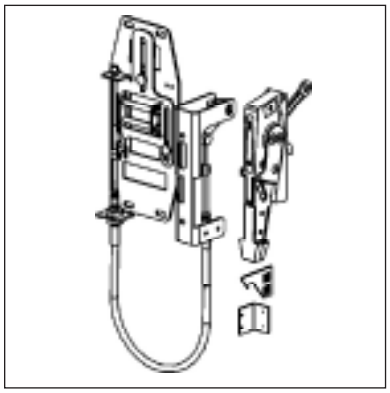

Description		For DG and FG Frame 150 to 250 A Catalogue Number	For JG and LG Frame 400 to 600 A Catalogue Number
Variable Depth Flange Mounted Operator Kit			
Adjustable from 8″ to 16″			
Complete kit, includes handle and variable depth operator.			
	NEMA 1, 3R, 12	**FHVF3R**	**FHVL3R**
	NEMA 4X	**FHVF4X**	**FHVL4X**
IEC Black Handle	NEMA 1, 3R, 12	**FHVF3RB**	**FHVL3RB**
	NEMA 4X	**FHVF4XB**	**FHVL4XB**
Max-Flex™, Variable Depth Flange Mounted Operator Kit			
Complete kit, includes plastic handle, breaker operator, and cable.	NEMA 1, 3R, 12	**MFKF3R**	**MFKL3R**
For DG and FG operators, the cable is 36″, all others are 48″			
May be right- or left-hand mounted			
Handle Only, for Max-Flex™ Variable Depth			
NEMA 1, 3R, 12	Plastic	**MFHM3R**	**MFHM3R**
NEMA 1, 3R, 12	Steel - epoxy coated	**MFHM3RS**	**MFHM3RS**
NEMA 4, 4X	Steel - chrome plated	**MFHM4X**	**MFHM4X**
Solid color (all gray) Plastic①			
NEMA 1, 3R, 12		**MFHM3RB**	**MFHM3RB**
Solid color (black handle) Steel epoxy coated①			
NEMA 1, 3R, 12		**MFHM3RSB**	**MFHM3RSB**
Breaker Operator Mechanism Only, for Max-Flex™		**MFMF**	**MFML**
Cable Only, for Max-Flex™ Variable Depth			
36″		**MFCF036**	**MFCM036**
48″		**MFCF048**	**MFCM048**
60″		**MFCF060**	**MFCM060**
72″		**MFCF072**	**MFCM072**
84″		**MFCF084**	**MFCM084**
96″		**MFCF096**	**MFCM096**
120″		**MFCF120**	**MFCM120**
144″		**MFCF144**	**MFCM144**
Handle Auxiliary Switch			
Form C (1NO - 1NC), early break②			
1 Aux. switch		**MFSFA1**	**MFSLA1**
2 Aux. switch		**MFSFA2**	**MFSLA2**

① Max-Flex™ handles are available with solid gray or black handles instead of the customary "Red for On" flange handle. The black handle is preferred for IEC markets, where red handles have a specific meaning.
② During manual operation, Early Break aux. contacts open before the breaker opens.

Description	For MG Frame 800 A Catalogue Number	For NG Frame 1200 A Catalogue Number	For PG Frame 1600 A Catalogue Number
Variable Depth Flange Mounted Operator Kit			
Adjustable from 8″ to 16″			
Complete kit, includes handle and variable depth operator.			
NEMA 1, 3R, 12	—	—	
NEMA 4X	—	—	
IEC Black Handle NEMA 1, 3R, 12	—	—	
NEMA 4X			
Max-Flex™, Variable Depth Flange Mounted Operator Kit			
Complete kit, includes plastic handle, breaker operator, and cable. NEMA 1, 3R, 12	**MFKM3R**	**MFKP3RS**	**MFKP3RS**
For DG and FG operators, the cable is 36″, all others are 48″			
May be right- or left-hand mounted			
Handle Only, for Max-Flex™ Variable Depth			
NEMA 1, 3R, 12 Plastic	**MFHM3R**	—	—
NEMA 1, 3R, 12 Steel - epoxy coated	**MFHM3RS**	**MFHP3RS**	**MFHP3RS**
NEMA 4, 4X Steel - chrome plated	**MFHM4X**	**MFHP4X**	**MFHP4X**
Solid color (all gray) Plastic①			
NEMA 1, 3R, 12	**MFHM3RB**	—	—
Solid color (black handle) Steel epoxy coated①			
NEMA 1, 3R, 12	**MFHM3RSB**	**MFHP3RSB**	**MFHP3RSB**
Breaker Operator Mechanism Only, for Max-Flex™	**MFMM**	**MFMP**	**MFMP**
Cable Only, for Max-Flex™ Variable Depth			
36″	**MFCM036**	—	—
48″	**MFCM048**	**MFCP048**	**MFCP048**
60″	**MFCM060**	**MFCP060**	**MFCP060**
72″	**MFCM072**	**MFCP072**	**MFCP072**
84″	**MFCM084**	**MFCP084**	**MFCP084**
96″	**MFCM096**	**MFCP096**	**MFCP096**
120″	**MFCM120**	**MFCP120**	**MFCP120**
144″	**MFCM144**	**MFCP144**	**MFCP144**
Handle Auxiliary Switch			
Form C (1NO - 1NC), early break②			
1 Aux. switch	**MFSPA1**	**MFSPA1**	**MFSPA1**
2 Aux. switch	**MFSPA2**	**MFSPA2**	**MFSPA2**

① Max-Flex™ handles are available with solid gray or black handles instead of the customary "Red for On" flange handle. The black handle is preferred for IEC markets, where red handles have a specific meaning.
② During manual operation, Early Break aux. contacts open before the breaker opens.

VL External Accessories

Operating Mechanisms

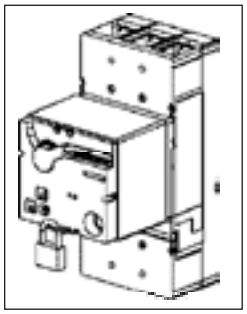

Description	For DG to FG Frame 150 to 250 A Catalogue Number
Stored Energy and Motor Operators	
Lockable with up to 3 padlocks.	
AC Voltage / DC Voltage	Stored Energy Type
— / 24	**SEAFB**
42-48 / 42-48	**SEAFM**
60 / 60	**SEAFY**
110–127 / 110–127	**SEAFN**
220–250 / 220–250	**SEAFR**
Cylinder Locks for Field Installation	**CLKF**

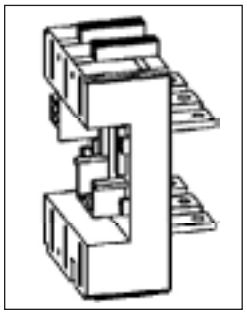

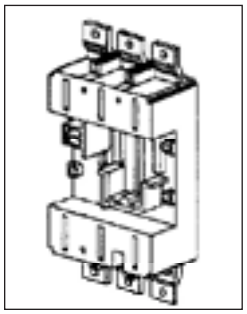

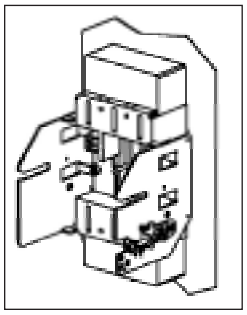

Description	For DG Frame 150 A Catalogue Number	For FG Frame 250 A Catalogue Number
Plug-in Mounting Base Assembly		
Includes base, terminal blade kit, sec. terminal block assembly, base trip interlock, and mounting hardware.		
Rear Connected		
3-pole	**PCBDRC3**	**PCBFRC3**
Front Connected		
3-pole	**PCBDFC3**	**PCBFFC3**
Draw-out Assembly		
Includes base, position indicator switch, socket, base trip interlock, crank handle, connectors, and necessary shields.		
Rear Connected		
3-pole	**DCADRC3**	**DCAFRC3**
Front Connected		
3-pole	**DCADFC3**	**DCAFFC3**
(Draw-out assembly includes side plates and all hardware)		
Hex Wrench for racking draw-out assembly and position indicator	**DCHP**	**DCHP**
Position Indicator Switch Form "C" switch to indicate breaker engaged/de-engaged position.①	**DCIP**	**DCIP**
Secondary Terminal Block Assy. Accessory connections for plug-in or draw-out breakers. Pre-wired plug and block with 8 terminal points.②	**PCTF83**	**PCTF83**
Plug-In Spare Breaker Kit Set of 6 terminal blades, 2 terminal shield, & 1 trip interlock	**PCXD3**	**PCXF3**
Draw-out Spare Breaker Kit Set of 6 terminal blades, & 1 trip interlock	**DCXD3**	**DCXF3**
Spare Breaker Trip Interlock	**PCXFT**	**PCXFT**

① Up to 2 position indicator switches may be mounted per plug-in or draw-out base.
② Up to 2 plugs per breaker (16 terminal points) may be mounted on DG, and FG breakers. Up to 3 plugs per breaker (24 terminal points) may be mounted on JG, LG, MG, NG, and PG breakers.

For JG to LG Frame 400 to 600 A	For MG Frame 800 A	For NG to PG Frame 1200 to 1600 A
Catalogue Number	**Catalogue Number**	**Catalogue Number**
Stored Energy Type	Stored Energy Type	Motor Operator Type
SEALB	**SEAMB**	**MTRPB**
SEALM	**SEAMM**	**MTRPM**
SEALY	**SEAMY**	**MTRPY**
SEALN	**SEAMN**	**MTRPN**
SEALR	**SEAMR**	**MTRPR**
CLKP	**CLKP**	**CLKP**

For JG Frame 400 A	For LG Frame 600 A	For MG Frame 800 A	For NG Frame 1200 A	For PG Frame 1600 A
Catalogue Number	**Catalogue Number**	**Catalogue Number**	**Catalogue Number**	**Catalogue Number**
PCBJRC3	**PCBLRC3**	**PCBMRC3**	**PCBNRC3**	—
PCBJFC3	**PCBLFC3**	—	—	—
DCAJRC3	**DCALRC3**	**DCAMRC3**	**DCANRC3**	—
DCAJFC3	**DCALFC3**	**DCAMFC3**	**DCANFC3**	—
DCHP	**DCHP**	**DCHP**	**DCHP**	—
DCIP	**DCIP**	**DCIP**	**DCIP**	—
PCTL83	**PCTL83**	**PCTM83**	**PCTN83**	—
PCXJ3	**PCXL3**	**PCXM3**	**PCXN3**	—
DCXJ3	**DCXL3**	**DCXM3**	**DCXN3**	—
PCXLT	**PCXLT**	**PCXMT**	**PCXPT**	—

VL External Accessories

Connections

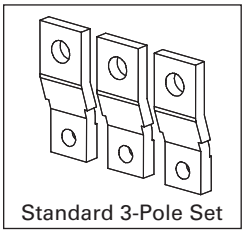
Standard 3-Pole Set

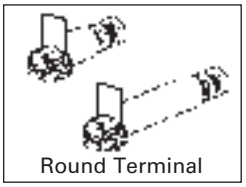
Round Terminal

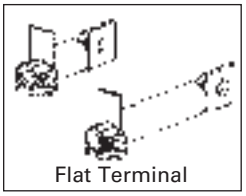
Flat Terminal

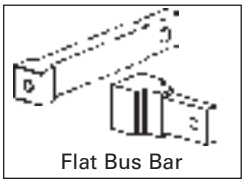
Flat Bus Bar

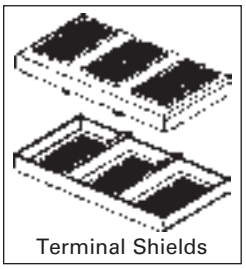
Terminal Shields


IPBF

Description	For DG Frame 150 A Catalogue Number	For FG Frame 250 A Catalogue Number
Front Bus Bar Connections		
Includes nut keeper plates and shield.		
Standard (straight)		
3-Pole Set	**FBCD3**	**FBCF3**
Bus Bar Connection Strap Kit	—	—
Includes 6 - Bus Bars, 6 Nut Keepers & Shields	—	—
100% rated applications		
Rear-Connecting Studs		
Short length round term. (1piece)	**RTLDSR**	**RTLFSR**
Long length round term. (1piece)	**RTLDLR**	**RTLFLR**
3-Pole round term. kit, 2 short + 1 long	**SRTDR3**	**SRTFR3**
Short length flat term. (1piece)	**RTLDSF**	**RTLFSF**
Long length flat term. (1piece)	**RTLDLF**	**RTLFLF**
3-Pole flat term. kit, 2 short + 1 long	**SRTDF3**	**SRTFF3**
Flat bus bar type (1 piece)	—	—
3-Pole set of flat bus bar	—	—
Terminal Shields		
Includes 2 terminal shields.		
3-Pole Standard Shield	**TSSF3**	**TSSF3**
3-Pole Extended Shield	**TSLF3**	**TSLF3**
Interphase Barriers		
Set of 2 barriers	**IPBF**	**IPBF**
Also fits plug-in and draw-out bases.		
Lug Mounting Assy.	—	—
Breaker Mounting Base		
Front connected	—	—
Rear connected	—	—

For JG Frame 400 A	For LG Frame 600 A	For MG Frame 800 A	For NG Frame 1200 A	For PG Frame 1600 A
Catalogue Number	Catalogue Number	Catalogue Number	Catalogue Number	Catalogue Number
FBCJ3 —	FBCL3 —	FBCM3 —	SSBP SSBPH	SSBP SSBPH
RTLJSR RTLJLR SRTJR3 RTLJSF RTLJLF SRTJF3 — —	— — — — — — RTLLSF SRTLF3	— — — — — — RTLMSF SRTMF3	— — — — — — RTLNSF SRTNF3	— — — — — — — —
TSSL3 TSLL3	— —	TSSM3 TSLM3	TSSP3 TSLP3	TSSP3 TSLP3
IPBM	IPBM	IPBM	IPBP	IPBP
—	—	—	—	LMAP1600②
— —	— —	— —	— —	MBPG1600 MBPG1601

① Not for use with standard Al terminals. Use Standard Shield for rear connection and Extended Shield for bus-bar connection.

② Kit includes connection for one side of breaker only. Order quantity 2 if connecting line and load side.

VL External Accessories

Connections

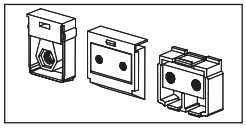

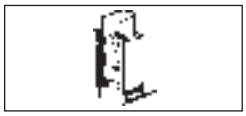



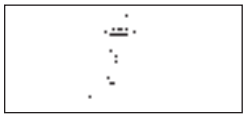

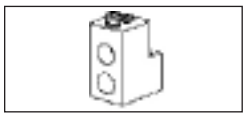

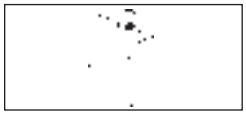



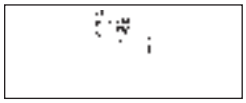

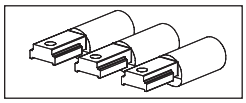

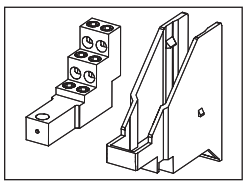

Note: pictures provide graphical representaions only.

Description	For DG Frame 150 A Catalogue Number	For FG Frame 250 A Catalogue Number
Nut Keeper Plates		
For ring/tongue terminal or bus bar connections. (For metric threads on other than the JG or LG frame, change "TNK" to "TMK")		
1 Nut Keeper Plate	**TNKD**	**TNKF**
Kit of 3	**TNKD3**	**TNKF3**
Mechanical Lugs		
Steel Wrap Around Body (Cu Wire Only)		
Cable Size; (cables per phase)	#8-1/0; 1-hole	#4-350 kcmil; 1-hole
Single Lug	**TW1DG20**	**TW1FG350**
Kit of 3	**3TW1DG20**	**3TW1FG350**
Aluminum Body (Al or Cu Wire)		
Cable Size; (cables per phase)	#6-3/0; 1-hole	#4-350 kcmil; 1-hole
Single Lug	**TA1DG30**	**TAW1FG350**
Kit of 2	—	—
Kit of 3	**3TA1DG30**	**3TAW1FG350**
Cable Size; (cables per phase)	—	—
Single Lug	—	—
Kit of 2	—	—
Kit of 3	—	—
Cable Size; (cables per phase)	—	—
Single Lug	—	—
Kit of 3	—	—
Copper Body (Cu Wire Only)		
Cable Size; (cables per phase)	#6-3/0; 1-hole	#4-350 kcmil; 1-hole
Single Lug	**TC1DG30**①	**TCW1FG350**①
Kit of 2	—	—
Kit of 3	**3TC1DG30**①	**3TCW1FG350**①
Cable Size; (cables per phase)	—	—
Single Lug	—	—
Compression Lugs		
Cable Size; (cables per phase)	#14-2/0; 1-cable	#4-350 kcmil; 1-cable
Kit of 2	**2CLD20**	—
Kit of 3	**3CLD20**	**3CLF350**
Cable Size; (cables per phase)		—
Kit of 2		—
Kit of 3	—	—
Cable Size; (cables per phase)	—	—
Kit of 3	—	—
Distribution Lugs *(Cu Wire Only)*		#14-#1; 2-hole and
Cable Size; (cables per phase)	#14-#2; 3-hole	#14-2/0; 1-hole
Single Lug	**TA3DG02**	**TA3FG20**
Kit of 3	**3TA3DG02**	**3TA3FG20**
Cable Size; (cables per phase)	#14-#4; 6-hole	#14-#4; 6-hole
Single Lug	**TA6DG04**	**TA6FG04**
Kit of 3	**3TA6DG04**	**3TA6FG04**
Control Wire Terminals		
Control Wire Terminal (Single)	—	—
Control Wire Terminal (Kit of 3)	—	—

① Required for 100% rated breakers. Requires 90°C cable sized at 75°C ampacity.

For JG Frame 400 A	For LG Frame 600 A	For MG Frame 800 A	For NG Frame 1200 A	For PG Frame 1600 A
Catalogue Number	**Catalogue Number**	**Catalogue Number**	**Catalogue Number**	**Catalogue Number**
TMKJ **TMKJ3** *metric only*	**TNKL** **TNKL3**	**TNKM** **TNKM3**	**TNKP** **TNKP3**	**TNKP** **TNKP3**
1/0-600 kcmil; 1-hole **TW1JG600** **3TW1JG600**	— — —	— — —	— — —	— — —
3/0-250 kcmil; 2-hole **TA2JG250** — **3TA2JG250**	#2-600 kcmil; 2-hole — — — **3TA2LG600LD**① **3TA2LG600LN**②	1/0-500 kcmil, 3-hole **TA3MG500** **3TA3MG500**	1/0-500 kcmil; 4-hole — **2TA4NG500** **3TA4NG500** **3TA4NG500H**③	1/0-750 kcmil; 6-hole — — **3TA6PG750**⑤
AL: 250-750 kcmil CU: 3/0-600 kcmil; 1-hole **TA1JG750** — **3TA1JG750** — — — —	AL: 250-750 kcmil CU: 3/0-600 kcmil; 1-hole **TA1JG750** (400A max) — **3TA1JG750** (400A max) — — —	500 -750 kcmil; 2-hole **TA2MG750** — **3TA2MG750** #2-600 kcmil; 3-hole — **3TA3MG600**④	500 -750 kcmil; 3-hole — **2TA3NG750** **3TA3NG750** — —	600-750 kcmil; 4-hole **TA4P750**⑥ — 300-600 kcmil; 5; 6-hole **TA5P600**⑥ **TA6R600**⑥ —
3/0-250 kcmil; 2-hole **TC2JG250**③ — — 3/0-750 kcmil; 1-hole **TC1JG750**③	#2-600 kcmil; 2-hole — — — **3TC2LG600LD**①③ **3TC2LG600LN**②③ — —	1/0-500 kcmil; 3-hole **TC3MG500**③ — — — —	1/0-500 kcmil; 4-hole — — **3TC4NG500**③ — —	— — — — 300-600 kcmil; 5-hole **TC5R600**③⑥
#6-350 kcmil; 1-cable — **3CLJ350** 250-600 kcmil; 1-cable **3CLJ600** — 250-750 kcmil; 1-cable **3CLJG750** —	#6-350 kcmil; 2-cable — **6CLL350** (kit of 6) 250-750 kcmil; 1-cable **3CLL750** — 250-600 kcmil; 2-cable **6CLL600** (kit of 6) —	— — — — — — — —	1/0-500 kcmil; 4-cable — **12CLN500** (kit of 12) — — — — —	— — — — — — — —
#14-#4; 12-hole **TA12JG04** **3TA12JG04** #14-2/0; 6-hole **TA6JG20** **3TA6JG20**	— — — — — —	— — — — — —	— — — — — —	— — — — — —
TA2JG250PT —	— **3TA2LG600LNPT**	**TA3MG500PT** —	— **3TA4NG500PT**	— —

All lug kits include the nut keepers.
① Mounted on Load Side Only.
② Mounted on Line Side Only.
③ Required for 100% rated breakers. Requires 90°C cable sized at 75°C ampacity.
④ Requires extended modified shield.
⑤ Used only with LMAP1600 mounting base.
⑥ Used only with MBPG1600 or MBPG1601 mounting base.

VL External Accessories

General

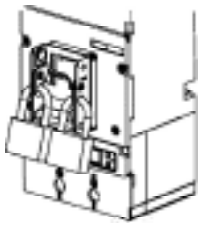

Handle Padlocking Device



Walking-Beam Interlock Mechanism

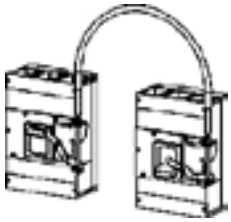

Cable Interlock System

Description	For DG Frame 150 A Catalogue Number	For FG Frame 250 A Catalogue Number
Handle Padlocking Device To padlock breaker toggle in the "OFF" position. Accepts up to 3 padlocks with 5–8 mm shackles.	**HPLF**	**HPLF**
Handle Blocking Device For holding the handle in the "ON" position. Not a lockout/tagout device.	**HBDF**	**HBDF**
Walking-Beam Interlock Mechanism Provides mechanical interlocking between two adjacent circuit breakers. Fixed mounted breakers Note: Both breakers must be of the same frame size.	**WBMFFM**	**WBMFFM**
Cable Interlock Mechanism Provides mechanical interlocking between 2 circuit-breakers - includes operator mechanism for one circuit breaker only. Combination with the next larger or smaller frame size is possible.	**CBTF**	**CBTF**
Interlock Cable Cable only, to connect 2 circuit breakers.		
Cable length 18 in. .46m (recommended up to 250A)	**CBCF18**	**CBCF18**
Cable length 36 in. .91m (recommended from 400–800A)	**CBCM36**	**CBCM36**
Cable length 54 in. 1.37m (recommended from 1200–1600A)	**CBCP54**	**CBCP54**
Mounting Screw Kit Includes the necessary hardware to mount a circuit breaker to the user's prepared surface		
Kit with 2 screws (SAE thread)	**MSKF2**	**MSKF2**
Kit with 4 screws (SAE thread)	**MSKF4**	**MSKF4**
Trip Adjustment Sealing Cover Includes a trip unit cover to prevent tampering or adjustment of trip settings. Seal not included. Thermal-Magnetic Trip Units	**TSCFTM**	**TSCFTM**

For JG Frame 400 A	For LG Frame 600 A	For MG Frame 800 A	For NG Frame 1200 A	For PG Frame 1600 A
Catalogue Number	Catalogue Number	Catalogue Number	Catalogue Number	Catalogue Number
HPLL	HPLL	HPLM	HPLP	HPLP
HBDL	HBDL	HBDM	HBDP	HBDP
WBMLFM	WBMLFM	WBMMFM	WBMPFM	WBMPFM
CBTL	CBTL	CBTM	CBTP	CBTP
—	—	—	—	—
CBCM36	CBCM36	CBCM36	—	—
CBCP54	CBCP54	CBCP54	CBCP54	CBCP54
—	—	—	—	—
MSKL4	MSKL4	MSKM4	MSKP4	MSKP4
TSCLTM	TSCLTM	TSCMTM	—	—

VL External Accessories

Ground Sensors & Electronic Accessories

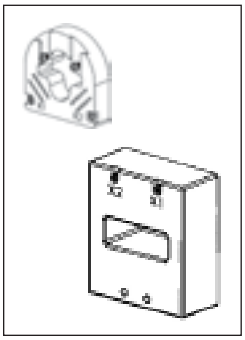

Description	For DG Frame 150 A Catalogue Number	For FG Frame 250 A Catalogue Number
Neutral Current Transformer (Ground Sensor, N-pole)		
Neutral = 35/60A	**NGSD060**	—
Neutral = 100A	**NGSF100**	**NGSF100**
Neutral = 150A	**NGSF150**	**NGSF150**
Neutral = 250A	—	**NGSJ250**
Neutral = 400A	—	—
Neutral = 600A	—	—
Neutral = 800A	—	—
Neutral = 1000/1200A	—	—
Neutral = 1600A	—	—

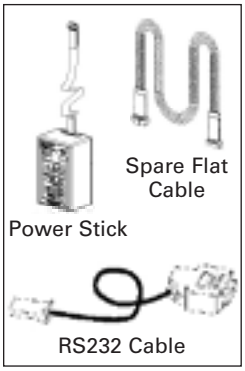

Communications & Electronics		
Power Stick - Hand held, battery operated power supply for LCD trip units. (Requires two -9V batteries) For programming and trip testing only.	**EPSP18V**	**EPSP18V**
Com20 Profibus Communications Module with ZSI for electronic trip units (order cable separately)	**COMPRO2O**	**COMPRO020**
Com21 Modbus Communications Module with ZSI for electronic trip units (order cable separately)	**COMMOD21**	**COMMOD21**
Cable for COM20/21 and power supply.....5ft. (1.5m)	**COMKIT13**	**COMKIT13**
Cable for COM20/21, 3.0m (9.8ft).	**COMKIT6**	**COMKIT6**
Spare flat cable for Test Kits	**COMPCA**	**COMPCA**
Adressing Plug - Assigns a field bus address without a PC by pluging into Com20/21	**3UF79100AA00**	**3UF79100AA000**

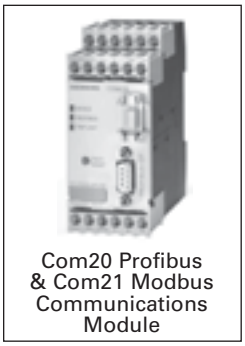

Door Cutouts & Extensions

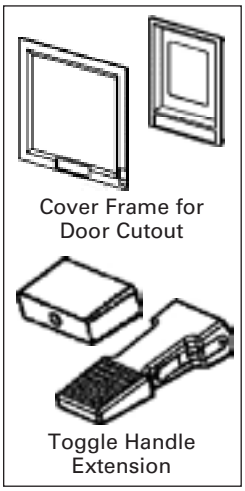

Cover Frame for Door Cutout For fixed or plug-in mounted circuit breakers. (IP30) 2-Pole & 3-Pole	**BZLF3**	**BZLF3**
For breakers with stored energy operator. (IP40)	**BZLFRHSE**	**BZLFRHSE**
Circuit-breaker draw-out mounted and toggle handle operated. Kit includes cover frame (bezel) and escutcheon as needed. (IP40) (not for use with rotary handle or stored energy operator)	**BZLFBDC**	**BZLFBDC**
Toggle Handle Extension For spare or replacement. (One is included with each NG - PG frame.)	—	—

For JG Frame 400 A	For LG Frame 600 A	For MG Frame 800 A	For NG Frame 1200 A	For PG Frame 1600 A
Catalogue Number	Catalogue Number	Catalogue Number	Catalogue Number	Catalogue Number
—	—	—	—	—
—	—	—	—	—
—	—	—	—	—
NGSJ250	—	—	—	—
NGSL400	NGSL400	—	—	—
—	NGSM600	NGSM600	—	—
—	—	NGSN800	NGSN800	—
—	—	—	NGSP120	NGSP120
—	—	—	—	NGSP160
EPSP18V	EPSP18V	EPSP18V	EPSP18V	EPSP18V
COMPRO20	COMPRO20	COMPRO20	COMPRO20	COMPRO20
COMMOD21	COMMOD21	COMMOD21	COMMOD21	COMMOD21
COMKIT4	COMKIT4	COMKIT5	COMKIT5	COMKIT5
COMKIT7	COMKIT7	COMKIT8	COMKIT8	COMKIT8
COMPCA	COMPCA	COMPCA	COMPCA	COMPCA
3UF79100AA000	3UF79100AA000	3UF79100AA000	3UF79100AA000	3UF79100AA000
BZLL3	BZLL3	BZLM3	BZLP3	BZLP3
BZLLRHSE	BZLLRHSE	BZLMRHSE	BZLPRHSE	BZLPRHSE
BZLLBDC	BZLLBDC	BZLMBDC	BZLPBDC	BZLPBDC
THEL	THEL	THEM	THEP	THEP

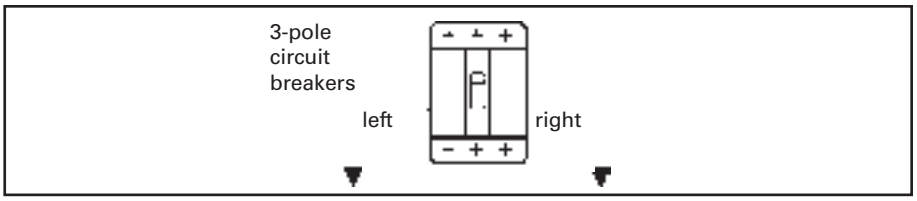

Locations of Internally Mounted Accessories

Frame Family	Left Pocket	Right Pocket
DG*, FG*, JG, LG 150 to 600A	Up to 2 Auxiliary Switches + 1 Alarm Switch	ShuntTrip or UVR or up to 3 Auxiliary Switches or up to 2 Auxiliary Switches + 1 Alarm Switch
		ShuntTrip or UVR or up to 3 Auxiliary Switches or up to 2 Auxiliary Switches + 1 Alarm Switch
MG, NG, PG 800 to 1600A	Up to 4 Auxiliary Switches	ShuntTrip or UVR or up to 4 Auxiliary Switches
	Up to 2 Auxiliary Switches + 2 Alarm Switches	ShuntTrip or UVR or up to 4 Auxiliary Switches

* Except DG and FG breakers with Electronic Trip Units. Due to the location of the Magnetic Latch, the Left Pocket is not available for accessories.

Accessory Information

- Aux. Switch is an Auxiliary Switch, 1A or 1B contact
- Alarm Switch has 1A or 1B contact
- UVR is an Undervoltage Release
- The standard location for factory mounted Auxiliary and Alarm Switches is the Left Pocket

Accessory Maximums

DG, FG, JG, LG Maximum Accessories:

- Maximum of six (6) switches total
- DG, FG Maximum of two (2) Alarm Switches, one each in the Left and Right Pockets. JG, LG Max. of 1 Alarm, Left only

MG, NG, PG Maximum Accessories:

- Maximum of eight (8) switches total
- Maximum of two (2) Alarm Switches, Left Pocket only

If the frame is:	And you need these functions:	Then add this suffix:	Device Catalogue Number
DG, FG, JG or LG	1 Alarm Switch 1 NO Alarm 1 NC Alarm	A1	**ASKL1**
DG, FG, JG or LG	2 Aux. Switches 1 NO + 1 NC Aux. Contacts	A2	**ASKL2**
DG, FG, JG or LG	2 Aux. + 1 Alarm Switches 1 NO + 1NC Aux. and 1 NC Alarm 2 NO Aux. and 1 NC Alarm	A3	**ASKL3**
MG, NG or PG	2 Aux. + 2 Alarm Switches 1 NO + 1 NC Aux. and 1 NO + 1 NC Alarm 2 NO Aux. and 2 NC Alarm 2 NC Aux. and 2 NO Alarm	A3	**ASKP3**
MG, NG or PG	4 Aux. Switches 2 NO + 2 NC Aux.	A4	**ASKP4**

Suffix for factory mounted Shunt Trips

If the frame is:	And you need these functions:	Then add this suffix:	Device Catalogue Number
DG, FG, JG or LG	24V DC 48-60V DC 110-127V DC "220-250V DC 48-60V AC" 110-127V AC 208-277V AC 380-600V AC	RB RC RD RE RM RN RS RV	**STRLB24DC** **STRLC60DC** **STRLD125DC** **STRLE250DC** **STRLM60** **STRLN120** **STRLS277** **STRLV600**
MG, NG or PG	24V DC 48-60V DC 110-127V DC 220-250V DC 48-60V AC 110-127V AC 208-277V AC 380-600V AC	RB RC RD RE RM RN RS RV	**STRPB24DC** **STRPC60DC** **STRPD125DC** **STRPE250DC** **STRPM60** **STRPN120** **STRPS277** **STRPV600**

Suffix for factory mounted Undervoltage Releases

If the frame is:	And you need these functions:	Then add this suffix:	Device Catalogue Number
DG, FG, JG or LG	12V DC 24V DC 48V DC 60V DC 110-127V DC 220-250V DC 24V AC 110-127V AC 220-240V AC 208V AC 277V AC 380-415V AC 440-480V AC	UA UB UC UG UD UE UK UN UR UP US UT UU	**UVRLA12DC** **UVRLB24DC** **UVRLC48DC** **UVRLG60DC** **UVRLD125DC** **UVRLE250DC** **UVRLL24** **UVRLN120** **UVRLR240** **UVRLP208** **UVRLS277** **UVRLT415** **UVRLU480**
MG, NG or PG	12V DC 24V DC 48V DC 60V DC 110-127V DC 220-250V DC 110-127V AC 220-240V AC 208V AC 277V AC 380-415V AC 440-480V AC	UA UB UC UG UD UE UN UR UP US UT UU	**UVRPA12DC** **UVRPB24DC** **UVRPC48DC** **UVRPG60DC** **UVRPD125DC** **UVRPE250DC** **UVRPN120** **UVRPR240** **UVRPP208** **UVRPS277** **UVRPT415** **UVRPU480**

VL Technical Data

		DG	FG	JG	LG	MG	NG	PG
Max rated continuous current		150	250	400	600	800	1200	1600
Rated operational voltage								
NEMA	V AC	600	600	600	600	600	600	600
IEC	V AC	690	690	690	690	690	690	690
Rated impulse withstand voltage								
Main conducting paths	kV	8	8	8	8	8	8	8
Auxiliary circuits	kV	4	4	4	4	4	4	4
Ambient temperature range	°C	-25 to +75	-25 to +75	-25 to +75	-25 to +75	-25 to +75	-25 to +75	-25 to +75
High ambient derating (thermal-mag.)	50°C	93%	93%	93%	93%	95%	95%	95%
	60°C	86%	86%	86%	86%	86%	86%	80%
	70°C	80%	80%	80%	80%	80%	80%	74%
Operating cycles		20,000	20,000	20,000	10,000	5,000	3,000	3,000
Max switching rate (per hour)		120	120	120	60	60	30	30
Power loss (at max. rated current)								
Thermal-magnetic	W	15 – 48	32 – 80	60 – 175	85 – 230	170 – 250	150 – 220	200 – 260
Electronic trip unit	W	40	60	90	160	250	210	260
IEC ①								
Time constant t = 10 ms								
1 current path / Up to 250V DC		—	—	—	—	—	—	—
2 current paths in series / 440V DC								
3 current paths in series / 600V DC								
NEMA								
Time constant t = 8 ms								
2 poles switching 1 current path 250V DC max.②		30	30	30	30	42	42	42
3 poles switching 2 current paths in series 500V DC max.②		18	25	35	35	65	65	65
Accessories								
Auxiliary/Alarm switch								
Current rating (1 or 2 switches)		10	10	10	10	10	10	10
Current rating (3 or 4 same switch)	A	5	5	5	5	5	5	5
Shunt trip								
Pick-up voltage	V	0.7 – 1.1	0.7 – 1.1	0.7 – 1.1	0.7 – 1.1	0.7 – 1.1	0.7 – 1.1	0.7 – 1.1
Power consumption (short-time) at:								
48 –60 V AC	VA	158 – 200	158 – 200	158 – 200	158 – 200	380 – 480	380 – 480	380 – 480
110 – 127 V AC	VA	136 – 158	136 – 158	136 – 158	136 – 158	302 – 353	302 – 353	302 – 353
208 – 277 V AC	VA	274 – 350	274 – 350	274 – 350	274 – 350	330 – 439	330 – 439	330 – 439
380 – 600 V AC	VA	158 – 237	158 – 237	158 – 237	158 – 237	243 – 384	243 – 384	243 – 384
24 V DC	W	110	110	110	110	360	360	360
48 – 60 V DC	W	110 – 172	110 – 172	110 – 172	110 – 172	512 – 820	512 – 820	512 – 820
110 –127 V DC	W	220 – 254	220 – 254	220 – 254	220 – 254	302 – 353	302 – 353	302 – 353
220 – 250 V DC	W	97 – 110	97 – 110	97 – 110	97 – 110	348 – 397	348 – 397	348 – 397
Max. operating time	ms	50	50	50	50	50	50	50

① Consult Siemens for short circuit values.
② Review individual frame and type values.

VL Technical Data

Undervoltage trip		DG	FG	JG	LG	MG	NG	PG
Drop voltage (percentage)	V	35% – 70%	35% – 70%	35% – 70%	35% – 70%	35% – 70%	35% – 70%	35% – 70%
Pick-up voltage (percentage)	V	70% – 85%	70% – 85%	70% – 85%	70% – 85%	70% – 85%	70% – 85%	70% – 85%
Power consumption (continuous) at:								
110 – 127 V AC	VA	1.5	1.5	1.5	1.5	1.1	1.1	1.1
220 – 250 V AC	VA	1.5	1.5	1.5	1.5	2.1	2.1	2.1
208 V AC	VA	1.8	1.8	1.8	1.8	2.2	2.2	2.2
277 V AC	VA	2.1	2.1	2.1	2.1	1.6	1.6	1.6
380 – 415 V AC	VA	1.6	1.6	1.6	1.6	2.0	2.0	2.0
440 – 480 V AC	VA	1.8	1.8	1.8	1.8	2.3	2.3	2.3
500 – 525 V AC	VA	2.5	2.5	2.5	2.5	2.9	2.9	2.9
Max. opening time	ms	50	50	50	50	50	50	50
Motorized operating mechanism								
Motor with stored energy mechanism (synchronizable)		X	X	X	X	X	—	—
Motor Operator						—	X	X
Max. switching rate (per hour)		120	120	120	60	60	30	30
Command duration	ms	20 – 50	20 – 50	20 – 50	20 – 50	20 – 50	50	50
Closing time	ms	<100	<100	<100	<100	<100	<5,000	<5,000
Charging time	s	<5	<5	<5	<5	<5	<5	<5
Break time	s	<5	<5	<5	<5	<5	<5	<5
Power consumption	VA/W	<100	<100	<100	<100	<250	<250	<250
Control voltages 24 V DC								
42 – 48 V AC / DC								
60 V AC / DC								
110 - 127 V AC/ DC								
220 - 250 V AC/ DC								
Operating range: 85 – 110% of rated control voltage								

Unusual Operating Conditions

Note: The information provided on this and the next page is intended for reference and recommendation only. Because several variables can act on a circuit breaker's performance at the same time, the data below is based less on controlled testing, than on experience and engineering judgment. Contact Siemens for further information on special conditions and treatment.

High Ambient Temperatures

Because thermal-magnetic trip breakers are temperature sensitive and calibrated for a specific ambient of 40° C (104° F) (average enclosure temperature), a higher ambient will cause the breaker to trip at lower current than its nameplate rating, in other words, causing the breaker to "derate" (see Table 1). Similarly, the current carrying capacity of a circuit conductor is based upon a certain ambient temperature, a higher ambient will reduce its current carrying capacity, causing it to "derate." Thus, with a fluctuating temperature, a thermal-magnetic breaker will derate nearly parallel with its connected circuit conductors and maintain close circuit protection. If the application temperature exceeds 40° C (104° F) and is known, either a breaker specially calibrated for the higher ambient or one oversized according to Table 1 may be selected. In a case such as this, the circuit conductors should be oversized as well.

Siemens Electronic Trip Unit Breakers are insensitive to temperature changes. However, they do include circuitry to protect the components from abnormally high temperatures.

Altitude

Reduced air density at altitudes greater than 6600 ft. (2000 meters) affects the ability of a molded case circuit breaker to transfer heat and interrupt faults. Therefore, circuit breakers applied at these altitudes should have interrupting, insulation and continuous currents derated as indicated in Figure 1.

Table 1 – Temperature derating date for thermal-magnetic breakers

Reference Ampere Rating at 40° C (104° F)	Ampere Rating at: 25° C (77° F)	50°C (122° F)	60° C (140° F)	Siemens Breaker Frames
50	55	46	42	DG
60	66	56	52	
70	77	65	60	
90	99	84	78	
100	110	94	87	
125	137	114	100	FG
150	165	136	120	
175	192	159	140	
200	220	182	160	
225	247	205	180	JG
250	275	235	220	
300	330	276	252	
350	385	325	301	LG
400	440	372	340	
500	550	468	435	MG
600	660	564	525	
700	770	658	613	
800	880	754	704	NG
900	990	828	749	
1000	1100	900	825	
1200	1320	1090	1000	PG
1400	1540	1304	1148	
1600	1760	1500	1320	

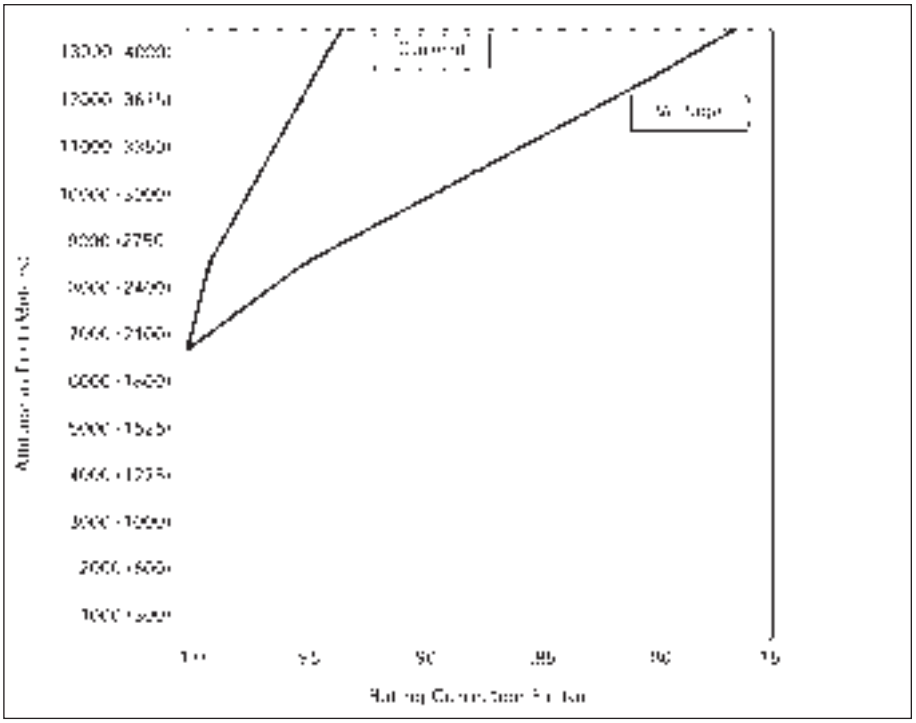

Figure 1 – Altitude adjustment

Unusual Operating Conditions 400 Hz Systems

Circuit Breaker Derating Required

This table lists the maximum continuous current carrying capacity for Siemens breakers at 400Hz. Due to the increased resistance of the copper sections resulting from the skin effect produced by eddy currents at these frequencies, circuit breakers in many cases require derating. The thermal derating on these devices is based upon 100%, three phase application in open air in a maximum of 40°C (104° F) with 48 in. (1219 mm) of the specified cable or bus at the line and load side. Additional derating of not less than 20% will be required if the circuit breaker is to be utilized in an enclosure. Further derating may be required if the enclosure ambient temperature exceeds 40°C(104° F).

Cable and Bus Sizing

The cable and bus sizes to be utilized at 400Hz are not based on standard National Electric Codes tables for 60Hz application. Larger cross sections are necessary at 400Hz. All bus bars specified are based upon mounting the bars in the vertical plane to allow maximum air flow. All bus bars are spaced at a minimum of 0.25 in. (6 mm) apart. Mounting of bus bars in the horizontal plane will necessitate additional drafting. Edgewise orientation of the bus may change the maximum ratings indicated. If additional information is required for other connections of cable or bus, contact Siemens for information.

Application Recommendations

It is recommended that temperatures be measured on the line and load terminals or T-connectors of the center pole. These are usually the hottest terminals with a balanced load. A maximum temperature of 75°C (35°C over a maximum ambient of 40°C) would verify the particular application. Temperature profiles taken on these breakers can be correlated to ensure that the hottest points within the breaker are within the required temperature limits.

Interrupting Rating

Circuit breakers used in 400 Hz systems are limited to a 5000 A interrupting rating. If higher ratings are required, consult Siemens.

Breaker type	Maximum continuous ampere rating at 40°C (104°F)②			75°C (167F) Copper cable per pole	
	60HZ	400HZ			
	Open air	Open air③	Enclosed after derating	No of pieces	Wire size
DG	50	48	38	1	#8
	60	57	46	1	#6
	70	63	50	1	#4
	80	72	58	1	#4
	90	80	64	1	#3
	100	90	72	1	#3
	110	95	75	1	#2
	125	105	84	1	#1
	150	125	100	1	#1/0
FG	100	90	72	1	#3
	110	95	75	1	#2
	125	105	84	1	#1
	150	125	100	1	#1/0
	175	140	112	1	#2/0
	200	160	128	1	#3/0
	225	180	144	1	#4/0
	250	200	160	1	250 kcmil
JG	250	210	168	1	250 kcmil
	300	240	192	1	350 kcmil
	350	260	208	1	500 kcmil
	400	300	240	2	#2/0
JG 100% Rated	250	210	210	1	250 kcmil
	300	240	240	1	350 kcmil
	350	260	260	1	500 kcmil
	400	300	300	2	#3/0
LG	400	300	240	2	#3/0
	500	375	300	2	250 kcmil
	600	420	336	2	350 kcmil

Breaker type	Maximum continuous ampere rating at 40°C (104°F)②			75°C (167F) Copper cable per pole	
	60HZ	400HZ			
	Open air	Open air③	Enclosed after derating	No of pieces	Wire size
LG	400	300	240	2	#3/0
	500	375	300	2	250 kcmil
	600	420	336	2	350 kcmil
MG	600	430	360	2	350 kcmil
	700	500	400	3	250 kcmil
	800	560	448	3	300 kcmil
MG 100% Rated	600	430	430	2	350 kcmil
	700	500	500	3	250 kcmil
	800	560	560	3	300 kcmil
NG	800	560	448	3	300 kcmil
	900	600	480	3	350 kcmil
	1000	650	520	3	400 kcmil
	1200	780	624	4	350 kcmil
NG 100% Rated	900	600	600	3	350 kcmil
	1000	650	650	3	400 kcmil
	1200	780	780	4	350 kcmil
	1200	780	624	4	400 kcmil
PG	1400	850	680	4	500 kcmil
	1600	960	768	5	500 kcmil
	1200	780	780	4	400 kcmil
PG 100% Rated	1400	850	850	4	500 kcmil
	1600	960	960	5	500 kcmil

① The information provided on this page is intended for reference and recommendation only. Because several variables can act on a circuit breaker's performance at the same time, the data above is based less on controlled testing, than on experience and engineering judgment.Contact Siemens for further information on special conditions and treatment.

② Additional derating may be required if the ambient temperature is greater than 40°C (104°F).

③ Calculated after derating to compensate for the heating of the copper conductor, caused by the skin effect generated by eddy currents produced at 400/415HZ.

Molded Case Circuit Breakers

Series Connected Short Circuit Ratings

General

The term "Series Connected Short Circuit Rating" refers to the application of series circuit breakers in a combination that allows downstream breakers to have lower individual interrupting ratings than the available fault current.

This is permitted as long as the series combination has been tested and certified by CSA.

The tables on these pages list specific main and branch breaker combinations that may be used for the short circuit interrupting ratings shown.

No substitutions are permitted. All combinations shown have been tested and are CSA Certified. This information is provided as a reference tool only.

240V Series Ratings

Series Rating	Main Breaker		Branch Breaker			
	Max. Amps	Type	Type	Poles	Amps	Volts
22,000	70 125 100	QPH,BQH,BLH 70(1P) 125(2P) 100(3P)	QP,BQ,BL	1	15-70	120/240
				2	15-125	120/240
				2	15-125	240
				3	15-100	240
			QT	1,2	15-50	120/240
			QPF,BQF,BLF	1	15-30	120
			QE,BE,BLE	1	15-30	120
			QPF2,BLF2	1	15-30	120
			QAF,BQAF,BAF	1	15-20	120
			QAF2,BAF2	1	15-20	120
			QFGA2,BFGA2	1	15-20	120
		QPH,BQH,BLH 125(2P) 100(3P)	QPF,BLF	2	15-60	120/240
			QE,BLE	2	15-60	120/240
			QAF,BAF	2	15-20	120/240
		QPH,BQH,BLH 70(1P)	QT	1	15-50	120/240
	125	EQ967# (2P)	QP,BQ,BL	1	15-70	120/240
				2	15-125	120/240
			QT	1,2	15-50	120/240
			QPF,BQF,BLF	1	15-30	120
			QPF,BLF,SPF	2	15-60	120/240
			QE,BE,BLE	1	15-30	120
				2	15-60	120/240
			QAF,BQAF,BAF	1	15-20	120
			QAF,BAF	2	15-20	120/240
			QAF2,BAF2	1	15-20	120
	200	EQ968# (2P)	QP,BQ,BL	1	15-70	120/240
				2	15-125	120/240
			QT	1,2	15-50	120/240
			QPF,BQF,BLF	1	15-30	120
			QPF,BLF	2	15-60	120/240
			QE,BE,BLE	1	15-30	120
				2	15-60	120/240
			QPF2,BLF2	1	15-30	120
			QAF,BQAF,BAF	1	15-20	120
			QAF,BAF	2	15-20	120/240
			QAF2,BAF2	1	15-20	120
			QFGA2,BFGA2	1	15-20	120
		QNH,QNRH (2P)	QP,BQ,BL	1	15-70	120/240
				2	15-125	120/240
			QT	1,2	15-50	120/240
			QPF,BQF,BLF	1	15-30	120
			QPF,BLF	2	15-60	120/240
			QE,BE,BLE	1	15-30	120
				2	15-60	120/240
			QPF2,BLF2	1	15-30	120
			QAF,BQAF,BAF	1	15-20	120
			QAF,BAF	2	15-20	120/240
			QAF2,BAF2	1	15-20	120
			QFGA2,BFGA2	1	15-20	120

240V Series Ratings (Continued)

Series Rating	Main Breaker		Branch Breaker			
	Max. Amps	Type	Type	Poles	Amps	Volts
22,000	225	QPPH (2P)	QP,BQ,BL	1	15-70	120/240
				2	15-125	120/240
			QT	1,2	15-50	120/240
			QPF,BQF,BLF	1	15-30	120
			QPF,BLF	2	15-60	120/240
			QE,BE,BLE	1	15-30	120
				2	15-60	120/240
			QPF2,BLF2	1	15-30	120
			QAF,BQAF,BAF	1	15-20	120
			QAF,BAF	2	15-20	120/240
			QAF2,BAF2	1	15-20	120
			QFGA2,BFGA2	1	15-20	120
			QPP	2	125-200	120/240
			EQ948#	2	125-200	120/240
		QJH2 (2, 3P)	QP,BQ,BL	1	15-70	120/240
				2	15-125	120/240
				2	15-125	240
			QT	1,2	15,20,40	120/240
			QPF,BQF,BLF	1	15-30	120
			QPF,BLF	2	15-60	120/240
			QE,BE,BLE	1	15-30	120
				2	15-60	120/240
			QPF2,BLF2	1	15-30	120
			QAF,BQAF,BAF	1	15-20	120
			QAF,BAF	2	15-20	120/240
			QAF2,BAF2	1	15-20	120
			QFGA2,BFGA2	1	15-20	120
			EQ948#	2	125-200	120/240
		QJH2 (3P)	QP,BQ,BL	3	60-100	240
	250	QRH2 (2, 3P)	QP,BQ,BL	1	15-70	120/240
				2	15-125	120/240
				2	15-125	240
			QT	1,2	15-50	120/240
			QPF,BQF,BLF	1	15-30	120
			QPF,BLF	2	15-60	120/240
			QE,BE,BLE	1	15-30	120
			QE,BLE	2	15-60	120/240
			QPF2,BLF2	1	15-30	120
			QAF,BQAF,BAF	1	15-20	120
			QAF,BAF	2	15-20	120
			QAF2,BAF2	1	15-20	120
			QFGA2,BFGA2	1	15-20	120
		QRH2 (3P)	QP,BQ,BL	3	15-100	240
42,000	225	QJ2H (2, 3P)	QP,BQ,BL	1	15-70	120/240
				2	15-125	120/240
			QPH	1	15-70	120/240
				2	15-125	120/240
			BQH,BLH	1	15-70	120/240
				2	15-125	120/240
			EQ967#	2	100-125	120/240
			QJH2	2	60-225	240
		QJ2H (3P)	QP,BQ,BL	3	60-100	240
			QPH	3	15-100	240
			BQH,BLH	3	15-100	240
			QJH2	3	60-225	240

240V Series Ratings (Continued)

Series Rating	Main Breaker		Branch Breaker			
	Max. Amps	Type	Type	Poles	Amps	Volts
65,000	70	HQP,HBQ,HBL 70(1P)	QP,BQ,BL	1	15-70	120/240
			QPH	1	15-70	120/240
			BQH,BLH	1	15-70	120/240
			QT	1	15-50	120/240
	125	HQP,HBQ,HBL 125(2P)	QP,BQ,BL	1	15-70	120/240
				2	15-125	120/240
			QPH	1	15-70	120/240
				2	15-125	120/240
			BQH,BLH	1	15-70	120/240
				2	15-125	120/240
			EQ967#	2	100-125	120/240
	100	HQP,HBQ,HBL 100(3P)	QP,BQ,BL	1	15-70	120/240
				2	15-100	120/240
				2	15-100	240
				3	15-100	240
			QPH	1	15-70	120/240
				2	15-100	120/240
				3	15-100	240
			BQH,BLH	1	15-70	120/240
				2	15-100	120/240
				3	15-100	240
	125 100	HQP,HBQ,HBL 125(2P) 100(3P)	QT	1,2	15-50	120/240
			QPF,BLF	2	15-60	120/240
			QE,BLE	2	15-60	120/240
			QPHF,BLHF	2	15-60	120/240
			QEH,BLEH	2	15-60	120/240
	70 125 100	HQP,HBQ,HBL 70(1P) 125(2P) 100(3P)	QPF,BQF,BLF	1	15-30	120
			QE,BE,BLE	1	15-30	120
			QPHF,BQHF	1	15-30	120
			BLHF	1	15-30	120
			QEH,BLEH	1	15-30	120
			QPF2,BLF2	1	15-30	120
			QPHF2,BLHF2	1	15-30	120
			QAF,BQAF,BAF	1	15-20	120
			QAFH,BQAFH	1	15-20	120
			BAFH	1	15-20	120
			QAF2,BAF2	1	15-20	120
			QAFH2,BAFH2	1	15-20	120
			QFGA2,BFGA2	1	15-20	120
			QFGAH2,BFGAH2	1	15-20	120
	100	ED4 (1P)	QP,BQ,BL	1	15-70	120
			QPH	1	15-70	120
			BQH,BLH	1	15-70	120
			QT	1	15-50	120
			QPF,BQF,BLF	1	15-30	120
			QE,BE,BLE	1	15-30	120
			QPHF,BQHF	1	15-30	120
			BLHF	1	15-30	120
			QEH,BLEH	1	15-30	120
			QPF2,BLF2	1	15-30	120
			QPHF2,BLHF2	1	15-30	120
			QAF,BQAF,BAF	1	15-20	120
			QAFH,BQAFH	1	15-20	120
			BAFH	1	15-20	120
			QAF2,BAF2	1	15-20	120
			QAFH2,BAFH2	1	15-20	120
			QFGA2,BFGA2	1	15-20	120
			QFGAH2,BFGAH2	1	15-20	120
			ED2	1	15-100	120
	125	ED4,ED6 (2, 3P)	QP,BQ,BL	1	15-70	120/240
				2	15-125	120/240
				2	15-125	240

240V Series Ratings (Continued)

Series Rating	Main Breaker		Branch Breaker			
	Max. Amps	Type	Type	Poles	Amps	Volts
65,000	125	ED4,ED6 (2, 3P)	QPH	1	15-70	120/240
				2	15-125	120/240
			BQH,BLH	1	15-70	120/240
				2	15-125	120/240
			QT	1,2	15-50	120/240
			QPF,BQF,BLF	1	15-30	120
			QPF,BLF	2	15-60	120/240
			QE,BE,BLE	1	15-30	120
			QE,BLE	2	15-60	120/240
			QPHF,BQHF	1	15-30	120
			QPHF,BLHF	2	15-60	120/240
			BLHF	1	15-30	120
			QEH,BLEH	1	15-30	120
				2	15-60	120/240
			QPF2,BLF2	1	15-30	120
			QPHF2,BLHF2	1	15-30	120
			QAF,BQAF,BAF	1	15-20	120
			QAFH,BQAFH	1	15-20	120
			BAFH	1	15-20	120
			QAF2,BAF2	1	15-20	120
			QAFH2,BAFH2	1	15-20	120
			QFGA2,BFGA2	1	15-20	120
			QFGAH2,BFGAH2	1	15-20	120
			ED2	1	15-100	120
				2	15-100	240
		ED4,ED6 (3P)	QP,BQ,BL	3	15-100	240
			QPH	3	15-100	240
			BQH,BLH	3	15-100	240
			ED2	3	15-100	240
	150	NDGA,NDGB (2, 3P)	QPH,BQH,BLH	1	15-70	120/240
				2	15-125	120/240
		NDGA,NDGB (3P)	QPH,BQH,BLH	3	15-100	240
	200	HQN,HQNR (2P)	QP,BQ,BL	1	15-70	120/240
				2	15-125	120/240
			QPH,BQH,BLH	1	15-70	120/240
				2	15-125	120/240
			QT	1,2	15-50	120/240
			QPF,BQF,BLF	1	15-30	120
			QPF,BLF	2	15-60	120/240
			QE,BE,BLE	1	15-30	120
				2	15-60	120/240
			QPHF,BQHF	1	15-30	120
			QPHF,BLHF	2	15-60	120/240
			BLHF	1	15-30	120
			QEH,BLEH	1	15-30	120
				2	15-60	120/240
			QPF2,BLF2	1	15-30	120
			QPHF2,BLHF2	1	15-30	120
			QAF,BQAF,BAF	1	15-20	120
			QAFH,BQAFH	1	15-20	120
			BAFH	1	15-20	120
			QAF2,BAF2	1	15-20	120
			QAFH2,BAFH2	1	15-20	120
			QFGA2,BFGA2	1	15-20	120
			QFGAH2,BFGAH2	1	15-20	120
			EQ967#	2	100-125	120/240
			EQ968#	2	150-200	120/240
	225	HQPP (2P)	QP,BQ,BL	1	15-70	120/240
				2	15-125	120/240
			QPH	1	15-70	120/240
				2	15-125	120/240

240V Series Ratings (Continued)

Series Rating	Main Breaker		Branch Breaker			
	Max. Amps	Type	Type	Poles	Amps	Volts
65,000	225	HQPP (2P)	BQH,BLH	1	15-70	120/240
				2	15-125	120/240
			QT	1,2	15-50	120/240
			QPF,BQF,BLF	1	15-30	120
			QPF,BLF	2	15-60	120/240
			QE,BE,BLE	1	15-30	120
			QE,BLE	2	15-60	120/240
			QPHF,BQHF	1	15-30	120
			QPHF,BLHF	2	15-60	120/240
			BLHF	1	15-30	120
			QEH,BLEH	1	15-30	120
				2	15-60	120/240
			QPF2,BLF2	1	15-30	120
			QPHF2,BLHF2	1	15-30	120
			QAF,BQAF,BAF	1	15-20	120
			QAFH,BQAFH	1	15-20	120
			BAFH	1	15-20	120
			QAF2,BAF2	1	15-20	120
			QAFH2,BAFH2	1	15-20	120
			QFGA2,BFGA2	1	15-20	120
			QFGAH2,BFGAH2	1	15-20	120
			EQ967#	2	100-125	120/240
			QPP	2	125-200	120/240
			QPPH	2	125-200	120/240
			EQ968#	2	150-200	120/240
		EQ978# (2P)	QP,BQ,BL	1	15-70	120/240
				2	15-125	120/240
			QPH	1	15-70	120/240
				2	15-125	120/240
			BQH,BLH	1	15-70	120/240
				2	15-125	120/240
			QT	1,2	15-50	120/240
			QPF,BQF,BLF	1	15-30	120
			QPF,BLF	2	15-60	120/240
			QE,BE,BLE	1	15-30	120
			QE,BLE	2	15-60	120/240
			QPHF,BQHF	1	15-30	120
			QPHF,BLHF	2	15-60	120/240
			BLHF	1	15-30	120
			QEH,BLEH	1	15-30	120
				2	15-60	120/240
			QPF2,BLF2	1	15-30	120
			QPHF2,BLHF2	1	15-30	120
			QAF,BQAF,BAF	1	15-20	120
			QAFH,BQAFH	1	15-20	120
			BAFH	1	15-20	120
			QAF2,BAF2	1	15-20	120
			QAFH2,BAFH2	1	15-20	120
			QFGA2,BFGA2	1	15-20	120
			QFGAH2,BFGAH2	1	15-20	120
			EQ967#	2	100-125	120/240
			QPP	2	125-200	120/240
			QPPH	2	125-200	120/240
			EQ968#	2	150-200	120/240
		HQJ2 (3P)	QP,BQ,BL	1	15-70	120/240
				2	15-125	120/240
				3	15-100	240
			QPH,BQH,BLH	1	15-70	120/240
				2	15-125	120/240
				3	15-100	240
			QT	1,2	15-50	120/240
			QPF,BQF,BLF	1	15-30	120

240V Series Ratings (Continued)

Series Rating	Main Breaker		Branch Breaker			
	Max. Amps	Type	Type	Poles	Amps	Volts
65,000	225	HQJ2 (3P)	QPF,BLF	2	15-60	120/240
			QE,BE,BLE	1	15-30	120
			QE,BLE	2	15-60	120/240
			QPHF,BLHF	1	15-30	120
				2	15-60	120/240
			QEH,BLEH	1	15-30	120
				2	15-60	120/240
			QPF2,BLF2	1	15-30	120
			QPHF2,BLHF2	1	15-30	120
			QAF,BQAF,BAF	1	15-20	120
			QAF,BAF	2	15-20	120/240
			QAFH,BQAFH	1	15-20	120
			QAFH,BAFH	2	15-20	120/240
			BAFH	1	15-20	120
			QAF2,BAF2	1	15-20	120
			QAFH2,BAFH2	1	15-20	120
			QFGA2,BFGA2	1	15-20	120
			QFGAH2,BFGAH2	1	15-20	120
	250	HQR2 (2, 3P)	QP,BQ,BL	1	15-70	120/240
				2	15-125	120/240
				2	15-125	240
			QPH,BQH,BLH	1	15-70	120
				2	15-125	120/240
				2	15-125	240
			QT	1,2	15-50	120/240
			QPF,BQF,BLF	1	15-30	120
			QPF,BLF	2	15-60	120/240
			QE,BE,BLE	1	15-30	120
			QE,BLE	2	15-60	120/240
			QPHF,BQHF	1	15-30	120
			QPHF,BLHF	2	15-60	120/240
			BLHF	1	15-30	120
			QEH,BLEH	1	15-30	120
				2	15-60	120/240
			QPF2,BLF2	1	15-30	120
			QPHF2,BLHF2	1	15-30	120
			QAF,BQAF,BAF	1	15-20	120
			QAF,BAF	2	15-20	120/240
			QAFH,BQAFH	1	15-20	120
			QAFH,BAFH	2	15-20	120/240
			BAFH	1	15-20	120
			QAF2,BAF2	1	15-20	120
			QAFH2,BAFH2	1	15-20	120
			QFGA2,BFGA2	1	15-20	120
			QFGAH2,BFGAH2	1	15-20	120
			QR2,QRH2	2	100-250	240
		HQR2 (3P)	QP,BQ,BL	3	15-100	240
			QPH,BQH,BLH	3	15-100	240
			QR2,QRH2	3	100-250	240
		NFGA,NFGB (2, 3P)	QPH,BQH,BLH	1	15-70	120/240
				2	15-125	120/240
		NFGA,NFGB (3P)	QPH,BQH,BLH	3	15-100	240
		FD6-A,FXD6-A (2, 3P)	QP,BQ,BL	1	15-70	120/240
				2	15-125	120/240
			QPH	1	15-70	120/240
				2	15-125	120/240
			BQH,BLH	1	15-70	120/240
				2	15-125	120/240
			QPPH	2	125-225	120/240
			QJ2	2	60-225	240
			QJH2	2	60-225	240
			QJ2H	2	60-225	240

240V Series Ratings (Continued)

Series Rating	Main Breaker		Branch Breaker			
	Max. Amps	Type	Type	Poles	Amps	Volts
65,000	250	FD6-A,FXD6-A (2, 3P)	QR2,QRH2	2	100-250	240
			QP,BQ,BL	1	15-70	120/240
				2	15-125	120/240
			QPH	1	15-70	120/240
				2	15-125	120/240
			BQH,BLH	1	15-70	120/240
				2	15-125	120/240
			QPPH	2	125-225	120/240
			QJ2	2	60-225	240
			QJH2	2	60-225	240
			QJ2H	2	60-225	240
		FD6-A,FXD6-A (3P)	QP,BQ,BL	3	15-100	240
			QPH	3	15-100	240
			BQH,BLH	3	15-100	240
			QJ2	3	60-225	240
			QJH2	3	60-225	240
			QJ2H	3	60-225	240
			QR2,QRH2	3	100-250	240
			QP,BQ,BL	3	15-100	240
			QPH	3	15-100	240
			BQH,BLH	3	15-100	240
			QJ2	3	60-225	240
			QJH2	3	60-225	240
			QJ2H	3	60-225	240
	400	NJGA,NJJA (2, 3P)	QPH,BQH,BLH	1	15-70	120/240
				2	15-125	120/240
			QN,QNH	2	150-200	120/240
			QNR,QNRH	2	150-200	120/240
			QR2,QRH2	2	100-250	240
		NJGA,NJJA (3P)	QPH,BQH,BLH	3	15-100	240
			QR2,QRH2	3	100-250	240
		JXD2-A (2, 3P)	QPH	1	15-70	120/240
				2	15-125	120/240
			BQH,BLH	1	15-70	120/240
				2	15-125	120/240
			QN,QNH	2	150-200	120/240
			QNR,QNRH	2	150-200	120/240
			QJH2	2	60-225	240
			QJ2H	2	60-225	240
			QR2,QRH2	2	100-250	240
		JXD2-A (3P)	QPH	3	15-100	240
			BQH,BLH	3	15-100	240
			QJH2	3	60-225	240
			QJ2H	3	60-225	240
		JXD2 (2, 3P)	QPH	1	15-70	120/240
				2	15-125	120/240
			BQH,BLH	1	15-70	120/240
				2	15-125	120/240
			QN,QNH	2	150-200	120/240
			QNR,QNRH	2	150-200	120/240
			QJH2	2	60-225	240
			QJ2H	2	60-225	240
		JXD2 (3P)	QR2,QRH2	3	100-250	240
			QPH	3	15-100	240
			BQH,BLH	3	15-100	240
			QJH2	3	60-225	240
			QJ2H	3	60-225	240
		JD6-A,JXD6-A (2, 3P)	QPH	1	15-70	120/240
				2	15-125	120/240
			BQH,BLH	1	15-70	120/240
				2	15-125	120/240
			QN,QNH	2	150-200	120/240
			QNR,QNRH	2	150-200	120/240

240V Series Ratings (Continued)

Series Rating	Main Breaker		Branch Breaker			
	Max. Amps	Type	Type	Poles	Amps	Volts
65,000	400	JD6-A,JXD6-A (2, 3P)	QJH2	2	60-225	240
			QJ2H	2	60-225	240
			QR2,QRH2	2	100-250	240
		JD6-A,JXD6-A (3P)	QPH	3	15-100	240
			BQH,BLH	3	15-100	240
			QJH2	3	60-225	240
			QJ2H	3	60-225	240
			QR2,QRH2	3	100-250	240
		JD6,JXD6 (2, 3P)	QPH	1	15-70	120/240
				2	15-125	120/240
			BQH,BLH	1	15-70	120/240
				2	15-125	120/240
			QN,QNH	2	150-200	120/240
			QNR,QNRH	2	150-200	120/240
			QJH2	2	60-225	240
		JD6,JXD6 (3P)	QPH	3	15-100	240
			BQH,BLH	3	15-100	240
			QJH2	3	60-225	240
			QJ2H	3	60-225	240
		SJD6-A (3P)	QPH	1	15-70	120/240
				2	15-125	120/240
				3	15-100	240
			BQH,BLH	1	15-70	120/240
				2	15-125	120/240
				3	15-100	240
			QR2,QRH2	2	100-250	240
				3	100-250	240
		SJD6 (3P)	QPH	1	15-70	120/240
				2	15-125	120/240
				3	15-100	240
			BQH,BLH	1	15-70	120/240
				2	15-125	120/240
				3	15-100	240
		HJD6-A (2, 3P)	QPH	1	15-70	120/240
				2	15-125	120/240
			QR2,QRH2	2	100-250	240
		HJD6-A (3P)	QPH	3	15-100	240
		HJXD6-A (2, 3P)	QPH	1	15-70	120/240
				2	15-125	120/240
		HJXD6-A (3P)	QPH	3	15-100	240
			QR2,QRH2	3	100-250	240
			QPH	3	15-100	240
	600	NLGA (2, 3P)	QPH,BQH,BLH	1	15-70	120/240
				2	15-125	120/240
			QN,QNH	2	150-200	120/240
			QNR,QNRH	2	150-200	120/240
			QR2,QRH2	2	100-250	240
			QPH,BQH,BLH	1	15-70	120/240
				2	15-125	120/240
			QN,QNH	2	150-200	120/240
			QNR,QNRH	2	150-200	120/240
			QR2,QRH2	2	100-250	240
		NLGA (3P)	QPH,BQH,BLH	3	15-100	240
			QR2,QRH2	3	100-250	240
		LD6-A (2, 3P)	QPH	1	15-70	120/240
				2	15-125	120/240
			BQH,BLH	1	15-70	120/240
				2	15-125	120/240
			QN,QNH	2	150-200	120/240
			QNR,QNRH	2	150-200	120/240
			QJH2	2	60-225	240
			QJ2H	2	60-225	240
			QR2,QRH2	2	100-250	240

240V Series Ratings (Continued)

Series Rating	Main Breaker		Branch Breaker			
	Max. Amps	Type	Type	Poles	Amps	Volts
65,000	600	LD6-A (3P)	QPH	3	15-100	240
			BQH,BLH	3	15-100	240
			QJH2	3	60-225	240
			QJ2H	3	60-225	240
		LD6 (2, 3P)	QPH	1	15-70	120/240
				2	15-125	120/240
			BQH,BLH	1	15-70	120/240
				2	15-125	120/240
			QN,QNH	2	150-200	120/240
			QNR,QNRH	2	150-200	120/240
			QJH2	2	60-225	240
			QJ2H	2	60-225	240
		LD6 (3P)	QPH	3	15-100	240
			BQH,BLH	3	15-100	240
			QJH2	3	60-225	240
			QJ2H	3	60-225	240
		LXD6-A (2, 3P)	QPH	1	15-70	120/240
				2	15-125	120/240
			BQH,BLH	1	15-70	120/240
				2	15-125	120/240
			QN,QNH	2	150-200	120/240
			QNR,QNRH	2	150-200	120/240
			QJH2	2	60-225	240
			QJ2H	2	60-225	240
			QR2,QRH2	2	100-250	240
		LXD6-A (3P)	QPH	3	15-100	240
			BQH,BLH	3	15-100	240
			QJH2	3	60-225	240
			QJ2H	3	60-225	240
			QR2,QRH2	3	100-250	240
			QPH	1	15-70	120/240
				2	15-125	120/240
			BQH,BLH	1	15-70	120/240
				2	15-125	120/240
		LXD6 (2, 3P)	QN,QNH	2	150-200	120/240
			QNR,QNRH	2	150-200	120/240
			QJH2	2	60-225	240
			QJ2H	2	60-225	240
		LXD6 (3P)	QPH	3	15-100	240
			BQH,BLH	3	15-100	240
			QJH2	3	60-225	240
			QJ2H	3	60-225	240
		SLD6-A (3P)	QPH	1	15-70	120/240
				2	15-125	120/240
				3	15-100	240
			BQH,BLH	1	15-70	120/240
				2	15-125	120/240
				3	15-100	240
			QR2,QRH2	2	100-250	240
				3	100-250	240
		SLD6 (3P)	QPH	1	15-70	120/240
				2	15-125	120/240
				3	15-100	240
			BQH,BLH	1	15-70	120/240
				2	15-125	120/240
				3	15-100	240
		HLD6-A (2, 3P)	QPH	1	15-70	120/240
				2	15-125	120/240
			QR2,QRH2	2	100-250	240
		HLD6-A (3P)	QPH	3	15-100	240
			QR2,QRH2	3	100-250	240
		HLD6 (2, 3P)	QPH	1	15-70	120/240
				2	15-125	120/240

240V Series Ratings (Continued)

Series Rating	Main Breaker		Branch Breaker			
	Max. Amps	Type	Type	Poles	Amps	Volts
65,000	600	HLD6 (3P)	QPH	3	15-100	240
		HLXD6-A (2, 3P)	QPH	1	15-70	120/240
				2	15-125	120/240
			QR2,QRH2	2	100-250	240
		HLXD6 (2, 3P)	QPH	1	15-70	120/240
				2	15-125	120/240
		HLXD6-A (3P)	QPH	3	15-100	240
			QR2,QRH2	3	100-250	240
		HLXD6 (2, 3P)	QPH	1	15-70	120/240
				2	15-125	120/240
		HLXD6 (3P)	QPH	3	15-100	240
	800	LMD6,LMXD6 (2, 3P)	QPH,BQH,BLH	1	15-70	120/240
			QPH,BQH,BLH	2	15-125	120/240
		LMD6,LMXD6 (3P)	QPH,BQH,BLH	3	15-100	240
		HLMD6,HLMXD6 (2, 3P)	QPH,BQH,BLH	1	15-70	120/240
				2	15-125	120/240
		HLMD6,HLMXD6 (3P)	QPH,BQH,BLH	3	15-100	240
		NMG,HMG (2, 3P)	QPH,BQH,BLH	1	15-70	120/240
				2	15-125	120/240
			QN,QNH	2	150-200	120/240
			QNR,QNRH	2	150-200	120/240
			QR2,QRH2	2	100-250	240
		NMG,HMG (3P)	QPH,BQH,BLH	3	15-100	240
			QR2,QRH2	3	100-250	240
		MD6,MXD6 (2, 3P)	QPH	1	15-70	120/240
				2	15-125	120/240
			BQH,BLH	1	15-70	120/240
				2	15-125	120/240
			QN,QNH	2	150-200	120/240
			QNR,QNRH	2	150-200	120/240
			QR2,QRH2	2	100-250	240
		MD6,MXD6 (3P)	QPH	3	15-100	240
			BQH,BLH	3	15-100	240
			QR2,QRH2	3	100-250	240
		SMD6 (3P)	QPH	1	15-70	120/240
				2	15-125	120/240
				3	15-100	240
			BQH,BLH	1	15-70	120/240
				2	15-125	120/240
				3	15-100	240
			QR2,QRH2	2	100-250	240
				3	100-250	240
		HMD6,HMXD6 (2, 3P)	QPH	1	15-70	120/240
				2	15-125	120/240
			QR2,QRH2	2	100-250	240
		HMD6,HMXD6 (3P)	QPH	3	15-100	240
			QR2,QRH2	3	100-250	240
	1200	NNG,HNG (2, 3P)	QPH,BQH,BLH	1	15-70	120/240
				2	15-125	120/240
			QN,QNH	2	150-200	120/240
			QNR,QNRH	2	150-200	120/240
			QR2,QRH2	2	100-250	240
		NNG,HNG (3P)	QPH,BQH,BLH	3	15-100	240
			QR2,QRH2	3	100-250	240
		ND6,NXD6 (2, 3P)	QPH	1	15-70	120/240
				2	15-125	120/240
			BQH,BLH	1	15-70	120/240
				2	15-125	120/240
			QN,QNH	2	150-200	120/240
			QNR,QNRH	2	150-200	120/240

240V Series Ratings (Continued)

Series Rating	Main Breaker		Branch Breaker			
	Max. Amps	Type	Type	Poles	Amps	Volts
65,000	1200	ND6,NXD6 (2, 3P)	QR2,QRH2	2	100-250	240
		ND6,NXD6 (3P)	QPH	3	15-100	240
			BQH,BLH	3	15-100	240
			QR2,QRH2	3	100-250	240
		SND6 (3P)	QPH	1	15-70	120/240
				2	15-125	120/240
				3	15-100	240
			BQH,BLH	1	15-70	120/240
				2	15-125	120/240
				3	15-100	240
			QR2,QRH2	2	100-250	240
				3	100-250	240
		HND6,HNXD6 (2, 3P)	QPH	1	15-70	120/240
				2	15-125	120/240
			QR2,QRH2	2	100-250	240
		HND6,HNXD6 (3P)	QPH	3	15-100	240
			QR2,QRH2	3	100-250	240
	1600	NPG,HPG (3P)	QPH,BQH,BLH	1	15-70	120/240
				2	15-125	120/240
				3	15-100	240
			QN,QNH	2	150-200	120/240
			QNR,QNRH	2	150-200	120/240
			QR2,QRH2	2	100-250	240
				3	100-250	240
		PD6,PXD6 (3P)	QPH	1	15-70	120/240
				2	15-125	120/240
				3	15-100	240
			BQH,BLH	1	15-70	120/240
				2	15-125	120/240
				3	15-100	240
			QN,QNH	2	150-200	120/240
			QNR,QNRH	2	150-200	120/240
			QR2,QRH2	2	100-250	240
				3	100-250	240
		SPD6 (3P)	QPH	1	15-70	120/240
				2	15-125	120/240
				3	15-100	240
			BQH,BLH	1	15-70	120/240
				2	15-125	120/240
				3	15-100	240
			QR2,QRH2	2	100-250	240
				3	100-250	240
		HPD6,HPXD6 (3P)	QPH	1	15-70	120/240
				2	15-125	120/240
				3	15-100	240
			QR2,QRH2	2	100-250	240
				3	100-250	240
	2000	RD6,RXD6 (3P)	QPH	1	15-70	120/240
				2	15-125	120/240
				3	15-100	240
			BQH,BLH	1	15-70	120/240
				2	15-125	120/240
				3	15-100	240
			QN,QNH	2	150-200	120/240
			QNR,QNRH	2	150-200	120/240
			QR2,QRH2	2	100-250	240
				3	100-250	240
		HRD6,HRXD6 (3P)	QPH	1	15-70	120/240
				2	15-125	120/240
				3	15-100	240
			QR2,QRH2	2	100-250	240
				3	100-250	240
100,000	100	HED4 (1P)	ED2	1	15-100	120

240V Series Ratings (Continued)

Series Rating	Main Breaker		Branch Breaker			
	Max. Amps	Type	Type	Poles	Amps	Volts
100,000	100	HED4 (1P)	ED4	1	15-100	120
	125	NGB,HGB,LGB (2, 3P)	QP,BQ,BL	1	15-70	120
				2	15-125	120/240
			QPH	1	15-70	120
				2	15-125	120/240
			BQH,BLH	1	15-70	120
				2	15-125	120/240
			HQP	1	15-70	120
				2	15-125	120/240
			HBQ,HBL	1	15-70	120
				2	15-125	120/240
			QPF,BLF	2	15-60	120/240
		NGB,HGB,LGB (3P)	QP,BQ,BL	3	15-100	240
			QPH	3	15-100	240
			BQH,BLH	3	15-100	240
			HQP	3	15-100	240
			HBQ,HBL	3	15-100	240
		NGB,HGB,LGB (1, 2, 3P)	QPF,BQF,BLF	1	15-30	120
			QPHF,BQHF	1	15-30	120
			BLHF	1	15-30	120
			QPF2,BLF2	1	15-30	120
			QPHF2,BLHF2	1	15-30	120
			HQPF2,HBLF2	1	15-30	120
			QAF,BQAF,BAF	1	15-20	120
			QAFH,BQAFH	1	15-20	120
			BAFH	1	15-20	120
			QAF2,BAF2	1	15-20	120
			QAFH2,BAFH2	1	15-20	120
			HQAF2,HBAF2	1	15-20	120
			QFGA2,BFGA2	1	15-20	120
			QFGAH2,BFGAH2	1	15-20	120
			HQFGA2,HBFGA2	1	15-20	120
		HED4,HED6 (2, 3P)	QP,BQ,BL	1	15-70	120
				2	15-125	120/240
			QPH	1	15-70	120
				2	15-125	120/240
			BQH,BLH	1	15-70	120
				2	15-125	120/240
			HQP	1	15-70	120
				2	15-125	120/240
			HBQ,HBL	1	15-70	120
				2	15-125	120/240
			QT	1	15-50	120
				1,2	15-50	120/240
			QPF,BQF,BLF	1	15-30	120
			QPF,BLF	2	15-60	120/240
			QE,BE,BLE	1	15-30	120
			QE,BLE	2	15-60	120/240
			QPHF,BQHF	1	15-30	120
				2	15-60	120/240
			BLHF	1	15-30	120
			QEH,BLEH	1	15-30	120
				2	15-60	120/240
			QPF2,BLF2	1	15-30	120
			QPHF2,BLHF2	1	15-30	120
			HQPF2,HBLF2	1	15-30	120
			QAF,BQAF,BAF	1	15-20	120
			QAFH,BQAFH	1	15-20	240
			BAFH	1	15-20	120
			QAF2,BAF2	1	15-20	120
			QAFH2,BAFH2	1	15-20	240
			HQAF2,HBAF2	1	15-20	240

240V Series Ratings (Continued)

Series Rating	Main Breaker		Branch Breaker			
	Max. Amps	Type	Type	Poles	Amps	Volts
100,000	125	HED4,HED6 (2, 3P)	QFGA2,BFGA2	1	15-20	120
			QFGAH2,BFGAH2	1	15-20	120
			HQFGA2,HBFGA2	1	15-20	120
			ED2	1	15-100	120
				2	15-100	240
			ED4	1	15-100	120
			ED4,ED6	2	15-125	240
		HED4,HED6 (3P)	QP,BQ,BL	3	15-100	240
			QPH	3	15-100	240
			BQH,BLH	3	15-100	240
			HQP	3	15-100	240
			HBQ,HBL	3	15-100	240
			ED2	3	15-100	240
			ED4,ED6	3	15-125	240
	150	HDGA (2, 3P)	ED4,ED6	1	15-100	240
				2	15-125	240
			NDGA,NDGB	2	50-150	240
		HDGA (3P)	ED4,ED6	3	15-125	240
			NDGA,NDGB	3	50-150	240
	225	HQPPH (2P)	QP,BQ,BL	1	15-70	120/240
				2	15-125	120/240
			QPH	1	15-70	120/240
				2	15-125	120/240
			BQH,BLH	1	15-70	120/240
				2	15-125	120/240
			HQP	1	15-70	120/240
				2	15-125	120/240
			HBQ,HBL	1	15-70	120/240
				2	15-125	120/240
			QT	1,2	15-50	120/240
			QPF,BQF,BLF	1	15-30	120
			QPF,BLF	2	15-60	120/240
			QE,BE,BLE	1	15-30	120
			QE,BLE	2	15-60	120/240
			QPHF,BQHF	1	15-30	120
			QPHF,BLHF	2	15-60	120/240
			BLHF	1	15-30	120
			QEH,BLEH	1	15-30	120
				2	15-60	120/240
			QPF2,BLF2	1	15-30	120
			QPHF2,BLHF2	1	15-30	120
			HQPF2,HBLF2	1	15-30	120
			QAF,BQAF,BAF	1	15-20	120
			QAFH,BQAFH	1	15-20	120
			BAFH	1	15-20	120
			QAF2,BAF2	1	15-20	120
			QAFH2,BAFH2	1	15-20	120
			HQAF2,HBAF2	1	15-20	120
			QFGA2,BFGA2	1	15-20	120
			QFGAH2,BFGAH2	1	15-20	120
			HQFGA2,HBFGA2	1	15-20	120
			QPP	2	125-225	120/240
			EQ948#	2	125-225	120/240
			QPPH	2	125-225	120/240
			EQ968#	2	125-225	120/240
			HQPP	2	125-225	120/240
			EQ978#	2	125-225	120/240
		EQ988# (2P)	QP,BQ,BL	1	15-70	120/240
				2	15-125	120/240
			QPH	1	15-70	120/240
				2	15-125	120/240
			BQH,BLH	1	15-70	120/240
				2	15-125	120/240

240V Series Ratings (Continued)

Series Rating	Main Breaker		Branch Breaker			
	Max. Amps	Type	Type	Poles	Amps	Volts
100,000	225	EQ988# (2P)	HQP	1	15-70	120/240
				2	15-125	120/240
			HBQ,HBL	1	15-70	120/240
				2	15-125	120/240
			QT	1,2	15-50	120/240
			QPF,BQF,BLF	1	15-30	120
			QPF,BLF	2	15-60	120/240
			QE,BE,BLE	1	15-30	120
			QE,BLE	2	15-60	120/240
			QPHF,BQHF	1	15-30	120
				2	15-60	120/240
			BLHF	1	15-30	120
			QEH,BLEH	1	15-30	120
				2	15-60	120/240
			QPF2,BLF2	1	15-30	120
			QPHF2,BLHF2	1	15-30	120
			HQPF2,HBLF2	1	15-30	120
			QAF,BQAF,BAF	1	15-20	120
			QAFH,BQAFH	1	15-20	120
			BAFH	1	15-20	120
			QAF2,BAF2	1	15-20	120
			QAFH2,BAFH2	1	15-20	120
			HQAF2,HBAF2	1	15-20	120
			QFGA2,BFGA2	1	15-20	120
			QFGAH2,BFGAH2	1	15-20	120
			HQFGA2,HBFGA2	1	15-20	120
			QPP	2	125-225	120/240
			EQ948#	2	125-225	120/240
			QPPH	2	125-225	120/240
			EQ968#	2	125-225	120/240
			HQPP	2	125-225	120/240
			EQ978#	2	125-225	120/240
		HQJ2H (2, 3P)	QP,BQ,BL	1	15-25	120/240
				1	35-70	120/240
				2	15-25	120/240
				2	35-125	120/240
			QPH,BQH,BLH	1	15-70	120/240
				2	15-125	120/240
			HQP,HBQ,HBL	1	15-70	120/240
				2	15-125	120/240
			QT	1	15-50	120/240
				1	15-50	120/240
			QPF,BQF,BLF	1	15-30	120
			QPF,BLF	2	15-60	120/240
			QE,BE,BLE	1	15-30	120
			QE,BLE	2	15-60	120/240
			QPHF,BQHF	1	15-30	120
			QPHF,BLHF	2	15-60	120/240
			BLHF	1	15-30	120
			QEH,BLEH	1	15-30	120
				2	15-60	120/240
			QPF2,BLF2	1	15-30	120
			QPHF2,BLHF2	1	15-30	120
			HQPF2,HBLF2	1	15-30	120
			QAF,BQAF,BAF	1	15-20	120
			QAFH,BQAFH	1	15-20	120
			BAFH	1	15-20	120
			QAF2,BAF2	1	15-20	120
			QAFH2,BAFH2	1	15-20	120
			HQAF2,HBAF2	1	15-20	120
			QFGA2,BFGA2	1	15-20	120
			QFGAH2,BFGAH2	1	15-20	120
			HQFGA2,HBFGA2	1	15-20	120

240V Series Ratings (Continued)

Series Rating	Main Breaker		Branch Breaker			
	Max. Amps	Type	Type	Poles	Amps	Volts
100,000	225	HQJ2H (3P)	QP,BQ,BL	3	15-100	240
			QPH,BQH,BLH	3	15-100	240
			HQP,HBQ,HBL	3	15-100	240
	250	HQR2H (2, 3P)	QP,BQ,BL	1	15-70	120/240
				2	15-125	120/240
				2	15-125	240
			QPH,BQH,BLH	1	15-70	120/240
				2	15-125	120/240
				2	15-125	240
			HQP,HBQ,HBL	1	15-70	120/240
				2	15-125	240
				2	15-125	240
			QT	1,2	15-50	120/240
			QPF,BQF,BLF	1	15-30	120
			QPF,BLF	2	15-60	120/240
			QE,BE,BLE	1	15-30	120
			QE,BLE	2	15-60	120/240
			QPHF,BQHF	1	15-30	120
			QPHF,BLHF	2	15-60	120/240
			BLHF	1	15-30	120
			QEH,BLEH	1	15-30	120
				2	15-60	120/240
			QPF2,BLF2	1	15-30	120
			QPHF2,BLHF2	1	15-30	120
			HQPF2,HBLF2	1	15-30	120
			QAF,BQAF,BAF	1	15-20	120
			QAF,BAF	2	15-20	120/240
			QAFH,BQAFH	1	15-20	120
			QAFH,BAFH	2	15-20	120/240
			BAFH	1	15-20	120
			QAF2,BAF2	1	15-20	120
			QAFH2,BAFH2	1	15-20	120
			HQAF2,HBAF2	1	15-20	120
			QFGA2,BFGA2	1	15-20	120
			QFGAH2,BFGAH2	1	15-20	120
			HQFGA2,HBFGA2	1	15-20	120
			QR2,QRH2,HQR2	2	100-250	240
		HQR2H (3P)	QP,BQ,BL	3	15-100	240
			QPH,BQH,BLH	3	15-100	240
			HQP,HBQ,HBL	3	15-100	240
			QR2,QRH2,HQR2	3	100-250	240
		HFGA (2, 3P)	QR2,QRH2,HQR2	2	100-250	240
			ED4,ED6	1	15-100	240
				2	15-125	240
			NDGA,NDGB	2	50-150	240
			NFGA,NFGB	2	70-250	240
			FD6-A,FXD6-A	2	70-250	240
			FD6,FXD6	2	70-250	240
		HFGA (3P)	QR2,QRH2,HQR2	3	100-250	240
			ED4,ED6	3	15-125	240
			NDGA,NDGB	3	50-150	240
			NFGA,NFGB	3	70-250	240
			FD6-A,FXD6-A	3	70-250	240
			FD6,FXD6	3	70-250	240
		HFGB (2, 3P)	QR2,QRH2,HQR2	2	100-250	240
			ED4,ED6	1	15-100	240
				2	15-125	240
			NDGA,NDGB	2	50-150	240
			NFGA,NFGB	2	70-250	240
			FD6-A,FXD6-A	2	70-250	240
			FD6,FXD6	2	70-250	240
		HFGB (3P)	QR2,QRH2,HQR2	3	100-250	240
			ED4,ED6	3	15-125	240

240V Series Ratings (Continued)

Series Rating	Main Breaker		Branch Breaker			
	Max. Amps	Type	Type	Poles	Amps	Volts
100,000	250	HFGB (3P)	NDGA,NDGB	3	50-150	240
			NFGA,NFGB	3	70-250	240
			FD6-A,FXD6-A	3	70-250	240
			FD6,FXD6	3	70-250	240
		HFD6,HFXD6 (2, 3P)	QP,BQ,BL	1	15-70	120/240
				2	15-125	120/240
			QPH	1	15-70	120/240
				2	15-125	120/240
			BQH,BLH	1	15-70	120/240
				2	15-125	120/240
			HQP	1	15-70	120/240
				2	15-125	120/240
			HBQ,HBL	1	15-70	120/240
				2	15-125	120/240
			QT	1,2	15-50	120/240
			QPF,BQF,BLF	1	15-30	120
			QPF,BLF	2	15-60	120/240
			QE,BE,BLE	1	15-30	120
			QE,BLE	2	15-60	120/240
			QPHF,BQHF	1	15-30	120
			QPHF,BLHF	2	15-60	120/240
			BLHF	1	15-30	120
			QEH,BLEH	1	15-30	120
			QEH,BLEH	2	15-60	120/240
			QPF2,BLF2	1	15-30	120
			QPHF2,BLHF2	1	15-30	120
			HQPF2,HBLF2	1	15-30	120
			QAF,BQAF,BAF	1	15-20	120
			QAFH,BQAFH	1	15-20	120
			BAFH	1	15-20	120
			QAF2,BAF2	1	15-20	120
			QAFH2,BAFH2	1	15-20	120
			HQAF2,HBAF2	1	15-20	120
			QFGA2,BFGA2	1	15-20	120
			QFGAH2,BFGAH2	1	15-20	120
			HQFGA2,HBFGA2	1	15-20	120
			QPP	2	125-225	120/240
			QPPH	2	125-225	120/240
			HQPP	2	125-225	120/240
			QJ2	2	60-225	240
			QJH2	2	60-225	240
			QJ2H	2	60-225	240
			QR2,QRH2,HQR2	2	100-250	240
			ED4	1	15-100	120
			ED4,ED6	2	15-125	240
			NDGA,NDGB	2	50-150	240
			NFGA,NFGB	2	70-250	240
			FD6-A,FXD6-A	2	70-250	240
			FD6,FXD6	2	70-250	240
		HFD6,HFXD6 (3P)	QP,BQ,BL	3	15-100	240
			QPH	3	15-100	240
			BQH,BLH	3	15-100	240
			HQP	3	15-100	240
			HBQ,HBL	3	15-100	240
			QJ2	3	60-225	240
			QJH2	3	60-225	240
			QJ2H	3	60-225	240
			QR2,QRH2,HQR2	3	100-250	240
			ED4,ED6	3	15-125	240
			NDGA,NDGB	3	50-150	240
			NFGA,NFGB	3	70-250	240
			FD6-A,FXD6-A	3	70-250	240
			FD6,FXD6	3	70-250	240

240V Series Ratings (Continued)

Series Rating	Main Breaker		Branch Breaker			
	Max. Amps	Type	Type	Poles	Amps	Volts
100,000	400	HJGA (2, 3P)	QR2,QRH2,HQR2	2	100-250	240
			ED4,ED6	1	15-100	240
				2	15-125	240
			NDGA,NDGB	2	50-150	240
			NFGA,NFGB	2	70-250	240
			FD6-A,FXD6-A	2	70-250	240
			FD6,FXD6	2	70-250	240
			NJGA,NJJA	2	200-400	240
			JD6-A,JXD6-A	2	200-400	240
			JD6,JXD6	2	200-400	240
		HJGA (3P)	QR2,QRH2,HQR2	3	100-250	240
			ED4,ED6	3	15-125	240
			NDGA,NDGB	3	50-150	240
			NFGA,NFGB	3	70-250	240
			FD6-A,FXD6-A	3	70-250	240
			FD6,FXD6	3	70-250	240
			NJGA,NJJA	3	200-400	240
			JD6-A,JXD6-A	3	200-400	240
			JD6,JXD6	3	200-400	240
		HJD6-A (2, 3P)	QR2,QRH2,HQR2	2	100-250	240
			ED4	1	15-100	120
			ED4,ED6	2	15-125	240
			NDGA,NDGB	2	50-150	240
			NFGA,NFGB	2	70-250	240
			FD6-A,FXD6-A	2	70-250	240
			FD6,FXD6	2	70-250	240
			NJGA,NJJA	2	200-400	240
			JXD2-A	2	200-400	240
			JD6-A,JXD6-A	2	200-400	240
		HJD6-A (3P)	QR2,QRH2,HQR2	3	100-250	240
			ED4,ED6	3	15-125	240
			NDGA,NDGB	3	50-150	240
			NFGA,NFGB	3	70-250	240
			FD6-A,FXD6-A	3	70-250	240
			FD6,FXD6	3	70-250	240
			NJGA,NJJA	3	200-400	240
			JXD2-A	3	200-400	240
			JD6-A,JXD6-A	3	200-400	240
			SJD6-A	3	200-400	240
		HJXD6-A (2, 3P)	QR2,QRH2,HQR2	2	100-250	240
			ED4	1	15-100	120
			ED4,ED6	2	15-125	240
			NDGA,NDGB	2	50-150	240
			NFGA,NFGB	2	70-250	240
			FD6-A,FXD6-A	2	70-250	240
			FD6,FXD6	2	70-250	240
			NJGA,NJJA	2	200-400	240
			JXD2-A	2	200-400	240
			JD6-A,JXD6-A	2	200-400	240
		HJXD6-A (3P)	QR2,QRH2,HQR2	3	100-250	240
			ED4,ED6	3	15-125	240
			NDGA,NDGB	3	50-150	240
			NFGA,NFGB	3	70-250	240
			FD6-A,FXD6-A	3	70-250	240
			FD6,FXD6	3	70-250	240
			NJGA,NJJA	3	200-400	240
			JXD2-A	3	200-400	240
			JD6-A,JXD6-A	3	200-400	240
			SJD6-A	3	200-400	240
		HJD6,HJXD6 (2, 3P)	ED4	1	15-100	120
			ED4,ED6	2	15-125	240
			NDGA,NDGB	2	50-150	240
			NFGA,NFGB	2	70-250	240

240V Series Ratings (Continued)

Series Rating	Main Breaker		Branch Breaker			
	Max. Amps	Type	Type	Poles	Amps	Volts
100,000	400	HJD6,HJXD6 (2, 3P)	FD6-A,FXD6-A	2	70-250	240
			FD6,FXD6	2	70-250	240
			NJGA,NJJA	2	200-400	240
			JXD2	2	200-400	240
			JD6,JXD6	2	200-400	240
		HJD6,HJXD6 (3P)	ED4,ED6	3	15-125	240
			NDGA,NDGB	3	50-150	240
			NFGA,NFGB	3	70-250	240
			FD6-A,FXD6-A	3	70-250	240
			FD6,FXD6	3	70-250	240
			NJGA,NJJA	3	200-400	240
			JXD2	3	200-400	240
			JD6,JXD6	3	200-400	240
			SJD6	3	200-400	240
		SHJD6-A (3P)	QR2,QRH2,HQR2	2	100-250	240
				3	100-250	240
			ED4	1	15-100	120
			ED4,ED6	2	15-125	240
				3	15-125	240
			NDGA,NDGB	2	50-150	240
				3	50-150	240
			NFGA,NFGB	2	70-250	240
				3	70-250	240
			FD6-A,FXD6-A	2	70-250	240
				3	70-250	240
			FD6,FXD6	2	70-250	240
				3	70-250	240
			NJGA,NJJA	2	200-400	240
				3	200-400	240
			JXD2-A	2	200-400	240
				3	200-400	240
			JD6-A,JXD6-A	2	200-400	240
				3	200-400	240
			SJD6-A	3	200-400	240
		SHJD6 (3P)	ED4	1	15-100	120
			ED4,ED6	2	15-125	240
				3	15-125	240
			NDGA,NDGB	2	50-150	240
				3	50-150	240
			NFGA,NFGB	2	70-250	240
				3	70-250	240
			FD6-A,FXD6-A	2	70-250	240
				3	70-250	240
			FD6,FXD6	2	70-250	240
				3	70-250	240
			NJGA,NJJA	2	200-400	240
				3	200-400	240
			JXD2	2	200-400	240
				3	200-400	240
			JD6,JXD6	2	200-400	240
				3	200-400	240
			SJD6	3	200-400	240
	600	HLGA (2, 3P)	QR2,QRH2,HQR2	2	100-250	240
			ED4,ED6	1	15-100	240
				2	15-125	240
			NDGA,NDGB	2	50-150	240
			NFGA,NFGB	2	70-250	240
			FD6-A,FXD6-A	2	70-250	240
			FD6,FXD6	2	70-250	240
			NJGA,NJJA	2	200-400	240
				2	200-400	240
			JD6-A,JXD6-A	2	200-400	240
			JD6,JXD6	2	200-400	240

240V Series Ratings (Continued)

Series Rating	Main Breaker		Branch Breaker			
	Max. Amps	Type	Type	Poles	Amps	Volts
100,000	600	HLGA (2, 3P)	NLGA,NLGB	2	400-600	240
			LD6,LD6-A	2	200-600	240
			LXD6-A,LXD6	2	450-600	240
		HLGA (3P)	QR2,QRH2,HQR2	3	100-250	240
			ED4,ED6	3	15-125	240
			NDGA,NDGB	3	50-150	240
			NFGA,NFGB	3	70-250	240
			FD6-A,FXD6-A	3	70-250	240
			FD6,FXD6	3	70-250	240
			NJGA,NJJA	3	200-400	240
				3	200-400	240
			JD6-A,JXD6-A	3	200-400	240
			JD6,JXD6	3	200-400	240
			NLGA,NLGB	3	400-600	240
			LD6,LD6-A	3	200-600	240
			LXD6-A,LXD6	3	450-600	240
		HLGB (2, 3P)	QR2,QRH2,HQR2	2	100-250	240
			ED4,ED6	1	15-100	240
			ED4,ED6	2	15-125	240
			NDGA,NDGB	2	50-150	240
			NFGA,NFGB	2	70-250	240
			FD6-A,FXD6-A	2	70-250	240
			FD6,FXD6	2	70-250	240
			NJGA,NJJA	2	200-400	240
				2	200-400	240
			JD6-A,JXD6-A	2	200-400	240
			JD6,JXD6	2	200-400	240
			NLGA,NLGB	2	400-600	240
			LD6,LD6-A	2	200-600	240
			LXD6-A,LXD6	2	450-600	240
		HLGB (3P)	QR2,QRH2,HQR2	3	100-250	240
			ED4,ED6	3	15-125	240
			NDGA,NDGB	3	50-150	240
			NFGA,NFGB	3	70-250	240
			FD6-A,FXD6-A	3	70-250	240
			FD6,FXD6	3	70-250	240
			NJGA,NJJA	3	200-400	240
				3	200-400	240
			JD6-A,JXD6-A	3	200-400	240
			JD6,JXD6	3	200-400	240
			NLGA,NLGB	3	400-600	240
			LD6,LD6-A	3	200-600	240
			LXD6-A,LXD6	3	450-600	240
		HLD6-A (2, 3P)	QR2,QRH2,HQR2	2	100-250	240
			ED4	1	15-100	120
			ED4,ED6	2	15-125	240
			NDGA,NDGB	2	50-150	240
			NFGA,NFGB	2	70-250	240
			FD6-A,FXD6-A	2	70-250	240
			FD6,FXD6	2	70-250	240
			NJGA,NJJA	2	200-400	240
			JXD2	2	200-400	240
			JD6-A,JXD6-A	2	200-400	240
			NLGA,NLGB	2	400-600	240
			LD6-A	2	200-600	240
			LXD6-A	2	450-600	240
		HLD6-A (3P)	ED4,ED6	3	15-125	240
			NDGA,NDGB	3	50-150	240
			NFGA,NFGB	3	70-250	240
			FD6-A,FXD6-A	3	70-250	240
			FD6,FXD6	3	70-250	240
			NJGA,NJJA	3	200-400	240
			JXD2-A	3	200-400	240

240V Series Ratings (Continued)

Series Rating	Main Breaker		Branch Breaker			
	Max. Amps	Type	Type	Poles	Amps	Volts
100,000	600	HLD6-A (3P)	JD6-A,JXD6-A	3	200-400	240
			SJD6-A	3	200-400	240
			NLGA,NLGB	3	400-600	240
			LD6-A	3	200-600	240
			LXD6-A	3	450-600	240
			SLD6-A	3	300-600	240
		HLD6 (2, 3P)	ED4	1	15-100	120
			ED4,ED6	2	15-125	240
			NDGA,NDGB	2	50-150	240
			NFGA,NFGB	2	70-250	240
			FD6-A,FXD6-A	2	70-250	240
			FD6,FXD6	2	70-250	240
			NJGA,NJJA	2	200-400	240
			JXD2	2	200-400	240
			JD6,JXD6	2	200-400	240
			NLGA,NLGB	2	400-600	240
			LD6	2	200-600	240
			LXD6	2	450-600	240
		HLD6 (3P)	ED4,ED6	3	15-125	240
			NDGA,NDGB	3	50-150	240
			NFGA,NFGB	3	70-250	240
			FD6-A,FXD6-A	3	70-250	240
			FD6,FXD6	3	70-250	240
			NJGA,NJJA	3	200-400	240
			JXD2	3	200-400	240
			JD6,JXD6	3	200-400	240
			SJD6	3	200-400	240
			NLGA,NLGB	3	400-600	240
			LD6	3	200-600	240
			LXD6	3	450-600	240
			SLD6	3	300-600	240
		HLXD6-A (2, 3P)	QR2,QRH2,HQR2	2	100-250	240
			ED4	1	15-100	120
			ED4,ED6	2	15-125	240
			NDGA,NDGB	2	50-150	240
			NFGA,NFGB	2	70-250	240
			FD6-A,FXD6-A	2	70-250	240
			FD6,FXD6	2	70-250	240
			NJGA,NJJA	2	200-400	240
			JXD2-A	2	200-400	240
			JD6-A,JXD6-A	2	200-400	240
			NLGA,NLGB	2	400-600	240
			LD6-A	2	200-600	240
			LXD6-A	2	450-600	240
		HLXD6-A (3P)	QR2,QRH2,HQR2	3	100-250	240
			ED4,ED6	3	15-125	240
			NDGA,NDGB	3	50-150	240
			NFGA,NFGB	3	70-250	240
			FD6-A,FXD6-A	3	70-250	240
			FD6,FXD6	3	70-250	240
			NJGA,NJJA	3	200-400	240
			JXD2-A	3	200-400	240
			JD6-A,JXD6-A	3	200-400	240
			SJD6-A	3	200-400	240
			NLGA,NLGB	3	400-600	240
			LD6-A	3	200-600	240
			LXD6-A	3	450-600	240
		HLXD6 (2, 3P)	ED4	1	15-100	120
			ED4,ED6	2	15-125	240
			NDGA,NDGB	2	50-150	240
			NFGA,NFGB	2	70-250	240
			FD6-A,FXD6-A	2	70-250	240
			FD6,FXD6	2	70-250	240

240V Series Ratings (Continued)

Series Rating	Main Breaker		Branch Breaker			
	Max. Amps	Type	Type	Poles	Amps	Volts
100,000	600	HLXD6 (2, 3P)	NJGA,NJJA	2	200-400	240
			JXD2	2	200-400	240
			JD6,JXD6	2	200-400	240
			NLGA,NLGB	2	400-600	240
			LD6	2	200-600	240
			LXD6	2	450-600	240
		HLXD6 (3P)	ED4,ED6	3	15-125	240
			NDGA,NDGB	3	50-150	240
			NFGA,NFGB	3	70-250	240
			FD6-A,FXD6-A	3	70-250	240
			FD6,FXD6	3	70-250	240
			NJGA,NJJA	3	200-400	240
			JXD2	3	200-400	240
			JD6,JXD6	3	200-400	240
			SJD6	3	200-400	240
			NLGA,NLGB	3	400-600	240
			LD6	3	200-600	240
			LXD6	3	450-600	240
			SLD6	3	300-600	240
		SHLD6-A (3P)	QR2,QRH2,HQR2	2	100-250	240
				3	100-250	240
			ED4	1	15-100	120
			ED4,ED6	2	15-125	240
				3	15-125	240
			NDGA,NDGB	2	50-150	240
				3	50-150	240
			NFGA,NFGB	2	70-250	240
				3	70-250	240
			FD6-A,FXD6-A	2	70-250	240
				3	70-250	240
			FD6,FXD6	2	70-250	240
				3	70-250	240
			NJGA,NJJA	2	200-400	240
				3	200-400	240
			JXD2-A	2	200-400	240
				3	200-400	240
			JD6-A,JXD6-A	2	200-400	240
				3	200-400	240
			SJD6-A	3	200-400	240
			NLGA,NLGB	2	400-600	240
				3	400-600	240
			LD6-A	2	200-600	240
				3	200-600	240
				2	450-600	240
				3	450-600	240
			SLD6-A	3	300-600	240
		SHLD6 (3P)	ED4	1	15-100	120
			ED4,ED6	2	15-125	240
				3	15-125	240
			NDGA,NDGB	2	50-150	240
				3	50-150	240
			NFGA,NFGB	2	70-250	240
				3	70-250	240
			FD6,FXD6	2	70-250	240
				3	70-250	240
			NJGA,NJJA	2	200-400	240
				3	200-400	240
			JXD2	2	200-400	240
				3	200-400	240
			JD6,JXD6	2	200-400	240
				3	200-400	240
			SJD6	3	200-400	240

240V Series Ratings (Continued)

Series Rating	Main Breaker		Branch Breaker			
	Max. Amps	Type	Type	Poles	Amps	Volts
100,000	600	SHLD6 (3P)	NLGA,NLGB	2	400-600	240
				3	400-600	240
			LD6	2	200-600	240
				3	200-600	240
			LXD6	2	450-600	240
				3	450-600	240
			SLD6	3	300-600	240
	800	HMG (2, 3P)	QR2,QRH2,HQR2	2	100-250	240
			ED4,ED6	1	15-100	240
				2	15-125	240
			NDGA,NDGB	2	50-150	240
			NFGA,NFGB	2	70-250	240
			FD6-A,FXD6-A	2	70-250	240
			FD6,FXD6	2	70-250	240
			NJGA,NJJA	2	200-400	240
			JD6-A,JXD6-A	2	200-400	240
			JD6,JXD6	2	200-400	240
			NLGA,NLGB	2	400-600	240
			LD6,LD6-A	2	200-600	240
			LXD6-A,LXD6	2	450-600	240
			LMD6,LMXD6	2	600-800	240
			NMG	2	600-800	240
			MD6,MXD6	2	400-800	240
		HMG (3P)	QR2,QRH2,HQR2	3	100-250	240
			ED4,ED6	3	15-125	240
			NDGA,NDGB	3	50-150	240
			NFGA,NFGB	3	70-250	240
			FD6-A,FXD6-A	3	70-250	240
			FD6,FXD6	3	70-250	240
			NJGA,NJJA	3	200-400	240
			JD6-A,JXD6-A	3	200-400	240
			JD6,JXD6	3	200-400	240
			NLGA,NLGB	3	400-600	240
			LD6,LD6-A	3	200-600	240
			LXD6-A,LXD6	3	450-600	240
			LMD6,LMXD6	3	600-800	240
			NMG	3	600-800	240
			MD6,MXD6	3	400-800	240
		HMD6,HMXD6 (2, 3P)	QR2,QRH2,HQR2	2	100-250	240
			ED4	1	15-100	120
			ED4,ED6	2	15-125	240
			NDGA,NDGB	2	50-150	240
			NFGA,NFGB	2	70-250	240
			FD6-A,FXD6-A	2	70-250	240
			FD6,FXD6	2	70-250	240
			NJGA,NJJA	2	200-400	240
			JXD2-A	2	200-400	240
			JXD2	2	200-400	240
			JD6-A,JXD6-A	2	200-400	240
			JD6,JXD6	2	200-400	240
			NLGA,NLGB	2	400-600	240
			LD6-A	2	200-600	240
			LD6	2	200-600	240
			LXD6-A	2	450-600	240
			LXD6	2	450-600	240
			NMG	2	500-800	240
			MD6,MXD6	2	500-800	240
		HMD6,HMXD6 (3P)	QR2,QRH2,HQR2	3	100-250	240
			ED4,ED6	3	15-125	240
			NDGA,NDGB	3	50-150	240
			NFGA,NFGB	3	70-250	240
			FD6-A,FXD6-A	3	70-250	240
			FD6,FXD6	3	70-250	240

240V Series Ratings (Continued)

Series Rating	Main Breaker		Branch Breaker			
	Max. Amps	Type	Type	Poles	Amps	Volts
100,000	800	HMD6,HMXD6 (3P)	NJGA,NJJA	3	200-400	240
			JXD2-A	3	200-400	240
			JXD2	3	200-400	240
			JD6-A,JXD6-A	3	200-400	240
			JD6,JXD6	3	200-400	240
			SJD6-A	3	200-400	240
			SJD6	3	200-400	240
			NLGA,NLGB	3	400-600	240
			LD6-A	3	200-600	240
			LD6	3	200-600	240
			LXD6-A	3	450-600	240
			LXD6	3	450-600	240
			SLD6-A	3	300-600	240
			SLD6	3	300-600	240
			NMG	3	500-800	240
			MD6,MXD6	3	500-800	240
			SMD6	3	500-800	240
		SHMD6 (3P)	QR2,QRH2,HQR2	2	100-250	240
				3	100-250	240
			ED4	1	15-100	120
			ED4,ED6	2	15-125	240
				3	15-125	240
			NDGA,NDGB	2	50-150	240
				3	50-150	240
			NFGA,NFGB	2	70-250	240
				3	70-250	240
			FD6-A,FXD6-A	2	70-250	240
				3	70-250	240
			FD6,FXD6	2	70-250	240
				3	70-250	240
			NJGA,NJJA	2	200-400	240
				3	200-400	240
			JXD2-A	2	200-400	240
				3	200-400	240
			JXD2	2	200-400	240
				3	200-400	240
			JD6-A,JXD6-A	2	200-400	240
				3	200-400	240
			JD6,JXD6	2	200-400	240
				3	200-400	240
			SJD6-A	3	200-400	240
			SJD6	3	200-400	240
			NLGA,NLGB	2	400-600	240
				3	400-600	240
			LD6-A	2	200-600	240
				3	200-600	240
			LD6	2	200-600	240
				3	200-600	240
			LXD6-A	2	450-600	240
				3	450-600	240
			LXD6	2	450-600	240
				3	450-600	240
			SLD6-A	3	300-600	240
			SLD6	3	300-600	240
			NMG	2	500-800	240
			NMG	3	500-800	240
			MD6,MXD6	2	500-800	240
			MD6,MXD6	3	500-800	240
			SMD6	2	500-800	240
			SMD6	3	500-800	240
	1200	HNG (2, 3P)	QR2,QRH2,HQR2	2	100-250	240
			ED4,ED6	1	15-100	240
				2	15-125	240

240V Series Ratings (Continued)

Series Rating	Main Breaker		Branch Breaker			
	Max. Amps	Type	Type	Poles	Amps	Volts
100,000	1200	HNG (2, 3P)	NDGA,NDGB	2	50-150	240
			NFGA,NFGB	2	70-250	240
			FD6-A,FXD6-A	2	70-250	240
			FD6,FXD6	2	70-250	240
			NJGA,NJJA	2	200-400	240
			JD6-A,JXD6-A	2	200-400	240
			JD6,JXD6	2	200-400	240
			NLGA,NLGB	2	400-600	240
			LD6,LD6-A	2	200-600	240
			LXD6-A,LXD6	2	450-600	240
			LMD6,LMXD6	2	600-800	240
			NMG	2	600-800	240
			NNG	2	800-1200	240
			ND6,NXD6	2	600-1200	240
		HNG (3P)	QR2,QRH2,HQR2	3	100-250	240
			ED4,ED6	3	15-125	240
			NDGA,NDGB	3	50-150	240
			NFGA,NFGB	3	70-250	240
			FD6-A,FXD6-A	3	70-250	240
			FD6,FXD6	3	70-250	240
			NJGA,NJJA	3	200-400	240
			JD6-A,JXD6-A	3	200-400	240
			JD6,JXD6	3	200-400	240
			NLGA,NLGB	3	400-600	240
			LD6,LD6-A	3	200-600	240
			LXD6-A,LXD6	3	450-600	240
			LMD6,LMXD6	3	600-800	240
			NMG	3	600-800	240
			NNG	3	800-1200	240
			ND6,NXD6	3	600-1200	240
		HND6,HNXD6 (2, 3P)	QR2,QRH2,HQR2	2	100-250	240
			NDGA,NDGB	2	50-150	240
			NFGA,NFGB	2	70-250	240
			FD6-A,FXD6-A	2	70-250	240
			FD6,FXD6	2	70-250	240
			NJGA,NJJA	2	200-400	240
			JXD2-A	2	200-400	240
			JXD2	2	200-400	240
			JD6-A,JXD6-A	2	200-400	240
			JD6,JXD6	2	200-400	240
			NLGA,NLGB	2	400-600	240
			LD6-A	2	200-600	240
			LD6	2	200-600	240
			LXD6-A	2	450-600	240
			LXD6	2	450-600	240
			NMG	2	500-800	240
			MD6,MXD6	2	500-800	240
			NNG	2	800-1200	240
			ND6,NXD6	2	500-1200	240
		HND6,HNXD6 (3P)	QR2,QRH2,HQR2	3	100-250	240
			NDGA,NDGB	3	50-150	240
			NFGA,NFGB	3	70-250	240
			FD6-A,FXD6-A	3	70-250	240
			FD6,FXD6	3	70-250	240
			NJGA,NJJA	3	200-400	240
			JXD2-A	3	200-400	240
			JXD2	3	200-400	240
			JD6-A,JXD6-A	3	200-400	240
	1200	HND6,HNXD6 (3P)	JD6,JXD6	3	200-400	240
			SJD6-A	3	200-400	240
			SJD6	3	200-400	240
			NLGA,NLGB	3	400-600	240

240V Series Ratings (Continued)

Series Rating	Main Breaker		Branch Breaker			
	Max. Amps	Type	Type	Poles	Amps	Volts
100,000	1200	HND6,HNXD6 (3P)	LD6-A	3	200-600	240
			LD6	3	200-600	240
			LXD6-A	3	450-600	240
			LXD6	3	450-600	240
			SLD6-A	3	300-600	240
			SLD6	3	300-600	240
			NMG	3	500-800	240
			MD6,MXD6	3	500-800	240
			SMD6	3	500-800	240
			NNG	3	800-1200	240
			ND6,NXD6	3	500-1200	240
			SND6	3	500-1200	240
		SHND6 (3P)	QR2,QRH2,HQR2	2	100-250	240
				3	100-250	240
			ED4	1	15-100	240
			ED4,ED6	2	15-125	240
				3	15-125	240
			NDGA,NDGB	2	50-150	240
				3	50-150	240
			NFGA,NFGB	2	70-250	240
				3	70-250	240
			FD6-A,FXD6-A	2	70-250	240
				3	70-250	240
			FD6,FXD6	2	70-250	240
				3	70-250	240
			NJGA,NJJA	2	200-400	240
				3	200-400	240
			JXD2-A	2	200-400	240
				3	200-400	240
			JXD2	2	200-400	240
				3	200-400	240
			JD6-A,JXD6-A	2	200-400	240
				3	200-400	240
			JD6,JXD6	2	200-400	240
				3	200-400	240
			SJD6-A	3	200-400	240
			SJD6	3	200-400	240
			NLGA,NLGB	2	400-600	240
				3	400-600	240
			LD6-A	2	200-600	240
				3	200-600	240
			LD6	2	200-600	240
				3	200-600	240
			LXD6-A	2	450-600	240
				3	450-600	240
			LXD6	2	450-600	240
				3	450-600	240
			SLD6-A	3	300-600	240
			SLD6	3	200-600	240
			NMG	2	500-800	240
				3	500-800	240
			MD6,MXD6	2	500-800	240
				3	500-800	240
			SMD6	3	500-800	240
			NNG	2	800-1200	240
				3	800-1200	240
			ND6,NXD6	2	500-1200	240
				3	500-1200	240
			SND6	3	500-1200	240
	1600	HPG (3P)	QR2,QRH2,HQR2	2	100-250	240
				3	100-250	240
			ED4,ED6	1	15-100	240
				2	15-125	240
				3	15-125	240

240V Series Ratings (Continued)

Series Rating	Main Breaker		Branch Breaker			
	Max. Amps	Type	Type	Poles	Amps	Volts
100,000	1600	HPG (3P)	NDGA,NDGB	2	50-150	240
				3	50-150	240
			NFGA,NFGB	2	70-250	240
				3	70-250	240
			FD6-A,FXD6-A	2	70-250	240
				3	70-250	240
			FD6,FXD6	2	70-250	240
				3	70-250	240
			NJGA,NJJA	2	200-400	240
				3	200-400	240
			JD6-A,JXD6-A	2	200-400	240
				3	200-400	240
			JD6,JXD6	2	200-400	240
				3	200-400	240
			NLGA,NLGB	2	400-600	240
				3	400-600	240
			LD6,LD6-A	2	200-600	240
				3	200-600	240
			LXD6-A,LXD6	2	450-600	240
				3	450-600	240
			LMD6,LMXD6	2	600-800	240
				3	600-800	240
			NMG	2	600-800	240
				3	600-800	240
			MD6,MXD6	2	400-800	240
				3	400-800	240
			NNG	2	800-1200	240
				3	800-1200	240
			ND6,NXD6	2	600-1200	240
				3	600-1200	240
			NPG	2	1200-1600	240
				3	1200-1600	240
			PD6,PXD6	2	1200-1600	240
				3	1200-1600	240
		HPD6,HPXD6 (3P)	QR2,QRH2,HQR2	2	100-250	240
				3	100-250	240
			ED4	1	15-100	120
			ED4,ED6	2	15-125	240
				3	15-125	240
			NDGA,NDGB	2	50-150	240
				3	50-150	240
			NFGA,NFGB	2	70-250	240
				3	70-250	240
			FXD6-A,FD6-A	2	70-250	240
				3	70-250	240
			FXD6,FD6	2	70-250	240
				3	70-250	240
			NJGA,NJJA	2	200-400	240
				3	200-400	240
			JXD2-A	2	200-400	240
				3	200-400	240
			JXD2	2	200-400	240
				3	200-400	240
			JXD6-A,JD6-A	2	200-400	240
				3	200-400	240
			JXD6,JD6	2	200-400	240
				3	200-400	240
			SJD6-A	3	200-400	240
			SJD6	3	200-400	240
			NLGA,NLGB	2	400-600	240
				3	400-600	240
			LD6-A	2	200-600	240
				3	200-600	240

240V Series Ratings (Continued)

Series Rating	Main Breaker		Branch Breaker			
	Max. Amps	Type	Type	Poles	Amps	Volts
100,000	1600	HPD6,HPXD6 (3P)	LD6	2	200-600	240
				3	200-600	240
			LXD6-A	2	450-600	240
				3	450-600	240
			LXD6	2	450-600	240
				3	450-600	240
			SLD6-A	3	300-600	240
			SLD6	3	300-600	240
			NMG	2	600-800	240
				3	600-800	240
			MD6,MXD6	2	500-800	240
				3	500-800	240
			SMD6	3	500-800	240
			NNG	2	800-1200	240
				3	800-1200	240
			ND6,NXD6	2	500-1200	240
				3	500-1200	240
			SND6	3	500-1200	240
			NPG	2	1200-1600	240
				3	1200-1600	240
			PD6,PXD6	2	1200-1600	240
				3	1200-1600	240
			SPD6	3	1400-1600	240
		SHPD6 (3P)	QR2,QRH2,HQR2	2	100-250	240
				3	100-250	240
			ED4	1	15-100	120
			ED4,ED6	2	15-125	240
				3	15-125	240
			NDGA,NDGB	2	50-150	240
				3	50-150	240
			NFGA,NFGB	2	70-250	240
				3	70-250	240
			FXD6-A,FD6-A	2	70-250	240
				3	70-250	240
			FXD6,FD6	2	70-250	240
				3	70-250	240
			NJGA,NJJA	2	200-400	240
				3	200-400	240
			JXD2-A	2	200-400	240
				3	200-400	240
			JXD2	2	200-400	240
				3	200-400	240
			JXD6-A,JD6-A	2	200-400	240
				3	200-400	240
			JXD6,JD6	2	200-400	240
				3	200-400	240
			SJD6-A	3	200-400	240
			SJD6	3	200-400	240
			NLGA,NLGB	2	400-600	240
				3	400-600	240
			LD6-A	2	200-600	240
				3	200-600	240
			LD6	2	200-600	240
				3	200-600	240
			LXD6-A	2	450-600	240
				3	450-600	240
			LXD6	2	450-600	240
				3	450-600	240
			SLD6-A	3	300-600	240
			SLD6	3	300-600	240
			NMG	2	600-800	240
				3	600-800	240
			MD6,MXD6	2	500-800	240
				3	500-800	240

240V Series Ratings (Continued)

Series Rating	Main Breaker		Branch Breaker			
	Max. Amps	Type	Type	Poles	Amps	Volts
100,000	1600	SHPD6 (3P)	SMD6	3	500-800	240
			NNG	2	800-1200	240
				3	800-1200	240
			ND6,NXD6	2	500-1200	240
				3	500-1200	240
			SND6	3	500-1200	240
			NPG	2	1200-1600	240
				3	1200-1600	240
			PD6,PXD6	2	1200-1600	240
				3	1200-1600	240
			SPD6	3	1400-1600	240
	2000	HRD6,HRXD6 (3P)	QR2,QRH2,HQR2	2	100-250	240
				3	100-250	240
			ED4	1	15-100	120
			ED4,ED6	2	15-125	240
				3	15-125	240
			NDGA,NDGB	2	50-150	240
				3	50-150	240
			NFGA,NFGB	2	70-250	240
				3	70-250	240
			FXD6-A,FD6-A	2	70-250	240
				3	70-250	240
			FXD6,FD6	2	70-250	240
				3	70-250	240
			NJGA,NJJA	2	200-400	240
				3	200-400	240
			JXD2-A	2	200-400	240
				3	200-400	240
			JXD2	2	200-400	240
				3	200-400	240
			JXD6-A,JD6-A	2	200-400	240
				3	200-400	240
			JXD6,JD6	2	200-400	240
				3	200-400	240
			SJD6-A	3	200-400	240
			SJD6	3	200-400	240
			NLGA,NLGB	2	400-600	240
				3	400-600	240
			LD6-A	2	200-600	240
				3	200-600	240
			LD6	2	200-600	240
				3	200-600	240
			LXD6-A	2	450-600	240
				3	450-600	240
			LXD6	2	450-600	240
				3	450-600	240
			SLD6-A	3	300-600	240
			SLD6	3	300-600	240
			NMG	2	600-800	240
				3	600-800	240
			MD6,MXD6	2	500-800	240
				3	500-800	240
			SMD6	3	500-800	240
			NNG	2	800-1200	240
				3	800-1200	240
			ND6,NXD6	2	500-1200	240
				3	500-1200	240
			SND6	3	500-1200	240
			NPG	2	1200-1600	240
				3	1200-1600	240
			PD6,PXD6	2	1200-1600	240
				3	1200-1600	240
			SPD6	3	1400-1600	240
			RD6,RXD6	2	1600-2000	240
				3	1600-2000	240

240V Series Ratings (Continued)

Series Rating	Main Breaker		Branch Breaker			
	Max. Amps	Type	Type	Poles	Amps	Volts
200,000	125	CED6 (2, 3P)	QP,BQ,BL	1	15-70	120/240
				2	15-125	120/240
				2	15-125	240
			QPH	1	15-70	120/240
				2	15-125	120/240
			BQH,BLH	1	15-70	120/240
				2	15-125	120/240
			HQP	1	15-70	120/240
				2	15-125	120/240
			HBQ,HBL	1	15-70	120/240
				2	15-125	120/240
			QT	1	15-50	120/240
			QT	1,2	15-50	120/240
			QPF,BQF,BLF	1	15-30	120
			QPF,BLF	2	15-60	120/240
			QE,BE,BLE	1	15-30	120
			QE,BLE	2	15-60	120/240
			QPHF,BQHF	1	15-30	120
			QPHF,BLHF	2	15-60	120/240
			BLHF	1	15-30	120
			QEH,BLEH	1	15-30	120
				2	15-60	120/240
			QAF,BQAF,BAF	1	15-20	120
			QAFH,BQAFH	1	15-20	120
			BAFH	1	15-20	120
			QAF2,BAF2	1	15-20	120
			QAFH2,BAFH2	1	15-20	120
			HQAF2,HBAF2	1	15-20	120
			QFGA2,BFGA2	1	15-20	120
			QFGAH2,BFGAH2	1	15-20	120
			HQFGA2,HBFGA2	1	15-20	120
			ED4	1	15-100	120
			ED4,ED6	2	15-125	240
			HED4	1	15-100	120
			HED4,HED6	2	15-125	240
		CED6 (3P)	QP,BQ,BL	3	15-100	240
			QPH	3	15-100	240
			BQH,BLH	3	15-100	240
			HQP	3	15-100	240
			HBQ,HBL	3	15-100	240
			ED4,ED6	3	15-125	240
			HED4,HED6	3	15-125	240
	150	LDGA (2, 3P)	NGB,HGB,LGB	1	15-125	120
				2	15-125	240
			NDGB,HDGB	2	50-150	240
			NDGA,HDGA	2	50-150	240
		LDGA (3P)	NGB,HGB,LGB	3	15-125	240
			NDGB,HDGB	3	50-150	240
			NDGA,HDGA	3	50-150	240
		LDGB (2, 3P)	NGB,HGB,LGB	1	15-125	120
				2	15-125	240
			NDGB,HDGB	2	50-150	240
			NDGA,HDGA	2	50-150	240
		LDGB (3P)	NGB,HGB,LGB	3	15-125	240
			NDGB,HDGB	3	50-150	240
			NDGA,HDGA	3	50-150	240
	250	LFGA (2, 3P)	NGB,HGB,LGB	1	15-125	120
				2	15-125	240
			NDGB,HDGB	2	50-150	240
			NDGA,HDGA	2	50-150	240
			NFGA,HFGA	2	70-250	240
			NFGB,HFGB	2	70-250	240
			HFD6,HFXD6	2	70-250	240

240V Series Ratings (Continued)

Series Rating	Main Breaker		Branch Breaker			
	Max. Amps	Type	Type	Poles	Amps	Volts
200,000	250	LFGA (3P)	NGB,HGB,LGB	3	15-125	240
			NDGB,HDGB	3	50-150	240
			NDGA,HDGA	3	50-150	240
			NFGA,HFGA	3	70-250	240
			NFGB,HFGB	3	70-250	240
			HFD6,HFXD6	3	70-250	240
		LFGB (2, 3P)	NGB,HGB,LGB	1	15-125	120
				2	15-125	240
			NDGB,HDGB	2	50-150	240
			NDGA,HDGA	2	50-150	240
			NFGB,HFGB	2	70-250	240
			HFD6,HFXD6	2	70-250	240
		LFGB (3P)	NGB,HGB,LGB	3	15-125	240
			NDGB,HDGB	3	50-150	240
			NDGA,HDGA	3	50-150	240
			NFGB,HFGB	3	70-250	240
		CFD6(-A) (2, 3P)	QP,BQ,BL	1	15-70	120/240
				2	15-125	120/240
			QPH	1	15-70	120/240
				2	15-125	120/240
			BQH,BLH	1	15-70	120/240
				2	15-125	120/240
			HQP	1	15-70	120/240
				2	15-125	120/240
			HBQ,HBL	1	15-70	120/240
				2	15-125	120/240
			QP,BQ,BL	3	15-100	240
			QPH	3	15-100	240
			BQH,BLH	3	15-100	240
			HQP	3	15-100	240
			HBQ,HBL	3	15-100	240
			QT	1,2	15-50	120/240
			QPF,BQF,BLF	1	15-30	120
			QPF,BLF	2	15-60	120/240
			QE,BE,BLE	1	15-30	120
			QE,BLE	2	15-60	120/240
			QPHF,BQHF	1	15-30	120
			QPHF,BLHF	2	15-60	120/240
			BLHF	1	15-30	120
			QEH,BLEH	1	15-30	120
				2	15-60	120/240
			QAF,BQAF,BAF	1	15-20	120
			QAFH,BQAFH	1	15-20	120
			BAFH	1	15-20	120
			QAF2,BAF2	1	15-20	120
			QAFH2,BAFH2	1	15-20	120
			HQAF2,HBAF2	1	15-20	120
			QFGA2,BFGA2	1	15-20	120
			QFGAH2,BFGAH2	1	15-20	120
			HQFGA2,HBFGA2	1	15-20	120
			QPP	2	125-225	120/240
			QPPH	2	125-225	120/240
			QJ2	2	60-225	240
			QJH2	2	60-225	240
			QJ2H	2	60-225	240
			ED2	1	15-100	120
			ED2	2	15-100	240
			ED4	1	15-100	120
			ED4,ED6	2	15-125	240
			HED4	1	15-100	120
			HED4,HED6	2	15-125	240
			NDGB,HDGB	2	50-150	240
			NDGA,HDGA	2	50-150	240

240V Series Ratings (Continued)

Series Rating	Main Breaker		Branch Breaker			
	Max. Amps	Type	Type	Poles	Amps	Volts
200,000	250	CFD6(-A) (2, 3P)	NFGA,HFGA	2	70-250	240
			NFGB,HFGB	2	70-250	240
			FXD6-A,FD6-A	2	70-250	240
			FXD6,FD6	2	70-250	240
			HFD6,HFXD6	2	70-250	240
		CFD6(-A) (3P)	QP,BQ,BL	3	15-100	240
			QPH	3	15-100	240
			BQH,BLH	3	15-100	240
			HQP	3	15-100	240
			HBQ,HBL	3	15-100	240
			QJ2	3	60-225	240
			QJH2	3	60-225	240
			QJ2H	3	60-225	240
			ED2	3	15-100	240
			ED4,ED6	3	15-125	240
			HED4,HED6	3	15-125	240
			NDGB,HDGB	3	50-150	240
			NDGA,HDGA	3	50-150	240
			NFGA,HFGA	3	70-250	240
			NFGB,HFGB	3	70-250	240
			FXD6-A,FD6-A	3	70-250	240
			FXD6,FD6	3	70-250	240
			HFD6,HFXD6	3	70-250	240
	400	LJGA (2, 3P)	NGB,HGB,LGB	1	15-125	120
				2	15-125	240
			NDGB,HDGB	2	50-150	240
			NDGA,HDGA	2	50-150	240
			NFGA,HFGA	2	70-250	240
			NFGB,HFGB	2	70-250	240
			HFD6,HFXD6	2	70-250	240
			NJGA,NJJA	2	200-400	240
			HJGA	2	200-400	240
		LJGA (3P)	NGB,HGB,LGB	3	15-125	240
			NDGB,HDGB	3	50-150	240
			NDGA,HDGA	3	50-150	240
			NFGA,HFGA	3	70-250	240
			NFGB,HFGB	3	70-250	240
			HFD6,HFXD6	3	70-250	240
			NJGA,NJJA	3	200-400	240
			HJGA	3	200-400	240
		HHJD6 (2, 3P)	NDGB,HDGB	2	50-150	240
			NDGA,HDGA	2	50-150	240
			NFGA,HFGA	2	70-250	240
			NFGB,HFGB	2	70-250	240
			FXD6-A,FD6-A	2	70-250	240
			FXD6,FD6	2	70-250	240
			HFXD6,HFD6	2	70-250	240
			NJGA,NJJA	2	200-400	240
			HJGA	2	200-400	240
		HHJD6 (3P)	NDGB,HDGB	3	50-150	240
			NDGA,HDGA	3	50-150	240
			NFGA,HFGA	3	70-250	240
			NFGB,HFGB	3	70-250	240
			FXD6-A,FD6-A	3	70-250	240
			FXD6,FD6	3	70-250	240
			HFXD6,HFD6	3	70-250	240
			NJGA,NJJA	3	200-400	240
			HJGA	3	200-400	240
		HHJXD6(2, 3P)	NDGB,HDGB	2	50-150	240
			NDGA,HDGA	2	50-150	240
			NFGA,HFGA	2	70-250	240
			NFGB,HFGB	2	70-250	240
			FXD6-A,FD6-A	2	70-250	240

240V Series Ratings (Continued)

Series Rating	Main Breaker		Branch Breaker			
	Max. Amps	Type	Type	Poles	Amps	Volts
200,000	400	HHJXD6(2, 3P)	FXD6,FD6	2	70-250	240
			HFXD6,HFD6	2	70-250	240
			NJGA,NJJA	2	200-400	240
			HJGA	2	200-400	240
		HHJXD6 (3P)	NDGB,HDGB	3	50-150	240
			NDGA,HDGA	3	50-150	240
			NFGA,HFGA	3	70-250	240
			NFGB,HFGB	3	70-250	240
			FXD6-A,FD6-A	3	70-250	240
			FXD6,FD6	3	70-250	240
			HFXD6,HFD6	3	70-250	240
			NJGA,NJJA	3	200-400	240
			HJGA	3	200-400	240
		CJD6(-A) (2, 3P)	QPH	2	100-125	120/240
			BQH,BLH	2	100-125	120/240
			HQP	2	100-125	120/240
			HBQ,HBL	2	100-125	120/240
			QT	1,2	15-30	120/240
			ED4,ED6	2	15-125	240
			NDGB,HDGB	2	50-150	240
			NDGA,HDGA	2	50-150	240
			NFGA,HFGA	2	70-250	240
			NFGB,HFGB	2	70-250	240
			FXD6-A,FD6-A	2	70-250	240
			FXD6,FD6	2	70-250	240
			HFD6,HFXD6	2	70-250	240
			NJGA,NJJA	2	200-400	240
			HJGA	2	200-400	240
			JXD2-A	2	200-400	240
			JXD2	2	200-400	240
			JD6-A,JXD6-A	2	200-400	240
			JD6,JXD6	2	200-400	240
			HJD6-A	2	200-400	240
			HJXD6-A	2	200-400	240
			HJD6,HJXD6	2	200-400	240
		CJD6(-A) (3P)	QPH	3	100	240
			BQH,BLH	3	100	240
			HQP	3	100	240
			HBQ,HBL	3	100	240
			ED4,ED6	3	15-125	240
			NDGB,HDGB	3	50-150	240
			NDGA,HDGA	3	50-150	240
			NFGA,HFGA	3	70-250	240
			NFGB,HFGB	3	70-250	240
			FXD6-A,FD6-A	3	70-250	240
			FXD6,FD6	3	70-250	240
			HFD6,HFXD6	3	70-250	240
			NJGA,NJJA	3	200-400	240
			HJGA	3	200-400	240
			JXD2-A	3	200-400	240
			JXD2	3	200-400	240
			JD6-A,JXD6-A	3	200-400	240
			JD6,JXD6	3	200-400	240
			HJD6-A	3	200-400	240
			HJXD6-A	3	200-400	240
			HJD6,HJXD6	3	200-400	240
		CJD6(-A),CJD6-A (2, 3P)	NGB,HGB,LGB	1	15-125	120
				2	15-125	240
		CJD6(-A),CJD6-A (3P)	NGB,HGB,LGB	3	15-125	240
	600	LLGA (2, 3P)	NGB,HGB,LGB	1	15-125	120
				2	15-125	240
			NDGB,HDGB	2	50-150	240
			NDGA,HDGA	2	50-150	240

240V Series Ratings (Continued)

Series Rating	Main Breaker		Branch Breaker			
	Max. Amps	Type	Type	Poles	Amps	Volts
200,000	600	LLGA (2, 3P)	NFGA,HFGA	2	70-250	240
			NFGB,HFGB	2	70-250	240
			HFD6,HFXD6	2	70-250	240
			NJGA,NJJA	2	200-400	240
			HJGA	2	200-400	240
			NLGA,HLGA	2	400-600	240
			NLGB,HLGB	2	400-600	240
		LLGA (3P)	NGB,HGB,LGB	3	15-125	240
			NDGB,HDGB	3	50-150	240
			NDGA,HDGA	3	50-150	240
			NFGA,HFGA	3	70-250	240
			NFGB,HFGB	3	70-250	240
			HFD6,HFXD6	3	70-250	240
			NJGA,NJJA	3	200-400	240
			HJGA	3	200-400	240
			NLGA,HLGA	3	400-600	240
			NLGB,HLGB	3	400-600	240
		LLGB (2, 3P)	NGB,HGB,LGB	1	15-125	120
				2	15-125	240
			NDGB,HDGB	2	50-150	240
			NDGA,HDGA	2	50-150	240
			NFGA,HFGA	2	70-250	240
			NFGB,HFGB	2	70-250	240
			HFD6,HFXD6	2	70-250	240
			NJGA,NJJA	2	200-400	240
			HJGA	2	200-400	240
			NLGA,HLGA	2	400-600	240
			NLGB,HLGB	2	400-600	240
		LLGB (3P)	NGB,HGB,LGB	3	15-125	240
			NDGB,HDGB	3	50-150	240
			NDGA,HDGA	3	50-150	240
			NFGA,HFGA	3	70-250	240
			NFGB,HFGB	3	70-250	240
			HFD6,HFXD6	3	70-250	240
			NJGA,NJJA	3	200-400	240
			HJGA	3	200-400	240
			NLGA,HLGA	3	400-600	240
			NLGB,HLGB	3	400-600	240
		HHLD6 (2, 3P)	NDGB,HDGB	2	50-150	240
			NDGA,HDGA	2	50-150	240
			NFGA,HFGA	2	70-250	240
			NFGB,HFGB	2	70-250	240
			FXD6-A,FD6-A	2	70-250	240
			FXD6,FD6	2	70-250	240
			HFXD6,HFD6	2	70-250	240
			NJGA,NJJA	2	200-400	240
			HJGA	2	200-400	240
			NLGA,HLGA	2	400-600	240
			NLGB,HLGB	2	400-600	240
		HHLD6 (3P)	NDGB,HDGB	3	50-150	240
			NDGA,HDGA	3	50-150	240
			NFGA,HFGA	3	70-250	240
			NFGB,HFGB	3	70-250	240
			FXD6-A,FD6-A	3	70-250	240
			FXD6,FD6	3	70-250	240
			HFXD6,HFD6	3	70-250	240
			NJGA,NJJA	3	200-400	240
			HJGA	3	200-400	240
			NLGA,HLGA	3	400-600	240
			NLGB,HLGB	3	400-600	240
		HHLXD6 (2, 3P)	NDGB,HDGB	2	50-150	240
			NDGA,HDGA	2	50-150	240
			NFGA,HFGA	2	70-250	240

240V Series Ratings (Continued)

Series Rating	Main Breaker		Branch Breaker			
	Max. Amps	Type	Type	Poles	Amps	Volts
200,000	600	HHLXD6 (2, 3P)	NFGB,HFGB	2	70-250	240
			FXD6-A,FD6-A	2	70-250	240
			FXD6,FD6	2	70-250	240
			HFXD6,HFD6	2	70-250	240
			NJGA,NJJA	2	200-400	240
			HJGA	2	200-400	240
			NLGA,HLGA	2	400-600	240
			NLGB,HLGB	2	400-600	240
		HHLXD6 (3P)	NDGB,HDGB	3	50-150	240
			NDGA,HDGA	3	50-150	240
			NFGA,HFGA	3	70-250	240
			NFGB,HFGB	3	70-250	240
			FXD6-A,FD6-A	3	70-250	240
			FXD6,FD6	3	70-250	240
			HFXD6,HFD6	3	70-250	240
			NJGA,NJJA	3	200-400	240
			HJGA	3	200-400	240
			NLGA,HLGA	3	400-600	240
			NLGB,HLGB	3	400-600	240
		CLD6(-A) (2, 3P)	QPH	2	100-125	120/240
			BQH,BLH	2	100-125	120/240
			HQP	2	100-125	120/240
			HBQ,HBL	2	100-125	120/240
			QT	1,2	15-30	120/240
			NGB,HGB,LGB	1	15-125	120
				2	15-125	240
			ED4,ED6	2	15-125	240
			NDGB,HDGB	2	50-150	240
			NDGA,HDGA	2	50-150	240
			NFGA,HFGA	2	70-250	240
			NFGB,HFGB	2	70-250	240
			FXD6-A,FD6-A	2	70-250	240
			FXD6,FD6	2	70-250	240
			HFD6,HFXD6	2	70-250	240
			NJGA,NJJA	2	200-400	240
			HJGA	2	200-400	240
			JXD2-A	3	200-400	240
			JXD2	3	200-400	240
			JD6-A,JXD6-A	2	200-400	240
			JD6,JXD6	2	200-400	240
			HJD6-A	2	200-400	240
			HJXD6-A	2	200-400	240
			HJD6,HJXD6	2	200-400	240
			NLGA,HLGA	2	400-600	240
			NLGB,HLGB	2	400-600	240
			LD6-A	2	200-600	240
			LD6	2	200-600	240
			LXD6-A	2	450-600	240
			LXD6	2	450-600	240
			HLD6-A	2	200-600	240
			HLD6	2	200-600	240
			HLXD6-A	2	450-600	240
			HLXD6	2	450-600	240
		CLD6(-A) (3P)	QPH	3	100	240
			BQH,BLH	3	100	240
			HQP	3	100	240
			HBQ,HBL	3	100	240
			NGB,HGB,LGB	3	15-125	240
			ED4,ED6	3	15-125	240
			NDGB,HDGB	3	50-150	240
			NDGA,HDGA	3	50-150	240
			NFGA,HFGA	3	70-250	240
			NFGB,HFGB	3	70-250	240

240V Series Ratings (Continued)

Series Rating	Main Breaker		Branch Breaker			
	Max. Amps	Type	Type	Poles	Amps	Volts
200,000	600	CLD6(-A) (3P)	FXD6-A,FD6-A	3	70-250	240
			FXD6,FD6	3	70-250	240
			HFD6,HFXD6	3	70-250	240
			NJGA,NJJA	3	200-400	240
			HJGA	3	200-400	240
			JXD2-A	2	200-400	240
			JXD2	2	200-400	240
			JD6-A,JXD6-A	3	200-400	240
			JD6,JXD6	3	200-400	240
			HJD6-A	3	200-400	240
			HJXD6-A	3	200-400	240
			HJD6,HJXD6	3	200-400	240
			NLGA,HLGA	3	400-600	240
			NLGB,HLGB	3	400-600	240
			LD6-A	3	200-600	240
			LD6	3	200-600	240
			LXD6-A	3	450-600	240
			LXD6	3	450-600	240
			HLD6-A	3	200-600	240
			HLD6	3	200-600	240
			HLXD6-A	3	450-600	240
			HLXD6	3	450-600	240
	800	LMG (2, 3P)	NDGB,HDGB	2	50-150	240
			NDGA,HDGA	2	50-150	240
			NFGA,HFGA	2	70-250	240
			NFGB,HFGB	2	70-250	240
			HFD6,HFXD6	2	70-250	240
			NJGA,NJJA	2	200-400	240
			HJGA	2	200-400	240
			NLGA,HLGA	2	400-600	240
			NLGB,HLGB	2	400-600	240
			MD6,MXD6	2	400-800	240
			HMD6,HMXD6	2	400-800	240
		LMG (3P)	NDGB,HDGB	3	50-150	240
			NDGA,HDGA	3	50-150	240
			NFGA,HFGA	3	70-250	240
			NFGB,HFGB	3	70-250	240
			HFD6,HFXD6	3	70-250	240
			NJGA,NJJA	3	200-400	240
			HJGA	3	200-400	240
			NLGA,HLGA	3	400-600	240
			NLGB,HLGB	3	400-600	240
			MD6,MXD6	3	400-800	240
			HMD6,HMXD6	3	400-800	240
		CMD6 (2, 3P)	ED4,ED6	2	15-125	240
			HED4,HED6	2	15-125	240
			NDGB,HDGB	2	50-150	240
			NDGA,HDGA	2	50-150	240
			NFGA,HFGA	2	70-250	240
			NFGB,HFGB	2	70-250	240
			FXD6-A,FD6-A	2	70-250	240
			FXD6,FD6	2	70-250	240
			HFD6,HFXD6	2	70-250	240
			NJGA,NJJA	2	200-400	240
			HJGA	2	200-400	240
			JXD2-A	2	200-400	240
			JXD2	2	200-400	240
			JD6-A	2	200-400	240
			JD6	2	200-400	240
			JXD6-A	2	200-400	240
			JXD6	2	200-400	240
			HJD6-A	2	200-400	240
			HJXD6-A	2	200-400	240

240V Series Ratings (Continued)

Series Rating	Main Breaker		Branch Breaker			
	Max. Amps	Type	Type	Poles	Amps	Volts
200,000	800	CMD6 (2, 3P)	HJD6,HJXD6	2	200-400	240
			NLGA,HLGA	2	400-600	240
			NLGB,HLGB	2	400-600	240
			LD6-A	2	200-600	240
			LD6	2	200-600	240
			LXD6-A	2	450-600	240
			LXD6	2	450-600	240
			HLD6-A	2	200-600	240
			HLD6	2	200-600	240
			HLXD6-A	2	450-600	240
			HLXD6	2	450-600	240
			MD6,MXD6	2	500-800	240
			HMD6,HMXD6	2	500-800	240
		CMD6 (3P)	ED4,ED6	3	15-125	240
			HED4,HED6	3	15-125	240
			NDGB,HDGB	3	50-150	240
			NDGA,HDGA	3	50-150	240
			NFGA,HFGA	3	70-250	240
			NFGB,HFGB	3	70-250	240
			FXD6-A,FD6-A	3	70-250	240
			FXD6,FD6	3	70-250	240
			HFD6,HFXD6	3	70-250	240
			NJGA,NJJA	3	200-400	240
			HJGA	3	200-400	240
			JXD2-A	3	200-400	240
			JXD2	3	200-400	240
			JD6-A	3	200-400	240
			JD6	3	200-400	240
			JXD6-A	3	200-400	240
			JXD6	3	200-400	240
			HJD6-A	3	200-400	240
			HJXD6-A	3	200-400	240
			HJD6,HJXD6	3	200-400	240
			NLGA,HLGA	3	400-600	240
			NLGB,HLGB	3	400-600	240
			LD6-A	3	200-600	240
			LD6	3	200-600	240
			LXD6-A	3	450-600	240
			LXD6	3	450-600	240
			HLD6-A	3	200-600	240
			HLD6	3	200-600	240
			HLXD6-A	3	450-600	240
			HLXD6	3	450-600	240
			MD6,MXD6	3	500-800	240
			HMD6,HMXD6	3	500-800	240
		SCMD6(-A) (3P)	NDGB,HDGB	2	50-150	240
				3	50-150	240
			NDGA,HDGA	2	50-150	240
				3	50-150	240
			NFGA,HFGA	2	70-250	240
				3	70-250	240
			NFGB,HFGB	2	70-250	240
				3	70-250	240
			NJGA,NJJA	2	200-400	240
				3	200-400	240
			HJGA	2	200-400	240
				3	200-400	240
			NLGA,HLGA	2	400-600	240
				3	400-600	240
			NLGB,HLGB	2	400-600	240
				3	400-600	240
			MD6,MXD6	2	500-800	240
				3	500-800	240
			HMD6,HMXD6	2	500-800	240
				3	500-800	240

240V Series Ratings (Continued)

Series Rating	Main Breaker		Branch Breaker			
	Max. Amps	Type	Type	Poles	Amps	Volts
200,000	1200	LNG (2, 3P)	NDGB,HDGB	2	50-150	240
			NDGA,HDGA	2	50-150	240
			NFGA,HFGA	2	70-250	240
			NFGB,HFGB	2	70-250	240
			HFD6,HFXD6	2	70-250	240
			NJGA,NJJA	2	200-400	240
			HJGA	2	200-400	240
			NLGA,HLGA	2	400-600	240
			NLGB,HLGB	2	400-600	240
			MD6,MXD6	2	400-800	240
			HMD6,HMXD6	2	400-800	240
			ND6,NXD6	2	600-1200	240
			HND6,HNXD6	2	600-1200	240
		LNG (3P)	NDGB,HDGB	3	50-150	240
			NDGA,HDGA	3	50-150	240
			NFGA,HFGA	3	70-250	240
			NFGB,HFGB	3	70-250	240
			HFD6,HFXD6	3	70-250	240
			NJGA,NJJA	3	200-400	240
			HJGA	3	200-400	240
			NLGA,HLGA	3	400-600	240
			NLGB,HLGB	3	400-600	240
			MD6,MXD6	3	400-800	240
			HMD6,HMXD6	3	400-800	240
			ND6,NXD6	3	600-1200	240
			HND6,HNXD6	3	600-1200	240
		CND6 (2, 3P)	ED4,ED6	2	15-125	240
			HED4,HED6	2	15-125	240
			FXD6-A,FD6-A	2	70-250	240
			FXD6,FD6	2	70-250	240
			HFD6,HFXD6	2	70-250	240
			JXD2-A	2	200-400	240
			JXD2	2	200-400	240
			JD6-A	2	200-400	240
			JD6	2	200-400	240
			JXD6-A	2	200-400	240
			JXD6	2	200-400	240
			HJD6-A	2	200-400	240
			HJXD6-A	2	200-400	240
			HJD6,HJXD6	2	200-400	240
			LD6-A	2	200-600	240
			LD6	2	200-600	240
			LXD6-A	2	450-600	240
			LXD6	2	450-600	240
			HLD6-A	2	200-600	240
			HLD6	2	200-600	240
			HLXD6-A	2	450-600	240
			HLXD6	2	450-600	240
			MD6,MXD6	2	500-800	240
			HMD6,HMXD6	2	500-800	240
			ND6,NXD6	2	500-1200	240
			HND6,HNXD6	2	500-1200	240
		CND6 (3P)	ED4,ED6	3	15-125	240
			HED4,HED6	3	15-125	240
			FXD6-A,FD6-A	3	70-250	240
			FXD6,FD6	3	70-250	240
			HFD6,HFXD6	3	70-250	240
			JXD2-A	3	200-400	240
			JXD2	3	200-400	240
			JD6-A	3	200-400	240
			JD6	3	200-400	240
			JXD6-A	3	200-400	240
			JXD6	3	200-400	240

240V Series Ratings (Continued)

Series Rating	Main Breaker		Branch Breaker			
	Max. Amps	Type	Type	Poles	Amps	Volts
200,000	1200	CND6 (3P)	HJD6-A	3	200-400	240
			HJXD6-A	3	200-400	240
			HJD6,HJXD6	3	200-400	240
			LD6-A	3	200-600	240
			LD6	3	200-600	240
			LXD6-A	3	450-600	240
			LXD6	3	450-600	240
			HLD6-A	3	200-600	240
			HLD6	3	200-600	240
			HLXD6-A	3	450-600	240
			HLXD6	3	450-600	240
			MD6,MXD6	3	500-800	240
			HMD6,HMXD6	3	500-800	240
			ND6,NXD6	3	500-1200	240
			HND6,HNXD6	3	500-1200	240
		SCND6(-A) (3P)	NDGB,HDGB	2	50-150	240
			NDGB,HDGB	3	50-150	240
			NDGA,HDGA	2	50-150	240
			NDGA,HDGA	3	50-150	240
			NFGA,HFGA	2	70-250	240
			NFGA,HFGA	3	70-250	240
			NFGB,HFGB	2	70-250	240
			NFGB,HFGB	3	70-250	240
			NJGA,NJJA	2	200-400	240
			NJGA,NJJA	3	200-400	240
			HJGA	2	200-400	240
			HJGA	3	200-400	240
			NLGA,HLGA	2	400-600	240
			NLGA,HLGA	3	400-600	240
			NLGB,HLGB	2	400-600	240
			NLGB,HLGB	3	400-600	240
			MD6,MXD6	2	500-800	240
			MD6,MXD6	3	500-800	240
			SMD6	3	500-800	240
			HMD6,HMXD6	2	500-800	240
			HMD6,HMXD6	3	500-800	240
			SHMD6	3	500-800	240
			ND6,NXD6	2	500-1200	240
			ND6,NXD6	3	500-1200	240
			SND6	3	500-1200	240
			HND6,HNXD6	2	500-1200	240
			HND6,HNXD6	3	500-1200	240
			SHND6	3	500-1200	240
	1600	LPG (3P)	NDGB,HDGB	2	50-150	240
				3	50-150	240
			NDGA,HDGA	2	50-150	240
				3	50-150	240
			NFGA,HFGA	2	70-250	240
				3	70-250	240
			NFGB,HFGB	2	70-250	240
				3	70-250	240
			HFD6,HFXD6	2	70-250	240
				3	70-250	240
			NJGA,NJJA	2	200-400	240
				3	200-400	240
			HJGA	2	200-400	240
				3	200-400	240
			NLGA,HLGA	2	400-600	240
				3	400-600	240
			NLGB,HLGB	2	400-600	240
				3	400-600	240
			MD6,HMXD6	2	400-800	240
				3	400-800	240

240V Series Ratings (Continued)

Series Rating	Main Breaker		Branch Breaker			
	Max. Amps	Type	Type	Poles	Amps	Volts
200,000	1600	LPG (3P)	HMD6,HMXD6	2	400-800	240
				3	400-800	240
			ND6,NXD6	2	600-1200	240
				3	600-1200	240
			HND6,HNXD6	2	600-1200	240
				3	600-1200	240
			PD6,PXD6	2	1200-1600	240
				3	1200-1600	240
			HPD6,HPXD6	2	1200-1600	240
				3	1200-1600	240
		CPD6 (3P)	NDGB,HDGB	2	50-150	240
				3	50-150	240
			NDGA,HDGA	2	50-150	240
				3	50-150	240
			NFGA,HFGA	2	70-250	240
				3	70-250	240
			NFGB,HFGB	2	70-250	240
				3	70-250	240
			FXD6-A,FD6-A	2	70-250	240
				3	70-250	240
			FXD6,FD6	2	70-250	240
				3	70-250	240
			HFD6,HFXD6	2	70-250	240
				3	70-250	240
			NJGA,NJJA	2	200-400	240
				3	200-400	240
			HJGA	2	200-400	240
				3	200-400	240
			JXD2-A	2	200-400	240
				3	200-400	240
			JXD2	2	200-400	240
				3	200-400	240
			JD6-A,JXD6-A	2	200-400	240
				3	200-400	240
			JD6,JXD6	2	200-400	240
				3	200-400	240
			HJD6-A	2	200-400	240
				3	200-400	240
			HJXD6-A	2	200-400	240
				3	200-400	240
			HJD6,HJXD6	2	200-400	240
				3	200-400	240
			NLGA,HLGA	2	400-600	240
				3	400-600	240
			NLGB,HLGB	2	400-600	240
				3	400-600	240
			LD6-A	2	200-600	240
				3	200-600	240
			LD6	2	200-600	240
				3	200-600	240
			LXD6-A	2	450-600	240
				3	450-600	240
			LXD6	2	450-600	240
				3	450-600	240
			HLD6-A	2	200-600	240
				3	200-600	240
			HLD6	2	200-600	240
				3	200-600	240
			HLXD6-A	2	450-600	240
				3	450-600	240
			HLXD6	2	450-600	240
				3	450-600	240
			MD6,MXD6	2	500-800	240
				3	500-800	240

240V Series Ratings (Continued)

Series Rating	Main Breaker		Branch Breaker			
	Max. Amps	Type	Type	Poles	Amps	Volts
200,000	1600	CPD6 (3P)	HMD6,HMXD6	2	500-800	240
			HMD6,HMXD6	3	500-800	240
			ND6,NXD6	2	500-1200	240
			ND6,NXD6	3	500-1200	240
			HND6,HNXD6	2	500-1200	240
			HND6,HNXD6	3	500-1200	240

480V Series Ratings

Series Rating	Main Breaker		Branch Breaker			
	Max. Amps	Type	Type	Poles	Amps	Volts
25,000	125	NGB,HGB,LGB (2,3P)	BQD,CQD	1	15-100	277
				2	15-100	277/480
		NGB,HGB,LGB (3P)	BQD,CQD	3	15-100	277/480
30,000		HED6 (2,3P)	ED4	1	15-100	277
			ED4,ED6	2	15-125	480
		HED6 (3P)	ED4,ED6	3	15-125	480
35,000	250	FD6-A,FXD6-A (2,3P)	NGB	1	15-125	277
				2	15-125	277/480
		FD6-A,FXD6-A (3P)	NGB	3	15-125	277/480
	400	JD6-A,JXD6-A (2,3P)	NGB	1	15-125	277
				2	15-125	277/480
		JD6-A,JXD6-A (3P)	NGB	3	15-125	277/480
		JD6,JXD6 (2,3P)	ED4	1	15-100	277
	600	LD6 (2,3P)	ED4	1	15-100	277
		LXD6 (2,3P)	ED4	1	15-100	277
42,000	125	HED4 (2,3P)	ED4	1	15-100	277
			ED4,ED6	2	15-125	480
		HED4 (3P)	ED4,ED6	3	15-125	480
	400	HJD6-A (2,3P)	NGB,HGB	1	15-125	277
				2	15-125	277/480
		HJD6-A (3P)	NGB,HGB	3	15-125	277/480
		HJXD6-A (2,3P)	NGB,HGB	1	15-125	277
				2	15-125	277/480
		HJXD6-A (3P)	NGB,HGB	3	15-125	277/480
50,000	250	HFD6,HFXD6 (2,3P)	NGB,HGB	1	15-125	277
				2	15-125	277/480
		HFD6,HFXD6 (3P)	NGB,HGB	3	15-125	277/480
	400	HJD6-A (2,3P)	HED4	2	15-50	480
		HJD6-A (3P)	HED4	3	15-50	480
		HJXD6-A (2,3P)	HED4	2	15-50	480
		HJXD6-A (3P)	HED4	3	15-50	480
		HJD6,HJXD6 (2,3P)	HED4	2	15-50	480
		HJD6,HJXD6 (3P)	HED4	3	15-50	480
	600	HLD6-A (2,3P)	HED4	2	15-50	480
		HLD6-A (3P)	HED4	3	15-50	480
		HLXD6-A (2,3P)	HED4	2	15-50	480
		HLXD6-A (3P)	HED4	3	15-50	480
		HLD6,HLXD6 (2,3P)	HED4	2	15-50	480
		HLD6,HLXD6 (3P)	HED4	3	15-50	480
	800	MD6,MXD6 (2,3P)	NDGA,NDGB	2	50-150	480
			NFGA,NFGB	2	70-250	480
			FXD6,FD6	2	70-250	480
			FXD6-A,FD6-A	2	70-250	480
			NJGA	2	250-400	480
			JXD6,JD6	2	200-400	480
			JXD6-A,JD6-A	2	200-400	480
			NLGA,NLGB	2	400-600	480
			LD6	2	200-600	480
			LD6-A	2	200-600	480
			LXD6	2	450-600	480
			LXD6-A	2	450-600	480
			SJD6-A	3	200-400	480
			SJD6	3	200-400	480
			SLD6-A	3	400-600	480
			SLD6	3	400-600	480
			LMD6,LMXD6	2	600-800	480
			NMG	2	600-800	480
		MD6,MXD6 (3P)	NDGA,NDGB	3	50-150	480
			NFGA,NFGB	3	70-250	480
			FXD6,FD6	3	70-250	480

480V Series Ratings (Continued)

Series Rating	Main Breaker		Branch Breaker			
	Max. Amps	Type	Type	Poles	Amps	Volts
50,000	800	MD6,MXD6 (3P)	FXD6-A,FD6-A	3	70-250	480
			NJGA	3	250-400	480
			JXD6,JD6	3	200-400	480
			JXD6-A,JD6-A	3	200-400	480
			NLGA,NLGB	3	400-600	480
			LD6	3	200-600	480
			LD6-A	3	200-600	480
			LXD6	3	450-600	480
			LXD6-A	3	450-600	480
			SJD6-A	3	200-400	480
			SJD6	3	200-400	480
			SLD6-A	3	400-600	480
			SLD6	3	400-600	480
			LMD6,LMXD6	3	600-800	480
			NMG	3	600-800	480
		SMD6 (3P)	NDGA,NDGB	2	50-150	480
				3	50-150	480
			NFGA,NFGB	2	70-250	480
				3	70-250	480
			NJGA	2	250-400	480
				3	250-400	480
			JD6,JXD6	2	200-400	480
				3	200-400	480
			JD6-A,JXD6-A	2	200-400	480
				3	200-400	480
			NLGA,NLGB	2	400-600	480
				3	400-600	480
			LD6-A	2	200-600	480
				3	200-600	480
			LD6	2	200-600	480
				3	200-600	480
			LXD6-A	2	450-600	480
				3	450-600	480
			LXD6	2	450-600	480
				3	450-600	480
			SJD6-A	3	200-400	480
			SJD6	3	200-400	480
			SLD6-A	3	400-600	480
			SLD6	3	400-600	480
			LMD6,LMXD6	2	600-800	480
				3	600-800	480
			NMG	2	600-800	480
				3	600-800	480
	1200	ND6,NXD6 (2,3P)	NDGA,NDGB	2	50-150	480
			NFGA,NFGB	2	70-250	480
			FXD6,FD6	2	70-250	480
			FXD6-A,FD6-A	2	70-250	480
			NJGA	2	250-400	480
			JXD6,JD6	2	200-400	480
			JXD6-A,JD6-A	2	200-400	480
			NLGA,NLGB	2	400-600	480
			LD6	2	200-600	480
			LD6-A	2	200-600	480
			LXD6	2	450-600	480
			LXD6-A	2	450-600	480
			NMG	2	600-800	480
			LMD6,LMXD6	2	600-800	480
		ND6,NXD6 (3P)	NDGA,NDGB	3	50-150	480

480V Series Ratings (Continued)

Series Rating	Main Breaker		Branch Breaker			
	Max. Amps	Type	Type	Poles	Amps	Volts
50,000	1200	ND6,NXD6 (3P)	NFGA,NFGB	3	70-250	480
			FXD6,FD6	3	70-250	480
			FXD6-A,FD6-A	3	70-250	480
			NJGA	3	250-400	480
			JXD6,JD6	3	200-400	480
			JXD6-A,JD6-A	3	200-400	480
			NLGA,NLGB	3	400-600	480
			LD6	3	200-600	480
			LD6-A	3	200-600	480
			LXD6	3	450-600	480
			LXD6-A	3	450-600	480
			SJD6	3	200-400	480
			SJD6-A	3	200-400	480
			SLD6	3	400-600	480
			SLD6-A	3	400-600	480
			NMG	3	600-800	480
			LMD6,LXMD6	3	600-800	480
		SND6 (3P)	NDGA,NDGB	2	50-150	480
				3	50-150	480
			NFGA,NFGB	2	70-250	480
				3	70-250	480
			NJGA	2	250-400	480
				3	250-400	480
			JD6,JXD6	2	200-400	480
				3	200-400	480
			JD6-A,JXD6-A	2	200-400	480
				3	200-400	480
			NLGA,NLGB	2	400-600	480
				3	400-600	480
			LD6	2	200-600	480
				3	200-600	480
			LD6-A	2	200-600	480
				3	200-600	480
			LXD6	2	450-600	480
				3	450-600	480
			LXD6-A	2	450-600	480
				3	450-600	480
			SJD6	3	200-400	480
			SJD6-A	3	200-400	480
			SLD6	3	400-600	480
			SLD6-A	3	400-600	480
			NMG	2	600-800	480
				3	600-800	480
			LMD6,LMXD6	2	600-800	480
				3	600-800	480
	1600	PD6,PXD6 (3P)	NDGA,NDGB	2	50-150	480
				3	50-150	480
			NFGA,NFGB	2	70-250	480
				3	70-250	480
			FXD6,FD6	2	70-250	480
				3	70-250	480
			FXD6-A,FD6-A	2	70-250	480
				3	70-250	480
			NJGA	2	250-400	480
				3	250-400	480
			JD6,JXD6	2	200-400	480
				3	200-400	480
			JD6-A,JXD6-A	2	200-400	480
				3	200-400	480
			NLGA,NLGB	2	400-600	480
				3	400-600	480
			LD6	2	200-600	480
				3	200-600	480
			LD6-A	2	200-600	480
				3	200-600	480
			LXD6	2	450-600	480
				3	450-600	480
			LXD6-A	2	450-600	480
				3	450-600	480
			SJD6	3	200-400	480
			SJD6-A	3	200-400	480

480V Series Ratings (Continued)

Series Rating	Main Breaker		Branch Breaker			
	Max. Amps	Type	Type	Poles	Amps	Volts
50,000	1600	PD6,PXD6 (3P)	SLD6	3	400-600	480
			SLD6-A	3	400-600	480
			NMG	2	600-800	480
				3	600-800	480
			NNG	2	800-1200	480
				3	800-1200	480
			NPG	2	1200-1600	480
			NPG	3	1200-1600	480
		SPD6 (3P)	JD6,JXD6	2	200-400	480
				3	200-400	480
			JD6-A,JXD6-A	2	200-400	480
				3	200-400	480
			LD6	2	200-600	480
				3	200-600	480
			LD6-A	2	200-600	480
				3	200-600	480
			LXD6	2	450-600	480
				3	450-600	480
			LXD6-A	2	450-600	480
				3	450-600	480
			SJD6	3	200-400	480
			SJD6-A	3	200-400	480
			SLD6	3	400-600	480
			SLD6-A	3	400-600	480
	2000	RD6,RXD6 (3P)	NDGA,NDGB	2	50-150	480
				3	50-150	480
			NFGA,NFGB	2	70-250	480
				3	70-250	480
			FXD6,FD6	2	70-250	480
				3	70-250	480
			FXD6-A,FD6-A	2	70-250	480
				3	70-250	480
			NJGA	2	250-400	480
				3	250-400	480
			JD6-A,JXD6-A	2	200-400	480
				3	200-400	480
			JD6,JXD6	2	200-400	480
				3	200-400	480
			NLGA,NLGB	2	400-600	480
				3	400-600	480
			LD6-A	2	200-600	480
				3	200-600	480
			LD6	2	200-600	480
				3	200-600	480
			LXD6-A	2	450-600	480
				3	450-600	480
			LXD6	2	450-600	480
				3	450-600	480
			SJD6-A	3	200-400	480
			SJD6	3	200-400	480
			SLD6-A	3	400-600	480
			SLD6	3	400-600	480
			NMG	2	600-800	480
				3	600-800	480
			NNG	2	800-1200	480
				3	800-1200	480
			NPG	2	1200-1600	480
				3	1200-1600	480
65,000	150	HDGA,HDGB (2,3P)	NDGA,NDGB	2	50-150	480
		HDGA,HDGB (3P)	NDGA,NDGB	3	50-150	480
	250	HFGA,HFGB (2,3P)	NDGA,NDGB	2	50-150	480
			NFGA,NFGB	2	70-250	480
		HFGA,HFGB (3P)	NDGA,NDGB	3	50-150	480
			NFGA,NFGB	3	70-250	480
		HFD6,HFXD6 (2,3P)	ED4	1	15-100	277
			ED4,ED6	2	15-125	480
			HED4	1	15-100	277
			HED4,HED6	2	15-125	480
			NDGA,NDGB	2	50-150	480
			NFGA,NFGB	2	70-250	480

480V Series Ratings (Continued)

Series Rating	Main Breaker		Branch Breaker			
	Max. Amps	Type	Type	Poles	Amps	Volts
65,000	250	HFD6,HFXD6 (3P)	ED4,ED6	3	15-125	480
			HED4,HED6	3	15-125	480
			NDGA,NDGB	3	50-150	480
			NFGA,NFGB	3	70-250	480
	400	HJGA (2,3P)	NGB,HGB	1	15-125	277
				2	15-125	277/480
			NDGA,NDGB	2	50-150	480
			NFGA,NFGB	2	70-250	480
			NJGA	2	250-400	480
		HJGA (3P)	NGB,HGB	3	15-125	277/480
			NDGA,NDGB	3	50-150	480
			NFGA,NFGB	3	70-250	480
			NJGA	3	250-400	480
		HJD6-A (2,3P)	ED4	1	15-100	277
		HJD6-A (2,3P)	HED4	1	15-100	277
			NDGA,NDGB	2	50-150	480
			NFGA,NFGB	2	70-250	480
			FD6-A,FXD6-A	2	70-250	480
			FD6,FXD6	2	70-250	480
			JD6-A,JXD6-A	2	200-400	480
			NJGA	2	250-400	480
			JD6,JXD6	2	200-400	480
		HJD6-A (3P)	NDGA,NDGB	3	50-150	480
			NFGA,NFGB	3	70-250	480
			FD6-A,FXD6-A	3	70-250	480
			FD6,FXD6	3	70-250	480
			NJGA	3	250-400	480
			JD6-A,JXD6-A	3	200-400	480
			JD6,JXD6	3	200-400	480
		HJXD6-A (2,3P)	ED4	1	15-100	277
			HED4	1	15-100	277
			NDGA,NDGB	2	50-150	480
			NFGA,NFGB	2	70-250	480
			FD6-A,FXD6-A	2	70-250	480
			FD6,FXD6	2	70-250	480
			JD6-A,JXD6-A	2	200-400	480
			NJGA	2	250-400	480
			JD6,JXD6	2	200-400	480
		HJXD6-A (3P)	NDGA,NDGB	3	50-150	480
			NFGA,NFGB	3	70-250	480
			FD6-A,FXD6-A	3	70-250	480
			FD6,FXD6	3	70-250	480
			NJGA	3	250-400	480
			JD6-A,JXD6-A	3	200-400	480
			JD6,JXD6	3	200-400	480
		HJD6,HJXD6 (2,3P)	ED4	1	15-100	277
			HED4	1	15-100	277
			FD6-A,FXD6-A	2	70-250	480
			FD6,FXD6	2	70-250	480
			JD6,JXD6	2	200-400	480
		HJD6,HJXD6 (3P)	FD6-A,FXD6-A	3	70-250	480
			FD6,FXD6	3	70-250	480
			JD6,JXD6	3	200-400	480
		HHJD6 (2,3P)	NGB,HGB	1	15-125	277
				2	15-125	277/480
		HHJD6 (3P)	NGB,HGB	3	15-125	277/480
		HHJXD6 (2,3P)	NGB,HGB	1	15-125	277
				2	15-125	277/480
		HHJXD6 (3P)	NGB,HGB	3	15-125	277/480
	600	HLD6-A (2,3P)	ED4	1	15-100	277
		HLGA,HLGB (2,3P)	NGB,HGB	1	15-125	277
			NGB,HGB	2	15-125	277/480
			NDGA,NDGB	2	50-150	480
			NFGA,NFGB	2	70-250	480
			NJGA	2	250-400	480
			NLGA,NLGB	2	400-600	480
		HLGA,HLGB (3P)	NGB,HGB	3	15-125	277/480
			NDGA,NDGB	3	50-150	480
			NFGA,NFGB	3	70-250	480
			NJGA	3	250-400	480
			NLGA,NLGB	3	400-600	480

480V Series Ratings (Continued)

Series Rating	Main Breaker		Branch Breaker			
	Max. Amps	Type	Type	Poles	Amps	Volts
65,000	600	HLD6-A (2,3P)	HED4	1	15-100	277
			NDGA,NDGB	2	50-150	480
			NFGA,NFGB	2	70-250	480
			FD6-A,FXD6-A	2	70-250	480
			FD6,FXD6	2	70-250	480
			NJGA	2	200-400	480
			NLGA,NLGB	2	400-600	480
			JXD6-A,JD6-A	2	200-400	480
			LD6-A	2	200-600	480
			LXD6-A	2	450-600	480
		HLD6-A (3P)	NDGA,NDGB	3	50-150	480
			NFGA,NFGB	3	70-250	480
			FD6-A,FXD6-A	3	70-250	480
			FD6,FXD6	3	70-250	480
			NJGA	3	200-400	480
			NLGA,NLGB	3	400-600	480
			JXD6-A,JD6-A	3	200-400	480
			LD6-A	3	200-600	480
			LXD6-A	3	450-600	480
		HLD6 (2,3P)	ED4	1	15-100	277
			HED4	1	15-100	277
			FD6-A,FXD6-A	2	70-250	480
			FD6,FXD6	2	70-250	480
			JXD6,JD6	2	200-400	480
			LD6	2	200-600	480
			LXD6	2	450-600	480
		HLD6 (3P)	FD6-A,FXD6-A	3	70-250	480
			FD6,FXD6	3	70-250	480
			JXD6,JD6	3	200-400	480
			LD6	3	200-600	480
			LXD6	3	450-600	480
		HLXD6-A (2,3P)	ED4	1	15-100	277
			HED4	1	15-100	277
			NDGA,NDGB	2	50-150	480
			NFGA,NFGB	2	70-250	480
			FD6-A,FXD6-A	2	70-250	480
			FD6,FXD6	2	70-250	480
			NJGA	2	250-400	480
			JXD6-A,JD6-A	2	200-400	480
			JXD6,JD6	2	200-400	480
			NLGA,NLGB	2	400-600	480
			LD6-A	2	200-600	480
			LD6	2	200-600	480
			LXD6-A	2	450-600	480
			LXD6	2	450-600	480
		HLXD6-A (3P)	NDGA,NDGB	3	50-150	480
			NFGA,NFGB	3	70-250	480
			FD6-A,FXD6-A	3	70-250	480
			FD6,FXD6	3	70-250	480
			NJGA	3	250-400	480
			JXD6-A,JD6-A	3	200-400	480
			JXD6,JD6	3	200-400	480
			NLGA,NLGB	3	400-600	480
			LD6-A	3	200-600	480
			LD6	3	200-600	480
			LXD6-A	3	450-600	480
			LXD6	3	450-600	480
		HLXD6 (2,3P)	ED4	1	15-100	277
			HED4	1	15-100	277
			FD6-A,FXD6-A	2	70-250	480
			FD6,FXD6	2	70-250	480
			JXD6,JD6	2	200-400	480
			LD6	2	200-600	480
			LXD6	2	450-600	480
			NGB,HGB	1	15-125	277
		HLXD6 (3P)	FD6-A,FXD6-A	3	70-250	480
			FD6,FXD6	3	70-250	480
			JXD6,JD6	3	200-400	480
			LD6	3	200-600	480
			LXD6	3	450-600	480
		HHLXD6 (2,3P)	NGB,HGB	1	15-125	277
				2	15-125	277/480

480V Series Ratings (Continued)

Series Rating	Main Breaker		Branch Breaker			
	Max. Amps	Type	Type	Poles	Amps	Volts
65,000	600	HHLXD6 (3P)	NGB,HGB	3	15-125	277/480
		HHLD6 (2,3P)	NGB,HGB	2	15-125	277/480
		HHLD6 (3P)	NGB,HGB	3	15-125	277/480
	800	HMG (2,3P)	NDGA,NDGB	2	50-150	480
			NFGA,NFGB	2	70-250	480
			NJGA	2	250-400	480
			NLGA,NLGB	2	400-600	480
			NMG	2	600-800	480
			LMD6,LMXD6	2	600-800	480
			MD6,MXD6	2	400-800	480
		HMG (3P)	NDGA,NDGB	3	50-150	480
			NFGA,NFGB	3	70-250	480
			NJGA	3	250-400	480
			NLGA,NLGB	3	400-600	480
			NMG	3	600-800	480
			LMD6,LMXD6	3	600-800	480
			MD6,MXD6	3	400-800	480
		HMD6,HMXD6 (2,3P)	NDGA,NDGB	2	50-150	480
			NFGA,NFGB	2	70-250	480
			FXD6,FD6	2	70-250	480
			FXD6-A,FD6-A	2	70-250	480
			NJGA	2	250-400	480
			JXD6,JD6	2	200-400	480
			JXD6-A,JD6-A	2	200-400	480
			NLGA,NLGB	2	400-600	480
			LD6	2	200-600	480
			LD6-A	2	200-600	480
			LXD6	2	450-600	480
			LXD6-A	2	450-600	480
			LMD6,LMXD6	2	600-800	480
			NMG	2	600-800	480
			MD6	2	500-800	480
		HMD6,HMXD6 (3P)	NDGA,NDGB	3	50-150	480
			NFGA,NFGB	3	70-250	480
			FXD6,FD6	3	70-250	480
			FXD6-A,FD6-A	3	70-250	480
			NJGA	3	250-400	480
			JXD6,JD6	3	200-400	480
			JXD6-A,JD6-A	3	200-400	480
			NLGA,NLGB	3	400-600	480
			LD6	3	200-600	480
			LD6-A	3	200-600	480
			LXD6	3	450-600	480
			LXD6-A	3	450-600	480
			LMD6,LMXD6	3	600-800	480
			NMG	3	600-800	480
			MD6	3	500-800	480
	1200	HNG (2,3P)	NDGA,NDGB	2	50-150	480
			NFGA,NFGB	2	70-250	480
			NJGA	2	250-400	480
			NLGA,NLGB	2	400-600	480
			NMG	2	600-800	480
			LMD6,LMXD6	2	600-800	480
			MD6,MXD6	2	400-800	480
			NNG	2	800-1200	480
			ND6,NXD6	2	800-1200	480
		HNG (3P)	NDGA,NDGB	3	50-150	480
			NFGA,NFGB	3	70-250	480
			NJGA	3	250-400	480
			NLGA,NLGB	3	400-600	480
			NMG	3	600-800	480
			LMD6,LMXD6	3	600-800	480
			MD6,MXD6	3	400-800	480
			NNG	3	800-1200	480
			ND6,NXD6	3	800-1200	480
		HND6,HNXD6 (2,3P)	NDGA,NDGB	2	50-150	480
			NFGA,NFGB	2	70-250	480
			FXD6,FD6	2	70-250	480
			FXD6-A,FD6-A	2	70-250	480
			NJGA	2	250-400	480
			JXD6,JD6	2	200-400	480
			JXD6-A,JD6-A	2	200-400	480

480V Series Ratings (Continued)

Series Rating	Main Breaker		Branch Breaker			
	Max. Amps	Type	Type	Poles	Amps	Volts
65,000	1200	HND6,HNXD6 (2,3P)	NLGA,NLGB	2	400-600	480
			LD6	2	200-600	480
			LD6-A	2	200-600	480
			LXD6	2	450-600	480
			LXD6-A	2	450-600	480
			NMG	2	600-800	480
			LMD6,LMXD6	2	600-800	480
			MD6,MXD6	2	500-800	480
			NNG	2	800-1200	480
			ND6,NXD6	2	800-1200	480
		HND6,HNXD6 (3P)	NDGA,NDGB	3	50-150	480
			NFGA,NFGB	3	70-250	480
			FXD6,FD6	3	70-250	480
			FXD6-A,FD6-A	3	70-250	480
			NJGA	3	250-400	480
			JXD6,JD6	3	200-400	480
			JXD6-A,JD6-A	3	200-400	480
			NLGA,NLGB	3	400-600	480
			LD6	3	200-600	480
			LD6-A	3	200-600	480
			LXD6	3	450-600	480
			LXD6-A	3	450-600	480
			NMG	3	600-800	480
			LMD6,LXMD6	3	600-800	480
			MD6,MXD6	3	500-800	480
			SMD6	3	500-800	480
			NNG	3	800-1200	480
			ND6,NXD6	3	800-1200	480
		HPG (2,3P)	NDGA,NDGB	2	50-150	480
			NFGA,NFGB	2	70-250	480
			NJGA	2	250-400	480
			NLGA,NLGB	2	400-600	480
			NMG	2	600-800	480
			MD6,MXD6	2	400-800	480
			LMD6,LMXD6	2	600-800	480
			NNG	2	800-1200	480
			ND6,NXD6	2	800-1200	480
			NPG	2	1200-1600	480
	1600	HPG (3P)	NDGA,NDGB	3	50-150	480
			NFGA,NFGB	3	70-250	480
			NJGA	3	250-400	480
			NLGA,NLGB	3	400-600	480
			NMG	3	600-800	480
			MD6,MXD6	3	400-800	480
			LMD6,LMXD6	3	600-800	480
			NNG	3	800-1200	480
			ND6,NXD6	3	800-1200	480
			NPG	3	1200-1600	480
		HPD6,HPXD6 (3P)	NDGA,NDGB	2	50-150	480
				3	50-150	480
			NFGA,NFGB	2	70-250	480
				3	70-250	480
			FXD6,FD6	2	70-250	480
				3	70-250	480
			FXD6-A,FD6-A	2	70-250	480
				3	70-250	480
			NJGA	2	250-400	480
				3	250-400	480
			NLGA,NLGB	2	400-600	480
				3	400-600	480
			NMG	2	600-800	480
				3	600-800	480
			NNG	2	800-1200	480
				3	800-1200	480
			NPG	2	1200-1600	480
				3	1200-1600	480
	2000	HRD6,HRXD6 (3P)	NDGA,NDGB	2	50-150	480
				3	50-150	480
			NFGA,NFGB	2	70-250	480
				3	70-250	480
			FXD6,FD6	2	70-250	480
				3	70-250	480

480V Series Ratings (Continued)

Series Rating	Main Breaker		Branch Breaker			
	Max. Amps	Type	Type	Poles	Amps	Volts
65,000	2000	HRD6,HRXD6 (3P)	FXD6-A,FD6-A	2	70-250	480
				3	70-250	480
			NJGA	2	250-400	480
				3	250-400	480
			JD6,JXD6	2	200-400	480
				3	200-400	480
			JD6-A,JXD6-A	2	200-400	480
				3	200-400	480
			NLGA,NLGB	2	400-600	480
				3	400-600	480
			LD6	2	200-600	480
				3	200-600	480
			LD6-A	2	200-600	480
				3	200-600	480
			LXD6	2	450-600	480
				3	450-600	480
			LXD6-A	2	450-600	480
				3	450-600	480
			NMG	2	600-800	480
				3	600-800	480
			NNG	2	800-1200	480
				3	800-1200	480
			NPG	2	1200-1600	480
				3	1200-1600	480
100,000	150	LDGA,LDGB (2,3P)	NGB,HGB,LGB	1	15-125	277
				2	15-125	277/480
		LDGA,LDGB (3P)	NGB,HGB,LGB	3	15-125	277/480
	250	LFGA,LFGB (2,3P)	NGB,HGB,LGB	1	15-125	277
				2	15-125	277/480
			NDGB,HDGB	2	50-150	480
			NDGA,HDGA	2	50-150	480
			NFGB,HFGB	2	70-250	480
			NFGA,HFGA	2	70-250	480
			HFD6,HFXD6	2	70-250	480
		LFGA,LFGB (3P)	NGB,HGB,LGB	3	15-125	277/480
			NDGB,HDGB	3	50-150	480
			NDGA,HDGA	3	50-150	480
			NFGB,HFGB	3	70-250	480
			NFGA,HFGA	3	70-250	480
			HFD6,HFXD6	3	70-250	480
		HHFD6 (2,3P)	NGB,HGB,LGB	1	15-125	277
				2	15-125	277/480
		HHFD6 (3P)	NGB,HGB,LGB	3	15-125	277/480
		HHFXD6 (2,3P)	NGB,HGB,LGB	1	15-125	277
				2	15-125	277/480
		HHFXD6 (3P)	NGB,HGB,LGB	3	15-125	277/480
	400	CJD6(-A) (2,3P)	NGB,HGB,LGB	1	15-125	277
				2	15-125	277/480
		CJD6(-A) (3P)	NGB,HGB,LGB	3	15-125	277/480
		LJGA (2,3P)	NDGB,HDGB	2	50-150	480
			NDGA,HDGA	2	50-150	480
			NFGB,HFGB	2	70-250	480
			NFGA,HFGA	2	70-250	480
			HFD6,HFXD6	2	70-250	480
		LJGA (3P)	NDGB,HDGB	3	50-150	480
			NDGA,HDGA	3	50-150	480
			NFGB,HFGB	3	70-250	480
			NFGA,HFGA	3	70-250	480
			HFD6,HFXD6	3	70-250	480
		HHJD6 (2,3P)	ED4,ED6	1	15-100	277
			HED4,HED6	1	15-100	277
			FD6-A,FXD6-A	2	70-250	480
			FD6,FXD6	2	70-250	480
			HFD6,HFXD6	2	70-250	480
		HHJD6 (3P)	FD6-A,FXD6-A	3	70-250	480
			FD6,FXD6	3	70-250	480
			HFD6,HFXD6	3	70-250	480
		HHJXD6 (2,3P)	ED4,ED6	1	15-100	277
			HED4,HED6	1	15-100	277

480V Series Ratings (Continued)

Series Rating	Main Breaker		Branch Breaker			
	Max. Amps	Type	Type	Poles	Amps	Volts
100,000	400	HHJXD6 (2,3P)	FD6-A,FXD6-A	2	70-250	480
			FD6,FXD6	2	70-250	480
			HFD6,HFXD6	2	70-250	480
		HHJXD6 (3P)	FD6-A,FXD6-A	3	70-250	480
			FD6,FXD6	3	70-250	480
			HFD6,HFXD6	3	70-250	480
	600	LLGA,LLGB (2,3P)	NDGB,HDGB	2	50-150	480
			NDGA,HDGA	2	50-150	480
			NFGB,HFGB	2	70-250	480
			NFGA,HFGA	2	70-250	480
			HFD6,HFXD6	2	70-250	480
			NJGA,HJGA	2	200-400	480
		LLGA,LLGB (3P)	NDGB,HDGB	3	50-150	480
			NDGA,HDGA	3	50-150	480
			NFGB,HFGB	3	70-250	480
			NFGA,HFGA	3	70-250	480
			HFD6,HFXD6	3	70-250	480
			NJGA,HJGA	3	200-400	480
		HHLD6 (2,3P)	NDGB,HDGB	2	50-150	480
			NDGA,HDGA	2	50-150	480
			NFGB,HFGB	2	70-250	480
			NFGA,HFGA	2	70-250	480
			ED4,ED6	1	15-100	277
			HED4,HED6	1	15-100	277
			FD6-A,FXD6-A	2	70-250	480
			FD6,FXD6	2	70-250	480
			HFD6,HFXD6	2	70-250	480
			NJGA,HJGA	2	200-400	480
		HHLD6 (3P)	NDGB,HDGB	3	50-150	480
			NDGA,HDGA	3	50-150	480
			NFGB,HFGB	3	70-250	480
			NFGA,HFGA	3	70-250	480
			FD6-A,FXD6-A	3	70-250	480
			FD6,FXD6	3	70-250	480
			HFD6,HFXD6	3	70-250	480
			NJGA,HJGA	3	200-400	480
		HHLXD6 (2,3P)	NDGB,HDGB	2	50-150	480
			NDGA,HDGA	2	50-150	480
			NFGB,HFGB	2	70-250	480
			NFGA,HFGA	2	70-250	480
			ED4,ED6	1	15-100	277
			HED4,HED6	1	15-100	277
			FD6-A,FXD6-A	2	70-250	480
			FD6,FXD6	2	70-250	480
			HFD6,HFXD6	2	70-250	480
			NJGA,HJGA	2	200-400	480
		HHLXD6 (3P)	NDGB,HDGB	3	50-150	480
			NDGA,HDGA	3	50-150	480
			NFGB,HFGB	3	70-250	480
			NFGA,HFGA	3	70-250	480
			FD6-A,FXD6-A	3	70-250	480
			FD6,FXD6	3	70-250	480
			HFD6,HFXD6	3	70-250	480
			NJGA,HJGA	3	200-400	480
	800	LMG (2,3P)	NDGB,HDGB	2	50-150	480
			NDGA,HDGA	2	50-150	480
			NFGB,HFGB	2	70-250	480
			NFGA,HFGA	2	70-250	480
			HFD6,HFXD6	2	70-250	480
			NJGA,HJGA	2	200-200	480
			NLGB,HLGB	2	400-600	480
			NLGA,HLGA	2	400-600	480
			MD6,MXD6	2	400-800	480
			HMD6,HMXD6	2	400-800	480
		LMG (3P)	NDGB,HDGB	3	50-150	480
			NDGA,HDGA	3	50-150	480
			NFGB,HFGB	3	70-250	480
			NFGA,HFGA	3	70-250	480
			HFD6,HFXD6	3	70-250	480
			NJGA,HJGA	3	200-200	480
			NLGB,HLGB	3	400-600	480

480V Series Ratings (Continued)

Series Rating	Main Breaker		Branch Breaker			
	Max. Amps	Type	Type	Poles	Amps	Volts
100,000	800	LMG (3P)	NLGA,HLGA	3	400-600	480
			MD6,MXD6	3	400-800	480
			HMD6,HMXD6	3	400-800	480
		CMD6 (3P)	NDGB,HDGB	2	50-150	480
				3	50-150	480
			NDGA,HDGA	2	50-150	480
				3	50-150	480
			NFGB,HFGB	2	70-250	480
				3	70-250	480
			NFGA,HFGA	2	70-250	480
				3	70-250	480
			FXD6,FD6	2	70-250	480
				3	70-250	480
			FXD6-A,FD6-A	2	70-250	480
				3	70-250	480
			HFD6,HFXD6	2	70-250	480
				3	70-250	480
			NJGA,HJGA	2	200-200	480
				3	200-200	480
			JXD6,JD6	2	200-400	480
				3	200-400	480
			JXD6-A,JD6-A	2	200-400	480
				3	200-400	480
			HJD6,HJXD6	2	200-400	480
				3	200-400	480
			HJD6-A	2	200-400	480
			HJXD6-A	2	200-400	480
			HJD6-A	3	200-400	480
			HJXD6-A	3	200-400	480
			NLGB,HLGB	2	400-600	480
				3	400-600	480
			NLGA,HLGA	2	400-600	480
				3	400-600	480
			LD6	2	200-600	480
				3	200-600	480
			LD6-A	2	200-600	480
				3	200-600	480
			LXD6	2	450-600	480
				3	450-600	480
			LXD6-A	2	450-600	480
				3	450-600	480
			HLD6	2	200-600	480
				3	200-600	480
			HLD6-A	2	200-600	480
				3	200-600	480
			HLXD6	2	450-600	480
				3	450-600	480
			HLXD6-A	2	450-600	480
				3	450-600	480
			MD6,MXD6	2	500-800	480
				3	500-800	480
			HMD6,HMXD6	2	500-800	480
				3	500-800	480
		SCMD6 (3P)	HFD6,HFXD6	2	70-250	480
				3	70-250	480
	1200	LNG (2,3P)	NDGB,HDGB	2	50-150	480
			NDGA,HDGA	2	50-150	480
			NFGB,HFGB	2	70-250	480
			NFGA,HFGA	2	70-250	480
			HFD6,HFXD6	2	70-250	480
			NJGA,HJGA	2	200-400	480
			NLGB,HLGB	2	400-600	480
			NLGA,HLGA	2	400-600	480
			MD6,MXD6	2	400-800	480
			HMD6,HMXD6	2	400-800	480
			ND6,NXD6	2	600-1200	480
			HND6,HNXD6	2	600-1200	480
		LNG (3P)	NDGB,HDGB	3	50-150	480
			NDGA,HDGA	3	50-150	480
			NFGB,HFGB	3	70-250	480
			NFGA,HFGA	3	70-250	480

480V Series Ratings (Continued)

Series Rating	Main Breaker		Branch Breaker			
	Max. Amps	Type	Type	Poles	Amps	Volts
100,000	1200	LNG (3P)	HFD6,HFXD6	3	70-250	480
			NJGA,HJGA	3	200-400	480
			NLGB,HLGB	3	400-600	480
			NLGA,HLGA	3	400-600	480
			MD6,MXD6	3	400-800	480
			HMD6,HMXD6	3	400-800	480
			ND6,NXD6	3	600-1200	480
			HND6,HNXD6	3	600-1200	480
		CND6 (3P)	NDGB,HDGB	2	50-150	480
				3	50-150	480
			NDGA,HDGA	2	50-150	480
				3	50-150	480
			NFGB,HFGB	2	70-250	480
				3	70-250	480
			NFGA,HFGA	2	70-250	480
				3	70-250	480
			FXD6,FD6	2	70-250	480
				3	70-250	480
			FXD6-A,FD6-A	2	70-250	480
				3	70-250	480
			HFD6,HFXD6	2	70-250	480
				3	70-250	480
			NJGA,HJGA	2	200-400	480
				3	200-400	480
			JXD6,JD6	2	200-400	480
				3	200-400	480
			JXD6-A,JD6-A	2	200-400	480
				3	200-400	480
			HJD6,HJXD6	2	200-400	480
				3	200-400	480
			HJD6-A	2	200-400	480
			HJXD6-A	2	200-400	480
			HJD6-A	3	200-400	480
			HJXD6-A	3	200-400	480
			NLGB,HLGB	2	400-600	480
				3	400-600	480
			NLGA,HLGA	2	400-600	480
				3	400-600	480
			LD6	2	200-600	480
				3	200-600	480
			LD6-A	2	200-600	480
				3	200-600	480
			LXD6	2	450-600	480
				3	450-600	480
			LXD6-A	2	450-600	480
				3	450-600	480
			HLD6	2	200-600	480
				3	200-600	480
			HLD6-A	2	200-600	480
				3	200-600	480
			HLXD6	2	450-600	480
				3	450-600	480
			HLXD6-A	2	450-600	480
				3	450-600	480
			MD6,MXD6	2	500-800	480
				3	500-800	480
			HMD6,HMXD6	2	500-800	480
				3	500-800	480
			ND6,NXD6	2	500-1200	480
				3	500-1200	480
			HND6,HNXD6	2	500-1200	480
				3	500-1200	480
		SCND6 (3P)	HFD6,HFXD6	2	70-250	480
				3	70-250	480
		LPG (2,3P)	ND6,NXD6	2	600-1200	480
			HND6,HNXD6	2	600-1200	480
		LPG (3P)	ND6,NXD6	3	600-1200	480
			HND6,HNXD6	3	600-1200	480
	1600	LPG (2,3P)	NDGB,HDGB	2	50-150	480
			NDGA,HDGA	2	50-150	480
			NFGB,HFGB	2	70-250	480

480V Series Ratings (Continued)

Series Rating	Main Breaker		Branch Breaker			
	Max. Amps	Type	Type	Poles	Amps	Volts
100,000	1600	LPG (2,3P)	NFGA,HFGA	2	70-250	480
			HFD6,HFXD6	2	70-250	480
			NJGA,HJGA	2	200-400	480
			NLGB,HLGB	2	400-600	480
			NLGA,HLGA	2	400-600	480
			MD6,MXD6	2	400-800	480
			HMD6,HMXD6	2	400-800	480
			PD6,PXD6	2	1200-1600	480
			HPD6,HPXD6	2	1200-1600	480
		LPG (3P)	NDGB,HDGB	3	50-150	480
			NDGA,HDGA	3	50-150	480
			NFGB,HFGB	3	70-250	480
			NFGA,HFGA	3	70-250	480
			HFD6,HFXD6	3	70-250	480
			NJGA,HJGA	3	200-400	480
			NLGB,HLGB	3	400-600	480
			NLGA,HLGA	3	400-600	480
			MD6,MXD6	3	400-800	480
			HMD6,HMXD6	3	400-800	480
			PD6,PXD6	3	1200-1600	480
			HPD6,HPXD6	3	1200-1600	480
		CPD6 (3P)	NDGB,HDGB	2	50-150	480
				3	50-150	480
			NDGA,HDGA	2	50-150	480
				3	50-150	480
			NFGB,HFGB	2	70-250	480
				3	70-250	480
			NFGA,HFGA	2	70-250	480
				3	70-250	480
			FXD6,FD6	2	70-250	480
				3	70-250	480
			FXD6-A,FD6-A	2	70-250	480
				3	70-250	480
			HFD6,HFXD6	2	70-250	480
				3	70-250	480
			NJGA,HJGA	2	200-400	480
				3	200-400	480
			NLGB,HLGB	2	400-600	480
				3	400-600	480
			NLGA,HLGA	2	400-600	480
				3	400-600	480
150,000	400	CJD6(-A) (2,3P)	ED4	1	15-100	277
			HFD6,HFXD6	2	70-250	480
			JXD6,JD6	2	200-400	480
			JXD6-A,JD6-A	2	200-400	480
			HJD6,HJXD6	2	200-400	480
			HJD6-A	2	200-400	480
			HJXD6-A	2	200-400	480
		CJD6(-A) (3P)	HFD6,HFXD6	3	70-250	480
			JXD6,JD6	3	200-400	480
			JXD6-A,JD6-A	3	200-400	480
			HJD6,HJXD6	3	200-400	480
			HJD6-A	3	200-400	480
			HJXD6-A	3	200-400	480
	600	CLD6(-A) (2,3P)	ED4	1	15-100	277
			HFD6,HFXD6	2	70-250	480
			JXD6,JD6	2	200-400	480
			JXD6-A,JD6-A	2	200-400	480
			HJD6,HJXD6	2	200-400	480
			HJD6-A	2	200-400	480
			HJXD6-A	2	200-400	480
			LD6	2	200-600	480
			LD6-A	2	200-600	480
			LXD6	2	450-600	480
			LXD6-A	2	450-600	480
			HLD6	2	200-600	480
			HLD6-A	2	200-600	480
			HLXD6	2	450-600	480
			HLXD6-A	2	450-600	480
		CLD6(-A) (3P)	HFD6,HFXD6	3	70-250	480

480V Series Ratings (Continued)

Series Rating	Main Breaker		Branch Breaker			
	Max. Amps	Type	Type	Poles	Amps	Volts
150,000	600	CLD6(-A) (3P)	JXD6,JD6	3	200-400	480
			JXD6-A,JD6-A	3	200-400	480
			HJD6,HJXD6	3	200-400	480
			HJD6-A	3	200-400	480
			HJXD6-A	3	200-400	480
			LD6	3	200-600	480
			LD6-A	3	200-600	480
			LXD6	3	450-600	480
			LXD6-A	3	450-600	480
			HLD6	3	200-600	480
			HLD6-A	3	200-600	480
			HLXD6	3	450-600	480
			HLXD6-A	3	450-600	480
200,000	125	CED6 (2,3P)	NGB,HGB,LGB	1	15-125	277
				2	15-125	277/480
			ED4	1	15-100	277
			ED4,ED6	2	15-125	480
			HED4	1	15-100	277
			HED4,HED6	2	15-125	480
		CED6 (3P)	NGB,HGB,LGB	3	15-125	277/480
			ED4,ED6	3	15-125	480
			HED4,HED6	3	15-125	480
	250	CFD6 (2,3P)	NGB,HGB,LGB	1	15-125	277
				2	15-125	277/480
			ED4	1	15-100	277
			ED4,ED6	2	15-50	480
			HED4	1	15-100	277
			HED4,HED6	2	15-125	480
			FXD6,FD6	2	70-250	480
			FXD6-A,FD6-A	2	70-250	480
			HFD6,HFXD6	2	70-250	480
		CFD6 (3P)	NGB,HGB,LGB	3	15-125	277/480
			ED4,ED6	3	15-50	480
			HED4,HED6	3	15-125	480
			FXD6,FD6	3	70-250	480
			FXD6-A,FD6-A	3	70-250	480
			HFD6,HFXD6	3	70-250	480

600V Series Ratings

Series Rating	Main Breaker/Fuse		Branch Breaker			
	Max. Amps	Type	Type	Number of Poles	Amperes	Voltage
14,000	125	NGB2 (2,&3P)	BQD6	1	15-70	347
				2,3		347/600
18,000	125	ED6, HED6 (1,2,&3P)	BQD6	1	15-70	347
				2,3		347/600
		ED6 (2,3P)	NGB, NGB2	1	15-125	347
				2,3		347/600
22,000	125	HGB2 (2,&3P)	BQD6	1	15-70	347
				2,3		347/600
	250	HFD6, HFXD6 (2,&3P)	NGB, NGB2	1	15-125	347
				2,3		347/600
25,000	125	LGB2 (2,3P)	BQD6	1	15-70	347
				2,3		347/600
	250	HFD6, HFXD6 (2,&3P)	BQD6	1	15-70	347
				2,3		347/600
			ED6, HED6	2,3	15-125	600
			NGB, NGB2, HGB2	1	15-125	347
				2,3		347/600
35,000	400	HJD6 (-A) , HJXD6 (-A) (2,&3P)	HFD6	2,3	70-250	600
	600	HLD6 (-A) (2,&3P)	HFD6	2,3	70-250	600
		HLXD6 (-A) (2,&3P)	HFD6	2,3	70-250	600
50,000	800	HMD6, HMXD6 (2,&3P)	HFD6	2,3	70	600
			JD6 (-A), JXD6 (-A)	2,3	200-400	600
			HJD6 (-A), HJXD6 (-A)	2,3	200-400	600
			LD6 (-A), HLD6 (-A)	2,3	200-600	600
			LXD6 (-A), HLXD6 (-A)	2,3	450-600	600
	1200	HND6, HNXD6 (2,&3P)	HFD6	2,3	70	600
			JD6 (-A), JXD6 (-A)	2,3	200-400	600
			HJD6 (-A), HJXD6 (-A)	2,3	200-400	600
			LD6 (-A), HLD6 (-A)	2,3	200-600	600
			LXD6 (-A), HLXD6 (-A)	2,3	450-600	600
65,000	250	CFD6 (2,&3P)	BQD6	2,3	15-70	347/600
			ED6, HED6	2,3	15-125	600
	800	CMD6 (2,&3P)	HFD6	2,3	70	600
			JD6 (-A), JXD6 (-A)	2,3	200-400	600
			HJD6 (-A), HJXD6 (-A)	2,3	200-400	600
			LD6 (-A), HLD6 (-A)	2,3	200-600	600
			LXD6 (-A), HLXD6 (-A)	2,3	450-600	600
	1200	CND6 (2,&3P)	HFD6	2,3	70	600
			JD6 (-A), JXD6 (-A)	2,3	200-400	600
			HJD6 (-A), HJXD6 (-A)	2,3	200-400	600
			LD6 (-A), HLD6 (-A)	2,3	200-600	600
			LXD6 (-A), HLXD6 (-A)	2,3	450-600	600
	1600	PD6, HPXD6 (2,&3P)	HFD6	2,3	70	600
			JD6 (-A), JXD6 (-A)	2,3	200-400	600
			HJD6 (-A), HJXD6 (-A)	2,3	200-400	600
			LD6 (-A), HLD6 (-A)	2,3	200-600	600
			LXD6 (-A), HLXD6 (-A)	2,3	450-600	600
		CPD6 (2,&3P)	HFD6	2,3	70	600
			JD6 (-A), JXD6 (-A)	2,3	200-400	600
			HJD6 (-A), HJXD6 (-A)	2,3	200-400	600
			LD6 (-A), HLD6 (-A)	2,3	200-600	600
			LXD6 (-A), HLXD6 (-A)	2,3	450-600	600
100,000	125	CED6 (2,&3P)	BQD6	1	15-70	347
				2,3		347/600
			ED6, HED6	2,3	15-125	600
			NGB, NGB2, HGB2, LGB2	1	15-125	347
				2,3		347/600
	250	CFD6 (3P)	BQD6	1	15-70	347
			ED6, HED6	2,3	15-125	600
			HFD6	2,3	70-250	600
			NGB, NGB2, HGB2, LGB2	1	15-125	347
				2,3		347/600

600V 3VA Breaker

Series Rating	Main Breaker/Fuse			Branch Breaker				
	Max Amps	Type	Interrupting Class	Type	Interrupting Class	Poles	Amps	Volts
18,000	250	3VA52	MFAS (2,3P)	3VA41	SEAB	1	15-125	347
						2		600Y/347
						3		600Y/347
		3VA62	MFAE (3P)			1		347
						2		600Y/347
						3		600Y/347
	400	3VA53	MJAS (2,3P)			1		347
						2	15-30	600Y/347
						3		600Y/347
		3VA63	MJAE (3P)			1	15-125	347
						2	15-30	600Y/347
						3		600Y/347
	600	3VA54	MLAS (2,3P)			1	15-125	347
22,000	150	3VA61	HDAE (2,3P)	3VA41	SEAB	1	15-125	347
					MEAB	1		347
					SEAB	2		600Y/347
					MEAB	2		600Y/347
					SEAB	3		600Y/347
					MEAB	3		600Y/347
	250	3VA62	HFAE (3P)		SEAB	1	15-125	347
					MEAB	1		347
					SEAB	2		600Y/347
					MEAB	2		600Y/347
					SEAB	3		600Y/347
					MEAB	3		600Y/347
	400	3VA63	HJAE (3P)		SEAB	1	15-125	347
					MEAB	1		347
					SEAB	2	15-30	600Y/347
					MEAB	2		600Y/347
					SEAB	3		600Y/347
					MEAB	3		600Y/347
25,000	250	3VA52	HFAS (2,3P)	3VA41	SEAB	1	15-125	347
					MEAB	1		347
					HEAB	1		347
					SEAB	2		600Y/347
					MEAB	2		600Y/347
					HEAB	2		600Y/347
					SEAB	3		600Y/347
					MEAB	3		600Y/347
					HEAB	3		600Y/347
	400	3VA53	HJAS (2,3P)		SEAB	1	15-125	347
					MEAB	1		347
					SEAB	2	15-30	600Y/347
					MEAB	2		600Y/347
					SEAB	3		600Y/347
					MEAB	3		600Y/347
	600	3VA54	HLAS (2,3P)		SEAB	1	15-125	347
					MEAB	1		347
35,000	150	3VA61	CDAE (2,3P)	3VA41	SEAB	1	15-125	347
					MEAB	1		347
					HEAB	1		347
					SEAB	2		600Y/347
					MEAB	2		600Y/347
					HEAB	2		600Y/347
					SEAB	3		600Y/347
					MEAB	3		600Y/347
					HEAB	3		600Y/347
35,000	250	3VA52	CFAS (2,3P)		SEAB	1	15-125	347
					MEAB	1		347
					HEAB	1		347
					SEAB	2		600Y/347
					MEAB	2		600Y/347
					HEAB	2		600Y/347
					SEAB	3		600Y/347
					MEAB	3		600Y/347
					HEAB	3		600Y/347

600V 3VA Breaker (Continued)

	Main Breaker/Fuse			Branch Breaker				
Series Rating	Max Amps	Type	Interrupting Class	Type	Interrupting Class	Poles	Amps	Volts
35,000	250	3VA52	CFAE (3P)	3VA41	SEAB	1	15-125	347
					MEAB	1		347
					HEAB	1		347
					SEAB	2		600Y/347
					MEAB	2		600Y/347
					HEAB	2		600Y/347
					SEAB	3		600Y/347
					MEAB	3		600Y/347
					HEAB	3		600Y/347
	400	3VA53	CJAS (2,3P)		SEAB	1	15-125	347
					MEAB	1		347
					HEAB	1		347
					SEAB	2	15-30	600Y/347
					MEAB	2		600Y/347
					HEAB	2		600Y/347
					SEAB	3		600Y/347
					MEAB	3		600Y/347
					HEAB	3		600Y/347
		3VA63	CJAE (3P)		SEAB	1	15-125	347
					MEAB	1		347
					HEAB	1		347
					SEAB	2	15-30	600Y/347
					MEAB	2		600Y/347
					HEAB	2		600Y/347
					SEAB	3		600Y/347
					MEAB	3		600Y/347
					HEAB	3		600Y/347
	600	3VA54	CLAS (2,3P)		SEAB	1	15-125	347
					MEAB	1		347
					HEAB	1		347
50,000	150	3VA61	LDAE (2,3P)	3VA41	SEAB	1	15-125	347
					MEAB	1		347
					HEAB	1		347
					SEAB	2		600Y/347
					MEAB	2		600Y/347
					HEAB	2		600Y/347
					SEAB	3		600Y/347
					MEAB	3		600Y/347
					HEAB	3		600Y/347
		3VA62	LFAE (3P)		SEAB	1	15-125	347
					MEAB	1		347
					HEAB	1		347
					SEAB	2		600Y/347
					MEAB	2		600Y/347
					HEAB	2		600Y/347
					SEAB	3		600Y/347
					MEAB	3		600Y/347
					HEAB	3		600Y/347
	400	3VA63	LJAE (3P)		SEAB	1	15-125	347
					MEAB	1		347
					HEAB	1		347
					SEAB	2	15-30	600Y/347
					MEAB	2		600Y/347
					HEAB	2		600Y/347
					SEAB	3		600Y/347
					MEAB	3		600Y/347
					HEAB	3		600Y/347
100,000	125	ED	CED6 (2,3P)	3VA41	SEAB	1	15-125	347
					MEAB	1		347
					HEAB	1		347
					SEAB	2		600Y/347
					MEAB	2		600Y/347
					HEAB	2		600Y/347
					SEAB	3		600Y/347
					MEAB	3		600Y/347
					HEAB	3		600Y/347
	250	FD	CFD6-A (2,3P)		SEAB	1		347
					MEAB	1		347
					HEAB	1		347
					SEAB	2		600Y/347
					MEAB	2		600Y/347
					HEAB	2		600Y/347
					SEAB	3		600Y/347
					MEAB	3		600Y/347
					HEAB	3		600Y/347

240 Volt Fuse Series Ratings

Series Connected Rating	Main Fuse		Branch Breaker		
	Type	Maximum Amperes	Type	No. of Poles	Amperes
65,000	J,R (1, 2, 3P)	600	QPH	1	15-70
			BQH,BLH	1	15-70
	J,R (2, 3P)		QPH	2	15-125
			BQH,BLH	2	15-125
			QN,QNH	2	150-200
			QNR,QNRH	2	150-200
	J,R (3P)		QPH	3	15-100
			BQH,BLH	3	15-100
	T (1, 2 3P)	1200	QPH	1	15-70
			BQH,BLH	1	15-70
	T (2, 3P)		QPH	2	15-125
			BQH,BLH	2	15-125
			QN,QNH	2	150-200
			QNR,QNRH	2	150-200
	T (3P)		QPH	3	15-100
			BQH,BLH	3	15-100
	L (1, 2 3P)	6000	QPH	1	15-70
			BQH,BLH	1	15-70
	L (2, 3P)		QPH	2	15-125
			BQH,BLH	2	15-125
			QN,QNH	2	150-200
			QNR,QNRH	2	150-200
	L (3P)		QPH	3	15-100
			BQH,BLH	3	15-100
100,000	T(300V) (1, 2 3P)	200	QP,BQ,BL	1	15-70
			QT	1,2	15-50
			QPF,BQF,BLF	1	15-30
			QE,BE,BLE	1	15-30
			QPHF,BQHF	1	15-30
			BLHF	1	15-30
			QEH,BLEH	1	15-30
			QPF2,BLF2	1	15-30
			QPHF2,BLHF2	1	15-30
			HQPF2,HBLF2	1	15-30
			QAF,BQAF,BAF	1	15-20
			QAFH,BQAFH	1	15-20
			BAFH	1	15-20
			QAF2,BAF2	1	15-20
			QAFH2,BAFH2	1	15-20
			HQAF2,HBAF2	1	15-20
			QFGA2,BFGA2	1	15-20
			QFGAH2,BFGAH2	1	15-20
			HQFGA2,HBFGA2	1	15-20
	T(300V) (2, 3P)		QP,BQ,BL	2	15-125
			QP,BQ,BL	2	15-125
			QPF,BLF	2	15-60
			QE,BLE	2	15-60
			QPHF,BLHF	2	15-60
			QEH,BLEH	2	15-60
	T(300V) (3P)		QP,BQ,BL	3	15-100
			QPH	3	15-100
			BQH,BLH	3	15-100
			HQP	3	15-100
			HBQ,HBL	3	15-100
	T(300V) (1, 2 3P)	600	QPH	1	15-70
			BQH,BLH	1	15-70
			HQP	1	15-70
			HBQ,HBL	1	15-70
	T(300V) (2, 3P)		QPH	2	15-125
			BQH,BLH	2	15-125
			HQP	2	15-125
			HBQ,HBL	2	15-125
	J,R (2, 3P)		QR2,QRH2,HQR2	2	100-250
			QR2,QRH2,HQR2	2	100-250
			ED4	1	15-100
			ED4,ED6	2	15-125
			HED4	1	15-100
			HED4,HED6	2	15-125
			FD6-A,FXD6-A	2	70-250

240 Volt Series Ratings (Continued)

Series Connected Rating	Main Fuse		Branch Breaker		
	Type	Maximum Amperes	Type	No. of Poles	Amperes
100,000	J,R (2, 3P)	600	FD6,FXD6	2	70-250
			JXD2-A	2	200-400
			JXD2	2	200-400
			JD6-A,JXD6-A	2	200-400
			JD6,JXD6	2	200-400
			LD6-A	2	200-600
			LD6	2	200-600
			LXD6-A	2	450-600
			LXD6	2	450-600
	J,R (3P)		QR2,QRH2,HQR2	3	100-250
			QR2,QRH2,HQR2	3	100-250
			ED4,ED6	3	15-125
			HED4,HED6	3	15-125
			FD6-A,FXD6-A	3	70-250
			FD6,FXD6	3	70-250
			JXD2-A	3	200-400
			JXD2	3	200-400
			JD6-A,JXD6-A	3	200-400
			JD6,JXD6	3	200-400
			SJD6-A	3	200-400
			SJD6	3	200-400
			LD6-A	3	200-600
			LD6	3	200-600
			LXD6-A	3	450-600
			LXD6	3	450-600
			SLD6-A	3	300-600
			SLD6	3	300-600
	T (2, 3P)	1200	ED4	1	15-100
			ED4,ED6	2	15-125
			HED4	1	15-100
			HED4,HED6	2	15-125
			FD6-A,FXD6-A	2	70-250
			FD6,FXD6	2	70-250
			JXD2-A	2	200-400
			JXD2	2	200-400
			JD6-A,JXD6-A	2	200-400
			JD6,JXD6	2	200-400
			LD6-A	2	200-600
			LD6	2	200-600
			LXD6-A	2	450-600
			LXD6	2	450-600
	T (3P)		ED4,ED6	3	15-125
			HED4,HED6	3	15-125
			FD6-A,FXD6-A	3	70-250
			FD6,FXD6	3	70-250
			JXD2-A	3	200-400
			JXD2	3	200-400
			JD6-A,JXD6-A	3	200-400
			JD6,JXD6	3	200-400
			SJD6-A	3	200-400
			SJD6	3	200-400
			LD6-A	3	200-600
			LD6	3	200-600
			LXD6-A	3	450-600
			LXD6	3	450-600
			SLD6-A	3	300-600
			SLD6	3	300-600
	T (2, 3P)	6000	ED4	1	15-100
			ED4,ED6	2	15-125
			HED4	1	15-100
			HED4,HED6	2	15-125
			FD6-A,FXD6-A	2	70-250
			FD6,FXD6	2	70-250
			JXD2-A	2	200-400
			JXD2	2	200-400
			JD6-A,JXD6-A	2	200-400
			JD6,JXD6	2	200-400
			LD6-A	2	200-600
			LD6	2	200-600
			LXD6-A	2	450-600

240 Volt Series Ratings (Continued)

Series Connected Rating	Main Fuse		Branch Breaker		
	Type	Maximum Amperes	Type	No. of Poles	Amperes
100,000	L (2, 3P)	6000	LXD6	2	450-600
			PD6,PXD6	3	1200-1600
			RD6,RXD6	3	1600-2000
	L (3P)		ED4,ED6	3	15-125
			HED4,HED6	3	15-125
			FD6-A,FXD6-A	3	70-250
			FD6,FXD6	3	70-250
			JXD2-A	3	200-400
			JXD2	3	200-400
			JD6-A,JXD6-A	3	200-400
			JD6,JXD6	3	200-400
			SJD6-A	3	200-400
			SJD6	3	200-400
			LD6-A	3	200-600
			LD6	3	200-600
			LXD6-A	3	450-600
			LXD6	3	450-600
			SLD6-A	3	300-600
			SLD6	3	300-600
			SMD6	3	500-800
			SND6	3	500-1200
			PD6,PXD6	3	1200-1600
			SPD6	3	1400-1600
			RD6,RXD6	3	1600-2000
200,000	R (2, 3P)	200	QJ2	2	125-200
			QJH2,QJ2H	2	125-200
	R (3P)		QJ2	3	125-200
			QJH2,QJ2H	3	125-200
	T,J (2, 3P)	400	QJ2	2	125-225
	T,J (3P)		QJ2	3	125-225
	T,J (2, 3P)	600	QJH2,QJ2H	2	125-225
	T,J (3P)		QJH2,QJ2H	3	125-225
	J,R (1, 2, 3P)		NGB,HGB,LGB	1	15-125
	J,R (2, 3P)		NGB,HGB,LGB	2	15-125
			NDGB,HDGB	2	50-150
			NDGA,HDGA	2	50-150
			NFGA,HFGA	2	70-250
			NFGB,HFGB	2	70-250
			HFD6,HFXD6	2	70-250
			NJGA,NJJA	2	200-400
			HJGA	2	200-400
			NLGA,HLGA	2	400-600
			NLGB,HLGB	2	400-600
	J,R (3P)		NGB,HGB,LGB	3	15-125
			NDGB,HDGB	3	50-150
			NDGA,HDGA	3	50-150
			NFGA,HFGA	3	70-250
			NFGB,HFGB	3	70-250
			HFD6,HFXD6	3	70-250
			NJGA,NJJA	3	200-400
			HJGA	3	200-400
			NLGA,HLGA	3	400-600
			NLGB,HLGB	3	400-600
	T (1, 2 3P)	1200	NGB,HGB,LGB	1	15-125
	T (2, 3P)		NGB,HGB,LGB	2	15-125
			NDGB,HDGB	2	50-150
			NDGA,HDGA	2	50-150
			NFGA,HFGA	2	70-250
			NFGB,HFGB	2	70-250
			HFD6,HFXD6	2	70-250
			NJGA,NJJA	2	200-400
			HJGA	2	200-400
			NLGA,HLGA	2	400-600
			NLGB,HLGB	2	400-600
	T (3P)		NGB,HGB,LGB	3	15-125
			NDGB,HDGB	3	50-150
			NDGA,HDGA	3	50-150
			NFGA,HFGA	3	70-250
			NFGB,HFGB	3	70-250
			HFD6,HFXD6	3	70-250

240 Volt Series Ratings (Continued)

Series Connected Rating	Main Fuse		Branch Breaker		
	Type	Maximum Amperes	Type	No. of Poles	Amperes
200,000	T (3P)	1200	NJGA,NJJA	3	200-400
			HJGA	3	200-400
			NLGA,HLGA	3	400-600
			NLGB,HLGB	3	400-600
	L (2, 3P)	6000	NDGB,HDGB	2	50-150
			NDGA,HDGA	2	50-150
			NFGA,HFGA	2	70-250
			NFGB,HFGB	2	70-250
			HFD6,HFXD6	2	70-250
			NJGA,NJJA	2	200-400
			HJGA	2	200-400
			NLGA,HLGA	2	400-600
			NLGB,HLGB	2	400-600
			MD6,MXD6	2	500-800
			HMD6,HMXD6	2	500-800
			ND6,NXD6	2	500-1200
			HND6,HNXD6	2	500-1200
	L (3P)		NDGB,HDGB	3	50-150
			NDGA,HDGA	3	50-150
			NFGA,HFGA	3	70-250
			NFGB,HFGB	3	70-250
			HFD6,HFXD6	3	70-250
			NJGA,NJJA	3	200-400
			HJGA	3	200-400
			NLGA,HLGA	3	400-600
			NLGB,HLGB	3	400-600
			MD6,MXD6	3	500-800
			HMD6,HMXD6	3	500-800
			ND6,NXD6	3	500-1200
			HND6,HNXD6	3	500-1200

480 Volt Fuse Series Ratings

Series Connected Rating	Main Breaker		Branch Breaker		
	Type	Maximum Amperes	Type	No. of Poles	Amperes
50,000	J (1,2,3P)	400	ED4	1	60-100
	J (2,3P)		ED4	2	15-100
	J (3P)		ED4	3	15-100
100,000	J (1,2,3P)	400	ED4	1	15-50
	T,J (2,3P)	600	FXD6,FD6	2	70-250
			FXD6-A,FD6-A	2	70-250
	T,J (3P)		FXD6,FD6	3	70-250
			FXD6-A,FD6-A	3	70-250
	J,R (2,3P)		HFD6,HFXD6	2	70-250
			NDGB,HDGB	2	50-150
			NDGA,HDGA	2	50-150
			NFGB,HFGB	2	70-250
			NFGA,HFGA	2	70-250
			NJGA,HJGA	2	200-400
			NLGB,HLGB	2	400-600
			NLGA,HLGA	2	400-600
	J,R (3P)		HFD6,HFXD6	3	70-250
			NDGB,HDGB	3	50-150
			NDGA,HDGA	3	50-150
			NFGB,HFGB	3	70-250
			NFGA,HFGA	3	70-250
			NJGA,HJGA	3	200-400
			NLGB,HLGB	3	400-600
			NLGA,HLGA	3	400-600
	T,J,R (2,3P)		JD6,JXD6	2	200-400
			JD6-A,JXD6-A	2	200-400
			LD6	2	200-600
			LD6-A	2	200-600
			LXD6	2	450-600
			LXD6-A	2	450-600
			HJD6,HJXD6	2	200-400
			HJD6-A	2	200-400
			HJXD6-A	2	200-400
			HLD6	2	200-600

480 Volt Fuse Series Ratings (continued)

Series Connected Rating	Main Breaker		Branch Breaker		
	Type	Maximum Amperes	Type	No. of Poles	Amperes
100,000	T,J,R (2,3P)	600	HLD6-A	2	200-600
			HLXD6	2	450-600
			HLXD6-A	2	450-600
	T,J,R (3P)		JD6,JXD6	3	200-400
			JD6-A,JXD6-A	3	200-400
			LD6	3	200-600
			LD6-A	3	200-600
			LXD6	3	450-600
			LXD6-A	3	450-600
			HJD6,HJXD6	3	200-400
			HJD6-A	3	200-400
			HJXD6-A	3	200-400
			HLD6	3	200-600
			HLD6-A	3	200-600
			HLXD6	3	450-600
			HLXD6-A	3	450-600
	T (2,3P)	1200	HFD6,HFXD6	2	70-250
			NDGB,HDGB	2	50-150
			NDGA,HDGA	2	50-150
			NFGB,HFGB	2	70-250
			NFGA,HFGA	2	70-250
			NJGA,HJGA	2	200-400
			NLGB,HLGB	2	400-600
			NLGA,HLGA	2	400-600
	T (3P)		HFD6,HFXD6	3	70-250
			NDGB,HDGB	3	50-150
			NDGA,HDGA	3	50-150
			NFGB,HFGB	3	70-250
			NFGA,HFGA	3	70-250
			NJGA,HJGA	3	200-400
			NLGB,HLGB	3	400-600
			NLGA,HLGA	3	400-600
	T,L (2,3P)		JD6,JXD6	2	200-400
			JD6-A,JXD6-A	2	200-400
			LD6	2	200-600
			LD6-A	2	200-600
			LXD6	2	450-600
			LXD6-A	2	450-600
			HJD6,HJXD6	2	200-400
			HJD6-A	2	200-400
			HJXD6-A	2	200-400
			HLD6	2	200-600
			HLD6-A	2	200-600
			HLXD6	2	450-600
			HLXD6-A	2	450-600
	T,L (3P)		JD6,JXD6	3	200-400
			JD6-A,JXD6-A	3	200-400
			LD6	3	200-600
			LD6-A	3	200-600
			LXD6	3	450-600
			LXD6-A	3	450-600
			HJD6,HJXD6	3	200-400
			HJXD6-A	3	200-400
			HLD6	3	200-600
			HLD6-A	3	200-600
			HLXD6	3	450-600
			HLXD6-A	3	450-600
	L (2,3P)	600	NDGB,HDGB	2	50-150
			NDGA,HDGA	2	50-150
			NFGB,HFGB	2	70-250
			NFGA,HFGA	2	70-250
			HFD6,HFXD6	2	70-250
			NJGA,HJGA	2	200-400
			NLGB,HLGB	2	400-600
			NLGA,HLGA	2	400-600
			MD6,MXD6	2	500-800
			HMD6,HMXD6	2	500-800
			ND6,NXD6	2	500-1200
			HND6,HNXD6	2	500-1200
	L (3P)		NDGB,HDGB	3	50-150

480 Volt Fuse Series Ratings (continued)

Series Connected Rating	Main Breaker		Branch Breaker		
	Type	Maximum Amperes	Type	No. of Poles	Amperes
100,000	L (3P)	600	NDGA,HDGA	3	50-150
			NFGB,HFGB	3	70-250
			NFGA,HFGA	3	70-250
			HFD6,HFXD6	3	70-250
			NJGA,HJGA	3	200-400
			NLGB,HLGB	3	400-600
			NLGA,HLGA	3	400-600
			MD6,MXD6	3	500-800
			HMD6,HMXD6	3	500-800
			ND6,NXD6	3	500-1200
			HND6,HNXD6	3	500-1200
			PD6,HPD6	3	1200-1600
			HPD6,HPXD6	3	1200-1600

600 Volt Fuse Series Ratings

Series Connected Rating	Main Breaker		Branch Breaker			
	Type	Maximum Amperes	Type	No. of Poles	Amperes	Volts
100,000	J, R, T Fuse (2,&3P)	600	JD6 (-A), JXD6 (-A)	2,3	200-400	600
			HJD6 (-A), HJXD6 (-A)	2,3	200-400	600
			LD6 (-A), HLD6 (-A)	2,3	200-600	600
			LXD6 (-A), HLXD6 (-A)	2,3	450-600	600
	J Fuse (2,&3P)	600	FD6-A, FXD6-A	2,3	70-250	600

Molded Case Circuit Breakers

IEC 947-2® AC Interrupting Ratings, 50/60 HZ KA

Reference

Ampere Rating	Breaker Frame	Breaker Type	220/240 Volts		380/415 Volts		500 Volts	
			Icu	Ics	Icu	Ics	Icu	Ics
15-125	ED	ED6	65	17	35	9	—	—
70-250	FD	FXD6	65	33	35	18	—	—
		FD6	65	33	35	18	—	—
		HFD6	100	50	65	33	—	—
		HFXD6	100	50	65	33	—	—
		HHFD6	200	100	100	50	—	—
		HHFXD6	200	100	100	50	—	—
250-400	JD	JXD6(A)	65	33	40	20	—	—
		JD6(A)	65	33	40	20	—	—
		HJD6(A)	100	50	65	33	—	—
		HJXD6(A)	100	50	65	33	—	—
		HHJD6	200	100	100	50	—	—
		HHJXD6	200	100	100	50	—	—
400-600	LD	LXD6(A)	65	33	40	20	—	—
		LD6(A)	65	33	40	20	—	—
		HLD6(A)	100	50	65	33	—	—
		HLXD6(A)	100	50	65	33	—	—
		HHLD6(A)	200	100	100	50	—	—
		HHLXD6	200	100	100	50	—	—
600-800	MD	MXD6	65	33	40	20	—	—
		MD6	65	33	40	20	—	—
		HMXD6	100	50	65	33	—	—
		HMD6	100	50	65	33	—	—
800-1200	ND	NXD6	65	33	40	20	—	—
		ND6	65	33	40	20	—	—
		HNXD6	100	50	65	33	—	—
		HND6	100	50	65	33	—	—

Molded Case Circuit Breakers

Superseded Breakers

Reference

Sentron Series	Note	Superseded	Note	Superseded
CED62B015-CED62B125	①	CLE62B015-CLE62B100	③	CE2B015-CE2B100
CED62S100A	①	CLE62S100	③	CE2S100
CED63A001-CED63A125	①	CLE63A001-CLE63A125		
CED63B015-CED63B125	①	CLE63B015-CLE63B100	③	CE3B015-CEB100
CED63S100A	①	CLE63S100	③	CE3S100
HHED63B015-HHED63B125"	①	HED63B015-HED63B125		
CFD62A150, CFD62L150, CFD62A250	①	CLF62A150, CLF62A250		
CFD62B070-CFD62B250	①	CLF62B070-CLF62B240	③	CJ2B125-CJ2B250
CFD62S250A	①	CLF62S250		
CFD63A150, CFD63L150, CFD63A250	①	CLF63A150, CLF63A250	③	CJ3B125-CJ3B250
CFD63B070-CFD63B250	①	CLF63B070-CLF63B250		
CFD63S250A	①	CLF63S250		
CJD62B200-CJD62B400	①	CLJ62B100-CLJ62B400	④	CJ2B300-CJ2B400
CJD62H400, CJD62L400	①	CLJ62L400, CLJ62H400		
CJD62S400A	①	CLJ62S400	④	CJ2S400
CJD63B200-CJD63B400	①	CLJ63B200-CLJ63B400	④	CJ3B300-CJ3B400
CJD63H400, CJD63L400	①	CLJ63L400, CLJ63H400		
CJD63S400A	①	CLJ63S400	④	CJ3S400
CPD63B120-CPD63B160	⑤	CP3B120-CP3B160		
ED21B015-ED21B100	①	E21B015-E21B100	②	EE1B015-EE1B100
ED22B015-ED22B100	①	E22B015-E22B100	②	EE2B015-EE2B100
ED22S100A	①	E22S100A	②	EE2S100
ED23B015-ED23B100	①	E23B015-E23B100	②	EE3B015-EE3B100
ED23S100A	①	E23S100A	②	EE3S100
ED41B015-ED41B100	①	E41B015-E41B100	②	EH1B015-EH1B100
ED42B015-ED42B125	①	E42B015-E42B100	②	EH2B015-ED2B125
ED42S100A	①	E42S100	②	EH2S100
ED43B015-ED43B125	①	E43B015-E43B100	②	EH3B015-EH3B100
ED43S100A	①	E43S100	②	EH3S100
ED61B015-ED61B100	①	E61B015-E61B100	②	EF1B015-EF1B020
ED62B015-ED62B125	①	E62B015-E62B100	②	EF2B015-EF2B100
ED62S100A	①	E62S100A	②	EF2S100
ED63A001-ED63A125	①	E63A001-E63A125	②	EF3A003, EF3J050, EF3L050-EF3A100, EF3H1
ED63B015-ED63B125	①	E63B015-E63B100	②	EF3B015-EF3B100
ED63S100A	①	E63S100A	②	EF3S100
HHED63B015-HHED63B125	①	HED63B015-HED63B125		
FD62B070-FD62B250f	①	F62B070, F62B250		
FD63B070-FD63B250f	①	F63B070-F63B250		
FXD62A150, FXD62L150, FXD62A250	①	FJ62A150, FJ62L150-FJ62A250		
FXD62B070-FXD62B250f	①	FJ62B070-FJ62B250	②	FJ2B070-FJ2B225
FXD62S250A	①	FJ62S250	②	FJ2S225
FXD63A150, FXD63L150, FXD63A250	①	FJ63A150, FJ63L150-FJ63A250	②	FJ3A225
FXD63B070-FXD63B250f	①	FJ63B070-FJ63B250	②	FJ3B070-FJ3B225 FJ3S225
FXD63S250A	①	FJ63S250	②	
HED41B015-HED41B100	①	HE41B015-HE41B100		
HED42B015-HED42B125	①	HE42B015-HE42B100		
HED43B015-HED43B125	①	HE43B015-HE43B100		
HED61B015-HED61B100	①	HE61B015-HE61B100	②	HE2B015-HE2B100
HED63B015-HED63B125	①	HE63B015-HE63B100	②	HE3B015-HE3B100
HFD62B070-HFD62B250	①	HF62B070-HF62B250		
HFD63B070-HFD63B250	①	HF63B070-HF63B250		
HHED63B015-HHED63B125	①	HED63B015-HED63B125		
HJD63B200-HJD63B400	①	HJ63B200-HJ63B400	②	HJ3B125-HJ3B400
HLD63B250-HLD63B600	①	HL63B450-HL63B600	②	HL3B450-HL3B600
HMD63B500-HMD63B800	②	HN3B500-HN3B800		
HND63B100-HND63B120	②	HK3B100-HK3B120		
HPD63B120-HPD63B160	②	HP3B120-HP3B160		
HRD63B160-HRD63B200	②	HR3B160-HR3B200		

①Mechanically and electrically interchangeable.
②Electrically interchangeable only, refer to sales office for further details.
③Electrically interchangeable only if the system interrupting capacity is less than or equal to:
200 kA at 240V AC
200 kA at 480V AC
100 kA at 600V AC

④Electrically interchangeable only if the system interrupting capacity is less than or equal to:
200 kA at 240V AC
150 kA at 480V AC
100 kA at 600V AC
⑤Refer to local sales office for replacement information.

⑥Effective 1994 — The FD6 and FXD6 types have been replaced by FD6-A and FXD6-A type thermal / magnetic circuit breakers — mechanically and electrically interchangeable with the exception that FXD6-A and FD6-A have 22kA at 600V AC ratings versus 18kA at 600V AC for types FXD6 and FD6.

Sentron Series	Note	Superseded	Note	Superseded
JD62B200-JD62B400	①	JLB200-JL62B400	②	JL2B070-JL2B400
JD63B200-JD63B400	①	JL63B200-JL63B400	②	JL3B0L0-JL3B400
JXD22B200-JXD22B400	①	JD22B200-JD22B400	②	JD2B250-JD2B400
JXD22S400A	①	JD22S400	②	JD2S400
JXD23B200-JXD23B400	①	JD23B200-JD23B400	②	JD3B250-JD3B400
JXD23S400A	①	JD23S400	②	JD3S400
JXD62B200-JXD62B400	①	JJ62B200-JJ62B400	②	JJ2B250-JJ2B400
JXD62H400, JXD62L400	①	JL62L400, JL62H400	②	JL2L400-JL2H400
JXD62S400A	①	JJ62S400A		
JXD63B200-JXD63B400	①	JJ63B200-JJ63B400	②	JJ3B200-JJ3B400
JXD63H400, JXD63L400	①	JL63A400, JL63H400, JL63L400	②	JL3H400, JL3L400, JL3A225
JXD63S400A	①	JJ63S400A		
LD62B250-LD62B500	①	LL63B250-LL62B600	②	LL2B450-LL2B600
LD62B250-LD63B600	①	LL63B250-LL63B600	②	LL3B450-LL3B600
LXD62B450-LXD62B600	①	LJ62B450-LJ62B600		
LXD62J600, LXD62L600	②	LL2H600, LL2U600, LL2X600		
LXD62S600A	①	LJ62S600		
LXD63B450-LXD63B600	①	LJ63B450-LJ63B600		
LXD64H600, LXD63L600	①	LL63H600, LL63L600	②	LL3A450, LL3H600
LXD63S600A	①	LJ63S600A	②	LL3S600
MD62B500-MD62B800	②	KM2B500-KM2B800		
MD63B500-MD63B800	②	KM3B500-KM3B800		
MXD62A800, MXD62H800, MXD62L800	②	KM2A800, KM2H800, KM2L800		
MXD62S800A	②	KM2S800		
MXD63A800, MXD63H800, MXD63L800	②	KM3A600, KM3H800, KM3L800		
MXD63S800A	②	KM3S800		
ND63B100-ND63B900	②	KP3B100-KP3B900		
NXD63S120A	②	KP3S120		
PD63B120-PD63B160	②	HP3B120-HP3B160		
PXD63S160A	②	HP3S160		
RD63B160-RD63B200	②	HR3B160-HR3B200		
QR22B100 – QR22B225		QJ22B060-QJ22B225		
QR22B100H – QR22B225H		QJ22B060H-QJ22B225H		
HQR23S250HA		QJ22S225		
QJ23B100 – QR23B225		QJ23B060-QJ23B225		
QR23B100H – QR23B225H		QJ23B060H-QJ23B225H		
QRH22B100 – QRH22B225		QJH22B060-QJH22B225		
QRH23B100 – QRH23B225		QJH23B060-QJH23B225		
HQR23S250HA		QJH23S225	①	
QJH22B060-QJH22B225	①	QJ2H125-QJ2B225		
QJH23B060-QJH23B225	①	QJ3H125-QJ3H225		
QJH23S225	①	QJ3S225		
RD63B160-RD63B200	②	HR3B160-HR3B200		
RXD63S200A	②	HR3S200		
SCJD6B200LI-SCJD6B400LI	①	SCJD69200-SCJD69400		
SCJD6B200LIG-SCJD6B400LIG	①	SCJD69200G-SCJD69400G		
SCJD6B200LSIG-SCJD6B400LSIG	①	SCJD69200NGT-SCJD69400NGT		
SCJD6B200LSI-SCJD6B400LSI	①	SCJD69200NT-SCJD69400NT		
SCLD6B300LI-SCLD6B600LI	①	SCLD69300-SCLD69600		
SCLD6B300LIG-SCLD6B600LIG	①	SCLD69300G-SCLD69600G		
SCLD6B300LSIG-SCLD6B600LSIG	①	SCLD69300NGT-SCLD69600NGT		
SCLD6B300LSI-SCLD6B600LSI	①	SCLD69300NT-SCLD69600NT		
SCMD6B600LI-SCMD6B800LI	①	SCMD69600A-SCMD69800A		
SCMD6B600LIG-SCMD6B800LIG	①	SCMD69600AG-SCMD69800AG		
SCMD6B600LSIG-SCMD6B800LSIG	①	SCMD69600ANGT-SCMD69800ANGT		
SCMD6B600LSI-SCMD6B800LSI	①	SCMD69600ANT-SCMD69800ANT		
SCND6B800LI-SCND6B120LI	①	SCND69800A-SCND69120A		
SCND6B800LIG-SCND6B120LIG	①	SCND69800AG-SCND69120AG		
SCND6B800LSIG-SCND6B120LSIG	①	SCND69800ANGT-SCND69120ANGT		
SCND6B800LSI-SCND6B120LSI	①	SCND69800ANT-SCND69120ANT		

①Mechanically and electrically interchangeable.
②Electrically interchangeable only, refer to sales office for further details.

③Electrically interchangeable only if the system interrupting capacity is less than or equal to:
200 kA at 240V AC
200 kA at 480V AC
100 kA at 600V AC

④Electrically interchangeable only if the system interrupting capacity is less than or equal to:
200 kA at 240V AC
150 kA at 480V AC
100 kA at 600V AC

⑤Refer to local sales office for replacement information.

Superseded Breakers

Sentron Series	Note	Superseded	Note	Superseded
SHJD6B200LI-SHJD6B400LI	①	SHJD69200-SHJD69400	①	SHJ63B200-SHJ63B400G
SHJD6B200LIG-SHJD6B400LIG	①	SHJD69200G-SHJD69400G	①	SHJ63B200G-SHJ63B400G
SHJD6B200LSIG-SHJD6B400LSIG	①	SHJD69200NGT-SHJD69400NGT	①	SHJ63N200G-SHJ63N400G
SHJD6B200LSI-SHJD6B400LSI	①	SHJD69200NT-SHJD69400NT	①	SHJ63N200-SHJ63N400
SHLD6B300LI-SHLD6B600LI	①	SHLD69300-SHLD69600	①	SHL63B300-SHL63B600
SHLD6B300LIG-SHLD6B600LIG	①	SHLD69300G-SHLD69600G	①	SHL63B300G-SHL63B600G
SHLD6B300LSIG-SHLD6B600LSIG	①	SHLD69300NGT-SHLD69600NG	①	SHL63N300G-SHL63N600G
SHLD6B300LSI-SHLD6B600LSI	①	SHLD69300NT-SHLD69600NT	①	SHL63N300-SHL63N600
SHND6B100LI-SHND6B120LI	①	SHND69100A-SHND69120A	①	SHND69100-SHND69800
SHND6B100LIG-SHND6B120LIG	①	SHND69100AG-SHND69120AG	①	SHND69100G-SHND69800G
SHPD6B140LI-SHPD6B160LI	①	SHPD69140-SHPD69160	②	SHPF3B120-SHPF3B160
SHPD6B140LIG-SHPD6B160LIG	①	SHPD69140G-SHPD69160G	②	SHPF3B120G-SHPF3B160G
SHND6B100LSIG-SHND6B120LSIG	①	SHND69100NGT-SHND69800NGT	①	SHKF3N100G-SHKF3N800G
SHND6B100LSI-SHND6B120LSI	①	SHND69100NT-SHND69800NT	②	SHKF3N100-SHKF3N800
SJD6B200LI-SJD6B400LI	①	SJD69200-SJ369400	①	SJL63B200-SJL63B400
SJD6B200LIG-SJD6B400LIG	①	SJD69200G-SJD69400G	①	SJL63B200G-SJL63B400G
SJD6B200LSIG-SJD6B400LSIG	①	SJD69200NGT-SJD69400NGT	①	SJL63N200G-SJL63N400G
SJD6B200LSI-SJD6B400LSI	①	SJD69200NT-SJD69400NT	①	SJL63N200-SJL63N400
SLD6B300LI-SLD6B600LI	①	SLD69300-SLD69600	①	SLL63B300-SLL63B600
SLD6B300LIG-SLD6B600LIG	①	SLD69300G-SLD69600G	①	SLL63B300G-SLL63B600G
SLD6B300LSIG-SLD6B600LSIG	①	SLD69300NGT-SLD69600NGT	①	SLL63N300G-SLL63N600G
SLD6B300LSI-SLD6B600LSI	①	SLD69300NT-SLD69600NT	①	SLL63N300-SLL63N600
SMD6B600LI-SMD6B800LI	①	SMD69600A-SMD69800A	①	SMD69600-SMD69800
SMD6B600LIG-SMD6B800LIG	①	SMD69600AG-SMD69800AG	①	SMD69600G-SMD69800G
SMD6B600LSIG-SMD6B800LSIG	①	SMD69600ANGT-SMD69800ANGT	①	SMD69600NGT-SMD69800NGT
SMD6B600LSI-SMD6B800LSI	①	SMD69600ANT-SMD69800ANT	①	SMD69600NT-SMD69800NT
SND6B800LI-SND6B120LI	①	SND69800A-SND69120A	①	SND69100-SND69800
SND6B800LIG-SND6B120LIG	①	SND69800AG-SND69120AG	①	SND69100G-SND69800G
SND6B800LSIG-SND6B120LSIG	①	SND69800ANGT-SND69120ANGT	①	SND69100NGT-SND69800NGT
SND6B800LSI-SND6B120LSI	①	SND69800ANT-SND69120ANT	①	SND69100NT-SND69800NT
SHPD6B140LI-SHPD6B160LI	①	SPD69140-SPD69160	②	SHPF3B120-SHPF3B160
SHPD6B140LIG-SHPD6B160LIG	①	SPD69140G-SPD69160G	②	SHPF3B120G-SHPF3B160G
SHPD6B140LSIG-SHPD6B160LSIG	①	SPD69140NGT-SPD69160NGT	②	SHPF3N120-SHPF3N160G
SHPD6B140LSI-SHPD6B160LSI	①	SPD69140NT-SPD69160NT	②	SHPF3N120G-SHPF3N160G
— —	④	BQCC1B015-BQC1B030		
— —	④	CC1B015-CC1B030		
— —	④	CC2B015-CC2B030		
— —	④	CC3B015-CC3B030		
— —	④	EF2A003, EF2H050, EF2L050, EF2A100		
— —	④	EF2H150, EF2L150		
— —	④	EH1B015-EH1B100		
— —	④	EH2B015-EH2B100		
— —	④	EH3B015-EH3B100		
— —	③	HE2A003, HE2H050, HE2L050-HE2A100		
— —	③	HE3A003, HE3H050, HE3L050-HE3A100		
— —	③	HE3B015-HE3B100		

①Mechanically and electrically interchangeable.
②Electrically interchangeable only, refer to sales office for further details.
③These units are for replacement purposes only. Consult sales office for availability.
④These units are no longer manufactured, and no replacement is available.

Contents

Features and benefits 6-3
Breaker assembly view 6-4
Product overview 6-5
Draw-out cradle assembly view 6-6
Electronic trip units (ETUs)
ETU models and features 6-7
ETU communication 6-8
ETU metering function 6-9
Alarm parameters 6-10
Extended relaying 6-10
Function overview of the ETU 6-11 — 6-12
Factory installed options
Ground fault module 6-13
Key lock-out 6-13
Operation counter 6-13
Auxiliary contacts 6-13
Breaker status sensor (BSS) 6-13
Bell alarm contact and reset coil 6-14
Racking handle key lock 6-14
Breaker push-button locks 6-14
Close coil 6-14
Spring charging handle lock 6-15
Rating plugs 6-15
Ready-to-close contact 6-15
Shunt trip 6-15
Shunt trip (continuous duty) 6-15
Status contact 6-16
Spring charging motor 6-16
Undervoltage release 6-16
Secondary disconnects 6-17
Isolation shutters 6-17
Modbus, Modbus TCP, PROFIBUS, and PROFINET IO communications 6-17
Dual key breaker locking 6-17
Cradle accessories and options
Arc chute cover 6-18
TOC (truck operated contacts) 6-18
MOC (mechanism operated contacts 6-18
Accessories
Communication power supplies 6-19
Handheld test device 6-19
Electromagnetic Compatibility (EMC) Filter 6-19
Mechanical breaker interlocks 6-19
Metering current transformer – 3-phase window 6-20
Metering current transformer – single phase 6-20
Neutral current sensor – 4-wire residual 6-21
Breaker door cover 6-21
Door sealing frame 6-21
Breaker lifting device 6-21
Remote breaker racking device 6-21
Breaker hoist 6-21
CubicleBus modules 6-22
Digital input module 6-22
ZSI module 6-22
Analog output module 6-22
Pre-assembled CubicleBus communication cables 6-22
Fixed-mounted breaker bus connectors 6-23
Primary lug connector kits 6-23
WL Catalog Numbering Overview 6-24
UL 489 Ratings
Ratings for UL 489 6-25
Ratings for UL 489 (non-automatic) 6-26
UL 489 assembled breaker catalog number
Interrupting rating, frame size, breaker type and frame rating 6-27
Rating plug 6-28
Electric trip unit 6-28
Bell alarm, ready-to-close contacts 6-29
Shunt trip 6-29
Undervoltage release 6-30
Charging motor, motor switch, operations counter 6-30
Close coil, power metering and communications 6-31
Breaker locks 6-31
Miscellaneous options 6-31
UL 489 assembled breaker catalog number (non-automatic)
Breaking capacity, frame size, switch type and frame rating 6-32
Ready-to-close auxiliary contacts 6-32
Shunt trip 6-33
Undervoltage release 6-33
Charging motor switch and operation counter 6-34
Close coil communications 6-34
Switch locks 6-35
Miscellaneous options 6-35
UL 489 accessories 6-36
External breaker accessories 6-36
UL 489 cradle catalog numbers 6-37 — 6-38
UL 489 cradle accessories 6-39
UL 1066 ratings
Ratings for UL 1066 6-42 — 6-43
Ratings for UL 1066 (non-automatic) 6-43
UL 1066 assembled breaker catalog number 6-40 — 6-41
Interrupting rating, frame size, breaker type and frame rating 6-42
Rating plug 6-44
Electronic trip units 6-44
Bell alarm, auxiliary contacts 6-45
Shunt trip 6-45
Undervoltage release 6-45
Charging motor 6-46
Close coil power metering and communications 6-47
Breaker locks 6-47
Miscellaneous options 6-47
UL 1066 non-automatic assembled breaker catalog numbers
Breaker capacity, frame size, switch type andframe rating 6-48
Auxiliary contacts 6-49
Shunt trip 6-49
Undervoltage release 6-49
Charging motor, motor switch, operations counter 6-50
Close coil, communications 6-50
Switch locks 6-51
Miscellaneous options 6-51
1066 fixed mount breaker vertical connector kits 6-51

Contents

UL 1066 cradle catalog numbers 6-52
UL 1066 accessories 6-53
Secondary terminal assignments 6-54
General wiring schematic 6-55 — 6-56
Ground fault setting 6-57
Metering voltage details 6-58
UL 489 Fixed breaker dimensions 6-59 — 6-74
UL 489 Draw-out breaker dimensions 6-75 — 6-88
UL 489 Door sealing frame dimensions 6-89
UL 1066 Draw-out breaker dimensions 6-90 — 6-101
UL 1066 Draw-out fuse carriage dimensions 6-102 — 6-103
UL 1066 Door sealing frame dimensions 6-104
UL 1066 Draw-out dimensions 6-106

Spare/Replacement Parts

Trip unit options 6-107
Rating plugs 6-107
EMC Filter 6-107
Communication Components
Breaker communication module 6-108
Breaker status sensor 6-108
External I/O CubicleBus modules 6-108
Trip unit test equipment 6-109
24Vdc power supply 6-109
Draw-out cradle assembly
Secondary disconnects 6-110
Stationary primary bus-bar disconnect terminals 6-111
Cradle arc chute cover 6-111
MOC (mechanism operated aux. contacts) 6-111
TOC (truck operated aux. contacts) 6-111
Isolation shutters 6-111
Locking devices 6-112
Mechanical interlock devices 6-112
Metering CT units
3-phase metering CTs 6-113
Single phase metering CTs 6-113
Ground fault and current sensors 6-114
Circuit breaker accessories
Shunt trip releases 6-115
Auxiliary switches 6-115
Bell Alarm switches 6-115
Ready to close switch 6-115
Operation counter 6-115
Undervoltage trip release 6-116
Signal contactor for UV trip 6-116
Spring charging motor 6-116
Closing coil 6-116
UL 1066 Internal contact replacement kit 6-117
Internal phase sensor 6-117
UL1066 Circuit breaker arc chute replacement kit 6-117
Circuit breaker finger cluster replacement kit 6-118
Circuit breaker bus connectors (front mounted) 6-118
Circuit breaker fix mount optional metric hardware 6-118
Options and accessories
Locking provisions overview 6-119
Breaker locking devices 6-120
Fuse kits 6-120
WL fuse replacement kits 6-120
Options and accessories 6-121
Door sealing frame
Plexiglass breaker cover
Breaker lifting device
Breaker maintenance grease
WL Circuit Breaker certified test report
Return to factory shipping cartons for breaker only
Communication components
Typical certified test report 6-122
Quick reference guide 6-123

WL Circuit Breaker

Introduction

Businesses are becoming increasingly more intelligent about the way they consume energy. Industrial and Commercial energy consumers are continuously looking for practical and efficient methods of measuring their energy usage while simultaneously ensuring any possible downtime is minimized. At Siemens we understand those needs and we have developed products and solutions to help energy consumers achieve their goals.

One of our solutions begins with our world-class WL Circuit Breakers. The WL line-up of breakers developed by Siemens combines decades of patented circuit breaker protection experience with the latest technology in circuit breaker performance and communication.

A good example of our innovative technology is, Dynamic Arc-Flash Sentry® (DAS). DAS is a solution that allows users the ability to automatically lower the down-stream available fault current when facility personnel are nearby the electrical equipment. Helping our customers provide a safer work-place environment is an important part to our overall solutions.

Other valuable aspects that complement our solutions are the WL circuit breaker's ability to gather energy and environmental data and send it to a central or remote monitoring network system. You'll find these capabilities and more when you take a closer look at WL circuit breakers features within this guide.

WL Circuit Breaker Features and Benefits

- 3 frame sizes: Three frame sizes that cover a wide range of continuous current ratings allow for flexible exchange of breakers to other compartments and reducing the footprint of the breaker enclosures.
- Ready-to-close indication: Built-in check points of the breakers mechanical operator provide an additional layer of safety and external controls by inhibiting the breaker from closing until certain conditions are satisfied.
- 100% rating: All model breakers are designed for continuous operation at their maximum current ratings without de-rating the frame.
- High-efficiency: Low loss of energy flowing through the breaker reduces the operating costs.
- Bi-directional feed: Top or bottom supply feed without any hardware configuration changes.
- Rogowski coil sensing: Full range sensing without tap terminals or exchanging sensors to match load change requirements.
- Modular trip unit: Upgrading to a higher or lower current rating, adding ground fault, power monitoring or communication is cost effective and expandable using separately available modules.
- Common accessories: Interchangeable accessories for all Frame sizes makes upgrading easy and readily available.

Practical solution Applications

The WL line of power breakers are protecting electrical distribution applications like waste water treatment, industrial plants, hospitals, transportation systems and data centers just to name a few. Yes, mission critical applications trust the Siemens WL circuit breakers to operate safe and reliably. The compact modular design provides higher power density in a section or line-up of distribution gear. Components like spring-charging motor, shunt trips, and trip units are common across the entire line of breakers. That allows users the ability to stock fewer spare parts or exchange options if necessary. Common options and accessories also make learning how to order, maintain and operate the WL much easier than most breakers on the market today.

WL circuit breakers are manufactured and performance tested to comply with UL489 and UL1066 standards for listed products.

UL/CSA 489 Listed type WL low voltage insulated case circuit breakers are generally intended to provide service entrance, feeder, and branch circuit protection in accordance with UL/CSA 489 Standard for Safety for Molded-Case Circuit Breakers, Molded-Case Switches, and Circuit-Breaker Enclosures. These circuit breakers are also certified for UL 489 Supplement SB, for use in Naval applications, and for ambient environments up to 50°C without derating. This versatile family of insulated case circuit breakers is acceptable for use within low-voltage switchboards (i.e. UL 891), low-voltage motor control centers (i.e. UL 845), and other types of industrial control equipment (i.e. UL 508 series). Certain options and maintenance capability may be limited in comparison to the UL1066 Listed circuit breakers. UL file numbers E231263, E236091 and E236299 apply.

UL 1066 Listed type WL low voltage power circuit breakers are generally intended to provide main and feeder circuit protection in accordance with UL1066 Standard for Safety for Low-Voltage AC and DC Power Circuit Breakers Used in Enclosures. Presently, there is not an equivalent CSA standard to UL 1066, and therefore these circuit breakers do not carry a CSA listing mark. These circuit breakers are constructed in compliance with ANSI/IEEE C37.13, and performance tested in accordance with ANSI C37.50. Throughout this document any reference to UL1066 will also mean ANSI C37 Certified. This versatile family of power circuit breakers is acceptable for use within low voltage switchgear (i.e. ANSI/IEEE C37.20.1, ANSI/IEEE C37.20.7, and UL 1558), low voltage switchboards (i.e. UL 891), low voltage motor control centers (i.e. UL 845), and other types of industrial control equipment (i.e. UL 508 series). Certain options and ratings may be limited may be limited in comparison to the UL/CSA 489 Listed circuit breakers. UL file numbers E240124, E240232, E240233 and E236299 apply.

WL Circuit Breaker

Breaker Assembly View



Exterior Breaker Features

❶ Secondary contacts
❷ Charging handle
❸ Centralized operator panel
❹ Integral racking handle with position indicator
❺ Trip unit with LCD
❻ Arc chutes

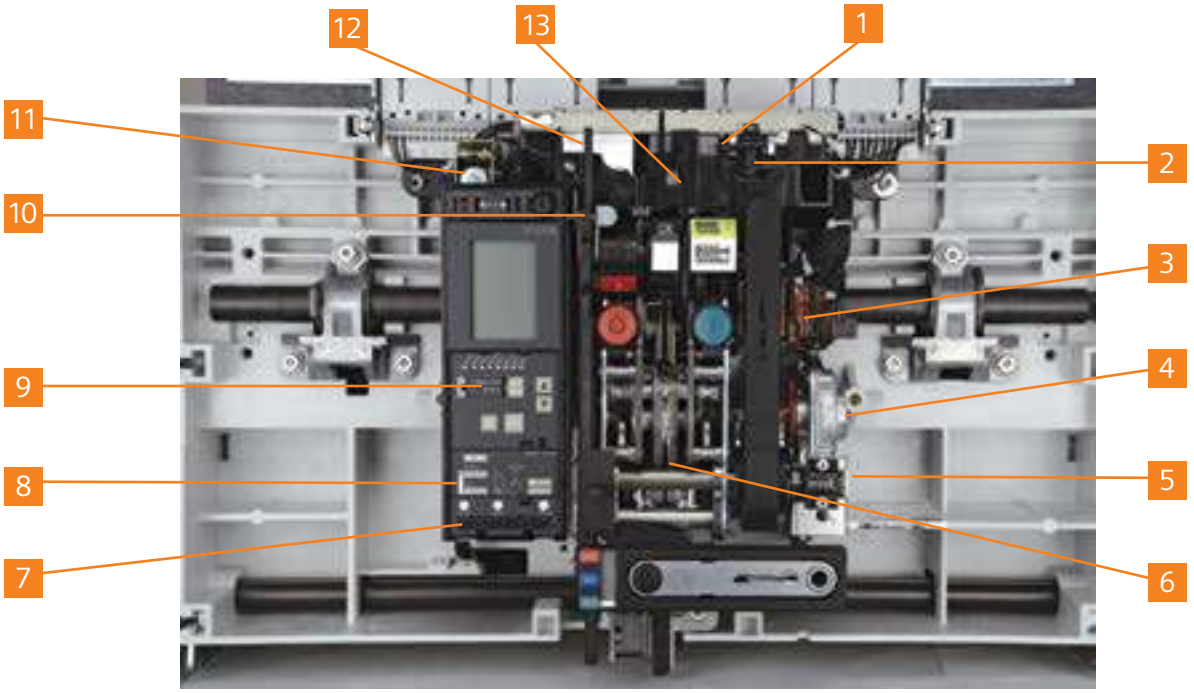

Interior Breaker Features

❶ Remote closing coil
❷ Second shunt trip or UV release
❸ Auxiliary switch
❹ Automatic charging motor
❺ Operation counter
❻ Operating mechanism
❼ Electronic trip unit (ETU)
❽ Optional ground fault module with alarm and trip functions
❾ Interchangeable current rating plug
❿ Breaker status sensor (BSS)
⓫ Bell alarm contact with remote reset
⓬ Shunt trip coil
⓭ Ready-to-close-contact

WL Circuit Breaker

Superior Individual Products for Low-voltage Power Distribution Systems

Overview

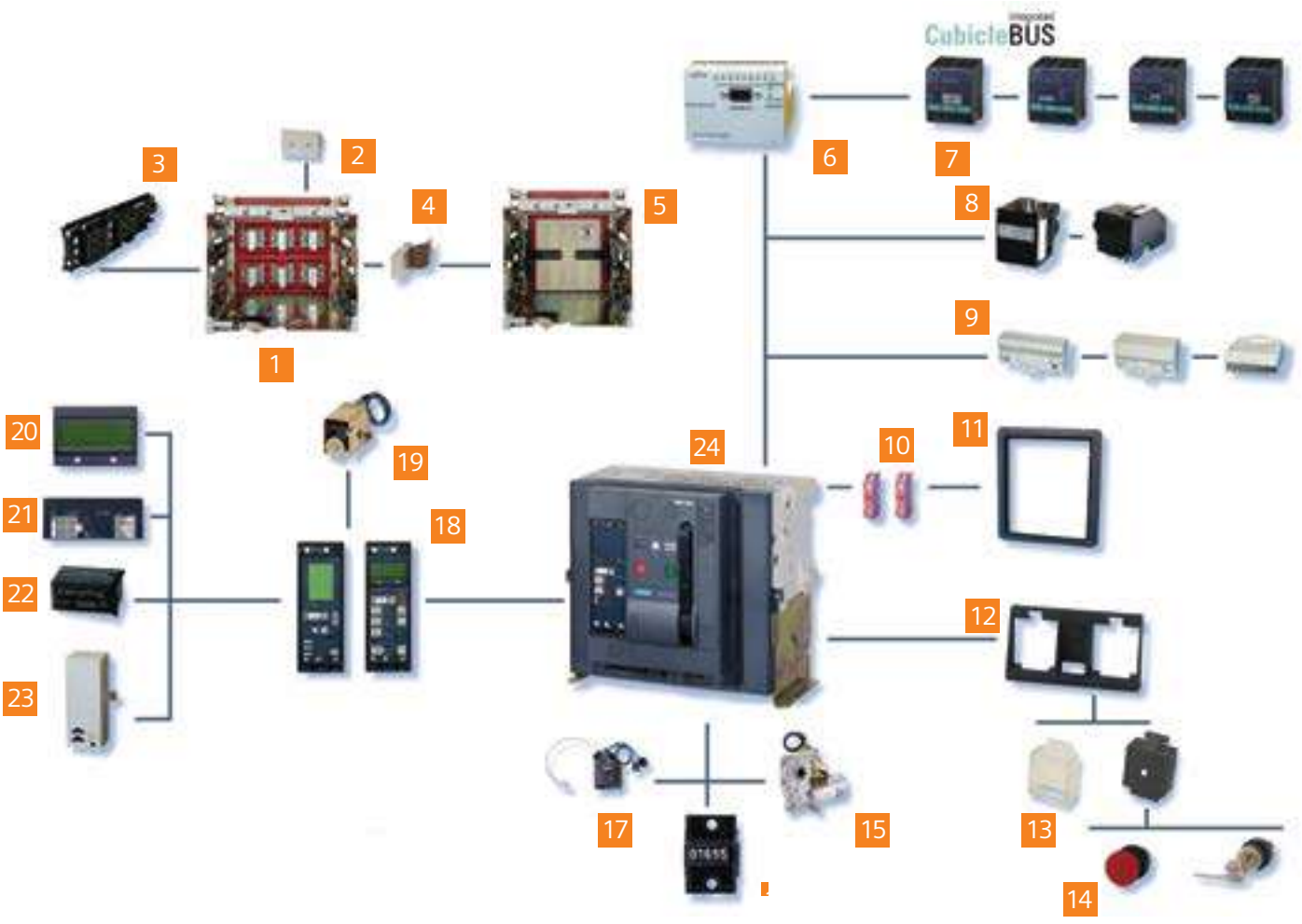

❶ Guide Frame (for drawout version only)
❷ Vertical to Horizontal BUS Connector
❸ Position Signaling Switch
❹ Breaker / Guide Frame Grounding Contact
❺ Shutter (locking)
❻ Communications module
❼ External CubicleBUS I/O Module
❽ Plug-In Open and Closed Solenoids)
❾ Multiple Secondary Connections
❿ Auxiliary Switch Block
⓫ Door Sealing Frame
⓬ Interlocking Set Base Plate
⓭ Protective Cover for OPEN/CLOSE Buttons
⓮ Multiple Key Locking Accessories
⓯ Single Bolt Motor Operator Installation
⓰ Operations Counter
⓱ Breaker Status Sensor (BSS)
⓲ Complete Trip Unit Family
⓳ Remote Reset
⓴ Multi Angle LCD Module
㉑ Ground Fault Protection Module
㉒ Rating Plug
㉓ Metering Function (+ wave forms and harmonics)
㉔ Circuit Breaker

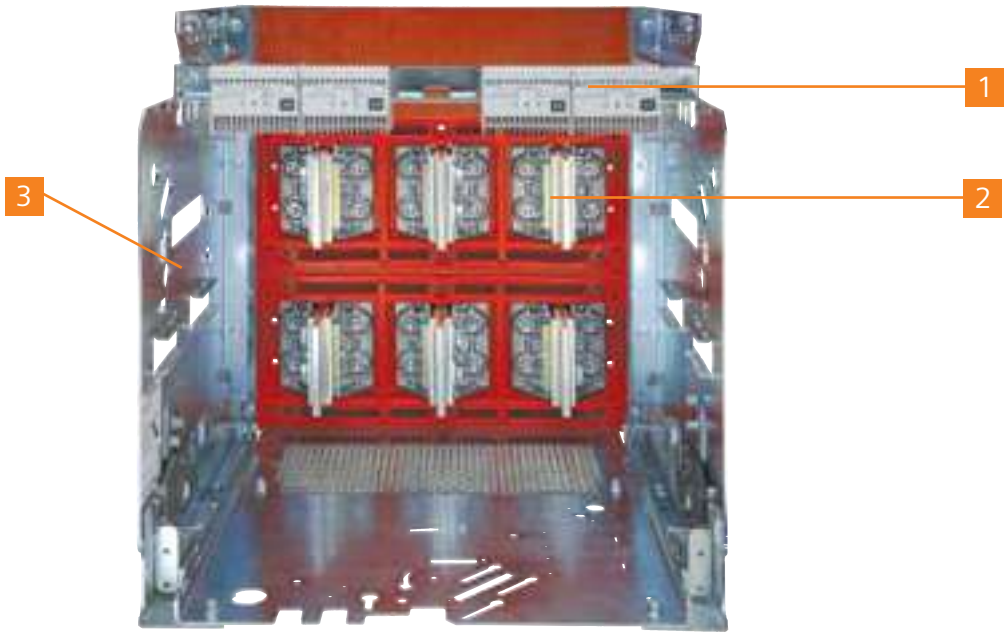

Standard cradle

❶ Stationary secondary disconnect
❷ Primary disconnects
❸ Cradle frame assembly for draw-out breakers

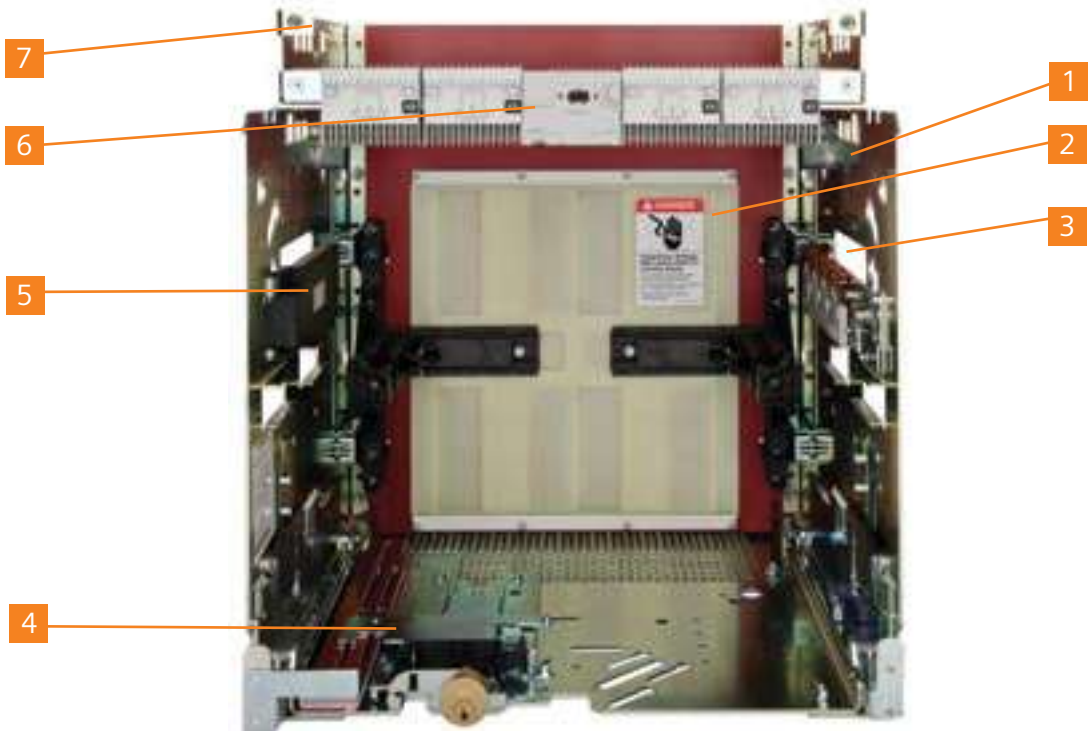

Cradle accessories

❶ Mechanical interlock (not shown)
❷ Isolation shutters
❸ Mechanism operated contact switches (MOC)
❹ Dual key-lock location
❺ Breaker position switches (TOC)
❻ Communication module location (COM 16 or COM 15)
❼ Optional arc chute cover (not shown)

Electronic trip units (ETUs)
Power system protection is necessary to defend against common types of abnormal occurrences, such as overloads or faults that can lead to electrical power system failure.

The methods for detecting and clearing such abnormalities and restore to normal operation is an engineered technique. Adequate protection requires constant measurements of certain system quantities, such as voltages and currents, comparing those system quantities, or some combination of the quantities, to a threshold setting computed by a systems engineer and set into an electronic trip unit like those available on the WL breakers. It's equally important for power system protection to perform under normal operating conditions. If the above thresholds are set too low the power may be interrupted unnecessarily causing loss of productivity or safety provisions. The WL circuit breaker offers a practical means of setting power system protection through vast selectivity available in its Electronic Trip Unit (ETU). WL ETUs have a wide range of protective settings for implementing simple or complex coordination schemes and configuring reliable system protection.

ETU Enhanced Features

- Extended Instantaneous Protection (EIP): Allows the entire range of WL ampacities to be applied at the withstand rating of the breaker with minus 0% tolerance; that means no instantaneous override whatsoever. EIP further enables the circuit breaker to be applied up to the full interrupting rating of the breaker on systems where the available fault current exceeds the withstand rating, even with LS-only trip units.
- Dynamic Arc-Flash Sentry (DAS): Allows you the ability to execute a faster coordinated trip condition should an arc fault event occur while personnel are within the arc flash boundary. When the presence of personnel is no longer in the arc flash boundary, DAS will default back to maintaining your selective trip coordination through time delay functions. This is like toggling between two trip units on one breaker. DAS can be activated by a simple contact closer, so a wide range of activation devices can be used to enable DAS.
- Selectable I4t: ETU745 and 776 make it possible to switch over from an I2t to an I4t inverse-time function for overload protection. This selectivity increases optimization of coordinated overload protection when overload fuse protection is also provided.

ETU Basic Functions

Long-time trip
The long-time delay adjustment is used to set the tripping delay of the circuit breaker based on the magnitude of the overcurrent condition (6 times Ir). For example if the rating plug is 2000 amps and the long-time delay is set to 10 seconds, a fault current of 12,000 amps (6 x 2000) will cause the breaker to trip after 10 seconds. Long-time is an inverse of I2t ramp function. This means the higher the current, the shorter the time the circuit breaker will remain closed. An Alarm LED indicator will flash during the delay period and a separate "Trip L" indicator may turn on if the breaker trips on long-time function.

Short-time trip
The short-time pickup adjustment is used to set the level of high current the breaker will carry for a short period of time without tripping. This adjustment is set in multiples of the value of the rating plug (Ir). Together with the short-time delay, this adjustment allows downstream breakers time to clear short circuit faults without tripping upstream breakers. Short-time delay is used to set the time interval the breaker will wait before responding to the current value selected by short-time pickup. There are two modes of operation: fixed and I2t. The I2t delay has the characteristic of being inversely proportional to the square of the magnitude of the current. This means higher overcurrent conditions have shorter delays. An Alarm LED indicator may flash during the delay period and a separate "Trip S" indicator will turn on if the breaker trips on short-time function.

Instantaneous trip
The instantaneous pickup adjustment is used to set the current level at which the breaker will trip without an intentional time delay. Non-delayed tripping as a result of severe over-current minimizes potential damage to the electrical system and equipment.

Ground fault
The ground fault pickup adjustment is used to set the level of ground current at which circuit interruption will be initiated.

Together with ground fault delay, this adjustment allows selective tripping between main and feeder or downstream breakers.

The ground fault delay adjustment is used to set the time interval (in seconds) the breaker will wait before responding once the ground fault pickup level has been reached. The available ground fault delay settings available are: inverse time (I^2t) or fixed delay.

ETU communication

The ETU uses a Siemens proprietary communication network called CubicleBus. The CubicleBus network ensures all Siemens devices are able to transmit data reliably and efficiently. The ETU can not be connected directly any other network so the use of converters are necessary to allow communication between the ETU and the outside world. The WL has three types of communications modules to allow communication between the ETU and computer type equipment. The three converts are:

- PROFIBUS (COM15)
- Modbus (COM16)
- Modbus TCP / PROFINET IO (COM35)

The WL PROFIBUS communications module is model 'COM15.' The COM15 device acts as an interface between the WL breaker and a PLC. A joint device master file (GSD) can be used for integrating WL circuit breakers in a PROFIBUS DP network. The advantage of this joint communication profile is that the same software can be used for automation, monitoring and control systems.

The WL Modbus communications module is model 'COM16'. The COM16 device enables the WL breaker to be connected to any Modbus master network. Universal Modbus mapping can be used to allow custom monitoring and controls with a centralized monitoring system.

The COM16 has a standard RS485 Modbus port for convenient daisy-chaining to other WL breakers and Modbus devices to create a serial network that can connect through a suitable gateway to a LAN or WAN network.

The WL Modbus TCP and PROFINET IO communications module is model 'COM35'. This device can communicate PROFINET IO and Modbus TCP simultaneously over Ethernet, and is capable of supporting dual masters. The datasets are structured identical to the COM15 and COM16 communications devices for easy integration in existing SCADA systems.

All three communications modules require a 24VDC Class 2 power supply. See External Accessories for more information on available power supplies.



ETU Models and Features

Features and Characteristics	ETU745	ETU776
Long-time overcurrent protection (L)	X	X
Short-time delayed overcurrent protection (S)	X	X
Instantaneous overcurrent protection (I)	X	X
Neutral conductor protection (N)	X	X
Ground fault protection (G)	X	X
Selectable neutral protection	X	X
Defeatable short-time protection	X	X
Defeatable instantaneous protection	X	X
Selectable thermal memory	X	X
Zone selective interlocking	X	X
Selectable I^2t or I^4t long-time delay	X	X
Adjustable instantaneous pick-up	X	X
Selectable I^2t or I^4t long-time delay		X
Adjustable short-time delay and pick-up	X	X
Selectable and adjustable neutral protection	X	X
Dual protective setting capability		X
Dynamic arc-flash sentry (DAS)		X
Extended instantaneous protection (EIP)	X	X
Parameterization by rotary switches	X	
Parameterization by communication (absolute values)		X
Parameterization by menu/keypad (absolute values)		X
Remote parameterization of the alarm functions		X
Remote parameterization of the relay functions		X
Alphanumeric display	O	X
Graphical display		X
Power meter function	O	O
Communication via PROFIBUS DP	O	O
Communication via Modbus RTU	O	O
Communication via Modbus TCP / PROFINET IO	O	O

(X) = Standard feature, (O) = Optional feature

Power metering function
In addition to excellent protection capabilities, the WL ETU has unparalleled power metering functionality. True RMS current sensing for metering is obtained from the same current sensors used for overload protection. ETU power metering can measure the following:

Measured value	Value range	Accuracy
Currents Ia, Ib, Ic, In	30 ... 8000A	± 1%
Ground-fault current Ig (measure with external Gnd transformer)	100 ... 1200A	± 5%
Line-to-line voltages Vab, Vbc, Vca	80 ... 120% Vn	± 1%
Line-to-neutral voltages Van, Vbn, Vcn	80 ... 120% Vn	± 1%
Average value of phase-to-phase voltages V L-L AVG	80 ... 120% Vn	± 1%
Apparent power kVA per phase	13 ... 8000kVA	± 2%
Total apparent power KVA	13 ... 24000kVA	± 2%
Active power kW per phase	-8000 ... 8000kW	± 3% (power factor > 0.6)
Total active power kW total	-24000 ... 24000kVA	± 3% (power factor > 0.6)
Reactive power kvar	-6400 ... 6400kvar	± 4% (power factor > 0.6)
Total reactive power kvar	-20000 ... 20000kvar	± 4% (power factor > 0.6)
Power factor per phase	-0.6 ... 1 ... 0.6	± 0.04
Power factor total	-0.6 ... 1 ... 0.6	± 0.04
Demand of currents Ia, Ib, Ic	30 ... 8000A	± 1%
Average demand of 3-phase current	30 ... 8000A	± 1%
Demand kWD per phase	13 ... 8000kW	± 3% (power factor > 0.6)
kW demand 3-phase active power kWD total	13 ... 8000kW	± 3% (power factor > 0.6)
kVA demand kVA total	13 ... 8000kVA	± 2%
kVAR demand kVAR per phase	13 ... 8000kVA	± 2%
kVAR demand total	-24000 ... 24000kvar	± 4% (power factor > 0.6)
kWhr imported	1 ... 10000MWh	± 2%
kWhr exported	1 ... 10000MWh	± 2%
kVARh imported	1 ... 10000Mvarh	± 4%
kVARh exported	1 ... 10000Mvarh	± 4%
Frequency	15 ... 440 Hz	± 0.1 Hz
Total harmonic distortions for current and voltage	2 ... 100%	± 3% from the meas. range up to the 29th harmonic
Phase unbalance for current and voltage	2 ... 150%	± 1%

Potential transformers (PTs) are required to step down the supply voltage to a level that is suitable for local input connection to the breaker. PTs must be wired to the secondary connections of the breaker and configured for three-phase, three-wire or three-phase, four-wire supply system. The measured values can be sent to a central database for future power analysis or consumption reports.

Metering is not field installable, it is integrated into the trip unit and must be configured in the initial breaker purchase.

Event log The event log is very extensive. Information regarding the list of events can be found in the WL operation manual or communication guide. Some of the event log categories are:

- Warnings
- Trip Logs
- Set-points
- Maintenance Detail
- CubicleBus Conditions
- Waveform Displays

Alarm parameters

The metering function includes the following alarm set-point functions::

Alarm function	Setting range	Delay range
Overcurrent	3 ... 10000A	0 ... 255 s
Overcurrent – ground fault	3 ... 10000A	0 ... 255 s
Overcurrent – N-conductor	3 ... 10000A	0 ... 255 s
Phase unbalance – current	5 ... 50%	0 ... 255 s
Demand – current	3 ... 10000A	0 ... 255 s
Total harmonic distortion – current	0 ... 50%	5 ... 255 s
Undervoltage	100...1200V	0 ... 255 s
Overvoltage	200...1200V	0 ... 255 s
Phase unbalance – voltage	5 ... 50%	0 ... 255 s
Total harmonic distortion – voltage	0 ... 50%	5 ... 255 s
Crest factor	0.01 ... 25.5%	0 ... 255 s
Form factor	0.01 ... 25.5%	0 ... 255 s
Active power in normal direction	1 ... 10000kW	0 ... 255 s
Active power in reverse direction	1 ... 10000kW	0 ... 255 s
Leading power factor	-0.999 ... 1	0 ... 255 s
Lagging power factor	-0.999 ... 1	0 ... 255 s
Demand – active power	1 ... 10000kW	0 ... 255 s
Apparent power	1 ... 10000kVA	0 ... 255 s
Reactive power in normal direction	1 ... 10000kvar	0 ... 255 s
Reactive power in reverse direction	1 ... 10000kvar	0 ... 255 s
Demand – reactive power	1 ... 10000kvar	0 ... 255 s
Underfrequency	40 ... 70 Hz	0 ... 255 s
Overfrequency	40 ... 70 Hz	0 ... 255 s

Extended relaying

Protective relays included with the metering function can monitor the following criteria and initiate a trip if the values are exceeded.

Protective relay function	ANSI device number	Setting range	Delay range
Current unbalance	46	5 ... 50%	1 ...15 s
Total harmonic distortion - current	81 THDC	0 ... 50%	5 ...15 s
Voltage unbalance	47	5 ... 50%	1 ...15 s
Undervoltage	27	100 ... 1100V	1 ...15 s
Overvoltage	59	200 ... 1200V	1 ...15 s
Total harmonic distortion - voltage	81 THDV	0 ... 50%	5 ...15 s
Direction of phase rotation	47N		
Active power in normal direction	32	1 ... 10000kW	1 ...15 s
Active power in reverse direction	32R	1 ... 10000kW	1 ...15 s
Under frequency	81U	40 ... 70 Hz	1 ...15 s
Over frequency	81O	40 ... 70 Hz	1 ...15 s

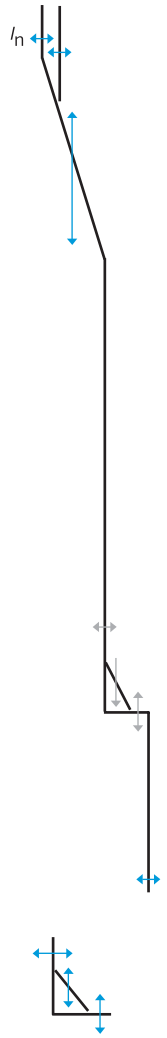

	Basic functions	ETU745
L	Long-time overcurrent protection	✓
	Function can be disabled	–
	Setting range $I_R = I_n$ x ...	0.4, 0.45, 0.5, 0.55, 0.6, 0.65, 0.7, 0.8, 0.9, 1
	Switch-selectable overload protection (I^2t or I^4t dependent function)	✓
	Setting range of time delay class t_R at I^2t (seconds)	2, 3.5, 5.5, 8, 10, 14, 17, 21, 25, 30
	Setting range of time delay t_R at I^4t (seconds)	1, 2, 3, 4, 5
	Thermal memory	✓ (via slide switch)
	Phase loss sensitivity	set t_{sd} =20 ms (M)
N	Neutral protection	✓
	Function can be disabled	✓ (via slide switch)
	N-conductor setting range $I_N = I_n$ x ...	0.5 ... 1
S	Short-time overcurrent protection	✓
	Function can be disabled	✓ (via rotary switch)
	Setting range $I_{sd} = I_n$ x ...	1.25, 1.5, 2, 2.5, 3, 4, 6, 8, 10, 12
	Setting range of time delay t_{sd}, fixed (constant time in seconds)	0.02 (M), 0.1, 0.2, 0.3, 0.4, OFF
	Setting range of time delay I_{sd} at I^2t (seconds)	0.1, 0.2, 0.3, 0.4
I	Zone Selective Interlocking (ZSI) function	per CubicleBUS module
	Instantaneous overcurrent protection	✓
	Function can be disabled	✓
	Extended Instantaneous Protection	Instantaneous is active when disabled
	Setting range $I_i = I_n$ x ...	1.5, 2.2, 3, 4, 6, 8, 10, 12 0.8 x I_{cw} = Max,
G	Ground fault protection	O (field installable module)
	Trip and alarm function	✓
	Detection of the ground fault current by residual summing method	✓
	Detection of the ground fault current by direct sensing method	✓
	Setting range of the I_g for trip	FS1 & 2: 100, 300, 600, 900, 1200A, FS3: 400, 600, 800, 1000, 1200A
	Setting range of the I_g for alarm	FS1 & 2: 100, 300, 600, 900, 1200A, FS3: 400, 600, 800, 1000, 1200A
	Setting range of the time delay t_g (fixed seconds)	0.1, 0.2, 0.3, 0.4, 0.5
	Setting range time delay t_g at I^2t	0.4, 0., 0.3, 0.4, 0.5
	ZSI ground function	per CubicleBUS module

Notes:

① M = tsd = 20ms is the motor protection setting with phase-loss sensitivity enabled: LT pick-up is reduced to 80% when phase unbalance > 50% .

② Extended Instantaneous Protection (EIP) allows the WL breaker to be applied at the withstand rating of the breaker with minus 0% tolerance; that means no instantaneous override whatsoever. EIP further enables the circuit breaker to be applied up to the full instantaneous rating of the breaker on systems where the available fault current exceeds the withstand rating.

✓ available
– not available
o optional

WL Circuit Breaker

ETU Function

Overview

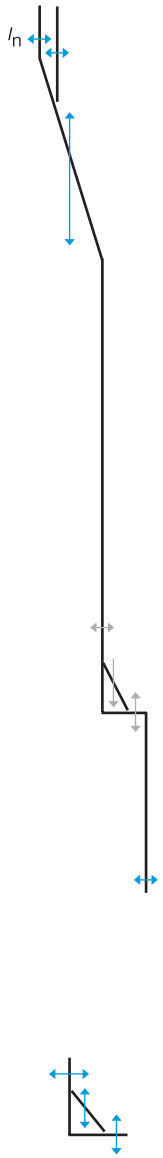

Basic function		ETU776
L	Long-time overcurrent protection	✓
	Function can be disabled	–
	Setting range $I_R = I_n$ x ...	40-100% of I_n (Adjustable in Amps[1])
	Switch-selectable overload protection (I^2t or I^4t dependent function)	✓
	Setting range of time delay t_R at I^2t (seconds)	2...30s
	Setting range of time delay t_R at I^4t (seconds)	1...5s
	Thermal memory	✓ (on/off via keypad or communications)
	Phase loss sensitivity	✓ (on/off via keypad or communications)
N	Neutral protection	✓
	Function can be disabled	✓ (on/off via keypad or communications)
	N-conductor setting range $I_N = I_n$ x ...	0.5 ... 2 OFF
S	Short-time delayed overcurrent protection	✓
	Function can be switched ON/OFF	✓ (on/off via keypad or communications)
	Setting range $I_{sd} = I_n$ x ...	1.25... 0.9 x I_{cw} = max
	Setting range of time delay t_{sd}, fixed (seconds)	0.02s (M), 0.08 ... 4s, OFF
	Switch-selectable short-time delay short-circuit protection (I^2t dependent function)	✓ (via keypad or communications)
	Setting range of time delay I_{sd} at I^2t (seconds)	0.1 ... 0.4s
	Zone Selective Interlocking (ZSI) function	per CubicleBUS module
I	Instantaneous overcurrent protection [2]	
	Function can be disabled, Extended Instantaneous Protection is enabled when OFF	✓ (via keypad or communications)
	Setting range I_i = In x ...	1.5 ... 0.8 x I_{cs} = MAX OFF = I_{cw} = EIP
G	Ground fault protection	o (field installable module)
	Trip and alarm function	✓
	Detection of the ground fault current by residual summing method	✓
	Detection of the ground fault current by direct summing method	✓
	Setting range of the I_g for trip	FS1 & 2: 100A ... 1200A, FS3: 400A ... 1200A
	Setting range of the I_g for alarm	FS1 & 2: 100A ... 1200A, FS3: 400A ... 1200A
	Setting range of the time delay t_g (seconds)	0.1 ... 0.5s
	Switch-selectable ground fault protection (I^2t / fixed)	✓
	Setting range time delay t_g at I^2t	0.1...0.5s
	ZSI ground function	per CubicleBUS module

NOTES:

① From the ETU keypad, delay times can be set in the following increments within the applicable limits:
20ms ... 500ms in 5ms steps 1.05s ... 1.5s in 50ms steps
510ms ... 1.0s in 10ms steps > 1.6s in 0.1s steps
Via communication, delay times can be set in 0.1s steps.

② ETU776 settings via communications: 10A steps for Instantaneous and Short Time pickup, all others 1A steps.
Via ETU Keypad: Below 1000A: 10A steps 1600A-1000A: 50A steps
1600A-1000A: 100A steps Above 10000A, 1000A steps

③ Extended Instantaneous Protection (EIP) allows the WL breaker to be applied at the withstand rating of the breaker with minus 0% tolerance; that means no instantaneous override whatsoever. EIP further enables the circuit breaker to be applied up to the full instantaneous rating of the breaker on systems where the available fault current exceeds the withstand rating.

④ M = tsd = 20ms is the motor protection setting with phase-loss sensitivity enabled: LT pick-up is reduced to 80% when phase unbalance > 50%. Keypad - Direct input at the trip unit.

✓ Available
– Not available
o Optional

Factory Installed Options①

Breaker mounted options

Ground fault module

The ground fault module (GFM) is used to detect current flowing through the grounding conductors which may present a hazardous condition. The module can be field installed. Residual sensing by phase vector summation or direct sensing can be selected on the module or via the setup of the ETU776. Ground fault modules may be ordered as alarm only or as alarm and trip. Alarm will provide a visual and communication notification. Alarm and trip model will trip the breaker in addition to alarm notification.

For more information about ground fault protection, see the Ground Fault Application Guide. www.usa.siemens.com/wl



Key lock-out

To lock the WL breaker in the "Open" position, an optional keylock can be installed in the breaker. The key cylinder and lock-out assembly are mounted in the breaker and accessible through a knockout in the breaker front cover. The key is removable only when the breaker is locked open. If a custom, coordinated key/cylinder is required, order the lock provision-only. The lock cylinder and matched key must then be ordered separately from the respective lock manufacturer.

The compatible Kirk cylinder lock part number is C-900-301. The compatible Superior cylinder lock part number is C-900.



Operation counter

For monitoring the number of breaker operations (open and close) a numerical operations counter is available. This counter is only suitable for breakers equipped with the spring-charging motor option. The counter mounts to the motor assembly and will register manual and electrical breaker operations. Counter is non-resettable up to 100,000 operations. Counter ships with available pre-service operations for field setting to zero.



① See page 6-109 for field install part numbers.

Auxiliary contacts

Auxiliary contacts can be used to provide interlocking control or remote indication of the breakers main contact position (open or closed breaker). The Normally Open (NO) contacts are open when the breakers main contacts are open. The Normally Closed (NC) contacts are closed when the breakers main contacts are open. The contacts are wired individually to the secondary disconnects for user connectivity. See breaker wiring diagram for supply terminal locations.



Characteristics table

Available Contact Configurations		2NO and 2NC or 4NO and 4NC
AC Operation	Voltage	240VAC 50/60Hz
	Continuous Current	10A
	Making Current	30A
	Breaking Current	3A
DC Operation	Voltage	24, 125, 250VDC
	Continuous Current	5A
	Making Current	1.1A @ 24 or 125VDC, .55A @250VDC
	Breaking Current	1.1A @ 24 or 125VDC, .55A @250VDC

Breaker status sensor (BSS)

BSS is an integrated circuit device that measures the internal breaker temperature, monitors breaker main contact position (open or closed), bell alarm status, undervoltage release status, breaker ready-to-close and closing spring charged status. All status conditions and information is transmitted through the CubicleBus network as real-time data. A COM16 (Modbus), COM15 (PROFIBUS) or a COM35 (Modbus TCP / PROFINET IO) accessory can be used to communicate the breaker status provided by the BSS to an external computer or monitoring system. See breaker wiring diagram for supply terminal locations, which are included with COM15, COM16, and COM35 communications accessories



.

Characteristics table

Operating Voltage	24VDC
Peak Inrush Current	110mA
Max. Continuous Current	40mA
Ambient Operation Temperature	-25 to 70°C

WL Circuit Breaker

Factory Installed Options①

Bell alarm contact and reset coil

The bell alarm contacts are mechanically activated by the trip unit solenoid. If a breaker trip condition occurs, the bell alarm form-C contacts will change state closing or opening a user circuit wired to the secondary terminal block. The contacts can be locally reset to their original position by manually resetting the breaker trip button or through the use of a reset coil that resets the contacts remotely. See breaker wiring diagram for supply terminal locations. Non-automatic (manual) reset trip units can not be used with the reset coil option.



Characteristics table

Available contact configurations		Coil ratings
Remote Reset Coil AC Operation	Voltage	240VAC 50/60Hz
	Continuous Current	5A
	Making Current	8A
	Breaking Current	5A
Remote Reset Coil DC Operation	Voltage	24, 48,125 or 250VDC
	Continuous Current	5A
	Making Current	.4A @ 24, 48,125VDC, .2A @250VDC
Breaking Current	.4A @ 24, 48,125VDC, .2A @250VDC	

Racking handle key lock

A draw-out breaker can be key locked (optional) or padlocked (standard not shown) in three racking positions; connect, test or disconnect. Key lock cylinders are available in Kirk or Superior types and uniquely keyed.

For more information about interlocking possibilities, see the Locking Provisions Application Guide www.usa.siemens.com/wl



Breaker push button lock-outs

A finger or hand tool shroud option can be added to the breaker front cover to isolate the open and close buttons from unintentional use. Shrouds may be used in combination or like configuration.

To isolate the open and close buttons from unintentional use, transparent padlock covers can be installed in lieu of the shroud option. Two padlocks may be used with a latch diameter of 3/8 inch maximum (padlocks by others).

For more information about interlocking possibilities, see the Locking Provisions Application Guide. www.usa.siemens.com/wl



Close coil

To remotely close the WL breaker, a close coil must be used with a momentary electrical source. Only one close coil can be used per breaker. Charging springs must be charged and breaker open prior to activating the close coil. See breaker wiring diagram for supply terminal location.



Characteristics table

Close Coil AC Operation	120VAC Range	104 - 127VAC
	240VAC Range	208 - 254
	Power Consumption	120W for 50ms (5% duty cycle)
	Breaker closing time	50ms from point of signal
Close Coil DC Operation	24VDC	14 - 28VDC
	48VDC	28 - 56VDC
	125VDC	70 - 140VDC
	250VDC	140 - 280VDC
	Power Consumption	120W for 50ms (5% duty cycle)
	Breaker closing time	50ms from point of signal

① See page 6-109 for field install part numbers.

Factory Installed Options①

Spring charging handle lock

An optional padlock provision to prevent manual charging of the closing springs can be installed on the breaker front cover. This provision does not prevent electric charging of the closing springs and the breaker can be mechanically closed if the closing spring is charged prior to padlocking the charging handle. One padlock may be used with a latch diameter of 3/8 inch maximum (padlock by others).

For more information about interlocking possibilities, see the Locking Provisions Application Guide www.usa.siemens.com/wl



Rating plugs

The rating plug is required to limit the downstream load current. Use of a rating plug that exceeds the breaker frame rating will result in a trip unit error and will trip the breaker automatically. Rating plugs are field interchangeable.



Ready-to-close contact

In addition to the standard "ready-to-close" visual indicator on the WL breaker, an optional contact can be added to remotely monitor the ready-to-close conditions. Closing is ready if all of the following conditions are true:

- Cclosing spring-charged
- breaker main contacts are open
- mechanical lock-outs disabled
- racking handle seated in stored position
- electrical lock-outs disabled



Characteristics table

Ready-to-close contact	Voltage	125-240VAC, 125 -250VDC
	Continuous current	3A
	Making current	.4A @24-125VDC, 5A @120-240VAC
	Breaking current	.2A @24-125VDC, 3A @120-240VAC

Shunt trip (intermittent duty)

The shunt trip opens the circuit breaker instantly when energized by a remote power source. A clearing contact is wired in series with the shunt trip to remove the control voltage from the coil after the breaker is opened. Two shunt trip coils may be installed in a breaker if dual supply sources or control circuits are required.

An optional status contact may be selected to provide a signaling condition that the shunt trip has been activated.



Characteristics table

Trip coil AC operation	120VAC range	104 - 127VAC
	240VAC range	208 - 254VAC
	Power consumption	120W for 50ms (5% duty cycle)
	Min. closing time	50ms from point of signal
Trip coil DC operation	24VDC range	14 - 28VDC
	48VDC range	28 - 56VDC
	125VDC range	70 - 140VDC
	250VDC range	140 - 280DVC
	Power consumption	120W for 50ms (5% duty cycle)
	Min. closing time	50ms from point of signal

Shunt trip (continuous duty)

The continuous duty shunt trip is available for 100% duty cycle and can hold the WL breaker open during an electrical or manual "close breaker" attempt (i.e. lock-out). The continuous duty trip may be used in conjunction with a standard shunt trip solenoid for dual control.



Characteristics table

Shunt trip (interlock coil)	120 - 240 VAC range	85 - 110% of nominal
	24 - 250VDC range	70 - 126% or nominal
	Power consumption	15W / 15VA
	Min. shunt trip actuation	60 ms
	Opening time of breaker	80 ms
	Smallest fuse protection rating	1A

① See page 6-109 for field install part numbers.

Factory Installed Options①

Status contact

A status contact is a mechanical switch that is suitable for monitoring an undervoltage trip or second shunt trip coil position. The contact will be wired to the secondary contacts of the breaker for customer connections or wired to the Breaker Status Sensor (BSS) if communications is installed on the breaker. Contact is 1NO configured.



Characteristics table

Signaling contact	Voltage	127 - 240VAX, 24 - 125VDC
	Continuous current	3A
	Making current	1A @24 - 125DVC, 5A @120 - 240VAC
	Breaking current	1A @24 - 125DVC, 3A @120 - 240VAC

Spring-charging motor

The spring charging motor is used to automatically charge the breakers closing spring so the breaker is suitable for closing on command. Motor charging is typically used for remote breaker operation or as an alternative to local manual charging. The motor assembly can be easily installed in the field and includes an automatic cut-off switch which disconnects the current upon full charge of the closing spring mechanism.



Characteristics table

Spring-charging motor	120 - 240VAC range	85 -110% of nominal
	24 - 240VDC range	70 - 126% of nominal
	Power consumption	110W
	Max. charging time	10 seconds
	Fuse protection rating	24-60V 6A, 120-240V 3A (slow-blow)

Undervoltage release

In the event of loss or low level control circuit voltage, an undervoltage release may be used to automatically open the circuit breaker. To prevent nuisance breaker openings from temporary voltage dips, a separate adjustable time-delay undervoltage release is also available. The status of the undervoltage release can be monitored via communications using a contact connected to the BSS.



Characteristics table

Undervoltage release UVR	Operating values	85 - 110% breaker can be closed, 35 - 70% breaker will open
	120 - 240VAC Coil voltage tolerance	85 - 110% of nominal
	24 - 250VDC Coil voltage tolerance	85 - 126% of nominal
	Supply voltage	120, 240VAC or 24, 48, 125, 250VDC
	Power consumption	200VA inrush/ 5VA continuous (same in Watts for DC)
	Opening time of breaker	200 ms
	UVR w/o time delay (dual setting)	80 ms or 200ms
	UVR with time delay (adjustable delay)	0.2 to 3.2 sec.

6 WL POWER CIRCUIT BREAKERS

① See page 6-109 for field install part numbers.

Factory Installed Options①

The following items are available for WL cradles. Items are described to highlight the functional characteristics of these factory installed cradle options.

Secondary disconnects

Secondary disconnects are used to interconnect external breaker control and signaling circuitry to the WL breakers factory wired circuitry. Three types of external connection terminals are available. 1. Screw connection, 2. Tension spring connection and, 3. Ring lug connection. Tension spring connection terminals are standard for fixed mounted breakers.



Characteristics table

	Wire connection type	Number of wires and sizes
Secondary disconnects	Screw compression	1 x 14AWG or 2 x 16AWG
	Tension spring compression	2 x 14AWG
	Ring lug terminal	2 x 14AWG or 2 x 16AWG

Isolation shutters

When removing a draw-out breaker from its connected position the primary contacts become exposed and more accessible to personnel in the breaker compartment. Isolation shutters reduce that accessibility to the primary terminals by automatically closing the access ports to the primary terminals whenever the breaker is disconnected or withdrawn. After removal of the breaker from its compartment, the shutters may be padlocked to inhibit manual shutter opening while breaker is not in the compartment.



Modbus, Modbus TCP, PROFIBUS, and PROFINET IO communications

PROFIBUS or Modbus communication requires a COM15 or COM16 communications module to transmit WL breaker data to external PCs or PLC monitoring systems. External communication connection to either module is through a DB-9F connector.

Modbus TCP and PROFINET IO communication requires a COM35 communications module. External communication connection is through a RJ-45 Ethernet connection.



Characteristics table

Operating voltage	24VDC
Peak inrush current	280mA
Max. continuous current	125mA
Ambient temperature	-25 to 70°C

Dual key breaker locking

For draw-out breakers, a cradle-mounted breaker lockout device can be installed with either one or two independent key cylinders. The key is removable only when the breaker is locked open. Cradle-mounted key locks are commonly utilized for interlocking in open transition schemes, where paralleling certain sources is not desirable. Siemens offers the choice of unique, uncoordinated, Kirk and Superior key lock types. If a custom, coordinated key/cylinder is required, order the lock provision-only. The lock cylinder and matched key must then be ordered separately from the respective lock manufacturer.

The compatible Kirk cylinder lock part number is C-900-301. The compatible Superior cylinder lock part number is C-900.

For more information about interlocking possibilities, see the Locking Provisions Application Guide www.usa.siemens.com/wl



① See page 6-109 for field install part numbers.

WL Circuit Breaker

Cradle Factory Installed Options①

Characteristics

Arc chute cover

The arc chute cover is available for isolating enclosure material or parts located above the circuit breaker where heat and exhaust gases may exit from the breakers arc chutes. Arc chute covers are not available for fixed mounted breakers and limited to select draw-out breaker types.



TOC (Truck Operated Contacts)

For draw-out breaker applications a TOC device is available to provide remote indication of the circuit breakers primary and secondary contact connections (racking positions). When the breaker is racked into a connected, test or disconnected position, it activates TOC switches for external user circuits.



MOC (Mechanism Operated Contacts)

Mechanism Operated Contacts (MOC) are a cradle mounted accessory which indicate the state of the breaker's internal contacts (open or closed). MOCs are typically utilized when additional auxiliary contacts are necessary – above and beyond the number configurable in the circuit breaker – although they may also be used in lieu of t he internal auxiliary switches. Each MOC assembly includes 4 'a' and 4 'b' contacts. Two different MOC assemblies are available. One version operates when the circuit breaker is in both the "TEST" and "CONNECTED" positions, and the other version operates only when the circuit breaker is in the "CONNECTED" position.

Note per ANSI C37.20.10:
'a' contact: a contact that is open when the main device is in the standard reference position and that is closed when the device is in the opposite position.

'b' contact: a contact that is closed when the main device is in the standard reference position and that is open when the device is in the opposite position.



Characteristics table

MOC Contact Configurations	4NO and 4NC	
AC Operation	Voltage	240VAC 50/60Hz
	Continuous current	10A
	Making current	30A
	Breaking current	3A
DC Operation	Voltage	24, 125, 250VDC
	Making current	1.1A @ 125VDC, 0.55A @ 250VDC
	Breaking current	1.1A @ 125V DC, 0.55A @250VDC

TOC Switch	Breaker disconnected = Primary and secondary contacts are disconnected	Breaker in test = Primary contacts disconnected and secondary contacts are connected	Breaker connected = Primary and secondary contacts are connected
Option 1 Option 2 Option 3	1 form C contacts	1 form C contacts	1 form C contacts
	1 form C contacts	2 form C contacts	3 form C contacts
	0 form C contacts	0 form C contacts	6 form C contacts
	TOC Contact Ratings	AC Voltage	120, 240VAC
		AC Continuous Current	10A
		AC Making/Breaking Current	6A@120V, 3A@240VAC
		DC Voltage	24, 48, 125, 250VDC
		DC Continuous Current	6A, 1A, 1A
		DC Making/Breaking Current	6A, 0.22A, 0.11A

① See page 6-109 for field install part numbers.

Communication power supplies
For WL devices that require a 24VDC input we offer the Siemens SITOP power supply. The SITOP power supply is a class 2 rated devices suitable for supporting loads of 2.5 or 3.8 amps. DIN rail mounting provision and compression wire connections included. For loads of 2.5A maximum order part number **WLSITOP25** or **WLSITOP1** for 3.8A maximum loads.



Handheld test device
To test the WL breakers ETU trip functions we offer a hand-held tester that checks:

- Sensor continuity
- Long-time function
- Short-time function
- Instantaneous function
- Neutral and ground fault function

During a test, the device will electrically trip the circuit breaker performing a full function test of the ETU and the trip actuator. Cables for 120VAC power supply and ETU connection is included with the tester. Order part number **WLTS**

For more information about the capabilities of this test set, see the WLTS Application Guide. **www.usa.siemens.com/wl**



Electromagnetic Compatibility (EMC) Filter
The WL EMC filter resides between the electronic trip unit (ETU) and the current sensors, filtering out unwanted electromagnetic interference that could distort both protection and metering. Use of the filter is recommended when the breaker is applied in high-resistance grounded systems when variable-speed drives are the primary load. Order part number **WLEMCFILTER**.



Mechanical breaker interlocks
Mechanical interlock options are available for fixed or draw-out breakers. Interlocking is managed through cable connections between two or three breakers less than 6 meters apart. Lock kit includes 2.0 meter interlocking cable and mechanism for mounting to a single breaker.

For fixed breaker frame size 1 order part number **WLNTLKF1**
For fixed breaker frame size 2 or 3, order part number **WLNTLKF23**

For draw-out breaker frame size 1, 2, or 3,
order part number **WLNTLK**

For more information about interlocking possibilities, see the Locking Provisions Application Guide. **www.usa.siemens.com/wl**



For alternate cable lengths, order part number

3.0 meter	**WLNTLWRE3**
4.5 meter	**WLNTLWRE4**
6.0 meter	**WLNTLWRE5**

Metering current transformer 3-phase window (cradle mounting only)

For draw-out breaker applications, a three phase metering CT is available. Termination screws are integral to the mold for point-to-point wiring without the use of terminal blocks or wire couplers. Metering ratios range from 800:5 to 5000:5. CTs include mounting hardware.



For frame size 1 and 2 order part numbers:	
800:5 Rating	**WLG8005MCT2**
1200:5 Rating	**WLG12005MCT2**
1600:5 Rating	**WLG16005MCT2**
2000:5 Rating	**WLG20005MCT2**
2500:5 Rating	**WLG25005MCT2**
3200:5 Rating	**WLG32005MCT2**

For frame size 3 order part numbers:	
3200:5 Rating	**WLG32005MCT3**
4000:5 Rating	**WLG40005MCT3**
5000:5 Rating	**WLG50005MCT3**

4-Wire Modified Differential Ground Fault (MDGF)

For MDGF draw-out breaker applications, a three phase ironcore CT is available. The MDGF CTs are physically the same as the above metering CTs but the current ratio is 1200:1.

For frame size 2, breakers order part number:
1200:1 rating WLGMDGFCT2 Phase CT

For frame size 3, breakers order part number:
1200:1 rating WLGMDGFCT3 Phase CT

For frame size 2 and 3, neutral CT order part number:
1200:1 rating WLGNMDGCT23 Neutral CT

A typical application for modified differential ground fault is 'Main-Tie-Main' where all breakers require 3 Phase CTs and a neutral CT.

For more information about ground fault protection, see the Ground Fault Application Guide. **www.usa.siemens.com/wl**

Metering current transformer – single phase

Metering current transformer – single phase A single piece housing that is compact and designed to fit around phase or neutral bussing. Termination screws are integral to the mold for point-to-point wiring without the use of terminal blocks or wire couplers. Metering ratios range from 800:5 to 5000:5.



For frame size 1, 2 or 3, order part numbers:	
800:5 Rating	**WLG800NMCT23**
1200:5 Rating	**WLG1200NMCT23**
1600:5 Rating	**WLG1600NMCT23**
2000:5 Rating	**WLG2000NMCT23**
2500:5 Rating	**WLG2500NMCT23**
3000:5 Rating	**WLG3000NMCT23**
3200:5 Rating	**WLG3200NMCT23**
4000:5 Rating	**WLG4000NMCT23**
5000:5 Rating	**WLG5000NMCT23**

Neutral current sensor – 4-wire residual ground fault
For 4-wire residual ground fault protection we offer neutral current sensors with or without bus bar coupling. The sensors are comparable to the sensors used within the breaker and connected to the ETU. This sensor must also be wired to the ETU through designated secondary disconnects on the breaker.

Without copper bus adapters:
- 3″ max bus bar width order part number **WLNCT2**
- 3 - 5″ bus bar width order part number **WLNCT3**

With copper bus adapters:
- 3″ max bus bar width order part number **WLNCT2CB**
- 3 - 5″ bus bar width order part number **WLNCT3CB**



Breaker door cover
A transparent hinged door cover is available to provide IP55 protection. Provision for padlocking included. Fits frame size 2 and 3 breakers. Order part number **WLPGC**



Door sealing frame
For openings around the door cutout of the breaker, this rubber door trim is available. For frame size 2 and 3 breakers only. Order part number **WLDSF**



Breaker lifting
The breaker lifting yolk is designed to transport the WL breaker when using a hoist or other lifting equipment. The device is expandable to conform to all three WL frame sizes and easily attaches to specified lift points on the breaker. Order part number **WLLFT** (3-pole) and **WLLFT4** (4-pole)



For more information, see the Recommended Practice for Using the WL Telescopic Lifting Yokes. **www.usa.siemens.com/wl**

Remote Breaker Racking Device
Provides the ability to safely rack WL breakers into the Connect, Test and Disconnect positions from 30 feet away from the breaker, allowing the operator to be outside the arc flash boundary which provides additional personnel protection. **WLRBRD**

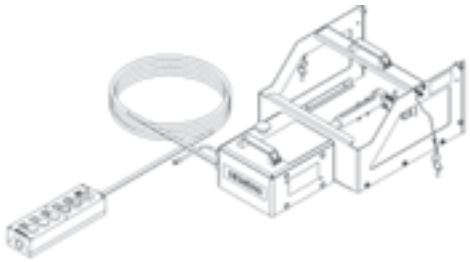

Door Bracket Kit, Remote Breaker Racking Device
In order to mount the remote breaker racking device on existing gear, this retrofit door bracket kit and the **WLRBRDTEMPL** must be ordered. **WLRBRDKIT**

Remote Breaker Racking Device Door Bracket Install Template
In order to mount the remote breaker racking device on existing gear, this mounting template and the **WLRBRDKIT** must be ordered. **WLRBRDTEMPL**

Breaker Hoist
This device acts as a hoist for the WL breaker, allowing it to be carried using a forklift or similar device. **WLHOIST**



CubicleBUS modules
External CubicleBUS modules enable the WL Circuit Breaker a way to interface with external switchgear controls or building management systems. They can be used, for example, to activate analog displays or devices, transmit circuit breaker status and cause of trip, or read external device control signals. One module is suitable for zone-selective interlocking main and branch breakers.

Three different CubicleBUS modules can output data from the CubicleBUS system (two digital output modules and one analog output module). A digital input module can transmit data from the switchgear or system to a PROFIBUS/Modbus master device like a power meters or logic controllers.

For more information about the capabilities of CubicleBUS modules, see the WL Communications Manual.
www.usa.siemens.com/wl

Digital Output Module with Rotary Switch – The digital output module can be used to output six events. These events can be warnings or trips and can be used for external annunciation or control. The load shedding and load restoring signals can enable a load to be switched ON or OFF automatically. Voltages of up 250V AC/DC are possible. The relay contacts are isolated.

Relay Digital Output Module: Order part number **WLRLYCUB**



Digital input module
The digital input module enables up to six additional binary signals (24V DC) to be connected. Signals, such as breaker status, arc-flash current reduction, over-temperature conditions or control circuit status switchgear, can be transmitted directly to the power monitoring network.

A total of 6 inputs are available in the "BUS Input" Switch position. Six inputs are also available if the rotary switch is in the "Parameter Switch" position, although the first input causes the active parameter set to change. If the connected ETU does not have two parameter set capability (e.g. ETU745), this input can also be used without any restrictions.

Digital Input Module: Order part number **WLDGNCUB**



ZSI module
To use the ZSI function with the WL Circuit Breaker, the external CubicleBUS ZSI module must be implemented. The zone selective interlocking (ZSI) module provides the complete range of selectivity with the short delay time of tZSI = 50 ms, ir respective of the number of levels and the location of the short-circuit in a distribution system. Its benefits become even more apparent, the higher the number of levels in large systems and the longer the resulting delay times. By shortening the time, the ZSI module significantly reduces stress and damage in the event of a shortcircuit in the switchgear.

Zone Selective Interlocking Module: Order part number **WLZSIMD**



Analog output module
The analog output module can be used to output the most important measured values sent via the CubicleBUS to analog indicators (e.g. analog meters) in the switchgear cubicle door. Each analog output module has four channels for this purpose. The signals are available at two physical interfaces: a 4 ... 20mA and a 0 ... 10V interface.

Analog output module: order part number **WLANLGCUB**

Pre-assembled CubicleBUS communication cables (RJ45-M connections)

1 meter length: order part number	**WLCBUSCABLE1**
2 meter length: order part number	**WLCBUSCABLE2**
4 meter length: order part number	**WLCBUSCABLE4**
9 meter length: order part number	**WLCBUSCABLE9**

Fixed-mounted breaker front bus connectors
Front connector bus kits are available for adapting WL breaker primary mounting stabs to a standard NEMA bussing and bolt-hole pattern. NEMA bolt connection is accessible from the front of the breaker for ease of installation or removal of breaker inside an enclosure. Kit includes the required bus and hardware for mounting one 3-pole set of adapters to a breaker.

For frame size 1, 2 or 3, order part numbers:	
Frame size 1, 1200A frame, 85 kAIC at 480V	**WLH1F12CONUL**
Frame size 2, 1600A frame, 100kAIC at 480V	**WLL2F16CONUL**
Frame size 2, 2000A frame, 100kAIC at 480V	**WLL2F20CONUL**
Frame size 2, 2500A frame, 100kAIC at 480V	**WLL2F25CONUL**
Frame size 3, 4000 to 5000A frame, 100kAIC at 480V	**WLL3F50CONUL**



Mechanical lug connector kits are available for connecting 800 to 2000A WL front connector bus kits (sold separately) to power cables.

For frame size 1, 2 or 3, order part numbers:	
Frame size 1, 1200A max, 65 kAIC at 480V	**WLS2P12CONUL**
Frame size 2, 1600A/2000A 65 kAIC at 480V	**WLS2P20CONUL**

Fixed mounted breaker rear bus connector kits are available for adapting WL breaker primary mounting stabs to a standard NEMA bussing and bolt-hole pattern. Adapters also rotate the primary breaker connections by 90° for vertical bus arrangement. Bolted connections are accessible from the rear of the breaker. Kit includes the required bus and hardware for mounting one3-pole set of adapters to a breaker.

For frame size 1, 2 or 3, order part numbers:	
Frame size 1, up to 2000A frame, 85 kAIC at 480	**WLH1R12CONUL**
Frame size 2, 1600A frame, 100 kAIC at 480V	**WLL2R16CONUL**
Frame size 2, 2000A frame, 100 kAIC at 480V	**WLL2R20CONUL**
Frame size 2, 3000A frame, 100 kAIC at 480V	**WLL2R30CONUL**
Frame size 2, 800A to 3000A frame, 150 kAIC at 480V rated breaker only	**WLC2R30CONUL**
Frame size 3, 4000A to 5000A frame, 100 kAIC at 480V	**WLC3R50CONUL**

WL Circuit Breaker

WL Catalogue Numbering

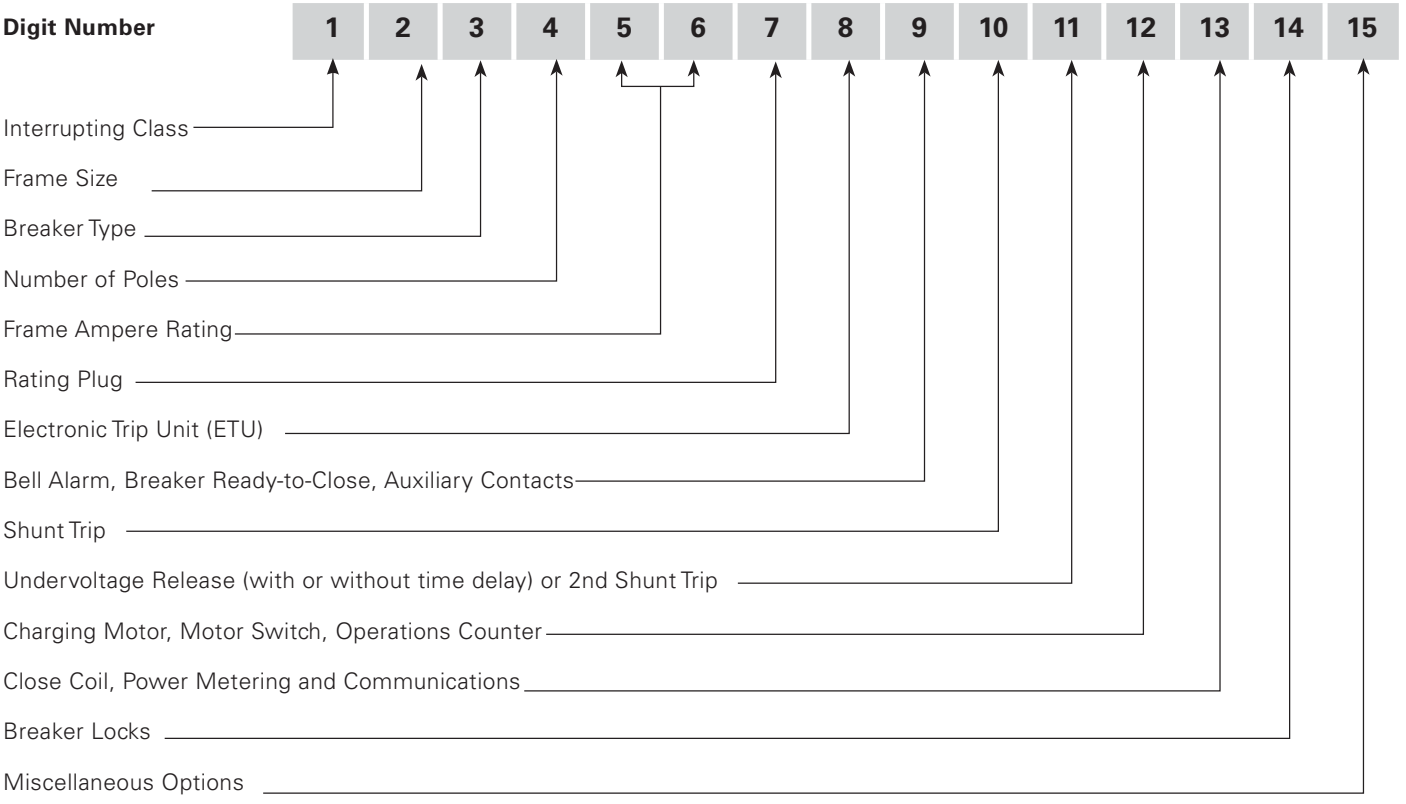

WL Insulated Case Circuit Breaker

Ratings for UL489 Listed Breakers

Selection

WL frame ratings – frame size 1		**800A**			**1200A**			**1600A**			**2000A**		
Rating Class		S	H	L	S	H	L	S	H	L	S	H	L
Interrupting current frame Ics (kAIR RMS) 50/60 Hz	240VAC	65	85	100	65	85	100	65	85	100	65	85	100
	480VAC	65	85	100	65	85	100	85	85	100	65	85	100
	600VAC	65	65	65	65	65	65	65	65	65	65	65	65
Short-time current Icw (kA RMS)	0.4 sec.	65	65	65	65	65	65	65	65	65	65	65	65
Extended instantaneous protection rating (kA RMS)	480VAC	65	85	100	65	85	100	65	85	100	65	85	100
	600VAC	65	65	65	65	65	65	65	65	65	65	65	65
Close and latch rating (kA RMS)		65	65	65	65	65	65	65	65	65	65	65	65
Applicable rating plug range		200 - 800A			200 - 1200A			200 - 1600A			200 - 2000A		
Mechanical make-time (ms)		35			35			35			35		
Mechanical break-time (ms)		34			34			34			34		
Electric close make-time (ms)		50			50			50			50		
Electric trip/ UV break-time (ms)		40/73			40/73			40/73			40/73		
Electric trip and reclose interval (ms)		80			80			80			80		
Mechanical duty cycles (no maint.)		7500			7500			7500			7500		
Electrical duty cycles (no maint.)		7500			7500			7500			7500		
Draw-out breaker efficiency (Watts loss at In)		80			180			350			530		
Fixed-mount breaker efficiency (Watts loss at In)		60			120			160			270		
Ambient operating temperature (°C)		-25 to 40			-25 to 40			-25 to 40			-25 to 40		

WL frame ratings – frame size 2		800A			1200A			1600A			2000A			2500A		3000A	
Rating Class		S	L	C	S	L	C	S	L	C	S	L	C	L	C	L	C
Interrupting current frame Ics	240VAC	65	100	150	65	100	150	65	100	150	65	100	150	100	150	100	150
(kAIR RMS) 50/60 Hz	480VAC	65	100	150	65	100	150	65	100	150	65	100	150	100	150	100	150
	600VAC	65	85	100	65	85	100	65	85	100	65	85	100	85	100	85	100
Short-time current Icw (kA RMS)	0.4 sec.	65	85	100	65	85	100	65	85	100	65	85	100	85	100	85	100
Extended instantaneous protection	480VAC	65	100	150	65	100	150	65	100	150	65	100	150	100	150	100	150
rating (kA RMS)	600VAC	65	85	100	65	85	100	65	85	65	65	85	100	85	100	85	100
Close and latch rating (kA RMS)		65	85	100	65	85	100	65	85	100	65	85	100	85	100	85	100
Applicable rating plug range		200 - 800A			200 - 1200A			200 - 1600A			200 - 2000A			200 - 2500A		200 - 3000A	
Mechanical make-time (ms)		35			35			35			35			35		35	
Mechanical break-time (ms)		34			34			35			34			34		34	
Electric close make-time (ms)		50			50			50			50			50		50	
Electric trip/ UV break-time (ms)		40/73			40/73			40/73			40/73			40/73		40/73	
Electric trip and reclose interval (ms)		80			80			80			80			80		80	
Mechanical duty cycles (no maint.)		10,000 (5000 for Class C)			10,000 (5000 for Class C)			10,000 (5000 for Class C)			10,000 (5000 for Class C)			10,000 (5000 for Class C)		10,000 (5000 for Class C)	
Electrical duty cycles (no maint)		7500 (5000 for Class C)			7500 (5000 for Class C)			7500 (5000 for Class C)			4000			4000		4000	
Draw-out breaker efficiency (Watts loss at I_n)		85			150			320			500			680		1000	
Fixed-mount breaker efficiency (Watts loss at I_n)		40			80			120			230			320		480	
Ambient operating temperature (°C)		-25 to 40			-25 to 40			-25 to 40			-25 to 40			-25 to 40		-25 to 40	

NOTE: Frame Size 1 H-Class only for switches

WL Insulated Case Circuit Breaker

Ratings for UL489 Listed Breakers

WL frame ratings – Frame size 3		4000A		5000A	
Rating Class		**L**	**C**	**L**	**C**
Interrupting current frame Ics (kAIR RMS) 50/60 Hz	240VAC	100	150	100	150
	480VAC	100	150	100	150
	600VAC	85	100	85	100
Short-time current *I*cw (kA RMS)	0.4 sec.	85	100	85	100
Extended instantaneous protection rating	480VAC	100	150	100	150
(kA RMS)	600VAC	85	100	85	100
Close and latch rating (kA RMS)		85	100	85	100
Applicable rating plug range		800 - 4000A		800 - 5000A	
Mechanical make-time (ms)		35		35	
Mechanical break-time (ms)		34		34	
Electric close make-time (ms)		50		50	
Electric trip/ UV break-time (ms)		40/73		40/73	
Electric trip and reclose interval (ms)		80		80	
Mechanical duty cycles (no maint.)		5000		5000	
Electrical duty cycles (no maint.)		2000		2000	
Draw-out breaker efficiency (Watts loss at I_n)		1100		1100	
Fixed-mount breaker efficiency (Watts loss at I_n)		580		580	
Ambient operating temperature (°C)		-25 to 40		-25 to 40	

Ratings for UL489 Listed non-automatic switches

WL frame ratings		Frame size 1 800-2000A	Frame size 2 800 - 3000A	Frame size 3 4000/5000A
Rating Class		**L**	**L**	**L**
Breaking capacity with external relay (kA RMS)	240VAC	100	100	100
50/60 Hz, instantaneous trip	480VAC	100	100	100
	600VAC	85	85	85
Short-time current Icw (kA RMS)	0.4 sec.	85	85	85

WL Insulated Case Circuit Breaker

UL 489 Listed Catalogue Number

Interrupting rating, frame size, breaker type and frame rating

Note: Cradle must be ordered separately for drawout breaker types (see page 39)

Class	Interrupt rating (kA)		Frame	Frame size			Breaker type		Breaker catalog number																	
	240VAC 480VAC	600VAC	Max ampere rating (A)1	1	2	3	Fixed mount	Drawout	1	2	3	4	5	6	7	8	9	10	11	12	13	14	15
S	65	65	800	X			X		S	1	F	3	0	8									
S	65	65	800		X		X		S	2	F	3	0	8									
S	65	65	800	X				X	S	1	D	3	0	8									
S	65	65	800		X			X	S	2	D	3	0	8									
S	65	65	1200	X			X		S	1	F	3	1	2									
S	65	65	1200		X		X		S	2	F	3	1	2									
S	65	65	1200	X				X	S	1	D	3	1	2									
S	65	65	1200		X			X	S	2	D	3	1	2									
S	65	65	1600	X			X		S	1	F	3	1	6									
S	65	65	1600		X		X		S	2	F	3	1	6									
S	65	65	1600	X				X	S	1	D	3	1	6									
S	65	65	1600		X			X	S	2	D	3	1	6									
S	65	65	2000	X			X		S	1	F	3	2	0									
S	65	65	2000		X		X		S	2	F	3	2	0									
S	65	65	2000	X				X	S	1	D	3	2	0									
S	65	65	2000		X			X	S	2	D	3	2	0									
L	100	65	800	X			X		L	1	F	3	0	8									
L	100	85	800		X		X		L	2	F	3	0	8									
L	100	65	800	X				X	L	1	D	3	0	8									
L	100	85	800		X			X	L	2	D	3	0	8									
L	100	65	1200	X			X		L	1	F	3	1	2									
L	100	85	1200		X		X		L	2	F	3	1	2									
L	100	65	1200	X				X	L	1	D	3	1	2									
L	100	85	1200		X			X	L	2	D	3	1	2									
L	100	65	1600	X			X		L	1	F	3	1	6									
L	100	85	1600		X		X		L	2	F	3	1	6									
L	100	65	1600	X				X	L	1	D	3	1	6									
L	100	85	1600		X			X	L	2	D	3	1	6									
L	100	65	2000	X			X		L	1	F	3	2	0									
L	100	85	2000		X		X		L	2	F	3	2	0									
L	100	65	2000	X				X	L	1	D	3	2	0									
L	100	85	2000		X			X	L	2	D	3	2	0									
L	100	85	2500		X		X		L	2	F	3	2	5									
L	100	85	2500		X			X	L	2	D	3	2	5									
L	100	85	3000		X		X		L	2	F	3	3	0									
L	100	85	3000		X			X	L	2	D	3	3	0									
L	100	85	4000			X	X		L	3	F	3	4	0									
L	100	85	4000			X		X	L	3	D	3	4	0									
L	100	85	5000			X	X		L	3	F	3	5	0									
L	100	85	5000			X		X	L	3	D	3	5	0									
C	150	100	800		X		X		C	2	F	3	0	8									
C	150	100	800		X			X	C	2	D	3	0	8									
C	150	100	1200		X		X		C	2	F	3	1	2									
C	150	100	1200		X			X	C	2	D	3	1	2									
C	150	100	1600		X		X		C	2	F	3	1	6									
C	150	100	1600		X			X	C	2	D	3	1	6									
C	150	100	2000		X		X		C	2	F	3	2	0									
C	150	100	2000		X			X	C	2	D	3	2	0									
C	150	100	2500		X		X		C	2	F	3	2	5									
C	150	100	2500		X			X	C	2	D	3	2	5									
C	150	100	3000		X		X		C	2	F	3	3	0									
C	150	100	3000		X			X	C	2	D	3	3	0									
C	150	100	4000			X	X		C	3	F	3	4	0									
C	150	100	4000			X		X	C	3	D	3	4	0									
C	150	100	5000			X	X		C	3	F	3	5	0									
C	150	100	5000			X		X	C	3	D	3	5	0									

Rating Plug

Breaker catalog number

1	2	3	4	5	6	7	8	9	10	11	12	13	14	15

Maximum continuous current rating	For use with frame size 1	2	3	7
200	X	X		A
225	X	X		B
250	X	X		C
300	X	X		D
315	X	X		E
350	X	X		F
400	X	X		G
450	X	X		H
500	X	X		J
600	X	X		K
630	X	X		L
700	X	X		M
800	X	X	X	N
1000	X	X	X	P
1200	X	X	X	Q
1250	X	X	X	R
1600	X	X	X	T
2000	X	X	X	U
2500		X	X	V
3000		X	X	W
3200			X	Y
4000			X	Z
5000			X	1

Electronic trip unit (ETU)[1)]

Trip unit models	Function L	S	I	LCD display Alpha num.	Ground fault Alarm	Trip	EMC filter	8
ETU745	X	(X)	(X)					C
ETU745	X	(X)	(X)	X				D
ETU745	X	(X)	(X)		X			E
ETU745	X	(X)	(X)	X	X			F
ETU745	X	(X)	(X)		X	X		G
ETU745	X	(X)	(X)	X	X	X		H
ETU745	X	(X)	(X)				X	3
ETU745	X	(X)	(X)	X			X	4
ETU745	X	(X)	(X)		X		X	5
ETU745	X	(X)	(X)	X	X		X	6
ETU745	X	(X)	(X)		X	X	X	7
ETU745	X	(X)	(X)	X	X	X	X	8
ETU776	X	(X)	(X)					V
ETU776	X	(X)	(X)		X			W
ETU776	X	(X)	(X)		X	X		Y
ETU776	X	(X)	(X)				X	M
ETU776	X	(X)	(X)		X		X	Z
ETU776	X	(X)	(X)		X	X	X	1

(X) Indicates function can be disabled by user

1 Neutral protection "N" is available as standard.

Bell alarm, breaker ready-to-close, auxiliary contacts

Bell alarm			Breaker	Breaker open/close		Breaker catalog number 1 2 3 4 5 6 7 8 9 10 11 12 13 14 15
Remote reset coil voltage		Form C	ready-to-close	auxiliary switches		
AC	DC	contacts	1*b* contact	2*a* + 2*b*	4*a* + 4*b*	
						None X
		X				A
			X			B
				X		C
					X	D
		X	X			E
		X		X		F
		X			X	G
			X	X		H
			X		X	I
		X	X	X		J
		X	X		X	K
	24	X				L
	48	X				M
120	125	X				N
240	250	X				O
	24	X	X			P
	48	X	X			Q
120	125	X	X			R
240	250	X	X			S
	24	X		X		T
	48	X		X		U
120	125	X		X		V
240	250	X		X		W
	24	X			X	Y
	48	X			X	Z
120	125	X			X	1
240	250	X			X	2
	24	X	X	X		3
	48	X	X	X		4
120	125	X	X	X		5
240	250	X	X	X		6
	24	X	X		X	7
	48	X	X		X	8
120	125	X	X		X	9
240	250	X	X		X	0

Shunt trip

Operation voltage		Status	Continuous duty coil	
AC	DC	contact	(electrical interlock)	
				None X
	24			A
	48			B
120	125			C
240	250			D
	24	X		E
	48	X		F
120	125	X		G
240	250	X		H
	24		X	J
	48		X	K
120	125		X	L
240	250		X	M
	24	X	X	N
	48	X	X	P
120	125	X	X	R
240	250	X	X	S

WL Insulated Case Switch

UL 489 Listed Non-automatic Catalogue Number

Undervoltage Release (with or without time delay) or 2nd Shunt Trip

Breaker catalog number

1	2	3	4	5	6	7	8	9	10	11	12	13	14	15

Operation voltage		UVR without delay	UVR with delay	UVR status[1] contact (1NO)	2nd shunt trip		
AC	DC						
						None	X
	24	X					A
	48	X					B
120	125	X					C
240	250	X					D
	48		X				E
120	125		X				F
240	250		X				G
	24				X		H
	48				X		J
120	125				X		K
240	250				X		L
	24	X		X			M
	48	X		X			N
120	125	X		X			P
240	250	X		X			Q
	48		X	X			R
120	250		X	X			S
240	250		X	X			T

Charging motor, motor switch, operations counter

Charging motor operation voltage		Motor cut-off switch	Operations counter		
AC	DC				
				None	X
	24				A
	48				B
120	125				C
240	250				D
	24	X			E
	48	X			F
120	125	X			G
240	250	X			H
	24		X		J
	48		X		K
120	125		X		L
240	250		X		M
	24	X	X		N
	48	X	X		P
120	125	X	X		Q
240	250	X	X		R

[1] Status contact is only available when Communications is not installed on breaker. Signal is sent via communications in lieu of status contact.

WL Insulated Case Switch

UL 489 Listed Non-automatic Catalogue Number

Selection

Close coil, power metering and communications

Close coil operation voltage		Power metering capable	Modbus	PROFIBUS	Modbus TCP/ / PROFINET	Breaker catalog number 13
AC	DC					
					None	X
	24					A
	48					B
120	125					C
240	250					D
			X			G
				X		H
					X	E
	24		X			N
	24			X		P
	48		X			S
	48			X		T
120	125		X			W
120	125			X		Y
120	125				X	J
240	250		X			2
240	250			X		3
	24	X	X			Q
	48	X	X			U
120	125	X	X			Z
240	250	X	X			4
	24	X		X		R
	24	X			X	6
	48	X		X		V
	48	X			X	7
120	125	X		X		1
120	125	X			X	9
240	250	X		X		5
240	250	X			X	O
		X	X			L
		X		X		M
		X				F
		X			X	K
120	125	X				8

Breaker locks

Key lock breaker OPEN position (lock type – KIRK) [1]	Key lock breaker OPEN position (lock type – SUPERIOR) [1]	Padlock provisions for OPEN and CLOSE push buttons [2]	Padlock provisions for charging handle [2]	Breaker catalog number 14
			None	X
X				A
		X		C
			X	E
	X			F
X		X		G
	X	X		J
X			X	S
	X		X	U
		X	X	V
X		X	X	W
	X	X	X	Z

Miscellaneous options

Key lock breaker OPEN position (provision only) [2]	Manual trip reset ETU (Automatic trip reset is standard)	Breaker catalog number 15
	None	N
X		B
	X	C
X	X	D

[1] Custom key locks are not available and must be supplied by others. Order key lock provision if custom if keyed alike locks are required.
[2] Locks provided by others.

Breaking capacity, frame size, switch type and frame rating

Class	Breaking capacity (kA) 240VAC 480VAC	Breaking capacity (kA) 600VAC	Frame Max ampere rating (A)	Frame size 1	Frame size 2	Frame size 3	Switch type Fixed mounted	Switch type drawout	Switch catalog number 1	2	3	4	5	6	7	8	9	10	11	12	13	14	15
L	100	85	800	X			X		L	1	Y	3	0	8	S	S							
L	100	85	800	X				X	L	1	Z	3	0	8	S	S							
L	100	85	1200	X			X		L	1	Y	3	1	2	S	S							
L	100	85	1200	X				X	L	1	Z	3	1	2	S	S							
L	100	85	1600	X			X		L	1	Y	3	1	6	S	S							
L	100	85	1600	X				X	L	1	Z	3	1	6	S	S							
L	100	85	2000	X			X		L	1	Y	3	2	0	S	S							
L	100	85	2000	X				X	L	1	Z	3	2	0	S	S							
L	100	85	800		X		X		L	2	Y	3	0	8	S	S							
L	100	85	800		X			X	L	2	Z	3	0	8	S	S							
L	100	85	1600		X		X		L	2	Y	3	1	6	S	S							
L	100	85	1600		X			X	L	2	Z	3	1	6	S	S							
L	100	85	2000		X		X		L	2	Y	3	2	0	S	S							
L	100	85	2000		X			X	L	2	Z	3	2	0	S	S							
L	100	85	2500		X			X	L	2	Y	3	2	5	S	S							
L	100	85	2500		X			X	L	2	Z	3	2	5	S	S							
L	100	85	3000		X		X		L	2	Y	3	3	3	S	S							
L	100	85	3000		X		X		L	2	Z	3	3	0	S	S							
L	100	85	4000		X		X		L	3	Y	3	4	0	S	S							
L	100	85	4000			X		X	L	3	Z	3	4	0	S	S							
L	100	85	5000			X	X		L	3	Y	3	5	0	S	S							
L	100	85	5000			X		X	L	3	Z	3	5	0	S	S							

Ready-to-close and auxiliary contacts

Ready-to-close 1b contact	Breaker open/close auxiliary switches 2a + 2b	4a + 4b		Switch catalog number 9
			None	X
X				B
	X			C
		X		D
X	X			H
X		X		I

WL Insulated Case Switch

UL 489 Listed Non-automatic Catalogue Number

Shunt trip

Switch catalog number

1	2	3	4	5	6	7	8	9	10	11	12	13	14	15

Operation voltage		Status contact[1]	Shunt trip	Continuous duty rated (electrical interlock)	
AC	DC				
					None X
	24		X		A
	48		X		B
120	125		X		C
240	250		X		D
	24	X	X		E
	48	X	X		F
120	125	X	X		G
240	250	X	X		H
	24			X	J
	48			X	K
120	125			X	L
240	250			X	M
	24	X		X	N
	48	X		X	P
120	125	X		X	R
240	250	X		X	S

Undervoltage release (with or without time delay) or 2nd shunt trip

Operation voltage		UVR without delay	UVR with delay	UVR status [1] contact (1NO)	2nd shunt trip	
AC	DC					
						None X
	24	X				A
	48	X				B
120	125	X				C
240	250	X				D
	48		X			E
120	125		X			F
240	250		X			G
	24				X	H
	48				X	J
120	125				X	K
240	250				X	L
	24	X		X		M
	48	X		X		N
120	125	X		X		P
240	250	X		X		Q
	48		X	X		R
120	250		X	X		S
240	250		X	X		T

[1] Status contact is only available when communication is not installed. Signal is sent via communications in lieu of status contact.

Charging motor, motor switch and operation counter

Switch catalog number

1	2	3	4	5	6	7	8	9	10	11	12	13	14	15

Charging motor operation voltage		Motor cut-off switch	Operations counter	12
AC	DC			
				None X
	24			A
	48			B
120	125			C
240	250			D
	24	X		E
	48	X		F
120	125	X		G
240	250	X		H
	24		X	J
	48		X	K
120	125		X	L
240	250		X	M
	24	X	X	N
	48	X	X	P
120	125	X	X	Q
240	250	X	X	R

Close coil, communications

Close coil operation voltage		Power metering capable	Modbus [1]	PROFIBUS [1]	Modbus TCP / PROFINET [1]	13
AC	DC					
						None X
	24					A
	48					B
120	125					C
240	250					D
			X			G
				X		H
					X	E
	24		X			N
	24			X		P
	48		X			S
	48			X		T
120	125		X			W
120	125			X		Y
120	125				X	J
240	250		X			2
240	250			X		3
120	125	X				8

[1] Requires 24VDC power supply. Power metering not available on non-automatic switches and BSS is included.

WL Insulated Case Switch

UL 489 Listed Non-automatic Catalogue Number

Selection

Switch locks

Key lock switch OPEN position (lock type – KIRK) [1]	Key lock switch OPEN position (lock type – SUPERIOR) [1]	Padlock provisions for OPEN and CLOSE push buttons [2]	Padlock provisions for charging handle	Switch catalog number 1 2 3 4 5 6 7 8 9 10 11 12 13 14 15
				None X
X				A
		X		C
			X	E
	X			F
X		X		G
	X	X		J
X			X	S
	X		X	U
		X	X	V
X		X	X	W
	X	X	X	Z

Miscellaneous options

Key lock switch OPEN position (provision only) [2]	Switch catalog number 15
	None N
X	B

[1] Custom key locks are not available and must be supplied by others. Order Key Lock Provisions if custom keys or keyed alike locks are required.
[2] Padlock provided by others.

WL Insulated Case Breaker Cradle

UL 489 Listed Accessories

Selection

External breaker accessories

Description		Catalog number
Front mount connectors	**for fixed breakers**	
FS1, 85kAIC at 480V max.	800A, 1200A	**WLHF12CONUL**
FS2, 100kAIC at 480V max.	1600A	**WLL2F16CONUL**
FS2, 100kAIC at 480V max.	2000A	**WLL2F20CONUL**
FS2, 100kAIC at 480V max.	3000A	**WLL2F30CONUL**
FS3, 100kAIC at 480V max.	4000A, 5000A	**WLL3F50CONUL**
Mechanical lug		
FS1, 65kAIC at 480V max	800A, 1200A	**WLS2P12CONUL**
FS2, 65kAIC at 480V max	1600A, 2000A	**WLS2P20CONUL**
Rear vertical connectors		
FS1, 100kAIC at 480V max	800A, 1200A, 1600A, 2000A	**WLH1R12CONUL**
FS2, 100kAIC at 480V max	800A, 1200A, 1600A	**WLL2R16CONUL**
FS2, 100kAIC at 480V max	2000A	**WLL2R20CONUL**
FS2, 1100kAIC at 480V max	2500A, 3000A	**WLL2R30CONUL**
FS2, 150kAIC at 480V max	800A, 1200A, 1600A, 2000A, 2500A, 3000A	**WLC2R30CONUL**
FS3, 150kAIC at 480V max	4000A, 5000A	**WLC3R50CONUL**
Single phase CTs for metering, 5A secondary		
Rating:	800:5	**WLG800NMCT23**
Rating:	1200:5	**WLG1200NMCT23**
Rating:	1600:5	**WLG1600NMCT23**
Rating:	2000:5	**WLG2000NMCT23**
Rating:	2500:5	**WLG2500NMCT23**
Rating:	3000:5	**WLG3000NMCT23**
Rating:	4000:5	**WLG4000NMCT23**
Rating:	5000:5	**WLG5000NMCT23**
Modified differential ground fault (MDGF) CTs		
Modified differential GF	(FS2 1200:1) Phase CT	**WLGMDGFCT2**
Modified differential GF	(FS3 1200:1) Phase CT	**WLGMDGFCT3**
Modified differential GF	(FS2 and FS3 1200:1) Neutral CT	**WLGNMDGFCT23**
4-wire residual ground fault sensor		
Without copper bus adapters (pass-thru mount) - for 3" max bus bar		**WLNCT2**
Without copper bus adapters (pass-thru mount) - for 3 - 5" max bus bar		**WLNCT3**
With copper bus adapters for bus bar connection - for 3" max bus bar		**WLNCT2CB**
With copper bus adapters for bus bar connection - for 3 - 5" max bus bar		**WLCNMDGCT23**
Mechanical interlocks		
Fixed mounted breaker (FS1)		**WLNTLKF1**
Fixed mounted breaker (FS2 and FS3)		**WLNTLKF23**
Miscellaneous external accessories		
Crimp lugs for 10# AWG secondary wiring (package of 70)		**WL10RL**
Auxiliary contact on drawout breaker (knife block)		**WLCNMD**
24V DC trip unit and communications power supply, 2.5A SITOP power, Class 2		**WLSITOP25**
24V DC trip unit and communications power supply 3.8A SITOP power, Class 2		**WLSITOP1**
Optional metric inserts and bolts for breaker mains (4 each) M8x25 for FS1and FS2		**WLMETRC**
Optional metric inserts and bolts for breaker mains (4 each) M10x25 for FS3		**WLMETRC3**
Secondary disconnect coding kit for UL 489 fixed mounted breaker		**WLCODEKITUL**
Pull apart terminal block with 1 meter leads for UL 489 fix mounted breakers		**WLTERMBLKUL**

WL Insulated Case Breaker Cradles

UL 489 Listed Catalogue Number

Selection

Interrupting rating, frame size, and frame rating

Class	Interrupt rating (kA)		Frame	Frame size		
	240VAC 480VAC	600VAC	Max ampere rating (A)	1	2	3
S	65	65	800	X		
S	65	65	800		X	
S	65	65	1200	X		
S	65	65	1200		X	
S	65	65	1600	X		
S	65	65	1600		X	
S	65	65	2000	X		
S	65	65	2000		X	
L	100	65	800	X		
L	100	85	800		X	
L	100	65	1200	X		
L	100	85	1200		X	
L	100	65	1600	X		
L	100	85	1600		X	
L	100	65	2000	X		
L	100	85	2000		X	
L	100	85	2500		X	
L	100	85	3000		X	
L	100	85	4000			X
L	100	85	5000			X
C	150	100	800		X	
C	150	100	1200		X	
C	150	100	1600		X	
C	150	100	2000		X	
C	150	100	2500		X	
C	150	100	3000		X	
C	150	100	4000			X
C	150	100	5000			X

Cradle catalog number

G	2	3	4	5	6	7	8	9	10	11	12	13	14	15
S	1	3	0	8										
S	2	3	0	8										
S	1	3	1	2										
S	2	3	1	2										
S	1	3	1	6										
S	2	3	1	6										
S	1	3	2	0										
S	2	3	2	0										
L	1	3	0	8										
L	2	3	0	8										
L	1	3	1	2										
L	2	3	1	2										
L	1	3	1	6										
L	2	3	1	6										
L	1	3	2	0										
L	2	3	2	0										
L	2	3	2	5										
L	2	3	3	0										
L	3	3	4	0										
L	3	3	5	0										
C	2	3	0	8										
C	2	3	1	2										
C	2	3	1	6										
C	2	3	2	0										
C	2	3	2	5										
C	2	3	3	0										
C	3	3	4	0										
C	3	3	5	0										

Type of secondary terminal connection [1]	
For circuit breakers:	
Screw clamp terminals	A
Spring clamp terminals	B
Ring terminals	C
Screw clamp terminals (low profile, non-partable design)	L
For switches (non-automatic circuit breakers):	
Screw clamp terminals	G
Spring clamp terminals	H
Ring terminals	J
Screw clamp terminals (low profile non-partable design)	N
Truck Operated Contacts (TOC)	
Breaker position switches in the following configurations:	
None	X
(1) Connected, (1) Test, (1) Disconnected - all Form C	1
(3) Connected, (2) Test, (1) Disconnected - all Form C	3
(6) Connected - all Form C	6
Cradle mounted key locks – FS2 and FS3 only	
None	X
Lock breaker in OPEN position (Kirk lock)	A
Lock breaker in OPEN position (Superior lock)	B
Double-key lock breaker in OPEN position (Kirk lock)	C
Double-key lock breaker in OPEN position (Superior lock)	D
Provision only - Lock breaker in OPEN position	E
Provision only - Double-key lock breaker in OPEN position	F
Primary conductor isolation shutter	
None	X
Isolation Shutter	F

[1] Terminal blocks (X5, X6, X8, X9) are installed as standard.

WL Insulated Case Breaker Cradles

UL 489 Listed Catalog Number

Selection

					Cradle catalog number														
					G	2	3	4	5	6	7	8	9	10	11	12	13	14	15
Arc chute covers																			
None															X				
Arc chute covers				(FS1 only)											C				
Arc chute covers				(FS2 only)											D				
Arc chute covers				(FS3 only – except Class C)											B				
Door locks and mechanical interlocks																			
1. Mechanical interlock with 2.0 meter Bowden cable																			
2. Locks cubicle door, when breaker is in connect position				(FS2 and FS3)															
3. Locks cubicle door, when breaker is in connect position				(FS1 only)															
4. Locks against racking breaker if the cubicle door is open				(FS2 and FS3)															
1	**2**	**3**	**4**																
					None											X			
X																M			
	X															A			
		X														B			
			X													C			
X	X															D			
X	X		X													E			
X		X														F			
X			X													G			
	X		X													H			
Mechanism Operated Contacts (MOC)																			
Breaker open/close auxiliary switches (4a & 4b) in the following positions:																			
None																	X		
Test and Connect position				(FS1 and FS2 only)													M		
Connect position				(FS1 and FS2 only)													N		
Test and Connect position				(FS3 only)													P		
Connect position				(FS3 only)													Q		
Connector and heater options																			
Standard rear connectors																		X	
Standard rear connectors and a cradle heater				(FS2 and FS3)														H	
Rotatable rear connector				(FSI and FS2 2000A and below, S Class)														J	
Rotatable rear connectors and a cradle heater				(FS2 2000A and below, S Class)														K	
Future use																			
Placeholder (required)																			N

WL Insulated Case Breaker Cradles

UL 489 Listed Accessories

Selection

Cradle accessories		Catalog number
3-phase metering CTs, cradle mounted (3 windows per CT)		
FS1 and FS2	Rating – 800:5	**WLG8005MCT2**
	Rating – 1200:5	**WLG12005MCT2**
	Rating – 1600:5	**WLG16005MCT2**
FS2	Rating – 2500:5	**WLG25005MCT2**
	Rating – 3000:5	**WLG30005MCT2**
FS3	Rating – 4000:5	**WLG40005MCT3**
	Rating – 5000:5	**WLG50005MCT3**

WL Power Circuit Breaker

Ratings for UL 1066 Listed (ANSI C37) Breakers

Selection

WL frame ratings – Frame size 2		800A					1600A				
Rating Class		**N**	**S**	**H**	**L**	**F**	**N**	**S**	**H**	**L**	**F**
Interrupting current frame Ics (kAIC RMS) 50/60 Hz	254VAC	50	65	85	100	200	50	65	85	100	200
	508VAC	50	65	85	100	200	50	65	85	100	200
	600VAC	—	—	—	—	200	—	—	—	—	200
	635VAC	50	65	65	85	—	50	65	65	85	—
Short-time current *I*cw (kA RMS)	1 sec.	50	65	65	85	—	50	65	65	85	—
Close and latch rating (kA RMS)		50	65	65	85	—	50	65	65	85	—
Applicable rating plug range		200 - 800A					200 - 1600A				
Mechanical make-time (ms)		35					35				
Mechanical break-time (ms)		34					34				
Electric close make-time (ms)		50					50				
Electric trip/ UV break-time (ms)		40/73					40/73				
Electric trip and reclose interval (ms)		80					80				
Mechanical duty cycles (with maint.) [1]		15,000					15,000				
Electrical duty cycles (with maint.) [1]		15,000					15,000				
Draw-out breaker efficiency (Watts loss at rated In)		85					320				
Draw-out fused breaker efficiency (Watts loss at rated In)		Consult factory					Consult factory				
Ambient operating temperature (°C)		-25 to 40					-25 to 40				

WL frame ratings – Frame size 2		2000A				3200A		
Rating Class		**S**	**H**	**L**	**F**	**S**	**H**	**L**
Interrupting current frame *I*cs	254VAC	65	85	100	200	65	85	100
(kAIC RMS) 50/60 Hz	508VAC	65	85	100	200	65	85	100
	600VAC	—	—	—	200	—	—	—
	635VAC	65	65	85	—	65	65	85
Short-time current *I*cw (kA RMS)	1 sec.	65	65	85	—	65	65	85
Close and latch rating (kA RMS)		65	65	85	—	65	65	85
Applicable rating plug range		200 - 2000A				200 - 3200A		
Mechanical make-time (ms)		35				35		
Mechanical break-time (ms)		34				34		
Electric close make-time (ms)		50				50		
Electric trip/ UV break-time (ms)		40/73				40/73		
Electric trip and reclose interval (ms)		80				80		
Mechanical duty cycles (with maint.) [1]		15,000				15,000		
Electrical duty cycles (with maint.) [1]		15,000				15,000		
Draw-out breaker efficiency (Watts loss at rated In)		700				1650		
Draw-out fused breaker efficiency (Watts loss at rated In)		Consult factory				Consult factory		
Ambient operating temperature (°C)		-25 to 40				-25 to 40		

[1] Maintenance means: replacing main contacts and arc chutes (see operating instructions).
M-Class main contacts can be replaced by Siemens personnel only.

WL Power Circuit Breaker

Ratings for UL 1066 Listed (ANSI C37) Breakers

WL frame ratings – Frame size 3WL frame		3200A		4000A				5000A				6000A		
Rating Class		**M**	**F**	**H**	**L**	**M**	**F**	**H**	**L**	**M**	**F**	**H**	**L**	**M**
Interrupting current frame *I*cs	254VAC	150	200	85	100	150	200	85	100	150	200	85	100	150
(kAIC RMS) 50/60 Hz	508VAC	150	200	85	100	150	200	85	100	150	200	85	100	150
	600VAC	—	200	—	—	—	200	—	—	—	200	—	—	—
	635VAC	85	—	85	85	85	—	85	85	85	—	85	85	85
Short-time current *I*cw (kA RMS)	1 sec.	100 [2]	—	85	100 [2]	100 [2]	—	85	100 [2]	100 [2]	—	85	100 [2]	100 [2]
Close and latch rating (kA RMS)		100 [2]	—	85	100 [2]	100 [2]	—	85	100 [2]	100 [2]	—	85	100 [2]	100 [2]
Applicable rating plug range		800 - 3200A		800 - 4000A				800 - 5000 A				800 - 6000 A		
Mechanical make-time (ms)		35		35				35				35		
Mechanical break-time (ms)		34		34				24				24		
Electric close make-time (ms)		50		50				50				50		
Electric trip/ UV break-time (ms)		40/73		40/73				40/73				40/73		
Electric trip and reclose interval (ms)		80		80				80				80		
Mechanical duty cycles (with maint.) [1]		10,000		10,000				10,000				10,000		
Electrical duty cycles (with maint.) [1]		10,000		10,000				10,000				10,000		
Draw-out breaker efficiency (Watts loss at rated In)		700		1100				1650				2375		
Draw-out fused breaker efficiency (Watts loss at rated In)		Consult factory		Consult factory				Consult factory				N/A		
Ambient operating temperature (°C)		-25 to 40		-25 to 40				-25 to 40				-25 to 40		

Ratings for UL 1066 Listed Non-automatic Switches

WL frame ratings		Frame size 2 800A - 3200A [4]		Frame size 3 3200A - 6000A [4]	
Rating Class		**L**	**F** [3]	**L**	**F** [3]
Breaking capacity with external relay (kA RMS)	254VAC	100	200	100	200
50/60 Hz, instantaneous trip	508VAC	100	200	100	200
	635VAC	85	200	85	200
Short-time current Icw (kA RMS)	1 sec.	65	N/A	100	N/A

[1] Maintenance means: replacing main contacts and arc chutes (see operating instructions).
M-Class main contacts can be replaced by Siemens personnel only. Do not apply switch or breaker rated at 635VAC to a system with fault current > 85kA RMS.

[2] Short-time withstand current (Icw) at 635 VAC is kAIC RMS.

[3] Max. 600 VAC.

[4] 3200A frame rating is only available in L-Class in Frame Size 2. 3200A frame rating is not available in L-Class in Frame Size 3.

WL Power Circuit Breaker

UL 1066 Listed Catalogue Number

Interrupting rating, frame size, breaker type and frame rating (3-Pole Circuit Breakers)

Note: Cradle must be ordered separately (see page 54)

Class	Interrupt rating (kA) 254VAC 508VAC	Interrupt rating (kA) 635VAC	Frame Max ampere rating (A)	Frame size 2	Frame size 3	Fuse (A)	Breaker catalog number 1 2 3 4 5 6 7 8 9 10 11 12 13 14 15
N	50	50	800	X			N 2 A 3 0 8
N	50	50	1600	X			N 2 A 3 1 6
S	65	65	800	X			S 2 A 3 0 8
S	65	65	1600	X			S 2 A 3 1 6
S	65	65	2000	X			S 2 A 3 2 0
S	65	65	3200	X			S 2 A 3 3 2
H	85	65	800	X			H 2 A 3 0 8
H	85	65	1600	X			H 2 A 3 1 6
H	85	65	2000	X			H 2 A 3 2 0
H	85	65	3200	X			H 2 A 3 3 2
H	85	85	4000		X		H 3 A 3 4 0
H	85	85	5000		X		H 3 A 3 5 0
H	85	85	6000		X		H 3 A 3 6 0
L	100	85	800	X			L 2 A 3 0 8
L	100	85	1600	X			L 2 A 3 1 6
L	100	85	2000	X			L 2 A 3 2 0
L	100	85	3200	X			L 2 A 3 3 2
L	100	85	4000		X		L 3 A 3 4 0
L	100	85	5000		X		L 3 A 3 5 0
L	100	85	6000		X		L 3 A 3 6 0
M	150	85	3200		X		M 3 A 3 3 2
M	150	85	4000		X		M 3 A 3 4 0
M	150	85	5000		X		M 3 A 3 5 0
M	150	85	6000		X		M 3 A 3 6 0
F	200	200	800	X		400	F 2 A 3 0 A
F	200	200	800	X		600	F 2 A 3 0 B
F	200	200	800	X		800	F 2 A 3 0 C
F	200	200	800	X		900	F 2 A 3 0 D
F	200	200	800	X		1000	F 2 A 3 0 E
F	200	200	800	X		1200	F 2 A 3 0 F
F	200	200	800	X		1600	F 2 A 3 0 G
F	200	200	800	X		2000	F 2 A 3 0 H
F	200	200	800	X		2500	F 2 A 3 0 J
F	200	200	800	X		3000	F 2 A 3 0 K
F	200	200	1600	X		400	F 2 A 3 1 A
F	200	200	1600	X		600	F 2 A 3 1 B
F	200	200	1600	X		800	F 2 A 3 1 C
F	200	200	1600	X		900	F 2 A 3 1 D
F	200	200	1600	X		1000	F 2 A 3 1 E
F	200	200	1600	X		1200	F 2 A 3 1 F
F	200	200	1600	X		1600	F 2 A 3 1 G
F	200	200	1600	X		2000	F 2 A 3 1 H
F	200	200	1600	X		2500	F 2 A 3 1 J
F	200	200	1600	X		3000	F 2 A 3 1 K
F	200	200	2000	X		400	F 2 A 3 2 A
F	200	200	2000	X		600	F 2 A 3 2 B
F	200	200	2000	X		800	F 2 A 3 2 C
F	200	200	2000	X		900	F 2 A 3 2 D
F	200	200	2000	X		1000	F 2 A 3 2 E
F	200	200	2000	X		1200	F 2 A 3 2 F
F	200	200	2000	X		1600	F 2 A 3 2 G
F	200	200	2000	X		2000	F 2 A 3 2 H
F	200	200	2000	X		2500	F 2 A 3 2 J
F	200	200	2000	X		3000	F 2 A 3 2 K
F	200	200	3200		X	6000	F 3 A 3 3 2
F	200	200	4000		X	6000	F 3 A 3 4 0
F	200	200	5000		X	6000	F 3 A 3 5 0

WL Power Circuit Breaker

UL 1066 Listed Catalogue Number

Interrupting rating, frame size, breaker type and frame rating (4-Pole Circuit Breakers)

Note: Cradle must be ordered separately (see page 54)

								Breaker catalog number													
								1	2	3	4	5	6	7	8	9	10	11	12	13	14	15
	Interrupt rating (kA)		Frame	Frame size																		
Class	254VAC 508VAC	635VAC	Max. ampere rating (A)	2	3	Fixed	Drawout	Neutral CT														
S	65	65	800	X			X	X	S	2	A	4	0	8								
S	65	65	800	X		X			S	2	H	4	0	8								
S	65	65	800	X			X		S	2	G	4	0	8								
S	65	65	800	X		X		X	S	2	K	4	0	8								
S	65	65	1600	X			X	X	S	2	A	4	1	6								
S	65	65	1600	X		X			S	2	H	4	1	6								
S	65	65	1600	X			X		S	2	G	4	1	6								
S	65	65	1600	X		X		X	S	2	K	4	1	6								
S	65	65	2000	X			X	X	S	2	A	4	2	0								
S	65	65	2000	X		X			S	2	H	4	2	0								
S	65	65	2000	X			X		S	2	G	4	2	0								
S	65	65	2000	X		X		X	S	2	K	4	2	0								
S	65	65	3200	X			X	X	S	2	A	4	3	2								
S	65	65	3200	X		X			S	2	H	4	3	2								
S	65	65	3200	X			X		S	2	G	4	3	2								
S	65	65	3200	X		X		X	S	2	K	4	3	2								
H	85	65	800	X			X	X	H	2	A	4	0	8								
H	85	65	800	X		X			H	2	H	4	0	8								
H	85	65	800	X			X		H	2	G	4	0	8								
H	85	65	800	X		X		X	H	2	K	4	0	8								
H	85	65	1600	X			X	X	H	2	A	4	1	6								
H	85	65	1600	X		X			H	2	H	4	1	6								
H	85	65	1600	X			X		H	2	G	4	1	6								
H	85	65	1600	X		X		X	H	2	K	4	1	6								
H	85	65	2000	X			X	X	H	2	A	4	2	0								
H	85	65	2000	X		X			H	2	H	4	2	0								
H	85	65	2000	X			X		H	2	G	4	2	0								
H	85	65	2000	X		X		X	H	2	K	4	2	0								
H	85	65	3200	X			X	X	H	2	A	4	3	2								
H	85	65	3200	X		X			H	2	H	4	3	2								
H	85	65	3200	X			X		H	2	G	4	3	2								
H	85	65	3200	X		X		X	H	2	K	4	3	2								
L	100	85	800	X			X	X	L	2	A	4	0	8								
L	100	85	800	X		X			L	2	H	4	0	8								
L	100	85	800	X			X		L	2	G	4	0	8								
L	100	85	800	X		X		X	L	2	K	4	0	8								
L	100	85	1600	X			X	X	L	2	A	4	1	6								
L	100	85	1600	X		X			L	2	H	4	1	6								
L	100	85	1600	X			X		L	2	G	4	1	6								
L	100	85	1600	X		X		X	L	2	K	4	1	6								
L	100	85	2000	X			X	X	L	2	A	4	2	0								
L	100	85	2000	X		X			L	2	H	4	2	0								
L	100	85	2000	X			X		L	2	G	4	2	0								
L	100	85	2000	X		X		X	L	2	K	4	2	0								
L	100	85	3200	X			X	X	L	2	A	4	3	2								
L	100	85	3200 [1]	X		X			L	2	H	4	3	2								
L	100	85	3200	X			X		L	2	G	4	3	2								
L	100	85	3200 [1]	X		X		X	L	2	K	4	3	2								
L	100	85	4000		X		X	X	L	3	A	4	4	0								
L	100	85	4000 [1]		X	X			L	3	H	4	4	0								
L	100	85	4000		X		X		L	3	G	4	4	0								
L	100	85	4000 [1]		X	X		X	L	3	K	4	4	0								
L	100	85	5000		X		X	X	L	3	A	4	5	0								
L	100	85	5000 [1]		X	X			L	3	H	4	5	0								
L	100	85	5000		X		X		L	3	G	4	5	0								
L	100	85	5000 [1]		X	X		X	L	3	K	4	5	0								
L	100	85	6000		X		X	X	L	3	A	4	6	0								
L	100	85	6000		X		X		L	3	G	4	6	0								

[1] FS2 3200A, FS3 4000A/5000A fixed mount breakers have vertical rear connectors included as standard.

Rating plug

Breaker catalog number

1	2	3	4	5	6	7	8	9	10	11	12	13	14	15

Maximum continuous current rating (A)	Frame size 2	Frame size 3	
200	X		A
225	X		B
250	X		C
300	X		D
315	X		E
350	X		F
400	X		G
450	X		H
500	X		J
600	X		K
630	X		L
700	X		M
800	X	X	N
1000	X	X	P
1200	X	X	Q
1250	X	X	R
1600	X	X	T
2000	X	X	U
2500	X	X	V
3000	X	X	W
3200	X	X	Y
4000		X	Z
5000		X	1
6000		X	2

Electronic trip units (ETU)

Trip unit models	Protective function			LCD display	Ground fault		EMC filter	
	L	S	I	alpha num.	Alarm	Trip		
ETU745	X	(X)	(X)					C
ETU745	X	(X)	(X)	X				D
ETU745	X	(X)	(X)		X			E
ETU745	X	(X)	(X)	X	X			F
ETU745	X	(X)	(X)		X	X		G
ETU745	X	(X)	(X)	X	X	X		H
ETU745	X	(X)	(X)				X	3
ETU745	X	(X)	(X)	X			X	4
ETU745	X	(X)	(X)		X		X	5
ETU745	X	(X)	(X)	X	X		X	6
ETU745	X	(X)	(X)		X	X	X	7
ETU745	X	(X)	(X)	X	X	X	X	8
ETU776	X	(X)	(X)					V
ETU776	X	(X)	(X)		X			W
ETU776	X	(X)	(X)		X	X		Y
ETU776	X	(X)	(X)				X	M
ETU776	X	(X)	(X)		X		X	Z
ETU776	X	(X)	(X)		X	X	X	1

( ) Function can be disabled by user.

Bell alarm, breaker ready-to-close, auxiliary contacts

Breaker catalog number

1	2	3	4	5	6	7	8	9	10	11	12	13	14	15

Bell alarm			Breaker	Breaker open/close auxiliary switches		
Remote reset coil voltage		Form C	ready-to-close			
AC	DC	contacts	1*b* contact	2*a* + 2*b*	4*a* + 4*b*	
					None	X
		X				A
			X			B
				X		C
					X	D
		X	X			E
		X		X		F
		X			X	G
			X	X		H
			X		X	I
		X	X	X		J
		X	X		X	K
	24	X				L
	48	X				M
120	125	X				N
240	250	X				O
	24	X	X			P
	48	X	X			Q
120	125	X	X			R
240	250	X	X			S
	24	X		X		T
	48	X		X		U
120	125	X		X		V
240	250	X		X		W
	24	X			X	Y
	48	X			X	Z
120	125	X			X	1
240	250	X			X	2
	24	X	X	X		3
	48	X	X	X		4
120	125	X	X	X		5
240	250	X	X	X		6
	24	X	X		X	7
	48	X	X		X	8
120	125	X	X		X	9
240	250	X	X		X	0

Shunt trip

Control voltage		Status	Continuous duty coil (electrical interlock)		
AC	DC	contact			
				None	X
	24				A
	48				B
120	125				C
240	250				D
	24	X			E
	48	X			F
120	125	X			G
240	250	X			H
	24		X		J
	48		X		K
120	125		X		L
240	250		X		M
	24	X	X		N
	48	X	X		P
120	125	X	X		R
240	250	X	X		S

Undervoltage release (with or without time delay) or 2nd shunt trip

Breaker catalog number

1	2	3	4	5	6	7	8	9	10	11	12	13	14	15

Control voltage AC	Control voltage DC	UVR without delay	UVR with delay	UVR status contact [1]	2nd shunt trip		11
						None	X
	24	X					A
	48	X					B
120	125	X					C
240	250	X					D
	48		X				E
120	125		X				F
240	250		X				G
	24				X		H
	48				X		J
120	125				X		K
240	250				X		L
	24	X		X			M
	48	X		X			N
120	125	X		X			P
240	250	X		X			Q
	48		X	X			R
	125		X	X			S
120	250		X	X			T

Charging motor, motor switch, operations counter

Charging motor operation voltage AC	Charging motor operation voltage DC	Motor cut-off switch	Operations counter		12
				None	X
	24				A
	48				B
120	125				C
240	250				D
	24	X			E
	48	X			F
120	125	X			G
240	250	X			H
	24		X		J
	48		X		K
120	125		X		L
240	250		X		M
	24	X	X		N
	48	X	X		P
120	125	X	X		Q
240	250	X	X		R

[1] Status contact is only available when communication is not installed on breaker. Signal is sent via communication in lieu of status contact.

WL Power Circuit Breaker

UL 1066 Listed Catalog Number

Selection

Close coil, power metering and communications

Breaker catalog number: 1 2 3 4 5 6 7 8 9 10 11 12 13 14 15

Close coil operation voltage		Power metering capable	Modbus [2]	PROFIBUS [2] PROFINET	Modbus TCP/ PROFINET	13
AC	DC					
						None X
	24					A
	48					B
120	125					C
240	250					D
			X			G
				X		H
					X	E
	24		X			N
	24			X		P
	48		X			S
	48			X		T
120	125		X			W
120	125			X		Y
120	125				X	J
240	250		X			2
240	250			X		3
	24	X	X			Q
	48	X	X			U
120	125	X	X			Z
120	250	X	X			4
	24	X		X		R
	24	X			X	6
	48	X		X		V
	48	X			X	7
120	125	X		X		1
120	125	X			X	9
240	250	X		X		5
240	250	X			X	0
		X		X		L
		X		X		M
		X				F
		X			X	K
120	125	X				8

Breaker locks

Breaker catalog number: 14

Key lock breaker OPEN position (lock type – KIRK) [3]	Key lock breaker OPEN position (lock type – SUPERIOR) [3]	Padlock provisions for OPEN and CLOSE pushbuttons [4]	Padlock provisions for charging handle [4]	
				None X
X				A
		X		C
			X	E
	X			F
X		X		G
	X	X		J
X			X	S
	X		X	U
		X	X	V
X		X	X	W
	X	X	X	Z

Miscellaneous options [5]

Breaker catalog number: 15

Key lock breaker OPEN position (provision only) [4]	Manual trip reset ETU (Automatic trip reset is standard)	
		None N
X		B
	X	C
X	X	D

[1] Requires External PTs for voltage input and 24VDC power supply.
[2] Includes BSS device and requires 24VDC power supply.
[3] Custom key locks are not available and must be supplied by others. Order key lock provision if custom if keyed alike locks are required.
[4] Locks provided by others.
[5] If a breaker lock is chosen for Digit 14, a provision need not be ordered in Digit 15.

WL Power Circuit Breaker

UL 1066 Listed Non-automatic Catalogue Number

Selection

Breaking capacity, frame size, switch type and frame rating (3-Pole Non-Automatic Circuit Breakers)

Class	Breaking capacity (kA)		Frame	Frame size			Switch catalog number													
	240VAC		Max ampere			Fuse	1	2	3	4	5	6	7	8	9	10	11	12	13	14	15
	480VAC	600VAC	rating (A)	2	3	(A)														
L	100	85	800	X			L	2	S	3	0	8	S	S							
L	100	85	1600	X			L	2	S	3	1	6	S	S							
L	100	85	2000	X			L	2	S	3	2	0	S	S							
L	100	85	3200	X			L	2	S	3	2	2	S	S							
L	100	85	4000		X		L	3	S	3	4	0	S	S							
L	100	85	5000		X		L	3	S	3	5	0	S	S							
F	200	200	800	X		1000	F	2	S	3	0	E	S	S							
F	200	200	800	X		1200	F	2	S	3	0	F	S	S							
F	200	200	800	X		1600	F	2	S	3	0	G	S	S							
F	200	200	800	X		2000	F	2	S	3	0	H	S	S							
F	200	200	800	X		2500	F	2	S	3	0	J	S	S							
F	200	200	800	X		3000	F	2	S	3	0	K	S	S							
F	200	200	1600	X		1000	F	2	S	3	1	E	S	S							
F	200	200	1600	X		1200	F	2	S	3	1	F	S	S							
F	200	200	1600	X		1600	F	2	S	3	1	G	S	S							
F	200	200	1600	X		2000	F	2	S	3	1	H	S	S							
F	200	200	1600	X		2500	F	2	S	3	1	J	S	S							
F	200	200	1600	X		3000	F	2	S	3	1	K	S	S							
F	200	200	2000	X		1000	F	2	S	3	2	E	S	S							
F	200	200	2000	X		1200	F	2	S	3	2	F	S	S							
F	200	200	2000	X		1600	F	2	S	3	2	G	S	S							
F	200	200	2000	X		2000	F	2	S	3	2	H	S	S							
F	200	200	2000	X		2500	F	2	S	3	2	J	S	S							
F	200	200	2000	X		3000	F	2	S	3	2	K	S	S							
F	200	200	3200		X	6000	F	3	S	3	3	2	S	S							
F	200	200	4000		X	6000	F	3	S	3	4	0	S	S							
F	200	200	5000		X	6000	F	3	S	3	5	0	S	S							

Breaking capacity, frame size, switch type and frame rating (4-Pole Non-Automatic Circuit Breakers)

Class	Breaking capacity (kA)		Frame	Frame size				Switch catalog number													
	254VAC 508VAC	635VAC	Max ampere rating (A)	2	3	Fixed	Drawout	1	2	3	4	5	6	7	8	9	10	11	12	13	14	15
L	100	85	800	X		X		L	2	J	4	0	8	S	S							
L	100	85	800	X			X	L	2	S	4	0	8	S	S							
L	100	85	1600	X				L	2	J	4	1	6	S	S							
L	100	85	1600	X			X	L	2	S	4	1	6	S	S							
L	100	85	2000	X		X		L	2	J	4	2	0	S	S							
L	100	85	2000	X			X	L	2	S	4	2	0	S	S							
L	100	85	3200	X		X		L	2	J	4	3	2	S	S							
L	100	85	3200	X			X	L	2	S	4	3	2	S	S							
L	100	85	4000		X	X		L	3	J	4	4	0	S	S							
L	100	85	4000		X		X	L	3	S	4	4	0	S	S							
L	100	85	5000		X	X		L	3	J	4	5	0	S	S							
L	100	85	5000		X		X	L	3	S	4	5	0	S	S							
L	100	85	6000		X		X	L	3	S	4	6	0	S	S							

WL Power Circuit Switch

UL 1066 Listed Non-automatic Catalogue Number

Selection

Switch catalog number

1	2	3	4	5	6	7	8	9	10	11	12	13	14	15

Breaker ready-to-close auxiliary contacts

Breaker ready-to-close	Breaker open/close auxiliary switches	
1b contact	2a + 2b	4a + 4b
		None → X
X		→ B
	X	→ C
		X → D
X	X	→ H
X		X → I

Shunt trip

Operation voltage		Status contact	
AC	DC		
		None → X	
	24	→ A	
	48	→ B	
120	125	→ C	
240	250	→ D	
	24	X → E	
	48	X → F	
120	125	X → G	
240	250	X → H	

Undervoltage release (with or without time delay) or 2nd shunt trip

Operation voltage		UVR without delay	UVR with delay	UVR status contact[1]	2nd shunt trip	
AC	DC					
					None → X	
	24	X			→ A	
	48	X			→ B	
120	125	X			→ C	
240	250	X			→ D	
	48		X		→ E	
120	125		X		→ F	
240	250		X		→ G	
	24				X → H	
	48				X → J	
120	125				X → K	
240	250				X → L	
	24	X		X	→ M	
	48	X		X	→ N	
120	125	X		X	→ P	
240	250	X		X	→ Q	
	48		X	X	→ R	
	125		X	X	→ S	
120	250		X	X	→ T	

[1] Status contact only available when communication is not installed. Signal is sent via communication in lieu of status contact.

Charging motor, motor switch, operations counter

Switch catalog number

1	2	3	4	5	6	7	8	9	10	11	12	13	14	15

Charging motor operation voltage		Motor cut-off switch	Operations counter	12
AC	DC			
				None X
	24			A
	48			B
120	125			C
240	250			D
	24	X		E
	48	X		F
120	125	X		G
240	250	X		H
	24		X	J
	48		X	K
120	125		X	L
240	250		X	M
	24	X	X	N
	48	X	X	P
120	125	X	X	Q
240	250	X	X	R

Close coil, communications

Close coil operation voltage		Power metering capable	Modbus [1]	PROFIBUS [1]	Modbus TCP / PROFINET [1]	13
AC	DC					
						None X
	24					A
	48					B
120	125					C
240	250					D
			X			G
				X		H
					X	E
	24		X			N
	24			X		P
	48		X			S
	48			X		T
120	125		X			W
120	125			X		Y
120	125				X	J
240	250		X			2
240	250			X		3

1 Requires 24VDC power supply. BSS is included.

WL Power Circuit Switch

UL 1066 Listed Cradle Catalogue Number

Selection

Switch locks

Key lock breaker OPEN position (lock type – KIRK) [1]	Key lock breaker OPEN position (lock type – SUPERIOR)[1]	Padlock provisions for OPEN and CLOSE pushbuttons[2]	Padlock provisions for charging handle	Switch catalog number 14
				None X
X				A
		X		C
			X	E
	X			F
X		X		G
	X	X		J
X			X	S
	X		X	U
		X	X	V
X		X	X	W
	X	X	X	Z

Miscellaneous options [3]

Key lock breaker OPEN position (provision only) [2]	Switch catalog number 15
	None N
X	B

UL 1066 Fixed Mount Breaker Vertical Connector Kits

Description	Catalog number
FS 2 800A - 1600A Rear Vertical Connectors (8 pieces, includes Neutral Pole)	**WL4L2R16CONUL**
FS 2 2000A Rear Vertical Connectors (8 pieces, includes Neutral Pole)	**WL4L2R20CONUL**
FS 2 3200A Rear Vertical Connectors (8 pieces, includes Neutral Pole)	**WL4L2R32CONUL** [4]
FS 3 4000A - 5000A Rear Vertical Connectors (8 pieces, includes Neutral Pole)	**WL4L2R50CONUL** [4]

[1] Custom key locks are not available and must be supplied by others. Order Key Lock Provisions if custom keys or keyed alike breakers are required.
[2] Lock provided by others.
[3] If a breaker lock is chosen for Digit 14, a provision need not be ordered in Digit 15.
[4] FS II 3200A, FS III 4000A, 5000A breakers include vertical connectors as a standard.

UL 1066 Listed Cradle Catalog Number

Interrupting rating, frame size and frame rating

Class	Interrupt rating (kA)		Frame	Frame size		
	240VAC 480VAC	600VAC	Max ampere rating (A)	2	3	No. of Poles
N	50	50	800	X		3
N	50	50	1600	X		3
S	65	65	800	X		3
S	65	65	1600	X		3
S	65	65	2000	X		3
S	65	65	3200	X		3
H	85	65	800	X		3
H	85	65	1600	X		3
H	85	65	2000	X		3
H	85	65	3200	X		3
H	85	85	4000		X	3
H	85	85	5000		X	3
L	100	85	800	X		3
L	100	85	1600	X		3
L	100	85	2000	X		3
L	100	85	3200	X		3
L	100	85	4000		X	3
L	100	85	5000		X	3
L	100	85	6000		X	3
M	150	85	3200		X	3
M	150	85	4000		X	3
M	150	85	5000		X	3
M	150	85	6000		X	3
F	200	200	800	X		3
F	200	200	1600	X		3
F	200	200	2000	X		3
F	200	200	3200		X	3
F	200	200	4000		X	3
F	200	200	5000		X	3
S	65	65	800		X	4
S	65	65	1600		X	4
S	65	65	2000	X		4
S	65	65	3200	X		4
H	85	65	800	X		4
H	85	65	1600	X		4
H	85	65	2000	X		4
H	85	65	3200	X		4
L	100	85	800	X		4
L	100	85	1600	X		4
L	100	85	2000	X		4
L	100	85	3200	X		4
L	100	85	4000		X	4
L	100	85	5000		X	4
L	100	85	6000		X	4

Cradle catalog number

G	2	3	4	5	6	7	8	9	10	11	12	13	14	15

Class	G	2	3	4	5	6	7	8
N		N	2	3	0	8		
N		N	2	3	1	6		
S		S	2	3	0	8		
S		S	2	3	1	6		
S		S	2	3	2	0		
S		S	2	3	3	2		
H		H	2	3	0	8		
H		H	2	3	1	6		
H		H	2	3	2	0		
H		H	2	3	3	2		
H		H	3	3	4	0		
H		H	3	3	5	0		
L		L	2	3	0	8		
L		L	2	3	1	6		
L		L	2	3	2	0		
L		L	2	3	3	2		
L		L	3	3	4	0		
L		L	3	3	5	0		
L		L	3	3	6	0		
M		M	3	3	3	2		
M		M	3	3	4	0		
M		M	3	3	5	0		
M		M	3	3	6	0		
F		F	2	3	0	8		
F		F	2	3	1	6		
F		F	2	3	2	0		
F		F	2	3	3	2		
F		F	3	3	4	0		
F		F	3	3	5	0		
S		S	2	4	0	8		
S		S	2	4	1	6		
S		S	2	4	2	0		
S		S	2	4	3	2		
H		H	2	4	0	8		
H		H	2	4	1	6		
H		H	2	4	2	0		
H		H	2	4	3	2		
L		L	2	4	0	8		
L		L	2	4	1	6		
L		L	2	4	2	0		
L		L	2	4	3	2		
L		L	3	4	4	0		
L		L	3	4	5	0		
L		L	3	4	6	0		

Type of secondary terminal connection [1]	
For Breakers:	
Screw clamp terminals	P
Spring clamp terminals	T
Ring terminals	R
Screw clamp terminals (low profile, non-partable design)	K
For Switch (Non-automatic):	
Screw clamp terminals	D
Spring clamp terminals	E
Ring terminals	F
Screw clamp terminals, non-partable design)	M

Truck Operated Contacts (TOC)	
Breaker position switches in the following configurations:	
None	X
(1) Connected, (1) Test, (1) Disconnected - all Form C	1
(3) Connected, (2) Test, (1) Disconnected - all Form C	3
(6) Connected - all Form C	6

[1] Terminal blocks (X5, X6, X8, X9) are installed as standard.

[2] Fused Frame Size 3 circuit breakers include a two cylinder provision as standard, with the second position pre-populated with a key-interlock to prevent racking (in or out) of the separately-mounted fuse carriage while the associated fused circuit breaker is closed.

WL Power Circuit Breaker Cradles

UL 1066 Listed Cradle Catalog Number

Selection

Cradle catalog number

	G	2	3	4	5	6	7	8	9	10	11	12	13	14	15
Cradle mounted key locks [2]															
None									X						
Lock breaker in OPEN position (Kirk key)									A						
Lock breaker in OPEN position (Superior key)									B						
Double lock breaker in OPEN position (Kirk key)									C						
Double lock breaker in OPEN position (Superior key)									D						
Provision only - Lock breaker in OPEN position									E						
Provision only - Double lock breaker in OPEN position									F						
Primary conductor isolation shutter															
None										X					
Isolation Shutters										F					
Arc chute covers															
None											X				
Arc chute covers (FS2 only – Except Class F)											A				
Arc chute covers (FS3 only – Except Class F and M)											B				
Door locks and mechanical interlock															
1. Mechanical interlock with 2.0 meter Bowden cable															
2. Locks cubicle door, when breaker is in connect position (FS2 and FS3)															
3. Locks against racking breaker if the cubicle door is open (FS2 and FS3)															
1			**2**			**3**									
None												X			
X												M			
			X									A			
						X						C			
X			X									D			
X			X			X						E			
X						X						G			
			X			X						H			
Mechanism Operated Contacts (MOC)															
Breaker open/close auxiliary switches (4a & 4b) in the following positions:															
None													X		
Test and Connect position (FS2 only)													M		
Connect position (FS2 only)													N		
Test and Connect position (FS3 only)													P		
Connect position (FS3 only)													Q		
Connector and heater options															
Standard rear connectors														X	
Standard rear connectors and a cradle heater														H	
Rotatable rear connectors (FS2, 2000A and below, N, S, & H Class)														J	
Rotatable rear connectors and a cradle heater (FS2, 2000A and below, N, S, & H Class)														K	
Future use															
Placeholder (required)															N

UL 1066 Listed accessories

Cradle accessories		Catalog Number
3-phase metering CTs, cradle mounted (3 windows per CT)		
FS2	Ratings – 800:5	**WLG8005MCT2**
	Ratings – 1600:5	**WLG16005MCT2**
	Ratings – 2000:5	**WLG20005MCT2**
	Ratings – 3200:5	**WLG32005MCT2**
FS3	Ratings – 3200:5	**WLG32005MCT3**
	Ratings – 4000:5	**WLG40005MCT3**
	Ratings – 5000:5	**WLG50005MCT3**

WL Secondary Terminal Assignments

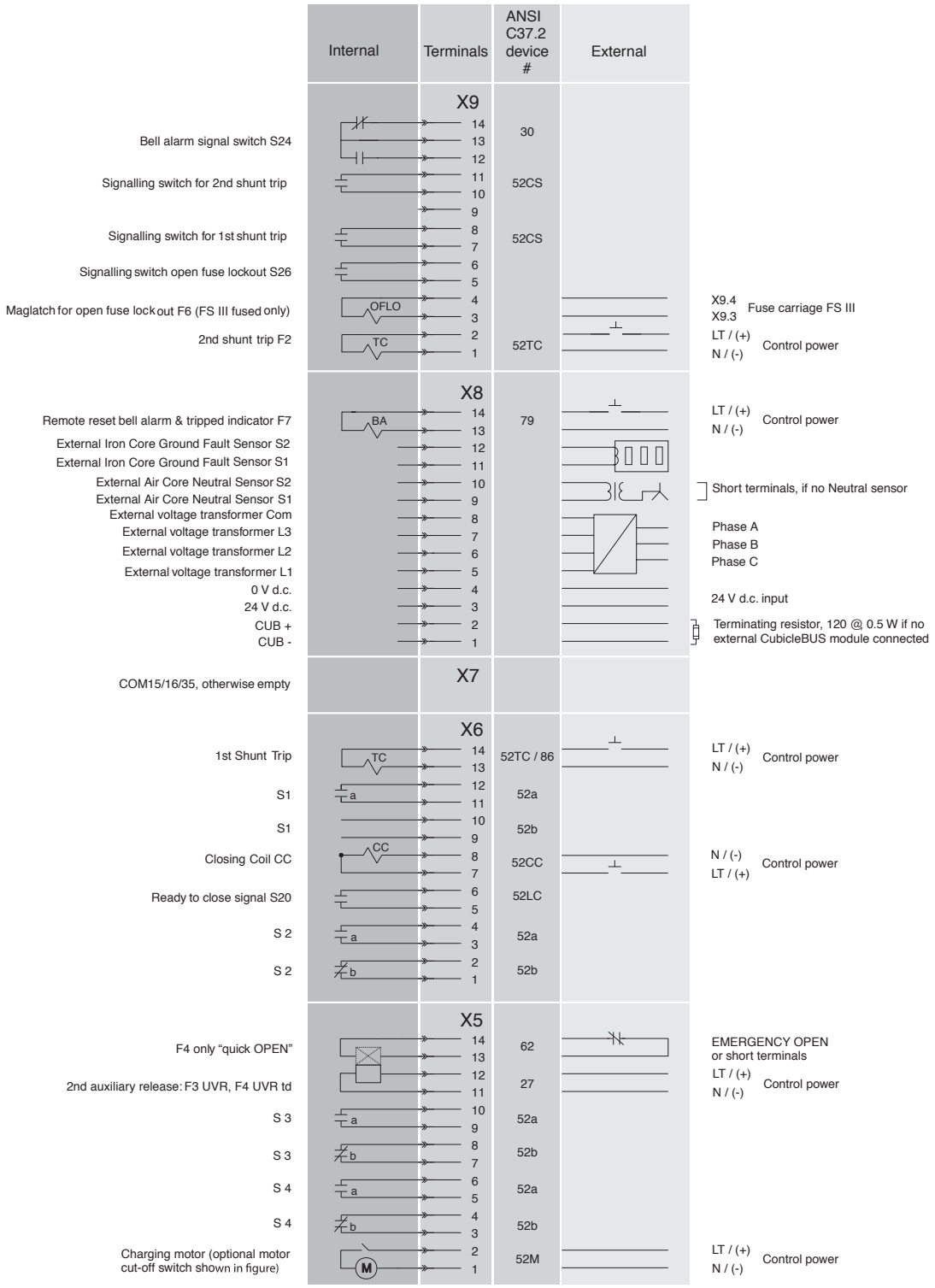

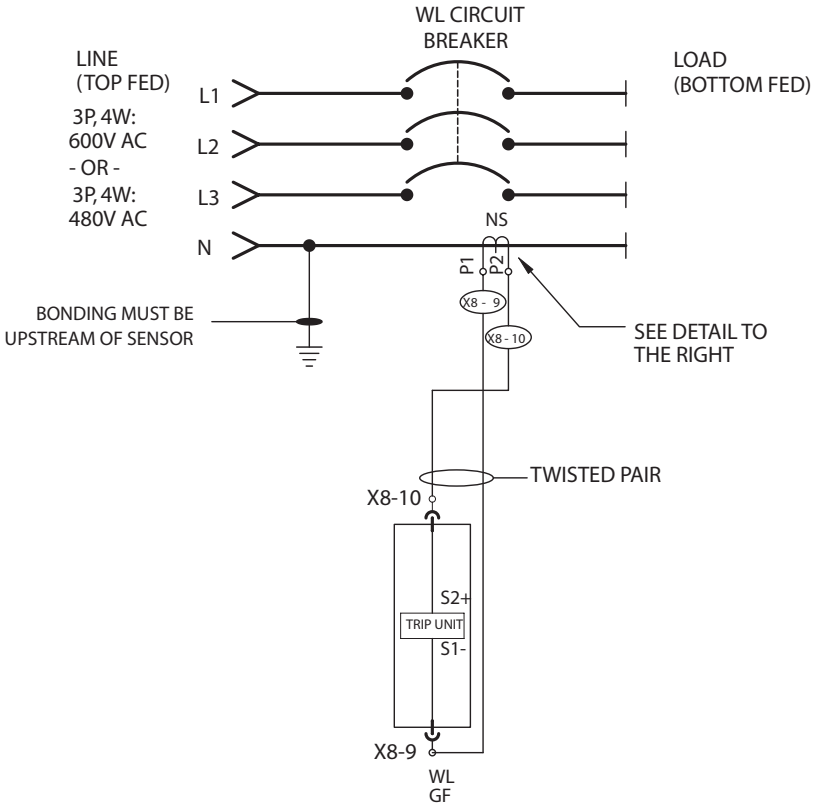
WL CIRCUIT BREAKER
LINE (TOP FED)
3P, 4W: 600V AC
- OR -
3P, 4W: 480V AC
L1
L2
L3
N
NS
P1
P2
X8 - 9
X8 - 10
LOAD (BOTTOM FED)
BONDING MUST BE UPSTREAM OF SENSOR
SEE DETAIL TO THE RIGHT
TWISTED PAIR
X8-10
S2+
TRIP UNIT
S1-
X8-9
WL GF

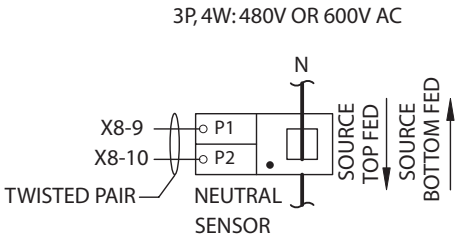
3P, 4W: 480V OR 600V AC
N
X8-9
X8-10
P1
P2
TWISTED PAIR
NEUTRAL SENSOR
SOURCE TOP FED
SOURCE BOTTOM FED

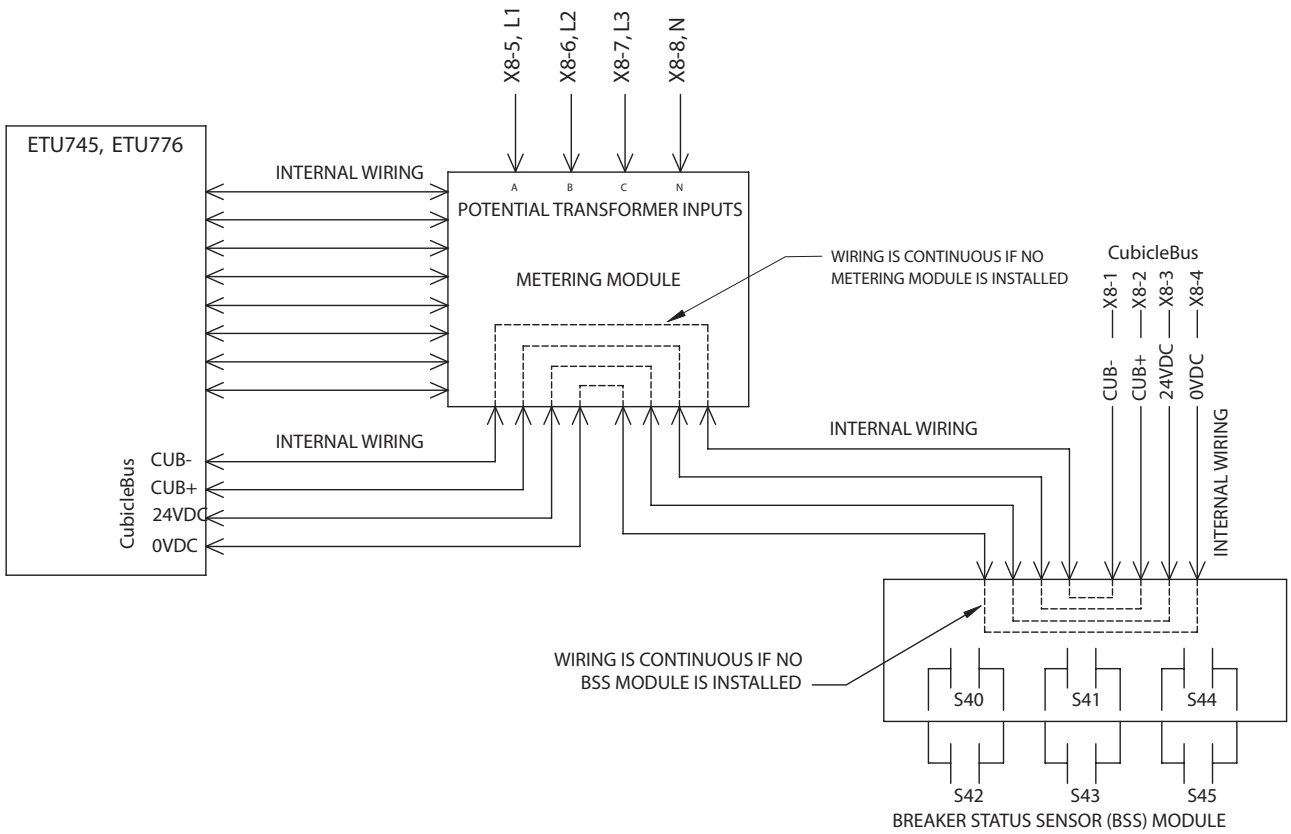
X8-5, L1
X8-6, L2
X8-7, L3
X8-8, N
ETU745, ETU776
INTERNAL WIRING
A
B
C
N
POTENTIAL TRANSFORMER INPUTS
METERING MODULE
WIRING IS CONTINUOUS IF NO METERING MODULE IS INSTALLED
CubicleBus
X8-1
X8-2
X8-3
X8-4
CUB-
CUB+
24VDC
0VDC
INTERNAL WIRING
INTERNAL WIRING
INTERNAL WIRING
CubicleBus
CUB-
CUB+
24VDC
0VDC
WIRING IS CONTINUOUS IF NO BSS MODULE IS INSTALLED
S40
S41
S44
S42
S43
S45
BREAKER STATUS SENSOR (BSS) MODULE

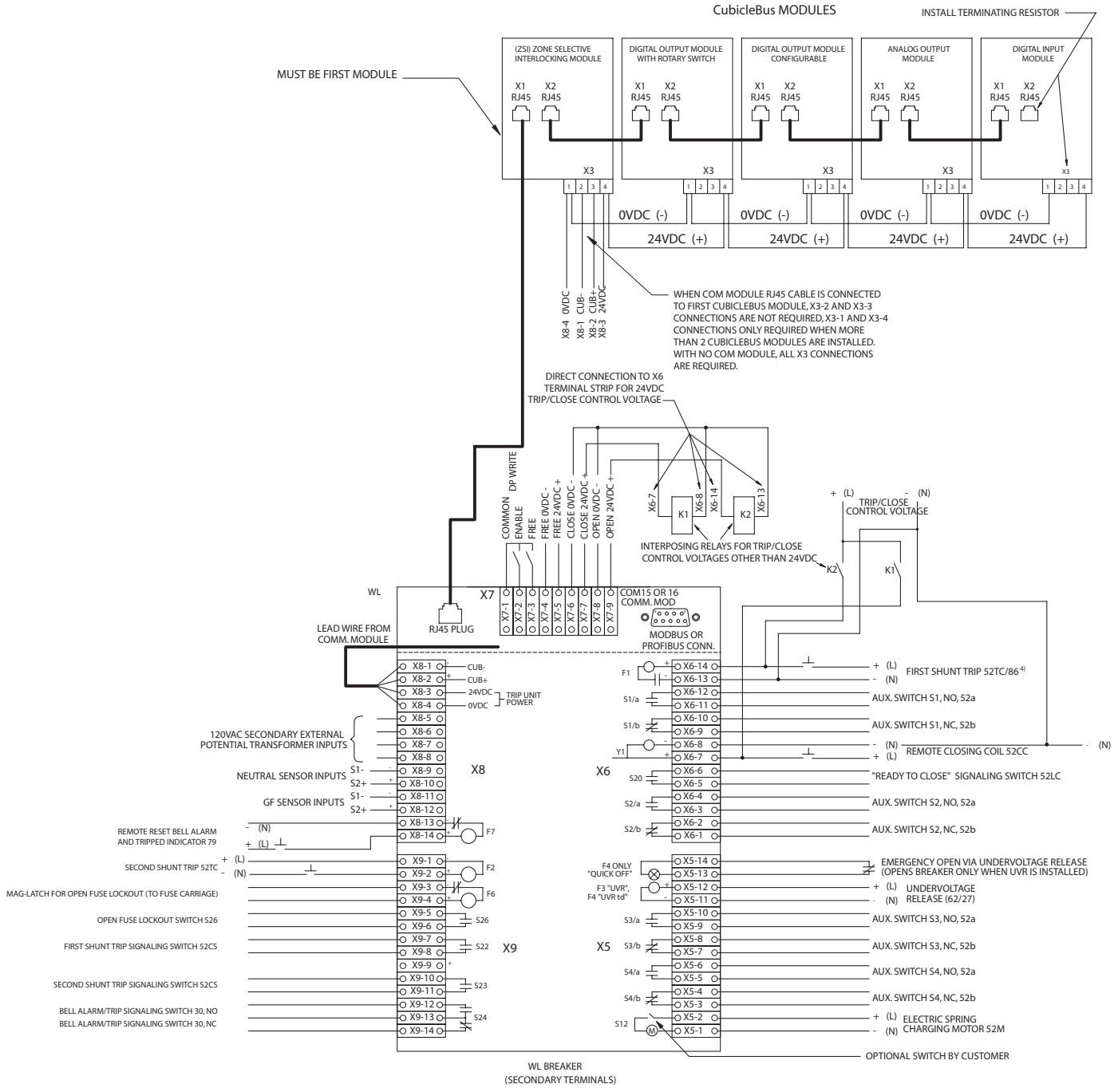

NOTES:

1. COMPONENT PLACEMENT PER PANEL, SWITCHGEAR, OR SWITCHBOARD DRAWINGS.
2. ALL DEVICES SHOWN IN OPEN AND/OR DE-ENERGIZED STATE.
3. ALL GROUND FAULT WIRING TO BE SHIELDED TWISTED PAIR
4. SHUNT TRIP CLEARING CONTACT ONLY WITH INTERMITTENT-DUTY SHUNT TRIPS ON FIRST SHUNT TRIP ONLY

Ground Fault Protection

When optional ground fault is selected, the trip unit detects fault currents that flow to ground and represent a fire hazard to the system. The adjustable time delay allows selective staggering of consecutively arranged circuit breakers.

When setting the parameters of the trip unit, a selection can be made between alarm and trip if the set current value is exceeded. The cause of the trip is displayed on an LED when the query button is pressed.

Modules

The trip unit versions ETU745 and ETU776 can be retrofitted with a ground fault protection module.

Two versions of the optional ground fault module can be ordered:

- Trip and Alarm
- Alarm only

Ground Fault Measuring Methods

Residual sensing of the ground fault current

The trip unit calculates the ground fault current by vectorial current summation of the 3- phase currents and the neutral conductor current.

Direct measurement of the ground fault current

A current transformer with the transformer ratio 1200A : 1A is used to measure the ground fault current. The transformer can be installed directly in the grounded star point of a transformer.

Setting

The ground fault module can be set depending on the measuring method (see above):

Measuring method 1: in position sum I
Measuring method 2: in position G.

With trip unit ETU776, this setting is implemented via the display and key pad or communications.

Ground Fault Protection with I^2t Characteristic Curve

All versions of the ground fault modules are delivered with an I^2t or fixed delay.

Modules are available in either Alarm only or Alarm and Trip functions.

For more information about ground fault protection, see the Ground Fault Application Guide.
www.usa.siemens.com/wl

Residual sensing of the ground fault current

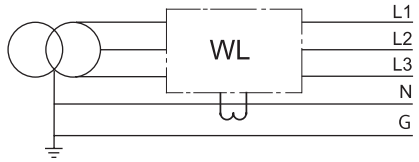

Direct measurement of the ground fault current

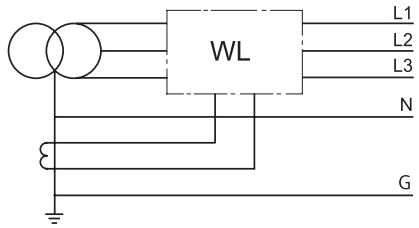

Ground fault module GFM A 745

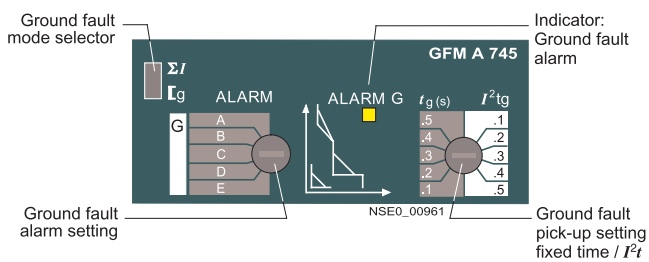

Ground fault module GFM AT 745

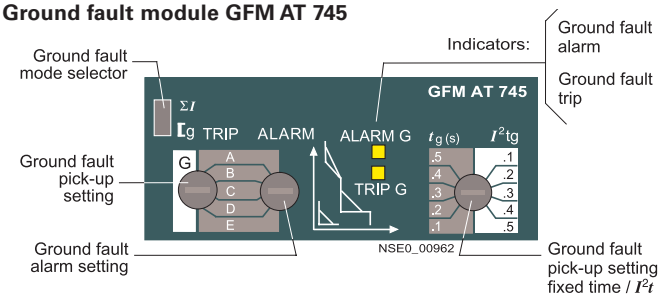

Ground fault module GFM A 776

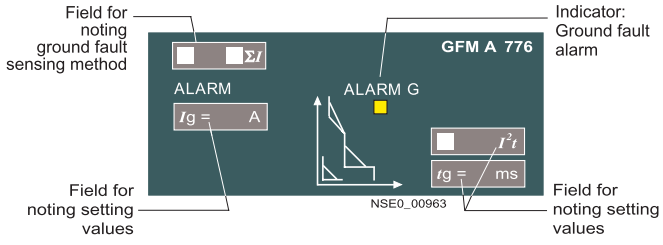

Ground fault module GFM AT 776

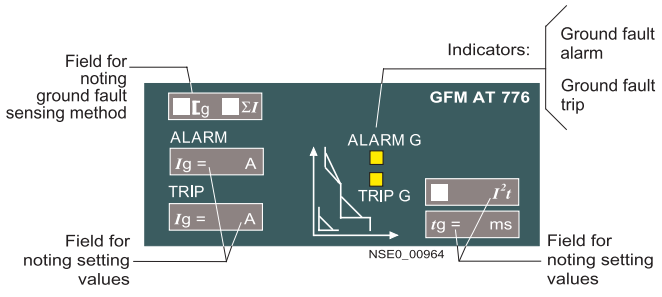

Metering Voltage Details

VT / PT connections for the WL Breaker when equipped with metering

WL power metering ("Meter Function") can accept 3W or 4W (LL/LN) system voltage connections.

The trip unit settings available are:
1) VT Primary Voltage (240V, 480V, 600V)
2) VT Secondary Voltage (100V, 110V, 120V)
3) VT Connection (Wye / LN, Delta / LL)

Three VTs must be used at all times.

All three VTs should be rated for the nominal system L-L voltage (e.g. 480V) and may have either 100V, 110V or 120V secondary voltages.

The following ratios are suggested or equivalent VTs can be used: (Must be suppled by others)
240:120 = 2:1 (ITI Part # 460-240 or 468-240)
480:120 = 4:1 (ITI Part # 460-480 or 468-480)
600:120 = 5:1 (ITI Part # 460-600 or 468-600)

VT Accuracy:
Each Metering Module presents a purely resistive (unity power factor) load to the transformer. Assuming no other devices connected to the VT, a ITI type 486 VT can safely feed 10 metering modules and and still maintain 0.6% accuracy assuming the wiring from the VT to the individual metering modules is twisted pair and kept to a minimum length.

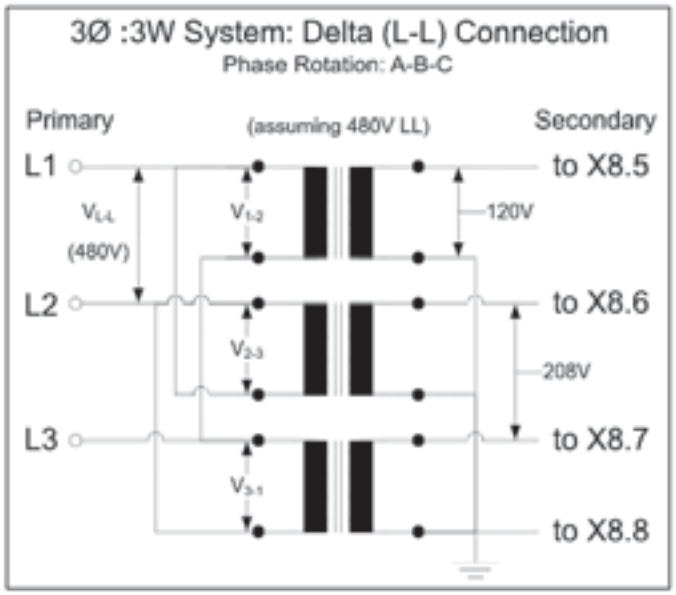

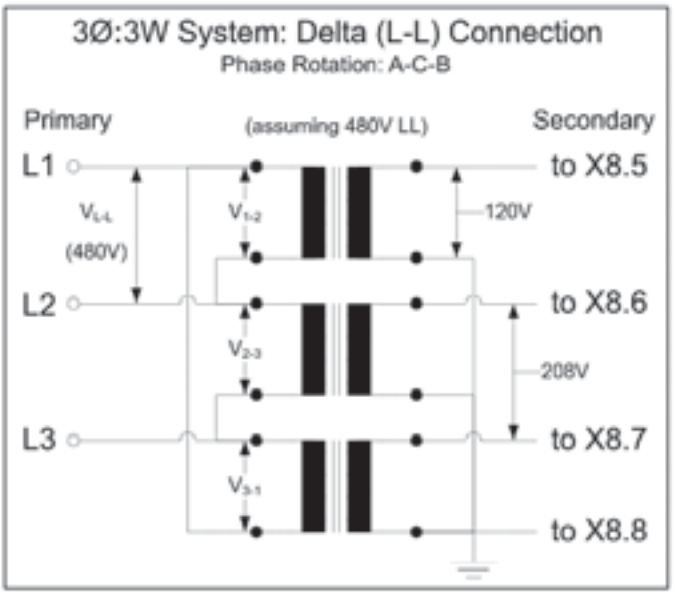

Notes:

- Required primary and secondary overcurrent protection (fusing) not shown for clarity.
- When applied in a High Resistance Ground system with a L-L primary connection, the secondary common connection should be left ungrounded if possible.

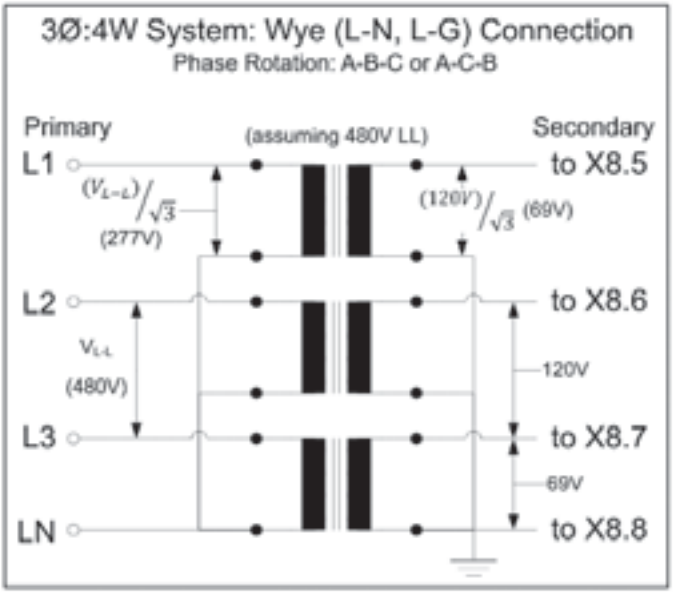

Frame size 1

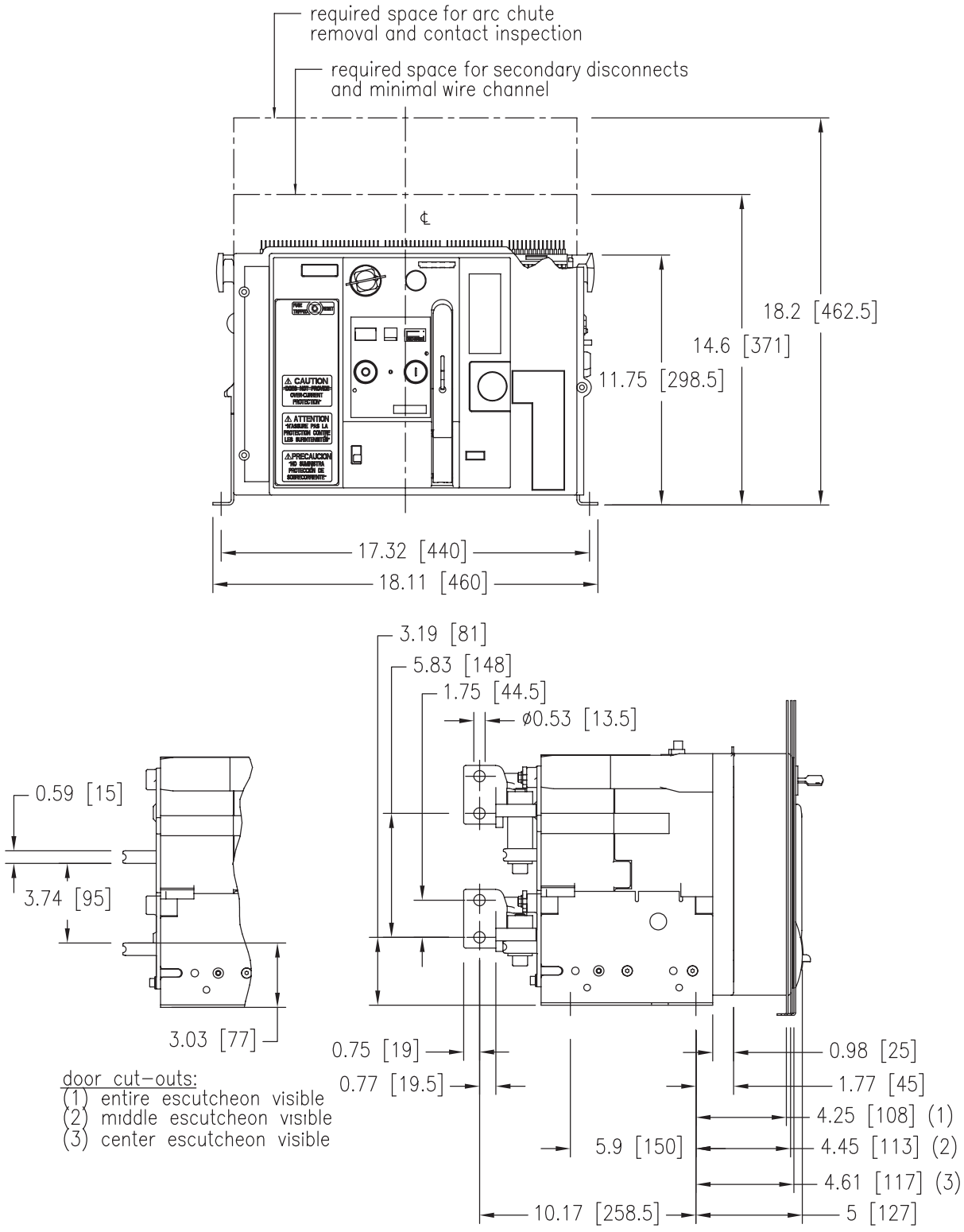
required space for arc chute removal and contact inspection
required space for secondary disconnects and minimal wire channel
℄
18.2 [462.5]
14.6 [371]
11.75 [298.5]
17.32 [440]
18.11 [460]
3.19 [81]
5.83 [148]
1.75 [44.5]
ø0.53 [13.5]
0.59 [15]
3.74 [95]
3.03 [77]
door cut-outs:
(1) entire escutcheon visible
(2) middle escutcheon visible
(3) center escutcheon visible
0.75 [19]
0.77 [19.5]
0.98 [25]
1.77 [45]
4.25 [108] (1)
4.45 [113] (2)
4.61 [117] (3)
5.9 [150]
10.17 [258.5]
5 [127]

Frame size 1
Horizontal Connectors

Top view

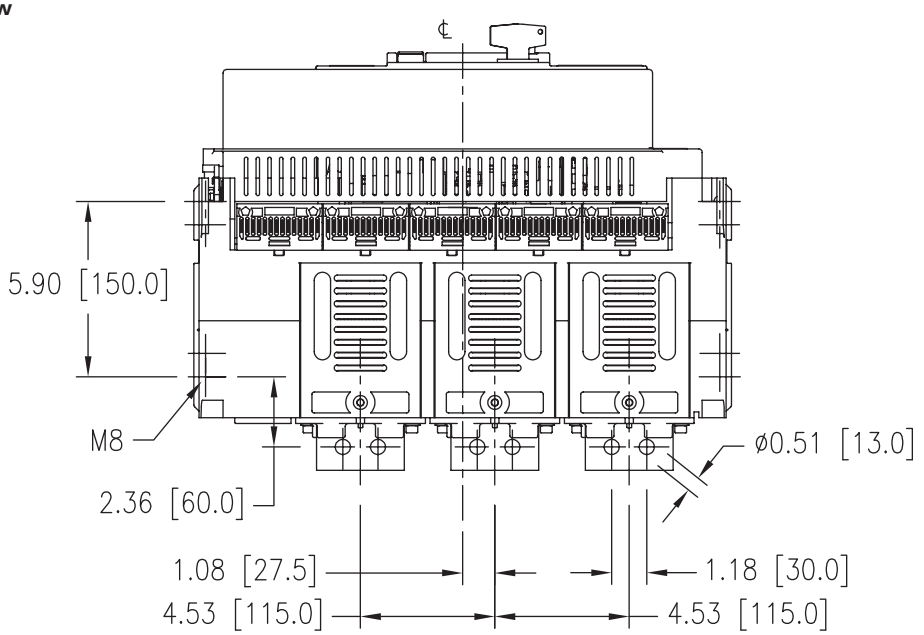

Bottom view

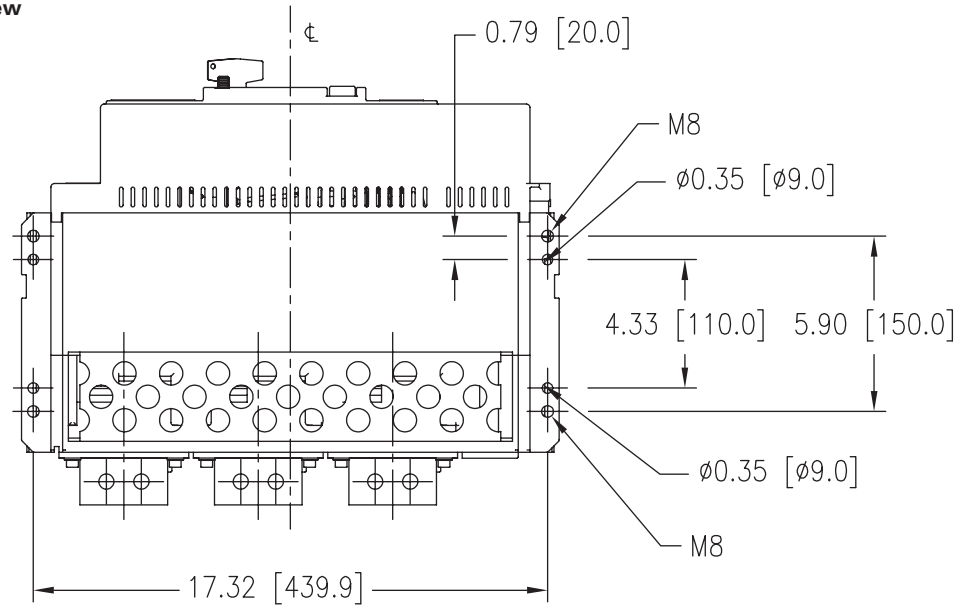

Frame Size 1
Rear Vertical Connectors

Top view

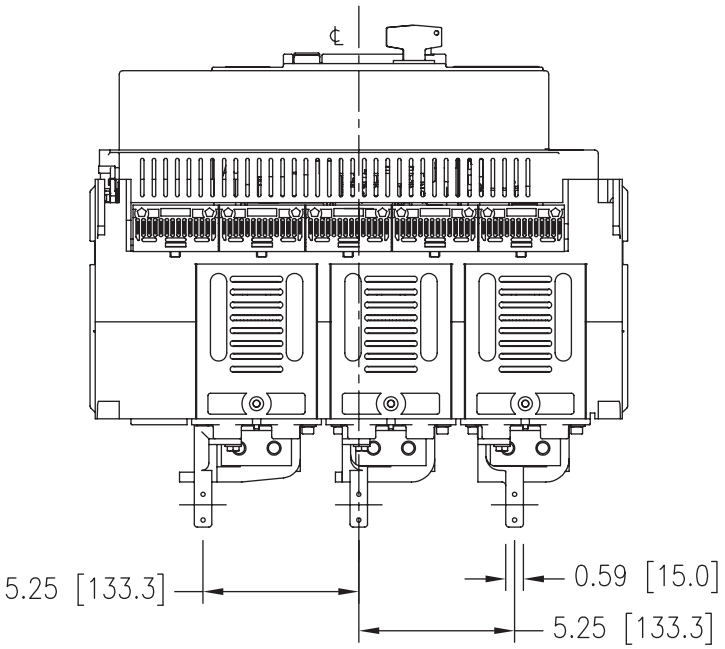

Rear view

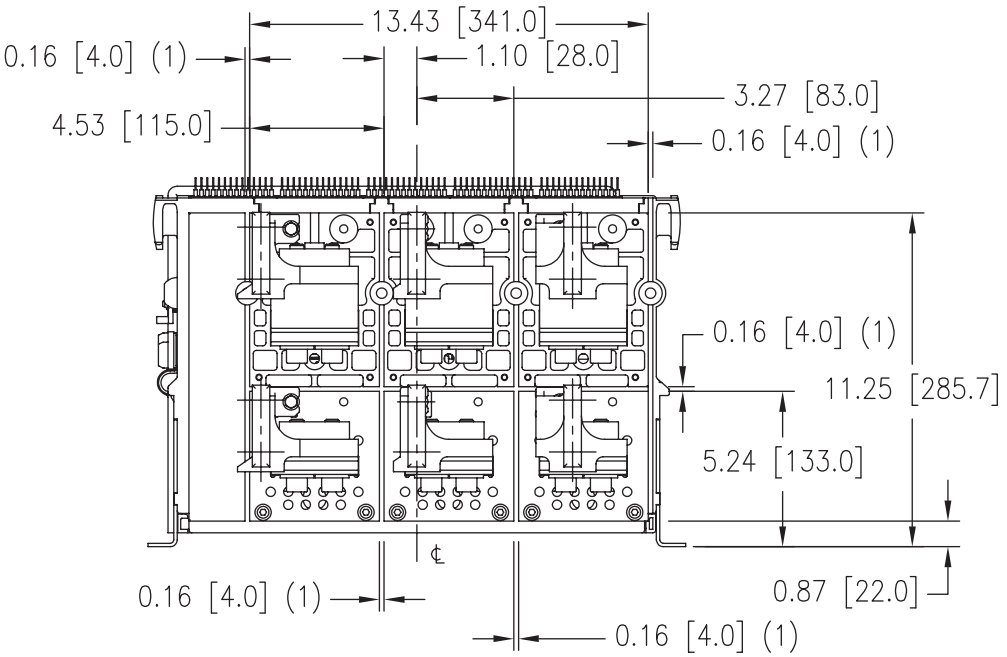

(1) = slots for insulation barriers

Frame Size 1
Front Connectors

Top view

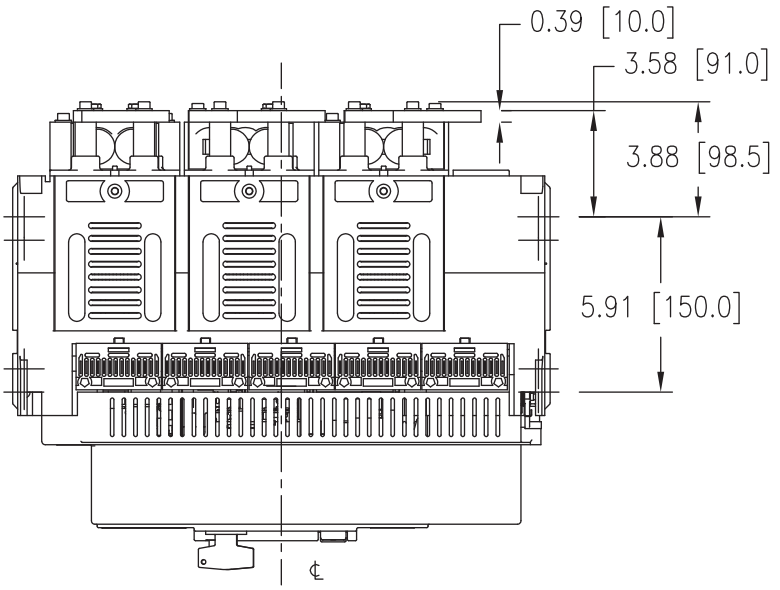

Front view

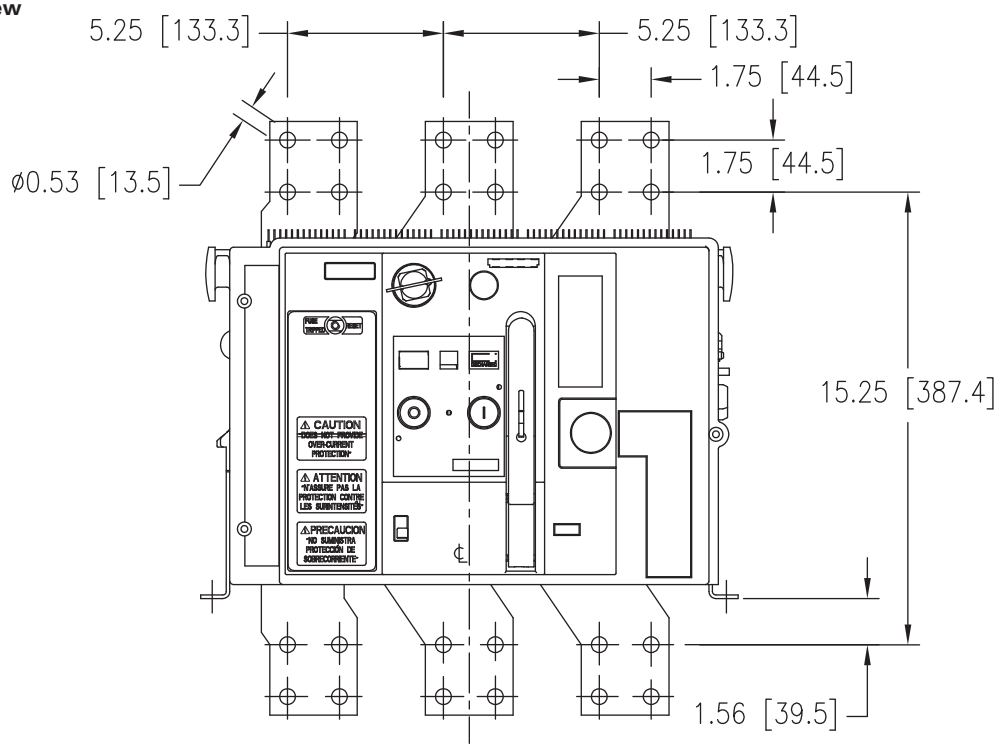

Frame Size 1

Front Connectors and Lugs

Top view

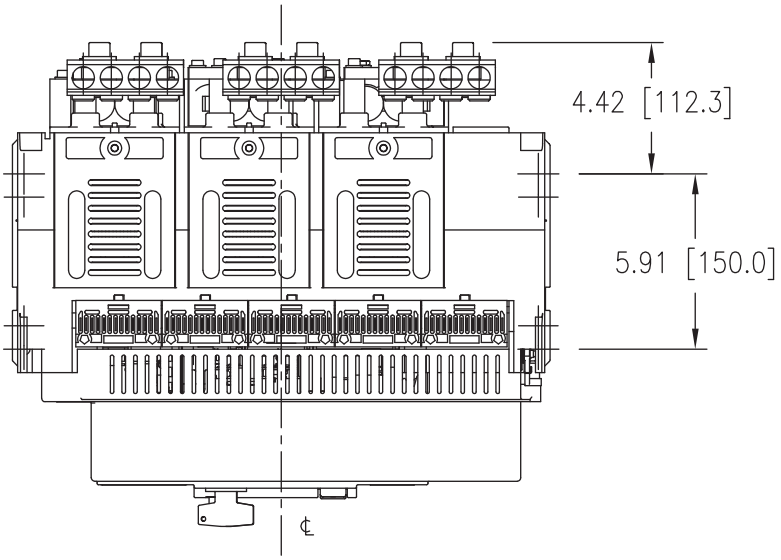

Front view

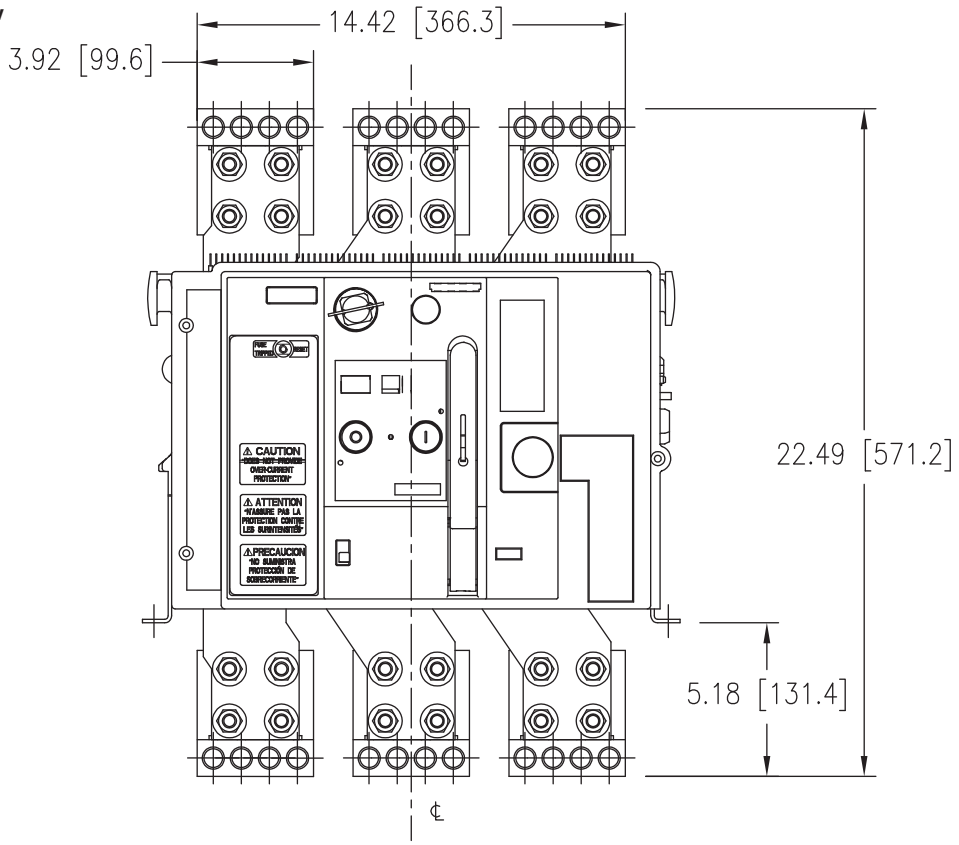

Fixed Size 1

Door Cut-outs

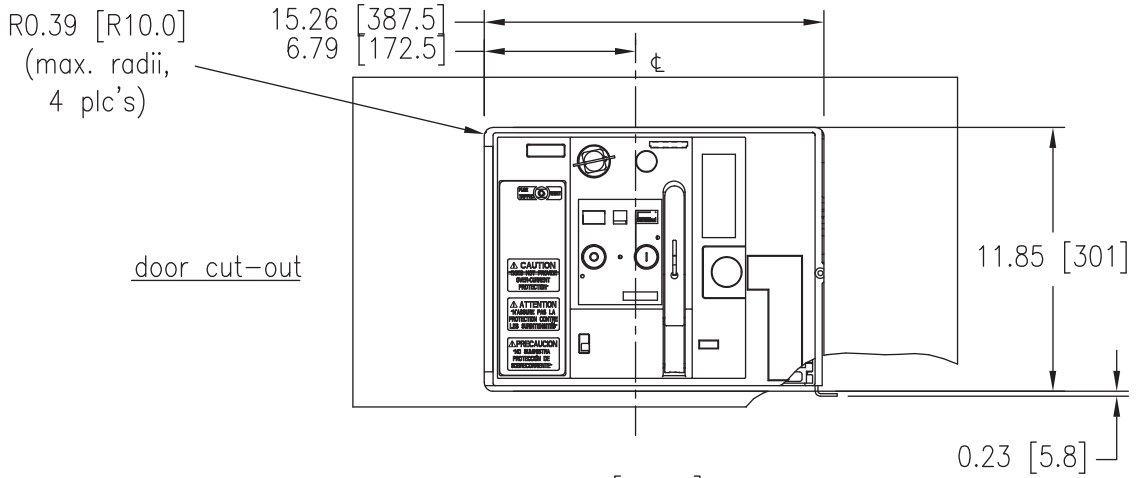

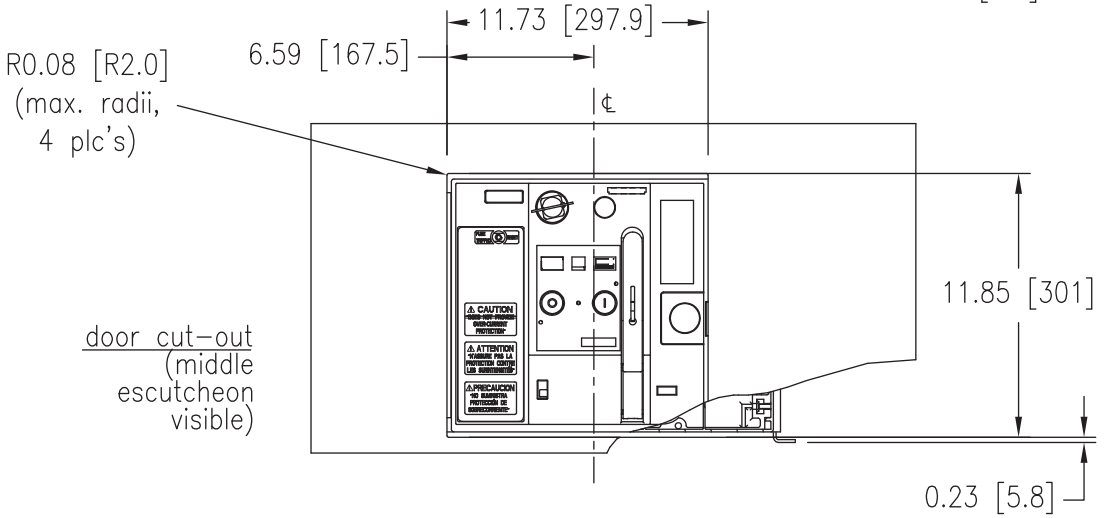

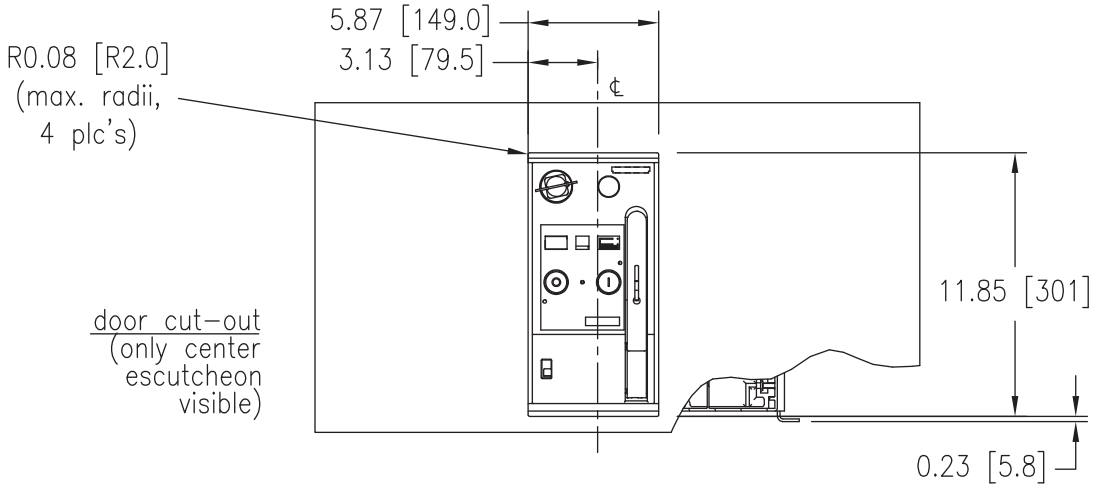

Frame Size 2

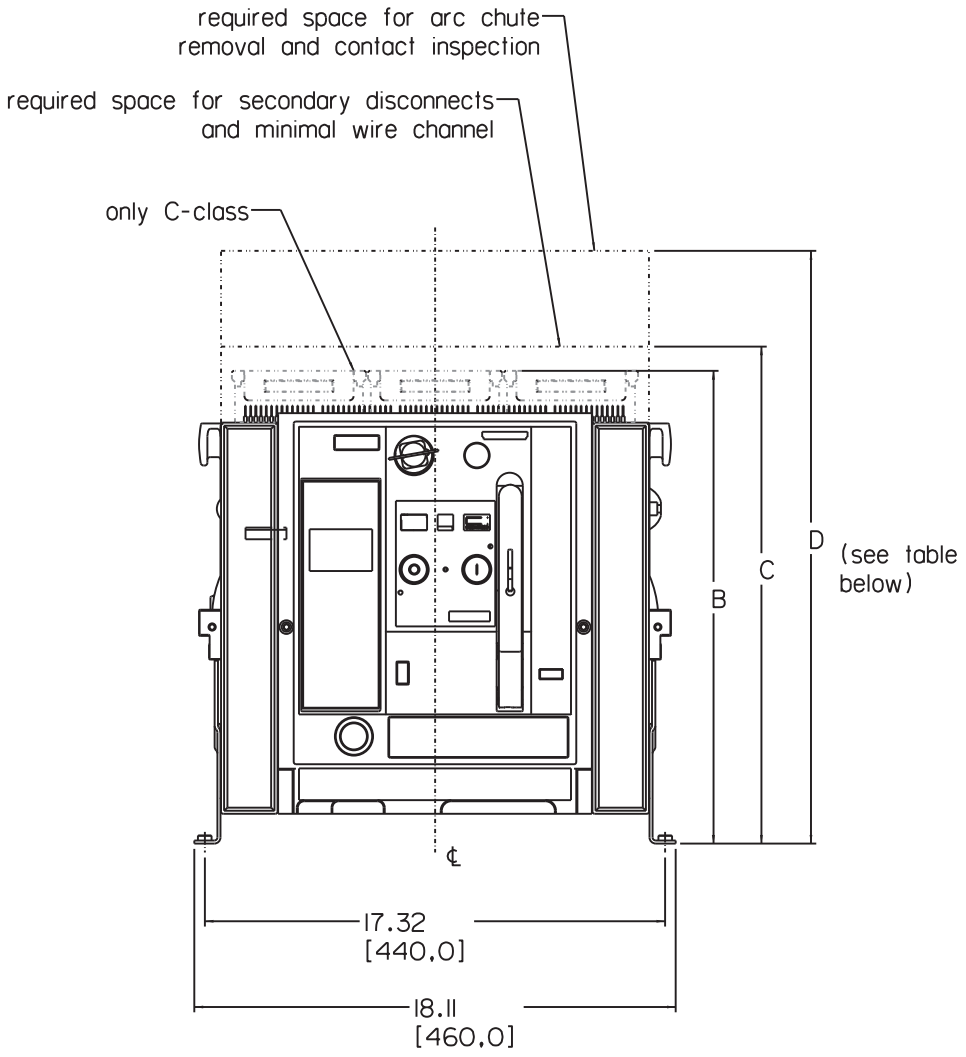

Interrupting class	Dimension B	Dimension C	Dimension D
S/L	15.85 [402.5]	18.70 [475.0]	22.30 [566.5]
C	17.80 [452.10]	18.70 [475.0]	25.20 [640.0]

Frame Size 2

Optional Vertical Connectors

Interrupting Class	Rated Current	Dimension A
S/L	max. 1600 A	0.39 [10]
S/L	max. 2000 A	0.59 [15]
S/L	max. 3000 A	1.18 [30]
C	1600 - 3000 A	1.18 [30]

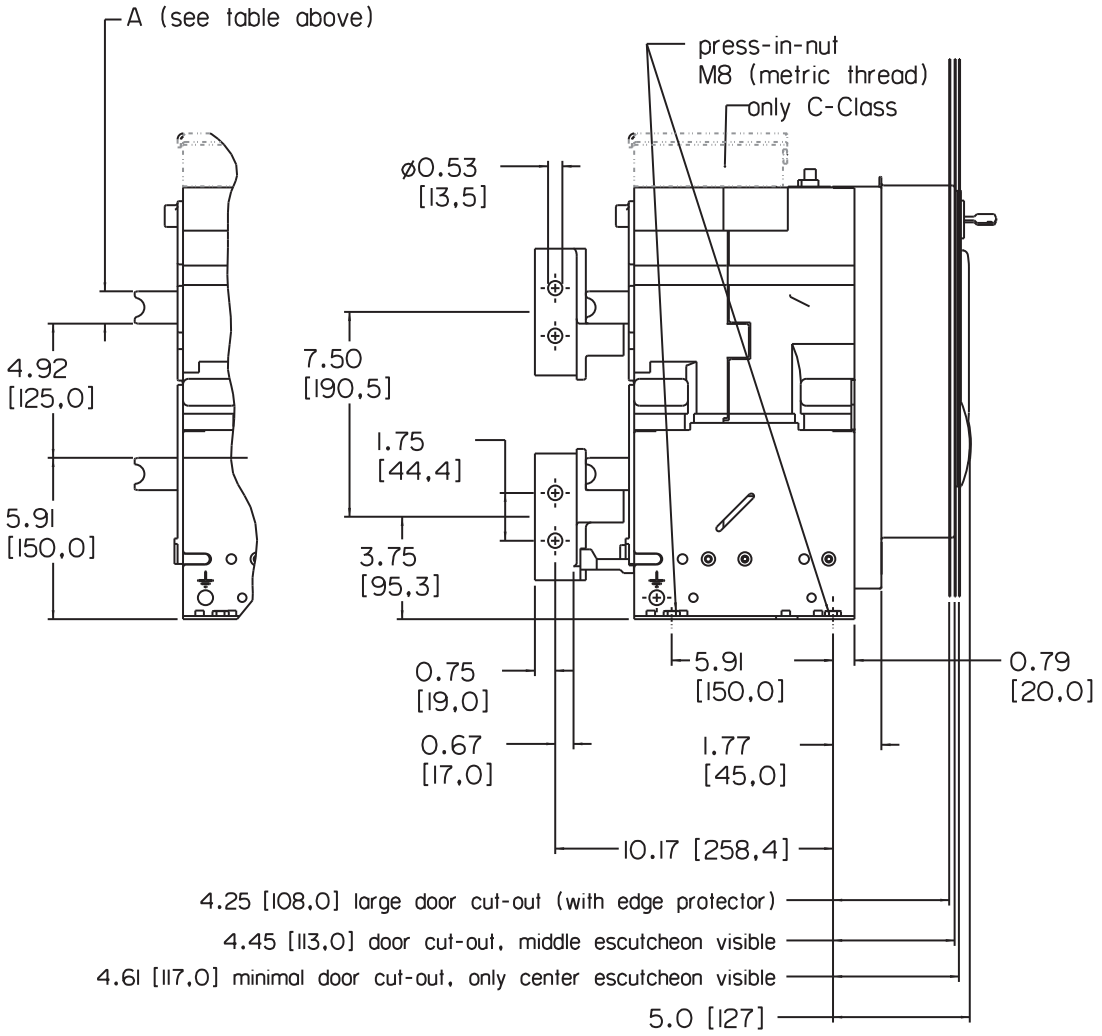

Frame Size 2

Optional Vertical Connectors

Top view

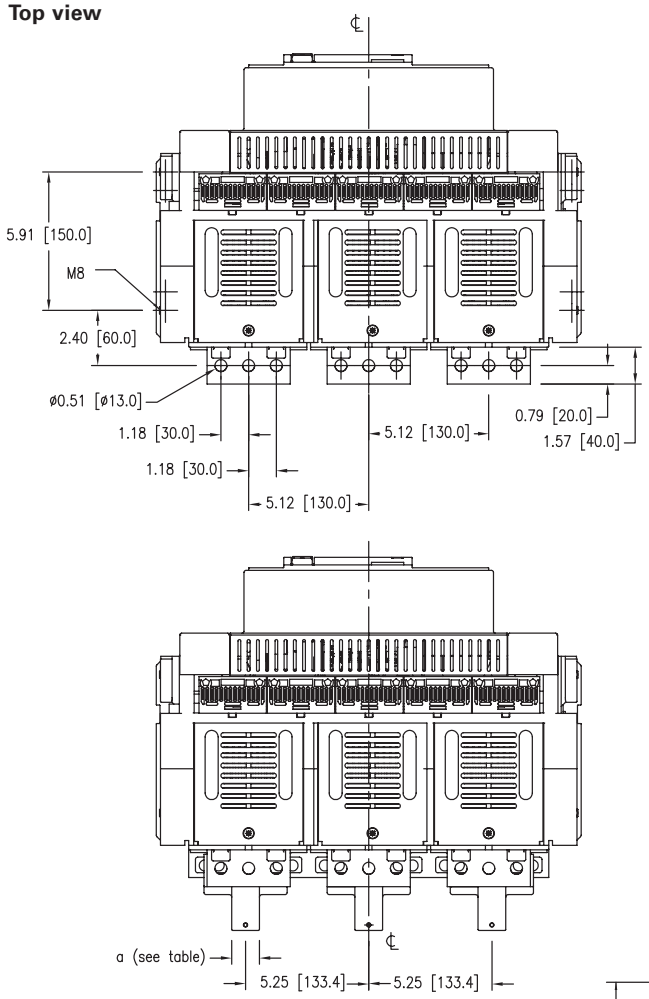

Rated Current	Dimension A
max. 1600 A	0.39 [10]
max. 2000 A	0.59 [15]
max. 3000 A	1.18 [30]
C-class always	1.18 [30]

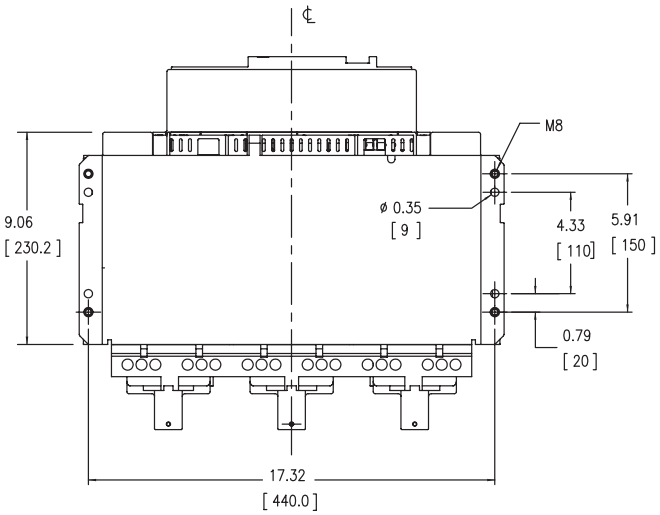

Rear view

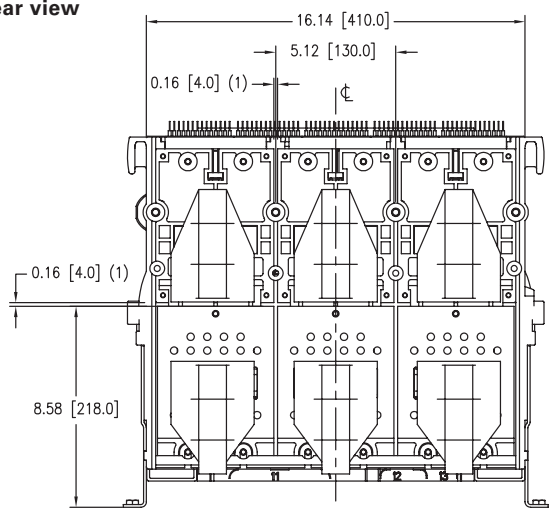

(1) = Slots 0.2 [5] for insulation barriers

Frame Size 2

Front Connectors

LH side view

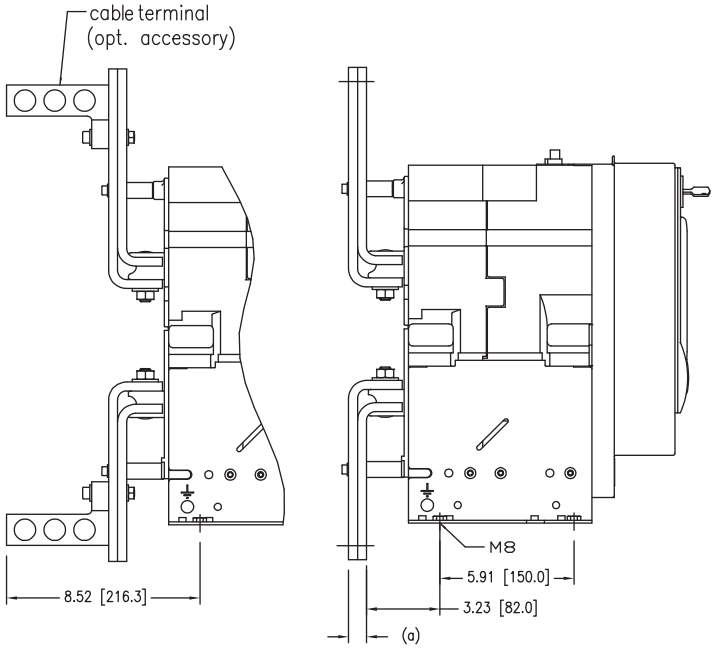

Rated Current	Dimension A
max. 1600 A	0.39 [10]
max. 2000 A	0.79 [20]
max. 2500 A	0.79 [20]

Front view

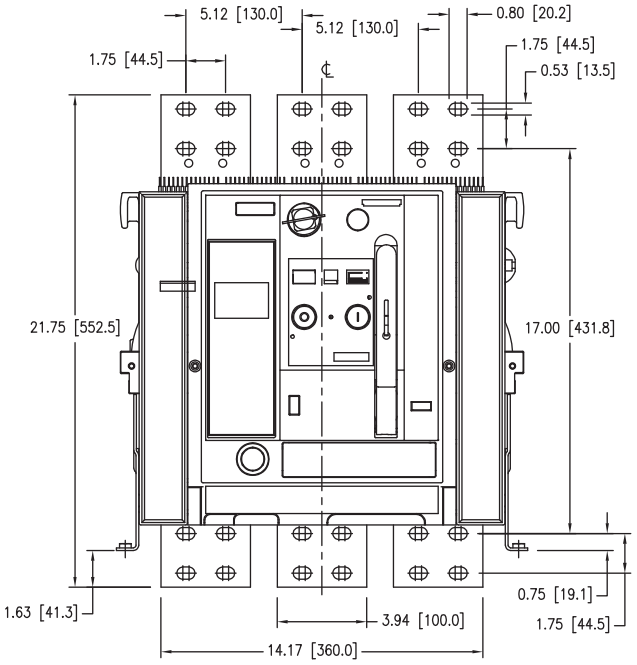

Frame Size 2

3000A Front Connectors

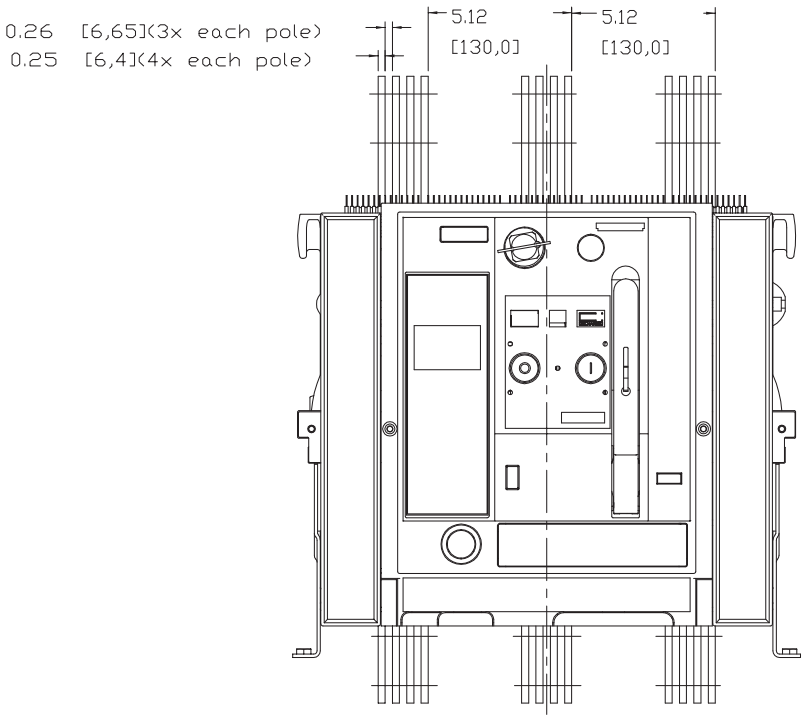

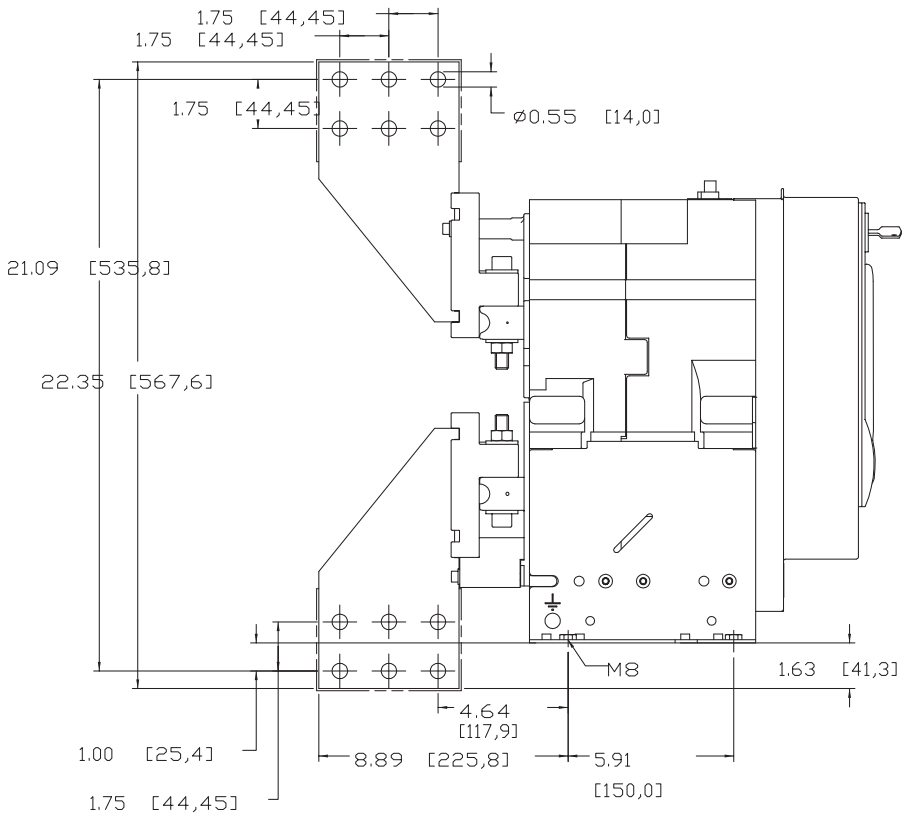

Frame Size 3

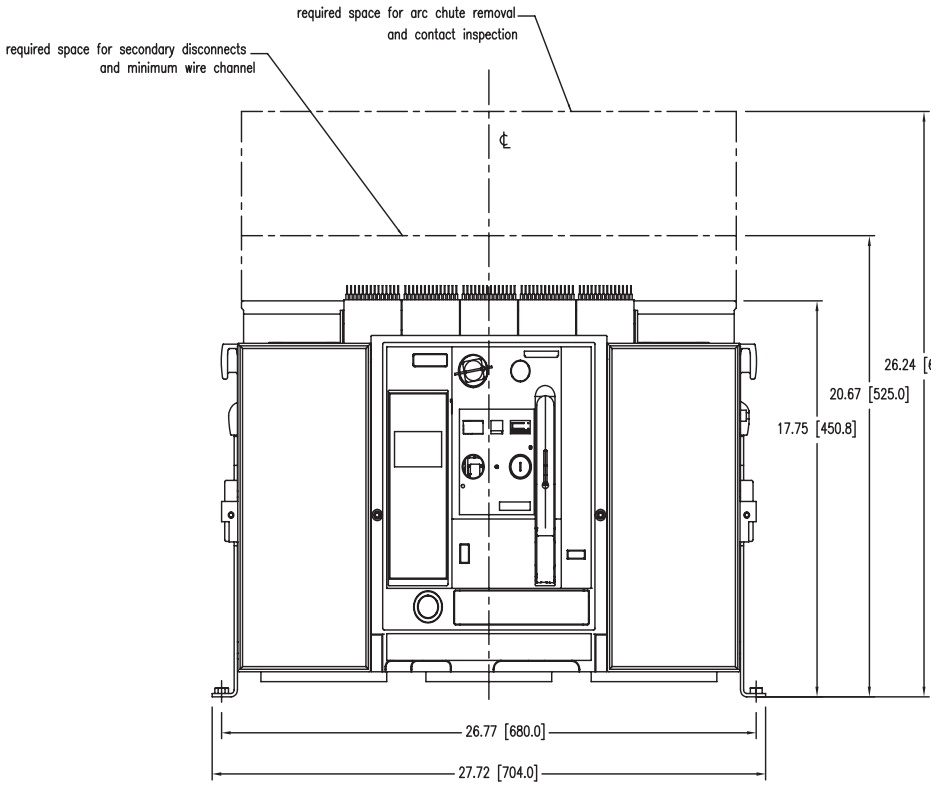

LH side view

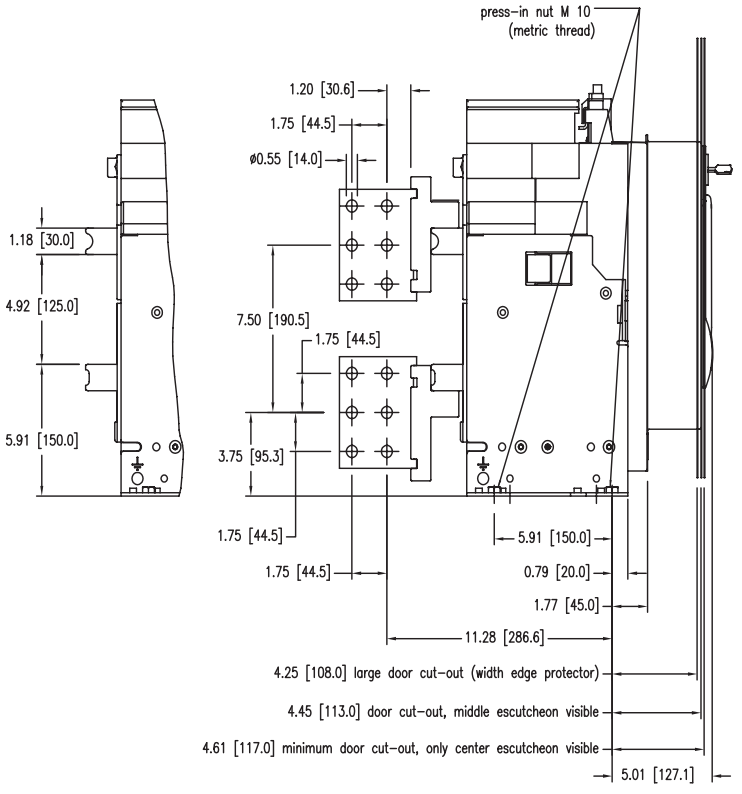

Frame Size 3

Vertical Connectors and Horizontal Stabs

Top view

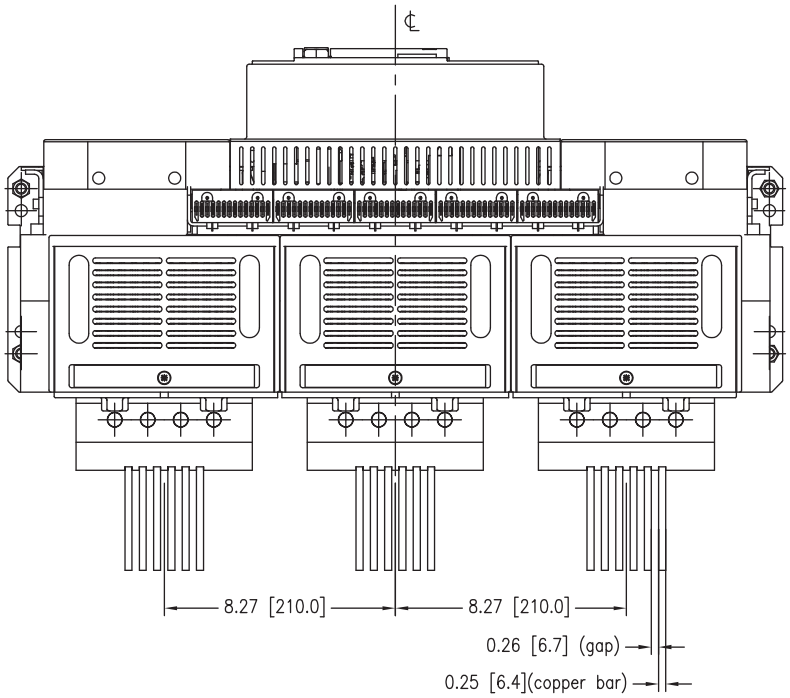

Top view

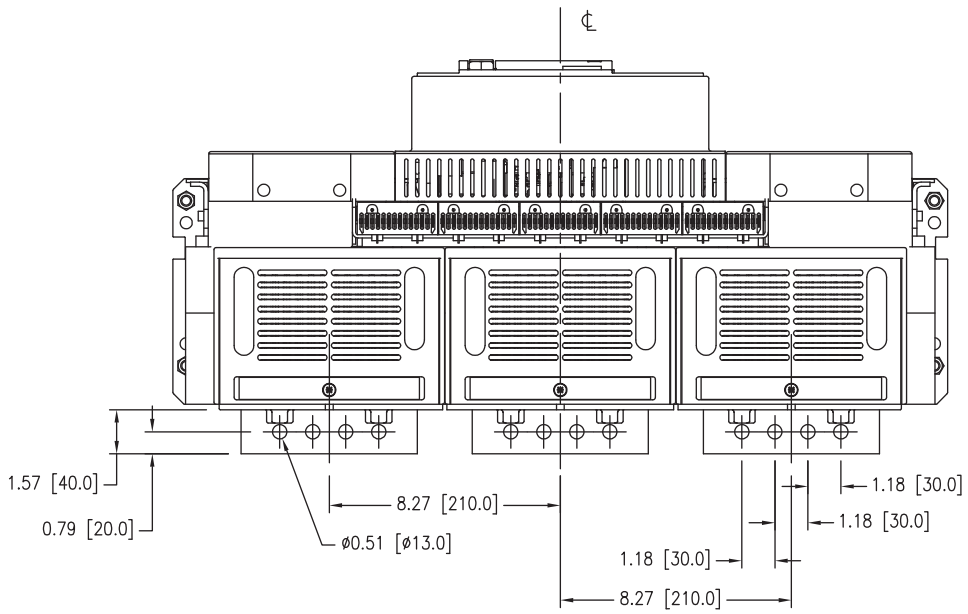

Frame Size 3

Top view

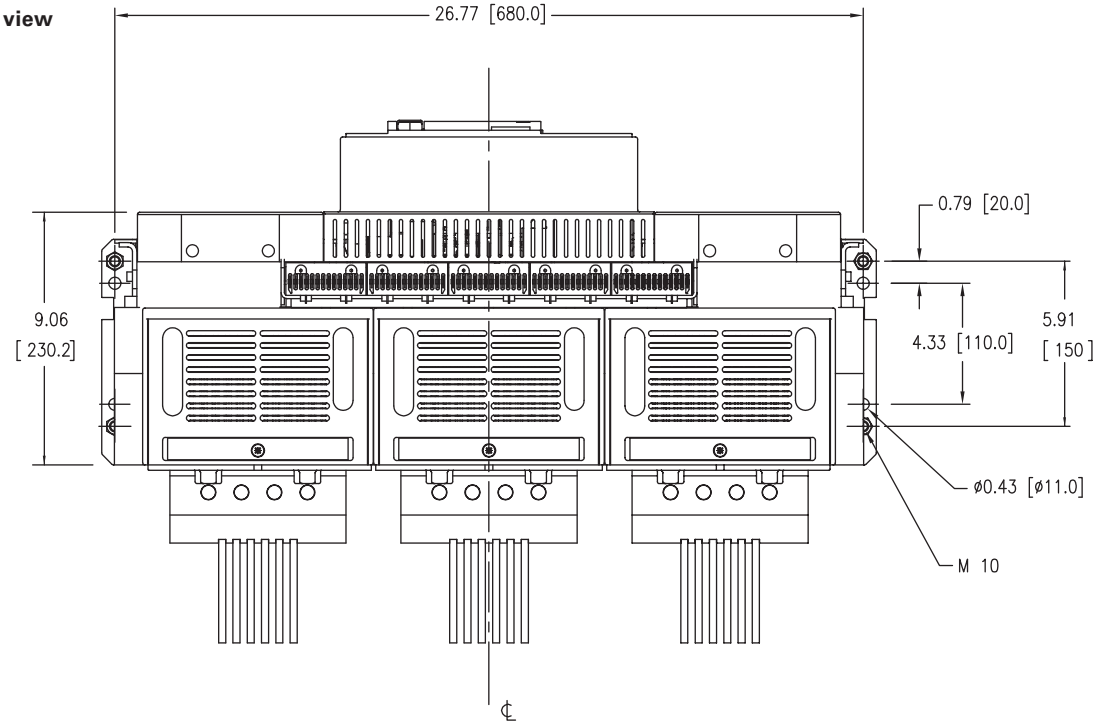

Rear view

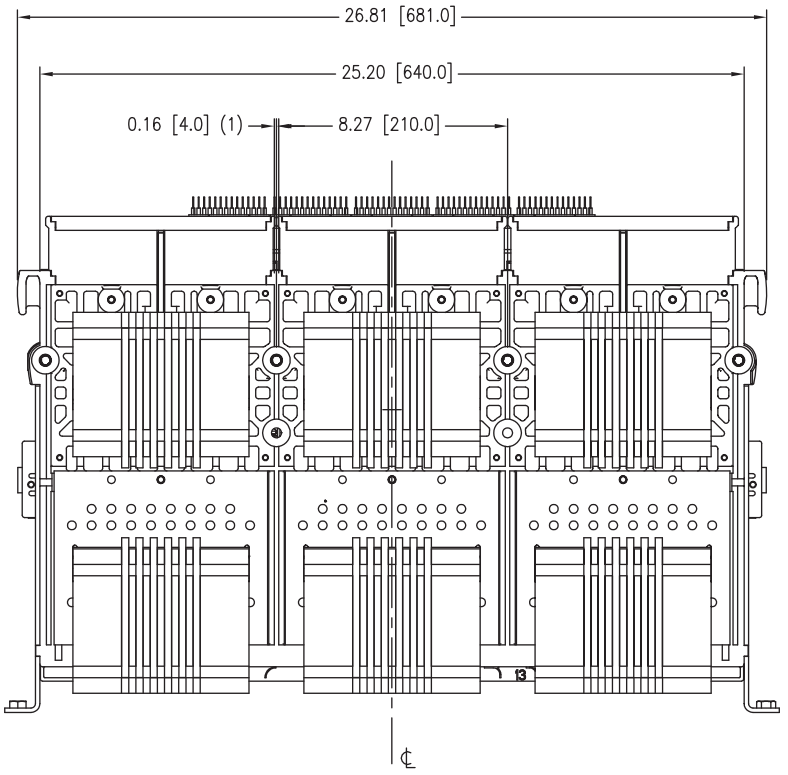

(1) = Slots 0.2 [5] for insulation barriers

Frame Size 3

5000A Vertical Connectors

LH side view

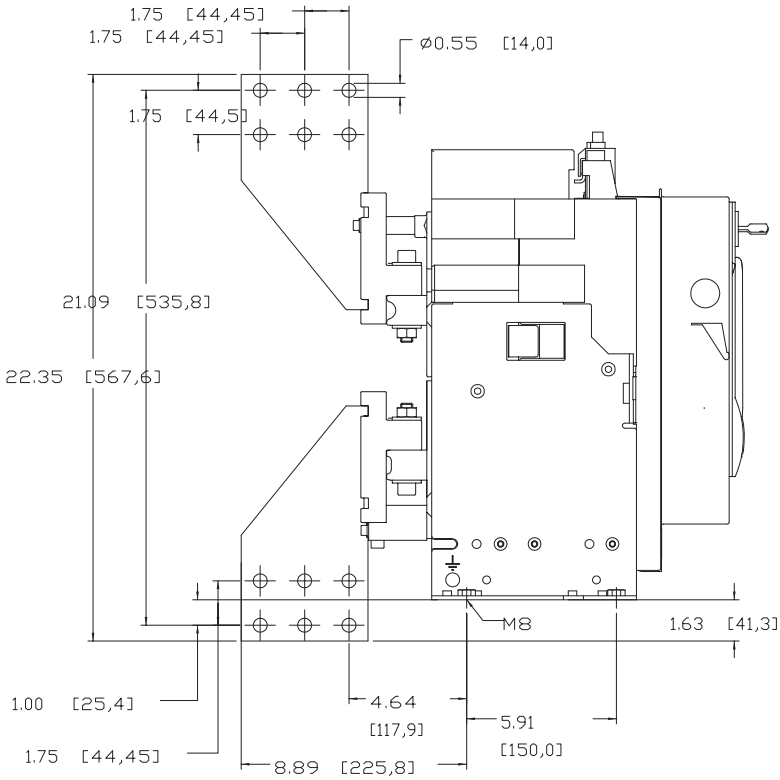

Front view

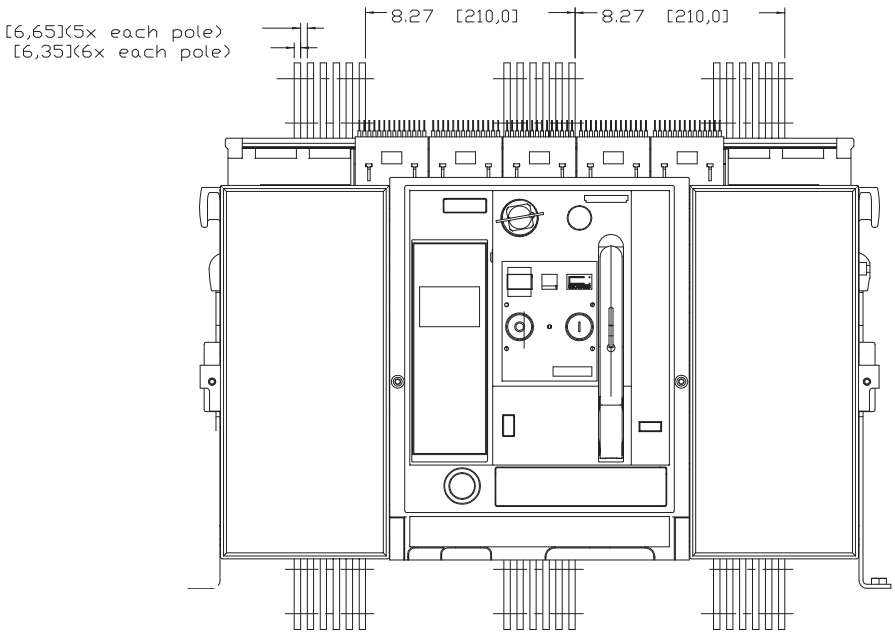

Frame Size 2 and 3

Door Cut-outs

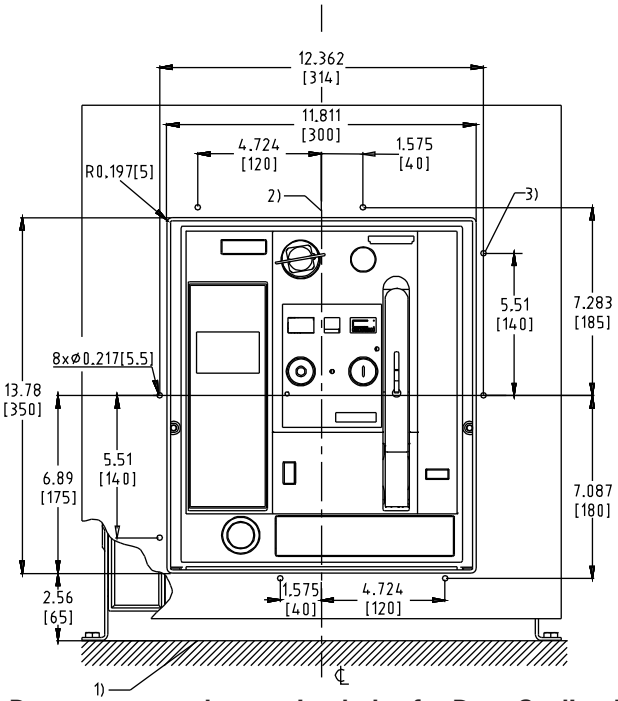

Door cut-out and mounting holes for Door Sealing Frame

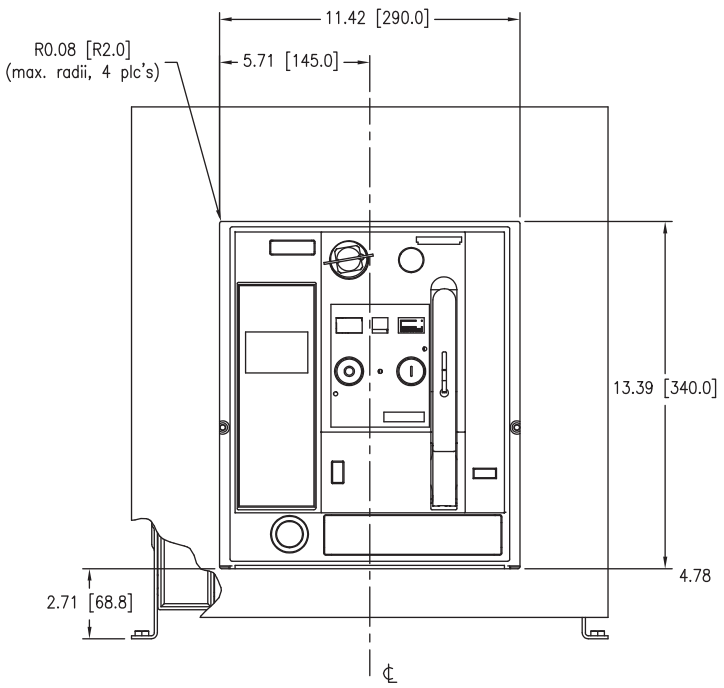

Door cut-out (after mounting Door Sealing Frame)

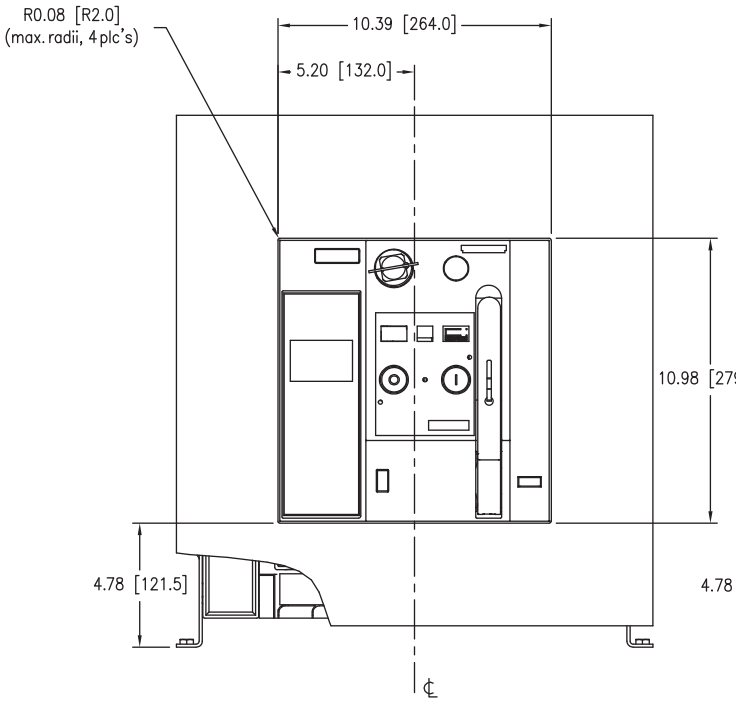

Door cut-out (Middle escutcheon visible)

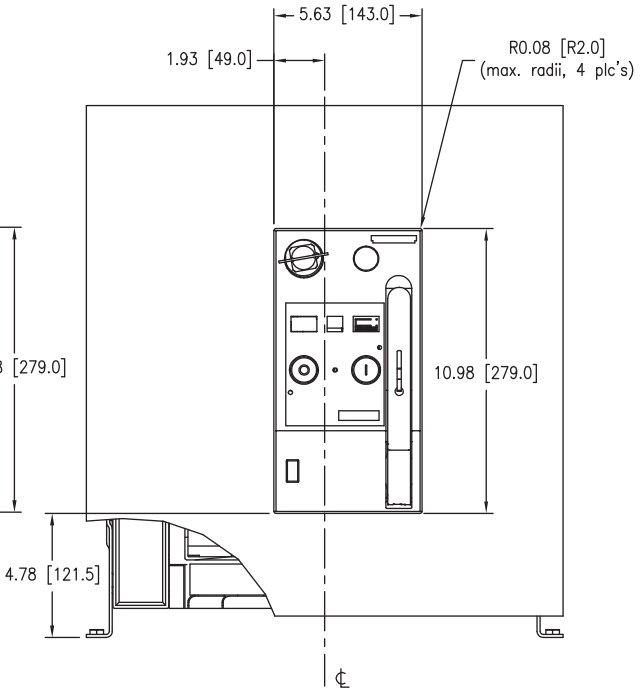

Minimal door cut-out (Only center eustcheon visible)

1) Breaker mounting surface.
2) Center of breaker front panel.
3) Drill eight holes for mounting door sealing frame.

Frame Size 1

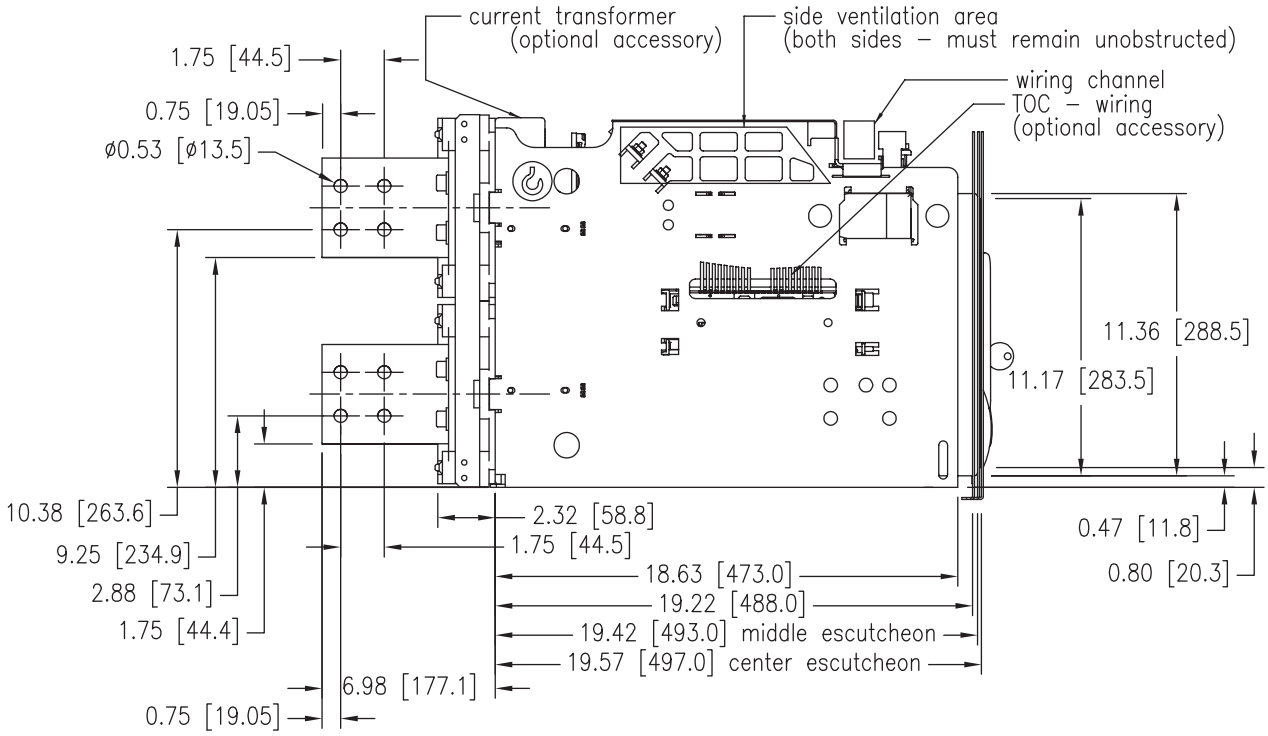
current transformer
(optional accessory)
side ventilation area
(both sides – must remain unobstructed)
wiring channel
TOC – wiring
(optional accessory)
1.75 [44.5]
0.75 [19.05]
ø0.53 [ø13.5]
11.36 [288.5]
11.17 [283.5]
10.38 [263.6]
9.25 [234.9]
2.88 [73.1]
1.75 [44.4]
0.75 [19.05]
2.32 [58.8]
1.75 [44.5]
18.63 [473.0]
19.22 [488.0]
19.42 [493.0] middle escutcheon
19.57 [497.0] center escutcheon
6.98 [177.1]
0.47 [11.8]
0.80 [20.3]

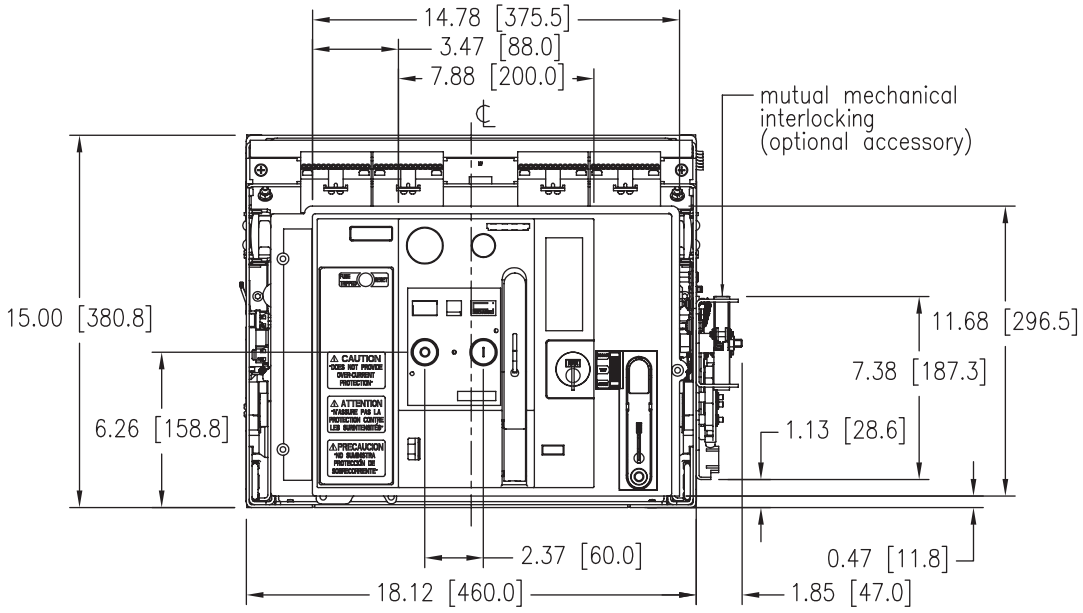
14.78 [375.5]
3.47 [88.0]
7.88 [200.0]
mutual mechanical
interlocking
(optional accessory)
15.00 [380.8]
6.26 [158.8]
11.68 [296.5]
7.38 [187.3]
1.13 [28.6]
2.37 [60.0]
18.12 [460.0]
0.47 [11.8]
1.85 [47.0]

Frame Size 1
Vertical Connectors

Rear view

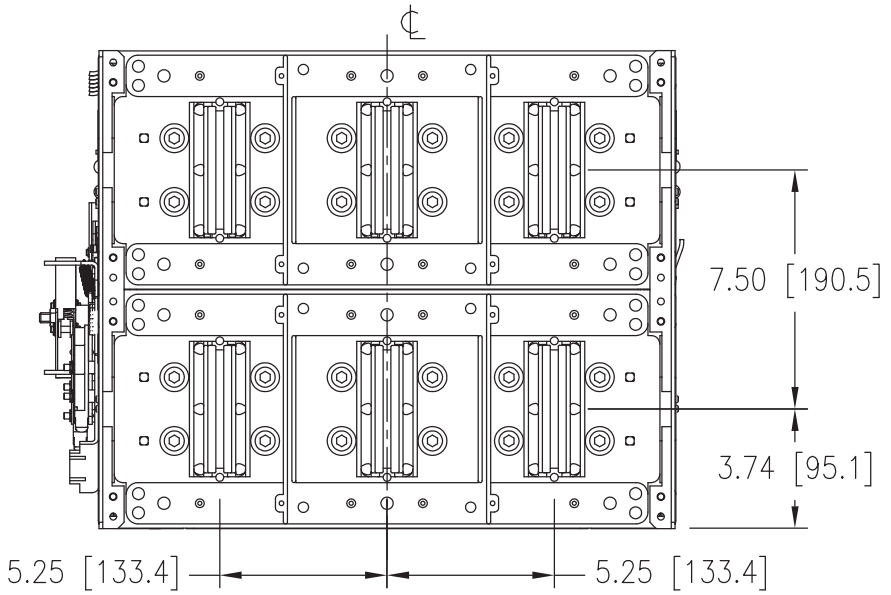

Top view

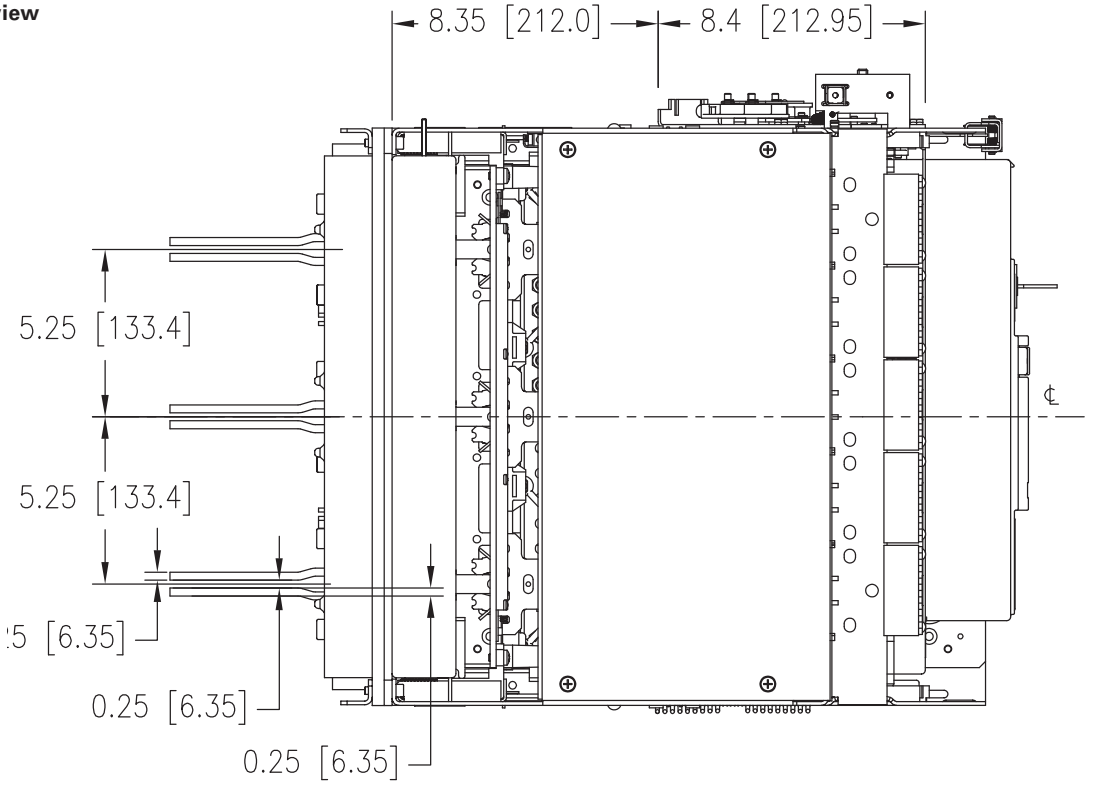

Frame Size 1

Bottom view

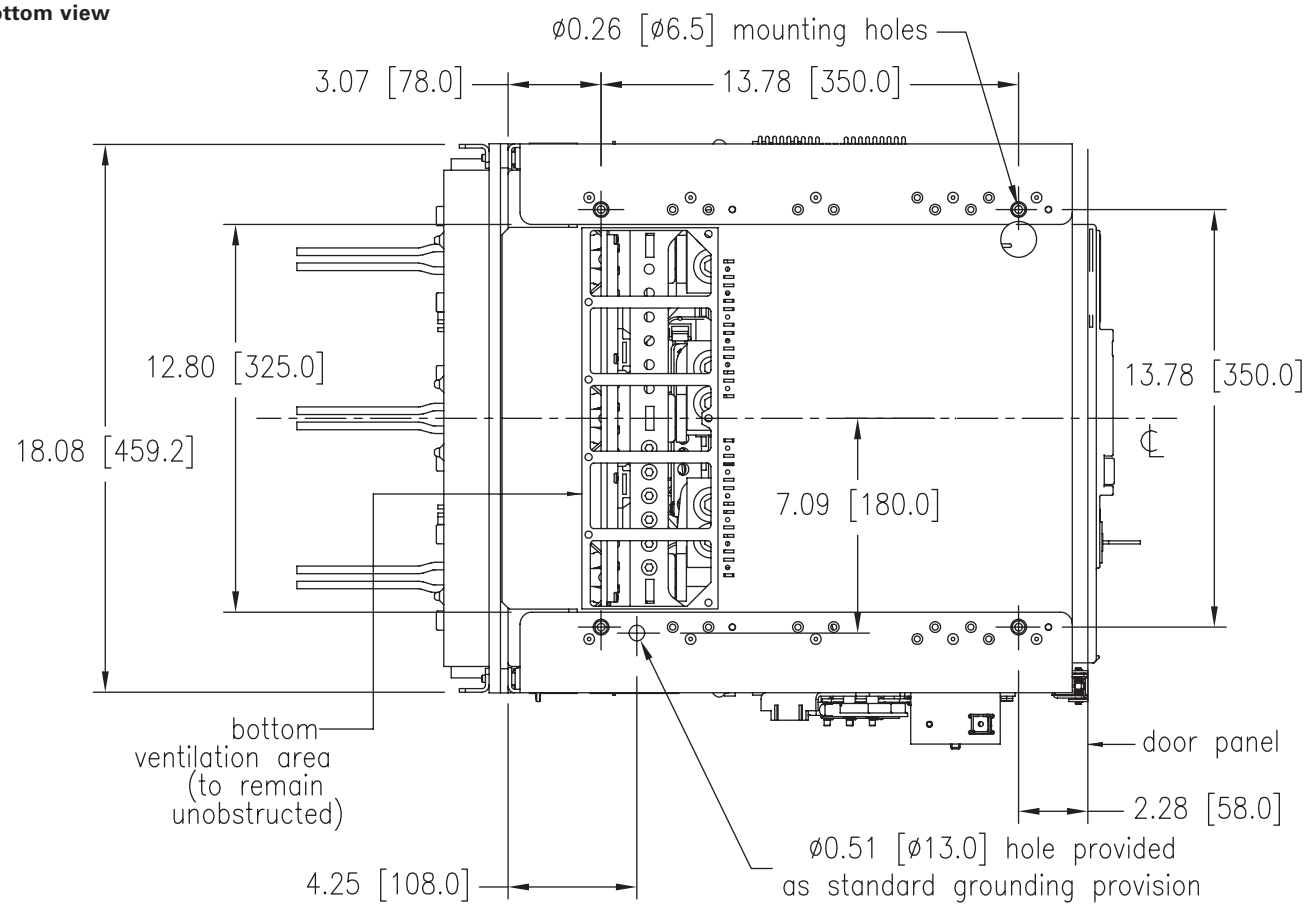

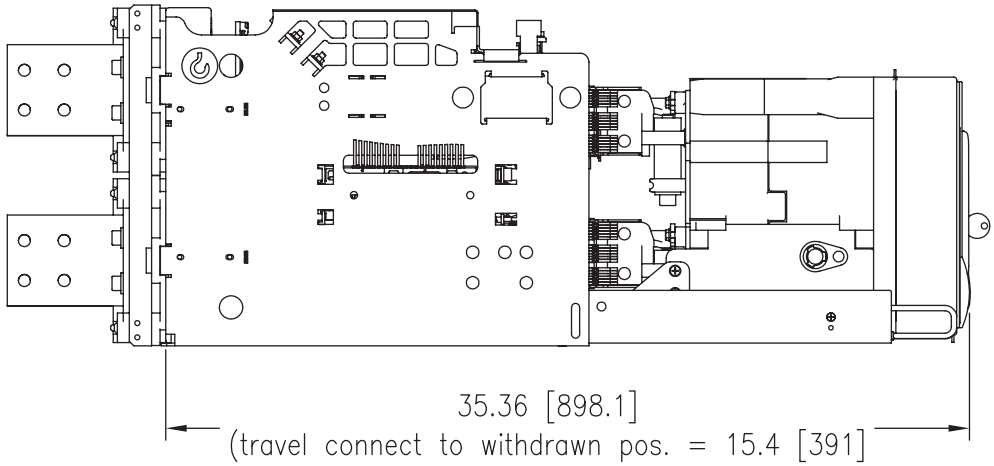

Frame Size 1

Charging and Racking

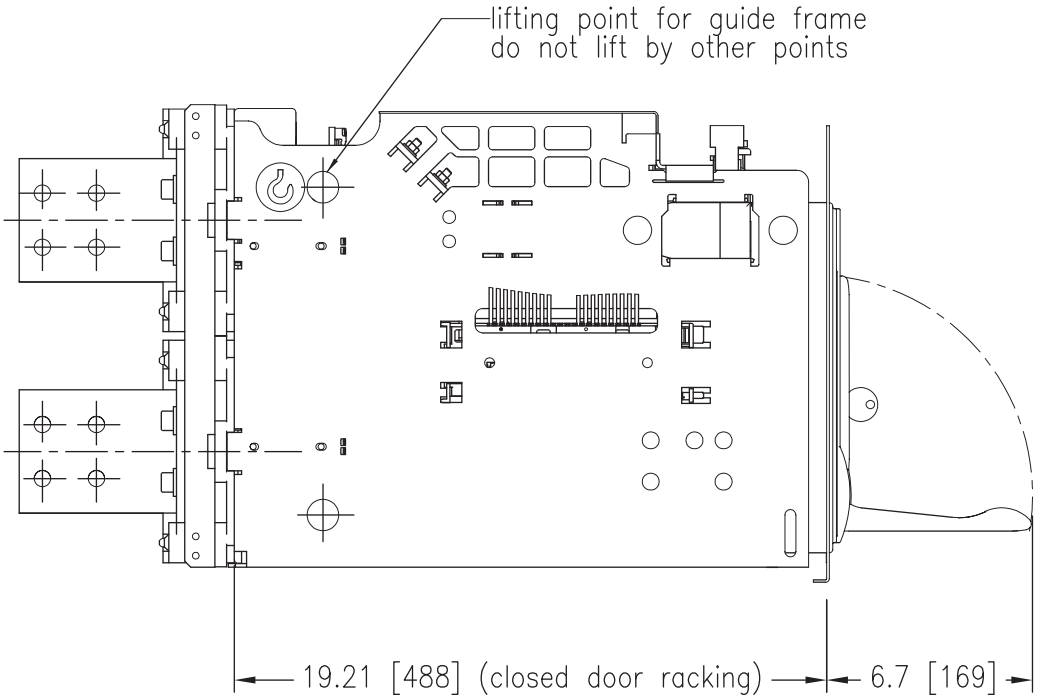

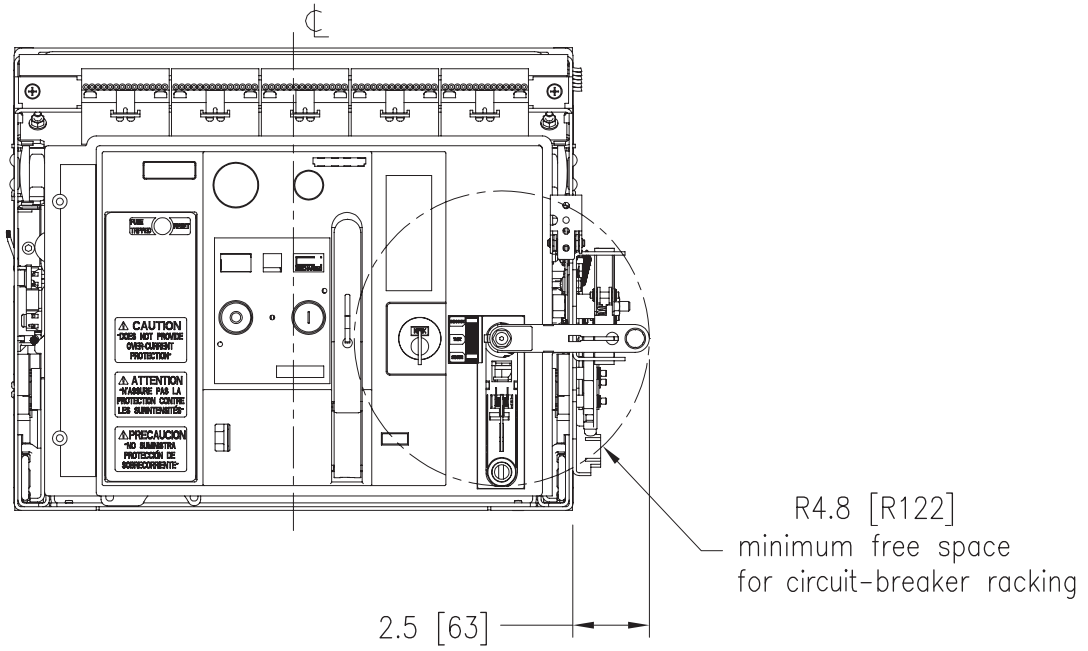

Frame Size 1
Plexiglass Cover

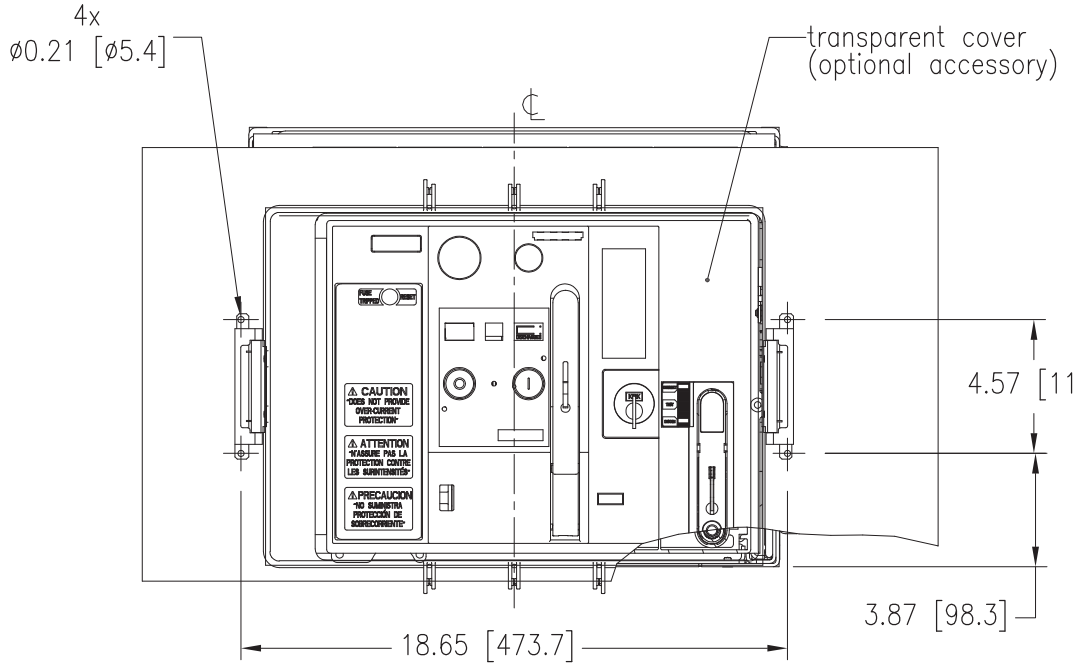

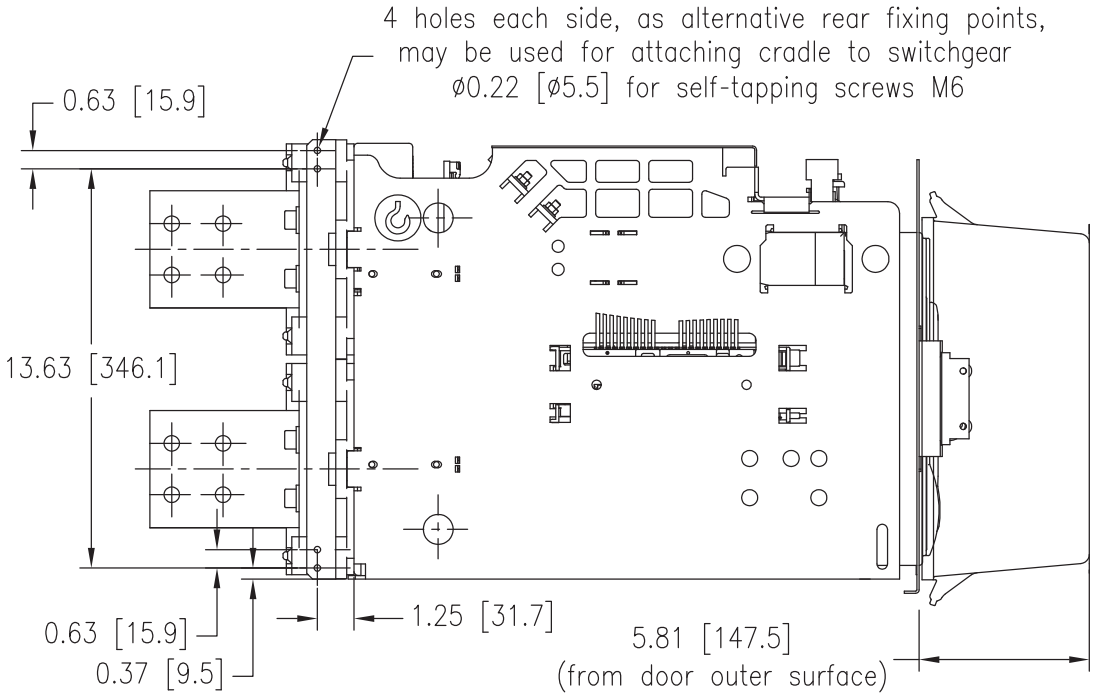

Frame Size 1

Door Cut-outs

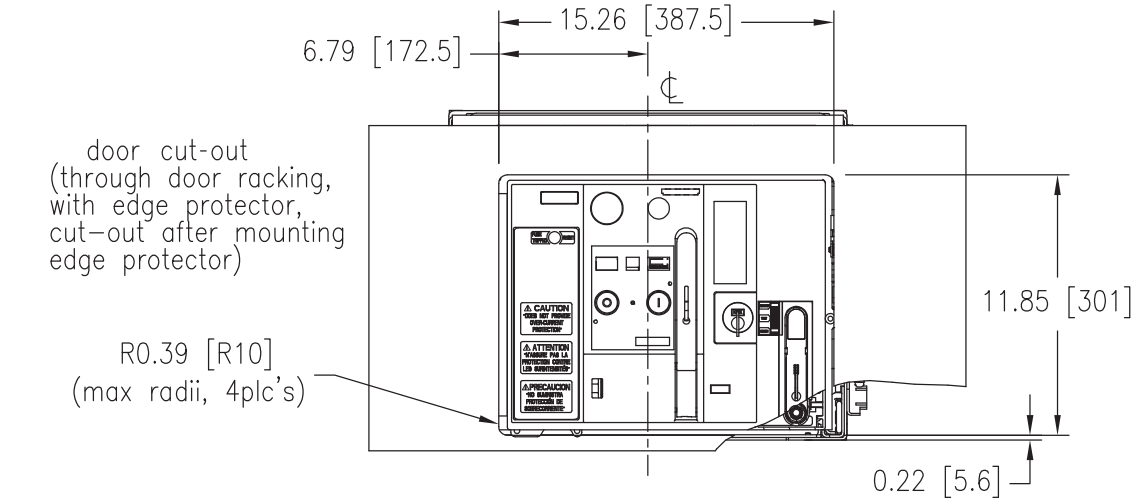

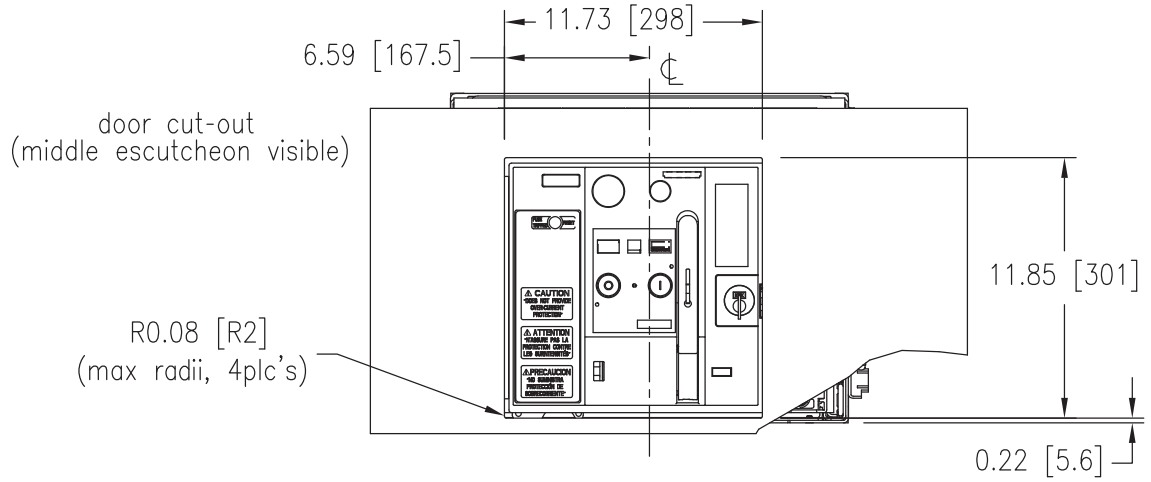

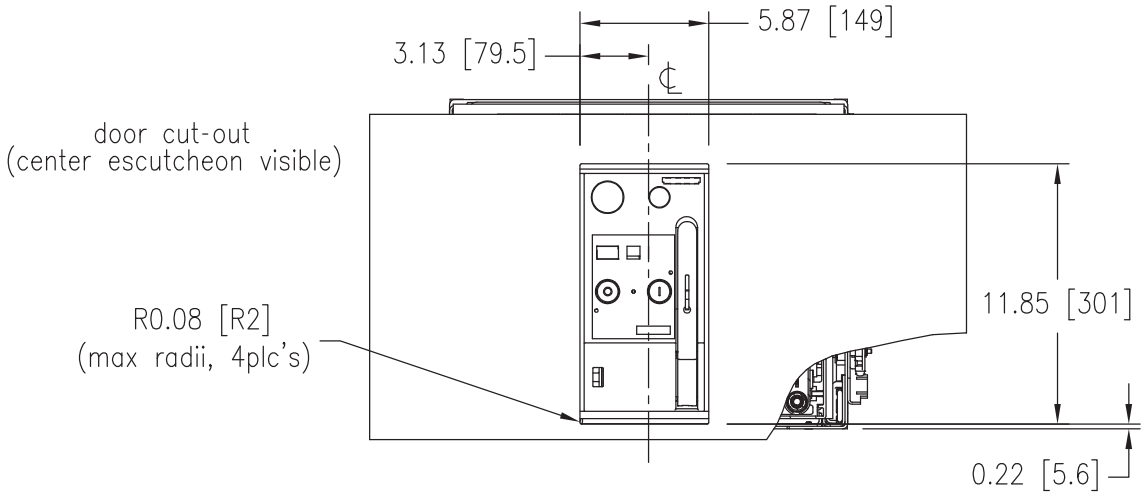

Frame Size 2

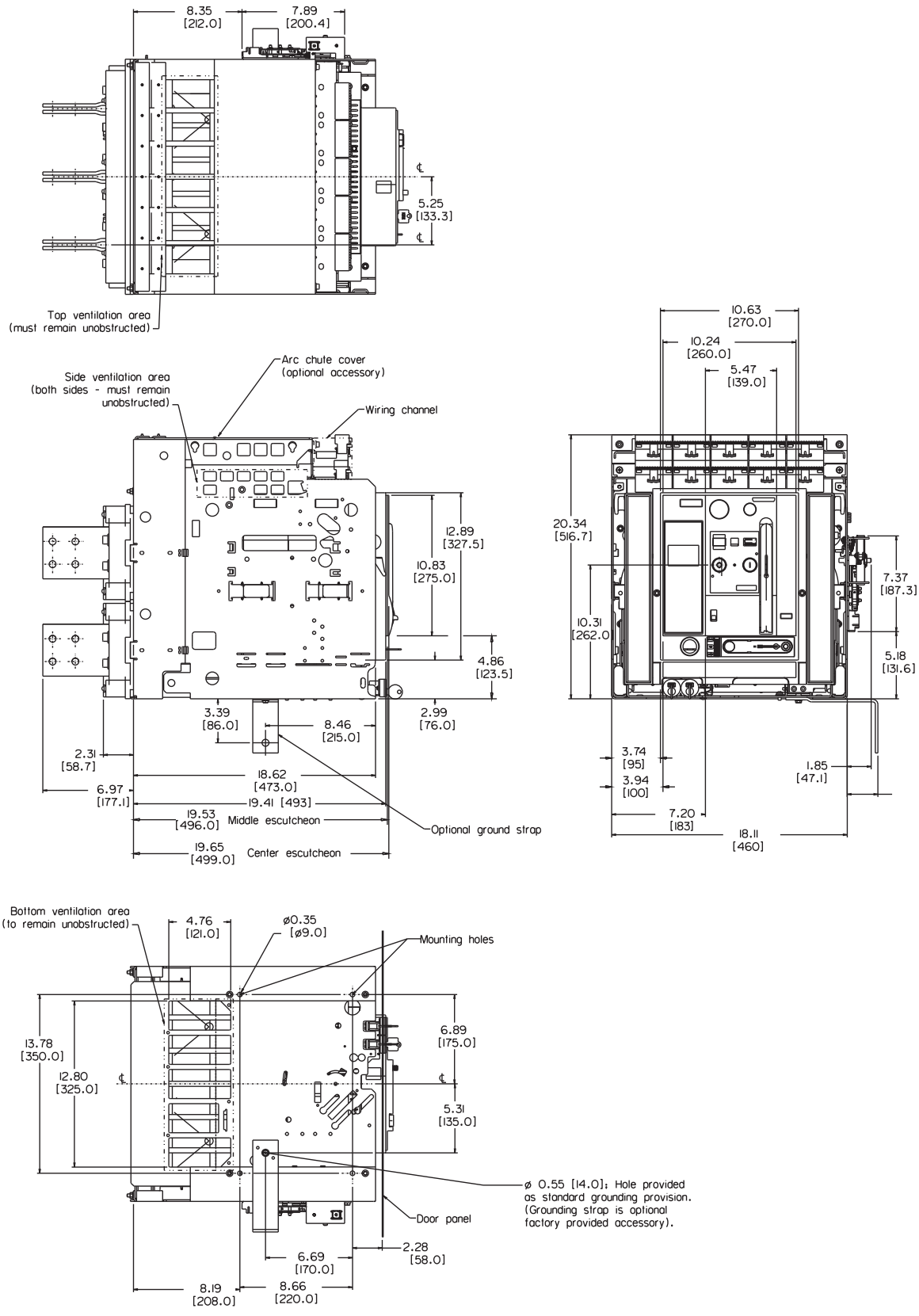
8.35
[212.0]
7.89
[200.4]
5.25
[133.3]
Top ventilation area
(must remain unobstructed)
Side ventilation area
(both sides - must remain
unobstructed)
Arc chute cover
(optional accessory)
Wiring channel
12.89
[327.5]
10.83
[275.0]
4.86
[123.5]
3.39
[86.0]
8.46
[215.0]
2.99
[76.0]
2.31
[58.7]
18.62
[473.0]
6.97
[177.1]
19.41 [493]
19.53
[496.0]
Middle escutcheon
Optional ground strap
19.65
[499.0]
Center escutcheon
10.63
[270.0]
10.24
[260.0]
5.47
[139.0]
20.34
[516.7]
10.31
[262.0]
7.37
[187.3]
5.18
[131.6]
3.74
[95]
3.94
[100]
1.85
[47.1]
7.20
[183]
18.11
[460]
Bottom ventilation area
(to remain unobstructed)
4.76
[121.0]
ø0.35
[ø9.0]
Mounting holes
13.78
[350.0]
12.80
[325.0]
6.89
[175.0]
5.31
[135.0]
ø 0.55 [14.0]; Hole provided
as standard grounding provision.
(Grounding strap is optional
factory provided accessory).
Door panel
2.28
[58.0]
6.69
[170.0]
8.19
[208.0]
8.66
[220.0]

Frame Size 2

2500/3000A

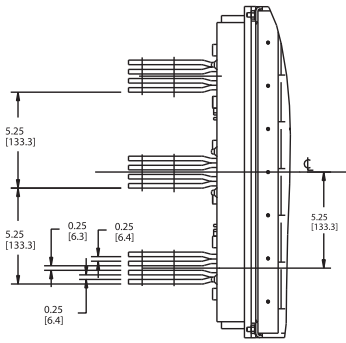

2000A

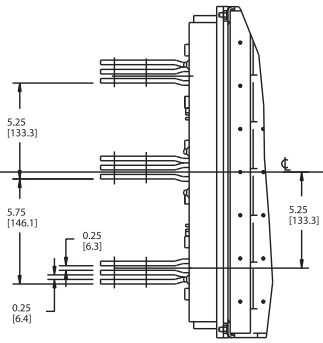

800/1200/1600A

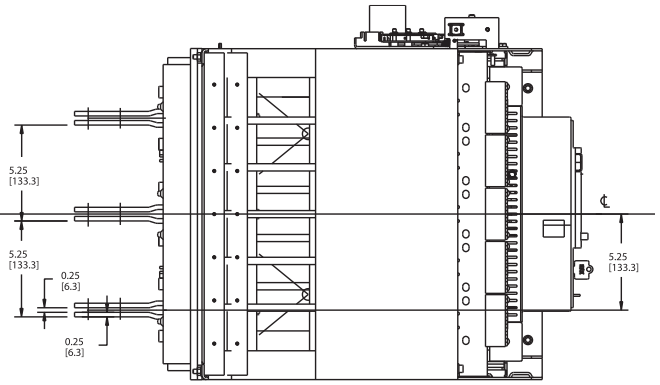

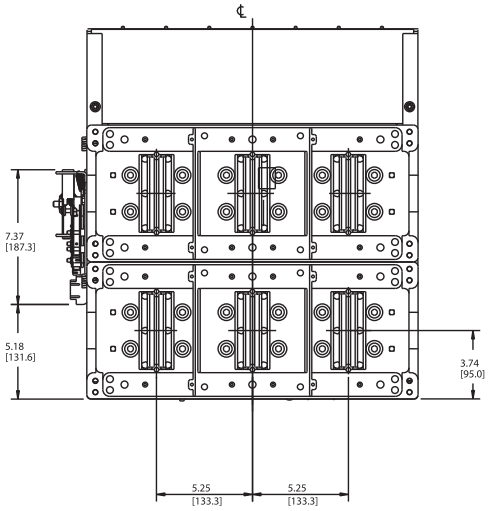

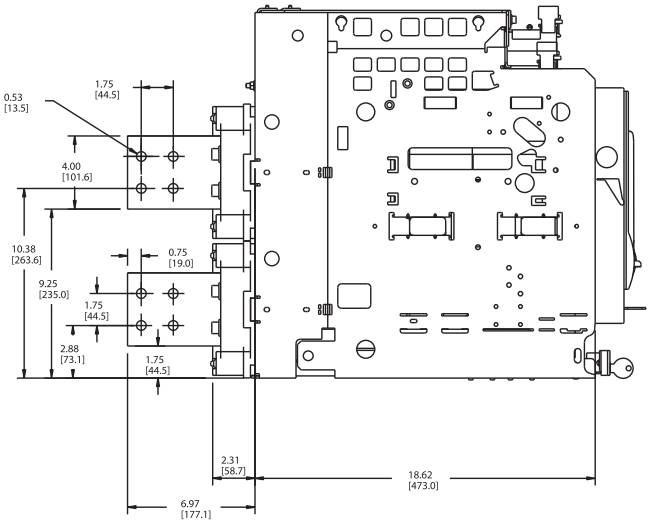

Frame Size 2

Vertical Connectors and Optional Horizontal Connectors

Horizontal Main Bus Connectors

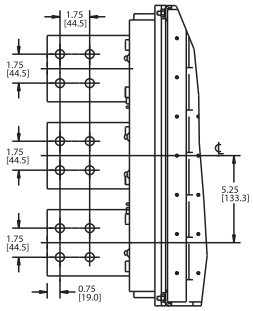

Vertical Main Bus Connectors

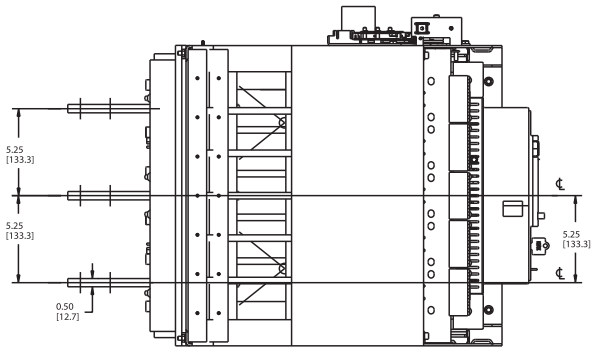

Horizontal Main Bus Connectors

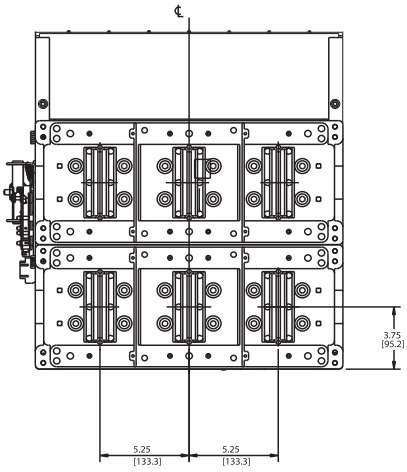

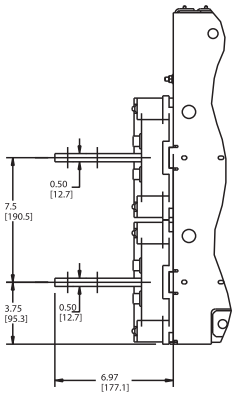

Vertical Main Bus Connectors

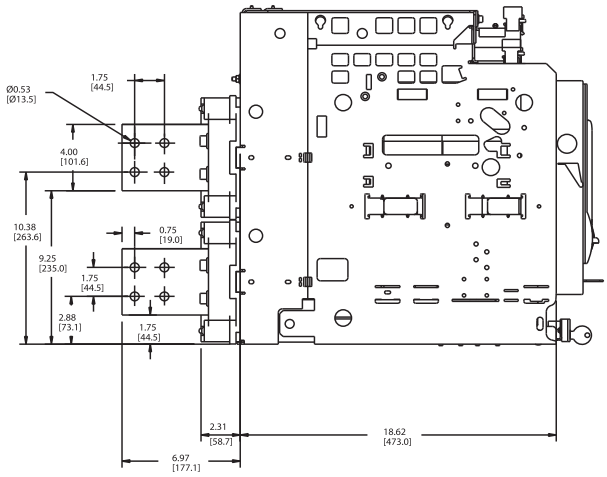

Note:
Rotatable main bus connectors are only available under the following conditions:
(1) Only acceptable for FS II 800A-2000A Frame Sizes
(2) Only acceptable for short circuit ratings of 85KAIC or less

Frame Size 2

Charging, Racking and Draw-out

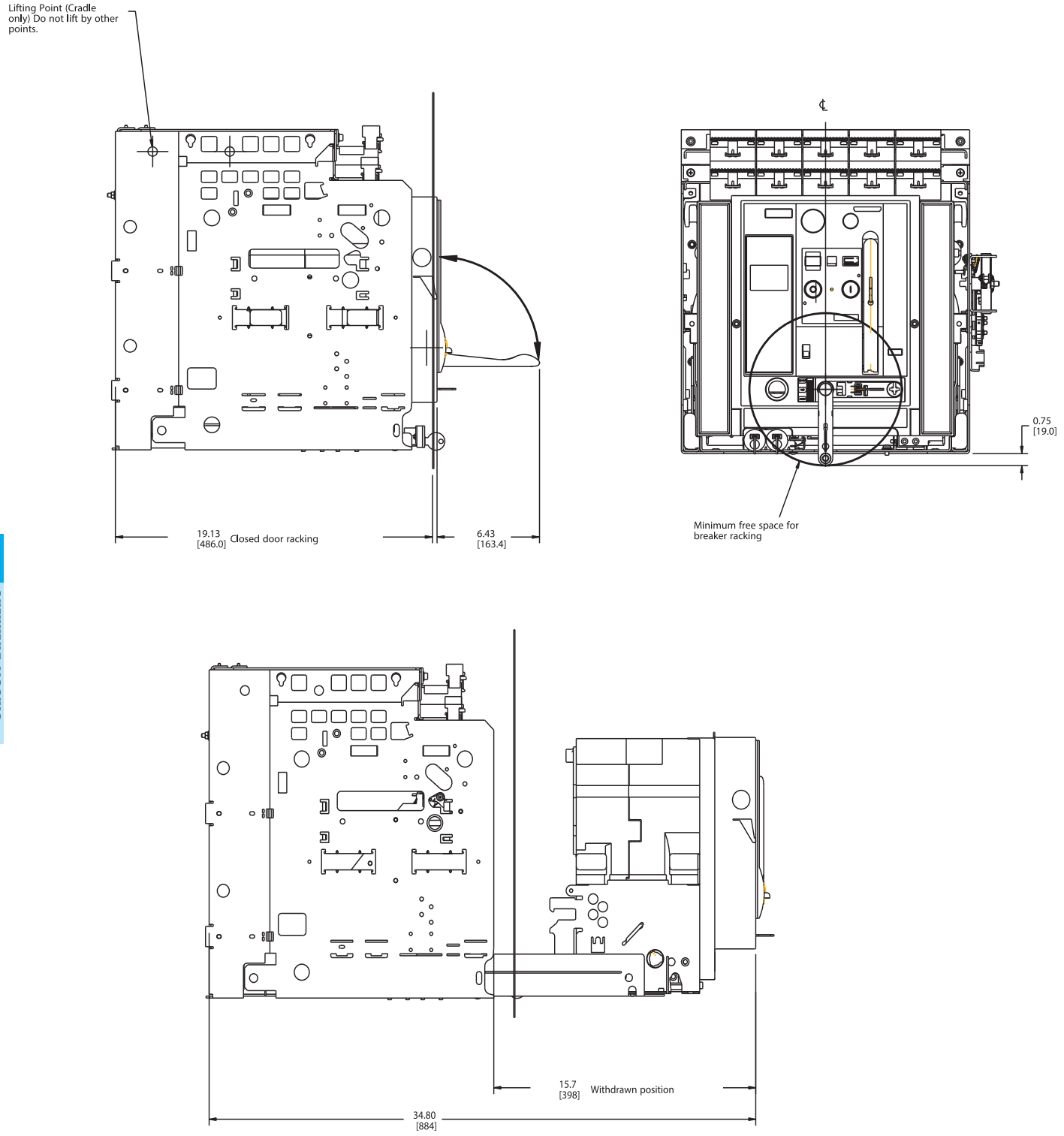

Frame Size 3

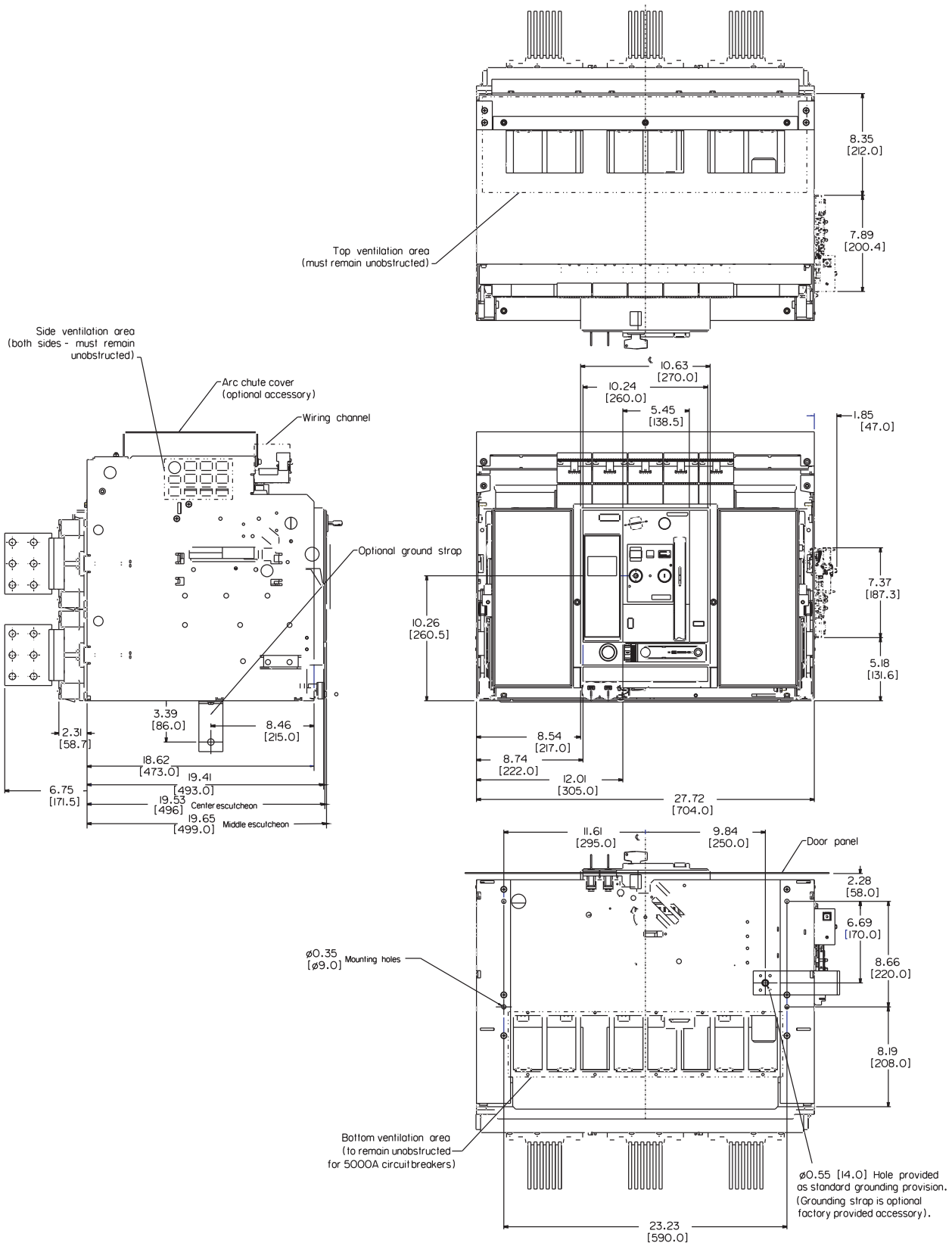
8.35
[212.0]
7.89
[200.4]
Top ventilation area
(must remain unobstructed)
Side ventilation area
(both sides - must remain
unobstructed)
Arc chute cover
(optional accessory)
Wiring channel
Optional ground strap
10.63
[270.0]
10.24
[260.0]
5.45
[138.5]
1.85
[47.0]
7.37
[187.3]
10.26
[260.5]
5.18
[131.6]
3.39
[86.0]
2.31
[58.7]
8.46
[215.0]
18.62
[473.0]
19.41
[493.0]
6.75
[171.5]
19.53
[496]
Center escutcheon
19.65
[499.0]
Middle escutcheon
8.54
[217.0]
8.74
[222.0]
12.01
[305.0]
27.72
[704.0]
11.61
[295.0]
9.84
[250.0]
Door panel
2.28
[58.0]
6.69
[170.0]
8.66
[220.0]
ø0.35
[ø9.0]
Mounting holes
8.19
[208.0]
Bottom ventilation area
(to remain unobstructed
for 5000A circuit breakers)
ø0.55 [14.0] Hole provided
as standard grounding provision.
(Grounding strap is optional
factory provided accessory).
23.23
[590.0]

Frame Size 3
Vertical Connectors

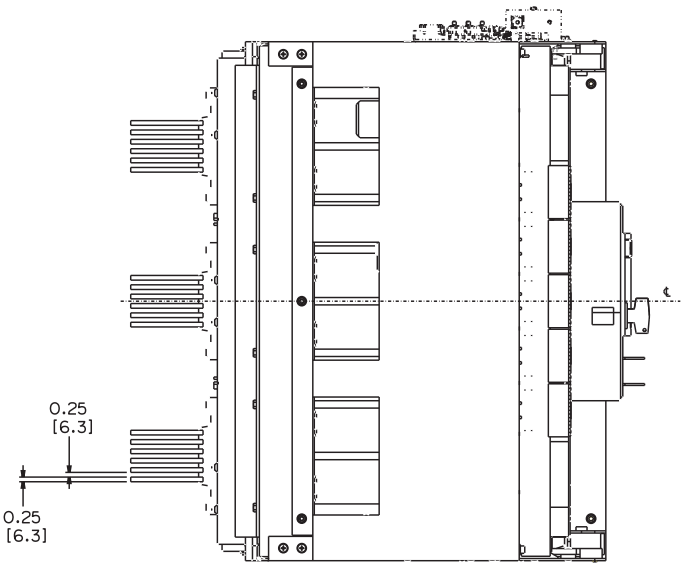

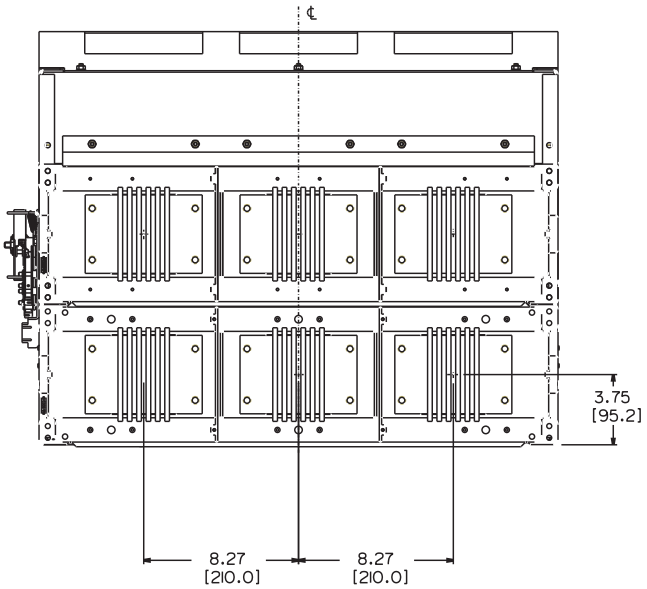

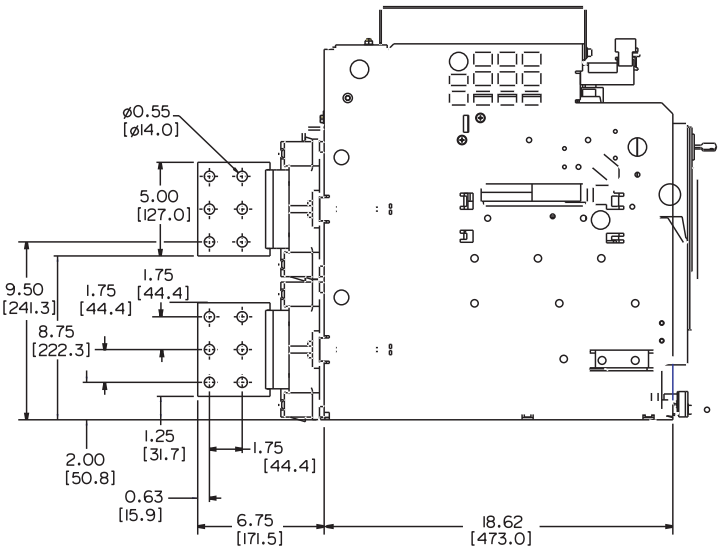

Frame Size 3

Charging, Racking and Draw-out

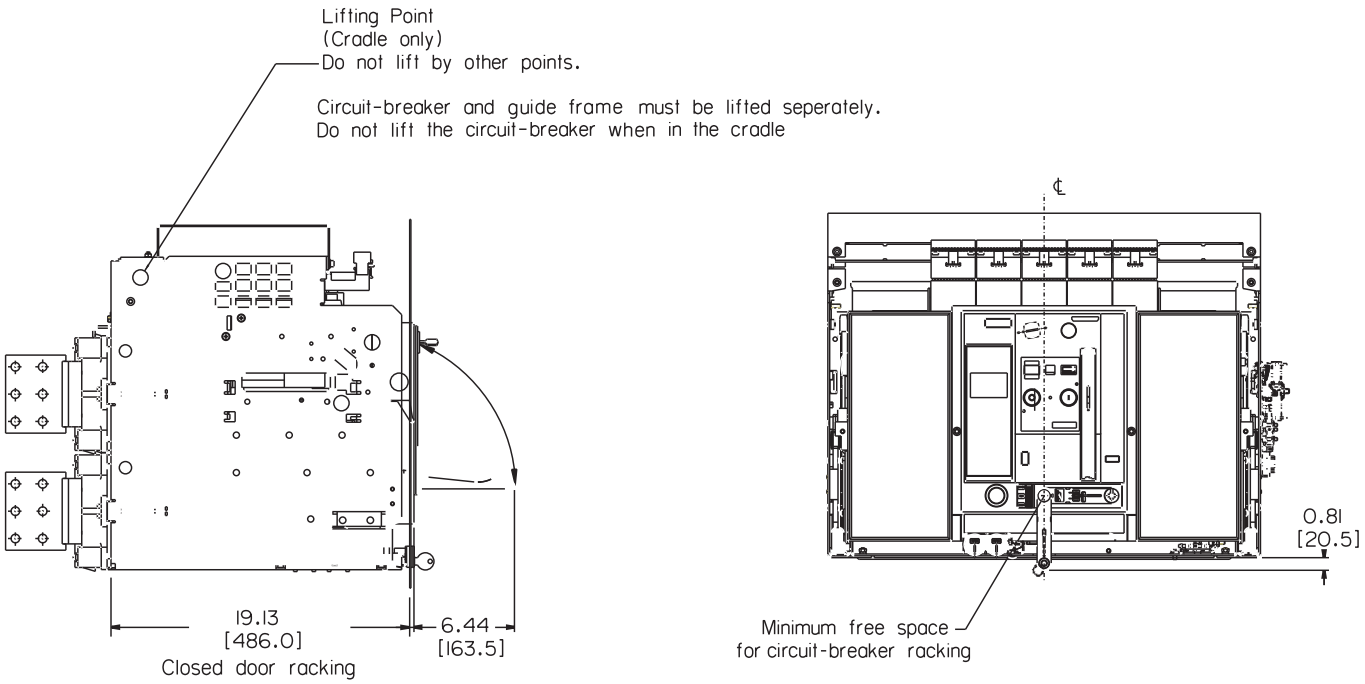

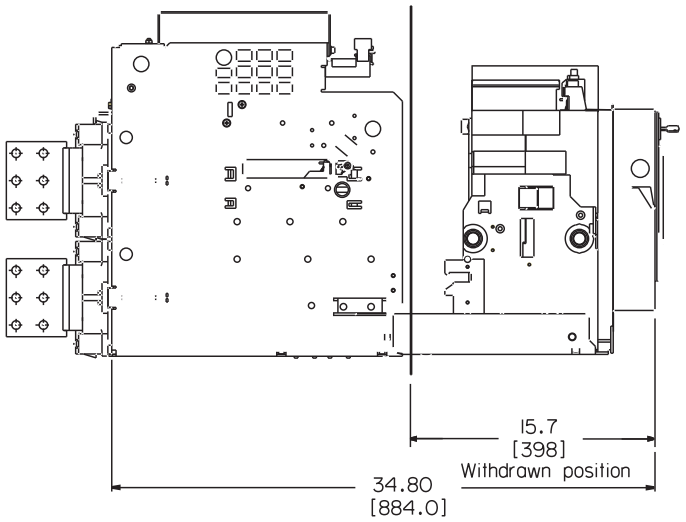

Frame Size 2 and 3
Door Cut-outs

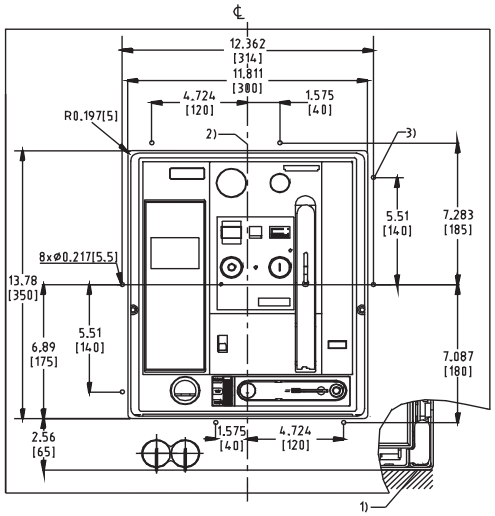

Door cut-out and mounting holes for Door Sealing Frame

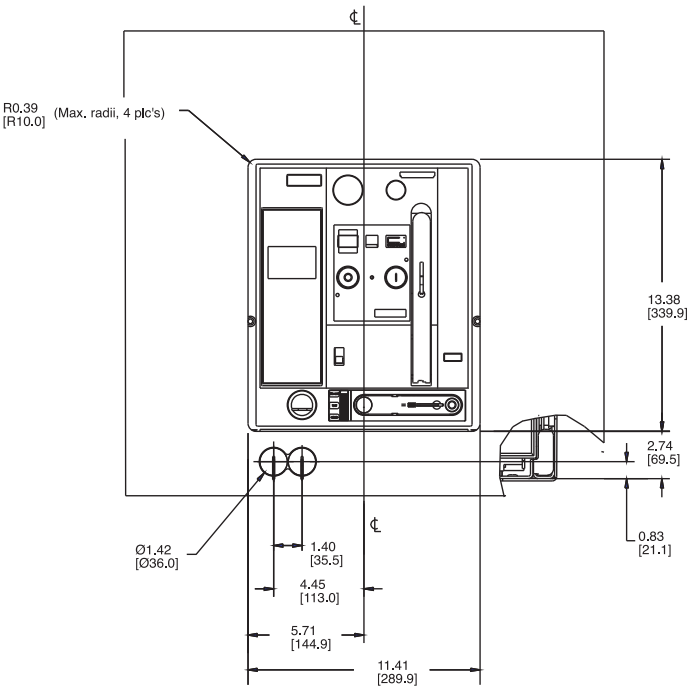

Door cut-out (after mounting Door Sealing Frame)

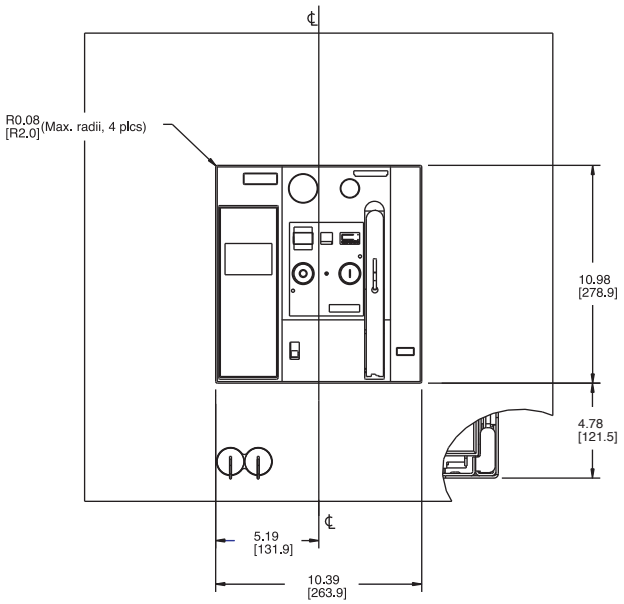

Door cut-out (Middle escutcheon visible)

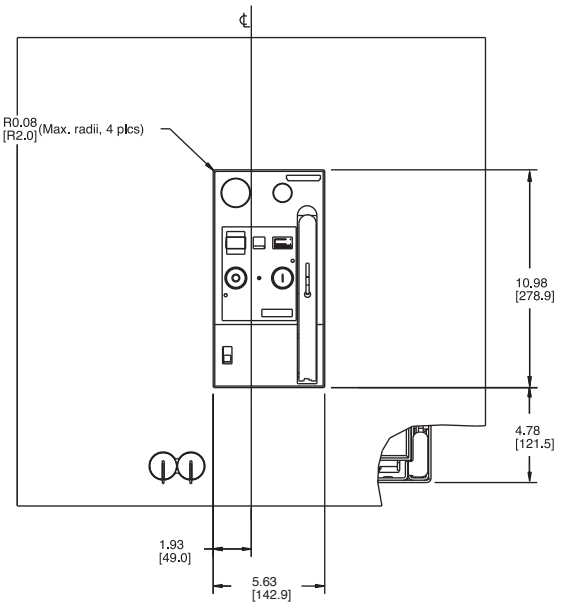

Minimal door cut-out (Only center eustcheon visible)

1) Mounting surface of the circuit breaker or cradle.
2) Center of breaker front panel.
3) Drill eight holes for mounting door sealing frame.

UL489 Door Sealing Frame

Frame Size 2 and 3
Door Cut-outs

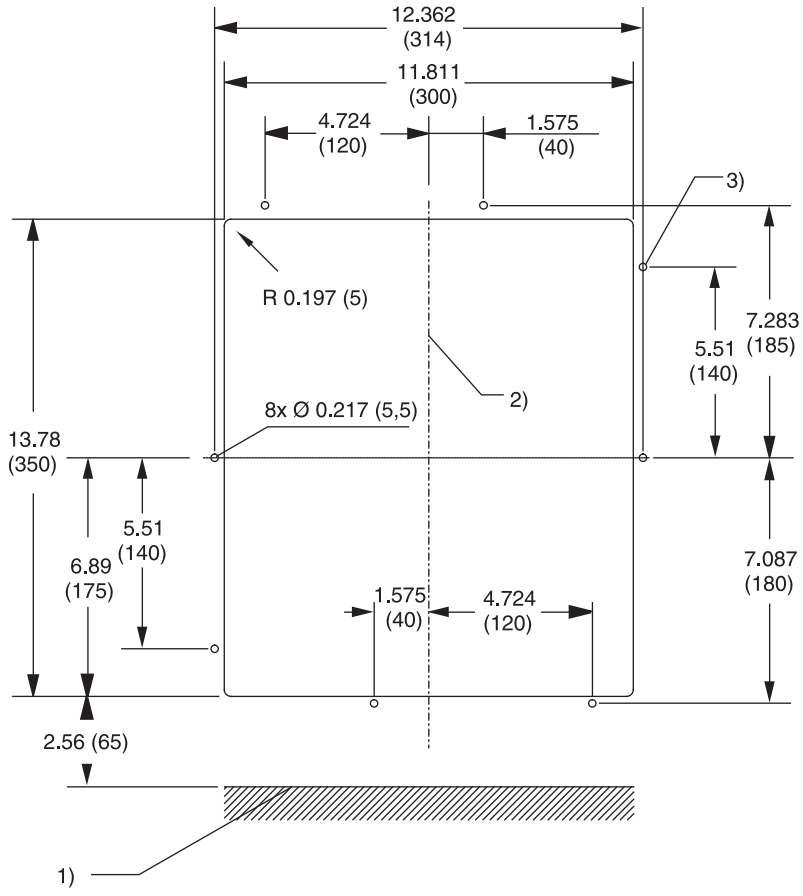

1) Mounting surface of the circuit-breaker or cradle.
2) Center of breaker front panel.
3) Drill eight holes for mounting door sealing frame.

Frame Size 2

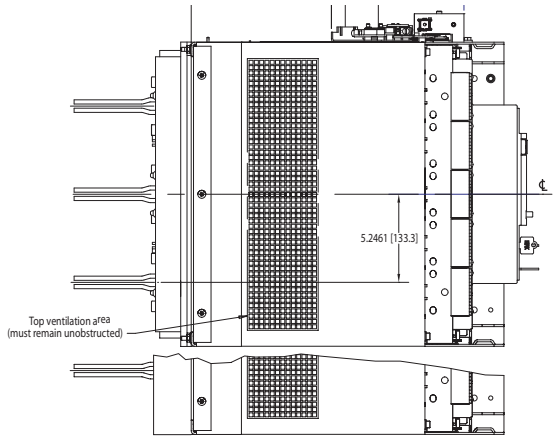
5.2461 [133.3]
Top ventilation area
(must remain unobstructed)

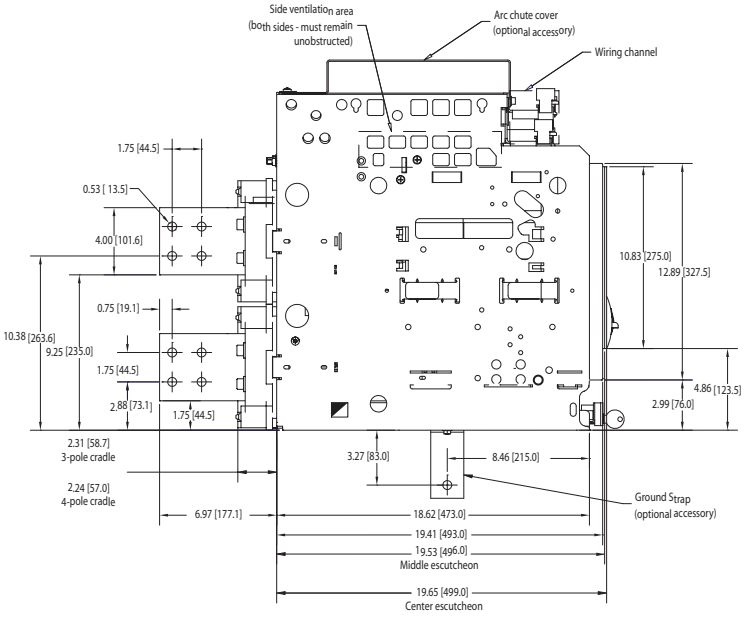
Side ventilation area
(both sides - must remain unobstructed)
Arc chute cover
(optional accessory)
Wiring channel
1.75 [44.5]
0.53 [13.5]
4.00 [101.6]
0.75 [19.1]
10.38 [263.6]
9.25 [235.0]
1.75 [44.5]
2.88 [73.1]
1.75 [44.5]
2.31 [58.7]
3-pole cradle
2.24 [57.0]
4-pole cradle
6.97 [177.1]
3.27 [83.0]
8.46 [215.0]
10.83 [275.0]
12.89 [327.5]
4.86 [123.5]
2.99 [76.0]
Ground Strap
(optional accessory)
18.62 [473.0]
19.41 [493.0]
19.53 [496.0]
Middle escutcheon
19.65 [499.0]
Center escutcheon

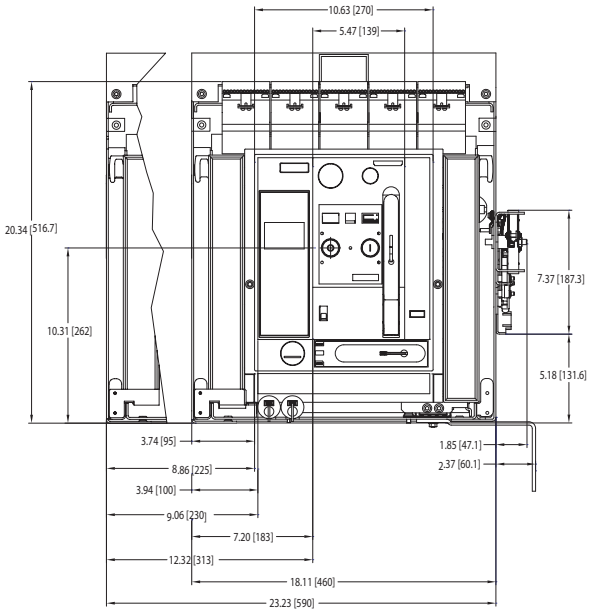
10.63 [270]
5.47 [139]
20.34 [516.7]
10.31 [262]
7.37 [187.3]
5.18 [131.6]
3.74 [95]
8.86 [225]
3.94 [100]
9.06 [230]
7.20 [183]
12.32 [313]
18.11 [460]
23.23 [590]
1.85 [47.1]
2.37 [60.1]

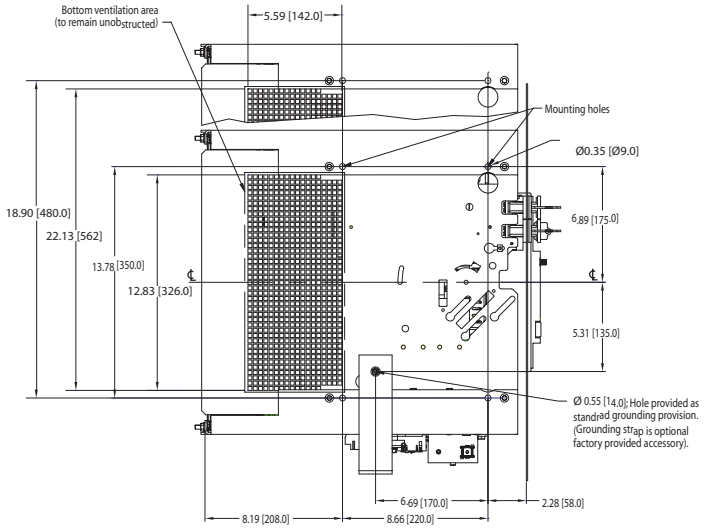
Bottom ventilation area
(to remain unobstructed)
5.59 [142.0]
Mounting holes
Ø0.35 [Ø9.0]
18.90 [480.0]
22.13 [562]
13.78 [350.0]
12.83 [326.0]
6.89 [175.0]
5.31 [135.0]
Ø 0.55 [14.0]; Hole provided as standard grounding provision.
(Grounding strap is optional factory provided accessory).
6.69 [170.0]
2.28 [58.0]
8.19 [208.0]
8.66 [220.0]

Frame Size 2

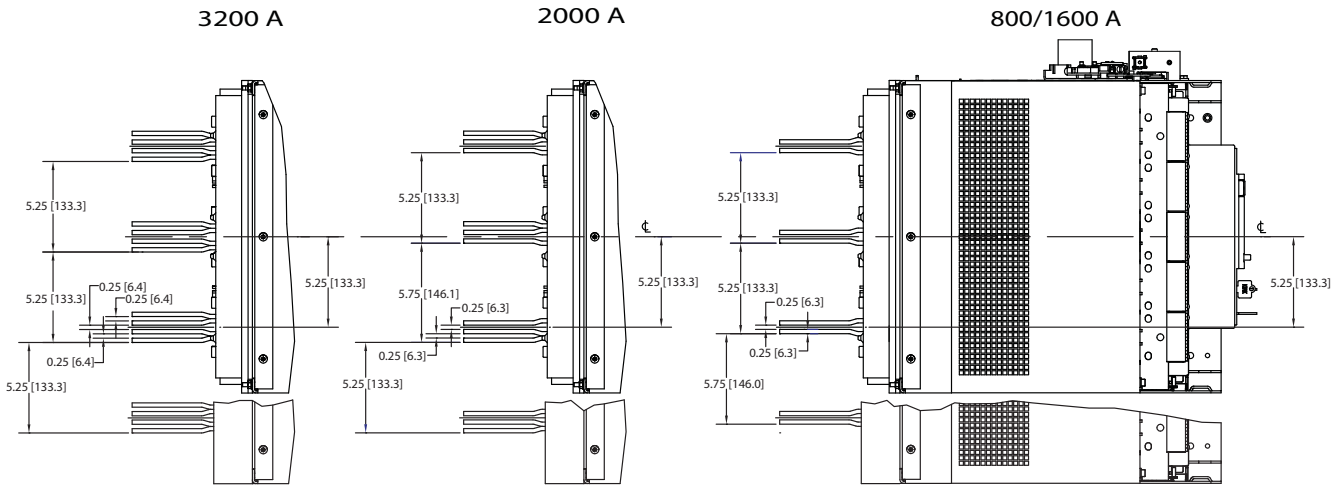
3200 A
2000 A
800/1600 A
5.25 [133.3]
0.25 [6.4]
0.25 [6.4]
5.75 [146.1]
0.25 [6.3]
0.25 [6.3]
5.75 [146.0]

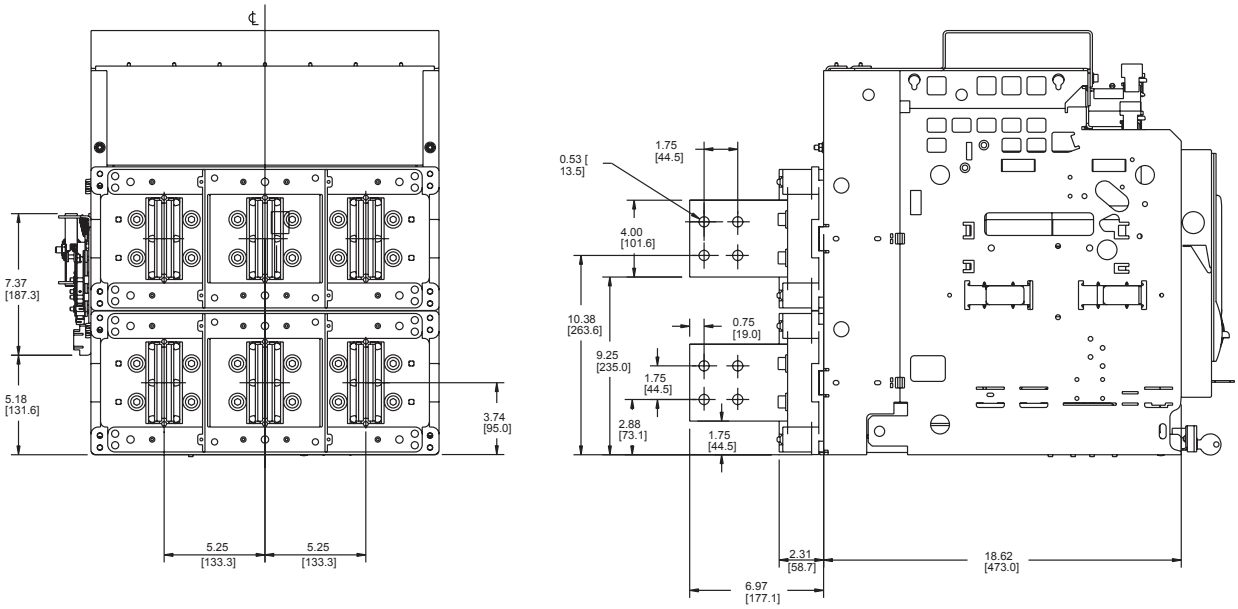
7.37 [187.3]
5.18 [131.6]
3.74 [95.0]
5.25 [133.3]
5.25 [133.3]
0.53 [13.5]
1.75 [44.5]
4.00 [101.6]
10.38 [263.6]
9.25 [235.0]
0.75 [19.0]
1.75 [44.5]
2.88 [73.1]
1.75 [44.5]
2.31 [58.7]
18.62 [473.0]
6.97 [177.1]

Frame Size 2

Horizontal Main Bus Connectors

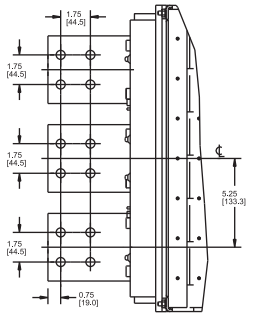

Vertical Main Bus Connectors

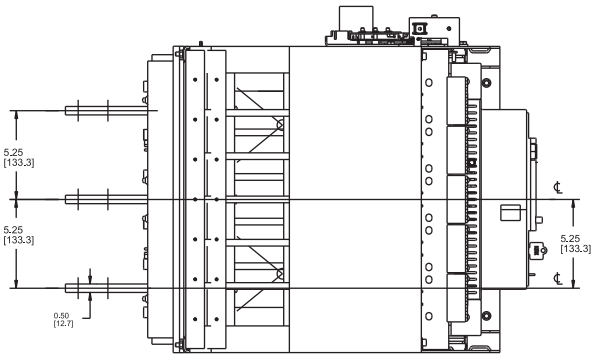

Horizontal Main Bus Connectors

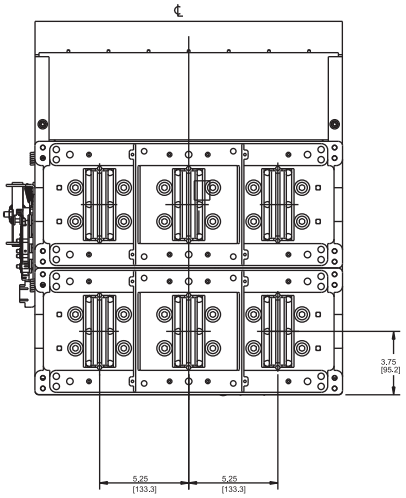

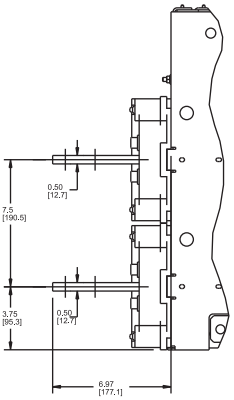

Vertical Main Bus Connectors

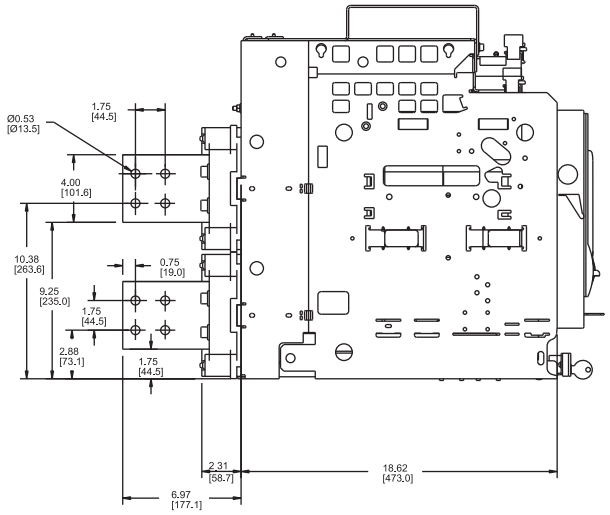

NOTE:
Rotatable main bus connectors are only available under the following conditions:
(1) Only acceptable for FS2 800A – 2000A Frame Sizes
(2) Only acceptable for short circuit ratings of 85kAIC or less

Frame Size 2

Charging, Racking and Draw-out

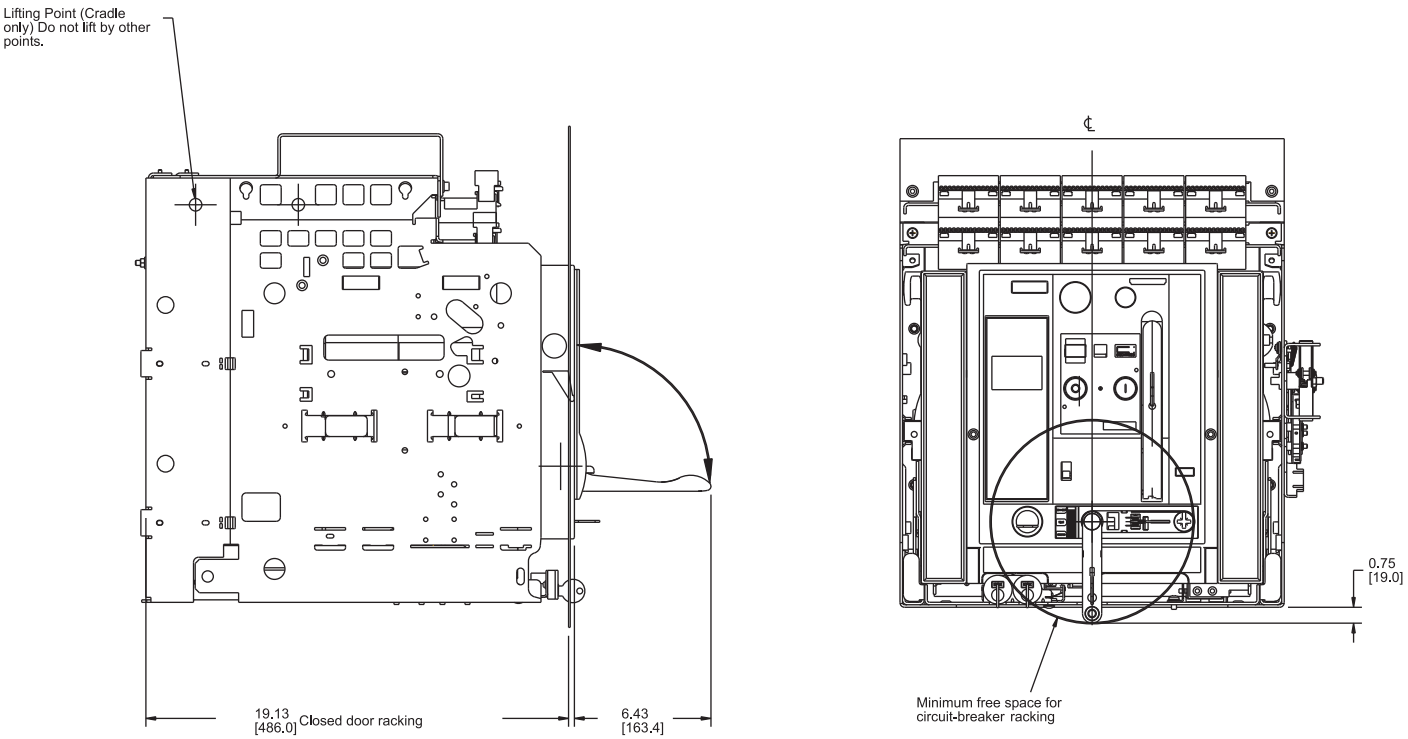

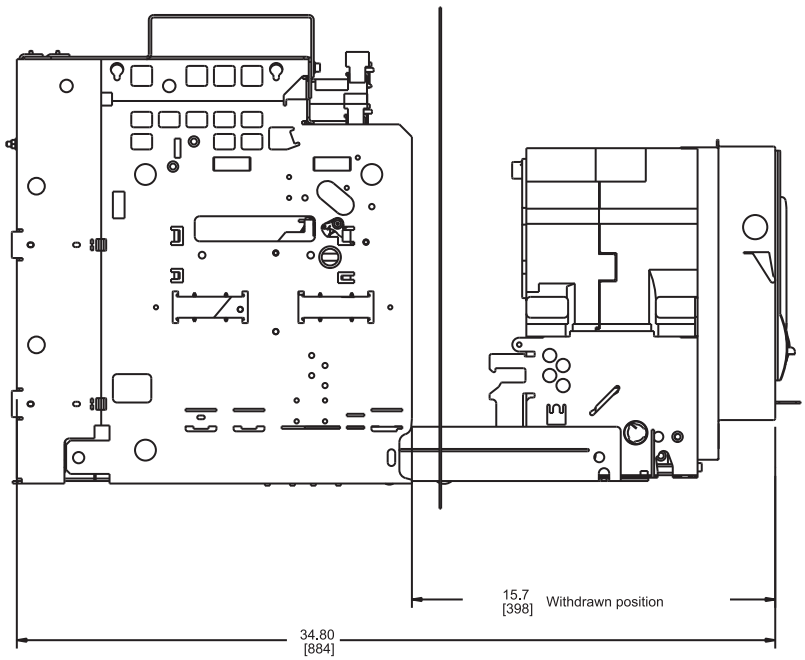

Frame Size 2

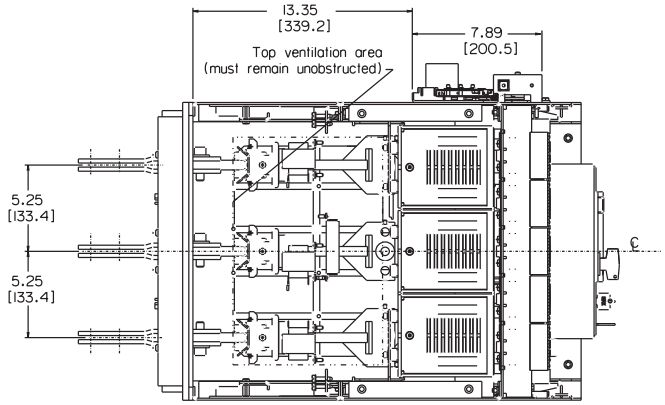
13.35
[339.2]
7.89
[200.5]
Top ventilation area
(must remain unobstructed)
5.25
[133.4]
5.25
[133.4]
℄

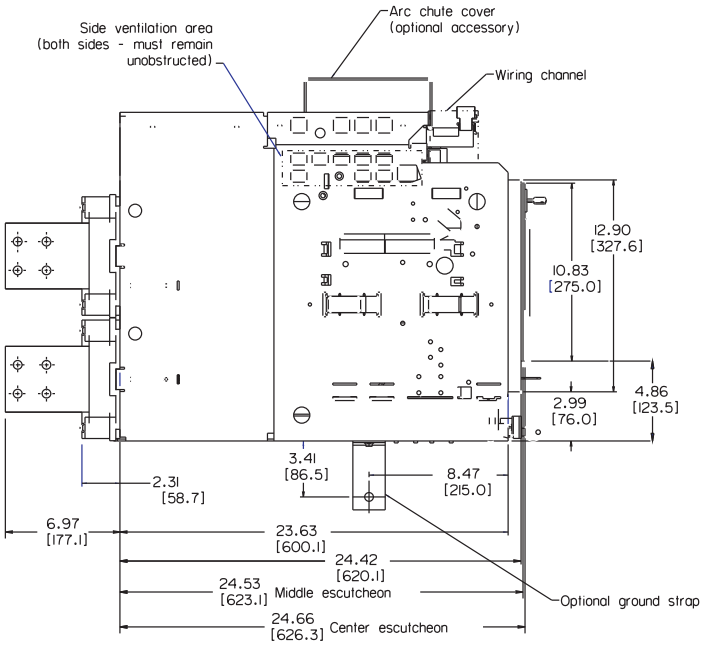
Side ventilation area
(both sides - must remain
unobstructed)
Arc chute cover
(optional accessory)
Wiring channel
12.90
[327.6]
10.83
[275.0]
4.86
[123.5]
2.99
[76.0]
3.41
[86.5]
8.47
[215.0]
2.31
[58.7]
6.97
[177.1]
23.63
[600.1]
24.42
[620.1]
24.53
[623.1]
Middle escutcheon
24.66
[626.3]
Center escutcheon
Optional ground strap

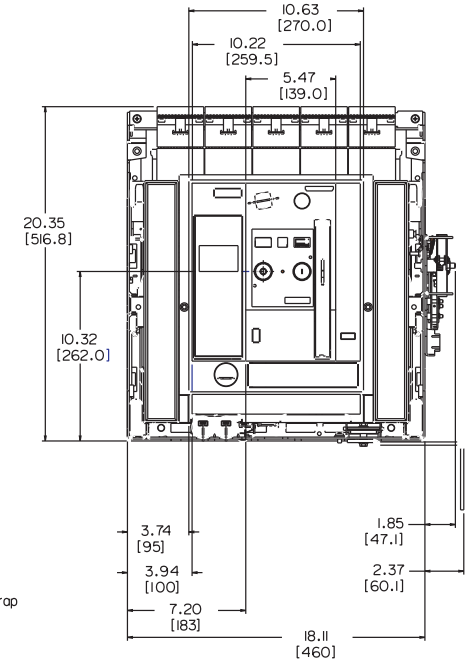
10.63
[270.0]
10.22
[259.5]
5.47
[139.0]
20.35
[516.8]
10.32
[262.0]
3.74
[95]
3.94
[100]
7.20
[183]
1.85
[47.1]
2.37
[60.1]
18.11
[460]

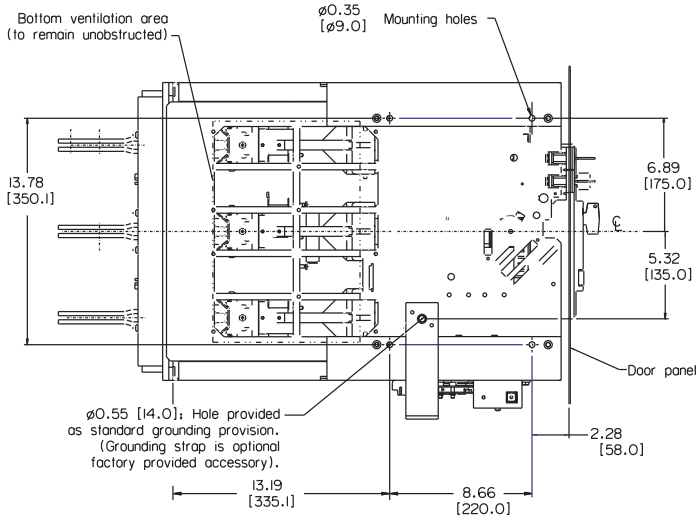
Bottom ventilation area
(to remain unobstructed)
ø0.35
[ø9.0]
Mounting holes
13.78
[350.1]
6.89
[175.0]
5.32
[135.0]
℄
Door panel
ø0.55 [14.0]; Hole provided
as standard grounding provision.
(Grounding strap is optional
factory provided accessory).
2.28
[58.0]
13.19
[335.1]
8.66
[220.0]

Frame Size 2

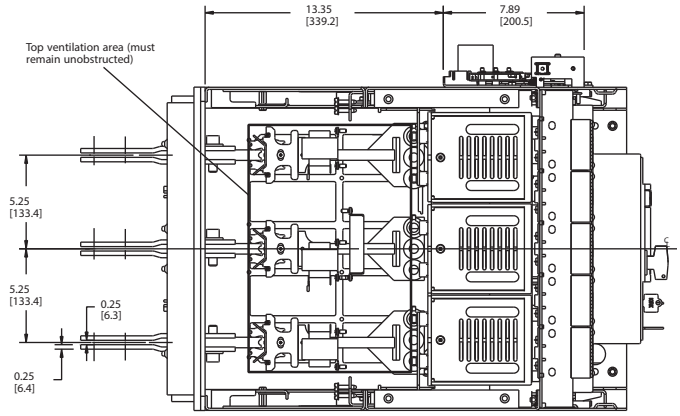
13.35
[339.2]
7.89
[200.5]
Top ventilation area (must
remain unobstructed)
5.25
[133.4]
5.25
[133.4]
0.25
[6.3]
0.25
[6.4]

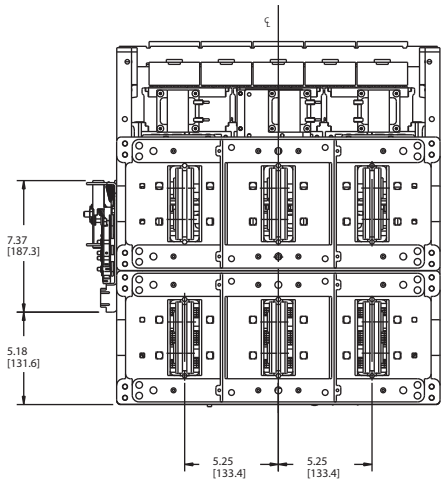
7.37
[187.3]
5.18
[131.6]
5.25
[133.4]
5.25
[133.4]

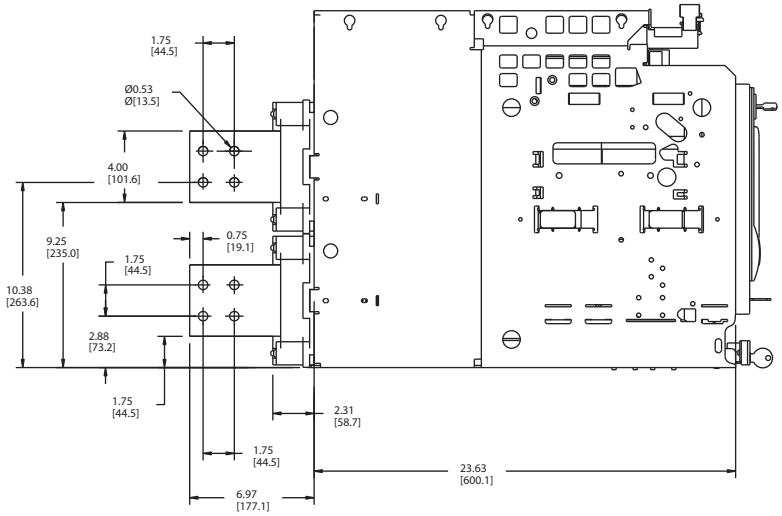
1.75
[44.5]
Ø0.53
Ø[13.5]
4.00
[101.6]
9.25
[235.0]
10.38
[263.6]
0.75
[19.1]
1.75
[44.5]
2.88
[73.2]
1.75
[44.5]
2.31
[58.7]
1.75
[44.5]
23.63
[600.1]
6.97
[177.1]

Frame Size 2
Charging, Racking and Draw-out

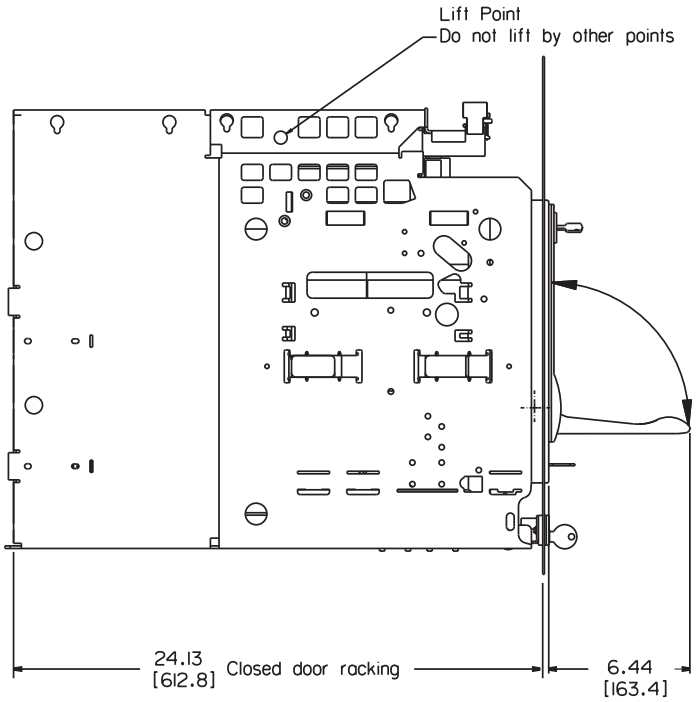

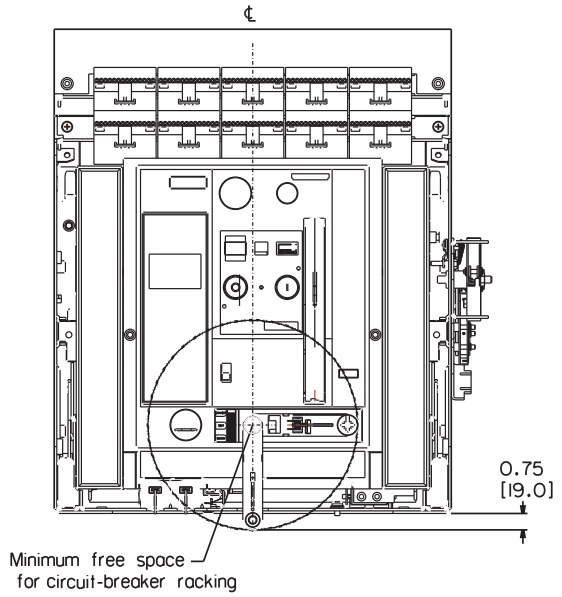

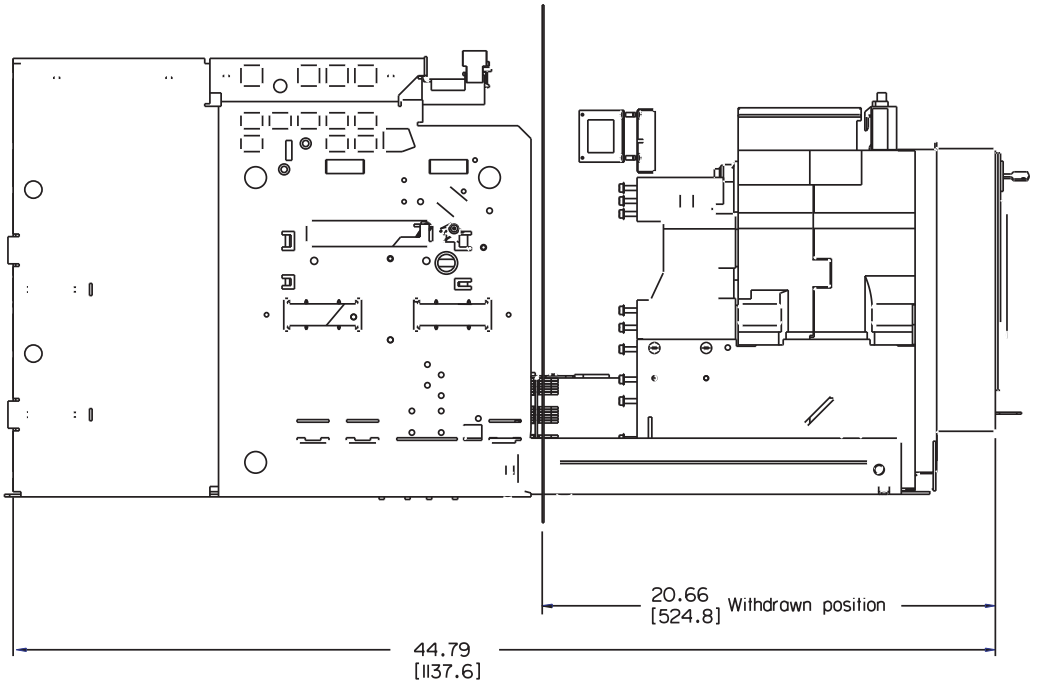

Frame Size 2
Fixed Mounted Version

Fixed mount versions are only available with rear vertical connector for FS2 3200A and FS3 4000A/5000A

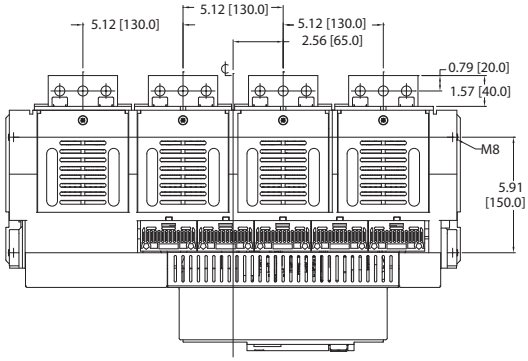

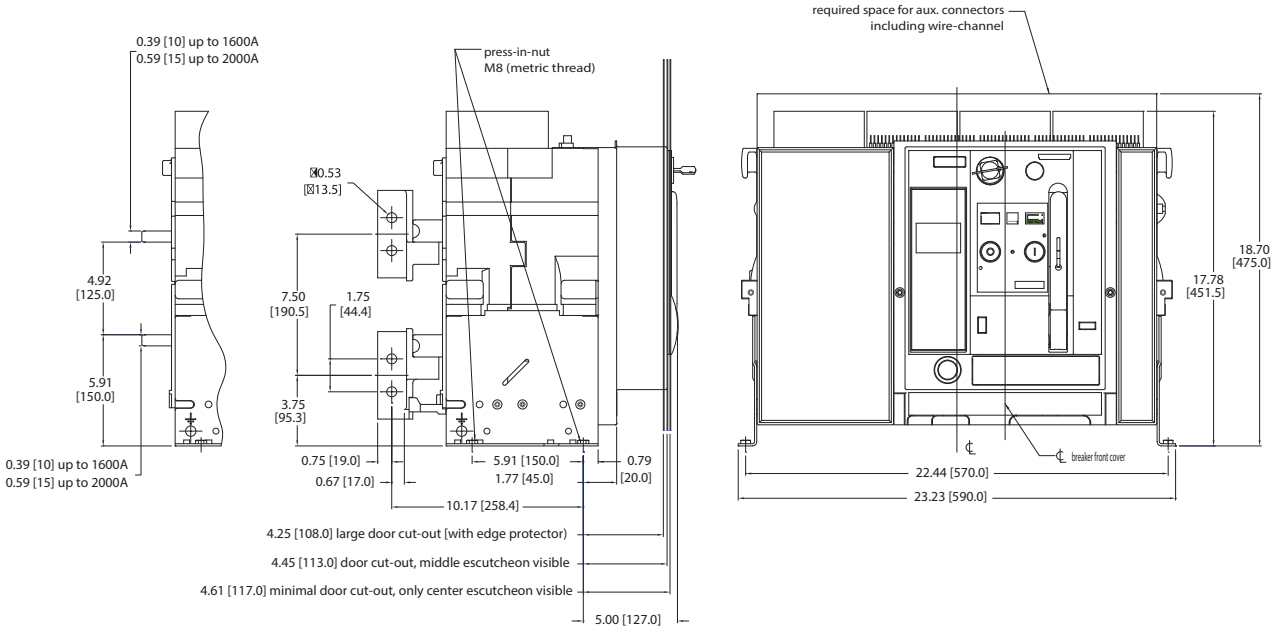

Rear View

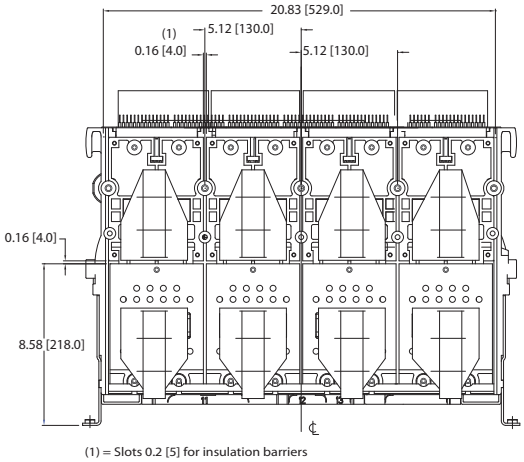

(1) = Slots 0.2 [5] for insulation barriers

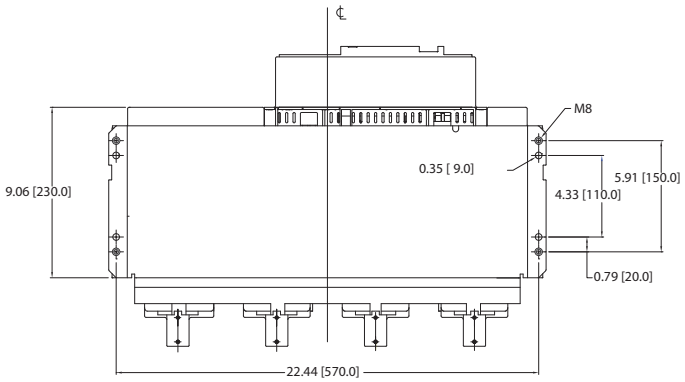

Frame Size 2

Door Cut-outs

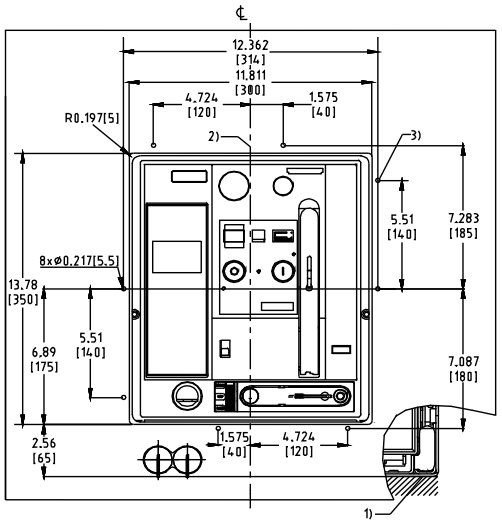

Door cut-out and mounting holes for Door Sealing Frame

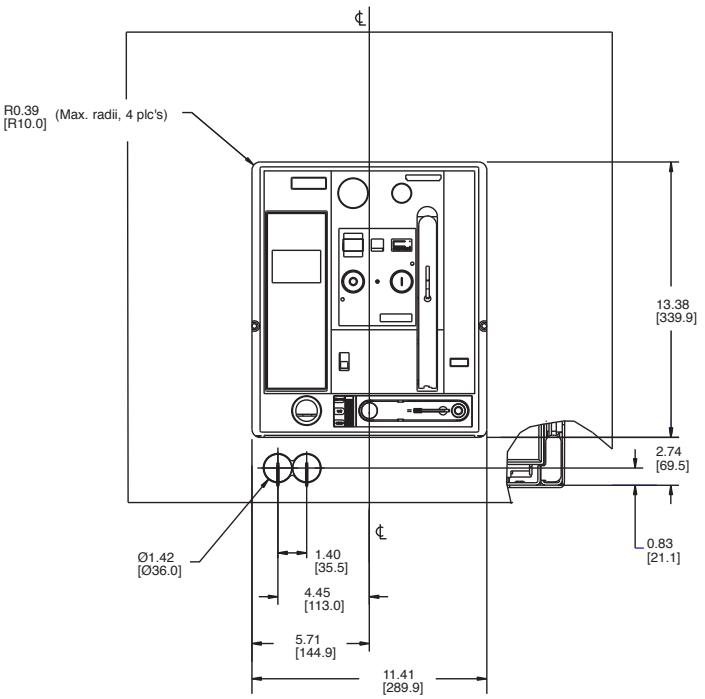

Door cut-out (after mounting Door Sealing Frame)

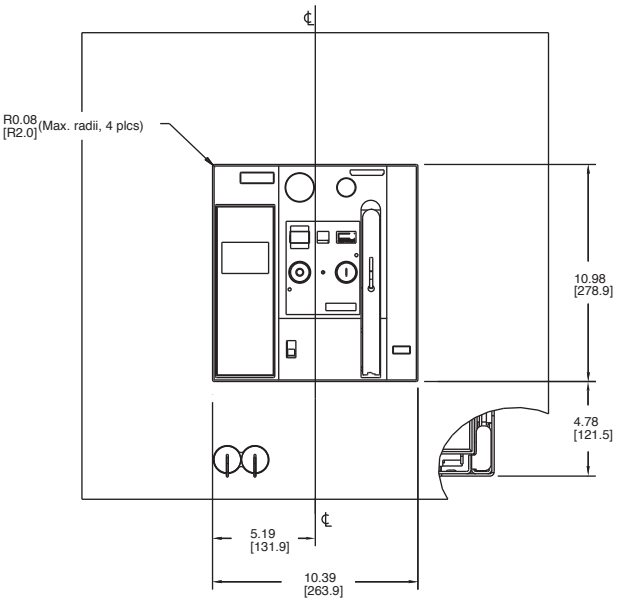

Door cut-out (Middle escutcheon visible)

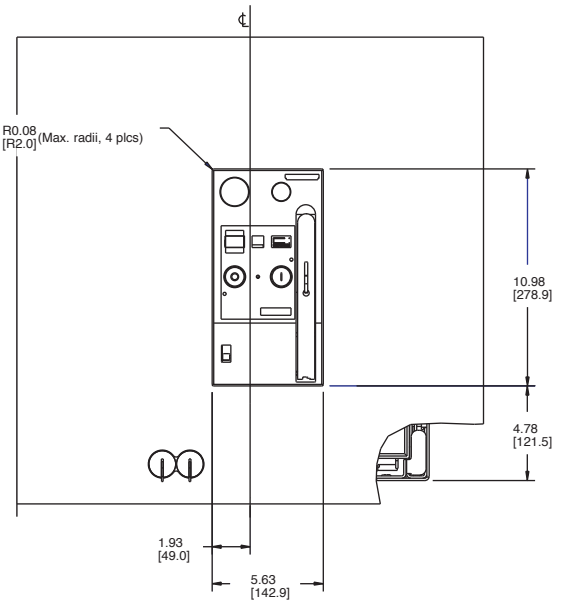

Minimal door cut-out (Only center eustcheon visible)

1) Mounting surface of the circuit breaker or cradle.
2) Center of breaker front panel.
3) Drill eight holes for mounting door sealing frame.

Frame Size 3

Drawout (3-Pole and 4-Pole)

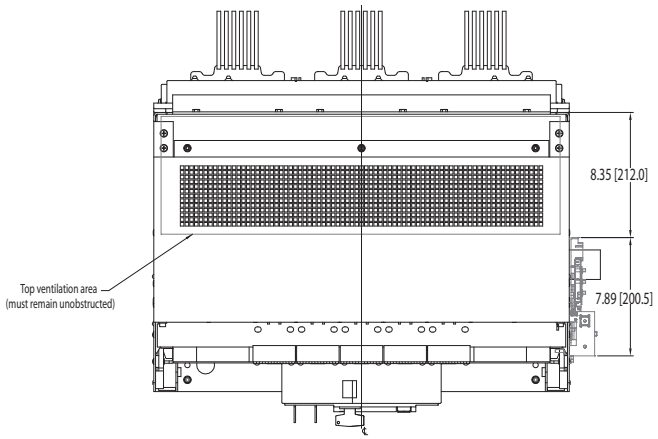

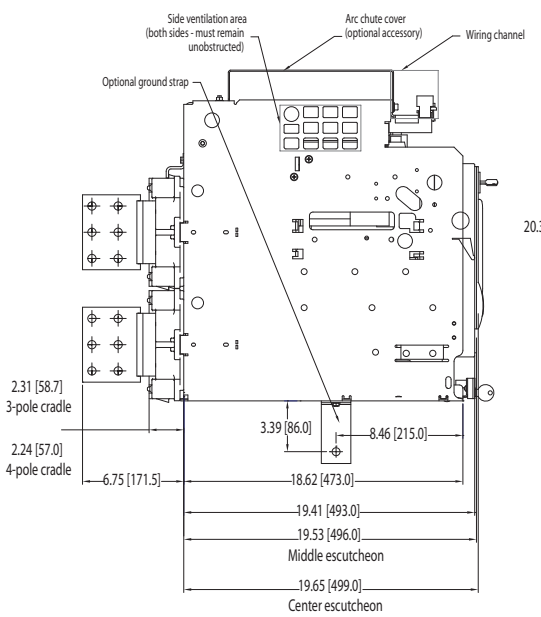

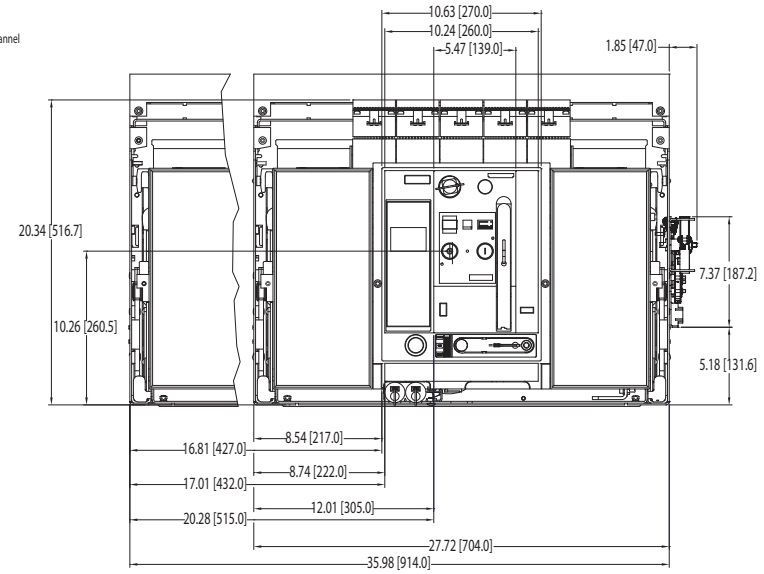

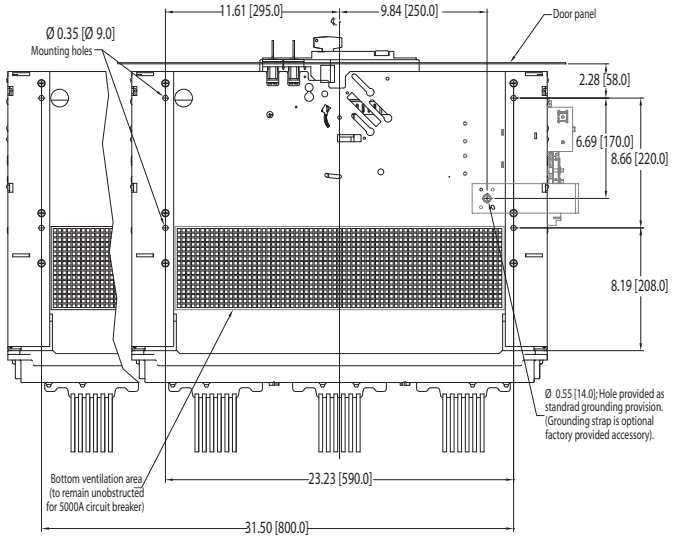

Frame Size 3

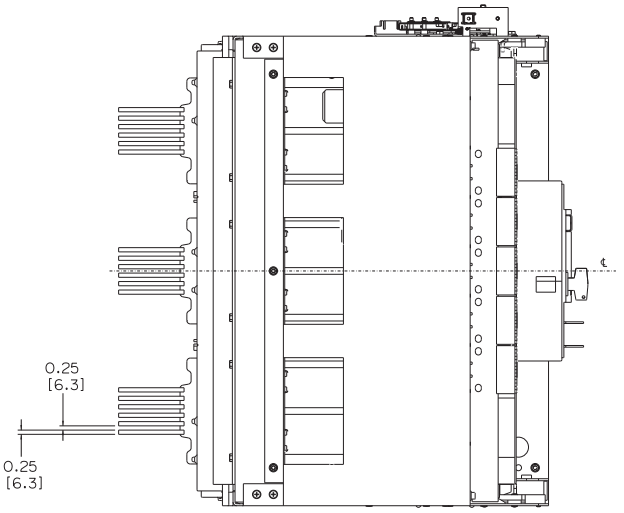
0.25
[6.3]
0.25
[6.3]

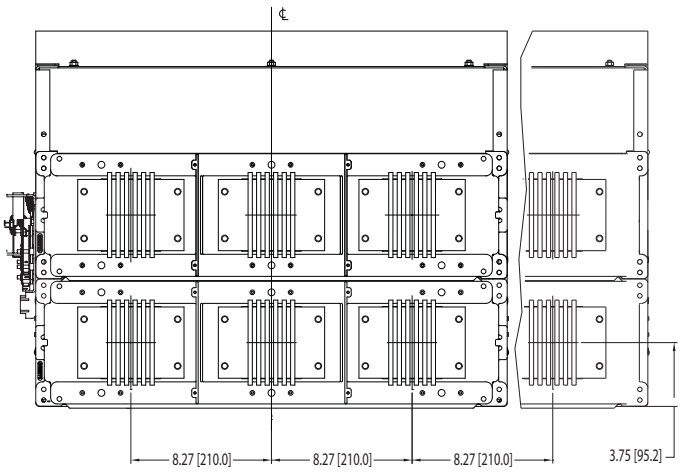
8.27 [210.0]
8.27 [210.0]
8.27 [210.0]
3.75 [95.2]

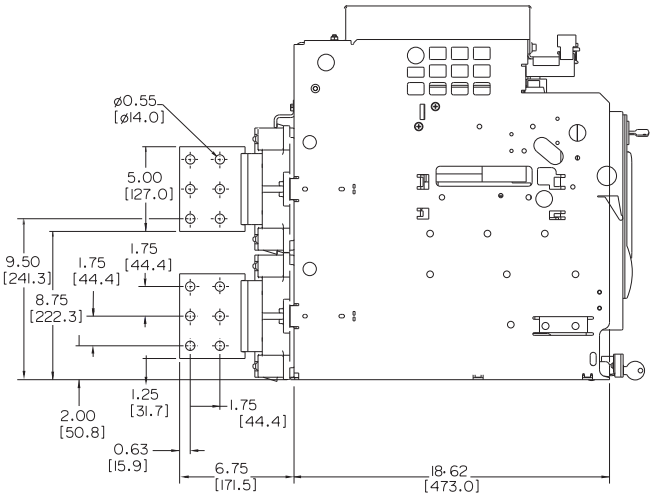
ø0.55
[ø14.0]
5.00
[127.0]
9.50
[241.3]
1.75
[44.4]
1.75
[44.4]
8.75
[222.3]
1.25
[31.7]
1.75
[44.4]
2.00
[50.8]
0.63
[15.9]
6.75
[171.5]
18.62
[473.0]

Frame Size 3

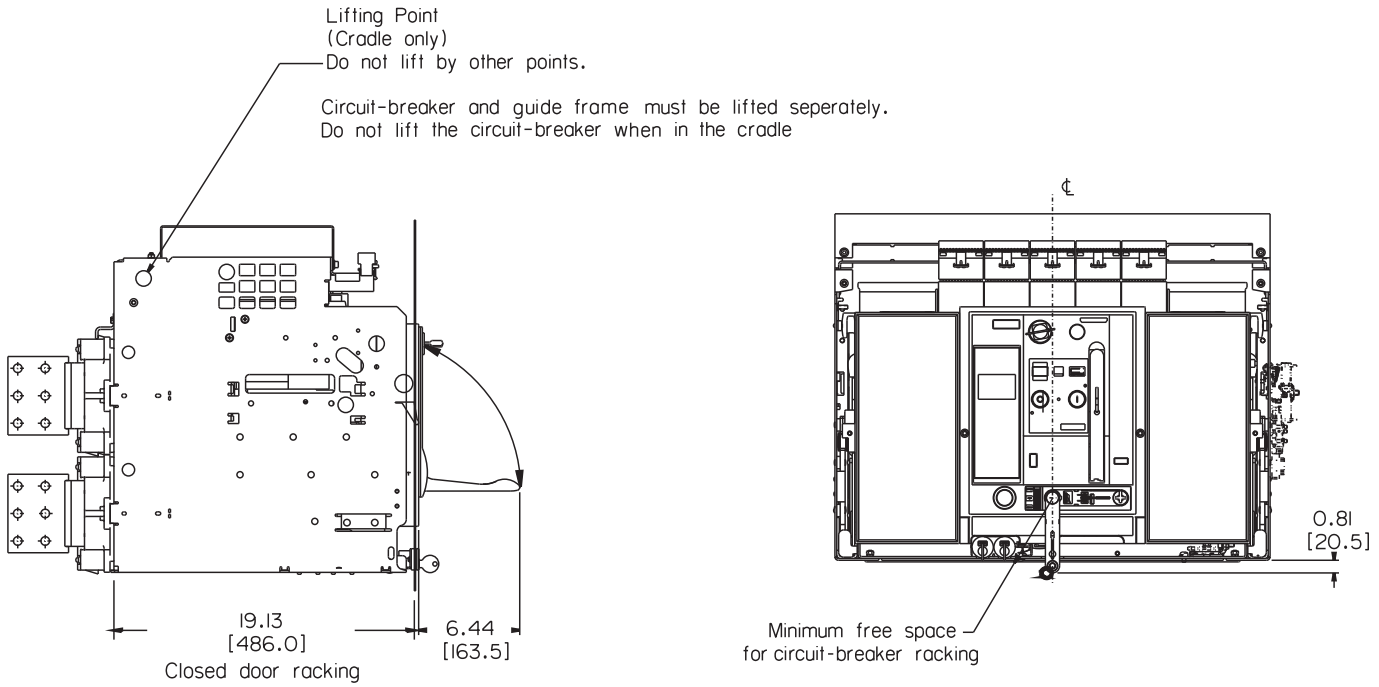
Lifting Point
(Cradle only)
Do not lift by other points.
Circuit-breaker and guide frame must be lifted seperately.
Do not lift the circuit-breaker when in the cradle
℄
0.81
[20.5]
19.13
[486.0]
Closed door racking
6.44
[163.5]
Minimum free space
for circuit-breaker racking

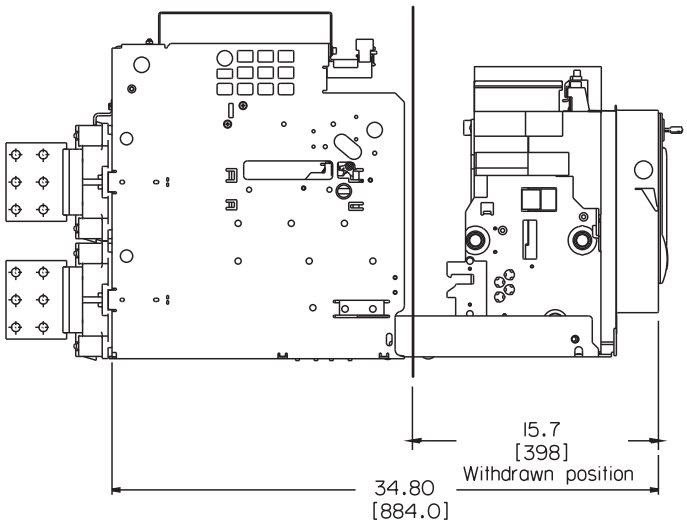
15.7
[398]
Withdrawn position
34.80
[884.0]

Frame Size 3

Fuse Carriage

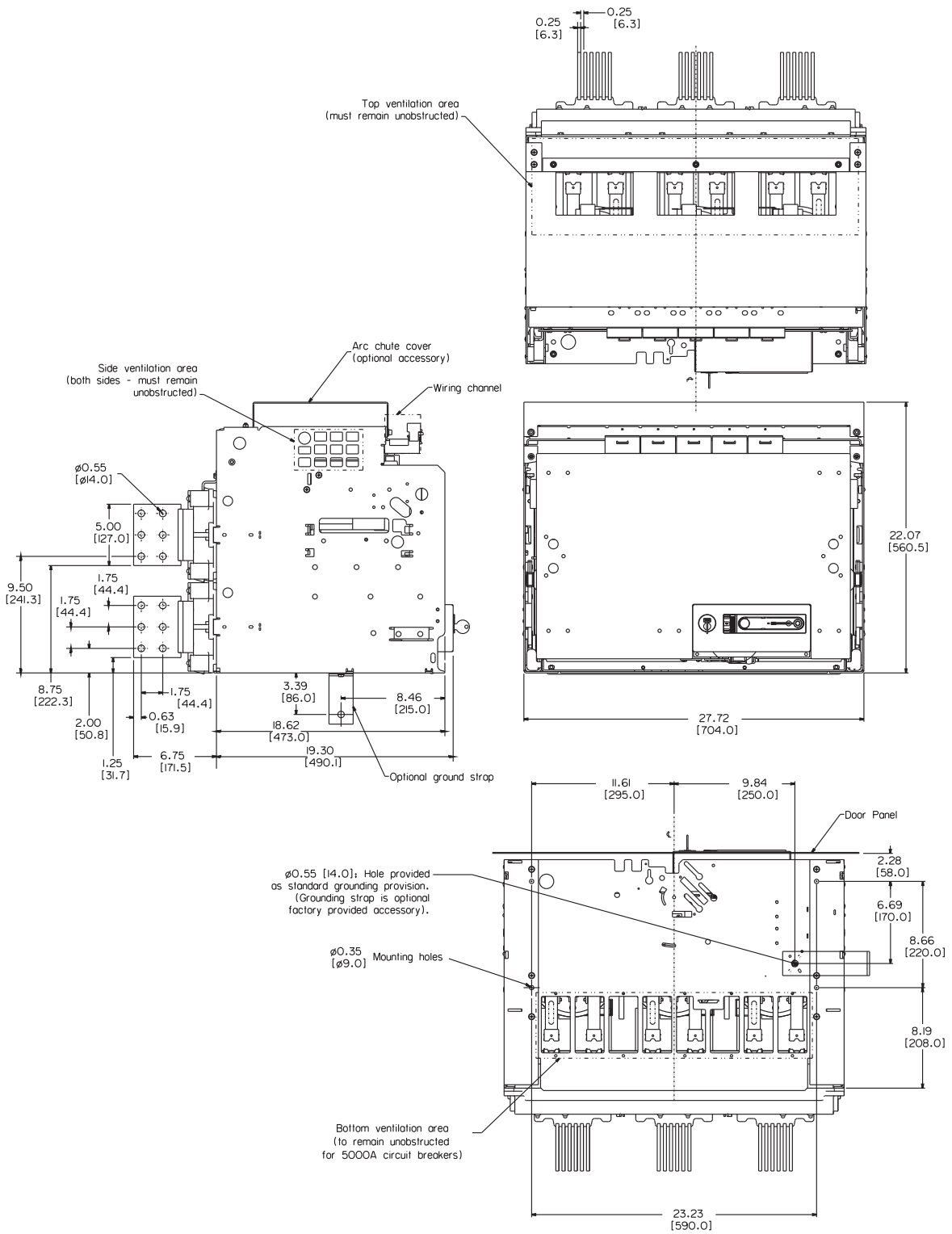

Frame Size 3

Fuse Carriage Racking

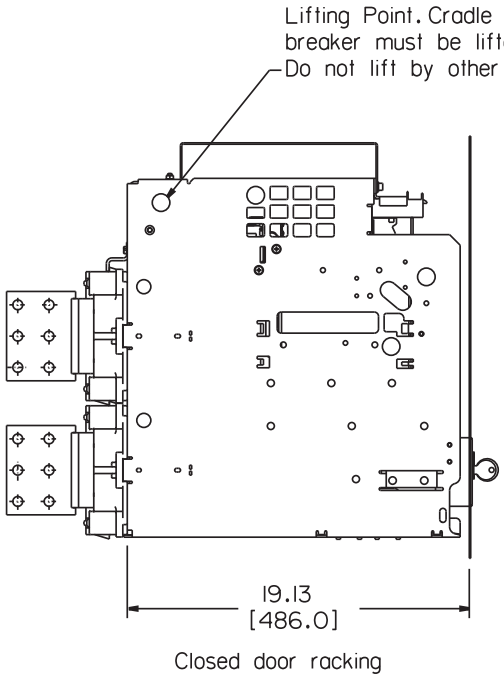

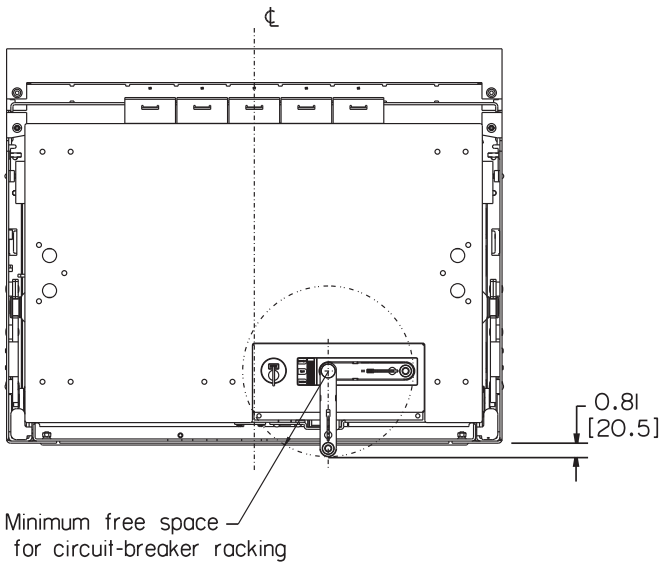

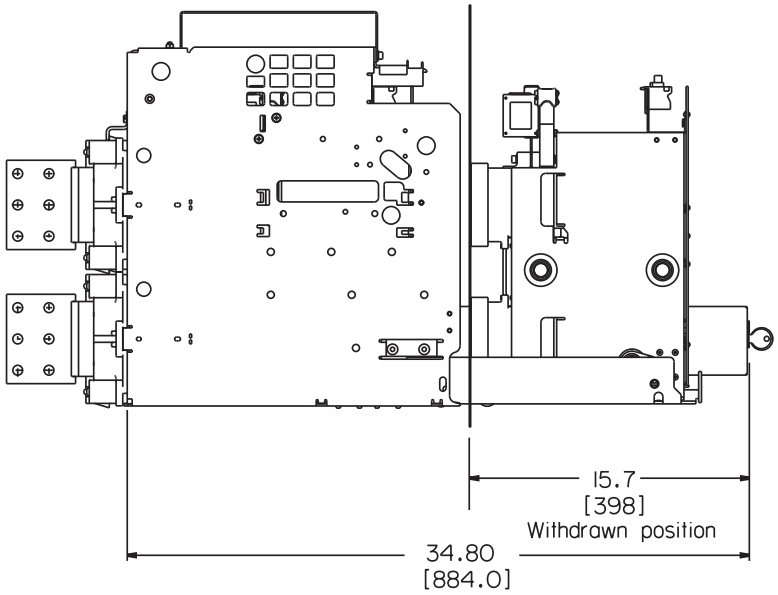

Frame Size 3

Fixed Mounted Version

Fixed-mounted versions are only available as 4-pole with vertical connections

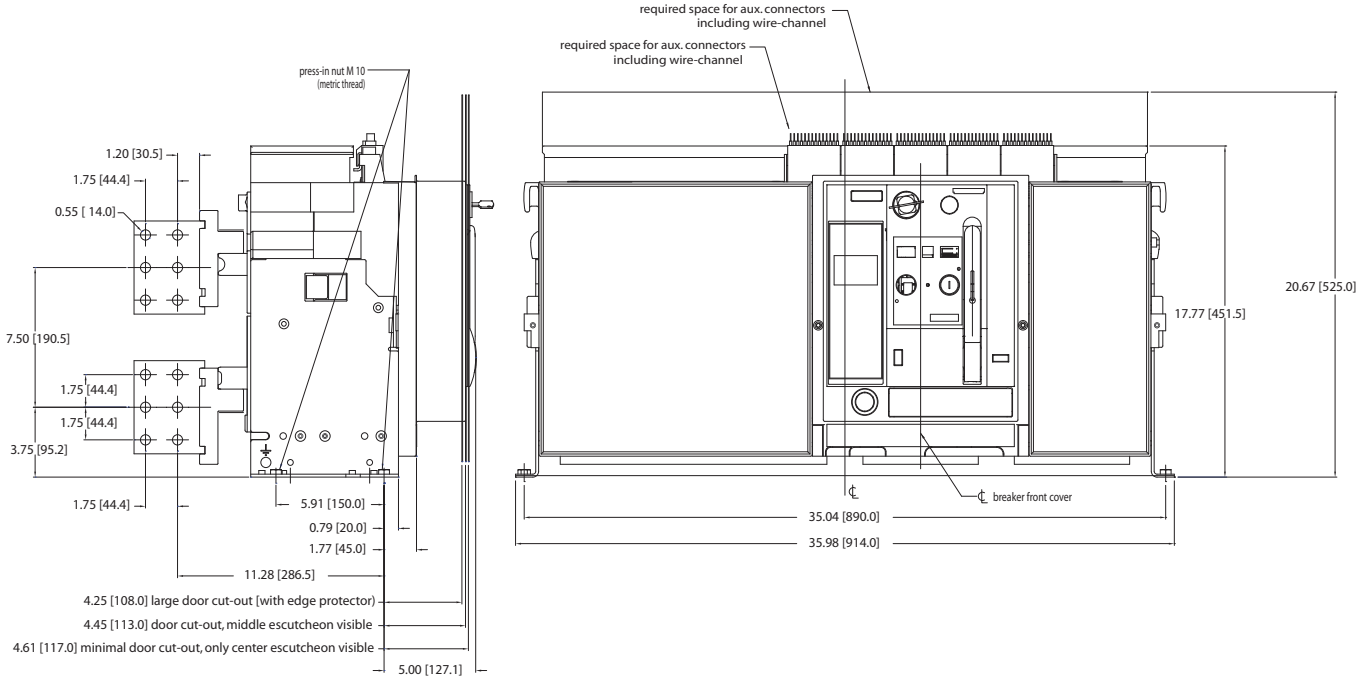

Top view vertical connection

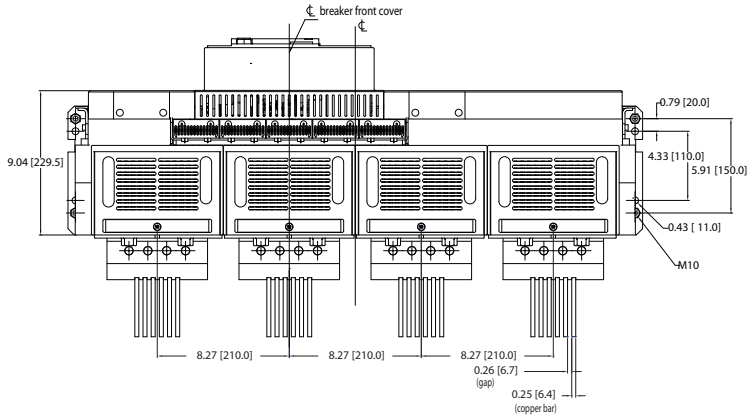

Rear view

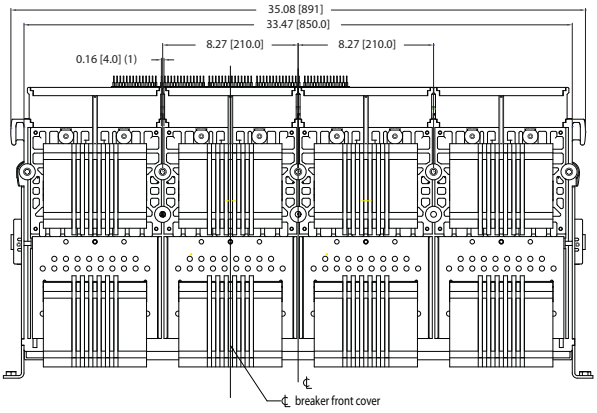

Frame Size 3

Door Cut-outs

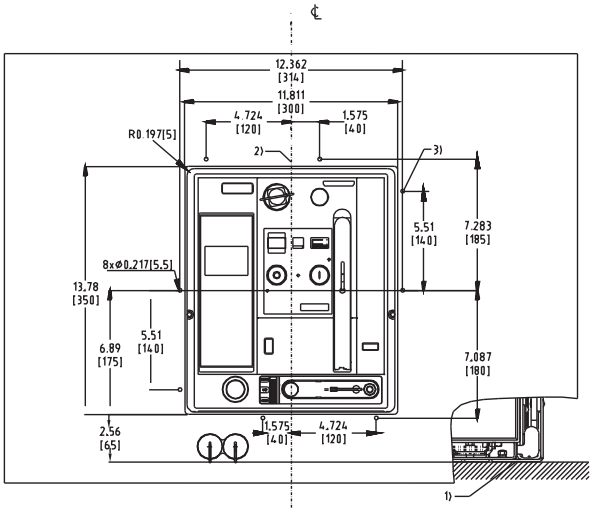

Door cut-out and mounting holes for Door Sealing Frame

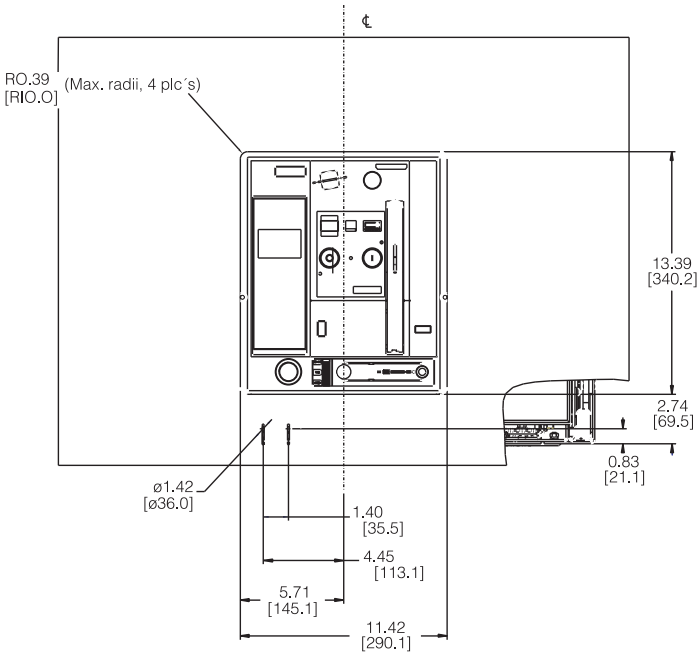

Door cut-out (after mounting Door Sealing Frame)

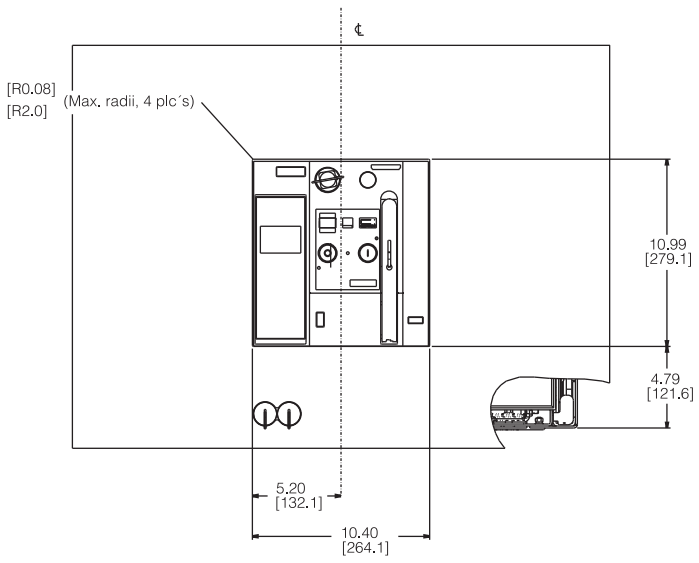

Door cut-out (Middle escutcheon visible)

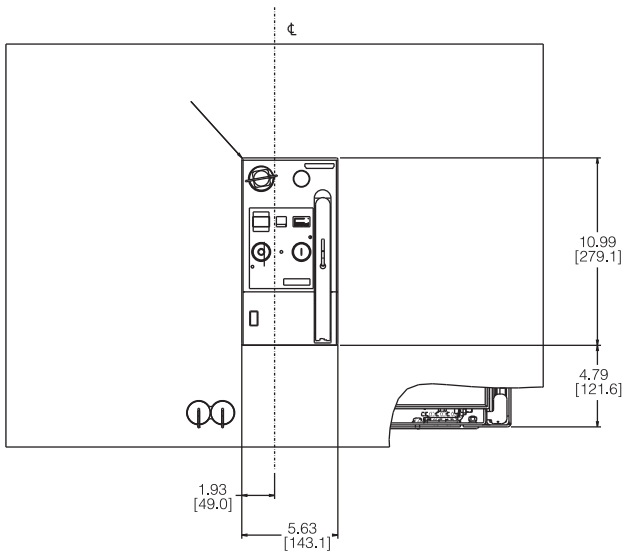

Minimal door cut-out (Only center eustcheon visible)

1) Mounting surface of the circuit breaker or cradle.
2) Center of breaker front panel.
3) Drill eight holes for mounting door sealing frame.

Frame Size 2 and 3
Door Cut-outs

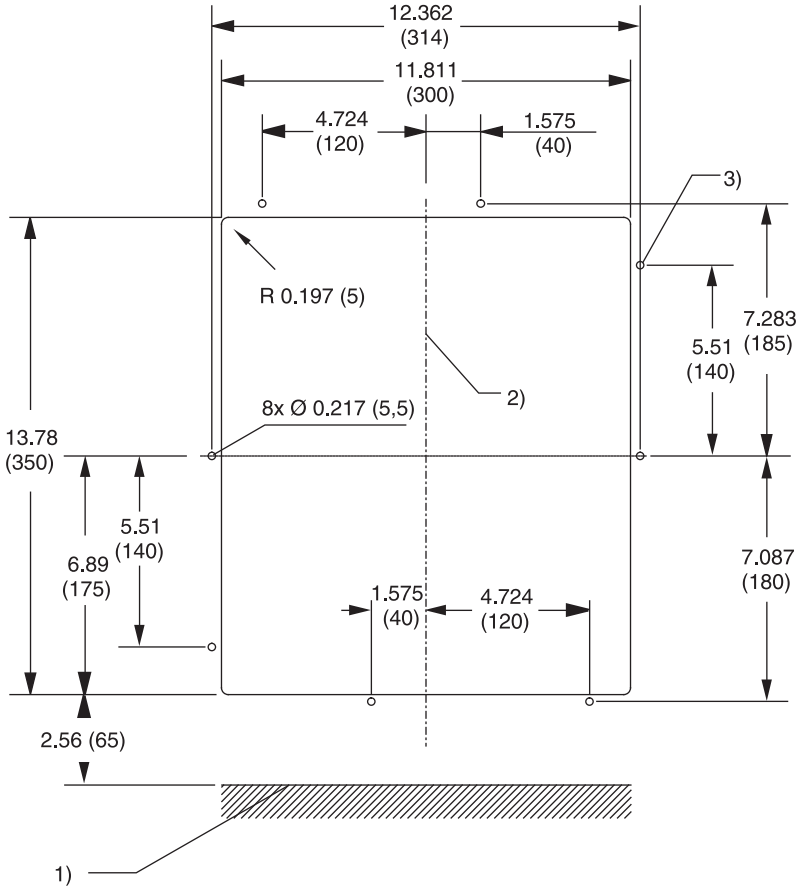

1) Mounting surface of the circuit-breaker or cradle.
2) Center of breaker front panel.
3) Drill eight holes for mounting door sealing frame.

WL Spare/Replacement Parts

Trip Units and Rating Plugs

Selection

ETU 745



ETU 776



GFM A 745



GFM AT 745



GFM A 776



GFM AT 776



ETU catalog number	Trip unit functions	Protective covers	Replacement LCD displays	Ground fault alarm	Ground fault alarm and trip
WLETU745	LSI [1]	WLTUSC55	WLLCD48	WLGFA48	WLGFM48
WLETU776 [2]	LSI [1]	WLTUSC76	Not replaceable	WLGFA76	WLGFM76
WLETU776G [2]	LSIG	WLTUSC76	Not replaceable	Not available	Included
Trip unit with metering function					
WLETU745MP	LSI [1]	WLTUSC76	WLLCD48	WLGFA48	WLGFM48
WLETU776MP [2]	LSI [2]	WLTUSC76	Not replaceable	WLGFA76	WLGFM76
WLETU776GMP	LSIG	WLTUSC76	Not replaceable	Not available	WLGFM76

Overload Protection

L – Long Time Pick-up and Delay
S – Short Time Pick-up and Delay
I – Instantaneous Trip
G – Ground Fault Pick-up and Delay (Accessory sold separately)

EMC filter

Catalog number	
WLEMCFILTER	Compatible with all WL ETU versions



Rating plug

Rating plug

Catalog number	Ampere rating	Catalog number	Ampere rating	Catalog number	Ampere rating	Catalog number	Ampere rating
WLRP200	200A	**WLRP400**	400A	**WLRP800**	800A	**WLRP2500**	2500A
WLRP225	225A	**WLRP450**	450A	**WLRP1000**	1000A	**WLRP3000**	3000A
WLRP250	250A	**WLRP500**	500A	**WLRP1200**	1200A	**WLRP3200**	3200A
WLRP300	300A	**WLRP600**	600A	**WLRP1250**	1250A	**WLRP4000**	4000A
WLRP315	315A	**WLRP630**	630A	**WLRP1600**	1600A	**WLRP5000**	5000A
WLRP350	350A	**WLRP700**	700A	**WLRP2000**	2000A	**WLRP6000**	6000A

1 Optional GF module sold separately.
2 Metering function and ETU776 requires 24VDC supply.

WL Spare/Replacement Parts

Communication Components

Selection



COM Device



BSS



CubicleBus Devices



WLCOMBOARD

Catalog number	
Breaker communication module	
WLUSB485	COM16 Modbus RS485 to USB adapter cable
WLCM15M	PROFIBUS module COM15
WLCM15RET	PROFIBUS module COM15 w/ BSS
WLCM16MD	Modbus module COM16
WLCM16RET	Modbus module COM16 w/ BSS
WLCOMBOARD	COM16 RS485 adapter board (Modbus only)
WLCOM35	Modbus TCP / PROFINET module COM35
WLCOM35KIT	Modbus TCP / PROFINET module with mounting hardware
WLCOM35RET	Modbus TCP / PROFINET module with mounting hardware and BSS
Breaker status sensor	
WLBSS	Breaker status sensor for Profibus/Modbus
External I/O CubicleBus modules	
WLZSIMD	CubicleBUS Zone Selective Interlocking (ZSI) module
WLANLGCUB	CubicleBUS analog output module
WLRLYCUB	CubicleBUS digital output relay module w/ rotary switch
WLRLYCCUB	CubicleBUS digital output relay module (Configurable)
WLDGNCUB	CubicleBUS digital input module
Cables for CubicleBus modules	
WLCBUSCABLE02	CubicleBUS RJ45-M communication cable - 0.2 meters
WLCBUSCABLE1	CubicleBUS RJ45-M communication cable - 1 meter
WLCBUSCABLE2	CubicleBUS RJ45-M communication cable - 2 meters
WLCBUSCABLE4	CubicleBUS RJ45-M communication cable - 4 meters
WLCBUSCABLE9	CubicleBUS RJ45-M communication cable - 9 meters

WL Spare/Replacement Parts

Trip Unit Options

Selection



Handheld tester



24VDC power supply



TD400

Catalog number	
Trip unit test equipment	
WLTS	Hand held tester for Electronic Trip Unit, Fixed LSIG pick-up
WLTSC	Replacement cable for WLTS Test Unit

24Vdc power supply	
WLSITOP25	24Vdc ETU and COMM power supply, 2.5A SITOP Power, Class 2
WLSITOP1	24Vdc ETU and COMM power supply, 3.8A SITOP Power, Class 2

Trip unit test equipment	
3WL9111-0AT44-0AA0	Function test device for testing the tripping characteristics for overcurrent release ETU15B to ETU76B (IEC circuit breakers)
3VW9011-0AT40	TD400 Kit (IEC and UL) Commissioning and service tool for WL, 3WL1/5, and 3VA Circuit Breaker Comes with adapter, cable, and case
3VW9011-0AT43	TD400 Adapter (spare part) for 3VA
3VW9011-0AT44	TD400 Adapter (spare part) for 3WL ETU (UL)
3VW9011-0AT45	TD400 Adapter (spare part) for 3WL ETU (IEC)

WL Spare/Replacement Parts

Secondary Disconnects

Selection





Compression screw connector
WLGAUXPLUGP



Spring load connector
WLGAUXPLUGT



Ring lug connector
WLGAUXPLUGR

Catalog number	
WLGAUXPLUGP	Secondary Disconnect - Compression Screw
WLGAUXPLUGL	Secondary Disconnect - Low-Profile Compression Screw
WLGAUXPLUGT	Secondary Disconnect - Tension Terminal
WLGAUXPLUGR	Secondary Disconnect - Ring Terminal
Secondary disconnect breaker frame mount	
WLCNMD	Auxiliary Contact on Drawout Breaker (Knife Block)
WLTERMBLKUL	Pull Apart Terminal Block w/ 1M leads for UL489 Fixed Mount Breaker
WLCNMDA	Block for Extending Height of Secondary Disconnect/WLCNMD
Secondary disconnect coding kit (UL489 only)	
WLCODEKITUL	Secondary disconnect coding kit for fixed mounted breaker
WL crimp lugs	
WL10RL	Crimp Lugs (70) for WLGAUXPLUGR - #10 AWG



Low-profile screw connector
WLGAUXPLUGL



Knife Blade Contact Block
WLCNMD



WLTERMBLKUL



Extends Height of WLCNMD
WLCNMDA



Coding Kit
WLCODEKITUL

WL Spare/Replacement Parts

Cradle Frame Accessories

Selection



Arc Chute Cover



Catalog number	
Stationary primary bus-bar disconnect terminals consists of 1 bus-bar pole only)	
WLGST15123LI	Stab tip replacement kit - 800A/1200A, FS1, Line Side
WLGST10163LD	Stab tip replacement kit - 800A/1200A/1600A, FS2, Load Side
WLGST10163LL	Stab tip replacement kit - 800A/1200A/1600A, FS2, Line and Load Side
WLGST15203LL	FS2 2000A and FS1 800/1200/1600/2000 lower Stab Tip
WLGST15203LD	Stab tip replacement kit - 2000A - 800A/1200A, FS2, Load Side
WLGST30323LL	Stab tip replacement kit - 2500A/3000A, FS2, Line and Load Side
WLGST30503LL	Stab tip replacement kit - 4000A/5000A, FS3, Line and Load Side

Cradle arc chute cover	
WLGARC1UL	3P Arc chute cover, UL489 FS1, Class S/H/L
WLGARC2	3P Arc chute cover ANSI FS2, Class N/S/H/L
WLGARC2UL	3P Arc chute cover, UL489 FS2, Class S/L
WLGARCF2	3P Arc chute cover, ANSI FS2, Class F Fused
WLGARC3	3P Arc chute cover, ANSI/UL489 FS3, Class H/L/F
WL4GARC2	4P Arc chute Cover, ANSI FS2
WL4GARC3	4P Arc chute Cover, ANSI FS3

MOC – Mechanism operated contacts	
(for draw-out breaker)	
WLMOC	MOC with 4NO + 4NC, Test and Connect Position, FS1/FS2
WLMOCC	MOC with 4NO + 4NC, Connect Position, FS1/FS2
WLMOC3	MOC with 4NO + 4NC, Test and Connect Position, FS3
WLMOCC3	MOC with 4NO + 4NC, Connect Position, FS3
(for fixed mounted circuit breakers)	
WLMOCUL1	MOC with 4NO + 4NC, FS1 Fixed
WLMOCUL	MOC with 4NO + 4NC, FS2/FS3 Fixed

TOC – Truck operated contacts	
WLGSGSW111	Truck Operated Contact (1Conn-1Test-1Disconn)
WLGSGSW321	Truck Operated Contact (3Conn-2Test-1Disconn)
WLGSGSW6	Truck Operated Contact (6Conn)

Isolation shutters	
WLG3SHUT1L	FS1 3-Pole Shutter for Class S,H,L
WLG3SHUT2L	FS2 3-Pole Shutter for Class N,S,H,L
WLG3SHUT2F	FS2 3-Pole Shutter for Class F
WLG3SHUT2M	FS2 3-Pole Shutter for Class C
WLG3SHUT3L	FS3 3-Pole Shutter for Class L,F,H
WLG3SHUT3M	FS3 3-Pole Shutter for Class C,M
WLG3SHUT3FC	FS3 3-Pole Shutter for Fuse Carriage
WLG4SHUT2L	FS2 4-Pole Shutter for Class S,H,L
WLG4SHUT3L	FS3 4-Pole Shutter for Class H,L

WL Spare/Replacement Parts

Cradle Frame

Selection



Cradle Frame Heater
WLGHEAT



Key Interlocking
(Drawout)



Mechanical Interlock

Catalog number	
WLGHEAT	Cradle frame heater

Locking devices mounted on the cradle frame	
WLDLKRK	Kirk Key – Lock breaker in OPEN position (FS2, FS3 only)
WLDLDKRK	Double-Kirk Key – Lock breaker in OPEN position (FS2, FS3 only)
WLDLSUP	Superior – Lock breaker in OPEN position (FS2, FS3 only)
WLDLDSUP	Double Superior – Lock breaker in OPEN position (FS2, FS3 only)
WLDLDPR	Provision Only – Double lock breaker in the OPEN position (FS2, FS3 only)
WLDRLC	Locking device against opening the cubicle door when breaker is in connect position, FS1 Only
WLDRLC1	Locking device against opening the cubicle door when breaker is in connect position, FS2, FS3
WLDRLC5UL	Locking device against moving/racking the breaker when the cubicle door is in connect position, FS2, FS3
WL4DLDRK2	WL Cradle Lock Double Kirk FS2 4-Pole
WL4DLDUP2	WL Cradle Lock Double Superior FS2 4-pole
WL4DLPR2	WL Cradle Lock Single Superior Provision FS2 4-pole
WL4DLKRK3	WL Cradle Lock Single Kirk FS3 4-Pole
WL4DLSUP3	WL Cradle Lock Single Superior FS3 4-pole
WL4DLKRK3	WL Cradle Lock Double Kirk FS3 4-pole
WL4DLDSUP3	WL Cradle Lock Double Superior FS3 4-pole
WL4DLPR3	WL Cradle Lock Single Provision FS3 4-pole

Mechanical interlock devices [1]	
WLNTLK	For FS1, FS2, FS3 Draw-out breaker
WLNTLKF1	FS1 Fixed mounted circuit breaker
WLNTLK23	FS2 and FS3 Fixed mounted circuit breaker
WLNTLWIRE2	Interlock Cable (2.0m Bowden Cable)
WLNTLWRE3	Interlock Cable (3.0m Bowden Cable)
WLNTLWRE4	Interlock Cable (4.5m Bowden Cable)
WLNTLWRE5	Interlock Cable (6.0m Bowden Cable

[1] Mechanical interlock cable ships with 2.0m Bowden Cable.

WL Spare/Replacement Parts

Metering CT Units



3 phase metering CT, cradle frame mounted

Catalog number	Frame	Ratio
WLG8005MCT1	FS1	800:5
WLG12005MCT1	FS1	1200:5
WLG8005MCT2	FS2	800:5
WLG10005MCT2	FS2	1000:5
WLG12005MCT2	FS2	1200:5
WLG16005MCT2	FS2	1600:5
WLG20005MCT2	FS2	2000:5
WLG30005MCT2	FS2	3000:5
WLG32005MCT2	FS2	3200:5
WLG20005MCT3	FS3	2000:5
WLG30005MCT3	FS3	3000:5
WLG32005MCT3	FS3	3200:5
WLG40005MCT3	FS3	4000:5
WLG50005MCT3	FS3	5000:5



Single phase metering CT

Catalog number	Ratio
WLG800NMCT23	800:5
WLG1200NMCT23	1200:5
WLG1600NMCT23	1600:5
WLG2000NMCT23	2000:5
WLG3000NMCT23	3000:5
WLG3200NMCT23	3200:5
WLG4000NMCT23	4000:5
WLG5000NMCT23	5000:5

WL Spare/Replacement Parts

Ground Fault and Current Sensors

Selection



Modified differential CT



Neutral Sensor



Neutral Sensor with Bus Connector

Catalog number		
Modified differential ground fault for source ground return		
WLGMDGFCT2	FS2	1200:1 3 phase cradle mount
WLGMDGFCT3	FS3	1200:1 3 phase cradle mount
WLGNMDGCT23	Iron core neutral sensor	1200:1 1 phase bus mount

External neutral CT for 4 wire residual ground fault		
WLNCT2	3″	Without copper bus adapter (pass-thru mount)
WLNCT3	3 – 5″ max. bus-bar size	Without copper bus adapter (pass-thru mount)
WLNCT2CB	For 3″	With copper bus adapter for bus connection
WLNCT3CB	For 3″ – 5″ max. bus-bar size	With copper bus adapter for bus connection

WL Spare/Replacement Parts

Circuit Breaker Accessories

Selection



Shunt Trip Coil



Auxiliary Contact



Ready-to-Close Contact



Bell Alarm Reset Coil



Bell Alarm Contacts



Operations Counter

Catalog number	
Shunt trip release	
WLST24	24Vdc, 3-cycle momentary duty
WLST48	48Vdc, 3-cycle momentary duty
WLST120	120Vdc/120Vac, 3-cycle momentary duty
WLST240	250Vdc/240Vac, 3-cycle momentary duty
WLSTCD24	24Vdc, continuous duty (UL 489 only)
WLSTCD48	48Vdc, continuous duty (UL 489 only)
WLSTCD120	120Vdc/120Vac, continuous duty (UL 489 only)
WLSTDC240	250Vdc/240Vac, continuous duty (UL 489 only)
(signal contactor first Shunt Trip) **WLSTC**	"NO" switch 3A-240Vac rating
(signal contactor second Shunt Trip) **WLUVRC**	"NO" switch 3A-240Vac rating
Auxiliary signaling switch	
WLAS2	2 NO and 2 NC contacts
WLAS4	4 NO and 4 NC contacts
Ready-to-close signal switch	
WLRTCS	1 form "A" NO contact 5A - 240Vac
Bell alarm	
Remote reset solenoid for Bell-alarm and trip indicator	
WLRSET24	24Vdc
WLRSET48	48Vdc
WLRSET120	125Vdc/120Vac
WLRSET240	250Vdc/240Vac
WLBA	Form "C" contact
Operation Counter	
Available only with spring charging motor option	
WLNUMCNT	Mechanical counter

WL Spare/Replacement Parts

Circuit Breaker Accessories

Selection



Undervoltage Trip Coil



Signal Contacts



Closing Coil



Charging Motor

Catalog number	
Undervoltage trip release	
WLUV24	24Vdc, instantaneous trip
WLUV48	48Vdc, instantaneous trip
WLUV120	125Vdc/120Vac, instantaneous trip
WLUV240	250Vdc/240Vac, instantaneous trip
WLUVD48	48Vdc, time delayed
WLUVD120	125Vdc/120Vac, time delayed
WLUVD240	250Vdc/1240Vac, time delayed
Signal contactor for UV trip	
WLUVRC	"NO" switch 3A – 240Vac rating
Closing coil	
WLRCS24	24Vdc, 3 cycle momentary duty
WLRCS48	48Vdc, 3 cycle momentary duty
WLRCS120	125Vdc/120Vac, 3 cycle momentary duty
WLRCS240	250Vdc/240Vac, 3 cycle momentary duty
Spring charging motor	
WLELCMTR24	24Vdc, Charging motor
WLELCMTR48	48Vdc, Charging motor
WLELCMTR120	120Vdc/120Vac, Charging motor
WLELCMTR240	250Vdc/240Vac, Charging motor
WLELCMTR24S	24Vdc, Charging motor w/cut-off switch
WLELCMTR48S	48Vdc, Charging motor w/cut-off switch
WLELCMTR120S	125Vdc/120Vac, Charging motor w/cut-off switch
WLELCMTR240S	250Vdc/240Vac, Charging motor w/cut-off switch
WLMCOSW	Motor cut-off switch

WL Spare/Replacement Parts

Circuit Breaker Accessories

Selection



Breaker Current Sensor



Arc Chutes

Catalog number	
ANSI UL 1066 breaker internal contact replacement kit	
RCS2N10	FS2 N-Group, 800A, 1600A
RCS2S10	FS2 S-Group, 800A, 1600A
RCS2H10	FS2 H-Group, 800A, 1600A
RCS2L10	FS2 L-Group, 800A, 1600A
RCS2S15	FS2 S-Group, 2000A
RCS2HF15	FS2 H and F-Group, 2000A
RCS2L15	FS2 L-Group, 2000A
RCS2S30	FS2 S-Group, 3200A
RCS2H30	FS2 H-Group, 3200A
RCS2L30	FS2 L-Group, 3200A
RCS3HF30	FS3 H and F-Group, 4000/5000A
RCS3L30	FS2 L-Group, 4000/5000A
Internal phase sensor (Rogowski coil)	
WLCT2	FS2 ANSI breaker kit for one breaker (3 current sensors included)
WLCT3	FS3 ANSI breaker kit for one breaker (3 current sensors included)
ANSI 1066 breaker arc chute replacement kit	
WLARC2	For FS2 ANSI breaker only (3 arc chutes included)
WLARC3	For FS3 ANSI breaker only (3 arc chutes included)
WLARCM3	For FS3 ANSI M-Class breaker only (3 arc chutes included)





Fixed Breaker Connectors

Catalog number		Units
Circuit breaker finger cluster replacement kit		
WLFNGR1UL	For FS1 UL489 800A, 1200A	1 piece
WLFNGR10UL	For FS2 UL489 800, 1200, 1600A Class S&L	1 piece
WLFNGR15UL	For FS2 UL489 2000A, S&L	1 piece
WLFNGR30UL	For FS2 UL489 2500/3000A Class S&L	1 piece
WLFNGR30ULC	For FS2 UL489 1600/2000/2500/3000A Class C only	1 piece
WLFNGR10	For FS2 ANSI 800A, 1200A	1 piece
WLFNGR15	For FS2 ANSI 2000A	1 piece
WLFNGR30	For FS2 ANSI 3200A	1 piece
WLFCK3	For FS3 ANSI 4000A, 5000A	1 piece
WLFC6X1A	For FS1 UL489 800A, 1200A	6 pieces
WLFC6X10	For FS2 ANSI 800, 1600A	6 pieces
WLFC6X15	For FS2 ANSI 1200A	6 pieces
WLFC6X1B	For FS2 Fused	6 pieces
WLFC6X30	For FS2 ANSI, 3200A	6 pieces
WLFC6X3C	For FS2 C-Class	6 pieces
WLFC6X3A	For FS3 ANSI 4000A, 5000A	6 pieces
WLFC6X3B	For FS3 Fuse carriage	6 pieces
Circuit breaker bus connectors		
UL 489 Fixed Mount (Front mount Bus Connector)		
WLH1F12CONUL	FS1, 800-1200AF, 85kAIC at 480V maximum	6 pieces
WLL2F16CONUL	FS2, 1600AF, 100kAIC at 480V maximum	6 pieces
WLL2F20CONUL	FS2, 2000AF, 100kAIC at 480V maximum	6 pieces
WLL2F25CONUL	FS2, 2500AF, 100kAIC at 480V maximum	6 pieces
WLL2F30CONUL	FS2, 2500-3000AF, 100kAIC at 480V maximum	6 pieces
WLL3F50CONUL	FS3, 4000-5000AF, 100kAIC at 480V maximum	6 pieces
(Rear Vertical Bus Connector)		
WLH1R12CONUL	FS1, 800-2000AF, 100kAIC at 480 V maximum	6 pieces
WLL2R16CONUL	FS2, 800-1600AF, 100kAIC at 480V maximum	6 pieces
WLL2R20CONUL	FS2, 2000AF, 100kAIC at 480V maximum	6 pieces
WLL2R30CONUL	FS2, 2500-3000AF, 100kAIC at 480V maximum	6 pieces
WLC2R30CONUL	FS2, 800-3000A, 150kAIC at 480V max	6 pieces
WLC3R50CONUL	FS3, 4000-5000AF, 150kAIC at 480V maximum	6 pieces
UL 1066 Fixed Mount (4-Pole Rear Vertical Bus Connector)		
WL4L2R16CONUL	FS 2 800A -1600A rear vertical connectors	(8 pieces, includes Neutral pole)
WL4L2R20CONUL	FS 2 2000A rear vertical connectors	(8 pieces, includes Neutral pole)
WL4L2R32CONUL[1]	FS 2 3200A rear vertical connectors	(8 pieces, includes Neutral pole)
WL4L2R50CONUL[1]	FS 3 4000A - 5000A rear vertical connectors	(8 pieces, includes Neutral pole)
Circuit breaker fix mount optional metric hardware		
WLMETRC	FS1 and FS2 M8x25 bolts and 6.3 washers	
WLMETRC3	FS3 M10X25 bolts and 6.3 washers	

[1] FS II 3200A, FS III 4000A, 5000A breakers include vertical connectors as a standard.

Locking Provisions (Overview)

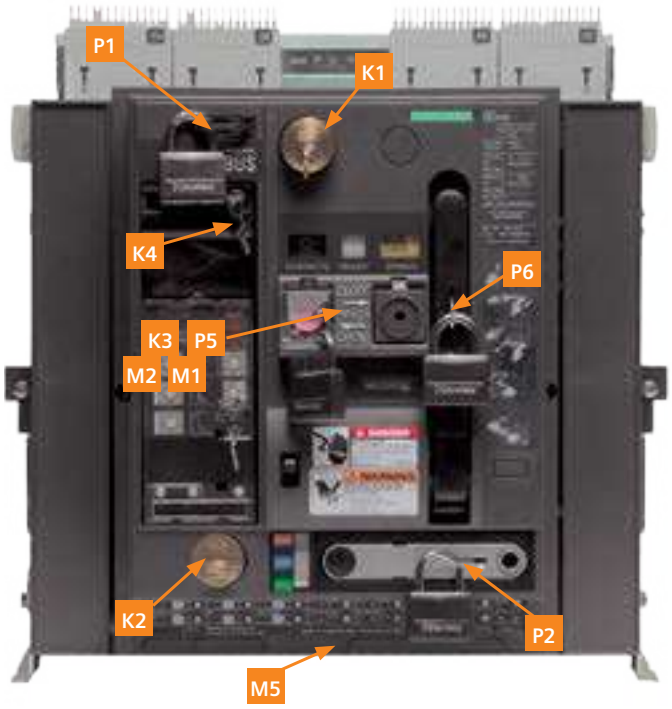

Padlock Provisions

- P1 OPEN (Trip-Free) (see page 4)
- P2 Racking Handle (see page 4)
- P5 OPEN / CLOSE Buttons (see page 5)
- P6 Charging Handle (see page 5-6)

Keylock Provisions

- K1 OPEN (Trip-Free) (see page 6)
- K2 Racking Handle (see page 6)
- K3 OPEN / CLOSE Buttons (see page 7)
- K4 Bell Alarm Reset (see page 7)

Mechanical Interlocks

- M1 Emergency OPEN (see page 8)
- M2 Cheat-Hole Covers and Button Shields (see page 9)
- M5 Door Closed w/ Circuit Breaker CLOSED (see page 9)

Padlock Provisions

- P3 Drawout Rails (see page 5)
- P4 Shutter (see page 5)

Keylock Provisions

- K5 OPEN (Trip-Free) (see page 7)

Mechanical Interlocks

- M3 Closed Door Racking (see page 9)
- M4 Door Closed While Connected (see page 9)

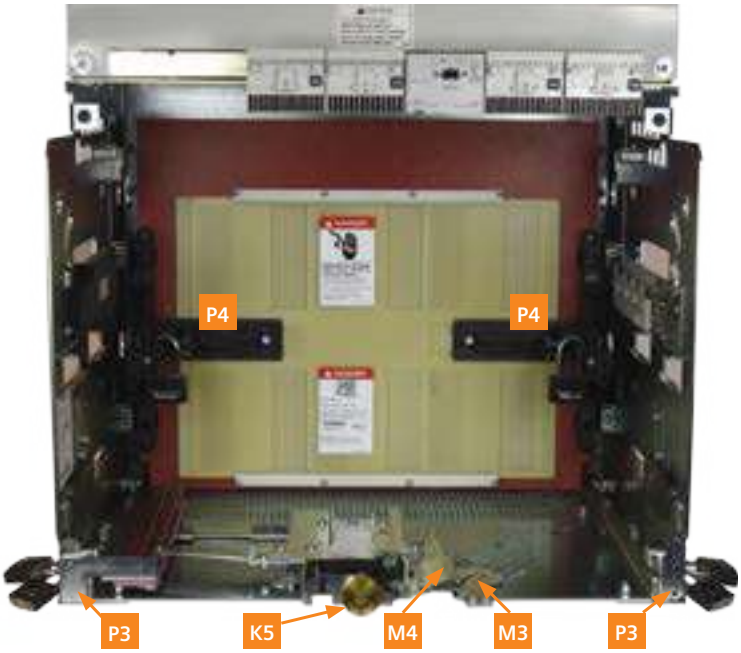



Breaker Open Lock
WLLKOFFKRK



Pushbutton Lock Outs
WLLKKT



Charge Handle Lock
WLHANDLC

Catalog number	
Breaker Locking Device	
WLLKOFFDRUL1	Door lock FS1 (locked when breaker is closed)
WLLKOFFDRUL3	Door lock FS2/FS3 (locked when breaker is closed)
WLLKOFFKRK	Kirk key (lock when breaker is open)
WLLKOFFSUP	Superior Key (lock when breaker is open)
WLLKNP	Provision only padlock (lock when breaker is open)
WLLKOFFPR	Provision only key lock (lock when breaker is open)
WLLKKT	Sealing/Locking cover for OPEN/CLOSE button w/cheat-hole
WLLKCLKRK1	Racking handle lock, FS1 - Kirk key
WLLKCKRK	Racking handle lock, FS2/FS3 - Kirk key
WLLKCLSUP1	Racking handle lock, FS1 - Superior key
WLLKCLSUP	Racking handle lock, FS2/FS3 - Superior key
WLLKCLPR	Racking handle lock, FS2/FS3 - Provision only
WLHANDLC	Charging handle padlock provision
WLEPEN	Emergency OPEN button (mushroom head)

Fuse Kits

Catalog number	
WL fuse replacement kits	
WLCLF0400	Breaker fuse kit FS2 400A (3 Fuses)
WLCLF0600	Breaker fuse kit FS2 600A (3 Fuses)
WLCLF0800	Breaker fuse kit FS2 800A (3 Fuses)
WLCLF0900	Breaker fuse kit FS2 900A (3 Fuses)
WLCLF1000	Breaker fuse kit FS2 1000A (3 Fuses)
WLCLF1200	Breaker fuse kit FS2 1200A (3 Fuses)
WLCLF1600	Breaker fuse kit FS2 1600A (3 Fuses)
WLCLF2000	Breaker fuse kit FS2 2000A (3 Fuses)
WLCLF2500	Breaker fuse kit FS2 2500A (3 Fuses)
WLCLF3000	Breaker fuse kit FS2 3000A (3 Fuses)
WLCLF3001	Carriage fuse kit FS3 3000A (3 Fuses)
WLCLF4000	Carriage fuse kit FS3 4000A (3 Fuses)
WLCLF5000	Carriage fuse kit FS3 5000A (3 Fuses)
WLCLF6000	Carriage fuse kit FS3 6000A (3 Fuses)

WL Spare/Replacement Parts

Options and Accessories



Sealing Frame
WLDSF



Plexiglass Cover
WLPGC



Lift Device
WLLFT

Catalog number	
WLDSF	Door sealing frame, FS2/FS3
WLPGC	Door plexiglass cover, FS2/FS3
WLLFT	3-pole breaker lifting yoke
WLLFT4	4-pole breaker lifting yoke
WLHOIST	Breaker Lift Truck/Hoist
WLBGREASE	WL circuit breaker maintenance grease
WLBCERTEST	WL circuit breaker certified test report

Should it become necessary for the customer to return a WL circuit breaker frame for any reason, proper packaging is to be used to prevent damage to the product while in shipment.

WLPFS1B	Packaging for FS1 Breaker
WLPFS2B	Packaging for FS2 Breaker
WLPFS2FB	Packaging for FS2 Fused Breaker
WLPFS3B	Packaging for FS3 Breaker

Typical certified test report

SIEMENS
Ft. Worth, TX

WL Low Voltage Power Circuit Breaker Certified Test Report

Catalog #:
Breaker Type:
CBID: FS: Frame Rating:
Base Frame ID: Interrupt Cap:
Trip Unit ID:
Test Station: Rating Plug:

Production Order:
Sold To:

Ship To:

Test Date: **7/15/2014**

☑ Identify Test Performed - Incl. Programming, Labeling, Catalog Order Check

☑ Mechanical Accessory Tests Performed - Incl. Manual Mechanism Charging, Anti-Pumping, Trip/Close Solenoids, UVR, Motor, Aux. Switch Bell Alarms etc. (as per installed)

☑ Dielectric / Hi-Pot Tests Performed - Incl. @2.65 kV: Open x A,B,C; Closed: AB, BC, AC, AG, BG, CG
@1.80 kV: Accessories to Ground
@1.20kV: Motor connection to Ground

Primary Injection Test	Settings *ETU Initial settings / Test Current etc.; See Note 3*	Results A	 B	 C	 *	Acceptable Range Min	 Max
Long TIme Pickup (A)	IR(xIn): PU A: tR(s):						
Long Time Delay (S)	Test Current:						
Short Time Pickup (A)	Isd (xIn): PU A: Tsd(s):						
Short Time Delay (S)	Tsd(s): Test Current:						
Instantaneous Pickup (A)	Ii (xIn): PU A:						
Ground Fault Pickup (A)	Trip: Alarm: Tg(s):						
Neutral Delay (S)	tR(s): IN (xIn): ON / IN = 0.5 x In PU A: Test Current:						

UVR Drop-out Voltage: 0

Notes:
1. This WL Low Voltage Power Circuit Breaker was tested in accordance with ANSI C37.50-1989
2. The above tests were carried out according to controlled Siemens-Ft. Worth test inspection plans and standards on calibrated equipment. This process and documentation is controlled and audited by UL in accordance with ISO9001:2008. Certification available upon request.
3. All delay test settings are the same as for the preceding pickup test unless otherwise noted. PU A = Function pickup setting in Amperes.
4. All WL Circuit Breaker ETUs are set to factory default safety settings prior to shipment. [Lowest Pickups, Shortest Delays, N-protection off, Memory Off, GF=sumI]
5. The above product identification information [ETU, Catalog Number etc.] is accurate as of the test date. Any changes to this configuration are not covered by the above test results.
6. For product support, please contact your sales representative or customer service at: mark.vandre@siemens.com
7. DNT indicates 'Did Not Test' and represents a test not applicable to this configured breaker.

(signed)

Quality Manager, Siemens - Ft. Worth ModCenter

Source: Ft. Worth ModCenter Product Traceability System
Page: 1 of 1

SIEMENS
Ft. Worth

Date Printed:

WL Spare/Replacement Parts

Communication Components

Selection

Quick reference guide

Task	Accessories
Manual charging circuit breaker to electrically operated circuit breaker...	• WLELCMTRXX • WLMCOSW Motor Cut-off switch (Optional)
Remote operation of circuit breaker	• WLELCMTRXX • WLMCOSW Motor Cut-off switch (Optional) • Shunt Trip (WLSTXX) • Close coil (WLRCSXX) • Control Power
Remote operation of circuit breaker via communications	• WLELCMTRXX • WLMCOSW Motor Cut-off switch (Optional) • Shunt Trip (WLSTXX) • Close coil (WLRCSXX) • COM15/COM16/COM35 (WLCMXX) • 24V DC Power Supply • Power supply for electric motor, shunt trip etc, should be separate than the one used for trip unit.
Dynamic Arc Sentry (DAS)	• WLETU776 + WLDGNCUB + WLRLYCCUB (Input + Output Modules) • 24V DC Class 2 Power Supply
	• WLETU776 + WLCOM35 (Output Module Not Required) • 24V DC Class 2 Power Supply
	Add the following for use with communications • WLCM15M for PROFIBUS • WLCM16MD for Modbus
PROFIBUS Addition	To a circuit breaker: • WLCM15M + WLBSS • WLCM15RET includes (WLCM15M+WLBSS). This uses the 24VDC Class 2 power supply used for the ETU.
	To a switch: • WLCM15M + WLBSS + External 24VDC Class 2 UL Power Supply (WLSITOP25)
Modbus Addition	To a circuit breaker: • WLCM16RET (includes WLCM16MD+WLBSS) • 24V DC Class 2 Power Supply
	To a switch: • WLCM16RET (includes WLCM16MD+WLBSS) • 24V DC Class 2 Power Supply
Modbus TCP Addition	To a circuit breaker: • WLCOM35RET (includes WLCOM35+WLBSS) • 24V DC Class 2 Power Supply
	To a switch: • WLCOM35RET (includes WLCOM35+WLBSS) • 24V DC Class 2 Power Supply
Power Supply Requirements	For ETU, and Cubicle bus modules, the power supply must be UL Listed Class 2 24VDC • WLSITOP25 (2.5A) : good for 2 breakers (2ETUs, COMM Cubicle bus Modules) • WLSITOP1 (3.8A): good for up to 4 breakers (4ETUs, COMM Cubicle bus Modules)

WL Spare/Replacement Parts

Communication Components

Selection

Accessory	Description
WLELCMTRXX	• Charging motor • 24VDC/48VDC/125VDC/250VDC/120VAC/240VAC
WLMCOSW	• Motor cut-off switch
WLSTXX	• Shunt trip • 3-cycle or continuous duty • 24VDC/48VDC/125VDC/250VDC/120VAC/240VAC
WLRCSXX	• Closing coil • 3-cycle • 24VDC/48VDC/125VDC/250VDC/120VAC/240VAC
WLBSS	• Breaker Status Sensor (BSS Board)
WLSITOP25	• Power supply for trip unit and communications • 24VDC • 2.5A SITOP Power, Class 2
WLSITOP1	• Power supply for trip unit and communications • 24VDC • 3.8A SITOP Power, Class 2
WLCM15M	• COM15 PROFIBUS Communication Module
WLCM15RET	• COM15 PROFIBUS Communication Module with BSS
WLCM16MD	• COM16 Modbus Communication Module
WLCM16RET	• COM16 Modbus Communication Module with BSS
WLCOM35	• COM35 Modbus TCP Communication Module
WLCOM35RET	• COM35 Modbus TCP Communication Module with BSS

Contents

Dry Type Transformers
Amperage Rating Reference Tables 7-2
Catalogue coding system 7-3
NRCAN Rated General Purpose Transformers
Commercial Dry Type Transformers
Aluminium Winding 7-4
Copper Winding 7-5
Industrial Dry Type Transformers
Aluminium Winding 7-6 – 7-7
Copper Winding 7-8 – 7-9
K Rated Industrial Dry Type Transformers
Aluminium Winding 7-10
Copper Winding 7-11
Wiring Diagrams 7-12 – 7-13
Enclosure Figures 7-14 – 7-16

Single Phase Transformer Amperage Ratings

Line Voltage (Volts)						
kVA	**120**	**240**	**480**	**600**	**2400**	**4160**
3	25.0	12.5	6.25	5.00	1.25	0.72
5	41.7	20.8	10.4	8.33	2.08	1.20
7.5	62.5	31.3	15.6	12.5	31.3	1.80
10	83.3	41.7	20.8	16.7	4.17	2.40
15	125	62.5	31.3	25.0	6.25	3.61
25	208	104	52.1	41.7	10.4	6.01
37.5	313	156	78.1	62.5	15.6	9.01
50	417	208	104	83.3	20.8	12.0
75	625	313	156	125	31.3	18.0
100	833	417	208	167	41.7	24.0
150	1250	625	313	250	62.5	36.1
200	1667	833	417	333	83.3	48.1
250	2083	1042	521	417	104	60.1
333	2775	1388	694	555	139	80.0

Three Phase Transformer Amperage Ratings

Line Voltage (Volts)						
kVA	**208**	**240**	**480**	**600**	**2400**	**4160**
6	16.7	14.4	7.22	5.77	1.44	0.83
10	27.8	24.1	12.0	9.62	2.41	1.39
15	41.6	36.1	18.0	14.4	3.61	2.08
30	83.3	72.2	36.1	28.9	7.22	4.16
45	125	108	54.1	43.3	10.8	6.25
50	139	120	60.1	48.1	12.0	6.94
75	208	180	90.2	72.2	18.0	10.4
112.5	312	271	135	108	27.1	15.6
150	416	361	180	144	36.1	20.8
225	625	541	271	217	54.1	31.2
300	833	722	361	289	72.2	41.6
450	1249	1083	541	433	108	62.5
500	1388	1203	601	481	120	69.4
600	1665	1443	722	577	144	83.3
750	2082	1804	902	722	180	104
1000	2776	2406	1203	962	241	139
1500	4164	3608	1804	1443	361	208
2000	5551	4811	2406	1925	481	278

$$\text{kVA (1 phase)} = \frac{\text{volts X amps}}{1000} \qquad \text{kVA (3 phases)} = \frac{\text{1,732 X volts X amps}}{1000}$$

$$\text{Amps} = \frac{\text{kVA (1 phase) X 1000}}{\text{volts}} \qquad \text{Amps} = \frac{\text{kVA (3 phase) X 1000}}{\text{1,732 X volts}}$$

CATALOGUE CODE

T = DRY TYPE
E = EPOXY
D = DRIVE
A = AUTO

PRIMARY VOLTAGE
A = 240 V.
B = 208 V.
C = 380 V.
D = 416 V.
F = 480 V.
G = 600 V.
S = special voltage

kVA RATING

TEMPERATURE RISE
5 = 150° C
1 = 115° C
8 = 80° C

ELECTRO SHIELD
1 = 1x SHEILD
2 = 2x SHIELD
3 = 3x SHIELD
X = NONE

M = Commercial type NrCan
N = Industrial type NrCan
NJ = Industrial type NrCan
E = C802
BLANK = Non-C802

T	3	G	3	0	1	5	0	A	5	V	X	X	E

1 = 1 PHASE
3 = 3 PHASE

SECONDARY VOLTAGE
1 = 120/240 V.
2 = 240Y/139 V.
3 = 208Y/120 V.
4 = 380Y/220 V.
5 = 416Y/240 V.
6 = 480Y/277 V.
7 = 600Y/347V.
0 = special voltage

C = COPPER
A = ALUMINUM

V = NEMA 1 C/W DRIP COVER
D = NEMA 1 C/W DRIP SHIELD
S = NEMA 1 C/W SPRINKLER HOODS
R = NEMA 3R
W = NEMA 4
X = NEMA 4X
O = OPEN TYPE (CORE AND COILS ONLY)

K FACTOR
K = 4
L = 9
M = 13
N = 20
P = 30
Q = 40
R = 50
X = NONE



NRCAN Rated General Purpose Transformers

Commercial Type Aluminum Winding

Features:

- Available transformer sizes are:
  - Single phase: 15 - 250 kVA
  - Three phase: 15 - 450 kVA
- All winding conductors are in aluminum
- Standard impedance at 60 Hz
- Insulation class 220
- Lugs up to 225 kVA
- Wall mounting brackets up to 75 kVA for three phase
- Standard audible sound level (Meets NEMA ST-20 standards)
- CSA certified (LR3902) and UL listed (E112313)
- 150ºC temperature rise
- Enclosure Type: Heavy duty ventilated Type 3R standard
- Enclosure Finish: ANSI 61 Grey, UL50
- Impedance: Typically 3% to 6.5%

150ºC Rise - Primary 600 V or 480 V

Catalogue Number	kVA	Mounting①	Taps②	Figure③	Dimensions						Weight		Wiring Diagram
					Height		Width		Depth				
					in.	mm	in.	mm	in.	mm	lbs	kg	
Single Phase, Secondary 120 / 240 V													
T1*10015A5RXXM	15	W/F	4 X 2.5	2	24	600	22	561	18	457	160	73	WD1
T1*10025A5RXXM	25	W/F	4 X 2.5	3	26	650	25	632	19	483	225	102	WD1
T1*10037A5RXXM	37.5	F	4 X 2.5	4	31	790	26	668	23	584	310	141	WD1
T1*10050A5RXXM	50	F	4 X 2.5	4	31	790	26	668	23	584	370	168	WD1
T1*10075A5RXXM	75	F	4 X 2.5	5	39	993	29	737	27	686	450	205	WD1
T1*10100A5RXXM	100	F	4 X 2.5	5	39	993	29	737	27	686	560	255	WD1
T1*10150A5RXXM	150	F	4 X 2.5	6	48	1219	38	960	30	762	820	373	WD2
T1*10200A5RXXM	200	F	4 X 2.5	6	48	1219	38	960	30	762	1000	455	WD2
T1*10250A5RXXM	250	F	4 X 2.5	7	56	1425	42	1062	36	914	1300	591	WD2
Three Phase, Secondary 208 Y / 120 V													
T3*30015A5RXXM	15	W/F	4 X 2.5	1	18	447	20	511	18	457	165	75	WD3
T3*30030A5RXXM	30	W/F	4 X 2.5	2	24	600	22	561	18	457	285	130	WD3
T3*30045A5RXXM	45	W/F	4 X 2.5	3	26	650	25	635	19	483	345	157	WD3
T3*30075A5RXXM	75	F	4 X 2.5	4	31	993	26	668	23	584	540	245	WD3
T3*30112A5RXXM	112.5	F	4 X 2.5	5	39	993	29	737	27	686	750	341	WD3
T3*30150A5RXXM	150	F	4 X 2.5	5	39	993	29	737	27	686	885	403	WD3
T3*30225A5RXXM	225	F	4 X 2.5	6	49	1229	38	960	30	762	1500	682	WD3
T3*30300A5RXXM	300	F	4 X 2.5	6	49	1229	38	960	30	762	1750	795	WD3
T3G30450A5RXXM	450	F	4 X 2.5	7	56	1422	42	1067	36	914	2400	1091	WD4

* Primary Voltage – F = 480V, G = 600V. See page 7-3 for Catalogue Code Detail.

① W = Wall mount F = Floor mount

② Taps: Single phase: 15-250 kVA - 2 x FCAN, 2 x FCBN
Three phase: 15-450 kVA - 2 x FCAN, 2 x FCBN

③ Please refer to enclosure figures on page 7-23

All weights and dimensions are approximate and subject to change without notice.

NRCAN Rated General Purpose Transformers

Commercial Type Copper Winding

Features:

- Available transformer sizes are:
  - Single phase: 15 - 250 kVA
  - Three phase: 15 - 450 kVA
- All winding conductors are aluminum
- Standard impedance at 60 Hz
- Insulation class 220
- Lugs up to 225 kVA
- Wall mounting brackets up to 75 kVA for three phase
- Standard audible sound level (Meets NEMA ST-20 standards)
- CSA certified (LR3902) and UL listed (E112313)
- 150°C temperature rise
- Enclosure Type: Heavy duty ventilated Type 3R standard
- Enclosure Finish: ANSI 61 Grey, UL50
- Impedance: Typically 3% to 6.5%

150°C Rise - Primary 600 V or 480 V

Catalogue Number	kVA	Mounting①	Taps②	Figure③	Dimensions						Weight		Wiring Diagram
					Height		Width		Depth				
					in.	mm	in.	mm	in.	mm	lbs	kg	
Single Phase, Secondary 120 / 240 V													
T1*10015C5RXXM	15	W/F	4 X 2.5	2	24	600	22	561	18	457	165	75	WD1
T1*10025C5RXXM	25	W/F	4 X 2.5	3	26	650	25	632	19	483	240	109	WD1
T1*10037C5RXXM	37.5	W/F	4 X 2.5	4	31	790	26	668	23	584	340	155	WD1
T1*10050C5RXXM	50	F	4 X 2.5	4	31	790	26	668	23	584	390	177	WD1
T1*10075C5RXXM	75	F	4 X 2.5	5	39	993	29	737	27	686	540	245	WD1
T1*10100C5RXXM	100	F	4 X 2.5	5	39	993	29	737	27	686	650	295	WD1
T1*10150C5RXXM	150	F	4 X 2.5	6	48	1219	38	960	30	762	960	436	WD2
T1*10200C5RXXM	200	F	4 X 2.5	6	48	1219	38	960	30	762	1080	491	WD2
T1*10250C5RXXM	250	F	4 X 2.5	7	56	1425	42	1062	36	914	1440	655	WD2
Three Phase, Seconday 208 Y / 120 V													
T3*30015C5RXXM	15	W/F	4 X 4.5	1	18	447	20	511	18	457	185	84	WD3
T3*30030C5RXXM	30	W/F	4 X 2.5	2	24	600	22	561	18	457	300	136	WD3
T3*30045C5RXXM	45	W/F	4 X 2.5	3	26	650	25	635	19	483	390	177	WD3
T3*30075C5RXXM	75	W/F	4 X 2.5	4	31	993	26	668	23	584	635	289	WD3
T3*30112C5RXXM	112.5	F	4 X 2.5	5	39	993	29	737	27	686	815	370	WD3
T3*30150C5RXXM	150	F	4 X 2.5	5	39	993	29	737	27	686	980	445	WD3
T3*30225C5RXXM	225	F	4 X 2.5	6	48	1229	38	960	30	762	1600	727	WD3
T3*30300C5RXXM	300	F	4 X 2.5	6	48	1229	38	960	30	762	1850	841	WD3
T3*30450C5RXXM	450	F	4 X 2.5	7	56	1422	42	1067	36	914	3000	1364	WD4

* Primary Voltage – F = 480V, G = 600V. See page 7-3 for Catalogue Code Detail.

① W = Wall mount F = Floor mount
② Taps: Single phase: 15-250 kVA - 2 x FCAN, 2 x FCBN
Three phase: 15-450 kVA - 2 x FCAN, 2 x FCBN
③ Please refer to enclosure figures on page 7-21 and 7-22

All weights and dimensions are approximate and subject to change without notice.

NRCAN Rated General Purpose Transformers

Industrial Type Aluminum Winding

Features:

- 15 - 250 kVA single phase
  15 - 450 kVA three phase
- Aluminum winding -
  (standard 3 coil delta-wye three phase)
- High quality grain-oriented steel laminations
- Insulation class 220
- Compact and easy-to-install enclosure
- Quiet operation and adequate ventilation
- Epoxy Vacuum Impregnated (EVI)
- Manufactured to ISO standards upon request

Options and Accessories:

- Electrostatic shield
- Special paint (other than ASA 61 grey)
- 115°C and 80°C temperature rise
- Operating frequencies other than 60 Hertz
- Special voltage (for domestic or export applications)
- Low loss and low noise special designs
- Anti-vibration pads
- Temperature probes
- Busbar to your specifications

150°C Rise - Primary 600 V or 480 V

Catalogue Number	kVA	Montage①	Prises②	Dimensions								Noise level (dB)
				Height		Width		Depth		Weight		
				in.	mm	in.	mm	in.	mm	lbs	kg	
Single Phase. Secondary 120 / 240 V												
T1*10015A5RXXN	15	W/F	4 X 2.5	30	762	18	457	14	349	169	77	50
T1*10025A5RXXN	25.	W/F	4 X 2.5	33	838	21	533	16	400	227	103	50
T1*10037A5RXXN	37.5	W/F	4 X 2.5	33	838	21	533	16	400	277	126	50
T1*10050A5RXXN	50.	W/F	4 X 2.5	33	838	21	533	16	400	350	159	50
T1*10075A5RXXN	75	F	4 X 2.5	47	1194	24	616	23	583	486	221	55
T1*10100A5RXXN	100.	F	4 X 2.5	47	1194	24	616	23	583	572	260	55
T1*10150A5RXXN	150	F	4 X 2.5	51	1 295	28	718	27	685	814	370	60
T1*10200A5RXXN	200	F	4 X 2.5	58	1 473	32	820	30	761	1 109	504	65
T1*10250A5RXXN	250	F	4 X 2.5	58	1 473	32	820	30	761	1 265	575	65
Three Phase. Secondary 208 Y / 120 V												
T3*30015A5RXXN	15	W/F	4 X 2.5	26	660	18	464	15	375	207	94	45
T3*30030A5RXXN	30.	W/F	4 X 2.5	31	775	23	578	18	451	335	152	45
T3*30045A5RXXN	45.	W/F	4 X 2.5	31	775	23	578	18	451	381	173	45
T3*30075A5RXXN	75.	F	4 X 2.5	31	775	23	578	18	451	396	180	50
T3*30112A5RXXN	112.5	F	4 X 2.5	37	940	28	705	22	552	596	270	50
T3*30150A5RXXN	150.	F	4 X 2.5	37	940	28	705	22	552	734	333	50
T3*30225A5RXXN	225	F	4 X 2.5	46	1 168	31	787	24	616	1 092	495	55
T3*30300A5RXXN	300	F	4 X 2.5	53	1 346	37	927	29	724	1 635	742	55
T3*30450A5RXXN	450	F	4 X 2.5	53	1 346	37	927	29	724	2 176	987	55
T3*30500A5RXXN	500	**CONSULT CUSTOMER SERVICE**										
T3*30600A5RXXN	600											
T3*30750A5RXXN	750											
T3*31000A5RXXN	1 000											

* Primary Voltage – F = 480V, G = 600V. See page 7-3 for Catalogue Code Detail.

① W = Wall mount F = Floor mount

② Taps: Single phase: 15-250 kVA - 2 x FCAN, 2 x FCBN
Three phase: 15-1000 kVA - 2 x FCAN, 2 x FCBN

All weights and dimensions are approximate and subject to change without notice.

NRCAN Rated General Purpose Transformers

Industrial Type Aluminium Winding

Features:

- Large connection compartment for ease of wiring and installation
- Many sizes in stock and available for immediate shipment
- Quiet operation for installation flexibility
- Seismic certification for all units
- Space-saving design for easy handling and installation
- Termination lugs provided with transformer through 75 kVA
- Wall brackets available for units up to 75kVA
- Vibration isolation pads provide quiet operation
- Staggered front loop taps for easy connection
- CSA certified (163067) and UL listed (E78376)

150°C Rise - Primary 600V or 480V①

Catalogue Number	kVA	Mounting	Enclosure Figure④	Dimensions④ A inch	A mm	B inch	B mm	C inch	C mm	D inch	D mm	E inch	E mm	Weight lbs.
Three Phase, 480V Primary, 208Y / 120 Secondary②														
T3F30015A5RXXNJ	15	W/F	8	22	559	19	483	21	533	16	401	12	305	235
T3F30030A5RXXNJ	30	W/F	8	25	635	22	559	22	559	18	460	13	330	365
T3F30045A5RXXNJ	45	W/F	8	28	711	25	635	23.5	597	20	495	14.5	368	455
T3F30075A5RXXNJ	75	W/F	8	32	813	27	686	26	660	24	597	16	406	735
T3F30112A5RXXNJ	112.5	F	8	38	965	29	737	29	737	26	648	18	457	885
T3F30150A5RXXNJ	150	F	8	42	1067	33	838	32.5	826	30	762	21	533	1140
T3F30225A5RXXNJ	225	F	8	46	1168	35	889	37	940	31	782	25	635	1530
T3F30300A5RXXNJ	300	F	8	52	1321	35	889	37	940	31	782	25	635	1935
Three Phase, 600V Primary, 208Y / 120 Secondary③														
T3G30015A5RXXNJ	15	W/F	8	22	559	19	483	21	533	15.8	401	12	305	215
T3G30030A5RXXNJ	30	W/F	8	25	635	22	559	22	559	18.1	460	13	330	330
T3G30045A5RXXNJ	45	W/F	8	28	711	25	635	23.5	597	19.5	495	14.5	368	455
T3G30075A5RXXNJ	75	W/F	8	32	813	27	686	26	660	23.5	597	16	406	735
T3G30112A5RXXNJ	112.5	F	8	38	965	29	737	29	737	25.5	648	18	457	885
T3G30150A5RXXNJ	150	F	8	42	1067	33	838	32.5	826	30	762	21	533	1140
T3G30225A5RXXNJ	225	F	8	46	1168	35	889	37	940	30.8	782	25	635	1530
T3G30300A5RXXNJ	300	F	8	52	1321	35	889	37	940	30.8	782	25	635	1935

① Taps: 480v primary: FCAN 2@2.5%, FCBN 4@2.5%
600v primary: FCAN 2@2.5%, FCBN 4@2.5%
② See wiring diagram WD6 (page 7-20)
③ See wiring diagram WD5 (page 7-20)
④ Please refer to enclosure figure on page 7-23 (Fig. 8)

NRCAN Rated General Purpose Transformers

Industrial Type Copper Winding

Features:

- 15-250 kVA single phase
  15-300 kVA three phase
- Copper winding
  (standard 3 coil delta-wye three phase)
- High quality grain-oriented steel laminations
- Insulation class 220
- Compact and easy-to-install enclosure
- Quiet operation and adequate ventilation
- Manufactured to ISO standard upon request
- Epoxy Vacuum Impregnated (EVI)

Options and Accessories:

- Electrostatic shield
- Special paint (other than ASA 61 grey)
- 115°C and 80°C temperature rise
- Operating frequencies other than 60 Hertz
- Special voltage (for domestic or export applications)
- Low loss and low noise special designs
- Anti-vibration pads
- Temperature probes
- Busbar to your specifications

150°C Rise - Primary 600 V or 480 V

Catalogue Number	kVA	Mounting①	Taps②	Dimensions						Weight		Noise level (dB)
				Height		Width		Depth				
				in.	mm	in.	mm	in.	mm	lbs	kg	
Single Phase, Secondary 120 / 240 V												
T1*10015C5RXXN	15	W/F	4 X 2.5	30	762	18	457	14	349	185	84	50
T1*10025C5RXXN	25	W/F	4 X 2.5	30	762	18	457	14	349	227	103	50
T1*10037C5RXXN	37.5	F	4 X 2.5	33	838	21	533	16	400	321	146	50
T1*10050C5RXXN	50	F	4 X 2.5	33	838	21	533	16	400	352	160	50
T1*10075C5RXXN	75	F	4 X 2.5	33	838	21	533	16	400	453	206	55
T1*10100C5RXXN	100	F	4 X 2.5	47	1194	25	616	23	583	631	287	55
T1*10150C5RXXN	150	F	4 X 2.5	51	1295	28	718	27	685	805	366	60
T1*10200C5RXXN	200	F	4 X 2.5	51	1295	28	718	27	685	1043	474	65
T1*10250C5RXXN	250	F	4 X 2.5	58	1473	32	820	30	761	1342	610	65
Three Phase, Seconday 208 Y / 120 V												
T3*30015C5RXXN	15	W/F	4 X 2.5	26	660	18	464	15	375	214	97	45
T3*30030C5RXXN	30	W/F	4 X 2.5	31	775	23	578	18	451	341	155	45
T3*30045C5RXXN	45	W/F	4 X 2.5	31	775	23	578	18	451	407	185	45
T3*30050C5RXXN	50	W/F	4 X 2.5	31	775	23	578	18	451	441	200	45
T3*30075C5RXXN	75	W/F	4 X 2.5	37	940	28	705	22	552	674	306	50
T3*30112C5RXXN	112.5	F	4 X 2.5	37	940	28	705	22	552	978	398	50
T3*30150C5RXXN	150	F	4 X 2.5	46	1168	31	787	24	616	1069	485	50
T3*30225C5RXXN	225	F	4 X 2.5	53	1346	37	927	29	724	1533	695	55
T3*30300C5RXXN	300	F	4 X 2.5	53	1346	37	927	29	724	1843	836	55

* Primary Voltage – F = 480V, G = 600V. See page 7-3 for Catalogue Code Detail.

① W = Wall mount F = Floor mount

② Taps: Single phase: 15-250 kVA - 2 x FCAN, 2 x FCBN
Three phase: 15-300 kVA - 2 x FCAN, 2 x FCBN

All weights and dimensions are approximate and subject to change without notice.

NRCAN Rated General Purpose Transformers

Industrial Type Copper Winding

Features:

- Large connection compartment for ease of wiring and installation
- Many sizes in stock and available for immediate shipment
- Quiet operation for installation flexibility
- Seismic certification for all units
- Space-saving design for easy handling and installation
- Termination lugs provided with transformer through 75 kVA
- Wall brackets available for units up to 75 kVA
- Vibration isolation pads provide quiet operation
- Staggered front loop taps for easy connection

150°C Rise - Primary 600V or 480V①

Catalogue Number	kVA	Mounting	Enclosure Figure④	Dimensions④ A inch	A mm	B inch	B mm	C inch	C mm	D inch	D mm	E inch	E mm	Weight lbs.
Three Phase, 480V Primary, 208 Y / 120 Secondary②														
T3F30015C5RXXNJ	15	W/F	8	22	559	19	483	21	533	16	401	12	305	235
T3F30030C5RXXNJ	30	W/F	8	25	635	22	559	22	559	18	460	13	330	365
T3F30045C5RXXNJ	45	W/F	8	28	711	25	635	23.5	597	20	495	14.5	368	455
T3F30075C5RXXNJ	75	W/F	8	32	813	27	686	26	660	23.5	597	16	406	735
T3F30112C5RXXNJ	112.5	F	8	38	965	29	737	29	737	26	648	18	457	885
T3F30150C5RXXNJ	150	F	8	42	1067	33	838	32.5	826	30	762	21	533	1140
T3F30225C5RXXNJ	225	F	8	46	1168	35	889	37	940	31	782	25	635	1530
T3F30300C5RXXNJ	300	F	8	52	1321	35	889	37	940	31	782	25	635	1935
Three Phase, 600V Primary, 208 Y / 120 Secondary③														
T3G30015C5RXXNJ	15	W/F	8	22	559	19	482.6	21	533	16	401	12	305	235
T3G30030C5RXXNJ	30	W/F	8	25	635	22	558.8	22	559	18	460	13	330	365
T3G30045C5RXXNJ	45	W/F	8	28	711	25	635	23.5	597	20	495	14.5	368	455
T3G30075C5RXXNJ	75	F	8	32	813	27	685.8	26	660	23.5	597	16	406	735
T3G30112C5RXXNJ	112.5	F	8	38	965	29	736.6	29	737	26	648	18	457	885
T3G30150C5RXXNJ	150	F	8	42	1067	33	838.2	32.5	826	30	762	21	533	1140
T3G30225C5RXXNJ	225	F	8	46	1168	35	889	37	940	31	782	25	635	1530
T3G30300C5RXXNJ	300	F	8	52	1321	35	889	37	940	31	782	25	635	1935

① Taps: 480v primary: FCAN 2@2.5%, FCBN 4@2.5%
600v primary: FCAN 2@2.5%, FCBN 4@2.5%
② See wiring diagram WD6 (page 7-20)
③ See wiring diagram WD5 (page 7-20)
④ Please refer to enclosure figure on page 7-23 (Fig. 8)

NRCAN Rated General Purpose Transformers

K Rated - Industrial Type Aluminium Winding

Features:

- Large connection compartment for ease of wiring and installation
- Many sizes in stock and available for immediate shipment
- Quiet operation for installation flexibility
- Seismic certification for all units
- Space-saving design for easy handling and installation
- Termination lugs provided with transformer through 75 kVA
- Wall brackets available for units up to 75 kVA
- Vibration isolation pads provide quiet operation
- Staggered front loop taps for easy connection
- CSA certified (163067) and UL listed (E78376)

150°C Rise - Primary 600V①

Catalogue Number	kVA	Mounting	Enclosure Figure	Dimensions④ A inch	A mm	B inch	B mm	C inch	C mm	D inch	D mm	E inch	E mm	Weight lbs.
Three Phase, 208Y / 120 Secondary, K-4 Rated②														
T3G30015A5R1KNJ	15	W/F	8	22	559	19	483	21	533	16	401	12	305	210
T3G30030A5R1KNJ	30	W/F	8	25	635	22	559	22	559	18	460	13	330	310
T3G30045A5R1KNJ	45	W/F	8	28	711	25	635	23.5	597	20	495	14.5	368	400
T3G30075A5R1KNJ	75	F	8	32	813	27	686	26	660	24	597	16	406	585
T3G30112A5R1KNJ	112.5	F	8	38	965	29	737	29	737	26	648	18	457	775
T3G30150A5R1KNJ	150	F	8	42	1067	33	838	32.5	826	30	762	21	533	1000
T3G30225A5R1KNJ	225	F	8	52	1321	35	889	37	940	31	782	25	635	1315
T3G30300A5R1KNJ	300	F	8	60	1524	48	1219	43.5	1105	42	1067	27	686	1660
Three Phase, 208Y / 120 Secondary, K-13 Rated③														
T3G30015A5R1MNJ	15	W/F	8	25	635	22	559	22	559	18	460	13	330	310
T3G30030A5R1MNJ	30	W/F	8	28	711	25	635	23.5	597	20	495	14.5	368	400
T3G30045A5R1MNJ	45	W/F	8	32	813	27	686	26	660	24	597	16	406	585
T3G30075A5R1MNJ	75	F	8	38	965	29	737	29	737	26	648	18	457	775
T3G30112A5R1MNJ	112.5	F	8	42	1067	33	838	32.5	826	30	762	21	533	1000
T3G30150A5R1MNJ	150	F	8	46	1168	35	889	37	940	31	782	25	635	1530
T3G30225A5R1MNJ	225	F	8	52	1321	35	889	37	940	31	782	25	635	1660
T3G30300A5R1MNJ	300	F	8	60	1524	48	1219	43.5	1105	42	1067	27	686	2460

① Taps: 480v primary: FCAN 2@2.5%, FCBN 2@2.5%
600v primary: FCAN 2@2.5%, FCBN 2@2.5%
② See wiring diagram WD5
③ See wiring diagram WD5
④ Please refer to enclosure figure on page 7-23 (Fig. 8)

NRCAN Rated General Purpose Transformers

K Rated - Industrial Type Copper Winding

Features:

- Large connection compartment for ease of wiring and installation
- Many sizes in stock and available for immediate shipment
- Quiet operation for installation flexibility
- Seismic certification for all units
- Space-saving design for easy handling and installation
- Termination lugs provided with transformer through 75 kVA
- Wall brackets available for units up to 75 kVA
- Vibration isolation pads provide quiet operation
- Staggered front loop taps for easy connection
- CSA certified (163067) and UL listed (E78376)

150°C Rise - Primary 600V①

Catalogue Number	kVA	Mounting	Enclosure Figure④	Dimensions④ A inch	A mm	B inch	B mm	C inch	C mm	D inch	D mm	E inch	E mm	Weight lbs.
Three Phase, 208Y / 120 Secondary, K-4 Rated②														
T3G30015C5R1KNJ	15	W/F	8	22	559	19	483	21	533	15.8	401	12	305	235
T3G30030C5R1KNJ	30	W/F	8	25	635	22	559	22	559	18.1	460	13	330	335
T3G30045C5R1KNJ	45	W/F	8	28	711	25	635	23.5	597	19.5	495	14.5	368	400
T3G30075C5R1KNJ	75	F	8	32	813	27	686	26	660	23.5	597	16	406	660
T3G30112C5R1KNJ	112.5	F	8	38	965	29	737	29	737	25.5	648	18	457	885
T3G30150C5R1KNJ	150	F	8	42	1067	33	838	32.5	826	30	762	21	533	1140
T3G30225C5R1KNJ	225	F	8	52	1321	35	889	37	940	30.8	782	25	635	1530
T3G30300C5R1KNJ	300	F	8	60	1524	48	1219	43.5	1105	42	1067	27	686	1935
Three Phase, 208Y / 120 Secondary, K-13 Rated③														
T3G30015C5R1MNJ	15	W/F	8	25	635	22	559	22	559	18	460	13	330	310
T3G30030C5R1MNJ	30	W/F	8	28	711	25	635	23.5	597	20	495	14.5	368	400
T3G30045C5R1MNJ	45	W/F	8	32	813	27	686	26	660	24	597	16	406	585
T3G30075C5R1MNJ	75	F	8	38	965	29	737	29	737	26	648	18	457	775
T3G30112C5R1MNJ	112.5	F	8	42	1067	33	838	32.5	826	30	762	21	533	1000
T3G30150C5R1MNJ	150	F	8	46	1168	35	889	37	940	31	782	25	635	1530
T3G30225C5R1MNJ	225	F	8	52	1321	35	889	37	940	31	782	25	635	1660
T3G30300C5R1MNJ	300	F	8	60	1524	48	1219	43.5	1105	42	1067	27	686	2460

① Taps: 600v primary: FCAN 2@2.5%, FCBN 2@2.5%
② See wiring diagram WD5 (page 7-20)
③ See wiring diagram WD5 (page 7-20)
④ Please refer to enclosure figure on page 7-23 (Fig. 8)

WD1 wiring diagram

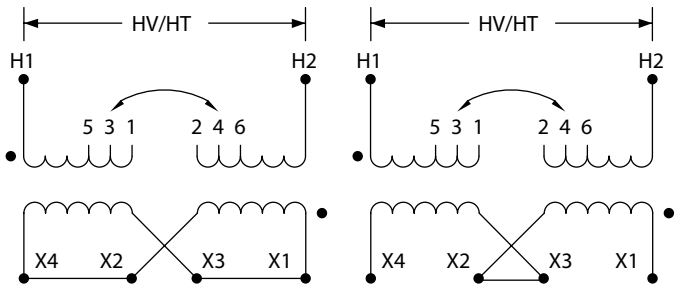

% Voltage	Primary Volts	Connect lines to	Inter-connect
105.0%	504 630	H1, H2	1–2
102.5%	492 615	H1, H2	2–3
100.0%	480 600	H1, H2	3–4
97.5%	468 585	H1, H2	4–5
95.0%	456 570	H1, H2	5–6
	Secondary Volts	**Connect lines to**	**Inter-connect**
	240	X1, X4	X2–X3
	120	X1 & X3, X2 & X4	X2–X4, X1–X3
	120/240	X1, X2, X4	X2–X3

WD2 wiring diagram

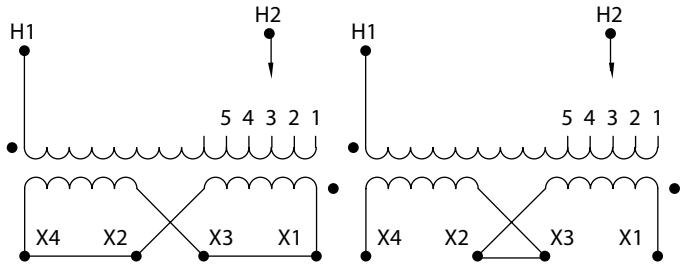

% Voltage	Primary Volts	Connect lines to	Inter-connect
105.0%	504 630	H1, H2	1
102.5%	492 615	H1, H2	2
100.0%	480 600	H1, H2	3
97.5%	468 585	H1, H2	4
95.0%	456 570	H1, H2	5
	Secondary Volts	**Connect lines to**	**Inter-connect**
	240	X1, X4	X2–X3
	120	X1 & X3, X2 & X4	X2–X4, X1–X3
	120/240	X1, X2, X4	X2–X3

WD3 wiring diagram

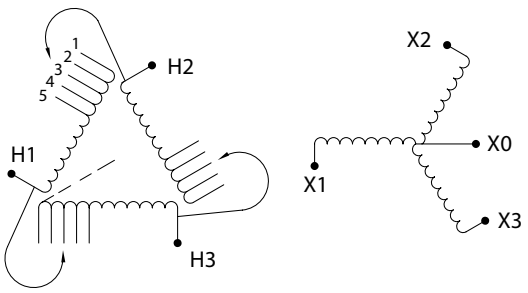

% Voltage	Primary Volts	Connect lines to	Inter-connect
105.0%	504 630	H1, H2, H3	1
102.5%	492 615	H1, H2, H3	2
100.0%	480 600	H1, H2, H3	3
97.5%	468 585	H1, H2, H3	4
95.0%	456 570	H1, H2, H3	5
	Secondary Volts	**Connect lines to**	
	208	X1, X2, X3	
	120	X1,X0 X2,X0 X3, X0	

WD4 wiring diagram

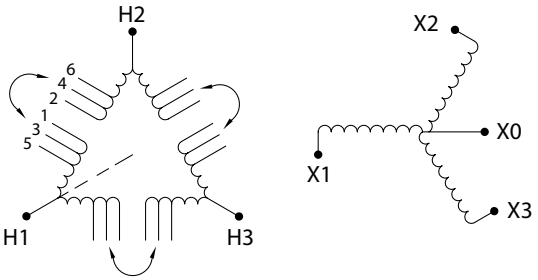

% Voltage	Primary Volts	Connect lines to	Inter-connect
105.0%	630	H1, H2, H3	1–2
102.5%	615	H1, H2, H3	2–3
100.0%	600	H1, H2, H3	3–4
97.5%	585	H1, H2, H3	4–5
95.0%	570	H1, H2, H3	5–6
	Secondary Volts	**Connect lines to**	
	208	X1, X2, X3	
	120	X1,X0 X2,X0 X3, X0	

WD5 wiring diagram

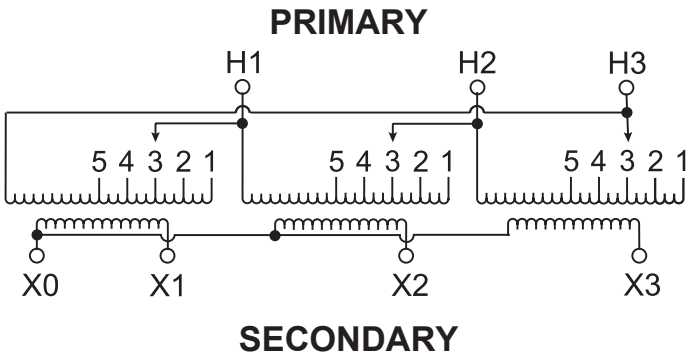

Primary Volts	Connect lines to
630	H1,H2,H3
615	H1,H2,H4
600	H1,H2,H5
585	H1,H2,H6
570	H1,H2,H7
Secondary Volts	**Connect lines to**
208	X1,X2,X3
120	X0 - X1 or X2 or X3

WD6 wiring diagram

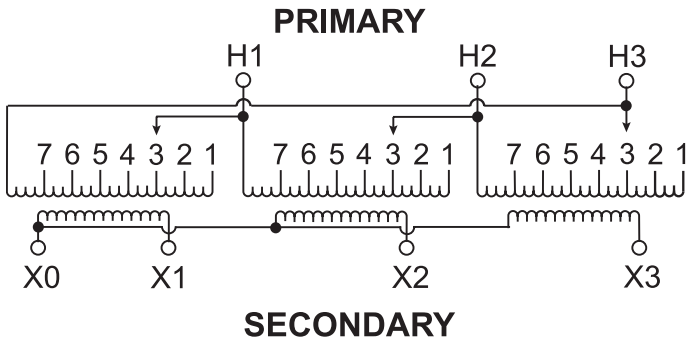

Primary Volts	Connect lines to
504	H1,H2,H3
492	H1,H2,H4
480	H1,H2,H5
468	H1,H2,H6
456	H1,H2,H7
444	H1,H2,H8
432	H1,H2,H9
Secondary Volts	**Connect lines to**
208	X1,X2,X3
120	X0 - X1 or X2 or X3

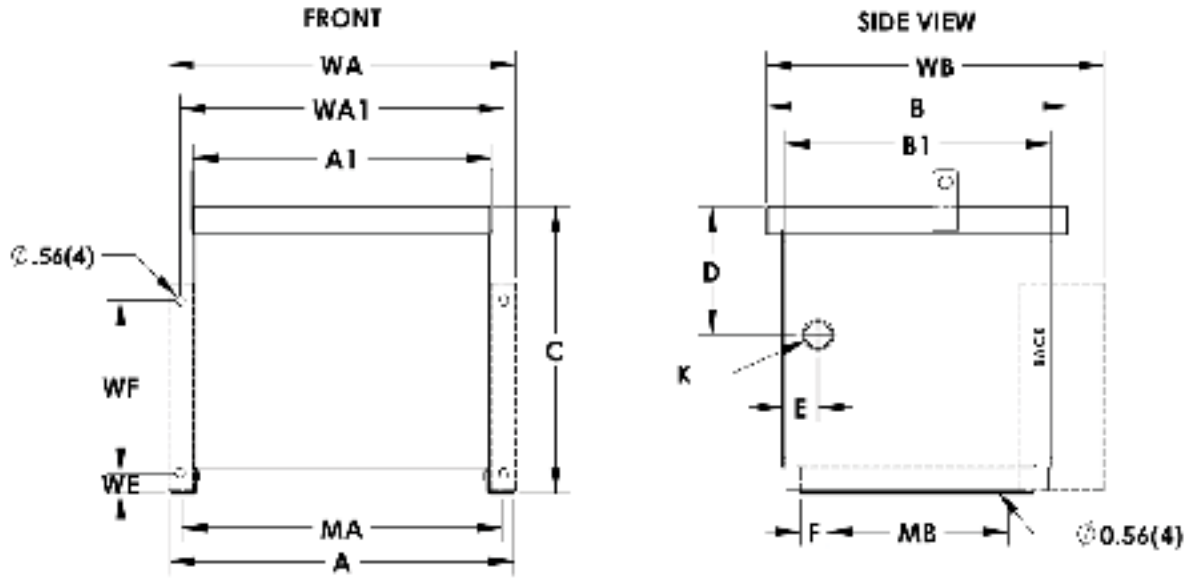

Enclosure	Dimensions in Inches															
	A	A1	B	B1	C	D	E	F	K	MA	MB	WA*	WA1*	WB*	WE*	WF*
FIG1	19.9	17.3	17.5	15.5	17.6	7.4	2.0	1.5	1.75 K.O.	18.5	10.5	20.1	18.7	19.5	2.2	10.0

* Dimensions of enclosure when wall-mounting bracket installed (optional accessory component).

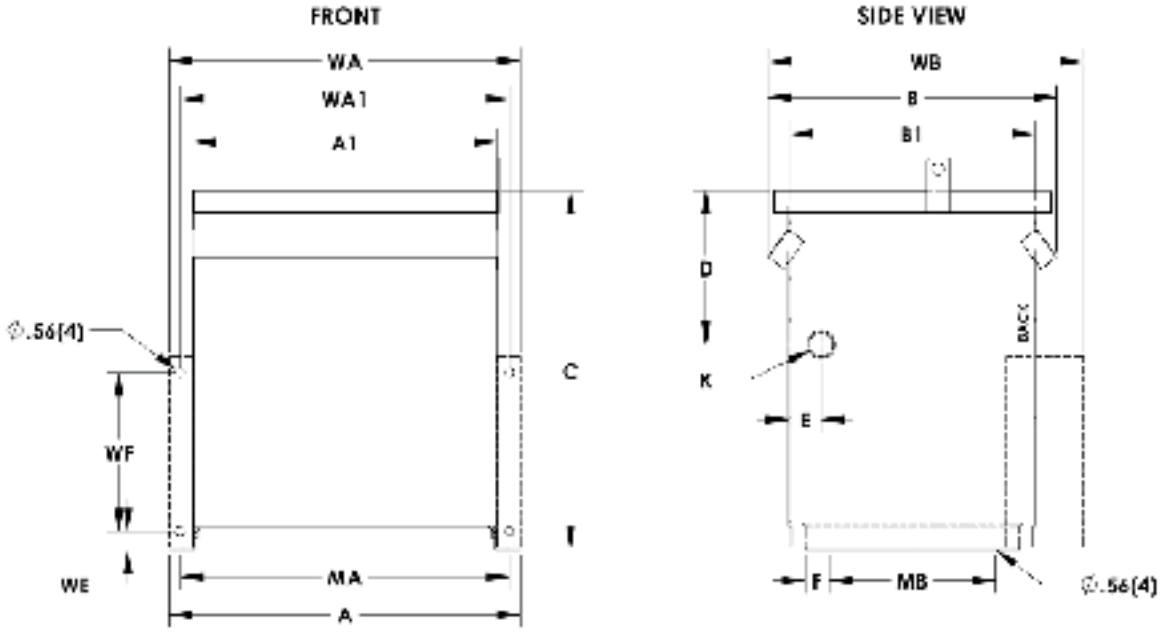

Enclosure	Dimensions in Inches															
	A	A1	B	B1	C	D	E	F	K	MA	MB	WA*	WA1*	WB*	WE*	WF*
FIG2	22.1	19.2	18.2	15.5	23.6	9.7	2.0	1.5	1.75 K.O.	20.8	10.5	22.1	20.8	19.9	2.2	10.0
FIG3	24.9	22.0	19.4	16.5	25.6	12.0	2.0	2.0	1.75 K.O.	23.5	10.5	24.9	23.5	21.0	2.2	10.0

* Dimensions of enclosure when wall-mounting bracket installed (optional accessory component).

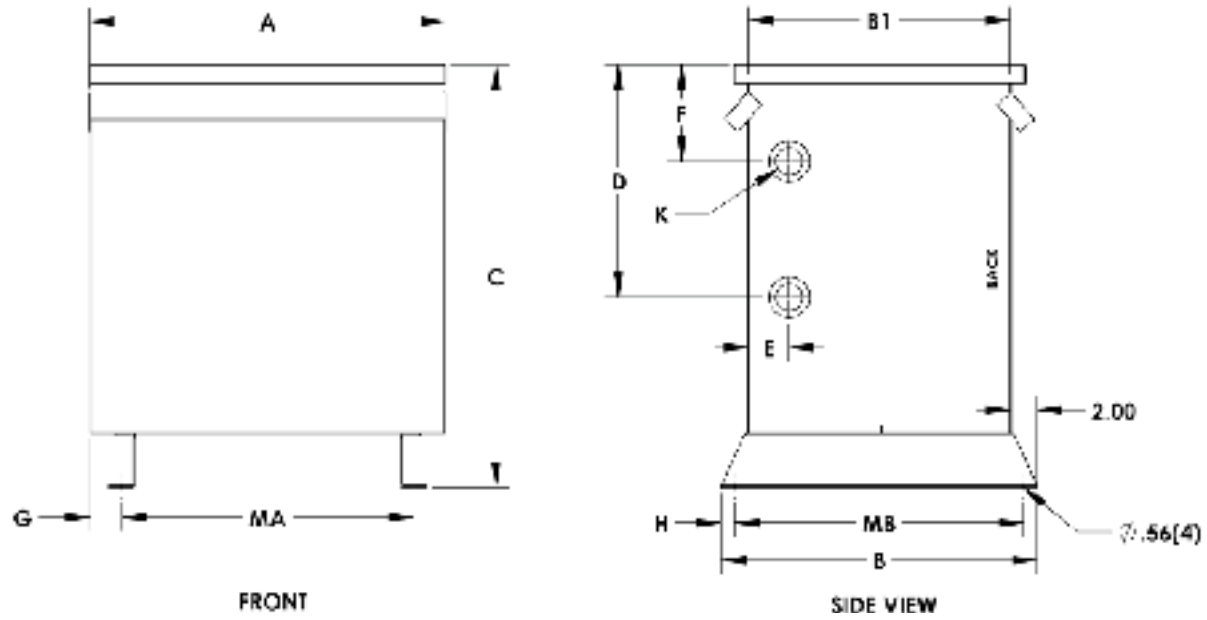

Enclosure	Dimensions in Inches											
	A	B	B1	C	D	E	F	G	H	K	MA	MB
Fig 4	26.3	23.3	19.3	31.1	17.1	3.0	7.1	2.3	1.0	2.0 x 3.0 K.O.	21.5	21.3
Fig 5	29.0	26.5	22.5	39.1	24.1	3.0	14.1	2.7	1.0	2.0 x 3.0 K.O.	23.5	24.5
Fig 6	37.8	30.0	26.0	48.4	33.4	3.0	23.4	6.8	1.0	2.0 x 3.0 K.O.	24.0	28.0

* Dimensions of enclosure when wall-mounting bracket installed (optional accessory component).

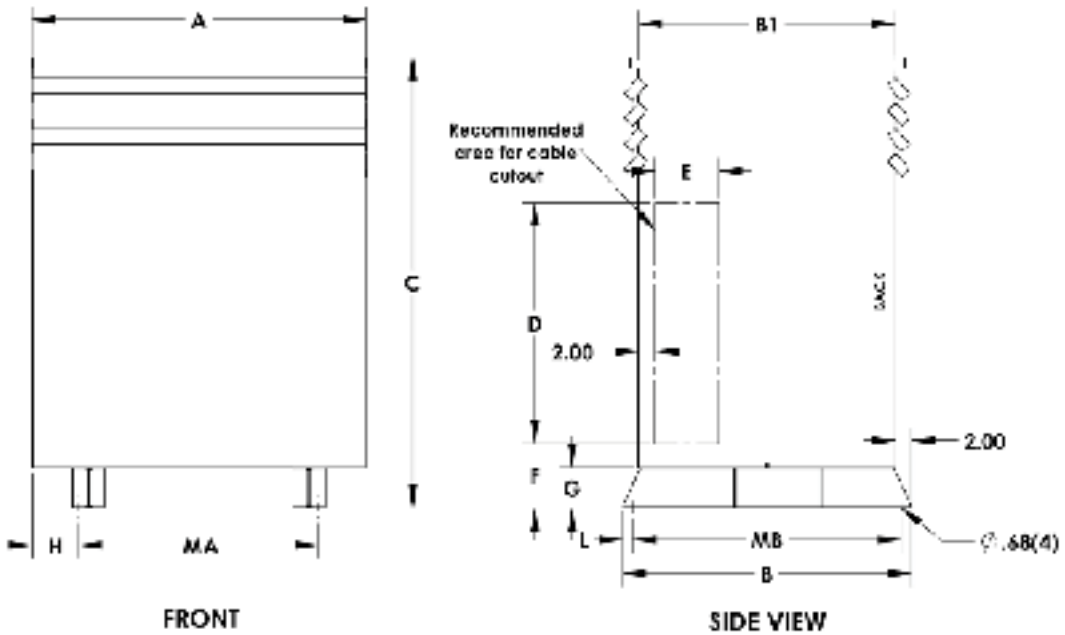

Enclosure	Dimensions in Inches											
	A	B	B1	C	D	E	F	G	H	L	MA	MB
Fig 7	41.8	36.0	32.0	56.1	30.0	8.0	8.0	5.0	5.9	0.8	30.0	34.5

* Dimensions of enclosure when wall-mounting bracket installed (optional accessory component).

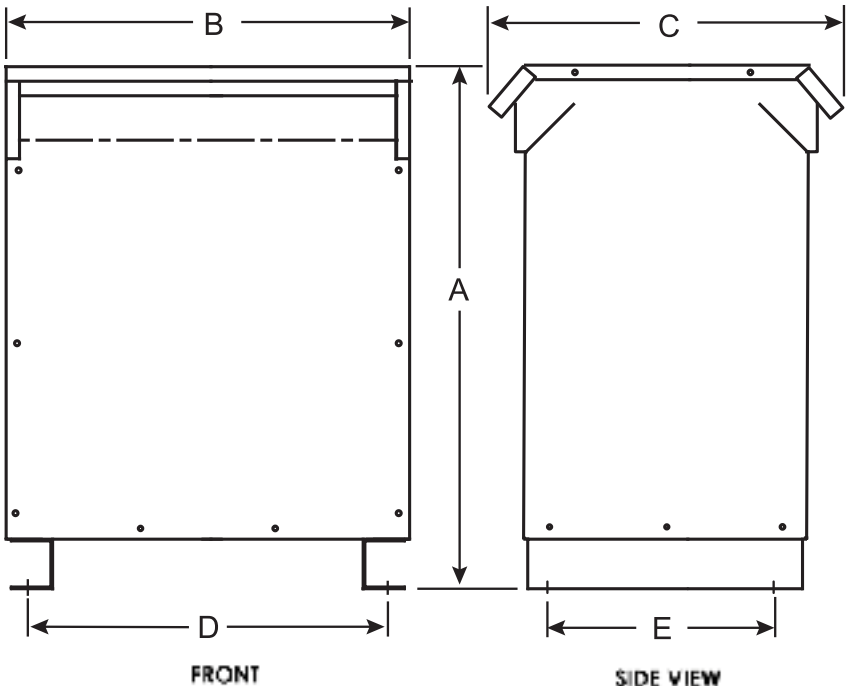

Enclosure	
Fig 8	Enclosure figure 8 applies to all item numbers ending with NJ

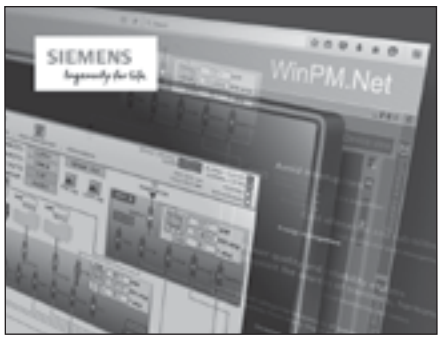

WinPM.Net



Powermanager Software

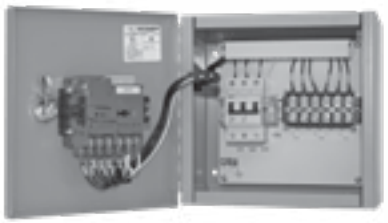

Assembled Meter Enclosure



Power Meters

Contents

Power Distributions Solutions
Power Distributions Solutions Introduction
Power Monitoring Systems Overview 8-2
Intelligent Metering and Control Devices 8-3
Power Meters
PAC2200 8-4
PAC3120 8-5
PAC3200T 8-6
PAC3220 8-7
PAC4200 8-8
9410 8-9
9810 8-10
Enclosed Meters 8-12
Branch Circuit Monitoring /SEM3 Embedded Metering 8-17
Enclosures for External Applications 8-21
MD Meter – BACnet MSTP/IP standalone meter 8-23
Low-voltage Current Transformers 8-24
Thermal Monitoring Solution
SEM3T 8-26
Energy Management Software
Powermanager Software 8-32
WinPM.Net Software 8-33
Application Engineering
Digitalization for Smart Infrastructure 8-34
Services 8-35

Siemens recognizes that high performance facilities make for high performance business. Energy is the lifeline of your business, and better efficiency and sustainability can have a large positive impact on your bottom line.

Energy Management and Control Systems from Siemens are complete enterprise solutions that help you manage the energy costs and availability of your business. With our advanced meters and controls, you can be sure to use only the energy you need, when you need it.

Siemens Power Distribution Solutions contribute toward achieving LEED® certification and provides the needed energy metering data for federal/local government energy reductions programs.

Features and Benefits of Siemens Power Distribution Solutions:

- Power Quality Reliability & Analysis
- Utilities Cost Allocation & Billing
- Utilities Usage Aggregation
- Load Preservation
- Equipment Monitoring
- Facility Monitoring & Automation
- Sequence of Event Recording
- Preventative Maintenance
- Electrical Asset Management

Additional Products/Services

- Branch Circuit Monitoring
- Sub-Billing and Cost Allocation
- Application Engineering
- Services Agreements
- Network/Communication Components
- Integration with Existing
- SCADA/BAS Systems
- Incorporation of Third Party Devices

Totally Integrated Power

System Overview

General

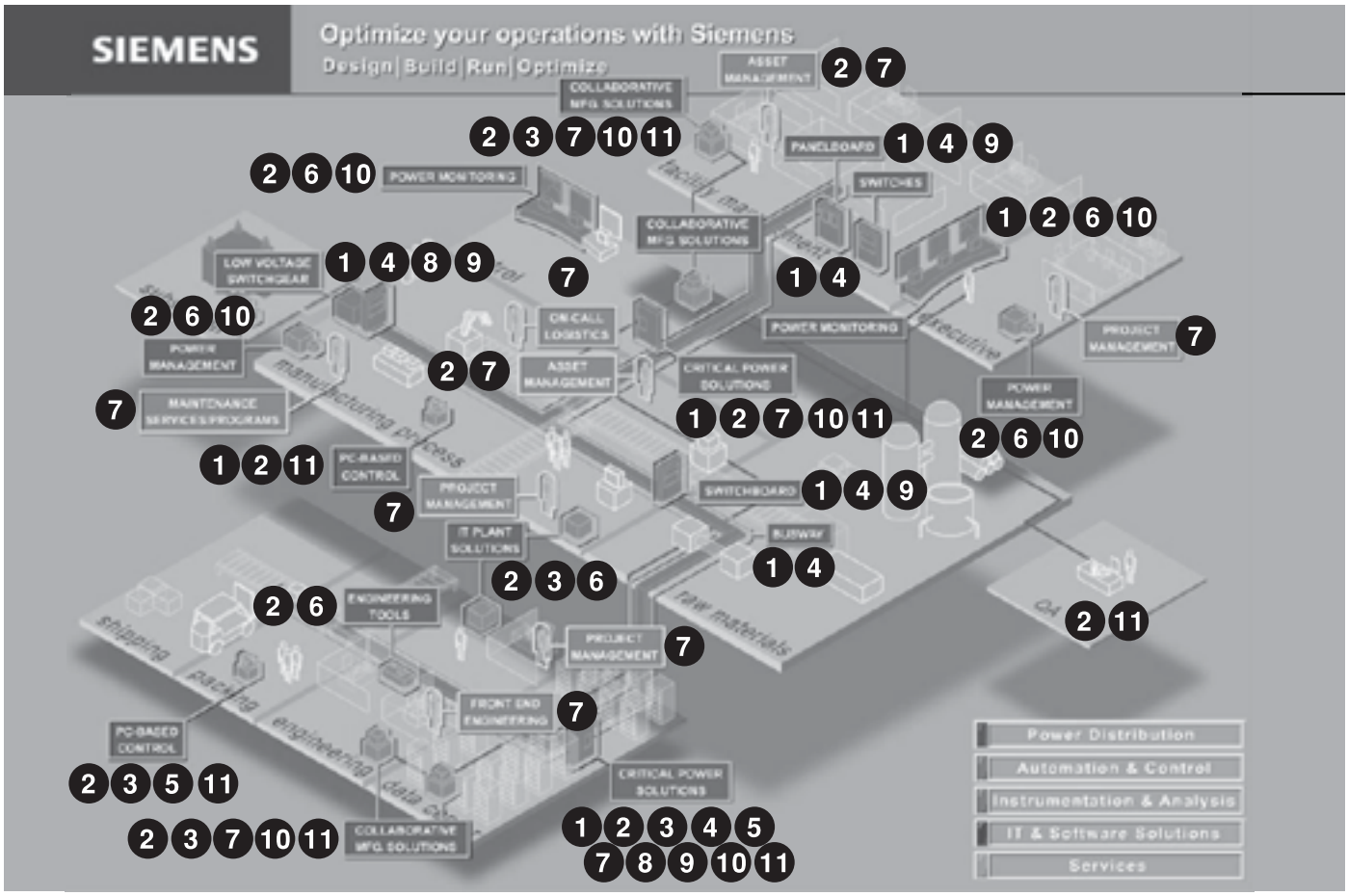

1. Power Meters
Siemens' ACCESS power monitors combine the best of new technologies and proven practices. Monitor critical loads, power quality, and demand via the web directly from the meters.

2. Power Monitoring Software
WinPM.Net web-enabled software facilitates easy, enterprise-wide connection to power monitoring equipment, circuit breakers, and other devices from Siemens and third parties. Access information via the web with unlimited no-cost clients using built-in WebReach™ via your web browser.

3. Communications Networks
Utilize existing Ethernet or RS-485 communications networks to extract the information you need and get it where it needs to go.

4. Components
Current Transformers (CTs), Voltage/Potential Transformers (PTs), Power Supplies, Ethernet Switches, Protocol Converters. Siemens can provide everything required for your system.

5. Intelligent I/O
Our S7 I/O enables plug-n-play communications with Modbus devices and expands digital and analog input and output functionality of ACCESS Systems.

6. Billing and Load Allocation Software
ACCESS Energy Manager is the low-cost, simplified solution for cost allocation, billing & load/demand analysis using your web browser.

7. Engineering Services
PDS Application Engineers can help from design through commissioning of even the most demanding power quality and monitoring systems.

8. Motor Control Centres
Monitor mains and feeders for critical or power-intensive loads. Communicate with breakers (Static Trip III, SBEC), SAMMS, SIMOCODE, I/O and devices from other manufacturers. Use ACCESS power meters to web-enable new as well as existing MCCs.

9. Low & Medium Voltage Switchgear
Web-enable switchgear by having ACCESS monitor power as well as breaker status and upload the information to a corporate Intranet or to the Internet. Use MeterMail™ directly from meters for alarm conditions or simple reporting.

10. Facility Management Systems
Tie into building automation systems to provide the required power and energy information. Lots of communications options are available ranging from legacy protocols to XML directly from the power monitors.

11. Distributed Control Systems, Automation, and SCADA/Human Machine Interface
ACCESS power monitors and/or software can talk to all major vendors' systems.

Intelligent Metering and Control Devices



	PAC2200	PAC3120	MD Meter	SEM3	PAC3200T	PAC3220	PAC4200	9410	9810
Power, Energy and Demand									
Voltage/current: per phase, average	■	■	■	■	■	■	■	■	■
Voltage/current: unbalance	■	■		■	■	■	■	■	■
Power: real(kW), reactive(kVAR), apparent(kVA), power factor, frequency	■	■	■	■	■	■	■	■	■
Energy: bi-directional, import, export	■	■		■	■	■	■	■	■
Energy kWh: total, net	■	■	■	■	■	■	■	■	■
Demand: block, sliding window	■	■	■	■	■	■	■	■	■
Demand: thermal predicted								■	■
Power Quality Analysis									
Sag(Dip)/Swell disturbances monitoring								■	■
Voltage disturbance direction detection								■	■
High speed transient capture									10MHz
Harmonics (individual, even, odd, total) up to		THD only			THD only	THD only	63rd	63rd	63rd
Sampling rate, maximum samples/cycle	135k	135k		60	135k	135k	204	256	1024
Flicker, harmonics to EN50160, IEC 6100-4-7 / 4-15								■	■
Configurable for IEEE 519-2014, SEMI/ITIC									■
Data and Waveform Logs									
Triggered by setpoint, schedule, or external signal								■	■
Sequence-of-event logs or alarm logs, variable log depth				■			■	■	■
Minimum/maximum logs		■			■	■	■	■	■
Onboard Historical logging Memory	③	③		8GB (6 mos.)	③	③	④	320MB	2GB
Email data and event logs				■					
Waveform recording								■	■
Waveform in COMTRADE format with FTP								■	■
GPS time synchronization	NTP/SNTP			NTP	NTP/SNTP	NTP/SNTP	SNTP	NTP/SNTP	NTP/SNTP
Time-stamps, resolution in seconds	±1 sec			1 min	±1 sec	±1 sec	±0.1 sec.	±0.1 msec.	±0.1 msec.
Time synchronization - IEEE1588/IEC615888/PTP								■	■
Communication Ports, Protocols and I/O									
( ) = Optional									
USB ports			1						2 (not activated)
RS-485-only ports	(1)	1	1	1		(1)	(1)	1	2
Ethernet ports	(1)		(1)	1	1	2	1	2 (UTP)	2 (UTP)
PROFIBUS ports						(1)	(1)		
PROFINET ports						(2)	(2)		
Modbus RTU Slave on serial	(■)	■	■	■		(■)	(■)	■	■
Modbus RTU Master on serial ports								■	■
Modbus/TCP on Ethernet ports	(■)		■	■	■	■	■	■	■
ModbusTCP Master over Ethernet								■	■
BACnet MS/TP			■	■					
BACnet IP on Ethernet ports			■	■					
SNMP				■				■	■
DNP 3								■	■
IEC 61850								■	■
DHCP	(■)			■	■	■	■	■ (IP v4/IP v6)	■ (IP v4/IP v6)
RSTP								■	■
Secure protocols (HTTPS, SFTP, SSH, Secure Modbus)								HTTPS	HTTPS
Ethernet Gateway: 31 other meters accessible via RS-485							(■)	■	■
Multiple masters over Ethernet	3		2	4	3	3	3	8	8
On-board web server - Realtime, Trending	(■)			■ (CSV output)	■	■	■	■	■
On-board web server - Waveform display								■	■
Analog inputs						(1)	(1)	(16)	(16)
Analog outputs								(8)	(8)
Digital status/counter inputs (standard/optional add-ons)	1	2		2/(44)	1	2 / (8)	2 / (8)	3 / (24)	8 / (24)
Digital relay outputs (control/pulse)	1	2	1	1	1	2 / (4)	2 / (4)	1 / (8)	4 FA/2RO (8RO)①
Integrated display	B/W	B/W	B/W	Opt. Color		B/W	B/W	Color	Color
Setpoints, Alarming and Control									
Setpoints, minimum response time		■	■	■	■	■	■	½ cycle	½ cycle
Math, logic, trig, log, linearization formulas		and/or, > <		Grouping	and/or, > <	and/or, > <	and/or, > <	■	■
Multi-condition alarms		■			■	■	■	■	■
Email on alarm								■	■
Revenue metering									
ANSI C12.1 accuracy compliant	1.0							■	■
ANSI C12.20		0.5	0.2	0.2	0.5	0.5	0.2	0.2②	0.2
EN50160 Compliance Reporting								■	■ (Ed4)
IEC 61000-4-30 Class A/S								■(Class S Meter)	■(Class A Ed3)
IEC 61577-12 accuracy compliant	1.0	0.5			0.5	0.5			
IEC 62053-22 replaces IEC 60687 0.2S compliant	■	■		■		■	■	■	■ (0.1S)
IEC 62053-23, 24 compliant for Reactive Energy accuracy	■	■				■		■	■ (0.25)
IEC 62586-1 (new Power Quality standard)									■
IEC 60687 accuracy class compliant	■ (1.0)	■ (0.5)		■ (0.2)	■ (0.5)	■ (0.5)	■ (0.2)	■ (0.2)	■ (0.2)
ANSI class 10, IEC 1/10 (1A nominal, 10A max)								■	■
ANSI class 20, IEC 5/20 (5A nominal, 20A max)								■	■
Time-of-use	■	■			■	■	■	■	■

Some Features are optional, Refer to datasheets for allowable port configurations. Products meet or exceed the accuracy requirements of the standards listed; due to form factors, not all ANSI/IEC compliance tests may apply. Some products certified by third party laboratory.

① FA - Form A contact output, RO - Relay output.
② This meter is 0.2S compliant at 5A nominal CT, and 0.5S compliant at 1A nominal CT.
③ Load profile kWh/day for 63 days. kWh/month for 24 months.
④ Load profile kWh/15min values for 40 days.

PAC2200 Power Meter

Reliable and Precise Monitoring of Electrical Power Systems

The **PAC2200** is a powerful compact din rail mounted power monitoring device that is suitable for use in industrial, government and commercial applications where basic metering and energy monitoring is required. The meter may be used as a standalone device monitoring over 50+ parameters or as part of an industrial control, building automation or global power monitoring system. Metering and monitoring applications range from simple analog volt and amp meter replacements to stand-alone cost allocation installations with multiple tariffs.

The PAC2200 provides open communications using Modbus RTU/TCP, and Mbus protocols for easy integration into any local or remote monitoring system. With a built-in web server viewing your data has never been easier. Simple configuration of the meter can be done from the front display or by using a PC with SENTRON powerconfig setup free software available for download from SIEMENS website.

Precision

- ANSI C12.1 Class 1
- Energy Measurement
  - Voltage +/- 0.5%
  - Current +/- 0.5%
  - Power Factor +/- .5%
  - Sampling Rate 135K/per cycle
- Revenue Accurate
  - Cost Allocation
  - MID Certified variant for European customers
- Cost Effective

Energy Management

- Serves three masters via the TCP connection
- Energy Consumption
- Automation Integration
- Solution for LEED® credit
- Monitors Critical Equipment
- Modbus TCP/RTU
- Mbus

Reliability

- Economical Measurement
  - Commercial
  - Industrial
  - Residential
- Degree of Protection
  - Front – IP40
  - Rear – IP20
- 480V Connected Voltage
- Simple Retrofit Installation
- Integration with Existing Systems







Condensed LCD Display to indicate:
- Display title or designation of the displayed measurements
- Phase
- Measured value
- Unit
- Labeling of function keys

Example of operating menu:
The texts can be displayed in several languages, which can be selected directly on the device.① The condensed graphic LCD display facilitates reading even from a distance. For optimum visability even in poor light conditions the PAC2200 comes with a gradually adjustable background illumination.

Order information

Product	Catalogue Number
PAC2220 Modbus RTU, L-L: 400 V, L-N: 230 V, 5 Amp, self-powered, screw terminals	**7KM22002EA301DA1**
PAC2220 Modbus TCP, L-L: 400 V, L-N: 230 V, 5 Amp, strd rail instr, self-powered, screw terminals	**7KM22002EA301EA1**
PAC2220 Modbus RTU, MID Certified, L-L: 400 V, L-N: 230 V, 5 Amp, self-powered, screw terminals	**7KM22002EA301HA1**
PAC2220 Modbus TCP, MID Certified ,L-L: 400 V, L-N: 230 V, 5 Amp, self-powered, screw terminals	**7KM22002EA301JA1**

① Languages included as standard in the meter are English, German, French, Spanish, Italian, Portuguese, Turkish, Russian and Chinese.

PAC3120 Power Meter

Basic Monitoring of Electrical Power Systems

The **PAC3120** is a powerful compact power monitoring device that is suitable for use in industrial, government and commercial applications, where basic metering and energy monitoring is required. The meter may be used as a stand alone device monitoring over 100+ parameters or as part of an industrial control, building automation or global power monitoring system. Metering and monitoring applications range from simple analog volt and amp meter replacements to stand-alone cost allocation installations.

The PAC3120 has many features not usually found in this price class of meters. A large graphical display supports multiple languages and easy to use menus that can be used to set up the meter. The meter also has built in Modbus RTU communications via a RS485 interface. The meter comes standard with two digital inputs and two digital outputs. One output is suitable for pulse output for export/import real and reactive energy. The other output is controllable from an outside source by way of a Modbus register.

Precision

- ANSI C12.20 class 0.5
- Energy Measurement
  - Voltage +/- 0.2%
  - Current +/- 0.2%
  - Power Factor +/- 0.5%
  - Sampling Rate 135k/per cycle
- Revenue Accurate
  - Cost Allocation
- Cost Effective

Energy Management

- Energy Consumption
- Demand Control
- Automation Integration
- Solution for LEED® credit
- Monitors Critical Equipment
- Sub Metering

Reliability

- Economical Measurement
  - Commercial
  - Industrial
  - Residential
- Degree of Protection
  - Front – IP65
  - Rear – IP20
- 480V Connected Voltage
- Simple Retrofit Installation
- Integration with Existing Systems



Full Graphic LCD Display to indicate:
- Display title or designation of the displayed measurements
- Phase
- Measured value
- Unit
- Labeling of function keys





Example of operating menu
With an easy-to-read adjustable back lit LCD display, the PAC3120 can be commissioned in only two steps. After selecting the language and setting two parameters (voltage and current inputs), the meter is ready for use.①

Order information

Product	Catalogue Number
PAC3120 Compression terminals AC/DC	**7KM31200BA011DA0**
PAC3120 Compression terminals DC Only	**7KM31201BA011EA0**
Adapter Plate for 4700/4720 meter cutout	**93-47ADAPTER**
PAC32/4200 Meter DIN Rail adapter – Meter display will not be seen	**7KM9900-0YA00-0AA0**
PAC32/4200 Meter DIN Rail 2-adapter – Meter display will not be seen	**7KM9900-0XA00-0AA0**

① Languages included as standard in the meter are English, German, French, Spanish, Italian, Portuguese, Turkish, Russian and Chinese.

PAC3200T Power Meter

Reliable and Precise Monitoring of Electrical Power Systems

The **PAC3200T** is a powerful compact din rail mounted power monitoring device that is suitable for use in industrial, government and commercial applications where basic metering and energy monitoring is required. The meter may be used as a standalone device monitoring over 100+ parameters or as part of an industrial control, building automation or global power monitoring system. Metering and monitoring applications range from simple analog volt and amp meter replacements to stand-alone cost allocation installations with multiple tariffs.

The PAC3200T provides open communications using Modbus TCP protocol for easy integration into any local or remote monitoring system. With a built-in web server viewing your data has never been easier. Simple configuration of the meter can be done by using a PC with SENTRON powerconfig setup free software available for download from SIEMENS website.

Precision

- ANSI C12.20 Class 0.5s
- Energy Measurement
  - Voltage +/- 0.5%
  - Current +/- 0.5%
  - Power Factor +/- .5%
  - Sampling Rate 135K/per cycle
  - Total Harmonic Distortion (THD)
- Revenue Accurate
  - Cost Allocation
- Cost Effective

Energy Management

- Serves three masters via the TCP connection
- Energy Consumption
- Automation Integration
- Solution for LEED® credit
- Monitors Critical Equipment
- Modbus TCP/RTU

Reliability

- Economical Measurement
  - Commercial
  - Industrial
  - Residential
- Degree of Protection
  - Front – IP40
  - Rear – IP20
- 480V Connected Voltage
- Simple Retrofit Installation
- Integration with Existing Systems



- DIN rail mount
- Modbus TCP/Ethernet Port available on the top right slot
- No Integrated display



Current and Voltage Input wiring screw terminals



Digital Input and Digital Output wiring screw terminals

Order information

Product	Catalogue Number
PAC3200T DIN Rail Mount Power Meter without DISPLAY, AC/DC, Modbus TCP, L-L: 400 V, L-N: 230 V, 5 A, wide-range pwr sup. unit AC/DC, screw terminals	**7KM32000CA011AA0**

① Languages included as standard in the meter are English, German, French, Spanish, Italian, Portuguese, Turkish, Russian and Chinese.

PAC3220 Power Meter

Reliable and Precise Monitoring of Electrical Power Systems

The **PAC3220** is a powerful compact power monitoring device that is suitable for use in industrial, government and commercial applications where basic metering and energy monitoring is required. The meter may be used as a stand alone device monitoring over 100+ parameters or as part of an industrial control, building automation or global power monitoring system. Metering and monitoring applications range from simple analog volt and amp meter replacements to stand-alone cost allocation installations with multiple tariffs.

The PAC3220 provides open communications using Modbus RTU/TCP, PROFIBUS-DP, and PROFINET protocols for easy integration into any local or remote monitoring system. With a built-in web server viewing your data has never been easier. Simple configuration of the meter can be done from the front display or by using a PC with SENTRON powerconfig setup free software available for download from SIEMENS website.

Precision

- ANSI C12.20 Class 0.5s
- Energy Measurement
  - Voltage +/- 0.2%
  - Current +/- .2%
  - Power Factor +/- .5%
  - Sampling Rate 135K/per cycle
  - Total Harmonic Distortion (THD)
- Revenue Accurate
  - Cost Allocation
- Cost Effective

Energy Management

- Serves three masters via the TCP connection
- Energy Consumption
- Automation Integration
- Solution for LEED® credit
- Monitors Critical Equipment
- Modbus TCP/RTU
- Industrial Systems
  - PROFIBUS
  - PROFINET

Reliability

- Economical Measurement
  - Commercial
  - Industrial
  - Residential
- Degree of Protection
  - Front – IP65
  - Rear – IP20
- 600V Connected Voltage
- Simple Retrofit Installation
- Integration with Existing Systems



Full Graphic LCD Display to indicate:
- Display title or designation of the displayed measurements
- Phase
- Measured value
- Unit
- Labeling of function keys



Example of operating menu:
The texts can be displayed in several languages, which can be selected directly on the device.① The large graphic LCD display facilitates reading even from a distance. For optimum visability even in poor light conditions the PAC3220 comes with a gradually adjustable background illumination.



Example of Optional Expansion Module install

Order information

Product	Catalogue Number
PAC3220 compression terminals (not suitable for use with ring tongue terminals), AC/DC	**7KM32200BA011DA0**
PAC3220 compression terminals (not suitable for use with ring tongue terminals), DC only	**7KM32201BA011EA0**
Expansion Module - PAC PROFIBUS DP	**7KM93000AB010AA0**
Expansion Module - PAC PROFINET	**7KM93000AE020AA0**
Expansion Module - PAC MODBUS RTU	**7KM99000XA000AA0**
Expansion Module - I(N), I(Diff), Analog for PAC 3220 or 4200	**7KM92000AD000AA0**
PAC3220/4200 Meter DIN Rail adapter – Meter display will not be seen	**7KM99000YA000AA0**
PAC3220/4200 Meter DIN Rail 2-Tier adapter – Meter display will not be seen	**7KM99000XA000AA0**
Power Supply. Input: 120-230V AC / 110-300V DC Output: 24 V DC 4 Amps. DIN Rail mounted.	**US2:PWRSP4A**
Adapter Plate for 4700/4720 meter cutout	**93-47ADAPTER**

① Languages included as standard in the meter are English, German, French, Spanish, Italian, Portuguese, Turkish, Russian and Chinese.

PAC4200 Power Meter

Reliable and Precise Monitoring of Electrical Power Systems

The **PAC4200** is a feature packed power monitoring device that is suitable for use in industrial, government and commercial applications where basic to advanced metering, logging, and I/O is required. The meter may be used as a stand alone device monitoring over 200 parameters or as part of an industrial control, building automation or global enterprise wide monitoring system.

Advanced power quality monitoring and logging applications range from single low-voltage breaker / building metering to sub-station main feeder monitoring, cost allocation installations with multiple tariffs. Whether your goal is to reduce operation cost, reduce your carbon footprint or to maintain your power assets, the PAC4200 meter should be an important part of your power monitoring system.

The PAC4200 provides open communication using the standard built-in Ethernet Modbus TCP and has the capability of communicating through Optional Modbus RTU, PROFIBUS-DP, and PROFINET protocol modules simultaneously. This allows for easy integration into any local or remote monitoring system. With a built-in web server viewing your data has never been easier. The gateway functionality of this device reduces installation cost by replacing other gateway devices and simplifying wiring.

Precision

- ANSI C12.20 Class .2s
- Energy Measurement
  - Voltage +/- .2%
  - Current +/- .2%
  - Power Factor +/- .5%
  - Sampling Rate 204/per cycle
  - Individual Harmonics up to 63rd
- Power Quality
- Revenue Accurate
  - Cost Allocation
- Cost Effective

Energy Management

- Serves three masters via the TCP connection
- Energy Consumption
- Min/Max and Event Logs
  - Storage Capacity 40 days at 15 min intervals
  - Event Logging 4000 events
- Demand Control
- Automation Integration
- Modbus Gateway
- Modbus TCP/RTU
- Industrial Systems
  - PROFIBUS
  - PROFINET

Reliability

- Monitors Critical Equipment
- Economical Measurement
  - Commercial
  - Industrial
- Degree of Protection
  - Front – IP65
  - Rear – IP20
- 600V Connected Voltage
- Customizable Displays
- Simple Retrofit Installation
- Integration with Existing Systems
- Solution for LEED® credit

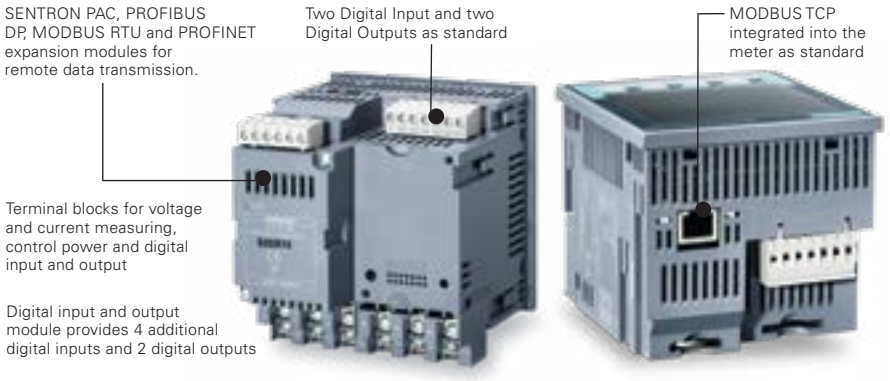

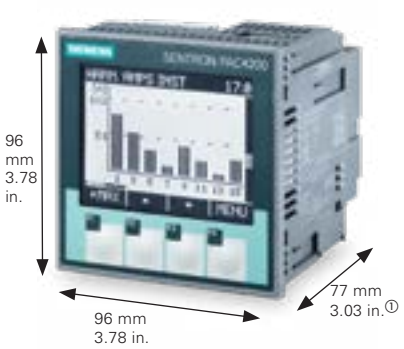

Order information

Product	Catalogue Number
PAC4200 compression terminals (not suitable for use with ring tongue terminals), AC/DC	**7KM42120BA003AA0**
PAC4200 compression terminals (not suitable for use with ring tongue terminals), DC only	**7KM42111BA003AA0**
Expansion Module - PAC PROFIBUS DP	**7KM93000AB010AA0**
Expansion Module - PAC PROFINET	**7KM93000AE020AA0**
Expansion Module - PAC MODBUS RTU	**7KM99000XA000AA0**
Expansion Module - PAC additional I/O	**7KM92000AB000AA0**
Expansion Module - I(N), I(Diff), Analog for PAC 3220 or 4200	**7KM92000AD000AA0**
PAC3220/4200 Meter DIN Rail adapter – Meter display will not be seen	**7KM99000YA000AA0**
PAC3220/4200 Meter DIN Rail 2-Tier adapter – Meter display will not be seen	**7KM99000XA000AA0**
Power Supply. Input: 120-230V AC / 110-300V DC Output: 24 V DC 4 Amps. DIN Rail mounted.	**US2:PWRSP4A**
Adapter Plate for 4700/4720 meter cutout	**93-47ADAPTER**

① 99mm, 3.90 in., with expansion module

9410 Web-Enabled Power Quality & Analysis Meter

Reliable and Precise Monitoring of Electrical Power Systems

The 9410 series meters are ideally suited to local and remote monitoring of low or high-voltage electrical installations in industrial facilities, commercial buildings, utility networks or critical power environments. Facility and operations personnel will benefit in energy-related costs while avoiding power quality conditions that can reduce equipment life and productivity.

The 9410 series meter is easy to install and use, offering integrated or remote high-visibility displays. A range of expansion modules help match features to the application and support field-upgrading of meters as required. Serial and Ethernet communication enable the meter to be used within a WinPM.Net power management system or with third-party management systems.



Precision

- ANSI C12.20 Class 0.2s
  - Energy Measurement
  - Voltage +/- .1%
  - Current +/- .1%
  - Power Factor +/- .5%
  - Sampling Rate 256/ per cycle
  - Individual Harmonics up to 63rd
  - Sags / Swells Detection
  - Programmable Math / Logic Function
- Revenue Accurate
  - Sub Billing
  - Cost Allocation

Energy Management

- Energy Consumption
- 9410 Waveform Capture
- Customizable Webpages
- Min/Max and Event Logs
- Demand Control
- Automation Integration
- Solution for LEED® credit
- Monitors Critical Equipment
- Modbus Gateway
- Modbus TCP/RTU
- Modbus Master
- Industrial Systems
- IEC 61850 Protocol

Reliability

- Economical Measurement
  - Commercial
  - Industrial
- Degree of Protection
  - Front – IP54, UL type 12
  - Rear – IP30
- 600V Connected Voltage
- Customizable Displays
- Email Alarms through Ethernet
- Field Addable Modules
- Simple Retrofit Installation
- Integration with Existing Systems

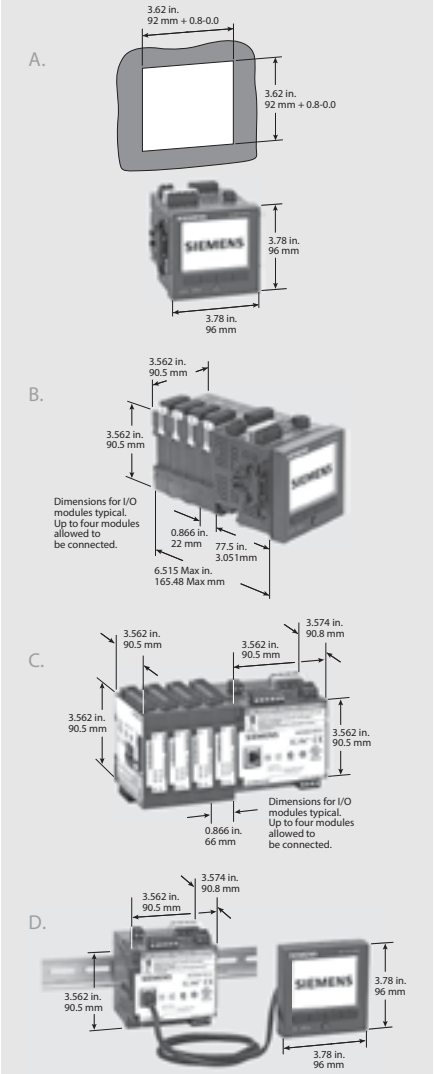

Dimensions:
A. Meter with integrated display panel mount into a square cutout
B. Meter with integrated display with up to (4) I/O module
C. Din Rail mounted meter with up to (4) I/O modules
D. Din Rail Mounted meter with remote display

Order information

Product	Catalogue Number
9410DC measurement Canada approved and sealed	**9410DCANS**
9410DC measurement Canada approved	**9410DCAN**
9410 Panel meter with integrated colour display, 1 DO, 3 DI, dual port Ethernet	**9410DC**
9410 DC Powered Panel meter with integrated color display, 1 DO, 3 DI, dual port Ethernet, 20Vdc-60Vdc PS	**9410D24VDC**
9410 DC Powered DIN transducer meter packaged with remote display (includes 3m cable), 20Vdc-60Vdc PS	**9410R24VDC**
9410 DC Powered Meter without display (DIN rail mount transducer version) with 1 DO, 3 DI, dual port Ethernet, 20Vdc-60Vdc PS	**9410T24VDC**
9410 DIN transducer meter packaged with remote display (includes 3m cable)	**9410RC**
9410 Meter without display (DIN rail mount transducer version) with 1 DO, 3 DI, dual port Ethernet	**9410TC**
Accessories	**Catalogue Number**
9410 Remote colour LCD display, 96 mm x 96 mm, with 3 m cable	**948DISP96**
9410 I/O Module with 2 relay outputs, and 6 digital inputs (wetted)	**948M2DO6DI**
9410 I/O Module, 2 analog outputs (4 - 20 mA, 0- 10 VDC), and 4 analog inputs (4 - 20 mA, 0 - 30 VDC)	**948M2AO4AI**
9410 Voltage and Current Sealing Kit (included with base meter)	**9410SK**
9410 Remote display cable, 10 meters	**948DCAB10**
9410 Remote Display Mounting Adapter kit for 4" round hole - requires 9410RC	**94PMAK**
9410 Replacement hardware kit for 9410 meter	**94PMHWK**
9410 Replacement hardware kit for remote display	**94PMRDHWK**
9410 24Vdc Meter replacement hardware kit for remote display	**94PMHWKDC**

9810 Power Quality Meter and Analysis Meter

Power Quality Meter with Web Server Technology

The Siemens 9810 series high accuracy and advanced power quality meter combines accurate; 3-phase energy and power measurement with data logging, power quality analysis, e-mail, alarming, Modbus mastering, Transient detection, Disturbance Direction Detection (DDD), Pre-Event/Post-Event Waveform capture and extensive I/O capabilities in a highly flexible and modular format. Analysis results are captured in the event log, along with a time-stamp and confidence level indicating level of certainty. The 9810 base meter includes 8 digital inputs capable of providing ±1 millisecond time stamping and 4 digital outputs. The 9810 meters support numerous protocols including Modbus, ION, DNP3, IEC 61850, HTTP, HTTPS, DLMS, FTP, SNMP, SMTP, DPWS, RSTP, PTP, NTP/SNTP, GPS, Syslog, and DHCP protocols.

Fast sampling rates and extensive memory make this the perfect choice for critical power systems making analysis of issues possible for correction and prevention. As a data accumulator, the 9810 meter can also save money and time by simplifying wiring and networking. Information from the meter and downstream devices can be displayed on the large capacitive 7" touch display or smaller 3.5" display, on customizable web pages in reports and screens.

Applications for the 9810 meter range from critical power applications such as data centers to industrial, commercial and government power and power quality monitoring systems. The 9810 meter is offered in a number of forms from single meter enclosures integrated into Siemens switchgear, switchboard and panelboards. Place this high end power quality meter throughout the power distribution system where critical information is desired. Know what is happening in your facility and get maximum efficiency.



Precision

- ANSI C12.20 Class .1s
- Energy Measurement
  - Voltage +/- .1%
  - Current +/- .1%
  - Power Factor +/- .5%
  - 9810 Sampling Rate 1024 samples per cycle
  - 9810 Individual Harmonics up to 63rd
  - Sags / Swells Detection
  - Programmable Math / Logic Function
- Revenue Accurate
  - Cost Allocation

Reliability

- Economical Measurement
  - Commercial
  - Industrial
- 600V Connected Voltage
- Email Alarms
- Customizable Displays
- Password Protected
- Hardware Lockable
- Supports Copper Ethernet
- Integration with Existing Systems

Energy Management

- Energy Consumption
- Waveform Capture
- Transient Capture 17 µs @ 60 Hz
- Disturbance Direction Detection (DDD)
- Customizable Webpages
- Extensive data logging, trending and forecasting
  Non-volatile on-board logging of min/max values, energy and demand, maintenance data, alarms, and any measured parameters. Trending and short-term forecasting of energy, demand, and measured parameters.
- Demand Control
- Automation Integration
- Monitors Critical Equipment
- Modbus Master / Gateway
- Supports Multiple Protocols
- Supports Multiple Master via Ethernet

Din rail mounted meter with 4 I/O modules

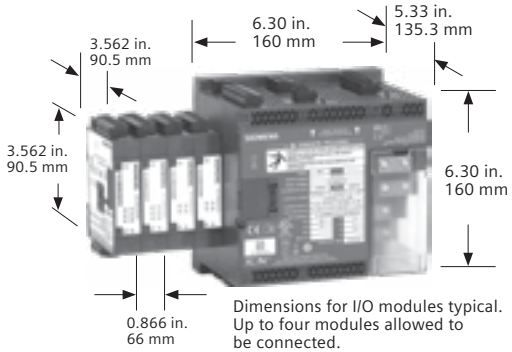

Dimensions for I/O modules typical. Up to four modules allowed to be connected.

Back-to-back adapter used to panel mount display and meter

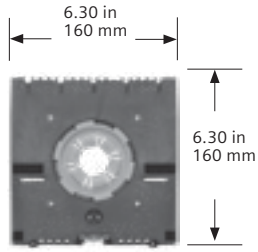

Large 7 in. touchscreen capacitive display

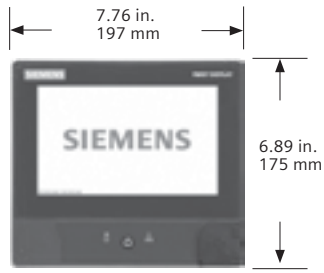

3.5 in. pushbutton display

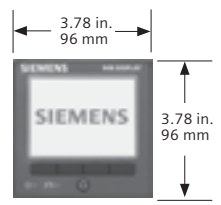

9810 Power Quality Meter and Analysis Meter

Order information

Product	Catalogue Number
9810 with 7" display (either din rail or panel mount)	**9810RC**
9810 without display	**9810TC**
9810RC 24VDC DIN transducer meter packaged with remote display, LVDC power supply (includes B2B adapter and 3m cable)	**9810R24V**
9810TC 24VDC Meter without display, LVDC power suppply	**9810T24V**
9810RC LVCS DIN transducer meter packaged with remote display, LVCS current input (includes B2B adapter and 3m cable)	**9810RCLVCS**
9810TC LVCS Meter without display, LVCS current input	**9810TCLVCS**
9810RC LVSC 24VDC DIN transducer meter packaged with remote display, LVDC power supply, LVCS current input (includes B2B adapter and 3m cable)	**9810RLVCS24V**
9810TC LVSC 24VDC Meter without display, LVDC power supply, LVCS current input	**9810TLVCS24V**
Accessories	**Catalogue Number**
Large 7" display	**9810R7DISP**
Small 3.5" display + 3M cable	**948DISP96**
Remote display cable 10 M	**948DCAB10**
Remote display hardware kit	**9810PMRDHWK**
Expansion Modules	**Catalogue Number**
I/O Module-Digital (6IN/2OUT)	**948M2DO6DI**
I/AI Module-Analog (4IN/2OUT)	**948M2AO4AI**
Miscellaneous	**Catalogue Number**
9810 Hardware Kit	**9810PMHWK**
9810 LVCS Hardware Kit	**9810LVCSHWK**
9810 Back to Back adapter	**9810BBADAPTER**
9810 Current Input Green Connectors Hardware Kit.	**9810CTHWK**
9610/9510/ADR to 9810 mounting adapter	**9810MADAPTER**

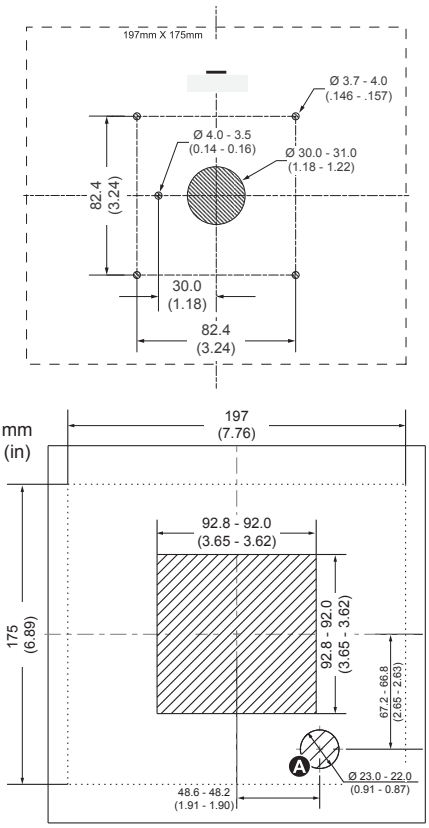

Electrical Characteristics

Measurement accuracy	Current and voltage	Class 0.1 as per IEC 61557-12
	Active power	Class 0.1 as per IEC 61557-12
	Power factor	Class 0.5 as per IEC 61557-12
	Frequency	Class 0.02 as per IEC 61557-12
	Active energy	Class 0.1S IEC 62053-22 (In=5A)
		Class 0.1 IEC 61557-12, ANSI C12.20 Class 0.1
	Reactive energy	Class 0.5S IEC 62053-24
Data update rate		1/2 cycle or 1 second
Input-voltage characteristics	Specified accuracy voltage	57 VLN/100 VLL TO 400 VLN/690 VLL
	Impedance	5MΩ per phase
	Specified accuracy frequency	42 to 69Hz (50/60Hz nominal)
	Limit range of operation -frequency	20 to 450Hz
Input-current characteristics	Rated nominal current	1A (0.1S), 5A (0.1S), 20A (0.1ANSI)
	Specified accuracy current range	Starting Current: 1mA (No Accuracy) Accurate Range: 10mA-20A
	Permissible overload	500A rms for 1s
	Impedance	0.0003Ω per phase
	Burden	0.01 VA max at 5A
Power supply	AC	90-480V AC ±10% (50/60Hz ± 10%), 90-120V AC ±10% (400Hz)
	DC	110-480V DC ±15%
	Ride-through time	100 ms (6 cycles at 60Hz) typical, 120V AC 400 ms (24 cycles at 60Hz) typical, 240V AC 1200 ms (72 cycles at 60Hz) typical, 480V AC
	Burden	Meter Only: 16.5W/38 VA max at 480V AC (50/60 Hz) Fully optioned meter: 40W/80 VA max at 480V AC (50/60 Hz)
Input/outputs	Meter Base Only	Meter Base Only 8 form A digital inputs (30V AC/60V DC) 4 form A (KY) solid state digital output (30V AC/60V, 75mA) 2 form C relay outputs (8 A at 250 V AC/ 5 A at 24 V DC)
	Optional	Digital - 6 form A digital inputs (30V AC/60V DC) 8 A at 250V AC or 5A at 24V DC) Analog - 4 analog inputs (4-20mA, 0-30V DC) +2 analog outputs (4-20mA 0-10V DC)

Mechanical Characteristics

Weight	DIN rail mounted Model 1.5 kg
	IO modules 0.140 kg
	7" Touchscreen display: 0.861 kg
IP degree of protection	3.5" Display: 0.300 kg
	IP 65, UL type 12: Panel mount and touchscreen display, front.
	IP 30: Panel mount rear, DIN rail mount, I/O modules.

Dimensions	Panel mount model: Color remote display (2 options): 197 x 175 x 27.5 mm touch-screen 96 x 96 x 27 mm pushbutton	160 x 160 x 135.3 mm
	DIN model	160 x 160 x 135.3 mm
	IO modules	90.5 x 90.5 x 22 mm
	Touchscreen Display(s)	192 mm and 96 mm

Enclosed Meters

Convenience and Reliability with Siemens Meter Enclosures

For economical and simple monitoring solutions, turn to Siemens metering units. Installed in rugged NEMA enclosures, these metering units are ideal for;

- Property Management Firms
- Malls
- Government Applications
- Food Courts
- Universities
- Building Retrofits
- Corporate Facilities
- High Rise Condos



NEMA 1 Enclosure Metering Solution

The Siemens Meter Enclosure solution is shipped with all the required components pre-installed prior to shipment. The control voltage / voltage taps are wired to a protection device for safety of the meter and wiring and to provide a disconnect from outside power to the meter. Since safety is paramount, the meter CT connections are wired out to shorting blocks and shipped shorted. The enclosure also has a ground lug for equipment grounding. When the control voltage is greater than 240 volts, a CPT is provided between the breaker and the meter.

Siemens will be offering its Enclosed Meter solutions with all of its major Power Meter Options. The following options will be available for selection and application:

Enclosure Types:*
- NEMA 1
- NEMA 3R
- NEMA 12

Power Meter Series:
- PAC Meter Series **
- 9410 Meter Series
- 9810 Meter Series
- SEM3 - Embedded Metering Solution





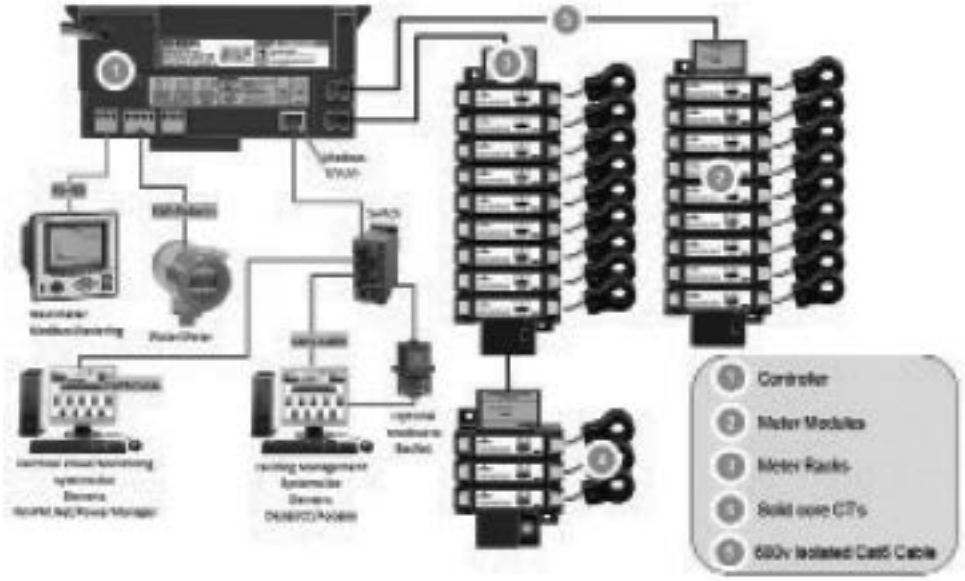



* NEMA 4X Enclosure option is available on special requests.
** Includes PAC 3100, 3200 and 4200

Enclosed Meters

Standard PAC Meter

Catalogue Number

E	N	C	L	X	X	X	X	X	X	X	X	X	X	X

Meter

31	PAC3120 Series Meter ①
32	PAC3220 Series Meter ②
42	PAC4200 Series Meter ②

Voltage

240	240 Volts
480	480 Volts
600	600 Volts

Wiring Configuration

A	3 phase 3 wire
B	3 phase 4 wire

Enclosure Type

01	Type 1
04	Type 4
12	Type 12

Communication

TC	Standard
RT	RTU ③
PD	Profibus ③
PN	Profinet ③
BC	BACNET

Options

X	4DI + 2DO ④

① PAC3100 standard is Modbus RTU
② Only available for PAC3200 and 4200 Meter
③ PAC3200 and 4200 standard is Modbus TCP/IP
④ Only available for PAC4200 Meter

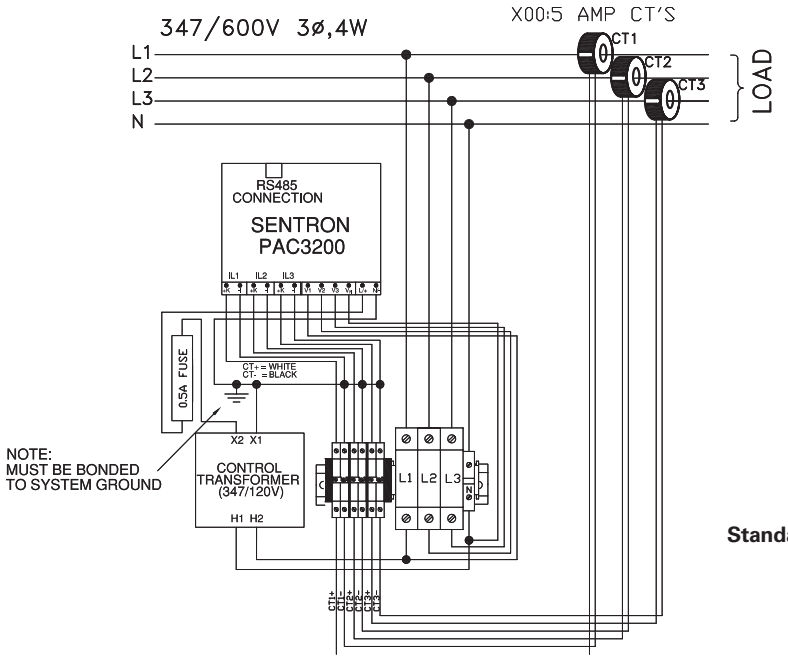

Standard PAC Meter in Enclosure Schematic

Enclosed Meters

Standard 9410 Meter

Catalogue Number

Catalogue No.

E	N	C	L	X	X	X	X	X	X	X	X

Meter

94 9419RC - 9410 meter with remote display

Voltage

240 240 Volts
480 480 Volts
600 600 Volts

Wiring Configuration

A 3 phase 3 wire
B 3 phase 4 wire

Enclosure Type

01 Type 1
04 Type 4
12 Type 12

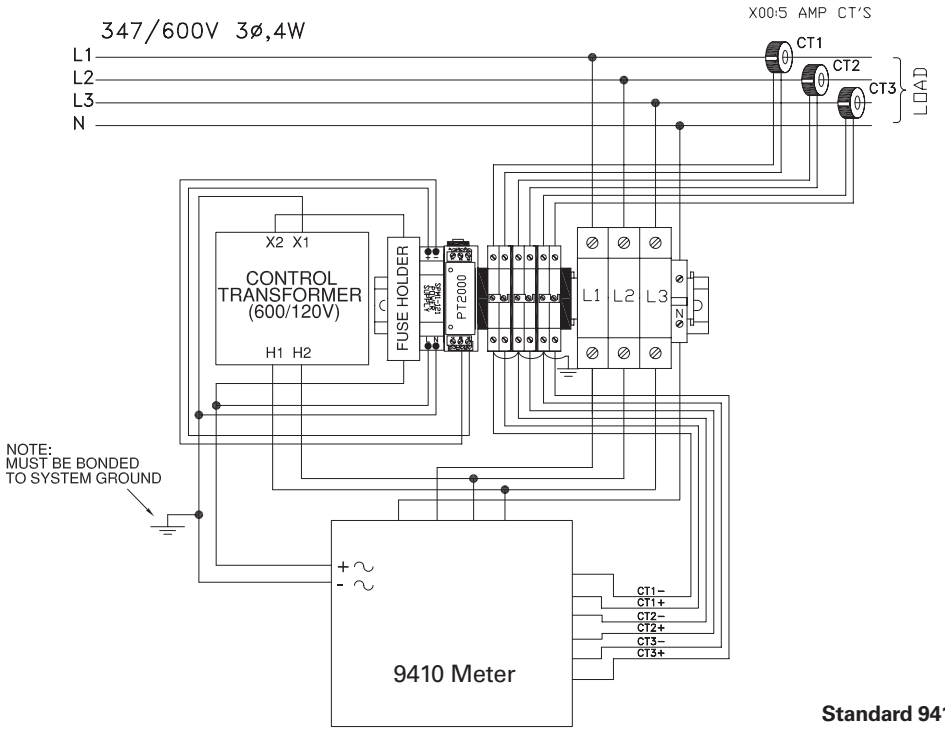

Standard 9410 Meter in Enclosure Schematic

Enclosed Meters

Multiple PAC Series Metering Solutions

With safety being paramount, Siemens has designed the SMU with many safety and convenience features in mind. These include a single circuit breaker for both the control voltage & voltage taps to protect internal wiring and the power meters from damage and allowing a "single source" disconnect from outside power, separate CT shorting blocks for each meter, a grounding lug and either the Modbus serial communications or TCP/IP will be terminated to one location for ease of network installation.

If required, a CPT will be provided for control voltages above 240 volts. This complete SMU solution is delivered ready to install with all the components pre-installed prior to shipment.

The Siemens PAC Series Metering Units (SMU) come completely pre-wired and ready to go with our standard PAC3100 and PAC3200 energy meter. The SMU also has the option of adding the PAC4200 meter as gateway. The SMU's can also be supplied with the more advanced Power Meters if required.

Multiple PAC Series Metering Solutions

- Replace multiple meters with one enclosure and save wall space.
- Improve energy efficiency.
- Aggregate Energy Purchases for reduced rates.
- Improve productivity, eliminate manual meter when coupled with Siemens WinPM.Net or other software through automatic reporting software

Typical SMU Network

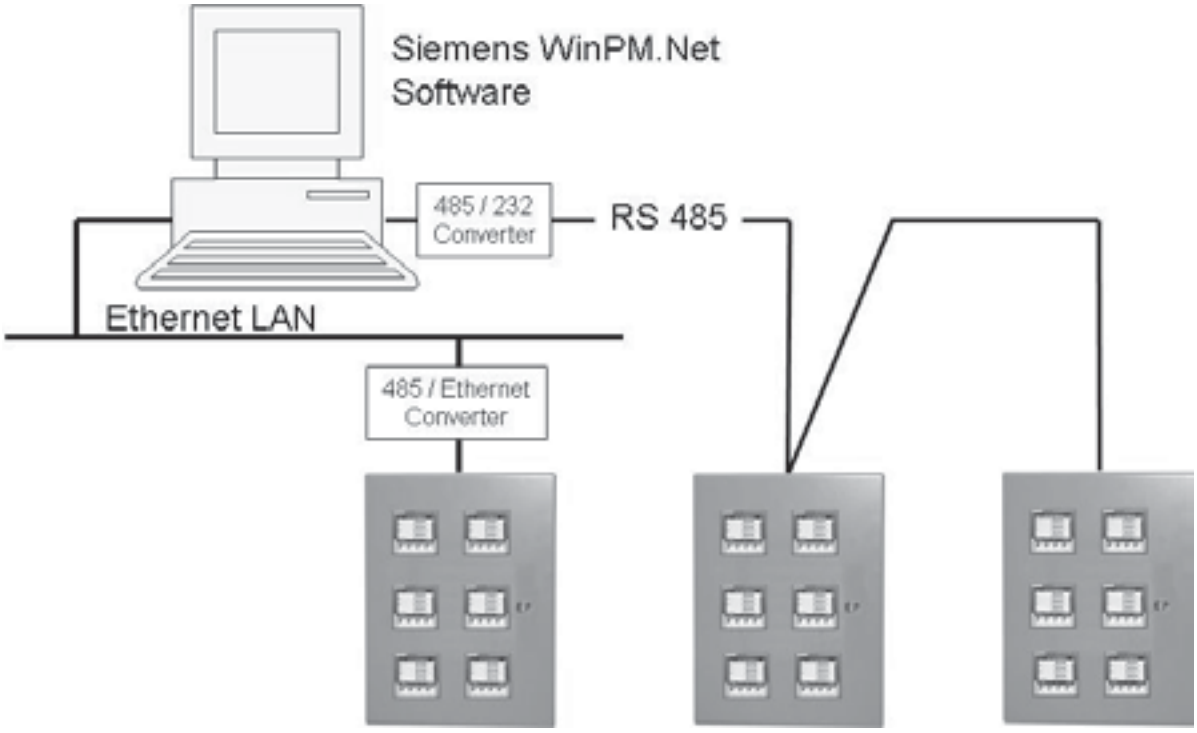

Enclosed Meters

Multiplier Meter in Enclosure

Catalogue Number

E	N	C	L	X	X	X	X	X	X	X	X	X	X	X	X

Meter

31	PAC3120 Series Meter ①
32	PAC3220 Series Meter ②
42	PAC4200 Series Meter ②

Voltage

240	240 Volts
480	480 Volts
600	600 Volts

Wiring Configuration

A	3 phase 3 wire
B	3 phase 4 wire

Panel Size

02	Two Meter Panel
03	Three Meter Panel
04	Four Meter Panel

Installed Meters

02	Two Meters Installed
03	Three Meters Installed
04	Four Meters Installed

Enclosure Type & Module

X	Type 1
B	Type 12
C	Type 4
D	Type 1 Modbus RTU ③
F	Type 12 Modbus RTU ③
G	Type 4 Modbus RTU ③
H	Type 1 Ethernet ④
J	Type 12 Ethernet ④
K	Type 4 Ethernet ④

Communication

TC	Standard
RT	RTU ③
PD	Profibus ③
BC	BACNET

① PAC3100 standard is Modbus RTU
② PAC3200 and 4200 standard is Modbus TCP/IP
③ All Meters will come with Modbus RTU communication.
④ All meter will come with TCP/IP protocol.
PAC3100 meter will have Ethernet converter installed.

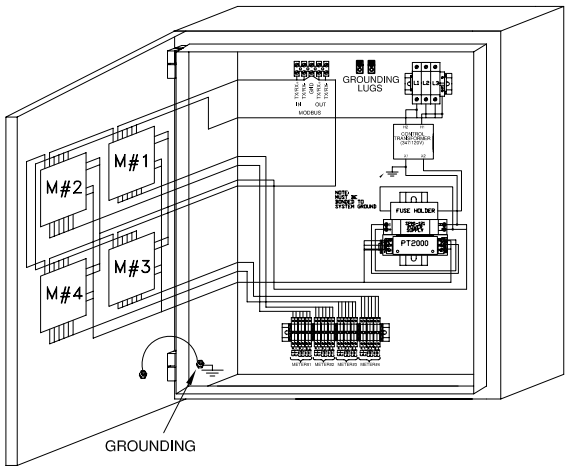

Branch Circuit Monitoring/ SEM3 Embedded Micro Sub Metering

Space Savings, Convenience, and Reliability with Siemens Branch Circuit Monitoring



In a world where tenant square footage is a premium in commercial building designs, the area for electrical metering is being drastically reduced, and critical power is being relied upon in data center applications, Siemens Branch Circuit Monitoring provides the solution.

The Siemens Branch Circuit Monitoring Solution utilizes the metering and monitoring technology integrated into the space saving panelboards from Siemens. When compared to the typical external wall mounted metering installations, considerable savings in space, installation costs, and data collection are realized with the Siemens Branch Circuit Monitoring Solution.

In addition, contractor labour costs for installation of sub-metering systems continues to increase. Still, building owners and property management companies must face the challenges of how to cost effectively provide tenant sub-metering in the constrained spaces.

To meet the sub-metering challenges of designers, contractors and property management companies, Siemens offers a proven cost-effective solution for Branch Circuit Monitoring/Embedded Metering .This solution combines a fully integrated metering system factory installed into the Siemens "P" series panelboards and switchboards, which along with the required local or remote sub-billing software, provides a "Total" sub-metering system.

Siemens Branch Circuit Monitoring / Embedded Metering Solution

- Saves you money – A tenant billing system improves cash flow, allows immediate pass-on of electric rate increases and helps building owners control costs. Tenants are confident they are paying their fair share for energy use and are saving money through energy conservation.
- Fast, low-cost installation – The embedded Siemens solution provides a faster and lower cost installation compared to other external systems.
- Lower space requirements – The embedded panelboard construction design requires no additional wall space to provide tenant metering. Conventional metering requires an external metering enclosure and possibly a current transformer transition cabinet.
- Reliable and accurate – Many Siemens systems are already in operation in large commercial and residential buildings around the country. Their accuracy exceeds utility industry and government standards like EPact 2005 for revenue grade meters.
- LEED certification – Provides the energy monitoring and logging required to achieve additional LEED points.
- Automated billing – With automated billing services the responsibility to acquire the data, store the data and bill the tenants is removed from the property management company, thus saving manpower and time.
- Responsive service – With remote monitoring, continuous 24/7 monitoring can be done by the property management company or tenants. The service can also relay consumption changes to the owners for immediate investigation.

Designer and contractor benefits include:

- Much smaller footprint versus the traditional socket meter combo units
- Factory pre-wired – less installation time
- Drastically less installation wiring
- No CT installation required in the field
- All equipment fits into the standard Siemens panel design
- Additional utilities like water, air and gas can be easily integrated into the system for a comprehensive monitoring system
- Hardwire and wireless communication options
- All components factory calibrated to meet revenue metering requirements
- Additional meters can be added in the field
- UL and CSA-us listed

Branch Circuit Monitoring applications include:

- Mixed Tenant & Retail
- Industrial Manufacturing
- Higher Ed
- Strip Malls
- Critical Power
- Goverment
- LEEDS buildings
- Airports

Please Contact Your Siemens Sales Engineer for additional information regarding Branch Circuit Monitoring / Embedded Metering

Branch Circuit Monitoring/ SEM3 Embedded Micro Sub Metering

Powerful embedded metering at the source of consumption!

The new Siemens Embedded Micro Metering Module (SEM3) is a modular metering solution for energy monitoring, data analysis, and sub billing applications. The flexible design allows for low, medium, and high density metering requirements to be met efficiently and economically using only a few standardized components integrated into Siemens Panelboard and Switchboard products. SEM3 is pre-engineered to integrate into new Siemens Panelboards and Switchboards but has also been designed to be implemented in OEM and retrofit applications as well.

The SEM3 provides an innovative and cost effective metering solution that can be incorporated into existing applications such as power monitoring, building automation, and sub-billing systems. SEM3 also has the flexibility to be installed as a standalone solution with real time data available from the controller's standard built-in web pages. This metering product has two levels of accuracy to meet the market's differing requirements and price points. This versatile system allows you to meter just the loads you need without the excess hardware and space requirements of traditional or competing solutions.



Features & Benefits:

- System designed to meter up to 45 metering points
- Easy retrofit and plug-n-play expansion features
- High metering accuracy up to 0.2%; standard 1.0%
- Installed and configured in SIEMENS engineered Panel boards, Switchboards, and Bus Plugs at SIEMENS Plants. SIEMENS ONE SOLUTION!
- Built-in HTML web pages for easy configuration & real-time data monitoring for Voltage, Current, Power, Energy, Water, and, Gas
- Modbus RTU, Modbus TCP, SNMP, NTP, BACnet IP & MSTP protocols
- Utilizes milliamp CT's reducing hardware and increasing safety
- Solid core CT's for high accuracy and split core CT's for easy retrofit.
- Emailing, Alarming, Trending, Totalizing, Event Logging & Data Logging
- Offline Configuration for improving Field and Factory engineering time
- 4 Language support includes English, German, French, and Spanish

Order Information

Controller	Catalogue Number	
Main Controller	**SEM3CONTROLLER**	
Main Controller – External power supply input 120V/125VDC for powering up the controller. Leads are available for voltage measuring sources. Pulse output feature is not available in this variant.	**SEM3CONT120V**	
Meter Modules		
Meter - Standard Accuracy 1% with Pulse Output	**SEM3PLAMETER**	
Meter - High Accuracy 0.2% with Pulse Output	**SEM3PHAMETER**	
Meter Modules		
Meter Rack 3 Position	**SEM3RACK3**	
Meter Rack 6 Position	**SEM3RACK6**	
Meter Rack 9 Position	**SEM3RACK9**	
Meter Rack 15 Position	**SEM3RACK15**	
Meter Rack 21 Position	**SEM3RACK21**	
Cables		
Controller to Rack Cable - 6 Inch	**SEM3CAB6INCH**	
Controller to Rack Cable - 12 Inch	**SEM3CAB12INCH**	
Controller to Rack Cable - 24 Inch	**SEM3CAB24INCH**	
Controller to Rack Cable - 36 Inch	**SEM3CAB36INCH**	
Controller to Rack Cable - 5 Foot	**SEM3CAB5FT**	
Controller to Rack Cable - 10 Foot	**SEM3CAB10FT**	
Controller to Rack Cable - 20 Foot	**SEM3CAB20FT**	
Solid Core CT's		
Solid Core CT 50:0.1	**SEM3SCCT50**	
Solid Core CT 125:0.1	**SEM3SCCT125**	
Solid Core CT 250:0.1	**SEM3SCCT250**	
Solid Core CT 400:0.1	**SEM3SCCT400**	
Solid Core CT 600:0.1	**SEM3SCCT600**	
Solid Core CT 800:0.1	**SEM3SCCT800**	
Solid Core CT 1200:0.1	**SEM3SCCT1200**	
Solid Core CT 1600:0.1	**SEM3SCCT1600**	
Solid Core CT 2000:0.1	**SEM3SCCT2000**	
Split Core CT's		
Split Core CT 50:0.1	**7KT1280-5MA00**	
Split Core CT 125:0.1	**7KT1280-5MA01**	
Split Core CT 250:0.1	**7KT1280-5MA02**	
Split Core CT 400:0.1	**7KT1280-5MA03**	
Split Core CT 600:0.1	**7KT1280-5MA04**	
Split Core CT 800:0.1	**7KT1280-5MA05**	
Split Core CT 1200:0.1	**7KT1280-5MA06**	
Split Core CT 1600:0.1	**7KT1280-5MA07**	
Split Core CT 2000:0.1	**7KT1280-5MA08**	

Meter Rack
(3, 9, 15, 21)

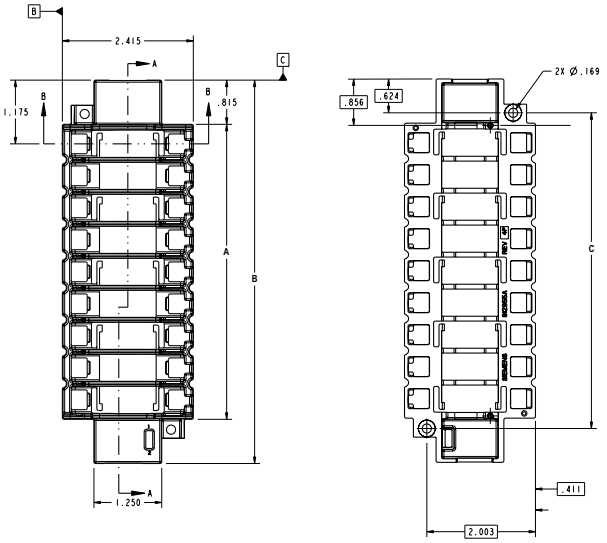

Meter Rack
(3, 9, 15, 21)

Catalogue Number	Description	Variable Dimensions (inches)		
		A	B	C
SEM3RACK3	3 position rack	1.900	3.570	2.282
SEM3RACK6	6 position rack	3.670	5.340	4.050
SEM3RACK9	9 position rack	5.440	7.070	5.822
SEM3RACK15	15 position rack	8.980	10.610	9.362
SEM3RACK21	21 position rack	12.520	14.150	12.902

Controller Dimensions

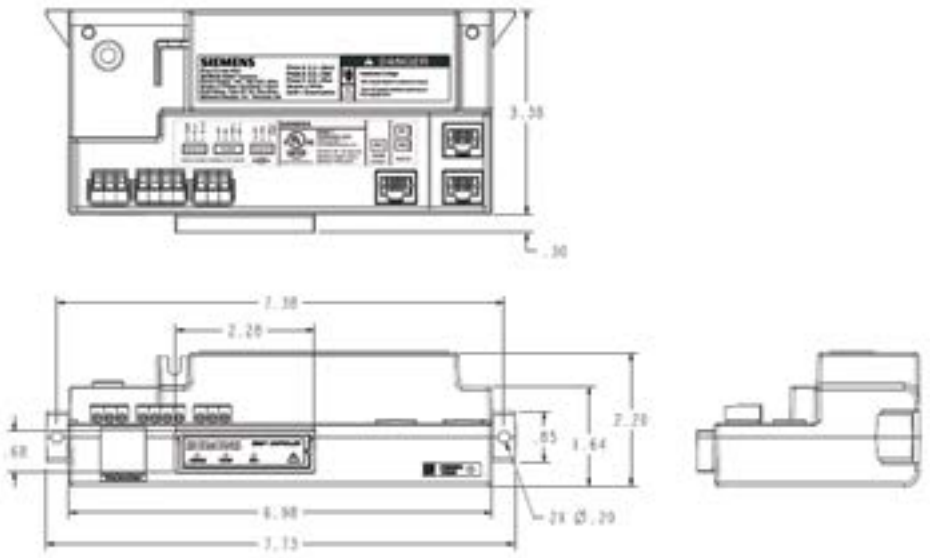

Controller

Catalogue no.
SEM3CONTROLLER

Current Transformer – Solid Core

Description	Catalogue Number	Dimensions (Inches)						
		A	B	C	D	E	F	G
Solid Core CT 50:0.1	**SEM3SCCT50**	1.40	0.38	0.20	0.92	2.12	0.74	0.37
Solid Core CT 125:0.1	**SEM3SCCT125**	1.40	0.66	0.20	0.92	2.16	0.74	0.37
Solid Core CT 250:0.1	**SEM3SCCT250**	1.90	0.93	0.20	0.92	2.75	0.78	0.39
Solid Core CT 400:0.1	**SEM3SCCT400**	2.62	1.60	0.20	0.92	3.62	0.78	0.39
Solid Core CT 600:0.1	**SEM3SCCT600**	3.74	2.30	0.24	0.92	4.66	0.78	0.39
Solid Core CT 800:0.1	**SEM3SCCT800**	4.05	2.60	0.24	0.92	5.05	0.98	0.49
Solid Core CT 1200:0.1	**SEM3SCCT1200**	4.56	2.80	0.24	0.92	5.57	0.98	0.49
Solid Core CT 1600:0.1	**SEM3SCCT1600**	6.00	4.25	0.28	1.07	7.15	1.05	0.50
Solid Core CT 2000:0.1	**SEM3SCCT2000**	6.00	4.25	0.28	1.07	7.15	1.05	0.50

Current Transformer – Solid Core

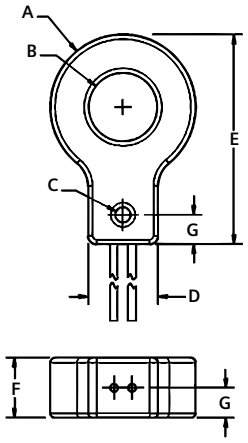

Current Transformer – Split Core

Description	Catalogue Number	A	B	C	D	E	F
Split Core CT 50:0.1	**7KT1280-5MA00**	0.50	0.50	2.40	2.69	0.95	1.10
Split Core CT 125:0.1	**7KT1280-5MA01**	0.75	0.75	2.40	2.69	0.83	0.94
Split Core CT 250:0.1	**7KT1280-5MA02**	1.00	1.00	2.87	3.24	0.94	1.11
Split Core CT 400:0.1	**7KT1280-5MA03**	1.50	1.50	3.60	3.75	1.05	1.15
Split Core CT 600:0.1	**7KT1280-5MA04**	2.14	2.17	4.72	4.32	1.28	1.15
Split Core CT 800:0.1	**7KT1280-5MA05**	3.00	3.14	5.56	5.27	1.21	1.16
Split Core CT 1200:0.1	**7KT1280-5MA06**	3.27	3.02	6.48	5.69	1.73	1.48
Split Core CT 1600:0.1	**7KT1280-5MA07**	4.50	4.50	7.68	7.14	1.59	1.48
Split Core CT 2000:0.1	**7KT1280-5MA08**	4.50	4.50	7.68	7.14	1.59	1.48

Current Transformer – Split Core

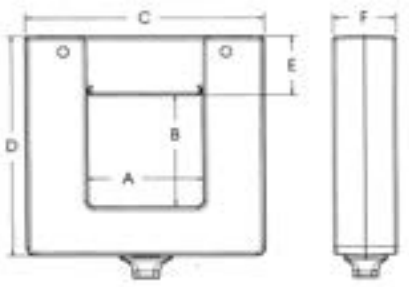

Meter Module

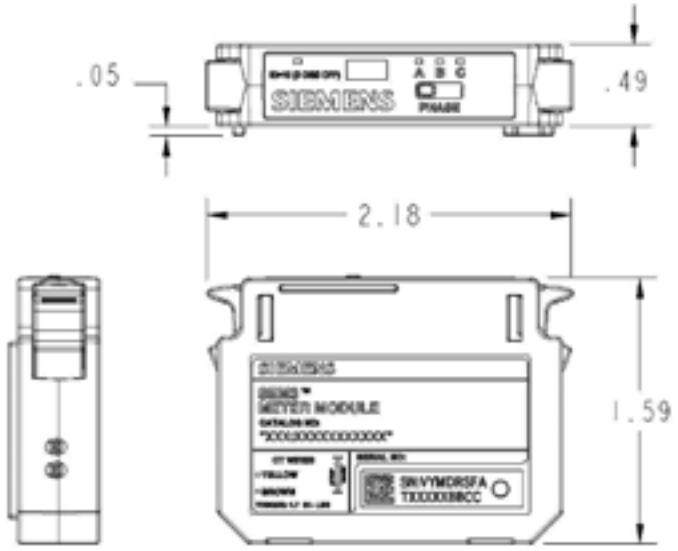

Meter Module

Description	Catalogue No.
Meter - Standard Accuracy 1% with Pulse Output	US2:SEM3PLAMETER
Meter - High Accuracy 0.2% with Pulse Output	US2:SEM3PHAMETER

Enclosures for External Applications

Standard Enclosures for External Applications



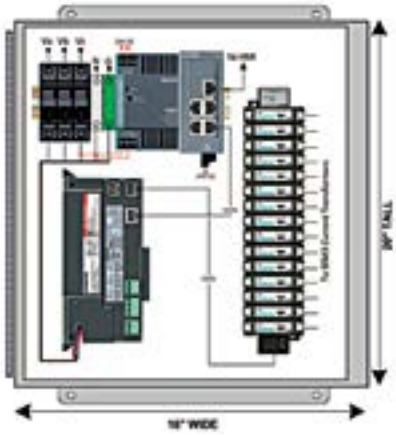

Typical SEM3™ with display example

The SEM3 standalone enclosure is ideal for retrofit/external wall mount applications, as it requires minimal modification of existing systems while gaining full functionality of the SEM3 branch circuit monitoring solution. Installation of the required milliamp current transformers (CT) is minimized by utilizing the Siemens Split Core CTs ranging from 50 to 2000 Amps. See "Split Core CT" section.

SEM3 standard enclosures are available with NEMA 1, 4 and 12 ratings. The SEM3 meter enclosure is shipped with all the required components installed. The control voltage is wired to a fusible disconnect switch to protect the system and to provide a disconnect from outside power to the meter. SEM3 Solid Core CTs are self shorting, not requiring a shorting block in the enclosure/panel.Shorting blocks are recommended for SEM3 Split Core CT's installed in an enclosure/panel. The enclosure has a ground lug for equipment grounding. When the control voltage is greater than 480 volts, a CPT is provided between the disconnect switch and SEM3 controller. The enclosure is pre-drilled to make mounting quick and easy.

The standard enclosure comes with the controller, power supply, disconnect, meter racks, communication cables, and shorting blocks. Meter modules and CTs are added separately. As mentioned previously, the display is available as an option.

No Display Standard Enclosure for External Application – HMI, SEM3 Meter Modules, and CT's are not included

Description	Catalogue Numbers
SEM3 3M ENCL Type 1 16T x 12W X 6D	**SEM303ENCL1**
SEM3 3M ENCL Type 12 16T x 12W X 6D	**SEM303ENCL12**
SEM3 3M ENCL Type 4 16T x 12W X 6D	**SEM303ENCL4**
SEM3 9M ENCL Type 1 16DT x 12W X 6D	**SEM309ENCL1**
SEM3 9M ENCL Type 12W 16DT x 12W X 6D	**SEM309ENCL12**
SEM3 9M ENCL Type 4 16DT x 12W X 6D	**SEM309ENCL4**
SEM3 15M ENCL Type 1 16DT x 12W X 6D	**SEM315ENCL1**
SEM3 15M ENCL Type 12W 16DT x 12W X 6D	**SEM315ENCL12**
SEM3 15M ENCL Type 4 16DT x 12W X 6D	**SEM315ENCL4**
SEM3 18M ENCL Type 1 20T x 12W x 6D	**SEM318ENCL1**
SEM3 18M ENCL Type 12W 20T x 12W x 6D	**SEM318ENCL12**
SEM3 18M ENCL Type 4 20T x 12W x 6D	**SEM318ENCL4**
SEM3 21M ENCL Type 1 20T x 12W x 6D	**SEM321ENCL1**
SEM3 21M ENCL Type 12W 20T x 12W x 6D	**SEM321ENCL12**
SEM3 21M ENCL Type 4 20T x 12W x 6D	**SEM321ENCL4**
SEM3 30M ENCL Type 1 20T x 16W x 6.62D	**SEM330ENCL1**
SEM3 30M ENCL Type 12W 20T x 16W x 6.62D	**SEM330ENCL12**
SEM3 30M ENCL Type 4 20T x 16W x 6.62D	**SEM330ENCL4**
SEM3 42M ENCL Type 1 20T x 16W x 6.62D	**SEM342ENCL1**
SEM3 42M ENCL Type 12W 20T x 16W x 6.62D	**SEM342ENCL12**
SEM3 42M ENCL Type 4 20T x 16W x 6.62D	**SEM342ENCL4**
SEM3 45M ENCL Type 1 20T x 16W x 6.62D	**SEM345ENCL1**
SEM3 45M ENCL Type 12W 20T x 16W x 6.62D	**SEM345ENCL12**
SEM3 45M ENCL Type 4 20T x 16W x 6.62D	**SEM345ENCL4**



SEM3 Enclosure without display



SEM3 Enclosure without meter modules installed

Enclosures for External Applications

Standard Enclosure with HMI Display & Switch for External Application – SEM3 Meter Modules, and CT's are not included	
Description	**Catalogue Numbers**
SEM3 3M w/display/switch 16 x 16 x 6.5	**SEM303ENCL1DS**
SEM3 3M w/display 16 x 16 x 6.5	**SEM303ENCL1D**
SEM3 9M w/display/switch 16 x 16 x 6.5	**SEM309ENCL1DS**
SEM3 9M w/display 16 x 16 x 6.5	**SEM309ENCL1D**
SEM3 15M w/display/switch 20 x 16 x 8	**SEM315ENCL1DS**
SEM3 15M w/display 20 x 16 x 8	**SEM315ENCL1D**
SEM3 18M w/display/switch 20 x 16 x 8	**SEM318ENCL1DS**
SEM3 18M w/display 20 x 16 x 8	**SEM318ENCL1D**
SEM3 21M w/display/switch 20 x 16 x 8	**SEM321ENCL1DS**
SEM3 21M w/display 20 x 16 x 8	**SEM321ENCL1D**
SEM3 30M w/display/switch 20 x 20 x 8	**SEM330ENCL1DS**
SEM3 30M w/display 20 x 20 x 8	**SEM3301ENCL1D**
SEM3 42M w/display/switch 20 x 20 x 8	**SEM342ENCL1DS**
SEM3 42M w/display 20 x 20 x 8	**SEM342ENCL1D**
SEM3 45M w/display/switch 20 x 20 x 8	**SEM345ENCL1DS**
SEM3 45M w/display 20 x 20 x 8	**SEM345ENCL1D**

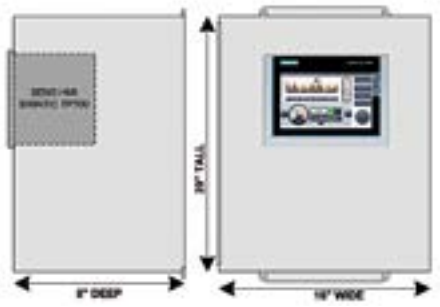

Remote Touch Display Enclosure Package - No SEM3 parts included	
Description	**Catalogue Numbers**
SEM3 ENCL 7" Touch Display 24 VDC/1.3 Amp Power Supply	**SEM3TP7SEN**
SEM3 ENCL 7" Touch Display 24 VDC/1.3 Amp PS UL Listed	**SEM3TP7SENUL**
SEM3 ENCL 7" Touch Display 24 VDC/1.3 Amp PS + 8 Port Switch	**SEM3TP7AEN**
SEM3 ENCL 7" Touch Display 24 VDC/1.3 Amp PS + 8 Port Switch UL Listed	**SEM3TP7AENUL**
SEM3 ENCL 9" Touch Display 24 VDC/1.3 Amp Power Supply	**SEM3TP9SEN**
SEM3 ENCL 9" Touch Display 24 VDC/1.3 Amp PS UL Listed	**SEM3TP9SENUL**
SEM3 ENCL 9" Touch Display 24 VDC/1.3 Amp PS + 8 Port Switch	**SEM3TP9AEN**
SEM3 ENCL 9" Touch Display 24 VDC/1.3 Amp PS + 8 Port Switch UL Listed	**SEM3TP9AENUL**
SEM3 ENCL 12" Touch Display 24 VDC/1.3 Amp Power Supply	**SEM3TP12SEN**
SEM3 ENCL 12" Touch Display 24 VDC/1.3 Amp PS UL Listed	**SEM3TP12SENUL**
SEM3 ENCL 12" Touch Display 24 VDC/1.3 Amp PS + 8 Port Switch	**SEM3TP12AEN**
SEM3 ENCL 12" Touch Display 24 VDC/1.3 Amp PS + 8 Port Switch UL Listed	**SEM3TP12AENUL**



Optional Loose Remote Touch Display and Power Supply	
Description	**Catalogue Numbers**
SEM3 7" TD 100-240VAC + SITOP PS 24VDC	**SEM3TOUCHP7**
SEM3 9" TD 100-240VAC + SITOP PS 24VDC	**SEM3TOUCHP9**
SEM3 12" TD 100-240VAC + SITOP PS 24VDC	**SEM3TOUCHP12**
SEM3 15" TD 100-240VAC + SITOP PS 24VDC	**SEM3TOUCHP15**
SEM3 19" TD 100-240VAC + SITOP PS 24VDC	**SEM3TOUCHP19**



MD Series Power Meter

MD Standalone and High Density Power Meters

Siemens Industry's MD Model Power Meters are sub metering devices designed to provide real time, accurate electricity metering to enable proper control over energy costs. The meter can capture kWh/kW energy and demand data, as well as virtually all relevant energy parameters for diagnostics and monitoring on three-phase or single- phase circuit installations. The meters' flexibility, size, and ease-of-use make them ideal tools for gathering detailed consumption information in commercial, industrial, governmental, and retail environments. The meters use direct connections to each phase of the voltage and various interchangeable current transformer (CT) options such as split-core CTs or flexible Rogowski Coils (for large loads or large cables and buss bars) to monitor current on each phase. All of Siemens' current transformers are internally shunted for intrinsically safe operation on energized conductors.

The power meters make over 75 total electrical measurements which are derived from the voltage and current inputs. Electrical load diagnostic parameters such as power factor and line frequency are captured in addition to energy and demand values. The Siemens MD Power Meters require no external power and the power supplies can accommodate service voltages ranging from 80 to 600V (phase-to-phase). The simple installation is accomplished by connecting the color-coded voltage leads and clearly labeled CTs. A three-LED indicator display confirms proper CT-to-phase installation. The meters automatically adjust for CT orientation—greatly reducing set-up time and all but eliminating installation errors.



MD Meter Series Base Model	Catalogue Number
MD Meter BACnet-Modbus DIN Rail Mount with Display	**MD3HDRDN**
MD Meter BACnet-Modbus Wall Mount Cabinet/Enclosure with Display	**MD3HDCDN**
MD Meter BACnet-Modbus 12 Circuit Cabinet/Enclosure with Display	**MD12HDCDN**
MD Meter BACnet-Modbus 24 Circuit Cabinet/Enclosure with Display	**MD24HDCDN**
MD Meter BACnet-Modbus 48 Circuit Cabinet/Enclosure with Display	**MD48HDCDN**
0.333mV Output Current Transformers	**Catalogue Number**
Mini SplitCore 0.4 Opening 100A	**SCTHMC0100U**
Mini SplitCore 0.4 Opening 200A	**SCTHMC0200U**
Small SplitCore 0.75 Opening 50A	**SCTSCS0050U**
Small SplitCore 0.75 Opening 100A	**SCTSCS0100U**
Medium SplitCore 1.25 Opening 100A	**SCTSCM0100U**
Medium SplitCore 1.25 Opening 200A	**SCTSCM0200U**
Medium SplitCore 1.25 Opening 400A	**SCTSCM0400U**
Medium SplitCore 1.25 Opening 600A	**SCTSCM0600U**
Large SplitCore 2.00 Opening 600A	**SCTSCL0600U**
Large SplitCore 2.00 Opening 1000A	**SCTSCL1000U**
0.333mV Output Rogowski Coil Current Transformers	**Catalogue Number**
Rogowski Coil Current Transformer, 16" (40 cm); 4.5" (11.5 cm) opening; 4000A	**SCTR161310U**
Rogowski Coil Current Transformer, 24" (60 cm); 7.0" (18 cm) opening; 4000A	**SCTR241310U**
Rogowski Coil Current Transformer, 36" (90 cm); 10.8 (28 cm) opening; 4000A	**SCTR361310U**

Low Voltage Current Transformers

Comprehensive metering grade CT offering spilt-core, flexible and solid core designs

Split core – Rectangular Window

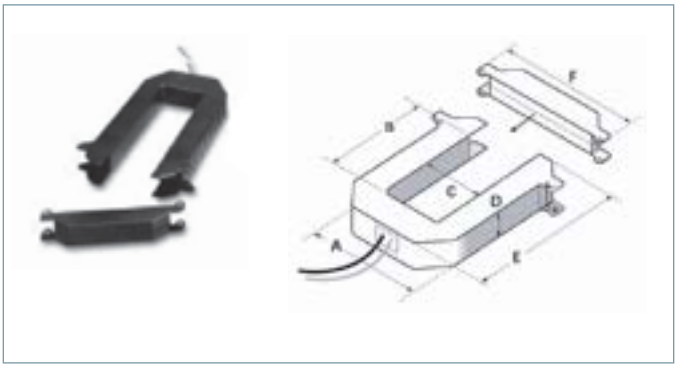

200A – 300A	400A – 800A	1000A – 1200A
A = 3.75″ (95mm)	A = 4.90″ (124mm)	A = 4.90″ (124mm)
B = 1.51″ (38mm)	B = 2.89″ (73mm)	B = 5.50″ (140mm)
C = 1.25″ (32mm)	C = 2.45″ (62mm)	C = 2.45″ (62mm)
D = 1.13″ (29mm)	D = 1.13″ (29mm)	D = 1.13″ (29mm)
E = 4.20″ (107mm)	E = 5.57″ (141mm)	E = 8.13″ (207mm)
F = 4.75″ (121mm)	F = 5.91″ (150mm)	F = 5.92″ (150mm)

Siemens Instrument Grade Current Transformers (CT) have a split-core construction and provide a safe 5A secondary output. These split-core current transformers allow for easy installation, retrofit, and service. CT's come with 4′ leads (18 gauge). Use on low voltage applications of 600V or less.
Accuracy 0.5%.

Amps	Window (C x B)	Catalogue Number
100A	1.25″x1.15″	**PDS-CTSC-011**
200A	1.25″x1.51″	**PDS-CTSC-021**
300A	1.25″x1.51″	**PDS-CTSC-031**
400A	2.45″x2.89″	**PDC-CTSC-042**
600A	2.45″x2.89″	**PDS-CTSC-062**
800A	2.45″x2.89″	**PDS-CTSC-083**
1000A	2.45″x5.50″	**PDS-CTSC-013**
1200A	2.45″x5.50″	**PDS-CTSC-123**
1600A	2.45″x5.50″	**PDS-CTSC-163**
2000A	2.45″x5.50″	**PDS-CTSC-200**
3000A	2.75″x6.625″	**PDS-CTSC-03R**

Split-core – Round Window

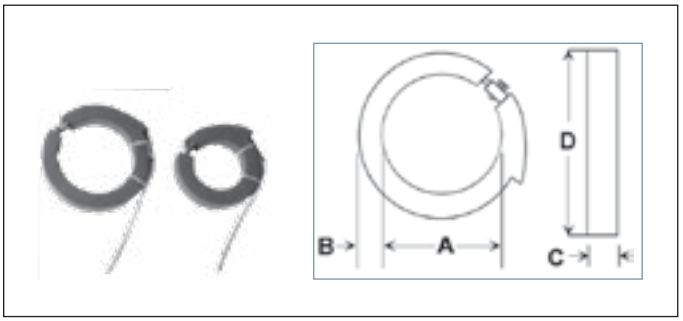

200A – 1200A	3000A – 4000A
A = 4.00″	A = 6.00″
B = 1.25″	B = 1.25″
C = 1.50″	C = 1.50″
D = 6.50″	D = 8.50″

Split-core round rubber insulated flexible CT's with 12′ heavy duty leads (18 AWG) and 5A secondary output for use on low voltage applications of 600V.
Accuracy is 4% for 200/400A, 3% for 400A, and 2% for 600A and above.

Amps	Window (A)	Catalogue Number
200A	4.00″	**PDS-CTHC-024**
300A	4.00″	**PDS-CTHC-034**
400A	4.00″	**PDC-CTHC-044**
600A	4.00″	**PDS-CTHC-064**
800A	4.00″	**PDS-CTHC-084**
1200A	4.00″	**PDS-CTSC-123**
2000A	6.00″	**PDS-CTHC-206**
3000A	6.00″	**PDS-CTHC-306**
4000A	6.00″	**PDS-CTHC-406**

Low Voltage Current Transformers

Comprehensive metering grade CT offering spilt-core, flexible and solid core designs

Solid-core – Round with Round Window

The small size solid core Current Transformer (CT) are designed for tight locations and new installations providing a safe 5 amp secondary for use on voltage applications of 600V or less.
Accuracy is 0.3%.

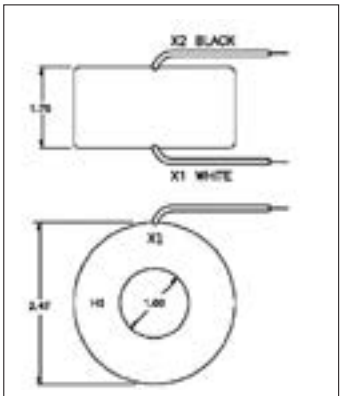

Example: 100 to 300A size

Solid core – Round metering grade, 600V		
Catalogue Number	**Primary**	**Size**
SMU-CT-011	100A	1.75″ x 2.47″, 1″ Window
SMU-CT-021	200A	1.75″ x 2.47″, 1″ Window
SMU-CT-025	250A	1.75″ x 2.47″, 1″ Window
SMU-CT-031	300A	1.75″ x 2.47″, 1″ Window
SMU-CT-041	400A	1.1″ x 3.56″, 1.56″ Window
SMU-CT-061	600A	1.1″ x 3.56″, 1.56″ Window
SMU-CT-081	800A	1.1″ x 3.56″, 1.56″ Window
SMU-CT-123	1000A	1.1″ x 3.56″, 1.56″ Window
SMU-CT-02R	2000A	1.15″ x 5.73″, 3.25″ Window

Solid-core – Square with Round Window

Siemens Instrument Grade Current Transformers (CT) are designed as solid-core construction and provide a safe 5A secondary output. Solid-core CT's come with terminals for attaching leads. Use on low voltage applications of 600V or less.
Accuracy is 0.3%.

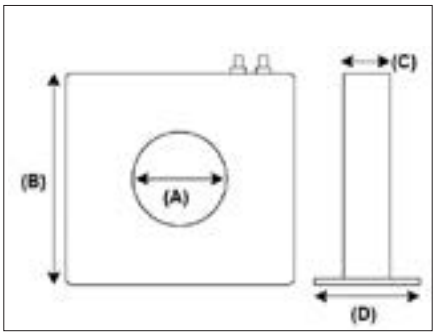

Amps	Dimension (A x B x C x D)	Catalogue Number
200:5	1.25″ x 4.88″ x 2.19″ x 4.68″	**PDS-CTRC-021**
300:5	1.25″ x 4.88″ x 2.19″ x 4.68″	**PDS-CTSC-031**
400:5	1.25″ x 4.88″ x 2.19″ x 4.68″	**PDS-CTRC-041**
500:5	1.25″ x 5.10″ x 3.00″ x 5.50″	**PDC-CTRC-051**
600:5	1.25″ x 5.10″ x 3.00″ x 5.50″	**PDS-CTRC-061**
800:5	1.25″ x 5.10″ x 3.00″ x 5.50″	**PDS-CTRC-081**
1000:5	1.25″ x 5.10″ x 3.00″ x 5.50″	**PDS-CTRC-101**
100:5	2.25″ x 6.31″ x 3.00″ x 5.82″	**PDS-CTRC-012**
200:5	2.25″ x 6.31″ x 3.00″ x 5.82″	**PDS-CTRC-022**
300:5	2.25″ x 6.31″ x 3.00″ x 5.82″	**PDS-CTRC-032**
400:5	2.25″ x 6.31″ x 3.00″ x 5.82″	**PDS-CTRC-042**
800:5	4.00″ x 6.44″ x 3.25″ x 3.25″	**PDS-CTRC-084**
1000:5	4.00″ x 6.44″ x 3.25″ x 3.25″	**PDS-CTRC-104**
1200:5	4.00″ x 6.44″ x 3.25″ x 3.25″	**PDS-CTRC-124**
1600:5	4.00″ x 6.44″ x 3.25″ x 3.25″	**PDS-CTRC-164**
2000:5	4.00″ x 6.44″ x 3.25″ x 3.25″	**PDS-CTRC-204**
3200:5	6.50″ x 9.88″ x 7.00″ x 7.00″	**PDS-CTRC-326**
4000:5	6.50″ x 9.88″ x 7.00″ x 7.00″	**PDS-CTRC-426**

Shorting Block

All low voltage current transformers should be installed with a shorting block to allow for easy removal of the metering unit and to provide a safe method for disconnecting the CT signal. One shorting block is required per meter. Various size shorting blocks are available; 4, 6, and 8 pole configurations are available with four slotted shorting screws and cover. Wire size is 18-10 AWG.

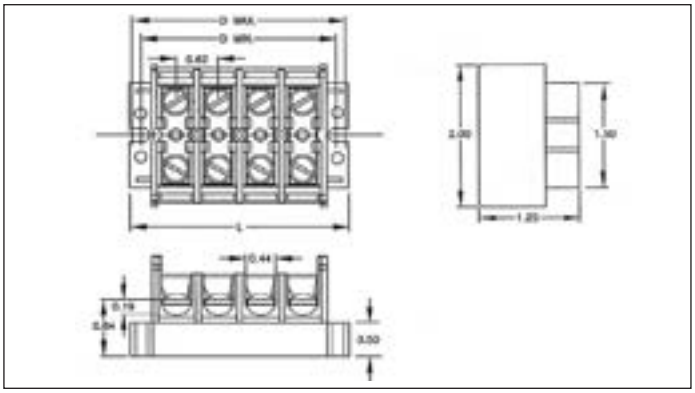

Catalogue Number		Mounting		
	Ckts.	**L**	**D min.**	**D max.**
IKU4SC	4	3.25	2.88	3.00
IKU6SC	6	4.50	4.12	4.25
IKU8SC	8	5.75	5.38	5.50
IKU12SC	12	8.25	7.88	8.00

Typical electrical meter CT and shorting block installation

This example shows a common three phase, three wire installation where three CT's and one shorting block are used.

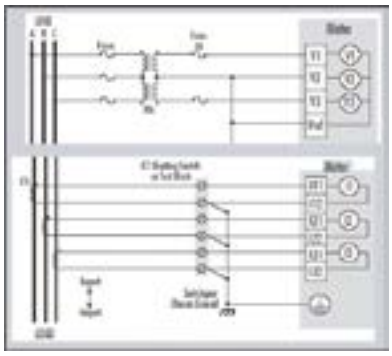

SEM3T System

Overview

Avoid downtime with 24/7 continuous monitoring via SIEMENS SEM3T Thermal Monitoring



For many years, scheduled infrared thermography (IR) inspections have been the accepted method for reducing risk of fire by identifying faulty or loose connections in electrical distribution systems. SEM3T is a system specifically designed to provide continuous thermal monitoring. It offers a safer, more effective way to detect thermal risks before they progress into a major failure.

The method also delivers up to a 10:1 return on investment due to avoided equipment damage and downtime.

Continuous Thermal Monitoring is now enabling safer, more efficient inspection of energized electrical equipment, ensuring electrical asset integrity. This becomes apparent when looking at the technology comparison of SEM3T to IR windows and thermal imaging.

To meet the thermal monitoring challenges of operations owner, design engineers, and contractors, Siemens offers a proven cost-effective solution for Thermal Monitoring. This solution combines a fully integrated thermal monitoring system factory installed into the Siemens Panelboards, Switchboards, and Switchgears, which along with the required local or remote monitoring software, provides a "Total" Power and Thermal monitoring system.

Siemens Thermal Monitoring/ Embedded Monitoring Solution

- **Saves you money** – SIEMENS SEM3T thermal monitoring system specifically designed to provide 24x7 detection of hotspots at an early stage of development; thus, avoiding potential downtime resulting from Arc Flash / power outage incidents.
- **Fast, low-cost installation** – The embedded Siemens solution provides a faster and lower cost installation compared to other external systems.
- **Safety in mind** – SIEMENS thermal monitoring system is safer, more effective way to detect thermal risks before they progress into a major failure.
- **Minimum space requirements** – The embedded switchgear, switchboard and panelboard construction design requires no additional wall space to provide thermal monitoring.
- **Reliable and accurate** – SIEMENS thermal monitoring system is non-invasive reliable and easily installed thermal monitoring solution which can monitor numerous locations within low voltage apparatus including bus joints, lug landings, bus ducts, transformers, and circuit breakers. Thermal sensors can be positioned appropriately to detect ambient temperature, as well as overloaded or poorly conducting electrical connections.
- **Automated alert notifications** – With automated alert notification services the responsibility to acquire the data, store the data and analyze the data is removed from the facility management company, thus saving manpower and time.
- **Responsive service** – With remote monitoring, continuous 24/7 monitoring can be done by the facility management company or local users. The service can also relay thermal hotspot conditions changes to the owners for immediate investigation.

Designer and Contractor benefits include:

- No need to wait for inspector to scan the system to understand abnormalities
- Factory pre-wired – less installation time
- Drastically less installation wiring & cost
- Thermal sensors are calibrated to meet the accuracy standards and requirements
- All equipment fits into the standard Siemens electrical equipment design
- cUL, CE (Pending) approved
- Embedded web-server for on-site configuration, real time data display, data logging, event logging, trending and alarm notifications.
- Built-in industry standard Modbus TCP communication
- Dual Ethernet ports for daisy chaining over Ethernet and Wi-Fi as an option
- Monitor 1 to 45 thermal points.
- Web pages can also be set by a user to four different languages (English, German, French, or Spanish) for configurations and real-time data display

Thermal Monitoring applications include:

- Industrial Manufacturing
- Critical Power - Data Centers and Hospitals
- Government
- LEEDS buildings
- Airports
- Higher Education

Please Contact Your Siemens Sales Engineer for additional information regarding Thermal Sensing:

SEM3T System

SEM3T System Overview

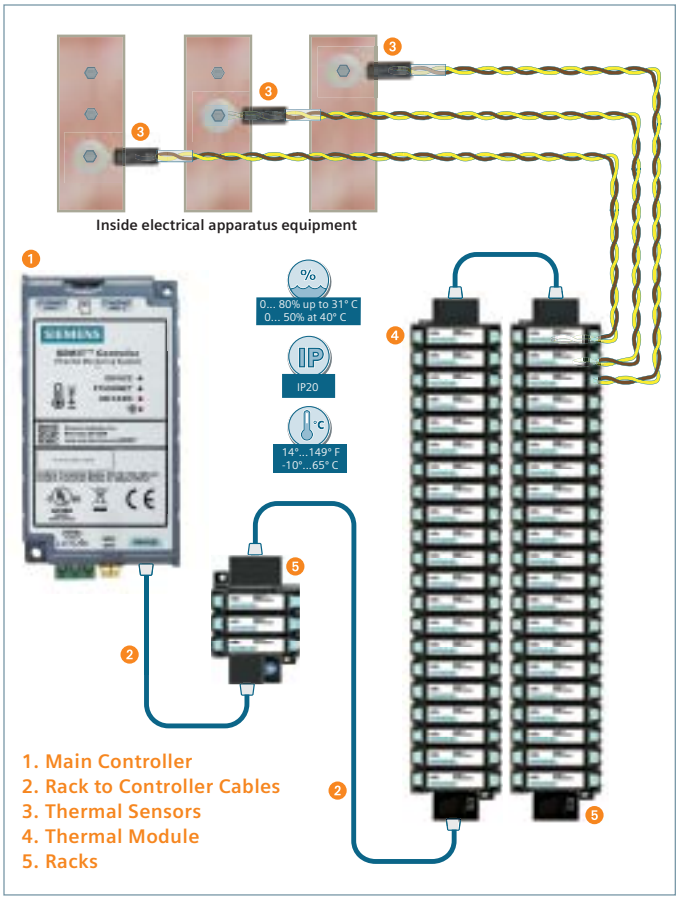

SEM3T Controller

SEM3T Controller can provide thermal monitoring for up to 45 Thermal points. SEM3T Controller acts as a Data Server and processes the data from the Thermal Modules. The controller can be configured to create several groups with multiple thermal points. This information either viewed in real-time or communicated to other systems through its communication interfaces. Some applications may require for more than 45 thermal points in one apparatus electrical equipment. If so, then simply add a second controller. Two controllers can monitor up to 90 thermal points. Using the available dual Ethernet ports in each controller, daisy chaining of multiple controllers in a serial fashion is achievable.

- SEM3T Controller has built-in web pages for real-time data, historical logging/trending, alarm notifications, KPI dash boards, and configurations
- Easy to integrate to Siemens MindSphere cloud platform – MindSphere ready device
- 24vdc power supply
- Optional Wi-Fi
- Available standard communication protocol: Modbus TCP for integration with monitoring software system, SMTP for emailing, and NTP for network time synchronization
- Dual Ethernet (RJ45) ports for daisy chain over Ethernet
- Meets global certifications/ standards

SEM3T Thermal Module

The Thermal Module reads the address from the racks designated by its location and thermal signals from its respective thermal sensor. Each Thermal Module is an independent thermal module that samples thermal signals, processes these signals using the embedded algorithms and communicates these parameters to the controller. When the thermal module is powered and is communicating properly with the controller, the power LED will blink.

- One thermal module per thermal monitoring location
- No configuration required for the modules
- Connects directly to thermal sensors

SEM3T Thermal Sensors

Thermal Sensors are components used for thermal measurement. SEM3T product is UL listed. Thermal Sensor lead wires come with standard 10' can be extended up to 50', still maintaining the thermal output accuracy.

- Thermal Sensors are designed to work specifically with the SEM3T product
- Lead wire type: UL rated operating temperature to 200ºC, 600V rated, UL style 1199, 18AWG, 10 x 30 stranded
- Primary rating: 600VAC
- Overvoltage category: CAT IV
- Operating temperature 0ºC to 130ºC
- Very reliable non-powered wired Sensors are designed to withstand harsh environments Thermal Sensors come in the following variants and sizes:
- 4 types Sensor Screw Ring terminals for monitoring thermal points at joint locations
- Sensor S-Ring sizes: 1/4", 5/16", 3/8", 1/2"
- Cylindrical sensor for monitoring ambient temperature Sensor C-Ring

SEM3 Racks

The SEM3 Racks are the holders for the thermal modules. Embedded within a rack is the internal addressing for the communication of thermal information from the module to the controller via Ethernet cables. A two-way DIP switch is available on the 9, 15, and 21 position racks for thermal monitoring addressing, whereas a rotary switch is available to set the addressing on 3 and 6 position racks.

- Five types of racks available
- DIP switch or rotary switch for controller to recognize module location and rack assignments

Rack to Controller Cables

The communications cables connect the SEM3 racks to the controller and daisy chain additional meter racks together in series (for 3 and/or 6 meter module racks only). Multiple lengths are available to suit a wide variety of panelboard and switchboard configurations. The data cables are insulated for 600V applications and are not standard Ethernet cables. **NOTE:** See ordering information page for cable sizes and catalog numbers.

- Seven cable lengths
- 600V rated Ethernet cable. Note: Regular Ethernet RJ45 cables are rated only up to 300V and are not allowed to use for this application

SEM3T Controller

Ordering information

Part	Catalogue Number
SEM3T Controller with Wi-Fi	**7KT1281-0AA10**
SEM3T Controller without Wi-Fi	**7KT1281-0AA00**

Controller

Description	Information
Altitude / Elevation	3000 Meters/9843 Feet
Humidity	Maximum relative humidity 80% for temperature up to 31°C decreasing linearly to 50% relative humidity at 40°C
Operating Temperature Range	-10°C to +65°C / 14°F to 149°F
Power Supply Requirement	UL Listed 24V DC Class II power supply.

	IN-LBS [Nm]	mm²	AWG
24 V DC power supply leads	5 [.56]	.50 to 2.50	22 to 14
Thermal Sensor Leads	1.7 [.19]	0.75	18

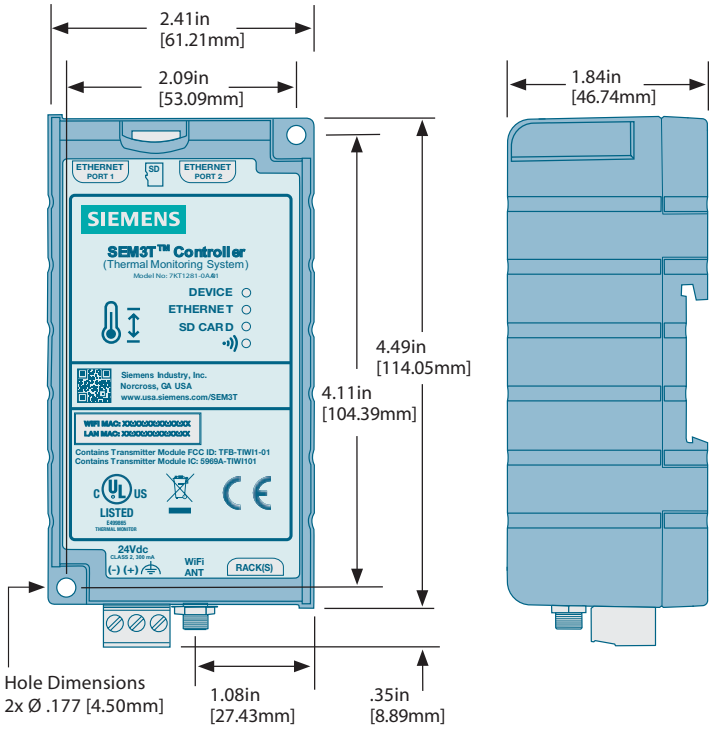

SEM3T Thermal Module

Ordering information

Part	Catalogue Number
SEM3T Sensor Module	**7KT1281-1AA00**

Thermal Module

Description	Information
Altitude / Elevation	3000 Meters/9843 Feet
Pollution Degree	3 (UL 61010)
Overvoltage Category	IV (UL 61010)
Operating Temperature Range	-10°C to +65°C / 14°F to 149°F

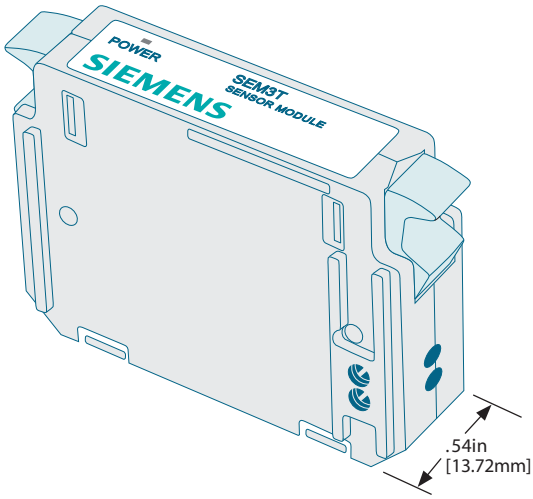

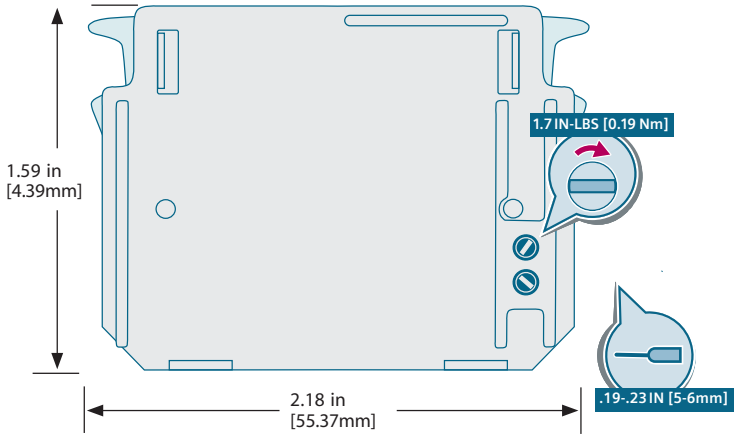

SEM3T Thermal Sensors

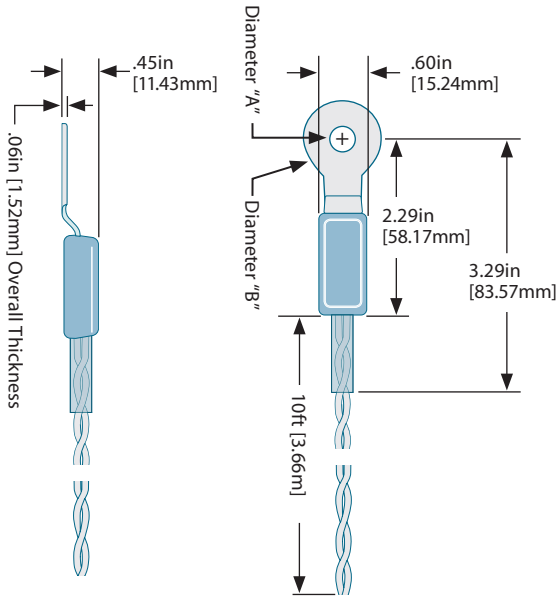

Screw Ring Terminal

Dimensions inches [mm]				Torque (lb-ft) for non-lubricated threads*
Description	**Catalogue Number**	**A**	**B**	
SEM3T sensor ¼" terminal	**7KT1281-2SA00**	0.257 [6.527]	0.625 [15.875]	6 – 9
SEM3T sensor 5/16" terminal	**7KT1281-2SA01**	0.323 [8.204]	1.00 [25.4]	6 – 9
SEM3T sensor ⅜" terminal	**7KT1281-2SA02**	0.386 [9.804]	1.125 [28.575]	20 – 30
SEM3T sensor ½" terminal	**7KT1281-2SA03**	0.515 [13.081]	1.25 [31.75]	40 – 50

* Example: The SEM3T Sensor 1/4" terminal accepts a 1/4" bolt /screw and the tightening torque is 6-9 lb-ft.

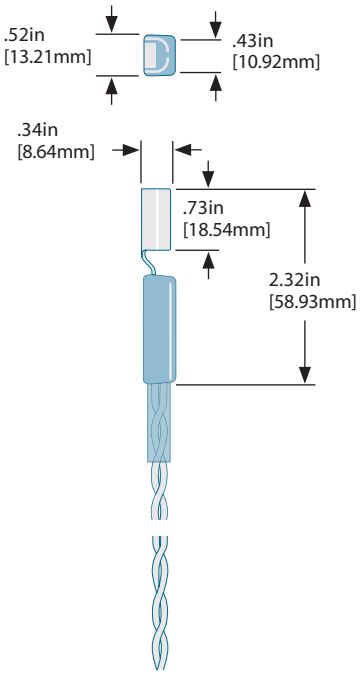

Cylindrical Ring Terminal

Description	Catalogue Number
SEM3T sensor cylindrical	**7KT1281-2CA00**

Sensor Information

Description	Information
Altitude / Elevation	3000 Meters/9843 Feet
Pollution Degree	3 (UL 61010)
Overvoltage Category	IV (UL 61010)
Operating Temperature Range	0°C to 130°C / 32°F to 266°F
Wire Type	UL rated operating temperature to 200°C, 600V rated, UL style 1199, 18 AWG, 10x30 stranded

Racks and Cables

Variable Dimensions inches [mm]

Catalogue Number	Description	A	B	C	D
SEM3RACK3	3 position rack	1.90 [48.26]	3.57 [90.68]	2.28 [57.91]	1.79 [45.46]
SEM3RACK6	6 position rack	3.67 [93.22]	5.34 [135.64]	4.05 [102.87]	1.79 [45.46]
SEM3RACK9	9 position rack	5.44 [138.18]	7.07 [179.58]	5.82 [147.83]	1.59 [40.38]
SEM3RACK15	15 position rack	8.98 [228.09]	10.61 [269.49]	9.36 [237.74]	1.59 [40.38]
SEM3RACK21	21 position rack	12.52 [318.01]	14.15 [359.41]	12.90 [327.66]	1.59 [40.38]

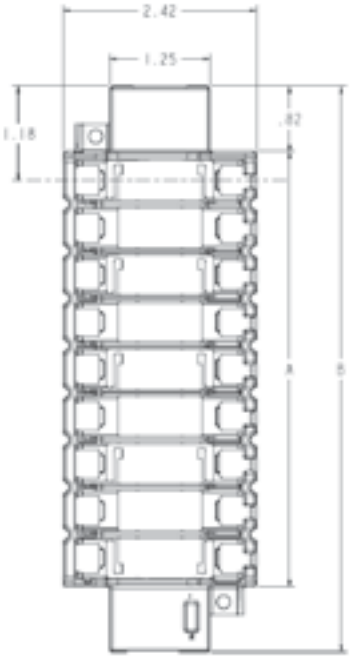

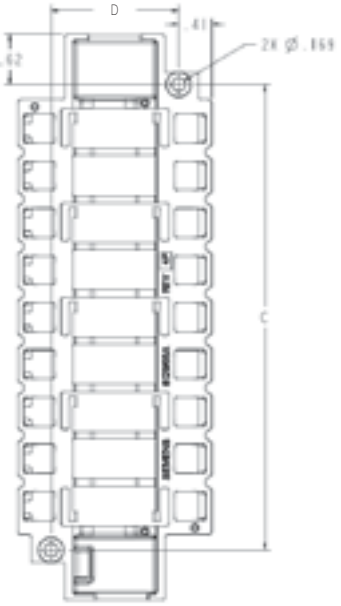

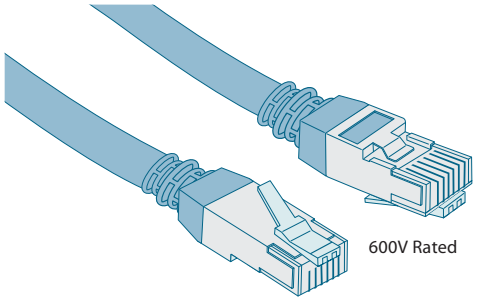

6" (152.40 mm)	US2:SEM3CAB6INCH
12" (304.80 mm)	US2:SEM3CAB12INCH
24" (609.60 mm)	US2:SEM3CAB24INCH
36" (914.40 mm)	US2:SEM3CAB36INCH

Product Connector Electrical Ratings

Description	Information
Controller Rack Connector	12VDC, 0.5A max
Sensor	5VDC, 0.14mA max
Module	12VDC, 12mA max
Rack - Ethernet Connector	12VDC, 0.5A max
Rack - Module Connector	12VDC, 12mA max

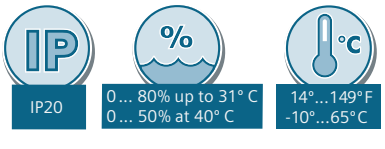

Order Information

Controller	Catalog Number	
SEM3T Controller with Wi-Fi	**7KT1281-0AA10**	
SEM3T Controller wiithout Wi-Fi	**7KT1281-0AA00**	
Thermal Sensor Module		
SEM3T Sensor Module	**7KT1281-1AA00**	
Thermal Sensors		
SEM3T Sensor Screw Ring Terminal ¼"	**7KT1281-2SA00**	
SEM3T Sensor Screw Ring Terminal 5⁄16"	**7KT1281-2SA01**	
SEM3T Sensor Screw Ring Terminal ⅜"	**7KT1281-2SA02**	
SEM3T Sensor Screw Ring Terminal ½"	**7KT1281-2SA03**	
SEM3T Sensor Cylindrical Ring Terminal	**7KT1281-2CA00**	
Accessories		
SEM3T Wi-Fi Antenna and Cable	**7KT1281-8AN00**	
Meter Racks		
Module Rack 3 Position	**SEM3RACK3**	
Module Rack 6 Position	**SEM3RACK6**	
Module Rack 9 Position	**SEM3RACK9**	
Module Rack 15 Position	**SEM3RACK15**	
Module Rack 21 Position	**SEM3RACK21**	
Cables		
Controller to Rack Cable - 6 inch	**SEM3CAB6INCH**	
Controller to Rack Cable - 12 inch	**SEM3CAB12INCH**	
Controller to Rack Cable - 24 inch	**SEM3CAB24INCH**	
Controller to Rack Cable - 36 inch	**SEM3CAB36INCH**	
Controller to Rack Cable - 5 Foot	**SEM3CAB5FT**	
Controller to Rack Cable - 10 Foot	**SEM3CAB10FT**	
Controller to Rack Cable - 20 Foot	**SEM3CAB20FT**	

Powermanager

A power management system that can be customized to your needs. View and control your facilities' infrastructure condition from anywhere.

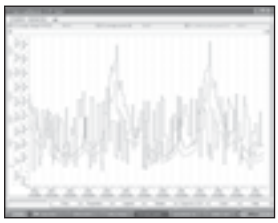



SENTRON Powermanager software, combined with Siemens power meters and low-voltage protective devices, provides a complete energy management solution for your business. It allows you to measure, process, analyze, store and share energy usage and status information across your entire enterprise. It offers control capabilities, comprehensive energy usage and reliability, and detailed reporting that will help you reduce energy related costs.

Cost allocation and Sub-billing Reports

Cost allocation and sub-billing functionality in the Powermanager software allows the user to track energy related costs by building, floor, tenant, feeder or location. Match virtually any fixed rate billing structure and use comprehensive multi-year scheduling and time-of-use features to manage the energy costs.

Load Studies and Asset Management

Trend power usage data to take full advantage of your electrical distribution system capacity and avoid over-design. Create usage profiles that will allow you to distribute loads and avoid demand peak which helps to identify energy leaks such as equipment running during down time.

Equipment Monitoring and Control

Powermanager allows you to meter all your utilities including gas, steam, air and water and set up general condition alarming and pre-event alarms for impending or imminent conditions. Interface with other energy management and SCADA systems through multiple communication channels and protocols like OPC.

Reports

Standard reports provide models of daily electricity usage so you can distribute loads and avoid demand peaks. This enables you to allocate energy consumption and/or costs to individual areas and identify expensive processes that need attention. The historic trending report compiles data from load circuits over a users predefined period. This enables the user to fully utilize the power distribution system and run at near rated tolerances.

Benefits

- Visibility and control of power flows
- Exact knowledge of the consumption profile
- Increase of energy efficiency
- Optimization of power supply contracts
- Compliance with contractual terms or regulations
- Allocation of costs to individual cost centers
- Optimization of plant maintenance
- Identification of critical systems conditions

The Powermanager software:

- Is available in a stand-alone or LAN/WAN based configuration that can also exchange information with other supervisory systems like building automation software
- Can utilize any Ethernet or serial based connections
- Is expandable from the basic monitoring application to a fully customized enterprise management system
- Is fully scalable with regard to the connected devices and to the software's function to meet current and future needs
- Ensures the seamless integration of power monitoring devices from the Siemens SENTRON PAC Series Meter, SEM3, and SENTRON WL/VL/3VA circuit breakers as well as other Modbus communicating devices
- Is designed to collect, archive, monitor, display and evaluate any kind of energy related device data
- Provides web based reporting and detailed graphics construction utilities as standard

Ordering information

Powermanager Software V4.x and greater versions - Device Licenses	Catalogue Number
POWERMANAGER BASIC 10 DEVICES	**7KN27102CE400YC0**
POWERMANAGER 20 ADTNL.DEVICES	**7KN27111CE400YC0**
POWERMANAGER 50 ADTNL.DEVICES	**7KN27112CE400YC0**
POWERMANAGER 100 ADTNL.DEVICES	**7KN27113CE400YC0**
POWERMANAGER 200 ADTNL.DEVICES	**7KN27114CE400YC0**
POWERMANAGER 500 ADTNL.DEVICES	**7KN27115CE400YC0**
POWERMANAGER 1000 ADTNL.DEVICES	**7KN27116CE400YC0**
Powermanager Software V4.x and greater versions - Add Ons and Upgrades	**Catalogue Number**
POWERMANAGER OPT PACKAGE EXPERT	**7KN27120CE400YC0**
POWERMANAGER OPT PACKAGE CLIENT (2)	**7KN27121CE400YC0**
POWERMANAGER OPT PACKAGE CLIENT (5)	**7KN27122CE400YC0**
POWERMANAGER OPT PACKAGE 1 x DISTR SYS	**7KN27124CE400YC0**

Contact Siemens for upgrade information

WinPM.Net Enhanced Web-Enabled Energy Management Software



WinPM.Net is a complete energy information management solution for your business allowing you to process, analyze, store and share energy usage and power quality data across your entire enterprise. It offers control capabilities, comprehensive power quality and reliability analysis and can help you reduce energy-related costs. WinPM.net allows you to manage intelligent metering and protective devices, analyze data, and decide on new courses of action to help you save money and keep your business up and running.

Its cutting-edge flexibility and compatibility means you can add one piece at a time, at your own pace, while still maintaining your original investments. Interface to your existing systems through industry-standard protocols and choose newer components as they become available.

The WinPM.Net software:

- Provides detailed analysis of the power quality and overlays waveforms to correlate phase-to-phase relationships between voltages and currents and cascading failures
- Pinpoints the sources of transients, harmonics, or sags, whether external or internal to your facility, allowing you to decide on the right corrective actions. By monitoring circuits 24 hours a day, you can develop strategies to avoid interruptions
- Provides a comprehensive graphics utility as standard to build and edit any graphical screen whether it is a standard screen or a customized one. These custom screens can display real-time and historical data, alarms, status indications, meter, relay and third party equipment information
- Supports Modbus RTU, Modbus TCP, ION, XML, OPC, FTP, and PQDIF compliant systems, so you can unify your diverse operations into one system. Interface to other energy management software, or include transducers, PLCs, and RTUs in a WinPM.net network. OPC can extract values from other software databases then combine these values with up-to-date readings from WinPM.net to perform real time calculations
- Offers easy, cost effective and fast system expansion. The system grows as your needs grow. Add one piece at a time, at your own pace, within your own budget

Cost allocation and sub-billing

Track energy-related costs by building, feeder, or tool. Match virtually any billing structure and use comprehensive multi-year scheduling and time-of-use activity profiles.

Load studies and asset management

Trend power usage data to take full advantage of your electrical distribution system capacity and avoid over-design. Create usage profiles so you can distribute loads and avoid demand peak.

Demand and power factor control

Eliminate penalties through automated power factor correction, load shedding, or peak shaving.

Equipment monitoring and control

Meter all your utilities including gas, steam, air and water. Set up alarms for pending problems, pre-alarm on impending or imminent conditions. Interface with other energy management and SCADA systems through multiple communication channels and protocols.

Ordering information

Software	Catalogue Number
WinPM.NET V9.0 DVD New (Includes 5 meter device licenses, 1 Eng Client, 2 Web Clients, New! Dashboards & PQDIF)	**3ZS67100CC900BA0**
WinPM.NET V9.0 DVD Replacement	**3ZS67100CC900BC0**
Device License	
WinPM.Net V9.0 9xxx Meter Device License Limit 6 to 50	**3ZS68120CC900BA2**
WinPM.Net V9.0 9xxx Meter Device License Limit 51 to 100	**3ZS68130CC900BA2**
WinPM.Net V9.0 9xxx Meter Device License Limit 101 to 1000	**3ZS68140CC900BA2**
WinPM.Net V9.0 3rd Party device/Modbus/SeaBus Dev. Lic. Limit 1 to 50	**3ZS68220CC900BA2**
WinPM.Net V9.0 3rd Party device/Modbus/SeaBus Dev. Lic. Limit 51 to 100	**3ZS68230CC900BA2**
WinPM.Net V9.0 3rd Party device/Modbus/SeaBus Dev. Lic. Limit 101 to 1000	**3ZS68240CC900BA2**
Options	
WinPM.Net V9.0 Engineering Client License Limit 2 to 50	**3ZS67220CC900BA2**
WinPM.Net V9.0 Engineering Client License Limit 51 to 100	**3ZS67230CC900BA2**
WinPM.Net V9.0 Web Client License	**3ZS67420CC900BA2**
WinPM.Net V9.0 OPC Server License	**3ZS67520CC900BA2**
WinPM.NetSQL Server 2017 - 2 CORE License increment (*** Minimum of 4 cores per server is required (2 x 3ZS67317CC900BA0 minimum))	**3ZS67317CC900BA0**
Software upgrade	
Contact your local SIEMENS D&CES Business Developer for ordering information & upgrade. Allows remote configuration of base WinPM.Net software. Excel is required for excel base reports using Reporter. Outlook is required for e-mailing reports.	

Digitalization for Smart Infrastructure



Cloud & IIoT Solution Offerings

The Siemens Digital Solutions & Services team offers a complete portfolio of digitally enabled products that provide access to data for customers to manage and monitor their assets, as well as analytical insights into their electrical infrastructure.

Edge Data Collection Unit (DCU)

- Collects field-level device data and stores locally at the edge
- Predefined asset model for automatic configuration of MindSphere assets
- Custom Dashboarding of live data
- Dual Ethernet ports for local and external networks
- Easily connect and monitor standard modbus devices
- Standard device drivers for LP equipment::
  - PAC Power Meters
  - ACCESS Power Meters
  - SEM3
  - 3WL, 3VA, 3VL
- Energy usage and cost breakdown for sub-billing
- One-time or scheduled data export via FTP, USB, and Email
- On-board storage options with or without local display

Cloud Connectivity and Applications

Data aggregated in the Edge DCU can be pushed to an external server or cloud platform for long-term storage. The Edge DCU also offers greater flexibility in configuring and creating a hierarchy of your assets. By doing configuration at the local level and pushing this structure to cloud platforms, such as MindSphere, it removes the need of programming the traditional MindConnect devices in the cloud, transferring the configuration files to USB, before loading directly onto hardware. Cloud connectivity empowers customers to realize value from their data by giving them access to their data outside of their facility. This allows customer to interact with their data using

Provides:

- Edge Connectivity for Cloud Applications
- Plug & Play for Siemens LP Products
- Simplified Dashboarding of Connected Assets
- Mobile, Tablet, & Desktop Compatible
- Multiple Data Export Options
- MindSphere Enabled



SIMATIC Nanobox PC IPC127E | SIMATIC Nanobox PC IPC227E | SIMATIC Touch PC IPC277E (7")



applications built by Siemens experts, or develop new applications for specific requirements. Using the Siemens cloud applications, users have the ability to choose and change displays to the specific metrics of interest, view and compare time-series data of similar devices, and configure and export reports.

Services



Advantages to You...

- Technical experts
- Single source supplier
- Available 24/7, 365 days a year
- Reduced total cost of ownership (TCO)
- Avoid unscheduled downtime with preventive maintenance

Service Products

Modular service products enable you to customize a technical service agreement to meet your organization's maintenance needs over the entire life cycle of your installation. Including Service products in your TSA will provide the following benefits:

- Substantial savings versus "on demand" purchases
- Optimized scaling of your maintenance organization
- Assurance that your installation is operating at maximum performance and availability

Telephone and Internet

Priority support
When you need help right now, choose the support coverage that fits your business:
24 hours x 7 days a week
8 hours x 5 days a week

Extended support

With extended support, you can request blocks of support hours for specific projects and tasks. We can customize this support service to meet your individual needs.

Remote service

Remote service provides support and diagnostics via data line to save you time and money. Technical support specialists directly access your system for real-time troubleshooting to provide maximum uptime.

Technical account liaison

A technical account liaison provides consulting and guidance on all aspects of support through familiarity with the application, your business goals and processes, and your maintenance and engineering staff.

In addition to a site visit to assess your installation and support requirements, the technical account liaison will conduct monthly reviews with your staff to ensure you are receiving maximum payback on your investment.

Field services

Block of hours
Purchase field service hours in 40 hour increments for preventative, predictive or emergency services.

Maintenance programs

Packaged maintenance programs available for:

- System performance checks
- Run diagnostics
- Analyze power quality
- Visual inspections of key system components
- Database trim and backup

Training

Operation and maintenance
Siemens training offers a broad range of educational services, providing quality and excellence to the automation industry. Targeted product and system training provides the student with practical, hands-on experience.

Customized on-site training

On-site training is excellent for large groups or when individual, one-on-one instruction is needed. When the trainer visits your facility, product training will be conducted on your specific installation. Classroom lectures, and troubleshooting techniques specific to your installation are covered in detail during the training session.

Software update service

The software update service enables you to take advantage of enhancements to the most current software versions. A site evaluation is conducted to determine necessary upgrade requirements prior to the Software Update Service.

Notes

Contents

Siemens Residential and Commercial Surge Protective Devices

Family SPDs	9-2
BoltShield™ Surge Protective Devices	9-4 – 9-6
TPS4 01 and TPS4 L1 (10 Mode)	9-7
TPS4 03	9-8
TPS4 05 and TPS4 L5 (10 Mode)	9-9
TPS4 06 and TPS4 L6 (10 Mode)	9-10
TPS4 09	9-11
TPS4 11	9-12
TPS4 12 and TPS4 L12 (10 mode)	9-13
TPS4 13	9-14
TPS4 15 and TPS4 L15 (10 mode)	9-15
Frequently Asked Questions	9-16

Surge Protection Devices (SPD)

Siemens Surge Protection Innovations

Introduction

In today's electronic world, home and business electrical systems just aren't complete unless they incorporate surge protection. **Stopping Surges Before They Get Into** these systems is best accomplished through the installation of appropriately sized hard-wired surge protective devices (SPDs) beginning at the incoming service followed by installations at other key surge entry points.

When Siemens first developed the Transient Protection System (TPS) family of surge protectors, we knew early on that hard-wired surge protectors needed fully coordinated safety controls. This led to the adoption of a number of SPD industry safety control firsts including the patented Ceramgard and TranSafe circuitry, coordinated fusing and thermal cutouts, dielectric isolation, mechanical re-enforcing taping, etc… resulting in a design that ensures the highest possible electrical system surge protection and reliability.

Our next generation UL 1449 5th edition TPS SPDs carry on this same legacy. Every TPS is infused with Siemens engineering safety and performance "know-how." Siemens SPDs have the highest degree of safety while delivering the industry's best performance ratings – some of the lowest Voltage Protection Ratings (VPRs), Type 1 or 2 and 20 kA I-nominal ratings (for most models) with surge current ratings from 50 to 1000 kA.

The Siemens BoltShield family of residential and commercial products allows this to be done easily and at a reasonable cost.

Electrical disturbances will always occur, but they don't have to cause surge protectors to fail in an unsafe manner. Safer surge protection means uncompromised electrical system **protection, safety, and reliability.**

The following pages provide additional technical and ordering information concerning our entire offering of surge protection devices.

Internally Mounted SPDs



Features

- Per Phase Surge Current Capacity ranging from 100 kA to 500 kA
- Industry best VPRs
- I_n = 20 kA (most models)
- Across the board UL 96A compliance (most models)
- Ground Reference Monitoring (GRM) diagnostics

External or Wall Mounted SPDs



Features

- Per Phase Surge Current Capacity ranging from 50 kA to 1000 kA
- Industry best VPRs
- I_n = 20 kA (most models)
- Across the board UL 96A compliance (most models)
- Ground Reference Monitoring (GRM) diagnostics (excluding TPS4 03 & TPS4 09)

Residential SPDs



Features

- Per Phase Surge Current Capacity of 36, 40, 50, 60, 100 or 140 kA
- Ground Reference Monitoring (GRM) diagnostics

Surge Protection Devices (SPD)

Siemens Surge Protection Innovations

Surge Protector Per Phase Surge Current Capacities

Internal, External and Wall Mounted Standard Mode

Per Phase Surge Current	50 kA	100 kA	130 kA	150 kA	200 kA	250 kA	300 kA	400 kA	500 kA	600 kA	800 kA	1000 kA
TPS4 01 		✓		✓	✓	✓	✓	✓	✓			
TPS4 03 	✓											
TPS4 05 		✓		✓	✓	✓	✓	✓	✓			
TPS4 06 		✓		✓	✓	✓	✓	✓	✓			
TPS4 09 			✓									
TPS4 11 		✓		✓	✓	✓						
TPS4 12 (coming soon) 		✓		✓	✓	✓	✓	✓	✓			
TPS4 13 		✓		✓	✓	✓	✓	✓				
TPS4 15 (coming soon) 										✓	✓	✓

10 Mode SPDs

Per Phase Surge Current	100 kA	150 kA	300 kA	450 kA	500 kA	550 kA	600 kA	750 kA	900 kA
TSP4 L1 		✓	✓	✓		✓		✓	
TPS4 L5 		✓	✓	✓		✓		✓	
TPS4 L6 		✓	✓	✓		✓		✓	
TPS4 L12 (coming soon) 		✓	✓	✓		✓		✓	
TPS4 L15 (coming soon) 							✓		✓

Discrete or True 10 Mode Style SPDs

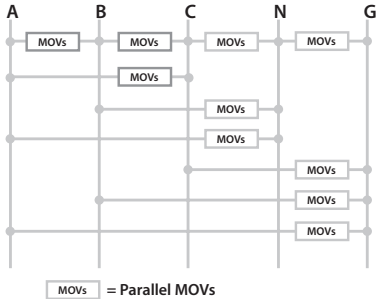

For mission critical or high profile applications, a growing number of end users prefer the assurance discrete or true 10-mode SPDs provide.

When surges traverse the electrical system via phase to phase conductors, standard SPDs indirectly protect via the line to neutral or line to ground modes of protection. Siemens integral or wall mounted "Discrete" or "True" 10-mode SPDs address L-L surges by incorporating directly connected line to line surge protection elements. This style of SPD provides the "Just in Case" assurance mission critical or high profile projects require.

BoltShield™ Surge Protective Devices

BSPD – Commercial Surge Protection for Panel Boards

Catalogue Logic

BSPD series for panelboards



BSPD Series

Ordering Information

Catalog # BSPD – 2 – A – 100

Series	Poles	Voltage Code	Surge Current Rating
BSPD	**2** = 2 Pole **3** = 3 Pole	**A** = 120/240V, 1Ø 3W (Fig.1)① **B** = 240/120V, 3Ø 4W (Fig.3) **C** = 208Y/120V, 3Ø 4W (Fig.2) **D** = 240V, 3Ø 3W (Fig.4) **E** = 480Y/277V, 3Ø, 4W (Fig.1) **F** = 480V, 3Ø, 3W (Fig.4) **G** = 600V, 3Ø, 3W (Fig.4) **K** = 380Y/220V, 3Ø, 4W (Fig.1) **L** = 600Y/347V, 3Ø, 4W (Fig.1) **S** = 400Y/230V, 3Ø, 4W (Fig.1) **T** = 415Y/240V, 3Ø, 4W (Fig.1)	**100** = 100kA per Mode/Phase

Product specifications

General specifications	
Maximum surge current rating range	100 kA per phase
UL Type designation	SPD Type 1②
UL 1449 I-nominal rating	20kA
UL 1449 short circuit current rating	200kA
Repetitive impulse	5,000 hits
Response time	<1 ns

Diagnostic monitoring specifications
Green/red visual mechanical flag failure indicators
Flashing dual color LED (green/red) status indicator
Audible alarm with silence switch/button
Form C dry contact, 240V AC, 1A max, 48V DC, 0.5A max

Design specifications
Monolithic distribution grade MOV
Integrated optimized thermal protection
Fits in footprint of BL/BQD, or xGB/3VA41③
Modes of protection (L-N or L-G, L-L)

BSPD Catalog Numbers and UL 1449 performance data

Catalog numbers	System voltage	L-N (L-G)	L-L	I_n	SCCR	MCOV	Siemens breaker form factor
BSPD2A100①	120/240V, 1Ø, 3W	600V	900	20kA	200kA	150V	2-P, BL/BQD or xGB/3VA41
BSPD3B100	240/120V, 3Ø, 4W	600V/800V	1200	20kA	200kA	150V	3-P, BL/BQD or xGB/3VA41
BSPD3C100	208Y/120V, 3Ø, 4W	600V	900	20kA	200kA	150V	3-P, BL/BQD or xGB/3VA41
BSPD3D100	240V, 3Ø, 3W	800V	1500	20kA	200kA	280V	3-P, BL/BQD or xGB/3VA41
BSPD3E100	480Y/277V, 3Ø, 4W	1000V	1800	20kA	200kA	320V	3-P, BL/BQD or xGB/3VA41
BSPD3F100	480V, 3Ø, 3W	1800V	3000	20kA	200kA	550V	3-P, BL/BQD or xGB/3VA41
BSPD3G100	600V, 3Ø, 3W	2000V	4000	20kA	200kA	700V	3-P, BL/BQD or xGB/3VA41
BSPD3K100	380Y/220V, 3Ø, 4W	900V	1800	20kA	200kA	320V	3-P, BL/BQD or xGB/3VA41
BSPD3L100	600Y/347V, 3Ø, 4W	1200V	2500	20kA	200kA	400V	3-P, BL/BQD or xGB/3VA41
BSPD3S100	400Y/230V, 3Ø, 4W	900V	1800	20kA	200kA	320V	3-P, BL/BQD or xGB/3VA41
BSPD3T100	415Y/240V, 3Ø, 4W	900V	1800	20kA	200kA	320V	3-P, BL/BQD or xGB/3V

Benefits of installing multiple BSPDs

Adding multiple BSPDs in a single panelboard can increase modes of protection and a surge capacity. See the BoltShield brochure for more details and review an example chart below:

Number of BSPDs	Connection	Modes of protection	Surge current capacity per mode	Surge current capacity per phase
1	Neutral	3	100kA	100kA
2	Neutral + Ground	6	100kA	200kA
2	Neutral(2)	3	200kA	200kA
3	Neutral(2) + Ground(1)	6	200kA(L-N) + 100kA (L-G)	300kA
3	Ground(3)	3	300kA	300kA
4	Neutral(2) + Ground(2)	6	200kA	400kA

① Can also be used on 208Y/120V, 1Ø, 3W system.
② Type 1 SPDs suitable for use in Type 2 applications.
③ Each SPD comes with an adapter for xGB/3VA41 applications. Replacement adapter kit BSPDXGB1 is available, containing 2 and 3 pole adapters (1 each).

BoltShield™ Surge Protective Devices

QSPD – Residential Surge Protection for Load Centers

Catalogue Logic

QSPD series for load centers

Ordering Information

QSPD catalog number logic

QSPD – 2 – A – 065

Series	Poles	Voltage Code	Surge Current Rating
QSPD	**2** = 2 Pole **3** = 3 Pole	**A** = 120/240V, 1Ø 3W (Fig.1)① **B** = 240/120V, 3Ø 4W (Fig.3) **C** = 208Y/120V, 3Ø 4W (Fig.2) **D** = 240V, 3Ø 3W (Fig.4)	**065P** = 65kA per Mode/Phase in retail blister pack packaging



QSPD Series

Product specifications

General specifications	QSPD
Maximum surge current rating range	65kA per phase
UL Type designation	SPD Type 1①
UL 1449 I-nominal rating	20kA
UL 1449 short circuit current rating	200kA
Repetitive impulse	5,000 hits
Response time	<1 ns

Diagnostic monitoring specifications	QSPD
Green/red visual mechanical flag failure indicators	√
Flashing dual color LED (green/red) status indicator	√
Audible alarm with silence switch/button	√
Design specifications	**QSPD**
Monolithic distribution grade MOV	√
Integrated optimized thermal protection	√
Fits in footprint of Siemens QP breaker	√
Modes of protection (L-N or L-G, L-L)	√

QSPD Catalog Numbers and UL 1449 performance data

Catalog numbers	System voltage	L-N (L-G)	L-L	I_n	SCCR	MCOV	Siemens breaker form factor
QSPD							
QSPD2A065P③	120/240V, 1Ø, 3W①	600V	1000	20kA	200kA	150V	2-P, QP
QSPD3B065	240/120V, 3Ø, 4W	600V/900V	1200	20kA	200kA	150V	3-P, QP
QSPD3C065	208Y/120V, 3Ø, 4W	600V	1000	20kA	200kA	150V	3-P, QP
QSPD3D065	240V, 3Ø, 3W	900V	1500	20kA	200kA	280V	3-P, QP

Benefits of installing multiple QSPDs

Adding multiple QSPDs in a single load center can increase the modes of protection and the surge capacity.

See the Boltshield brochure for more details and review the example chart below:

			Multiple QSPD	
No. of QSPDs or QSPD-Bases	**Connection**	**Modes of protection**	**Surge current capacity per mode**	**Surge current capacity per phase**
1	Neutral	3	65kA	65kA
2	Neutral + Ground	6	65kA	130kA
2	Neutral	3	130kA	130kA
3	Neutral(2) + Ground(1)	6	130kA(L-N) + 65kA (L-G)	195kA
3	Ground	3	195kA	195kA
4	Neutral(2) + Ground(2)	6	130kA	260kA

① Can also be used on 208Y/120V, 1Ø, 3W system.
② Type 1 SPDs suitable for use in Type 2 applications.
③ QSPD2A065P comes in retail style blister pack packaging.

FSPD Series for External Applications

FSPD036

Features & Benefits

- UL 1449 Listed
- Type 1 rated SPD
- Surge Current Rating 36kA
- Nominal Rating 10kA
- Short Circuit Current Rating 200kA
- Voltage code A 120/240V, 1Ø, 3W
- Reduced mode of protection (L1-N, L2-N, L-L)
- LED Protection Status Monitoring (Single LED Standard)



FSPD036

FSPD060 | FSPD100 | FSPD140

Features & Benefits

- UL 1449 Listed
- Type 2 rated SPD
- Surge Current Rating:
  - FSPD060 60kA
  - FSPD100 100kA
  - FSPD140 140kA
- Nominal Rating 20kA
- Short Circuit Current Rating 200kA
- Voltage code A 120/240V, 1Ø, 3W
- All modes of protection (L-N, L-G, N-G)
- LED Protection Status Monitoring and audible alarm
- GRM (Ground Reference Monitoring), N-G>20V detected



FSPD060, FSPD100, FSPD140

FSPD Series Catalog Number and Performance data

Catalog numbers	System voltage	L-N	L-G	L-L	N-G	MCOV
FSPD036	120/240V, 1Ø, 3W	700	—	1200	—	180
FSPD060	120/240V, 1Ø, 3W	700	700	1200	700	180
FSPD100	120/240V, 1Ø, 3W	700	700	1200	700	180
FSPD140	120/240V, 1Ø, 3W	700	700	1200	700	180

TPS4 01 and TPS4 L1
(True or Discrete 10-Mode)

Siemens TPS4 01 and L1 surge protective devices are designed for integration within our RP1, P2, and P3 power distribution panel boards, as well as TIASTAR motor control centers and busway systems. The TPS4 01 and L1 SPDs feature Ground Integrity Monitoring (GIM) diagnostics

TPS4 01 and TPS4 L1 Key Features

- UL 1449-5 Type 2 SPD and UL 1283 Listed
  – Optional UL 1449 5th edition Listed Type 1
- Type 1 / Type 2 SPD
- 100 - 500 kA Per Phase Surge Current
- 20 kA I_n
- 200 kA SCCR
- Voltage Protection Rating (VPRs)
  – 208/120 V, 3Ø, 4W: 500V
  – 480/277 V, 3Ø, 4W: 1000V
- UL 96A Lightning Protection Master Labeling compliant (@ 20 kA)
- New Large Block MOV Pill Stack Design
- Every MOV is monitored, including N-G
- Mounts internal to:
  – RP1, P2, and P3 panels
  – TIASTAR motor control centers – standard 6"bucket
  – STP series busplug on SX series busway
- Consult factory for field retrofit in P1 panels
- Modes of Protection: L-N, L-G, N-G, and L-L
- All UL required OCP & safety coordination included
  – Type 1 SPDs intended for line or load side of main disconnect
  – Type 2 SPDs intended for load side of main disconnect
- Standard Monitoring: LCD Event Counter with Time and Date Stamp, LED Indicators, Surge Counter, Dry Contacts, Audible Alarm w/ silence switch & test button
- Dimensions: 9.25" x 4.5" x 4.29" (235 mm x 114.3 mm x 109 mm)
- Weight: 4.55 lb. (2.06 kg)
- Designed, manufactured & tested consistent with:
  – ANSI / IEEE C62.41.1-2002, C62.41.2-2002, C62.45-2002, C62.62-1010, C62.72-2007 and CSA C22.2 No. 269.1 and 269.2
  – 1992/2000 NEMA LS-1
  – NEC Article 285
  – IEC 61643, CE
- 10-year product warranty

Available Options:

- Direct bus connected or can be wired to a circuit breaker (include W option)



TPS4 01

Ordering Information

Catalog # TPS4 □ 01 □□ □□□□

Voltage Code	Surge Current (kA)	Options	
A = 240/120 V, 1Ø, 3W①	**10** = 100 kA per phase	**X** = Surge counter (Standard)	**2** = Type 2 SPD (Default) Includes UL 1283 EMI/ RFI Filters
B = 240/120 V, 3Ø, 4W	**15** = 150 kA per phase		
C = 208/120 V, 3Ø, 4W	**20** = 200 kA per phase	**0** = Std config (default)	
W= 220/127 V, 3Ø, 4W	**25** = 250 kA per phase	**W**= Terminal lug	
D = 240 V, 3Ø, 3W	**30** = 300 kA per phase		
E = 480/277 V, 3Ø, 4W	**40** = 400 kA per phase	**0** = Std config (default)	**0** = Type 1 SPD (Consult Factory Prior to Ordering)
F = 480 V, 3Ø, 3W	**50** = 500 kA per phase	**B** = Busway application	
G = 600 V, 3Ø, 3W②		**M** = MCC application	
K = 380/220 V, 3Ø, 4W			
L = 600/347 V, 3Ø, 4W			
S = 400/230 V, 3Ø, 4W			
T = 415/240 V, 3Ø, 4W			

Example: **TPS4C0120X000** = SPD for a 208/120V panelboard with a surge current capacity of 200 kA per phase and a surge counter option.

When an option is not selected, include a **zero** (**0**) in the field.

① Can also be used on 208Y/120V, 1Ø, 3W System
② Not available in 300, 400 or 500 kA versions

Please note: The TPS4 01 series is not suitable for use in the Original P1 Lighting Panels - Only Revised P1 Lighting Panels.



TPS4 L1

Ordering Information

Catalog # TPS4 □ L1 □□ □□□□

Voltage Code	Surge Current (kA)	Options	
A = 240/120 V, 1Ø, 3W	**15** = 150 kA per phase	**X** = Surge counter (Standard)	**2** = Type 2 SPD (Default) Includes UL 1283 EMI/ RFI Filters
B = 240/120 V, 3Ø, 4W	**30** = 300 kA per phase		
C = 208/120 V, 3Ø, 4W	**45** = 450 kA per phase	**0** = Std config (default)	
W= 220/127 V, 3Ø, 4W	**55** = 550 kA per phase	**W**= Terminal lug	
E = 480/277 V, 3Ø, 4W	**75** = 750 kA per phase		
K = 380/220 V, 3Ø, 4W		**0** = Std config (default)	**0** = Type 1 SPD
L = 600/347 V, 3Ø, 4W		**B** = Busway application	
S = 400/230 V, 3Ø, 4W		**M** = MCC application	
T = 415/240 V, 3Ø, 4W			

Example: **TPS4CL120X000** = SPD for a 208/120V panelboard with a surge current capacity of 200kA per phase and a surge counter option.

When an option is not selected, include a **zero** (**0**) in the field.

① Can also be used on 208Y/120V, 1Ø, 3W System
② Not available in 450, 550 or 750 kA versions

Please note: The TPS4 L1 series is not suitable for use in the Original P1 Lighting Panels - Only Revised P1 Lighting Panels.

TPS4 03

TPS4 03 is a UL 1449 5th edition 50 kA Type 1 compact surge protective device that can be used as a replacement secondary surge or lighting arrestors. Having a Type 1 designation allows for flexible electrical system connection location (line or load side) as well as UL 96A compliance (@ 20 kA I_n).

TPS4 03 Key Features

- UL 1449 5th edition Listed Type 1
- Type 1 Rated SPD
- 50 kA Per Phase Surge Current
- 20 kA I_n
- 200 kA SCCR
- UL 96A Lightning Protection Master Labeling compliant (@ 20 kA))
- Every MOV is monitored
- Mounts external to electrical distribution equipment – Recommended for line side or load side application
- Standard compact NEMA 4X polycarbonate enclosure
- Modes of Protection: L-N or L-G and L-L
- Standard Monitoring: LED Indicator
- Dimensions: 4.25" x 2.41" x 2.75"
- Weight: .5 lb.
- 2-year product warranty

Available Options:

- Neutral to Ground Protection (option "N")



TPS4 03

Ordering Information

Catalog # TPS4 □ 03 □□□□

Voltage Code

A = 120/240 V, 1Ø, 3W
B = 120/240 V, 3Ø, 4W
C = 120/208 V, 3Ø, 4W
W = 220/127 V, 3Ø, 4W
D = 240 V, 3Ø, 3W
E = 277/480 V, 3Ø, 4W
F = 480 V, 3Ø, 3W
G = 600 V, 3Ø, 3W
K = 380/220 V, 3Ø, 4W
L = 600/347 V, 3Ø, 4W
S = 400/230 V, 3Ø, 4W
T = 415/240 V, 3Ø, 4W

Surge Current (kA)

05 = 50 kA per phase

Options

0 = No Dry contact & No Audible alarm

N = Adds N-G Protection

TPS4 05 and TPS4 L5
(True or Discrete 10-Mode)

Siemens TPS4 05 and L5 surge protective devices are designed for integration within our F2 and S5 panelboards as well as distribution switchboards. The TPS4 05 and L5 SPDs feature Ground Integrity Monitoring (GIM) diagnostics.

TPS4 05 and TPS4 L5 Key Features

- UL 1449 Type 2 SPD and UL 1283 Listed
  – Optional UL 1449 Listed Type 1
- Type 1 / Type 2 SPD
- 100 - 500 kA Per Phase Surge Current
- 20 kA I_n
- 200 kA SCCR
- Voltage Protection Rating (VPRs)
  – 208/120 V, 3Ø, 4W: 600V
  – 480/277 V, 3Ø, 4W: 1000V
- UL 96A Lightning Protection Master Labeling compliant (@ 20 kA)
- New Large Block MOV Pill Stack Design
- Every MOV is monitored, including N-G
- Mounts internal to:
  – F2 and S5 panelboards and distribution switchboards
- Modes of Protection: L-N, L-G, N-G, and L-L
- All UL required OCP & safety coordination included
  – Type 1 SPDs intended for line or load side of main disconnect
  – Type 2 SPDs intended for load side of main disconnect
- Standard Monitoring: LCD Event Counter with Time and Date Stamp, LED Indicators, Surge Counter, Dry Contacts, Audible Alarm w/ silence switch & test button
- Dimensions: 17" x 10" x 6"
  (434 mm x 254 mm x 154 mm)
- Weight: 22 lbs. (10 kg)
- Designed, manufactured & tested consistent with:
  – ANSI / IEEE C62.41.1-2002, C62.41.2-2002, C62.45-2002, C62.62-1010, C62.72-2007 and CSA C22.2 No. 269.1 and 269.2
  – 1992/2000 NEMA LS-1
  – NEC Article 285
  – IEC 61643, CE
- 10-year product warranty

Panelboard Features:

- Copper or aluminum bus
  MB or MLO

Switchboard Features:

- Copper or aluminum bus
  200% rated neutral bus for harmonic-rich applications
- CSA, UL 891, UL 67 and NEMA PB-2

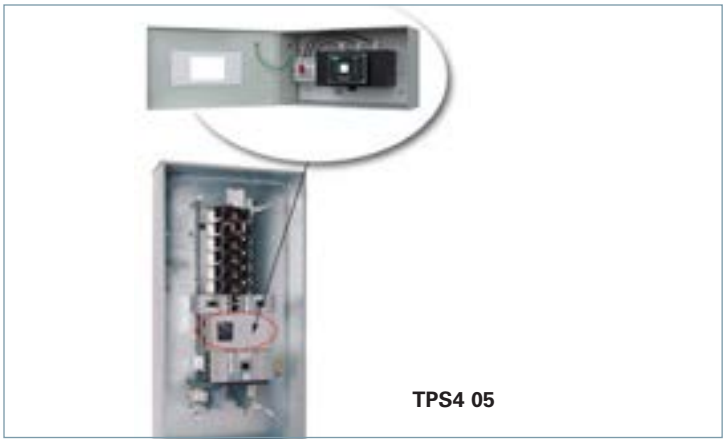

TPS4 05

Ordering Information

Catalog # TPS4 ☐ 05 ☐☐ X ☐

Voltage Code	Surge Current (kA)	Options
A = 240/120V ,1Ø, 3W	**10** = 100 kA per phase	**X** = Surge counter (Standard)
B = 240/120V, 3Ø, 4W	**15** = 150 kA per phase	**2** = Type 2 SPD (Default) Includes UL 1283 EMI/RFI Filters
C = 208/120V, 3Ø, 4W	**20** = 200 kA per phase	**0** = Type 1 SPD (Consult Factory Prior to Ordering)
W= 220/127V, 3Ø, 4W	**25** = 250 kA per phase	
D = 240V, 3Ø, 3W	**30** = 300 kA per phase	
E = 480/277V, 3Ø, 4W	**40** = 400kA per phase	
F = 480V, 3Ø, 3W	**50** = 500kA per phase	
G = 600V, 3Ø, 3W①		
K = 380/220V, 3Ø, 4W		
L = 600/347V, 3Ø, 4W		
S = 400/230V, 3Ø, 4W		
T = 415/240V, 3Ø, 4W		

Example: **TPS4C0520X2** = SPD for a 208/120V panelboard with a surge current capacity of 200kA per phase and Type 2 SPD.

When an option is not selected, include a **zero** (**0**) in the field.

① Not available in 300, 400 or 500kA versions



TPS4 L5

Ordering Information

Catalog # TPS4 ☐ L5 ☐☐ X ☐

Voltage Code	Surge Current (kA)	Options
A = 240/120V ,1Ø, 3W	**15** = 150 kA per phase	**X** = Surge counter (Standard)
B = 240/120V, 3Ø, 4W	**30** = 300 kA per phase	**2** = Type 2 SPD (Default) Includes UL 1283 EMI/RFI Filters
C = 208/120V, 3Ø, 4W	**45** = 450 kA per phase	**0** = Type 1 SPD
W= 220/127V, 3Ø, 4W	**55** = 550 kA per phase	
E = 480/277V, 3Ø, 4W	**75** = 750 kA per phase	
K = 380/220V, 3Ø, 4W		
L = 600/347V, 3Ø, 4W①		
S = 400/230V, 3Ø, 4W		
T = 415/240V, 3Ø, 4W		

Example: **TPS4CL520X2** = SPD for a 208/120V panelboard with a surge current capacity of 200kA per phase and Type 2 SPD.

When an option is not selected, include a **zero** (**0**) in the field.

① Not available in 450, 550 or 750kA versions

TPS4 06 and TPS4 L6 (True or Discrete 10-Mode)

Siemens TPS4 06 and L6 surge protective devices are designed for integration within our FC, IPS, SB switchboards and low voltage switchgears. The TPS4 06 and L6 SPDs feature Ground Integrity Monitoring (GIM) diagnostics.

TPS4 06 and TPS4 L6 Key Features

- UL 1449 Type 2 SPD and UL 1283 Listed
  – Optional UL 1449 Listed Type 1
- Type 1 / Type 2 SPD
- 100 - 500 kA Per Phase Surge Current
- 20 kA I_n
- 200 kA SCCR
- Voltage Protection Rating (VPRs)
  – 208/120 V, 3Ø, 4W: 600V
  – 480/277 V, 3Ø, 4W: 1000V
- UL 96A Lightning Protection Master Labeling compliant (@ 20 kA)
- New Large Block MOV Pill Stack Design
- Every MOV is monitored, including N-G
- Mounts internal to:
  – FC, IPS, SB switchboards
  – Type WL low-voltage switchgear
- Modes of Protection: L-N, L-G, N-G, and L-L
- All UL required OCP & safety coordination included
  – Type 1 SPDs intended for line or load side of main disconnect
  – Type 2 SPDs intended for load side of main disconnect
- Standard Monitoring: LCD Event Counter with Time and Date Stamp, LED Indicators, Surge Counter, Dry Contacts, Audible Alarm w/ silence switch & test button
- Dimensions: 11" x 11" x 4.5"
  (276 mm x 276 mm x 115 mm)
- Weight: 7.4 lbs (3.4 kg)
- Designed, manufactured & tested consistent with:
  – ANSI / IEEE C62.41.1-2002, C62.41.2-2002, C62.45-2002, C62.62-1010, C62.72-2007 & CSA C22.2 No. 269.1 and .2
  – 1992/2000 NEMA LS-1
  – NEC Article 285
  – IEC 61643, CE
- 10-year product warranty



TPS4 06

Ordering Information

Catalog # TPS4 □ 06 □□ X □

Voltage Code	Surge Current (kA)	Options
A = 240/120V ,1Ø, 3W	**10** = 100 kA per phase	**X** = Surge counter (Standard)
B = 240/120V, 3Ø, 4W	**15** = 150 kA per phase	**2** = Type 2 SPD (Default) Includes UL 1283 EMI/RFI Filters
C = 208/120V, 3Ø, 4W	**20** = 200 kA per phase	**0** = Type 1 SPD
W= 220/127V, 3Ø, 4W	**25** = 250 kA per phase	
D = 240V, 3Ø, 3W	**30** = 300 kA per phase	
E = 480/277V, 3Ø, 4W	**40** = 400 kA per phase	
F = 480V, 3Ø, 3W	**50** = 500 kA per phase	
G = 600V, 3Ø, 3W①		
K = 380/220V, 3Ø, 4W		
L = 600/347V, 3Ø, 4W		
S = 400/230V, 3Ø, 4W		
T = 415/240V, 3Ø, 4W		

Example: **TPS4C0620X2** = SPD for a 208/120V panelboard with a surge current capacity of 200kA per phase and Type 2 SPD.

When an option is not selected, include a **zero (0)** in the field.

① Not available in 300, 400 or 500kA versions



TPS4 L6

Ordering Information

Catalog # TPS4 □ L6 □□ X □

Voltage Code	Surge Current (kA)	Options
A = 240/120V ,1Ø, 3W	**15** = 150 kA per phase	**X** = Surge counter (Standard)
B = 240/120V, 3Ø, 4W	**30** = 300 kA per phase	**2** = Type 2 SPD (Default) Includes UL 1283 EMI/RFI Filters
C = 208/120V, 3Ø, 4W	**45** = 450 kA per phase	**0** = Type 1 SPD
W= 220/127V, 3Ø, 4W	**55** = 550 kA per phase	
E = 480/277V, 3Ø, 4W	**75** = 750 kA per phase	
K = 380/220V, 3Ø, 4W		
L = 600/347V, 3Ø, 4W		
S = 400/230V, 3Ø, 4W		
T = 415/240V, 3Ø, 4W		

Example: **TPS4CL620X2** = SPD for a 208/120V panelboard with a surge current capacity of 200kA per phase and Type 2 SPD.

When an option is not selected, include a **zero (0)** in the field.

Not available in 450, 550 or 750kA versions

TPS4 09

TPS4 09 is a UL 1449 5th edition 130 kA Type 1 compact multi-mode surge protective device that can be installed on either the line or load side of the electrical service. When installed at the electrical service entrance, it can be used for UL 96A compliance (@ 20 kA I_n).

TPS4 09 Key Features

- UL 1449 5th edition Listed Type 1
- Type 1 Rated SPD
- 130 kA Per Phase Surge Current
- 20 kA I_n (most models)
- 200 kA SCCR
- UL 96A Lightning Protection Master Labeling compliant (@ 20 kA)
- Every MOV is monitored, including N-G
- Mounts external to electrical distribution equipment – weatherproof hub included
- Standard compact NEMA 4X polycarbonate enclosure
- Modes of Protection: L-N, L-G, N-G, and L-L
- Standard Monitoring: LED Indicators
- Wire Size: Prewired with 3' (91.4 cm) of #10 AWG
- Dimensions: 5.02" x 2.93" x 3.25"
- Weight: 1 lb.
- 10-year product warranty

Available Options:

- Dry contacts & audible alarm (option "D")



TPS4 09

Ordering Information

Catalog # TPS4 ☐ 09 ☐☐ ☐ 00

Voltage Code	Surge Current (kA)	Options
A = 120/240 V, 1Ø, 3W **B** = 120/240 V, 3Ø, 4W **C** = 120/208 V, 3Ø, 4W **W**= 220/127 V, 3Ø, 4W **D** = 240 V, 3Ø, 3W **E** = 277/480 V, 3Ø, 4W **F** = 480 V, 3Ø, 3W **G** = 600 V, 3Ø, 3W **K** = 380/220 V, 3Ø, 4W **L** = 600/347 V, 3Ø, 4W **S** = 400/230 V, 3Ø, 4W **T** = 415/240 V, 3Ø, 4W	13 = 130 kA per phase Available for field retrofit in P1 panels.	**D** = Dry Contact & Audible Alarm (Standard)

When an option is not selected, include a **zero** (**0**) in the field.

TPS4 11

TPS4 11 is a UL 1449 5th edition Listed multi-mode Type 1 surge protective device with a per phase surge current capacity that can be increased to 200 kA. In addition, this unit provides UL 1283 listed EMI/RFI or Sine Wave tracking filtering that will condition low energy L-N coupled noise. When installed at the electrical service entrance, it can be used for UL 96A compliance (@ 20 kA I_n).

Standard monitoring includes protection status indication LEDs. Complete protection is intact when the status indicators are illuminated. When protection is lost, the status indicator will extinguish and the red service light will illuminate. An audible alarm and dry contacts are available monitoring options.

A new diagnostic feature integrated within the TPS4 11 is Ground Integrity Monitoring or (GIM) diagnostic indication circuit. Ground Integrity Monitoring or (GIM) diagnostics monitors the health of the electrical system's neutral to ground bond. If voltage is seen across neutral and ground, the phase indicators will remain illuminated, while the red service light begins to flash alerting the end user that the electrical system grounding needs to be checked and serviced. This feature can be remotely monitored when the optional dry contacts are included. Siemens TPS4s are one of the first in the industry to offer this power quality safety and performance indication.

TPS4 11 Key Features

- UL 1449-5 Type 2 SPD and UL 1283 Listed
  – Optional UL 1449 5th edition Listed Type 1
- Type 1 / Type 2 SPD
- 100, 150, 200 and 250 kA Per Phase Surge Current
- 20 kA I_n
- 200 kA SCCR (most models)
- UL 96A Lightning Protection Master Labeling compliant (@ 20 kA)
- Every MOV is monitored, including N-G
- Mounts external to electrical distribution equipment
- Standard NEMA 4X polycarbonate enclosure (UL 746C (f1), UL 94-5VA)
- Modes of Protection: L-N, L-G, N-G, and L-L
- Standard Monitoring: LED Indicators and Ground Integrity Monitoring diagnostics
- Wire size: #8 AWG to #10 AWG
- Dimensions: 6.88" x 6.88" x 2.96"
- Weight: 3.5 lb.
- 10-year product warranty

Available Options:

- Dry contacts & audible alarm (option "D")



TPS4 11

Ordering Information

Catalog # TPS4 ☐ 11 ☐☐ ☐ ☐

Voltage Code

A = 120/240 V, 1Ø, 3W
B = 120/240 V, 3Ø, 4W
C = 120/208 V, 3Ø, 4W
W = 220/127 V, 3Ø, 4W
D = 240 V, 3Ø, 3W
E = 277/480 V, 3Ø, 4W
F = 480 V, 3Ø, 3W
G = 600 V, 3Ø, 3W
K = 380/220 V, 3Ø, 4W
L = 600/347 V, 3Ø, 4W
S = 400/230 V, 3Ø, 4W
T = 415/240 V, 3Ø, 4W

Surge Current (kA)

10 = 100 kA per phase
15 = 150 kA per phase
20 = 200 kA per phase
25 = 250 kA per phase

Options

2 = Type 2 SPD (Default) Includes UL 1283 EMI/RFI Filters
0 = Type 1 SPD (Consult Factory Prior to Ordering)
D = Dry Contacts & audible alarm

TPS4 External SPDs NEW

TPS4 12 and TPS4 L12 (True or Discrete 10-Mode)

TPS4 12 and TPS4 L12 are UL 1449-5 Type 2 and Optional UL 1449 5th edition surge protective device with a per phase surge current capacity that can be increased to 500 kA (TPS4 L12 up to 750 kA). For mission critical or high profile applications, the TPS4 L12 is our "True" or "Discrete" 10-mode style SPD providing the "Just in Case" assurance of directly connected L-L MOVs.

Both TPS4 12 and TPS4 L12 are UL 1283 Listed incorporating EMI/RFI or Sine Wave tracking filtering designed to condition low energy L-N coupled noise. When installed at the electrical service entrance, it can be used for UL 96A compliance (@ 20 kA In).

Standard monitoring includes protection status indication LEDs, audible alarm, and dry contacts. Complete protection is intact when the status indicators are illuminated. When protection is lost, the status indicator will extinguish, the red service light will illuminate, and the dry contacts will change state. An optional surge counter is available.

A new diagnostic feature integrated within the TPS4 12 and TPS4 L12 is Ground Integrity Monitoring or (GIM) diagnostic indication circuit. Ground Integrity Monitoring or (GIM) diagnostics monitors the health of the electrical system's neutral to ground bond. If voltage is seen across neutral and ground, the phase indicators will remain illuminated, while the red service light begins to flash alerting the end user that the electrical system grounding needs to be checked and serviced. This feature can be remotely monitored via the dry contact outputs. Siemens TPSs are one of the first in the industry to offer this power quality safety and performance indication.

TPS4 12 and TPS4 L12 Key Features

- UL 1449-5 Type 2 SPD and UL 1283 Listed
  - Optional UL 1449 5th edition Listed Type 1
- Type 1 / Type 2 SPD
- TPS4 12: 100 – 500 kA Per Phase Surge Current
- TPS4 L12: 150, 300, 450, 550, 750 kA Phase Surge Current
- 20 kA I_n (most models)
- 200 kA SCCR (most models)
- UL 96A Lightning Protection Master Labeling compliant (@ 20 kA)
- Every MOV is monitored, including N-G
- Mounts external to electrical distribution equipment
  - Recommended for line side or load side applications
- Standard NEMA 1/12/3R/04 ANSI 61 steel enclosure
- TPS4 12 Modes of Protection – L-N, L-G, N-G, and L-L
- TPS4 L12 Modes of Protection – L-N, L-G, N-G, and L-L (directly connected L-L elements)
- Standard Monitoring:
  - LED Indicators
  - Ground Integrity Monitoring diagnostics
  - Dry contacts
  - Event counter with time and date stamp
  - Audible alarm with silence switch and test button
- Wire size: #8 AWG to 1/0
- Dim: 12" x 12" x 8.5" (305 mm x 305 mm x 216 mm)③
- Weight: 16.5 lbs (7484 g)③
- 10-year product warranty

Available Options:

- Internal rotary disconnect
- Thru-door disconnect
- Flush kits available as accessory



TPS4 12

Ordering Information

Catalog # TPS4 □ 12 □□ □ X □□

Voltage Code	Surge Current (kA)	Enclosure
A = 240/120 V, 1Ø, 3W	**10** = 100 kA per phase	**0** = Standard NEMA 4 metallic
B = 240/120 V, 3Ø, 4W	**15** = 150 kA per phase	**S** = NEMA 4X stainless steel
C = 208/120 V, 3Ø, 4W	**20** = 200 kA per phase	**V** = NEMA 4X non-metallic
W= 220/127 V, 3Ø, 4W	**25** = 250 kA per phase	
D = 240 V, 3Ø, 3W	**30** = 300 kA per phase	Options 1 alpha numeric character
E = 480/277 V, 3Ø, 4W	**40** = 400 kA per phase	**X** = Surge counter (standard)
F = 480 V, 3Ø, 3W	**50** = 500 kA per phase	
G = 600 V, 3Ø, 3W		**D** = Internal disconnect (default)
K = 380/220 V, 3Ø, 4W		**T** = Thru-door disconnect
L = 600/347 V, 3Ø, 4W		
S = 400/230 V, 3Ø, 4W		**2** = Type 2 SPD (default) includes UL 1283 EMI/RFI Filters
T = 415/240 V, 3Ø, 4W		**0** = NEMA 4X stainless steel

Example: **TPS4C12200XD2** = a Type 2 SPD for a 208/120V application with a surge current capacity of 200kA per phase, in a standard NEMA 4 enclosure with a surge counter and internal rotary disconnect option.

Not available in 300, 400 or 500kA
Can also be used on 208Y/120V 1Ø, 3W System

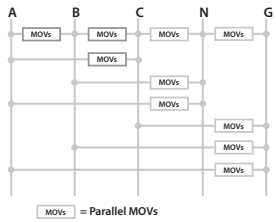

"True" or "Discrete" 10-Mode SPD



TPS4 L12

Ordering Information

Catalog # TPS4 □ L12 □□ □ X □□

Voltage Code	Surge Current (kA)	Enclosure
A = 240/120 V, 1Ø, 3W②	**10** = 100 kA per phase	**0** = Standard NEMA 4 metallic
B = 240/120 V, 3Ø, 4W	**30** = 300 kA per phase	**S** = NEMA 4X stainless steel
C = 208/120 V, 3Ø, 4W	**45** = 450 kA per phase	**V** = NEMA 4X non-metallic
W= 220/127 V, 3Ø, 4W	**55** = 550 kA per phase	
E = 480/277 V, 3Ø, 3W	**75** = 750 kA per phase	Options 1 alpha numeric character
K = 380/220 V, 3Ø, 4W		**X** = Surge counter (standard)
L = 600/347 V, 3Ø, 4W①		
S = 400/230 V, 3Ø, 4W		**D** = Internal disconnect (default)
T = 415/240 V, 3Ø, 4W		**T** = Thru-door disconnect
		2 = Type 2 SPD (default) includes UL 1283 EMI/RFI Filters
		0 = NEMA 4X stainless steel

Example: **TPS4CL12300XT2** = a Type 2 SPD for a 208/120V application with a surge current capacity of 300kA per phase, in a standard NEMA 4 enclosure with a surge counter and thru-door disconnect.

① Not available in 450, 550 or 750kA
② Can also be used on 208Y/120V 1Ø, 3W System
③ Internal disconnect options and other NEMA ratings may increase enclosure size and weight

TPS4 External or Wall Mounted SPDs NEW

Selection

TPS4 13

TPS4 13 is an UL 1449-5 Type 2 and Optional UL 1449 5th edition surge protective device with a per phase surge current capacity that can be increased to 400 kA.

TPS4 13 is UL 1283 Listed incorporating EMI/RFI or Sine Wave tracking filtering designed to condition low energy L-N coupled noise. When installed at the electrical service entrance, it can be used for UL 96A compliance (@ 20 kA In).

Standard monitoring includes protection status indication LEDs, audible alarm, and dry contacts. Complete protection is intact when the status indicators are illuminated. When protection is lost, the status indicator will extinguish, the red service light will illuminate, and the dry contacts will change state. A standard surge counter is included with time/date stamp.



TPS4 13

TPS4 13 Key Features

- UL 1449-5 Type 2 SPD and UL 1283 Listed
  – Optional UL 1449 5th edition Listed Type 1
- Type 1 / Type 2 SPD
- TPS4 13: 100 – 400 kA Per Phase Surge Current
- 20 kA I_n
- 200 kA SCCR
- UL 96A Lightning Protection Master Labeling compliant (@ 20 kA)
- Every MOV is monitored, including N-G
- Mounts external to electrical distribution equipment
  – Recommended for line side or load side applications
- NEMA 4 Aluminum enclosure
- TPS4 13 Modes of Protection – L-N, L-G, N-G, and L-L
- Standard Monitoring:
  – LED Indicators
  – Ground Integrity Monitoring diagnostics
  – Dry contacts
  – Audible alarm with silence switch and test button
- Pre-wired with #10 AWG
- Dimensions: 9.35" x 8.14" x 3.25"
- Weight: 5.4 lb.
- 10-year product warranty

Ordering Information

Catalog # TPS4 □ 13 □□ □ □ □

Voltage Code

A = 120/240 V, 1Ø, 3W
B = 120/240 V, 3Ø, 4W
C = 120/208 V, 3Ø, 4W
W = 220/127 V, 3Ø, 4W
D = 240 V, 3Ø, 3W
E = 277/480 V, 3Ø, 4W
F = 480 V, 3Ø, 3W
G = 600 V, 3Ø, 3W
K = 380/220 V, 3Ø, 4W
L = 600/347 V, 3Ø, 4W
S = 400/230 V, 3Ø, 4W
T = 415/240 V, 3Ø, 4W

Surge Current (kA)

10 = 100 kA per phase
15 = 150 kA per phase
20 = 200 kA per phase
25 = 250 kA per phase
30 = 300 kA per phase
40 = 400 kA per phase

Enclosure

0 = No Enclosure (Standard)

Options

2 = Type 2 SPD (Default) Includes UL 1283 EMI/RFI Filters
0 = Type 1 SPD (Consult Factory Prior to Ordering)
X = Surge Counter (Standard)

TPS4 External Mounted SPDs NEW

TPS4 15 and TPS4 L15 (True or Discrete 10-Mode)

TPS4 15 and TPS4 L15 are UL 1449-5 Type 2 and Optional UL 1449 5th edition surge protective device with a per phase surge current capacity that can be increased to 1000 kA (TPS4 L15 up to 900 kA). For mission critical or high profile applications, the TPS4 L15 is our "True" or "Discrete" 10-mode style SPD providing the "Just in Case" assurance of directly connected L-L MOVs.

Both TPS4 15 and TPS4 L15 are UL 1283 Listed incorporating EMI/RFI or Sine Wave tracking filtering designed to condition low energy L-N coupled noise. When installed at the electrical service entrance, it can be used for UL 96A compliance (@ 20 kA I_n).

Standard monitoring includes protection status indication LEDs, audible alarm, and dry contacts. Complete protection is intact when the status indicators are illuminated. When protection is lost, the status indicator will extinguish, the red service light will illuminate, and the dry contacts will change state. An optional surge counter is available.

A new diagnostic feature integrated within the TPS4 15 and TPS4 L15 is Ground Integrity Monitoring or (GIM) diagnostic indication circuit. Ground Integrity Monitoring or (GIM) diagnostics monitors the health of the electrical system's neutral to ground bond. If voltage is seen across neutral and ground, the phase indicators will remain illuminated, while the red service light begins to flash alerting the end user that the electrical system grounding needs to be checked and serviced. This feature can be remotely monitored via the dry contact outputs. Siemens TPSs are one of the first in the industry to offer this power quality safety and performance indication.

TPS4 15 and TPS4 L15 Key Features

- UL 1449-5 and UL 1283 Listed
  - Optional UL 1449 5th edition Listed Type 1
- Type 1 / Type 2 SPD
- TPS4 15: 400 – 1000 kA Per Phase Surge Current
- TPS4 L15: 600 and 900 kA Phase Surge Current
- 20 kA I_n (most models)
- 200 kA SCCR (most models)
- UL 96A Lightning Protection Master Labeling compliant (@ 20 kA)
- Every MOV is monitored, including N-G
- Mounts external to electrical distribution equipment
  - Recommended for line side or load side applications
- Standard NEMA 1/12/3R/04 ANSI 61 steel enclosure
- TPS4 15 Modes of Protection – L-N, L-G, N-G, and L-L
- TPS4 L15 Modes of Protection – L-N, L-G, N-G, and L-L (directly connected L-L elements)
- Internal rotary disconnect switch included
- Standard Monitoring:
  - LED Indicators
  - Ground Integrity Monitoring diagnostics
  - Dry Contacts
  - Audible alarm with silence switch and test button
  - Event counter with time and date stamp
- Wire size: #8 AWG to 1/0
- Dimensions: 12" x 12" x 8.5" (305 mm x 305 mm x 216 mm)
- Weight: 24.5 lb. (11,113 g)
- 10-year product warranty
- Thru-door disconnect (default)

Available Options:

- Flush kits available as accessory



TPS4 15

Ordering Information

Catalog # TPS4 □ 15 □□ □ X □□

Voltage Code	Surge Current (kA)	Enclosure
A = 240/120 V, 1Ø, 3W①	**60** = 300 kA per phase	**0** = Standard NEMA 4 metallic
B = 240/120 V, 3Ø, 4W	**80** = 400 kA per phase	**S** = NEMA 4X stainless steel
C = 208/120 V, 3Ø, 4W	**1K** = 1000 kA per phase	**V** = NEMA 4X non-metallic
W= 220/127 V, 3Ø, 4W		
D = 240 V, 3Ø, 3W		Options 1 alpha numeric character
E = 480/277 V, 3Ø, 4W		**X** = Surge counter (standard)
F = 480 V, 3Ø, 3W		
G = 600 V, 3Ø, 3W		**T** = Thru-door disconnect (default)
K = 380/220 V, 3Ø, 4W		
L = 600/347 V, 3Ø, 4W		**2** = Type 2 SPD (default) includes UL 1283 EMI/RFI Filters
S = 400/230 V, 3Ø, 4W		**0** = NEMA 4X stainless steel
T = 415/240 V, 3Ø, 4W		

Example: **TPS4C15800XT2** = a Type 2 SPD for a 208/120V application with a surge current capacity of 800kA per phase, in a standard NEMA 4 enclosure with a surge counter and thru-door disconnect.

① Can also be used on 208Y/120V 1Ø, 3W System

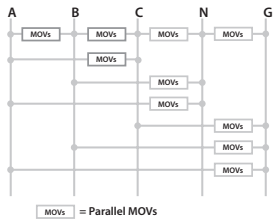

"True" or "Discrete" 10-Mode SPD



TPS4 L15

Ordering Information

Catalog # TPS4 □ L15 □□ □ X □□

Voltage Code	Surge Current (kA)	Enclosure
A = 240/120 V, 1Ø, 3W①	**60** = 600 kA per phase	**0** = Standard NEMA 4 metallic
B = 240/120 V, 3Ø, 4W	**90** = 900 kA per phase	**S** = NEMA 4X stainless steel
C = 208/120 V, 3Ø, 4W		**V** = NEMA 4X non-metallic
W= 220/127 V, 3Ø, 4W		
E = 480/277 V, 3Ø, 3W		Options 1 alpha numeric character
K = 380/220 V, 3Ø, 4W		**X** = Surge counter (standard)
L = 600/347 V, 3Ø, 4W		
S = 400/230 V, 3Ø, 4W		**T** = Thru-door disconnect (default)
T = 415/240 V, 3Ø, 4W		
		2 = Type 2 SPD (default) includes UL 1283 EMI/RFI Filters
		0 = NEMA 4X stainless steel

Example: **TPS4CL15900XT2** = a Type 2 SPD for a 208/120V application with a surge current capacity of 900kA per phase, in a standard NEMA 4 enclosure with a surge counter and thru-door disconnect.

① Can also be used on 208Y/120V 1Ø, 3W System
② Other NEMA ratings may increase enclosure size and weight.

Frequently Asked Questions

What is a surge protective device or SPD?

A Surge Protective Device is a device that attenuates (reduces in magnitude) random, high energy, short duration overvoltages caused by lightning, utilities, switching, etc. Such anomalies occur in the form of voltage and current spikes with a duration of less than half an ac voltage cycle. These high energy power spikes can damage sensitive electronic equipment, such as computers, instrumentation, and process controllers.

How do SPDs work?

Surge suppressors divert high energy power away from a load by providing a lower impedance path to common point earth ground. This is similar in concept to pressure relief valves that protect water heaters from overpressure. Surge suppressors used most often for protection of AC power have metal oxide varistors (MOVs) connected in parallel.

Where are SPDs installed?

AC voltage surge suppressors are typically installed in these three areas: at a utility service entrance for protection of an entire facility, in distribution panelboards and switchboards for protection of sensitive downstream loads; connected to a wall outlet for individual protection of a specific piece of equipment, such as a computer or solid-state controller.

What is clamping voltage?

Clamping voltage, also referred to as peak let through or suppressed voltage rating, is the amount of voltage a surge suppressor permits to pass through it to the attached load during a transient event. Clamping voltage is a performance measurement of a surge suppressor's ability to attenuate a transient. For example, a surge suppressor might limit a 6,000V surge so that only 700V is 'visible' to the load. The Voltage Protection Rating is 700V, commonly called Clamping Voltage. This performance value is confirmed by Underwriters Laboratories during tests conducted while evaluating a surge suppressor for listing.

What is surge current capacity?

Surge current capacity is the maximum amount of surge current that a surge suppressor can pass for a single transient event. This level is used to indicate the protection capacity of a particular surge suppressor design, and when specifying surge suppressors. For example, in a high exposure application with very large transients present from lightning, a higher level surge current capacity might be desired. Be aware that surges have natural limitations and that larger surge current capacity tends to add redundancy rather than the implied ability to handle an extremely large surge. For example, an entire lightning strike cannot go through wire; it is much like trying to put the output from a fire hose through a soda straw. Consequently, suppressors do not need to be sized for entire lightning strikes. There are valid reasons for adding excess surge current capacity for redundancy reasons.

What types of components make up a SPD?

The device most commonly used in AC voltage surge suppressors are MOVs, a solid-state device made of zinc oxide materials. MOVs are voltage sensitive semiconductors, which change from high impedance to low impedance when sensing an overvoltage condition. MOVs are packaged for specific voltages and current handling capacities. Other devices (more typically found in DC applications) include single junction diodes and gas tubes that ionize at preset voltages.

What features should be considered when selecting SPDs?

Two important areas to consider during the selection of a surge suppressor are performance and safety, and include the following criteria: Performance: 1) surge current capacity; and 2) clamping voltage. Safety: 1) the individual suppression circuit should be fused to clear an inoperative MOV during an extreme transient event, and 2) provide overcurrent protection for the surge suppressor during a fault condition.

What surge current capacity is required?

Surge current capacity is dependent on the application and the amount of required protection. The selection of the proper surge suppressor is not an exact science and cannot be scientifically calculated from a standard algorithm.

Questions to consider when specifying the proper surge current capacity for a surge suppressor include:

- What is the geographic location of the facility and it's susceptibility to lightning? (For example, Ontario is a high-lightning area; Prince Edward Island is a low lightning area.)
- Is the facility in a rural or urban setting?
- Is the facility the tallest building around?
- Is the facility at the end of the utility grid?
- If it is an existing facility, what is its power quality history?

Based on the above information, and taking into account the cost of protection, the following is a good rule of thumb: a surge suppressor with a surge current capacity in the range of 100kA to 300kA would be used in conjunction with a service entrance panelboard or switchboard. A surge suppressor with a surge current capacity in the range of 100kA to 200kA would be used in conjunction with a downstream panelboard



Circuit Breaker Lighting Panel Type P1



Circuit Breaker Lighting or Distribution Panel Types P2/P3



Circuit Breaker Distribution Panel Type S5

Contents

Features, Reference Guide & General Specifications	10-2 – 10-5
Factory Assembled Panelboard Coding System	10-6
Distributor Stock - Type P1 RTAP General info & Kits	10-7 – 10-14
Legacy Panelboard Replacement, Modification, and Additions	10-15
15A-125A Branch Breakers for Panelboards	10-16 – 10-19
Type P1	10-20 – 10-29
Specifications	10-20
Main Breaker, Main Lug, and Branch Breaker Config. Info	10-21 – 10-24
Modifications and Additions	10-25 – 10-26
Enclosure Dimensions - Type 1, 3R and 3R/12	10-27
General P1-P2-P3 Enclosure Information	10-28 – 10-29
Type P2	10-30 – 10-44
Specifications	10-30
Distributor Stock/Unassembled - Type P2 Main Lug Only	10-31 – 10-32
Main Breaker, Main Lug, and Branch Breaker Config. Info	10-33 – 10-37
Modifications and Additions	10-38 – 10-39
SEM3 Embedded Micro Metering Module	10-40 – 10-41
Enclosure Modifications, Kits, and Accessories	10-42 – 10-43
Enclosure Dimensions	10-44
Type P3	10-45 – 10-53
Specifications	10-45
Enclosure Selection/ Dimensions	10-46
Alternate Main, Branch, and Subfeed Breakers	10-47 – 10-48
Modifications and Additions	10-49 – 10-51
Kits and Accessories	10-52
Enclosure Dimensions	10-53
P1-P2-P2, S5, & F2 Distribution Circuit Breaker Connector Kits	10-54
Miscellaneous Accessories - Spare Part Kits	10-55 – 10-56
B74FLR Enclosures & Related Bottom Covers	10-57 – 10-59
Lighting panel ground bus information: P1, P2, P3	10-60
Type S5	10-61 – 10-65
Specifications	10-61
Main Lug and Main Breaker Selection	10-62
Branch Breakers	10-63
Modifications and Additions	10-64
Modifications, Additions, Replacements for Circuit Breakers	10-65
Type F2	10-66 – 10-71
Specifications and Fuse Types	10-66 – 10-67
Modifications and Additions	10-68
Modifications, Additions, Replacements for Fusible Switches	10-69
SEM3 Embedded Micro Metering Module	10-70
Panel Skirt/System Types, AC & DC Voltages	10-71
Type HCP Switchboard Units	10-72 – 10-73
Selection and accessories	10-72
Dimensions	10-73
Type C1/C2	10-74 – 10-81
Specifications	10-74
Main, Branch and Subfeed Breakers	10-75
Circuit Breaker / Column Type, Modifications and Additions	10-76
Conduit Enclosing Shield (Panel Skirts)	10-77
Enclosure/System Types, AC & DC Voltages	10-78
Dimensions and Panelboard Configurations	10-79 – 10-80
Fuse Curves	10-81

Panelboards

Introduction

General

This generation of panelboards from Siemens offers the high level of engineering and innovation you've come to expect from the leader in power distribution technology. The "P Series" line of panelboards offers a stepped approach to power distribution.

Additional strength has been added to an already rugged and durable panelboard family. Engineered specifically to provide maximum flexibility, the new designs simplify wiring and reduce material requirements making them easier to install and less costly than competitive products. At the heart of the product line is the extensive research and technology found among Siemens circuit protection devices – both fusible switches and molded case circuit breakers.

The line is anchored by the innovative P1. Featuring the industry's most flexible designs, the P1 virtually eliminates common errors, such as feed direction, and main lug versus main breaker. Increasing distribution is simplified by the ability to add feed-thru lugs. The Revised P1 design introduced in June 2015 has added extended circuits up to 66 and has available smaller enclosures with no subfeed option for added flexibility.

Subsequent steps in the P series offer increased capacity and more design options:

- The highly flexible P2 panel provides options to fit the most demanding specifications.
- Sized more like a lighting panel, the P3 panel packs the power of a distribution panel in a space-saving, highly flexible design.
- The powerful S5 and F2 are distribution power panels that allow circuit breakers as branch and main devices.

Siemens also offers a number of specialty panels, like column panels, SEM3 (Embedded Micro Metering Module™) and others. Don't see a panel to meet your requirements? Ask your Siemens representative about our custom capabilities.

Features Overview

P Series lighting panel features include Fas-Latch trim, which is popular among installers; the jacking screw system, that permits adjustments even after wiring has been installed; our exclusive split neutral, and more. Many panelboards have the capability of mixing and matching breakers of different sizes and ratings – or changing from main lug to main breaker, or adding subfeed breakers without changing the box size. Other models accept a wide range of fuse types, including Siemens exclusive Vacu-Break® technology.

Key Panelboard Features

	P1	P2	P3	S5	F2
Power Panelboard Applications	–	•	•	•	•
Convertible From Top Feed To Bottom Feed Or Vice Versa	•	–	–	–	–
Change From Main Lug To Main Breaker Or Add Subfeed Without Changing Enclosure Size②	•	–	–	–	–
Space-Saving, Horizontally Mounted Main Breaker	Up To 250 Amps	Up To 250 Amps	–	•	•
Short-Circuit Rating Label Giving Performance Level	•	•	•	•	•
Standard Aluminum Ground Assembly	•	•	•	•	•
Blank End-Walls Standard①	•	•	•	•	•
Bolted Current-Carrying Parts	•	•	•	•	•
Split Neutral	•	–	•	•	•
Connection Accessible From Front	•	•	•	•	•
Screw-Type Mechanical Lugs	•	•	•	•	•
Time-Reducing Wing Nuts To Secure Interior Without Tools	•	•	•	•	•
Main and Branch Devices Connected With Case-Hardened Hardware	•	•	•	•	•
Flush Lock, Concealed Door Hinges/Trim Screws	•	•	•	–	–
Symmetrical Interior Mounting Studs To Eliminate Upside-Down Mounting of Box	•	•	•	•	•
Interior Height Adjustment For Flush Applications	•	•	•	–	–
Standard Depth	5.75"	5.75"	7.75"	12.75"	12.75"
Accepts A Wide Range Of Fuse Types	–	–	–	–	•
Accepts Vacu-Break Fusible Switch	–	–	–	–	•
Accepts A Wide Range Of Circuit Breakers	•	•	•	•	•
Optional Compression Lugs	•	•	•	•	•

• Standard

① Knockouts are available for P1 & P2 (5.75"deep x 20"wide enclosures), and P3 (7.75"deep x 24"wide enclosures).

② For Revised P1, only when Subfeed Space is selected, Interior Part Number ends with "T". When "N" is at end there is no Subfeed Space available

General Specifications

Service Entrance Equipment

When a panelboard is used as service entrance equipment, it must be located near the point of entrance for conductors supplying the building. Panelboards must be identified as "Service Entrance" at the time of placing the order. This way they will be supplied with the appropriate CSA certification and labelling. Panels must include a connector for bonding and grounding neutral conductor. Please consult CSA, CEC and local inspection authorities for specification and installation guidelines.

Integrated Equipment Short Circuit Rating

The term "Integrated Equipment Short Circuit Rating" refers to the application of series connected circuit breakers in a combination that allows some breakers to have lower individual interrupting ratings than the available fault current. This is permitted as long as the series combination has been tested and certified by CSA. "Series Rated" must be identified at the time of placing the order.

Standards

CSA: C22.2 No.29. Certified under files # 93833
UL: 67 and 50. Listed by Underwriter's Laboratories, Inc., under "Panelboards" File #E2269 and #E4016.
NEMA: PB1.1

Wire Connectors①

Standard wire connectors in Siemens panels are suitable for copper or aluminum cables rated 60/75 °C. Copper main lugs are a price-added option for most panel types and some Circuit Breakers (check with Siemens sales for availability). It should be noted that most copper lugs will only accept copper cables. Some applications, 100% rated framed devices in particular, require that the cable and connectors be rated 90 °C but are sized to the 75 °C tables.

Standard ground connectors are also suitable for copper or aluminum wire. Ground connector assemblies (EGK, IGK) have (6) 1/0 max. and (15) #6 max. connections. The 1/0 holes are capable of connecting up (3) #10 max. wires. Copper ground assemblies (ECGK, ICGK) are rated for copper wire only and have the same wiring capacity as the Al/Cu connectors.

Standard neutrals①, like standard main lugs, are also rated for copper or aluminum wire. The neutral cross bar material follows the selection bus. Copper neutral lugs are rated for copper cable only and available as a price added option.

Lug Data

Feed-Thru Lugs

Fig. G-1

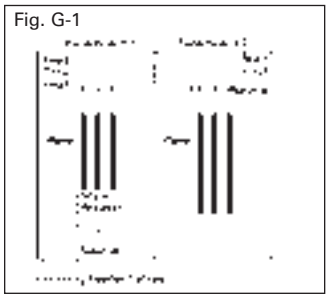

Subfeed Lugs or Double Lug

Fig. G-2

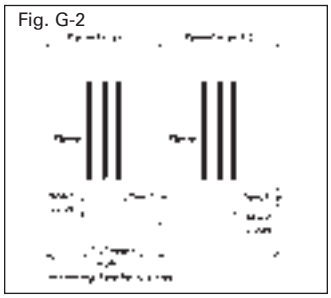

Feed-thru lugs (fig. G-1) are mounted at the opposite end of the main bus from the main lugs or main breaker and are used to connect two or more panelboards to the incoming feeder. The feeder cables are brought into Panelboard 1 and connected to the main lugs or main breaker. Cables interconnecting the two panelboards are connected to the feed-thru lugs in Panelboard 1 and are carried over the main lugs in Panelboard 2. This arrangement could be reversed with the main lugs located at the top and the feed-thru lugs at the bottom of the panel.

Subfeed lugs (fig. G-2) are mounted directly beside the main incoming lugs and are used to connect two or more panelboards to the incoming feeder. The feeder cables are brought into Panelboard 1 and connected to the main lugs. Another set of cables that are the same size are connected to the subfeed lugs of Panelboard 1 and are carried over the main lugs of Panelboard 2.

Note: P1 panelboards do not have subfeed lugs available. If this configuration is needed, move to a P2 or P3 panelboard.

Note: For Panelboards, Siemens uses this Document for the Operations and Maintenance manual: ANSI/NEMA PB 1.1-2013 [General Instructions for Proper Installation, Operation, and Maintenance of Panelboards Rated 600 Volts and Less (O&M Manual)] ** The PDF of this document can be downloaded (at no cost) for printing at this location: **https://www.nema.org/standards/view/Panelboards** (ref. Material # 11-1056-01)

① Reference info: Neutral Lugs are rated for 75°C cable. When running a circuit to a load, the same type of wire should be used on the phase (breaker) and neutral connections in the panel.
a) Cables should be sized per NEC Table 310.16 (formerly Table 310.15(B)(16)) and the 75°C column.
b) Customer can choose to use 90C cable if sized as if it is 75°C.
c) Some 100% rated circuit breakers require the use of 90°C cable sized per the 75°C column. Refer to the Markings on the breaker and use the appropriate cable.
d) Some Circuit breakers 100A or less are marked as being suitable for 60°C, 75°C or 60/75°C cable. Refer to the Markings on the breaker and use the appropriate cable.

General Specifications

Bussing Sequence

Interiors are designed to accommodate top or bottom feed. Regardless of which is specified, the uppermost pole is always on "A" phase; the second pole down is always on "B" phase, and the third pole down is always on "C" phase (assuming 3-phase voltage system).

As standard, branch breakers shall be mounted at the top of the panel with "spaces" at the bottom, regardless of the direction from which the panel is fed.

All breakers have bolted connections. The panel design provides bracing up to 200,000A IR CSA short circuit rating.



Circuit Breaker Lighting Panel Type P1



Circuit Breaker Lighting or Distribution Panel Types P2/P3

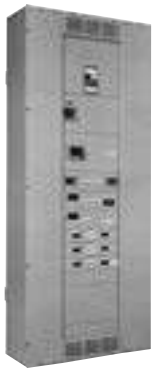

Circuit Breaker Distribution Panel Type S5



Fusible Switch Distribution Panel Type F2

Panelboard Ratings

Description	Revised P1	P2	P3	S5	F2
Max. Voltage	600Y/347V AC Max.⑦	600V AC Max. 250V DC Max.	600V AC Max. 250V DC Max.	600V AC Max. 250V DC Max.	600V AC Max. 250V DC Max.
System	1-Phase, 2-wire 1-Phase, 3-wire 3-Phase, 3-wire 3-Phase, 4-wire	1-Phase, 2-wire 1-Phase, 3-wire 3-Phase, 3-wire 3-Phase, 4-wire	1-Phase, 2-wire 1-Phase, 3-wire 3-Phase, 4-wire 3-Phase, 3-wire	1-Phase, 3-wire 3-Phase, 4-wire 3-Phase, 3-wire	1-Phase, 3-wire 3-Phase, 4-wire 3-Phase, 3-wire
Mains					
Main Lugs Main Breaker Main Switch	125A-400A 100A-400A —	125A-600A 100A-600A —	400A-800A 200A-600A —	225A-1200A 400A-1200A —	225A-1200A — 200A-600A
Circuits	18, 30, 42, 54, 66 (250A) 30, 42, 54, 66 (400A)	18, 30, 42, 54, 66 78, 90①	18, 30, 42, 54, 66, 78, 90	—	—
Branch Ratings	15-125A (Interior) 250A Max. (Subfeed breaker)	15-225A (Interior) 250A Max. (Subfeed breaker)	15-225A (Interior) 400A Max. (Subfeed breaker)	15-1200A MCCB	30-1200A Fusible
Branch Disconnect Devices	BL/BQD series, BT series, xGB series, 3VA41 series⑥, AFCI/GFCI series,	BL/BQD series, BT series, xGB series, 3VA41 series, QR series④, 3VA52/61/62 series④, AFCI/GFCI series, ED series,	BL/BQD series, BT series, xGB series, 3VA41 series, QR series⑤, 3VA52/61/62 series④, AFCI/GFCI series, ED series,	All 15-1200A MCCBs, and VL DG, FG, JG	All 30-600A VB switches, 30-200A VK switches, and 800-1200A HCP switches
Subfeed Circuit Breakers②③	ED series, QR series, FD series, 3VA41 series - coming soon, 3VA52/61/62 series - coming soo	FD series, JD series, 3VA53/63 series - coming soon	FD series, JD series, 3VA53/63 series - coming soon	—	—
Enclosure Heights Inches – (mm)	26, 32, 38, 44, 50, 56 @250A (660, 813, 965, 1118, 1270, 1422) 56, 62, 68, 74 @400A (1422, 1575, 1727, 1880)	26, 32, 38, 44, 50, 56, 62, 68, 74 (660, 813, 965, 1118, 1270, 1422, 1524, 1575, 1727)	56, 62, 68, 74, 80 (1422-2032)	60, 75, 90 (1524, 1905, 2286)	60, 75, 90 (1524, 1905, 2286)
Standard Trims	Fas-Latch – 1 Piece Surface or Flush	Fas-Latch – 1 Piece Surface or Flush	Fas-Latch – 1 Piece Surface or Flush	—	—

① Functional pricing is based on circuits shown. However, the panel can be configured with less circuits.
② P1 can have max. 1 subfeed breaker when Subfeed Space is available. P2 and P3 can have up to (2) FD subfeed breakers.
③ JD and FD breakers are mounted vertical. Limitations apply.
④ A maximum of (4) QR/3VA52/3VA61/3VA62 may be installed in a P2 panel and are single mounted in a 20"w enclosure.
⑤ A maximum of (6) QR/3VA52/3VA61/3VA62 may be installed in a P3 panel and are twin mounted.
⑥ P1 panels with xGB/3VA41 are limited to interiors for xGB/3VA41 breakers only.
⑦ Factory assembled P1 has capability of 600Y/347V AC system when the proper breakers are selected.

General Specifications

Typical Panelboard Modifications

Description	Lighting and Distribution Panelboards			Distribution Panelboards	
	P1	P2	P3	S5	F2
Box					
Type 1	Standard (20" W)	Standard (20" W)	Standard (24" W)	Standard	Standard
Type 1 Enclosure with Hood (available from distributor stock)	□	□	□	□	□
Type 1 w/Gasket between box and front	□	□	□	□	□
Type 2 Enclosure - Drip Tight①	□	□	□	□	□
Type 3R/12	□	□	□	□	□
Type 4, 4X (size varies by type/material)	□	□	□	—	—
Wider Box (check w/factory for custom options)	□ (24"W)	□ (24'', 30'' or 36''W)	□ (30'' or 36''W)	□ (custom)	□ (custom)
Deeper Box (check w/factory for custom options)	(7.75"D)	□ (7.75"D)	□ (custom)	□ (custom)	□ (custom)
Front					
Front with Door	Standard	Standard	Standard	□	□
4-piece Front	—	—	—	Standard	Standard
4-piece Front w/Hinged Gutter Covers	—	—	—	□	□
Hinged-to-Box Front/Skew-to-Box Front	□	□	□	(see Door-in-Door)	(see Door-in-Door)
Door-in-Door Front	□	□	□	□	□
Door with padlock	□	□	□	—	—
Special Locks	□	□	□	□	□
Nameplate	□	□	□	□	□
Interior					
Aluminum Equipment Ground Bar	Standard	Standard	Standard	Standard	Standard
Copper Equipment Ground Bar	□	□	□	□	□
Insulated Equipment Ground (CU or AL)	□	□	□	□	□
Subfeed Lugs	—	□	□	□	□
Feed-Thru Lugs	□	□	□	□	□
Compression Lugs	□	□	□	□	□
Copper Lugs	□	□	□	□	□
200% Neutral	□	□	□	400 - 600A	400 - 600A
Tin Plated Aluminum Bussing	Standard	Standard	Standard	Standard	Standard
Tin Plated Copper Bussing	□	□	□	□	□
Silver Plated Copper Bussing	—	□	□	□	□
R, J and T Fuse Clips	—	—	—	—	□

□ Available as an option. — Not Available

① To meet sprinkler proof requirements, if required:
- P1/P2/P3 Panels:
- Select Type 2 enclosure for non-service entrance applications.
- Select Type 3R enclosure for service entrance applications.
- S5/F2 Panels:
  - Select Type 3R enclosure.

Catalogue Numbering System

P	1	C	4	2	F	X	2	5	0	A	T	S	T	-	NGB

Type of Panel P1, P2, P3, S5, F2

Voltage and System*

C = 208Y/120 3Ø 4 W Wye AC - All
E = 480Y/277 3Ø 4 W Wye AC - All
D = 240 3Ø 3 W Delta AC - All
F = 480 3Ø 3 W Delta AC - All
G = 600 3Ø 3 W Delta AC - P2, P3, S5, F2
I = 347 3Ø 3 W Delta AC P2, P3, S5, F2
B = 240/120 3Ø 4 W Delta BØ High Leg AC - P2, P3, S5, F2
Q = 240/120 3Ø 4 W Delta CØ High Leg AC - P2, P3, S5, F2
A = 120/240 1Ø 3 W Grounded Neutral AC - All
H = 120 1Ø 2 W Grounded Neutral AC - P2, P3, S5, F2
J = 240 1Ø 2 W No Neutral AC - All
Y = 125 1Ø 2 W Grounded Neutral AC - P2, P3, S5, F2
Z = No Longer Available
K = 220/127 3Ø 4 W Wye AC - All
M = 380/220 3Ø 4 W Wye AC - All
R = 415/240 3Ø 4 W Wye AC - All
S = 440/250 3Ø 4 W Wye AC - All
L = 600/347 3Ø 4 W Wye AC - All
T = 230 3Ø 3 W Delta AC - All
W = 380 3Ø 3 W Delta AC - P2, P3, S5, F2
1 = 24V DC 1-Pole Branch Only - P2, P3, S5, F2
2 = 24V DC 2-Pole Branch Only - P2, P3, P4, P5
3 = 48V DC 1-Pole Branch Only - P2, P3, S5, F2
4 = 48V DC 2-Pole Branch Only - P2, P3, S5, F2
5 = 125V DC 1-Pole Branch Only - P2, P3, S5, F2
N = 125V DC 2-Pole Branch Only - P2, P3, S5, F2
O = 125/250V DC 2-Pole Branch Only - P2, P3, S5, F2
P = 125/250V DC 2 & 3-Pole Branch - All
U = 120V AC 3Ø3W - All
V = 240V 3Ø3W Grounded B Phase - P2, P3, S5, F2

*For any voltage system not listed, check with sales for availability.

Circuits **or** **Enclosure Height**
P1 – 18, 30, 42, 54, 66
P2 – 18, 30, 42, 54, 66, 78, 90
P3 – 18, 30, 42, 54, 66, 78, 90
S5, F2 - 60, 75, 90

Main Lug (ML), Main Breaker
(See Main Breaker Table coding below)

Amperage
100–400A = P1③ 400–800A = P3
100–600A = P2 400–1200A = S5, F2

Bus Code①	Bus Material	Bus Plating	P1	P2	P3	S5	F2
A	Aluminum	Tin-Plated	•	•	•	•	•
C	Copper	Tin-Plated	optional	optional	optional	n/a	n/a
E	Copper	Silver-Plated	optional	optional	optional	•	•

• Indicates default for this bus type.

Feed Location T = Top B = Bottom

Mounting
S = Surface
F = Flush. Flush trims extend 1 1/2" beyond the base box dimensions on P1, P2 and P3.

Subfeed Space Indicator (for P1 only) T = Subfeed Space Included N⑤ = No Subfeed Space

Branch Breaker Type
NONE = BL/BQD type NGB = NGB/3VA41 type only④

Main Breaker Coding

Code	Breaker	Code	Breaker	Code	Breaker	Code	Breaker	Code	Breaker	3VA ref	Code	Breaker	3VA ref
BL	BL	CJ	CJD6	L6	LD6	HN	HND6	V1	SEAB	3VA41 125A max	W2	MDAE	3VA61 150A max
BH	BLH	6H	HHJD6	LX	LXD6	HT	HNXD6	V2	MEAB		W3	HDAE	
BR	BLR	H9	HHJXD6	LH	LXD6H	HX	HNXD6H	V3	HEAB		W4	CDAE	
HB	HBL	H6	HJD6	S1	SCLD6	ND	ND6	V4	SEAS	3VA51 150A max	W5	LDAE	
BQ	BQD	H5	HJXD6	S2	SHLD6	NX	NXD6	V5	MEAS		WA	MFAE	3VA62 250A max
B6	BQD6⑤	H7	HJXD6H	SL	SLD6	NT	NXD6H	V6	HEAS		WB	HFAE	
CE	CED6	J6	JD6	—	—	SR	SCND6	VA	MFAS	3VA52 250A max	WC	CFAE	
E4	ED4	JD	JXD2	—	—	ST	SCND6H	VB	HFAS		WD	LFAE	
E6	ED6	JX	JXD6	—	—	AD	SHND6	VC	CFAS		WE	MJAE	3VA63 400A max
H4	HED4	JH	JXD6H	C9	CMD6	SD	SHND6H	VE	MJAS	3VA53 400A max	WF	HJAE	
HA	HHED6	SC	SCJD6	CH	CMD6H	SN	SND6	VF	HJAS		WG	CJAE	
CF	CFD6	SX	SHJD6	HM	HMD6	AY	SND6H	VG	CJAS		WH	LJAE	
FD	FD6	SY	SHJD6H	HR	HMXD6	—	—	VJ	MLAS	3VA54 600A max	WJ	MLAE	3VA64 600A max
FX	FXD6	SJ	SJD6	HS	HMXD6H	—	—	VK	HLAS		WK	HLAE	
HF	HFD6	SH	SJD6H	MD	MD6	—	—	VL	CLAS		WL	CLAE	
H2	HFXD6	CL	CLD6	MX	MXD6	—	—	VN	MMAS	3VA55 800A max	WM	LLAE	
H1	HHFD6	HH	HHLD6	MH	MXD6H	—	—	VO	HMAS		WN	MMAE	3VA65 800A max
H3	HHFXD6	XH	HHLXD6	SO	SCMD6	—	—	VP	CMAS		WO	HMAE	
G2	HGB	HL	HLD6	SQ	SCMD6H	—	—	VV	MNAS	3VA57 1200A max	WP	CMAE	
G3	LGB	HO	HLXD6	S5	SHMD6	—	—	VW	HNAS		WR	MMNAE	3VA66 1000A max
NB	NGB	HP	HLXD6H	S6	SHMD6H	—	—	VX	CNAS		WS	HMNAE	
G4	NGB2	—	—	SM	SMD6	—	—	—	—	—	WT	CMNAE	
G5	HGB2	—	—	AX	SMD6H	—	—	—	—	—	WV	MNAE	3VA67 1200A max
G6	LGB2	—	—	CN	CND6	—	—	—	—	—	WW	HNAE	
—	—	—	—	C6	CND6H	—	—	—	—	—	WX	CNAE	

① Standard bussing in P1, P2 and P3 panels is tin-plated for aluminum and copper.
② Not available for Revised P1 NGB/3VA41 interiors.
③ P1 Bus is either 250A max or 400A max.
④ 3VA41 breakers can only be used in interiors manufactured after October 2020 and marked with the NGB suffix.
⑤ Not available for Revised P1 xGB interiors.

Panelboards

Distributor stock - Type P1 Ready To Assemble Panelboards

Reference

Type P1 ready to assemble panelboards are completely convertible from main lug to main breaker and vice-versa. Additionally, feed-thru lugs up to 400A or sub-feed circuit breakers up to 250A can be added without increasing the box height for Revised P1 with "T" suffix, see the chart.

1. Compute total number of poles to determine interior catalog number. (Note: BL / BQD (or) or 3VA41/xGB Main Breaker will use unit space. The total number of poles should include 2 or 3 poles for 1-phase or 3-phase mains.
2. List catalog number of interior, box and front.
3. Select main lug kit or main breaker kit from appropriate tables.
   Note: Main/Subfeed Breaker mounting kits may be ordered with or without breakers included, see page 10-13 and 10-14 for selection.
4. List required branch circuit breakers and filler plates to cover any unused positions.
5. Select any modifications or accessories.

Note: Revised P1 was introduced in June 2015. All original P1 devices do not include the "Subfeed Space" Indicator.
All original P1 included the Subfeed Space as standard.

P	1	C	1	8	M	L	2	5	0	A	T	-	NGB

Type of Panel
P1

Voltage and System
C = 208Y/120, 3-Phase 4-Wire
A = 120/240V, 1-Phase 3-Wire
L = 600Y/347V, 3-Phase 4-Wire

Circuits
18, 30, 42, 54* (*Revised P1 only)

Mains
ML = Main lugs
MC = Main convertible
Select Main Lug Kit or Breaker Mounting Kit from pages 10-12 or 10-13

Amperage
250A max or 400A max only (typically 250A max Bus (or) 400A max Bus①

Main Bus Material
A = Aluminum
C = Copper

Subfeed Space Indicator (for Nex Gen P1 only) T = Subfeed Space Included

Note: Standard bussing in P1 panels is tin plated for aluminum and copper.
Standard bus is rated to the maximum amperage in the panel.

Branch Breaker Type
NONE = BL/BQD type NGB = NGB/3VA41 type only②

Branch Breakers

Revised P1 Branch Breaker Referece						
Panel Type	**Voltage Reference**	**Breaker Frame (kA Range)**				
		BL	**BQD**	**BQD6**	**NGB**	**3VA41**
Revised P1	120/240V	10-65kA	65kA	65kA	100kA	65-150kA
	240V	10-65kA	65kA	65kA	100kA	65-150kA
	480/277V	—	14kA	10kA	25kA	25-65kA
	480V	—	—	—	—	25-65kA
	600/347V	—	—	10kA	14kA	14-25kA
Revised P1 Interior Type						
P1C	208Y/120, 3-Phase 4-Wire	✓	✓	✓	✓	✓
P1A	120/240V, 1-Phase 3-Wire	✓	✓			
P1L	600Y/347V, 3-Phase 4-Wire			✓		
P1L (NGB) Manufactured prior to October 2020	600Y/347V, 3-Phase 4-Wire				✓	
P1L (NGB) Manufactured after October 2020	600Y/347V, 3-Phase 4-Wire				✓	✓

① P1 panels use either 250A rated bus or 400A rated bus, regardless of the Main Breaker installed (or) MLO Amp rating chosen. Panels with 250A bus can have up to 250A Main Breaker or Main Lugs. Panels with 400A bus can have up to 400A Main Breaker or Main Lugs.
② 3VA41 breakers can only be used in interiors manufactured after October 2020 and marked with the NGB suffix.

Panelboards

Features / Benefits

Reference

The standard Siemens P1 panelboard has some unique features that make it easier to design for an engineer, easier to reconfigure in the field for a contractor, and easier to upgrade and maintain for the Owner.

- The P1 is the smallest panel in the Siemens lineup, with bus sizes up to 400A.
- What makes it different is the split neutral design and the open ended bus. In the Siemens panel, instead of the common single neutral bus on one end, we have a neutral bus on both sides that is cross-bussed.
- This makes branch wiring simpler and cleaner – the lead lengths for line and neutral can now be made nearly the same, creating more room and a neater installation.
- It also allows access to both ends of the bus as a standard feature – this provides the flexibility to make changes in the field, even if it wasn't part of the original configuration. Revised P1 introduced in 2015 has extended circuits up to 66 available and also non-feed thru versions are available, without the Subfeed Space, in a 6'' smaller enclosure.
- Starting with 2022, new breakers were introduced: BT twin, and 3VA41/52/61/62 as branch breakers and BSPD surge products

MAIN BREAKER or SUB-FEED BREAKER



MAIN LUGS or FEED-THROUGH LUGS



INTEGRAL BUS MOUNTED SPD



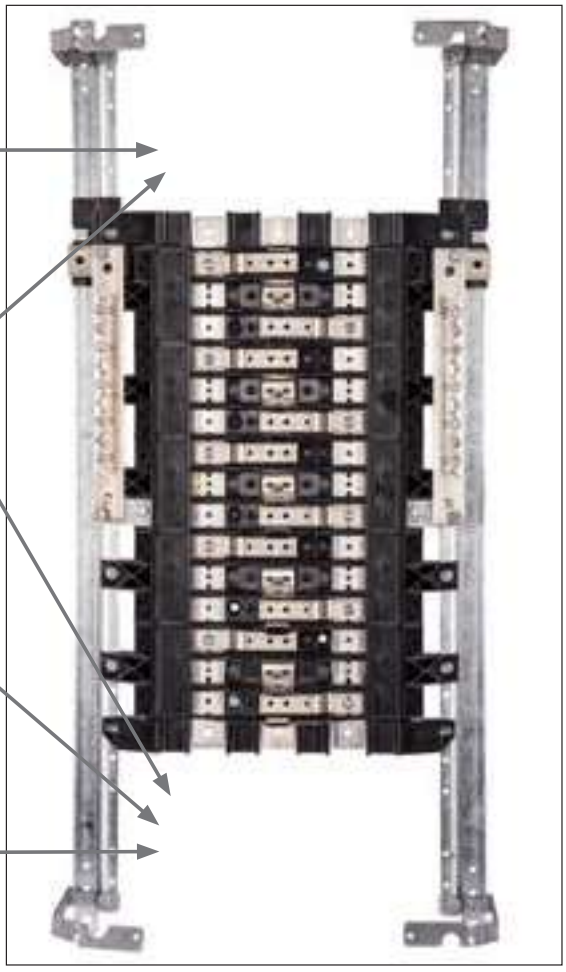

The following can be done to a standard P1 panelboard **in the field** with no modifications:

- Change from top fed to bottom fed
- Add feed-through lugs①
- Add an Integral bus-mounted SPD①⑮⑱ the new branch mounted BSPDs
- Add a sub feed breaker up to 250 amps①
- Change from Main Lugs to Main Breaker
- Change from Main Breaker to Main Lugs
- Panel may have up to two ground assemblies. Options are: (a) standard aluminum, (b) optional copper, or (c) optional insulated/isolated aluminum or copper. Mounting provisions in opposing corners of the box are standard. Any of these options may be added after installation.

① Only when Subfeed Space is selected/available.

Panelboards

Distributor stock - Type P1 Ready To Assemble Panelboards

To better serve the needs of customers, Ready to Assemble Panelboards offer product flexibility, quicker job turn-around, and affordable pricing. All Siemens ready to assemble panelboards are fully backed for high quality, and trouble-free operation.

Flexibility and ease of assembly:

Customer oriented design creates installation convenience. For all of its one-of-a-kind features, the P1 panelboard is also designed to be extremely user friendly. For instance, field convertible main breaker and main lug kits, (through 400 amps), will allow you to switch from main lug to main breaker, and vice versa with no change in box size or additional cabling. Plus, lay-in construction (for 250 A CU) and/or removable lugs make wiring the main and neutral lugs easier and faster.

To further speed wiring, as well as reduce clutter, the P1 panel also features a split neutral design and branch neutral connections which are closer to the breakers than competitors. Additionally, field addable sub-fed breakers (up to 250 amps) or feed through lug kits can be field installed without utilizing any of your feeder breaker positions or increasing your box height. Furthermore, the unique design allows the panel to be inverted in the field and keep its labeling legible.

1) Completely symmetrical Type 1 boxes may be mounted with either end up. There are two pre-punched equipment ground connector locations for contractor friendly installation.
2) Box comes pre-punched for optional, field installable door-in-door or hinged style trims. There are also two pre-punched ground connector locations. The panel box will accept both standard ground connector (EGK and ECGK) assemblies and insulated ground connector kits (IGK and ICGK).
3) Interior mounting is completely symmetrical allowing it to be changed from top to bottom feed by simply rotating the interior.
4) Choose either a Main Breaker kit or Main Lug kit with which to terminate your incoming cables. Main lug kits are contractor friendly lugs through 350 kcmil (250 amp panel), (1) 600 kcmil or (2) 250 kcmil connectors for 400 amp panels. No line connectors in the P1 panel require multiple wires under one screw. Main Breaker kits (250 amps and below) are horizontally mounted allowing field convertible top or bottom feeds to be performed easily. MLO kits and Main Breaker Kits are interchangeable and can be changed/added in the field without making changes to the enclosure or interior.
5) Branch neutral connections are near the breaker connections to speed wiring and reduce clutter. The standard P1 neutral is rated for 100% of the panel's ampacity and will accept copper or aluminum wire. Optional 200% and 2/0 neutral kits are also available. (2/0 max. Neutral strips are now standard on all NGB/3VA41 Interiors.)
6) The panel includes space to add (1) sub-feed breaker (max 250 amps), feed-thru lugs or one TPS3 or TPS4 (SPD) kit. Branch mounted BSPDs are also available for Surge Protection Flexibility.
7) Siemens standard trim has hidden hinges and mounting hardware for added safety. The rounded door corners not only enhance the panel's appearance but also help to eliminate injuries caused from sharp corners.
8) Semi-flush lock comes standard. Easily identified locked position denoted by keyway being horizontal when door has been locked.

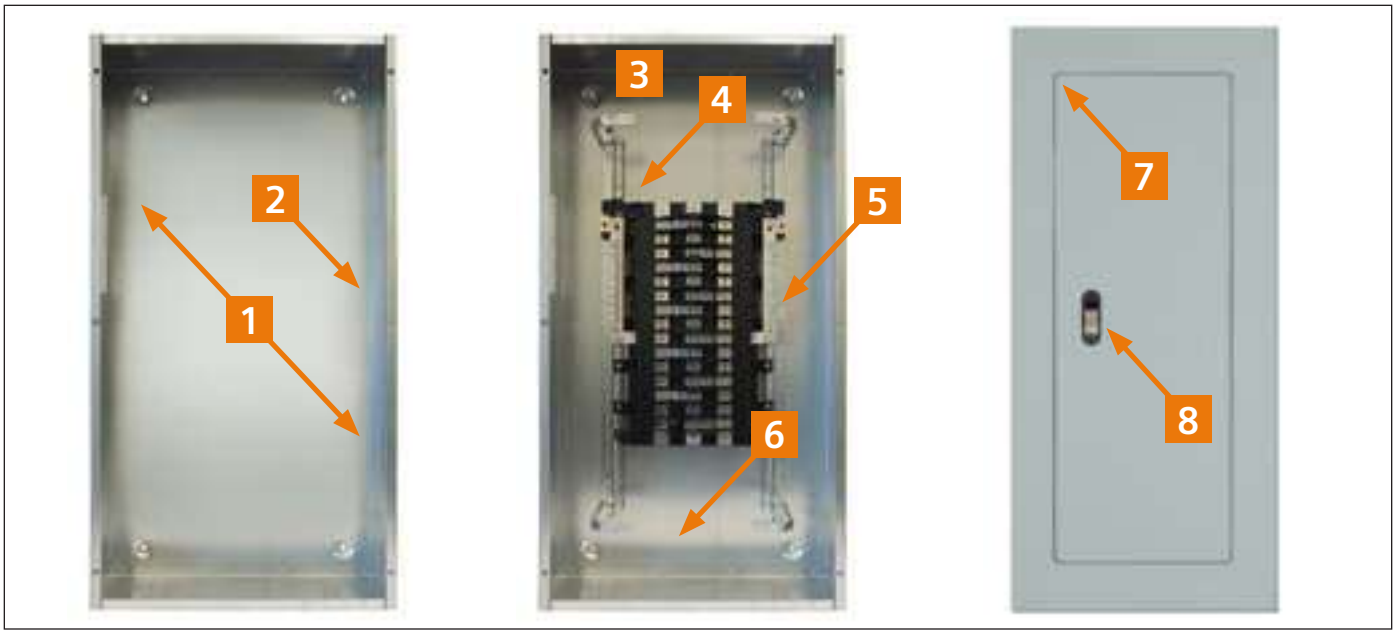

Revised P1 Panelboard 250 & 400A

Reference

Invertibility and Flexibility

All FT and NFT are invertable in field – Top-feed or Bottom-feed

FT **Feed-Thru Style Panel (Catalog Number ends with "T")**①

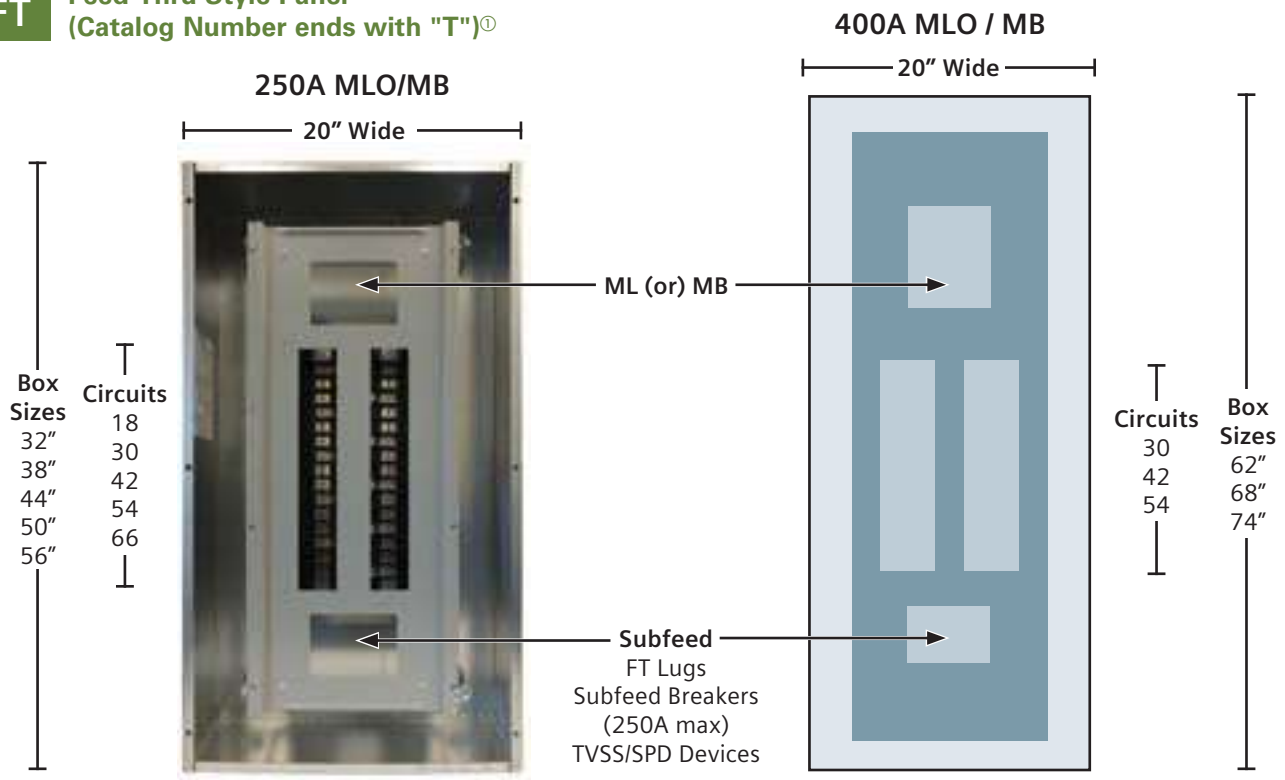

NFT **Non-Feed-Thru Style Panel (Catalog Number ends with "N")**②

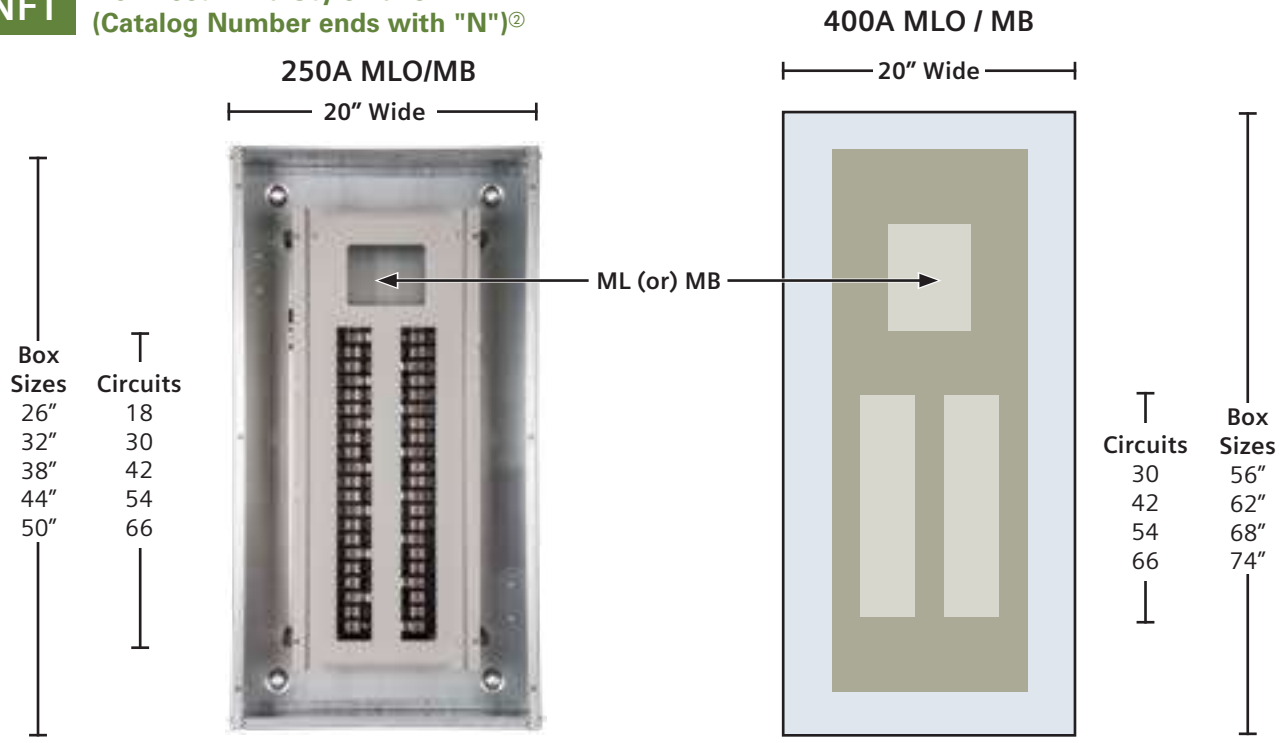

① 66 circuits only for Factory Assembly.

② Not available for stock or Ready to Assemble Panelboards

Revised P1 Panelboard 250A and 400A

FT 250A Configurations Feed-Thru Style Panel

18 circuit FT



B32 Enclosure

30 circuit FT



B38 Enclosure

42 circuit FT



B44 Enclosure

54 circuit FT



B50 Enclosure

66 circuit FT



B56 Enclosure

NFT configurations below are 6" shorter than FT with same circuit count

FT 400A Configurations Feed-Thru Style Panel

30 circuit FT



B62 Enclosure

42 circuit FT



B68 Enclosure

54 circuit FT



B74 Enclosure

66 circuit FT

Not Available

NFT 250A Configurations Non Feed-Thru Style Panel

18 circuit NFT



B26 Enclosure
6" shorter than FT

30 circuit NFT



B32 Enclosure
6" shorter than FT

42 circuit NFT



B38 Enclosure
6" shorter than FT

54 circuit NFT



B44 Enclosure
6" shorter than FT

66 circuit NFT



B50 Enclosure
6" shorter than FT

NFT 400A Configurations Non Feed-Thru Style Panel

30 circuit NFT



B56 Enclosure
6" shorter than FT

42 circuit NFT



B62 Enclosure
6" shorter than FT

54 circuit NFT



B68 Enclosure
6" shorter than FT

66 circuit NFT



B74 Enclosure

Panelboards

Distributor Stock - Type P1 Ready To Assemble Panelboards

Reference

400A Max. — 20" Wide x 5.75" Deep

1. Choose the appropriate Interior from the table below.
2. Choose the Main Device: Main Lugs from page 10-13, Main Breaker Kit from pages 10-13 - 10-14.
3. Choose Branch Breakers. BL, BQD and NGB/3VA41 breakers from pages 10-16 - 10-19.
4. Choose Feed-Thru Lugs or Subfeed Breaker Kit from page 10-13.

Type P1 Into Stock Panelboards (Revised P1 introduced in June 2015)

Amps	Max. #of Poles	Revised P1 Main Lug Interior Cat. Number	Revised P1 Main Convertible Interior Cat. Number	Box Size	Type 1 Encl.	Type 3R/12 Encl.①	Type 1 Front Surface	Type1 Front Flush
1-Phase, 3-Wire 120/240V (BL/BQD Branch Breakers only)								
250	18	**P1A18ML250AT**	**P1A18MC250AT**	32	B32	WP32	S32B	F32B
	30	**P1A30ML250AT**	**P1A30MC250AT**	38	B38	WP38	S38B	F38B
	42	**P1A42ML250AT**	**P1A42MC250AT**	44	B44	WP44	S44B	F44B
	54	**P1A54ML250AT**	**P1A54MC250AT**	50	B50	WP50	S50B	F50B
400	18	—	—	—	—	—	—	—
	30	**P1A30ML400AT**	**P1A30MC400AT**	62	B62	WP62	S62B	F62B
	42	**P1A42ML400AT**	**P1A42MC400AT**	68	B68	WP68	S68B	F68B
	54	**P1A54ML400AT**	**P1A54MC400AT**	74	B74	WP74	S74B	F74B
250	18	**P1A18ML250CT**	**P1A18MC250CT**	32	B32	WP32	S32B	F32B
	30	**P1A30ML250CT**	**P1A30MC250CT**	38	B38	WP38	S38B	F38B
	42	**P1A42ML250CT**	**P1A42MC250CT**	44	B44	WP44	S44B	F44B
	54	**P1A54ML250CT**	**P1A54MC250CT**	50	B50	WP50	S50B	F50B
400	18	—	—	—	—	—	—	—
	30	**P1A30ML400CT**	**P1A30MC400CT**	62	B62	WP62	S62B	F62B
	42	**P1A42ML400CT**	**P1A42MC400CT**	68	B68	WP68	S68B	F68B
	54	**P1A54ML400CT**	**P1A54MC400CT**	74	B74	WP74	S74B	F74B
3-Phase, 4-Wire 208Y/120V (BL/BQD Branch Breakers only)								
250	18	**P1C18ML250AT**	**P1C18MC250AT**	32	B32	WP32	S32B	F32B
	30	**P1C30ML250AT**	**P1C30MC250AT**	38	B38	WP38	S38B	F38B
	42	**P1C42ML250AT**	**P1C42MC250AT**	44	B44	WP44	S44B	F44B
	54	**P1C54ML250AT**	**P1C54MC250AT**	50	B50	WP50	S50B	F50B
400	18	—	—	—	—	—	—	—
	30	**P1C30ML400AT**	**P1C30MC400AT**	62	B62	WP62	S62B	F62B
	42	**P1C42ML400AT**	**P1C42MC400AT**	68	B68	WP68	S68B	F68B
	54	**P1C54ML400AT**	**P1C54MC400AT**	74	B74	WP74	S74B	F74B
250	18	**P1C18ML250CT**	**P1C18MC250CT**	32	B32	WP32	S32B	F32B
	30	**P1C30ML250CT**	**P1C30MC250CT**	38	B38	WP38	S38B	F38B
	42	**P1C42ML250CT**	**P1C42MC250CT**	44	B44	WP44	S44B	F44B
	54	**P1C54ML250CT**	**P1C54MC250CT**	50	B50	WP50	S50B	F50B
400	18	—	—	—	—	—	—	—
	30	**P1C30ML400CT**	**P1C30MC400CT**	62	B62	WP62	S62B	F62B
	42	**P1C42ML400CT**	**P1C42MC400CT**	68	B68	WP68	S68B	F68B
	54	**P1C54ML400CT**	**P1C54MC400CT**	74	B74	WP74	S74B	F74B
3-Phase, 4-Wire 600Y/347V (BQD6 Branch Breakers only)								
250	18	**P1L18ML250AT**	**P1L18MC250AT**	32	B32	WP32	S32B	F32B
	30	**P1L30ML250AT**	**P1L30MC250AT**	38	B38	WP38	S38B	F38B
	42	**P1L42ML250AT**	**P1L42MC250AT**	44	B44	WP44	S44B	F44B
	54	**P1L54ML250AT**	**P1L54MC250AT**	50	B50	WP50	S50B	F50B
400	18	—	—	—	—	—	—	—
	30	**P1L30ML400AT**	**P1L30MC400AT**	62	B62	WP62	S62B	F62B
	42	**P1L42ML400AT**	**P1L42MC400AT**	68	B68	WP68	S68B	F68B
	54	**P1L54ML400AT**	**P1L54MC400AT**	74	B74	WP74	S74B	F74B
250	18	**P1L18ML250CT**	**P1L18MC250CT**	32	B32	WP32	S32B	F32B
	30	**P1L30ML250CT**	**P1L30MC250CT**	38	B38	WP38	S38B	F38B
	42	**P1L42ML250CT**	**P1L42MC250CT**	44	B44	WP44	S44B	F44B
	54	**P1L54ML250CT**	**P1L54MC250CT**	50	B50	WP50	S50B	F50B
400	18	—	—	—	—	—	—	—
	30	**P1L30ML400CT**	**P1L30MC400CT**	62	B62	WP62	S62B	F62B
	42	**P1L42ML400CT**	**P1L42MC400CT**	68	B68	WP68	S68B	F68B
	54	**P1L54ML400CT**	**P1L54MC400CT**	74	B74	WP74	S74B	F74B
Interiors for NGB/3VA41 Breakers — 3-Phase, 4-Wire 600Y/347V (NGB/3VA41 Branch Breakers only②								
250	18	**P1L18ML250AT-NGB**	**P1L18MC250AT-NGB**	32	B32	WP32	S32H	F32H
	30	**P1L30ML250AT-NGB**	**P1L30MC250AT-NGB**	38	B38	WP38	S38H	F38H
	42	**P1L42ML250AT-NGB**	**P1L42MC250AT-NGB**	44	B44	WP44	S44H	F44H
400	18	—	—	—	—	—	—	—
	30	**P1L30ML400AT-NGB**	**P1L30MC400AT-NGB**	62	B62	WP62	S62H	F62H
	42	**P1L42ML400AT-NGB**	**P1L42MC400AT-NGB**	68	B68	WP68	S68H	F68H
250	18	**P1L18ML250CT-NGB**	**P1L18MC250CT-NGB**	32	B32	WP32	S32H	F32H
	30	**P1L30ML250CT-NGB**	**P1L30MC250CT-NGB**	38	B38	WP38	S38H	F38H
	42	**P1L42ML250CT-NGB**	**P1L42MC250CT-NGB**	44	B44	WP44	S44H	F44H
400	18	—	—	—	—	—	—	—
	30	**P1L30ML400CT-NGB**	**P1L30MC400CT-NGB**	62	B62	WP62	S62H	F62H
	42	**P1L42ML400CT-NGB**	**P1L42MC400CT-NGB**	68	B68	WP68	S68H	F68H

① Front included in type 3R/12 Box.
② 3VA41 breakers can only be used in interiors manufactured after October 2020 and marked with the NGB suffix.







42 circuit with Back-fed Main



54 circuit 400A

Warehouse Stock – Type P1 Panelboards

Lug Kits — Main or Feed Thru

Amp Rating	Matl.	Wire Range (includes Neutral)	Service	Revised P1② Cat. No.
250	AL	(1) #6 AWG- 350 kcmil (CU or AL)	1 Phase	**MLKA1A**
			3 Phase	**MLKA3A**
	CU	(1) #6 AWG- 350 kcmil (CU or AL)	1 Phase	**MLKC1A**
			3 Phase	**MLKC3A**
400	AL	(2) 1/0 - 250 kcmil or (1) #2 AWG-600 kcmil	1 Phase	**4MLKA1A**
			3 Phase	**4MLKA3A**
	CU	(2) 1/0 - 4/0 or (1) 1/0 - 600 kcmil	1 Phase	**4MLKC1A**
			3 Phase	**4MLKC3A**
400	AL	(1) AL 1/0-750 kcmil (2) AL/CU 250 kcmil max. [max.(1) 600 kcmil CU wire]	1 Phase	**4MLKA1B**
			3 Phase	**4MLKA3B**



MBKQJ3A



MBKFD3A

Main and Subfeed Strap Kits for Revised P1②

Group	Amps	Kit Catalog #	Description	Replaces	Comments
250A RP1 Main Strap Kits	125A max	**MBKVA41A**	RP1 1PH Main/SF kit BL/BQD/GB/3VA4 - Includes filler #DFFPVA41A	MBKBL1A① MBKBC1NBA①	New kits allow use of all 4 breaker types with included adapter (coming soon).
		MBKVA41B	RP1 3PH Main/SF kit BL/BQD/GB/3VA4 - Includes filler #DFFPVA41A	MBKBL3A① MBKBC3NBA①	
		MBKED1A **MBKED3A**	RP1 1PH Main/SF kit ED - 125A max RP1 3PH Main/SF kit ED - 125A max	none	Includes DF Filler #DFFPVA41A replacing #DFFPED01
	225A max	**MBKQR1A** **MBKQR3A**	RP1 1PH Main/SF kit QR - 225A max RP1 3PH Main/SF kit QR - 225A max	none	Includes DF Filler #MBKQRFK Although QR is rated 250A, it is limited to 225A in panelboards
	250A max	**MBKFD1A** **MBKFD3A**	RP1 1PH Main/SF kit FD - 250A max RP1 3PH Main/SF kit FD - 250A max	none	Includes DF Filler #DFFPFD01
		MBKVA5262A **MBKVA5262B**	RP1 1PH Main/SF kit 3VA52/61/62 - 250A max RP1 3PH Main/SF kit 3VA52/61/62 - 250A max	none	Includes DF Filler #DFFPVA5262A
		MBKBFA	RP1 Back-Fed Main in unit space kit for BL/BQD/xGB/3VA41 breakers.	none	Includes labeling required to field install properly. This kit takes branch spaces and reduces circuit count by 2 or 3 positions.
400A RP1 Main Strap Kits	400A max not allowed for sub-feed breakers	**MBKVA5363A**	RP1 400A 3VA Main Strap kit, 1ph or 3ph, includes: DFFPVA5363A (Large) Filler (coming soon)	none	These new 400A kits include both small and large filler plates as needed.
		MBKJD3B	RP1 400A JD Strap kit 1ph/3ph 2-fillers, includes: DFFPJD02 (Large) and DFFPJD01 (Small) Filler	MBKJD1A① MBKJD3A①	
		MBKVA5363JD	RP1 400A JD to 3VA53/63 Retrofit kit 1ph/3ph – This kit will allow 3VA53/63 in old 400A RP1 only with small Deadfront opening – no access to breaker adjustments without removing Deadfront.	none	(coming soon)

Neutral Kits for Revised P1②

Group	Amps	Kit Catalog #	Description	Replaces①	Circuits / details
1/0 Neutral Kits	250A & 400A	**LNLK5X12A**	RP1 1/0 NEUTRAL LUG KIT [(5x)1/0 + (12x) #6] - short 1/0 replacement neutral strip (17POS) (5.80" long) (Ref: 11-D-1810-01 strip)	na	2 strips per pack - replacement parts
		LNLK7X18A	RP1 1/0 NEUTRAL LUG KIT [(7x)1/0 + (18x) #6] - long 1/0 replacement neutral strip (25POS) (8.14" Long) (Ref: 11-D-1810-02 strip)	na	
2/0 Neutral Kits	250A & 400A	**LNLK4X11B**	RP1 & P3 2/0 NEUTRAL LUG KIT (15POS) - [(4x)2/0 + (11x) #6] - 2/0 max neutral strips (6.17" Long) (Ref: 11-D-1814-01 strip)	LNLK30A LNLK42A LNLK54A Revised P1 only	2 strips per pack - replacement parts
		LNLK6X17B	RP1 & P3 2/0 NEUTRAL LUG KIT (23POS) - [(5x)2/0 + (17x) #6] - 2/0 max neutral strips (8.67" Long) (Ref: 11-D-1814-02 strip)		
		LNLK7X20B	RP1 & P3 2/0 NEUTRAL LUG KIT (27POS) - [(7x)2/0 + (20x) #6] - 2/0 max neutral strips (9.92" Long) (Ref: 11-D-1814-03 strip)		
Copper Neutral Kits	250A	**CNLK42B**	RP1 CU NEUTRAL LUG KIT, 42B - 2 short & 2 long strips (17 & 25 pos) contains: CU neutral strips and CU riser extension, plus all hardware to replace standard neutrals. CU strips are 1/0 max. and require CU cable. The 250A CU body neutral lug assembly is included with this kit.	CNLK30A CNLK42A CNLK54A Revised P1 only	250A - 18, 30, 42
	250A & 400A	**CNLK54B**	RP1 CU NEUTRAL LUG KIT, 54B - 4 long strips (25 pos) contains: CU neutral strips and CU riser extension, plus all hardware to replace standard neutrals. CU strips are 1/0 max. and require CU cable. The 250A and 400A CU body neutral lug assembly is included with this kit.		all 400A - 30, 54, 66 250A - 54, 66
200% Neutral Kits	250A	**2NLK42B**	RP1 250A 200% NEUTRAL LUG KITS. Contains: CU neutral strips (2 short & 2 long strips (17 & 25 pos)), CU neutral extensions and an additional AL Line Lug (350kcmil), plus all hardware to replace standard neutrals. CU strips are 1/0 max. and require CU cable. (200% neutral kits require CU neutrals)	2NLK30A 2NLK42A 2NLK54A Revised P1 only	250A - 18, 30, 42
		2NLK54B	RP1 250A 200% NEUTRAL LUG KITS. Contains: CU neutral strips (4 long strips (25 pos)), CU neutral extensions and an additional AL Line Lug (350kcmil), plus all hardware to replace standard neutrals. CU strips are 1/0 max. and require CU cable. (200% neutral kits require CU neutrals)		250A - 54, 66
	400A	**42NLK54B**	RP1 400A 200% NEUTRAL LUG KIT contains: CU neutral strips (4 long strips (25 pos)), CU neutral extensions and an additional AL Line Lugs (600kcmil and 300kcmil), plus all hardware to replace standard neutrals. CU strips are 1/0 max. and require CU cable. (200% neutral kits require CU neutrals)	42NLK30A 42NLK42A 42NLK54A Revised P1 only	all 400A - 30, 54, 66

① Parts will no longer be available after inventory is depleted. OK to use up inventory.
② Revised P1 kits cannot be used with original P1. See page 10-15.
③ MBKBFA is available for Back-Fed Mains in unit space with BL/BQD/xGB/3VA41 breakers. Includes labeling required to field install properly.

Main Breaker Mounting Kits with Breakers for P1 Panels

(250A and lower can be used as subfeed kits also)

Frame size Reference	Revised P1 Catalog No.	Description	Max IR (kA) at 240V	480V	600V
ED① 3-ph 125A Max.	MBKED3100A	Kit w/3-pole ED4 100A breaker	65	18	—
	MBKED3125A	Kit w/3-pole ED4 125A breaker	65	18	—
QR 1-ph 225A Max.	MBKQR1125A	Kit w/2-pole QR2 125A breaker	10	—	—
	MBKQR1150A	Kit w/2-pole QR2 150A breaker	10	—	—
	MBKQR1175A	Kit w/2-pole QR2 175A breaker	10	—	—
	MBKQR1200A	Kit w/2-pole QR2 200A breaker	10	—	—
	MBKQR1225A	Kit w/2-pole QR2 225A breaker	10	—	—
HQR 1-ph 225A Max.	MBKQR1125HA	Kit w/2-pole HQR2 125A breaker	65	—	—
	MBKQR1150HA	Kit w/2-pole HQR2 150A breaker	65	—	—
	MBKQR1175HA	Kit w/2-pole HQR2 175A breaker	65	—	—
	MBKQR1200HA	Kit w/2-pole HQR2 200A breaker	65	—	—
	MBKQR1225HA	Kit w/2-pole HQR2 225A breaker	65	—	—
QR2 3-ph 225A Max.	MBKQR3125A	Kit w/3-pole QR2 125A breaker	10	—	—
	MBKQR3150A	Kit w/3-pole QR2 150A breaker	10	—	—
	MBKQR3175A	Kit w/3-pole QR2 175A breaker	10	—	—
	MBKQR3200A	Kit w/3-pole QR2 200A breaker	10	—	—
	MBKQR3225A	Kit w/3-pole QR2 225A breaker	10	—	—
HQR2 3-ph 225A Max.	MBKQR3125HA	Kit w/3-pole HQR2 125A breaker	65	—	—
	MBKQR3150HA	Kit w/3-pole HQR2 150A breaker	65	—	—
	MBKQR3175HA	Kit w/3-pole HQR2 175A breaker	65	—	—
	MBKQR3200HA	Kit w/3-pole HQR2 200A breaker	65	—	—
	MBKQR3225HA	Kit w/3-pole HQR2 225A breaker	65	—	—
3VA52 3-ph 250A Max.	MBKVAM3150A	RP1 150A MB kit, 35kA 3ph 3VA52, MFAS	85	35	18
	MBKVAM3200A	RP1 200A MB kit, 35kA 3ph 3VA52, MFAS	85	35	18
	MBKVAM3225A	RP1 225A MB kit, 35kA 3ph 3VA52, MFAS	85	35	18
	MBKVAM3250A	RP1 250A MB kit, 35kA 3ph 3VA52, MFAS	85	35	18
	MBKVAH3200A	RP1 200A MB kit, 65kA 3ph 3VA52, HFAS	100	65	25
	MBKVAH3250A	RP1 250A MB kit, 65kA 3ph 3VA52, HFAS	100	65	25
FD① 3-ph 250A Max.	MBKFD3150A	Kit w/3-pole FXD6 150A breaker	65	35	22
	MBKFD3175A	Kit w/3-pole FXD6 175A breaker	65	35	22
	MBKFD3200A	Kit w/3-pole FXD6 200A breaker	65	35	22
	MBKFD3225A	Kit w/3-pole FXD6 225A breaker	65	35	22
	MBKFD3250A	Kit w/3-pole FXD6 250A breaker	65	35	22
3VA53 3-ph 400A Max. (coming soon)	MBKVAM1300A	RP1 300A MB kit, 35kA 1ph 3VA53, MJAS	85	35	18
	MBKVAM1400A	RP1 400A MB kit, 35kA 1ph 3VA53, MJAS	85	35	18
	MBKVAM3300A	RP1 300A MB kit, 35kA 3ph 3VA53, MJAS	85	35	18
	MBKVAM3400A	RP1 400A MB kit, 35kA 3ph 3VA53, MJAS	85	35	18
	MBKVAH3300A	RP1 300A MB kit, 65kA 3ph 3VA53, HJAS	100	65	25
	MBKVAH3400A	RP1 400A MB kit, 65kA 3ph 3VA53, HJAS	100	65	25
JD① 1-ph 400A Max.	MBKJD1300A	Kit w/2-pole JXD6 300A breaker	65	35	—
	MBKJD1400A	Kit w/2-pole JXD6 400A breaker	65	35	—
	MBKJD12300A	Kit w/2-pole JXD2 300A breaker	65	—	—
	MBKJD12400A	Kit w/2-pole JXD2 400A breaker	65	—	—
JD① 3-ph 400A Max.	MBKJD3300A	Kit w/3-pole JXD6 300A breaker	65	35	—
	MBKJD3400A	Kit w/3-pole JXD6 400A breaker	65	35	—
	MBKJD32300A	Kit w/3-pole JXD2 300A breaker	65	—	—
	MBKJD32400A	Kit w/3-pole JXD2 400A breaker	65	—	—

① These Main Breaker Kits are Make to Order only – expect extended lead-times.

Branch Breakers Selection for P1

Selection Guide

1. Select breaker type.
2. Select required amperage.
3. Select number of poles.
4. Select branch breaker catalog numbers.
5. Select ground bar and filler plates. (See replacement parts & accessories on Page 10-14.)



300A Main installed. These Revised P1 kits can now be used as top or bottom feed.

300A Main installed. These Next Gen P1 kits can now be used as top or bottom feed.

S1/S2 Panels—All the original P1 panel kits for 250 amp and below panels will work for 250 amp maximum S1/S2 panels
(will not work for S1/S2 400A and above).

Note: Revised P1 kits will not work with S1/S2 or SE Panels.

Original P1 Kits

Original P1 Main or Subfeed Strap Kits without Breakers and MLO kits

S1/S2 Panels—All the original P1 panel kits for 250 amp and below panels will work for 250 amp maximum S1/S2 panels (will not work for S1/S2 400A and above).
Note: Revised P1 kits will not work with S1/S2 or SE Panels.

Strap kits for Original P1 product only - Breaker kits not available				
Original P1 Catalog No.	**Description of breaker type to order**	**Phase**	**Amps Max.**	**Available for Subfeed**
MBKBL1	2-pole BL/BLH/HBL 15A-100A	1	100A	yes
MBKBL3	3-pole BL/BLH/HBL 15A-100A	3	100A	yes
MBKBC3	3-pole BQD 15A-100A	3	100A	yes
MBKNB1	2-pole NGB/LGB/HGB 15A-125A	1	125A	yes
MBKNB3	3-pole NGB/LGB/HGB 15A-125A	3	125A	yes
MBKED1	2-pole ED4/HED4 50A-125A	1	125A	yes
MBKED3	3-pole ED4/HED4 50A-125A	3	125A	yes
MBKQR1	2-pole QR(H)2/HQR2(H) 125A-225A	1	225A	yes
MBKQR3	3-pole QR(H)2/HQR2(H) 125A-225A	3	225A	yes
MBKFD1	2-pole F(X)D6/HF(X)D6 70A-250A	1	250A	yes
MBKFD3	3-pole F(X)D6/HF(X)D6 70A-250A	3	250A	yes
MBKJD1	2-pole JXD2/J(X)D6/HJ(X)D6 200A-400A	1	400A	NO
MBKJD3	3-pole JXD2/J(X)D6/HJ(X)D6 200A-400A	3	400A	NO

Strap kits for 400/600A S1/S2 and all SE panels - breakers not included				
Catalog No.	**Description of breaker type to order**	**Phase**	**Amps Max.**	**Available for Subfeed**
SMBKED1	2-pole ED2, ED4, ED6, HED4, HHED6	1	125A	yes
SMBKED3	3-pole ED2, ED4, ED6, HED4, HHED6	3	125A	yes
SMBKFD1	2-pole FXD6, FD6, HFXD6, HFD6	1	250A	yes
SMBKFD3	3-pole FXD6, FD6, HFXD6, HFD6	3	250A	yes
SMBKJD1	2-pole JD6, JXD6, HJD6, HJXD6	1	400A	yes
SMBKJD3	3-pole JD6, JXD6, HJD6, HJXD6	3	400A	yes

MLO kits for Original P1 product only

* MLO Kits available for SE Panels - AL 250A only
Note: 400/600A S1/S2 MLO kits no longer available

Original P1 Cat No.	Description	Phase	Amps Max.	Available for P1 Feed-thru
MLKA1*	(1) #6 AWG- 350 kcmil (CU or AL)	1	250A	yes
MLKA3*		3		yes
MLKC1	(1) #6 AWG- 350 kcmil (CU)	1	250A	yes
MLKC3		3		yes
4MLKA1	(2) 1/0 - 250 kcmil or (1) #2 AWG-600 kcmil	1	400A	yes
4MLKA3		3		yes
4MLKC1	(2) 1/0 - 4/0 or (1) 1/0 - 600 kcmil	1	400A	yes
4MLKC3		3		yes

Other applications:
For S5 and 12.75" deep SPP panels see page <?> for branch breaker mounting kits.
For F2 and 12.75" deep FPP panels see page <?> for branch fusible switch mounting kits.
For Series 5, Series 6, CDP6 and VB 6 panels as well as FC20, FCI, FCII, SB1, SB2 and SB3 distribution switchboards, see page 12-32 for branch device mounting kits.

Branch Breakers Selection for P1

BL Family Circuit Breakers

Amp Ratings	1-Pole	2-Pole		3-Pole
	120V	240/120V	240V	240V
Type BL - 10,000A IR①				
15	B115	B215	B215R	B315
20	B120	B220	B220R	B320
25	B125	B225	B225R	B325
30	B130	B230	B230R	B330
35	B135	B235	B235R	B335
40	B140	B240	B240R	B340
45	B145	B245	B245R	B345
50	B150	B250	B250R	B350
60	B160	B260	—	B360
70	B170	B270	—	B370
80	—	B280	—	B380
90	—	B290	—	B390
100	—	B2100	—	B3100
Type BLH — 22,000 IR①				
15	B115H	B215H	—	B315H
20	B120H	B220H	—	B320H
25	B125H	B225H	—	B325H
30	B130H	B230H	—	B330H
35	B135H	B235H	—	B335H
40	B140H	B240H	—	B340H
45	B145H	B245H	—	B345H
50	B150H	B250H	—	B350H
60	B160H	B260H	—	B360H
70	B170H	B270H	—	B370H
80	—	B280H	—	B380H
90	—	B290H	—	B390H
100	—	B2100H	—	B3100H
Type HBL — 65,000A IR①				
15	B115HH	B215HH	—	B315HH
20	B120HH	B220HH	—	B320HH
30	B130HH	B230HH	—	B330HH
40	B140HH	B240HH	—	B340HH
50	B150HH	B250HH	—	B350HH
60	—	B260HH	—	B360HH
70	—	B270HH	—	B370HH
80	—	B280HH	—	B380HH
90	—	B290HH	—	B390HH
100	—	B2100HH	—	B3100HH

BQD6 Family Circuit Breakers

Amp Ratings	1-Pole	2-Pole	3-Pole
	347V	600/347V	600/347V
Type BQD6 - 10,000A IR @ 600/347V			
15	BQD6115	BQD6215	BQD6315
20	BQD6120	BQD6220	BQD6320
25	BQD6125	BQD6225	BQD6325
30	BQD6130	BQD6230	BQD6330
35	BQD6135	BQD6235	BQD6335
40	BQD6140	BQD6240	BQD6340
45	BQD6145	BQD6245	BQD6345
50	BQD6150	BQD6250	BQD6350
60	BQD6160	BQD6260	BQD6360
70	BQD6170	BQD6270	BQD6370

① To add Shunt trip to BL breakers (factory assempled only), See PPC Breaker accessories section 5. One inch additional unit space required typically.
② To add Shunt trip or other accessories to BQD and NGB family breakers, See PPC Breaker accessories section 5. One inch additional unit space required typically for each.

BQD & GB Family Circuit Breakers

Amp Ratings	1-Pole	2-Pole	3-Pole
	277V	480Y/277V	480Y/277V
Type BQD② – 14,000A IR @ 480/277V | 65,000A IR @ 240V			
15	BQD115	BQD215	BQD315
20	BQD120	BQD220	BQD320
25	BQD125	BQD225	BQD325
30	BQD130	BQD230	BQD330
35	BQD135	BQD235	BQD335
40	BQD140	BQD240	BQD340
45	BQD145	BQD245	BQD345
50	BQD150	BQD250	BQD350
60	BQD160	BQD260	BQD360
70	BQD170	BQD270	BQD370
80	BQD180	BQD280	BQD380
90	BQD190	BQD290	BQD390
100	BQD1100	BQD2100	BQD3100
Type NGB - 14,000A IR @ 600/347V | 100,000A IR @ 240V			
Amp Ratings	**347V**	**600/347V**	**600/347V**
15	NGB1B015B	NGB2B015B	NGB3B015B
20	NGB1B020B	NGB2B020B	NGB3B020B
25	NGB1B025B	NGB2B025B	NGB3B025B
30	NGB1B030B	NGB2B030B	NGB3B030B
35	NGB1B035B	NGB2B035B	NGB3B035B
40	NGB1B040B	NGB2B040B	NGB3B040B
45	NGB1B045B	NGB2B045B	NGB3B045B
50	NGB1B050B	NGB2B050B	NGB3B050B
60	NGB1B060B	NGB2B060B	NGB3B060B
70	NGB1B070B	NGB2B070B	NGB3B070B
80	NGB1B080B	NGB2B080B	NGB3B080B
90	NGB1B090B	NGB2B090B	NGB3B090B
100	NGB1B100B	NGB2B100B	NGB3B100B
110	NGB1B110B	NGB2B110B	NGB3B110B
125	NGB1B125B	NGB2B125B	NGB3B125B

Typical Cable Ranges by Breaker Type

UL Breaker Type	Amps	Connector Range for AL cable	Connector Range for CU cable
BL	15-20A	#12-#10 AWG	#14-#10 AWG
	25-35A	#8-#6 AWG	#8-#6 AWG
	10-50A	#8-#4 AWG	#8-#6 AWG
	55-70A	#8-#2 AWG	#8-#4 AWG
	80-100A	#2-#1/0 AWG	#4-#1/0 AWG
BQD	15-40A	#12-#6 AWG	#14-#6 AWG
	45-100A	#6-1/0 AWG	#8 - #1 AWG
xGB	15-30A	#12-#6 AWG	#14-#6 AWG
	35-125A	#4-2/0 AWG	#6-1/0 AWG
3VA41	15-125A	#14 AWG - 3/0	#14 AWG - 2/0

BT Twin Family Circuit Breakers

The Space saver duplex breakers combine two independent 1/2" breaker poles in a common unit. This unit bolts into any location that would typically fit a 1-pole BL breaker and requires only 1" of panel space.

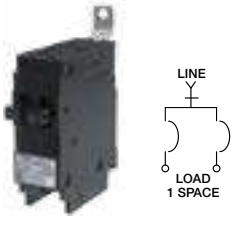

Replacement for 1-pole BL series (15A & 20A only)

Amp Ratings	Width	Circuits	BT (10k AIC)	BTH (22k AIC)	Details
Type BT and BTH					
15-15	1" pole	2	B1515	B1515H	Two 15A circuits
20-20	1" pole	2	B2020	B2020H	Two 20A circuits

AFCI/GFCI

Electronic Circuit Breakers		1-Pole		2-Pole		
Trip Type	**Breaker Type**	**Max IR (kA) at 120V**	**Amp Ratings Available**	**Max IR (kA) at 120/240**	**Amp Ratings Available**	**Catalog Number**
Combination AFCI	BAF2	10	15	—	—	BA115AFC
		10	20	—	—	BA120AFC
	BAFH2	22	15	—	—	BA115AFCH
		22	20	—	—	BA120AFCH
	HBAF2	65	15	—	—	BA115AFCHH
		65	20	—	—	BA120AFCHH
	BAF	—	—	10	15	B215AFC
		—	—	10	20	B220AFC
	BAFH	—	—	22	15	B215AFCH
		—	—	22	20	B220AFCH
Dual Function AFCI/GFCI	BFGA2	10	15	—	—	B115DF
		10	20	—	—	B120DF
	BFGAH2	22	15	—	—	B115DFH
		22	20	—	—	B120DFH
	HBFGA2	65	15	—	—	B115DFHH
		65	20	—	—	B120DFHH
GFCI Personnel Protection (5mA)	BLF2	10	15	—	—	BF115A
		10	20	—	—	BF120A
		10	30	—	—	BF130A
	BLF	—	—	10	15	BF215A
		—	—	10	20	BF220A
		—	—	10	30	BF230A
		—	—	10	40	BF240A
		—	—	10	50	BF250A
		—	—	10	60	BF260A
	BLHF2	22	15	—	—	BF115AH
		22	20	—	—	BF120AH
		22	30	—	—	BF130AH
	BLHF	—	—	22	15	BF215AH
		—	—	22	20	BF220AH
		—	—	22	30	BF230AH
		—	—	22	40	BF240AH
		—	—	22	50	BF250AH
		—	—	22	60	BF260AH
	HBLF2	65	15	—	—	BF115AHH
		65	20	—	—	BF120AHH
		65	30	—	—	BF130AHH
GFCI Ground Fault Equipment Protection (30mA)	BLE	10	15	—	—	BE1153
		10	20	—	—	BE1203
		10	30	—	—	BE130
		—	—	10	15	BE215
		—	—	10	20	BE220
		—	—	10	30	BE230
		—	—	10	40	BE240
		—	—	10	50	BE250
		—	—	10	60	BE260
	BLEH	22	15	—	—	BE115H2
		22	20	—	—	BE120H2
		22	30	—	—	BE130H2
		—	—	22	15	BE215H2
		—	—	22	20	BE220H2
		—	—	22	30	BE230H2
		—	—	22	40	BE240H2
		—	—	22	50	BE250H2
		—	—	22	60	BE260H2

① Built to order. Additional "circuit" is included for neutral (via pigtail) and is NOT connected to bus. 2-pole is one phase and one neutral pigtail. 3-pole is two phase connections and one neutral pigtail.

② Allow 8-10 weeks for delivery

③ UL Listed as SWD (Switching Duty) Rated, suitable for 120V AC fluorescent lighting

3VA41 TMTU 125A max. - breakers w/AL lugs included

3VA41 1-Pole (1" wide)

		UL Type Code ==>	SEAB	MEAB	HEAB
		Panelboard MB codes ==>	V1 1-pole	V2 1-pole	V3 1-pole
		120 VAC kAIC rating ==>	65	85	150①
		277 VAC kAIC rating ==>	25	35	65
		347 VAC kAIC rating ==>	14	18	25
		125 VDC kAIC rating ==>	14②	25②	30②
		IC family @ 277VAC ==>	25kA	35kA	65kA
amps	**code**	**FTFM Trip included ==>**	**TM230**	**TM230**	**TM230**
15	95	**3VA41 1P breaker w/TM210**	3VA4195-4ED11-0AA0	...-5ED...	...-6ED...
20	20		3VA4120-4ED11-0AA0	...-5ED...	...-6ED...
25	25	**1 Pole 3VA41 with**	3VA4125-4ED11-0AA0	...-5ED...	...-6ED...
30	30	**AL connectors included.**	3VA4130-4ED11-0AA0	...-5ED...	...-6ED...
35	35	**For copper, use the following kits:**	3VA4135-4ED11-0AA0	...-5ED...	...-6ED...
40	40	**15A-40A use # 3VA9133-0JD10**	3VA4140-4ED11-0AA0	...-5ED...	...-6ED...
45	45	**45A-125A use # 3VA9133-0JD11**	3VA4145-4ED11-0AA0	...-5ED...	...-6ED...
50	50		3VA4150-4ED11-0AA0	...-5ED...	...-6ED...
60	60		3VA4160-4ED11-0AA0	...-5ED...	...-6ED...
70	70	Note: No accessory pockets available	3VA4170-4ED11-0AA0	...-5ED...	...-6ED...
80	80		3VA4180-4ED11-0AA0	...-5ED...	...-6ED...
90	90		3VA4190-4ED11-0AA0	...-5ED...	...-6ED...
100	10		3VA4110-4ED11-0AA0	...-5ED...	...-6ED...
110	11		3VA4111-4ED11-0AA0	...-5ED...	...-6ED...
125	12		3VA4112-4ED11-0AA0	...-5ED...	...-6ED...

3VA41 1-Pole in 2-Pole Frame (2" wide)

		IC family @ 277VAC ==>	25kA	35kA	65kA
amps	**code**	**FTFM Trip included ==>**	**TM230**	**TM230**	**TM230**
15	95	**3VA41 1P in 2-P**	3VA4195-4ED51-0AA0	...-5ED...	...-6ED...
20	20	**Frame breaker w/TM230**	3VA4120-4ED51-0AA0	...-5ED...	...-6ED...
25	25		3VA4125-4ED51-0AA0	...-5ED...	...-6ED...
30	30	**1 Pole in 2-pole Frame**	3VA4130-4ED51-0AA0	...-5ED...	...-6ED...
35	35	**3VA41 with AL connectors**	3VA4135-4ED51-0AA0	...-5ED...	...-6ED...
40	40	**included for CU order one**	3VA4140-4ED51-0AA0	...-5ED...	...-6ED...
45	45	**3VA9133-0JD11 connector kit**	3VA4145-4ED51-0AA0	...-5ED...	...-6ED...
50	50		3VA4150-4ED51-0AA0	...-5ED...	...-6ED...
60	60	Note: Only 3 Left side Accessory	3VA4160-4ED51-0AA0	...-5ED...	...-6ED...
70	70	pockets available	3VA4170-4ED51-0AA0	...-5ED...	...-6ED...
80	80		3VA4180-4ED51-0AA0	...-5ED...	...-6ED...
90	90		3VA4190-4ED51-0AA0	...-5ED...	...-6ED...
100	10		3VA4110-4ED51-0AA0	...-5ED...	...-6ED...
110	11		3VA4111-4ED51-0AA0	...-5ED...	...-6ED...
125	12		3VA4112-4ED51-0AA0	...-5ED...	...-6ED...

① Although some breakers have a kAIC rating above 100 kAIC – many panels are limited to 100 kAIC or less.

② DC Voltage panels are limited by various factors. These DC ratings apply to the Breaker only.

3VA41 TMTU 125A max. - breakers w/AL lugs included

3VA41 2-Pole & 3-Pole (2" & 3" wide)

		UL Type Code ==>	SEAB	MEAB	HEAB
		Panelboard MB codes ==>	V1 3-pole | 2-pole	V2 3-p | 2-p	V3 3-p | 2-p
		240 VAC kAIC rating ==>	65 | 65	85 | 85	150①|150①
		480Y/277VAC kAIC rating ==>	25 | 25	35 | 35	65 | 65
		480 VAC kAIC rating ==>	25 | 25	35 | 35	65 | 65
		600Y/347VAC kAIC rating ==>	14 | 14	18 | 18	25 | 25
		600 VAC kAIC rating ==>	na | na	na | na	na | na
		250 VDC kAIC rating ==>	na | 50②	na | 85②	na | 100②
		IC family @ 480VAC ==>	25kA	35kA	65kA
amps	**code**	**FTAM Trip included ==>**	**TM230**	**TM230**	**TM230**
15	95	**3VA41 2P breaker w/TM210**	3VA4195-4ED21-0AA0	...-5ED...	...-6ED...
20	20		3VA4120-4ED21-0AA0	...-5ED...	...-6ED...
25	25	**2 Pole 3VA41 with**	3VA4125-4ED21-0AA0	...-5ED...	...-6ED...
30	30	**AL connectors included.**	3VA4130-4ED21-0AA0	...-5ED...	...-6ED...
35	35	**For copper, use the following kits:**	3VA4135-4ED21-0AA0	...-5ED...	...-6ED...
40	40	**15A-40A use # 3VA9133-0JD10**	3VA4140-4ED21-0AA0	...-5ED...	...-6ED...
45	45	**45A-125A use # 3VA9133-0JD11**	3VA4145-4ED21-0AA0	...-5ED...	...-6ED...
50	50		3VA4150-4ED21-0AA0	...-5ED...	...-6ED...
60	60	Note: Only 3 Left side Accessory	3VA4160-4ED21-0AA0	...-5ED...	...-6ED...
70	70	pockets available	3VA4170-4ED21-0AA0	...-5ED...	...-6ED...
80	80		3VA4180-4ED21-0AA0	...-5ED...	...-6ED...
90	90		3VA4190-4ED21-0AA0	...-5ED...	...-6ED...
100	10		3VA4110-4ED21-0AA0	...-5ED...	...-6ED...
110	11		3VA4111-4ED21-0AA0	...-5ED...	...-6ED...
125	12		3VA4112-4ED21-0AA0	...-5ED...	...-6ED...
amps	**code**	**FTAM Trip included ==>**	TM230	**TM230**	**TM230**
15	95	**3VA41 3P breaker w/TM210**	3VA4195-4ED31-0AA0	...-5ED...	...-6ED...
20	20		3VA4120-4ED31-0AA0	...-5ED...	...-6ED...
25	25	**3 Pole 3VA41 with**	3VA4125-4ED31-0AA0	...-5ED...	...-6ED...
30	30	**AL connectors included.**	3VA4130-4ED31-0AA0	...-5ED...	...-6ED...
35	35	**For copper, use the following kits:**	3VA4135-4ED31-0AA0	...-5ED...	...-6ED...
40	40	**15A-40A use # 3VA9133-0JD10**	3VA4140-4ED31-0AA0	...-5ED...	...-6ED...
45	45	**45A-125A use # 3VA9133-0JD11**	3VA4145-4ED31-0AA0	...-5ED...	...-6ED...
50	50		3VA4150-4ED31-0AA0	...-5ED...	...-6ED...
60	60	Note: 3 Left side and 3 right side	3VA4160-4ED31-0AA0	...-5ED...	...-6ED...
70	70	Accessory pockets available	3VA4170-4ED31-0AA0	...-5ED...	...-6ED...
80	80		3VA4180-4ED31-0AA0	...-5ED...	...-6ED...
90	90		3VA4190-4ED31-0AA0	...-5ED...	...-6ED...
100	10		3VA4110-4ED31-0AA0	...-5ED...	...-6ED...
110	11		3VA4111-4ED31-0AA0	...-5ED...	...-6ED...
125	12		3VA4112-4ED31-0AA0	...-5ED...	...-6ED...

① Although some breakers have a kAIC rating above 100 kAIC – many panels are limited to 100 kAIC or less.

② DC Voltage panels are limited by various factors. These DC ratings apply to the Breaker only.

Revised Type P1

600Y/ 347 Vac Maximum
400A max. Main Breakers
250A max. Branch Breakers
Short Circuit Rating —
200,000 A. @ 240 Vac / 100,000 A. @ 600Y/347 Vac. IR Maximum

Branch Breaker Symmetrical Interrupting Capacity

Based on CSA's Test Procedure

Feed thru and subfeed lugs may result in lower interrupting ratings if not protected by a main device. Consult sales office.

Panelboards

Certified by CSA under file #165172 and listed by Underwriters' Laboratories, Inc., under "Panelboards" File #E2269 for interiors and #E4016 for boxes and fronts.

Service

1-phase 2-wire - 120 Vac, 240 Vac,

1-phase 3-wire - 120/240 Vac,

3-phase 3-wire - 480Y/277 (when derived from 3-phase 4-wire system), 240 Vac, 120 Vac

3-phase 4-wire - 208Y/120 Vac, 480Y/277 Vac, 600Y/347 Vac, 380/220 Vac.

Panelboard Fronts and Doors

Standard panelboards are furnished with trim featuring concealed fasteners and hinges with a flush door lock. All are factory-assembled for ease of installation. Fronts are fabricated from code gauge steel and finished ANSI-61. See page 10-29 for optional fronts.

Main Breakers

BL, BLH, HBL, NGB, BQD, BQD6, ED4, ED6, HED4, QR2, QRH2,HQR2, HQR2H, FXD6, FD6, HFD6, HFXD6, JXD6, JD6, HJXD6, HJD6, 3VA41/52/61/62/53/63. (All main breakers except 400 amp frame are mounted horizontal.)

Note: Revised P1 interiors with BL, BQD, GB or 3VA41 type mains can be back-fed in unit space. See special notes for unit space reduction.

Main Breaker Panel Connectors⑦

Ampere Rating	Connectors Suitable for Cu or Al
100	(1)—#14 1/0 AWG
125	(1)—#4 1/0 AWG
225	(1)—#4 AWG–300 kcmil
250	(1)—#4/0 AWG–350 kcmil Al (1)—#6/0 AWG–350 kcmil Cu
400①	(2)—#3/0 AWG–250 kcmil Al or (1)—#3/0 AWG–500 kcmil Al

Connector ranges indicated do not apply to all main breaker types. Refer to molded case circuit breaker standard pressure wire connector chart (Section 5) for the connector range of a specific frame.

Main Lug Connectors⑥

125	(1)—#6 AWG–350 kcmil
250	(1)—#6 AWG–350 kcmil
400 std.	AL (2) 1/0-250 kcmil or (1) #2 AWG–600 kcmil
400 opt.	CU (2) 1/0–4/0 or (1) 1/0–600 kcmil
400 opt.	AL (1) AL 1/0–750 kcmil (2) AL/CU 250 kcmil max. [max. (1) 600 kcmil CU wire]

Boxes

20" wide, 5.75" deep

- End walls are blank as standard.
- End walls with knockouts are available for 5.75" deep enclosures, if requested at time of order, and are available as a field installable kit.

Main Breaker Gutter Dimensions - Inches

Main Breaker	Side Gutter 20" w/box	Side Gutter 24" w/box	Neutral Location 20" w/box
BL, BLH, HBL, BQD, BQD6	8.500	10.5	11.5
NGB	8.000	10	11.5
ED4, ED6, HED4	6.125	8.125	11.5
QR2, QRH2, HQR2,HQR2H	6.500	8.5	11.5
FD6, FXD6, HFD6, HFDX6	5.250	7.25	11.5
JD6②, JXD6②	15.000	15	26.75

Main Lug End Gutter Dimensions - Inches

Amp Rating	End Gutter	Neutral Location
125	10.500	11.5
250	10.500	11.5
400③	25.500	26.75

Weight — Approximate

Total panelboard weight when filled with a normal quantity of breakers and accessories is:

- About 3 lbs. per inch of box height

Gauge Steel Boxes (Type 1)

Width	Height	Gauge Steel
20"	All	#16

Fronts — Surface, Flush (Type 1)

20"	All	#14

Series Connected Short Circuit Ratings

The term "Series Connected Short Circuit Rating" refers to the application of series connected circuit breakers in a combination that allows some breakers to have lower individual interrupting ratings than the available fault current. This is permitted as long as the series combination has been CSA/UL tested and certified.

(see section 5 - Circuit Breakers - of this catalogue).

These series ratings must be specified at time of placing the order.

① P1 400 amp main breaker panels have wire bending space available for 600 kcmil.
② 400A main breaker is vertical mounted.
③ Feed-thru lug wire bending space is 15.000" (381mm) and neutral wire bending space is 15.880" (413mm) on 400A panel.
④ P1 panel limited to (1) subfeed 250 amperes max.
⑤ See Branch Breaker Side Gutter Chart for Nex Gen P1 Backfed Options.

⑥ See complete list of MLO connectors on page <?>.
⑦ Reference info: Neutral Lugs are rated for 75°C cable. When running a circuit to a load, the same type of wire should be used on the phase (breaker) and neutral connections in the panel.
a) Cables should be sized per NEC Table 310.16 (formerly Table 310.15(B)(16)) and the 75°C column.
b) Customer can choose to use 90C cable if sized as if it is 75°C.
c) Some 100% rated circuit breakers require the use of 90°C cable sized per the 75°C column. Refer to the Markings on the breaker and use the appropriate cable.
d) Some Circuit breakers 100A or less are marked as being suitable for 60°C, 75°C or 60/75°C cable. Refer to the Markings on the breaker and use the appropriate cable.

For inches / millimeters conversion, see Application Data section.

Table P1-3 – Main Breaker Panel Size Selector – Revised P1

RP1 Est. size/weights for AL MLO panels. - Add Main Breaker weights as needed. - Add 20% for CU Bus.		Max # of 1" Poles		Max # of Poles w/BT②		Dimensions in inches (mm)			MLO① Estimated Weight in Lbs. (kg) with Breakers
Type of RP1 interior ==>		BL/BQD or xGB/3VA41③		BL/BQD only		Unit Space		Box Height B"(mm)	
Main Breaker Amp Rating / Type	Main Lug Amp Rating	FT #	NFT #	FT w/BT	NFT w/BT	FT A"	NFT A"		
250A max. Main Bus rating 100A max BL or BQD series 125A max xGB or 3VA41 Series (coming soon) or 225A max QR Series (coming soon) 250A max FD or 3VA52/62 Series (coming soon)	125A or 250A (all bus is 250A max.)	–	18	–	18 + 10	–	9	26 (661)	95 (43)
		18	30	18 + 10	30 + 20	9	15	32 (813)	110 (50)
		30	42	30 + 20	42 + 30	15	21	38 (965)	125 (57)
		42	54	42 + 30	54 + 30	21	27	44 (1118)	140 (64)
		54	66	54 + 30	66 + 30	27	33	50 (1270)	155 (71)
		66	—	66 + 30	—	33	—	56 (1423)	170 (78)
400A max. Main Bus rating 400A max JD Series or 400A max 3VA53/63 Series	400A (all bus is 400A max.)	—	30	—	30 + 20	—	15	56 (1423)	172 (78)
		30	42	30 + 20	42 + 30	15	21	62 (1575)	190 (86)
		42	54	42 + 30	54 + 30	21	27	68 (1728)	208 (95)
		54	66	54 + 30	66 + 30	27	33	74 (1880)	226 (104)

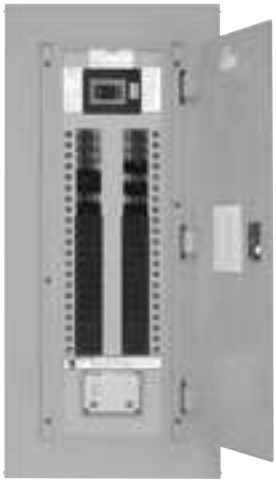

① Estimated weights are for Aluminum bus MLO panels and vary by MB and installed Branches
② BT - twin style breakers are available in 15A and 20A only and provide two 1-pole circuits in 1" of unit space.
The maximum Qty. of BT twins allowed in a panel is restricted to the max. number of neutral positions and/or physical space available, whichever is lower. Values shown are recommended maximums.
③ BT twins can only be used in BL/BQD RP1 panels. The NGB series of interiors do not accept BL/BQD or BT style of breakers.

Table P1-4 – Main Breaker Selection

P1 Main Circuit Breakers & Subfeed					2-Pole and 3-Pole Max IR (kA) at ④						Available for Sub-feed Horizontal mount only
Amp Rating	Trip Type	Breaker Family	Main Breaker Code	Breaker Type	240V	480Y /277V	480V	600Y /347V	600V	Amp Ratings Available	
70	Thermal Magnetic	BQD6	B6	BQD6	65	—	—	10	—	15-70	Single
100		BL	BL	BL	10	—	—	—	—	15-100	Single
			BH	BLH	22	—	—	—	—	15-100	Single
			HB	HBL	65	—	—	—	—	15-100	Single
		BQD	BQ	BQD⑤	65	14	—	10	—	15-100	Single
125	Thermal Magnetic	Sentron GB	NB	NGB	100	25	—	14	—	15-125	Single
			G2	HGB	100	35	—	14	—	15-125	Single
			G3	LGB	100	65	—	14	—	15-125	Single
		Sentron ED	E4	ED4	65	—	18	—	—	15-125	Single
			E6	ED6⑥	65	—	25	—	18	20-125	Single
			H4	HED4	100	—	42	—	—	15-125	Single
		3VA41 (coming soon)	V1	SEAB	65	—	—	—	14	15-125	Single
			V2	MEAB	85	—	35	—	18	15-125	Single
			V3	HEAB	100	—	65	—	25	15-125	Single
225	Thermal Magnetic	Sentron QR	QR	QR2	10	—	—	—	—	100-225	Single
			Q4	QRH2	25	—	—	—	—	100-225	Single
			Q5	HQR2	65	—	—	—	—	100-225	Single
			Q6	HQR2H	100	—	—	—	—	100-225	Single
250	Thermal Magnetic	Sentron FD	FX, FD	FXD6-A, FD6-A	65	—	35	—	22	70-250	Single
			HF	HFD6	100	—	65	—	25	70-250	Single
			H2	HFXD6	100	—	65	—	—	70-250	Single
250 [150]	Thermal Magnetic	3VA52 (W/TM230 trip) (coming soon)	VA	MFAS	85	—	35	—	18	100-250	Single
			VB	HFAS	100	—	65	—	25	100-250	Single
			VC	CFAS	200	—	100	—	35	100-250	Single
	Electronic (Solid state)	3VA62 [3VA61] (ETU350 LSI standard) (coming soon)	WA [W2]	MFAE [MDAE]	100	—	35	—	18	100-250 [40-150]	Single
			WB [W3]	HFAE [HDAE]	100	—	65	—	22	100-250 [40-150]	Single
			WC [W4]	CFAE [CDAE]	200	—	100	—	35	100-250 [40-150]	Single
			WD [W5]	LFAE [LDAE]	200	—	150	—	50	100-250 [40-150]	Single
400	Thermal Magnetic	Sentron JD	JX, J6	JXD6-A, JD6-A	65	—	35	—	25	200-400	n/a
			H5, H6	HJXD6-A, HJD6-A	100	—	65	—	35	200-400	n/a
			JD	JXD2	65	—	—	—	—	300-400	n/a
400	Thermal Magnetic	3VA53 (W/TM230 trip) (coming soon)	VE	MJAS	85	—	35	—	18	200-400	n/a
			VF	HJAS	100	—	65	—	25	200-400	n/a
			VG	CJAS	200	—	100	—	35	300-400	n/a
	Electronic (Solid state)	3VA63 (ETU350 LSI standard) (coming soon)	WE	MJAE	100	—	35	—	18	100-400	n/a
			WF	HJAE	100	—	65	—	22	100-400	n/a
			WG	CJAE	200	—	100	—	35	100-400	n/a
			WH	LJAE	200	—	150	—	50	100-400	n/a

Table P1-5 - Line/Load Cable Connector Size Chart

Max Amp Rating	Main Lug	Amp Series	Connections suitable for Copper Cable	Connections suitable for Aluminum Cable
125	Aluminum body	125A max	(1) #6 AWG - 350 kcmil	(1) #6 AWG - 350 kcmil
	Copper body	125A max	(1) #6 AWG - 350 kcmil	not suitable
250	Aluminum body	250A max	(1) #6 AWG - 350 kcmil	(1) #6 AWG - 350 kcmil
	Copper body	250A max	(1) #6 AWG - 350 kcmil	not suitable
400 std.	Aluminum body	400A max	(2) 1/0 - 4/0 or (1) #2 AWG - 600kcmil	(2) 1/0 - 250 kcmil or (1) #2 AWG-600kcmil
	Copper body	400A max	(2) 1/0 - 4/0 or (1) 1/0 - 600kcmil	not suitable for AL
400 alt.	Aluminum body	400A max	(2) 1/0 - 250 kcmil or (1) 1/0 - 600kcmil	(2) 1/0 - 250 kcmil or (1) 1/0 - 750kcmil
Max Amp	**Main Breaker Types**	**Series**	**Connections for Copper**	**Connections for Aluminum**
100	BL, BLH, HBL	15-35A 40-50A 55-100A	#14-#6 AWG #8-#6 AWG #8 AWG - 2/0	#14-#6 AWG #8-#4 AWG #8 AWG - 2/0
	BQD	15-40A 45-100A	#14-#6 AWG #8-#1 AWG	#12-#6 AWG #6 AWG -1/0
125	NGB, HGB, LGB	15-30A 35-125A	#14-#6 AWG #8 AWG-1/0	#12-#6 AWG #8-2/0 AWG
	ED4 ED6, HED4	15-25A 30-100A 110-125A (1-P) 30-60A (1-P) 70-100A	#14-#10 AWG #10 AWG -1/0 #3 AWG-3/0 #10-#4 AWG #6 AWG- 1/0	#12-10 AWG #10 AWG -1/0 #1 AWG-2/0 #10-#4 AWG #6 AWG- 1/0
	3VA41 (coming soon)	15-40A	#14-#10 AWG	#14-#10 AWG
		45-125A	#14AWG - 3/0	#14AWG - 2/0
225	QR2, QRH2, HQR2, HQR2H	100-225A	#3 AWG-300 Kcmil	#3 AWG-300 Kcmil
250 [150]	FXD6, FD6, HFD6, HFXD6	70-250A	#6 AWG-350 Kcmil	#4 AWG-350 Kcmil
	3VA52 3VA62 [3VA61] (coming soon)	100-250A 40-250A [16-150A]	#6 AWG-350 Kcmil	#6 AWG-350 Kcmil
400	JD6, JXD6, HJD6, HJXD6	200-400A	(1)or(2) 3/0-500 Kcmil [dual port lug]	(1)or(2) 4/0-500 Kcmil [dual port lug]
	3VA53 (coming soon) 3VA63 (coming soon)	200-400A 100-400A	(1)or(2) 2/0-600 kcmil [dual port lug]	(1)or(2) 2/0-600 kcmil [dual port lug]

Note: Main breakers use breaker connectors. For sizes, see breaker connector chart. 400A MLO Panels have wire bend space for 600kcmil CU & AL wire when using standard lugs. With optional 750kcmil AL/CU connectors, wire bend space is available for up to 750kcmil AL wire, but is still limited to 600kcmil CU wire.

Table P1-6 – Branch Circuit Breakers

Revised P1 Branch Circuit Breakers①				1-Pole					2-Pole and 3-Pole								
				Max IR (kA) at					Max IR (kA) at								
Amp Rating	Trip Type	Breaker Family	Breaker Type	120V	277V	347V	125V DC③	Amp Ratings Available	120/ 240V	240V	480Y/ 277V	480V	600Y/ 347V	600V	125/ 250V DC③	250V DC③	Amp Ratings Available
100	Thermal Magnetic	BL	BL, BT⑦	10	—	—	—	15-70⑦	10	10	—	—	—	—	—	—	15-100④
			BLH, BTH⑦	22	—	—	—	15-70⑦	22	22	—	—	—	—	—	—	15-100④
			HBL	65	—	—	—	15-50	65	65	—	—	—	—	—	—	15-100
	Special② Application	BLG BL	BLG②	10	—	—	—	15-20	10	-	—	—	—	—	—	—	30
			BL(HID)	10	—	—	—	15-30	10	-	—	—	—	—	—	—	15-30
	Thermal Magnetic	BQD BQD (CSA)	BQD⑤	65	14	—	14	15-100	—	65	14	—	—	—	14	—	15-100
			BQD6⑥	65	—	—	14	15-70	—	65		—	10	—	14	—	15-70
XX	Electronic and misc.	BL	AFCI/GFCI & Dual Function	X	—	—	—	see special table page <?>	x	—	—	—	—	—	—	—	see special table page <?>
125	Thermal Magnetic	GB	NGB	100	25	14	14	15-125	—	100	25	—	14	—	14	—	15-125
			HGB	100	35	14	14	15-125	—	100	35	—	14	—	14	—	15-125
			LGB	100	65	14	14	15-125	—	100	65	—	14	—	14	—	15-125
		3VA41③ (coming soon)	SEAB	65	25	14	14		65	65	25	25	14	—	50	50	15-125
			MEAB	85	35	18	25		85	85	35	35	18	—	85	85	15-125
			HEAB	150	65	25	30		150	150	65	65	25	—	100	100	15-125

① Unit space is 1 inch per pole, except for Special Application with accessory included.
- No branch kits available, unit space for all branch positions is twin mount.
- Branch space is either for BL/BQD only (or) for xGB/3VA41 only.

② BLG: Two-pole breaker is one phase and neutral
- See section 5-31 for additional info. Some are Built to order. Allow 2-3 weeks delivery.

③ DC Voltage Systems are not approved for use in P1 panels. Refer to P2/P3 panels if DC Voltage Systems are needed.

④ 110A-125A BL/BLH (2-pole only) available as Main or Subfeed only in Revised P1 panels.

⑤ Approved for CSA and UL Listed.

⑥ Approved for CSA but not UL Listed.

⑦ BT and BTH are only available in 15A and 20A with two 1-pole circuits in one inch of unit space.

Table P1-13 – Main Breaker Gutter Dimensions Inches (mm)

Main Breaker	Gutter Space inches (mm)		Neutral Location to Endwall
	20" wide box	24" wide box	20" wide box
BL, BLH, HBL②	8.500 (215)③	10.500 (267)③	10.000 (254)
BQD②	7.750 (196)③	9.750 (248)③	10.000 (254)
NGB, HGB, LGB②	7.500 (190)③	9.500 (241)③	10.000 (254)
ED4, ED6, HED4	6.125 (156)	8.125 (206)	10.000 (254)
QR2, QRH2, HQR2, HQR2H	6.500 (165)	8.500 (216)	10.000 (254)
3VA41 (coming soon)	7.250 (184)	9.250 (235)	10.000 (254)
3VA52 (coming soon)	6.750 (171)	8.750 (222)	10.000 (254)
3VA61/62 (coming soon)	6.250 (159)	8.250 (210)	10.000 (254)
3VA53/63① (coming soon) Double / Single Port	7.500 (190) / 12.250 (305)	14.750 (375) / 12.250 (305)	24.500 (622)
FD6, FXD6, HFD6, HFXD6	5.250 (133)	7.250 (184)	10.500 (267)
JD6, JXD6①	15.000 (381)	15.000 (381)	26.500 (674)

① 3VA53/63 or JD frame mounted vertically.

② For Revised P1 with Back-fed Main option, use Side Gutter Wiring Spec Table P1-15.

③ These dimensions are for Revised P1 only. See Original P1 cut sheets for valid dimensions if needed (P1 production prior to June 2015).



Feed-Thru (FT)

Table P1-14 – Main Lug End Gutter Dimensions Inches (mm)

Amp Rating	End Gutter		Neutral Location - to Endwall	
	20" wide box	24" wide box	20" wide box	24" wide box
125	9.500 (242)	9.500 (242)	10.500 (267)	10.500 (267)
250	9.500 (242)	9.500 (242)	10.500 (267)	10.500 (267)
400	25.500 (648)	25.500 (648)	26.750 (680)	26.750 (680)

NOTE: Feed-thru lug and neutral wire bending space is 15.000" and 16.250" respectively on 400A panel.



Non-Feed-Thru (NFT)

Table P1-15 – Side Gutter Wiring Space Inches (mm) (Fig P1-1)

Reference Letter	Panel Width 20"	Panel Width 24" Optional
A②	6.375 (167)	8.375 (213)
B②	5.500 (140)	7.500 (191)
C②	5.000 (127)	7.000 (178)
D	6.125 (156)	8.125 (206)
E	6.500 (165)	8.500 (216)
F	5.250 (133)	7.250 (184)
G	6.750 (171)	8.750 (222)
H	6.250 (159)	8.250 (210)

① Subfeed mounting limit 1 per panel.

Table P1-1

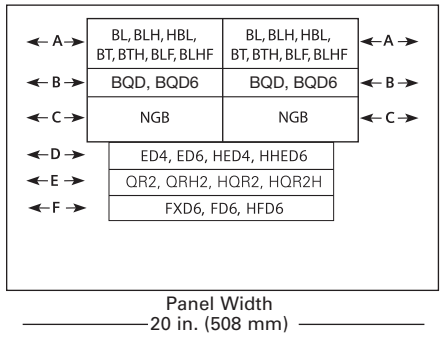

② For all Revised P1 panels using BL/BQD or xGB breakers as mains in back-fed position, use this chart for wiring space.

NOTE: See page <?> for Main Breaker trip handle height reference chart.



Type P1 Panelboard Modifications and Additions

Panel Options

Enclosures

- Extra gutter to sides or ends of the can
- 24" wide boxes
- Hinged trims
- Door-in-door trims
- Screw to the box trims
- Piano hinge trims
- Painted boxes
- Custom colors
- Stainless steel trims and boxes
- Type 1 enclosures (Std 16 Gage)
- Type 3R/12 enclosures 16 Gauge Can w/ 14 Gauge front)
- Type 4 enclosures (14 Gauge only)
- Type 4X enclosures (14 Gauge only - 304SS Std, 316SS Optional)
- Panel skirts
- Gaskets between trim and box

Surge Protection Devices

- TPS3 02
  - Bus connected
  - Internally mounted (30A breaker required to feed SPD)
  - Externally mounted in a 15" high aux. enclosure (30A breaker required to feed SPD)
- TPS3 09
  - Internally mounted (20A breaker required to feed SPD)
  - Externally mounted (20A breaker required to feed SPD)
- TPS3 12
  - Externally mounted (40A breaker required to feed SPD)

Panel Modifications

Enclosures

- Main Bus
- Standard main bus is tin-plated aluminum. For copper main bus, add from the table for each panel. Includes copper neutral cross bar. For copper neutral branch lugs, see miscellaneous.
- Compression lug for MLO②
- Branch and main breaker accessories
  – Handle blocks
  – Handle locks
- Feed-thru lugs①
  Cannot be used in conjunction with SPD/TVSS or subfeed breakers. Do not add height to the panel.

Feed-thru Lugs Amp Rating	Type	Connector CU/AL Range
250	AL/CU Mechanical	(1)–#6 AWG-350 kcmil
	CU Mechanical	(1)–#6 AWG-350 kcmil
	AL/CU Compression	(1)–#6 AWG-350 kcmil
400	AL/CU AWG Mechanical	(2)–#1/0 - 250 kcmil or
		(1)–#2 AWG-600 kcmil
	CU	(1)–1/0-600 kcmil (2)-1/0-4/0
	AL/CU Compression	(1) 400-600 kcmil AL (1) 400-500 kcmil CU

- 200% neutral①
- Copper lugs, mechanical line and branch neutral①
- Bus mounted SPD/TVSS and unit space mounted BSPD①
- Grounding of Panelboards
- Ground Bars except for brazed to box are shipped with the panel interior factory mounted.
  – Non-Insulated Equipment Ground Bar – Standard
  – Copper Non-Insulated Ground Bar
  – AL Insulated Equipment Ground Bar
  – CU Insulated Equipment Ground Bar
- Shunt Trip on Main or Branch
  BL②, BLH②, HBL②, BQD②, BQD6, NGB② as branch use 1" unit space for shunt trip.

QR2, QRH2, HQR2, HQR2H, ED2, ED4, ED6, HED4, FD6, FXD6, HFD6
HFXD6, JXD6, JD6, HJD6, HJXD6

NOTE: Specify copper or aluminum cable.

① Do not increase panel or enclosure size.
② Accessories on 1" pole breakers (BL, BQD, xGB, ED) will take 1" unit space.
③ External to the panel, supplied in a separate enclosure.

Type P1 Panelboard Modifications and Additions

Reference

Compression Lugs

Table P1-19 – Lugs

Style	Amp Rating	Breaker Type	Compression Connectors	Box Height Addition
MLO	125	N/A	(1) #6 AWG - 350 kcmil	None
	250			
	400	N/A	(1) 400 - 600 kcmil AL (1) 400 - 500 kcmil CU	None
Main Breaker	125	ED4, ED6, HED4	(1) #14 AWG - 2/0	Box must go to 24″ wide
	225	QR2, QRH2, HQR2, HQR2H	(1) #6 AWG - 350 kcmil CU or AL	Box must go to 24″ wide
	250	FXD6, HFD6	(1) #6 AWG - 350 kcmil CU or AL	Box must go to 24″ wide

NOTE: Standard compression lugs used for P1 panels are range taking lugs and require a particular crimping tool (tool is Hubbell/Anderson Versa Crimp VC6 -for 250A) to accommodate the range. Consult factory for information. 200% neutral not available with compression lugs. xGB breakers cannot accommodate compression lugs. (For 400A tool use Hubbell/Anderson Versa Crimp VC6FT/VC7FT - see instruction sheet for details.)

Enclosure Modifications

Type-4–Water Tight, Dust Tight, Steel Enclosure

(Actual Type-4 enclosure is larger than standard Type 1 enclosure. See chart below for reference to approximate actual size.)

Table P1-20

Standard Box Height (in inches)	Actual NEMA 4 Enclosure Size		
	H	W	D
32	32	20	8
38	42	30	8
44	48	36	8
56	60	36	10

NOTE: Larger Type 4 enclosures are not available.

Type-4X Water Tight, Dust Tight and Corrosion Resistant

(consult plant to verify actual enclosure size)

Table P1-21

Catalogue Number	Enclosure – Stainless Steel Size (inches) (304SS is standard)		
	H	W	D
B4X26	26	20	5.75
B4X32	32	20	5.75
B4X38	38	20	5.75
B4X44	44	20	5.75
B4X50	50	20	5.75
B4X56	56	20	5.75
B4X62	62	20	5.75
B4X68	68	20	5.75
B4X74	74	20	5.75

NOTE: 316SS is available as an option – must be specified.

Remote Switch Modifications

Table P1-22 – Control Power Transformer

Size	VA Power
0, 1	50
2	75
3	150
4	250

Table P1-24 – Remote Control (with auxiliary contacts)

Description
Auxiliary Contacts (mounted, not wired)
2-Wire Control

Gauge Steel of Boxes/Fronts, Surface and Flush

Dimensions in Inches (mm)		Gauge Steel		
H	W	Box	Front/Door	Type
26-74 (660-1880)	20 (508)	16①	14③	Type 1
26-74 (660-1880)	20 (508)	16②	16/14②	Type 3R/12
32-60 (813-1524)	20-36 (508-914)	14③	14③	Type 4
26-74 (660-1879)	20 (508)	14④	14④	Type 4X

① 16 Gauge is Standard (14 Gauge & 12 Gauge are optional)
② 15 Gauge Steel Can with 14 Gauge Door or Similar Approved Construction
③ No Optional Gauge available
④ 304SS 14 Gauge Std., 316SS 14 Gauge optional

Siemens TPS Surge Protection

The new TPS4 01/L1 series has been added to our internal mount SPD family for Lighting panels. This series provides many additional benefits and features not available with TPS3 01/L1 series or the TPS3 02/L2 series (for RP1 only). TPS4 series uses different MOV technology than the Mersen TPMOV used in TPS3 series. The TPS4 product leverages a MOV 'pill stack' design that also includes thermal protection, that is proven in the telecomm and other industries for many years. Look for comparisons for these products online for more information.

Wired versions of the TPS4 01/L1 series allow for connection to bus by cabling to a branch breaker in the panel when specs require a disconnect for the installation.

This TPS4 01/L1 series is designed for form/fit/function to replace both the TPS3 01/02 or TPS3 02/L2 series in most applications, but some differences must be considered - see important notes below:

1) TPS4 01/L1 series is designed to directly bolt to the bus of Revised P1 product (RP1). There are no adapters needed which makes installation easier. For field replacement of TPS3 02/L2, the entire TPS3 kit must be removed and the new TPS4 kit can be installed.
2) The TPS4 01/L1 series is NOT compatible with Original P1 series so TPS3 01/L1 must be used for Original P1 as either initial installation or as replacement.
3) TPS4 01/L1 can be used to replace TPS3 01/L1 in most RP1/P2/P3 applications where specs will allow. P2/P3 will need an additional kit ordered to adapt to the interior properly. Order Kit # TPS4P2P3K - SPD KIT P2 P3 TPS4.

Customer Interaction Centre (CIC) should be contacted if there are any questions regarding field replacement of SPD products.

TPS4 01 and TPS4 L1 Key Features

(see section 9 for a complete list)

- UL 1449-5 Type 2 SPD CSA 22.2 No. 269 and UL 1283 Listed
  – Optional UL 1449 5th Edition Listed Type 1
- Type 1 / Type 2 SPD
- 100 - 500 kA Per Phase Surge Current
- UL 96A Lightning Protection Master Labeling compliant (@ 20 kA)
- Modes of Protection: L-N, L-G, N-G, and L-L
- Dimensions: 9.25" x 4.5" x 4.29" (235 mm x 114.3 mm x 109 mm)
- Weight: 4.55 lb. (2.06 kg)



TPS4 01

Ordering Information

Catalog # TPS4 □ 01 □□ □□□□

Voltage Code

A = 240/120 V, 1Ø, 3W①
B = 240/120 V, 3Ø, 4W
C = 208/120 V, 3Ø, 4W
W= 220/127 V, 3Ø, 4W
D = 240 V, 3Ø, 3W
E = 480/277 V, 3Ø, 4W
F = 480 V, 3Ø, 3W
G = 600 V, 3Ø, 3W②
K = 380/220 V, 3Ø, 4W
L = 600/347 V, 3Ø, 4W
S = 400/230 V, 3Ø, 4W
T = 415/240 V, 3Ø, 4W

Surge Current (kA)

10 = 100 kA per phase
15 = 150 kA per phase
20 = 200 kA per phase
25 = 250 kA per phase
30 = 300 kA per phase
40 = 400 kA per phase
50 = 500 kA per phase

Options

X = Surge counter (Standard)

0 = Std config (default)
W= Terminal lug

0 = Std config (default)
B = Busway application
M = MCC application

2 = Type 2 SPD (Default) Includes UL 1283 EMI/ RFI Filters
0 = Type 1 SPD (Consult Factory Prior to Ordering)

Example: **TPS4C0120X000** = SPD for a 208/120V panelboard with a surge current capacity of 200 kA per phase and a surge counter option.

When an option is not selected, include a **zero (0)** in the field.

① Can also be used on 208Y/120V, 1Ø, 3W System
② Not available in 300, 400 or 500 kA versions

Please note: The TPS4 01 series is not suitable for use in the Original P1 Lighting Panels - Only Revised P1 Lighting Panels.



TPS4 L1

Common TPS4 01 SPD Catalog Reference

(see SPD section 9 for complete list including L1)

Catalog #	Description reference
TPS4A0110X002	SPD2 100kA 240/120V 1P3W SC
TPS4A0115X002	SPD2 150kA 240/120V 1P3W SC
TPS4B0110X002	SPD2 100kA 240/120V 3P4W SC
TPS4B0115X002	SPD2 150kA 240/120V 3P4W SC
TPS4C0110X002	SPD2 100kA 208/120V 3P4W SC
TPS4C0115X002	SPD2 150kA 208/120V 3P4W SC
TPS4C0120X002	SPD2 200kA 208/120V 3P4W SC
TPS4C0125X002	SPD2 250kA 208/120V 3P4W SC
TPS4E0110X002	SPD2 100kA 480/277V 3P4W SC
TPS4E0115X002	SPD2 150kA 480/277V 3P4W SC
TPS4E0120X002	SPD2 200kA 480/277V 3P4W SC
TPS4F0110X002	SPD2 100kA 480V 3P3W SC
TPS4F0115X002	SPD2 150kA 480V 3P3W SC
Kit below is needed for P2/P3 installation only	
TPS4P2P3K	SPD KIT P2 P3 TPS4 ADDER

Note: P2/P3 SPD's are factory installed only. For field replacement in P2/P2 panels, these same part numbers can be used to replace TPS3 01/L1 but an additional kit is needed only if replacing TPS3 with TPS4. Order kit # TPS4P2P3K - SPD KIT P2 P3 TPS4 ADDER

P1 Endwall to Main or Subfeed Trip Handle Distance

Interior ==>	P1 250A			P1 400A							
Mains ==>	includes BL/BQD and 3VA Mains (coming soon)			includes 3VA53/63 mains. (coming soon) JD dimensions +/- 1" from these values							
Feed ==>	Top & Bottom Feed			Top Feed				Bottom Feed①			
Box size	A	B/D②	C②	A	B	C②	D②	A	B	C②	D②
26	8.03	17.97	NFT②	na	na	na	na	na	na	na	na
32	8.03	23.97	8.03	na	na	na	na	na	na	na	na
38	8.03	29.97	8.03	na	na	na	na	na	na	na	na
44	8.03	35.97	8.03	na	na	na	na	na	na	na	na
50	8.03	41.97	8.03	na	na	na	na	na	na	na	na
56	8.03	47.97	8.03	19.5	36.5	NFT only②		21.38	34.62	NFT only②	
62	na	na	na	19.5	42.5	13.78	48.22	21.38	40.62	13.78	48.22
68	na	na	na	19.5	48.5	13.78	54.22	21.38	46.62	13.78	54.22
74	na	na	na	19.5	54.5	13.78	60.22	21.38	52.62	13.78	60.22

① Bottom Feed 400A distance is different due to breaker orientation.
② For NFT panels (Non-Feed-thru) - these values are not appropriate.

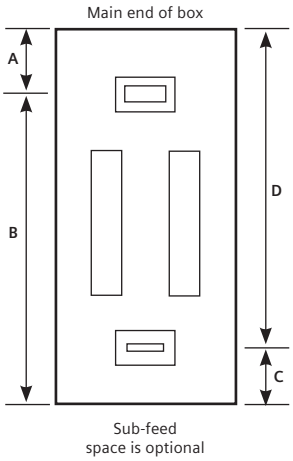

Type 1 Box

Box is symmetrical

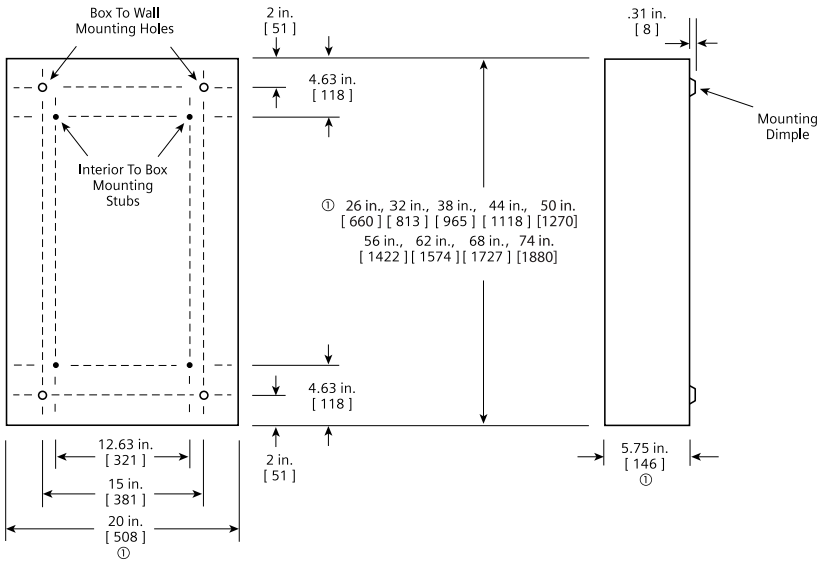

Flush Mounting

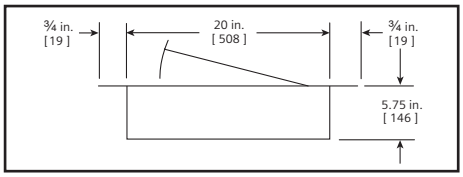

Type 3R and 3R/12 Box

Note: 3R boxes 50"h and larger include two "T" handles.

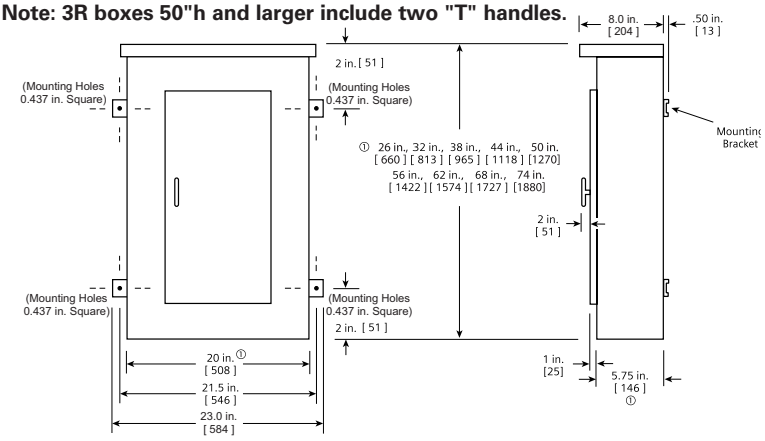

① Dimensions are interior of the box. Add 5/8" to width for absolute dimension. Add 1/8" to height for absolute dimension.
Dimensions shown in inches and millimeters [ ].

Enclosures

Type 1
Primarily indoor use: Box and front needed for complete enclosure.



Type 3R
Outdoor use primarily to provide a degree of protection against rain, sleet, and damage from external ice formation.



Type 12 (Siemens 3R/12)
These enclosures for Lighting Panels are useable as Type 12 or Type 3R by adding the gasket shown around the door.



(Siemens 3R/12 panelboard products meet this requirement)

Type 4 or 4X
Indoor or outdoor use primarily to provide a degree of protection against splashing water, corrosion, windblown dust and rain, hose-directed water, and damage from external ice formation.



Note: Type 4 is painted steel. NEMA Type 4X is typically stainless or non-metallic.



Standard Trim (FAS-Latch)
(14 Gage Standard)

(Into stock includes surface or flush versions of this style in chart on page 11.

Standard Trim (FAS-Latch) Typical Dimensions
(Hinges available as shown on right side only)
(Typical 14 Gage Steel construction or approved equivalent)

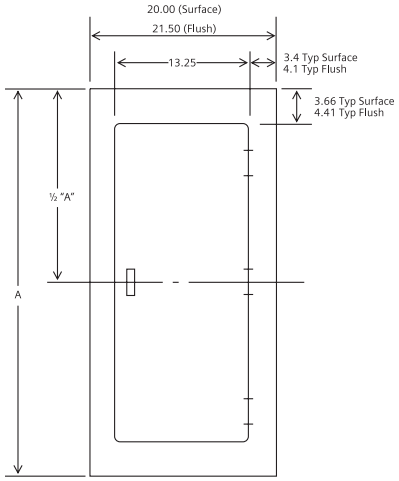

Box Size	Surface A	Flush A	# of Hinges
26	26	27.5	2
32	32	33.5	2
38	38	39.5	2
44	44	45.5	3
50	50	51.5	3

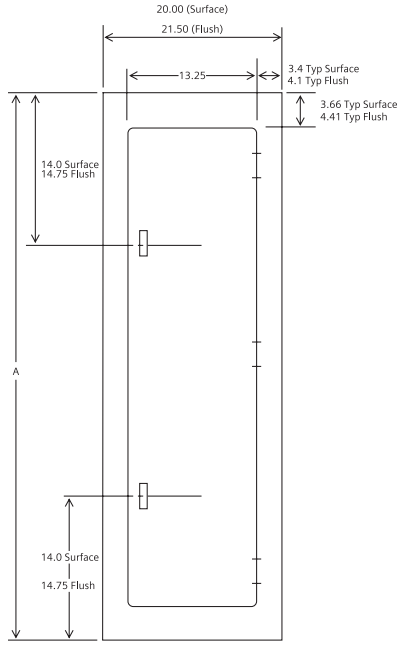

Box Size	Surface A	Flush A	# of Hinges
56	56	57.5	3
62	62	63.5	3
68	68	69.5	3
74	74	75.5	3



Door in Door Front
(14 Gage Standard)



Hinged to Box Front
(14 Gage Standard)

Also available

- Screw to Box Trim
  (14 Gauge Std.)
- Piano Hinge Trim
  (14 Gauge Std.)
  a) Screw to box with Piano Hinge Door
  b) Hinge to Box with Piano Hinge and Piano Hinge Door
  c) Door-in-Door with Piano Hinge, Both Doors

Features

Flexibility is the hallmark of the P2 panel and with the addition of the 3VA family of breakers in 2022 it is more capable than ever.

This panel offers a wide array of factory assembled options to meet almost all panel board applications up to 600A Maximum Bus ratings. With this design, the ability to mix breaker frames in unit space up to 250 amps will also meet many distribution panel requirements in a much smaller package.

Subfeed lugs (up to 400 amp) are only one of the options of this flexible panel.

Similar to Siemens P1 panel board, P2 is set up around 18, 30, 42, 54, 66, 78, and 90 circuit configurations in 6" increments of box size. It will also allow the user to configure the panel to the smallest possible size. Enclosures are shared with the P1 series as well and are from 26" to 74" high (in 6" increments to match interiors).

The P2 panel starts with 9" of unit space (18 circuits of 1" pole breakers). Breaker strap kits mounted in unit space can be mixed and matched to meet customer requirements for many types of breakers. All 1" pole breakers (BL, BQD, xGB, xGB2, ED & 3VA41 frames) are mounted in 3" or 6-pole increments. Breaker frames, above 125 amps, are mounted in 6" single breaker mounting kits (Sentron QR, FD and new 3VA series 3VA52/61/62 cover all requirements up to 250A).

- 3VA52/61/62 can be single mounted in 6" of unit space so FD will no longer be needed in sub-feed space.
- JD 400 amp will no longer be needed as main or sub-feed when new 3VA53/63 mains will be available.

Main Breakers from 100A frame to 600A frame can be configured as needed. 3VA mains (coming soon) will be the preferred main choice for most applications.

As an example of a minimum panel, (6) 20 amp 1-pole BL breakers (3" in height of unit space) and a 3-pole 225 amp QR breaker (6" of unit space) equalling 9" of unit space can be configured in a P2 panel without any extra provisions or space required.

Another unique feature of the P2 panel is that blank unit space can be added to allow for future expansions or modifications. - Any expansions or modifications must be in 3"or 6" increments for these kits and they can be mixed in unit space as needed.

Small frame breakers of the same frame can cross from one mounting kit to another if needed.

- BL/BQD 100A max. has 3" kits - 6-poles max.
- xGB/3VA41 125A max. has 3" kits - 6-poles max.
- xGB2 and ED 125A max. each have 3" kits also, but are no longer needed with the introduction of 3VA.

Larger frame breaker kits are single mount in 6" of unit space:

- QR 225A max. 2-pole or 3-pole have 6" kits.
- Changes in the field for unit space length for any 3" kit may require an addition deadfront center strip kit. Check with sales or the factory for field installable unit space strap kits.
- 3VA61 150A ETU only and 3VA52/62 250A max. 2-pole or 3-pole share the same 6"high kit.

Enclosures for P2

- Standard Type 1 enclosures are 20" wide x 5.75" deep. Box height is determined by main device and unit space. See charts for box height.
- Height: 26", 32", 38", 44", 50", 56", 62", 68" and 74" are standard sizes used for both P1 and P2
- Type 3R, 3R/12, 4X are typical examples of product available in 20" wide x 5.75" deep enclosures.
- For most applications, 24" wide and 7.75" deep variations are also available.

Main Lug / Main Breaker for P2

Voltage – 600V AC max./250V DC max.

Amperage

- Main Lug: 125 to 600 amp max.
- Main Breaker: 100 to 600 amp max.

Short circuit rating

- 200 kAIC max. symmetrical or equal to the lowest rated device installed unless a series rating is indicated.
- Panels with subfeed or feed-thru lugs without a main device*, circuit breaker or fusible unit, are limited to a three-cycle rating. The three-cycle rating for the P2 panel is limited to 22 kAIC.

*Note: The main device may be mounted remote from the panel.

Bussing – The P2 panel has more options to meet market requirements. The standard bussing is temperature rated aluminum. The rating is per the requirements of CSA C22.2 No.29 - the standard for panelboards. All aluminum bussing is tin-plated. Optional bussing for the P2 panel is copper.

The copper bus option for this panel is tin-plated as standard or silver.

Weight – Approximate

Total panelboard weight when filled with a normal quantity of breakers and accessories is about 3 lbs. (1 kg) per inch (54g per mm) of box height.

Gauge Steel of Boxes/Fronts, Surface and Flush

Dimensions in Inches (mm)		Gauge Steel		
H	W	Box	Front/Door	Type
26-74 (660-1880)	20 (508)	16①	14⑤	Type 1
26-74 (660-1880)	20 (508)	16②	16/14②	Type 3R/12
32-60 (813-1524)	20-36 (508-914)	14③	14③	Type 4
26-74 (660-1879)	20 (508)	14④	14④	Type 4X

① 16 Gauge is Standard (14 Gauge & 12 Gauge are optional)
② 15 Gauge Steel Can with 14 Gauge Door or Similar Approved Construction
③ No Optional Gauge available
④ 304SS 14 Gauge Std., 316SS 14 Gauge optional
⑤ FAS-Latch is 14 GA only.
Screw-to-Box, Hinge-to-Box, Door-in-Door (14 GA Std./12 GA Std. or 10 GA Optional)
STB/HTB/DND with Piano Hinge (14 GA Std./12 GA Optional)

Distributor Stock - Type P2 Main Lug Only

Reference

Interior Numbering System

Type P2 unassembled panelboards are available as main lug only and come with provisions for the branch breaker type selected.

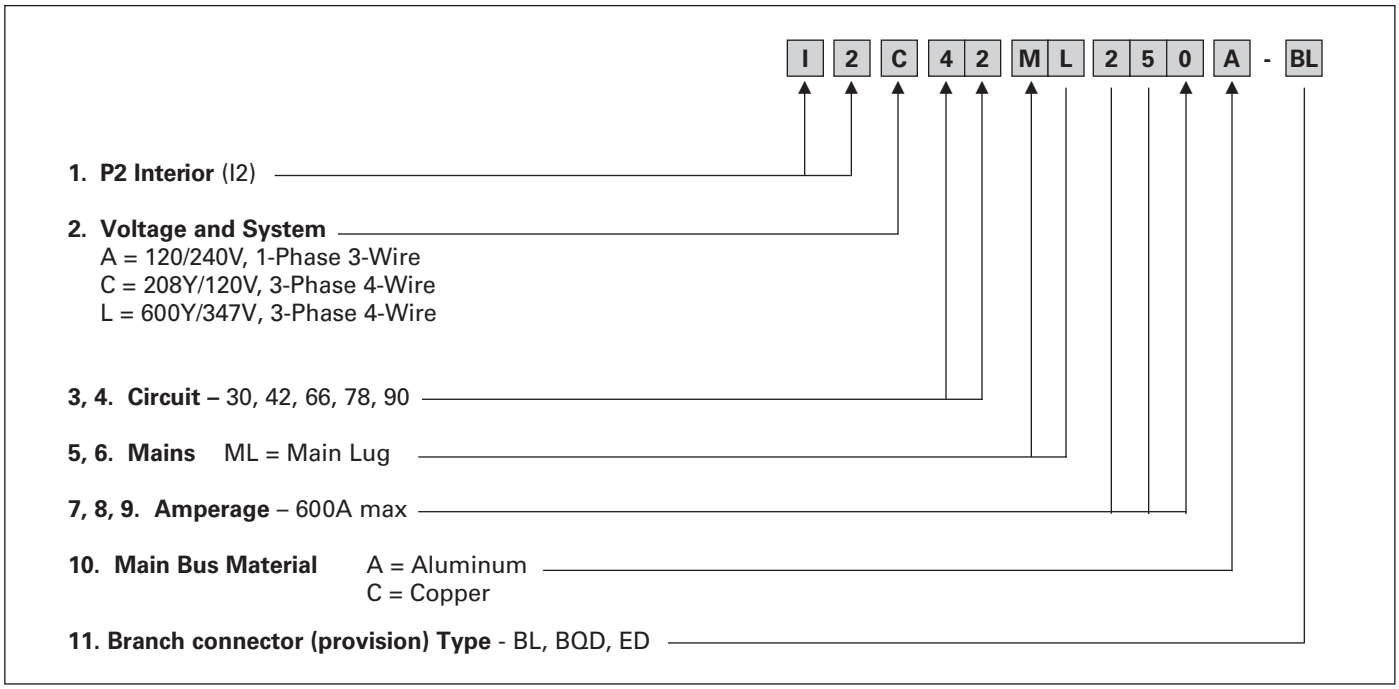

Branch Breakers

Panel Type	Voltage (Max.)	Breaker Type	Power Product Catalogue Page
P2	240	BL, BLH, HBL, BQD	See section 5
	600/347	BQD6, ED6	

Distributor Stock - Type P2 Main Lug Only

Interior, Box and Trim Selection

600A Max. — 20" Wide x 5.75" Deep

1. Determine voltage, system, amperage and type of branch breaker connectors to select the appropriate Interior from the table below.
2. Select the type of box and trim needed.
3. List required branch circuit breakers: Type BL, BQD or ED breakers.

Type P2 Unassembled Panelboards

Interiors Only - Less Branch Breakers				**Boxes**			**Trim**	
Amperes Rating Mains	**Max. No. of Circuits**	**Provision Type**	**Main Lug + provisions**	**Height -** Inches (mm)	**Type 1**	**Type 3R/12①**	**Surface**	**Flush②**
1-Phase, 3-Wire								**120/240V**
250	66 78	BL/BQD	**I2A66ML250A-BL** **I2A78ML250A-BL**	56 (1422) 62 (1575)	**B56** **B62**	**WP56** **WP62**	**S56B** **S62B**	**F56B** **F62B**
400	42 66	BL/BQD	**I2A42ML400A-BL** **I2A66ML400A-BL**	50 (1270) 62 (1575)	**B50** **B62**	**WP50** **WP62**	**S50B** **S62B**	**F50B** **F62B**
3-Phase, 4-Wire								**208Y/120V**
250	42 66 78	BL/BQD	**I2C42ML250A-BL** **I2C66ML250A-BL** **I2C78ML250A-BL**	44 (1118) 56 (1422) 62 (1575)	**B44** **B56** **B62**	**WP44** **WP56** **WP62**	**S44B** **S56B** **S62B**	**F44B** **F56B** **F62B**
400	42 66 78 90	BL/BQD	**I2C42ML400A-BL** **I2C66ML400A-BL** **I2C78ML400A-BL** **I2C90ML400A-BL**	50 (1270) 62 (1575) 68 (1727) 74 (1880)	**B50** **B62** **B68** **B74**	**WP50** **WP62** **WP68** **WP74**	**S50B** **S62B** **S68B** **S74B**	**F50B** **F62B** **F68B** **F74B**
600	66	BL/BQD	**I2C66ML600A-BL**	62 (1575)	**B62**	**WP62**	**S62B**	**F62B**
3-Phase, 4-Wire								**600Y/347V**
250	30	ED	**I2L30ML250A-ED**	38 (965)	**B38**	**WP38**	**S38B**	**F38B**
	42	ED	**I2L42ML250A-ED**	44 (1118)	**B44**	**WP44**	**S44B**	**F44B**
	66	BQD6 ED	**I2L66ML250A-BQD** **I2L66ML250A-ED**	56 (1422) 56 (1422)	**B56** **B56**	**WP56** **WP56**	**S56B** **S56B**	**F56B** **F56B**
	78	BQD6 ED	**I2L78ML250A-BQD** **I2L78ML250A-ED**	62 (1575) 62 (1575)	**B62** **B62**	**WP62** **WP62**	**S62B** **S62B**	**F62B** **F62B**
400	42	BQD6 ED	**I2L42ML400A-BQD** **I2L42ML400A-ED**	50 (1270) 50 (1270)	**B50** **B50**	**WP50** **WP50**	**S50B** **S50B**	**F50B** **F50B**
	66	BQD6 ED	**I2L66ML400A-BQD** **I2L66ML400A-ED**	62 (1575) 62 (1575)	**B62** **B62**	**WP62** **WP62**	**S62B** **S62B**	**F62B** **F62B**
	78	BQD6 ED	**I2L78ML400A-BQD** **I2L78ML400A-ED**	68 (1727) 68 (1727)	**B68** **B68**	**WP68** **WP68**	**S68B** **S68B**	**F68B** **F68B**
	90	BQD6 ED	**I2L90ML400A-BQD** **I2L90ML400A-ED**	74 (1880) 74 (1880)	**B74** **B74**	**WP74** **WP74**	**S74B** **S74B**	**F74B** **F74B**
600	66	BQD6 ED	**I2L66ML600A-BQD** **I2L66ML600A-ED**	62 (1575) 62 (1575)	**B62** **B62**	**WP62** **WP62**	**S62B** **S62B**	**F62B** **F62B**

① Hinged door included with type 3R/12 enclosures.
② Flush trims extend 3/4" beyond each side of the base box dimensions.

Standard Circuit P2 Panels (Neutral Configurations for up to 54 circuits max.)

Table below shows minimum Box Size required for the Unit Space indicated with the Main Option at the top of each Column.

- Adding other options generally will add to the box Height when configured in COMPAS. Also, there may be cost adders with each option.
- The maximum number of 1" circuits supported is shown at the bottom of each column in brackets. [54p] = max 54 poles of 1" circuits supported (BL, BT, BQD, ED, xGB, xGB2, 3VA41).
- Unit space is available in 9", 15", 21", 27", 33", 39", and 45" sizes.
- Within unit space listed, the neutral will support up to 54 circuits.
- When more then 54 circuits are required, COMPAS will configure with larger Extended Circuit Neutral.
- Box sizes available: 26", 32", 38", 44", 50", 62", 68", 74"

Circuit P2 Panels with Standard Line Side Lugs

Unit Space (starting with 9" and adding 6" increments) "A" Dimension

Panel Type →		Main Lugs			Main Breakers																	
Bus amps max.		250A		600A	250A											600A					
ML/MB amps		125	250	400-600	100	125 max.				225 max.		250 max.				400 max.			600 max.		
"B" Dim. Box Height	Type / Family	→			BL BQD	xGB 3VA41	ED		CED	QR		3VA52/ 61/62		FD		CFD	3VA53 3VA63	JD	CJD	3VA54 3VA64	LD	CLD
	Horiz.	→			H	H	H		H	H		H		H								
	Vertical	→						V①			V①		V①		V①	V	V	V	V	V	V	V
26	values to right are in inches of unit space	—	—	—	9	9	9	—	—	—	—	—	—	—	—	—	—	—	—	—	—	—
32		9	9	—	15	15	15	9	9	9	—	9	—	9	—	—	—	—	—	—	—	—
38		15	15	9	21	21	21	15	15	15	9	15	—	15	—	—	—	—	—	—	—	—
44		21	21	15	27	27	27	21	21	21	15	21	9	21	9	—	—	—	—	—	—	—
50		27	27	21	33	33	33	27	27	27	21	27	15	27	15	9	9	9	—	—	—	—
56		33	33	27	39	39	39	33	33	33	27	33	21	33	21	15	15	15	—	9	9	—
62		39	39	33	45	45	45	39	39	39	33	39	27	39	27	21	21	21	9	15	15	9
68		45	45	39	—	—	—	45	45	45	39	45	33	45	33	27	27	27	15	21	21	15
74		—	—	45	—	—	—	—	—	—	45	n/a	39	n/a	39	33	33	33	21	27	27	21
Max. 1-pole brk②		[54p]			[54p]					[54p]		[54p]					[54p]		[42p]	[54p]		[42p]

H = horizontally mounted

V = vertically mounted

① The vertical main breaker application for ED, QJ, QR, FD and 3VA52/61/62 adds 6" of box height.

② Generally the count varies depending on neutral connections available and configuration of the panel. Use this value as general rule. Also, see tables on page <?>.

Main lug wire bending space diagram

Box depth = 5.75 in. (146 mm)
Box width = 20 in. (508 mm) for 100-600A

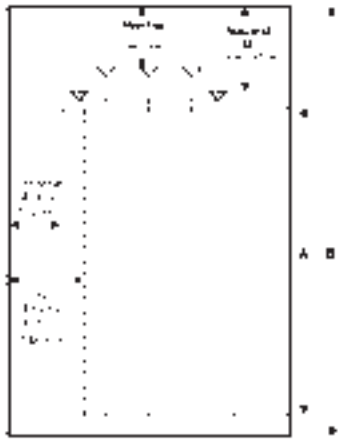

Main breaker wire bending space diagram

Box depth = 5.75 in. (146 mm)
Box width = 20 in. (508 mm) for 100-600A

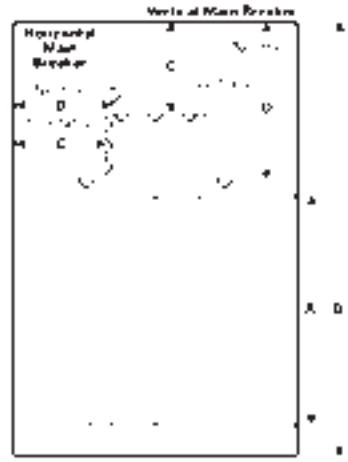

Standard Circuit P2 Panels

Main Breaker Wire Bending

Panel Amps	Standard Circuits (up to 54 1" module branch poles)			
	Breaker Frames	Mounting	C① (Main)	D① (Neutral)
100	BL	Horiz.	5.75	8.00
	BQD	Horiz.	5.13	8.00
125	3VA41 (coming soon)	Horiz.	4.63	8.00
	xGB, GB2	Horiz.	4.63	8.00
	ED	Horiz.	4.00	8.00
	ED	Vert.	6.56	11.13
225	QR	Horiz.	5.00	7.00
	QR	Vert.	10.06	16.69
250	3VA52 (coming soon)	Horiz.	6.83	7.29
	3VA61/62 (coming soon)	Horiz.	6.29	7.29
	3VA52 (coming soon)	Vert.	17.07	22.75
	3VA61/62 (coming soon)	Vert.	16.56	22.75
	FD	Horiz.	5.00	7.00
	FD	Vert.	13.25	22.72
400	3VA53/63 (1) 600 Lug (coming soon)	Vert.	14.73	25.00
	3VA53/63 (2) 600 Lug (coming soon)	Vert.	12.30②	25.00
	JD	Vert.	15.38	25.00
600	3VA54/64 (2)600 Lug	Vert.	12.30	29.00③
	LD	Vert.	15.38	23.00③

Main Lug Connectors

Standard Circuits (up to 54 1" module branch poles)			
Panel Amps	Standard Connectors	C①	D①
125	(1) #14-2/0	12.62	14.19
250	(1) #6 AWG - 350 kCMIL	11.75	10.72
400	(1) #4 AWG - 600 kCMIL or (2) #6 - 250 kCMIL	14.00	13.09
600	(2) #4 AWG - 500 kCMIL	14.00	11.00

① Refer to diagrams at the top of this page.
② Wire bending with std neut with AL/CU lugs. Same for JD.

Branch Breaker Side Gutters Inches (mm)

← 24" (610mm) box width reference →						
← 20" (508mm) box width reference →					20" W box	24" W box
Ref code	**Breaker type or Family**		**Ref code**		**Gutter Space inches (mm)**	**Gutter Space inches (mm)**
← A →	BL, BLH,HBL	BL, BLH,HBL	← A →	=	5.750 (146)	7.750 (197)
← B →	BLF2, BLHF2, HBLF2, BLFB, BLHFB	BLF2, BLHF2, HBLF2, BLFB, BLHFB	← B →	=	5.125 (130)	7.125 (181)
	BQD, BQD6	BQD, BQD6				
← C →	NGB, HGB, LGB	NGB, HGB, LGB	← C →	=	4.625 (117)	6.625 (168)
	NGB2, HGB2, LGB2	NGB2, HGB2, LGB2				
← D →	3VA41	3VA41	← D →	=	4.625 (117)	6.625 (168)
← E →	ED4, ED6	ED4, ED6	← E →	=	4.000 (102)	6.000 (152)
	HED4, HHED6	HED4, HHED6				
← F →	QR2, QRH2, HQR2, HQR2H (Single Mounted)		← F →	=	5.000 (127)	7.000 (178)
← G →	3VA52 (w/1-port lug) (Single Mount)		← G →	=	6.83(174)	8.83(225)
← H →	3VA61/62 (w/1-port lug) (Single Mount)		← H →	=	6.29(160)	8.29(211)

P2 Branch Neutral Connections①

Wire Range	Maximum Connections Std. Panels	Max. Amp reference			
Note: Large Branch is >125A frame size. Connector Wire Range below:	**Neutral with 1/0 step lugs (varies with config.)**	**AL Cable 60C**	**CU Cable 60C**	**AL Cable 75C②**	**CU Cable 75C**
#14-#6	28	40	55	50	65
#14-1/0	28	n/a	n/a	120	150
#6-350 kCMIL	0-3	n/a	n/a	250	310
(1) #4-600 kCMIL or (2) #6-250 kCMIL (for subfeed breaker or as needed)	0-1	n/a	n/a	340 410	420 510
Total connections max. =	56-60				

① Reference info: Neutral Lugs are rated for 75°C cable. When running a circuit to a load, the same type of wire should be used on the phase (breaker) and neutral connections in the panel.
a) Cables should be sized per CEC and the 75°C column.
b) Customer can choose to use 90°C cable if sized as if it is 75°C.
c) Some 100% rated circuit breakers require the use of 90°C cable sized per the 75°C column. Refer to the Markings on the breaker and use the appropriate cable.
d) Some Circuit breakers 100A or less are marked as being suitable for 60°C, 75°C or 60/75°C cable. Refer to the Markings on the breaker and use the appropriate cable.
② The branch neutral can already use 75°C, but when running a circuit to a load, the same type of wire should be used on the phase (breaker) and neutral connections in the panel. All of our breakers are rated for 75°C (smaller dia per amp rating than 60°C wire). – UL assumes 75°C or higher rating for wires at or above 1/0 size.

P2 Main Circuit Breakers and Subfeed

P2 Main Circuit Breakers④ and Subfeed					2-P	2-Pole and 3-Pole														
					Max IR (kA) at															
Amp Rating	Trip Type	Breaker Family	Main Breaker Code	Breaker Type	120/240V	240V	480Y/277V	480V	600Y/347V	600V	125/250V DC	250V DC ⓘ	Amp Ratings Available	For Horizontal or Vertical Mounted Main Option – add X" to Box Height	Horiz. mount box size Min. w/ 9" of unit space	Vertical mount box size Min. w/ 9" of unit space	Extended Circuits Available	Horiz. mount box size Ext. Ckts w/ 33" unit space	Vertical mount box size Ext. Ckts w/ 33" unit space	Sub-feed outside of unit space – add X" to Box Height
100	Thermal Magnetic	BL	BL	BL	10	10	—	—	—	—	—	—	15-100	Horiz. Only	26	n/a	n	n/a	n/a	n/a
			BH	BLH	22	22	—	—	—	—	—	—	15-100	Horiz. Only	26	n/a	n	n/a	n/a	n/a
			HB	HBL	65	65	—	—	—	—	—	—	15-100	Horiz. Only	26	n/a	n	n/a	n/a	n/a
		BQD	BQ	BQD②	—	65	14	—	10	—	14	—	15-100	Horiz. Only	26	n/a	y	56	n/a	n/a
125	Thermal Magnetic	Sentron GB	NB	NGB	—	100	25	—	14	—	14	—	15-125	Horiz. Only	26	n/a	y	56	n/a	n/a
			G2	HGB	—	100	35	—	14	—	14	—	15-125	Horiz. Only	26	n/a	y	56	n/a	n/a
			G3	LGB	—	100	65	—	14	—	14	—	15-125	Horiz. Only	26	n/a	y	56	n/a	n/a
		Sentron GB2	G4	NGB2	—	100	—	25	14	—	14	—	15-125	Horiz. Only	26	n/a	y	56	n/a	n/a
			G5	HGB2	—	100	—	35	22	—	14	—	15-125	Horiz. Only	26	n/a	y	56	n/a	n/a
			G6	LGB2	—	100	—	65	65	—	14	—	15-125	Horiz. Only	26	n/a	y	56	n/a	n/a
		Sentron ED	E4	ED4	—	65	—	18	—	—	—	30	15-125	Vert.= Std. +6"	26	32	y	56	62	n/a
			E6	ED6③	—	65	—	25	—	18	—	30	20-125	Vert.= Std. +6"	26	32	y	56	62	n/a
			H4	HED4	—	100	—	42	—	—	—	30	15-125	Vert.= Std. +6"	26	32	y	56	62	n/a
			HA	HHED6	—	100	—	65	—	18	—	—	15-50	Vert.= Std. +6"	26	32	y	56	62	n/a
			CE	CED6	—	200	—	200	—	100	—	—	50-125	Vert. Only Std. +6"	n/a	32	y	62	n/a	n/a
		3VA41	V1	SEAB	—	65	—	25	14	—	—	—	15-125	Horiz Only	26	n/a	y	56	n/a	n/a
			V2	MEAB	—	85	—	35	18	—	—	—	15-125	Horiz Only	26	n/a	y	56	n/a	n/a
			V3	HEAB	—	150	—	65	25	—	—	—	15-125	Horiz Only	26	n/a	y	56	n/a	n/a
150	Electronic (Solid state)	3VA61 (ETU350 LSI std)	W2	MDAE	—	100	—	35	—	18	—	—	16-150	Vert.= Std. +6"	38	44	y	68	74	n/a
			W3	HDAE	—	100	—	65	—	22	—	—	16-150	Vert.= Std. +6"	38	44	y	68	74	n/a
			W4	CDAE	—	200	—	100	—	35	—	—	16-150	Vert.= Std. +6"	38	44	y	68	74	n/a
			W5	LDAE	—	200	—	150	—	50	—	—	16-150	Vert.= Std. +6"	38	44	y	68	74	n/a
225	Thermal Magnetic	Sentron QR	QR	QR2	—	10	—	—	—	—	—	—	100-225	Vert.= Std. +6"	32	38	y	56	62	n/a
			Q4	QRH2	—	25	—	—	—	—	—	—	100-225	Vert.= Std. +6"	32	38	y	56	62	n/a
			Q5	HQR2	—	65	—	—	—	—	—	—	100-225	Vert.= Std. +6"	32	38	y	56	62	n/a
			Q6	HQR2H	—	100	—	—	—	—	—	—	100-225	Vert.= Std. +6"	32	38	y	56	62	n/a
250	Thermal Magnetic	Sentron FD	FX, FD	FXD6-A, FD6-A	—	65	—	35	—	22	—	30	70-250	Vert.= Std. +6"	38	44	y	68	74	⑤
			H2, HF	HFXD6, HFD6	—	100	—	65	—	25	—	30	70-250	Vert.= Std. +6"	38	44	y	68	74	⑤
			CF	CFD6-A	—	200	—	200	—	100	—	50	70-250	Vert. Std. +12"	38	50	n	n/a	n/a	n/a
250	Thermal Magnetic	3VA52 (with TM230 trip)	VA	MFAS	—	85	—	35	—	18	—	60	100-250	Vert.= Std. +6"	38	44	y	68	74	n/a
			VB	HFAS	—	100	—	65	—	25	—	85	100-250	Vert.= Std. +6"	38	44	y	68	74	n/a
			VC	CFAS	—	200	—	100	—	35	—	100	100-250	Vert.= Std. +6"	38	44	y	68	74	n/a
	Electronic (Solid state)	3VA62 (ETU350 LSI std)	WA	MFAE	—	100	—	35	—	18	—	—	100-250	Vert.= Std. +6"	38	44	y	68	74	n/a
			WB	HFAE	—	100	—	65	—	22	—	—	100-250	Vert.= Std. +6"	38	44	y	68	74	n/a
			WC	CFAE	—	200	—	100	—	35	—	—	100-250	Vert.= Std. +6"	38	44	y	68	74	n/a
			WD	LFAE	—	200	—	150	—	50	—	—	100-250	Vert.= Std. +6"	38	44	y	68	74	n/a

Vertically Mounted Main Breaker
(available in 2-pole or 3-pole)

Ampere Rating	Breaker Type(s)	Unit Space (in.)
100	ED4, ED6, HED4	6
225	FXD6, FD6, HFD6 QR2, QRH2, HQR2, HQR2H	6

Subfeed Breakers
(available in 2-pole or 3-pole)

Breaker Type	Mounting Position When Used as Subfeed Breaker	Ampere Ratings For Load	Maximum Interrupting Rating (kA) Symmetrical		
	Vertical		240V AC	480V AC	600V AC
FD6®, FXD6	Twin	70–250	65	35	22
HFD6®, HFXD6	Twin	70–250	100	65	25
JD6®, JXD6	Single	200–250	65	35	25
HJD6®, HJXD6	Single	200–250	100	65	35

① Interchangeable trip main breakers are mounted at top of panel only.
② Vertically mounted.
③ Twin mounted subfeed breakers are mounted at the bottom of panelboard only and adds 24" to the panel height.
④ Subfeed breaker is mounted at bottom of panelboard only. 250 amp subfeed breaker adds 24" to the panel height. (Only for use with MLO)

Branch Circuit Breakers

Max. Amp Rating	Bolt-On Breaker Type	Amps	Availability			Maximum Interrupting Rating (kA)						
			1-Pole	2-Pole	3-Pole	120V AC	120/240V AC	240V AC	277V AC	480V AC	600V AC	250V DC
70	BQD6	15-70	√	√	√	65	65	65	—	—	10	—
100	BL	15–60	√	√	√	10	—	—	—	—	—	—
		70	√	√	√	—	10	—	—	—	—	—
		80–100	—	√	√	—	—	10	—	—	—	—
	BLH	15–60	√	√	√	—	22	—	—	—	—	—
		70	√	√	√	—	22	—	—	—	—	—
		80–100	—	√	√	—	—	22	—	—	—	—
	HBL BLR (240V)	15–55	√	√	√	—	65	—	—	—	—	—
		60–100	—	√	√	—	65	—	—	—	—	—
		15–60	—	√	—	—	—	10	—	—	—	—
		70–100	—	√	—	—	—	10	—	—	—	—
	BLE (GFCI)	15–30	√	√	—	10	—	—	—	—	—	—
		40–60	—	√	—	—	10	—	—	—	—	—
	BLEH	20–30	√	—	—	22	—	—	—	—	—	—
		15–60	√	√	—	—	22	—	—	—	—	—
	BLF (GFCI)	15–30	√	√	—	10	—	—	—	—	—	—
		40–60	√	√	—	—	10	—	—	—	—	—
	BLHF (GFCI)	15–30	√	√	—	22	—	—	—	—	—	—
		40–60	√	√	—	—	22	—	—	—	—	—
	HBLF2 (GFCI)	15–30	√	—	—	65	—	—	—	—	—	—
	BAF	15–20	√	√	—	10	—	—	—	—	—	—
	BAFH	15–20	√	√	—	22	—	—	—	—	—	—
	BQD	15–60	√	√	√	—	65	—	14	—	—	14
		70–100	√	√	√	—	65	—	—	14	—	14
125	NGB2	15–60	√	√	√	100	100	100	25	25	14	14④
		70–100	√	√	√	100	100	100	25	25	14	14④
		110–125	—	√	√	100	100	100	25	25	14	14④
	HGB2	15–60	√	√	√	100	100	100	35	35	22	14④
		70–100	√	√	√	100	100	100	35	35	22	14④
		110–125	—	√	√	100	100	100	35	35	22	14④
	LGB2	15–60	√	√	√	100	100	100	65	65	25	14④
		70–100	√	√	√	100	100	100	65	65	25	14③
		110–125	—	√	√	100	100	100	65	65	25	14③
	ED4	15–60	√	√	√	65	—	—	22	—	—	—
		70–100	√	√	√	—	—	65	—	18	—	30
		110–125	—	√	√	—	—	65	—	18	—	—
	ED6	15–60	—	√	√	—	—	65	—	25	18	30
		70–100	—	√	√	—	—	65	—	25	18	—
		110–125	—	√	√	—	—	65	—	25	18	—
	HED4①	15–60	√	√	√	—	—	65	—	42	18	30
		70–100	√	√	√	—	—	65	—	42	18	—
		110–125	—	√	√	—	—	65	—	42	18	—
	CED6④	15	—	—	√	—	—	200	—	—	100	—
		20-125	—	√	√	—	—	200	—	—	100	—
225	QR2	100–225	—	√	√	—	—	10	—	—	—	—
	QRH2	100–225	—	√	√	—	—	25	—	—	—	—
	HQR2	100–225	—	√	√	—	—	65	—	—	—	—
	HQR2H	100–225	—	√	√	—	—	100	—	—	—	—

Branch Neutral Connections

Wire Range	Max. Number of Connections	Max. Amp②
#14-#6	26	65
#14-1/0	28	125
#6-350 kcmil	3	250
(1) #4-600 kcmil or (2) #6-250 kcmil	1	400

① 1-Pole HED 4 15–30A Rated 65kA 35 through 100A Rated 25kA.
② Based on 75 degree copper.
③ 2-pole only (or) two outer poles of 3-pole breaker.
④ CED6 breaker can be used in 400A panel with copper bussing only. Panel enclosure required is 24'' (610mm) wide.

NOTE: QR Breakers are single mounted in unit space and take 6" of unit space. Limited to (4) per panel max. BL, HBL, BLH and BQD breakers are mounted in common mountings in 3" or (6) pole increments. ED4, ED6 and HED4 breakers are mounted in common mountings in 3" or (6) pole increments.

Type P2 Panelboard Modifications and Additions

Enclosure Modifications

Description
Type 1 with gasket Type 1 with dripshield Type 3R - Waterproof and silicone free Type 3R/12 - Dustproof Type 4/4X - Standard type 304 Stainless Steel Type 4/4X - Type 316 Stainless Steel Wider enclosure - 24", 30" or 36" wide
Hinged trim Piano hinged trim Trim with padlock Door-in-door trim Screw to the box trim Trim with gasketed door Stainless steel trim
Trim mounted devices (Devices mounted into a 10" minimum box extension) • Pilot lights • Toggle switches • Push buttons
Painted boxes Custom colors Increase gauge trims and boxes Stainless steel trims and boxes, Type 1

Meters
(Contact sales for pricing and application engineering for space requirements)

Panel Skirts See page 10-64

Panel Bus Modifications

Bus Material

Represented by "A", "C" or "E" in the 11th digit of the catalogue number.

Standard bussing is tin plated Al, alternate bus bar material can be selected:
- Tin plated copper
- Silver plated copper - optional

Subfeed and Feed-Thru (for 2-pole or 3-pole)

Ampere Rating	Connector Cu/Al Wire Range	Unit Space (inches)

Subfeed (Double) Lugs for Main Lug Panelboards Only

100/125	(2)—#12 AWG - 2/0 AWG	6
225/250	(2)—#6 AWG-350 kcmil	6
400	(4)—250 kcmil (2)—600 kcmil	6

Feed-Thru Lugs — Cannot be used in conjonction with SPD or Subfeed Breakers (200% Neutral not available)

Amp Rating	Type	Connector Wire Range
125	Al Mechanical	(1) #6 AWG - 2/0 AWG Al/Cu
	Cu Mechanical	(1) #6 AWG - 350 kcmil Cu
	Compression	(1) #6 AWG - 350 kcmil Al/Cu
250	Al Mechanical	(1) #6 AWG - 350 kcmil Al/Cu
	Cu Mechanical	(1) #6 AWG - 350 kcmil Cu
	Compression	(1) #6 AWG - 350 kcmil Al/Cu
400	Al Mechanical	(1) #2 AWG - 600 kcmil Al/Cu and (1) 1/0 AWG - 250 kcmil Al/Cu
	Cu Mechanical	(1) 1/0 AWG - 600 kcmil or (2) 1/0 AWG - 4/0 AWG
	Compression	(1) 250 kcmil - 600 kcmil Cu or (2) #6 AWG - 350 kcmil Al/Cu
600	Al Mechanical	(2) #2 AWG - 600 kcmil Al/Cu
	Cu Mechanical	(2) #2 AWG - 600 kcmil Cu
	Compression	(2) #6 AWG - 350 kcmil Al/Cu
		(2) 400 kcmil - 600 kcmil Al or (2) 400 kcmil - 500 kcmil Cu

Increase Capacity Neutral up to 200%
(N/A on FeedThru Lugs & Subfeed Lugs)

Main Bus Amps
125
250
400
600

See page 10-37 for unit space adders and compatibility with other options.

(Devices mounted and wired to the trim should also have hinged trim specified)

Bus mounted SPD See Section 9

TPS3 01
- Bus connected
- Internally mounted (30A breaker required to feed SPD)
- Externally mounted in a 15" high aux. enclosure (30A breaker required to feed SPD)

TPS3 09
- Internally mounted (20A breaker required to feed SPD)
- Externally mounted (20A breaker required to feed SPD)

TPS3 12
- Externally mounted (40A breaker required to feed SPD)

Service Entrance Label

Type P2 Panelboards are factory labeled "SUITABLE FOR USE AS SERVICE ENTRANCE EQUIPMENT" when identified as "Service Entrance" at the time of order entry. For regulations governing this feature, please consult CEC, CSA or local electrical authorities.

Grounding of Panelboards

Ground Bars except for brazed to box are shipped with the panel interior factory mounted.
- Non-Insulated Equipment Ground Bar
- Copper Non-Insulated Ground Bar
- Al Insulated Equipment Ground Bar
- Cu Insulated Equipment Ground Bar

Shunt Trip on Main or Branch

BL, BLH, HBL, NGB, xGB2, ED6, HED4, uses 1" unit space for shunt trip. All others may be used on mains or subfeeds.

Contactor Mains or Submain*

Asco 920 through 225 amps – adds 12" unit space as main, 15" unit space as submain

External with manufacture supplied enclosure
Siemens LEN through 30 amps - adds 6" as main; 18" for up to 100A submain and 21" for 200A. 7.75" depth cans for up to 100A and 10" depth cans for 200A.

Branch and Main Breaker Accessories

See breaker section of this catalog.
- Handle blocks
- Handle locks
- Aux. Contacts①
- UVR①

① Accessories on 1" pole breakers (BL, BQD, ED) will take unit space.

Type P2 Panelboard Standard Modifications and Additions

Selection

Box Size Additions for Optional Features

Options	Main Lugs				Main Breakers											
	125A	250A	400A	600A	125A Horiz. BL, BQD,ED, xGB	125A Horiz. CED	125A Vert. ED	225A Horiz. QR	225A Vert. QR	225A Horiz. FD	250A Vert. FD	250A Vert. CFD	400A JD	400A CJD	600A LD	600A CLD
***Min. Box Size**	**26"**	**32"**	**38"**	**38"**	**26"**	**32"**	**32"**	**32"**	**38"**	**38"**	**44"**	**50"**	**50"**	**62"**	**56"**	**62"**
200% Neutral (lug type)	0	0	6 (all)	6 (all)	0	0	0	N/A	0	N/A	0	0	0	0	0	0
Std. Lugs (100% Neut. PNL)	0	0	0	0	0	0	0	0	0	0	0	0	0	0	0	0
CU Lugs (100% Neut. PNL)	6	6	6	0	N/A	N/A	0	N/A	0	N/A	0	0	0	0	0	0
Comp Lugs (100% Neut. PNL)	6	6	6	6	N/A	N/A	0	N/A	0	N/A	0	0	0	0	0	0
Feed-thru Standard Lugs	6	6	12	12	6	6	6	N/A	6	N/A	6	6	12	12	12	12
Feed-thru Cu Lugs Feed-thru	6	6	12	N/A	N/A	N/A	6	N/A	6	N/A	6	6	12	12	N/A	N/A
Comp Lugs	6	12	12	N/A	N/A	N/A	6	N/A	6	N/A	12	12	12	12	N/A	N/A
Subfeed Standard Lugs	0	6	6	N/A	—	—	—	—	—	—	—	—	N/A	—	—	—
(1) FD Subfeed (Horizontal Mtg.)	N/A	12	12	12	N/A	N/A	N/A	N/A	N/A	12	12	12	12	12	12	12
(2) FD Subfeed (Vertical Mtg.)	N/A	24	24	24	N/A	N/A	N/A	N/A	N/A	24	24	24	24	N/A	N/A	N/A
SPD	12	12	12	12	12	12	12	12	12	12	12	12	12	12	12	12

NOTE: N/A = OPTION NOT AVAILABLE
*Min. Box Size, corresponding to 9" of Unit Space.

Compression Lugs

Style	Amp Rating	Breaker Type	Compression Connectors	Box Height Addition - Inches (mm)
MLO	125	N/A	(1)#6 - 350 kcmil Al/Cu	6 (152)
	250	N/A	(1)#6 - 350 kcmil Al/Cu	6 (152)
	400	N/A	(1) 400 - 600 kcmil Cu or (2)#6 - 350 kcmil Al/Cu	6 (152)
	600	N/A	(2)#6 - 350 kcmil Cu or Cu/Al or 400 - 600 kcmil Al/Cu	6 (152)
Main Breaker	100	ED4, ED6, HED4, CED6①	(1)#14-2/0 AWG Cu or Al	Box must go to 24" wide on CED6 breaker only Add 6" to box height for NØ
	225	QR2, QRH2, HQR2, HQR2H	(1)#6 AWG - 350 kcmil Cu or Al	Box must go to 24" wide
	250	FXD6, HFD6, CFD6	(1)#6 AWG - 350 kcmil Cu or Al	Box must go to 24" wide for all breakers Requires an additional 6.0" box height
	400	JD6, JXD6, HJD6, CJD6, SJD6, SHJD6, SCJD6	(2)#1/0 AWG - 500 kcmil Cu or Al	9 (229)
	600	LD6, LXD6, HLD6, CJD6, SLD6, SHLD6, SCLD6	(2)#2/0 AWG - 500 kcmil Cu or Al	6 (152)

Alternate Lugs

Style	Amp Rating	Breaker Type	Standard AL Connectors	Box Height Addition - Inches (mm)
MLO	400	N/A	(1) 250 - 750 kcmil or (2)#3/0 AWG - 250 kcmil Cu or Al	6 (152)
Main Breaker	400	JD6, JXD6, HJD6, CJD6, SJD6, SHJD6, SCJD6	(1)#4/0 AWG - 750 kcmil Cu or Al	6 (152)

① Not availabe for feed thru lug.

Embedded Micro Metering Module™ (Type P2 Panelboard)

Selection

SEM3 System configured in Panelboards

The Siemens SEM3 system can be configured for factory installation in branch circuit monitoring applications. This option can lower the installation time of the system for the installer while providing a factory warrantied solution.

The SEM3 system can be factory installed in unit space in type P2 & S5 Siemens panel boards and in Siemens switchboards. Please note P1 and P3 configurations are not available at this time and the amount of unit space needed varies depending upon the application. Please note that lead time adders will apply and may vary depending upon the configuration of the system.

SEM3 for use in Siemens Panelboards



Type P2: Enclosure

- Available in a Type 1 rated enclosure.
- Minimum width & depth: 30" width x 7.75'' depth
- Height: Up to 74" depending on branch breaker selection
  - – Addition of monitoring on some mains (primary and subfeed) may require additional box length. In these cases the box will be increased to the next size available as a standard design. The option of monitoring on mains is not available for equipment rated for service entrance.
  - – In cases where enclosure size is increased all multi-section panels will be increased to match the largest section.



Controller

SEM3 controller is mounted in a separate enclosure (relay cabinet) opposite of the feed location (i.e., bottom mount for top feed) with a height of 24''. Each controller will be powered by direct tap connection to the panel section or through a 150VA potential transformer for systems above 480V. the direct tap connection will use 2 circuits from the distribution section (i.e., 42 circuits panel will have 40 circuits usable for distribution. Each controller can monitor up to 45 circuits. Applications that require monitoring more than 45 circuits will require additional P2 panel complete with SEM3.



Current Transformers (CTs)

Five sizes of CTs are available for use in the P2 panel: 50, 125, 250, 400 & 600 amp. All CTs are pre-mounted to a support bracket that attaches to the base rail of the interior of the panel board. Each bracket supports a maximum of 3 CTs and is designed for the breaker selected (brackets are not interchangeable between breaker frames). Each CT will be attached to a data module that is placed in the meter racks.



Meter Racks

All meter racks will be installed next to the SEM3 controller in the relay cabinet.

NOTE: Monitoring of 45 circuits will require: two 21 position racks and one 3 position rack

P2 Devices
Enclosure sizes

Example P2 Panel with SEM3 Type 1 Enclosure (36" Wide x 7.75" Deep)

Enclosure heights are in 6" increments from 26" thru 74".
Enclosure heights: 26", 32", 38", 44", 50", 56", 62", 68", 74"

Example below is largest standard P2 enclosure for factory assembled panel with all small (1") branch breakers installed.

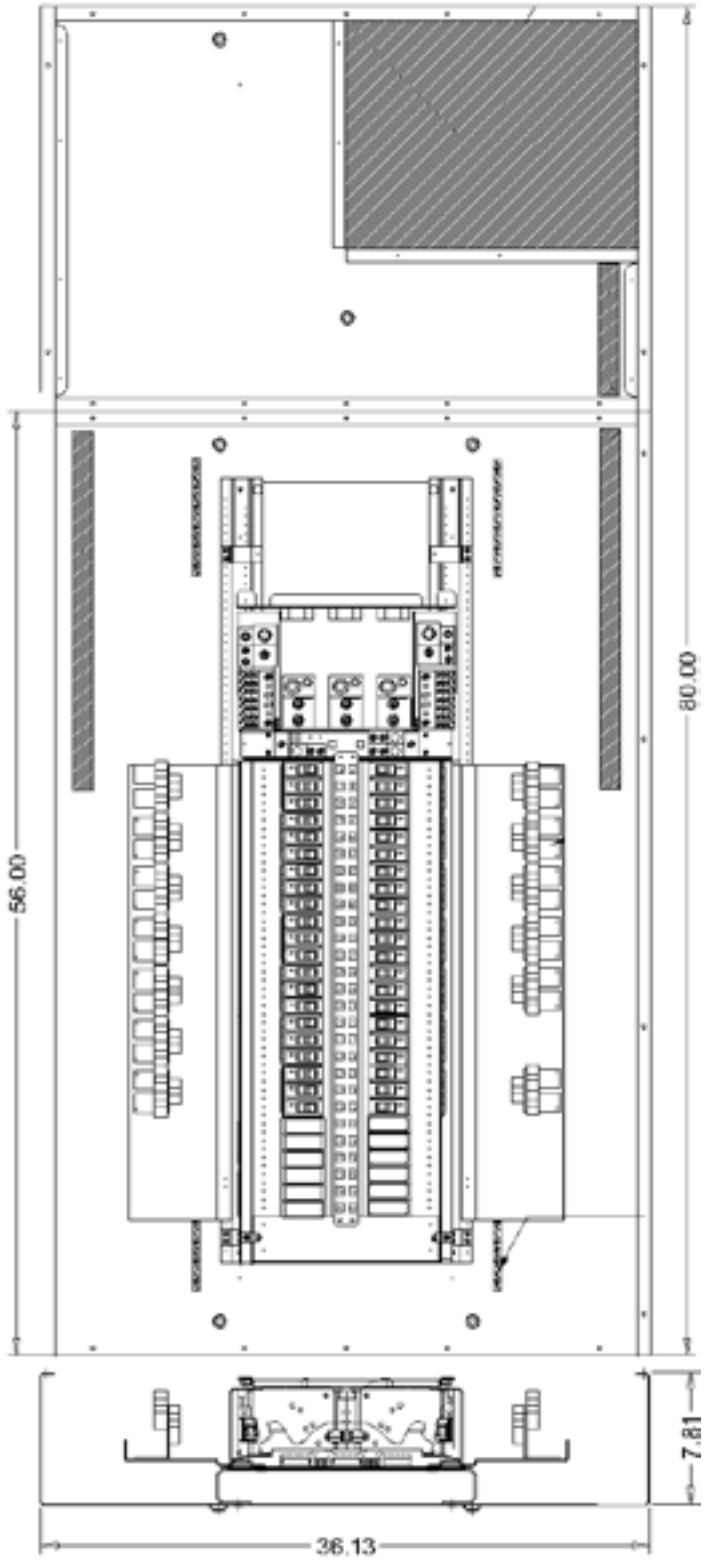

36" std. width

Relay Cabinet which includes SEM3 components:
Meter rack
3 Phase PT 150VA
Controller:
- 21 circuits monitored: one controller and one 21-pos rack
- 42 circuits monitored: one controller and two 21-pos racks
- 45 circuits monitored: one controller and two 21-pos racks plus one 3-pos rack

Main Breaker / Main Lug space varies based on selected options

Unit space varies based on selected options

Note: All circuits do not have to be monitored by SEM3 - user can select any circuits in this space to be monitored.

Based on smallest branch breakers and a 3-phase main being monitored.
There is a maximum of 42 circuits that can be monitored with the configuration shown.
Some selections of main breakers and other subfeed options could limit this further.

In this situation there is 27" of unit space available - so 54 branch circuits could be monitored. If monitoring the main three additional circuits could be monitored with a total of 57 circuits.

This requires two controllers and three 21 position racks using 15" of unit space.
- see below -

Note: If subfeed space is needed - it will take away from available unit space.

Enclosure Modifications

Description
Wider enclosure - 24'' wide
Type 1 with gasket
Type 1 with dripshield
Type 2 enclosures
Type 3R enclosures
Type 3R/12 enclosures

Type 4—Water Tight, Dust Tight, Steel Enclosure① (Actual NEMA-4 enclosure is larger than standard Type 1 enclosure. See chart below for reference to approximate actual size.)

Standard Box Height (in inches)	Actual NEMA 4 Enclosure Size②		
	H	W	D
32	32	20	8
38	42	30	8
44	48	36	8
56	60	36	10

NOTE: Larger Type 4 enclosures are not available.

Type 4X—Water Tight, Dust Tight and Corrosion Resistant① (consult plant for actual enclosure size)

Catalogue Number	Enclosure – Stainless Steel Size (inches) (304SS is standard)		
	H	W	D
B4X26	26	20	5.75
B4X32	32	20	5.75
B4X38	38	20	5.75
B4X44	44	20	5.75
B4X50	50	20	5.75
B4X56	56	20	5.75
B4X62	62	20	5.75
B4X68	68	20	5.75
B4X74	74	20	5.75

NOTE: 316SS is available as an option - must be specified.

① 16 Gauge Cans w/ 14 Gauge Front)
② 14 Gauge only
③ 14 Gauge only - 304SS Std, 316SS Optional)

Gauge Steel of Boxes/Fronts, Surface and Flush

Dimensions in Inches (mm)		Gauge Steel		
Width	Height	Box	Front/Door	Type
20 (508)	26-74 (660-1880)	14	14③	Type 1
20 (508)	26-74 (660-1880)	16②	16/14②	Type 3R/12
20-36 (508-914)	32-60 (813-1524)	14③	14③	Type 4
20 (508)	26-74 (660-1879)	14④	14④	Type 4X

② 15 Gauge Steel Can with 14 Gauge Door or Similar Approved Construction
③ No Optional Gauge available
④ 304SS 14 Gauge Std., 316SS 14 Gauge optional
⑤ Sizes do not match Standard Enclosure Sizes - See Table P1-21 - material is non-metallic - No Gauge Specified.

Type P2 Panelboard Kits and Accessories

Standard Enclosures

Box Height Inches	Catalogue Number				
	Type 1 Standard Trim				
	Box	Surface	Flush	Type 3R	Type 3R/12 ①
26	B26	S26B	F26B	NR26	WP26
32	B32	S32B	F32B	NR32	WP32
38	B38	S38B	F38B	NR38	WP38
44	B44	S44B	F44B	NR44	WP44
50	B50	S50B	F50B	NR50	WP50
56	B56	S56B	F56B	NR56	WP56
62	B62	S62B	F62B	NR62	WP62
68	B68	S68B	F68B	NR68	WP68
74	B74	S74B	F74B	NR74	WP74

① Same as Type 3R with Gasket added for Type 12 Spec.

Options For Type 1 Trims

Items must be ordered as manual line item on Spartanburg
Hinged trim – Replace “B” suffix with “H”
Door-in-door – Replace “B” suffix with “D”
Screw to Box - Replace "B" suffix with "C"
Metal card holder - Add "M" suffix on all trims

Option For 24" Wide Enclosures with Equal Gutter on Both Sides (Excludes Type 3R)

24" wide with equal gutter on both sides - Add “24” as prefix

Type 1 Box

Box is symmetrical

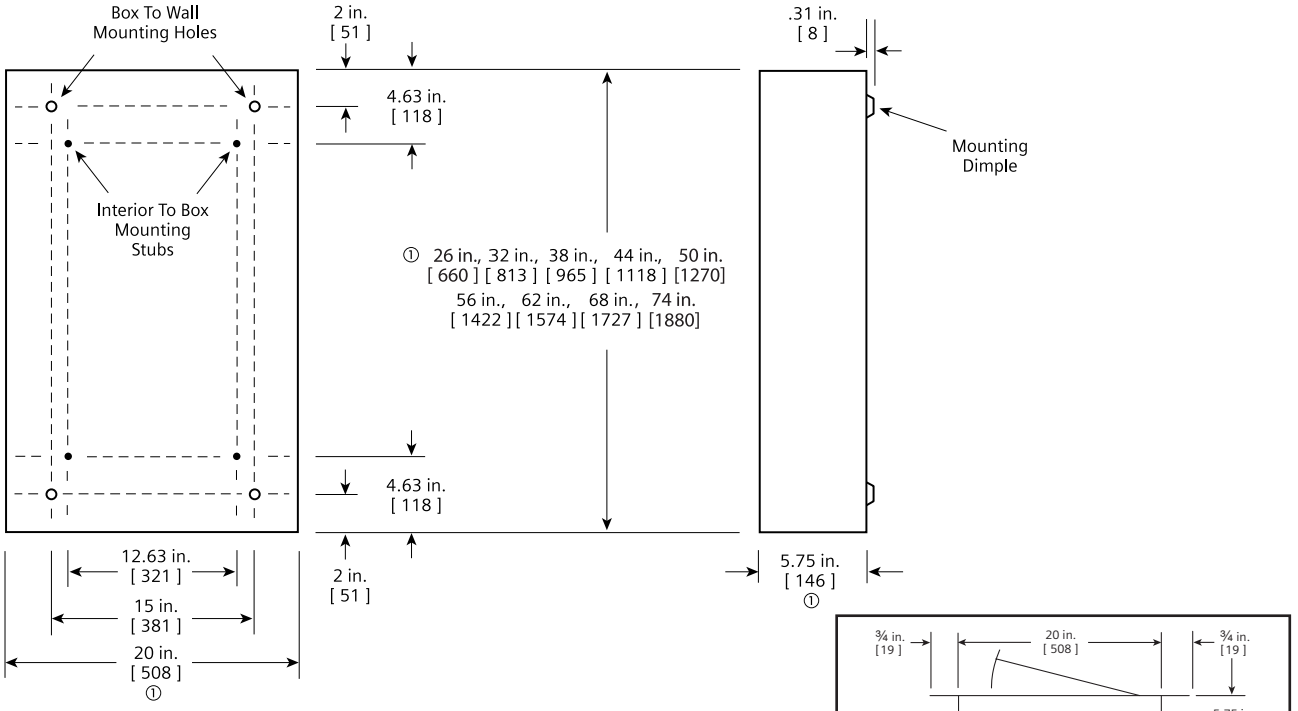

Flush Mounting

Type 3R and 3R/12 Box

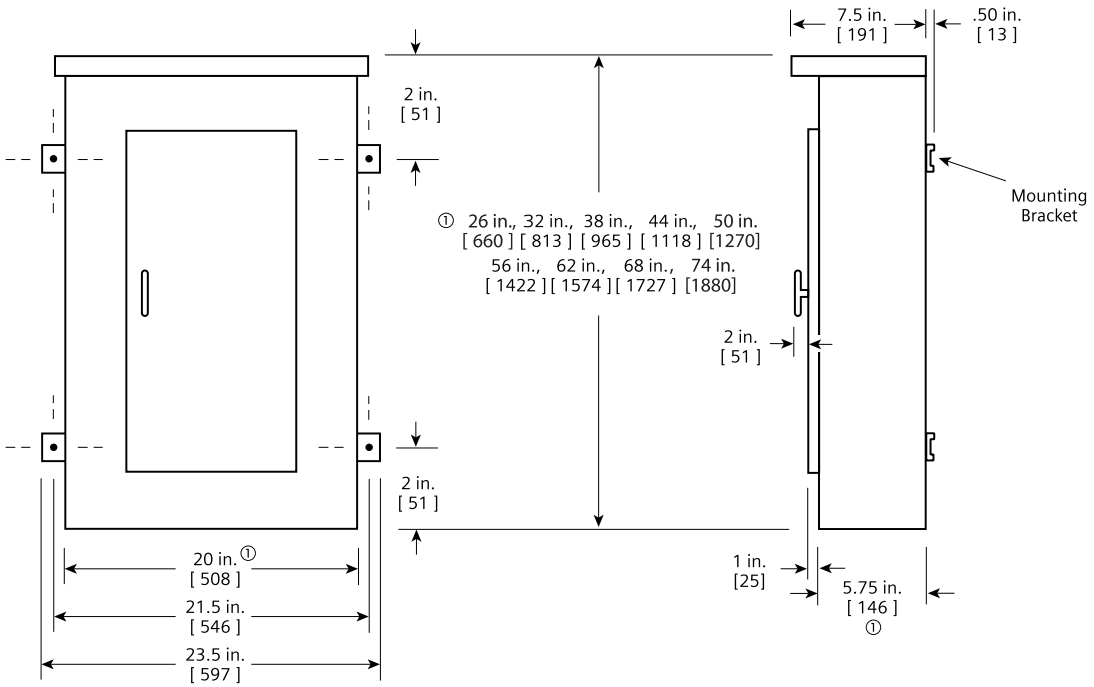

① Dimensions are interior of the box. Add 5/8" to width for absolute dimension. Add 1/8" to height for absolute dimension.

Dimensions shown in inches and millimeters [ ].

Type P3 Panelboards

Features

Another innovation from Siemens is the P3 panel. It is a smaller, footprint distribution panel to fit a large number of applications that require more (or larger) branch devices than the lighting panel class offer. This panel offers a wide array of factory-assembled options, and has the ability to mix breaker frames in unit space up to 250 amps. Bussing options for the P3 vary from the standard aluminum to copper designs. All bussing in the P3 panel is tin-plated as a standard. Silver-plated copper is offered as an option on a copper bus. Subfeed lugs (up to 400 amp) are just a few of the options of this unique panel.

The P3 panel configurations, defined by the unit space, allow for a given amperage, main device, and box height. The P3 panel starts with a 56" high box. Breaker unit space can be mixed and matched to meet customer requirements. All 1" pole breakers (BL, BQD, ED, xGB frames) are mounted in 3" or 6" pole increments. Breakers frames, above 125 amps, are mounted in 6" single or twin breaker mountings. As an example panel, FD 250 amp and JD 400 amp breakers are mounted as subfeed breakers outside of unit space.

Like other distribution panels, the P3 panel can have blank space added into the panel to allow for future expansions or modifications. Any expansions or modifications must be in 3" increments. BL, BQD and ED frame breakers have 3" or 6-pole kits and can be mixed in unit space by these increments. Breakers of the same frame can cross from one mounting to another if contiguous. xGB frame breakers cannot be mixed with other frame types. Any expansion or modification must be in 3" increments also. QR frame breakers are mounted in 6" increments for two and three pole single and twin mounted units. Changes in the unit space length for BL, BQD, xGB, or ED frame breakers require an additional deadfront center strip kit. Check with sales or the factory for additional unit space kits.

Main Lug/Main Breaker

Enclosure – Standard Type 1 enclosure is 24" wide x 7.75" deep. X Box Height is determined by main device and unit space. See charts for box height.

Voltage – 600V AC max.
250V DC max.

Amperage – 800 amp max.

Short Circuit Rating –
200,000 A @ 480 Vac

100,000 A @ 600 Vac IR max. symmetrical or equal to the lowest rated device installed unless a series rating is indicated. Panels with subfeed or feed-thru lugs without a main device, circuit breaker or fusible unit, are limited to a three-cycle rating. The three-cycle rating for the P3 panel is limited to 22 Kaic. Note that the main device may be mounted remote from the panel.

Bussing – The P3 panel has more options to meet market requirements. The standard bussing is aluminum. The rating is per the requirements of CSA C22.2 No.29 – the standard for panelboards. All aluminum bussing is tin-plated. Optional bussing for the P3 panel is copper. The copper bus option for this panel is tin-plated.

Weight – Approximate
Total panelboard weight when filled with a normal quantity of breakers and accessories is about 5 lbs. (1 kg) per inch (54g per mm) of box height.

Gauge Steel of Boxes Fronts, Surface & Flush

Dimensions in inches (mm)		Gauge Steel	
Width	Height	Box	Front
24" (610)	56 - 80" (1422, 2032)	#14	#14

Panel Unit Space To Box Height Requirements

"B" Dimension Box Height	P3 Panels With Standard Line Lugs. Unit Space (starting with 9" and adding 6" increments) "A" Dimension				
	Main Lugs			Main Breakers	
	400A	600A	800A	400A JD	600A LD
56	**21**	**21**	**21**	**9**	**9**
62	27	27	27	15	15
68	33	33	33	21	21
74	39	39	39	27	27
80	45	45	45	33	33

Main Lug Wire Bending

Panel Amps	Standard Connectors	C	D
400	(2) #3/0 AWG - 250 kcmil or (1) 600 kcmil	16.00	17.88
600	(2) #3/0 AWG - 500 kcmil	16.00	17.88
800	(2) 600 kcmil	16.00	17.88

① This lug is removable.

Main Breaker Wire Bending - Inches (mm)

Panel Amps	C	E	F
JD	—	15.63 (397)	29.38 (746)
LD	—	14.75 (375)	29.38 (746)

Main Breaker Wire Bending Diagram

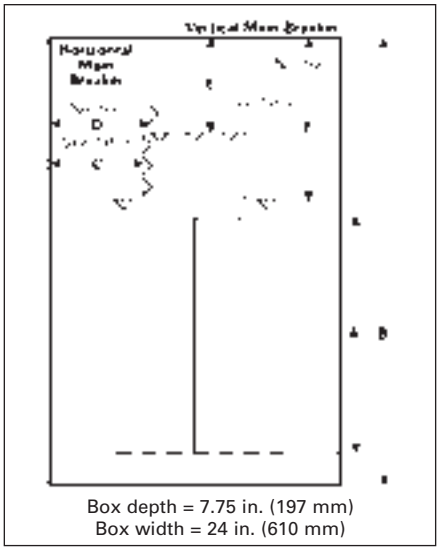

Box depth = 7.75 in. (197 mm)
Box width = 24 in. (610 mm)

Main Breaker Wire Bending

Main Lug Wire Bending Diagram

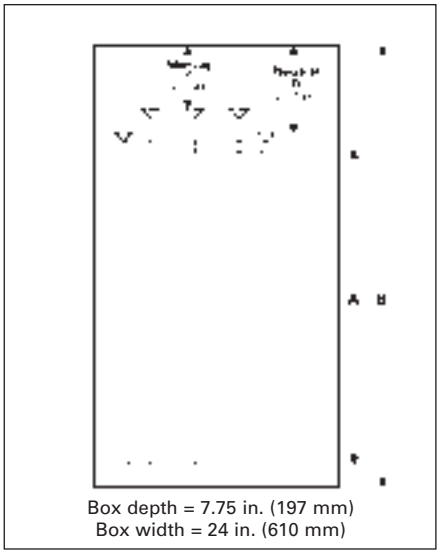

Box depth = 7.75 in. (197 mm)
Box width = 24 in. (610 mm)

Main Lug Wire Bending

Branch Breaker Side Gutters Inches (mm)

Reference Letter	Panel Width 24" (609)
A	7.750 (197)
B	7.125 (181)
C	6.000 (152)
D①	7.000 (178)
E	5.000 (127)
F	6.625 (168)

① Single branch mounting construction.

Branch Breaker Wire Bending Diagram

← A →	BL, BLH, HBL	BL, BLH, HBL	← A →
	BLF2, BLHF2 HBLF2, BLFB, BLHFB	BLF2, BLHF2 HBLF2, BLFB, BLHFB	
← B →	BQD, BQD6	BQD, BQD6	← B →
← C →	ED, ED4, ED6 HED4	ED, ED4, ED6 HED4	← C →
←D/E→	QR2, QRH2 HQR2, HQR2H	QR2, QRH2 HQR2, HQR2H	←D/E→
← F →	NGB2, HGB2, LGB2	NGB2, HGB2, LGB2	← F →

← Panel Width →
24 in. (610 mm)

Branch Breaker Side Gutters

Alternate Main Breakers

Ampere Rating	Breaker Type	Maximum Interrupting Rating (kA)			Ref. Catalogue Number	Available Configurations②			Available Trip Values
		240V	480V	600V		240V AC	480V AC	600V AC	
400	JXD6①	65	35	25	**JX**	**STD**	**STD**	**STD**	200, 225, 250, 300, 350, 400
	JD6①	65	35	25	**J6**	**STD**	**STD**	**STD**	200, 225, 250, 300, 350, 400
	HJXD6①	100	65	35	**H6**	**ADD**	**ADD**	**ADD**	200, 225, 250, 300, 350, 400
	HJD6①	100	65	35	**H5**	**ADD**	**ADD**	**ADD**	200, 225, 250, 300, 350, 400
	SJD6①	65	35	25	**SJ**	**ADD**	**ADD**	**ADD**	200, 300, 400
	SHJD6①	100	65	35	**S2**	**ADD**	**ADD**	**ADD**	200, 300, 400
600	LXD6①	65	35	25	**LX**	**STD**	**STD**	**STD**	450, 500, 600
	LD6①	65	35	25	**L6**	**STD**	**STD**	**STD**	250, 300, 350, 400, 450, 500, 600
	HLXD6①	100	65	35	**HL**	**ADD**	**ADD**	**ADD**	250, 300, 350, 400, 450, 500, 600
	HLD6①	100	65	35	**HO**	**ADD**	**ADD**	**ADD**	250, 300, 350, 400, 450, 500, 600
	SLD6①	65	35	25	**SL**	**ADD**	**ADD**	**ADD**	300, 400, 500, 600
	SHLD6①	100	65	35	**S6**	**ADD**	**ADD**	**ADD**	300, 400, 500, 600

① Vertically mounted
② STD = Standard configuration. ADD = Additional cost.

Branch Circuit Breakers

Max. Amp Rating	Bolt-On Breaker Type	Amps	Provisions for Maximum Interrupting Rating (kA)						
			120V AC	120/240V AC	240V AC	277V AC	480V AC	600V AC	250V DC
70	BQD6	15-70	—	65	65	—	—	10	14
100	BL	15–60	10	—	—	—	—	—	—
		70	—	10	—	—	—	—	—
		80–100	—	—	10	—	—	—	—
	BLH	15–60	—	22	—	—	—	—	—
		70	—	22	—	—	—	—	—
		80–100	—	—	22	—	—	—	—
	HBL	15–55	—	65	—	—	—	—	—
		60–100	—	—	65	—	—	—	—
	BLR (240V)	15–60	—	—	10	—	—	—	—
		70–100	—	—	10	—	—	—	—
	BLE (GFCI)	15–30	10	—	—	—	—	—	—
		40–60	—	10	—	—	—	—	—
	BLEH (GFCI)	15–30	22	—	—	—	—	—	—
		15–60	—	22	—	—	—	—	—
	BLF (GFCI)	15–30	10	—	—	—	—	—	—
		40–60	—	10	—	—	—	—	—
	BLHF (GFCI)	15–30	22	—	—	—	—	—	—
		40–60	—	22	—	—	—	—	—
	HBLF2 (GFCI)	15–30	65	—	—	—	—	—	—
	BAF	15–20	10	—	—	—	—	—	—
	BAFH	15–20	22	—	—	—	—	—	—
	BQD	15–60	—	65	—	—	14	—	14
		70–100	—	—	65	—	14	—	14
125	NGB2	15-125	100	100	100	25	25	14	14④
	HGB2	15-125	100	100	100	35	35	22	14④
	LGB2	15-125	100	100	100	65	65	25	14④
	ED4	15–60	65	—	—	22	—	—	—
		70–100	—	—	65	—	18	—	30
		110–125	—	—	65	—	18	—	—
	ED6	15–60	—	—	65	—	25	18	30
		70–100	—	—	65	—	25	18	—
		110–125	100	—	—	—	—	—	—
	HED4	15–60	100	—	—	—	—	—	—
		70–100	—	—	—	65	—	—	—
		110–125	—	—	—	65	—	—	—
225	QR2	100–225	—	—	10	—	—	—	—
	QRH2	100–225	—	—	25	—	—	—	—
	HQR2	100–225	—	—	65	—	—	—	—
	HQR2H	100–225	—	—	100	—	—	—	—

Subfeed Breakers (available in 2-pole or 3-pole)

Breaker Type	Mounting Position When Used as Subfeed Breaker	Ampere Ratings	Maximum Interrupting Rating (kA) Symmetrical		
	Vertical	For Load	240V AC	480V AC	600V AC
FD6①, FXD6	Twin	70–250	65	35	18
HFD6①, HFXD6	Twin	70–250	100	65	25
JD6②, JXD6	Single	200–400	65	35	25
HJD6②, HJXD6	Single	200–400	100	65	35

Neutral Connectors

Wire Range	Max. Number of Connections	Max. Amps
#14-#1/0	44	125
#4 - 350 kcmil	6	250
(1)#4 - 600 kcmil or (2)#6 - 250 kcmil	1	400

NOTE: QR Breakers are twin mounted in unit space and take 6" of unit space. Limited to (6) per panel max. BL, HBL, BLH and BQD breakers are mounted in common mountings in 3" or 4) pole increments. ED2, ED4, ED6 and HED4 breakers are mounted in common mountings in 3" or (6) pole increments.

① Twin mounted subfeed breakers are mounted at bottom of panelboard only and adds 24" to the panel height.
② Subfeed breaker is mounted at bottom of panelboard only. 400 amp subfeed breaker adds 30" to the panel height.

④ 2-pole only (or) two outer poles of 3-pole breaker.

Enclosures

Extra Gutter to Sides or Ends of the Can (Type 1 Only)

Description
6" end gutter 2" side gutter Barrier in gutter (add to extra gutter price – min 4" required)
Hinged trims Piano hinged trims Door-in-door trims Screw to the box trims
Trim mounted devices • Pilot lights • Toggle switches • Push buttons
Painted boxes Custom colours Increase gauge trims and boxes Stainless steel trims, Type 1

Meters
(Contact sales for pricing and application engineering for space requirements)

Panel Skirts See page 10-64

Panel Bus Modifications

Represented by "A," "C" or "E" in the 11th digit of the catalogue number

Standard bussing is tin plated Al, alternate bus bar material can be selected:
- Tin plated copper
- Silver plated copper - optional

Subfeed and Feed-Thru (for 2-pole or 3-pole)

Ampere Rating	Connector Cu/Al Wire Range	Unit Space (innches)

Subfeed (Double) Lugs for Main Lug Panelboards Only

225/250	(2)—#6 AWG-350 kcmil	6
400	(2)—250 kcmil (1)—600 kcmil	6

Feed-Thru Lugs — Cannot Be Used in Conjunction with SPD or Subfeed Breakers

See page <?> for unit space adders and compatibility with other options.

225/250	(1)—#6 AWG-350 kcmil	6
400	(2)—250 kcmil (1)—600 kcmil	6
600	(2)—250-500 kcmil	9
800	(2)—600 kcmil	12

Branch and Main Breaker Accessories

See page 10-44 and Breaker Section
- Handle blocks
- Handle locks
- Aux. Contacts①
- UVR①

Increase capacity neutral up to 200%

Main Bus Amps
125
250
400
600

See page 10-44 for unit space adders and compatibility with other options.

Copper MLO Only

Main Bus Amps
125
250
400
600

(Devices mounted and wired to the trim should also have hinged trim specified)

Surge Protection Device

See Section 10

Service Entrance Label

Type P3 Panelboards are factory labeled "SUITABLE FOR USE AS SERVICE ENTRANCE EQUIPMENT" when identified as "Service Entrance" at the time of order entry. For regulations governing this feature, please consult CEC, CSA or local electrical authorities.

P3 service entrance panels are available in type 1 enclosure only (indoor application) and come standard with plated copper.

Grounding of Panelboards

Ground Bars are shipped with the panel interior factory mounted.
- Non-Insulated Equipment Ground Bar
- Copper Non-Insulated Ground Bar
- Al Insulated Equipment Ground Bar
- Cu Insulated Equipment Ground Bar

Shunt Trip on Main or Branch

BL, BLH, HBL, BQD, ED4, HED4, ED6, HED6, QR2, QRH2, HQR2, HQR2H as branch only. BL, BLH, HBL, NGB2, HGB2, LGB2, ED2, ED4, HED4, ED6, uses 1" unit space for shunt trip. All others may be used on mains or subfeeds.

① Accessories on 1" pole breakers (BL, BQD, ED) will take unit space.

Type P3 Panelboard Standard Modifications

Option Combinations

Amps	Incoming	Subfeed Lugs	Feed-thru Lugs	FDa Subfeed	JD① Subfeed	FD② Subfeed	200% Neutral	Min. Box Size (in.)	Unit Space (in)
400②③	Main Lug Only	•	—	—	—	—	•	56	21
		—	•	—	—	—	•	56	15
		—	—	•	—	—	•	56	9
		—	—	—	•	—	•	56	9
		—	—	—	—	•	•	62	9
	Main Breaker (JD)	None Std.	—	—	—	—	•	56	9
			•	—	—	—	•	62	9
			—	•	—	—	•	68	9
			—	—	•	—	•	68	9
			—	—	—	•	•	74	9
600②③	Main Lug Only	—	—	—	—	—	•	56	21
			•	—	—	—	•	56	15
			—	•	—	—	•	56	9
			—	—	•	—	—	56	9
			—	—	—	•	•	62	9
	Main Breaker LD	—	—	—	—	—	•	56	9
			•	—	—	—	•	62	9
			—	•	—	—	•	68	9
			—	—	•	—	—	68	9
			—	—	—	•	•	74	9
800②③	Main Lug Only	—	—	—	—	—	•	56	21
			•	—	—	—	•	56	9
			—	•	—	—	•	56	9
			—	—	•	—	—	56	9
			—	—	—	•	•	62	9

① Subfed lugs are currently not offered as standard with main circuit breakers.
② Subfed lugs on panels above 400A are not standard.
③ 200% neutral cannot be provided along with a 400A subfeed breaker because the breaker blocks the 4th lug site.

Compression Lugs

Style	Amp Rating	Breaker Type	Compression Connectors	Box Height Addition
MLO	400	N/A	(1) 250 - 500 kcmil or (2)# 1/0 AWG - 250 kcmil	— —
	600	N/A	(2)#3/0 AWG - 500 kcmil	—
	800	N/A	(2) 400-750 kcmil Cu only	—
Main Breaker	400	JD6, JXD6, HJD6, SJD6, SHJD6	(2)#1/0 AWG - 500 kcmil Cu or Al	—
	600	LD6, LXD6, HLD6, SLD6, SHLD6	(2)#2/0 AWG - 500 kcmil Cu or Al	—

Alternate Lugs

Style	Amp Rating	Breaker Type	Standard AL Connectors	Box Height Addition
MLO	400	N/A	(1) 250 - 750 kcmil or (2)#3/0 AWG - 250 kcmil Cu or Al	6
	800	N/A	(3) 500 kcmil	6
	800	N/A	(4) 1/0-750 kcmil Cu or Al	6
Main Breaker	400	JD6, JXD6, HJD6, SJD6, SHJD6	(1)#4/0 AWG - 750 kcmil Cu or Al	6

Enclosure Modifications

24" Panel Width Description
Type 3R enclosures
Type 3R/12 enclosures①
Gasket between trim and box (Type 1)

Type 4X For Type P3③
Water Tight, Dust Tight and Corrosion Resistant
(consult plant for actual enclosure size and for Type 4② enclosures)

Box Height Inches	Enclosure – Stainless Steel		
	H	W	D
56	56	24	7.75
62	62	24	7.75
68	68	24	7.75
74	74	24	7.75
80	80	24	7.75

① 16 Gauge Cans w/ 14 Gauge Front)
② 14 Gauge only
③ 14 Gauge only - 304SS Std, 316SS Optional)

Standard Enclosures

Box Height (in.)	Catalog Number				
	Type 1 Standard Trim				
	Box	Surface	Flush	Type 3R	Type 3R/12
56	24WD56	P3S56	P3F56	24NRD56	24WPD56
62	24WD62	P3S62	P3F62	24NRD62	24WPD62
68	24WD68	P3S68	P3F68	24NRD68	24WPD68
74	24WD74	P3S74	P3F74	24NRD74	24WPD74
80	24WD80	P3S80	P3F80	24NRD80	24WPD80

Options For Type 1 Trims

Items must be ordered as manual line item on factory
Hinged trim – Add "H" suffix
Door-in-door – Add "D" suffix
Metal card holder - Add "M" suffix
Provision for padlock - Add "-PL" suffix
Service entrance application - Add "SE" suffix

Breaker Kits and Accessories

Kit Number	Description	Contents
BBKGB32 (P2/P3)	NGB2, HGB2, LGB2 3'' branch breaker kit	Kit contains top barrier, (3) A/C connectors, (1) B connector, hardware
BBKB32 (P2/P3)	BL/BQD 6-pole 3" branch breaker kit	Kit contains top barrier, (3) A/C connectors, (1) B connector, hardware
BBKNB32 (P2/P3)	NGB, 6-pole 3" branch breaker kit	Kit contains top barrier, (3) A/C connectors, (1) B connector, hardware
BBKEB32 (P3)	HEB 6-pole 3" branch breaker kit	Kit contains top barrier, (3) A/C connectors, (1) B connector, hardware
BBKED32 (P2/P3)	ED 6-pole 3" branch breaker kit	Kit contains breaker support, inter-phase barriers, (3) A/C connectors, (1) B connector, hardware
BBKQR2①	P3 twin BKR mounting kit for 1-phase/3-phase.	Kit contains all connectors and cover plates necessary to mount both 2 and 3-pole breakers
DFK1	BL, BQD, ED deadfront kit for 1" pole breakers	Center strips 3", 6", 9", 15", 21" plus mounting hardware
DFFP3	Deadfront filler 3"	3" empty space filler and hardware
DFFP6	Deadfront filler 6"	6" empty space filler and hardware
P3BK1	P3 bonding kit	Bonding strap and hardware
EBF1	HEB/NEB Filler Plate	Filler Plate
BBKQRP2FK	P3 Filler for QR. Dual mount horizontal. 1-phase/3-phase.	Kit contains all cover plates necessary to change from QJ to QR both 2 and 3-pole breakers. For 1-phase panel, both breakers must change from QJ to QR, cannot have one of each installed.

①Although QR is rated 250A, it is limited to 225A in panelboard.

Type P3 Panelboards

Miscellaneous Parts and Accessories

Catalogue Number	Description
EGK	Al Ground Bus 44 Connections
BK1	Bonding kit for 250A max. and all P1 panels
IMK1	Interior Adjusting Kit
9271-1	Directory Card Holder
NBK3	1 Numbering Button Kit "Snap-in" type 1 @ 42
NBK4	1 Numbering Button Kit "Snap-in" type 43 @ 84
NBK5	1 Numbering Button Kit "Snap-in" type 85 @ 126
NBK6	Number Strips 127-168.
NBK7	Number Strips 169-210.
NBK8	Number Strips 211-252.
ECGK	Cu Ground Bus 44 Connections
IGK	Insulated Al Ground Bus
ICGK	Insulated Cu Ground Bus
EWK2	End Wall Kit with Knockouts (24" W x 7.75" D)
DFFP1A	1" Filler Plate (Suitable for replacing QF3 in P1 thru S5 Panelboards and Switchboards)
P3BK1	P3 Bonding Kit
JCK24	24 trim screws and 24 trim clips
DFK1	BL, BQD, ED deadfront kit for 1" (include 7 different length centre strips)
12-1110-01	1 Directory card for 1-42 circuits
MCHK	1 Metallic directory card holder
FPLK2	2 Spare Fas-latch trim locks with 2 keys
DSK724	1 Dripshield 24''W x 7.75''D

Type 1 Box

Box is symmetrical

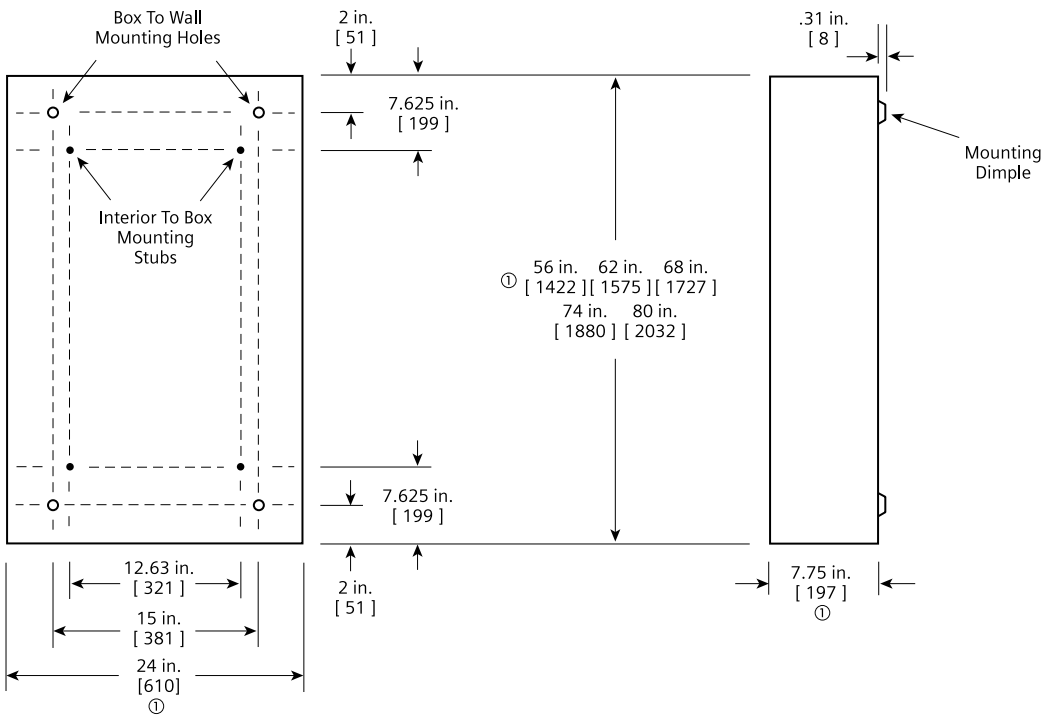

Type 3R and 3R/12 Box

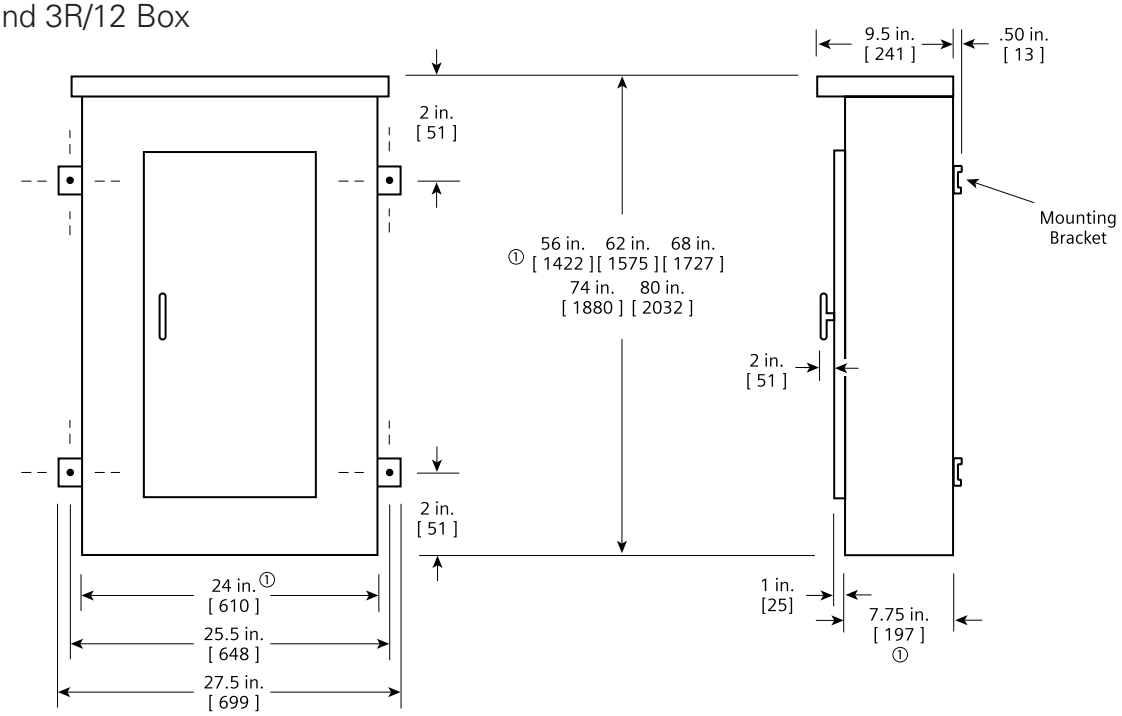

①Dimensions are interior of the box. Add 5/8" to width for absolute dimension. Add 1/8" to height for absolute dimension.
Dimensions shown in inches and millimeters [ ].

Distribution Connector Kits (Circuit Breakers)

Reference

Max Amp Rating	Breaker Family	Branch Breaker Type	Revised P1	P2	P3	S5	F2
100	General	BL, BLH, HBL, BQD6	No kit required	BBKB32	BBKB32	6BL2C③	—
125	General	NGB	No kit required①	BBKNB32	BBKNB32	SNBD	—
	General	NGB2, HGB2, LGB2	—	BBKGB32	BBKGB32	SGB2DCAN	—
	General	HEB	—	—	BBKEB32	SEBD	—
	Sentron	ED2, ED4, ED6, HED4	—	BBKED32	BBKED32	6E62②③	—
	Sentron	CED6	—	BBKCED32	—	6CLE2②	—
150	VL	NDG, LDG	—	—	—	SDGD	—
	3VA	3VA61	—	—	—	S3VA52TDCAN⑤	—
225	General Purpose	QR2, QR2H, HQR2, HQR2H	—	BBKQR1	BBKQR2	6QR2CAN④	—
250	Sentron	FXD6, FD6, HFD6, HHFD6	—	—	—	6F62②	—
	VL	NFG, LFG	—	—	—	SFGD	—
	Sentron	CFD6	—	—	—	6CLF1C	—
	3VA	3VA52, 3VA62	—	—	—	S3VA52TDCAN⑤	—
400	Sentron	JXD6, JD6, HJD6, HHJD6	—	—	—	6JJ62②	—
	VL (Single)	NJG, LJG	—	—	—	SJG1D	—
	VL (Twin)	NJG, LJG	—	—	—	SJG2D	—
	Sentron	CJD6	—	—	—	6CLJ1C	—
600	Sentron	LXD6, LD6, HLD6, HHLD6, SLD6, SHLD6, SJD6, SHJD6	—	—	—	6LL61C	—
	Sentron	CLD6	—	—	—	6CLL1C	—
	Sentron	SCJD6, SCLD6	—	—	—	6SCL61C	—
800	Sentron	MXD6, MD6, HMD6, CMD6, SHMD6, SCMD6	—	—	—	6M61C	—
1200	Sentron	NXD6, ND6, HND6, CND6, SHND6, SCND6	—	—	—	6N61C	—

① NGB branch breakers can be installed in P1 interior ending with suffix "-NGB" only.
② These are aluminum connectors. If copper is required please add suffix C.
③ 3.75" plate accommodates six 1-pole breakers.
④ For QR filler plate only, use p/n: **6QR2FKCAN**. For copper QR kit, use p/n: **6QR2CCAN**.
⑤ To field install a single **3VA52**, **3VA61** or **3VA62** breaker to an existing strap, provision kit p/n: **S3VA52PRCAN** is required.

Spare Parts Kits

Kit Number	Current Product					Old Product is no longer Manufactured, some kits are available			
	P1 Revised	P2	P3	C1	C2	P1 Original	S1, S2, SE	QTY/ Kit	**Product Description** Note: Some kits apply to only specific enclosures used or configurations of the product listed
Strap Kits									
BBKB32		X	X					1	P2/P3 BL/BQD 100A max. Branch Strap kit Cu/Tin, uses 3 of unit space for 6 circuits total. Kit contains top barrier, (3) A/C connectors, (1) B connector, hardware.
BBKB32AT		X	X					1	P2/P3 BL/BQD 100A max. Branch Strap kit Al/Tin, uses 3 of unit space for 6 circuits total. Kit contains top barrier, (3) A/C connectors, (1) B connector, hardware.
BBKB32CS		X	X					1	P2/P3 BL/BQD 100A max. Branch Strap kit Cu/Silver, uses 3 of unit space for 6 circuits total. Kit contains top barrier, (3) A/C connectors, (1) B connector, hardware.
BBKCED32		X						1	CED branch breacker kit Cu/Tin. Kit contains connector kit for P2 400A, 24 wide only
BBKCED32CS		X						1	CED branch breacker kit Cu/Silver. Kit contains connector kit for P2 400A, 24 wide only
BBKVA4P2P3		X	X					1	P2/P3 3VA41/xGB 125A max. Twin Mount Strap Kit, uses 3 of unit space for 6 circuits.
BBKQR1		X						1	P2 QR 225A max. Single Mount Branch Strap Kit, 6 of unit space for one 2-p or 3-p breaker
BBKQR2			X					1	P3 twin BKR mounting kit for 1-phase/3-phase. Kit contains all connectors and cover plates necessary to mount both 2 and3-pole breakers
BBKED32		X	X					1	P2/P3 ED Twin Mount Branch Strap Kit Cu/Tin, uses 3 of unit space for 6 circuits. Kit contains breaker support, inter-phase barrier, (3) A/C connectors, (1) B connector, hardware
BBKED32AT		X						1	P2/P3 ED Twin Mount Branch Strap Kit Al/Tin, uses 3 of unit space for 6 circuits. Kit contains breaker support, inter-phase barrier, (3) A/C connectors, (1) B connector, hardware
BBKED32CS		X						1	P2/P3 ED Twin Mount Branch Strap Kit Cu/Silver, uses 3 of unit space for 6 circuits. Kit contains breaker support, inter-phase barrier, (3) A/C connectors, (1) B connector, hardware
BBKNB32		X	X					1	P2/P3 xGB Twin Mount Branch Strap Kit, 3 of unit space for 6 circuits. Kit contains top barrier, (3) A/C connectors, (1) B connector, hardware
BBKGB32		X	X					1	P2/P3 GB2 Twin Mount Branch Strap Kit, 3 of unit space for 6 circuits. Kit contains top barrier, (3) A/C connectors, (1) B connector, hardware
BBKEB32			X					1	HEB 6-pole 3 branch breaker kit, Kit contains top barrier, (3) A/C connectors, (1) B connector, hardware
BBKQ1 (QJ is not avail. Use QR)		X						1	P2 QJ Sgl Mnt Branch Strap Kit, 6 of unit space for one 2-p or 3-p brkr
Deadfront Parts									
NBK01A	X					X		1	Number Strips 1–60. Stick-on type; Use w/ P1 series Panels – includes 1/2 spacing numbers for BT twins. Replaces NBK03
NBK02A	X					X		1	Number Strips 61-120. Stick-on type; Use w/ P1 series Panels – includes 1/2 spacing numbers for BT twins. Replaces NBK04-05
NBK03A	X					X		1	Number Strips 121-240. Stick-on type; Use w/ P1 series Panels – includes 1/2 spacing numbers for BT twins. Replaces NBK06-08
NBK3		X	X	X	X			1	Number Strips 1-42 (snap-in type, P2/P3 panels)
NBK4		X	X	X	X			1	Number Strips 43-84 (snap-in type, P2/P3 panels)
NBK5		X	X	X	X			1	Number Strips 85-126 (snap-in type, P2/P3 panels)
NBK6		X	X	X	X			1	Number Strips 86-168 (snap-in type, P2/P3 panels)
NBK7		X	X	X	X			1	Number Strips 169-210 (snap-in type, P2/P3 panels)
NBK8		X	X	X	X			1	Number Strips 211-252 (snap-in type, P2/P3 panels)
P1DFS250AFT	X							1	P1 250A Deadfront Support - for Feed-thru interiors only (4 per interior) Part # 11-D-3323-01 (replaces # 11-D-3212-01)
P1DFS250ANFT	X							1	P1 250A Deadfront Support - for Non Feed-thru interiors only (4 per interior) Part # 11-D-3323-02 (replaces # 11-D-3212-02)
P1DFS400A	X							1	P1 400A Deadfront Support (new for 3VA) - for both FT and NFT interiors. (#11-D-3315-01 replaces # 11-D-3004-01) (4 per interior)
DFK1		X	X					1	BL, BQD, ED, xGB, xGB2, 3VA41 deadfront center strip kit for 1 pole breakers with mounting hardware. Center strips included (7 sizes) 3, 6, 9, 12, 15, 18, 21 (of branch height)
DFK1-**		X	X					1	P2/P3 Deadfront center plate - available in 3 increments (starting with 3 and up to a max. of 57) ** represents the deadfront center length in inches.
DFFP3		X	X					1	Deadfront filler, 3 steel blank filler plate (one each P2&P3) P2 Blank Deadfront Plate 3 / P3 Blank Cover Plate 2.97
DFFP6		X	X					1	Deadfront filler, 6 steel blank filler plate (one each P2&P3) P2 Blank Deadfront Plate 6 / P3 Blank Cover Plate 5.97
Filler Plates									
DFFP1A	X	X	X	X	X	X	X	1	DFFP1A Blank filler , 1 inch snap-in, replaced old QF3 and DFFP1 in Systems Products. Ref. old #12-1800-01 and 11-D-4554-01
DFFP01B	X			X		X		1	P1 Main or Subfeed 250A Blank Filler Plate (use for Original or Revised P1 - also replaces DFFP01A/11-D-4560-01/12-A-1801-01) (Installs Vertical for 400A Main w/small DF opening)
DFFP01C	X							1	P1 Main 400A Blank Filler Plate (use for Revised P1 400A with Large MB opening only)
DFFPVA41A	X							1	RP1 Main/Sub-feed, 3VA4/BL/BQD/ED/xGB filler (replaces DFFPED01CAN / 12-A-1802-01)
DFFPED01CAN	X					X		5	P1 Main Filler 100-125A frames ED, BL/BQD or xGB (old filler used for Original or Revised P1 and other applications)
DFFPFD01CAN	X					X		5	FD Main Filler Plate for 1-Ph and 3-Ph P1 Panels (use for Original or Revised P1 and other applications)(P2/P3 and S1/S2/SE)
DFFPJD01CAN	X					X		5	JD Main Filler Plate for 1-Ph and 3-Ph P1 Panels – Small MB opening (use for Original or Revised P1 & other applications)(P2/P3 & S1/S2)
DFFPJD02	X					X		1	JD Main Filler Plate for 1-Ph and 3-Ph – for P1 Panels with Large MB Opening only.
DFFPQJ01CAN	X					X		5	QJ Main Filler Plate for 3-Phase (3-pole) P1 Panels (use for Original or Revised P1 and other applications)
DFFPQJ02CAN	X					X		5	QJ Main Filler Plate for 1-Phase (2-pole) P1 Panels (use for Original or Revised P1 and other applications)
MBKQRFK	X					X		1	P1/Revised P1 Filler for 1PH/3PH QR. Horizontal Mount only.
BBKQRP1FK		X						1	P2 Filler for QR. Horiz. or vert. mount. Contains all cover plates necessary to change from QJ to QR both 2 and 3-pole breakers.
BBKQRP2FK			X					1	P3 Filler for QR. Dual mount horiz. Kit contains all cover plates necessary to change from QJ to QR both 2 and 3-pole breakers. For 1-phase panel, both breakers must change from QJ to QR, cannot have one of each installed.
EBF1			X					1	EB Filler Plate
DFP3AP01CAN			X					5	Used for filling space in a P3 dead-front when a BL, BQD, ED, xGB or 3VA41 branch breaker is installed. Can be replaced in field if lost or damaged.

Spare Parts Kits (cont.)

Kit Number	Current Product					Old Product is no longer Manufactured, some kits are available			
	P1 Revised	P2	P3	C1	C2	P1 Original	S1, S2, SE	QTY/ Kit	**Product Description** Note: Some kits apply to only specific enclosures used or configurations of the product listed
Locks, Hadnles, & Keys									
LPKEY01ACAN	X	X	X	X	X	X		4	Key for FAS-Latch lock Siemens FAS-Latch and other various fronts use this standard key #B363A
LPKEY01BCAN	X	X	X	X	X	X		25	Key for FAS-Latch lock Siemens FAS-Latch and other various fronts use this standard key #B363A
FPLK2	X	X	X	X	X	X		1	FAS-Latch lock with 2 keys, 14-16 gauge door - for Lighting Panel Type 1 front Replacement lock for use when door thickness is 14-16 gauge painted steel
LPLOCK02ACAN	X	X	X	X	X	X		5	Siemens FAS-Latch Replacement Lock Kit with two B363A Keys, for 12 Gauge Steel, Lighting Panel Type 1 Fronts, various styles.
LPLOCK03ACAN	X	X	X	X	X	X		5	Siemens FAS-Latch Replacement Lock Kit with two B363A Keys, for 10 Gauge Steel, Lighting Panel Type 1 Fronts, various styles.
K71-1804-01	X	X	X	X	X	X		1	T-Handle lock - for Lighting Panels Type 3R & 12 Replacement lock for use with any P1, P2, & P3 panels with Type 3R/12 encosures.
General Hardware									
JCK24	X	X	X	X	X	X		1	J-Type speed nut - lighting panel fronts - 24 pieces per pack Replacement J-nuts for use with lighting panel fronts and deadfronts.
BNK2		X						1	P2 neutral 3-step lug - Tin-plated aluminum - 1 piece per pack with mounting hardware 14 connections for #6-1/0 wire and 12 connections for #14-#6 wire
BNK350NCAN		X	X					10	Narrow 350 KCMIL lug - Tin-plated aluminum - 1 piece per pack with mounting hardware One #6-350KCMIL connection.
LPP2NB01CAN		X						10	P2 Neutral 2-Step lug - Tin-plated aluminum - 1 piece per pack with mounting hardware Three connections for #6-1/0 wire and 18 connections for #14-#6 wire.
ECGK	X	X	X			X		1	ECGK Copper Ground Bus Kit, Connection count: (6) of #14-1/0 and (15) of #14-6 Connections (21 Holes total). Some connections allow multiple wires.
EGK	X	X	X			X		1	EGK Al/Cu Ground Bus Kit, Connection count: (6) of #14-1/0 and (15) of #14-6 Connections (21 Holes total). Some connections allow multiple wires.
ICGK	X	X	X			X		1	ICGK Insulated Copper Ground Bus Kit, Connection count: (6) of #14-1/0 and (15) of #14-6 Connections (21 Holes total). Some connections allow multiple wires.
IGK	X	X	X			X		1	IGK Insulated Al/Cu Ground Bus Kit, Connection count: (6) of #14-1/0 and (15) of #14-6 Connections (21 Holes total). Some connections allow multiple wires.
IMK1	X	X	X			X		1	Interior Mounting Kit with Adjustment Provisions for P1/P2/P3
LPDC01CAN	X	X	X	X	X	X	X	10	Panelboard Directory Card 9 x 4 - 8 pieces per pack Kit includes 8 cards. New cards have 1-42, 43-84, 85-126, and 127-168 circuits.
LPDC01	X	X	X	X	X	X	X	10	Panelboard Directory Card. 5.5X5, for 1-90 circuits.
LPDC02	X	X	X	X	X	X	X	10	Panelboard Directory Vinyl Pouch, 6.3x6.1.
9271-1	X	X	X	X	X	X	X	10	Directory Card Holder for 9 x 4
P1CONACPHCU	X							6	RP1 A/C-Phase Replacement Copper Connectors, Kit of 6 pcs plus mounting hardware. Also can be used to replaced AL A/C-Phase Connectors.
P1CONBPHAL	X							6	RP1 B-Phase Replacement Aluminum Connectors, Kit of 6 pcs plus mounting hardware
P1CONBPHCU	X							6	RP1 B-Phase Replacement Copper Connectors, Kit of 6 pcs plus mounting hardware
P1SCRWS	X					X		42	P1 Branch breaker mounting screws - pack of 42 screws, part #11-A-1505-03, 10-32 x 0.312 Hex Washer Head Screw - Do Not Substitute
MCHK	X	X	X	X	X	X	X	1	Metal Card Holder Kit - Field Installable
SDKN	X	X				X		1	Dripshield kit for Standard Enclsoure (20W x 5.75D)
DSK724			X					1	Dripshield 24''W x 7.75''D
Bonding Kits									
BK1A	X							1	Revised P1 Bonding Kit including Service Disconnect Label
P2BK1		X						1	P2 250A Max Horiz. MB Bonding Strap Kit
P2BK2		X						1	P2 125A max. Main Lug Bonding Strap Assembly
P2BK3		X						1	P2 250-600A MLO and all Vert MB Bonding Kit
P3BK1			X					1	P3 bonding kit 800A max MLO+MB

B74FLR Enclosures & Related Bottom Covers

Quick & Easy Installation Features

This "universal fit" enclosure is capable of sitting on the floor or over the conduit, eliminating the need to extend conduit or cut knockouts. If installed correctly, there will be no need for a panel skirt.

This enclosure includes two bottom endwalls: a standard and a special endwall with a cutout. The standard endwall is mounted at the bottom as usual, and the special endwall is mounted above it with two screws. By removing the standard endwall and moving the special endwall to the lower position, the enclosure can be mounted around conduit stubbed up from the floor.*

Any size P1 or P2 interior from 26" to 74" can fit in this 20" wide enclosure with the proper lower cover installed. See chart below for part numbers (See back for details).

The bottom section of the enclosure left open by all fronts (except the 74" front) will require a special lower cover installation. These are available in both surface and flush variations in six-inch increments from 6"- 48" height, to match the front "void" sizes. The chart to the right shows which lower covers are available for the interior selected.

Contractor Labor Savings

When installed to code, the labor to cut knockouts and extend conduit to the bottom endwall is eliminated.

Instruction Sheets:

Enclosure: B74FLR Instructions
Lower Cover: BXXCVR Instructions
Endwall Kit: EWK3 Instructions

Enclosure Part Number: B74FLR

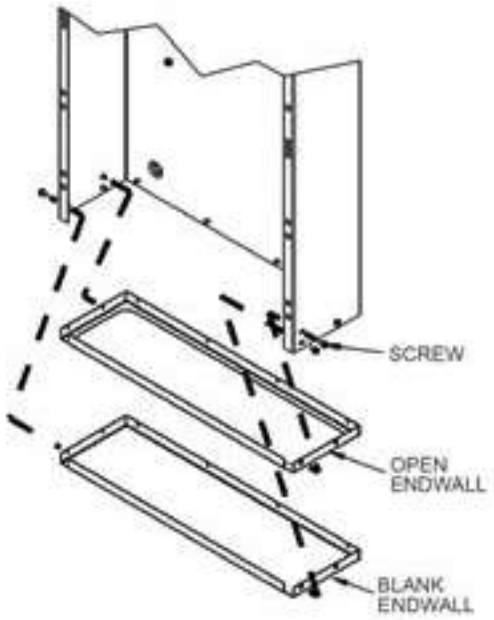

Standard Box Size	Standard Front Size	Required Lower Cover			
		Flush Mounted		Surface Mounted	
26" x 20"	26"	48"	BXXCVR48F	48"	BXXCVR48S
32" x 20"	32"	42"	BXXCVR42F	42"	BXXCVR42S
38" x 20"	38"	36"	BXXCVR36F	36"	BXXCVR36S
44" x 20"	44"	30"	BXXCVR30F	30"	BXXCVR30S
50" x 20"	50"	24"	BXXCVR24F	24"	BXXCVR24S
56" x 20"	56"	18"	BXXCVR18F	18"	BXXCVR18S
62" x 20"	62"	12"	BXXCVR12F	12"	BXXCVR12S
68" x 20"	68"	6"	BXXCVR06F	6"	BXXCVR06S
74" x 20"	74"	0"	None Required	0"	None Required

*Contractor is required to seal and install as required per local/national codes.

B74FLR Enclosures & Related Bottom Covers

The enclosure to the right shows two mounting studs at the top which are used for all sizes of P1/P2 panels that fit 20" wide x 5.75" deep enclosures. There are two studs at the bottom for mounting a 74" interior (Note: Interior sizes reference the standard enclosure size needed for the interior and front). The 74" can fits the 74" interior and front without any additional covers.

As interiors get shorter in six-inch increments, lower covers are needed to fill the space below the interior and standard front. Mounting holes and hardware are provided for attaching the bottom of the base rails.

Example: A 44" interior is 30" shorter than a 74" enclosure so it will need a 30" lower cover. Pick Surface or Flush to match the front.

Fronts available to use

Standard FasLatch Front
- Screw-to-box front (standard & piano hinge)

Hinge-to-box front (standard & piano hinge)
Door-to-door front (standard & piano hinge)

Note: Although stainless steel piano hinge fronts are available, stainless steel lower covers are NOT available at this time.

Special endwall retrofit kit: EWK3

This kit includes the "open" endwall that can be used to replace a standard endwall in any 20" wide x 5.75" deep enclosure if needed for special mounting situations. Contractor is responsible to seal and secure per local/ national codes.

Note: This B74FLR Enclosure is cULus Listed as a Electric Cabinet Box and when additional gutter space is available (beyond the required minimum Enclosure size required by the Panel Interior), this additional Gutter space is considered part of the Enclosure and does not require special wiring rules that apply to a "wire way". It is not a Panel Skirt, although in some cases it can be used in place of an Enclosure plus a panel skirt when installed per local and National codes.

Think of this as you would a "Switchboard Enclosure" resting on the floor, similar wiring rules should apply to the open bottom.

Enclosure Part Number: B74FLR

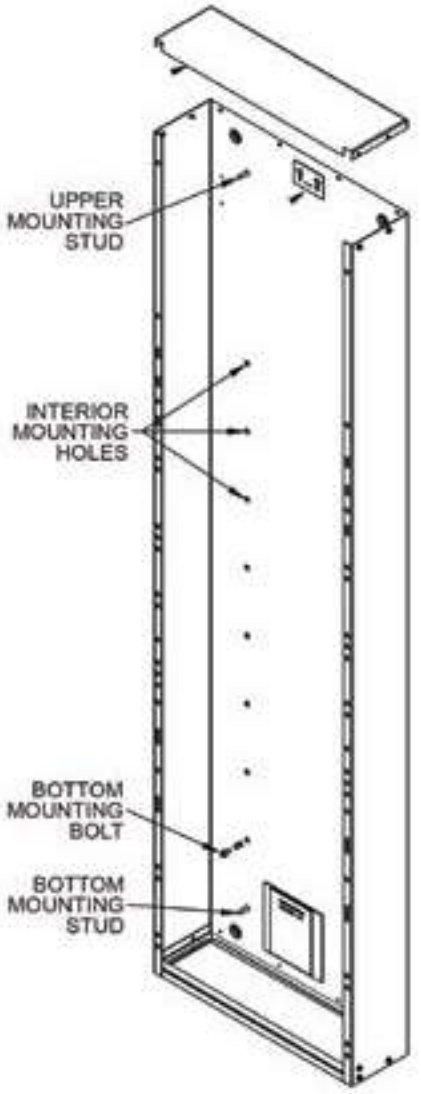

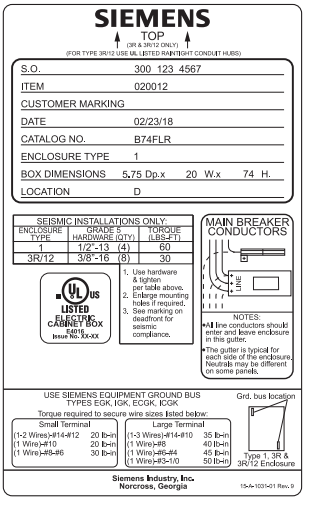

Example of Label provided on each enclosure with UL/cULus marking

Miscellaneous parts and accessories-enclosures

Catalog Number	Description	Comments
EWK1	End Wall Kit with Knockouts (20"W x 5.75" DP)	Type 1 Only
EWK2	End Wall Kit with Knockouts (24"W x 7.75" DP)	Type 1 Only
EWK3	End Wall Kit - open center space - ref B74FLR (20" W x 5.75" DP)	Type 1 Only

EWK1 End Wall w/KOs (20"W X 5.75"D)

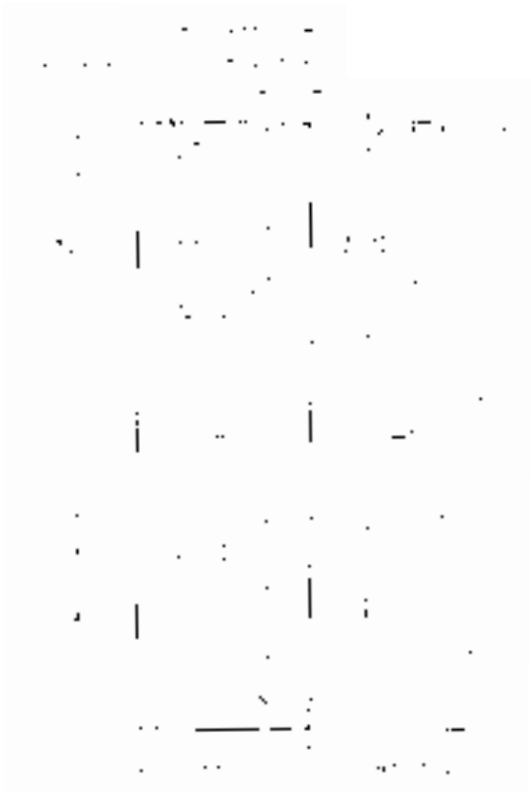

EWK2 End Wall w/KOs (20"W X 5.75"D)

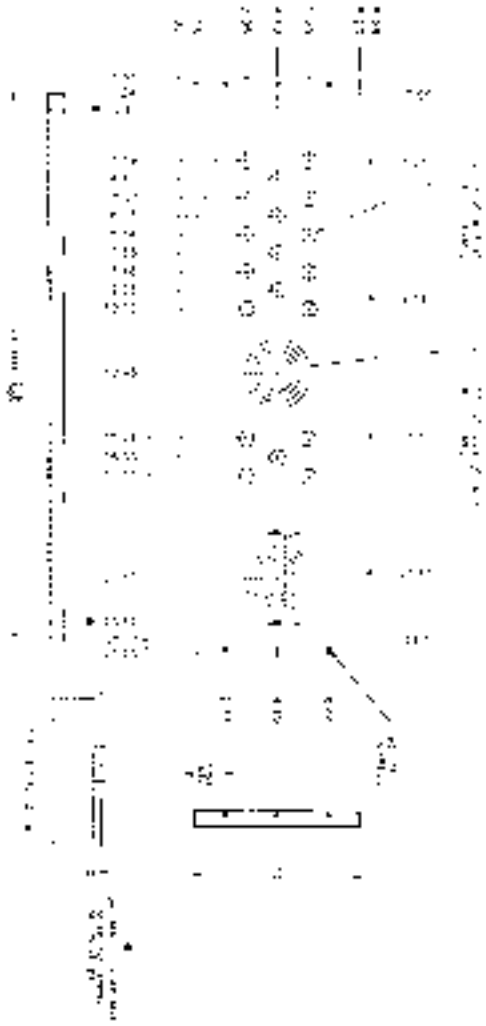

Lighting panel ground bus information: P1-P2-P3

Catalog Number	Description	Comments
EGK	Al Ground Bus 44 Connections	Type 1, 3R, 3R/12
ECGK	Cu Ground Bus 44 Connections	Type 1, 3R, 3R/12
IGK	Insulated Al Ground Bus	Type 1, 3R, 3R/12
ICGK	Insulated Cu Ground Bus	Type 1, 3R, 3R/12

EGK / ECGK / IGK / ICGK Installation Instructions:

Ground bus to be mounted in either left or right gutter with hardware provided. Applied torque ratings shall be 45-lbs-inch for three No. 10 AWG solid copper conductors in the large holes. For all other combinations of conductors, refer to the torque rating label on the panelboard.

Note: For IGK / ICGK, insure ground bar is attached to Glastic insulator with two screws before mounting insulator to enclosure. Ground Bar mounts thru side holes oriented as shown on picture below.

Wire size range of the EGK/ECGK/IGK/ICGK lug connections/holes:

(Note: The multiple combinations typically only apply when used as an equipment ground. If similar bar is used as a neutral bar, only one wire can be used in each hole.)

1. Connection count: (6) of #14-1/0 and (15) of #14-6 Connections (21 Holes total). (note: one Connection may be needed for incoming Ground Connection)
2. The Maximum wire size the standard ground accepts is:
   1/0 in the Large Holes and #6 in the Smaller Holes.
3. Small Hole can accept:
   (1-2 wires) #14-12; (1 wire) #10; (1 wire) #8-#6.
4. The Large Hole can accept:
   (1-3 wires) #14-#10; (1 wire) #8; (1 wire) #6 - #4; (1 wire) #3-1/0.
5. Max. connections if largest wire size is used:
   (6 x 1) + (15 x 1) = 21
6. Max. connections if smallest wire size is used:
   (6 x 3) + (15 x 2) = 48
7. Request for Ground Lug greater than 1/0 in Size requires a Special Modification in COMPAS when Line Item is entered (specify number of connections needed greater than 1/0) or Manual Line for Custom Ground (specify number of connections needed greater than

This chart is on labels for P1, P2 and P3 enclosures.

USE SIEMENS EQUIPMENT GROUND BUS
TYPES EGK, IGK, ECGK, ICGK

Torque required to secure wire sizes listed below:

Small Terminal	
(1-2 Wires)-#14-#12	20 lb-in
(1 Wire)-#10	20 lb-in
(1 Wire)-#8-#6	30 lb-in

Large Terminal	
(1-3 Wires)-#14-#10	35 lb-in
(1 Wire)-#8	40 lb-in
(1 Wire)-#6-#16	45 lb-in
(1 Wire)-#3-1/0	50 lb-in

Grd. bus location

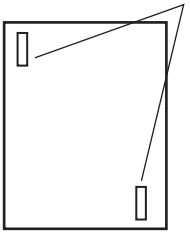

Type 1, 3R and 3R/12 Enclosure



EGK / ECGK kit parts



IGK / ICGK kit parts

Type S5 (SPP6)

600 Volts AC, 250 Volts DC Maximum
1200 Ampere Mains
1200 Ampere Maximum Branch
UL & CSA Short Circuit Rating — 200,000A IR Maximum

Branch Breaker Symmetrical Interrupting Capacity

Based on Underwriters' Test Procedure

Meets 1996 NEC wire bending requirement, section 373-6.
CSA - C22.2 No. 0.12

Panelboards

Listed by Underwriters' Laboratories, Inc., under "Panelboards" File #E2269 for interiors and #E4016 for boxes and fronts. Meet Federal Specification W-C375B/Gen. & CSA Certificate No. 1518681.

Service

600 Volts AC, 250 Volts DC, Maximum. 1 Phase, 3 Wire; 3 Phase, 3 Wire; or or 3 Phase, 4 Wire.

Panelboard Fronts and Doors

Standard panelboards are furnished with 4 piece trim with ventilation. Fronts are fabricated from code gauge steel and finished ASA61.

Main Breakers

All 400A and 1200A frame main breakers are mounted horizontally.

Main Lug Connectors

Ampere Rating	Connectors Range/Phase
225A - 400A	(1) #1/0-750MCM CU/AL or (2) #1/0-250MCM CU/AL
600A	(2) #1/0-750MCM CU/AL or (4) #1/0-250MCM CU/AL
800A	(3) #1/0-750MCM CU/AL or (6) #1/0-250MCM CU/AL
1200A	(4) #1/0-750MCM CU/AL or (8) #1/0-250MCM CU/AL

End Gutters

Ampere Rating	Main Lug (inches)	Main Breaker (inches)
400/600	15.967	13.0
800/1200	15.967	13.0

Boxes

38" wide, 12.75" deep (Type 1, 2)
38" wide, 14.25" deep (Type 3R/12)

Panelboard Specifications

Maximum Panel Ampere	Unit Space (MLO)	Box Height	120/240Volts 1 Phase, 3 Wire	120/208 Volts 3 Phase, 4 Wire	600 Volts 3 Phase, 3 Wire	347/600 Volts 3 Phase, 4 Wire
400A	30"	60"				
600A	45"	75"				
800A	60"	90"				
1200A	60"	90"				

Integrated Equipment Short Circuit Ratings

The term "Integrated Equipment Short Circuit Rating" refers to the application of series connected circuit breakers in a combination that allows some breakers to have lower individual interrupting ratings than the available fault current. This is permitted as long as the series combination has been tested and certified by UL & CSA.

Series ratings must be specified on order at time of entry.

Main Breaker Selection

Amperage Rating	Breaker Type	Trip Type	Maximum Interrupting Rating (kA)			Available Trip Values
			240V	480V	600V	
400	JXD6	Thermal Magnetic	65	35	25	200, 225, 250, 300, 350, 400
	JD6		65	35	25	200, 225, 250, 300, 350, 400
	HJD6		100	65	35	200, 225, 250, 300, 350, 400
	HHJD6		200	100	50	200, 225, 250, 300, 350, 400
	CJD6		200	150	100	200, 225, 250, 300, 350, 400
	SJD6	Electronic (Solid State)	65	35	25	200, 300, 400
	SHJD6		100	65	35	200, 300, 400
	SCJD6		200	150	100	200, 300, 400
600	LXD6	Thermal Magnetic	65	35	25	450, 500, 600
	LD6		65	35	25	250, 300, 350, 400, 450, 500, 600
	HLD6		100	65	35	250, 300, 350, 400, 450, 500, 600
	HHLD6		200	100	50	250, 300, 350, 400, 450, 500, 600
	CLD6		200	150	100	450, 500, 600
	SLD6	Electronic (Solid State)	65	35	25	300, 400, 500, 600
	SHLD6		100	65	35	300, 400, 500, 600
	SCLD6		200	150	100	300, 400, 500, 600
800	MXD6	Thermal Magnetic	65	50	25	500, 600, 700, 800
	MD6		65	50	25	500, 600, 700, 800
	HMD6		100	65	50	500, 600, 700, 800
	CMD6		200	100	65	500, 600, 700, 800
	SMD6	Electronic (Solid State)	65	50	25	600, 700, 800
	SHMD6		100	65	50	600, 700, 800
	SCMD6		200	100	65	600, 700, 800
1200	NXD6	Thermal Magnetic	65	50	25	800, 900, 1000, 1200
	ND6		65	50	25	800, 900, 1000, 1200
	HND6		100	65	50	800, 900, 1000, 1200
	CND6		200	100	65	800, 900, 1000, 1200
	SND6	Electronic (Solid State)	65	50	25	800, 1000, 1200
	SHND6		100	65	50	800, 1000, 1200
	SCND6		200	100	65	800, 1000, 1200

Branch Breaker Side Gutter Inches (mm)

Reference Letter	Panel Width 38 Inches Dimensions in inches (mm)
A	14.00 (356)
B	13.98 (355)
C	11.62 (295)
D	10.00 (254)
E	7.61 (193)
F	8.75 (222)
G	8.25 (210)
J	11.76 (299)
K	7.92 (201)
M	13.42 (341)
N	12.00 (305)
P	14.25 (362)
Q	13.42 (341)

◄— A —►	BL, BLH, HBL, BQD	BL, BLH, HBL, BQD	◄— A —►
◄— B —►	NGB2, HGB2, LGB2	NGB2, HGB2, LGB2	◄— B —►
◄— D —►	ED4, ED6, HED4, HHED6	ED4, ED6, HED4, HHED6	◄— D —►
◄— E —►	CED6	CED6	◄— E —►
◄— F —►	QR2, QRH2, HQR2, HQR2H	QR2, QRH2, HQR2, HQR2H	◄— F —►
◄— G —►	FD6, FXD6, HFD6, HHFD6	FD6, FXD6, HFD6, HHFD6	◄— G —►
◄— AA —►	3VA52 (MFAS, HFAS, CFAS)	3VA52 (MFAS, HFAS, CFAS)	◄— AA —►
◄— AB —►	3VA61 (MDAE, HDAE, CDAE, LDAE)	3VA61 (MDAE, HDAE, CDAE, LDAE)	◄— AB —►
◄— AC —►	3VA62 (MFAE, HFAE, CFAE, LFAE)	3VA62 (MFAE, HFAE, CFAE, LFAE)	◄— AC —►
◄— J —►	CFD		◄— J —►
◄— K —►	JD6, JXD6, HJD6, HHJD6	JD6, JXD6, HJD6, HHJD6	◄— K —►
◄— M —►	SJD6, SHJD6, LD6, LXD6, HLD6, HHLD6, SLD6, SHLD6		◄— M —►
◄— N —►	CJD6, SCJD6, CLD6, SCLD6		◄— N —►
◄— P —►	MXD6, MD6, HMD6, CMD6, NXD6, ND6, HND6, CND6		◄— P —►
◄— Q —►	SMD6, SHMD6, SCMD6, SND6, SHND6, SCND6		◄— Q —►

Branch Circuit Breaker Selection①

Breaker Frame Rating	Trip Type	Breaker Type	Poles	Trip Amperage	Mounting Height Inches (mm)			Max IC Rating (kA)		
					Single	Twin	Gutter⑤	240V	480V	600V
100	Thermal Magnetic	BL	1, 2, 3	15, 20, 25, 30, 40, 50, 60, 70, 80, 90, 100	—	3.75 (95)②③	14 (356)	10	—	—
		BLH	1, 2, 3	15, 20, 25, 30, 40, 50, 60, 70, 80, 90, 100	—	3.75 (95)②③	14 (356)	22	—	—
		HBL	1, 2, 3	15, 20, 25, 30, 40, 50, 60, 70, 80, 90, 100	—	3.75 (95)②③	14 (356)	65	—	—
		BQD6④	1, 2, 3	15, 20, 30, 40, 50, 60, 70	—	3.75 (95)②③	14 (356)	65	—	10
	Ground Fault Circuit Interrupter	BLE (GFCI)	1, 2	15, 20, 30, 40, 50, 60	—	3.75 (95)②	14 (356)	10	—	—
		BLF (GFCI)	1, 2	15, 20, 30, 40, 50, 60	—	3.75 (95)②	14 (356)	10	—	—
		BLHF (GFCI)	1, 2	15, 20, 30, 40, 50, 60	—	3.75 (95)②	14 (356)	22	—	—
	Arc Fault Circuit Interrupter	BAF (AFCI)	1	15, 20	—	3.75 (95)②	14 (356)	10	—	—
		BAFH (AFCI)	1	15, 20	—	3.75 (95)②	14 (356)	22	—	—
125	Thermal Magnetic	ED2	1, 2, 3	15, 20, 30, 40, 50, 60, 70, 80, 90, 100	3.75 (95)②③	3.75 (95)②③	10 (254)	10	—	—
		ED4	1, 2, 3	15, 20, 30, 35, 40, 50, 60, 70, 80, 90, 100, 110, 125	3.75 (95)②③	3.75 (95)②③	10 (254)	65	18	—
		ED6	1, 2, 3	15, 20, 30, 35, 40, 50, 60, 70, 80, 90, 100, 110, 125	3.75 (95)②③	3.75 (95)②③	10 (254)	100	18	18
		HED4	1, 2, 3	15, 20, 30, 35, 40, 50, 60, 70, 80, 90, 100, 110, 125	3.75 (95)②③	3.75 (95)②③	10 (254)	100	65	30
		CED6	2, 3	15, 20, 30, 35, 40, 50, 60, 70, 80, 90, 100, 110, 125	3.75 (95)③	3.75 (95)③	7.61 (193)	200	200	100
		NGB2	1, 2, 3	15, 20, 25, 30, 35, 40, 50 ,60, 70, 80, 90, 100, 110, 125	3.75 (95)②③	3.75 (95)②③	13.98 (355)	100	25	14
		HGB2	1, 2, 3	15, 20, 25, 30, 35, 40, 50 ,60, 70, 80, 90, 100, 110, 125	3.75 (95)②③	3.75 (95)②③	13.98 (355)	100	35	22
		LGB2	1, 2, 3	15, 20, 25, 30, 35, 40, 50 ,60, 70, 80, 90, 100, 110, 125	3.75 (95)②③	3.75 (95)②③	13.98 (355)	100	65	25
		3VA41 (SEAB)	1, 2, 3	15, 20, 25, 30, 35, 40, 45, 50, 60, 70, 80, 90, 100, 110, 125	3.75 (95)	3.75 (95)	13.98 (355)	65	25	14
		3VA41 (MEAB)	1, 2, 3	15, 20, 25, 30, 35, 40, 45, 50, 60, 70, 80, 90, 100, 110, 125	3.75 (95)	3.75 (95)	13.98 (355)	85	35	18
		3VA41 (HEAB)	1, 2, 3	15, 20, 25, 30, 35, 40, 45, 50, 60, 70, 80, 90, 100, 110, 125	3.75 (95)	3.75 (95)	13.98 (355)	150	65	25
150	Electronic (Solid State)	3VA61 (MDAE)	3	40, 100, 150	5 (127)	5 (127)	9.59 (244)	100	35	18
		3VA61 (HDAE)	3	40, 100, 150	5 (127)	5 (127)	9.59 (244)	100	65	22
		3VA61 (CDAE)	3	40, 100, 150	5 (127)	5 (127)	9.59 (244)	200	100	35
		3VA61 (LDAE)	3	40, 100, 150	5 (127)	5 (127)	9.59 (244)	200	150	50
225	Thermal Magnetic	QR2	2, 3	100, 110, 125, 150, 175, 200, 225	5 (127)	5 (127)	8.75 (222)	10	—	—
		QRH2	2, 3	100, 110, 125, 150, 175, 200, 225	5 (127)	5 (127)	8.75 (222)	25	—	—
		HQR2	2, 3	100, 110, 125, 150, 175, 200, 225	5 (127)	5 (127)	8.75 (222)	65	—	—
		HQR2H	2, 3	100, 110, 125, 150, 175, 200, 225	5 (127)	5 (127)	8.75 (222)	100	—	—
250	Thermal Magnetic	FXD6, FD6	2, 3	70, 80, 90, 100, 110, 125, 150, 175, 200, 225, 250	5 (127)	5 (127)	8.25 (210)	65	35	22
		HFD6	2, 3	70, 80, 90, 100, 110, 125, 150, 175, 200, 225, 250	5 (127)	5 (127)	8.25 (210)	100	65	25
		CFD6	2, 3	70, 80, 90, 100, 110, 125, 150, 175, 200, 225, 250	—	5 (127)	11.76 (299)	200	200	100
		3VA52 (MFAS)	2, 3	40, 45, 50, 60, 70, 80, 90, 100, 110, 125, 150, 175, 200, 225, 250	5 (127)	5 (127)	10.10 (257)	85	35	18
		3VA52 (HFAS)	2, 3	40, 45, 50, 60, 70, 80, 90, 100, 110, 125, 150, 175, 200, 225, 250	5 (127)	5 (127)	10.10 (257)	100	65	25
		3VA52 (CFAS)	2, 3	40, 45, 50, 60, 70, 80, 90, 100, 110, 125, 150, 175, 200, 225, 250	5 (127)	5 (127)	10.10 (257)	200	100	35
	Electronic (Solid State)	3VA62 (MFAE)	3	100, 250	5 (127)	5 (127)	9.59 (244)	100	35	18
		3VA62 (HFAE)	3	100, 250	5 (127)	5 (127)	9.59 (244)	100	65	22
		3VA62 (CFAE)	3	100, 250	5 (127)	5 (127)	9.59 (244)	200	100	35
		3VA62 (LFAE)	3	100, 250	5 (127)	5 (127)	9.59 (244)	200	150	50
400	Thermal Magnetic	JXD6, JD6	2, 3	200, 225, 250, 300, 350, 400	8.75 (222)	8.75 (222)	7.92 (201)	65	35	25
		HJD6	2, 3	200, 225, 250, 300, 350, 400	8.75 (222)	8.75 (222)	7.92 (201)	100	65	35
		HHJD6	2, 3	200, 225, 250, 300, 350, 400	8.75 (222)	8.75 (222)	7.92 (201)	200	100	50
		CJD6	2, 3	200, 225, 250, 300, 350, 400	8.75 (222)	—	12 (305)	200	150	100
	Electronic (Solid State)	SJD6	3	200, 300, 400	8.75 (222)	—	13.42 (341)	65	35	25
		SHJD6	3	200, 300, 400	8.75 (222)	—	13.42 (341)	100	65	35
		SCJD6	3	200, 300, 400	8.75 (222)	—	12 (305)	200	150	100
		NJG	3	250, 400	6.25 (159)	6.25 (159)	8 (203)	65	35	25
		LJG	3	250, 400	6.25 (159)	6.25 (159)	8 (203)	200	100	25
600	Thermal Magnetic	LXD6	2, 3	450, 500, 600	8.75 (222)	—	13.42 (341)	65	35	25
		LD6	2, 3	250, 300, 350, 400, 450, 500, 600	8.75 (222)	—	13.42 (341)	65	35	25
		HLD6	2, 3	250, 300, 350, 400, 450, 500, 600	8.75 (222)	—	13.42 (341)	100	65	35
		HHLD6	2, 3	250, 300, 350, 400, 450, 500, 600	8.75 (222)	—	13.42 (341)	200	100	50
		CLD6	2, 3	450, 500, 600	8.75 (222)	—	12 (305)	200	150	100
	Electronic (Solid State)	SLD6	3	300, 400, 500, 600	8.75 (222)	—	13.42 (341)	65	35	25
		SHLD6	3	300, 400, 500, 600	8.75 (222)	—	13.42 (341)	100	65	35
		SCLD6	3	300, 400, 500, 600	8.75 (222)	—	12 (305)	200	150	100
800	Thermal Magnetic	MXD6	2, 3	500, 600, 700, 800	10 (254)	—	13 (330)	65	50	25
		MD6	2, 3	500, 600, 700, 800	10 (254)	—	13 (330)	65	50	25
		HMD6	2, 3	500, 600, 700, 800	10 (254)	—	13 (330)	100	65	50
		CMD6	2, 3	500, 600, 700, 800	10 (254)	—	13 (330)	200	100	65
	Electronic (Solid State)	SMD6	3	600, 700, 800	10 (254)	—	12 (305)	65	50	25
		SHMD6	3	600, 700, 800	10 (254)	—	12 (305)	100	65	50
		SCMD6	3	600, 700, 800	10 (254)	—	12 (305)	200	100	65
1200	Thermal Magnetic	NXD6	2, 3	800, 900, 1000, 1200	10 (254)	—	13 (330)	65	50	25
		ND6	2, 3	800, 900, 1000, 1200	10 (254)	—	13 (330)	65	50	25
		HND6	2, 3	800, 900, 1000, 1200	10 (254)	—	13 (330)	100	65	50
		CND6	2, 3	800, 900, 1000, 1200	10 (254)	—	13 (330)	200	100	65
	Electronic (Solid State)	SND6	3	800, 1000, 1200	10 (254)	—	12 (305)	65	50	25
		SHND6	3	800, 1000, 1200	10 (254)	—	12 (305)	100	65	50
		SCND6	3	800, 1000, 1200	10 (254)	—	12 (305)	200	100	65

① Space includes housing frame plate with blank cover plate. Provision includes all necessary mounting hardware, less circuit breaker, and includes housing frame cover plate with breaker handle opening.

② 1 to 6 poles may be mounted in 3.75" (95) of unit space

③ Accessories such as shunt trips on three pole breakers require 6.25" (159) of unit space.

④ Also 10kA at 600Y/347 Volts.

⑤ Refer to Table 5 for layout dimensions.

Modifications and Additions

Type S5

When required, special constructions or additions to standard panelboards may be specified for all **factory-assembled** Power and Distribution Panelboards. Below and on the next page are listed many of those available for Type S5 panelboards. In no case do these apply to **Narrow** (Column) Width Lighting Panelboards or **Unassembled** Panelboards.

1. Miscellaneous

ENCLOSURE TYPE
Type1 Type 2 (Drip-proof) Type 3R Type 12

2. Painted Finish

Touch-Up Paint (ASA61, Light Gray)
12 oz. aerosol can,
Catalog Number TUP61

3. Miscellaneous Accessories

Nameplate — laminated, engraved
Tamper-Resistant Screws

4. Devices Mounted on Gutter Cover — Includes Device, Mounting — Wired or Unwired

Toggle Switch — SPST or 3-way; 15A

Pilot Light — General Purpose, Neon or Incandescent

Pushbutton

5. Feed-Thru Lugs① (One Set Per Panel)

Ampere Rating			Unit Space (Additional inches)
	3-Pole	2-Pole	MLO
400	Consult Sales	Consult Sales	10
600			10
800			17.5
1200			17.5

6. MLO Compression Lugs —

Available as main lugs and neutral lug.

Ampere Rating	Aluminum (Specify Size)	Copper (Specify Size)	Deduct From Available Unit Space (inches)
400	Consult Sales Office	Consult Sales Office	5
600			5
800			5
1200			5

7. Grounding of Panelboards②

Non-Insulated Equipment Ground Bus Including Ground Lug
Insulated Equipment Ground Bus Including Ground Lug

8. Remote Control Switches ③④

600V AC Ampere Rating	ASCO 920 Mechanically Held④⑤		Siemens CLH Electrically Held⑥	
	2-Pole	3-Pole	2-Pole	3-Pole
30	Unit space 20″		Unit space 20″	
60				
75				
100				
150④				
200④				
225				

9. Increased Capacity Neutral

Ampere Rating		Unit Space (inches)
Phase	Neutral	
400	600	None
400	800	None
600	1200	None
800	1200	None

10. Circuit Breaker Accessories

Handle Blocking Device
Blocks handle in either the "ON" or "OFF" position. Available for:

Breaker Type	Cat. Number
BL, BLH, HBL, BQ, BQH, HBQ	**ECQL1**
All BQD, GB	**BQDHBD**
All QR	**HPLQR**
All BQD, NGB, NGB2, HGB2, LGB2	**BQDPLD**
All ED	**E2HBL**
All FD	**FD6HB1**
All JD, LD	**JD6HBL**
All MD, ND, PD	**MN6BL**
3VA52/61/62	**3VA93780LB10**

Padlocking Device — Padlocks in "OFF" position. Available for:

Breaker Type	Cat. Number
BQ, BQH, BL, BLH, HBL	**ECQLD3**
One Pole BL, BLF, BE, BAF	**ECPLD1**
Two-Pole BL, BLF, BE	**ECPLD2**
All QR	**HPLQR**
All BQD, NGB, NGB2, HGB2, LGB2	**BQDPLD**
All ED	**ED2HPL**
All FD	**FD6PL1**
All JD, LD	**JD6HPL**
All MD, ND, PD	**MN6PLD**
3VA41	**3VA90380LB11**
3VA52/61/62	**3VA91380LB11**

11. Ground Fault Sensing Relay Kit⑩ Equipment Protection (30 mA)

For Use with Breaker Types	Number of Poles	Description
ED4, ED6, HED4	1, 2, 3	Basic kit Basic kit with bell alarm

12. Main Bus

Standard main bus and ground bus are tin plated aluminum. For copper main bus, neutral bus and ground bus change prefix 'A' to 'C' on catalog number and contact your sales office for pricing.

13. Copper Lugs — For Main Lug Only Panels

Standard main lugs and neutral lugs are tin plated aluminum, UL & CSA listed for use with aluminum/copper cables. For copper lugs in the mains and neutral for use with copper cables only, contact sales.

14. Shunt Trip on Main⑤⑥⑦⑧⑨ and Branches

Description	Cat. Number
"BL, BQD6 (branch only) QR2, QRH2, HQR2, HQR2H, ED2, ED4, HED4 (branch only) All others through 1200A"	See breaker portion of this catalogue

15. Sentron TPS (TVSS Modules)

100kA, 150kA, 200kA, 250kA, 300kA

Options
Surge Counter
Remote Indicator

16. Customer Metering

Siemens Digital Metering with Remote Display
SEM3 Embedded Metering

⑩ Not CSA approved.

①For use on main lug, main breaker or main switch panels without subfeed breakers.
② Ground bar not installed in box.
③ For short circuit ratings with remote control switches, consult sales office.
④ Available in 90″ high enclosure only. Unit space is 42 1/2″ with Test and Monitor Panel; 45″ without Test and Monitor Panel.
⑤ Not available on Sensitrip IV.
⑥ For required unit space — consult local sales office.
⑦ Price does not include control power transformer.
⑧ Price 600 Volt 7½″ high units. Mounting height increases to 6.25″ when shunt trip is required.
⑨ Shunt Trip on 100A frame breakers increases mounting height to 6.25″ for twin mounting.

Replacement Connecting Strap Guide

The following table may be used to obtain the proper connector kit by measuring the exterior dimensions of the panel. Every attempt has been made to make this table complete and accurate. The table is based on panels produced by ITE, Bulldog and Siemens from 1958 to present. Should any questions arise please contact your Siemens sales office for replacements.

Panelboard				
Tub Width	Depth	Panel Type	Replacement Max Amps	Note
30" - 36" - 42"	9"	OLD CDP	400	MCCB only.
	9.75"	OLD CDP	600	MCCB only.
32" - 38"	13.75"	CDP/VB6	1200A	MCCB series 6 connectors
			600A	"VB" style units only (*)
38"	12.75"	SPP/FPP6	1200A	MCCB series 6 connectors
			600A	"VK" or "VB" style (*)

* If switch unit width is 17" it is a vacubreak. If switch unit width is 23" or 28" it is a "VK" switch.

Connecting Strap For Use With SPP/FPP, S5③

Max Amp Rating	Breaker Family	Breaker Type	Catalogue Number	Unit Height	Mounting
100	General	BQ, BQH, HB BL, BLH, HBL, BQD6	**6BL2C**②⑤	3.75" (95)	Twin
125	General	NGB2, HGB2, LGB2	**SGB2DCAN**	3.75" (95)	Twin
	Sentron	ED2, ED4, ED6, HED4	**6E62**①②	3.75" (95)	
		CED6	**6CLE2**①	3.75" (95)	
	3VA	3VA41	**S3VA41TDCAN**	3.75" (95)	Twin
			S3VA41TDHCAN⑥	7.50" (191)	Twin, High Density
150	3VA	3VA61	**S3VA52TDCAN**⑤	5" (127)	Twin
225	General Purpose	QR2, QR2H, HQR2, HQR2H	**6QR2CAN**④	5" (127)	Twin
250	Sentron	FXD6, FD6, HFD6, HHFD6	**6F62**①	5" (127)	Twin
	VL	NFG, LFG	**SFGD**	5" (127)	
	Sentron	CFD6	**6CLF1C**	5" (127)	Single
	3VA	3VA52, 3VA62	**S3VA52TDCAN**⑤	5" (127)	Twin
400	Sentron	JXD6, JD6, HJD6, HHJD6	**6JJ62**①	8.75" (222)	Twin
	Sentron	CJD6	**6CLJ1C**	8.75" (222)	Single
600	Sentron	LXD6, LD6, HLD6, HHLD6, SLD6, SHLD6, SJD6, SHJD6	**6LL61C**	8.75" (222)	Single
		CLD6	**6CLL1C**	8.75" (222)	
		SCJD6, SCLD6	**6SCL61C**	8.75" (222)	
800	Sentron	MXD6, MD6, HMD6, CMD6, SHMD6, SCMD6, SJD6, SHJD6, SCJD6, SCLD6	**6M61C**	10" (254)	Single
1200	Sentron	NXD6, ND6, HND6, CND6, SHND6, SCND6	**6N61C**	10" (254)	Single

3VA Breaker Provision Kits

Breaker Type	Cat. Number	Description
3VA52, 3VA61 or 3VA62 Breaker	**S3VA52PRCAN**	Contains the necessary hardware to land breaker on an existing scrap kit

Blank Filler Plates (No Breaker Cutout)

For use with Series 6 CDP Panelboards, S5, F2, SMP, FCI and FCII Switchboards.	
Height	SPP/FPP/CDP/VB 6
1.25"	**6FPB01**
2.50"	**6FPB02**
3.75"	**6FPB03**
5.00"	**6FPB05**
10.00"	**6FPB10**
15.00"	**6FPB15**

Connecting Strap Kits and Front-Filler Plates① For use with NDP-CDP-7, S3

Breakers	Catalogue Number
BQD6 (S3 only)	**7 BQD6-2**
BL, BLH, HBL,	**7 BL-2**
ED2, ED4, ED6,HED4	**7 E6-2**
Filler 1 Pole	**DFFP1A**

① These are aluminum connectors. If copper is required please add suffix **C**.
② 3.75" (95) plate accommodates six 1-pole breakers.
③ Connecting strap kits include connecting straps, hardwares, and cover plates for switchboards and power panels. Breakers to be ordered separately.
④ QR filler plate only, use p/n: **6QR2FKCAN**. For copper QR kit, use p/n: **6QR2CCAN**.
⑤ To field install a single **3VA52**, **3VA61** or **3VA62** breaker to an existing strap, provision kit p/n: **S3VA52PRCAN** is required.
⑥ High Density Kit, requires 7.50" Unit Space to fit QTY (6) 2 Pole breakers.

Type F2

600 Volts AC, 250 Volts DC Maximum
600 Ampere Main Switch,
1200 Ampere Main Lugs Only
600 Ampere Maximum Branch
UL & CSA Short Circuit Rating — 200,000A IR Maximum

Meets 1996 NEC wire bending requirement, section 373-6.
CSA - C22.2 No. 0.12

Panelboards

Listed by Underwriters' Laboratories, Inc., under "Panelboards" File #E2269 for interiors and #E4016 for boxes and fronts & CSA Certificate No. 1518681.

Service

600 Volts AC, 250 Volts DC, Maximum. 1 Phase, 3 Wire; 3 Phase, 3 Wire; or 3 Phase, 4 Wire.

Boxes

38" wide, 12.75" deep, Type 1

Panelboard Fronts and Doors

Standard panelboards are furnished with 4 piece trim. Fronts are fabricated from code gauge steel and finished ASA61.

Fuses

The Proper Fuse Type for the Application is Selected Using the Following Parameters:

- Voltage Requirements
- Conductor Ampacity
- Horsepower Requirements
- Maximum Available RMS Fault Current
- CSA Fuse Class

Main Switch Panel Connectors

Ampere Rating	Connectors Range/Phase
400A-600A	(1, 2) #3/0-500MCM CU or (1) #4/0-500MCM AL
800A	(1-3) #1/0-500MCM CU/AL
1200A	(1-3) #1/0-500MCM CU/AL

Branch Switch Connectors

Switch Ampere Rating	Wire and Cable Range
30 60 100	(1)—#14–#2 AWG (Cu or Al) (1)—#14–#2 AWG (Cu or Al) (1)—#14–#1/0 AWG (Cu or Al)
200	(1)—#6 AWG–350 kcmil (Cu or Al)
400	(1) - 750 kcmil OR (2) - 250 kcmil (Cu or Al)
600	(2) - 750 kcmil OR (4) - 250 kcmil (Cu or Al)

Main Lug Panels

Ampere Rating	Connectors Range/Phase
225A - 400A	(1) #1/0-750MCM CU/AL or (2) #1/0-250MCM CU/AL
600A	(2) #1/0-750MCM CU/AL or (4) #1/0-250MCM CU/AL
800A	(3) #1/0-750MCM CU/AL or (6) #1/0-250MCM CU/AL
1200A	(4) #1/0-750MCM CU/AL or (8) #1/0-250MCM CU/AL

Gutters

Ampere Rating	End Gutters (Minimum inches)	Side Gutters (Minimum inches)
400	12	7.9
600	12	7.9
800	12	7.9
1200	12	7.9

Maximum VB HP Ratings

Amp Rating	3 Phase Volts 240	3 Phase Volts 480	3 Phase Volts 600	Single Phase Volts 240	DC Volts 250
30	7.5	15	20	3	5
60	15	30	50	10	10
100	30	60	50	15	20
200	60	125	50	–	40
400	50	50	50	–	50
600	50	50	–	–	–

Maximum VK HP Ratings

Amp Rating	3 Phase Volts 240	3 Phase Volts 480	3 Phase Volts 600	Single Phase Volts 240	DC Volts 250
30	7.5	15	20	3	5
60	1.5	30	50	10	10
100	30	50	75	15	20
200	60	125	150	15	40

CSA Fuse Classes

Class	Amperes	Volts	Interrupting Ratings	I^2t, I_p	Circuits
H (code)	1-600A	250 and 600V or less AC	10,000A	— —	Less than 10,000A available
K②	1-600A	250 and 600V or less AC	50,000A	—	Feeder circuits
J	1-600A	600V or less	To 200,000A	I^2t-Low I_p-Low	Feeder circuits (motor load small %)
RK1	1/10-600A	600V or less 250V or less	To 200,000A	I^2t-Slightly > J I_p-Slightly > J	Feeder circuits (motor load small %)
RK5	1/10-600A	600V or less 250V or less	To 200,000A	I^2t- > RK-1 I_p- > RK-1	Motor starting currents a factor
T	1-600A	300 and 600V or less AC	To 200,000A	I^2t-Low I_p-Low	Non-motor loads
L	601-5000A	600V or less	To 200,000A	I^2t-Low I_p-Low	Feeder circuits motor loads

Type F2

Maximum Panel Ampere	Unit Space (MLO)	Box Height	120/240Volts 1 Phase, 3 Wire	120/208 Volts 3 Phase, 4 Wire	600 Volts 3 Phase, 3 Wire	347/600 Volts 3 Phase, 4 Wire
400A	30″	60″				
600A	45″	75″				
800A	60″	90″				
1200A	60″	90″				

Branch Switches 600V Maximum①

Rating Ampere	Maximum Voltage	Fusing (1)	Mounting Height F2 38″ W
30/30A (VK)	600V	J	6.25(159)
60/60A (VK)			6.25(159)
100/100A (VK)			7.5(190)
200/200A (VK) 30/30A, 60/60A, 100/100A (VB)			10(254) 7.5(190)
200A (VB)			10(254)
400A (VB)			15(381)
600A (VB)			15(381)

① Single or twin units as listed and are valid for class C or J fuses. If class R or T fuse provisions are required add per table above.
② Not applicable to VB style units 400A and 600A.
③ Use of auxiliary switch kit will require the use of a 7.5″ (190) high unit for 30 and 60 Amp. switches.
④ Refer to Siemens for single phase and DC horsepower requirements.
⑤ Ratings are based on UL test procedure. CSA will not recognize ratings above 100Hp.

Type F2

When required, special constructions or additions to standard panelboards may be specified for all **factory-assembled** Power and Distribution Panelboards. Below and on the next page are listed many of those available, for Type F2 panelboards. In no case do these apply to **Narrow** (Column) Width Lighting Panelboards.

1. Miscellaneous

ENCLOSURE TYPE
Type 1 Type 2 (Drip-proof) Type 3R Type 12

2. Painted Finish

Description
Touch-Up Paint (ASA61, Light Gray) 12 oz. aerosol can, Catalog Number TUP-61

3. Miscellaneous Accessories

Nameplate — laminated, engraved Tamper-Proof Screws

4. Devices Mounted on Gutter Cover Includes Device, Mounting — Wired or Unwired

Description
Toggle Switch — SPST or 3-way; 15A Pilot Light — General Purpose, Neon or Incandescent Pushbutton

5. Grounding of Panelboards③

Non-Insulated Equipment Ground Bus Including Ground Lug
Insulated Equipment Ground Bus Including Ground Lug

6. Remote Control Switches④ 600V AC

600V AC Ampere Rating	ASCO 920 Mechanically Held⑤⑥		Siemens CLH Electrically Held⑦	
	2-Pole	3-Pole	2-Pole	3-Pole
30 60 75 100 150⑤ 200⑤ 225	Unit space 20″		Unit space 20″	

7. Increased Capacity Neutral

Ampere Rating		Unit Space (inches)
Phase	Neutral	
400	600	None
400	800	None
600	1200	None
800	1200	None

8. Main Bus

Standard main bus and ground bus is tin plated aluminum. For copper main bus, neutral bus and ground bus change prefix 'A' to 'C' on catalog number and contact your sales office for pricing.

9. Copper Lugs — For Main Lug Only Panels

Standard main lugs and neutral lugs are tin plated aluminum, UL & CSA listed for use with aluminum/copper cables. For copper Lugs in the mains and neutral for use with copper cables only, contact sales.

10. Feed-Through Lugs① (One Set Per Panel)

Ampere Rating			Unit Space (Additional inches)
	3-Pole	2-Pole	MLO
400	Consult Sales Office	Consult Sales Office	10
600			10
800			17.5
1200			17.5

11. MLO Compression Lugs

Available as main lugs and neutral lug.

Ampere Rating	Aluminum (Specify Size)	Copper (Specify Size)	Deduct From Available Unit Space (inches)
400			5
600			5
800			5
1200			5

12. VK Switch Accessories

Item	Cat. No.
Fuse Pullers (2) 30/60 mp	**FP2**
100 amp	**FP3**
200 amp	**FP4**

13. Sentron TPS (SPD Modules)

100 KA	200 KA	300 KA
150 KA	250 KA	
Options Surge Counter Remote Indicator		

14. Customer Metering

Siemens Digital Metering with Remote Display SEM3 Embedded Metering

① For use on main lug, main breaker or main switch panels without subfeed breakers.
② For increase in panelboard height — Consult local sales office.
③ Ground bar is not installed in box.
④ For required unit space — consult local sales office. Price includes increased enclosure height if required.
⑤ Devices listed by Underwriters' Laboratories, Inc. When 2 wire control is required. Relay and Terminal Block (9″ of unit space required).
⑥ For short circuit ratings with remote control switches consult sales office.
⑦ Panelboard short circuit rating is limited to 5,000 RMS symmetrical.

Type F2 Replacement Units①②

Amperes Rating	600 Volts J Fuses Cat. No.	Height in (mm)

VK Switch For Use With FPP6 Panelboard③④⑤⑨⑪

30/30	**VK23611JP**	6.25 (159)
60/60	**VK23622JP**	6.25 (159)
100/100	**VK33633JP**	7.5 (90)
200/200	**VK73644JP**	10 (254)

VB Switch For Use With VB6 Panelboards⑨⑪

30/30	**V7E3611JP**	7.5(190)
60/60	**V7E3622JP**	7.5(190)
100/100	**V7E3633JP**	7.5(190)
200	**V7F3604JP**	10(254)
400	**V7H3605JP**	15(381)
600	**V7H3606JP**	15(381)

Connecting Strap Kits⑩⑪

Rating Amperes	VB Switch Cat. No.	VK Switch Cat. No.	HCP Switch Cat. No.
30/30	VB6-71	VK6-57	N/A
60/60			
100/100		VK6-58	
200		N/A	
200/200	N/A	VK6-72	
400-600	VB6-150	N/A	
800-1200	N/A		F6162DCAN

Blank Filler Plates⑥

For use with Series 6 CDP Panelboards, S5, F2, FCI and FCII Switchboards.	
Height	SPP/FPP/CDP/VB 6
1.25″	**6FPB01**
2.50″	**6FPB02**
3.75″	**6FPB03**
5.00″	**6FPB05**
10.00″	**6FPB10**
15.00″	**6FPB15**

Panelboard				
Tub Width	Depth	Panel Type	Replacement Max Amps	Note
30″ - 36″ - 42″	9″	OLD CDP	400	MCCB only.
	9.75″	OLD CDP	600	MCCB only.
32″ - 38″	13.75″	CDP6/VB6	1200A 600A	MCCB series 6 connectors “VB” style units only (*)
38″	12.75″	SPP6/FPP6	1200A	MCCB series 6 connectors
			600A	“VK” or “VB” style (*)

① For Series 6 Main Devices above 200A, add suffix MS to Catalog Number when ordering.
② When 2-Pole units are required, use 3-Pole.
③ Series 6 (VB6, CDP6) replacement units and connector kits also accommodates FCI and FCII distributions interiors. Units installed after October 1991 will be FPP6 type.
④ Refer to Siemens for units equipped with auxiliary switches.
⑤ Price is for two brackets – to be included with filler plates.
⑥ To be used in tubs with 30-200A, VB units or fillers in $12\frac{5}{8}$″ deep tub.
⑦ Can be used as fillers or in place of circuit breakers, VK or VB Switches.
⑧ Special order
⑨ Fusible switch kits include fusible switches and cover plates for switchboards and power panels. Connecting strap kits to be ordered separately.
⑩ Connecting strap kits include connecting straps and hardware. See Note 9 for cover plates.
⑪ The fusible switches and connecting strap kits are designed for standard 38″W sections. Additional covers are required for wider sections. Please consult your local sales contact.

SEM3 System Configured in Panelboards

The Siemens SEM3 system can be configured for factory installation in branch circuit monitoring application. This option can lower the installation time of the system for the installer while providing a factory warrantied solution.

The SEM3 system can be factory installed in unit space in type P2 & S5 Siemens panel boards. Please note P1 and P3 configurations are not available at this time and the amount of unit space needed varies depending upon the application. Please note that lead time adders will apply and may vary depending upon the configuration of the system.

SEM3 for use in Siemens Panelboards

Available in a Type 1 and 2 rated enclosure



Controller

Each SEM3 Controller can monitor up to 45 circuits. Applications that require monitoring more than 45 circuits will require additional controllers.



Current Transformers (CTs)

Five sizes of CTs are available for use in the S5 panel: 50, 125, 250, 400, 600, 800 & 1200 amp. Each bracket supports a maximum of 3 CTs and is designed for the breaker selected (brackets are not interchangeable between breaker frames). Each CT will be attached to a data module that is placed in the meter racks.



Meter Racks

All meter racks will be installed next to the SEM3 controller unit space. The 21 space meter rack is used as a default option where possible.

NOTE: Monitoring of 45 circuits will require: two 21 position racks and one 3 position rack

Other Considerations

Configuration: Data modules from CTs monitoring a circuit breaker must be mounted adjacent to one another in the meter rack. Any field changes to the factory configuration must take this into account.

Start-up & Commissioning: Siemens can provide these services. Contact your local Siemens sales office for more details.

Panelboards

Panel Skirts/System Types, AC & DC Voltages

Conduit Enclosing Shield (Panel Skirts)

Sheet metal to cover conduits above or below a standard panelboard box.

Skirt Length	Width	Depth
8, 9, 11, 12	20.00	5.75
14, 17, 18, 23, 25	20.00	5.75
26, 27, 28, 29, 30, 31, 32, 33, 34, 35, 36	20.00	5.75
37, 38, 39, 40, 41, 42, 43, 44	20.00	5.75
8, 9, 11, 12	24.00	7.75
14, 17, 18, 23, 25	24.00	7.75
26, 27, 28, 29, 30, 31, 32, 33, 34, 35, 36	24.00	7.75
37, 38, 39, 40, 41, 42, 43, 44	24.00	7.75

Panel Skirts Standard Length

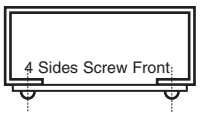

8, 9, 10,11, 12, 14, 17, 18, 23, 24, 25, 26, 27, 28, 29, 30, 31, 32, 33, 34, 35, 36, 37, 38, 39, 40, 41, 42, 43, 44

Busing

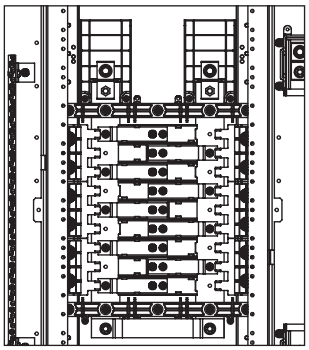

Single-phase

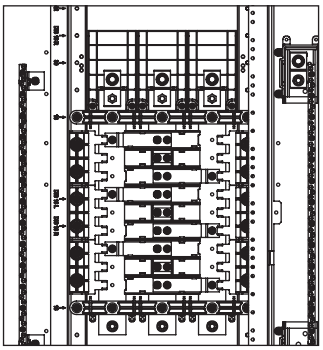

Three-phase

AC Voltages

1 phase, 2 wire
120V 1 phase, 2 wire
240V 1 phase, 2 wire

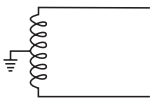

1 phase, 3 wire
120/240V 1 phase, 3 wire

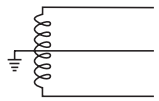

1 phase, 2 wire, Wye
277V 1 phase, 2 wire

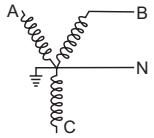

1 phase, 2 wire, Delta
480V 1 phase, 2 wire

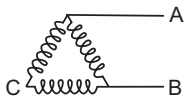

1 phase, 3 wire, Delta
240/480V 1 phase, 3 wire

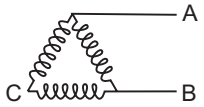

3 phase, 4 wire, Wye
208Y/120V 3 phase, 4 wire
480Y/277V 3 phase, 4 wire
600Y/347V 3 phase, 4 wire

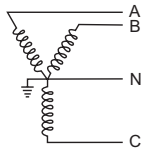

3 phase, 4 wire, Delta
240/120V 3 phase, 4 wire
480/240V 3 phase, 4 wire

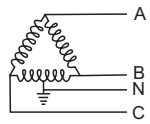

3 phase, 3 wire, Delta
240V, 3 phase, 3 wire
480V, 3 phase, 3 wire
600V, 3 phase, 3 wire
240V, 3 phase, 3 wire, grounded B
480V, 3 phase, 3 wire, grounded B
600V, 3 phase, 3 wire, grounded B

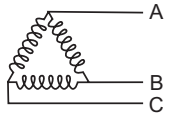

1 phase, 3 wire, Wye
208Y/120V 1 phase, 3 wire
480Y/277V 1 phase, 3 wire

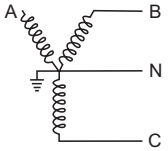

DC voltage

1 phase, 2 wire
125Vdc, 2 wire

(Up to 125Vdc, MLO option only.)

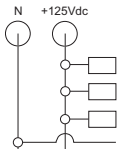

Panelboards

Type HCP Switchboard and Power Panel Units, Accessories

Selection

Features

- CSA certified under file #24563 and UL Listed under file #E6849 Vol 1, Sect. 8
- 400-1200A ratings
- Visible contacts
- Field installable shunt trip and auxiliary switch accessory kits
- Installs in existing Siemens switchboards
- Suitable for use on systems with up to 200,000A available fault current, RMS symmetrical when equipped with Class J or Class L fuses
- Group mounts with other 30A through 600A switches, and 100 through 1200 amp frame breakers
- Allows 800A and 1200A switches in standard 38" wide distribution sections in either main or branch configurations
- 16¼" mounting height is the smallest 1200A design in the industry, allowing up to 4 units in one vertical section
- Field reversible horizontal mounting design for left or right hand cabling
- Handle can be padlocked in the OFF position with up to three padlocks with 5/16" hasps. A cover padlocking provision is also supplied



3-Pole, Horizontal Mount①

Catalogue Number	Maximum Ampere Rating	Maximum AC Voltage Rating②	Fuse Class	Dimensions (inches*)			Horsepower Rating						
							240V		480V		600V		250V DC
				H	W	D	Std	Max	Std	Max	Std	Max	
HCP367HJ400	400	600	J	16.25	17.22	7.38	50	125	100	250	125	350	40
HCP367HJ600	600	600	J	16.25	17.22	7.38	75	200	150	400	200	400	40
HCP327HT	800	240	T	16.25	17.22	7.38	100	250	—	—	—	—	50
HCP367H	800	600	L	16.25	17.22	7.38	100	250	200	500	250	500	50
HCP328HT	1200	240	T	16.25	17.22	7.38	100	250	—	—	—	—	50
HCP368H	1200	600	L	16.25	17.22	7.38	100	250	200	500	250	500	50

3-Pole, Vertical Mount

HCP367VJ400	400	600	J	17.00	16.25	7.38	50	125	100	250	125	350	40
HCP367VJ600▲	600	600	J	17.00	16.25	7.38	75	200	150	400	200	400	40
HCP327VT	800	240	T	17.00	16.25	7.38	100	250	—	—	—	—	50
HCP367V	800	600	L	17.00	16.25	7.38	100	250	200	500	250	500	50
HCP328VT	1200	240	T	17.00	16.25	7.38	100	250	—	—	—	—	50
HCP368V	1200	600	L	17.00	16.25	7.38	100	250	200	500	250	500	50

Accessories

Terminal Connectors (one lug per kit)

Ampere Rating	Catalogue Number	Connector Wire Range
400–600A	**TA2K500**	(2) #1 AWG–500 kcmil (Cu or Al)
400–600A	**TC2K500**	(2) #1 AWG–500 kcmil (Cu only)
400–800A	**TA3K500**	(3) #1 AWG–500 kcmil (Cu or Al)
400–800A	**TC3K350**	(3) #1 AWG–350 kcmil (Cu only)
800-1200A	**TA4H500**	(4) #2 AWG–500 kcmil (Cu or Al)
800-1200A	**TA3H750**	(3) 500–750 kcmil (Cu or Al)

Auxiliary Switch Kits

Contact Ampere Rating	Maximum Voltage		Switch Mounting	Contacts	Catalogue Number
	AC	DC			
15A	480	125	Left Pole	1NO/1NC	**A01HCPL4▲**
15A	480	125	Right Pole	1NO/1NC	**A01HCPR4**

Shunt Trip Kit

Control Voltage		
AC	DC	Catalogue Number
120	—	**HCPST120**
240	—	**HCPST240▲**
277	—	**HCPST277**
480	—	**HCPST480▲**

Switchboard Connection Strap Kit①

Switch Ampere Rating	Catalogue Number
400–1200A	**F6162DCAN**

T Fuse Adapter Kits (one per pole)

Catalogue Number	Description
TFAK72	800A, 300V AC
TFAK75	800A, 600V AC
TFAK82	1200A, 300V AC

HCP Replacement Handle Kit
(For use on all HCP switches)

SW Ampere Rating	Catalogue Number
400–1200A	**HCPHK**

Compression Lug Adapter Kit

The use of this kit provides for the mounting of up to four lugs per phase. Each kit accepts lugs with (2) 3/8" diameter mounting holes on 1" centers. One kit per pole line or load is required. Lugs are not provided.

Ampere Rating	Catalog Number
400–1200A	**HCPCLP**

***For inches / millimeters conversion, multiply inches by 25.4.**

▲ Built to order. Allow 6–8 weeks for delivery.

① For horizontal mounting only in either 38" wide min switchboards or F2 power panelboards.

② Both 240 and 600V AC switches are also rated 250V DC max.

Horizontal Mount Drawing

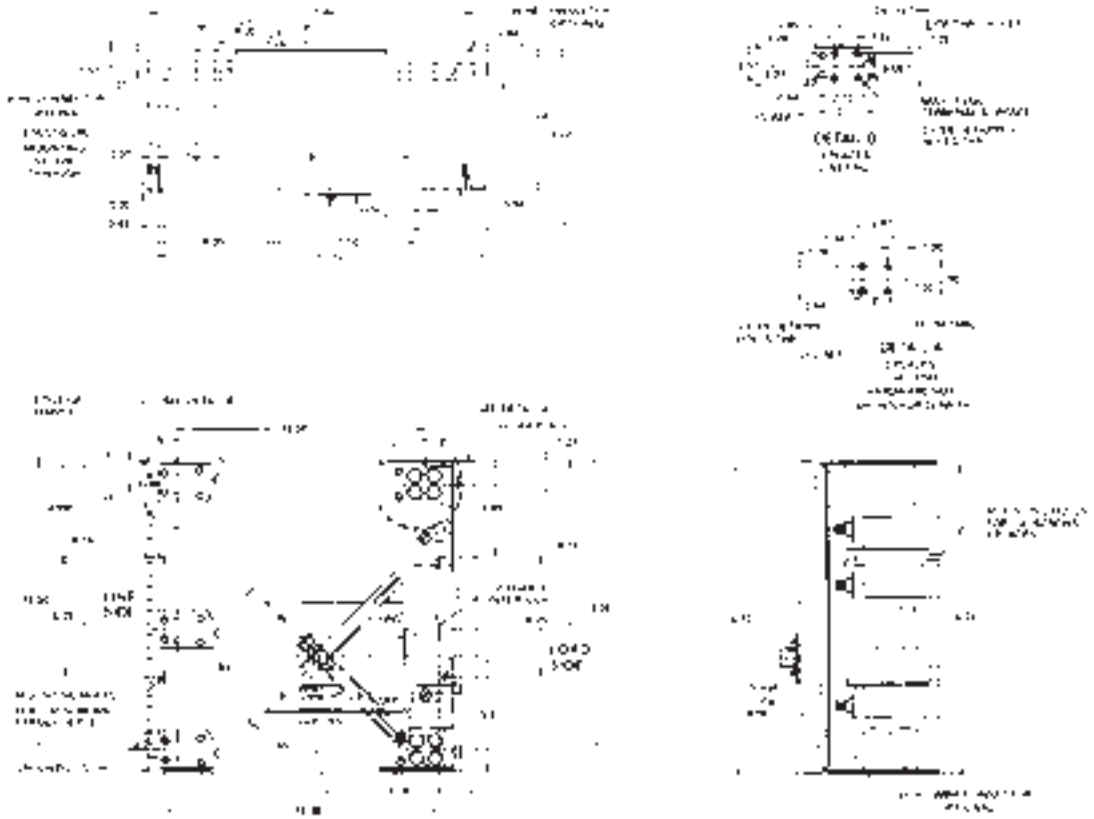

Group Mounting Assembly (Horizontal Mount Only)

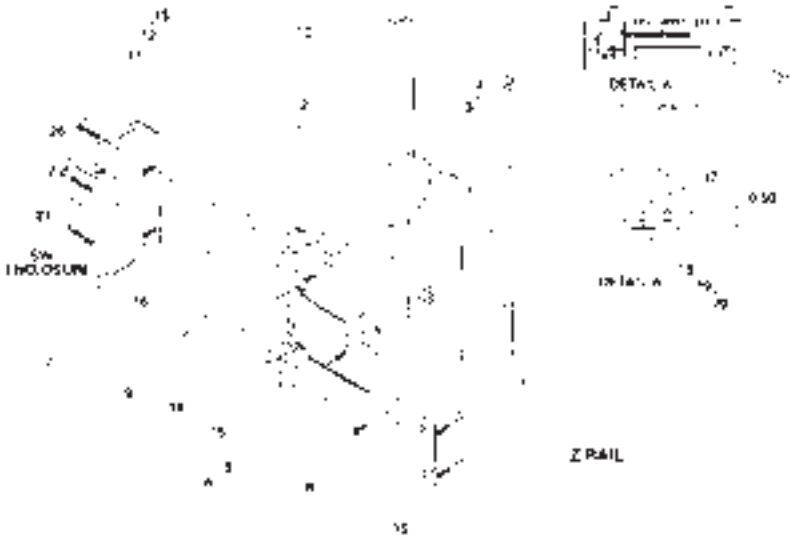

Item	Parts Supplied in Connection Strap Kit Cat. No. F6162D	Qty
1-2	[illegible]	[illegible]
3-4	3D Strap	[illegible]
5-6	[illegible]	[illegible]
7-8	[illegible]	[illegible]
9	[illegible]	[illegible]
10	[illegible]	[illegible]
[illegible]	[illegible]	[illegible]
12	[illegible]	[illegible]
13	[illegible]	[illegible]
14	[illegible]	[illegible]
15	[illegible]	[illegible]
16	[illegible]	[illegible]
17	[illegible]	[illegible]
18	[illegible]	[illegible]
19	[illegible]	[illegible]
20	[illegible]	[illegible]
21	[illegible]	[illegible]
26	[illegible]	[illegible]
27	[illegible]	[illegible]

Type C1

240 Volts AC Maximum
250 Ampere Mains
250 Ampere Maximum Branch
UL Short Circuit Rating —
200,000 IR Maximum

Branch Breaker Symmetrical Interrupting Rating

Based on Underwriters' Test Procedure

Type C2

480Y/277 Volts AC Maximum
250 Ampere Mains
250 Ampere Maximum Branch
UL Short Circuit Rating —
100,000 IR Maximum

Meets NEC wire bending requirement, section 312–6.

Panelboards

Listed by Underwriter's Laboratories, Inc., under "Panelboards" File #E2269.

Meets Federal Specification W–C375B/Gen.

Service

240 Volts Maximum. 1-Phase, 3-Wire, or 3-Phase, 4-Wire.

Panelboards Fronts and Doors

Standard panelboards are furnished with trim with a flush door lock. All are factory assembled for ease of installation. Fronts are fabricated from code gauge steel and finished ANSI-61.

Main Breakers C1

BL, BLH and HBL frame breakers are mounted horizontally. All other frames are mounted vertically.

Main Breakers C2

BQD frame breakers are mounted horizontally. All other frames are mounted vertically.

Boxes

C1 — 7⅝" wide, 5¾" deep.
C2 — 8½" wide, 5¾" deep.

Branch Breaker Side Gutters

Type	Circuit Breaker	Side Gutter (inches)
C1	BL, BLH, HBL	3.505
C2	BQD	3.5

Weight–Approximate

Total panelboard weight when filled with a normal quantity of breakers and accessories is:
*About 3 lbs. per inch of box height.

Gauge Steel Boxes

Type	Width	Height	Gauge Steel
C1	7⅝"	48", 73", 85"	#14
C2	8½"	48", 73", 85"	#14

Fronts

C1	7⅝"	48", 73", 85"*	#14
C2	8½"	48", 73", 85"*	#14

***Note:** Feed thru lugs and subfeed breaker not available for this height.

Main Breaker Connectors

Ampere Rating	Connectors suitable for Cu or Al
100	(1) #14–1/0 AWG
125	(1) #4–1/0 AWG
225	(1) #6 AWG–300 kcmil
250	(1) #4 AWG–350 kcmil Al (1) #6 AWG–350 kcmil Cu

Main Lugs

125	(1) #6 AWG–350 kcmil
250	(1) #6 AWG–350 kcmil

For inches / millimeters conversion, see Application Data section.

① Connector ranges indicated do not apply to all main breaker types. Refer to molded case circuit breaker standard pressure wire connectors in the breaker section of this catalog for the wire ranges for a specific breaker frame.

Branch Breaker Selection C1

Breaker Type	Available Ampere Rating	Availability 1-Pole	2-Pole	3-Pole	Maximum Interrupting Rating (kA) 120V	120/240V	240V
BL (120V)	15, 20, 30, 40, 50, 60	√	√	√	—	10	—
	70	√	√	√	—	10	—
	70, 80, 90, 100	—	√	√	—	10	—
BLF (GFCI)	15, 20, 30	√	√	—	10	—	—
	40, 50, 60	—	√	—	10	—	—
BLE (EQGFI)	15, 20, 30	√	√	—	10	—	—
BGL (SWN)	15, 20, 30	—	√	√	10	—	—
BLR (240V)	15, 20, 30, 40, 50, 60	—	√	—	—	—	10
	70, 80, 90, 100	—	√	—	—	—	10
BLH (120V)	15, 20, 30, 40, 50, 60	√	√	√	—	22	—
	70	√	√	√	—	22	—
	70, 80, 90, 100	—	√	√	—	22	—
BLHF (GFCI)	15, 20, 30	√	√	—	—	22	—
	40, 50, 60	—	√	—	—	22	—
HBL	15, 20, 30, 40, 50	√	√	√	—	65	65
	60, 70, 80, 90, 100	—	√	√	—	65	65

Subfeed Breakers — Limit One Per Panel② C1 (Not available for 42 circuit panels)

ED4	15, 20, 30, 40, 50, 60, 70, 80, 90, 100	—	√	√	—	—	65
	110, 125	—	√	√	—	—	65
HED4	15, 20, 30, 40, 50, 60, 70, 80, 90, 100	—	√	√	—	—	65
	110, 125	—	√	√	—	—	100
QR2	100, 110, 125, 150, 175, 200, 225	—	√	√	—	—	10
FXD6	70, 80, 90, 100, 110, 125, 150, 175, 200, 225, 250	—	√	√	—	—	65
HFD6③	70, 80, 90, 100, 110, 125, 150, 175, 200, 225, 250	—	√	√	—	—	100

Alternate Main Breaker Selection①②③ C2

Ampere Rating	Breaker Type	IR	Catalogue Number	Available Trip Values
100	BQD	14	**BD**	50, 60, 70, 80, 90, 100
	ED4	18	**E4**	50, 60, 70, 80, 90, 100
	ED6	25	**E6**	50, 60, 70, 80, 90, 100
	HED4	42	**H4**	50, 60, 70, 80, 90, 100
	HHED6	65	**H6**	50, 60, 70, 80, 90, 100
125	ED4	18	**E4**	110, 125
	ED6	25	**E6**	110, 125
	HED4	42	**H4**	110, 125
	HHED6	65	**H6**	110, 125
225	FXD6	35	**FX**	70, 80, 90, 100, 110, 125, 150, 175, 200, 225
	HFD6	65	**HF**	170, 80, 90, 100, 110, 125, 150, 175, 200, 225
250	FXD6	35	**FX**	250
	HFD6	65	**HF**	250

Branch Circuit Breakers C2

Breaker Type	Available Ampere Rating	Availability 1-Pole	2-Pole	3-Pole	Maximum Interrupting Rating (kA) 277V	480/277V	480V
BQD	15, 20, 30, 40, 50, 60	√	√	√	14	14	—
	70, 80, 90, 100	√	√	√	14	14	—

Subfeed Breakers — Limit One Per Panel①② C2 (Not available for 42 circuit panels)

ED4	15, 20, 30, 40, 50, 60, 70, 80, 90, 100	—	√	√	—	18	18
	110, 125	—	√	√	—	18	18
ED6	15, 20, 30, 40, 50, 60, 70, 80, 90, 100	—	√	√	—	—	25
	110, 125	—	√	√	—	—	25
HED4	15, 20, 30, 40, 50, 60, 70, 80, 90, 100	—	√	√	—	—	42
	110, 125	—	√	√	—	—	42
FXD6	70, 80, 90, 100, 110, 125, 150, 175, 200, 225, 250	—	√	√	—	—	35
HFD6	70, 80, 90, 100, 110, 125, 150, 175, 200, 225, 250	—	√	√	—	—	65

① No increase in box height. Space is already built into C1 panel.
② BL, BLH, HBL and BQD are horizontally mounted. All others vertically mounted.
③ Interchangeable trip breakers such as FD6 and HFD6 cannot be back fed. Must be top feed only.

Type C1/C2

When required, special constructions or additions to standard panelboards may be specified for factory-assembled column panelboards.

Box Modifications

Description
Gasketed
Metal Card Holder
Welded Metal Card Holder
Nameplate
Al Ground Bar
Cu Ground Bar
Insulated Al Ground Bar
Insulated Cu Ground Bar

Interior Modifications

Description
Feed-Thru Lugs
Cu Neutral Lugs
Cu main Lugs 125A
Cu main Lugs 250A

Box Sizing Chart

Certain modifications such as subfeed breakers and feed-thru lugs require additional unit space. Use this chart to determine proper enclosure size.

Panel Configuration	Box Height (inches)
All MLO 18 Circuit All MLO 30 Circuit All MLO 42 Circuit	48 73 85
All MLO 18 Circuit with feed-thru lugs All MLO 30 Circuit with feed-thru lugs	73 85
All MLO 18 Circuit with subfeed breaker All MLO 30 Circuit with subfeed breaker	73 85
All Main Breaker 18 Circuit All Main Breaker 30 Circuit All Main Breaker 42 Circuit	48 73 85
All Main Breaker 18 Circuit with feed-thru lugs All Main Breaker 30 Circuit with feed-thru lugs	73 85
All Main Breaker 18 Circuit with subfeed breaker All Main Breaker 30 Circuit with subfeed breaker	73 85

Column Extension

Available in various standard lengths, extensions are 5¼ inches deep and 7 inches wide.

Height (inches)	Catalogue Number①
14	**LXX-14**
20	**LXX-20**
26	**LXX-26**
32	**LXX-32**
38	**LXX-38**
41	**LXX-41**
44	**LXX-44**
53	**LXX-53**
56	**LXX-56**
62	**LXX-62**
65	**LXX-65**
68	**LXX-68**
74	**LXX-74**
80	**LXX-80**
86	**LXX-86**

Pull Boxes

Two styles of pull boxes are available, top and front mounted. When the panel and its extensions are mounted in a structural WF beam a front mounted pull box is required. When the panels are surface mounted, a top mounted pull box may be used. Provisions are made so that the neutral bar may be mounted in the pull box when required.
(Front mounted pull box dimensions are 14" H. X 20" W.)

Description	Catalogue Number①
Top Mount	**LXXP-T**
Front Mount②	**LXX50-F**

Breaker Kits and Accessories

Kit Number	Description	Contents
MBKQRC1FK	C1 Filler for QR in Main position 1PH or 3PH	Kit contains all cover plates necessary to change from QJ to QR both 2 and 3-pole breakers.

① Must be ordered as a manual line.
② Includes 50" extension.

Conduit Enclosing Shield (Panel Skirts)

Sheet metal to cover conduits above or below a standard panelboard box.

Skirt Length	Width	Depth
8, 9, 11, 12	20.00	5.75
14, 17, 18, 23, 25	20.00	5.75
26, 27, 28, 29, 30, 31, 32, 33, 34, 35, 36	20.00	5.75
37, 38, 39, 40, 41, 42, 43, 44	20.00	5.75
8, 9, 11, 12	24.00	7.75
14, 17, 18, 23, 25	24.00	7.75
26, 27, 28, 29, 30, 31, 32, 33, 34, 35, 36	24.00	7.75
37, 38, 39, 40, 41, 42, 43, 44	24.00	7.75

Panel Skirts Standard Length

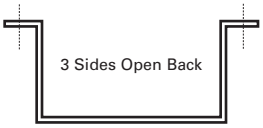

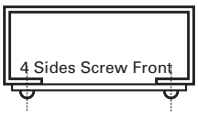

8, 9, 10,11, 12, 14, 17, 18, 23, 24, 25, 26, 27, 28, 29, 30, 31, 32, 33, 34, 35, 36, 37, 38, 39, 40, 41, 42, 43, 44

① Available only as a main switch for non-service equipment applications. Not available for branch devices.

Enclosure/System Types, AC & DC Voltages

Type 1

- Flush or surface mount.
- Galvanized steel with removable end walls –blank or with knockouts to order.
- Box sizes: 20" W x 5.75" D x 33", 50", 59" or 69" H (510 W x 145 D x 838, 1270, 1500 or 1753mm H). Box can be rotated 180° to accommodate conduit feed.
- Enclosure and chassis mounting instructions are found in supplied literature.
- Chassis mounts directly onto studs in the enclosure.
- Trim finished with gray powder coat paint over phosphatized steel (ANSI 61).
- Door and door-in-door configurations with locks.
- Door locks use key #2A1910-2.
- Circuit directory card is located on the inside of the door.
- Trim screws are concealed.

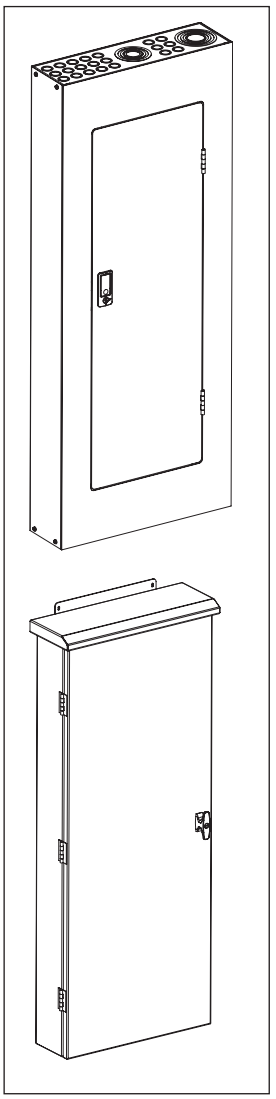

Type 3R

Surface mount only.
Finished with gray powder coat paint over phosphatized steel (ANSI 61).
Bottom feed only, no knockouts
Box sizes: 20" W x 7.7" D x 34.5", 51.5", 60.5" or 70.5 H (510 W x 195 D x 876, 1310, 1535 or 1791mm H).
Enclosure and chassis mounting instructions are found in supplied literature
Chassis mounts directly onto studs in the enclosure.
Gasketed door has vault handle with lock.
Door locks use key #2A1910-1.
Circuit directory card is located on the inside of the door.

Busing

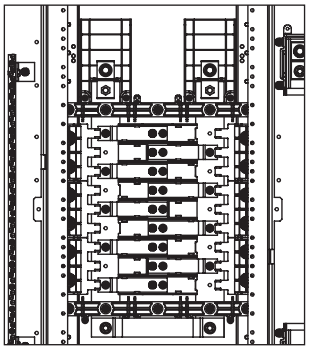

Single-phase

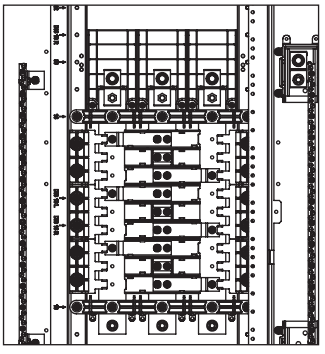

Three-phase

AC Voltages

1 phase, 2 wire
120V 1 phase, 2 wire
240V 1 phase, 2 wire

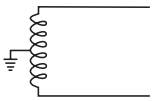

1 phase, 3 wire
120/240V 1 phase, 3 wire

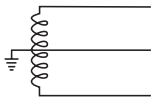

1 phase, 2 wire, Wye
277V 1 phase, 2 wire

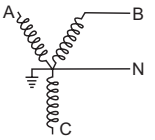

1 phase, 2 wire, Delta
480V 1 phase, 2 wire

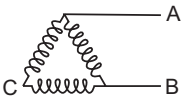

1 phase, 3 wire, Delta
240/480V 1 phase, 3 wire

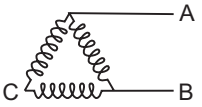

3 phase, 4 wire, Wye
208Y/120V 3 phase, 4 wire
480Y/277V 3 phase, 4 wire
600Y/347V 3 phase, 4 wire

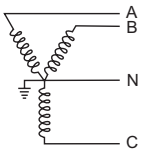

3 phase, 4 wire, Delta
240/120V 3 phase, 4 wire
480/240V 3 phase, 4 wire

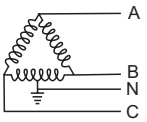

3 phase, 3 wire, Delta
240V, 3 phase, 3 wire
480V, 3 phase, 3 wire
600V, 3 phase, 3 wire
240V, 3 phase, 3 wire, grounded B
480V, 3 phase, 3 wire, grounded B
600V, 3 phase, 3 wire, grounded B

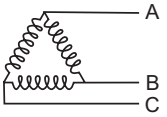

1 phase, 3 wire, Wye
208Y/120V 1 phase, 3 wire
480Y/277V 1 phase, 3 wire

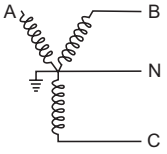

DC voltage

1 phase, 2 wire
125Vdc, 2 wire

(Up to 125Vdc, MLO option only, SCCPB 40A or less.)

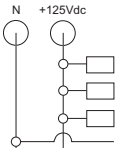

NEMA 1 and 3R Enclosure Dimensions

Encl. Type	Encl. Height	Dimensions (inches) H	HC	MH	CH	DH	RH	SH	DW	D
NEMA 1	33	33.0	N/A	29.0	26.0	28.9	25.0	2.0	20.0	5.7
	50	50.0	N/A	43.0	40.0	37.9	39.0	3.5	20.0	5.7
	59	59.0	N/A	52.0	49.0	46.9	48.0	3.5	20.0	5.7
	69	69.0	N/A	62.0	59.0	56.9	58.0	3.5	20.0	5.7
NEMA 3R	33	33.0	34.5	35.5	26.0	28.9	25.0	2.0	20.0	6.3
	50	50.0	51.5	52.5	40.0	37.9	39.0	2.0	20.0	6.3
	59	59.0	60.5	61.5	49.0	46.9	48.0	2.0	20.0	6.3
	69	69.0	70.5	71.5	59.0	56.9	58.0	2.0	20.0	6.3

Available panelboard configurations

Based on enclosure height, panel amp rating and number of branch circuit positions

Encl. height (inches)	Panel amp rating	Branch positions	Available configurations
33″	30–200	18	· Main lug only, with or without feed-through lugs · Non-fused disconnect, no loadside options
		30	· Main lug only, no loadside options
50″	30–60	18	· 30 through 60A fused main disconnect with or without feed-through lugs or TVSS device
		30	· 30 through 60A fused main disconnect with or without feed-through lugs or TVSS device
		42	· 30 through 60A fused main disconnect with or without feed-through lugs or TVSS device
	70–200	18	· 70 through 200A fused main disconnect with or without feed-through lugs or TVSS device
		30	· 70 through 200A fused disconnect with or without feed-through lugs
	30–200	18	· Main lug only with TVSS device · Non-fused disconnect, with feed-through lugs or TVSS device
		30	· Main lugs only, with feed-through lugs or TVSS device · Non-fused disconnect, with or without feed through lugs
		42	· Main lug only, with or without feed-through lugs or TVSS device · Non-fused disconnect, with or without feed-through lugs
	225–400A	18	· Main lug only, with ot without feed through lugs or TVSS device · Non-fused disconnect, with or without feed-through lugs
		30	· Main lug only, with or without feed-through lugs
59″	70–200	30	· 70 through 200A fused main disconnect, with TVSS device
		42	· 70 through 200A fused main disconnect with or without feed-through lugs or TVSS device
	30–200	42	· Non-fused disconnect with TVSS device
	225–400A	18	· Main lug only with loadside disconnect · Non-fused disconnect, with TVSS device · 225 through 400A fused disconnect with or without feed-through lugs or TVSS device
		30	· Main lug only, with TVSS device · 225 through 400A fused disconnect, with no loadside options
		42	· Main lug only, with or without feed-through lugs or TVSS device · Non-fused disconnect, with no loadside options
69″	225–400A	18	· Non-fused disconnect, with loadside disconnect
		30	· Main lug only with loadside disconnect · 225 through 400A fused disconnect with feed-through lugs or TVSS device
		42	· Non-fused disconnect, with or without feed through lugs or TVSS device · 225 through 400A fused main disconnect, with or without feed-through lugs or TVSS device

NEMA 1 Enclosures and Interior

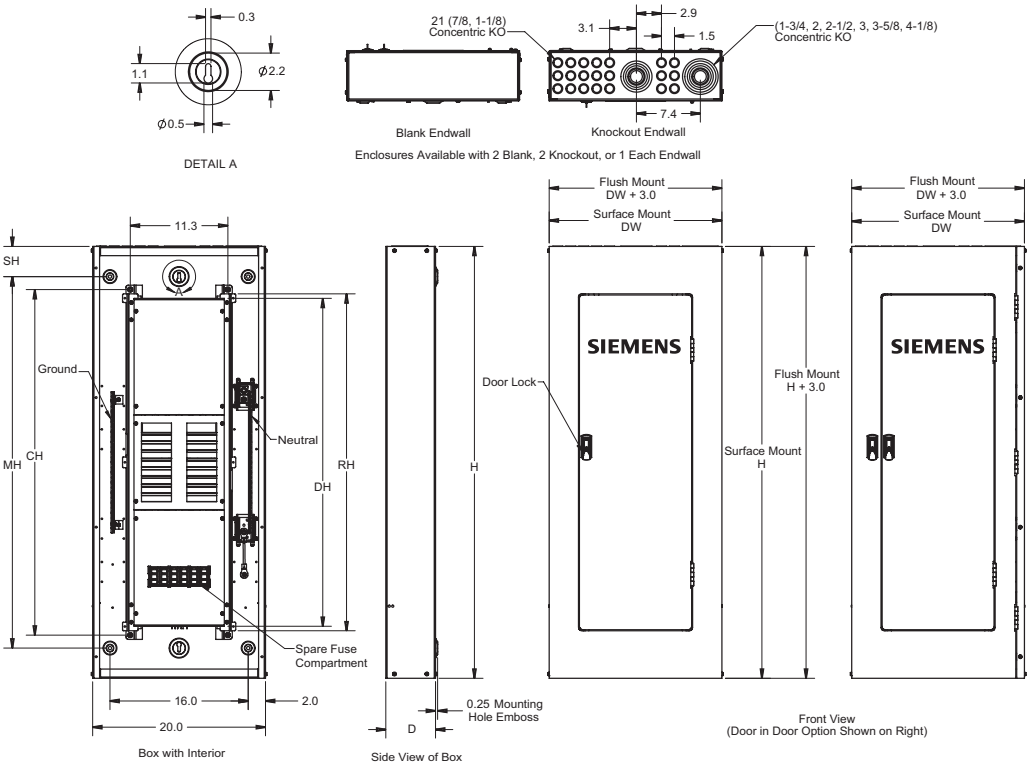

NEMA 3R Enclosures Interior same as NEMA 1

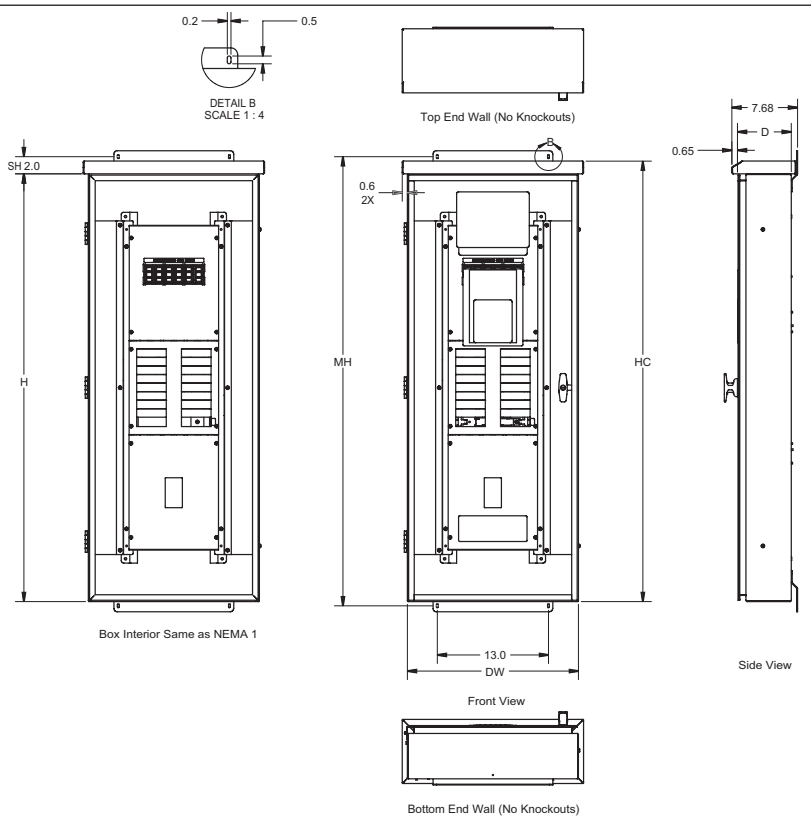

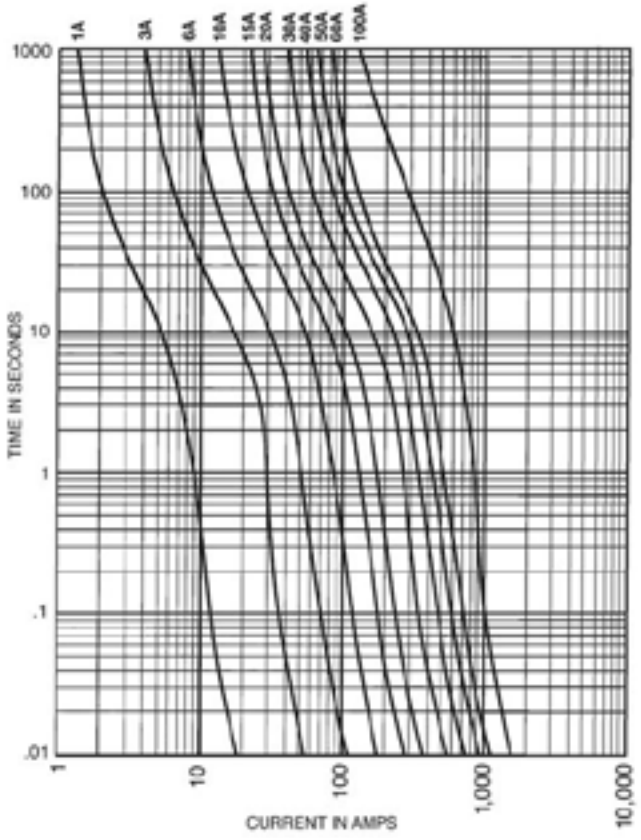

Time-Current Characteristic Curves–
Average Melt

Current Limitation Curves

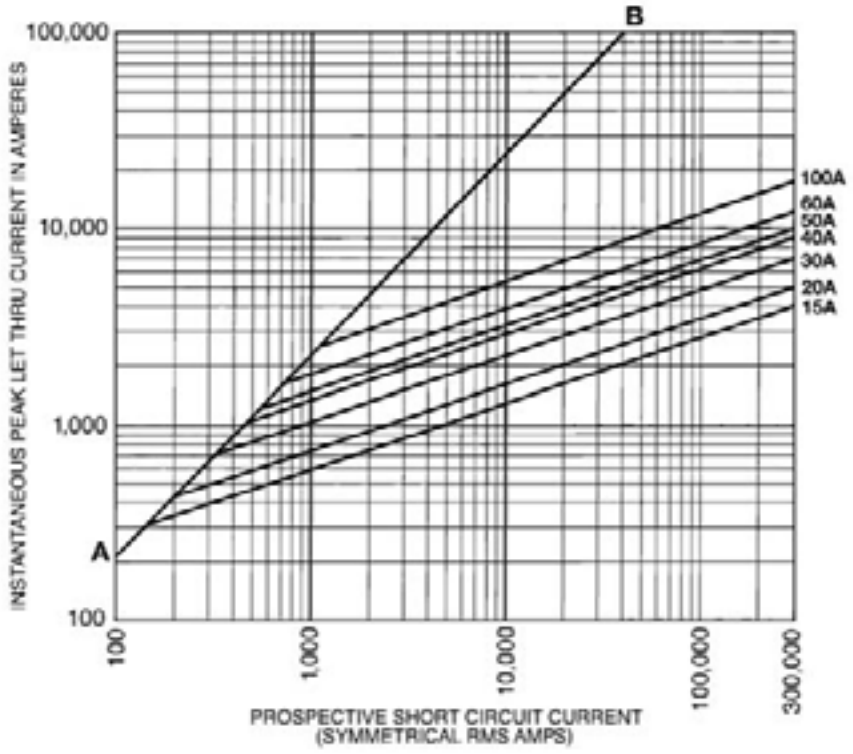

Notes

Contents

Distribution Switchboards (Type SB1, SB2, SB3) 11-2

Type SMP

Construction Details Features 11-5

Features 11-6

Specification 11-11

Type FCI, FCII 11-13

Construction Details Features 11-14

Features 11-15

Specifications 11-17

Modifications and Additions Replacements for Circuit Breakers and Fusible Switches Selection 11-20

Protective Devices

Sentron™ Molded Case Circuit Breakers 11-21

Solid State Sensitrip™ Molded Case Circuit Breakers 11-22

Fusible Switches 11-23

HCP Disconnect Switches 11-24

Metering Data 11-26

Type IPS - Integrated Power Systems Switchboard

Features 11-27

Embedded Micro Metering Module (SEM3) 11-29

Distribution Switchboards

Type SB1, SB2 and SB3

Product Description

Siemens modular front connected switchboard design provides a broad range of features and capabilities for a wide range of applications.

Every aspect of design of Siemens switchboards has been aimed at improving layout convenience, reducing installation costs and minimizing the impact and cost of changes to the system.

Siemens switchboards provide a rugged design and the flexibility necessary in electrical systems for all types of applications, some examples are:

- Commercial buildings
- Industrial plants
- Retail chain stores
- Health care facilities
- Hi-rise complexes



Front Connected Distribution Switchboard (Type SB2)

Features & Benefits

Features

- Up to 4000 ampere main bus rating
- Up to 600 volts AC
- Bus bracing up to 100KAIC
- Tin plated aluminum bus, silver plated copper bus or tin plated copper bus
- Bussing can be temperature or density rated
- Type 1, Type 2, Sprinkler Proof and Type 3R enclosures
- Main and branch circuit breakers and fusible switches
- Thermal magnetic and solid state circuit breakers
- Surge protective devices
- Customer metering
- Utility metering provisions
- Ground fault protection on mains and distribution devices
- Busway and transformer connections
- Power monitoring on mains and branches

Service Sections

Typical switchboards require one or more service main disconnects that feed one or more distribution sections. Service sections can be fed from overhead or underground, occasionally underground applications require that a pull section to be added to the switchboard lineup.

Distribution Sections

All switchboard distribution sections can accommodate any combination of panel mounted or individually mounted circuit breakers or fusible switches. This modularity allows future system modifications to be made without adding switchboard sections.

Front Accessibility

All Siemens switchboards are rear aligned and front accessible, enabling switchboards to be placed against a wall, while minimizing floor space requirements. Switchboards are standard rear aligned to minimize floor space requirements but can be front and rear aligned as an option.

Rear Accessibility

Rear access is available as an option for when bus maintenance and cable entry and exit require access to the rear of the switchboard.

Features & Benefits (continued)

Protective Devices

Thermal magnetic molded case circuit breakers can be supplied from 15 to 1200 amperes. Solid state (electronic) molded case circuit breakers are available from 30 to 1200 amperes. The solid state trip units provide finite trip setting adjustment, Modbus and Profibus communication along with many other features.

WL circuit breakers can be provided from 200 to 4000 amperes with solid state trip units.

For fusible applications VB and VK fusible switches can be supplied as branch devices.

Power Monitoring

Power monitoring can be accomplished in both service and distribution sections with a wide array of power monitoring products. Digital and analog meters can be applied as well as branch circuit monitoring devices for tenant sub-billing or cost allocation applications. See section 8 of the Power Product Catalogue for further information on power monitoring devices.

Surge Protective Devices

Siemens surge protective devices can be applied in switchboards to improve the electrical system's protection, safety and reliability. These devices can be applied in customer metering compartments in main service sections or can be panel mounted in auxiliary compartments in distribution sections. See section 9 of the Power Product Catalogue for further information on surge protection devices.

Arc Flash Mitigation

Many arc flash mitigating features can be incorporated into switchboards. The WL breaker can be provided with Dynamic Arc Flash Sentry to allow for safer device settings when personnel are working near the switchboard. Also, breaker shutters, remote racking devices and infrared scanning windows can be supplied to further protect personnel from potential arc flash hazards.

Busway and Transformer Connections

Busway and transformer incoming and outgoing connections can be provided in switchboards. For busway connections to the switchboard, bussing is provided up to where the busway enters the switchboard. Also, a cutout for the busway is provided to allow for quick connection of the switchboard to the busway. For transformer connections, flex connectors are supplied for close coupling the switchboard to the secondary side of the unit substation.

Standards and Certifications

- UL891 (cUL)
- NEMA PB-2
- Seismically qualified
- CSA C22.2 No. 244

Additional Information

For complete application and pricing information contact your local Siemens sales office.

For detailed configuration information consult the selection and application guide on the website.



Front Connected Distribution Switchboard (Type SB2)

Individual Product lines

SB1 Switchboards

Siemens SB1 switchboards have been specifically designed for applications where floor space is at a premium. The rear of all sections align so the switchboard can be installed against a wall. SB1 switchboards can contain main and branch protective devices and through bus ratings up to 2000 amperes and 600 Volts AC.

SB2 Switchboards

Siemens SB2 switchboards have been designed to be able to incorporate additional features. SB2 switchboards can have extra depth behind the bussing in each distribution section, can be front and rear aligned and can handle up to 4000 amperes and 600 Volts AC. These switchboards may also include insulated case circuit breakers, solid state molded case circuit breakers and density rated bussing.

SB3 Switchboards

Siemens SB3 switchboards are designed for custom options. SB3 switchboards can incorporate custom busway & transformer connections, rear access, all types of utility metering provisions and many other options. No matter your need, Siemens SB3 switchboards can provide a solution.

SB1 Switchboards

Available Features	Device Usage	Device Type	Ampere Rating	Mounting
▪ Individual or panel mounted mains ▪ Individual or panel mounted branches ▪ Thermal magnetic MCCBs ▪ 2000A maximum main bus ▪ Front accessible ▪ Rear Aligned ▪ Standard Utility Metering Position ▪ Customer metering: digital & analog meters ▪ 65KAIC interruption rating ▪ 65C Copper and Aluminum bussing ▪ Type 1, Type 2, Sprinkler Proof and Type 3R enclosures	Main	Molded Case Circuit Breakers (MCCB)	400 - 1200	Panel / Individual
	Branch	Molded Case Circuit Breakers (MCCB) Fusible Switches (VB and VK)	15 - 1200 30 - 600	Panel Panel

SB2 Switchboards

Available Features	Device Usage	Device Type	Ampere Rating	Mounting
▪ All SB1 options ▪ 4000A maximum main bus ▪ Electronic trip unit (solid state) MCCBs ▪ Density rated copper and aluminum bussing ▪ 100KAIC interruption rating ▪ Standard Maintenance Mode DAS (Dynamic Arc Sentry)	Main	All SB1 main devices WL Insulated Case Circuit Breakers (WL)	 Up to 4000	 Individual
	Branch	All SB1 branch devices WL Insulated Case Circuit Breakers (WL)	 Up to 4000	 Individual

SB3 Switchboards

Available Features	Device Usage	Device Type	Ampere Rating	Mounting
▪ All SB1 & SB2 options ▪ 4000A maximum main bus ▪ 400KAIC interruption rating ▪ Rear accessible ▪ Custom busway and transformer connections ▪ Additional special options and configurations	Main	All SB1 & SB2 main devices WL Insulated Case Circuit Breakers (WL)	 Up to 4000	 Individual
	Branch	All SB1 & SB2 branch devices WL Insulated Case Circuit Breakers (WL)	 Up to 4000	 Individual

Sentron® SMP Switchboards

Construction Details

Simplified system design.
A typical SMP switchboard consist of a floor mounted, wall supported service section, and a distribution section. The wireway can also be added where required by the local utility or if additional cable termination space is required.

Wireways are modular to allow flexibility.
The wireway is available in 2 depths to suit customer needs. Wireway has split front doors as standard with optional hinged doors. The lug pads are standard NEMA hole pattern and accept up to 5 mechanical lugs or 6 compression lugs.

90°C rated wireway.

The termination temperature for main incoming cables can be sized at 90°C for bussed pull sections.

Service Entrance Sections house a variety of equipment.

- *Service Entrance Sections.*

Service sections can be fed directly from overhead by cable.

Service entrance sections equipped for bottom feed will accept cable from underground directly into the service section.

- *Utility Metering*

In addition to the main device, the service section contains utility metering provisions. "Cold" metering provisions (CT's on the load side of the main device) are furnished. The CT's are provided by the utility company. The compartment will be built to utility company standards, with hinged doors and provisions for utility metering equipment.

- *User Metering*

The service section provides space for the Siemens Digital Meter with remote display, and it's associated components.

- *Main protective device*

The MCCB is mounted individually so that it can be located quickly in an emergency. SMP switchboards will accommodate different types of main circuit breakers. Selection depends on the characteristics of your individual electrical system.

Distribution Sections have ample wiring room and front accessibility.
Generous top or bottom gutters have been created by locating the bus-link in the top or bottom of the distribution section, so there's ample room to run cables into the distribution section and make connections.

Standard bolted covers allow complete access to load conductors. Future flexibility comes standard in the Siemens SMP switchboard. The distribution section can accommodate any combination of panel mounted devices, including MCCBs and fusible disconnect switches.

Operating temperatures are in accordance with CSA Standards
Bus bars are available in standard tin-finished aluminum or optional silver-finished copper. Standard bus is sized on the basis of heat rise criteria, in accordance with CSA C22.2 #31. All bus bars are sized to limit heat rise to 65°C above an ambient temperature of 40°C.

Bus-Link Connections are accessible from the front.

The Bus-Link can be bolted from the front of the switchboard. Each bus-link is attached by grade five bolts to assure solid joints between sections, and to maintain full bus ampacity through the joint.

To make installation and servicing of the bus-link easier, all phase and neutral busses are stacked one above the other.

Cable Terminals

Screw mechanical connectors (lugs) are provided as standard equipment.

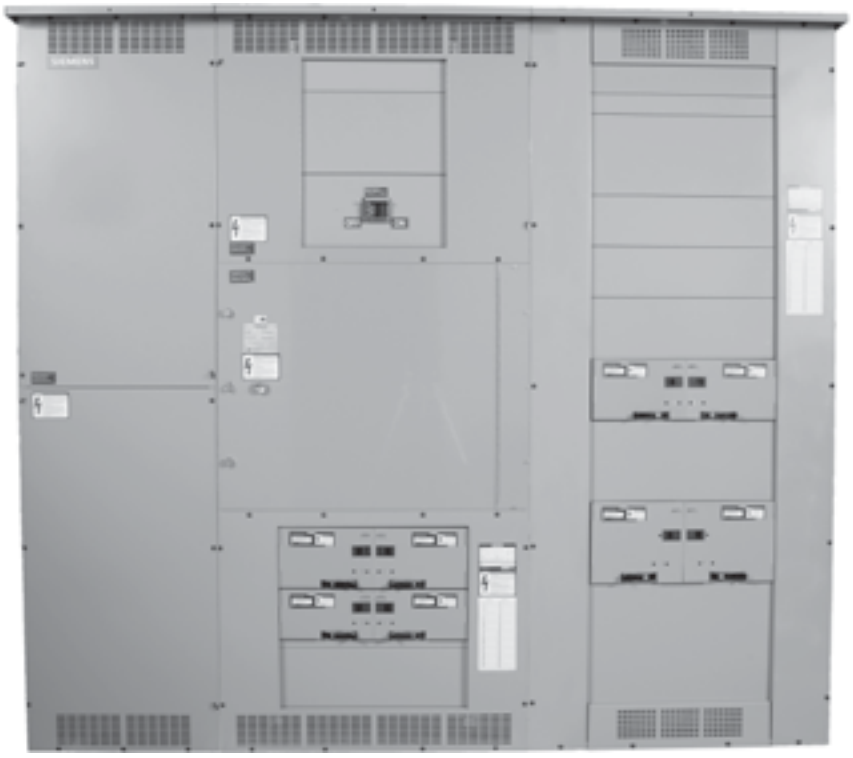

Sentron® SMP Switchboards

Power and Distribution

SMP Switchboard Introduction

Whether the design is for a 240V AC, 400 ampere system; a 600V AC, 1200 A ampere system; or something in between, Siemens Sentron Switchboards should be considered. Every aspect of design has been aimed at improving layout convenience, reducing installation costs, and minimizing the impact and cost of system changes. These switchboards provide the space saving construction and service flexibility necessary in systems for light industrial plants, retail strip malls, and commercial buildings.

Service entrance sections of the SMP accepts a wide range of Sentron Molded Case Circuit Breakers as main disconnect devices.

The SMP switchboard is designed for special configurations. It can be equipped with incoming and outgoing cable/conduit connections, supplied with metering and other special features.

The distribution sections of all Sentron Switchboards are designed with improved wiring space and greater accessibility. They're also designed for easier installation and maintenance. Conveniently located bus-link without compromising useful wiring gutter space, and standard bolted gutter covers offer complete access to load conductors. Front accessibility to bus and protective devices makes adding or replacing circuit breakers or switches quick and easy.

SMP Switchboard Features and Ratings

- **Main bus** rated up to 1200 ampere.
- Rear of all sections aligned so that switchboard can be floor mounted and secured against the wall.
- Front connected and front accessible.
- **Main devices** – individually mounted.
  Molded Case Breaker: 400-1200 amps.
- **Branch Devices** – panel mounted.
  Molded Case Breaker: 15–1200 amps fixed.
  Quick-Make Quick-Break Fusible Switch: 30 - 600A

600 Volts AC Maximum
1200 Ampere Mains
1200 Ampere Maximum Branch
CSA Short Circuit Rating —
65,000A IR Maximum

CSA Certified To: CAN/CSA-22.2 No. 31-18

CSA Certificate No. 70172996

SMP Specifications (Table 1)

SMP Switchboard	
Enclosure Type	Type 1 Type 2 (dripproof & sprinklerproof) Optional: Dripshield
Dimensions Main or Distribution Wireway	38" W x 90" H x 12.75" Dp 24" W x 90" H x 12.75" Dp or 25.5" Dp
Volts	600V Max
Amperes	400-1200A
Bus Type	Aluminum (tin plated) Copper (silver finished) optional
Bus Bracing	50 KA 65 KA (optional)
Interrupting Capacity	50 KA 65 KA (optional)
Entry	Cable only (top or bottom)
Main Device	MCCB 400-1200A ▪ 80% Rated ▪ 100% Rated (option)
Branch Devices (Unit Space)	52.5" in Main with Distribution Section, or 22.5" in MUD Section, or 60" in Distribution Section
Metering Devices	Siemens Digital Metering with Remote Display SEM3 Embedded Metering
Other Options	SPD Units Sill Channels (1.5") Lifting Hooks

Main and Distribution Section Dimensions (Table 2)

Switchboard Type	Access	Dimensions - Inches (mm)		
		H	W	D
SMP	Front	90" (2286)	38" (965)	12.75" (324)



① Only available as a Wireway.

Protective Devices - Molded Case Circuit Breakers

Standard

Breakers are designed for commercial, industrial, institutional and other heavy duty applications. They are rated up to 600V AC and 250V DC. Their interrupting ratings are higher than normal duty breakers.

High Interrupting

Breakers are designed for heavy duty applications where the interrupting requirements exceed the ratings of heavy duty breakers. They are rated up to 600V AC.

Current Limiting

Molded case breakers incorporate the exclusive I-T-E blow-apart interruption principle. They meet the CSA requirements for current-limiting breakers. Current-limiting circuit breakers can limit the let-through I^2t to a value less than the I^2t of one-half cycle wave of the symmetrical prospective current without any fusible elements when operating within their current-limiting range.

Main Breaker Selection (Table 3)

Amperage Rating	Breaker Type	Trip Type	Maximum Interrupting Rating (kA) 240V	480V	600V	Available Trip Values
400	JXD6	Thermal Magnetic	65	35	25	200, 225, 250, 300, 350, 400
	JD6		65	35	25	200, 225, 250, 300, 350, 400
	HJD6		100	65	35	200, 225, 250, 300, 350, 400
	HHJD6		200	100	50	200, 225, 250, 300, 350, 400
	CJD6		200	150	100	200, 225, 250, 300, 350, 400
	SJD6	Electronic (Solid State)	65	35	25	200, 300, 400
	SHJD6		100	65	35	200, 300, 400
	SCJD6		200	150	100	200, 300, 400
600	LXD6	Thermal Magnetic	65	35	25	450, 500, 600
	LD6		65	35	25	250, 300, 350, 400, 450, 500, 600
	HLD6		100	65	35	250, 300, 350, 400, 450, 500, 600
	HHLD6		200	100	50	250, 300, 350, 400, 450, 500, 600
	CLD6		200	150	100	450, 500, 600
	SLD6	Electronic (Solid State)	65	35	25	300, 400, 500, 600
	SHLD6		100	65	35	300, 400, 500, 600
	SCLD6		200	150	100	300, 400, 500, 600
800	MXD6	Thermal Magnetic	65	50	25	500, 600, 700, 800
	MD6		65	50	25	500, 600, 700, 800
	HMD6		100	65	50	500, 600, 700, 800
	CMD6		200	100	65	500, 600, 700, 800
	SMD6	Electronic (Solid State)	65	50	25	600, 700, 800
	SHMD6		100	65	50	600, 700, 800
	SCMD6		200	100	65	600, 700, 800
1200	NXD6	Thermal Magnetic	65	50	25	800, 900, 1000, 1200
	ND6		65	50	25	800, 900, 1000, 1200
	HND6		100	65	50	800, 900, 1000, 1200
	CND6		200	100	65	800, 900, 1000, 1200
	SND6	Electronic (Solid State)	65	50	25	800, 1000, 1200
	SHND6		100	65	50	800, 1000, 1200
	SCND6		200	100	65	800, 1000, 1200

Branch Breaker Gutter Dimensions

For 38"W Distribution Section **(Table 5)**

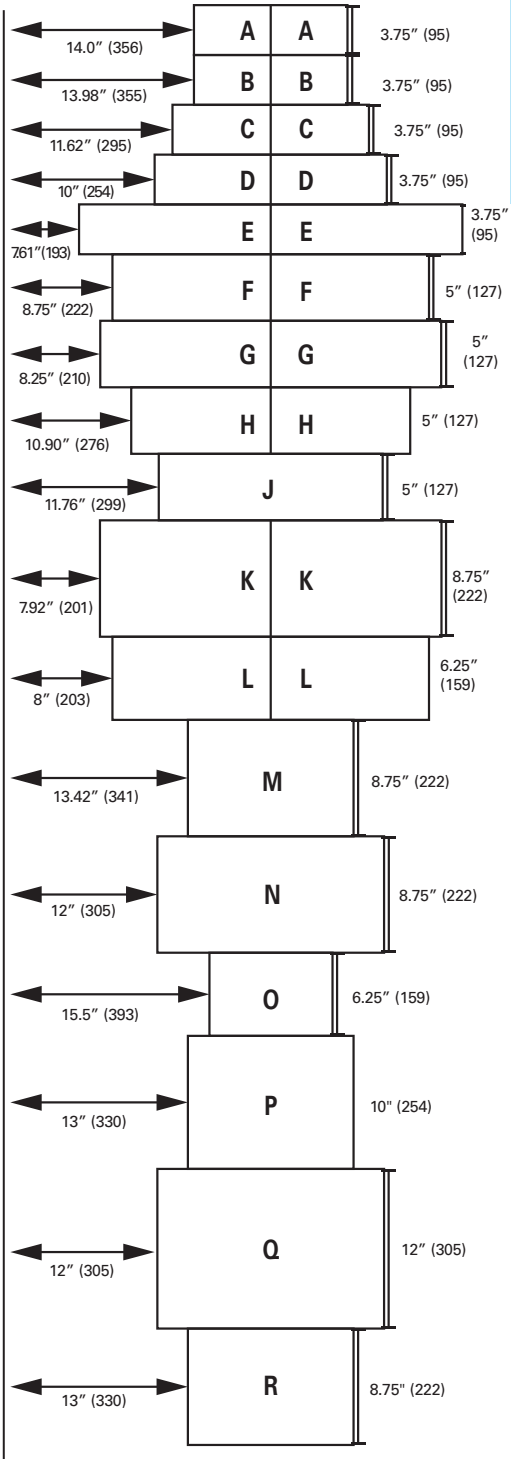

Sentron® SMP Switchboards

Power and Distribution

Selection

Branch Circuit Breaker Selection① (Table 4)

Breaker Frame Rating	Trip Type	Breaker Type	Poles	Trip Amperage	Mounting Height Inches (mm)			Max IC Rating (kA)		
					Single	Twin	Gutter⑤	240V	480V	600V
100	Thermal Magnetic	BL	1, 2, 3	15, 20, 25, 30, 40, 50, 60, 70, 80, 90, 100	—	3.75 (95)②③	14 (356)	10	—	—
		BLH	1, 2, 3	15, 20, 25, 30, 40, 50, 60, 70, 80, 90, 100	—	3.75 (95)②③	14 (356)	22	—	—
		HBL	1, 2, 3	15, 20, 25, 30, 40, 50, 60, 70, 80, 90, 100	—	3.75 (95)②③	14 (356)	65	—	—
		BQD6④	1, 2, 3	15, 20, 30, 40, 50, 60, 70	—	3.75 (95)②③	14 (356)	65	—	10
	Ground Fault Circuit Interrupter	BLE (GFCI)	1, 2	15, 20, 30, 40, 50, 60	—	3.75 (95)②	14 (356)	10	—	—
		BLF (GFCI)	1, 2	15, 20, 30, 40, 50, 60	—	3.75 (95)②	14 (356)	10	—	—
		BLHF (GFCI)	1, 2	15, 20, 30, 40, 50, 60	—	3.75 (95)②	14 (356)	22	—	—
	Arc Fault Circuit Interrupter	BAF (AFCI)	1	15, 20	—	3.75 (95)②	14 (356)	10	—	—
		BAFH (AFCI)	1	15, 20	—	3.75 (95)②	14 (356)	22	—	—
125	Thermal Magnetic	ED2	1, 2, 3	15, 20, 30, 35, 40, 50, 60, 70, 80, 90, 100	3.75 (95)②③	3.75 (95)②③	10 (254)	10	—	—
		ED4	1, 2, 3	15, 20, 30, 35, 40, 50, 60, 70, 80, 90, 100, 110, 125	3.75 (95)②③	3.75 (95)②③	10 (254)	65	18	—
		ED6	1, 2, 3	15, 20, 30, 35, 40, 50, 60, 70, 80, 90, 100, 110, 125	3.75 (95)②③	3.75 (95)②③	10 (254)	100	18	18
		HED4	1, 2, 3	15, 20, 30, 35, 40, 50, 60, 70, 80, 90, 100, 110, 125	3.75 (95)②③	3.75 (95)②③	10 (254)	100	65	30
		CED6	2, 3	15, 20, 30, 35, 40, 50, 60, 70, 80, 90, 100, 110, 125	3.75 (95)③	3.75 (95)③	7.61 (193)	200	200	100
		NGB2	1, 2, 3	15, 20, 25, 30, 35, 40, 50 ,60, 70, 80, 90, 100, 110, 125	3.75 (95)②③	3.75 (95)②③	13.98 (355)	100	25	14
		HGB2	1, 2, 3	15, 20, 25, 30, 35, 40, 50 ,60, 70, 80, 90, 100, 110, 125	3.75 (95)②③	3.75 (95)②③	13.98 (355)	100	35	22
		LGB2	1, 2, 3	15, 20, 25, 30, 35, 40, 50 ,60, 70, 80, 90, 100, 110, 125	3.75 (95)②③	3.75 (95)②③	13.98 (355)	100	65	25
		3VA41 (SEAB)	1, 2, 3	15, 20, 25, 30, 35, 40, 45, 50 ,60, 70, 80, 90, 100, 110, 125	3.75 (95)	3.75 (95)	13.98 (355)	65	25	14
		3VA41 (MEAB)	1, 2, 3	15, 20, 25, 30, 35, 40, 45, 50 ,60, 70, 80, 90, 100, 110, 125	3.75 (95)	3.75 (95)	13.98 (355)	85	35	18
		3VA41 (HEAB)	1, 2, 3	15, 20, 25, 30, 35, 40, 45, 50 ,60, 70, 80, 90, 100, 110, 125	3.75 (95)	3.75 (95)	13.98 (355)	150	65	25
150	Electronic (Solid State)	3VA61 (MDAE)	3	40, 100, 150	5 (127)	5 (127)	9.59 (244)	100	35	18
		3VA61 (HDAE)	3	40, 100, 150	5 (127)	5 (127)	9.59 (244)	100	65	22
		3VA61 (CDAE)	3	40, 100, 150	5 (127)	5 (127)	9.59 (244)	200	100	35
		3VA61 (LDAE)	3	40, 100, 150	5 (127)	5 (127)	9.59 (244)	200	150	50
225	Thermal Magnetic	QR2	2, 3	100, 110, 125, 150, 175, 200, 225	5 (127)	5 (127)	8.75 (222)	10	—	—
		QRH2	2, 3	100, 110, 125, 150, 175, 200, 225	5 (127)	5 (127)	8.75 (222)	25	—	—
		HQR2	2, 3	100, 110, 125, 150, 175, 200, 225	5 (127)	5 (127)	8.75 (222)	65	—	—
		HQR2H	2, 3	100, 110, 125, 150, 175, 200, 225	5 (127)	5 (127)	8.75 (222)	100	—	—
250	Thermal Magnetic	FXD6, FD6	2, 3	70, 80, 90, 100, 110, 125, 150, 175, 200, 225, 250	5 (127)	5 (127)	8.25 (210)	65	35	22
		HFD6	2, 3	70, 80, 90, 100, 110, 125, 150, 175, 200, 225, 250	5 (127)	5 (127)	8.25 (210)	100	65	25
		CFD6	2, 3	70, 80, 90, 100, 110, 125, 150, 175, 200, 225, 250	—	5 (127)	11.76 (299)	200	200	100
		3VA52 (MFAS)	2, 3	40, 45, 50, 60, 70, 80, 90, 100, 110, 125, 150, 175, 200, 225, 250	5 (127)	5 (127)	10.10 (257)	85	35	18
		3VA52 (HFAS)	2, 3	40, 45, 50, 60, 70, 80, 90, 100, 110, 125, 150, 175, 200, 225, 250	5 (127)	5 (127)	10.10 (257)	100	65	25
		3VA52 (CFAS)	2, 3	40, 45, 50, 60, 70, 80, 90, 100, 110, 125, 150, 175, 200, 225, 250	5 (127)	5 (127)	10.10 (257)	200	100	35
	Electronic (Solid State)	3VA62 (MFAE)	3	100, 250	5 (127)	5 (127)	9.59 (244)	100	35	18
		3VA62 (HFAE)	3	100, 250	5 (127)	5 (127)	9.59 (244)	100	65	22
		3VA62 (CFAE)	3	100, 250	5 (127)	5 (127)	9.59 (244)	200	100	35
		3VA62 (LFAE)	3	100, 250	5 (127)	5 (127)	9.59 (244)	200	150	50
400	Thermal Magnetic	JXD6, JD6	2, 3	200, 225, 250, 300, 350, 400	8.75 (222)	8.75 (222)	7.92 (201)	65	35	25
		HJD6	2, 3	200, 225, 250, 300, 350, 400	8.75 (222)	8.75 (222)	7.92 (201)	100	65	35
		HHJD6	2, 3	200, 225, 250, 300, 350, 400	8.75 (222)	8.75 (222)	7.92 (201)	200	100	50
		CJD6	2, 3	200, 225, 250, 300, 350, 400	8.75 (222)	—	12 (305)	200	150	100
	Electronic (Solid State)	SJD6	3	200, 300, 400	8.75 (222)	—	13.42 (341)	65	35	25
		SHJD6	3	200, 300, 400	8.75 (222)	—	13.42 (341)	100	65	35
		SCJD6	3	200, 300, 400	8.75 (222)	—	12 (305)	200	150	100
		NJG	3	250, 400	6.25 (159)	6.25 (159)	8 (203)	65	35	25
		LJG	3	250, 400	6.25 (159)	6.25 (159)	8 (203)	200	100	25
600	Thermal Magnetic	LXD6	2, 3	450, 500, 600	8.75 (222)	—	13.42 (341)	65	35	25
		LD6	2, 3	250, 300, 350, 400, 450, 500, 600	8.75 (222)	—	13.42 (341)	65	35	25
		HLD6	2, 3	250, 300, 350, 400, 450, 500, 600	8.75 (222)	—	13.42 (341)	100	65	35
		HHLD6	2, 3	250, 300, 350, 400, 450, 500, 600	8.75 (222)	—	13.42 (341)	200	100	50
		CLD6	2, 3	450, 500, 600	8.75 (222)	—	12 (305)	200	150	100
	Electronic (Solid State)	SLD6	3	300, 400, 500, 600	8.75 (222)	—	13.42 (341)	65	35	25
		SHLD6	3	300, 400, 500, 600	8.75 (222)	—	13.42 (341)	100	65	35
		SCLD6	3	300, 400, 500, 600	8.75 (222)	—	12 (305)	200	150	100
800	Thermal Magnetic	MXD6	2, 3	500, 600, 700, 800	10 (254)	—	13 (330)	65	50	25
		MD6	2, 3	500, 600, 700, 800	10 (254)	—	13 (330)	65	50	25
		HMD6	2, 3	500, 600, 700, 800	10 (254)	—	13 (330)	100	65	50
		CMD6	2, 3	500, 600, 700, 800	10 (254)	—	13 (330)	200	100	65
	Electronic (Solid State)	SMD6	3	600, 700, 800	10 (254)	—	12 (305)	65	50	25
		SHMD6	3	600, 700, 800	10 (254)	—	12 (305)	100	65	50
		SCMD6	3	600, 700, 800	10 (254)	—	12 (305)	200	100	65
1200	Thermal Magnetic	NXD6	2, 3	800, 900, 1000, 1200	10 (254)	—	13 (330)	65	50	25
		ND6	2, 3	800, 900, 1000, 1200	10 (254)	—	13 (330)	65	50	25
		HND6	2, 3	800, 900, 1000, 1200	10 (254)	—	13 (330)	100	65	50
		CND6	2, 3	800, 900, 1000, 1200	10 (254)	—	13 (330)	200	100	65
	Electronic (Solid State)	SND6	3	800, 1000, 1200	10 (254)	—	12 (305)	65	50	25
		SHND6	3	800, 1000, 1200	10 (254)	—	12 (305)	100	65	50
		SCND6	3	800, 1000, 1200	10 (254)	—	12 (305)	200	100	65

① Space includes housing frame plate with blank cover plate. Provision includes all necessary mounting hardware, less circuit breaker, and includes housing frame cover plate with breaker handle opening.

② 1 to 6 poles may be mounted in 3.75" (95) of unit space

③ Accessories such as shunt trips on three pole breakers require 6.25" (159) of unit space.

④ Also 10kA at 600Y/347 Volts.

⑤ Refer to Table 5 for layout dimensions.

Fuse Selection

The Proper Fuse Type for the Application is Selected Using the Following Parameters:

- Voltage Requirements
- Conductor Ampacity
- Horsepower Requirements
- Maximum Available RMS Fault Current
- CSA Fuse Class

Branch Switch Gutter Dimensions

For 38W Distribution Section **(Table 8)**

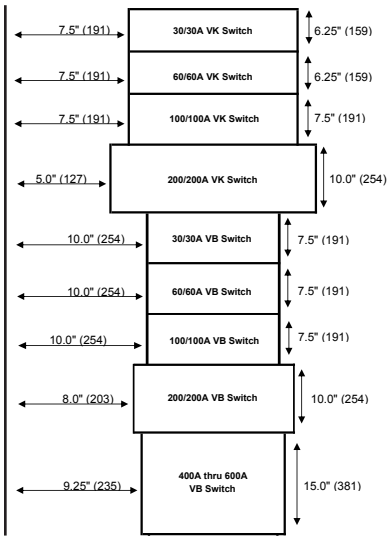

Maximum VB HP Ratings (Table 6)③

Amp Rating	Volts			
	3 Phase			Single Phase
	240	480	600	240
30	7.5	15	20	3
60	15	30	50	10
100	30	60	50	15
200	60	125	50	–
400	50	50	50	–
600	50	50	50	–

Maximum VK HP Ratings (Table 9)③

Amp Rating	Volts			
	3 Phase			Single Phase
	240	480	600	240
30	7.5	15	20	3
60	1.5	30	50	10
100	30	50	75	15
200	60	125	150	15

Branch Switches 600V Maximum (Table 11)

Rating Ampere	Max Voltage	Fusing	Mounting Height 38"W
30/30A & 60/60A (VK)⑤	600V	Class J	**6.25" (159)**
100/100A (VK)⑤	600V	Class J	**7.5" (190)**
200/200A (VK)⑤	600V	Class J	**10.0" (254)**
30/30A & 60/60A (VB)	600V	Class J	**7.5" (190)**
100/100A (VB)	600V	Class J	**7.5" (190)**
200A (VB)	600V	Class J	**10.0" (254)**
400A & 600A (VB)	600V	Class J	**15.0" (381)**

Branch Switch Connectors (Table 10)④

Switch Ampere Rating	Wire and Cable Range
30	(1)—#14–#4 AWG (Cu or Al)
60	(1)—#14–#4 AWG (Cu or Al)
100	(1)—#10–#1/0 AWG (Cu or Al)
200	(1)—#6 AWG-350kcmil (Cu or Al)
400	(1)—#1/0 AWG-750 MCM OR (2)—#1/0 AWG-250 MCM (Cu or Al)
600	(1)—#1/0 AWG-750 MCM OR (2)—#1/0 AWG-250 MCM (Cu or Al)

Switch Interrupting Ratings

Switch Type	Interrupting Rating (kA)		
	240V	480V	600V
VB	200	100	100
VK	200	200	200

Gutters (Table 12)

Ampere Rating	End Gutters Minimum - Inches (mm)	Side Gutters Minimum - Inches (mm)
400	12" (305)	7.9" (201)
600	12" (305)	7.9" (201)

Switch Accessories (Table 13)

Fuse Pullers (VK)	Cat. No.
30 or 60 Amp	**FP2**
100 Amp	**FP3**
200 Amp	**FP4**

CSA Fuse Classes (Table 14)

Class		Amperes	Volts (AC)	I^2t, Ip (Let-Thru)	Circuits
H	Standard Code	1-600A	250 and 600V or less	— —	Less than 10,000A available
K①	Fast Acting (One time)	1-600A	250 and 600V or less	—	Feeder circuits
J	Fast Acting and Time Delay	1-600A	600V or less	Ip and I2t-Low (motor load small %)	Feeder circuits Motor circuits
RK1	Fast Acting and Time Delay	1/10-600A	600V or less 250V or less	I2t-Slightly > J Ip-Slightly > J	Feeder circuits Motor circuits
RK5	Fast Acting and Time Delay	1/10-600A	600V or less 250V or less	I2t- > RK-1 Ip- > RK-1	Feeder circuits Motor circuits
C (FORM II)	Moderate Delay	2-600A	600V or less	I2t- < RK-5 Ip- < RK-5	Motor circuits
T	Fast Acting	1-600A	300 and 600V or less	I2t-Low Ip-Low	Non-motor loads
L	Fast Acting and Time Delay	601-5000A	600V or less	I2t-Low motor loads	Feeder circuits Motor circuits

① Fuse clips do not prohibit the use of Class H type fuse in switch.
② Refer to Siemens for single phase and DC horsepower requirements.
③ Ratings are based on UL test procedure.
④ Connector range applies to VB Switches only.
⑤ Not suitable for use in distribution space in main section.

Sentron® SMP Switchboards

Power and Distribution

Selection

Special Construction, Additions and Accessories

When required, special constructions or additions to standard Switchboards may be specified for all **factory-assembled** Power and Distribution Switchboards. Listed below are those available for Type SMP Switchboards.

1. Enclosure Type

38" Enclosure Types
Type 1 Type 2 (dripproof & sprinklerproof) Optional: Dripshield

2. Wireway Options

24"W x 90"H x 12.75" Dp	Hinged Door
	Door Covers
24"W x 90"H x 25.5" Dp	Hinged Door
	Door Covers

3. Painted Finish

Touch-Up Paint (ASA61, Light Grey)
12 oz. aerosol can, Cat. #TUP-61

4. Miscellaneous Accessories

Nameplate - laminated and engraved

5. Bus-Link (One Set Per Panel)

Ampere Rating	Unit Space Occupied in MUD - Inches (mm)
400-1200	Consult Factory

6. Grounding of SMP Switchboard

Non-Insulated Equipment Ground Bus Including Ground Lug Continuous Solid Copper Ground (optional)

7. Main Bus

Standard Main bus and Neutral bus are tin plated aluminum or silver finished copper (option).

8. Lugs

For Main Device and Neutral
For Main Breakers please see SpeedFax section #6 Neutral - please consult factory

9.SPD Modules

Sentron TPS3 05
100KA
150KA
200KA
250KA
300KA
Options: Surge Counter Remote Monitor

10. Circuit Breaker Accessories

Handle Blocking Device
Blocks handle in either the "ON" or "OFF" position. Available for:

Breaker Type	Cat. Number
BL, BLH, HBL, BQ, BQH, HBQ	**ECQL1**
All BQD, GB	**BQDHBD**
All QR	**HPLQR**
All BQD, NGB, NGB2, HGB2, LGB2	**BQDHBD**
All ED	**E2HBL**
All FD	**FD6HB1**
All JD, LD	**JD6HBL**
All MD, ND, PD	**MN6BL**
3VA52/61/62	**3VA93780LB10**

Padlocking Device — Padlocks in "OFF" position. Available for:

Breaker Type	Cat. Number
BQ, BQH, BL, BLH, HBL	**ECQLD3**
One Pole BL, BLF, BE, BAF	**ECPLD1**
Two-Pole BL, BLF, BE	**ECPLD2**
All QR	**HPLQR**
All BQD, NGB, NGB2, HGB2, LGB2	**BQDPLD**
All ED	**ED2HPL**
All FD	**FD6PL1**
All JD, LD	**JD6HPL**
All MD, ND, PD, RD	**MN6PLD**
3VA41	**3VA90380LB11**
3VA52/61/62	**3VA91380LB11**

Handle Extensions - For replacement (one extension shipped with breaker)

Breaker Type	Cat. Number
All MD, ND, PD	EX11

Ground Fault Sensing Relay Kit Equipment Protection (30 mA)

For Use with Breaker Types	Number of Poles	Catalogue Number Description
ED4, ED6, HED4	1, 2, 3	See breaker section of this catalogue.

Shunt Trip on Main or Branch

Description	Cat. Number
BL, BQD6 (branch only) ED2, ED4, HED4 (branch only) All others through 1200A	See breaker portion of this catalogue

VK Switch For Use With FPP6 Panelboards (for 38"W sections)

30/30	VK23611JP	6.25 (159)
60/60	VK23622JP	6.25 (159)
100/100	VK33633JP	7.5 (90)
200/200	VK73644JP	10 (254)

VB Switch For Use With VB6 Panelboards (for 38"W sections)

30/30	V7E3611JP	7.5(190)
60/60	V7E3622JP	75(190)
100/100	V7E3633JP	7.5(190)
200	V7F3604JP	10(254)
400	V7H3605JP	15(381)
600	V7H3606JP	15(381)

Sentron® SMP Switchboards

Specification

A. Scope
Furnish and install, as shown on the plans, a secondary distribution switchboard, as specified herein, for the system indicated below:
☐ 120/208V ☐ 3-phase ☐ 3-wire
☐ 347/600V ☐ 4-wire
☐ 600V

B. Configuration
The switchboard enclosure shall be of bolted construction:
☐ Type 1 indoor.
☐ Type 1 with dripshield (optional).
☐ Type 2.
Switchboard shall be bolted together to form one metal enclosed rigid switchboard. Switchboard shall include all protective devices and equipment as listed on drawings with necessary interconnections, instrumentation and control wiring.
All groups of control wires leaving the switchboard shall be provided with terminal blocks with suitable numbering strips.
The switchboard shall have space or provisions for future expansion as noted on the plans. Switchboard shall be constructed and certified in accordance with CSA 22.2.31 standards and shall be Siemens type (SMP) or approved equal. Individual sections shall be front accessible, not less than 12.75" (324) deep, and the rear of all sections shall align.
Distribution sections shall be designed to accommodate the intermixing of Molded Case Breakers and Fusible Disconnects in the same distribution interior.

C. Bus Requirements
The bus shall be ☐ tin-finished aluminum ☐ silver-finished copper (option) of sufficient size to limit the temperature rise to 65°C. The bus shall be braced for ☐ 50,000 or ☐ 65,000 (option) amperes symmetrical and supported to withstand mechanical forces exerted during short circuit conditions when directly connected to a power source having the indicated available short circuit current.

D. Incoming Service
☐ Overhead or ☐ Underground Service: Cable Entry
This section shall be bussed and ☐ sealable per local utility requirements. ☐ Screw-type mechanical lugs, ☐ compression lugs to terminate, ☐ aluminum, ☐ copper cable, shall be _____ kcmil, and ___ cables per phase. ☐ Main breaker standard aluminum mechanical lugs suitable for aluminum or copper. (No wireway)

E. Metering Service Section
The service section shall be designed for the system parameters indicated in section "A" above. The metering service section shall have a ☐ Utility Metering compartment per utility requirements.
☐ User metering as indicated below and as shown on plans.
Main (service) section:
Siemens Digital metering with remote display
☐ _____ current transformer(s)
☐ _____ /5 or suitable rating
SEM3 Embedded Metering

Ground fault Protection (3-Phase, 4-Wire)**:**
Furnish and install on the service equipment and/or switchboard a Ground Fault protection system and indication equipment as specified herein and as shown on drawings in accordance with CEC Section 14-102.
All new Ground Fault Protection and Indication equipment shall be factory installed, wired and tested by the switchboard manufacturer.

F. Switchboard SMP Guide Specification
The complete switchboard shall be finished with light grey, ASA-61 paint.
Each switchboard main section shall have a metal nameplate permanently affixed to it, listing the following information:
- Name of manufacturer
- System voltage
- Ampacity
- Type
- Manufacturer's shop order number and date
- Each section of switchboard shall bear a CSA certification mark and a short circuit rating label.

The switchboard shall be per the arrangement below.

F1. Switchboard Type Panel-Mounted, Front Accessible.
Switchboard shall be of Siemens SMP type, or approved equal. Individual sections shall be front accessible, floor mounted rear supported, not less than 12.75" (324) deep, and rear, of all sections shall align. Incoming line termination, main device connection and all bolts used to join current-carrying parts shall be installed so as to permit servicing from the front only so that no rear access is required. The branch devices shall be front removable and panel mounted with line and load side connections front accessible.

G. Main Protective Devices
The main protective device, to be installed in the main device section, shall be as indicated below:

G1. Molded Case Circuit Breaker
Molded case circuit breaker shall be of the quick-make, quick-break, trip-free, ☐ (standard) ☐ (High Interrupting) ☐ (Current Limiting) ☐ (solid state Sensitrip III) type.
It shall be _____ frame ☐ (3-pole) ☐ (240V) ☐ (600V) breaker with a trip current rating of:
☐ 400A, ☐ 600A, ☐ 800A, ☐ 1000A①, ☐ 1200 A① of an interrupting capacity of not less than _____ amperes RMS symmetrical at the system voltage.
The following accessory options are to be included:
☐ Shunt trip
☐ Ground fault relay
☐ Long time (Sensitrip III only)
☐ Long time delay (Sensitrip III only)
☐ Short time (Sensitrip III only)
☐ Short time delay (Sensitrip III only)
☐ Integral ground fault (Sensitrip III only)
☐ Other_____ (list)

H. Branch Protective Devices
(Select as necessary)
All molded case circuit breakers, and fusible disconnect units used as a protective device in a branch circuit will meet the requirements of the appropriate paragraph below

H1. Molded Case Circuit Breaker
Molded case circuit breakers shall be of quick-make, quick-break, trip-free ☐ (thermal magnetic type) ☐ (current limiting) ☐ (solid state) with frame, trip and voltage rating, either ☐ 2-pole or ☐ 3-pole, as indicated on the plans. All breakers shall have an interrupting capacity of not less than _____ amperes RMS symmetrical at the system voltage. All breakers shall be removable from the front of the switchboard without distributing adjacent units. The switchboard shall have space or provisions for future units shown on the plans.

H2. Current Limiting Circuit Breaker
Current limiting circuit breakers shall provide inverse time delay, instantaneous circuit protection, and also limit the let-through I^2t to a value less than I^2t of one-half cycle wave of the symmetrical prospective current without any fusible elements. Breakers shall have an interrupting capacity of not less than _____ ampere RMS symmetrical at the system voltage.

H3. Fusible Disconnect
Fusible disconnects shall be quick-make, quick-break units utilizing the double-break principle of circuit rupturing to minimize arcing and pitting and shall conform to the ratings shown on the plans.
Each disconnect shall have an individual door over the front, equipped with a voidable interlock that prevents the door from being opened when the switch is in the ON position unless the interlock is purposely defeated by activation of the voiding mechanism. All disconnects shall have externally operated handles. Disconnects shall be equipped with ☐ Class J (standard), ☐ Class R rejection type, ☐ Class L (standard), ☐ Class T fuse holders as indicated on the plans suitable for application on system with _____ amperes symmetrical available fault current.

① Ground fault protection required, per CEC section 14-102 when "the current is O 1000A at 600 volts."

Sentron® SMP Switchboards

Fault-Current Calculation on Low- Voltage AC Systems

In order to determine the maximum interrupting rate of the circuit breakers in a distribution system it is necessary to calculate the current which could flow under a three-phase bolted short circuit condition. For a three-phase system the maximum available fault current at the secondary side of the transformer can be obtained by use of the formula:

$$I_{sc} = \frac{kVA \times 100}{KV \times \sqrt{3} \times \%Z}$$

I_{sc} = Symmetrical RMS amperes of fault current.
kVA = Kilovolt-ampere rating of transformers.
KV = Secondary voltage in kilovolts.
%Z = Percent impedance of primary line and transformer.

Integrated Equipment Short Circuit Ratings

The term "Integrated Equipment Short Circuit Rating" refers to the application of series connected circuit breakers in a combination that allows some breakers to have lower individual interrupting ratings than the available fault current. This is permitted as long as the series combination has been tested and certified by UL & CSA.

Series ratings must be specified on order at time of entry. For more information on series ratings please consult your local Siemens sales representative.

Normal load and Fault Currents of Three Phase Transformers③ (Table 18)

Transformer Rating 3 Phase Kva and impedence %①	Maximum Short-Circuit Kva Available from Primary System	208 Volts, 3 Phase				240 Volts, 3 Phase				480 Volts, 3 phase				600 Volts, 3 Phase			
		Rated Load	Short-Circuit Current RMS Symmetrical Amps.			Rated Load	Short-Circuit Current RMS Symmetrical Amps.			Rated Load	Short-Circuit Current RMS Symmetrical Amps.			Rated Load	Short-Circuit Current RMS Symmetrical Amps.		
		Continuous Current, Amps	Transformer Alone	50% Motor Load ②	Combined	Continuous Current, Amps	Transformer Alone ②	100% Motor Load	Combined	Continuous Current, Amps	Transformer Alone ②	100% Motor Load	Combined	Continuous Current, Amps	Transformer Alone	100% Motor Load ②	Combined
300	50000	834	14900	1700	16600	722	12900	2900	15800	361	6400	1400	7800	289	5200	1200	6400
5%	100000		15700		17400		13600		16500		6800		8200		5500		6700
	150000		16000		17700		13900		16800		6900		8300		5600		6800
	250000		16300		18000		14100		17000		7000		8400		5600		6800
	500000		16500		18200		14300		17200		7100		8500		5700		6900
	Unlimited		16700		18400		14400		17300		7200		8600		5800		7000
500	50000	1388	21300	2800	25900	1203	20000	4800	24800	601	10000	2400	12400	481	8000	1900	9900
5%	100000		25200		28000		21900		26700		10900		13300		8700		10600
	150000		26000		28800		22500		27300		11300		13700		9000		10900
	250000		26700		29500		23100		27900		11600		14000		9300		11200
	500000		27200		30000		23600		28400		11800		14200		9400		11300
	Unlimited		27800		30600		24100		28900		12000		14400		9600		11500
750	50000	2080	28700	4200	32900	1804	24900	7200	32100	902	12400	3600	16000	722	10000	1900	12900
5.75%	100000		32000		36200		27800		35000		13900		17500		11100		14000
	150000		33300		37500		28900		36100		14400		18000		11600		14500
	250000		34400		38600		29800		37000		14900		18500		11900		14800
	500000		35200		39400		30600		37800		15300		18900		12200		15100
	Unlimited		36200		40400		31400		38600		15700		19300		12600		15500
1000	50000	2780	35900	5600	41500	2406	31000	9600	40600	1203	15500	4800	20300	962	12400	3900	16300
5.75%	100000		41200		46800		35600		45200		17800		22600		14300		18200
	150000		43300		48900		37500		47100		18700		23500		15000		18900
	250000		45200		50800		39100		48700		19600		24400		15600		19500
	500000		46700		52300		40400		50000		20200		25000		16200		20100
	Unlimited		48300		53900		41800		51400		20900		25700		16700		20600

①Short circuit currents are calculated with impedences and kVA shown in this table.
②Short circuit current contributions are calculated on the basis of motor characteristics that will produce four times normal current. 50% motor load contribution is assumed for 208V and 100% motor load contribution is assumed for 240V, 480V and 600V.
③This Table has been prepared to list the symmetrical RMS fault current which is available at the secondary terminals of the transformer.

Sentron® FCI, FCII Switchboards



General

Whether the design is for a 240V AC, 400 ampere system; a 600V AC, 6000 ampere system; or something in between, Siemens Sentron Switchboards should be considered. Every aspect of design has been aimed at improving layout convenience, reducing installation costs, and minimizing the impact and cost of system changes. These switchboards provide the rugged construction and service flexibility necessary in systems for industrial plants, hi-rise complexes, hospitals, and commercial buildings, and are built to NEMA and CSA, C22.2 #31 and EEMAC, G8.2 standards (up to 4000A).

90°C rated wireway.

The termination temperature for main incoming cables can be sized at 90°C for bussed pull sections.

CSA Certified to: CAN/CSA-22.2 No. 31-18

CSA Certificate No. 70172994

FCI Switchboard

- Main bus rated up to 2000 ampere.
- Branch Devices–panel mounted.
- Rear of all sections aligned so that switchboard can be installed against wall.
- Front connected and front accessible.
- Main devices–individually mounted or panel mounted. Molded Case Breaker: 400-1200 amps fixed.
- Quick-Make Quick-Break Fusible Switch: 800-1200 amps., fixed.
- Bolted Pressure Fusible Switch: 800–2000 amps., fixed.
- Low Voltage Power Circuit Breaker: 400-2000 amps fixed.
- Branch Devices: panel mounted only. Molded Case Breaker: 15–1200 amp., fixed.
- Quick-Make Quick-Break Fusible Switch: 30–1200 amps., fixed.

FCII Switchboard

- Main bus rated up to 6000A ampere.
- Branch Devices rear connected individually mounted.
- Front and rear of all sections align. Design for mounting away from wall.
- Free Standing
- Rear connected and rear accessible.
- Main Devices–individually mounted. Molded Case Breaker: 400-1200 amps., fixed.
- Quick-Make Quick-Break Vacu-Break Fusible Switch: 400-1200 amps., fixed. Bolted Pressure Fusible Switch: 800–4000 amps., fixed.
- Low Voltage Power Circuit Breaker: 800-5000 amps., fixed or drawout.
- Branch Devices: individually mounted Molded Case Breaker: 100–2000 amp., fixed (or plug in).
- Quick-Make Quick-Break Fusible Switch: 100–1200 amp., fixed. Bolted Pressure Switch: 800–4000 amp., fixed.
- Low Voltage Power Circuit Breaker: 800–5000 amps., fixed, or drawout.

* 6000 amps - Consult Sales Office

Sentron® FCI, FCII Switchboards

Construction Details

General

Versatility simplifies system design.

Service Sections

Typical switchboards consist of a service section, and one or more distribution sections. Service sections can be fed directly from overhead by either cable or bus duct.

When fed from underground, a separate pull section is usually added. The service section is then fed from the adjacent pull section.

Low Voltage Power circuit breakers and Vacu-Break Switches equipped for bottom feed will accept cable directly from underground into the service section

Choose bussed or non-bussed pull sections.

With FCI and FCII switchboards, a non-bussed pull section, or a cross-bussed pull section for underground feed can be selected. The unique cross-bussed section permits cable to be run straight from underground to the bus bars at the top of the section.

Non-bussed pull sections have openings for carrying the underground feed cables to the service section bus.

Main Section house a variety of equipment.

Utility Metering

In addition to the main disconnect, the main section usually contains utility metering provisions. "Cold" metering provisions (CT's on the load side of the main disconnect) are normally furnished. When utility metering is required, the CT's provided by the utility company will be mounted in a completely separate compartment. The compartment will be built to utility company standards, with hinged doors and provision for utility metering equipment.

User Metering

The main section often provides space for many user instrument requirements. Ammeters, voltmeters, and their associated selector switches can be mounted in the main section along with the main disconnect. Only if a very large instrument or an unusual number of instruments are required, would a separate section be required.

Main protective devices can be mounted individually so that they can be located quickly in an emergency. FC switchboards will accommodate different types of main protective devices. Selection depends on the characteristics of your individual electrical system.

Distribution Sections have expanded wiring room and exceptional accessibility.

Generous top and bottom gutters have been created by locating through-bus in the rear centre of the distribution section. No obstructions are less than 8" (203) above the floor, and no live bus bars are located less than 10" (254 off the floor. So there's plenty of room to run cables into the distribution section to make connections.

Standard bolted gutter covers give complete access to load conductors. As an option, hinged doors can be furnished where quick access to load connectors is desired.

Heavy channels form a rigid ring at the base and top of each section and heavy gauge structural members are used for the vertical corner posts so there's no encroachment of additional bracing into the top and bottom gutter areas.

To provide additional room for load cable routing where needed, pull box extensions are available in heights of 10 (254), 15 (381), 20 (508), 25 (635) and 30 (762) inches to mount on any standard distribution section.

Top plates on all sections are easily removed in the field for drilling, punching, and cutting conduit entry holes.

Distribution sections are designed with the future in mind.

Because all distribution sections can accommodate any combination of panel-mounted branch devices, including molded case circuit breakers, Vacu-Break® fusible switches, future system modifications are easier to handle without adding switchboard sections.

To make additional distribution sections easier to install when they are necessary the through-bus in each distribution section is extended, and the end is pre-drilled to accept splice plate bolts. To add a section to an existing FCI or FCII switchboard, set the new section flush against the side of the existing distribution section, and bolt together the bus bar splice plates.

Operating temperatures are in accordance with CSA Standard C22.2 #31 and UL Standard 891.

Bus cars are available in standard tin-finished aluminum or optional tin-finished copper. Standard bus is sized on the basis of heat rise criteria, in accordance with CSA C22.2 #31 and UL891. All bus bars are sized to limit heat rise to 65°C above an ambient temperature of 40°C.

Modular, bolted frame construction saves labour.

Modular construction of all service and distribution sections allows the switchboard to be designed into the building, rather than designing the building around the switchboard. FCI and FCII switchboards can even be continued around corners where necessary. Rigid, bolted frames can be shipped individually and moved into the building in sections that are easy to maneuver without special equipment, then quickly assembled in place.

Sentron® FCI, FCII Switchboards

FCI, FCII Switchboards

General

Service sections of the FCI and FCII accept a wide range of Sentron Molded Case Circuit Breakers, Vacu-Break® Fusible Switches, or WL Low Voltage Power Circuit Breakers as main disconnect devices.

The FCII switchboard is designed for special configurations. It can be equipped with incoming and outgoing busway connections, automatic transfer schemes and many other custom engineered applications. The FCII can also be supplied with special metering provisions, current transformers, potential transformers, panelboards and many other special features.

The distribution sections of all Sentron Switchboards are designed with improved wiring space and greater accessibility. They're also designed for easier installation and maintenance. Conveniently located through-bus creates useful wiring gutter space, and standard bolted gutter covers offer complete access to load conductors.

	FCI	FCII
Enclosure Type	Type 1 Type 2 (dripproof & sprinklerproof) Optional: Dripshield, Gaskets	Type 1 Type 2 (dripproof & sprinklerproof) Optional: Dripshield, Gaskets
Section Dimensions	38" W x 90" H x 28" Dp 20", 24", 32", 38" W Pull Box	20", 25", 32", 46", 54" W x 70", 90" H x 28", 38", 48", 58", Dp. 20", 24", 32", 38" W Pull Box
Volts	600V Max	600V Max
Amperes	400-2000A	400-6000A
Entry	Cable only	Cable, Duct Hydro Trough
Main Devices	MCCB 400-1200A VB 800-1200A Pringle 800-2000A WL ICCB 800-2000A	MCCB 400-1200A VB 400-1200A Pringle 800-4000A WL ACB 800-5000A (option) WL ICCB 800-5000A
Branch Devices	S5-22.5", 45", 65" CDP-7, P2 2-21" (MUD)	S5-22.5", 30", 45", 65", 75"
Metering Devices	Siemens Digital Metering with Remote Display	Siemens Digital Metering with Remote Display
	SEM3 Embedded Metering	SEM3 Embedded Metering other manufactures Analog VB Meter centres
Relays	Single Phase, GFR3, MGFR, GFR	All Types
Other Options		Transfer switch provisions, Power Transformer Connections, Dist. Transformer Provisions Bus Duct Connections

Distribution Sections

Switch-board Type	Access	Dimensions - Inches (mm)					
		Height		Width		Depth	
		Std.	Opt.	Std.	Opt.	Std.	Opt.
FCI	Front	90	—	38	—	28[1]	—
FCII	Rear	90	70	38	32 or 46	38[1][2]	28, 48, or 58[1][2]



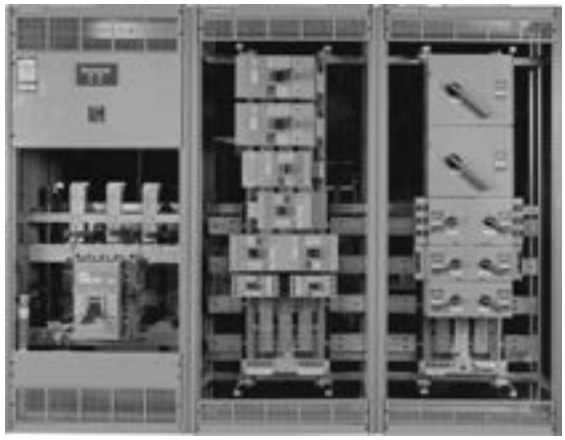

[1] Distribution section with two high 800 or 1200A Vacu-Break is 28 in. deep.

[2] Distribution section with two high bolted pressure switch is 38 in. deep minimum.

Sentron® FCI, FCII Switchboards

Even the front, back and side covers of the FCI and FCII are light, easy-to-handle, formed steel pieces that fit flush to the cabinet sides. No heavy, unwieldy flat plate must be removed to gain interior access.

Bus location saves wiring time.

All through-bus to adjoining sections are located in the rear centre of distribution section. This design provides large, unobstructed wiring gutters at the top and bottom of each section. Wiring takes less time, and costs less to install.

Splice plates are accessible from the front.

All splice plates can be bolted and unbolted from the front of the switchboard to make connection of adjacent sections easy. Each splice plate is attached by grade 5 bolts to assure solid joints between sections, and to maintain full bus ampacity through the splice joint.

To make installation and servicing of the splice plates easier, all phase and neutral through-busses are stacked one above the other, eliminating the need to stuff bolts in between bus bars that are stacked one behind the other in the same horizontal plane.

Two types of cable terminals are available.

Screw mechanical connectors (lugs) are provided as standard equipment on all devices. However, compression connectors are available as an option on all main lugs, main bolted pressure switches, main power circuit breakers, and main insulated case circuit breakers.

Sentron® FCI, FCII Switchboards

Specifications

General/Guide

A. Scope

Furnish and install, as shown on the plans, a secondary distribution switchboard, as specified herein, for the system indicated below:

☐ 120/208V ☐ 3-phase ☐ 3-wire
☐ 277/480V ☐ 4-wire
☐ 480V
☐ 347/600V
☐ 600V

B. Configuration

The switchboard enclosure shall be:
☐ Type 1 indoor of a bolted construction design.
☐ Sprinkler Proof ☐ Gasketted
☐ Type 2 ☐ Dripshield

Switchboard shall be of the required number of vertical sections bolted together to form one metal enclosed rigid switchboard. The sides, top and rear shall be covered with removable bolted code gauge steel plates. Switchboard shall include all protective devices and equipment as listed on drawings with necessary interconnections, intrumentation and control wiring. All groups of control wires leaving the switchboard shall be provided with terminal blocks with suitable numbering strips.

The switchboard shall have space or provisions for future expansion as noted on the plans.

Switchboard shall be constructed in accordance with the latest EEMAC G8.2 and CSA 22.2 #31 standards and shall be Siemens type (FCI) (FCII) or approved equal. Individual sections shall be front and rear accessible, not less than 28" deep, and the rear of all sections shall align.

Distribution sections shall be designed to accommodate the intermixing of Molded Case Breakers and fusible devices in the same distribution interior.

C. Bus Requirements

The bus shall be (tin-finished aluminum) (silver-flash copper) of sufficient size to limit the temperature rise to 65°C. The bus shall be braced for (50,000) (75,000) (100,000) (200,000) amperes symmetrical and supported to withstand mechanical forces exerted during short circuit conditions when directly connected to a power source having the indicated available short circuit current.

The through-bus on the end section shall be extended and pre-drilled to allow the addition of future sections with standard splice plates.

Grade 5 bolts will be used at bus joints.

D. Incoming Service

1. Underground Service:
   To isolate incoming underground service conductors, an underground cable pull or auxiliary section shall be used. This section shall be of the ☐ non-bussed, ☐ bussed type and shall be sealable per local utility requirements, ☐ screw-type mechanical lugs, ☐ compression lugs to terminate, ☐ aluminum, ☐ copper cable, shall be furnished as detailed on the plans.
2. Overhead Service:
   A. Cable Entry
      ☐ screw-type mechanical lugs
      ☐ compression lugs to terminate
      ☐ aluminum ☐ copper cable shall be furnished as detailed on the plans. Where necessary provide top cable pull box which shall be sealable per local utility requirements.
   B. Busway Entry
      Switchboard to be fed by Siemens Bus duct ☐ copper, ☐ aluminum, ____ ampere as detailed on plans, ☐ and other sections of the specification. The switchboard manufacturer shall be responsible for coordination, proper phasing and internal bussing to the incoming busway.
   C. Transformer Coupling ☐
      The switchboard shall be directly connected to the adjacent transformer section, including all necessary bus bars and flexible connectors.

E. Metering Service Section

The service section shall be designed for the system parameters indicated in section "A." The metering service section shall have a ☐ metering compartment per utility requirements, ☐ user metering as indicated below and as shown on plans.

Main bus:
- ☐ Voltmeter with _____ -phase transfer switch
- ☐ Ammeter, with _____ -phase transfer switch
- ☐ Digital metering
- ☐ _____ current transformer(s)
- ☐ _____ /5 or suitable rating
- ☐ _____ potential transformer(s), of suitable rating.
- ☐ SEM3 Embedded Metering (Main Breaker/Main Incoming)

Branch circuits:
- ☐ Ammeter(s), with _____ -phase transfer switch
- ☐ SEM3 Embedded Metering

Ground fault Protection:

Furnish and install on the service equipment and/or switchboard a Ground Fault protection system and indication equipment as specified herein and as shown on drawings in accordance with The Canadian Electrical Code Section 14-102.

All new Ground Fault Protection and Indication equipment shall be factory installed, wired and tested by the switchboard manufacturer.

F. Switchboards FCI, FCII Guide Specification

The complete switchboard shall be phosphatized and finished with light grey, ASA-61 paint.

Each switchboard section shall have a metal nameplate permanently affixed to it, listing the following information:

- Name of manufacturer
- System voltage
- Ampacity
- Type
- Manufacturer's shop order number and date
- Each section of switchboard shall bear a CSA listing mark and a short circuit rating label.
- The switchboard shall be per the arrangement below (Select 1 of ITEM F)

F1. Switchboard Type Panel-Mounted, Front Accessible.

Switchboard shall be of Siemens FCI type, or approved equal. Individual sections shall be front accessible, not less than 28" deep, and rear of all sections shall align. Incoming line termination, main device connection and all bolts used to join current-carrying parts shall be installed so as to permit servicing from the front only so that no rear access is required. The branch devices shall be front removable and panel mounted with line and load side connections front accessible.

F2. Switchboard Type Panel-Mounted Rear Accessible

Switchboard shall be of Siemens FCII type, or approved equal. Individual sections shall be front and rear accessible, not less than 38" deep, and both the front and rear of all sections shall align. The branch devices shall be front removable and panel mounted with line and load side connections front accessible. The bus and main device connections shall be rear accessible.

F3. Switchboard Type Individually Mounted, Rear Accessible (Fixed mounted devices).

Switchboard shall be of Siemens FCII type, or approved equal. All sections shall align front and rear. All disconnect devices, main and feeders, shall be mounted individually at the front of the switchboard and shall be rear accessible. The load terminals of each feeder device shall be extended by means of insulated bus bars through the bus compartment in to the rear cable compartment.

Optional

☐ barriers shall be provided between bus and cable compartment.

☐ barriers shall be provided between vertical sections.

☐ barriers shall be provided between devices and bus compartment.

☐ barriers shall be provided between individual devices.

F4. Switchboard Type Individually Mounted Rear Accessible (Drawout Power Circuit Breaker).

Switchboard shall be of Siemens FCII type or approved equal. All sections shall be aligned front and rear. Each vertical section forming part of switchboard lineup shall have one or more individual breakers or instrument compartments, a centralized main bus compartment and a rear cabling compartment. Drawout power circuit breakers shall be individually mounted in their own compartments. Metal barriers shall be provided at the sides and rear of each compartment and a horizontal metal barrier between breakers in the same vertical section. The breaker shall be accessible through a hinged metal door on each breaker compartment.

The drawout mechanism of power circuit breaker shall be such that it can be moved from connect through test to disconnect position without opening the door. In the "connect" position, both the primary and secondary disconnects are engaged. In the "test" position, the primary disconnect terminals are disengaged; however, the secondary disconnects are maintained to permit the operation of the circuit breaker. In the "disconnect" position, the primary and secondary disconnects are disengaged and separated a safe distance from the corresponding stationary terminals. In the "fully withdrawn" position, both primary and secondary contacts are disconnected and the circuit breaker may be inspected as it can be removed for more complete accessibility.

The load side of each feeder breaker shall have bus bars extending from the rear of the primary disconnect through the bus compartment in to the rear cable compartment.

Optional

☐ barriers shall be provided between bus and cable compartment.

☐ barriers shall be provided between vertical sections.

☐ barriers shall be provided between devices and bus compartment.

☐ barriers shall be provided between individual devices.

G. Main Protective Devices (Select one of Item G)

The main protective device, to be installed in the main device section, shall be as indicated below:

G1. Molded Case Circuit Breaker

Molded case circuit breaker shall be of the quick-make, quick-break, trip-free, (standard) (High Interrupting) (Current Limiting) (solid state Sensitrip III) type. It shall be _____ frame (2-pole) (3-pole) 600-volt breaker with a trip current rating of:

☐ 400 A ☐ 1600 A
☐ 600 A ☐ 2000 A
☐ 800 A
☐ 1000 A
☐ 1200 A

of an interrupting capacity of not less than _____ amperes RMS symmetrical at the system voltage.

The following accessory features are to be included:

☐ Shunt trip
☐ Electrical Operator
☐ Ground fault relay
☐ Long time (Sensitrip III only)
☐ Long time delay (Sensitrip III only)
☐ Short time (Sensitrip III only)
☐ Short time delay (Sensitrip III only)
☐ Integral ground fault (Sensitrip III only)
☐ Other_____ (list)

G2. Fusible Switch

Fusible switch of the quick-make, quick-break type. It shall be a (2-pole) (3-pole) (240V) (600V) Vacu-Break unit with a continuous current rating of (400) (600) (800) (1200) amperes and with _____ ampere Class _____ fuses, suitable for application on a system with _____ amperes symmetrical available fault current.

G3. Bolted Pressure Switch

Bolted pressure switch of the quick-make, quick-break type. It shall be a (2-pole) (3-pole) (240V) (600V) unit with a continuous current rating of:

☐ 800 A ☐ 2500 A
☐ 1200 A ☐ 3000 A
☐ 1600 A ☐ 4000 A
☐ 2000 A ☐ _____ A

and with _____ ampere Class L fuses suitable for application on a system with _____ amperes symmetrical available fault current.

The following accessory features are to be included:

☐ Shunt trip
☐ Ground fault relay
☐ Other _____ (list)

G4. Insulated Case Circuit Breaker

Insulated case circuit breaker with a stationary frame. Frame size to be _____ ampere 3-pole, 600-volt with a trip current rating of:

☐ 400 A ☐ 2000 A
☐ 600 A ☐ 2500 A
☐ 800 A ☐ 3000 A
☐ 1000 A ☐ _____ A
☐ 1200 A
☐ 1600 A

It shall be a manually operated breaker with a solid state trip device, and an interrupting capacity of not less than _____ amperes RMS symmetrical at the system voltage.

The following accessory features are to be included:

☐ Short time delay
☐ Integral ground fault trip
☐ Fault trip indicator
☐ Other _____ (list)

G5. Low Voltage Power Circuit Breaker

Low voltage power circuit breaker with a (stationary) (drawout) frame and a current rating of:

☐ 800 A ☐ 3200 A
☐ 1600 A ☐ 4000 A
☐ 2000 A ☐ _____ A

It shall be (manually) (electrically) operated power circuit breaker with a Electronic Trip Unit and an interrupting capacity of _____ amperes RMS symmetrical at the system voltage.

The following accessory features are to be included:

☐ Short time delay
☐ Integral ground fault trip
☐ Fault trip indicator
☐ Other _____ (list)

H. Branch Protective Devices (Select as necessary)

All molded case circuit breakers, fusible switches, insulated case circuit breakers, bolted pressure switches, low voltage power circuit breaker, and/or motor starter units used as a protective device in a branch circuit will meet the requirements of the appropriate paragraph below.

H1. Molded Case Circuit Breaker

Molded case circuit breakers shall be of quick-make, quick-break, trip-free (thermal magnetic type) (current limiting) (solid state) with frame, trip and voltage rating, either 2-pole or 3-pole, as indicated on the plans. All breakers shall have an interrupting capacity of not less than _____ amperes RMS symmetrical at the system voltage. All breakers shall be removable from the front of the switchboard without distributing adjacent units. The switchboard shall have space or provisions for future units shown on the plans.

H2. Current Limiting Circuit Breaker

Current limiting circuit breakers shall provide inverse time delay, instantaneous circuit protection, and also limit the let-through I^2t to a value less than I^2t of one-half cycle wave of the symmetrical prospective current without any fusible elements. Breakers shall have an interrupting capacity of not less than _____ ampere RMS symmetrical at the system voltage.

H3. Fusible Switch

Fusible switches shall be quick-make, quick-break units utilizing the double-break principle of circuit rupturing to minimize arcing and pitting and shall conform to the ratings shown on the plans.

Each switch shall have an individual door over the front, equipped with a voidable interlock that prevents the door from being opened when the switch is in the ON position unless the interlock is purposely defeated by activation of the voiding mechanism. All switches shall have externally operated handles. Switches shall be equipped with (Class R rejection type) fuse holders and Class (J) (R) or (L) fuses of ampere rating and type as indicated on the plans suitable for application on system with _____ amperes symmetrical available fault current.

H4. Bolted Pressure Switch

Each bolted pressure switch shall be the quick-make, quick-break type, equipped with Class L fuses suitable for application on a system with _____ amperes symmetrical available fault current. Ampere rating to be as shown on the plans.

H5. Insulated Case Circuit Breaker

FCII Switchboards only

Each insulated case circuit breaker shall be manually operated with solid state trip device. Frame sizes and trip ratings to be as shown on the plans. All breakers to have an interrupting capacity of not less than _____ amperes symmetrical at the rated voltage.

H6. Low Voltage Power Air Circuit Breaker

FCII Switchboards only

Each low voltage power air circuit breaker shall be (stationary mounted) (drawout mounted) stored energy type, trip free, (manually operated) (electrically operated) with solid-state trip device. Frame sizes and trip ratings to be as shown on the plans. All breakers to have an interrupting capacity of no less than_____amperes symmetrical at the rated voltage.

Sentron® SMP, FCI, FCII Switchboards

Modifications and Additions Replacements for Circuit Breakers and Fusible Switches⑦ *Selection*

Connecting Strap Kits for use with Circuit Breakers in Distribution Sections④⑧⑩ (Table 15)

Breaker Type	Catalogue Number	Unit Height	Mounting
BQ, BQH, HB, BL, BLH, HBL	**6BL2C**②③⑤	3.75" (95)	Twin
NGB2, HGB2, LGB2	**SGB2DCAN**	3.75" (95)	Twin
ED2, ED4, ED6, HED4	**6E62**①②③	3.75" (95)	Twin
CED6	**6CLE2**①	3.75" (95)	Twin
3VA41	**S3VA41TDCAN**	3.75" (95)	Twin
	S3A41TDHDCAN⑮	7.50" (191)	Twin, High Density
3VA61	**S3VA52TDCAN**⑬	5" (127)	Twin
QR2, QR2H, HQR2, HQR2H	**6QR2CAN**⑫	5" (127)	Twin
FXD6, FD6, HFD6, HHFD6	**6F62**①	5" (127)	Twin
CFD6	**6CLF1C**⑤	5" (127)	Single
3VA52, 3VA62	**S3VA52TDCAN**⑬	5" (127)	Twin
JXD6, JD6, HJD6, HHJD6	**6JJ62**①	8.75" (222)	Twin
SJD6, SHJD6	**6SJL1C**⑤	8.75" (222)	Single
CJD6	**6CLJ1C**⑤	8.75" (222)	Single
LXD6, LD6, HLD6, HHLD6, SLD6, SHLD6	**6LL61C**⑤	8.75" (222)	Single
CLD6, SCJD6	**6CLL1C**⑤	8.75" (222)	Single
SCJD6, SCLD6	**6SCL61C**⑤	8.75" (222)	Single
MXD6, MD6, HMD6, CMD6, SHMD6, SCMD6	**6M61C**⑤	10" (254)	Single
NXD6, ND6, HND6, CND6, SHND6, SCND6	**6N61C**⑤	10" (254)	Single

Connecting Strap Kits for use with VB, VK or HCP Switches in Distribution Sections④⑧⑩⑭ (Table 16)

Rating Amperes	VB Switch Cat. No.	VB Switch Cat. No.	HCP Switch Cat. No.
30/30	**VB6-71**	**VK6-57**	N/A
60/60			
100/100		**VK6-58**	
200		N/A	
200/200	N/A	**VK6-72**	
400-600	**VB6-150**	N/A	
800-1200	N/A		**F6162DCAN**

Blank Filler Plates for Distribution Switch or Circuit Breaker⑥ (Table 17)

For use with SMP Switchboards.	
Height - Inches (mm)	**Catalogue Number**
1.25" (32)	**6FPB01**
2.50" (64)	**6FPB02**
3.75" (95)	**6FPB03**
5.00" (127)	**6FPB05**
10.00" (254)	**6FPB10**
15.00" (381)	**6FPB15**

Metering Switch for FCI Metering Switchboards⑪ (46"W)

Ampere Rating	600V Metering Switch (c/w Meter Socket)	Height- Inches (mm)
30/30	**V7E3611JMC7**	10" (254)
60/60	**V7E3622JMC7**	10" (254)
100/100	**V7E3633JMC7**	10" (254)
200	**V7F3604JMC7**	17.5" (444.5)

Shunt Trip on Main or Branch

Description	Cat. Number
BL, BQD6 (branch only) ED2, ED4, HED4 (branch only) All others through 1200A	See breaker portion of this catalogue

3VA Breaker Provision Kits

Breaker Type	Cat. Number	Description
3VA52, 3VA61 or 3VA62 Breaker	**S3VA52PRCAN**	Only required when installing a 3VA52, 3VA61, or 3VA62 breaker to an existing provision in the field. Parts are included with kit **S3VA52TDCAN**.

① These are aluminum connectors. If copper is required please add suffix C.
② 3.75" (95) plate accommodates six 1-pole breakers.
③ 10" (254) plate accommodates eighteen 1-pole breakers.
④ Connector kits also accommodate S5, F2, CDP6 Panelboards, FCRS, FCI and FCII distribution interiors or CDP6/SPP6 Series Panels.
⑤ These connectors are available in copper only.
⑥ Blank (Circuit Breaker or Switch) Cover Plates can also be used in FCI and FCII distribution interiors or CDP6/SPP6 Series Panels.
⑦ Please refer to the respective section in the catalogue for detailed circuit breaker or switch information.
⑧ Mounting kits include connector straps and covers (breakers or switches are not included).
⑨ Refer to Siemens for units equipped with auxiliary switches.
⑩ Connecting strap kits include connecting straps, hardwares, and cover plates for switchboards and power panels. Breakers and switches to be ordered separately.
⑪ Metering switch kits include metering switches, cover plates, connecting straps, and hardware.
⑫ QR filler plates only: **6QR2FKCAN.** For copper QR kit, use p/n: **6QR2CCAN**.
⑬ To field install a single **3VA52**, **3VA61** or **3VA62** breaker to an existing strap, provision kit p/n: **S3VA52PRCAN** is required.
⑭ The fusible switches and connecting strap kits are designed for standard 38"W sections. Additional covers are required for wider sections. Please consult your local sales contact.
⑮ High Density Kit, requires 7.50" Unit Space to fit QTY (6) 2 Pole breakers.

Circuit Breaker Accessories

Handle Blocking Device Blocks handle in either the "ON" or "OFF" position. Available for:

Breaker Type	Cat. Number
BL, BLH, HBL, BQ, BQH, HBQ	**ECQL1**
All BQD, GB	**BQDHBD**
All QR	**HPLQR**
All BQD, NGB, NGB2, HGB2, LGB2	**BQDHBD**
All ED	**E2HBL**
All FD	**FD6HB1**
All JD, LD	**JD6HBL**
All MD, ND, PD	**MN6BL**
3VA52/61/62	**3VA93780LB10**

Padlocking Device — Padlocks in "OFF" position. Available for:

Breaker Type	Cat. Number
BQ, BQH, BL, BLH, HBL	**ECQLD3**
One Pole BL, BLF, BE, BAF	**ECPLD1**
Two-Pole BL, BLF, BE	**ECPLD2**
All QR	**HPLQR**
All BQD, NGB, NGB2, HGB2, LGB2	**BQDPLD**
All ED	**ED2HPL**
All FD	**FD6PL1**
All JD, LD	**JD6HPL**
All MD, ND, PD, RD	**MN6PLD**
3VA41	**3VA90380LB11**
3VA52/61/62	**3VA91380LB11**

Handle Extensions - For replacement (one extension shipped with breaker)

Breaker Types	Cat. Number
All MD, ND, PD	**EX11**

Ground Fault Sensing Relay Kit Equipment Protection (30 mA)

For Use with Breaker Types	Number of Poles	Cat. Number Description
ED4, ED6, HED4	1, 2, 3	See breaker portion of this catalogue

VK Switch For Use With FPP6 Panelboards⑭

30/30	VK23611JP	6.25 (159)
60/60	VK23622JP	6.25 (159)
100/100	VK33633JP	7.5 (90)
200/200	VK73644JP	10 (254)

VB Switch For Use With VB6 Panelboards⑭

30/30	V7E3611JP	7.5(190)
60/60	V7E3622JP	75(190)
100/100	V7E3633JP	7.5(190)
200	V7F3604JP	10(254)
400	V7H3605JP	15(381)
600	V7H3606JP	15(381)

Sentron® FCI, FCII Switchboards

Protective Devices - Sentron™ Molded Case Circuit Breakers

General

Standard

Breakers are designed for commercial, industrial, institutional and other heavy duty applications. They are rated up to 600V ac and 250V DC. Their interrupting ratings are higher than normal duty breakers.

High Interrupting

Breakers are designed for heavy duty applications where the interrupting requirements exceed the ratings of heavy duty breakers. They are rated up to 600V ac and 250V DC.

Current Limiting

Breakers are molded case breakers that incorporate the exclusive I-T-E blow-apart interruption principle. They meet the US-NEC requirements for current-limiting breakers. Current-limiting circuit breakers can limit the let-through I^2t to a value less than the I^2t of one-half cycle wave of the symmetrical prospective current without any fusible elements when operating within their current-limiting range.

Branch Circuit Breakers

Breaker Frame Rating	Trip Type	Breaker Type	Poles	Trip Amperage	Mounting Height Inches (mm)			Max IC Rating (kA)		
					Single	Twin	Gutter⑤	240V	480V	600V
100	Thermal Magnetic	BL	1, 2, 3	15, 20, 25, 30, 40, 50, 60, 70, 80, 90, 100	–	3.75 (95)②③	14 (356)	10	–	–
		BLH	1, 2, 3	15, 20, 25, 30, 40, 50, 60, 70, 80, 90, 100	–	3.75 (95)②③	14 (356)	22	–	–
		HBL	1, 2, 3	15, 20, 25, 30, 40, 50, 60, 70, 80, 90, 100	–	3.75 (95)②③	14 (356)	65	–	–
		BQD6④	1, 2, 3	15, 20, 30, 40, 50, 60, 70	–	3.75 (95)②③	14 (356)	65	–	10
	Ground Fault Circuit Interrupter	BLE (GFCI)	1, 2	15, 20, 30, 40, 50, 60	–	3.75 (95)②	14 (356)	10	–	–
		BLF (GFCI)	1, 2	15, 20, 30, 40, 50, 60	–	3.75 (95)②	14 (356)	10	–	–
		BLHF (GFCI)	1, 2	15, 20, 30, 40, 50, 60	–	3.75 (95)②	14 (356)	22	–	–
	Arc Fault Circuit Interrupter	BAF (AFCI)	1	15, 20	–	3.75 (95)②	14 (356)	10	–	–
		BAFH (AFCI)	1	15, 20	–	3.75 (95)②	14 (356)	22	–	–
125	Thermal Magnetic	ED2	1, 2, 3	15, 20, 30, 35, 40, 50, 60, 70, 80, 90, 100	3.75 (95)②③	3.75 (95)②③	10 (254)	10	–	–
		ED4	1, 2, 3	15, 20, 30, 35, 40, 50, 60, 70, 80, 90, 100, 110, 125	3.75 (95)②③	3.75 (95)②③	10 (254)	65	18	–
		ED6	1, 2, 3	15, 20, 30, 35, 40, 50, 60, 70, 80, 90, 100, 110, 125	3.75 (95)②③	3.75 (95)②③	10 (254)	100	18	18
		HED4	1, 2, 3	15, 20, 30, 35, 40, 50, 60, 70, 80, 90, 100, 110, 125	3.75 (95)②③	3.75 (95)②③	10 (254)	100	65	30
		CED6	2, 3	15, 20, 30, 35, 40, 50, 60, 70, 80, 90, 100, 110, 125	3.75 (95)③	3.75 (95)③	7.61 (193)	200	200	100
		NGB2	1, 2, 3	15, 20, 25, 30, 35, 40, 50 ,60, 70, 80, 90, 100, 110, 125	3.75 (95)②③	3.75 (95)②③	13.98 (355)	100	25	14
		HGB2	1, 2, 3	15, 20, 25, 30, 35, 40, 50 ,60, 70, 80, 90, 100, 110, 125	3.75 (95)②③	3.75 (95)②③	13.98 (355)	100	35	22
		LGB2	1, 2, 3	15, 20, 25, 30, 35, 40, 50 ,60, 70, 80, 90, 100, 110, 125	3.75 (95)②③	3.75 (95)②③	13.98 (355)	100	65	25
		3VA41 (SEAB)	1, 2, 3	15, 20, 25, 30, 35, 40, 45, 50 ,60, 70, 80, 90, 100, 110, 125	3.75 (95)	3.75 (95)	13.98 (355)	65	25	14
		3VA41 (MEAB)	1, 2, 3	15, 20, 25, 30, 35, 40, 45, 50 ,60, 70, 80, 90, 100, 110, 125	3.75 (95)	3.75 (95)	13.98 (355)	85	35	18
		3VA41 (HEAB)	1, 2, 3	15, 20, 25, 30, 35, 40, 45, 50 ,60, 70, 80, 90, 100, 110, 125	3.75 (95)	3.75 (95)	13.98 (355)	150	65	25
150	Electronic (Solid State)	3VA61 (MDAE)	3	40, 100, 150	5 (127)	5 (127)	9.59 (244)	100	35	18
		3VA61 (HDAE)	3	40, 100, 150	5 (127)	5 (127)	9.59 (244)	100	65	22
		3VA61 (CDAE)	3	40, 100, 150	5 (127)	5 (127)	9.59 (244)	200	100	35
		3VA61 (LDAE)	3	40, 100, 150	5 (127)	5 (127)	9.59 (244)	200	150	50
225	Thermal Magnetic	QR2	2, 3	100, 110, 125, 150, 175, 200, 225	5 (127)	5 (127)	8.75 (222)	10	–	–
		QRH2	2, 3	100, 110, 125, 150, 175, 200, 225	5 (127)	5 (127)	8.75 (222)	25	–	–
		HQR2	2, 3	100, 110, 125, 150, 175, 200, 225	5 (127)	5 (127)	8.75 (222)	65	–	–
		HQR2H	2, 3	100, 110, 125, 150, 175, 200, 225	5 (127)	5 (127)	8.75 (222)	100	–	–
250	Thermal Magnetic	FXD6, FD6	2, 3	70, 80, 90, 100, 110, 125, 150, 175, 200, 225, 250	5 (127)	5 (127)	8.25 (210)	65	35	22
		HFD6	2, 3	70, 80, 90, 100, 110, 125, 150, 175, 200, 225, 250	5 (127)	5 (127)	8.25 (210)	100	65	25
		CFD6	2, 3	70, 80, 90, 100, 110, 125, 150, 175, 200, 225, 250	–	5 (127)	11.76 (299)	200	200	100
		3VA52 (MFAS)	2, 3	40, 45, 50, 60, 70, 80, 90, 100, 110, 125, 150, 175, 200, 225, 250	5 (127)	5 (127)	10.10 (257)	85	35	18
		3VA52 (HFAS)	2, 3	40, 45, 50, 60, 70, 80, 90, 100, 110, 125, 150, 175, 200, 225, 250	5 (127)	5 (127)	10.10 (257)	100	65	25
		3VA52 (CFAS)	2, 3	40, 45, 50, 60, 70, 80, 90, 100, 110, 125, 150, 175, 200, 225, 250	5 (127)	5 (127)	10.10 (257)	200	100	35
	Electronic (Solid State)	3VA62 (MFAE)	3	100, 250	5 (127)	5 (127)	9.59 (244)	100	35	18
		3VA62 (HFAE)	3	100, 250	5 (127)	5 (127)	9.59 (244)	100	65	22
		3VA62 (CFAE)	3	100, 250	5 (127)	5 (127)	9.59 (244)	200	100	35
		3VA62 (LFAE)	3	100, 250	5 (127)	5 (127)	9.59 (244)	200	150	50
400	Thermal Magnetic	JXD6, JD6	2, 3	200, 225, 250, 300, 350, 400	8.75 (222)	8.75 (222)	7.92 (201)	65	35	25
		HJD6	2, 3	200, 225, 250, 300, 350, 400	8.75 (222)	8.75 (222)	7.92 (201)	100	65	35
		HHJD6	2, 3	200, 225, 250, 300, 350, 400	8.75 (222)	8.75 (222)	7.92 (201)	200	100	50
		CJD6	2, 3	200, 225, 250, 300, 350, 400	8.75 (222)	–	12 (305)	200	150	100
	Electronic (Solid State)	SJD6	3	200, 300, 400	8.75 (222)	–	13.42 (341)	65	35	25
		SHJD6	3	200, 300, 400	8.75 (222)	–	13.42 (341)	100	65	35
		SCJD6	3	200, 300, 400	8.75 (222)	–	12 (305)	200	150	100
		NJG	3	250, 400	6.25 (159)	6.25 (159)	8 (203)	65	35	25
		LJG	3	250, 400	6.25 (159)	6.25 (159)	8 (203)	200	100	25
600	Thermal Magnetic	LXD6	2, 3	450, 500, 600	8.75 (222)	–	13.42 (341)	65	35	25
		LD6	2, 3	250, 300, 350, 400, 450, 500, 600	8.75 (222)	–	13.42 (341)	65	35	25
		HLD6	2, 3	250, 300, 350, 400, 450, 500, 600	8.75 (222)	–	13.42 (341)	100	65	35
		HHLD6	2, 3	250, 300, 350, 400, 450, 500, 600	8.75 (222)	–	13.42 (341)	200	100	50
		CLD6	2, 3	450, 500, 600	8.75 (222)	–	12 (305)	200	150	100
	Electronic (Solid State)	SLD6	3	300, 400, 500, 600	8.75 (222)	–	13.42 (341)	65	35	25
		SHLD6	3	300, 400, 500, 600	8.75 (222)	–	13.42 (341)	100	65	35
		SCLD6	3	300, 400, 500, 600	8.75 (222)	–	12 (305)	200	150	100
800	Thermal Magnetic	MXD6	2, 3	500, 600, 700, 800	10 (254)	–	13 (330)	65	50	25
		MD6	2, 3	500, 600, 700, 800	10 (254)	–	13 (330)	65	50	25
		HMD6	2, 3	500, 600, 700, 800	10 (254)	–	13 (330)	100	65	50
		CMD6	2, 3	500, 600, 700, 800	10 (254)	–	13 (330)	200	100	65
	Electronic (Solid State)	SMD6	3	600, 700, 800	10 (254)	–	12 (305)	65	50	25
		SHMD6	3	600, 700, 800	10 (254)	–	12 (305)	100	65	50
		SCMD6	3	600, 700, 800	10 (254)	–	12 (305)	200	100	65
1200	Thermal Magnetic	NXD6	2, 3	800, 900, 1000, 1200	10 (254)	–	13 (330)	65	50	25
		ND6	2, 3	800, 900, 1000, 1200	10 (254)	–	13 (330)	65	50	25
		HND6	2, 3	800, 900, 1000, 1200	10 (254)	–	13 (330)	100	65	50
		CND6	2, 3	800, 900, 1000, 1200	10 (254)	–	13 (330)	200	100	65
	Electronic (Solid State)	SND6	3	800, 1000, 1200	10 (254)	–	12 (305)	65	50	25
		SHND6	3	800, 1000, 1200	10 (254)	–	12 (305)	100	65	50
		SCND6	3	800, 1000, 1200	10 (254)	–	12 (305)	200	100	65

① Space includes housing frame plate with blank cover plate. Provision includes all necessary mounting hardware, less circuit breaker, and includes housing frame cover plate with breaker handle opening.

② 1 to 6 poles may be mounted in 3.75" (95) of unit space

③ Accessories such as shunt trips on three pole breakers require 6.25" (159) of unit space.

④ Also 10kA at 600Y/347 Volts.

⑤ Refer to Table 5 for layout dimensions.

Sentron® FCI, FCII Switchboards

Protective Devices - Solid State Sensitrip™ Molded Case Circuit Breakers

General

The Sentron Sensitrip IV circuit breaker is a true RMS current sensing device. Digital microprocessor circuitry within the electronic trip unit provides more precise control over the circuit breaker functions. This control allows circuit coordination flexibility not available with thermal magnetic circuit breakers.

Functions available in Sentron Sensitrip circuit breakers

Catalogue Number Suffix	Trip Type	Cont Current Setting	Long Time Delay	Instan-taneous Pickup	Short Time Pickup	Short Time Fixed Delay	Short Time I2t Delay	Ground Fault Pickup	Ground Fault Delay
LI	LI	√	√	√					
LIG	LIG	√	√	√				√	√
LSI	LSI	√	√	√	√	√	√		
LSIG	LSIG	√	√	√	√	√	√	√	√

Typical Trip Unit Labeling and Adjustment Positions for the Sentron Sensitrip Circuit Breaker.

LI Trip Units①

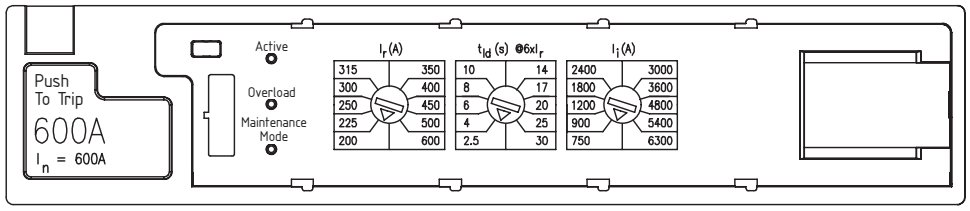

LIG Trip Units①

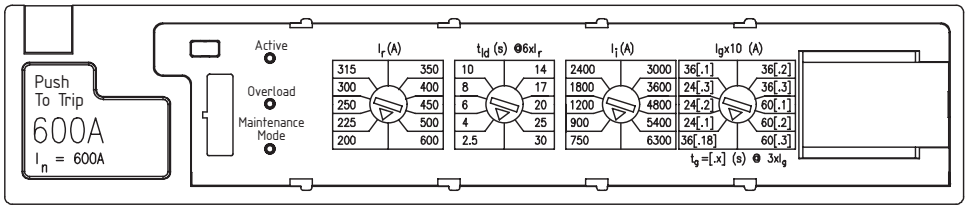

LSI Trip Units①

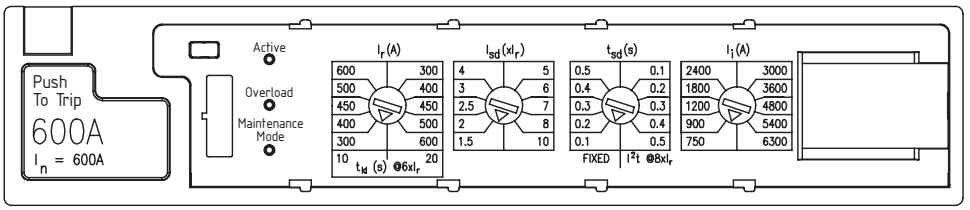

LSIG Trip Units①

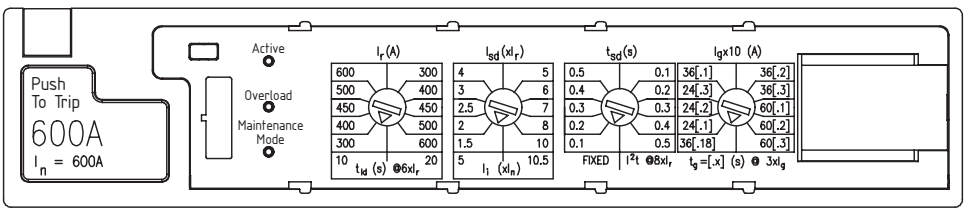

I_n = Maximum circuit breaker ampere rating
I_r = Continuous current rating expressed in amperes
I_i = Instantaneous pickup expressed in amperes
I_{sd} = Short time pickup expressed in multiples of I_r
I_g = Ground fault pickup expressed in amperes
t_{sd} = Short time delay - either fixed or I^2t time delay function
t_{ld} = Long time delay - I^2t time delay function
t_g = Ground fault delay - I^2t time delay function

NOTE: Frame rating (In) of 600A shown as an example. Trip unit settings will vary based on the specific frame rating (In) of the device.

① Schematic of advanced trip unit shown. Basic trip units are identical but do not include DAS / Maintenance Mode functionality.

VK and VB (Vacu-Break) Fusible Switches

All VK and Vacu-Break fusible switches include voidable cover interlock; quick-make, quick-break operation; positive ON-OFF action; padlockable (at ON or OFF) handle design; Vacu-Break arc control (i.e., enclosed arc chamber, double-break magnetic arc blowout); clampmatic pressure spring force on closed contacts; spring-reinforced fuse holders. The VK switch is a true visible contact design.

Accessory devices and modifications available for 250-volt switches (30 amps to 600 amps): Class R and class J rejection type fuse holders are available for all units. For 600-volt switches (30 amps to 600 amps): Class R rejection type fuse holders, Class J fuse holders; (100 amps to 600 amps) Class T fuse holders.

Bolted Pressure Switches

These switches are suitable for use on systems capable of delivering fault current up to 200,000 amps symmetrical RMS when equipped with Class L fuses. All bolted pressure switches include fuse door interlock; quick-make, quick-break operation; bolted pressure force on closed contact; padlockable (in the "open" position only) handle.

Accessories and modifications available: shunt trip (electrical open–manual close). 120V ac standard control voltage: electrical operator (electrical open and close), specify system voltage; ground fault relay (requires shunt trip); blown fuse trip (switch opens when any one fuse blows–requires shunt trip); blown fuse indicating lights; phase failure relay with capacitor trip (detects failure of any one phase and opens switch–requires shunt trip) specify system voltage; auxiliary contacts.

CSA Fuse Classes

Class		Amperes	Volts (AC)	Interrupting Ratings	I^2t, Ip (Let-Thru)	Circuits
H	Standard Code	1-600A	250 and 600V or less	10,000A	— —	Less than 10,000A available
K①	Fast Acting (One time)	1-600A	250 and 600V or less	50,000A	—	Feeder circuits
J	Fast Acting and Time Delay	1-600A	600V or less	To 200,000A	Ip and I^2t-Low (motor load small %)	Feeder circuits Motor circuits
RK1	Fast Acting and Time Delay	1/10-600A	600V or less 250V or less	To 200,000A	I^2t-Slightly > J Ip-Slightly > J	Feeder circuits Motor circuits
RK5	Fast Acting and Time Delay	1/10-600A	600V or less 250V or less	To 200,000A	I^2t- > RK-1 Ip- > RK-1	Feeder circuits Motor circuits
C (FORM II)	Moderate Delay	2-600A	600V or less	To 200,000A	I^2t- < RK-5 Ip- < RK-5	Motor circuits
T	Fast Acting	1-600A	300 and 600V or less	To 200,000A	I^2t-Low Ip-Low	Non-motor loads
L	Fast Acting and Time Delay	601-5000A	600V or less	To 200,000A Ip-Low	I^2t-Low motor loads	Feeder circuits Motor circuits

Branch Switches 600V Maximum

Switch Type	Ampere Rating	Maximum Voltage	Fusing
VB/VK	30 / 30A	600V	Class J
VB/VK	60 / 60A		
VB/VK	100 / 100A		
VB	200A		
VK	200 / 200A		
VB	400A, 600A		

① Refer to Siemens for Form II Class C applications.

Interrupting Ratings of Bolted Pressure Switches

Max. System Voltage	Ampere Rating	Class L Fuse Rating (Amps)	Fuse Interrupting Rating (Sym. RMS Amps)
240 to 600	800	601, 700, 800	200,000
	1200 1600	1000, 1200 1500, 1600	
	2000 2500	1800, 2000 2500	
	3000 4000	3000 3500, 4000	

Application Note: Lower rated fuses may be installed within any switch rating i.e.: 2000-amp fuse in 4000-amp switch.

Sentron® FCI, FCII Switchboards

Protective Devices - HCP Switchboard Unit Disconnect Switches

General

Features

- CSA Certified / UL Listed under file number E6849
- 800A-1200A switch design.
- Visible contacts.
- Field installable shunt trip and auxiliary switch accessory kits.
- Installs in existing Siemens switchboards and power panelboards.
- Suitable for use on systems with up to 200,000A available fault current, RMS symmetrical when equipped with Class J or Class L fuses.
- Mixes with other 30A through 600A switches, and 100 through 1200 amp frame breakers.
- Allows 800A and 1200A switches in standard 38" wide distribution sections in either main or branch configurations.
- 16¼" mounting height is the smallest 1200A design in the industry, allowing up to 4 units in one vertical section.
- Field reversible horizontal mounting design for left or right hand cabling.



3-Pole, Horizontal Mount ①

Catalogue Number	Maximum Ampere Rating	Maximum Voltage Rating	Fuse Class	Dimensions (inches)			Horsepower Rating						
							240V		480V		600V		250V DC
				H	L	D	Std	Max	Std	Max	Std	Max	
HCP327HT	800	240	T	16.25	17.22	7.38	100	250	—	—	—	—	50
HCP367H	800	600	L	16.25	17.22	7.38	100	250	200	500	250	500	50
HCP328HT	1200	240	T	16.25	17.22	7.38	100	250	—	—	—	—	50
HCP368H	1200	600	L	16.25	17.22	7.38	100	250	200	500	250	500	50

3-Pole, Vertical Mount

HCP327VT	800	240	T	17.00	16.25	7.38	100	250	—	—	—	—	50
HCP367V	800	600	L	17.00	16.25	7.38	100	250	200	500	250	500	50
HCP328VT	1200	240	T	17.00	16.25	7.38	100	250	—	—	—	—	50
HCP368V	1200	600	L	17.00	16.25	7.38	100	250	200	500	250	500	50

Accessories

Terminal Connectors (one lug per kit)②

Ampere Rating	Catalogue Number	Connector Wire Range
800A	**TA3K500**	(3) #1 AWG–500 kcmil (Cu or Al)
800A	**TC3K350**	(3) #1 AWG–350 kcmil (Cu only)
800-1200A	**TA4H500**	(4) #1 AWG–500 kcmil (Cu or Al)
800-1200A	**TA3H750**	(3) 250–750 kcmil (Cu or Al)

T Fuse Adapter Kits

Catalogue Number	Description
TFAK72	800A, 300V AC
TFAK75	800A, 600V AC
TFAK82	1200A, 300V AC

Auxiliary Switch Kits

Contact Ampere Rating	Maximum Voltage		Switch Mounting	Contacts	Catalogue Number
	AC	DC			
15A	480	125	Left Pole	1NO/1NC	**A01HCPL4**
15A	480	125	Right Pole	1NO/1NC	**A01HCPR4**
10A	240	125	Left Pole	2NO/2NC	**A01HCPL2**

Compression Lug Adapter Kit

The use of this kit provides for the mounting of up to four lugs per phase. Each kit accepts lugs with (2) 3/8" diameter mounting holes on 1" centres. One kit per pole line or load is required. Lugs are not provided.

Ampere Rating	Catalogue Number
800–1200A	**HCPCLP**

Shunt Trip Kit

Control Voltage		Catalogue Number
AC	DC	
120	—	**HCPST120**
240	—	**HCPST240**
277	—	**HCPST277**
480	—	**HCPST480**
—	48	**HCPST48**
—	125	**HCPST125**

Switchboard Connection Strap Kit①

Switch Ampere Rating	Catalogue Number
800–1200A	**F6162DCAN**

For inches / millimeters conversion, see Technical Section.

① For horizontal mounting only in either 38" wide min switchboards or S5/F2 power panelboards.
② 3 kits required for 3 phase switch

Horizontal Mount Drawing

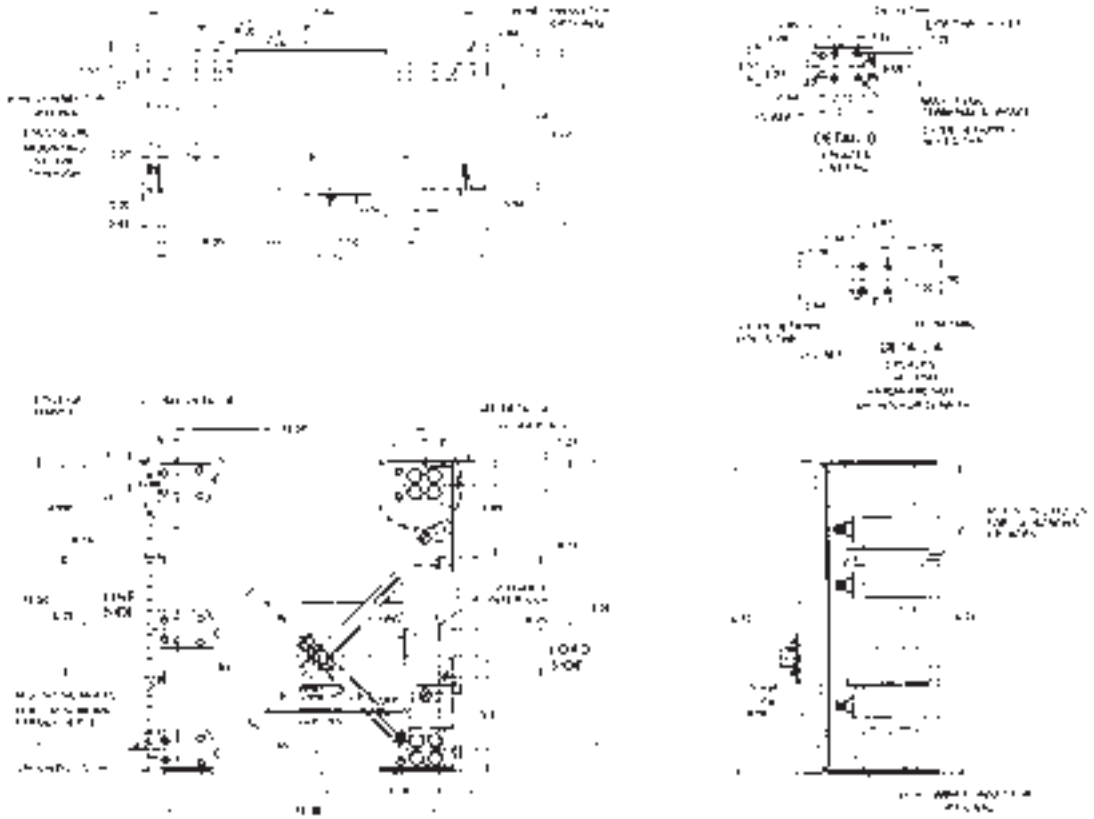

Group Mounting Assembly (Horizontal Mount Only)

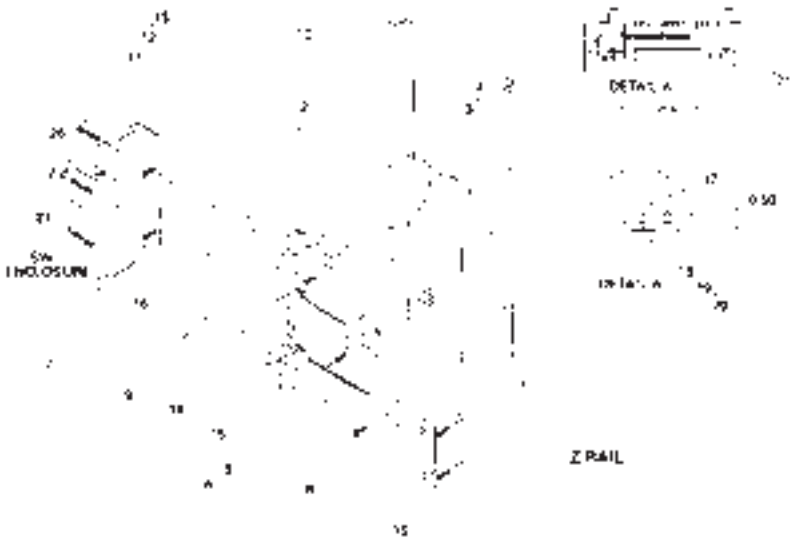

Item	Parts Supplied in Connection Strap Kit Cat. No. F6162D	Qty
1-2	[illegible]	[illegible]
3-4	3D Strap	[illegible]
5-6	[illegible]	[illegible]
7-8	[illegible]	[illegible]
9	[illegible]	[illegible]
10	[illegible]	[illegible]
[illegible]	[illegible]	[illegible]
12	[illegible]	[illegible]
13	[illegible]	[illegible]
14	[illegible]	[illegible]
15	[illegible]	[illegible]
16	[illegible]	[illegible]
17	[illegible]	[illegible]
18	[illegible]	[illegible]
19	[illegible]	[illegible]
20	[illegible]	[illegible]
21	[illegible]	[illegible]
26	[illegible]	[illegible]
27	[illegible]	[illegible]

Sentron® FCI, FCII Switchboards

Metering Data

Selection

User Metering

A full complement of switchboard instruments with appropriate current transformers, potential transformers and selector switches are available in all Siemens switchboards.

The meters and instrument switches are mounted on hinged panels with potential transformers and fuses located behind the door. Current transformers are mounted on the main bus or, in the case of branch feeder metering, at the load terminals of the branch protective device and normally do not require additional unit space.

Siemens Digital Power Meters

The Siemens Digital Power Meters are provided as an option for FCI & FCII switchboards. Please refer to the Power Monitoring Section in this catalogue for more information.

Ammeters and Voltmeters (Analog)

Ammeters are switchboard type with ± 1% accuracy, 0 to 6000 amperes maximum. The included instrument switch will provide positions to read each phase and will include an OFF position. Panel type ammeters with ± 3% accuracy, 800 ampere maximum, can be furnished for branch feeder metering to conserve panel space.

Voltmeters are switchboard type with± 1% accuracy, 0 to 600V AC. The included instrument switch provides positions to read each phase-to-phase voltage and each phase-to-neutral voltage and has an OFF position.

Current Transformers / Potential Transformers

Potential transformers are recommended wherever the system voltage exceeds 150 volts AC phase-to-neutral to lower voltage levels for instrument switches and meters mounted on the switchboard front panel.

Available CT Ratios — Ampere Rating

100:5	600:5	2500:5
150:5	800:5	3000:5
200:5	1000:5	4000:5
300:5	1200:5	5000:5
400:5	1500:5	6000:5
500:5	2000:5	

Number of CT's and or PT's required for Typical Meters Applied on Selected System Voltages

		Ammeter	Voltometer		Watthour Meter						Wattmeter		Varmeter		Power Factor Meter		Frequency Meter	Synchro-scope
					2 Element		2.5 Element		3 Element									
System	Volts AC	C/T	P/T	Scale	C/T	P/T	C/T	P/T	C/T	P/T	C/T	P/T	C/T	P/T	C/T	P/T	PT	P/T
1Ø3W	120/240	2	–	0-300	2	–	–	–	–	–	2	–	2	–	1	–	–	–
3Ø3W	240	2	–	0-300	2	–	–	–	–	–	2	2	2	2	1	2	–	2
	600	2	2	0-750	2	2	–	–	–	–	2	2	2	2	1	2	1	2
3Ø4W	120/240	3	–	0-300	–	–	3	–	–	–	3	2	3	2	1	2	–	–
	120/208	3	–	0-300	–	–	3	–	3	–	3	–	3	–	1	2	–	–
	347/600	3	3	0-750	–	–	3	2	3	3	3	2	3	2	1	2	1	2

Integrated Power Systems Switchboards

Type IPS

Product Description

Siemens integrated power systems (IPS) switchboards integrate multiple pieces of electrical distribution equipment into a single assembly. The design results in reduced installation time, a reduced footprint and reduced labour risk for installation.

The modular design of the IPS switchboard allows it to be combined with standard service entrance or distribution switchboards if needed. Also, the IPS switchboard can be added to an existing switchboard lineup.

IPS switchboards have a wide range of applications and are commonly used in retail stores, offices, health care facilities and retrofits.

Features & Benefits

Features

- All standard FCI, FCII & SMP Switchboard features
- Lighting panelboards
- Distribution transformers
- Half high distribution switchboard chassis
- Individually mounted breakers (cable in & cable out)
- Auxiliary sections for surge devices, ACCESS power monitoring, contactors, relays, time clocks
- Customer equipment, etc.

Integrated Power Systems Switchboard

Commonly Mounted Equipment

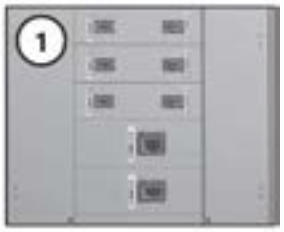

Distribution sections

- Up to 2000A (full height)
- Up to 1200A (half height)



Transformers

- Up to 300kVA (full height)
- Up to 112.5kVA (half height)

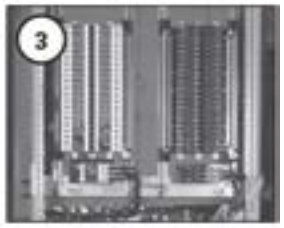

Panelboards

- P1 up to 250A
- P2 up to 600A

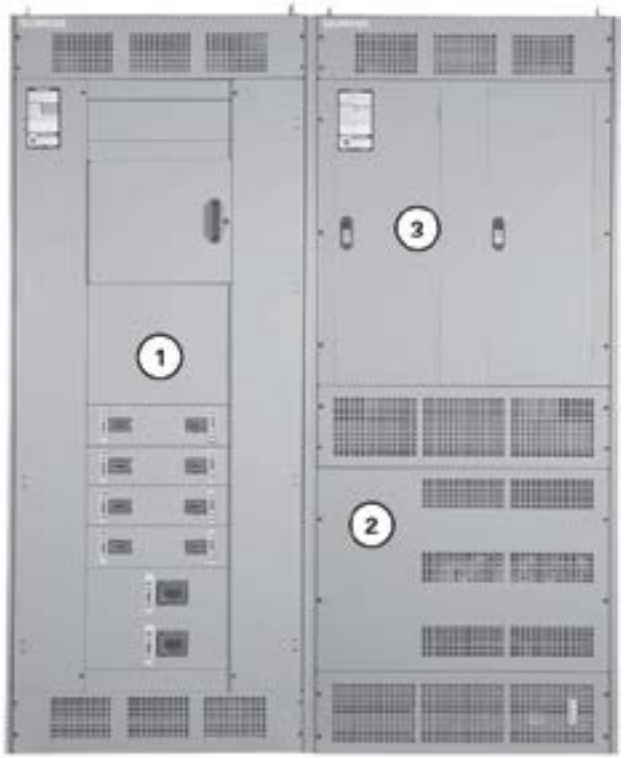

Integrated Power Systems Switchboards

Type IPS

Features & Benefits (continued)

Reduced Installation Time

IPS switchboards arrive at a jobsite with the components factory installed and wired. The result is significantly reduced installation time. The realized savings on installation result in lower labour costs which drops directly to the bottom line.

Reduced Space Requirements

By integrating components that are typically individually mounted, the IPS switchboard can reduce the space requirements for typical electrical equipment installation by up to 40%. This smaller footprint frees up valuable square footage that can be utilized by the building owner for other profitable uses.

Reduced Installation Risk.

IPS switchboards are assembled at Siemens manufacturing plants with meticulous attention to details reinforced with strict testing procedures. This focus on quality ensures that problems encountered with traditional installations such as misinterpretation of drawings or field installation errors are eliminated. Utilizing IPS switchboards eliminates risks, enabling projects to come in on time and on budget.

Standards and Certifications

- CSA C22.2 No.31
- Mounted panelboards built to UL67, NEMA PB-1 and CSA C22.2 No. 29
- Other equipment is CSA listed as applicable

Additional Information

For complete application and pricing information contact your local Siemens sales office.

Integrated Power Systems Switchboard
Optimized Electrical Room Layout

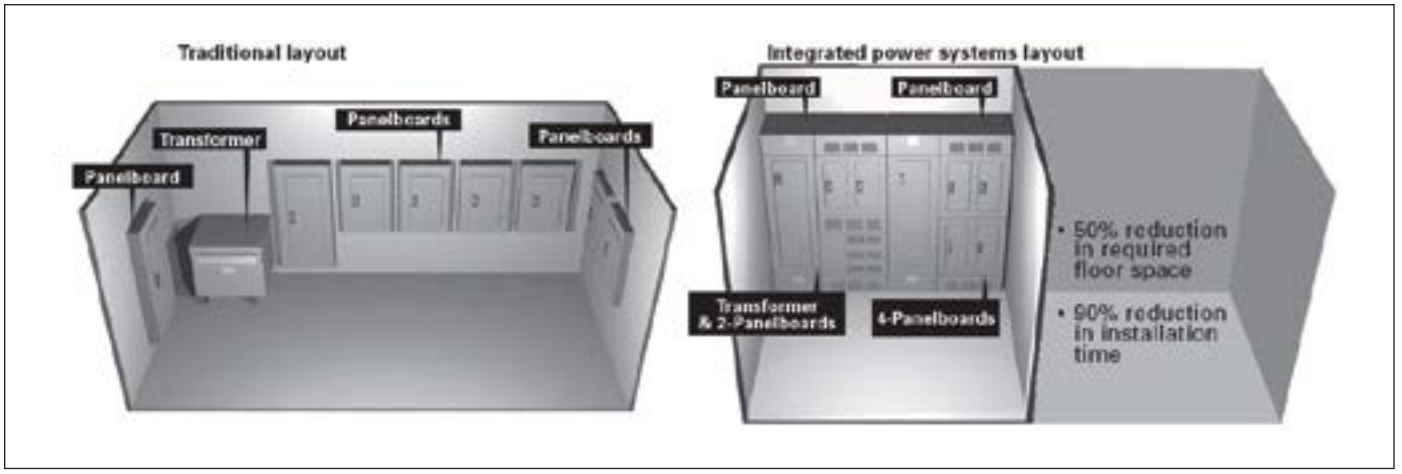

Embedded Micro Metering Module™

SEM3 System configured in Distribution Panels and Switchboards

The information below pertains to panelboard types S5 and switchboard types SMP, FCI, and FCII. SEM3 specifics to S5, SMP, FCI, and FCII are:

SEM3 for use in Siemens Switchboards



Controller

SEM3 controller is mounted in a low voltage compartment. Each controller can monitor up to 45 circuits. Applications that require monitoring more than 45 circuits will require additional controllers.



Current Transformers (CTs)

Six sizes of CTs are available for use in S5, SMP, FCI and FCII applications: 50, 125, 250, 400, 600, and 1200 amp. All CTs are pre-mounted to a support bracket that attaches to the interior. Each bracket supports a maximum of 3 CTs and is designed for the breaker selected (brackets are not interchangeable between breaker frames). Each CT will be attached to a data module that is placed in the meter racks.



Meter Racks

All meter racks will be installed next to the SEM3 controller in unit space. The 21 space meter rack is used as a default option where possible.

NOTE: Monitoring of 45 circuits will require two 21 position racks and one 3 position rack

Other Considerations

Configuration: Data modules from CTs monitoring a circuit breaker must be mounted adjacent to one another in the meter rack. Any field changes to the factory configuration must take this into account.

Start-up & Commissioning: Siemens can provide these services. Contact your local SIEMENS Sales office for more details.

Notes



Type WL Low voltage
Metal-Enclosed Switchgear

Contents

Low-voltage Switchgear

Standard WL Low-voltage Switchgear	12-2 – 12-3
Construction Details	12-3 – 12-5
WL Circuit Breakers	12-6 – 12-8
Electronic Tripping Units	12-7 – 12-9
Technical Information	12-10 – 12-21
Section Configuration/Dimensions	12-23 – 12-30
Sm@rtGear WL Low-voltage Switchgear	12-31 – 12-32
Marine WL Low-voltage Switchgear	12-33
Arc Resistant WL Low-voltage Switchgear	12-34 – 12-36
Arc Flash Solutions	12-37 – 12-42
Secondary Unit Substations	12-43 – 12-45

Low-voltage Switchgear

Type WL Low-voltage Metal-Enclosed Switchgear

Type WL Low-voltage Metal-Enclosed Switchgear

Siemens Type WL low-voltage metal-enclosed switchgear is designed, constructed and tested to provide superior power distribution, power monitoring and control. At the heart of the Type WL low-voltage switchgear is the World Class Siemens WL breaker.

Siemens Type WL low-voltage switchgear can be utilized in the following applications:

- **Industrial**
  Semiconductor
  Petrochemical
  Automotive
  Biotech
  Pharmaceutical
- **Institutional**
  Water treatment
  Airports
  Universities
  Medical facilities
  Correctional facilities
- **Critical power**
  Data Processing
  Continuous industrial process
  Hospitals
- **Utility and co-generation**
- **Commercial**
  Large office buildings
  Distribution centres
  Large warehouses



Type WL Low-voltage Metal-Enclosed Switchgear

Product Scope:

- Equipment ratings
  635VAC Maximum
  3 Phase 3 Wire,
  3 Phase 4 Wire
  50/60 Hz
  6000 amp maximum horizontal bus
  6000 amp maximum vertical bus
- Enclosure options
  NEMA 1 Indoor
  NEMA 3R Outdoor Walk-In
  NEMA 3R Outdoor Non Walk-in

Siemens WL breakers can be manually or electrically operated, fused or unfused and are available in the following rating designations – N, S, H, L, M and F. Refer to tables on Page 13 for interrupt and withstand ratings for each rating designation.

Industry Standards

Type WL switchgear with power circuit breakers are designed, tested and constructed in accordance with:

- UL 1558 — Metal-Enclosed Low-voltage Power Circuit Breaker Switchgear
- CSA C22.2 No. 31 - Switchgear Assemblies
- ANSI C37.20.1 — Metal-Enclosed Low-voltage Power Circuit Breaker Switchgear
- ANSI C37.50 — Test Procedure for Low-voltage AC Power Circuit Breakers Used in Enclosures
- ANSI C37.51 — Conformance Testing of Metal-Enclosed Low-voltage AC Power Circuit Breaker Switchgear Assemblies
- NEMA SG5 - Power Switchgear Assemblies
- Applicable requirements of the National Electric Code (NEC)

WL drawout circuit breakers are in accordance with:

- UL 1066 — Low-voltage AC and DC Power Circuit Breakers Used in Enclosures
- ANSI C37.13 — Low-voltage AC Power Circuit Breakers Used in Enclosures
- ANSI C37.16 — Preferred Ratings, Related Requirements, and Application for Low-voltage Power Circuit Breakers and AC Power Circuit Protectors
- ANSI C37.17 — Trip Devices for AC and General Purpose DC Low-voltage Power Circuit Breakers
- NEMA SG3 - Low-voltage Power Circuit Breakers

Features and modifications required by NEC are incorporated when the assembly is designated as "Service Equipment."

UL Listing

Underwriters' Laboratories listing mark (UL) is supplied for each vertical section provided all devices within a vertical section are UL Listed or UL Recognized and suitable for the intended use. All circuit breaker drawout elements are UL Listed.

Optional CSA compliance with cUL labeling is available.

Arc Resistant

Optional Type WL arc resistant low-voltage switchgear is available and is UL listed to ANSI/IEEE C37.20.7. Type 2B arc resistant accessibility rating with maximum internal acring short-circuit current rating of 100kA @508V and 85kA @ 635V.

Seismic Qualification

Seismic qualification to all major seismic construction standards (IBC, UBC, CBC, SBC, BOCA and IEEE 693) is available.

Low-voltage Switchgear

Type WL Low-voltage Metal-Enclosed Switchgear

Construction Details

General

The Siemens Type WL switchgear assembly consists of one or more metal-enclosed vertical sections. The end sections are designed to allow installation of future sections.

Each vertical section consists of up to four individually enclosed breaker or auxiliary compartments which are sized to provide uniform height.

Included in each assembly are various components such as circuit breakers, instrumentation and control equipment, transformers, relays, three-phase bus work, and all internal wiring, connectors, and other supporting equipment.

In accordance with ANSI C37.20.1, the maximum temperature for parts that are handled is 50°C. The main bus maximum temperature rise is 65°C above 40°C ambient. The temperature rise of the air surrounding the cable connection points is limited to 45°C above 40°C ambient.

Finish

During construction, the structural steel parts, panels, and compartments are all prepared for painting by a five-stage wash system.

Standard finish colour is light gray ANSI 61. The standard painting process is a UL approved electrostatic powder coat paint system utilizing a polyester powder coat paint. The completed finish has a nominal 2 mils dry film thickness.

Assembly Construction

Siemens Type WL metal-enclosed low voltage switchgear is constructed of a rigid internal frame structure that minimizes the possibility of damage during shipment and supports multiple installation methods – rolling or lifting. Lifting eyes are integrated into the internal frame design and ensure the structural integrity of the lifting assembly is always adequate for the weight of the total structure.

If requested in advance, the switchgear structure can be shipped so that the unit can be tilted onto its back during installation. This is an option that must be specified at order entry.

Each complete vertical section contains three compartments.

(1) Front compartment containing breakers and/or auxiliary equipment
(2) Bus compartment containing horizontal and vertical bus
(3) Rear cable compartment containing the load side runbacks connecting the load side of the breaker to the load cable terminals

Within the front compartment, each breaker is barriered and compartmented from all other breakers in the front compartment. This design also isolates the breakers in the front compartment from the bus compartment.

Optional barriers can be supplied to isolate the bus compartment from the rear cable compartment. Other optional barriers include: (1) Full depth section barriers to isolate one section from the adjacent section(s). (2) Barriers to isolate the incoming line side connections to the main breaker(s) from the load side bus and connections in the switchgear section. (Line/load barriers are provided as a standard feature for service equipment main breakers.)

1. Breaker Hoist and Track
2. Ventilation and Lifting Structure
3. Quarter Turn Door Latch
4. Secondary Disconnect Access Door
5. Channel Sill Base (Optional)
6. Breaker Compartment
7. Auxiliary Instrument Compartment
8. Secondary Disconnect
9. Breaker Cradle (Guide Frame)
10. Breaker Drawout Rail
11. TOC Switch Operator

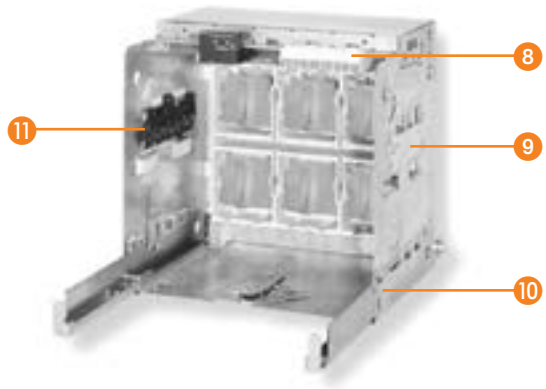

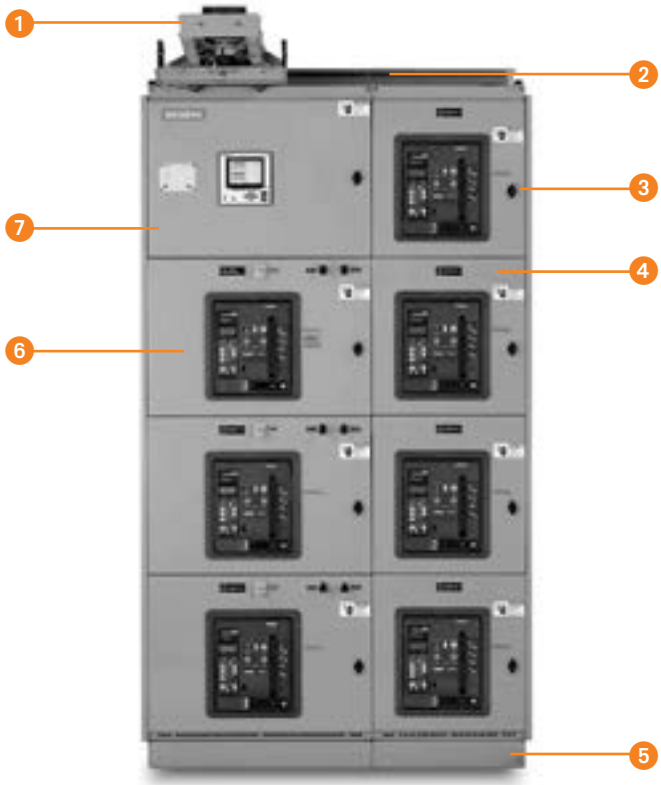

Low-voltage Switchgear

Type WL Low-voltage Metal-Enclosed Switchgear

Construction Details

Main and Ground Bus

The standard main bus is silver-plated copper. Tin-plated copper bus is optionally available. Vertical and horizontal bus bar utilize a channel shape design to maximize short circuit withstand capability and minimize heat rise. All bus joints include Grade 5 bolts and conical spring washers. Provisions for future extension of the main bus include plated joints and high tensile strength steel hardware.

The main three-phase horizontal bus is arranged vertically one phase above the other with edge-to-edge alignment to provide high, short circuit strength. Insulated main bus with isolated vertical bus is optional.

Vertical bus ratings available are 1600, 2000, 3200, 4000, 5000 and 6000 amperes continuous current. Horizontal bus ratings available are 1600, 2000, 3200, 4000, 5000 and 6000 amperes. A neutral bus is furnished when specified, and can be rated 1600, 2000, 3200, 4000, 5000 or 6000 amperes continuous current.

A 1/4" X 3" standard copper ground bus extends through all sections. Cable lugs are mounted to the ground bus in each section.

Standard short-circuit withstand (4 cycle) and short-time withstand (60 cycle) bus bracing is 100,000 amperes. Higher shortcircuit withstand bus bracings (150kA and 200kA) are available. Load side runbacks for feeder circuits are copper construction, are insulated with sleeve tubing in the main bus area, and are supported by high-strength bus bracing.

Control and Communication Wiring

Standard control and communication wiring is #14 AWG extra-flexible, stranded copper type SIS. Control and communication wiring is installed and accessed from the front of the switchgear structure. Each breaker compartment has a dedicated horizontal and vertical wireway.

For devices not having screw-type terminals, pressure terminals are used.

Insulation

The insulation used is a UL recognized thermoset material that has excellent heat resistance, flame retardance, dimensional stability and low moisture absorption.

Circuit Breaker Compartments

Typical circuit breaker compartments include primary disconnects, drawout rails, secondary disconnects, vertical wireway, horizontal wireway and, if applicable, TOC switch operator, MOC switch operator and associated interlocks. Draw-out rails allow the breaker to be withdrawn from the compartment without additional extensions or adapters. Up to six (2 sets of three) current transformers for metering or relaying can be mounted in each compartment.

A variety of auxiliary devices such as breaker control switches, indicating lights and pushbuttons can be mounted on the breaker compartment door.

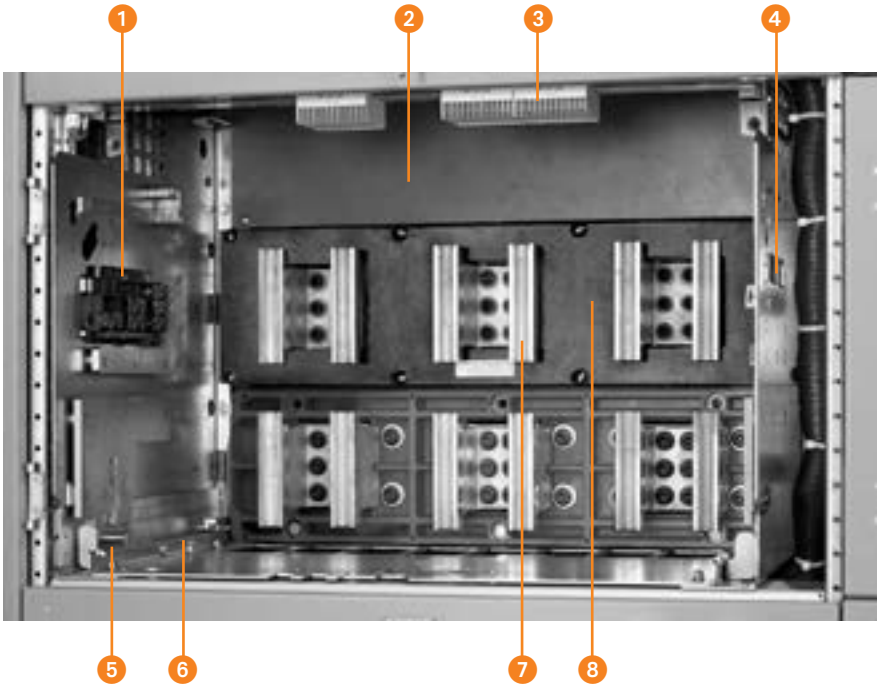

1. TOC Switch Operator
2. Breaker Compartment Rear Barrier
3. Secondary Disconnect
4. Vertical Wireway
5. Interference Interlock
6. Drawout Rails
7. Primary Disconnect
8. Cradle Mounted Current Transformer

Circuit Breaker Cell Interior

Type WL Low-voltage Metal-Enclosed Switchgear

Options

Switchgear Mounted Hoist
The integrally mounted hoist, standard on walk-in outdoor and optional on indoor switchgear enclosures, travels along rails on top of the switchgear to assist in breaker handling.

TOC and MOC Switches
The Truck Operated Cell (TOC) Switch provides interlocking control or remote indication of the breaker racking position. The cubicle mounted auxiliary switch or Mechanism Operated Cell (MOC) switch provides interlocking control or remote indication based on the main contact position (open or closed).

Shutters
These provide protection against accidental contact with primary disconnects in a compartment when the breaker is removed. Shutters automatically close when the breaker is withdrawn and are pad-lockable and field installable.

Key Interlock
This provides a mechanical means for operating circuit breakers and other devices only when predescribed conditions are met.

Test Set
A portable breaker test set is available as an option and supports testing the full range of functions and protective settings supplied with the breaker trip unit.

Metering and Auxiliary Compartments
Compartments are available to house devices such as voltage transformers, metering, control power transformers, and supervisory devices.

Instrument and Control Transformers
Voltage transformers and control power transformers are mounted in auxiliary compartments. These transformers are protected by primary pull-out type current-limiting fuses and secondary fuses. Current transformers are normally mounted on the compartment primary disconnect studs where they are readily accessible.

Miscellaneous

- Each switchgear lineup includes a breaker lifting device that is adjustable for use with Size II and Size III breakers.
- An optional portable breaker hoist is available if the integrated breaker hoist and track is not specified.
- A test cabinet is also available as an option. The test cabinet is wall mounted necessary equipment for testing electrically-operated breakers that have been removed from the breaker compartment. The test cabinet doesn't include or replace a breaker trip unit tester.
- A WL remote breaker racking device (RBRD) is available as an optional accessory that allows maintenance personnel to safely rack Siemens Type WL breakers into the Connect, Test and Disconnect positions from up to 30 feet away from the breaker. This allows the operator to be outside the arc flash hazard boundary and thereby providing additional personnel protection.
- 4" high formed steel channel sills are available for indoor switchgear enclosures.

Outdoor Switchgear
Type WL switchgear is available in two outdoor (NEMA 3R) enclosures. Walk-in and non walk-in versions are available to meet your particular application.

For protection from snow, rain and other foreign matter, both outdoor enclosures rest on a six-inch high, formed steel base which provides rigid support and a tight bottom seal. A heavy duty protective under-coating is applied to the underside of all outdoor enclosures to protect against moisture and corrosion. Shielded ventilation housings permit proper air circulation while excluding dirt and foreign matter.

In the walk-in outdoor enclosure a lighted, unobstructed service aisle is provided at the front of the switchgear allowing inspection and maintenance without exposure to the elements. An access door equipped with an emergency bar release is located at each end of the aisle.

Construction Details

The following features are standard with walk-in outdoor enclosures.
(1) Space heaters in breaker compartment and bus compartment.
(2) Screens and filters for exterior door ventilation louvers.
(3) Incandescent lighting receptacle with three-way switch at each aisle access door.
(4) Duplex receptacle with ground fault protection at each aisle access door.
(5) Loadcentre for power distribution to lights, receptacles, switches and heaters.

For non walk-in outdoor enclosures, space heaters and screens/filters for ventilation louvering are standard with lighting, receptacles, switches and loadcentres offered as options.



Side View

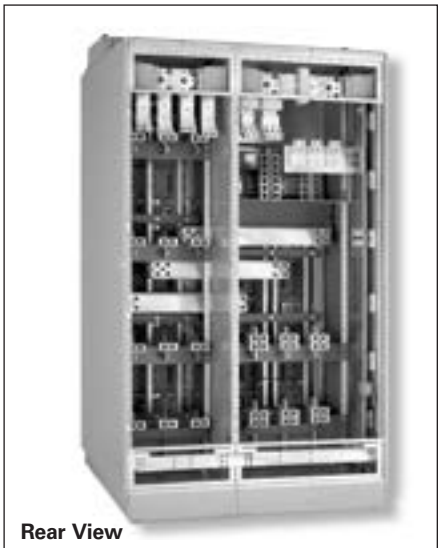

Rear View

Low-voltage Switchgear

Type WL Low-voltage Metal-Enclosed Switchgear—WL Circuit Breakers

Overview

WL Circuit Breaker

Superior individual products for low-voltage power distribution systems

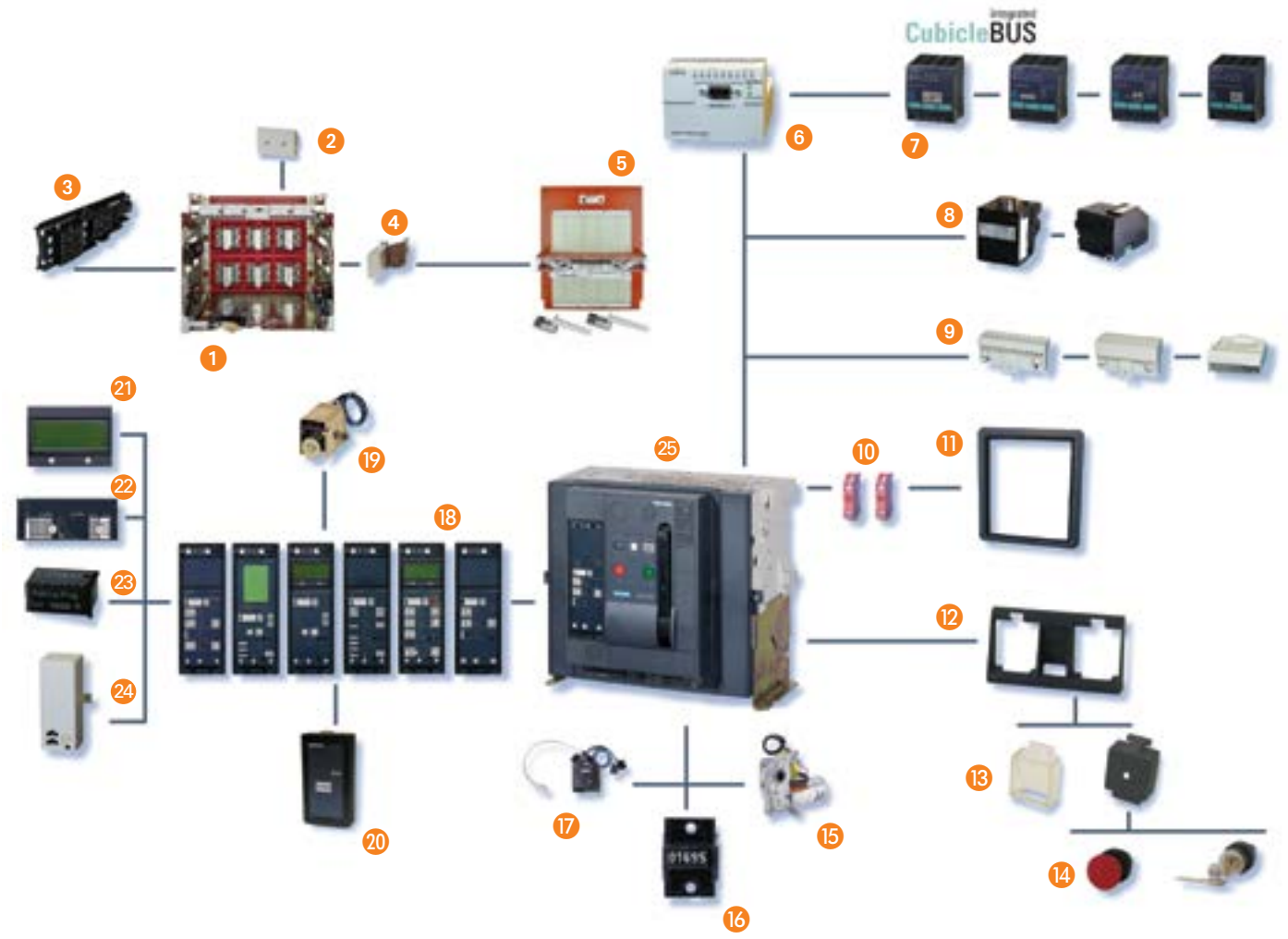

1 Guide Frame (for drawout version only)
2 Vertical to Horizontal BUS Connector
3 Position Signaling Switch (TOC)
4 Breaker / Guide Frame Grounding Contact
5 Shutter (locking)
6 MODBUS or PROFIBUS Communications
7 External CubicleBUS I/O Module
8 Plug-In Open and Closed Solenoids
9 Multiple Secondary Connections
10 Auxiliary Switch Block
11 Door Sealing Frame
12 Interlocking Set Base Plate
13 Protective Cover for OPEN/CLOSE Buttons
14 Multiple Key Locking Accessories
15 Single Bolt Motor Operator Installation
16 Operations Counter
17 Breaker Status Sensor (BSS)
18 Complete Trip Unit Family
19 Remote Reset
20 Breaker Data Adapter (BDA) for Internet Connection
21 Multi Angle LCD Module
22 Ground Fault Protection Module
23 Rating Plug
24 Metering Function (+ wave forms and harmonics)
25 Circuit Breaker

Electronic Trip Units

During development of our electronic trip units we have consistently striven to ensure modularity. The following are just some of the modules that are simple to retrofit at any time:

- Ground fault protection
- Communication
- Metering function
- Displays
- Rating plugs

This enables fast local adaptation to new system conditions. At the same time, the ETUs are provided with new, innovative functions, and all trip units are completely interchangeable independent of breaker ratings.

Rating Plug

The Rating Plug is a replaceable module that enables users to reduce the rated device current for optimum adaptation to the system; e.g. during startup of a plant section. The Rating Plug should be selected so that it corresponds to the rated current of the system.

Switch-selectable I^2t or I^4t Characteristic Curve Improved Overload Protection

The best possible protection is assured when all protective devices in the system are optimally coordinated. To achieve optimum selectivity and coordination, the long-time characteristic can be switched between I^2t and I^4t.

Switchable Parameter Sets

To allow the protection to adapt to changes in system needs such as switching between utility and generator feeds, WL Circuit Breakers support ETUs with two independent parameter sets. Switching between the parameter sets occurs in less than 100 ms and can be done remotely or via a contact input to an optional CubicleBUS module.

Extended Instantaneous Protection

The electronic trip units designed for use with the WL circuit breaker provide a feature we call "Extended Instantaneous Protection" (Patent Pending).

It allows the WL breaker, as a family, across the entire range of ampacities to be applied at the withstand rating of the breaker with minus 0% tolerance; that means no instantaneous override. EIP further enables the circuit breaker to be applied up to the full interrupting rating of the breaker on systems where the available fault current exceeds the withstand rating, even with LS-only trip units. Why is this feature important? The answer is reliable power.

The coordination of the main breaker and the first level of feeder breakers is especially important because of the wide spread outage that will occur if one of these breakers trips unnecessarily.

Conventional practice is to specify electronic trip beakers with "LS" type trip units in critical power systems. These 'Long-Time' and 'Short-Time' only trip units forgo the fast tripping times given by an 'Instantaneous' function. The justification for this delay is the benefit of allowing a downstream breaker to open first to clear a high magnitude fault. The main or feeder stays closed to keep the remainder of the loads operating.

However, a circuit breaker with an LS-only trip unit may never be applied on a system capable of delivering fault current higher than the breaker's withstand rating, commonly 85kA or less. Where the available fault current is above this level, a breaker with an additional function must be used — an instantaneous override. This instantaneous override function trips the breaker instantly when the fault current reaches a pre-determined level below the withstand rating, usually around 20% lower. The benefit of this override is to allow application of the breaker up to the interrupting rating, which may be as high as 150kA. The disadvantage is that it compromises the coordination benefit because the main will probably trip at the same time as a downstream branch breaker in that 20% lower override window.

This is where the Extended Instantaneous Protection feature of the WL can offer the next level of coordination and protection functionality. Unlike an instantaneous override, Extended Instantaneous Protection (EIP) allows the full withstand rating — in fact up to the tolerance of plus 20% higher. Of course, EIP still provides the ability of the breaker to be applied at the interrupting level, as high as 150kA in a Frame Size III, non-fused breaker. This unique combination enables the system designer to achieve the highest possible level of coordination in the industry and also allows application of the WL on modern power systems with extremely high levels of available fault current.

A further benefit offered by EIP, over a standard LS trip unit equipped breaker, is that it provides an extra measure of protection in the event that the available fault current increases at some time during the life of the system beyond the withstand level. This would typically be due to a utility transformer change but could also be due to the addition of generators or large motors that contribute fault current. EIP provides the breaker the ability to react in an instantaneous fashion to a high level fault instead of having to rely on the slower reaction time of the short-time function.

Sample Configuration of an ETU745



Selection Criteria for WL Circuit Breakers



The basic criteria for selecting circuit breakers is:

Maximum Available Short Circuit at the installation point. This value determines the short circuit current interrupting rating or short circuit current withstand rating of the circuit breaker.

Rated Current In which is to flow through the respective circuit breaker continuously. This value may not be greater than the maximum rated current of the circuit breaker. The rated current for the WL is determined by the rating plug, up to the maximum frame rating.

Ambient Temperature of the circuit breaker.

Design of the circuit breaker.

Protective Functions of the circuit breaker.These are determined by the selection of the appropriate trip unit.

Dynamic Arc-Flash Sentry
A unique feature of the WL trip unit allows the system designer to achieve lower levels of arc flash energy and delayed tripping for selective trip coordination purposes.

Dynamic Arc-Flash Sentry (DAS) employs the unique dual protective setting capability of the 776 trip units, coupled with the ability to easily toggle to a lower arc flash parameter set. A normal operation parameter set can be optimized for selective trip coordination, while the second set is optimized for lower arc flash energy levels. The dynamic action comes from the ability to switch from the normal operation set to the arc flash limiting set based on the presence of personnel as they approach the flash protection boundary. A wide variety of switching methods may used based on the needs of a particular facility. The capabilities range from fully automatic switching using appropriate occupancy sensors to manual switching via a key operation.

Electronic Trip Units





Basic Protective Functions		ETU745	ETU776
Long-time overcurrent protection	L	●	●
Short-time delayed overcurrent protection	S	●	●
Instantaneous overcurrent protection	I	●	●
Neutral protection	N	●	●
Ground fault protection	G	❍	❍
Additional Functions			
Selectable neutral protection		●	●
Defeatable short-time delay		●	●
Defeatable instantaneous protection		●	●
Selectable thermal memory		●	●
Zone selective interlocking		❍	❍
Selectable I^2t or fixed short-time delay		●	●
Adjustable instantaneous pick-up		●	●
Selectable I^2t or I^4t long-time delay		●	●
Adjustable short-time delay and pick-up		●	●
Selectable and adjustable neutral protection		●	●
Dual protective setting capability		—	●
Extended instantaneous protection		●	●
Parameterization and Displays			
Parameterization by rotary switches (10 steps)		●	—
Parameterization by communication (absolute values)		●	●
Parameterization by menu/keypad (absolute values)		—	●
Remote parameterization of the basic functions			●
Remote parameterization of the additional functions		—	●
Alphanumeric LCD		❍	—
Graphical LCD		—	●
Metering Function			
Metering function Plus		❍	❍
Communication			
CubicleBUS		●	●
Communication via PROFIBUS-DP		❍	❍
Communication via the MODBUS		❍	❍
Communication via the Ethernet (BDA)		❍	❍

● standard — not available ❍ optional

Tripping Characteristics

Every trip unit and every trip function has its own characteristic. You will find just a small section of these illustrated below. The characteristics show the respective greatest and smallest setting range of WL Circuit Breakers.

To obtain a complete release characteristic, the appropriate characteristic functions must be determined.

The characteristics show the behavior of the overcurrent release when it is activated by a current already flowing before tripping. If the overcurrent trip takes place immediately after closing and the overcurrent release is therefore not yet activated, the opening time is prolonged by about 3 to 10 ms, depending on the value of the overcurrent.

ETU745

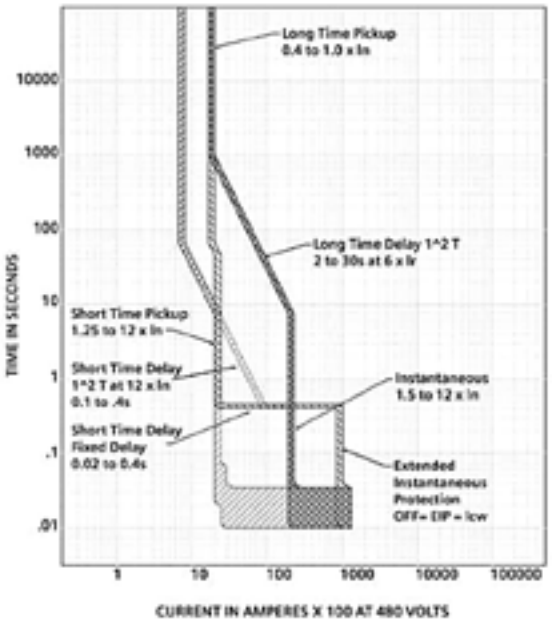

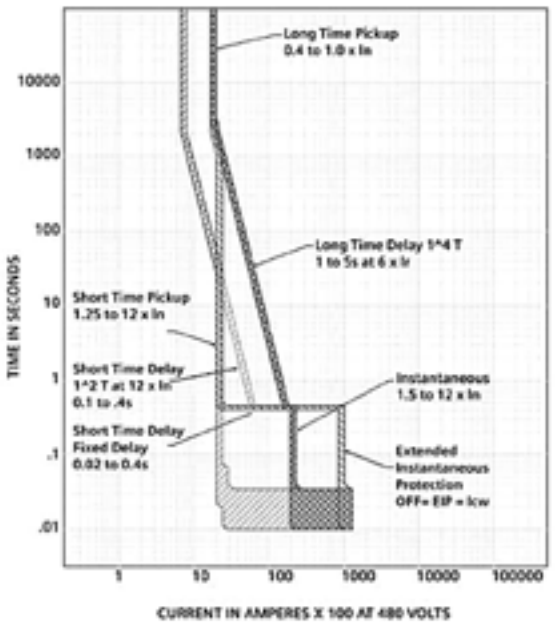

Tripping Characteristics

ETU776

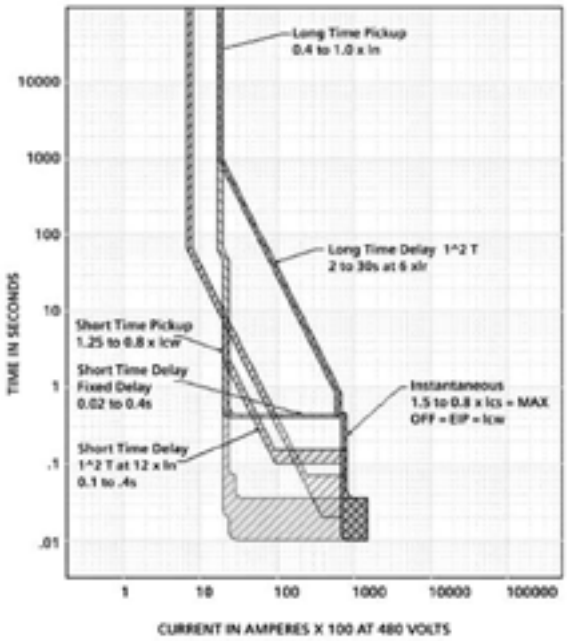

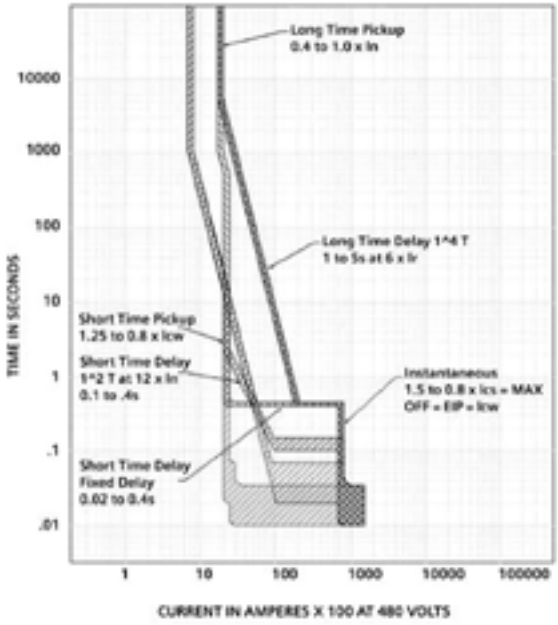

Ground Fault Curve for ETU745 and 776

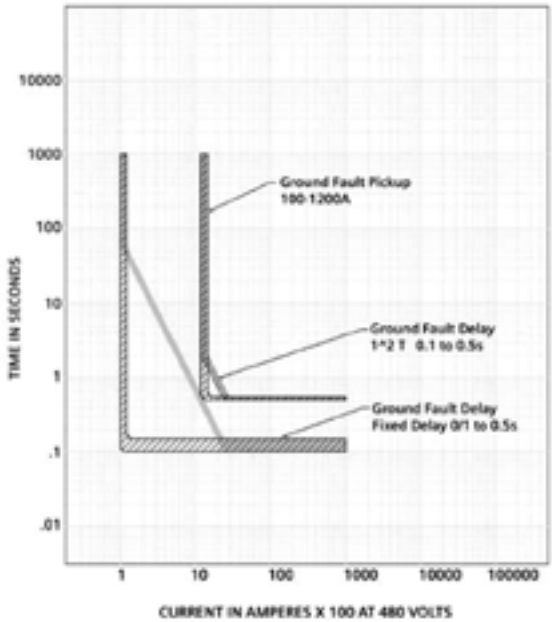

Low-voltage Switchgear

WL Low-voltage Metal-Enclosed Switchgear

WL Circuit Breakers ANSI / UL 1066

Breaker Ratings

Frame Rating / Rating Class		Frame Size II																
		800					1600					2000				3200		
		N	S	H	L	F	N	S	H	L	F	S	H	L	F	S	H	L
Instantaneous Short-circuit Current① (kA RMS) 50/60 Hz	254VAC 508VAC 635VAC	50 50 50	65 65 65	85 85 65	100 100 85	200 200 200	50 50 50	65 65 65	85 85 65	100 100 85	200 200 200	65 65 65	85 85 65	100 100 85	200 200 200	65 65 65	85 85 65	100 100 85
Short-time Withstand Current I_{cw} (kA RMS) 50/60 Hz	0.5s	50	65	65	85	—	50	65	65	85	—	65	65	85	—	65	65	85
Extended Instantaneous Protection (kA RMS -0% to +20%)		50	65	65	85	—	50	65	65	85	—	65	65	85	—	65	65	85
Close and Latch Ratings (kA RMS) 50/60 Hz		50	65	65	85	65	50	65	65	85	65	65	65	85	65	65	65	85
Rating Plug Range		200, 225, 250, 300, 315, 350, 400, 450, 500, 600, 630, 700, 800 amps					200, 225, 250, 300, 315, 350, 400, 450, 500, 600, 630, 700, 800, 1000, 1200, 1250, 1600 amps					200, 225, 250, 300, 315, 350, 400, 450, 500, 600, 630, 700, 800, 1000, 1200, 1250, 1600, 2000 amps				200, 225, 250, 300, 315, 350, 400, 450, 500, 600, 630, 700, 800, 1000, 1200, 1250, 1600, 2000, 2500, 3000, 3200 amps		
Endurance Rating (switching operations with maintenance)②	Mechanical Electrical	15,000 15,000					15,000 15,000					15,000 15,000				15,000 15,000		

Frame Rating / Rating Class		Frame Size III												
		3200		4000				5000				6000		
		M	F	H	L	M	F	H	L	M	F	H	L	M
Instantaneous Short-circuit Current① (kA RMS) 50/60 Hz	254V AC 508V AC 635V AC	150 150	200 200	85 85	100 100	150 150	200 200	85 85	100 100	150 150	200 200	85 85	100 100	150 150
		85	200	85	85	85	200	85	85	85	200	85	85	85
Short-time Withstand Current I_{cw} (kA RMS) 50/60 Hz	0.5 s	100②	—	85	100③	100②	—	85	100	100③	–	85	100	100③
Extended Instantaneous Protection (kA RMS -0% to +20%)	254V AC 508V AC 635V AC	150 85	—	85	100	150 85	—	85	100	150 85	–	85	100	150 85
Close and Latch Ratings (kA RMS) 50/60 Hz		100②	85	85	85	100②	85	85	85	100②	85	85	85	100②
Rating Plug Range		800, 1000, 1200,1250, 1600, 2000, 2500, 3000, 3200 amps		800, 1000, 1200, 1250, 1600, 2000, 2500, 3000, 3200, 4000 amps				800,1000, 1200, 1250, 1600, 2000 2500, 3000, 3200, 4000, 5000 amps				800,1000, 1200, 1250, 1600, 2000 2500, 3000, 3200, 4000, 5000, 6000 amps		
Endurance Rating (switching operations with maintenance)②	Mechanical Electrical	10,000 10,000		10,000 10,000				10,000 10,000				10,000 10,000		

① Maximum rated voltage for fused breakers is 600VAC.
② Maintenance means: replacing main contacts and arc chutes (see operating instructions).
③ Short-time withstand rating is 85kA RMS at 635VAC.

WL Non-Automatic Switches ANSI / UL 1066

Ratings

Frame Rating / Rating Class		Frame Size II							Frame Size III					
		800		1600		2000		3200	3200	4000		5000		6000
		L	F①	L	F①	L	F①	L	F①	L	F①	L	F①	L
Short-time Withstand Current (kA RMS) 50/60 Hz	0.5 s	85	20	85	20	85	20	85	40	100	40	100	40	100
Breaking Capacity with External Relay (kA RMS) 635Vac , 50/60 Hz, max time delay	0.5 s	85	20	85	20	85	20	85	40	100	40	100	40	100

WL Circuit Breakers

Frame Rating		Frame Size II				Frame Size III			
		800	1600	2000	3200	3200	4000	5000	6000
Rated current In									
at 40°C, at 50/60Hz	A	800	1600	2000	3200	3200	4000	5000	6000
Rated operational (nominal) voltage	VAC	600	600	600	600	600	600	600	600
Rated maximum voltage	VAC	635	635	635	635	635	635	635	635
Permissible ambient temperature operation (for operation with LCD max. 55°C)	°C	-25 / +70	-25 / +70	-25 / +70	-25 / +70	-25 / +70	-25 / +70	-25 / +70	-25 / +70
Storage (observe special conditions for LCD)	°C	-40 / +70	-40 / +70	-40 / +70	-40 / +70	-40 / +70	-40 / +70	-40 / +70	-40 / +70
Power loss at Rated Current with 3-phase② symmetrical load	W	85 130 (fused)	320 520 (fused)	500 850 (fused)	1150	700	1100	1650	2475
Operating times Make-time	ms	35	35	35	35	35	35	35	35
Break-time (with active ETU3)	ms	34	34	34	34	34	34	34	34
Break-time (without active ETU4)	ms	50	50	50	50	50	50	50	50
Total clearing time (with active ETU3)	ms	50	50	50	50	50	50	50	50
Total clearing time (without active ETU4)	ms	65	65	65	65	65	65	65	65
Make-time, electrical (via closing solenoid)	ms	50	50	50	50	50	50	50	50
Break-time, electrical (via shunt trip)	ms	40	40	40	40	40	40	40	40
(via instantaneous UVR)	ms	73	73	73	73	73	73	73	73

① Interrupting rating is equal to 200kA based on the rating of the f.use
② Consult factory for fuse carriage power l.o ss

WL Circuit Breakers

		Frame Size II				Frame Size III			
Frame Rating		**800**	**1600**	**2000**	**3200**	**3200**	**4000**	**5000**	**6000**
Endurance									
Mechanical (without aintenance)	operating cycles	12,500	12,500	10,000	10,000	5,000	5,000	5,000	5,000
Mechanical (with maintenance)①	operating cycles	15,000	15,000	15,000	15,000	10,000	10,000	10,000	10,000
Electrical (without maintenance)	operating cycles	7,500	7,500	4,000	4,000	2,000	2,000	2,000	2,000
Electrical (with maintenance)①	operating cycles	15,000	15,000	15,000	15,000	10,000	10,000	10,000	10,000
Switching frequency	1/h	60	60	60	60	60	60	60	60
Minimum interval between breaker trip and next closing of the circuit breaker (when used with the automatic mechanical reset of the bell alarm)	ms	80	80	80	80	80	80	80	80
Mounting position				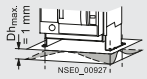					
Auxiliary secondary wire size (Cu) max # of aux. connecting leads x cross section (solid or stranded)	Bare wire pressure terminal	1 x AWG 14 or 2 x AWG 16	1 x AWG 14 or 2 x AWG 16	1 x AWG 14 or 2 x AWG 16	1 x AWG 14 or 2 x AWG 16	1 x AWG 14 or 2 x AWG 16	1 x AWG 14 or 2 x AWG 16	1 x AWG 14 or 2 x AWG 16	1 x AWG 14 or 2 x AWG 16
	Tension spring terminal	2 x AWG 14	2 x AWG 14	2 x AWG 14	2 x AWG 14	2 x AWG 14	2 x AWG 14	2 x AWG 14	2 x AWG 14
	Ring tongue terminal (standard)	2 x AWG 14 1 x AWG 102	2 x AWG 14 1 x AWG 102	2 x AWG 14 1 x AWG 102	2 x AWG 14 1 x AWG 102	2 x AWG 14 1 x AWG 102	2 x AWG 14 1 x AWG 102	2 x AWG 14 1 x AWG 102	2 x AWG 14 1 x AWG 102
		2 x AWG 16	2 x AWG 16	2 x AWG 16	2 x AWG 16	2 x AWG 16	2 x AWG 16	2 x AWG 16	2 x AWG 16
TOC wire connection size (Cu) max # of aux. connecting leads x cross section (solid or stranded)	Bare wire pressure terminal	1 x AWG 14	1 x AWG 14	1 x AWG 14	1 x AWG 14	1 x AWG 14	1 x AWG 14	1 x AWG 14	1 x AWG 14
Weight③ Circuit Breaker Guide Frame	kg/lb kg/lb	72/159 51/112	72/159 51/112	75/165 60/132	95/209 69/152	155/341 139/306	155/341 139/306	155/341 139/306	155/341 139/306
MOC wire connection size (Cu) max # of aux. connecting leads x cross section (solid or stranded)	Bare wire pressure terminal	1 x AWG 14	1 x AWG 14	1 x AWG 14	1 x AWG 14	1 x AWG 14	1 x AWG 14	1 x AWG 14	1 x AWG 14

① Maintenance consists of replacing main contacts and arc chutes (see operating instructions).
② For use only with Siemens supplied ring terminals (WL1.0RL).
③ **Fused Breaker Weights**

	Frame Size II (fused)	Frame Size III (fused)
Breaker (kg/lb)	103/227	same as table above
Guide Frame	68/150	130/275
Fuse Carriage	–	102/225

WL Circuit Breaker Accessory Ratings

Manual Operating Mechanism with Mechanical Closing				
Closing/charging stored energy mechanism				
	Maximum actuating force required on hand lever		52 lb	
	Number of hand lever strokes required		9	
Manual Operating Mechanism with Mechanical and Electrical Closing				
Charging stored-energy mechanism				
Closing solenoid and Shunt Trip	Coil voltage tolerance		24V DC 48V DC 120V AC / 125V DC 240V AC / 250V DC	14 - 28V DC 28 - 56V DC 70 - 140V DC 104 - 127V AC 140 - 280V DC 08 - 254V c.a. 180Y / 104V AC 220Y / 127V AC
	Power consumption (5 % duty cycle)			120 W
	Minimum closing solenoid actuation signal required			50 ms
Motor Operating Mechanism with Mechanical and Electrical Closing				
Spring charging motor				
	Motor voltage tolerance at 120V AC, 240V AC			85 - 110%
	Extended tolerance for battery operation at 24V DC, 48V DC, 125V DC, 250V DC			70 - 126%
	Power consumption of the motor			110 W
	Time required for charging the stored-energy mechanism			≤ 10 s
Closing solenoid				
For motor and closing solenoid short-circuit protection				
	Short-circuit protection Standard slow-blow cartridge fuse		24 - 60 V 110 - 250 V	6 A 3 A
Auxiliary Release				
Undervoltage release (UVR)	Operating values		≥ 85% (circuit breaker can be closed)	
			35 - 70% (circuit breaker opens)	
	AC Coil voltage tolerance at 120V AC, 240V AC			85 - 110%
	DC Extended tolerance for battery operation at 24V DC, 48V DC, 125V DC, 250V DC			85 - 126%
	Rated control supply voltage	AC 50/60Hz	V	120, 240
		DC	V	24, 48, 125, 250
	Power consumption (inrush / continuous)	AC	VA	200 / 5
		DC	W	200 / 5
	Opening time of the circuit breaker for AC / DC		ms	200
	UVR (no time delay), 2 settings Setting 1 Setting 2		 ms ms	 80 200
	UVR (with time delay) Adjustable delay		 s	 0,2 to 3,2
	Reset by additional NC direct opening		ms	≤ 100

WL Circuit Breaker Accessory Ratings

Auxiliary Contacts and Mechanism Operated Contacts (MOC)						
Contact rating	Alternating current					
	50/60 Hz	Rated operational voltage	240V			
		Rated operational current, continuous	10A			
		Rated operational current, making	30A			
		Rated operational current, breaking	3A			
	Direct current	Rated operational voltage	24V, 125V, 250V			
		Rated operational current, continuous	5A			
		Rated operational current, making	1.1A at 24V, 1.1A at 125V, 0.55A at 250V			
		Rated operational current, breaking	1.1A at 24V, 1.1A at 125V, 0.55A at 250V			
Bell Alarm Switch and Ready-to-Close Signal Contact						
Contact rating	Alternating current					
	50/60 Hz	Rated operational voltage	240V			
		Rated operational current, continuous	5A			
		Rated operational current, making	8A			
		Rated operational current, breaking	5A			
	Direct current	Rated operational voltage	24V, 48V, 125V	250V DC		
		Rated operational current, continuous	0.4A	0.2 A		
		Rated operational current, making	0.4A	0.2 A		
		Rated operational current, breaking	0.4A	0.2 A		
Shunt Trip, UVR and Blown Fuse Signaling Contacts						
Contact rating	Alternating current					
	50/60 Hz	Rated operational voltage	127V, 240V			
		Rated operational current, continuous	3A			
		Rated operational current, making	5A			
		Rated operational current, breaking	6A			
	Direct current	Rated operational voltage	24V, 48V, 125V	125V DC (IEC Rating Only)		
		Rated operational current, making	1.0A	0.5A		
		Rated operational current, breaking	1.0A	0.5A		
Position Signal Contact on the Guide Frame (TOC)						
Breaker position:	Connected position		3 form C	1 form C		6 form C
	Test position		2 form C	or 1 form C	or	0 form C
	Disconnected position		1 form C	1 form C		0 form C
Contact rating	Alternating current					
	50/60 Hz	Rated operational voltage	120V		240V	
		Rated operational current, continuous	10A		10A	
		Rated operational current, making	6A		3A	
		Rated operational current, breaking	6A		3A	
	Direct current	Rated operational voltage	24V	48V, 125V	250V	
		Rated operational current, continuous	6A	1A	1A	
		Rated operational current, making	6A	0.22A	0.11A	
		Rated operational current, breaking	6A	0.22A	0.11A	

Function Overview of the Electronic Trip Units

Fonctions de base			ETU745
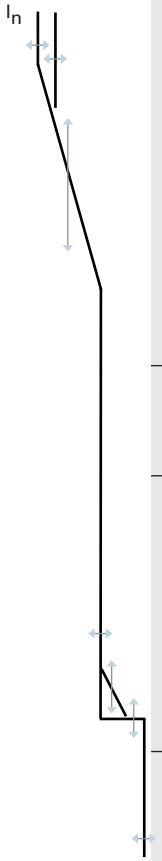	L	**Long-time overcurrent protection** Function can be switched ON/OFF Setting range $I_R = I_n$ x ...	✓
			—
			0.4, 0.45, 0.5, 0.55, 0.6, 0.65, 0.7, 0.8, 0.9, 1
		Switch-selectable overload protection (I^2t or I^4t dependent function)	✓
		Setting range of time delay class t_R at I^2t (seconds)	2, 3.5, 5.5, 8, 10, 14, 17, 21, 25, 30
			1, 2, 3, 4, 5
		Setting range of time delay t_R at I^4t (seconds)	✓(via slide switch)
		Thermal memory Phase loss sensitivity	at t_{sd}=20ms (M)
	N	**Neutral protection** Function can be switched ON/OFF	✓
		N-conductor setting range $I_N = I_n$ x ...	✓(via slide switch)
			0.5 ... 1
	S	**Short-time delayed overcurrent protection** Function can be switched ON/OFF	✓
		Setting range $I_{sd} = I_n$ x ...	✓(via rotary switch)
		Setting range of time delay t_{sd}, fixed (seconds)	1.25, 1.5, 2, 2.5, 3, 4, 6, 8, 10, 12
		Switch-selectable short-time delay short-circuit protection (I^2t dependent function)	0.02 (M), 0.1, 0.2, 0.3, 0.4, OFF
		Setting range of time delay tsd at I^2t (seconds)	✓(via rotary switch)
		Zone Selective Interlocking (ZSI) function	0.1, 0.2, 0.3, 0.4 per CubicleBUS module
	I	**Instantaneous overcurrent protection** Function can be switched on/off, Extended Instantaneous Protection is enabled when OFF	✓
			✓(via rotary switch)
		Setting range $I_i = I_n$ x ...	1.5, 2.2, 3, 4, 6, 8, 10, 12 0.8 x I_{cw} = max, OFF=I_{cw}=EIP①
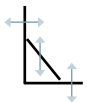	G	**Ground fault protection**②	❍(field installable module)
		Trip and alarm function	✓
		Detection of the ground fault current by residual summing method	✓
		Detection of the ground fault current by direct summing method	✓
		Setting range of the Ig for trip	A, B, C, D, E
		Setting range of the Ig for alarm	A, B, C, D, E
		Setting range of the time delay (seconds)	0.1, 0.2, 0.3, 0.4, 0.5
		Switch-selectable ground fault protection (I^2t / fixed)	✓
		Setting range time delay tg at I^2t	0.1, 0.2, 0.3, 0.4, 0.5
		ZSI ground function	En fonction du module CubicleBUS

① Extended Instantaneous Protection (EIP) allows the WL breaker to be applied at the withstand rating of the breaker with minus 0% tolerance; that means no instantaneous override whatsoever. EIP further enables the circuit breaker tobe applied up to the full instantaneous rating of the breaker on systems where the available fault current exceeds the withstand rating.

② Ground Fault Module cannot be removed after installation.

✓ available
— not available
❍ optional

Function Overview of the Electronic Trip Units

Basic Functions		ETU745
Parameter sets	Selectable between parameter set A and B	–
LCD	LCD, alphanumeric (4-line)	❍
	LCD, graphic	–
Communication	CubicleBUS integrated	✓
	Communication capability via MODBUS or PROFIBUS	✓
Metering function	Metering function capability with Metering Function PLUS	✓
Display by LED	Trip unit active	✓
	Alarm	✓
	ETU error	✓
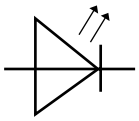	L trip	✓
	S trip	✓
	I trip	✓
	N trip	✓
	G trip	✓(only with ground fault module)
	G alarm	✓(only with ground fault module)
	Tripped by extended protection or protective relay function	✓
	Communication	✓
Signal contacts with external CubicleBUS modules (Opto or relay)		
	Overcurrent warning	✓
	Load shedding OFF/ON	✓
	Early signal of long time trip (200ms)	✓
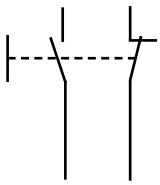	Temperature alarm	✓
	Phase unbalance	✓
	Instantaneous trip	✓
	Short-time trip	✓
	Long-time trip	✓
	Neutral conductor trip	✓
	Ground fault protection trip	✓(only with ground fault module)
	Ground fault alarm	✓(only with ground fault module)
	Auxiliary relay	✓
	ETU error	✓

Step for Settings via Communications or ETU Key Pad

from ... to	step	from ... to	step
0 ... 1	0.1	1000 ... 1600	50
1 ... 100	1	1600 ... 10000	100
100 ... 500	5	10000 ... max.	1 000
500 ... 1000	10		

Setting range of the I_g

	Frame Size II	Frame Size III
A	100A	400A
B	300A	600A
C	600A	800A
D	900A	1000A
E	1200A	1200A

✓ available
– not available
❍ optional

Function Overview of the Electronic Trip Units

Fonctions de base			ETU776
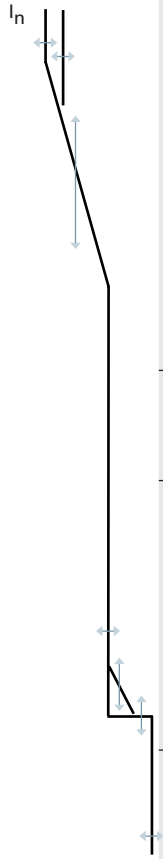		**Protection contre les surcharges à long délai** **Long-time overcurrent protection** Function can be switched ON/OFF Setting range $I_R = I_n$ x ...	✓ — 0.4 ... 1 (step: 1 A)
	L	Switch-selectable overload protection (I^2t or I^4t dependent function) Setting range of time delay class t}$_R$ at I^2t (seconds) Setting range of time delay t_R at I^4t (seconds) Thermal memory Phase loss sensitivity	✓ 2 ... 30 (step: 0.1 s) 1 ... 5 (step: 0.1 s) ✓(on/off via key pad or communications) ✓(on/off via key pad or communications)
	N	**Neutral protection** Function can be switched ON/OFF N-conductor setting range $I_N = I_n$ x ...	✓ ✓(via slide switch) 0.5 ... 1
	S	**Short-time delayed overcurrent protection** Function can be switched ON/OFF Setting range $I_{sd} = I_n$ x ... Setting range of time delay tsd, fixed (seconds) Switch-selectable short -time delay short-circuit protection (I^2t dependent function) Setting range of time delay t_{sd} at I^2t (seconds) Zone Selective Interlocking (ZSI) function	✓ ✓(via key pad or communications) 1,25 ... 0.8 x I_{cw} = max (step: 10 A) M, 0.08 ... 0.4, OFF (step: 0.001s) ✓(via key pad or communications) 0.1 ... 0.4 (step: 0.001 s) Per CubicleBUS module
	I	**Instantaneous overcurrent protection** Function can be switched ON/OFF, Extended Instantaneous Protection is enabled when OFF Setting range $I_i = I_n$ x ...	✓ ✓(via key pad or communications) 1.5 x I_n ... 0.8 x I_{cs} = max, OFF=I_{cw}=EIP①
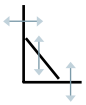	**G**	**Ground fault protection**② Trip and alarm function Detection of the ground fault current by residual summing method Detection of the ground fault current by direct summing method Setting range of the Ig for trip Setting range of the Ig for alarm Setting range of the time delay t_g (seconds) Switch-selectable ground fault protection (I^2t / fixed) Setting range time delay t_g at I^2t ZSI ground function	❍(field installable module) ✓(via key pad or communications) ✓ ✓ A ... E (step: 1 A) A ... E (step: 1 A) 0.1 ... 0.5 (step: 0.001 s) ✓ 0.1 ... 0.5 (step: 0.001 s) Per CubicleBUS module

① Extended Instantaneous Protection (EIP) allows the WL breaker to be applied at the withstand rating of the breaker with minus 0% tolerance; that means no instantaneous override whatsoever. EIP further enables the circuit breaker to be applied up to the full instantaneous rating of the breaker on systems where the available fault current exceeds the withstand rating.
② Ground Fault Module cannot be removed after installation.

Notes: **M** = Motor protection setting (20 ms)
Communications = Setting the parameters of the trip unit via the Breaker Data Adapter, MODBUS, or PROFIBUS
Key pad = Direct input at the trip unit

✓ available
— not available
❍ optional

Function Overview of the Electronic Trip Units

Basic Functions		ETU745	ETU776
Parameter sets	Selectable between parameter set A and B	–	✓
LCD	LCD, alphanumeric (4-line)	❍	–
	LCD, graphic	–	✓
Communication	CubicleBUS integrated	✓	✓
	Communication capability via MODBUS or PROFIBUS	✓	✓
Metering function	Metering function capability with Metering Function PLUS	✓	✓
Display by LED	Trip unit active	✓	✓
	Alarm	✓	✓
	ETU error	✓	✓
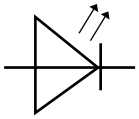	L trip	✓	✓
	S trip	✓	✓
	I trip	✓	✓
	N trip	✓	✓
	G trip	✓(only with ground fault module)	✓(only with ground fault module)
	G alarm	✓(only with ground fault module)	✓(only with ground fault module)
	Tripped by extended protection or protective relay function	✓	✓
	Communication	✓	✓
Signal contacts with external CubicleBUS modules (Opto or relay)			
	Overcurrent warning	✓	✓
	Load shedding OFF/ON	✓	✓
	Early signal of long time trip (200ms)	✓	✓
	Temperature alarm	✓	✓
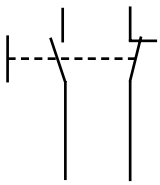	Phase unbalance	✓	✓
	Instantaneous trip	✓	✓
	Short-time trip	✓	✓
	Long-time trip	✓	✓
	Neutral conductor trip	✓	✓
	Ground fault protection trip	✓(only with ground fault module)	✓(only with ground fault module)
	Ground fault alarm	✓(only with ground fault module)	✓(only with ground fault module)
	Auxiliary relay	✓	✓
	ETU error	✓	✓

Metering and Protective Relaying Accuracies

Protective Relaying	Pick-up Accuracy
Phase Unbalance (I)	2% (5…50% I_n)
Phase Unbalance (V)	2% (5…50% Vn)
THD (I) (up to 29th)	+/- 3% (80…120% V_n)
THD (V) (up to 29th)	+/- 3% (80…120% V_n)
Overvoltage	+/- 2% (80…120% V_n)
Undervoltage	+/- 2% (80…120% V_n)
Under/Over Frequency	+/- 0.1 Hz

Metering Values	Accuracy
(I) at 1 x I_n	+/- 1%
(V) at 1 x V_n	+/- 0.5%
(P) at 1 x I_n	+/- 3%
(S) at 1 x I_n	+/- 2%
(Q) at 1 x I_n	+/- 3%

✓ available
– not available
❍ optional

WL Secondary Terminal Assignments

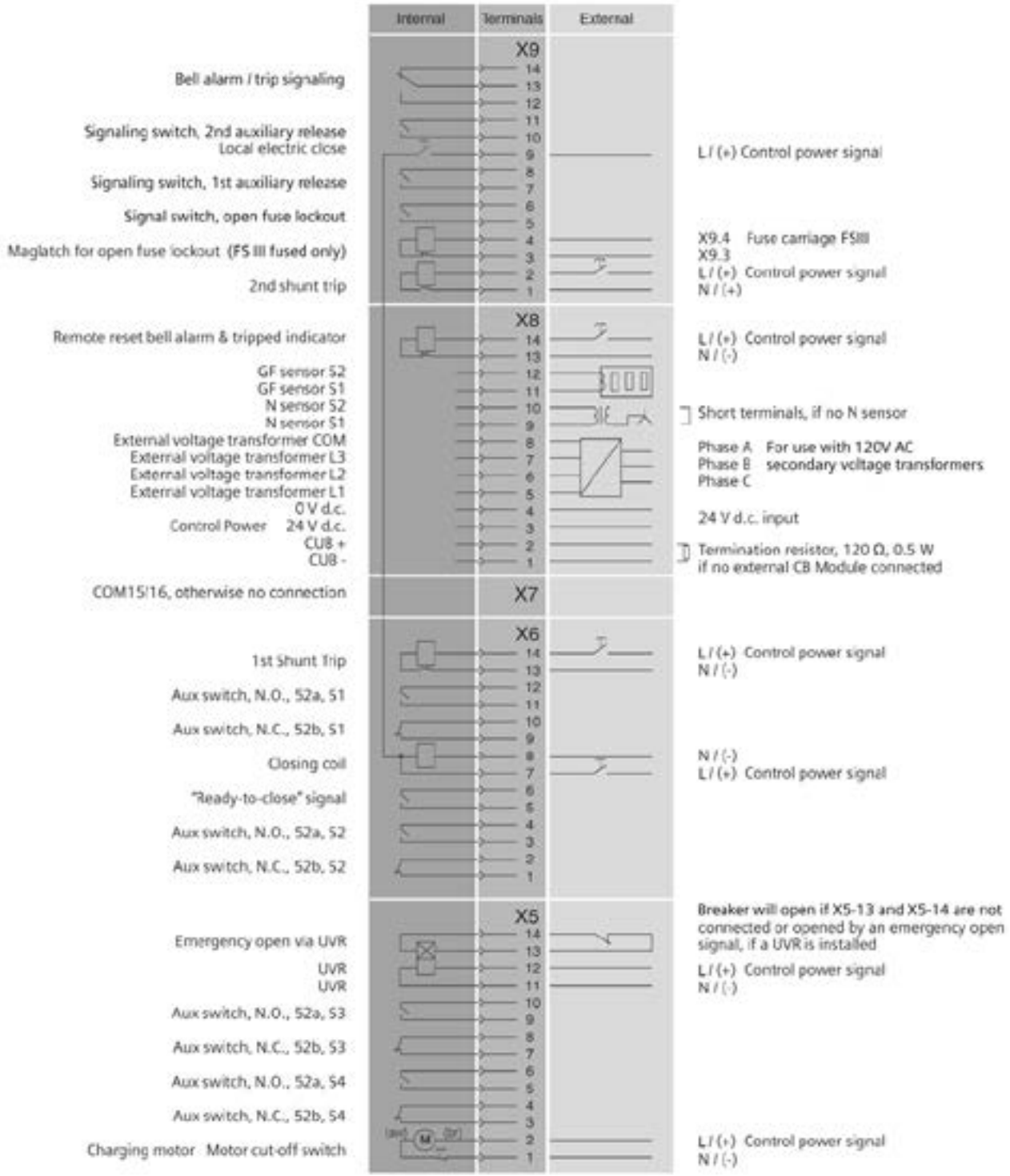

WL Communication Overview

Connection Diagram

1. Breaker Data Adapter Plus (BDAP) - discontinued
2. Browser-capable input and output device (e.g. notebook)
3. WL Circuit Breaker
4. COM 16 MODBUS module or COM 15 PROFIBUS module
5. Breaker Status Sensor (BSS)
6. Electronic Trip Unit
7. Metering function PLUS
8. Zone Selective Interlocking (ZSI) module
9. Digital output module with relay or optocoupler outputs
10. Digital output module with relay or optocoupler outputs, remotely configurable
11. Analog output module
12. Digital input module
13. WinPM.Net on PC
14. PLC (e.g. SIMATIC S7)
15. BDA Plus - discontinued

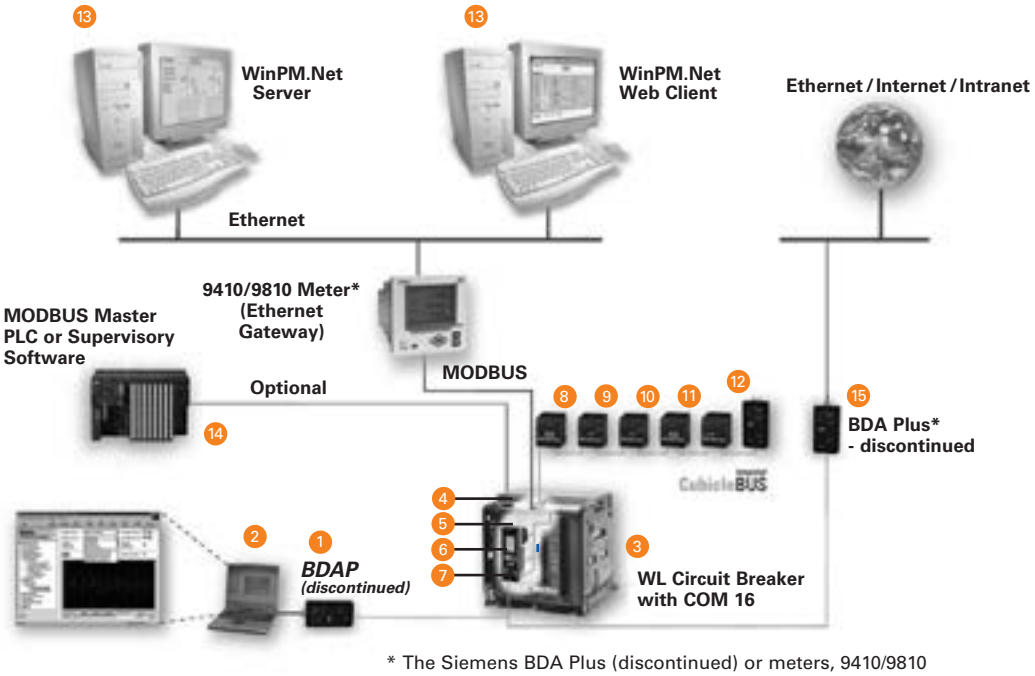

* The Siemens BDA Plus (discontinued) or meters, 9410/9810 can be used as a gateway to enable Ethernet communication to the WL Circuit Breaker.

Features

- Industry standard MODBUS or PROFIBUS communication available on all WL breakers from 200A to 6000A.
- The high modularity of the WL Circuit Breakers and accessories allows simple retrofitting of all communication components.
- The ability to connect additional input and output modules to the breaker internal CubicleBUS of the WL opens up a range of opportunities to reduce secondary device count and wiring and to increase functionality implemented in switchgear.
- Innovative software products for local configuration, operation, monitoring and diagnostics of WL Circuit Breakers using MODBUS, PROFIBUS or via Ethernet/ Intranet/Internet.
- Complete integration of WL Circuit Breakers in all Totally Integrated Power and Totally Integrated Automation Solutions.

General Notes:

- A blank/instrument compartment can always be substituted for a breaker compartment.
- Any 22″ wide section can be 32″ wide if more conduit working room is needed.
- For bus duct connections – if incoming is top, Compartment A must be blank/instrument, if incoming is bottom, Compartment D must be blank instrument.
- Bussed transition section is 22″ wide
- For close coupled transformer connections, Compartment A must be blank/instrument.
- Utility metering is always in a separate section. Section width is dependent on utility.

Switchgear Depth Dimensional Information

(Dimensions below are for internal frames – not total structure depth)

- Non-fused indoor – 60″ standard, 70″ and 80″ optional
- Fused indoor – 65″ standard, 75″ and 80″ optional
- Non-fused non-walk-in outdoor – 60″ standard and 75″ optional
- Fused non-walk-in outdoor – 65″ standard and 75″ optional
- Non-fused walk-in outdoor – 60″ standard and 75″ optional
- Fused walk-in outdoor – 65″ standard and 75″ optional
- Walk-in outdoor aisle is 42″ deep
- Sections with cable connected main, tie and/or feeder breakers that are 3200 amp or greater must be minimum depth of 70″ for unfused breakers and 75″ for fused breakers.

Section Compartment Arrangement

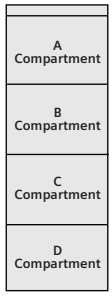

Main Sections – Non-Fused Breakers

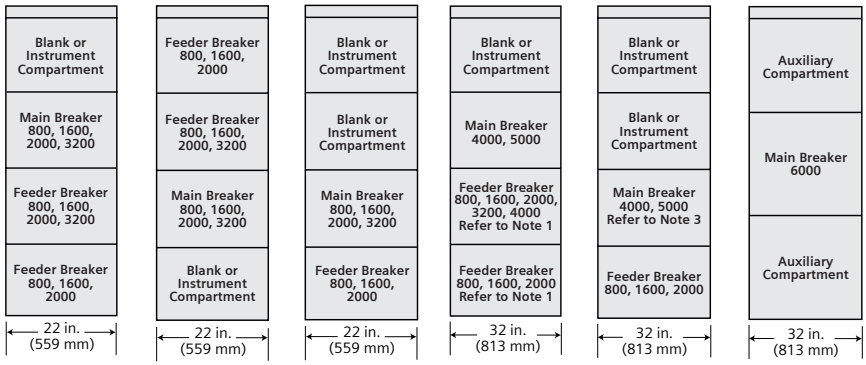

Main Sections – Fused Breakers

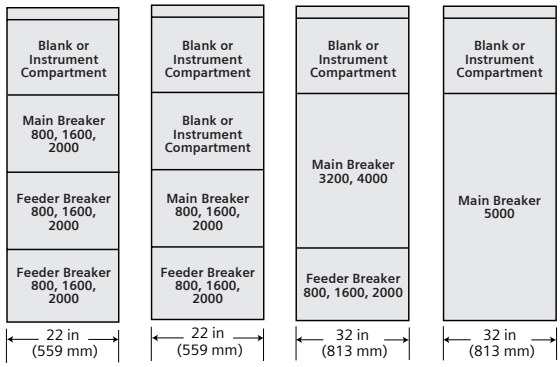

Note 1 – If a 4000 amp feeder breaker is installed in Compartment C, Compartment D must be a Blank or Instrument Compartment.
Note 2 – If a 4000 amp breaker is installed in Compartment B, Compartment A must be a Blank or Instrument Compartment.
Note 3 – If incoming is from bottom, feeder breakers can be mounted in compartments A and/or B.
Note 4 – If a 3200 amp breaker is installed in Compartment B, the middle level through bus is not available.
Note 5 – If a 3200 amp breaker is installed in Compartment D, the lower level through bus is not available.
Note 6 – Only one 800, 1600, 2000 amp feeder breaker can be mounted per section. If the horizontal main bus is at the top of the section, the 800, 1600, 2000 amp feeder breaker can go in the A compartment and a blank/instrument compartment must go in the D compartment. If the horizontal main bus is at the bottom of the section, the 800, 1600, 2000 amp feeder breaker can go in the D compartment and a blank/instrument compartment must go in the A compartment.
Note 7 – Any feeder section (or bus transition section) with 6000 amp vertical bus must be 32″ wide.

Low-voltage Switchgear

WL Low-voltage Metal-Enclosed Switchgear

Section Configurations

Tie Sections – Non-Fused Breakers

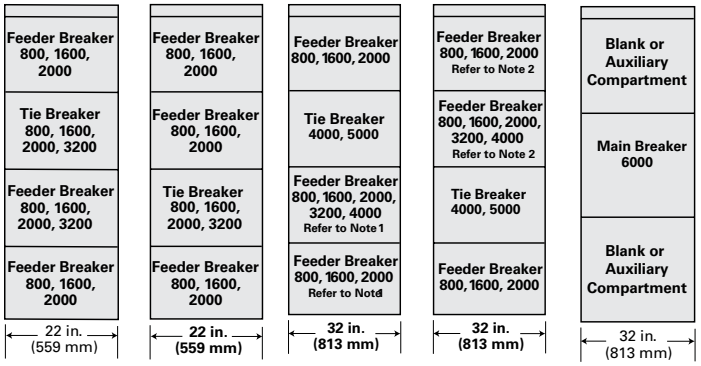

Tie Sections – Fused Breakers

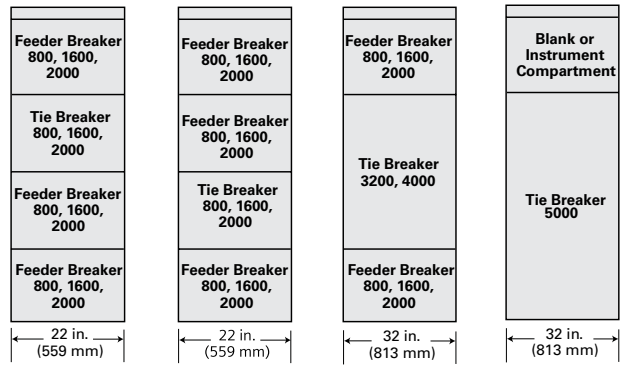

Main and Tie Sections – Non-Fused Breakers

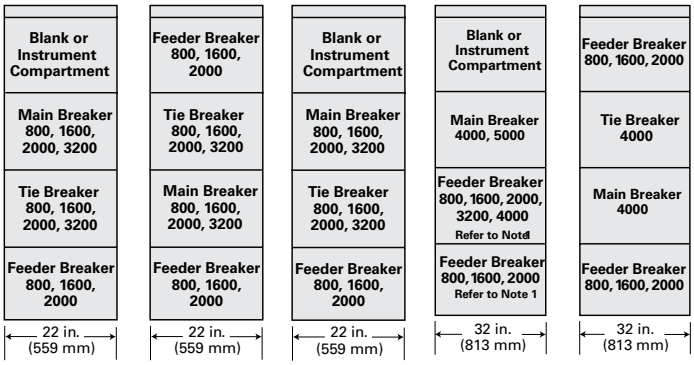

Main and Tie Sections – Fused Breakers

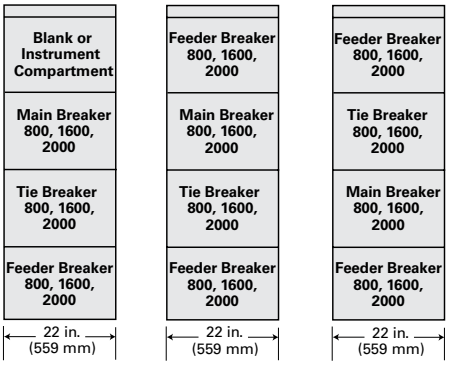

Feeder Sections – Non-Fused Breakers (see Note 7 on page 23)

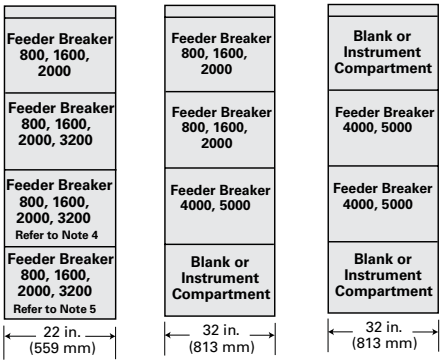

Feeder Sections – Fused Breakers

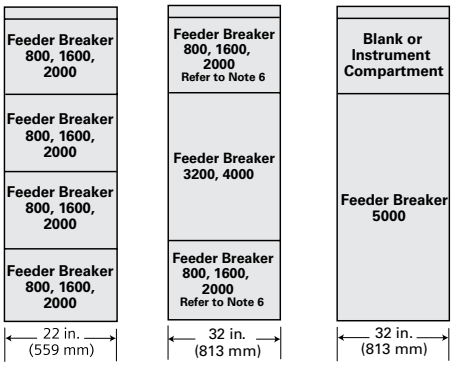

Siemens Type WL Low Voltage Switchgear can be configured in many ways by combining different section types. Up to five vertical sections plus a transition section can be shipped together as a unit.
Maximum shipping split length for indoor structures is 110 in. (2794 mm). If all vertical sections are not to be shipped as a unit, specifications need to be provided that describe the limiting factors (e.g., low door or narrow hallway).

Normal indoor vertical sections are 96 in. (2438 mm) high and a minimum 60 in. (1524 mm) deep for non-fused breakers and 65 in. (1651 mm) deep for fused breakers. A top-mounted hoist, which is shipped as an accessory in a separate container, adds 6.2 in. (157 mm) for a total installed height of 102.2 in. (2596 mm).

The outdoor switchgear assembly contains the indoor assembly in an outdoor housing. The overall height is 112.8 in. (2865 mm) for non walk-in designs and 114 in. (2896 mm) for walk-in designs. The depth of a non walk-in outdoor assembly with a 60 in. (1524 mm) internal structure is 82.3 in. (2090 mm) and the depth of a walk-in outdoor assembly with a 60 in. (1524 mm) internal structure is 110.7 in. (2812 mm). Maximum shipping split length for outdoor structures is 66 in. (1676 mm).

The major assembly sections include:

- Transition Sections — used as transition to liquid filled transformer or to outdoor dry type transformers.
- Auxiliary Sections — used as incoming bus duct or cable entrance when a main breaker is not used.
- Main Sections — used to contain main breaker and may house metering and feeder breakers.
- Feeder Sections — used to contain feeder breakers and other equipment such as instrumentation.
- Tie Sections — used to contain tie breaker and other equipment such as feeder breakers.

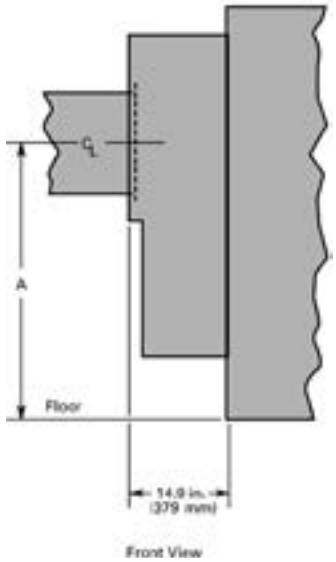

Transition Section For Liquid Filled and Outdoor Dry Type Transformers

	Dimension A in inches (mm)	Weight in lbs. (kg)
Intérieur	55 (1397)	500 (227)
Extérieur	61 (1549)	550 (250)

Approximate Weight – Lbs.

Section Type	22 in. Indoor	22 in. Outdoor	32 in. Indoor	32 in. Outdoor	38 in. Indoor	38 in. Outdoor	48 in. Indoor	48 in. Outdoor
Auxiliary	1000 (450)	2000 (900)	1300 (585)	2500 (1125)	1800 (810)	3200 (1440)	N/A	N/A
Utility Metering	N/A	N/A	N/A	N/A	2 100 (945)	3 500 (1 575)	2 600 (1 170)	4 500 (2 025)
Breaker	1400 (630)	2400 (1080)	2000 (900)	3300 (1485)	N/A	N/A	N/A	N/A

Weights shown in pounds and (kilograms).
Weights shown do not include weight of circuit breaker removeable element (but does include cradle).
Add 400 lbs for hoist and track.
On outdoor switchgear, add 500 lbs for end walls (weight is for both ends). Refer to shipping documents for actual weights.

Indoor Floor Plan and Cable Space Details

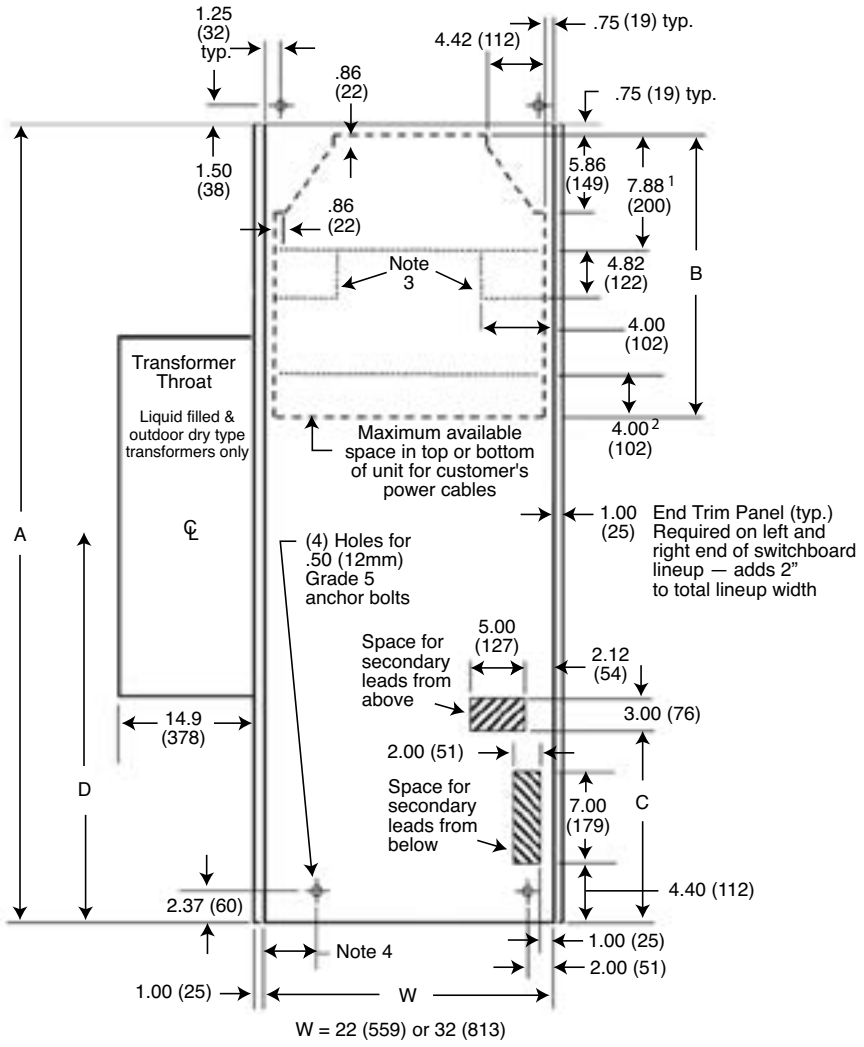

A Equipment Depth	Direction of Cables	B	C	D
60" Non-Fused with (N, S, H or L-Class Breakers) OR 65" Fused with (F-Class Breakers)	Below	21.50 (546)①②	13.88 (353)	32.59 (828)
	Above	21.25 (540)①	18.88 (480)	37.59 (955)
70" Non-fused with (N, S, H or L-Class Breakers) OR 75" Fused with (F-Class Breakers)	Below	31.50 (800)①②	13.88 (353)	32.59 (828)
	Above	31.25 (794)①	18.88 (480)	37.59 (955)
80" Non-fused with (N, S, H or L-Class Breakers)	Below	41.50 (1 054)①②	13.88 (353)	32.59 (828)
	Above	41.25 (1 048)①		
80" Fused with (F-Class Breakers)	Below	36.50 (927)①②	18.88 (480)	37.59 (955)
	Above	36.25 (921)①		

Note: Dimensions shown in inches and (mm).

① Reduce by 7.88" if upper neutral is present with cables above or if a lower neutral is present with cables below.
② Reduce by 4.00" if an 800-3200A breaker is located in the bottom compartment.
Reductions per notes 1 & 2 are additive. Example: cables below + lower neutral + 2000A breaker in bottom compartment = B-11.88.
③ Reduce cable space by 4.00" x 4.82" if Neutral Riser is present. (Consult Factory).
④ 4.10 (104) if W=22; 4.60 (117) if W=32.

Indoor Side View

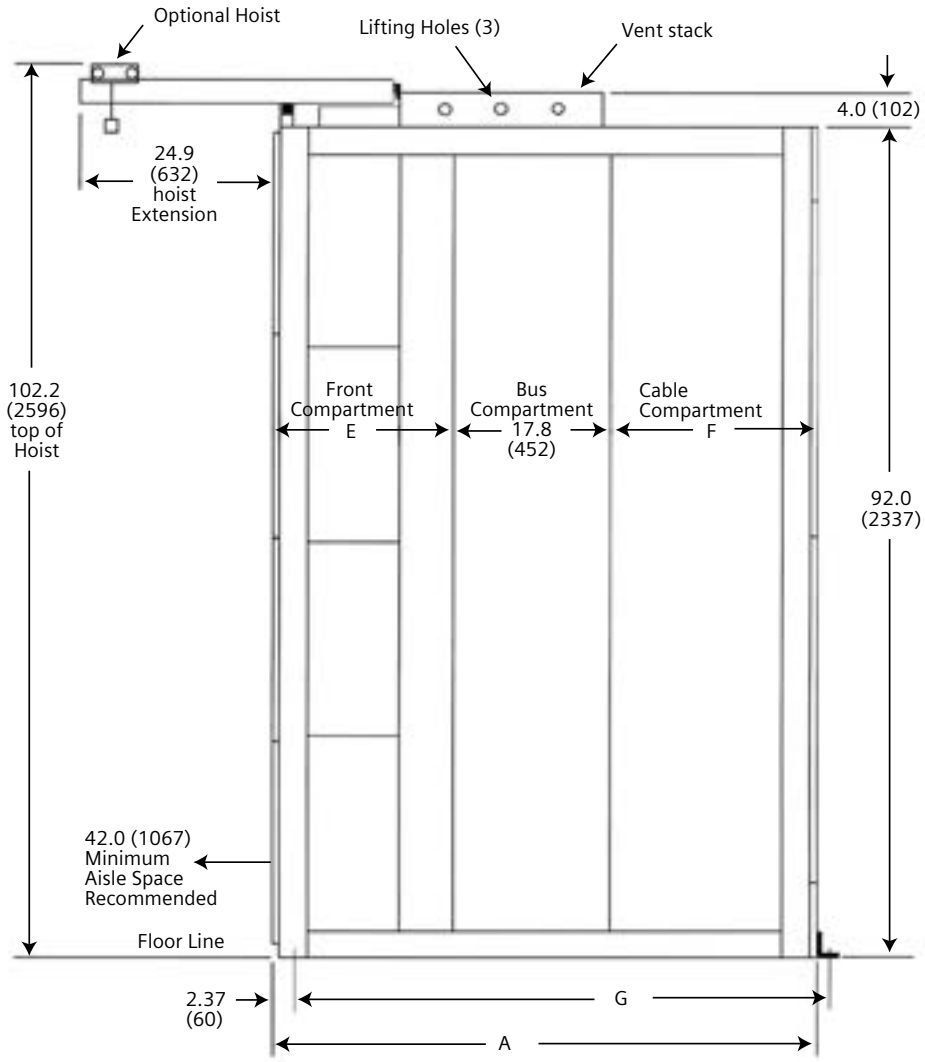

A Equipment Depth	E Breaker Compartment Depth	F Rear Compartment Depth	G Anchor Bolt Spacing
60 (1524) Non-fused breakers	19.8 (503)	22.4 (569)	59.13 (1502)
65 (1651) Fused breakers	24.8 (630)	22.4 (569)	64.13 (1629)
70 (1778) Non-fused breakers	19.8 (503)	32.4 (823)	69.13 (1756)
75 (1905) Fused breakers	24.8 (630)	32.4 (823)	74.13 (1883)
80 (2032) Non-fused breakers	19.8 (503)	42.4 (1077)	79.13 (2010)
80 (2032) Fused breakers	24.8 (630)	37.4 (950)	79.13 (2010)

Note: Dimensions shown in inches and (mm).

Outdoor Non-Walk-in Floor Plan

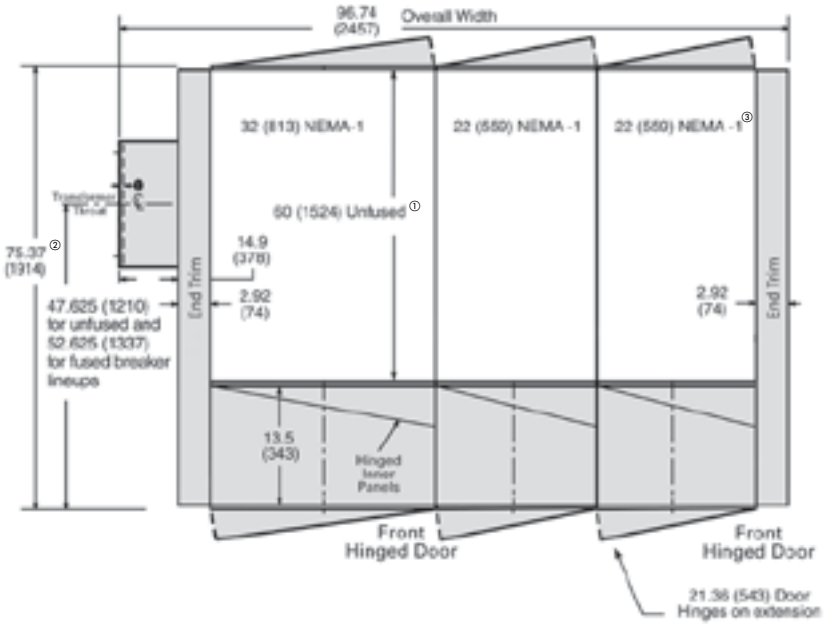

① 60" is representative for a 60" deep switchgear internal structure. For other internal structure depths (65 or 75) add extra depth to 60" that is shown.
② 75.37 is representative for a 60" deep internal structure. For other internal structure depths (65 or 75) add extra depth to 75.37 that is shown.
③ Refer to appropriate indoor plan view for available customer conduit information.

Outdoor Non Walk-in Side View

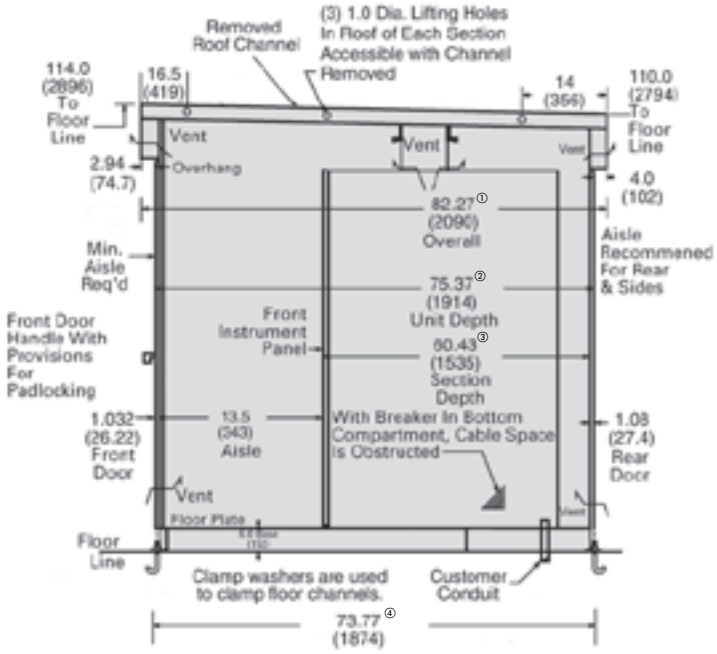

Dimensions shown in inches (mm).
① 82.27 dimension is based on 60" internal frame structure and if a deeper internal frame structure is used (65 or 75) the extra depth should be added to the 82.27 dimension.
② 75.37 dimension is based on 60" internal frame structure and if a deeper internal frame structure is used (65 or 75) the extra depth should be added to the 75.37 dimension.
③ 60.43 dimension is based on 60" internal frame structure and if a deeper internal frame structure is used (65 or 75) the extra depth should be added to the 60.43 dimension.
④ 73.77 dimension is based on 60" internal frame structure and if a deeper internal frame structure is used (65 or 75) the extra depth should be added to the 73.77 dimension.

Outdoor Walk-in Floor Plan

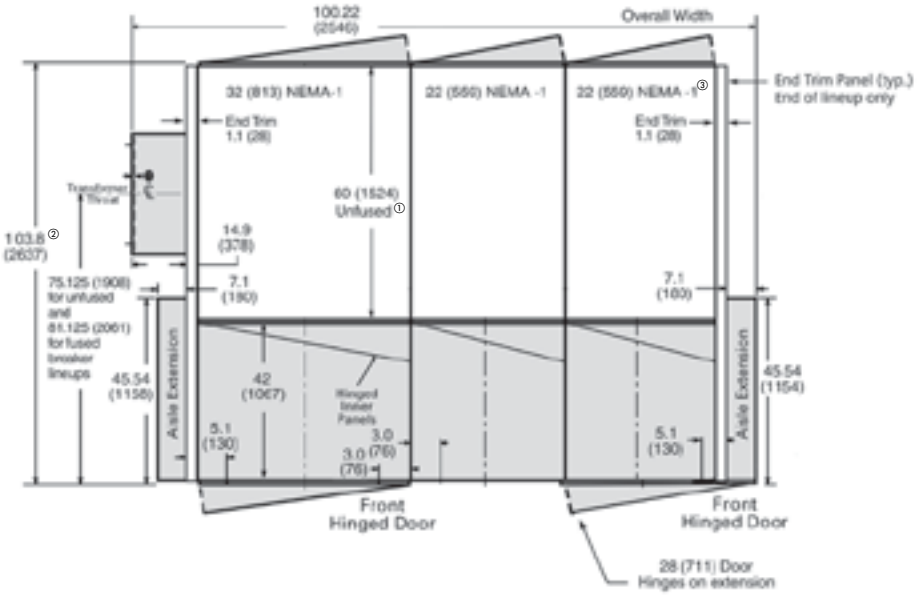

① 60″ is representative for a 60″ deep switchgear internal structure. For other internal structure depths (65 or 75) add extra depth to 60″ that is shown.
② 103.8″ is representative for a 60″ deep internal structure. For other internal structure depths (65 or 75) add extra depth to 103.8″ that is shown.
③ Refer to appropriate indoor plan view for available customer conduit information.

Outdoor Walk-in Side View

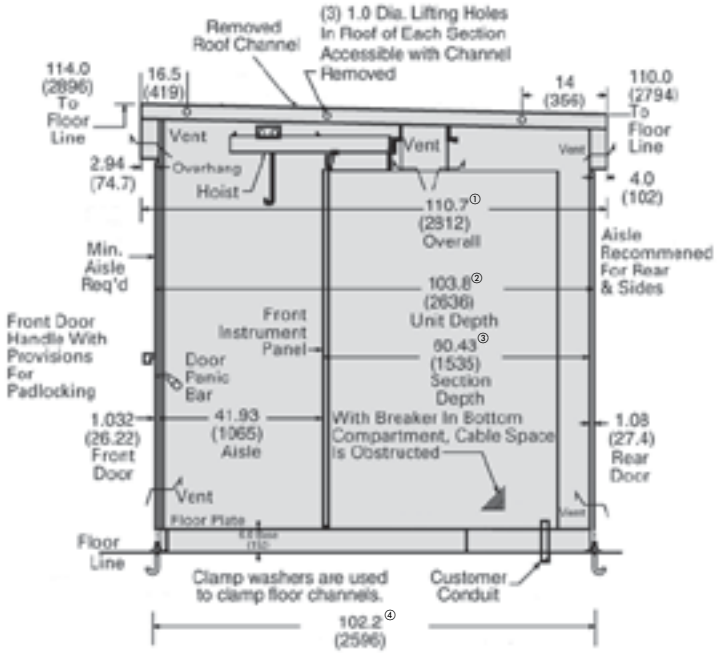

Dimensions shown in inches (mm).
① 110.7 dimension is based on 60″ internal frame structure and if a deeper internal frame structure is used (65 or 75) the extra depth should be added to the 110.7 dimension.
② 103.8 dimension is based on 60″ internal frame structure and if a deeper internal frame structure is used (65 or 75) the extra depth should be added to the 103.8 dimension.
③ 60.43 dimension is based on 60″ internal frame structure and if a deeper internal frame structure is used (65 or 75) the extra depth should be added to the 60.43 dimension.
④ 102.2 dimension is based on 60″ internal frame structure and if a deeper internal frame structure is used (65 or 75) the extra depth should be added to the 102.2 dimension.

Voltage Transformers – External Metering and Relaying

Ratio	Accuracy Class at 60 Hz Burden W	X	Y	Volt-Amp Rating	Thermal Rating VA	Hertz
600:120	0.6	1.2	1.2	100	150	50/60
480:120	0.6	1.2	1.2	100	150	50/60
288:120	0.6	1.2	1.2	100	150	50/60

Control Power Transformers – 115°C Rise

kVA	Phase	Primary Voltage	Secondary Voltage
3 5 10① 15①	Single	240/480	120/240

Current Transformers for FSII WL Breaker Applications - External Metering and Relaying②

Ratio	Accuracy at 60 Hz Metering Burden (ohms) B-0.1	B-0.2	B-0.5	B-0.9	B-1.8	Class
100.5	1.2	—	—	—	—	C5
150.5	1.2	—	—	—	—	C7
200.5	1.2	—	—	—	—	C9
250.5	1.2	—	—	—	—	C12
300.5	0.6	0.6	—	—	—	C15
400.5	0.6	0.6	1.2	—	—	C20
500.5	0.6	0.6	1.2	—	—	C25
600.5	0.3	0.3	0.6	1.2	1.2	C21
800.5	0.3	0.3	0.6	0.6	1.2	C29
1000.5	0.3	0.3	0.6	0.6	1.2	C35
1200.5	0.3	0.3	0.3	0.6	0.6	C20
1500.5	0.3	0.3	0.3	0.3	0.6	C25
1600.5	0.3	0.3	0.3	0.3	0.6	C27
2000.5	0.3	0.3	0.3	0.3	0.3	C34
2500.5	0.3	0.3	0.3	0.3	0.3	C20
3000.5	0.3	0.3	0.3	0.3	0.3	C21
3200.5	0.3	0.3	0.3	0.3	0.3	C20

Current Transformers for FSIII WL Breaker Applications – External Metering and Relaying②

Ratio	Accuracy at 60 Hz Metering Burden (ohms) B-0.1	B-0.2	B-0.5	B-0.9	B-1.8	Class
2000.5	0.3	0.3	0.3	0.3	0.3	C20
2500.5	0.3	0.3	0.3	0.3	0.3	C20
3000.5	0.3	0.3	0.3	0.3	0.3	C20
3200.5	0.3	0.3	0.3	0.3	0.3	C20
4000.5	0.3	0.3	0.3	0.3	0.3	C20
5000.5	0.3	0.3	0.3	0.3	0.3	C20
6000.5	0.3	0.3	0.3	0.3	0.3	C20

① Requires complete compartment.
② Breaker compartment will accept 1 set of CT's each on top and bottom primary disconnects.

Sm@rtGear™ Mobile App NEW

Take control of your gear from your smart device

Remotely monitor, configure, and control using mobile phone or tablet (wireless or hardwired)

Arc flash safety

- Remotely open/close breakers from outside arc flash hazard zone – no longer need dedicated control panel
- Remotely activate breaker maintenance mode from outside arc flash hazard zone
- Remotely view breaker status from outside arc flash hazard zone

Ease of commissioning

- Set breaker settings via touchscreen using mobile phone or tablet

Security

- Local security enabled WPA2 WIFI network only allowing local access

MindSphere (IoT) capable



Intelligence and control at your fingertips



Elevation Screen



WL Breaker Dashboard



PAC 4200 Dashboard

Sm@rtGear Mobile Network Topology

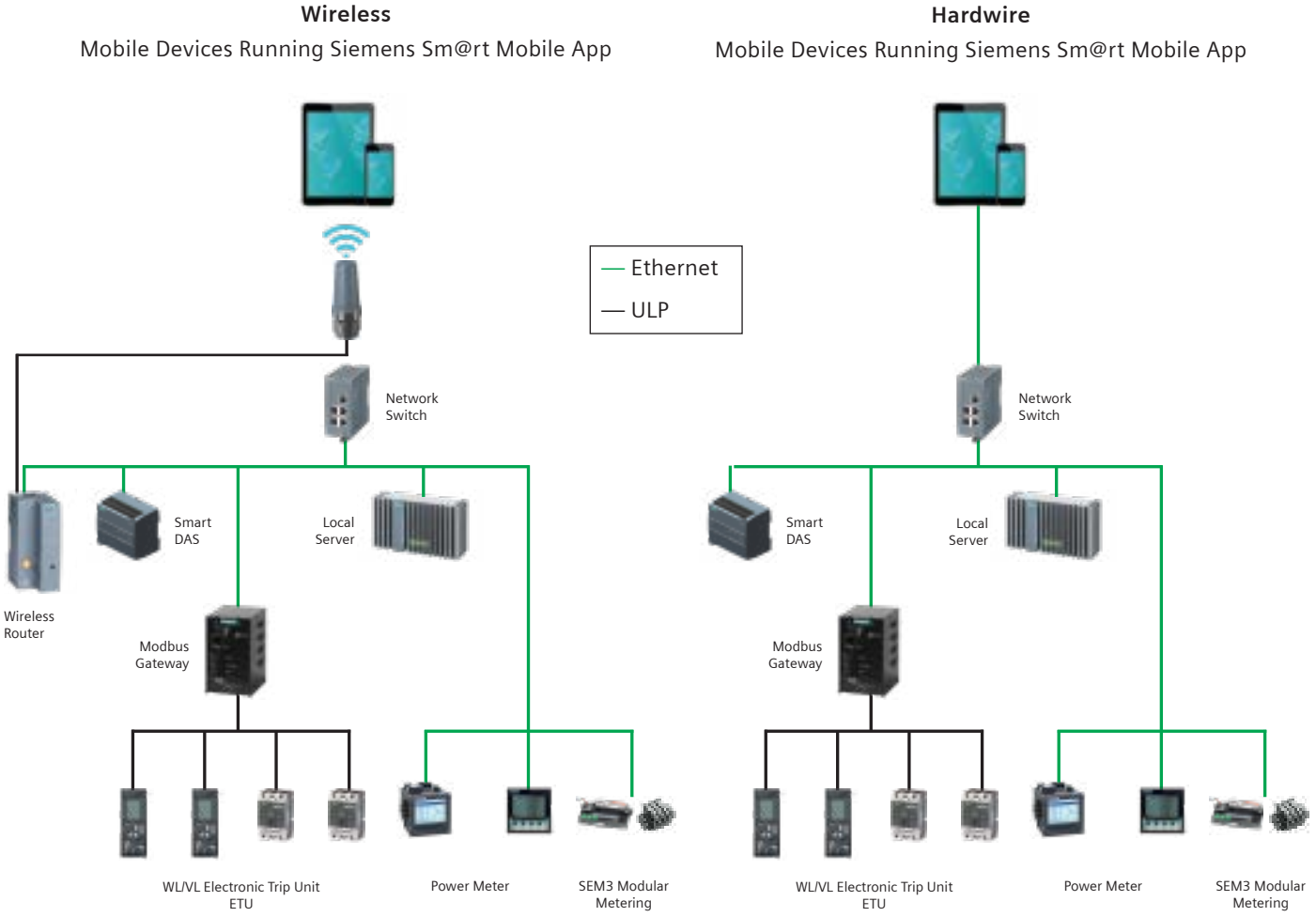

Sm@rtGear™ Mobile Standard Features

- Available in Type WL LV Switchgear, SB Switchboards and S5/F2 Power Panelboard
- Integrates with Siemens application using phone or tablet
- Ethernet switch and WIFI access point with WPA2 encryption

Power/Insulated Case Circuit Breaker Feature

- ETU 776 with Sm@rt Dynamic Arc Sentry (DAS)
- MODBUS communication
- Protective settings and alarm functions
- Current and voltage monitoring
- Power metering functions
- Electrically operated breakers
- Remote open/close

Molded Case Circuit Breaker Features

- ETU 586 with Smart DAS
- MODBUS communication
- Protective settings and alarm functions
- Current monitoring
- Breaker status

Sm@rtGear™ Mobile Optional Features

- PAC Digital meter integration
- SEM3™ submetering integration
- Siemens MindSphere IoT integration

Sm@rtGear™ LVS System Architecture



The past



The future

Why settle for partial control when you can have total control and pay less? Traditional hard wired remote control panels provide additional safety for your personnel but Siemens Sm@rtGear™ LVS can provide the same breaker remote control plus remote monitoring and configuration of all embedded intelligent devices.

Siemens Sm@rtGear™ LVS is pre-configured and pre-programmed low-voltage metal-enclosed switchgear that provides out-of-the-box remote monitoring, configuration and control of embedded intelligent devices.

All of the Sm@rtGear™ LVS communication backbone is installed and tested at the Siemens factory and the user only has to physically connect the three communication cables that connect the low-voltage switchgear to the remotely mounted touch screen interface panel (HMI).

The remote HMI allows the user to access the intelligent devices embedded in the low-voltage switchgear. Using the HMI, the user can monitor, configure and control the intelligent devices. The Sm@rtGear™ LVS CPU acts as the local master and can also be a remote slave tied into an upstream supervisory system.

Low-voltage Switchgear

Siemens Sm@rtGear™ Low-voltage Switchgear

Features

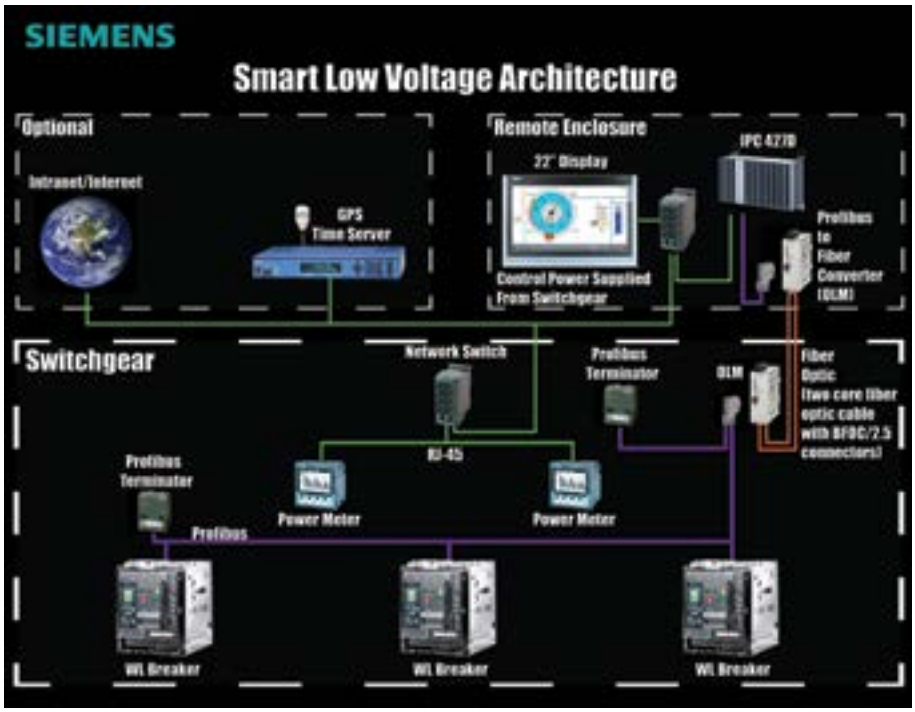

Sm@rtGear™ LVS standard features

- PC with pre-programmed software to remotely monitor, configure and control embedded intelligent devices and structural monitoring devices.
- 22" touch screen HMI pre-configured and programmed with application specific graphical user interface (application specific elevation and one-line drawings) that act as user home page.
- Communication backbone linking embedded intelligent devices, CPU and HMI.
- ETU776 trip units in all breakers with Dynamic Arc Flash Sentry (DAS) that supports arc flash incident energy reduction.
- Electrically operated breakers with spring charge motor, shunt trip and remote closing coil.
- Metering and protective relaying functionality in all breakers.

Sm@rtGear™ LVS standard functionality includes:

- LVS one-line view
- LVS elevation view
- User Administrator
- Cell Blocking
- WL breaker control (Password or hardware enabled/disabled)
- WL breaker monitoring
- WL breaker configuration Documentation

Sm@rtGear™ LVS optional functionality includes:

- WL breaker monitoring
- Digital meter monitoring (provided at no additional cost if digital meter is supplied)
- TPS 6 SPD monitoring (provided at no additional cost if SPD is supplied)
- High Resistance Grounding (HRG) (provided at no additional cost if HRG is supplied)
- LVS structural monitoring
- Custom Maintenance Reports

Low-voltage Switchgear

Siemens Sm@rtGear™ Low-voltage Switchgear

Siemens Type WL Low-voltage Switchgear for Marine and Offshore Applications

Siemens offers low-voltage switchgear for marine and offshore applications. Siemens Type WL Low-voltage Switchgear can be manufactured to meet ABS, USCG, DNV and Lloyd's of London standards. Additionally all Siemens Type WL Low-voltage Switchgear is built to the applicable UL, ANSI and IEEE standards.

Equipment Ratings

- 635V AC maximum
- 3 phase 3 wire, 3 phase 4 wire
- 50/60 Hz
- 6000 amp maximum horizontal bus
- 6000 amp maximum vertical bus
- Silver plated copper bus standard – tin plated copper optional
- Standard bus bracing 100kA –optional up to 200kA

Seismic Qualification

Seismic qualification to all major seismic construction standards (IBC, UBC, CBC, SBC, BOCA and IEEE 693) is available.

For additional Type WL low-voltage switchgear product information, including configuration information, refer to the WL Low-voltage Metal-Enclosed Switchgear Selection and Application Guide – Siemens USA Document No. LVSA-LVMES-0313.

Additional Industry Standards Compliance

Type WL switchgear with power circuit breakers are designed, tested and constructed in accordance with:

- **UL 1558** — Metal-Enclosed Low-voltage Power Circuit Breaker Switchgear
- **ANSI C37.20.1** — Metal-Enclosed Low-voltage Power Circuit Breaker Switchgear
- **ANSI C37.50** — Test Procedure for Low-voltage AC Power Circuit Breakers Used in Enclosures
- **ANSI C37.51** — Conformance Testing of Metal-Enclosed Low-voltage AC Power Circuit Breaker Switchgear Assemblies
- **NEMA SG5** — Power Switchgear Assemblies
- **NEC** — Applicable requirements of the National Electric Code (NEC)
- **CSA** — CSA compliance with cUL labeling is available.
- **ANSI C37.20.7** — Type WL arc resistant low-voltage switchgear is available and is UL listed to ANSI/ IEEE C37.20.7. Type 2B arc resistant accessibility rating with maximum internal arcing short-circuit current rating of 100kA @508V and 85kA @ 635V

WL Drawout Circuit Breakers are in accordance with:

- **UL 1066** — Low-voltage AC and DC Power Circuit Breakers Used in Enclosures
- **ANSI C37.13** — Low-voltage AC Power Circuit Breakers Used in Enclosures
- **ANSI C37.16** — Preferred Ratings, Related Requirements, and Application for Low-voltage Power Circuit Breakers and AC Power Circuit Protectors
- **ANSI C37.17** — Trip Devices for AC and General Purpose DC Low-voltage Power Circuit Breakers
- **NEMA SG3** — Low-voltage Power Circuit Breakers





Low-voltage Switchgear

Type WL Arc Resistant Low-voltage Metal-Enclosed Switchgear

WL Arc Resistant Low-voltage Switchgear
Features, Benefits and Ratings



Enhanced Safety

Siemens now offers arc resistant, metal-enclosed, low-voltage switchgear designed to provide an additional degree of protection for personnel performing normal operating duties in proximity to the energized equipment. Such duties include opening or closing circuit breakers, closed door circuit breaker racking, reading instruments, or other activities that do not require cover removal or opening doors (other than auxiliary/ instrument compartment doors).

Why Arc Resistant Switchgear

Standard metal-enclosed switchgear is designed to withstand the mechanical forces generated by bolted faults on the load terminals until a power circuit breaker or other protective device can interrupt the flow of fault current. This capability is verified by short-circuit and short-time withstand tests on the equipment and interruption tests on the power circuit breakers. During a bolted fault, the voltage at the fault location is essentially zero and the fault energy is dissipated throughout the power system. The arc generated within the power circuit breaker during interruption is cooled and extinguished by the circuit breaker arc chutes. The minimal out gassing of arc byproducts from the arc chutes is contained by the switchgear as verified by interruption tests.

Siemens arc resistant low-voltage switchgear provides an added degree of protection over standard metal-enclosed switchgear. In addition to bolted faults, Siemens WL arc resistant low-voltage switchgear is designed and performance tested to ANSI/IEEE C37.20.7 to provide protection from the hazards of internal arcing faults. An internal arcing fault can be caused by insulation degradation, insulation contamination, entrance of vermin, foreign objects coming into contact with the energized bus, or any other unplanned condition that creates an electrical discharge path through air. During an arcing fault, the voltage at the fault location is essentially the system voltage and the fault energy is focused within the switchgear enclosure. Arc temperatures can exceed 20,000 degrees Kelvin, rapidly heating the air and vaporizing metal parts. The expanding plasma creates severe mechanical and thermal stress in the equipment which can blow open doors and covers and burn through or fragment the enclosure.

Standard Features

- ANSI/IEEE Type 2B Arc Resistant to protect personnel at the front, back and sides of the equipment.
- UL Listed, performance tested and classified as arc resistant in accordance with ANSI/IEEE C37.20.7.
- Reinforced enclosure to withstand pressure from internal arcing faults.
- Internal venting system with pressure dams and pressure vents to channel the flow of arc fault gases and vent these gases out the top of the gear and away from personnel.
- Reinforced and gasketed front doors with additional hinges and latching means.
- One piece circuit breaker compartment doors with insert panels for control devices such as fuses, indicating lights and circuit breaker control switches when required.
- Reinforced bolted rear covers.
- Insulated/Isolated bus bar system.
- Integrally designed circuit breaker door sealing frame that allows the user to rack a circuit breaker to connect, test or disconnect position without having to install additional hardware (bellows, shrouds, etc) and still maintain arc resistant rating of the apparatus.
- Shutters in circuit breaker compartments.
- Riser Base with integrated arc plenum.
- Four high power circuit breaker stacking capability. No additional stacking/configuration restrictions.
- All section configurations available. Available in solidly grounded or resistance grounded configurations.
- Non-fused non current-limiting circuit breakers allow full power coordination.

Recommended Optional Features

Overhead plenum with exhaust duct. The system is designed to transfer the byproducts of the arcing event (smoke, particulate matter, heat, etc.) away from the immediate vicinity of the low-voltage switchgear when an internal arcing fault occurs. Typically, the

exhaust duct will vent the byproducts to a location usually outside of the room in which the low-voltage switchgear is located. The overhead plenum is attached to the roof of the low-voltage switchgear, and can be exhausted in any direction ((left, right, forward, backward) away from the switchgear assembly or unit substation.

Dynamic Arc Flash Sentry (DAS). DAS employs the unique dual parameter setting capability of the ETU776 trip unit, coupled with the ability to easily toggle to a lower arc flash parameter set. A normal operation parameter set can be optimized for selective trip coordination, while the second set is optimized for lower arc flash energy levels. The dynamic action comes from the ability to switch from the normal operation set to the arc flash limiting set based on the presence of personnel as they approach the flash protection boundary.

Zone Selective Interlocking (ZSI). If WL circuit breakers are arranged in several levels and minimum delays are desired, it is advisable to use the ZSI module. The circuit breakers are interconnected by these modules. In the event of a short-circuit, all circuit breakers communicate to determine and isolate the exact short-circuit location. Thus, only the closest upstream circuit breaker will be opened. The ZSI module provides the complete range of selectivity with the short delay time of tzsi = 50 ms. By shortening the delay time, the ZSI module significantly reduces arc duration, stress and damage in the event of a short-circuit in the switchgear.

High resistance grounding. Reduces available fault current during ground faults thereby reducing arc energy.

Ratings

- ANSI/IEEE Type 2B accessibility
- Maximum internal arcing short-circuit current: 100kA @ 508V and 85kA @ 635V
- WL power circuit breaker frames range from 800A to 6000A
- 3 and 4 pole WL power circuit breakers
- Maximum arcing duration: 500 msec
- Vertical bus continuous current ratings to 6000A
- Horizontal bus continuous current ratings to 6000A
- Maximum voltage: 635V
- 3 Phase 3 Wire, 3 Phase 4 Wire
- 50/60 Hz

Enclosure Type

- NEMA 1 indoor

Industry Standards

- UL-1558
- ANSI/IEEE C37.20.1
- ANSI C37.51
- ANSI/IEEE C37.20.7
- CSA C22.2 No. 31

Dimensional Data

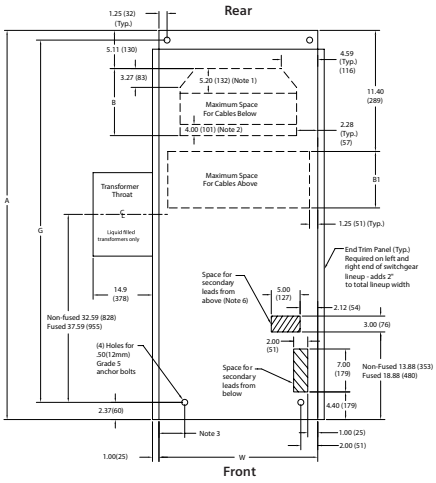

Plan View (WL Arc Resistant Switchgear without Optional Overhead Plenum)

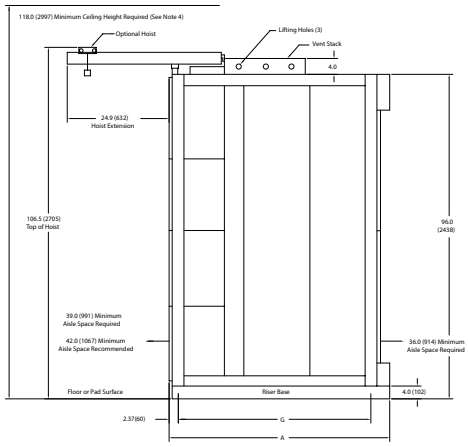

Side View

A = Equipment Depth +2.6 (66)

Anchor Bolt Spacing
G = Equipment Depth – 0.88 (22)

	Equipment Minimum Width W
3 Pole FS2	22 (559)
3 Pole FS3	32 (813)
4 Pole FS2	32 (813)
4 Pole FS3	40 (1016)

Equipment Depth	Cable Direction Below B	Cable Direction Above B1
60 (1524) Non-fused	20.00 (508)①	13.68 (347)
65 (1651) Fused	20.00 (508)①	13.68 (347)
70 (1778) Non-fused	30.00 (762)①	23.68 (601)
75 (1905) Fused	30.00 (889)①	23.68 (728)
80 (2032) Non-fused	40.00 (1016)①	33.68 (855)
80 (2032) Fused	35.00 (889) ①	28.68 (728)

① Space available for cables below is reduced by 5.20 inches when a lower neutral bus is present.

Dimensional Data

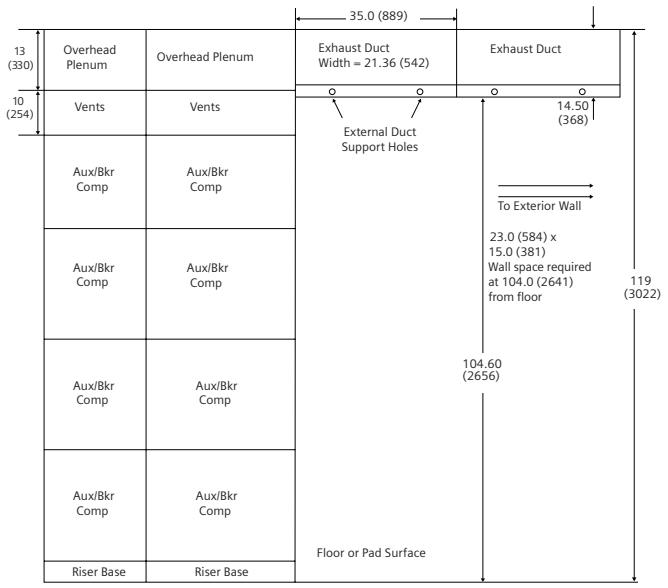

Front View: WL Arc Resistant Switchgear with Overhead Plenum

Note: Dimensions shown in inches and (mm).
Drawings are not to scale.

1. Space available for cables below is reduced by 5.20 inches when a lower neutral bus is present.
2. Space available for cables below is reduced by 4.00 inches if an 800-3200A circuit breaker is located in the bottom compartment. Reductions per notes 1 & 2 are additive. Example: cables below + lower neutral + 2000A circuit breaker in bottom compartment = B – 9.20
3. 4.10 (104) if W = 22; 4.60 (117) if W = 32, W = 40
4. 118 (2997) minimum room ceiling height is required for ventilation of arc products for LV Arc resistant switchgear without overhead plenum.
5. 120 (3048) minimum room ceiling height is required for LV Arc resistant switchgear with overhead plenum.
6. Not applicable for Overhead plenum application. Consult Factory for guidelines for secondary leads from above solutions.
7. Custom designed exhaust duct is provided when the exit is towards the front to clear the overhead hoist. Cross-sectional area of the exhaust duct remains same as shown in figure. Wall cutout required is same at 104 (2641) from floor.
8. Siemens to provide weatherproof box to be installed outside the exterior wall over the exhaust duct exit.
9. The area outside the exhaust duct vent needs to be kept clear of personnel and equipment due to the potential for pressurized exhaust gases being expelled in the area as a result of arc fault in the switchgear. An area of 4 feet X 4 feet centered on exhaust duct vent needs to be clear at all times.
10. Exhaust duct is not self supporting, recommended support every 6 linear feet minimum. The duct supports are not supplied by Siemens and must be supplied by the purchaser or the installing contractor.
11. LV Arc Resistant switchgear with and without overhead plenum should be installed on a solid surface to maintain the arc ratings.

Guide Form Specifications

A. This section supplements Section 16435 – Low-voltage Switch gear unless otherwise noted.
B. Comply with requirements of latest revision of ANSI/IEEE C37.20.7 – Guide for Testing Metal-Enclosed Switchgear Rated up to 38kV for Internal Arcing Faults.
C. Arc Resistant Electrical Ratings:
   1. Nominal System Voltage: [600 V] [480 V] [240 V] [208 V]
   2. Maximum Design Voltage: [635 V] [508 V] [254 V]
   3. Accessibility Type: 2B
   4. Internal Arcing Short-Circuit Current: [85kA @ 635V] [100 kA@ 508V]
   5. Arcing Duration: 100 msec, 500 msec
D. Arc Resistant General Construction:
   1. Indoor NEMA 1 enclosure
   2. Riser Base with arc plenum
   3. Insulated/Isolated bus bar system
   4. [Removable rear panels with captive screws.] [Hinged rear doors with captive hardware.]
   5. Devices connected to the primary bus such as: surge arresters, potential transformers, control power transformers and their associated current limiting fuses must be locatedin the rear of the switchgear in the bus/cable compartment and not in auxiliary compartments.
   6. Shutters in power circuit breaker compartments.
   7. One piece circuit breaker compartment doors with insert panels for fuses, indicating lights and control switches when required.

WARNING: This equipment contains hazardous voltages. Death, serious personal injury, or property damage may result if safety instructions are not followed. Only qualified personnel should work on or around this equipment after becoming thoroughly familiar with all warnings, safety notices, and maintenance procedures provided with the equipment. The successful and safe operation of this equipment is dependent upon proper handling, installation, operation and maintenance.

Arc Resistant Switchgear

- Insulated and isolated bus
- Separation barriers and top venting
- Breaker shutters

Arc resistant metal-enclosed low-voltage switchgear is an optional product offering that contains and channels internal arcing fault energy. This new switchgear construction provides an additional degree of protection to the personnel performing normal operating duties in close proximity to the equipment while the equipment is operating under normal conditions. In each of the descriptions below, additional design features are indicated, all of which aid in directing faults upward away from personnel or reduce the chances of a fault by insulating and isolating live parts.



Front view

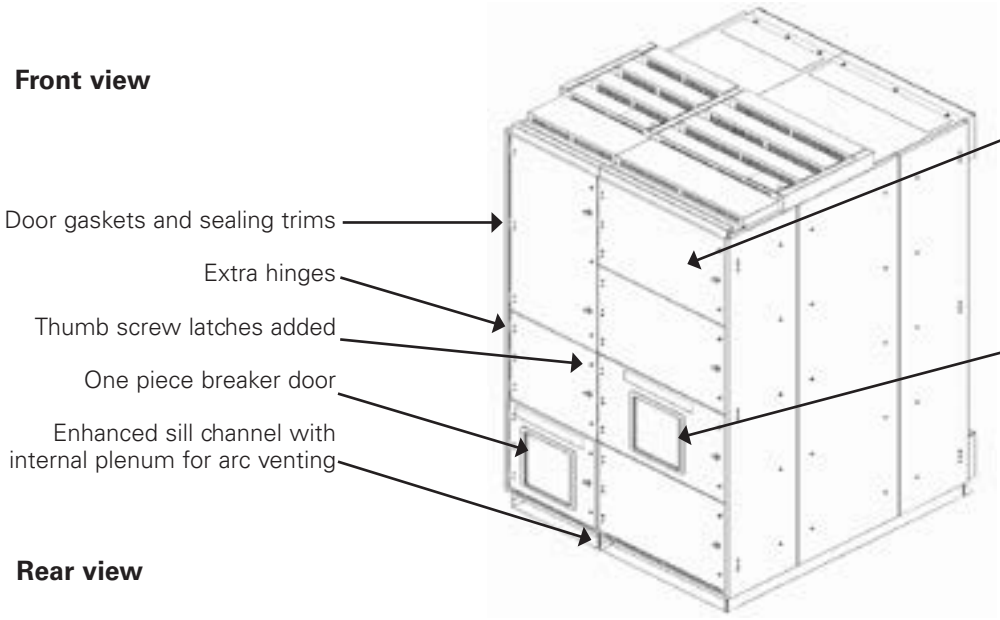

Rear view

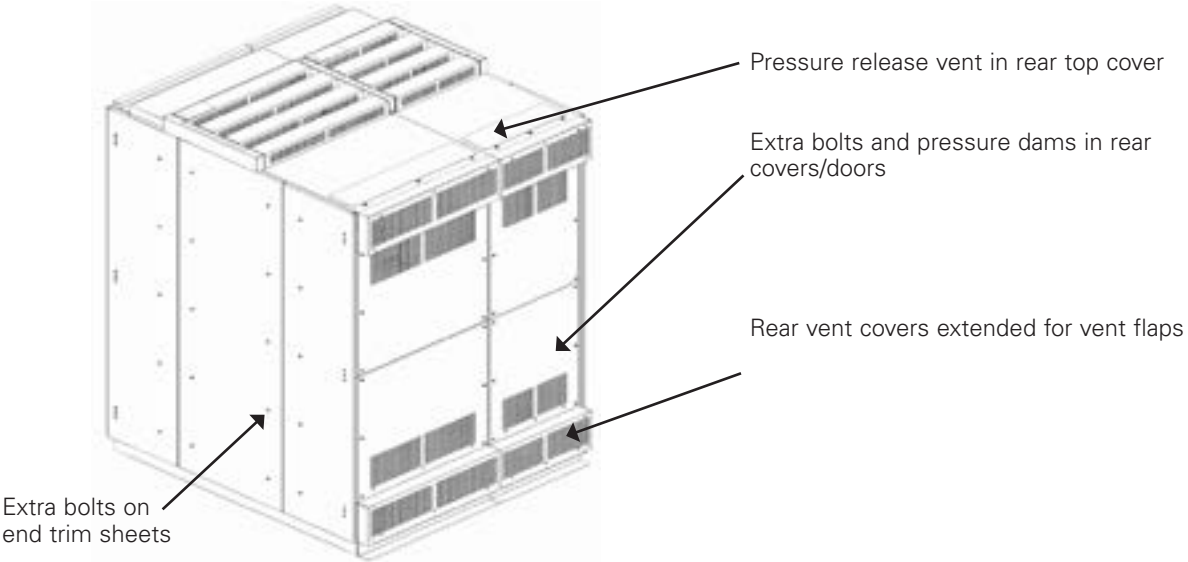

Dynamic Arc Sentry

One of the trip units available for the Siemens WL Family of breakers is the ETU 776. It offers dual parameter sets that enable the trip unit to automatically lower the instantaneous setting and thereby lower the available energy in a fault condition. Commonly referred to as "maintenance mode", making a breaker trip faster while engaged in any form of maintenance or just by being in proximity to energized equipment is an effective way to minimize arc flash dangers. If one is concerned about the effects of temporarily inhibiting selectivity, then rest assured that with the ETU 776 single step changes are possible giving engineers the ability to clear faults faster with minimum effect on coordination. In the example below the effects of the DAS system may be seen.

Example 1

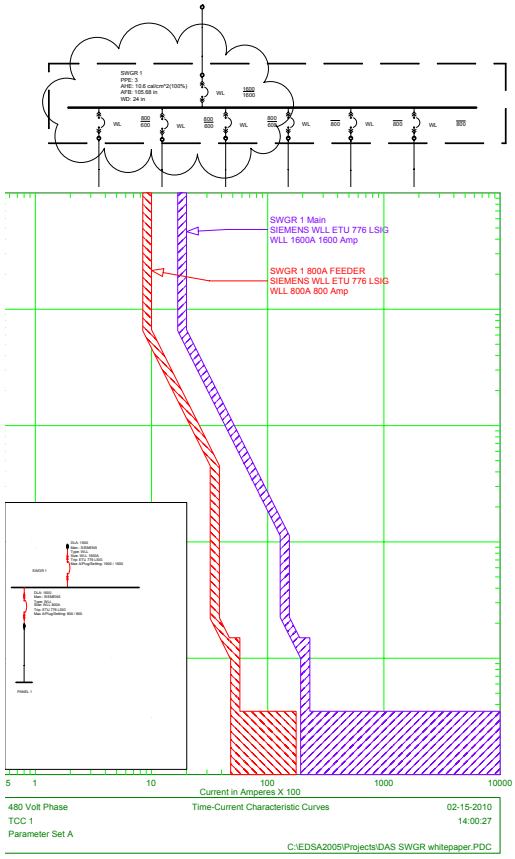

Parameter set "A"

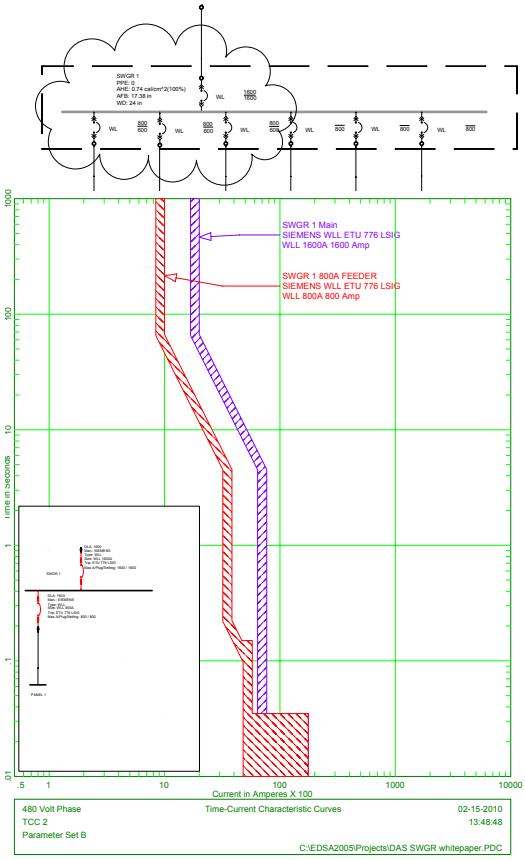

Parameter set "B"



WL Breaker with ETU 776



Dual Parameter sets enable "maintenance mode" - can be set remotely via software or automatically via digital input.

Under normal conditions, the switchgear's calculated arc flash energy will require PPE level 3 protection for anyone within the arc flash boundary. Incorporating the features built into the DAS system, and using the ETU776 trip unit, the system changes to parameter set B. In the second figure the instantaneous has been changed to a lower setting and the calculation shows a reduction of arc flash energy. The resultant PPE level has been reduced to 0.

Below is another example of the benefit of the DAS, or even manual switching, of breaker parameter set. The reduced settings set available in the ETU 776 can also be used to reduce the arc flash energy at downstream equipment. In the first figure on the left with normal settings the arc energy at panel 1 requires PPE level 2. After switching to the parameter B settings, the PPE level at Panel 1 is reduced to 0.

Example 2

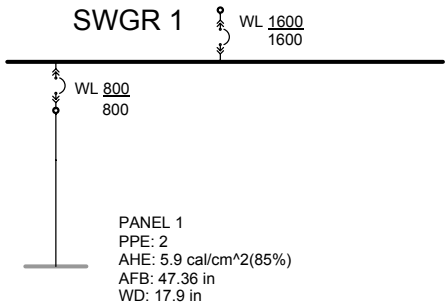

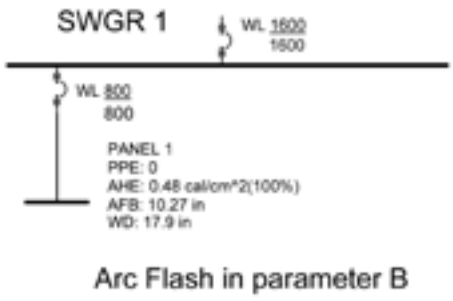

Arc Flash in parameter B

Arc Flash in parameter A

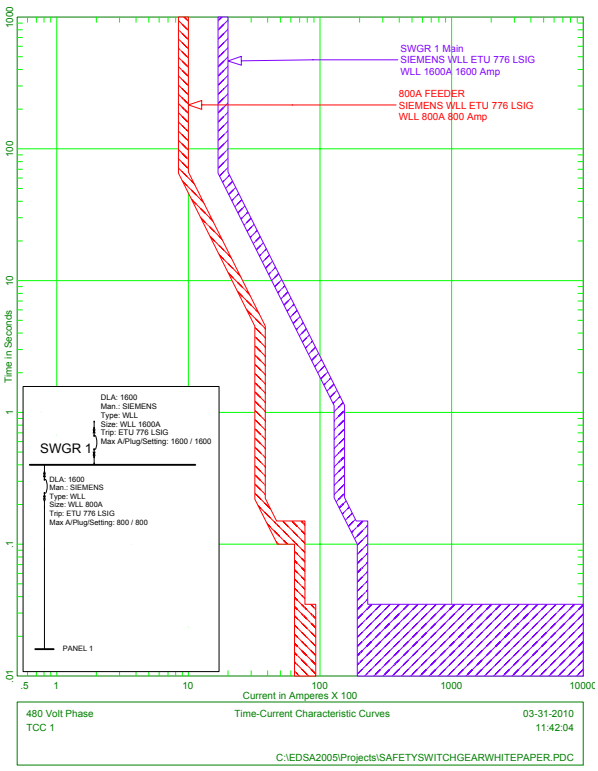

Arc Flash in parameter B

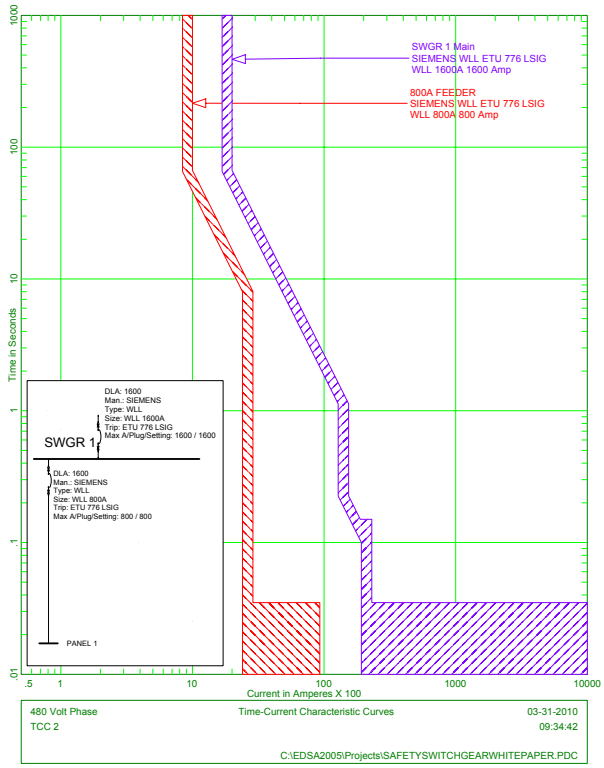

Remote operation and monitoring

- Remote Monitoring for temperature, metering and maintenance data.
- Remote Control via communications with or without interposing relays.
- Remote Racking feature.
- Remote Operation for opening and closing via local hand held pendant station.

Remote Monitoring is an effective way to maintain separation between personnel and energized electrical equipment. With the latest equipment from Siemens, this is now easier and more cost effective than ever. Maintenance personnel and engineers can now view real-time electrical parameters, operating conditions (like temperature in the breaker and number of operations), and open and close breakers remotely. The WinPM.Net software with its Web Enabled interface allows multiple users to access only the information they are interested in from the convenience of their desks. Accountants can access cost allocation and utility billing information to enforce accountability for electrical resources and verify utility bills. Trip settings and other parameters for the LV power breakers can be modified and monitored remotely as well.

In addition, WL breakers with appropriate electrical controls and communication components, can be opened and closed through communications directly or with the use of interposing relays.

Unit sub #5 elevation

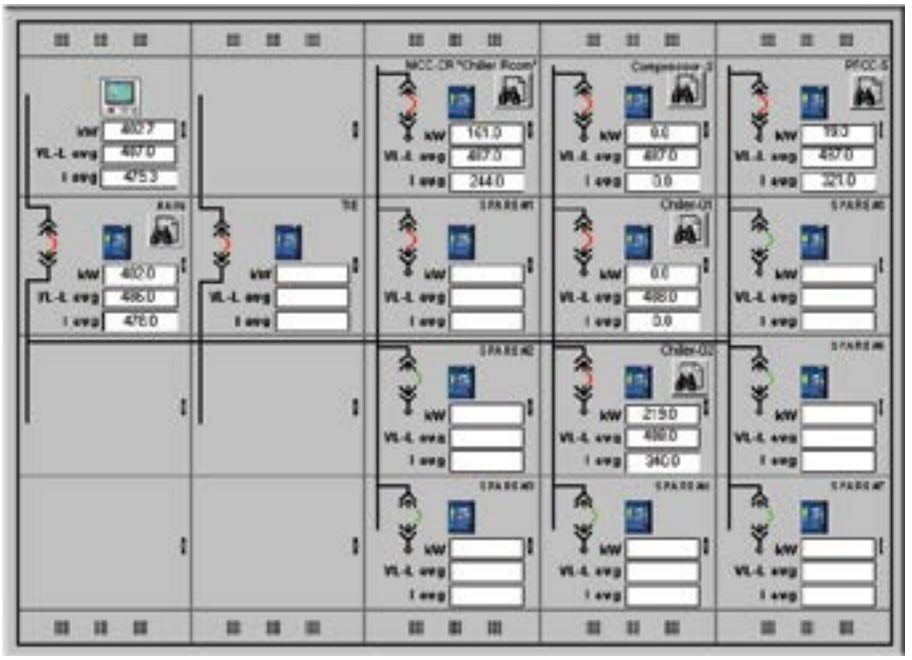

Real-time data from WL breakers with remote open/close capability

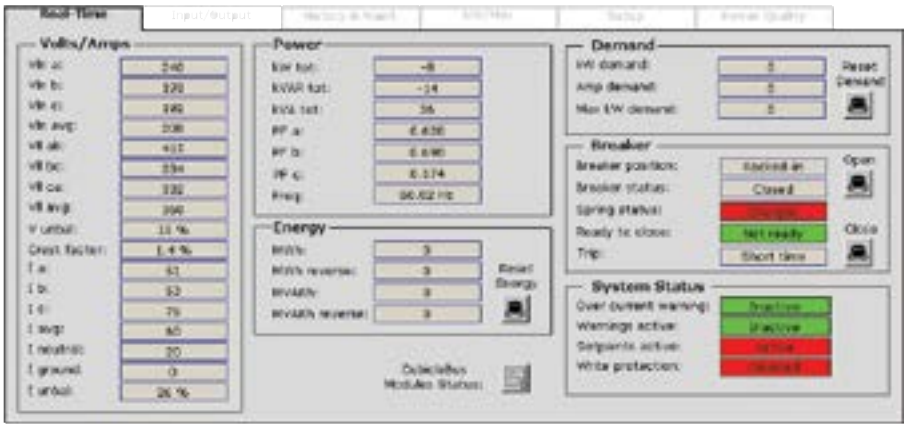

Remote Racking Device

Although it is always preferable to work on equipment that has been de-energized, in some cases it may not be practical. Siemens now offers the Remote Breaker Racking Device. This product uses an integral torque overload sensing mechanism and allows users to safely rack our WL breakers into the Connect, Test and Disconnect position from up to 30 feet away.

This allows the operator to be outside the arc flash boundary thereby providing additional personnel protection and reducing the PPE requirements. This system can be retrofitted to existing Siemens WL switchgear lineups.



Remote Racking Device

Remote Operator Pendant

This hand held pendant allows a user to remotely operate (open/close) a WL breaker without being in front of the switchgear. Standard cable lengths are 30 feet with other lengths available. This pendant, along with the Remote Racking device, can be used to improve personnel safety by putting operators outside the arc flash boundary. Maintenance personnel can remotely open breakers and close breakers, without being in front of the equipment. The Remote Operator Pendant can be used in combination with the Remote Racking Device for added personnel safety.



Remote Operator Pendant



Control port on WL Switchgear

Low-voltage Switchgear

Arc Flash Solutions

Other protection options

- Infrared Viewing ports
- Zone Selective Interlocking
- High Resistance Grounding

Infrared Viewing Ports

Infrared viewing ports allow maintenance personnel to monitor temperatures of the cable and bus connection points in the rear of the gear while it is energized and under load. Excessive temperatures can be an indication of a problem with a connection.



Infrared viewing ports

Zone Selective Interlocking

Zone Selective Interlocking eliminates any intentional time delay in the event a fault occurs between two breakers in adjacent zones. In the schematic to the right, representative time delay values are shown for the breakers in each zone. If a fault occurs on the load side of the downstream breaker, the ZSI system enables the upstream breaker's delay and allows the downstream device more time to independently clear the fault. If the fault occurs on the line side of the downstream breaker (between two zones), the delay in the upstream breaker will not occur. This allows the fastest tripping time for faults and will reduce the amount of arc energy which may be released. The ZSI function is available for short time delays and ground fault delays.

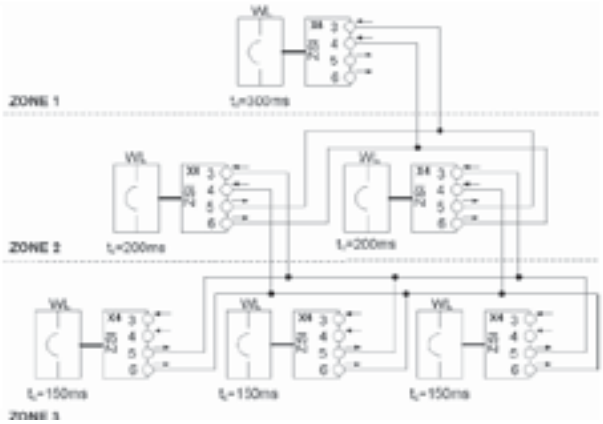

Zone Selective Interlocking

High Resistance Grounding

Research has shown that a high percentage of arc faults start as a phase to ground fault. High resistance grounding systems minimize the available phase to ground arcing current.

A high resistance grounding system reduces the magnitude of phase to ground faults. This will reduce the mechanical stress on equipment for the most common of faults and will reduce the magnitude of energy released.

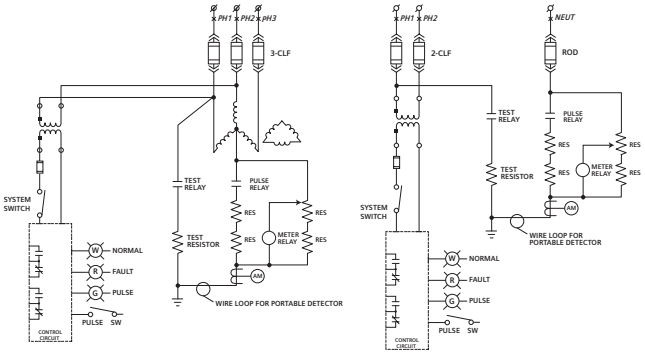



Secondary Unit Substations

Overview

Siemens offers a wide variety of unit substation designs to meet customer requirements. A unit substation consists of one or more transformers mechanically and electrically connected to and coordinated in design with one or more switchgear or switchboard assemblies. A secondary unit substation is defined as a unit substation whose outgoing section is rated below 1000 volts.

A typical secondary unit substation consists of three sections:

- Primary: an incoming section that accepts incoming high voltage (2400 to 13,800 volts) line
- Transformer: section that transforms incoming voltage down to utilization voltage (600 volts or less)
- Secondary: an outgoing section that distributes power to outgoing feeders and provides protection for these feeders (600 volts and less)

Standard secondary unit substations consist of:

- Medium Voltage Primary
- Transformer
- Low Voltage Secondary

Siemens also offers low voltage unit substations with:

- Low Voltage Primary
- Transformer
- Low Voltage Secondary

The primary reason for using a secondary unit substation is to bring power as close as possible to the center of the loads. Another reason is that it provides a system design concept incorporating a wide variety of components that permits tailoring equipment to the needs of the application. A secondary unit substation provides

- Reduced power losses
- Better voltage regulation
- Improved service continuity
- Increased functional flexibility
- Lower installation cost
- Efficient space utilization

Every component and assembly of secondary unit substations are designed and engineered as an integral part of a complete system.



Primary Switch

Liquid Filled Transformer

Switchboard with WL Encased Systems Breakers



Primary Switch

Dry Type Transformer

Type FC2 Switchboard with Fusible Switches



Primary Switch

Liquid Filled Transformer

Type WL Low Voltage Switchgear

For more information, please contact your local sales office.

Siemens Unit Substation Solutions

Indoor Dry Type Transformer

Sketch Page

Plan view

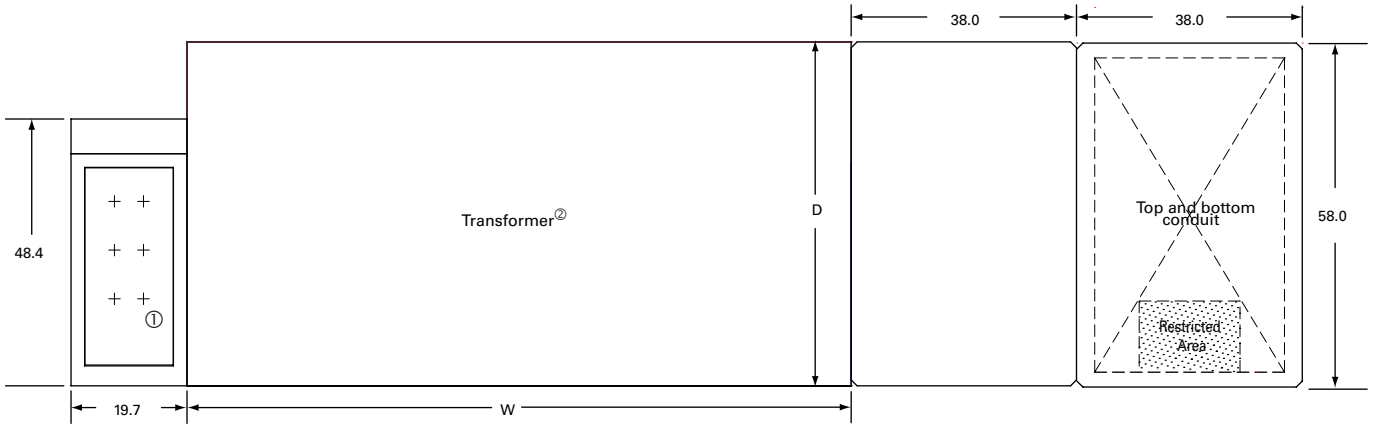

Front view

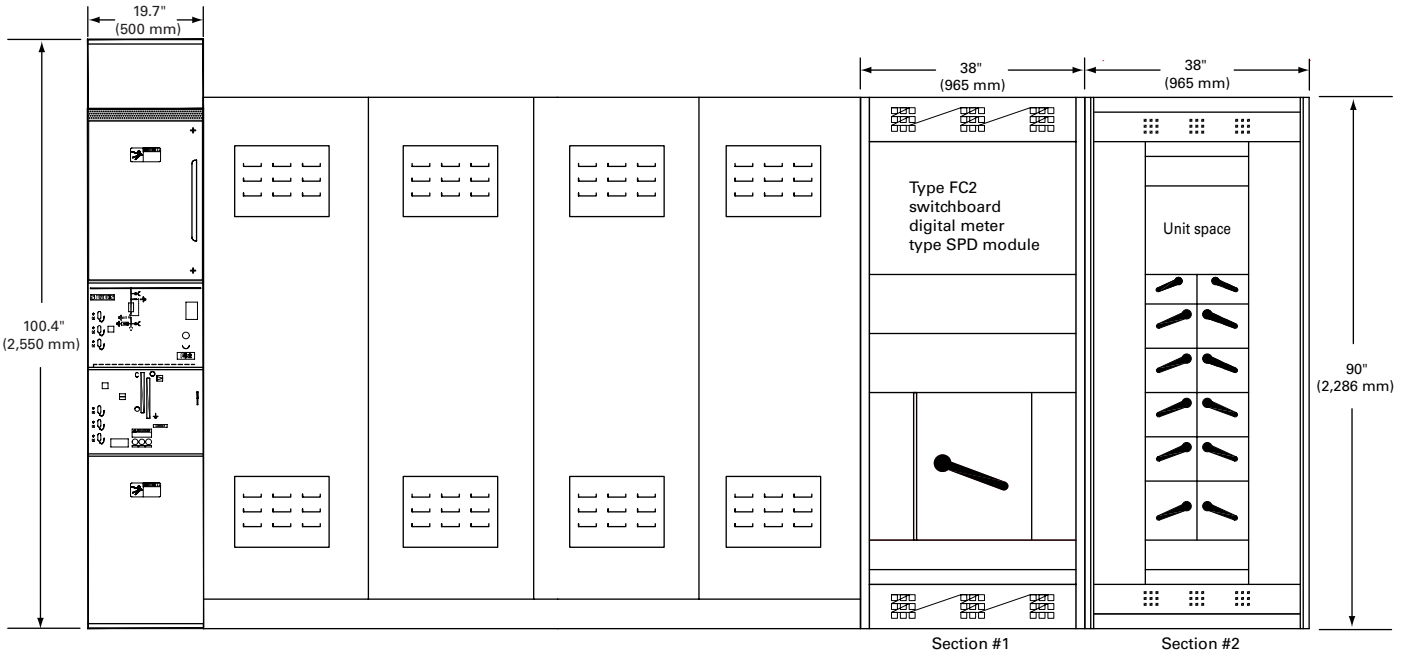

Primary Switch requires front access for top cable entry terminations.
Transformer requires access from the front and 12″ (305 mm) on the back side for ventilation space.

Plan view

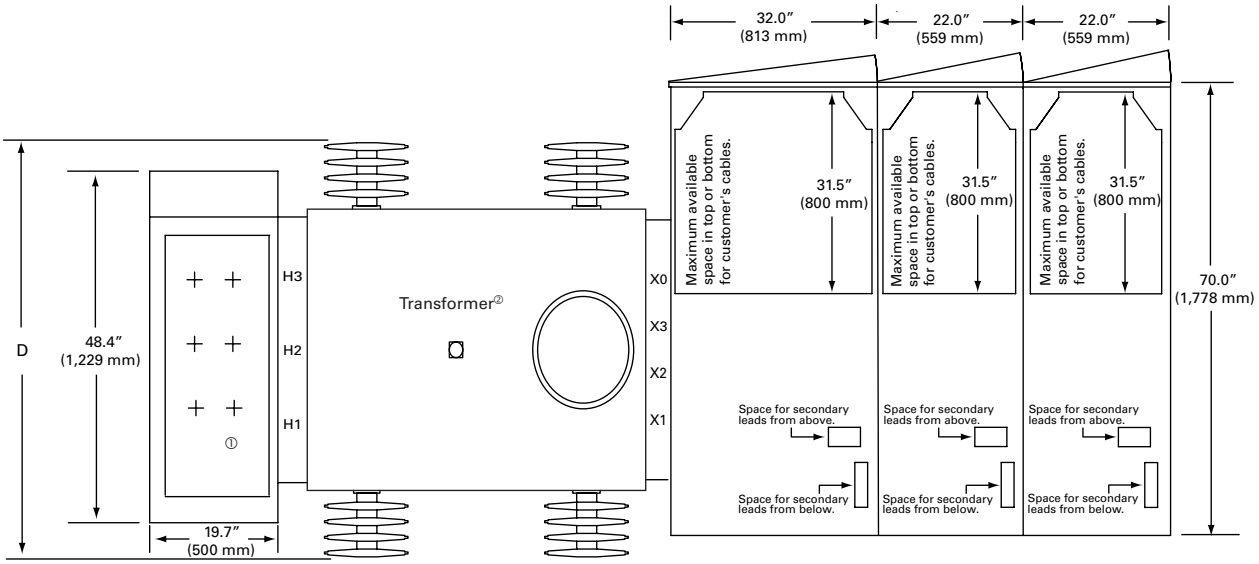

Front view

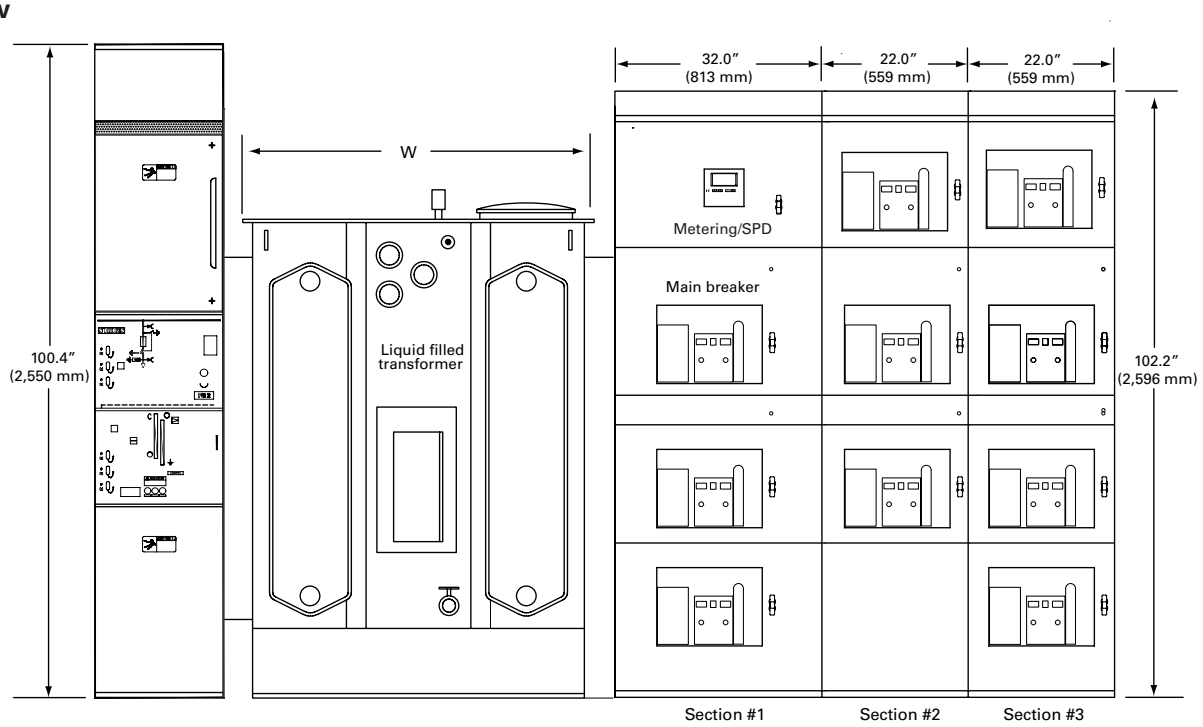

Primary Switch requires front access for top cable entry terminations.
Transformer requires access from the front and 12″ (305 mm) on the back side for ventilation space.

Notes

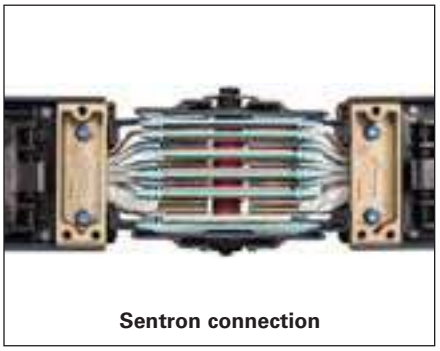

Sentron connection



XJ-L



Bus plugs

Contents

Busway System Overview

Pricing Notes	13-3
Busway Selector Chart	13-4

Sentron® Busway

Sentron Busway Overview	13-5 – 13-6
Catalogue Numbering System	13-7
Technical Data	13-8 – 13-9
Straight Sections – Plug-In, One-Sided Plug-In, and Feeder	13-10 – 13-12
Elbows	13-13 – 13-14
Offsets	13-15
Combinations	13-16
Tees	13-17
End Tap Boxes	13-18
Center Tap Boxes	13-19
Joint Mounted Tap Boxes	13-20
TBNK Fittings for Joint Mounted Tap Boxes	13-21 – 13-22
Expansion Fittings	13-23
Reducers and Phase Rotation Fittings	13-24
Service Heads	13-25
Hangers	13-26 – 13-27
Hangers and End Closers	13-28
Roof, Wall, Ceiling, and Floor Flanges	13-29
Busway Accessories	13-30
Flanges Ends	13-31 – 13-32
Combination Flange/Elbow	13-33
Cubicle Options	13-34
Panelboards and Meter Center Modules	13-35 – 13-36
Installation and Application Information	13-37- 13-39
Power II Fit Program	13-40
Quick Reference	13-41

Sentron® Busway Systems

Sentron Bus Plug Overview	13-43
Sentron Bus Plugs – Circuit Breaker (Installed) – Catalogue Numbering System	13-44
Sentron Circuit Breaker Bus Plugs	13-45
Bus Plugs with Standard Circuit Breakers	13-46
Bus Plugs with Current Limiting Circuit Breakers	13-47
Sentron Circuit Breaker Bus Plugs Dimensions and Weights	13-48
Wall Clearance and Circuit Breaker Bus Plug Dimensions	13-49
Sentron Bus Plugs – SLVB Fusible - Catalogue Numbering System	13-50
Sentron SLVB Fusible Bus Plugs	13-51 –13-52
Sentron Fusible Bus Plugs Dimensions and Weights	13-53 –13-54
Wall Clearance and Fusible Bus Plug Dimensions	13-55
Sentron SPD Bus Plugs	13-56
Sentron SPD Bus Plugs – Catalogue Numbering System	13-57
Sentron SPD Bus Plugs Dimensions and Weights	13-58
Sentron 3/6 Bus Plugs	13-59
Sentron 3/6 Bus Plugs – Circuit Breaker (Installed) - Catalogue Numbering System	13-60
Sentron 3/6 Bus Plugs – Product Configurations	13-61
Sentron 3/6 Bus Plugs Dimensions and Weights	13-62 –13-63

Contents

XJ-L™ HD Busway System

Introduction and Overview	13-64 – 13-65
Busway Specifications	13-66
Straight Sections	13-67 – 13-68
Elbows	13-69
Tees and Crosses	13-70
Tap Boxes	13-71 – 13-72
Flanged Ends	13-73
Accessories – Hangers, End Closers, and Outlet Covers	13-74

XJ-L™ HD Bus Plugs

Selection Guide and Catalogue Numbering System	13-75
XQ and XQR Series	13-76
XPM Series	13-77
XEC and XLEC Series	13-78
XLVB Series and Plug-In Tap Box	13-79

Busway Power Distribution

BD® Plug-In (225 — 1600 Ampere) Copper	13-80
XL-U® Aluminum (225–5000 Ampere)	13-81
XL-U® Copper (225–6500 Amperes)	13-82
XL-X®, XL-U®, BD® Plug-In Units	13-83 – 13-84

Pricing Notes

A. Footage Pricing

1. Sentron and XL-U base pricing is listed on a per foot charge. When calculating the footage charge, fractions are rounded to the larger whole number (i.e., a linear run totaling 66'3" would be priced at 67 feet.
2. BD and XJ-L HD base pricing is listed on a per section charge.

B. Accessories

Some busway accessories are listed as complete device prices while others are listed under accessory charges.

1. Complete device price includes all material and accessory charges for a standard device. (Busway footage included if applicable).
2. Accessory Charge includes fabrication and any miscellaneous fittings for the standard device. (No busway footage included).

C. End Cable Tap Boxes are designed to be installed at the beginning or end of a busway run. The busway rating determines the tap box list price. Mechanical lugs are standard. For compression lugs add 30% to tap box list price.

D. Elbows with an angle other than 90 degrees, the accessory charge is to be doubled.

E. Flange Ends (Switchboard Connections / Stubs) accessory prices are for connection to Siemens equipment. For connection to other manufacturer's equipment, multiply the flange end list price by 2.5. Standard list price includes eight inches of bus extension into equipment from mounting flange, if more than 8 inches are required, consult factory for pricing. Sentron Switchboards can be assembled with the Busway Flanged End pre-installed, eliminating the labor to connect the Busway to the switchboard at the job site.

F. Service Heads are specially constructed tap boxes suitable for outdoor use and are equipped to accept service cables through a removable insulated bottom plate. The busway should be priced through the end of the run.

G. Phase Transpositions can be built into a busway section to provide better voltage balance on long runs. To price, use the "Expansion Section" accessory charge for the appropriate ampere rating.

H. Hangers
Sentron and XL-U busway are UL listed for standard hanger spacing of ten feet (on center). Purchasing busway hangers for horizontal installations is optional. Unistrut/ Kindorf is commonly used by contractors as an approved alternative.

Two hangers are furnished free of charge with every straight section of BD and XJ-L HD. Self compensating "Spring" hangers required for vertical installations are designed to be field installed by the installer and are shipped separately. These are also used as intermediate supports where floor-to-floor height is greater than 16 feet.

I. Ceiling, Floor And Wall Flanges are used when busway passes through a floor or wall and are intended to cover that portion of the opening around the outside of the busway. **They are not to be used to support the busway.**

J. Reducers price is determined by the rating of the larger busway. Fused reducers do not include fuses.

K. Special Paint — Busway Sections, Accessories And Bus Plugs
Standard finish is ASA #61 light gray. For other than standard color, add 20% and consult factory for availability. XJL HD Busway is offered in ASA#61 Gray and Graphite Gray.

L. For Silver Finishing of Copper Bus Bars, add 10%.

M. Roof Flanges are specially constructed collars and plates built onto a section of 3R busway which passes through a flat or angled roof. Roof pitch must be given for angled roof.

N. Circuit Breaker Type Bus Plugs for Sentron Busways are priced as "complete devices" with circuit breakers factory installed. Circuit Breaker plugs for BD, XL-U and XL-X busways are priced "enclosure only". XJ-L HD may or may not have a circuit breaker and receptacle installed, depending upon the bus plug type.

O. Fusible Type Bus Plugs do not include fuses. Adapter kits for Class R, T & J fuses are available for field installation.

P. Cubicle list prices include labor and material for a single frame device with enclosure including line side internal bussing for connection to busway and protective device. Fuses and load side bussing are not included in the base price.

Q. Sentron Busway has been tested in accordance with UL1479 and offers a certified two hour fire rating for gypsum wall board construction, and a three hour fire rating for concrete slab or block penetrations. These ratings were achieved using standard busway installed with SpecSeal® sealant from Specified Technologies Inc. This material is available through Electrical Distribution.

R. Expansion Section

Qty (1) Expansion Section should be used for every 200ft of continuous Busway run length, at every transition to a vertical run, and for each building expansion joint. The Busway run must be positioned accordingly to accommodate the Expansion Section(s).

Busway Systems Overview

Busway Selector Chart (100-6500 Ampere)

I-T-E (previously known as Bulldog Electric) was the first manufacturer to make a Busway System. Since its introduction in 1932, Busway Systems have improved and expanded into several designs to meet the ever changing needs of the electrical industry. The Busway Selection Chart below will help you in selecting the proper product to fit your requirements.

Busway Selector Chart

100-6500 Ampere **600 Volts or Less**

Feature			Product: Plug-in and Feeder Busway: Sentron Plug-in/Feeder	XL-U Plug-in/Feeder	XJ-L HD Plug-in	BD Plug-in
Ampere Rating		100	–	–	√	–
		150	–	–	–	–
		200	–	–	–	–
		225	√	√	√	√
		400	√	√	√	√
		600	√	√	–	√
		800	√	√	–	√
		1000	√	√	–	√
		1200	√	√	–	√
		1350	√	√	–	√
		1600	√	√	–	√
		2000	√	√	–	–
		2500	√	√	–	–
		3000	√	√	–	–
		3200	√		–	–
		4000	√	√	–	–
		5000	√	√	–	–
		6000, 6500	–	√	–	–
Conductor		Copper	√	√	√	√
		Aluminum	√	√		√
Use		Indoor	√	√	√	√
		Outdoor	√	√	–	–
AC Service 50-60 Hz 400Hz①		2W	–	–	–	–
		1Ø3W	–	–	√	–
		3Ø3W	√	√	√	√
		3Ø4W 100% N	√	√	√	√
		3Ø4W 200% N	√		√	
Voltage		600 volts or less	√	√	√	√
Construction		Ventilated	–	√	–	–
		Non-Ventilated	√	√	√	√
Meets Electrical Standard	**UL**	857	√	√	√	√
	NEMA	BU1	√	√	√	√
	CSA/CUL	C22.2 NO 27	√	√	√	√
	ANCE	NMX-J-148ANCE	√	√	√	√

① Consult factory for information.

Sentron® Busway Systems – Reference Information

Sentron Busway Overview

Sentron Busway for Global Power Distribution Applications

Building on a solid foundation of advanced products for the construction industry, the Siemens Sentron name is recognized worldwide as synonymous with quality and consistent performance. Sentron Busway delivers impressive features and benefits that make it ideal for many types of industrial and construction implementations.

Engineered to ensure the safe and efficient distribution of power in industrial, commercial and institutional environments world-wide, Sentron ampacities range from 225A to 5000A UL. Thanks to an innovative design, you benefit from labor-saving installation and a flexible, compact bus system that is an ideal fit for most applications. In fact, Sentron Busway is one of the industry's least labor-intensive systems.

Sentron Busway installs with minimal hardware and often costs less than cable and conduit installations. The lightweight aluminum housing acts as an integral ground, joint stacks connect with splice plates featuring a single-bolt design, and bus plugs and cable tap boxes offer the industry's largest wire bending space. An optional 200% neutral within the bus bar housing accommodates harmonics common in today's power systems.

Sentron Busway conductors are insulated with a state-of-the-art epoxy insulation system, which is applied using an electrostatic spray process for optimal insulation integrity.

Exemplifying the spirit of continuing innovation, Sentron Busway is now available with economical and convenient elbow stacks for changing left, right, up or down directions at 90 degrees.

And, of course, Sentron Busway is certified to design standards worldwide, including UL, NEMA, IEC, CSA, VDE and BS.

Siemens Busway Business uses industry leading technology in all its manufacturing processes. From bus bar fabrication to Electrostatic Spray Epoxy insulation, all the processes used in the manufacturing of Siemens Sentron Busway are electronically controlled to provide for consistent, high quality results, making Sentron Busway products best in its class.

Housing

Sentron Busway incorporates an all aluminum housing. This lightweight totally enclosed, non-ventilated housing resists rust and other elements, distributes heat away from the conductors, and provides an excellent ground path. The totally enclosed design also eliminates the need for derating of the system regardless of installation orientation. The housing is covered with an electrostatically applied light gray ANSI 61 polyester urethane powder paint that is scratch resistant and has a 1,000-hour salt spray resistance rating.

Conductors

Sentron Busway conductors have a compact construction and can be configured as 3-phase 3-wire, 3-phase 4-wire or 3-phase 4-wire with 200% neutral. The conductors may be ordered in copper (98% conductivity), 1000A/in^2 M-Rated Copper, Aluminum (58% conductivity) and 750A/in^2 L-Rated Aluminum. The optional 200% neutral helps to handle harmonic conditions that may exist. This system is especially useful with discharge lighting (fluorescent) and computer installations. This will help to minimize overheating and prolong the life cycle of your power distribution equipment.

Ground

Sentron Busway offers ground options to meet your specifications: standard integral aluminum housing ground and optional internal grounding bars. An optional isolated ground is also available which is especially useful in applications where a clean ground is needed (such as hospitals or high tech).

Plating

All bus bars are electroplated with tin. This unique tin plating provides excellent conductivity and prevents impurities from attaching to the bars. Optional silver plating is also available.

Insulation

Sentron Busway is insulated with an Epoxy Powder Coating system designed by Siemens Engineers, Epoxy System Engineers and Epoxy Powder Specialists, specifically for Siemens Busway products.

The Siemens exclusive Electrostatic Spray insulation process produces uniform application of Epoxy powder over the entire conductor bar. This is further enhanced by the inline filter process and magnetic separator that helps to eliminate contaminants common to fluidized bed systems. The electrostatic application also provides a better coating consistency than that of the older fluidized bed process. The combination of electrostatic spray and lower oven temperatures produces a consistent coverage with fewer impurities and pinholes in the insulation. The lower oven temperatures reduce the risk of bar annealing, which affects the overall quality of the system.

Sentron Busway insulation is Class B, 130°C Rated. Every bus bar and completed assembly is dielectric tested to ensure the insulation is free of defects.

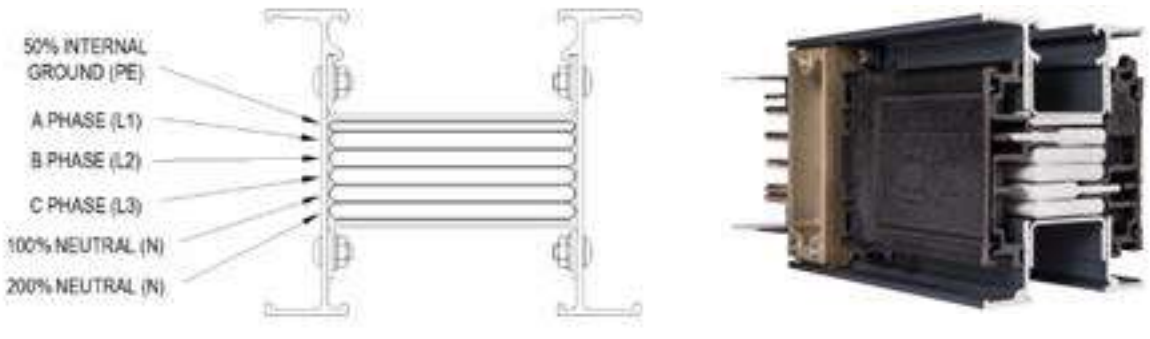

Sentron® Busway Systems – Reference Information

Sentron Busway Overview

Overview

Joint Stack

Each Sentron Busway piece is shipped with a joint stack and joint covers installed at one end of the busway and a shipping end protector at the other end. The joint stacks feature a single bolt design and a special, torque indicating, double headed break-off bolt. This eliminates the need for torque wrenches and assures proper torque at installation of 50 ft.-lbs.(68 N-m).

When the proper torque value is achieved, the top bolt head will shear off. Each joint stack allows for +/- .625 inches (15.8mm) adjustability at each joint. Over adjustment is prevented by the joint covers, which will only allow a .625 inch (15.8mm) adjustment when the knockouts on the joint cover are removed.

It is possible to remove any joint connection assembly to allow electrical isolation or removal of a busway length without disturbing adjacent busway lengths. Isolation joint stacks are available and used to electrically isolate a busway section(s) within a busway run. For easy visual identification, isolation joint stack assemblies are painted white.

Plug-in Opening

Sentron Busway offers plug-in style busway which feature plug-in openings rated for finger safety to IP2X in accordance with IEC 529 and BS EN 60439-1, -2 and BS EN 60529.

Each plug-in opening has a reversible hinged dead front designed to protect the contact surfaces from dirt, dust or moisture. Gasketing is used where applications require a splash proof (IP55) rating.

IP Ratings

Sentron Busway is available in a variety of IP ratings. Use the chart below to determine the IP rating that best fits your application needs.

Testing

Each piece of Sentron Busway is factory tested before shipping. Tests performed include dielectric tests, which are used to ensure integrity of insulation. In addition, Sentron Busway is tested in accordance with both UL and IEC standards. All Sentron Busway is manufactured and inspected in an ISO 9001:2000 registered facility.

Standards

All Sentron Busway products meet the following standards:

UL 857
NEMA BU1
CSA C22.2
IEC 60529 (2004)
BS EN 60529
BS EN 60439-1, 60439-2
UL 1479
DIN 4102 Parts 9&12
BS 6387 Parts 11.1 and 11.2

Labor Savings

Using Sentron Busway instead of cable and conduit can create savings of up to 20 - 30% on total installed costs. Sentron busway is lightweight, compact and takes half the time to install as cable and conduit. Siemens Busway Systems Cable Conversion Program will show you side by side comparisons of busway vs. cable/ conduit. For more information, visit our web site at www.sea.siemens.com.

Joint Assembly

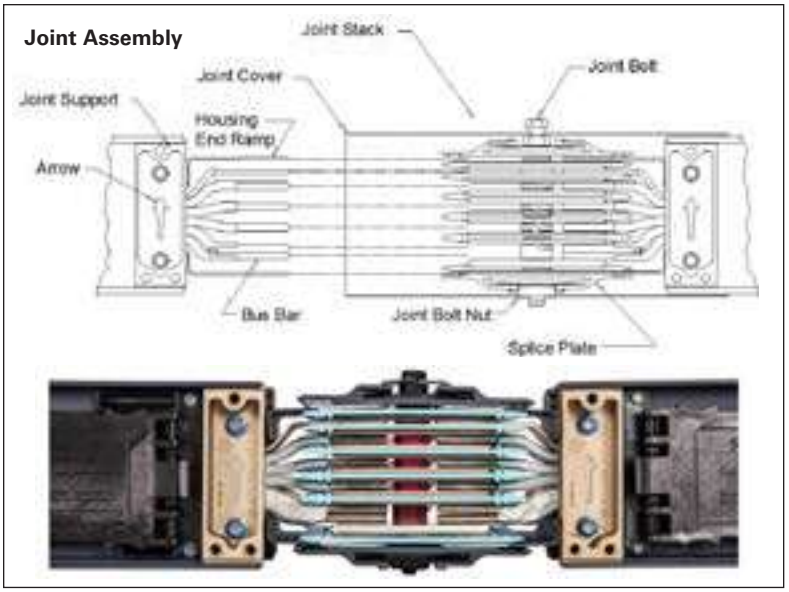

Plug-In Opening and Cover

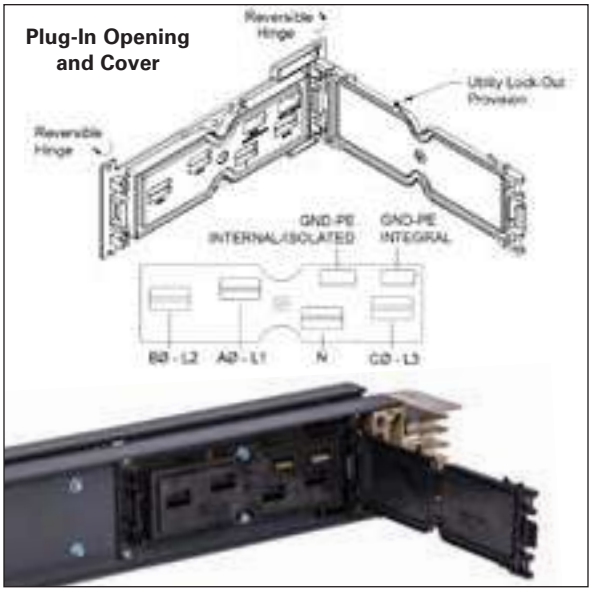

Levels of Protection Description

Code	Description	Sentron Busway		Sentron Bus Plugs
		Feeder	Plug-In	
IP 2X	Plug-In outlet protects against access to live parts by .472 in. (12 mm) test probe, even with cover opened. **Finger Safe**	•	•	•
IP 40	Enclosure protects against entry of .039 in. (1.0 mm) test probe. **Indoor** (Typical UL Designation)	•	•	•
IP 55	Enclosure protects against entry of dust and water jets. **Splash Proof**	•	•	•
IP 66	Enclosure is dust tight and protects against powerful water jets. **Outdoor** (International Only)	•		
NEMA 3R	Enclosure protects against rain, sleet and damage from ice formation. **Outdoor**	•		

Catalogue Numbering System

S	X	4	0	2	C	1	0

Sentron
SX = US Lengths

Configuration
3 = 3Ø, 3W
4 = 3Ø, 4W 100% Neutral
5 = 3Ø, 4W 200% Neutral

Ampere Rating
02 = 225A
04 = 400A
06 = 600A
08 = 800A
10 = 1000A
12 = 1200A
13 = 1350A
16 = 1600A
20 = 2000A
25 = 2500A
30 = 3000A
32 = 3200A
40 = 4000A
50 = 5000A①

Bus Bar Material
C = Copper
M = 1000 Amps/In² Copper
A = Aluminum
L = 750 Amps/In² Aluminum

Ground
1 = Integral (Housing)
2 = Internal Bus Bar②
3 = Isolated Ground②

IP Rating
0 = IP40⑥
4 = IP55⑥
6 = IP66③⑦⑧
9 = NEMA 3R④⑦⑧

① Copper only
② Copper or aluminum ground bar
③ IEC Markets
④ NEMA Markets
⑤ For odd degree angle (other than 90°) specify the degree angle of the turn.
⑥ Indoor only (Plug-in and Feeder)
⑦ Outdoor use (Feeder only)
⑧ Elbow Stack (IP40 and IP55 only)

• Catalog Numbers for Hangers can be found on page 13-43.

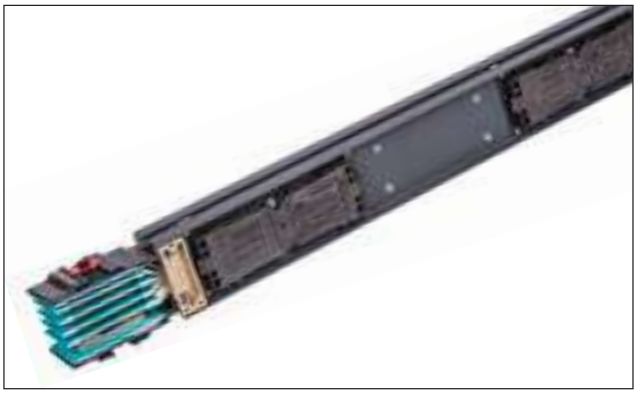

Suffix part of Catalogue Numbers

P	L	0	6

Feeder	**L**ength in Inches, ex.: 2'3" = 027 Feeder lengths available from 2'0" (024 Inches) up to 10'0" (120 inches)		
Plug-in	**L**	**L**ength	**04** = 4'0" **06** = 6'0" **08** = 8'0" **10** = 10'0"
One-sided plug-in (Riser)	**I**	**L**ength	**04** = 4'0" **06** = 6'0" **08** = 8'0" **10** = 10'0"
Elbows	**S** = Stack⑧ **L** = 90° **O** = Odd degree angle⑤	**E**dge	**U**p **D**own
		Flat	**R**ight **L**eft
Tees	**E**	**E**dge	**U**p **D**own
		Flat	**R**ight **L**eft
Offsets	**F**	**E**dge	**U**p **D**own
		Flat	**R**ight **L**eft
Combinations	**O**	Edge **U**p Edge **D**own Edge **U**p Edge **D**own	Flat **L**eft Flat **L**eft Flat **R**ight Flat **R**ight
		Flat **L**eft Flat **L**eft Flat **R**ight Flat **R**ight	Edge **U**p Edge **D**own Edge **U**p Edge **D**own
EX**p**ansion Fittings	P	**F**	**T**
Center Cable Tap Boxes	**T**	**B**	**S**tandard EX**p**anded
End Cable Tap Boxes	T	**V**ertical **H**orizontal	**S**tandard EX**p**anded
End Closers	**C**	**L**	**S**
Flan**G**e	**R**oof **W**all	**F**	**L**
Joint Stacks	**S**tandard **I**solation	**S**	**T**
Ser**V**ice Heads	**1** = 1-Phase **3** = 3-Phase **T** = Throat	**T**ranformer **U**tility	**H** **F**lorida Pwr/Light **H**ouston Pwr/Light **C**ommonwealth ED **P**acific Gas/Electric **D**etroit Edison **S**an Diego **S**eattle **O**ther
Reducers	**F**used **N**on-fused	**R** **R**	**F** **N**
Flanged End	**E** = Int'l Standard **R** = U.S. Standard **O** = Other	**N** **N**	**D** **D**
Transposition	**R**	**PG** = Phase & Ground **PO** = Phase only **GO** = Ground only	

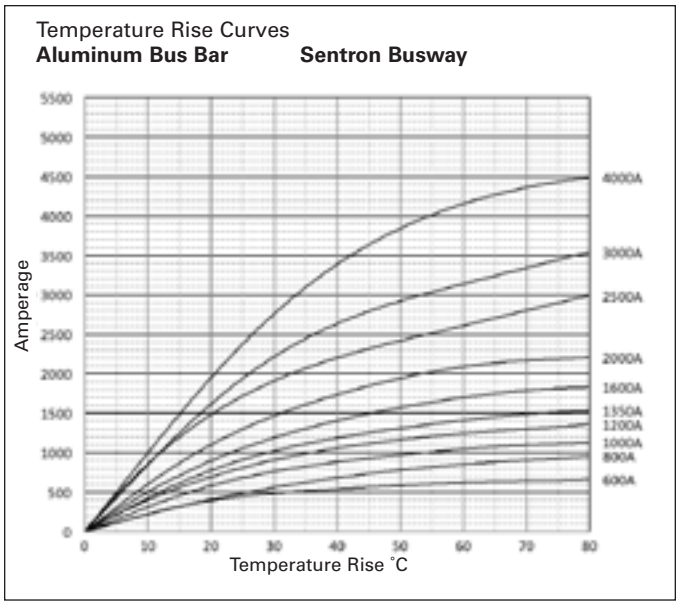

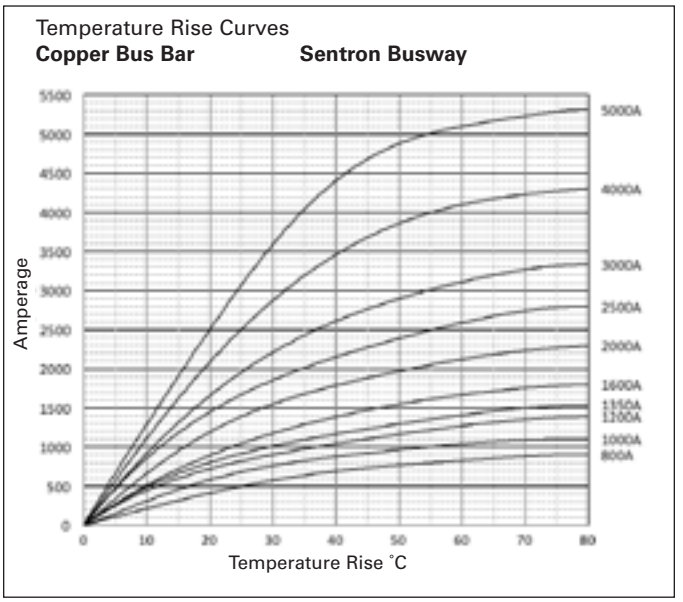

R, X, Z and Ohms, Voltage Drop

Ampere Rating		Bus Bar Width	Ohms x 10^{-3} per 100 feet			Voltage Drop - Concentrated Loads, Line-to-Line per 100 feet at 100% Rated Load, 35°C Ambient①③⑦							
		x 0.25 in. (6.4mm) Thick	Line to Neutral R	X	Z	Power Factor 0.3	0.4	0.5	0.6	0.7	0.8	0.9	1.0
AL	**L-Rated③**												
225	—	1.75 (44.5)	3.94	1.13	4.10	0.88	1.02	1.15	1.27	1.39	1.49	1.57	1.54
400	—	1.75 (44.5)	4.08	1.23	4.26	1.66	1.91	2.15	2.38	2.58	2.77	2.91	2.83
600	—	1.75 (44.5)	4.26	1.32	4.46	2.64	3.03	3.40	3.75	4.08	4.37	4.58	4.43
800	400	2.38 (60.5)	3.42	1.06	3.58	2.82	3.24	3.64	4.02	4.36	4.67	4.90	4.74
1000	600	3.25 (82.6)	2.45	0.74	2.56	2.50	2.88	3.24	3.57	3.89	4.17	4.38	4.24
1200	800	4.38 (111.3)	1.86	0.59	1.95	2.32	2.66	2.99	3.29	3.58	3.82	4.01	3.87
1350	1000	5.38 (138.7)	1.39	0.24	1.41	1.50	1.81	2.10	2.39	2.67	2.93	3.17	3.25
1600	1200	6.50 (165.1)	1.21	0.48	1.29	2.19	2.48	2.75	3.00	3.23	3.43	3.56	3.35
2000	1350,1600	8.75 (222.3)	0.91	0.35	0.98	2.11	2.38	2.64	2.87	3.08	3.26	3.37	3.16
2500	2000	(2) 5.63 (143.0)	0.68	0.29	0.74	2.09	2.34	2.57	2.78	2.97	3.12	3.21	2.95
3000	2500	(2) 6.75 (171.5)	0.54	0.28	0.61	2.24	2.47	2.67	2.85	3.01	3.12	3.16	2.80
3200	2000	(2) 7.50 (190.5)	0.48	0.33	0.58	2.53	2.73	2.91	3.06	3.17	3.23	3.20	2.68
4000	3000,3200	(2) 9.00 (228.6)	0.62	0.21	0.51	2.34	2.61	2.85	3.08	3.27	3.43	3.51	3.20
CU	**M-Rated③**												
225	—	1.75 (44.5)	2.34	1.13	2.60	0.69	0.77	0.84	0.90	0.95	0.99	1.01	0.91
400	—	1.75 (44.5)	2.44	1.13	2.69	1.26	1.40	1.52	1.64	1.74	1.82	1.86	1.69
600	—	1.75 (44.5)	2.58	1.16	2.83	1.96	2.18	2.39	2.58	2.74	2.87	2.94	2.68
800	400	1.75 (44.5)	2.71	1.17	2.95	2.67	2.98	3.28	3.55	3.78	3.97	4.08	3.76
1000	—	2.25 (67.2)	2.12	0.98	2.30	2.58	2.88	3.17	3.44	3.67	3.86	3.98	3.67
1200	600	2.88 (73.2)	1.66	0.77	1.83	2.56	2.85	3.11	3.35	3.56	3.72	3.80	3.45
1350	800	3.50 (88.9)	1.30	0.64	1.45	2.34	2.59	2.82	3.03	3.20	3.33	3.39	3.04
1600	1000	4.50 (114.3)	1.06	0.56	1.20	2.37	2.60	2.66	3.01	3.17	3.29	3.32	2.94
2000	1200,1350	6.00 (152.4)	0.77	0.44	0.89	2.27	2.48	2.50	2.83	2.96	3.05	3.07	2.66
—	1600	—	—	—	—	—	—	—	—	—	—	—	—
2500	2000	8.50 (215.9)	0.55	0.35	0.65	2.15	2.34	2.50	2.64	2.75	2.82	2.81	2.39
3000	—	(2) 4.75 (120.7)	0.49	0.27	0.56	2.07	2.28	2.46	2.62	2.76	2.86	2.89	2.54
3200	—	(2) 5.50 (139.7)	0.44	0.30	0.53	2.33	2.51	2.67	2.80	2.90	2.96	2.93	2.44
4000	2500,3000,3200	(2) 6.50 (165.1)	0.36	0.15	0.39	1.76	1.97	2.17	2.35	2.51	2.63	2.71	2.49
5000	4000	(2) 8.50 (215.9)	0.30	0.21	0.37	2.49	2.69	2.86	3.00	3.11	3.17	3.15	2.63

Notes:

① For plug-in distributed loads, divide voltage drop values by 2.

② To determine voltage drop line-to-neutral, multiply line-to-line values by 0.577.

③ Actual voltage drop for different lengths and at loadings less than full rated current can be calculated using the formula:

$$Vd\ (actual) = Vd\ (table) \times \frac{actual\ load}{rated\ load} \times \frac{actual\ length\ (ft)}{100\ feet}$$

④ For 50 Hz, multiply reactance (X) by 0.85 and resistance values do not change. For 400 Hz, multiply reactance by 3.75 and multiply resistance by 1.4. Calculate new voltage drop:

Vd = amps load x $\sqrt{3}(R\cos\theta + X\sin\theta)$ per 100 ft,
where $\cos\theta$ = Power Factor.

⑤ For metric conversion R, X, Z values "in Ohms per meters Line to Neutral"

R x .0328
X x .0328
Z x .0328

⑥ For metric conversion "Line to Line per meter at 25° C ambient in mV/A/m" (Vd 32.8) / A. Divide Vd by 2 for distributed loads.

⑦ Voltage Drop will decrease in lower ambient temperature. Contact Siemens for Voltage Drop in other ambient conditions.

Ground Capacity

Ampere Rating		Bus Bar Width Inches (mm)	Bars per Pole	Min. CSA for Ground Bus per UL 857 Table 14 In2 (mm2)	Sectional Area 50% Internal Ground Bar In2 (mm2)	Integral (Hsg.) Ground In2 (mm2)	Effective Current Carrying Capacity of Housing		Grd. Circuit Characterisitics under Fault Conditions Ohms x 10^{-3} per 100 ft					
									Internal Ground			Housing Ground		
A	L-Rated						% of UL Req	% of Phase Bar	R	X	Z	R	X	Z
225	—	1.75 (44.5)	1	0.08 (53.5)	0.22 (141.1)	2.30 (1485.1)	1333	253	4.872	9.037	10.267	5.797	12.963	14.200
400	—	1.75 (44.5)	1	0.17 (107.1)	0.22 (141.1)	2.30 (1485.1)	667	253	4.872	9.037	10.267	5.797	12.963	14.200
600	—	1.75 (44.5)	1	0.17 (107.1)	0.22 (141.1)	2.30 (1485.1)	667	253	4.872	9.037	10.267	5.797	12.963	14.200
800	400	2.38 (60.5)	1	0.17 (107.1)	0.30 (191.9)	2.40 (1550.1)	688	192	3.351	7.333	8.063	4.932	10.000	11.150
1000	600	3.25 (82.6)	1	0.20 (126.5)	0.41 (262.1)	2.54 (1639.9)	607	147	2.833	6.628	7.208	3.662	8.442	9.202
1200	800	4.38 (111.1)	1	0.23 (146.5)	0.55 (352.8)	2.72 (1756.6)	552	115	2.487	5.852	6.358	3.189	6.926	7.625
1350	1000	5.38 (136.5)	1	0.29 (189.7)	0.67 (433.5)	2.88 (1859.8)	446	94	2.182	5.115	5.561	2.713	5.883	6.478
1600	1200	6.50 (165.1)	1	0.29 (189.7)	0.81 (524.2)	3.06 (1975.4)	467	84	1.801	4.489	4.837	2.289	5.206	5.687
2000	1350,1600	8.75 (222.3)	1	0.35 (227.7)	1.09 (705.6)	3.42 (2207.7)	425	69	1.390	3.467	3.735	1.623	4.267	4.565
2500	2000	5.63 (142.9)	2	0.52 (332.3)	1.41 (907.3)	3.85 (2480.7)	320	59	1.145	2.955	3.169	1.526	3.837	4.129
3000	2500	6.75 (171.5)	2	0.59 (380.0)	1.69 (1088.7)	4.20 (2711.9)	301	53	0.954	2.683	2.848	1.221	3.635	3.835
3200	2000	7.50 (190.5)	2	0.81 (522.6)	1.88 (1209.7)	4.44 (2866.8)	229	51	0.894	2.493	2.648	1.144	3.428	3.614
4000	3000,3200	9.00 (228.6)	2	0.81 (522.6)	2.25 (1451.6)	4.92 (3176.5)	250	50	0.715	2.339	2.446	0.916	3.378	3.500
CU	M-Rated													
225	—	1.75 (44.5)	1	0.05 (33.5)	0.22 (141.1)	2.30 (1485.1)	2128	261	3.803	6.330	7.380	5.183	10.083	11.338
400	—	1.75 (44.5)	1	0.11 (67.7)	0.22 (141.1)	2.30 (1485.1)	1054	261	3.803	6.330	7.380	5.183	10.083	11.338
600	—	1.75 (44.5)	1	0.11 (67.7)	0.22 (141.1)	2.30 (1485.1)	1054	261	3.803	6.330	7.380	5.183	10.083	11.338
800	400	1.75 (44.5)	1	0.11 (67.7)	0.22 (141.1)	2.30 (1485.1)	1054	261	3.803	6.330	7.380	5.183	10.083	11.338
1000	—	2.25 (57.2)	1	0.13 (85.2)	0.28 (181.5)	2.38 (1536.7)	860	207	3.029	5.993	6.715	4.409	9.191	10.194
1200	600	2.88 (73.0)	1	0.18 (114.2)	0.36 (231.9)	2.48 (1601.8)	661	166	2.460	5.676	6.186	3.674	8.212	8.996
1350	800	3.50 (88.9)	1	0.24 (152.3)	0.44 (282.3)	2.58 (1665.8)	510	140	2.188	5.267	5.704	2.807	7.492	8.000
1600	1000	4.50 (114.3)	1	0.24 (152.3)	0.56 (362.9)	2.74 (1769.0)	534	113	1.893	4.323	4.719	2.756	6.880	7.411
2000	1200,1350	6.00 (152.4)	1	0.29 (189.7)	0.75 (483.9)	2.98 (1923.8)	457	90	1.476	3.181	3.507	2.205	6.032	6.422
—	1600	6.50 (165.1)	1	0.29 (189.7)	0.81 (524.2)	3.06 (1975.4)	467	84	1.801	4.489	4.837	2.289	5.206	5.687
2500	2000	8.50 (215.9)	1	0.35 (227.7)	1.06 (685.5)	3.38 (2181.9)	421	70	1.087	2.020	2.294	1.764	5.419	3.072
3000	—	4.75 (120.7)	2	0.41 (265.8)	1.19 (766.1)	3.56 (2290.0)	376	66	0.984	1.874	2.117	1.470	4.631	4.859
3200	—	5.50 (139.7)	2	0.59 (380.0)	1.38 (887.1)	3.80 (2453.9)	277	60	0.947	1.691	1.938	1.378	4.129	4.353
4000	2500,3000,3200	6.50 (165.1)	2	0.59 (380.0)	1.63 (1048.4)	4.12 (2660.3)	296	54	0.773	1.500	1.688	1.323	3.060	3.334
5000	4000	8.50 (215.9)	2	0.71 (456.1)	2.13 (1371.0)	4.76 (3073.2)	278	50	0.606	1.218	1.360	0.882	1.783	1.989

Note: Bus bar thickness = .25 in. (6.4mm), Ground bar thickness = .125 in.(3.18mm)

UL Short Circuit Ratings					UL Series Connected with Fuse		
		RMS Symmetrical (kA)			Maximum Fuse Size for 200kA RMS Symmetrical Rating		
Ampere	Rating	6 cycle	1 sec.	3 sec.	Class R	Class J & T	Class L
AL	L-Rated						
225	—	85	28	16	600	600 J & T	—
400	—	85	28	16	600	600 J & T	—
600	—	85	28	16	600	600 J & T	—
800	400	100	47	27	—	800 T	1200
1000	600	100	50	29	—	—	3000
1200	800	125	60	35	—	—	3000
1350	1000	150	75	43	—	—	3000
1600	1200	150	90	52	—	—	3000
2000	1350,1600	150	110	64	—	—	5000
2500	2000	200	130	75	—	—	5000
3000	2500	200	160	92	—	—	—
3200	2000	200	160	92	—	—	—
4000	3000,3200	200	200	115	—	—	—
CU	M-Rated						
225	—	85	40	23	600	600 J & T	—
400	—	85	40	23	600	600 J & T	—
600	—	85	40	23	600	600 J & T	—
800	400	85	40	23	—	800 T	1600
1000	—	100	50	29	—	—	3000
1200	600	100	65	38	—	—	3000
1350	800	100	80	46	—	—	3000
1600	1000	125	95	55	—	—	4000
2000	1200,1350	150	115	66	—	—	5000
—	1600	150	90	52	—	—	3000
2500	2000	150	130	75	—	—	5000
3000	—	200	175	101	—	—	—
3200	—	200	175	101	—	—	—
4000	2500,3000,3200	200	200	115	—	—	—
5000	4000	200	200	115	—	—	—

Sentron Busway has UL approved Series Ratings. By using the appropriate line side fuse, short circuit ratings can be enhanced to 200kA for lower amperage busway.

Sentron® Busway Systems – Reference Information

Straight Sections – Plug-In, One-Sided Plug-In and Feeder

Selection

Straight Sections

Sentron Busway can be ordered with Aluminum or Copper bus bars. Aluminum bars are available in 225-4000 ampere sections. Copper bars are available in 225-5000 ampere sections. Sentron Busway includes an integral housing ground, and is available with an internal ground bar or an isolated ground bar in all ampere ratings. Sentron Busway housing is a four-piece aluminum design.

Plug-In Sections

Sentron plug-in sections are designed with plug-in openings centered on 24 in. (610mm) intervals, and are located on both sides of the busway for optimum utilization. Plug-in sections are available in standard lengths of 4 ft. (1.22m), 6 ft. (1.83m), 8 ft. (2.44m) and 10 ft. (3.05m). Sentron plug-in sections meet IP40 (indoor) and IP55 (splash proof) requirements. One joint stack assembly is provided with each plug-in section.

One-Sided Plug-In Sections

Sentron one-sided plug-in sections are designed with plug-in openings centered on 24 in. (610mm) intervals on one side of the busway only. This eliminates unusable plug-in outlets in vertical applications. Riser busway is available in standard lengths of 4 ft. (1.22m), 6 ft. (1.83m), 8 ft. (2.44m) and 10 ft. (3.05m). Sentron Riser Busway is available in IP40 (indoor) and IP55 (splash proof). One joint stack assembly is provided with each riser section.

Plug-In Outlet Features

The plug-in outlet molded guard design prevents incidental finger contact with live conductors. Sentron plug-in outlets are IP 2X rated (with the outlet cover open) which means a .472 in. (12mm) or larger probe is unable to enter a plug-in outlet. The outlet is IP40 Rated with the cover closed and IP55 Rated when configured with gaskets.

Feeder Sections

Feeder busway carries the current of the busway system from the supply source. Feeder busway does not have plug-in outlets. Sentron Feeder busway is available in custom lengths from 2 ft. (.61m) to 10 ft. (3.05m). Feeder sections are rated as IP40 (Indoor), IP55 (Splash Proof), NEMA 3R (Outdoor), and IP66 (International Outdoor). One joint stack assembly is provided with each feeder section.

Standard Plug-In Section (Standard plug-in outlets on both sides on 24 in. centers)
Suffix PL04 (4 ft.), PL06 (6 ft.), PL08 (8 ft.), PL10 (10 ft.)

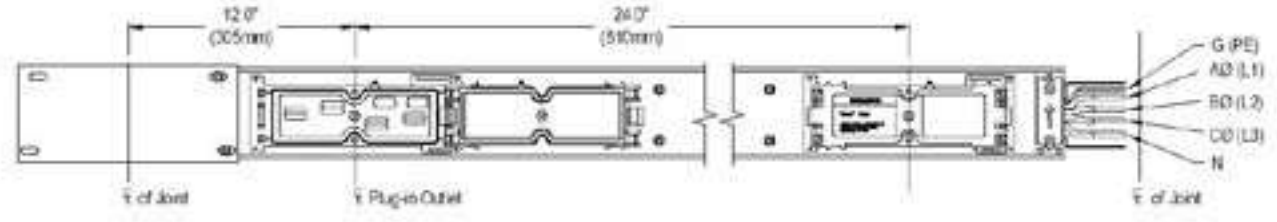

Standard One-Sided Plug-In Section (Standard Plug-In outlets on one side on 24 in. centers)
Suffix RI04 (4 ft.), RI06 (6 ft.), RI08 (8 ft.), RI10 (10 ft.)

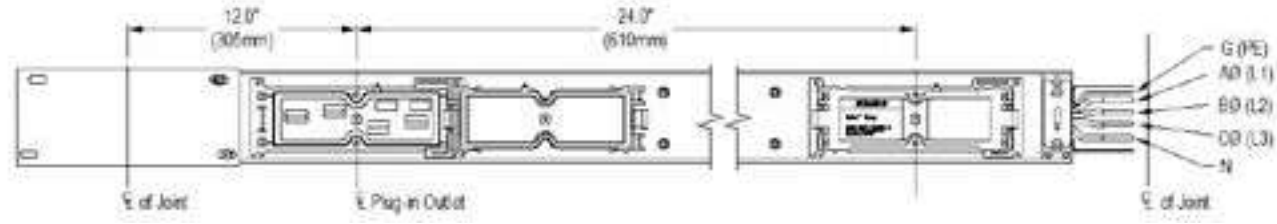

Standard Feeder Section
Suffix F024 - 120 (last 3 digits = length in Inches, 024=24 in., 120=120 in.)

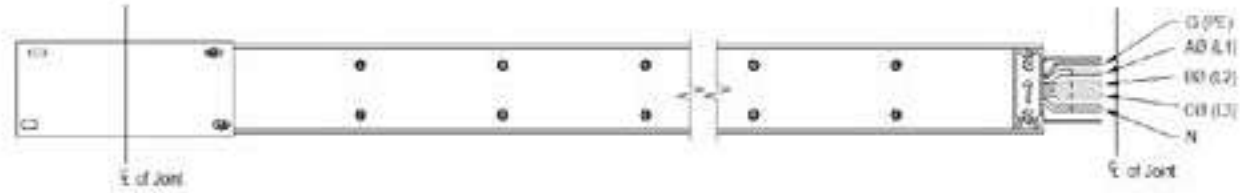

Sentron Busway, Widths and Weights

Ampere	Rating	Dimension Inches (mm)	Approximate Weight - lbs per ft. (kg per meter)					
			3Ø, 3-Wire	3Ø, 3-Wire with Internal Ground	3Ø, 4-Wire	3Ø, 4-Wire with Internal Ground	3Ø, 4-Wire 200% Neutral	3Ø, 4-Wire 200% Neutral with Internal Ground
AL	**L-Rated**							
225	—	"W1" 3.9 (99)	5 (8)	5 (8)	6 (9)	6 (9)	7 (10)	7 (10)
400	—	"W1" 3.9 (99)	5 (8)	5 (8)	6 (9)	6 (9)	7 (10)	7 (10)
600	—	"W1" 3.9 (99)	5 (8)	5 (8)	6 (9)	6 (9)	7 (10)	7 (10)
800	400	"W1" 4.6 (117)	6 (9)	6 (9)	7 (10)	7 (10)	7 (11)	8 (11)
1000	600	"W1" 5.4 (137)	7 (10)	7 (11)	8 (12)	8 (12)	9 (13)	9 (14)
1200	800	"W1" 6.6 (168)	8 (12)	9 (13)	9 (14)	10 (15)	11 (16)	11 (17)
1350	1000	"W1" 7.6 (193)	9 (13)	10 (15)	11 (16)	11 (17)	12 (18)	13 (19)
1600	1200	"W1" 8.7 (221)	10 (15)	11 (17)	12 (18)	13 (19)	14 (21)	15 (22)
2000	1250,1600	"W1" 10.9 (277)	13 (19)	14 (21)	15 (23)	16 (24)	18 (26)	19 (28)
2500	2000	"W2" 13.7 (348)	15 (22)	17 (25)	18 (27)	20 (30)	22 (33)	23 (34)
3000	2500	"W2" 15.8 (402)	17 (25)	19 (28)	21 (31)	23 (34)	25 (37)	27 (40)
3200	2000	"W2" 17.3 (439)	18 (27)	20 (30)	23 (34)	25 (37)	27 (40)	29 (43)
4000	3000,3200	"W2" 20.3 (516)	22 (33)	25 (37)	27 (40)	30 (44)	32 (48)	35 (52)
CU	**M-Rated**							
225	—	"W1" 3.9 (99)	9 (13)	10 (14)	10 (16)	11 (17)	12 (18)	13 (19)
400	—	"W1" 3.9 (99)	9 (13)	10 (14)	10 (16)	11 (17)	12 (18)	13 (19)
600	—	"W1" 3.9 (99)	9 (13)	10 (14)	10 (16)	11 (17)	12 (18)	13 (19)
800	400	"W1" 3.9 (99)	9 (13)	10 (14)	10 (16)	11 (17)	12 (18)	13 (19)
1000	—	"W1" 4.4 (112)	10 (15)	11 (17)	12 (19)	14 (20)	15 (22)	16 (23)
1200	600	"W1" 5.1 (130)	12 (18)	14 (20)	15 (23)	16 (24)	18 (26)	19 (29)
1350	800	"W1" 5.7 (145)	14 (21)	16 (24)	17 (26)	19 (29)	21 (31)	23 (34)
1600	1000	"W1" 6.7 (170)	17 (26)	19 (29)	22 (32)	24 (35)	26 (38)	28 (42)
2000	1200,1350	"W1" 8.2 (208)	22 (32)	25 (37)	28 (41)	30 (45)	33 (50)	36 (54)
—	1600	"W1" 8.7 (277)	13 (19)	14 (21)	15 (23)	16 (24)	18 (26)	19 (28)
2500	2000	"W1" 10.7 (272)	30 (44)	34 (50)	38 (56)	42 (62)	46 (68)	50 (74)
3000	—	"W2" 11.8 (300)	33 (49)	37 (55)	42 (63)	47 (70)	51 (76)	56 (83)
3200	—	"W2" 13.3 (335)	37 (55)	2 (63)	48 (72)	53 (79)	58 (86)	64 (95)
4000	2500,3000,3200	"W2" 15.3 (389)	43 (64)	50 (75)	56 (83)	62 (92)	68 (101)	75 (112)
5000	4000	"W2" 19.3 (491)	56 (83)	64 (95)	72 (107)	80 (119)	89 (132)	97 (145)

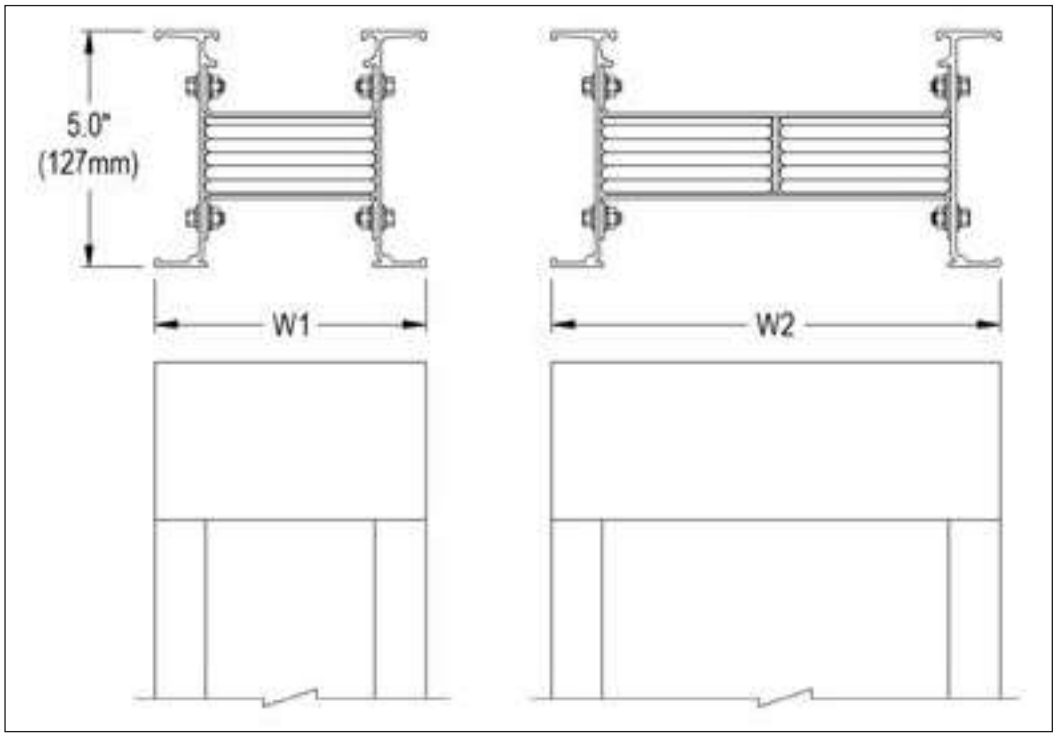

Sentron® Straight Section Busway

Copper (225-5000 Ampere) and Aluminum (225-4000 Ampere)

Selection

Copper (225 - 5000Ampere)

Base Catalog Number Guide									
Ampere	3-Pole	3-Pole Internal Ground	3-Pole Isolated Ground	4- Pole	4-Pole 200% Neutral	4-Pole Internal Ground	4-Pole 200% Neutral Internal Ground	4-Pole Isolated Ground	4-Pole 200% Neutral Isolated Ground
225	SX302C1	SX302C2	SX302C3	SX402C1	SX502C1	SX402C2	SX502C2	SX402C3	SX502C3
400	SX304C1	SX304C2	SX304C3	SX404C1	SX504C1	SX404C2	SX504C2	SX404C3	SX504C3
600	SX306C1	SX306C2	SX306C3	SX406C1	SX506C1	SX406C2	SX506C2	SX406C3	SX506C3
800	SX308C1	SX308C2	SX308C3	SX408C1	SX508C1	SX408C2	SX508C2	SX408C3	SX508C3
1000	SX310C1	SX310C2	SX310C3	SX410C1	SX510C1	SX410C2	SX510C2	SX410C3	SX510C3
1200	SX312C1	SX312C2	SX312C3	SX412C1	SX512C1	SX412C2	SX512C2	SX412C3	SX512C3
1350	SX313C1	SX313C2	SX313C3	SX413C1	SX513C1	SX413C2	SX513C2	SX413C3	SX513C3
1600	SX316C1	SX316C2	SX316C3	SX416C1	SX516C1	SX416C2	SX516C2	SX416C3	SX516C3
2000	SX320C1	SX320C2	SX320C3	SX420C1	SX520C1	SX420C2	SX520C2	SX420C3	SX520C3
2500	SX325C1	SX325C2	SX325C3	SX425C1	SX525C1	SX425C2	SX525C2	SX425C3	SX525C3
3000	SX330C1	SX330C2	SX330C3	SX430C1	SX530C1	SX430C2	SX530C2	SX430C3	SX530C3
3200	SX332C1	SX332C2	SX332C3	SX432C1	SX532C1	SX432C2	SX532C2	SX432C3	SX532C3
4000	SX340C1	SX340C2	SX340C3	SX440C1	SX540C1	SX440C2	SX540C2	SX440C3	SX540C3

Aluminum (225 - 4000Ampere)

Base Catalog Number Guide									
Ampere	3-Pole	3-Pole Internal Ground	3-Pole Isolated Ground	4- Pole	4-Pole 200% Neutral	4-Pole Internal Ground	4-Pole 200% Neutral Internal Ground	4-Pole Isolated Ground	4-Pole 200% Neutral Isolated Ground
225	SX302A1	SX302A2	SX302A3	SX402A1	SX502A1	SX402A2	SX502A2	SX402A3	SX502A3
400	SX304A1	SX304A2	SX304A3	SX404A1	SX504A1	SX404A2	SX504A2	SX404A3	SX504A3
600	SX306A1	SX306A2	SX306A3	SX406A1	SX506A1	SX406A2	SX506A2	SX406A3	SX506A3
800	SX308A1	SX308A2	SX308A3	SX408A1	SX508A1	SX408A2	SX508A2	SX408A3	SX508A3
1000	SX310A1	SX310A2	SX310A3	SX410A1	SX510A1	SX410A2	SX510A2	SX410A3	SX510A3
1200	SX312A1	SX312A2	SX312A3	SX412A1	SX512A1	SX412A2	SX512A2	SX412A3	SX512A3
1350	SX313A1	SX313A2	SX313A3	SX413A1	SX513A1	SX413A2	SX513A2	SX413A3	SX513A3
1600	SX316A1	SX316A2	SX316A3	SX416A1	SX516A1	SX416A2	SX516A2	SX416A3	SX516A3
2000	SX320A1	SX320A2	SX320A3	SX420A1	SX520A1	SX420A2	SX520A2	SX420A3	SX520A3
2500	SX325A1	SX325A2	SX325A3	SX425A1	SX525A1	SX425A2	SX525A2	SX425A3	SX525A3
3000	SX330A1	SX330A2	SX330A3	SX430A1	SX530A1	SX430A2	SX530A2	SX430A3	SX530A3
3200	SX332A1	SX332A2	SX332A3	SX432A1	SX532A1	SX432A2	SX532A2	SX432A3	SX532A3
4000	SX340A1	SX340A2	SX340A3	SX440A1	SX540A1	SX440A2	SX540A2	SX440A3	SX540A3

Suffix Numbers

	Base Catalog Number Suffix			
Busway Type	IP40	IP55	IP66	Nema 3R
Feeder	0F	4F	6F	9F
Plug-in	0P	4P	—	—
One-sided Plug-in	0R	4R	—	—

Elbows

Sentron Busway elbows provide a simple and convenient method of changing the direction (left, right, up or down) of a busway run. Two elbow styles are offered: elbow stack and elbow section.

Flatwise Elbow Stacks, Dimensions (standard/min.)		
Ampere Rating		Dimensions Inches (mm) "A"
AL	**L-Rated**	
225	—	1.00 (25)
400	—	1.00 (25)
600	—	1.00 (25)
800	400	1.12 (28
1000	600	2.00 (51)
1200	800	2.50 (64)
1350	1000	3.00 (76)
1600	1200	3.50 (89)
2000	1350,1600	4.62 (117)
2500	2000	5.75 (146)
3000	2500	7.00 (178)
3200	2000	7.75 (197)
4000	3000,3200	9.35 (237)
CU	**M-Rated**	
225	—	1.00 (25)
400	—	1.00 (25)
600	—	1.00 (25)
800	400	1.00 (25)
1000	—	1.12 (28)
1200	600	1.25 (33)
1350	800	2.00 (50)
1600	1000	2.50 (64)
2000	1200,1350	3.25 (83)
—	1600	4.62 (117)
2500	2000	4.50 (114)
3000	—	5.00 (127)
3200	—	5.75 (146)
4000	2500,3000,3200	6.75 (171)
5000	4000	8.87 (225)

Note: Flatwise elbow stacks can be ordered as either right-hand (ESFR) or left-hand (ESFL) to follow the same nomenclature as an elbow section. The construction is identical and interchangeable.

Flatwise Elbow Stacks

Flatwise elbow stacks are used for left and right directional changes. When the busway system is mounted flatwise in the horizontal plane (bus bars run parallel to the floor).

Flat

Suffix ESFR/ESFL

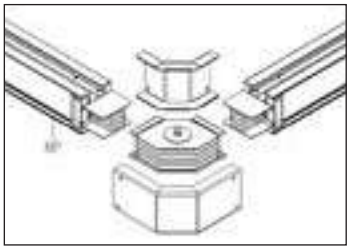

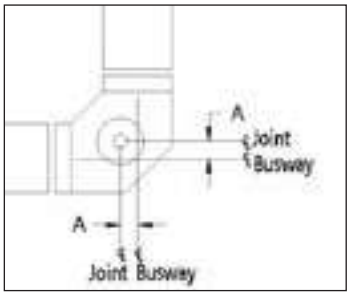

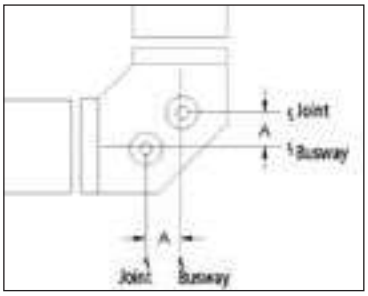

Edgewise Elbow Stacks, Dimensions (standard/min.)		
Ampere Rating		Dimensions Inches (mm) "A"
AL	**L-Rated**	
225	—	4.25 (108)
400	—	4.25 (108)
600	—	4.25 (108)
800	400	4.25 (108)
1000	600	4.25 (108)
1200	800	4.25 (108)
1350	1000	4.25 (108)
1600	1200	4.25 (108)
2000	1350,1600	4.25 (108)
2500	2000	4.25 (108)
3000	2500	4.25 (108)
3200	2000	4.25 (108)
CU	**M-Rated**	
225	—	4.25 (108)
400	—	4.25 (108)
600	—	4.25 (108)
800	400	4.25 (108)
1000	—	4.25 (108)
1200	600	4.25 (108)
1350	800	4.25 (108)
1600	1000	4.25 (108)
2000	1200,1350	4.25 (108)
—	1600	4.25 (108)
2500	2000	4.25 (108)
3000	—	4.25 (108)
3200	—	4.25 (108)
4000	2500,3000,3200	4.25 (108)
5000	4000	4.25 (108)

Note: Edge up and edge down elbow stacks are not interchangeable.

Edgewise Elbow Stacks

Edgewise elbow stacks create up and down directional changes. The "A" phase is on the inside of the bend for edge up elbow stacks. The "A" phase is on the outside of the bend for edge down elbow stacks.

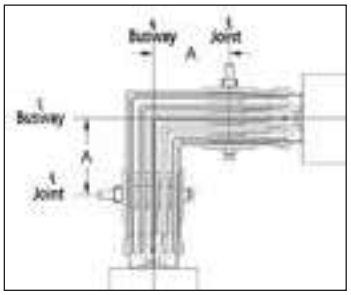

Edge Down

Suffix ESED

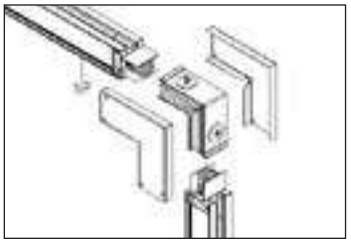

Edge Up

Suffix ESEU

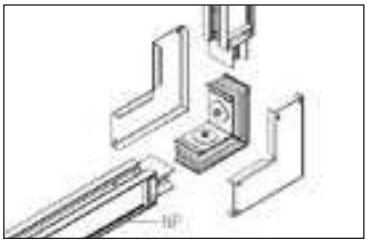

Flatwise Elbow Sections, Dimensions (standard/min.)			
Ampere Rating		Dimensions Inches (mm) "A"	"B"
AL	**L-Rated**		
225	—	12 (305)	12 (305)
400	—	12 (305)	12 (305)
600	—	12 (305)	12 (305)
800	400	12 (305)	12 (305)
1000	600	12(305)	12 (305)
1200	800	12 (305)	12 (305)
1350	1000	12 (305)	12 (305)
1600	1200	18 (457)	18 (457)
2000	1350,1600	18 (457)	18 (457)
2500	2000	18 (457)	18 (457)
3000	2500	18 (457)	18 (457)
3200	2000	18 (457)	18 (457)
4000	3000,3200	24 (610)	24 (610)
CU	**M-Rated**		
225	—	12 (305)	12 (305)
400	—	12 (305)	12 (305)
600	—	12 (305)	12 (305)
800	400	12 (305)	12 (305)
1000	—	12 (305)	12 (305)
1200	600	12 (305)	12 (305)
1350	800	12 (305)	12 (305)
1600	1000	12 (305)	12 (305)
2000	1200,1350	12 (305)	12 (305)
—	1600	18 (457)	18 (457)
2500	2000	18 (457)	18 (457)
3000	—	18 (457)	18 (457)
3200	—	18 (457)	18 (457)
4000	2500,3000,3200	18 (457)	18 (457)
5000	4000	24 (610)	24 (610)

Flatwise Elbow Sections

Flatwise elbow sections are used for left and right directional changes when the busway system is mounted in the horizontal plane (bus bars run parallel to the floor). The joint stack assembly may be moved to the opposite leg to change the orientation from left to right/right to left.

Flat Left

Suffix ELEF

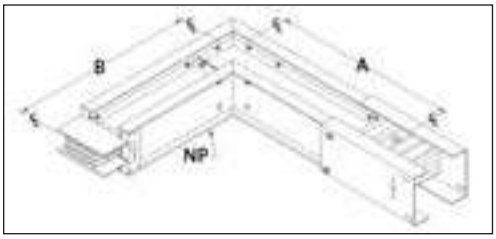

Flat Right

Suffix ELFR

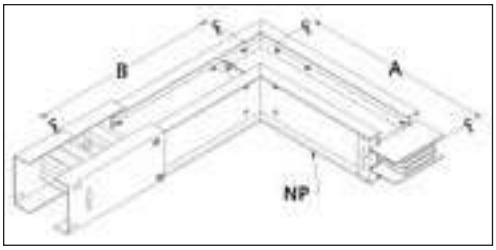

Edgewise Elbow Sections, Dimensions (standard/min.)			
Ampere Rating		Dimensions Inches (mm) "A"	"B"
AL	**L-Rated**		
225	—	10 (254)	10 (254)
400	—	10 (254)	10 (254)
600	—	10 (254)	10 (254)
800	400	10 (254)	10 (254)
1000	600	10 (254)	10 (254)
1200	800	10 (254)	10 (254)
1350	1000	10 (254)	10 (254)
1600	1200	10 (254)	10 (254)
2000	1350,1600	10 (254)	10 (254)
2500	2000	10 (254)	10 (254)
3000	2500	10 (254)	10 (254)
3200	2000	10 (254)	10 (254)
4000	3000,3200	10 (254)	10 (254)
CU	**M-Rated**		
225	—	10 (254)	10 (254)
400	—	10 (254)	10 (254)
600	—	10 (254)	10 (254)
800	400	10 (254)	10 (254)
1000	—	10 (254)	10 (254)
1200	600	10 (254)	10 (254)
1350	800	10 (254)	10 (254)
1600	1000	10 (254)	10 (254)
2000	1200,1350	10 (254)	10 (254)
—	1600	10 (254)	10 (254)
2500	2000	10 (254)	10 (254)
3000	—	10 (254)	10 (254)
3200	—	10 (254)	10 (254)
4000	2500,3000,3200	10 (254)	10 (254)
5000	4000	10 (254)	10 (254)

Note : Odd angle elbow flatwise and edgewise elbow sections are available for angles 95° - 175° in 5° increments.

Edgewise Elbow Sections

Edgewise elbow sections create up and down directional changes. The "A"phase bus bar lies on the inside of the bend for edge up elbows. The "A" phase bus bar lies on the outside of the bend for edge down elbows. The joint stack assembly on edgewise elbows can not be moved in order to change orientation from up to down/down to up. Sentron Busway elbow sections are shipped with a joint stack assembly on one end for direct connection to the busway system.

Edge Up

Suffix ELEU

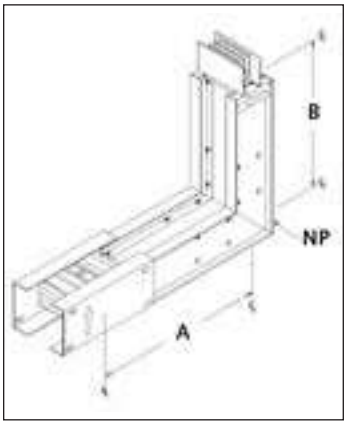

Edge Down

Suffix ELED

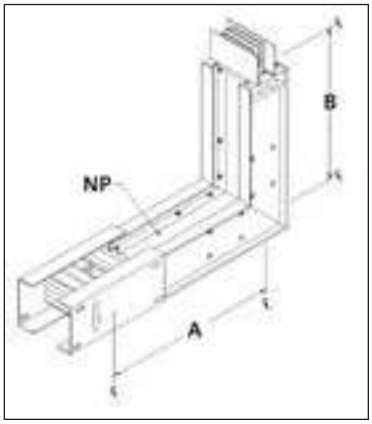

Offsets

Offsets can be utilized to solve difficult contour problems and save space. In applications where space does not allow for two connected elbows, a single offset can bypass an obstruction. All offsets are supplied with one joint stack assembly.

Flatwise Offsets, Dimensions (standard/min.)				
Ampere Rating		Dimensions Inches (mm) *"A"	"B"	"C"
AL	**L-Rated**			
225	—	12 (305)	5 (127)	12 (305)
400	—	12 (305)	5 (127)	12 (305)
600	—	12 (305)	5 (127)	12 (305)
800	400	12 (305)	5 (127)	12 (305)
1000	600	12 (305)	5 (127)	12 (305)
1200	800	12 (305)	5 (127)	12 (305)
1350	1000	12 (305)	5 (127)	12 (305)
1600	1200	18 (457)	5 (127)	18 (457)
2000	1350,1600	18 (457)	5 (127)	18 (457)
2500	2000	18 (457)	5 (127)	18 (457)
3000	2500	18 (457)	5 (127)	18 (457)
3200	2000	18 (457)	5 (127)	18 (457)
4000	3000,3200	24 (610)	8 (203)	24 (610)
CU	**M-Rated**			
225	—	12 (305)	5 (127)	12 (305)
400	—	12 (305)	5 (127)	12 (305)
600	—	12 (305)	5 (127)	12 (305)
800	400	12 (305)	5 (127)	12 (305)
1000	—	12 (305)	5 (127)	12 (305)
1200	600	12 (305)	5 (127)	12 (305)
1350	800	12 (305)	5 (127)	12 (305)
1600	1000	12 (305)	5 (127)	12 (305)
2000	1200,1350	12 (305)	5 (127)	12 (305)
—	1600			
2500	2000	18 (457)	5 (127)	18 (457)
3000	—	18 (457)	5 (127)	18 (457)
3200	—	18 (457)	5 (127)	18 (457)
4000	2500,3000,3200	18 (457)	5 (127)	18 (457)
5000	4000	24 (610)	8 (203)	24 (610)

Edgewise Offsets, Dimensions (standard/min.)				
Ampere Rating		Dimensions Inches (mm) *"A"	"B"	"C"
AL	**L-Rated**			
225	—	10 (254)	6 (152)	10 (254)
400	—	10 (254)	6 (152)	10 (254)
600	—	10 (254)	6 (152)	10 (254)
800	400	10 (254)	6 (152)	10 (254)
1000	600	10 (254)	6 (152)	10 (254)
1200	800	10 (254)	6 (152)	10 (254)
1350	1000	10 (254)	6 (152)	10 (254)
1600	1200	10 (254)	6 (152)	10 (254)
2000	1350,1600	10 (254)	6 (152)	10 (254)
2500	2000	10 (254)	6 (152)	10 (254)
3000	2500	10 (254)	6 (152)	10 (254)
3200	2000	10 (254)	6 (152)	10 (254)
4000	3000,3200	10 (254)	6 (152)	10 (254)
CU	**M-Rated**			
225	—	10 (254)	6 (152)	10 (254)
400	—	10 (254)	6 (152)	10 (254)
600	—	10 (254)	6 (152)	10 (254)
800	400	10 (254)	6 (152)	10 (254)
1000	—	10 (254)	6 (152)	10 (254)
1200	600	10 (254)	6 (152)	10 (254)
1350	800	10 (254)	6 (152)	10 (254)
1600	1000	10 (254)	6 (152)	10 (254)
2000	1200,1350	10 (254)	6 (152)	10 (254)
—	1600	10 (254)	6 (152)	10 (254)
2500	2000	10 (254)	6 (152)	10 (254)
3000	—	10 (254)	6 (152)	10 (254)
3200	—	10 (254)	6 (152)	10 (254)
4000	2500,3000,3200	10 (254)	6 (152)	10 (254)
5000	4000	10 (254)	6 (152)	10 (254)

***Note:** Leg Dimensions A and C have been reversed from prior publications.

Flat Right

Suffix OFFR

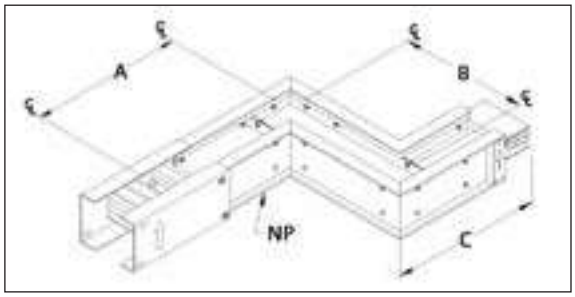

Flat Left

Suffix OFFL

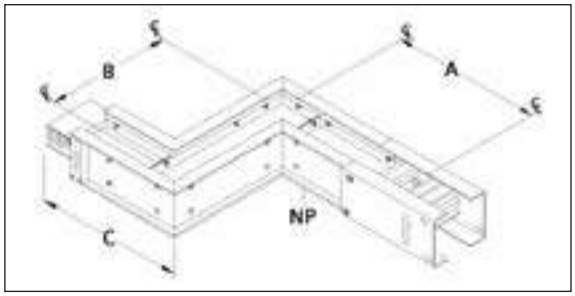

Edge Up

Suffix OFEU

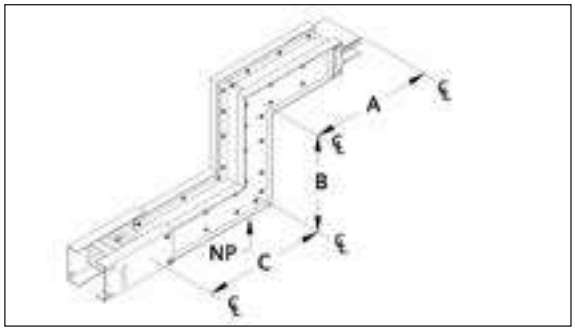

Edge Down

Suffix OFED

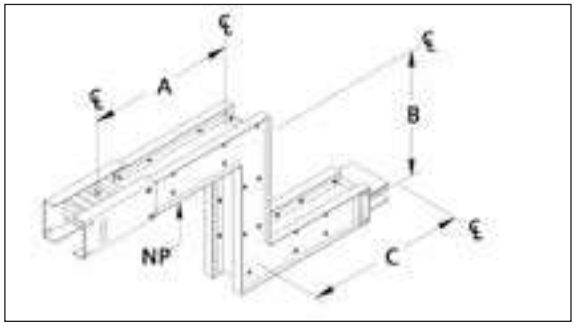

Sentron® Busway Systems – Reference Information

Combinations

Combinations are used to create edge to flat and flat to edge changes in the busway run. One joint stack assembly is shipped with combination.

See drawings for minimum dimensions. Consult Busway Order Service for information on custom lengths.

Combinations, Dimensions (standard/min.)				
Ampere Rating		Dimensions Inches (mm) *"A"	"B"	"C"
AL	**L-Rated**			
225	—	10 (254)	8 (203)	12 (305)
400	—	10 (254)	8 (203)	12 (305)
600	—	10 (254)	8 (203)	12 (305)
800	400	10 (254)	8 (203)	12 (305)
1000	600	10 (254)	8 (203)	12 (305)
1200	800	10 (254)	8 (203)	12 (305)
1350	1000	10 (254)	8 (203)	12 (305)
1600	1200	10 (254)	12 (305)	18 (457)
2000	1350,1600	10 (254)	12 (305)	18 (457)
2500	2000	10 (254)	12 (305)	18 (457)
3000	2500	10 (254)	12 (305)	18 (457)
3200	2000	10 (254)	12 (305)	18 (457)
4000	3000,3200	10 (254)	16 (406)	24 (610)
CU	**M-Rated**			
225	—	10 (254)	8 (203)	12 (305)
400	—	10 (254)	8 (203)	12 (305)
600	—	10 (254)	8 (203)	12 (305)
800	400	10 (254)	8 (203)	12 (305)
1000	—	10 (254)	8 (203)	12 (305)
1200	600	10 (254)	8 (203)	12 (305)
1350	800	10 (254)	8 (203)	12 (305)
1600	1000	10 (254)	8 (203)	12 (305)
2000	1200,1350	10 (254)	8 (203)	12 (305)
—	1600	10 (254)	12 (305)	18 (457)
2500	2000	10 (254)	12 (305)	18 (457)
3000	—	10 (254)	12 (305)	18 (457)
3200	—	10 (254)	12 (305)	18 (457)
4000	2500,3000,3200	10 (254)	12 (305)	18 (457)
5000	4000	10 (254)	16 (406)	24 (610)

***Note:** Leg Dimensions A and C have been reversed from prior publications.

Flat Right - Edge Up

Suffix CORU

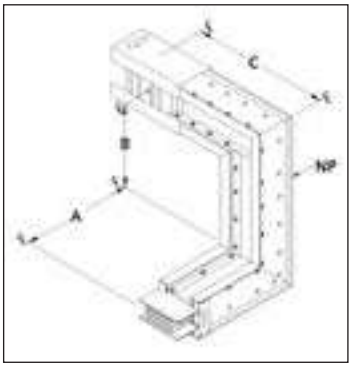

Flat Left - Edge Up

Suffix COLU

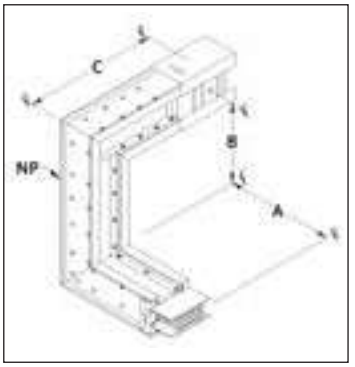

Edge Up - Flat Left

Suffix COUL

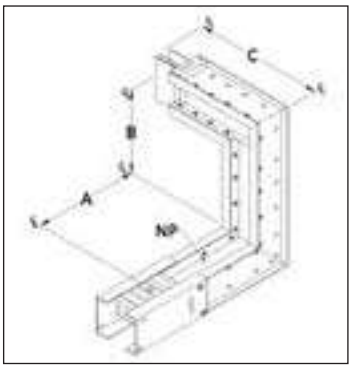

Edge Up - Flat Right

Suffix COUR

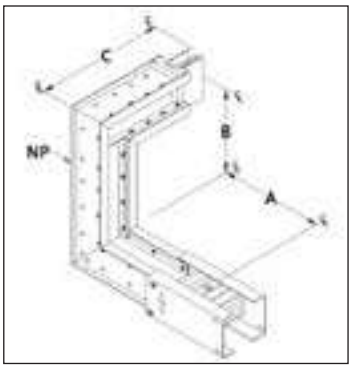

Flat Right - Edge Down

Suffix CORD

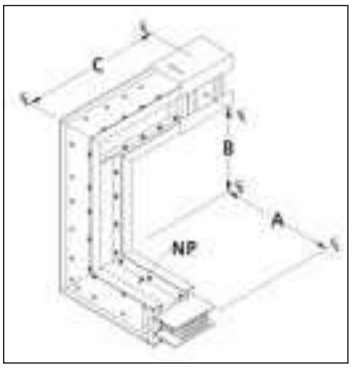

Flat Left - Edge Down

Suffix COLD

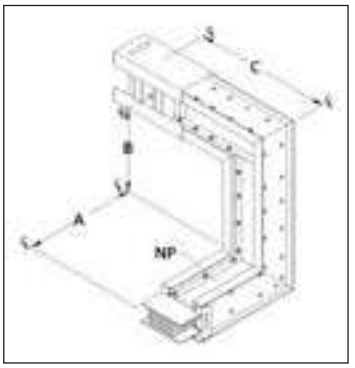

Edge Down - Flat Left

Suffix CODL

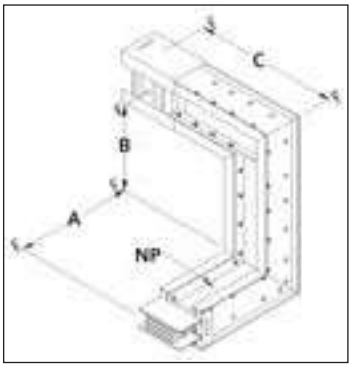

Edge Down - Flat Right

Suffix CODR

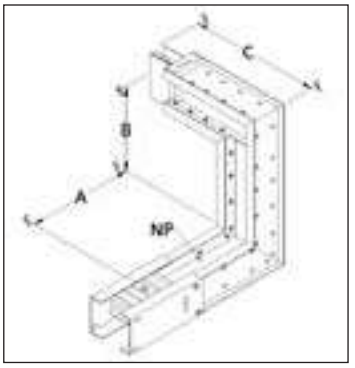

Tees

Tees are used to simplify directional and plane orientation changes in a busway system. Tees can make 90° bends left or right, and up and down along the busway run. All tees are supplied with two joint stack assemblies.

Flatwise Tees, Dimensions (standard/min.)		
Ampere Rating		Dimensions Inches (mm) "A", "B", "C"
AL	**L-Rated**	
225	—	12 (305)
400	—	12 (305)
600	—	12 (305)
800	400	12 (305)
1000	600	12 (305)
1200	800	12 (305)
1350	1000	12 (305)
1600	1200	18 (457)
2000	1350,1600	18 (457)
2500	2000	18 (457)
3000	2500	18 (457)
3200	2000	18 (457)
4000	3000,3200	24 (610)
CU	**M-Rated**	
225	—	12 (305)
400	—	12 (305)
600	—	12 (305)
800	400	12 (305)
1000	—	12 (305)
1200	600	12 (305)
1350	800	12 (305)
1600	1000	12 (305)
2000	1200,1350	12 (305)
—	1600	18 (457)
2500	2000	18 (457)
3000	—	18 (457)
3200	—	18 (457)
4000	2500,3000,3200	18 (457)
5000	4000	24 (610)

Flatwise Tees

Flatwise tees are used to create left and right branches.

Flat Right

Suffix TEFR

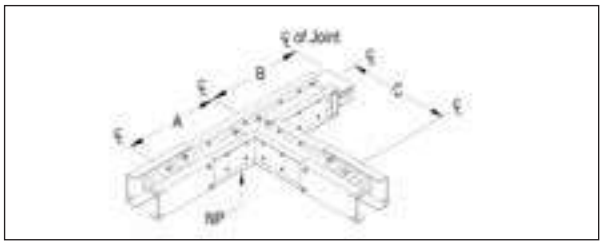

Flat Left

Suffix TEFL

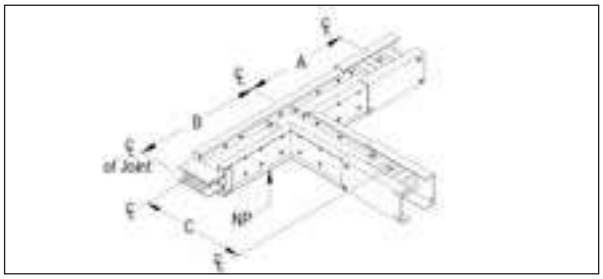

Edgewise Tees, Dimensions (standard/min.)		
Ampere Rating		Dimensions Inches (mm) "D"
AL	**L-Rated**	
225	—	13 (330)
400	—	13 (330)
600	—	13 (330)
800	400	13 (330)
1000	600	13 (330)
1200	800	18 (457)
1350	1000	18 (457)
1600	1200	18 (457)
2000	1350,1600	18 (457)
2500	2000	27 (686)
3000	2500	27 (686)
3200	2000	27 (686)
4000	3000,3200	29 (737)
CU	**M-Rated**	
225	—	13 (330)
400	—	13 (330)
600	—	13 (330)
800	400	13 (330)
1000	—	13 (330)
1200	600	13 (330)
1350	800	13 (330)
1600	1000	18 (457)
2000	1200,1350	18 (457)
—	1600	18 (457)
2500	2000	18 (457)
3000	—	27 (686)
3200	—	27 (686)
4000	2500,3000,3200	27 (686)
5000	4000	29 (737)

① 12.0" (305mm) For Isolated Ground.

Edgewise Tees

Edgewise tees are used to create branches that stem up or down from the busway run.

Edge Up

Suffix TEEU

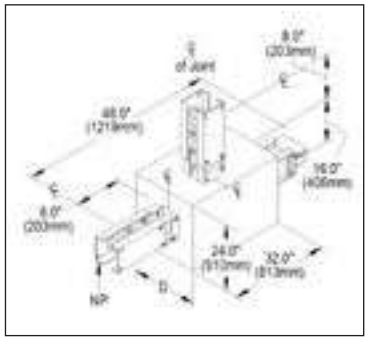

Edge Down

Suffix TEED

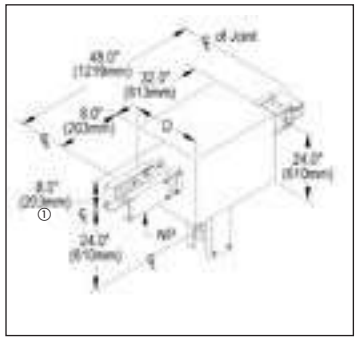

Sentron® Busway Systems – Reference Information

End Tap Boxes

Selection

End tap boxes are non-fusible devices used to connect cable and conduit to the end of a busway run or where busway runs connect without the need for over-current protection. End tap boxes may be installed at the end or beginning of a run. Vertical end tap boxes and horizontal end tap boxes can be installed in both horizontal and vertical applications. Extended end tap boxes are available if the application requires additional wire bending space. One joint stack assembly is shipped with each end tap box.

Standard and Extended Horizontal End Tap Boxes, Dimensions

Ampere Rating		Dimensions Inches (mm) "A"	"B" Std.	"B" Ext.	Wire Bend Space "C" Std.	"C" Ext.	Cable Lugs Per Phase & Neutral Qty.	Size	Ground Lugs①
AL	**L-Rated**								
225	—	13 (330)	30 (762)	34 (863)	17 (432)	21 (533)	1	①	1
400	—	13 (330)	30 (762)	34 (863)	17 (432)	21 (533)	1	②	1
600	—	13 (330)	30 (762)	34 (863)	17 (432)	21 (533)	2	②	1
800	400	13 (330)	30 (762)	34 (863)	17 (432)	21 (533)	3	②	1
1000	600	13 (330)	30 (762)	34 (863)	17 (432)	21 (533)	4	②	1
1200	800	18 (457)	32 (813)	37 (940)	20 (508)	24 (610)	4	②	1
1350	1000	18 (457)	33 (838)	37 (940)	20 (508)	24 (610)	4	②	1
1600	1200	18 (457)	33 (838)	37 (940)	20 (508)	24 (610)	6	②	2
2000	1350,1600	18 (457)	33 (838)	37 (940)	20 (508)	24 (610)	6	②	2
2500	2000	27 (686)	33 (838)	37 (940)	20 (508)	24 (610)	8	②	2
3000	2500	27 (686)	33 (838)	37 (940)	20 (508)	24 (610)	9	②	2
3200	2000	27 (686)	33 (838)	37 (940)	20 (508)	24 (610)	9	②	2
4000	3000,3200	29 (737)	33 (838)	37 (940)	20 (508)	24 (610)	12	②	3
CU	**M-Rated**								
225	—	13 (330)	30 (762)	34 (863)	17 (432)	21 (533)	1	①	1
400	—	13 (330)	30 (762)	34 (863)	17 (432)	21 (533)	1	②	1
600	—	13 (330)	30 (762)	34 (863)	17 (432)	21 (533)	2	②	1
800	400	13 (330)	30 (762)	34 (863)	17 (432)	21 (533)	3	②	1
1000	—	13 (330)	30 (762)	34 (863)	17 (432)	21 (533)	4	②	1
1200	600	13 (330)	33 (838)	37 (940)	20 (508)	24 (610)	4	②	1
1350	800	13 (330)	33 (838)	37 (940)	20 (508)	24 (610)	4	②	1
1600	1000	18 (457)	33 (838)	37 (940)	20 (508)	24 (610)	5	②	1
2000	1200,1350	18 (457)	33 (838)	37 (940)	20 (508)	24 (610)	6	②	2
—	1600	18 (457)	33 (838)	37 (940)	20 (508)	24 (610)	5	②	1
2500	2000	18 (457)	33 (838)	37 (940)	20 (508)	24 (610)	8	②	2
3000	—	27 (686)	33 (838)	37 (940)	20 (508)	24 (610)	9	②	2
3200	—	27 (686)	33 (838)	37 (940)	20 (508)	24 (610)	9	②	2
4000	2500,3000,3200	27 (686)	33 (838)	37 (940)	20 (508)	24 (610)	12	②	3
5000	4000	29 (737)	33 (838)	37 (940)	20 (508)	24 (610)	15	②	4

Horizontal End Tap Box

Suffix ETHS (Standard)
Suffix ETHX (Extended)

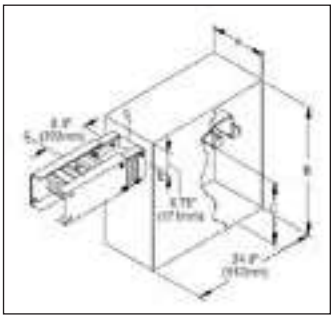

Standard and Extended Vertical End Tap Boxes, Dimensions

Ampere Rating		Dimensions Inches (mm) "A"	"B" Std.	"B" Ext.	Wire Bend Space "C" Std.	"C" Ext.	Cable Lugs Per Phase & Neutral Qty.	Size	Ground Lugs①
AL	**L-Rated**								
225	—	13 (330)	25 (635)	29 (737)	17 (432)	21 (533)	1	①	1
400	—	13 (330)	25 (635)	29 (737)	17 (432)	21 (533)	1	②	1
600	—	13 (330)	25 (635)	29 (737)	17 (432)	21 (533)	2	②	1
800	400	13 (330)	25 (635)	29 (737)	17 (432)	21 (533)	3	②	1
1000	600	13 (330)	25 (635)	29 (737)	17 (432)	21 (533)	4	②	1
1200	800	18 (457)	32 (813)	32 (813)	20 (508)	24 (610)	4	②	1
1350	1000	18 (457)	28 (711)	32 (813)	20 (508)	24 (610)	4	②	1
1600	1200	18 (457)	28 (711)	32 (813)	20 (508)	24 (610)	6	②	2
2000	1350,1600	18 (457)	28 (711)	32 (813)	20 (508)	24 (610)	6	②	2
2500	2000	27 (686)	28 (711)	32 (813)	20 (508)	24 (610)	8	②	2
3000	2500	27 (686)	28 (711)	32 (813)	20 (508)	24 (610)	9	②	2
3200	2000	29 (737)	28 (711)	32 (813)	20 (508)	24 (610)	9	②	2
4000	3000,3200	29 (737)	28 (711)	32 (813)	20 (508)	24 (610)	12	②	3
CU	**M-Rated**								
225	—	13 (330)	25 (635)	29 (737)	17 (432)	21 (533)	1	①	1
400	—	13 (330)	25 (635)	29 (737)	17 (432)	21 (533)	1	②	1
600	—	13 (330)	25 (635)	29 (737)	17 (432)	21 (533)	2	②	1
800	400	13 (330)	25 (635)	29 (737)	17 (432)	21 (533)	3	②	1
1000	—	13 (330)	25 (635)	29 (737)	17 (432)	21 (533)	4	②	1
1200	600	13 (330)	28 (711)	32 (813)	20 (508)	24 (610)	4	②	1
1350	800	13 (330)	28 (711)	32 (813)	20 (508)	24 (610)	4	②	1
1600	1000	18 (457)	28 (711)	32 (813)	20 (508)	24 (610)	5	②	1
2000	1200,1350	18 (457)	28 (711)	32 (813)	20 (508)	24 (610)	6	②	2
—	1600	18 (457)	28 (711)	32 (813)	20 (508)	24 (610)	5	②	1
2500	2000	18 (457)	28 (711)	32 (813)	20 (508)	24 (610)	8	②	2
3000	—	27 (686)	28 (711)	32 (813)	20 (508)	24 (610)	9	②	2
3200	—	27 (686)	28 (711)	32 (813)	20 (508)	24 (610)	9	②	2
4000	2500,3000,3200	27 (686)	28 (711)	32 (813)	20 (508)	24 (610)	12	②	3
5000	4000	29 (737)	28 (711)	32 (813)	20 (508)	24 (610)	15	②	4

Vertical End Tap Box

Suffix ETVS (Standard)
Suffix ETVX (Extended)

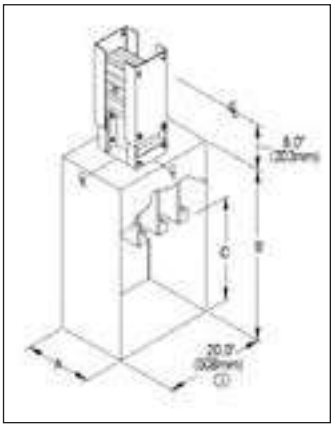

①#6 AWG -350 kcmil, Cu/Al. ②#4 AWG -600 kcmil, Cu/Al. ③24.0" (610mm) for isolated ground.

Center Tap Boxes

Center tap boxes are non-fusible devices utilized to feed to or take off power from the busway run. When loads served by the busway run do not require over-current protection, center tap boxes may be used. If the application requires additional wiring bending space, extended center tap boxes are available. One joint stack assembly is provided with each center tap box.

Standard and Extended Center End Tap Boxes, Dimensions

Ampere Rating		Dimensions Inches (mm)			Wire Bend Space			Cable Lugs Per Phase & Neutral		Ground Lugs①
		"A"Std.	"B"	"D"	"A" Ext..	"C" Std.	"C" Ext.	Qty.	Size	
AL	**L-Rated**									
225	—	25 (635)	16 (406)	3.9 (99)	29 (737)	17 (432)	21 (533)	1	①	1
225	—	25 (635)	16 (406)	3.9 (99)	29 (737)	17 (432)	21 (533)	1	②	1
400	—	25 (635)	16 (406)	3.9 (99)	29 (737)	17 (432)	21 (533)	1	②	1
600	—	25 (635)	16 (406)	3.9 (99)	29 (737)	17 (432)	21 (533)	2	②	1
800	400	25 (635)	16 (406)	4.2 (107)	29 (737)	17 (432)	21 (533)	3	②	1
1000	600	25 (635)	16 (406)	4.6 (117)	29 (737)	17 (432)	21 (533)	4	②	1
1200	800	29 (737)	16 (406)	5.2 (132)	33 (838)	20 (508)	24 (610)	4	②	1
1350	1000	29 (737)	16 (406)	5.7 (145)	33 (838)	20 (508)	24 (610)	4	②	1
1600	1200	33 (838)	20 (508)	6.3 (160)	37 (940)	20 (508)	24 (610)	5	②	1
2000	1350,1600	33 (838)	20 (508)	7.4 (188)	37 (940)	20 (508)	24 (610)	6	②	2
2500	2000	37 (940)	24 (610)	8.7 (221)	41 (1041)	20 (508)	24 (610)	8	②	2
3000	2500	37 (940)	24 (610)	9.7 (246)	41 (1041)	20 (508)	24 (610)	9	②	2
3200	2000	37 (940)	24 (610)	9.7 (246)	41 (1041)	20 (508)	24 (610)	9	②	2
4000	3000,3200	45 (1143)	28 (711)	11.9 (302)	49 (1245)	20 (508)	24 (610)	12	②	3
CU	**M-Rated**									
225	—	25 (635)	16 (406)	3.9 (99)	29 (737)	17 (432)	21 (533)	1	②	1
400	—	25 (635)	16 (406)	3.9 (99)	29 (737)	17 (432)	21 (533)	1	②	1
600	—	25 (635)	16 (406)	3.9 (99)	29 (737)	17 (432)	21 (533)	2	②	1
800	400	25 (635)	16 (406)	4.2 (107)	29 (737)	17 (432)	21 (533)	3	②	1
1000	—	25 (635)	16 (406)	4.2 (107)	29 (737)	18 (457)	22 (559)	4	②	1
1200	600	29 (737)	16 (406)	4.5 (114)	33 (838)	22 (559)	26 (660)	4	②	1
1350	800	29 (737)	16 (406)	4.8 (122)	33 (838)	21 (533)	25 (635)	4	②	1
1600	1000	29 (737)	20 (508)	5.3 (135)	33 (838)	21 (533)	25 (635)	5	②	1
2000	1200,1350	29 (737)	20 (508)	6.1 (155)	33 (838)	20 (508)	24 (610)	6	②	2
—	1600	33 (838)	20 (508)	6.3 (160)	37 (940)	20 (508)	24 (610)	5	②	1
2500	2000	33 (838)	24 (610)	7.3 (185)	37 (940)	23 (584)	17 (432)	8	②	2
3000	—	33 (838)	24 (610)	7.9 (201)	37 (940)	20 (508)	24 (610)	9	②	2
3200	—	33 (838)	24 (610)	7.9 (201)	37 (940)	20 (508)	24 (610)	9	②	2
4000	2500,3000, 3200	37 (940)	28 (711)	9.4 (239)	41 (1041)	20 (508)	24 (610)	12	②	3
5000	4000	40(1016)	34 (863)	11.7(297)	44 (1118)	19 (483)	23 (584)	15	②	4

Center Tap Box

Suffix CTBS (Standard)
Suffix CTBX (Extended)

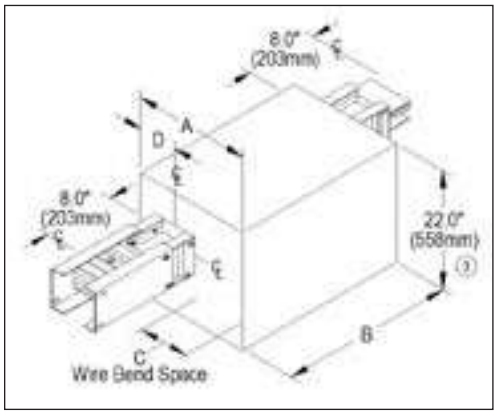

① #6 AWG -350 kcmil, Cu/Al.
② #4 AWG -600 kcmil, Cu/Al.
③ 24.0" (610mm) for isolated ground.

Joint Mounted Tap Boxes

Selection

The joint mounted tap box (JMTB) is used to tap off power via the busway joint. This device does not provide over-current protection and therefore, must be installed in compliance with NEC 240.21(B)①. The small footprint is ideal for space limited applications. The JMTB is compatible with Power Mod, Lighting Panels, Power Panels, and Switchboards 1200A and lower.

Horizontal Orientation JMTB

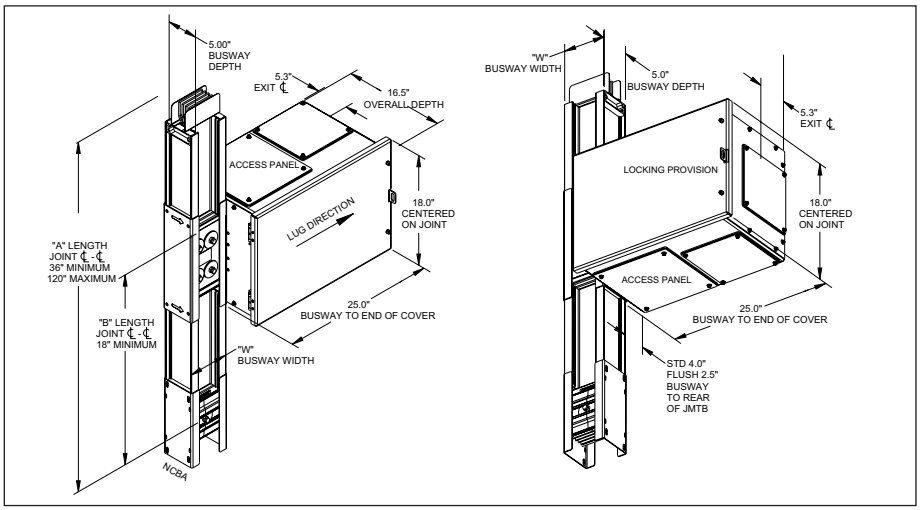

Product Features

- Lug Orientation: Vertical or Horizontal
- Maximum Voltage: 600V
- Maximum UL Short Circuit Rating: 150kA②
- Amperage Range: 100- 1200A
- Lug Type: Compression Only

Vertical Orientation JMTB

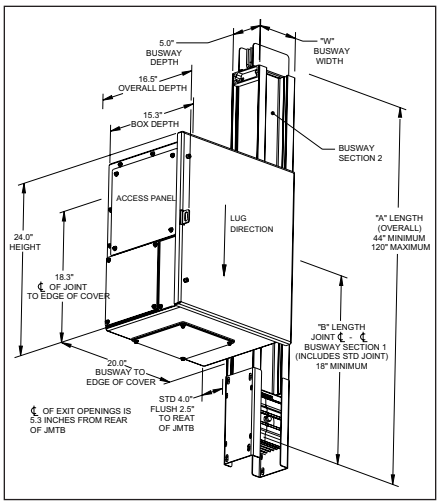

Configuration Types

Given a vertical bus run, the JMTB can be configured such that it is on the Left, Right, or Both sides. The JMTB is shipped from the factory installed on the busway.

When installed on vertical busway, the lug orientation matches the orientation of the tap box. If using the horizontal JMTB the lug orientation will be left/right, if vertical JMTB it will be up/down.

The standard JMTB extends 4" beyond the rear plane of the busway however a flush mount variation is available extending 2.5" from the rear of the busway.

Compression Lugs

Wire size	Straight Lug Catalogue Number	Stacking Lug Catalogue Number
1/0	**AL1/0-NTN**	**ASL1/0-NTN**
2/0	**AL2/0-NTN**	**ASL2/0-NTN**
3/0	**AL3/0-NTN**	**ASL3/0-NTN**
4/0	**AL4/0-NTN**	**ASL4/0-NTN**
250	**AL250-NTN**	**ASL250-NTN**
300	**AL300-NTN**	**ASL300-NTN**
350	**AL350-NTN**	**ASL350-NTN**

Compression Lugs

The JMTB requires compression lugs, which aid in minimizing product size. The JMTB is shipped with UL listed crimp type compression lugs, which are sized to the amperage of the load side device.

Should additional lugs be required, please reference the table below. The JMTB utilizes general purpose aluminum 2 hole NEMA lugs, compatible with Aluminum and Copper wire. Homac AL-N series or equivalent are recommended.③

If housing ground is selected the JMTB will contain a standard 4-hole NEMA pattern on a dedicated ground bar. If internal/isolated ground is selected, two ground bars will be included, each with the standard NEMA 4-hole pattern.

① This device requires compliance with NEC 240.21(B), see 2017 NEC, commonly referred to as the 10ft feeder tap rule. Feeder tap conductors cannot be over 10ft without overcurrent protection. Main circuit protection device is required downsteam. Please reference the NEC before using this device.

② For series ratings reference the short circuit table in the Technical Data section.

③ Replacement lugs to be supplied by others.

TBNK flexible fittings

TBNK flexible fittings are a factory installed series of wireway couplings for use with Sentron Joint Mounted Tap Boxes (JMTB's). TBNK fittings provide a nominal 4.25" long flexible wireway for coupling the JMTB and rigidly mounted downstream equipment. TBNK fittings allow for expansion and contraction of the Busway absorbing up to an inch of movement. Available in 4, 6, and 8-inch sizes, TBNK fittings are suitable for a wide range of equipment amperages and cabling requirements. TBNK fittings if desired should be selected when ordering Sentron JMTB's.

Horizontal JMTB with TBNK

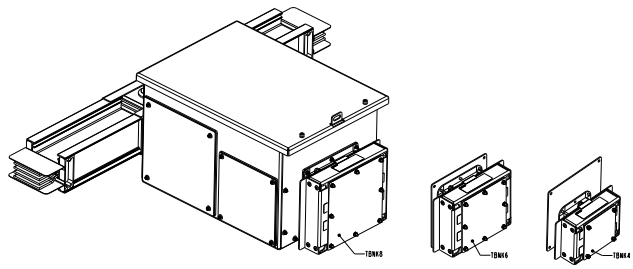

Vertical JMTB with TBNK

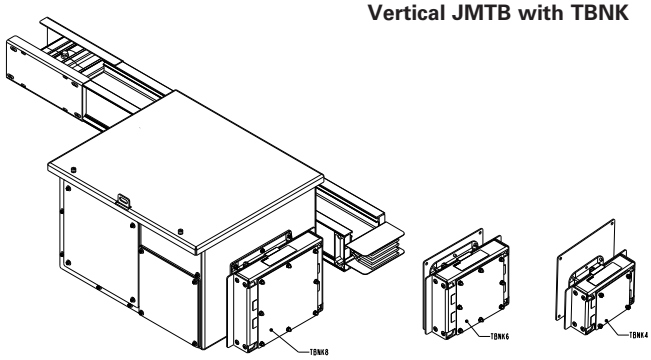

Installation and Grounding

TBNK flexible fittings must be field installed onto downstream equipment. JMTB's ordered with TBNK fittings include Installation Instructions and a template for making the required cut-out in the downstream equipment enclosure. Location of equipment, cut out and cabling must comply with applicable standards including NEC, Local Building Codes and any other authorities having jurisdiction. Consult codes in advance to assure compliance. The JMTB is shipped from the factory with a braided copper ground cable riveted onto the TBNK. During installation, the opposite end of the ground cable must be connected to the enclosure of the downstream equipment. The Installation Instructions provide details of the ground cable installation procedure.

TBNK flexible fittings

Catalogue Number	Cutout Size	Wireway Size	Maximum Cable Size
TBNK4	3.8"x 3.8"	4"x 4" (16 sq. inch)	900MCM
TBNK6	5.8"x 5.8"	6"x 6" (36 sq. inch)	500MCM
TBNK8	7.8"x 7.8"	8"x 8" (64 sq. inch)	4/0

TBNK4, TBNK6 and TBNK8

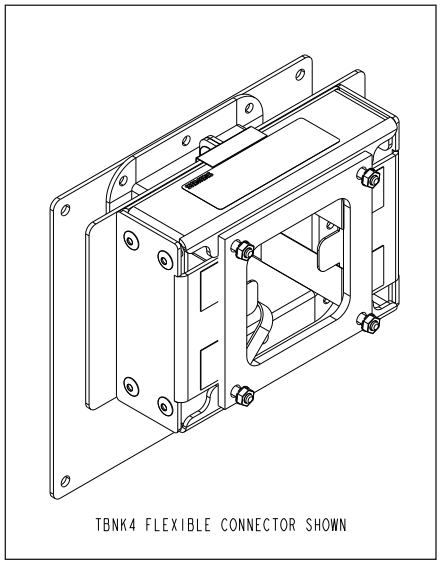

TBNK4 FLEXIBLE CONNECTOR SHOWN

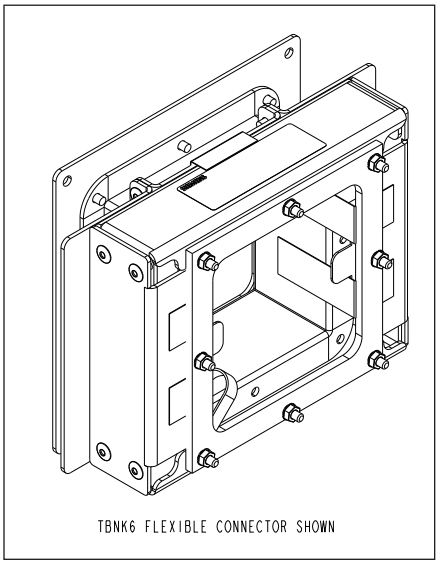

TBNK6 FLEXIBLE CONNECTOR SHOWN

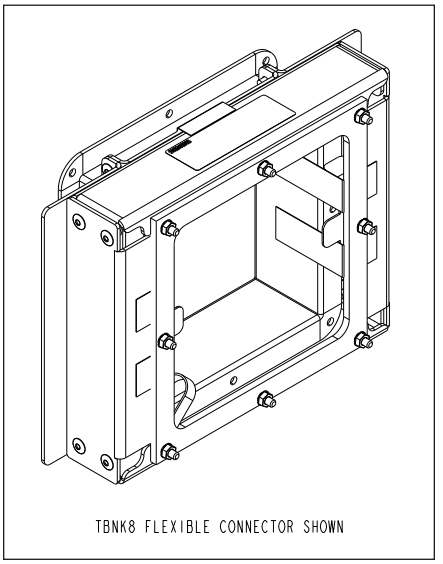

TBNK8 FLEXIBLE CONNECTOR SHOWN

TBNK cut out pattern

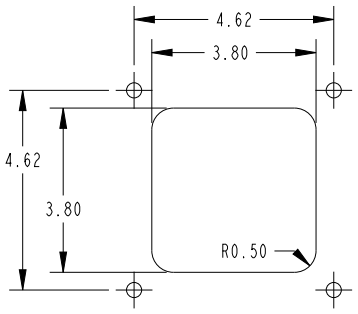

4X HOLE ∅.375
TBNK4 CUT-OUT PATTERN
(SYMMETRICAL ABOUT CENTERLINE)

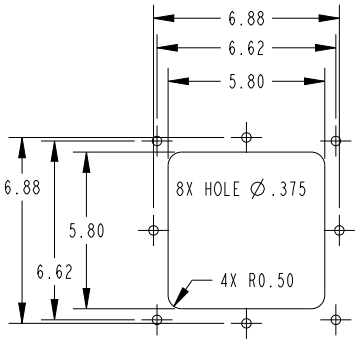

TBNK6 CUT OUT PATTERN
(DIMENSIONS SYMMETRICAL ABOUT CENTERLINE)

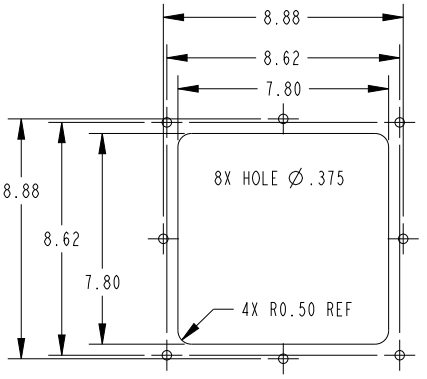

TBNK8 CUT OUT PATTERN
(DIMENSIONS SYMMETRICAL ABOUT CENTERLINE)

Expansion Fittings

Expansion Fittings, Dimensions (standard/min.)		
Ampere Rating		Dimensions Inches (mm) "A"
AL	**L-Rated**	
225	—	13 (330)
400	—	13 (330)
600	—	13 (330)
800	400	13 (330)
1000	600	13 (330)
1200	800	18 (457)
1350	1000	18 (457)
1600	1200	18 (457)
2000	1350,1600	18 (457)
2500	2000	23 (584)
3000	2500	23 (584)
3200	2000	25 (635)
4000	3000,3200	25 (635)
CU	**M-Rated**	
225	—	13 (330)
400	—	13 (330)
600	—	13 (330)
800	400	13 (330)
1000	—	13 (330)
1200	600	13 (330)
1350	800	13 (330)
1600	1000	18 (457)
2000	1200,1350	18 (457)
—	1600	18 (457)
2500	2000	18 (457)
3000	—	23 (584)
3200	—	23 (584)
4000	2500,3000,3200	23 (584)
5000	4000	25 (635)

Expansion Fittings

Expansion fittings accommodate for expansion and contraction of a busway run and building movement. Expansion fittings typically are installed in the center of long busway runs, and at the beginning of riser runs (within the first 20ft of vertical busway when total vertical run length is equal to or greater then 40ft) to minimize stress on the lower most device or where a busway run crosses an expansion joint of a building.

Qty (1) Expansion Section should be used for every 200ft of continuous Busway run length, at every transition to a vertical run, and at each building expansion joint. The Busway run must be positioned accordingly to accommodate the Expansion Section(s).

Expansion Fitting
Suffix XPFT

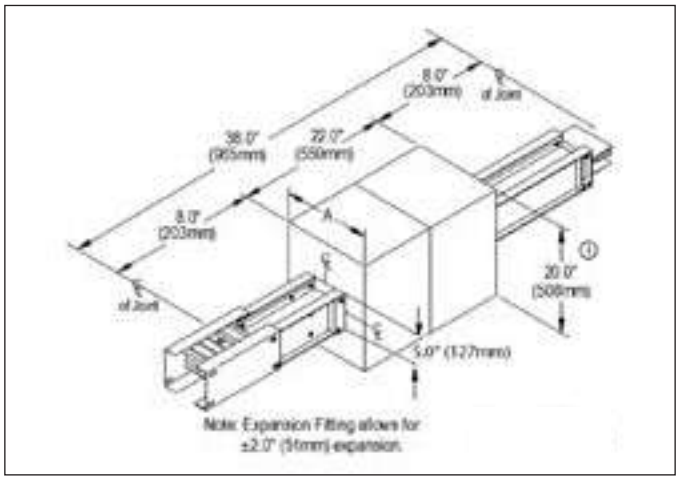

Flush Mount Expansion Fitting

Often useful in riser application, flush mount expansion fittings allow for the busway to be positioned closer to building walls (reference page <?> for minimum required clearances). The flush mount design shifts the centerline of the busway up or down by 5 in. on the 20 in. height axis shown above.

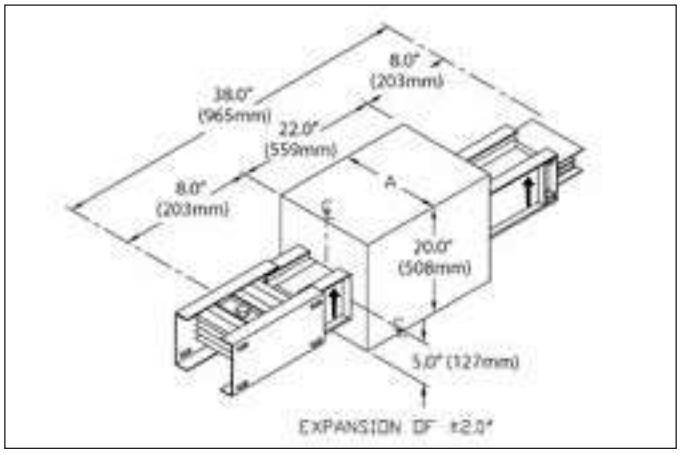

① 24.0" (610mm) for isolated ground.

Fused Reducers, Dimensions (standard/min.)		
Ampere Rating		Dimensions Inches (mm) "A"
AL	**L-Rated**	
225	—	11.4 (289)
400	—	11.4 (289)
600	—	11.4 (289)
800	400	11.4 (289)
1000	600	11.4 (289)
1200	800	12.5 (318)
1350	1000	13.5 (343)
1600	1200	14.6 (372)
2000	1350,1600	16.9 (429)
2500	2000	19.6 (498)
3000	2500	21.3 (541)
3200	2000	22.9 (582)
4000	3000,3200	31.5 (800)
CU	**M-Rated**	
225	—	10.4 (264)
400	—	10.4 (264)
600	—	10.4 (264)
800	400	10.4 (264)
1000	—	10.4 (264)
1200	600	11.0 (280)
1350	800	11.6 (296)
1600	1000	12.6 (321)
2000	1200,1350	14.1 (359)
—	1600	14.6 (372)
2500	2000	16.6 (423)
3000	—	17.9 (455)
3200	—	18.9 (480)
4000	2500,3000,3200	20.9 (531)
5000	4000	31.5 (800)

Fused Reducers

The National Electric Code requires over current protection when busway systems are reduced in ampacity. A fused reducer is used to reduce the allowable ampere rating in those sections of the busway that do not require a higher rating (i.e. at branch circuit junctures).

Fused Reducer

Suffix RFRF

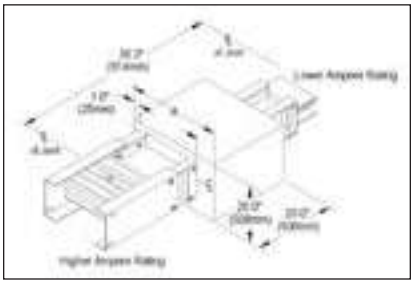

Non-Fused Reducers

Non-fused reducers are used in conjunction with the following exception to the Fused Reducer in the National Electric Code: "For industrial establishments only, omission of over current protection shall be permitted at points where busways are reduced in ampacity, provided that the length of the busway having the smaller ampacity does not exceed 50 ft. and has an ampacity of at least equal to one-third the rating or setting of the over current device next back on the line, and provided that such busway is free from contact with combustible material." Special joint stack connections are provided for non-fused reducer connections. Consult factory for specific design guidelines.

Phase Rotation Fittings, Dimensions (standard/min.)		
Ampere Rating		Dimensions Inches (mm) "A"
AL	**L-Rated**	
225	—	7.9 (200)
400	—	7.9 (200)
600	—	7.9 (200)
800	400	8.5 (216)
1000	600	9.4 (239)
1200	800	10.5 (267)
1350	1000	11.5 (293)
1600	1200	12.6 (321)
2000	1350,1600	14.9 (376)
2500	2000	17.6 (447)
3000	2500	19.8 (503)
3200	2000	21.3 (541)
4000	3000,3200	24.3 (617)
CU	**M-Rated**	
225	—	7.9 (200)
400	—	7.9 (200)
600	—	7.9 (200)
800	400	7.9 (200)
1000	—	8.4 (213)
1200	600	9.0 (229)
1350	800	9.6 (245)
1600	1000	10.6 (270)
2000	1200,1350	12.1 (372)
—	1600	12.6 (321)
2500	2000	14.6 (200)
3000	—	15.8 (402)
3200	—	17.3 (439)
4000	2500,3000,3200	19.3 (490)
5000	4000	23.3 (592)

Phase-Rotation Fittings

Phase-rotation fittings can be used when the application requires a phase rotation in the power supply. Phase rotation fittings can be ordered for "phase and ground", "phase only" and "ground only" rotations.

Phase Rotation Fitting

Suffix TRPG, Phase and Ground
TRPO, Phase Only
TRGO, Ground Only

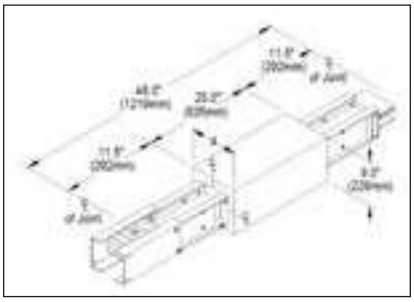

Phase Rotation Examples

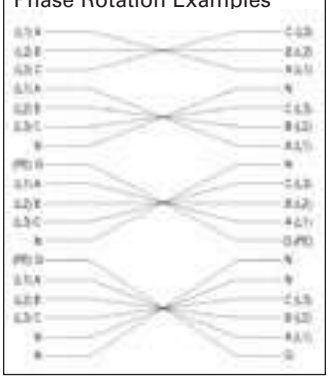

Sentron® Busway Systems – Reference Information

Service Heads

Selection

Service Heads are used to connect busway to a service entrance. In the Sentron Busway line, 3 single-phase service heads and 3-phase service head connections are available. The standard service entrance connection is the 3-phase service head which consists of one service head for all three phases. 3 single-phase service heads consist of three heads – one for each phase and may be used to meet the requirements of certain applications. To ensure ease of installation of incoming cables, both types of Sentron service heads are constructed so that the lugs face the Glastic bottom of the box. The Glastic bottom provides insulation and protection to the incoming cables.

Single-Phase Service Heads, Dimensions (standard/min.)

Ampere Rating		Dimensions Inches (mm) Single-Phase "A"	Cable Lugs per Phase and Neutral Qty.	Size	Ground Lugs①
AL	**L-Rated**				
225		13 (330)	1	①	1
400	225	13 (330)	1	②	1
600	—	13 (330)	2	②	1
800	400	13 (330)	3	②	1
1000	600	13 (330)	4	②	1
1200	800	18 (457)	4	②	1
1350	1000	18 (457)	4	②	1
1600	1200	18 (457)	5	②	1
2000	1350,1600	20 (508)	6	②	2
2500	2000	27 (686)	8	②	2
3000	2500	29 (737)	9	②	2
3200	2000	29 (737)	9	②	2
4000	3000,3200	29 (737)	12	②	3
CU	**M-Rated**				
225		13 (330)	1	①	1
400		13 (330)	1	②	1
600		13 (330)	2	②	1
800	400	13 (330)	3	②	1
1000	—	13 (330)	4	②	1
1200	600	13 (330)	4	②	1
1350	800	13 (330)	4	②	1
1600	1000	18 (457)	5	②	1
2000	1200,1350	20 (508)	6	②	2
—	1600	18 (457)	5	②	1
2500	2000	20 (508)	8	②	2
3000	—	27 (686)	9	②	2
3200	—	27 (686)	9	②	2
4000	2500,3000,3200	27 (686)	12	②	3
5000	4000	29 (737)	15	②	4

Three Single-Phase Service Heads

Suffix V1TX

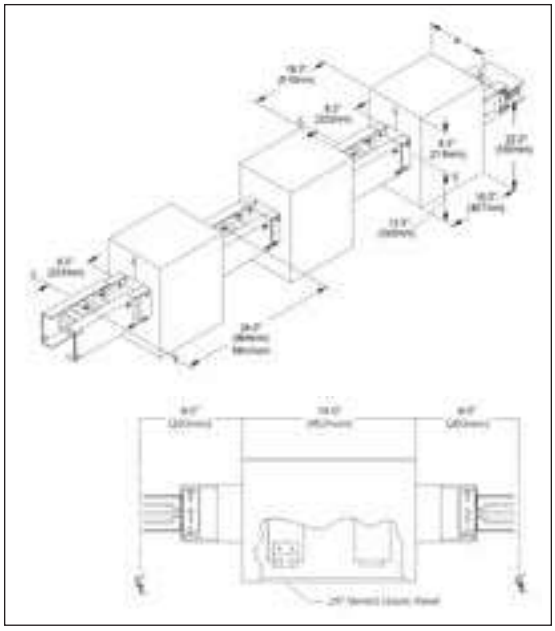

Three-Phase Service Head

Suffix V3TX

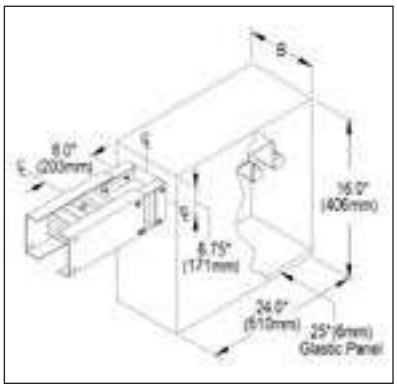

Three-Phase Service Heads, Dimensions (standard/min.)

Ampere Rating		Dimensions Inches (mm) Three-Phase "B"	Cable Lugs per Phase and Neutral Qty.	Size	Ground Lugs①
AL	**L-Rated**				
225		13 (330)	1	①	1
400	225	13 (330)	1	②	1
600	—	13 (330)	2	②	1
800	400	13 (330)	3	②	1
1000	600	13 (330)	4	②	1
1200	800	18 (457)	4	②	1
1350	1000	18 (457)	4	②	1
1600	1200	18 (457)	5	②	1
2000	1350,1600	18 (457)	6	②	2
2500	2000	27 (686)	8	②	2
3000	2500	27 (686)	9	②	2
3200	2000	27 (686)	9	②	2
4000	3000,3200	29 (737)	12	②	3
CU	**M-Rated**				
225		13 (330)	1	①	1
400		13 (330)	1	②	1
600		13 (330)	2	②	1
800	400	13 (330)	3	②	1
1000	—	13 (330)	4	②	1
1200	600	13 (330)	4	②	1
1350	800	13 (330)	4	②	1
1600	1000	18 (457)	5	②	1
2000	1200,1350	18 (457)	6	②	2
—	1600	18 (457)	5	②	1
2500	2000	18 (457)	8	②	2
3000	—	27 (686)	9	②	2
3200	—	27 (686)	9	②	2
4000	2500,3000,3200	27 (686)	12	②	3
5000	4000	29 (737)	15	②	4

①#6 AWG - 350 kcmil, Cu / Al.

②#4 AWG - 600 kcmil, Cu / Al.

Hangers

Selection

Trapeze Hanger—Aluminum (AL) and Copper (CU)

Ampere Rating		"A" Dimensions Inches (mm)	Flat Mounted Catalogue Number①
AL	**L-Rated**		
225	—	10.0 (254)	**SXTH1**
400	—	10.0 (254)	**SXTH1**
600	—	10.0 (254)	**SXTH1**
800	400	10.0 (254)	**SXTH1**
1000	600	10.0 (254)	**SXTH1**
1200	800	10.0 (254)	**SXTH1**
1350	1000	13.5 (343)	**SXTH2**
1600	1200	13.5 (343)	**SXTH2**
2000	1350,1600	13.5 (343)	**SXTH2**
2500	2000	13.5 (343)	**SXTH3**
3000	2500	13.5 (343)	**SXTH3**
3200	2000	13.5 (343)	**SXTH3**
4000	3000,3200	23.0 (584)	**SXTH4**
CU	**M-Rated**		
225	—	10.0 (254)	**SXTH1**
400	—	10.0 (254)	**SXTH1**
600	—	10.0 (254)	**SXTH1**
800	400	10.0 (254)	**SXTH1**
1000	—	10.0 (254)	**SXTH1**
1200	600	10.0 (254)	**SXTH1**
1350	800	10.0 (254)	**SXTH1**
1600	1000	10.0 (254)	**SXTH1**
2000	1200,1350	13.5 (343)	**SXTH2**
—	1600	13.5 (343)	**SXTH2**
2500	2000	13.5 (343)	**SXTH2**
3000	—	18.5 (470)	**SXTH3**
3200	—	18.5 (470)	**SXTH3**
4000	2500,3000,3200	18.5 (470)	**SXTH3**
5000	4000	23.0 (584)	**SXTH4**

① Use SXTH1 for Edge Mounted.

Spring Hanger—Aluminum (AL) and Copper (CU)②

Ampere Rating		Floor to Ceiling Height (ft.) 10	12	14	16	18
AL	**L-Rated**					
225	—	SXSH4	SXSH4	SXSH4	SXSH4	SXSH4
400	—	SXSH4	SXSH4	SXSH4	SXSH4	SXSH4
600	—	SXSH4	SXSH4	SXSH4	SXSH4	SXSH4
800	400	SXSH4	SXSH4	SXSH4	SXSH6	SXSH6
1000	600	SXSH4	SXSH4	SXSH4	SXSH6	SXSH6
1200	800	SXSH4	SXSH4	SXSH4	SXSH6	SXSH6
1350	1000	SXSH4	SXSH4	SXSH6	SXSH6	SXSH6
1600	1200	SXSH8	SXSH8	SXSH8	SXSH8	SXSH8
2000	1350,1600	SXSH8	SXSH8	SXSH8	SXSH8	SXSH8
2500	2000	SXSH8	SXSH8	SXSH8	SXSH10	SXSH10
3000	2500	SXSH8	SXSH8	SXSH10	SXSH10	SXSH10
3200	2000	SXSH8	SXSH8	SXSH10	SXSH10	SXSH10
4000	3000,3200	SXSH8	SXSH10	SXSH10	SXSH10	SXSH12
CU	**M-Rated**					
225	—	SXSH4	SXSH4	SXSH4	SXSH4	SXSH4
400	—	SXSH4	SXSH4	SXSH4	SXSH4	SXSH4
600	—	SXSH4	SXSH4	SXSH4	SXSH4	SXSH4
800	400	SXSH4	SXSH4	SXSH6	SXSH6	SXSH6
1000	—	SXSH4	SXSH6	SXSH6	SXSH6	SXSH8
1200	600	SXSH6	SXSH6	SXSH6	SXSH8	SXSH8
1350	800	SXSH6	SXSH6	SXSH6	SXSH8	SXSH8
1600	1000	SXSH8	SXSH8	SXSH10	SXSH10	SXSH10
2000	1200,1350	SXSH8	SXSH10	SXSH10	SXSH10	SXSH12
2500	2000	SXSH10	SXSH12	SXSH12	SXSH12	SXSH14
3000	—	SXSH10	SXSH12	SXSH12	SXSH14	SXSH14
3200	—	SXSH12	SXSH12	SXSH14	SXSH14	SXSH12 + 1.25" Preload②
4000	2500, 3000, 3200	SXSH12	SXSH14	SXSH14	SXSH16②	SXSH14 + 1.25" Preload②
5000	4000	SXSH14	SXSH12 + 1.25" Preload②	SXSH14 + 1.25" Preload②	SXSH16 + 1.25" Preload②	SXSH16 + 1.5" Preload②

Assuming 3P4W busway with no additional busway-supported weight per floor. This information is confirmed during the quotation process, for additional information please contact your local Siemens Sales representative.

Trapeze Hanger

A complete offering of hangers is available to support Sentron Busway in both vertical and horizontal applications. Standard trapeze hangers support Sentron Busway in horizontal applications on 10 ft. (3.05m) centers. Additional hangers may be used if structural requirements mandate their use. The contractor must supply drop rods to complete assembly for trapeze hangers.

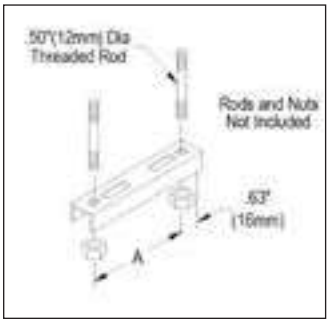

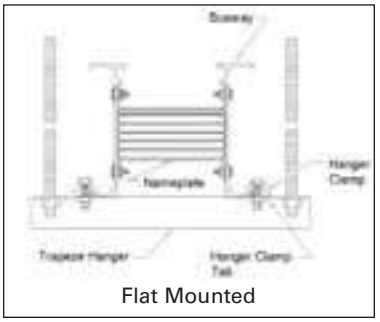

Flat Mounted

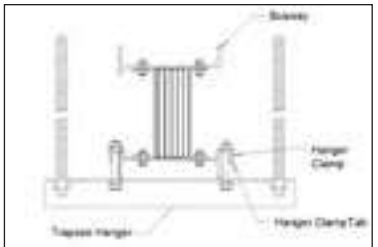

Edge Mounted

Spring Hanger

Spring hangers and floor support hangers must be used to provide secure mounting of the busway run in vertical applications. Spring hangers support the weight of the busway on each floor and also compensate for minimal building movement and thermal expansion. Maximum distance between spring hangers may not exceed 16 ft. (4.88m). When ordering 18 ft. (5.49m) floor to ceiling height assemblies, intermediate support hangers are necessary.

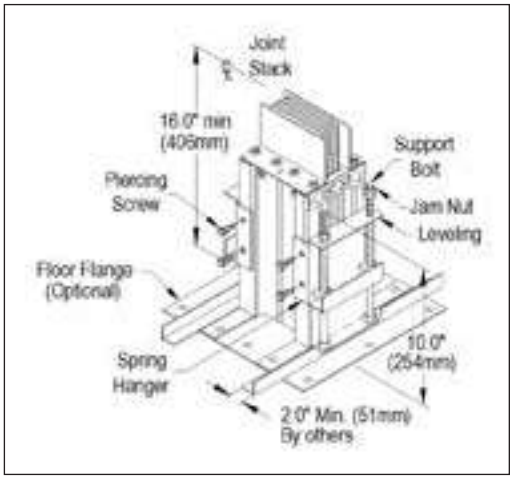

***Note:** Flanges do not offer support to the busway. Flanges provide a means of covering the hole created in the existing structure.

Structural Steel Hanger, Dimensions and Catalog Numbers			
Ampere Rating		"A" Dimensions Inches (mm)	Catalogue Number
AL	**L-Rated**		
225	—	10.0 (254)	**SXSS1**
400	—	10.0 (254)	**SXSS1**
600	—	10.0 (254)	**SXSS1**
800	400	10.0 (254)	**SXSS1**
1000	600	10.0 (254)	**SXSS1**
1200	800	10.0 (254)	**SXSS1**
1350	1000	13.5 (343)	**SXSS2**
1600	1200	13.5 (343)	**SXSS2**
2000	1350,1600	13.5 (343)	**SXSS2**
2500	2000	18.5 (470)	**SXSS3**
3000	2500	18.5 (470)	**SXSS3**
3200	2000	18.5 (470)	**SXSS3**
4000	3000,3200	23.0 (584)	**SXSS4**
CU	**M-Rated**		
225	—	10.0 (254)	**SXSS1**
400	—	10.0 (254)	**SXSS1**
600	—	10.0 (254)	**SXSS1**
800	400	10.0 (254)	**SXSS1**
1000	—	10.0 (254)	**SXSS1**
1200	600	10.0 (254)	**SXSS1**
1350	800	10.0 (254)	**SXSS1**
1600	1000	10.0 (254)	**SXSS1**
2000	1200,1350	13.5 (343)	**SXSS2**
—	1600	13.5 (343)	**SXSS2**
2500	2000	13.5 (343)	**SXSS2**
3000	—	13.5 (343)	**SXSS2**
3200	—	13.5 (343)	**SXSS2**
4000	2500,3000,3200	13.5 (343)	**SXSS2**
5000	4000	23.0 (584)	**SXSS4**

Structural Steel Hanger

A complete offering of hangers is available to support Sentron Busway in both vertical and horizontal applications. Structural Steel hangers support Sentron Busway in horizontal applications on 10 ft. (3.05m) centers. Additional hangers may be used if structural requirements mandate their use.

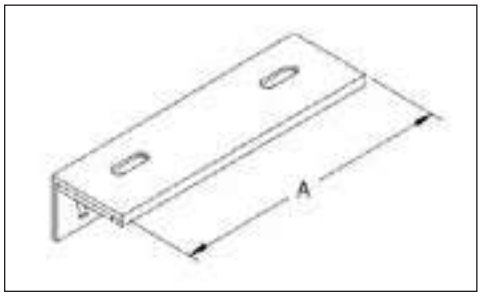

Single Drop Rod Hanger, Catalog Numbers		
Ampere Rating		Catalog Number
AL	**L-Rated**	
225	—	**SXDRA1**
400	—	**SXDRA1**
600	—	**SXDRA1**
800	400	**SXDRA2**
1000	600	**SXDRA3**
1200	800	**SXDRA4**
1350	1000	**SXDRA5**
1600	1200	**SXDRA6**
2000	1350,1600	**SXDRA7**
2500	2000	—
3000	2500	—
3200	2000	—
4000	3000,3200	—
CU	**M-Rated**	
225	—	**SXDRC1**
400	—	**SXDRC1**
600	—	**SXDRC1**
800	400	**SXDRC1**
1000	—	**SXDRC2**
1200	600	**SXDRC3**
1350	800	**SXDRC4**
1600	1000	**SXDRC5**
2000	1200,1350	**SXDRC6**
—	1600	**SXDRC6**
2500	2000	**SXDRC7**
3000	—	—
3200	—	—
4000	2500,3000,3200	—
5000	4000	—

Single Drop Rod Hanger

A complete offering of hangers is available to support Sentron Busway in both vertical and horizontal applications. Single drop rod hangers support Sentron Busway in horizontal applications on 10 ft. (3.05m) centers. Additional hangers may be used if structural requirements mandate their use. The contractor must supply drop rods to complete assembly for single drop rod hangers.

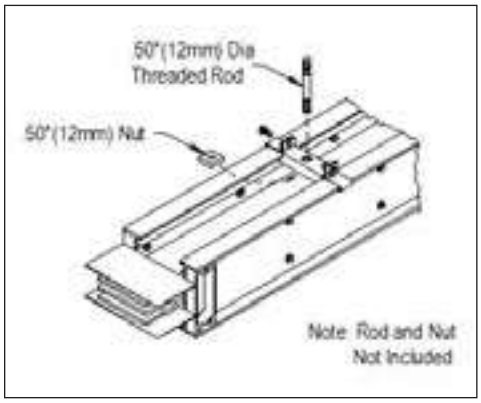

Note: Drop rod hangers can only be used when phase arrows are pointing up.

Wall Mounted Hanger, Dimensions and Catalog Numbers					
Ampere Rating		Dimensions Inches (mm) "A"	"B"	"C"	Catalogue Number
AL	**L-Rated**				
225	—	12.3 (311)	6.1 (156)	4.2 (107)	**SXWH1**
400	—	12.3 (311)	6.1 (156)	4.2 (107)	**SXWH1**
600	—	12.3 (311)	6.1 (156)	4.2 (107)	**SXWH1**
800	400	12.3 (311)	6.1 (156)	3.8 (97)	**SXWH1**
1000	600	12.3 (311)	6.1 (156)	3.8 (97)	**SXWH1**
1200	800	12.3 (311)	6.1 (156)	2.8 (72)	**SXWH1**
1350	1000	16.3 (413)	8.1 (206)	4.4 (111)	**SXWH2**
1600	1200	16.3 (413)	8.1 (206)	3.9 (98)	**SXWH2**
2000	1350,1600	16.3 (413)	8.1 (206)	2.8 (70)	**SXWH2**
2500	2000	20.8 (527)	10.4 (264)	3.6 (92)	**SXWH3**
3000	2500	20.8 (527)	10.4 (264)	2.5 (64)	**SXWH3**
3200	2000	20.8 (527)	10.4 (264)	1.8 (46)	**SXWH3**
4000	3000,3200	25.3 (641)	12.6 (321)	2.5 (64)	**SXWH4**
CU	**M-Rated**				
225	—	12.3 (311)	6.1 (156)	4.2 (107)	**SXWH1**
400	—	12.3 (311)	6.1 (156)	4.2 (107)	**SXWH1**
600	—	12.3 (311)	6.1 (156)	4.2 (107)	**SXWH1**
800	400	12.3 (311)	6.1 (156)	3.8 (97)	**SXWH1**
1000	—	12.3 (311)	6.1 (156)	3.8 (97)	**SXWH1**
1200	600	12.3 (311)	6.1 (156)	2.8 (72)	**SXWH1**
1350	800	12.3 (311)	6.1 (156)	2.8 (72)	**SXWH1**
1600	1000	12.3 (311)	6.1 (156)	2.8 (72)	**SXWH1**
2000	1200,1350	16.3 (413)	8.1 (206)	4.4 (111)	**SXWH2**
—	1600	16.3 (413)	8.1 (206)	3.9 (98)	**SXWH2**
2500	2000	16.3 (413)	8.1 (206)	2.8 (70)	**SXWH2**
3000	—	20.8 (527)	10.4 (264)	3.6 (92)	**SXWH3**
3200	—	20.8 (527)	10.4 (264)	2.5 (64)	**SXWH3**
4000	2500,3000,3200	20.8 (527)	10.4 (264)	1.8 (46)	**SXWH3**
5000	4000	25.3 (641)	12.6 (321)	2.5 (64)	**SXWH4**

Wall Mounted Hanger

Wall Mounted Hangers are used for horizontal applications close to a wall. The busway can be mounted either edgewise or flatwise to the wall.

Wall Mounted Hanger ensures the minimum clearance between the wall and the busway run.

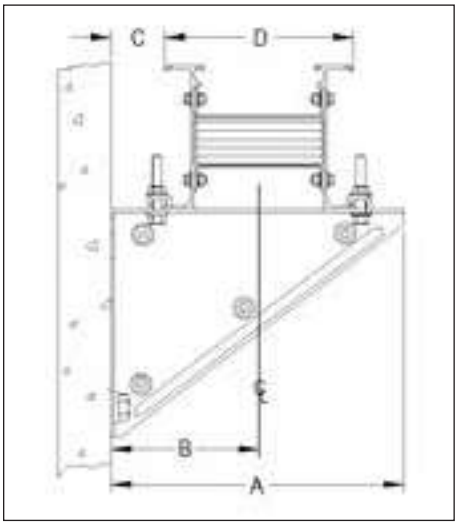

End Closers

End closers safely terminate a busway run and protect the bus bar ends. End closers may be removed easily in order to extend a busway run. End closers are shipped with Glastic insulation pieces, however, joint stacks and inspection covers are not included.

End Closers

(Joint stack and covers not included)
Suffix ECLS

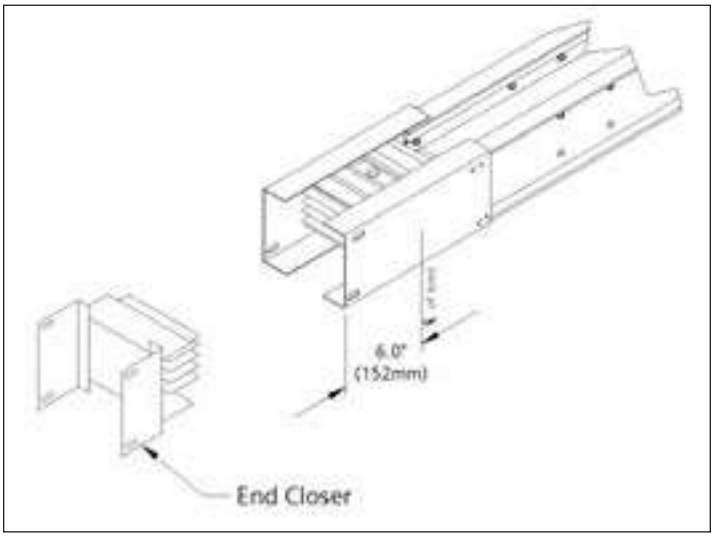

Roof, wall, ceiling and floor flanges are available for Sentron Busway. When the busway run passes thorough a roof, wall or ceiling, a flange should be used. Flanges do not offer support to the busway. Flanges provide a means of covering the hole created in the existing structure. Additional sealant may be required to meet fire codes and all other local requirements. No caulking or gasketing is provided with Sentron flanges.

Roof Flanges, Dimensions

Ampere Rating		Dimensions Inches (mm) "A"	"B"
AL	**L-Rated**		
225	—	12 (305)	18 (457)
400	—	12 (305)	18 (457)
600	—	12 (305)	18 (457)
800	400	12 (305)	18 (457)
1000	600	12 (305)	18 (457)
1200	800	12 (305)	18 (457)
1350	1000	16 (406)	22 (559)
1600	1200	16 (406)	22 (559)
2000	1350,1600	16 (406)	22 (559)
2500	2000	20.5 (521)	22 (559)
3000	2500	20.5 (521)	26.5 (673)
3200	2000	20.5 (521)	26.5 (673)
4000	3000,3200	25 (635)	31 (787)
CU	**M-Rated**		
225	—	12 (305)	18 (457)
400	—	12 (305)	18 (457)
600	—	12 (305)	18 (457)
800	400	12 (305)	18 (457)
1000	—	12 (305)	18 (457))
1200	600	12 (305)	18 (457)
1350	800	12 (305)	18 (457)
1600	1000	12 (305)	18 (457)
2000	1200,1350	16 (406)	22 (559)
—	1600	16 (406)	22 (559)
2500	2000	16 (406)	22 (559)
3000	—	20.5 (521)	26.5 (673)
3200	—	20.5 (521)	26.5 (673)
4000	2500,3000,3200	20.5 (521)	26.5 (673)
5000	4000	25 (635)	31 (787)

Roof Flanges

Roof flanges are available for Sentron Busway. When the busway run passes through a roof, a flange should be used. Flanges do not offer support to the busway. Flanges provide a means of covering the hole created in the existing structure. Additional sealant may be required to meet fire codes and all other local requirements. No caulking or gasketing is provided with Sentron flanges. Roof flanges provide a watertight seal for use with NEMA 3R and IP66 rated busway. Roof pitch must be indicated on drawings when ordering roof flanges.

Roof Flanges
Suffix GRFL

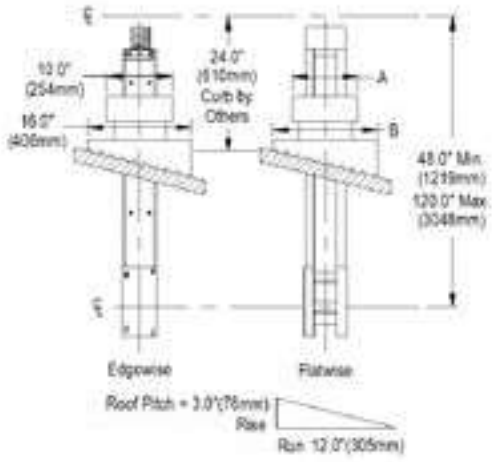

Wall, Ceiling and Floor Flanges, Dimensions

Ampere Rating		Dimensions Inches (mm) "A"	"B"
AL	**L-Rated**		
225	—	11 (279)	7 (178)
400	—	11 (279)	7 (178)
600	—	11 (279)	7 (178)
800	400	11 (279)	7 (178)
1000	600	12 (305)	8 (203)
1200	800	13 (330)	9 (229)
1350	1000	14 (356)	10 (254)
1600	1200	15 (381)	11 (279)
2000	1350,1600	17 (432)	13 (330)
2500	2000	20 (508)	16 (406)
3000	2500	22 (559)	18 (457)
3200	2000	24 (610)	20 (508)
4000	3000,3200	26 (660)	22 (559)
CU	**M-Rated**		
225	—	10 (254)	6 (152)
400	—	10 (254)	6 (152)
600	—	10 (254)	6 (152)
800	400	10 (254)	6 (152)
1000	—	11 (279)	7 (178)
1200	600	12 (305)	8 (203)
1350	800	12 (305)	8 (203)
1600	1000	13 (330)	9 (229)
2000	1200,1350	15 (381)	11 (279)
—	1600	15 (381)	11 (279)
2500	2000	17 (432)	13 (330)
3000	—	18 (457)	14 (356)
3200	—	19 (483)	15 (381)
4000	2500,3000,3200	21 (533)	17 (432)
5000	4000	26 (660)	22 (559)

Wall, Ceiling and Floor Flanges

Wall/Floor flanges are available for Sentron Busway. When the busway run passes through a wall, ceiling or floor, a flange should be used. Flanges do not offer support to the busway. Flanges provide a means of covering the hole created in the existing structure. Additional sealant may be required to meet fire codes and all other local requirements. No caulking or gasketing is provided with Sentron flanges.

Wall, Ceiling and Floor Flanges
Suffix GWFL

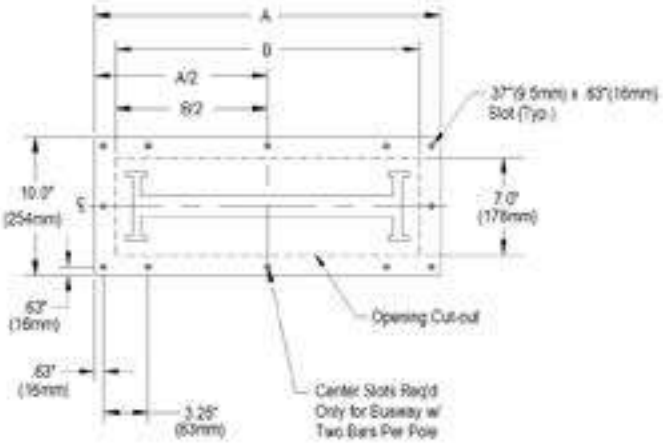

The following table identifies the feeder footage that is included in busway fittings.

Ampere Rating	Elbow Stack	Elbow	Tee	Cross	Tap Box End	Tap Box Center	Flanged End Swbd. Conn.	XFMR Throat	Expansion Section	Reducer Fusible	Reducer Unfused
225–1350 Al 225–1600 Cu	1'	2'	3'	4'	1'	4'	1'	4'	4'	4'	4'
1600–3200 Al 2000–4000 Cu	2'	3'	5'	6'	1'	4'	1'	4'	4'	4'	4'
4000 Al 5000 Cu	3'	4'	6'	8'	1'	4'	1'	4'	4'	4'	4'

"M" Rating / Standard Rating Conversion Table

1000/A Square Inch "M" Rating	Standard Rating Equivalent
	Sentron
225	600
400	800
600	1200
800	1350
1000	1600
1200	2000
1350	2000
1600	—
2000	2500
2500	4000
3000	4000
3200	4000
4000	5000

"L" Rating / Standard Rating Conversion Table

750/A Square Inch "L" Rating	Standard Rating Equivalent
	Sentron
225	600
400	800
600	1000
800	1200
1000	1350
1200	1600
1350	2000
1600	2000
2000	2500
2500	3000
3000	4000
3200	4000

Sway Brace Bracket
Catalogue Number SXSB

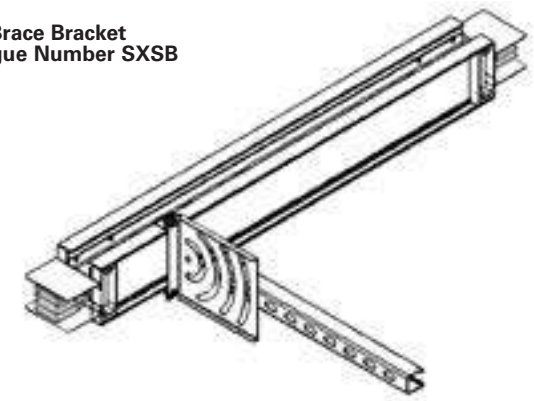

Busway Assembly Tool
Catalogue Number SXBAT

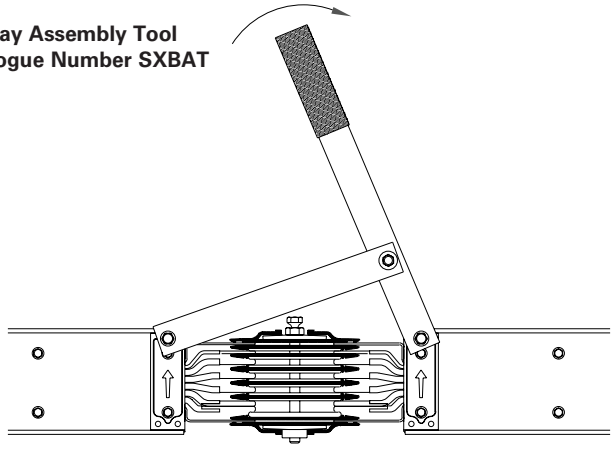

Lifting Kit
Catalogue Number SXLK

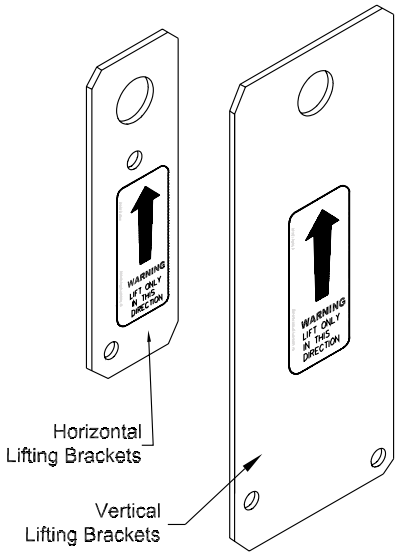

Flanged Ends

Selection

Flanged ends provide a direct connection to low-voltage switchgear, switchboards, motor control centers, large power panels, and other electrical distribution equipment.

Flanged ends are shipped with one joint stack assembly. The switchgear manufacturer supplies lugs and mounting hardware. See illustration for flanged end drilling patterns.

Flanged End, Dimensions

Ampere Rating		Dimensions Inches (mm) "W"	Fig. No.
AL	**L-Rated**		
225	—	1.75 (44.4)	1
400	—	1.75 (44.4)	1
600	—	1.75 (44.4)	1
800	400	2.38 (60.5)	1
1000	600	3.25 (82.6)	1
1200	800	4.38 (111.3)	1
1350	1000	5.38 (136.7)	1
1600	1200	6.50 (165.1)	1
2000	1350,1600	8.75 (222.3)	1
2500	2000	5.63 (143.0)	2
3000	2500	6.75 (171.5)	2
3200	2000	6.75 (171.5)	2
4000	3000,3200	9.00 (228.6)	2
CU	**M-Rated**		
225	—	1.75 (44.4)	1
400	—	1.75 (44.4)	1
600	—	1.75 (44.4)	1
800	400	1.75 (44.4)	1
1000	—	2.25 (57.2)	1
1200	600	2.88 (73.2)	1
1350	800	3.50 (88.9)	1
1600	1000	4.50 (114.3)	1
2000	1200,1350	6.00 (152.4)	1
—	1600	6.50 (165.1)	1
2500	2000	8.50 (215.9)	1
3000	—	4.75 (120.7)	2
3200	—	5.50 (139.7)	2
4000	2500,3000,3200	6.50 (165.1)	2
5000	4000	8.50 (215.9)	2

Flanged End

Suffix FRND

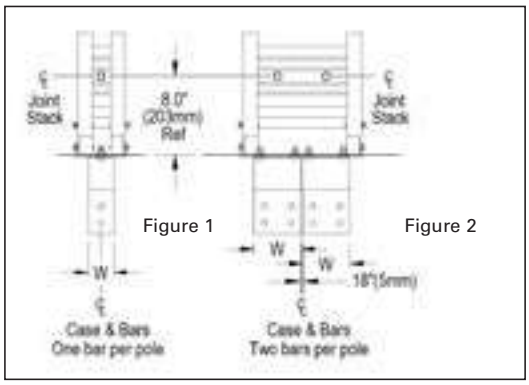

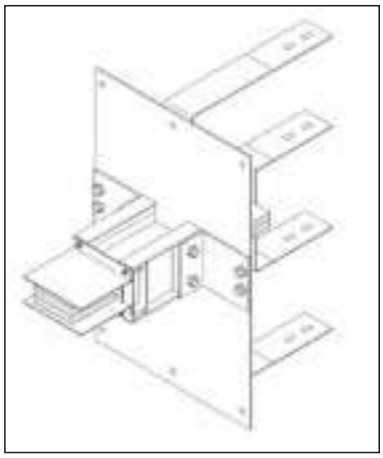

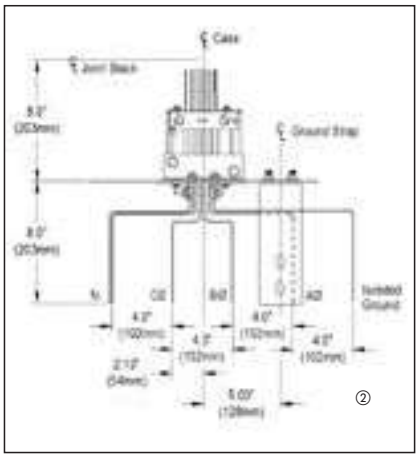

Flanged End Bus Bar Drilling Pattern (NEMA)①

(Same pattern for 2 bus bars per pole, see figure 2 above.)

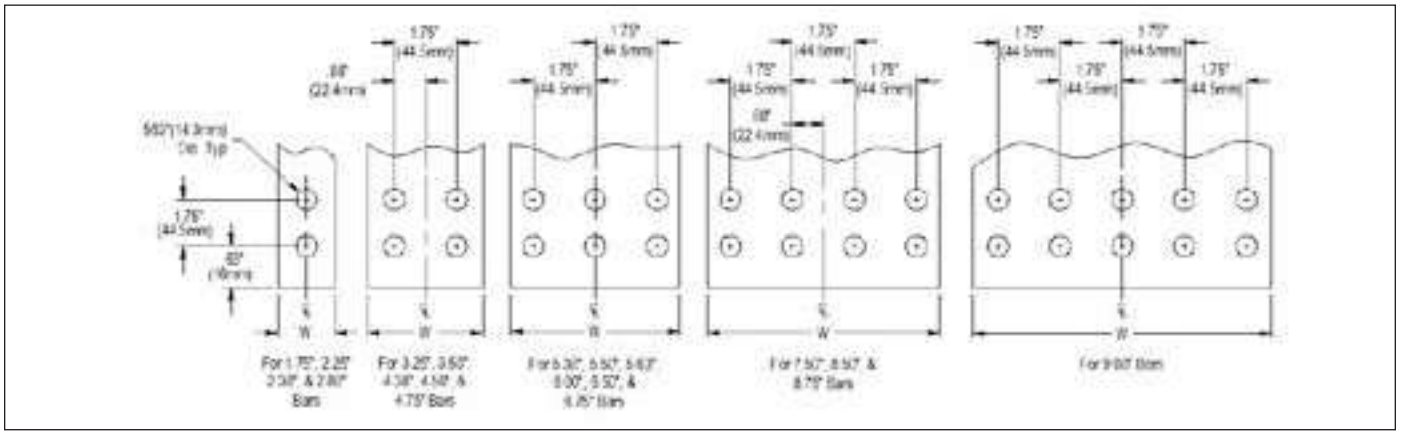

① Other drilling patterns are available and must be specified at order entry.
② See Figures 4, 5 and 6 on page 13-32.

Flanged End, Dimensions (standard/min.)

Ampere Rating		Dimensions Inches (mm) Ref. Bar Width	Fig. No.	"A"	"B"	"C"	"D"	"E"	"F"	"G"	Fig. No.
AL	**L-Rated**										
225	—	2.38 (60.5)	1	10.0 (254)	8.00 (203)	4.38 (111)	1.94 (49)	3.88 (99)	—	6.00 (152)	4, 5
400	—	2.38 (60.5)	1	10.0 (254)	8.00 (203)	4.38 (111)	1.94 (49)	3.88 (99)	—	6.00 (152)	4, 5
600	—	2.38 (60.5)	1	10.0 (254)	8.00 (203)	4.38 (111)	1.94 (49)	3.88 (99)	—	6.00 (152)	4, 5
800	400	2.38 (60.5)	1	10.0 (254)	8.00 (203)	4.38 (111)	1.94 (49)	3.88 (99)	—	6.00 (152)	4, 5
1000	600	3.25 (82.6)	2	10.0 (254)	8.00 (203)	4.38 (111)	1.94 (49)	2.06 (52)	—	6.00 (152)	4, 6
1200	800	4.38 (111.3)	2	15.50 (395)	13.50 (343)	7.13 (181)	1.60 (41)	3.19 (81)	—	8.50 (216)	4, 6
1350	1000	5.38 (136.7)	2	15.50 (395)	13.50 (343)	7.13 (181)	2.10 (53)	4.19 (106)	—	8.50 (216)	4, 6
1600	1200	6.50 (165.1)	2	15.50 (395)	13.50 (343)	7.13 (181)	2.66 (67)	5.31 (135)	—	8.50 (216)	4, 6
2000	1350,1600	8.75 (222.3)	2	15.50 (395)	13.50 (343)	7.13 (181)	3.78 (96)	7.56 (192)	—	8.50 (216)	4, 6
2500	2000	5.63 (143.0)	3	20.0 (508)	18.00 (457)	4.50 (114)	0.68 (17)	1.37 (36)	4.44 (113)	13.25 (337)	4, 6
3000	2500	6.75 (171.5)	3	20.0 (508)	18.00 (457)	4.50 (114)	0.68 (17)	1.37 (36)	5.56 (141)	13.25 (337)	4, 6
3200	2000	7.50 (190.5)	3	24.0 (610)	22.0 (569)	5.50 (140)	0.68 (17)	1.37 (36)	6.32 (161)	13.25 (337)	4, 6
4000	3000,3200	9.00 (228.6)	3	24.0 (610)	22.0 (569)	5.50 (140)	0.68 (17)	1.37 (36)	7.81 (198)	14.25 (362)	4, 6
CU	**M-Rated**										
225	—	1.75 (44.4)	1	10.0 (254)	8.00 (203)	4.38 (111)	1.63 (41)	3.25 (83)	—	6.00 (152)	4, 5
400	—	1.75 (44.4)	1	10.0 (254)	8.00 (203)	4.38 (111)	1.63 (41)	3.25 (83)	—	6.00 (152)	4, 5
600	—	1.75 (44.4)	1	10.0 (254)	8.00 (203)	4.38 (111)	1.63 (41)	3.25 (83)	—	6.00 (152)	4, 5
800	400	1.75 (44.4)	1	10.0 (254)	8.00 (203)	4.38 (111)	1.63 (41)	3.25 (83)	—	6.00 (152)	4, 5
1000	—	2.25 (57.2)	1	10.0 (254)	8.00 (203)	4.38 (111)	1.88 (48)	3.75 (95)	—	6.00 (152)	4, 5
1200	600	2.88 (73.2)	2	10.0 (254)	8.00 (203)	4.38 (111)	0.85 (21)	1.69 (43)	—	6.00 (152)	4, 6
1350	800	3.50 (88.9)	2	10.0 (254)	8.00 (203)	4.38 (111)	1.16 (29)	2.31 (59)	—	6.00 (152)	4, 6
1600	1000	4.50 (114.3)	2	15.50 (395)	13.50 (343)	7.13 (181)	1.66 (42)	3.31 (84)	—	8.50 (216)	4, 6
2000	1200,1350	6.00 (152.4)	2	15.50 (395)	13.50 (343)	7.13 (181)	2.41 (42)	4.81 (122)	—	8.50 (216)	4, 6
—	1600	6.50 (165.1)	2	15.50 (395)	13.50 (343)	7.13 (181)	2.66 (67)	5.31 (135)	—	8.50 (216)	4, 6
2500	2000	8.50 (215.9)	1	15.50 (395)	13.50 (343)	7.13 (181)	3.66 (93)	7.31 (186)	—	8.50 (216)	4, 6
3000	—	4.75 (120.7)	3	20.0 (508)	18.00 (457)	4.50 (114)	0.68 (17)	1.37 (36)	3.56 (90)	13.25 (337)	4, 6
3200	—	5.50 (139.7)	3	20.0 (508)	18.00 (457)	4.50 (114)	0.68 (17)	1.37 (36)	4.32 (110)	13.25 (337)	4, 6
4000	2500,3000,3200	6.50 (165.1)	3	20.0 (508)	18.00 (457)	4.50 (114)	0.68 (17)	1.37 (36)	5.31 (135)	13.25 (337)	4, 6
5000	4000	8.50 (215.9)	3	24.0 (610)	22.00 (569)	5.50 (140)	0.68 (17)	1.37 (36)	7.31 (186)	14.25 (362)	4, 6

Figure 1

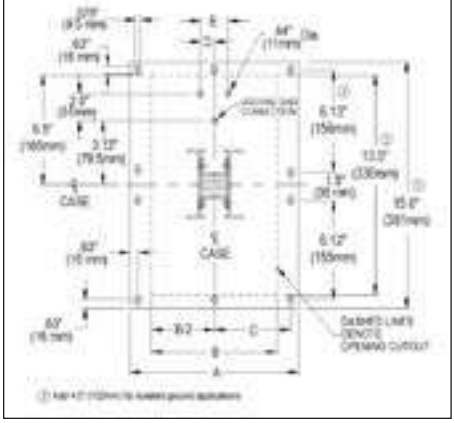

Figure 2

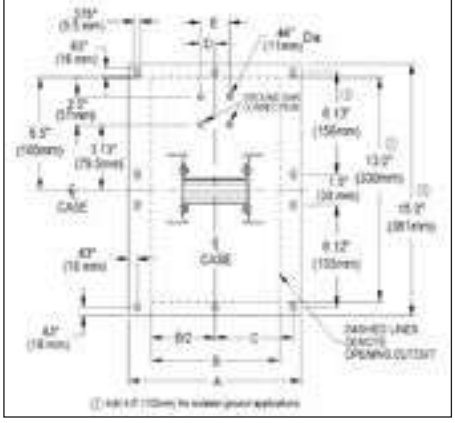

Figure 3

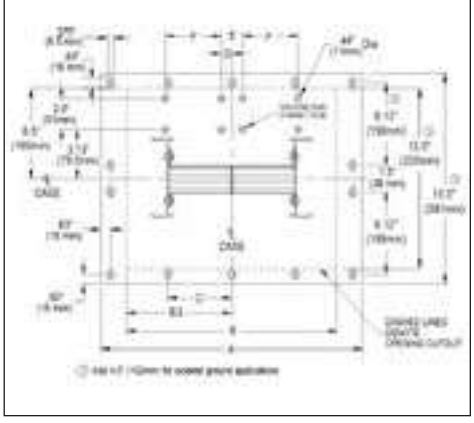

Integral and Internal Ground Strap Drilling Detail

Figure 4

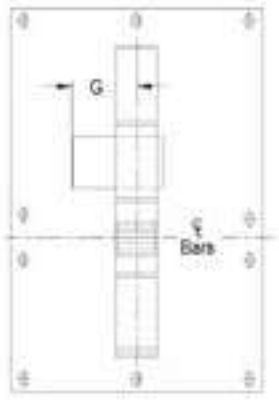

Figure 5

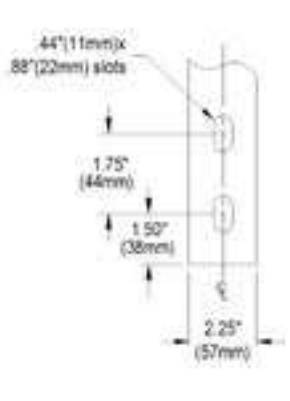

Figure 6

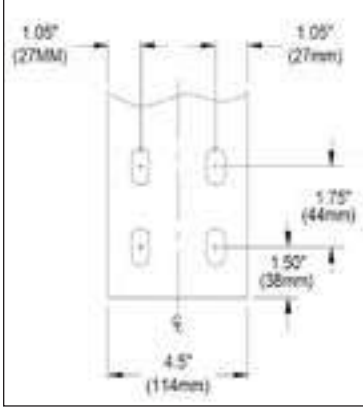

Combination Flange/Elbow

A combination Flange/Elbow may be used in space constrained applications. Flatwise and edgewise combination flange/elbows require a minimum clearance of 5 in. (127mm) from the top of the connecting equipment to the centerline of the busway.

Flat Elbow with Flanged End, Dimensions

Ampere Rating	Dimensions inches (mm)							
	Minimum		Maximum		Minimum		Maximum	
	"A"	"B"	"A"	"B"	"A"	"B"	"A"	"B"
800	4.75 (121)	12 (305)	22 (559)	48 (1219)	4.50 (121)	12 (305)	22 (559)	48 (1219)
1000	5.20 (132)	12 (305)	22 (559)	48 (1219)	4.70 (121)	12 (305)	22 (559)	48 (1219)
1200	5.75 (146)	12 (305)	22 (559)	48 (1219)	5.00 (121)	12 (305)	22 (559)	48 (1219)
1350	6.25 (159)	12 (305)	22 (559)	48 (1219)	5.30 (121)	12 (305)	22 (559)	48 (1219)
1600	6.80 (173)	18 (457)	22 (559)	48 (1219)	5.80 (121)	12 (305)	22 (559)	48 (1219)
2000	8.00 (203)	18 (457)	28 (711)	48 (1219)	6.60 (121)	12 (305)	22 (559)	48 (1219)
2500	9.30 (236)	18 (457)	28 (711)	48 (1219)	7.80 (121)	18 (457)	28 (711)	48 (1219)
3000	10.40 (264)	18 (457)	28 (711)	48 (1219)	8.40 (121)	18 (457)	28 (711)	48 (1219)
3200	11.15 (283)	18 (457)	28 (711)	48 (1219)	9.20 (234)	18 (457)	28 (711)	48 (1219)
4000	12.70 (323)	24 (607)	34 (864)	48 (1219)	10.20 (121)	18 (457)	28 (711)	48 (1219)
5000					12.20 (121)	24 (607)	34 (864)	48 (1219)

Edge Elbow with Flanged End, Dimensions

Minimum		Maximum	
"A"	"B"	"A"	"B"
5.00 (127)	10 (254)	18 (457)	48 (1219)

Edge Elbow with Flanged End

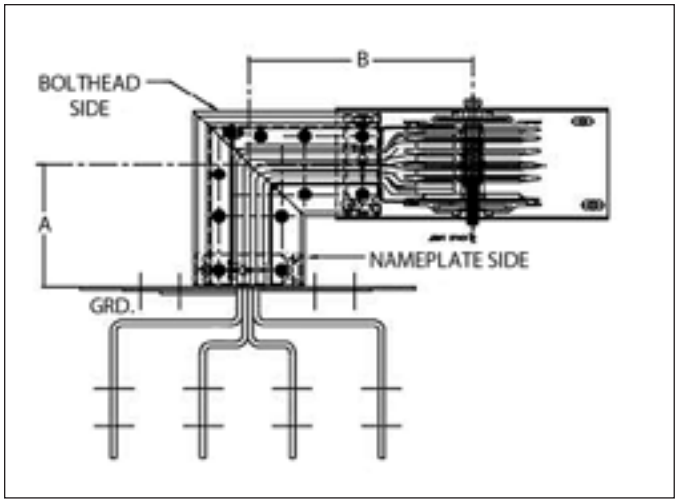

Flat Elbow with Flanged End

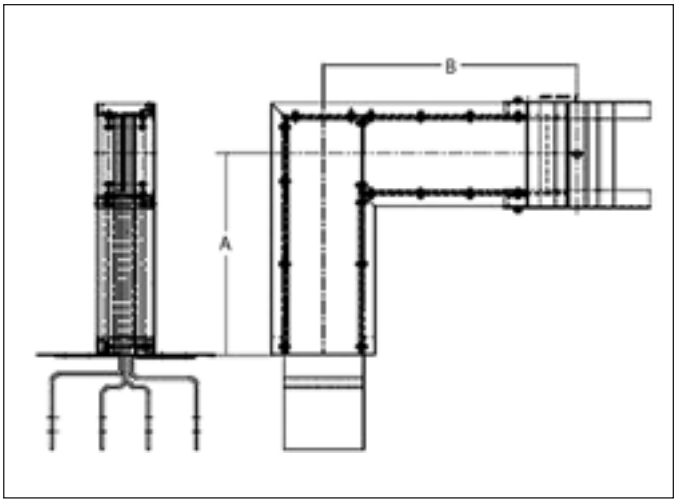

In-Line Disconnect Cubicle, Dimensions ②	
Description of Unit	**Type of Disconnect**
Fusible Switch	800-1200A Vacu-Break
Molded Case Circuit Breaker	JD6, LD6, MD6, ND6 PD6, RD6
Digital Sentron Series MCCB's	SJD6, SLD6, SMD6, SND6 SPD6 1600A Frame
Power Circuit Breaker	200-5000A WL①
Bolted Pressure Switch ACCESS-compatible	800A 1200-2500A 3000A 4000A

① Consult your local Siemens sales office for details on WL breakers.
② Consult factory for dimensions.

Fusible Cubicles①③

3-Pole, 600V/4-Pole, 480/277V

Ampere Ratings:
800
1200

Bolted Pressure Switches③

3-Pole 480V, 4-Pole 480V,
3-Pole 600V or 4-Pole 600V

Ampere Ratings:
800
1200
1600
2000
2500
3000
4000

Solid State Molded Case Circuit Breaker Cubicles③

3-Pole, 600V or 4-Pole 480/277V

Breaker Frame	Ampere Rating
SJD6-A, SHJD6-A, SCJD6-A	200–400
SLD6-A, SHLD6-A, SCLD6-A	300–600
SMD6, SHMD6, SCMD6-A	600–800
SND6, SHND6, SCND6-A	800–1200
SPD6, SHPD6	1400–1600

① Fuses not included.
② For electrically operated, specify control voltage.
③ IP40 and IP55

In-Line Disconnect Cubicles

Cubicles provide a means of mounting switches or circuit breakers where power feeds to or pulls from the busway system. When bolted connections are preferred, cubicles may be used in place of plug-in units. Cubicles can also be used at ampere ratings that exceed standard plug-in unit ratings. Modifications to cubicles can be made in order to accommodate key inter-locks, ground fault detector systems and power monitoring systems.

In-Line Disconnect Cubicle

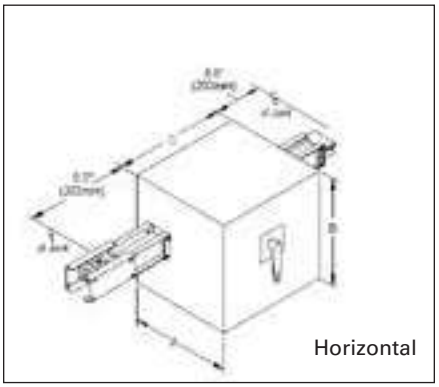

Horizontal

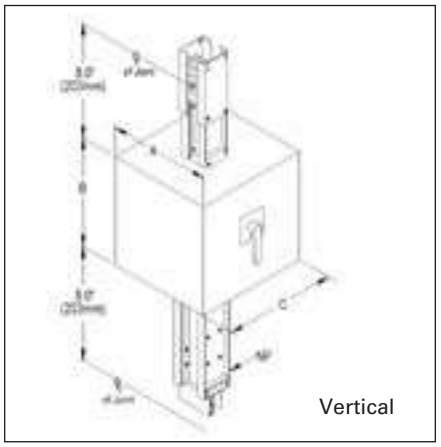

Vertical

Molded Case Circuit Breaker Cubicles

3-Pole, 600V or 4-Pole 480/277V

Breaker Type	Ampere Rating
FD6	70–250A
JD6	200–400A
LD6	450–600A
MD6	500–800A
ND6	900–1200A
PD6	1200–1600A
RD6	1600–2000A

Current-Limiting

3-Phase, 600V AC or
120/280V AC, 277/480V AC

Breaker Type	Ampere Rating
CFD6	70–250A
CJD6	200–400A
CLD6	450–600A
CMD6	600–800A
CND6	900–1200A
CPD6	1200–1600A

Power Circuit Breaker②③

3-Pole or 3-Phase, 4-Wire

Breaker Frame Type	Max. Amp. Rating	Interrupting current frame Ics (kAIR RMS) 50/60 Hz								
		240 Volt			480 Volt			600 Volt		
Type WL										
Frame Size 1 (S, H, L Rating Class)	2000A	65k	85k	100k	65k	85k	100k	65k	65k	65k
Frame Size 2 (S, L, C Rating Class)	3000A	65k	100k	150k	65k	100k	150k	65k	85k	100k
Frame Size 3 (L and C Rating Class)	5000A	—	100k	150k	—	100k	150k	—	85k	100k

In-Line Disconnect Cubicle, Approximate Dimensions

Description of Unit	Type of Disconnect	Dimensions in Inches		
		A	B	C
Fusible Switch	800-1200A Vacu-Break	36 (914)	36 (914)	32 (813)
Molded Case Circuit Breaker	JD6, LD6, MD6, ND6 PD6, RD6	36 (914) 36 (914)	28 (711) 36 (914)	28 (711) 32 (813)
Digital Sentron Series MCCB's	SJD6, SLD6, SMD6, SND6 SPD6, 1600A Frame	36 (914) 36 (914)	28 (711) 36 (914)	28 (711) 32 (813)
Power Circuit Breaker	WL Frame Size 1 WL Frame Size 2 WL Frame Size 3	48 (1219) 48 (1219) 48 (1219)	36 (914) 36 (914) 36 (914)	32 (813) 32 (813) 32 (813)
Bolted Pressure Switch	800A 1200-2500A 3000A 4000A	33 (838) 37 (940) 37 (940) 41 (1041)	36 (914) 40 (1016) 40 (1016) 40 (1016)	32 (813) 32 (813) 48 (1219) 48 (1219)

Meter center modules provide a quick and convenient method of connecting to metering devices for both commercial and industrial applications.

Meter center modules connect at the side of a busway run to special joint stacks; these special joints can be added to existing busway to accommodate meter center module connections. When using multiple metering stacks, main disconnects are available if the system reaches the 6 circuit rule (see metering bulletin for further information).

Dimensional Data Required

Dimensions Inches (mm)

"A" Distance between floor and bottom of meter center as required by the customer.

"B" Dimension from bottom of meter center to centerline of meter center joint connection stack:
100-125A Panel, B = 16.5 (419)
200A Panel, B = 22.0 (559)

"C" Equals "A" plus "B", Minimum 16.0 (406)

"D" Individual meter center height. Consult Modular Metering application information.

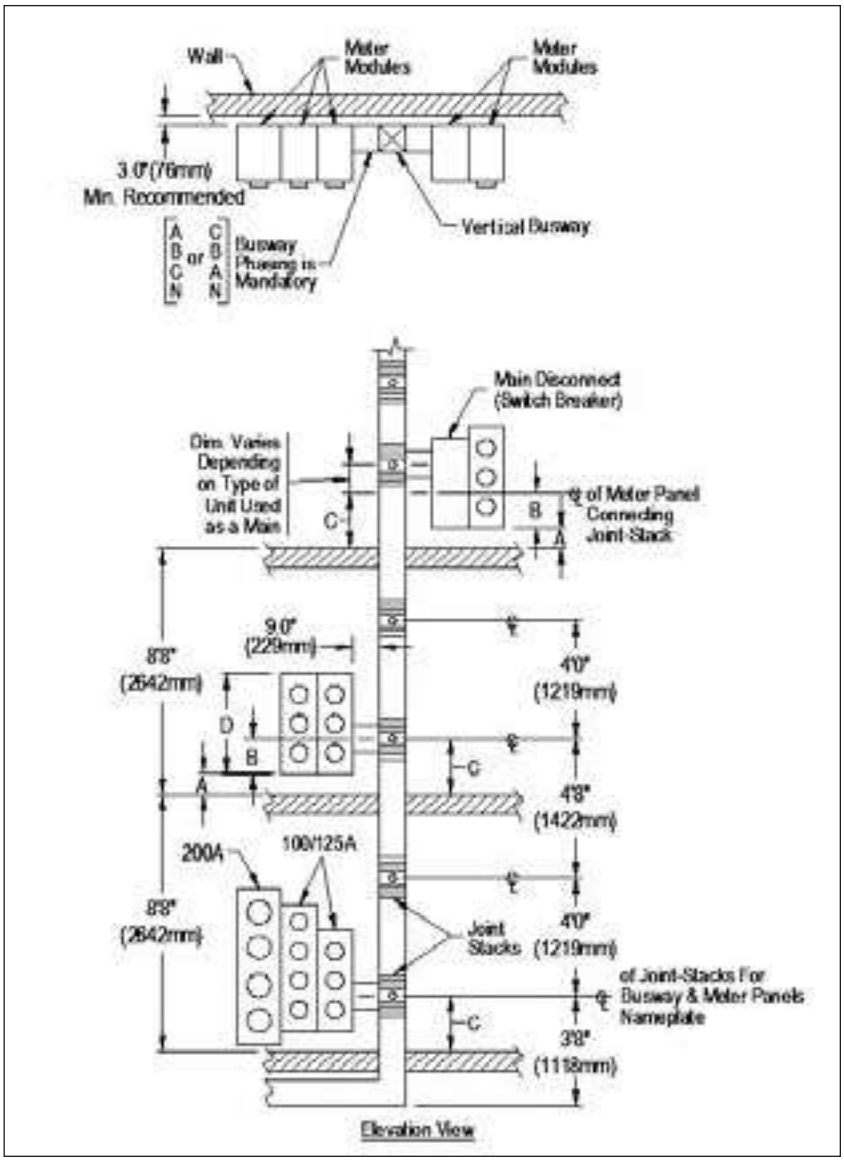

Meter Center Cubicles

Meter center cubicles provide a quick and convenient method of connecting to metering devices for both commercial and industrial applications and have the main disconnect circuit breaker factory installed.

Having the main disconnect built into the device reduces the required space on the right and left side of the busway. Meter center modules connect at the side of the cubicle frame box using an QC4 stack. Meter center cubicles are available for 600 – 1200 Amp (L, M and N Frames). They are available with flexible meter center connections, left side, right side or both. (When ordering a meter center cubicle a QC4 stack must be ordered separately.)

Molded Case Circuit Breaker Cubicles with Meter Tap Stack Provisions Dimensions, Inches (mm)

Ampere Rating		Busway Width W	L Frame Breaker (250-600A)			M Frame Breaker (250-800A)			N Frame Breaker (800-1200A)		
			A	B	C	A	B	C	A	B	C
AL	**L-Rated**										
225	—	3.9 (99)	32 (813)	24 (620)	16 (406)	37 (940)	26 (660)	16 (406)	37 (940)	26 (660)	16 (406)
400	—	3.9 (99)	32 (813)	24 (620)	16 (406)	37 (940)	26 (660)	16 (406)	37 (940)	26 (660)	16 (406)
600	—	3.9 (99)	32 (813)	24 (620)	16 (406)	37 (940)	26 (660)	16 (406)	37 (940)	26 (660)	16 (406)
800	400	4.6 (117)	32 (813)	24 (610)	16 (406)	37 (940)	26 (660)	16 (406)	37 (940)	26 (660)	16 (406)
1000	600	5.4 (137)	32 (813)	24 (610)	16 (406)	37 (940)	26 (660)	16 (406)	37 (940)	26 (660)	16 (406)
1200	800	6.6 (168)	32 (813)	24 (610)	16 (406)	37 (940)	26 (660)	16 (406)	37 (940)	26 (660)	16 (406)
1350	1000	7.6 (193)	32 (813)	24 (610)	16 (406)	37 (940)	26 (660)	16 (406)	37 (940)	26 (660)	16 (406)
1600	1200	8.7 (221)	32 (813)	24 (610)	20 (490)	37 (940)	26 (660)	20 (490)	37 (940)	26 (660)	20 (490)
2000	1350,1600	10.9 (277)	32 (813)	24 (610)	20 (490)	37 (940)	26 (660)	20 (490)	37 (940)	26 (660)	20 (490)
2500	2000	13.7 (348)	32 (813)	24 (610)	23.5 (597)	37 (940)	26 (660)	23.5 (597)	37 (940)	26 (660)	23.5 (597)
3000	2500	15.8 (401)	32 (813)	24 (610)	23.5 (597)	37 (940)	26 (660)	23.5 (597)	37 (940)	26 (660)	23.5 (597)
3200	2000	17.3 (439)	32 (813)	24 (610)	23.5 (597)	37 (940)	26 (660)	28 (711)	37 (940)	26 (660)	28 (711)
4000	3000,3200	20.3 (516)	32 (813)	24 (610)	28 (711)	37 (940)	26 (660)	28 (711)	37 (940)	26 (660)	28 (711)
4000	3000,3200	20.3 (516)	32 (813)	24 (610)	28 (711)	37 (940)	26 (660)	28 (711)	37 (940)	26 (660)	28 (711)
CU	**M-Rated**										
225	—	3.9 (99)	32 (813)	24 (620)	16 (406)	37 (940)	26 (660)	16 (406)	37 (940)	26 (660)	16 (406)
400	—	3.9 (99)	32 (813)	24 (620)	16 (406)	37 (940)	26 (660)	16 (406)	37 (940)	26 (660)	16 (406)
600	—	3.9 (99)	32 (813)	24 (620)	16 (406)	37 (940)	26 (660)	16 (406)	37 (940)	26 (660)	16 (406)
800	400	3.9 (99)	32 (813)	24 (620)	16 (406)	37 (940)	26 (660)	16 (406)	37 (940)	26 (660)	16 (406)
1000	—	4.4 (112)	32 (813)	24 (610)	16 (406)	37 (940)	26 (660)	16 (406)	37 (940)	26 (660)	16 (406)
1200	600	5.1 (130)	32 (813)	24 (610)	16 (406)	37 (940)	26 (660)	16 (406)	37 (940)	26 (660)	16 (406)
1350	800	5.7 (145)	32 (813)	24 (610)	16 (406)	37 (940)	26 (660)	16 (406)	37 (940)	26 (660)	16 (406)
1600	1000	6.7 (170)	32 (813)	24 (610)	16 (406)	37 (940)	26 (660)	16 (406)	37 (940)	26 (660)	16 (406)
2000	1200,1350	8.2 (208)	32 (813)	24 (610)	20 (490)	37 (940)	26 (660)	20 (490)	37 (940)	26 (660)	20 (490)
—	1600	8.7 (221)	32 (813)	24 (610)	20 (490)	37 (940)	26 (660)	20 (490)	37 (940)	26 (660)	20 (490)
2500	2000	10.7 (272)	32 (813)	24 (610)	20 (490)	37 (940)	26 (660)	20 (490)	37 (940)	26 (660)	20 (490)
3000	—	11.8 (300)	32 (813)	24 (610)	20 (490)	37 (940)	26 (660)	20 (490)	37 (940)	26 (660)	20 (490)
3200	—	13.3 (335)	32 (813)	24 (610)	20 (490)	37 (940)	26 (660)	23.5 (597)	37 (940)	26 (660)	23.5 (597)
4000	2500,3000,3200	15.3 (389)	32 (813)	24 (610)	23.5 (597)	37 (940)	26 (660)	23.5 (597)	37 (940)	26 (660)	23.5 (597)
5000	4000	19.3 (491)	32 (813)	24 (610)	28 (711)	37 (940)	26 (660)	28 (711)	37 (940)	26 (660)	28 (711)

Meter Center Module

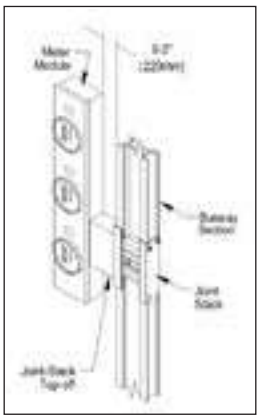

Side Mount Panelboard



For this panelboard configuration, please contact Spartanburg plant for mounting information. Configuration only available for P2 and P3 panels in 240V or below applications.

Main Disconnect Meter Module

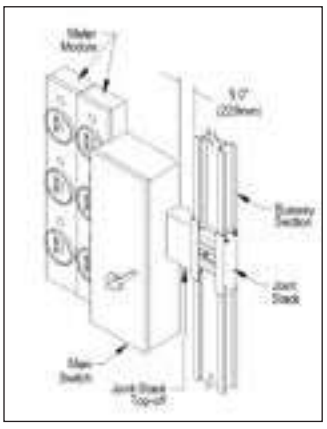

Meter Center Cubicle

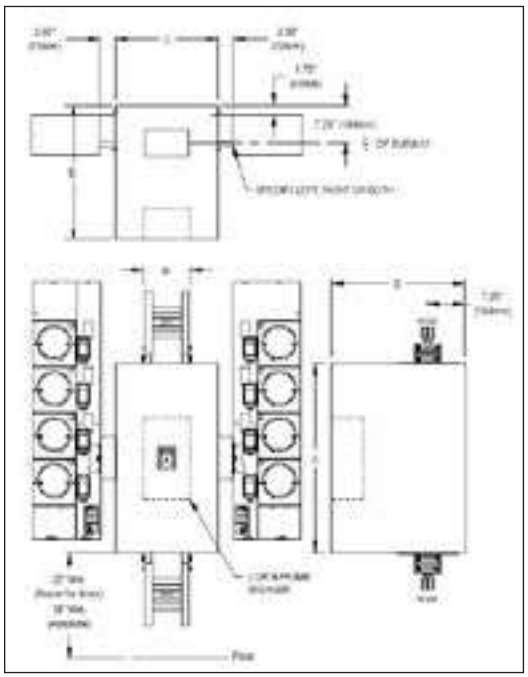

Installation

In preparation for installation of your busway systems, it is important to familiarize yourself with the following installation publications:

- General Instructions For Handling, Installation, Operation and Maintenance of Busway Rated 600 volts or less (NEMA Standards Publication BU1)
- Storage, Installation and Maintainance Instructions for Sentron Busway

These publications should be read through thoroughly and used as reference during installation to ensure proper installation procedures.

All equipment should be inspected upon delivery. If the busway is not installed immediately, it should be stored in a clean, dry location. Factory supplied record drawings as well as installation tools should be accessible in preparation for installation.

UL 1479 Fire Rated Installations

Sentron Busway has been tested in accordance with UL 1479 and offers a certified two hour fire rating for gypsum wallboard construction and a three hour fire rating for concrete slab or block penetrations. These ratings were achieved using standard busway installed with SpecSeal® sealant from Specified Technologies Inc.

The SpecSeal® fire stop system provides superior performance at the industry's lowest installed cost.

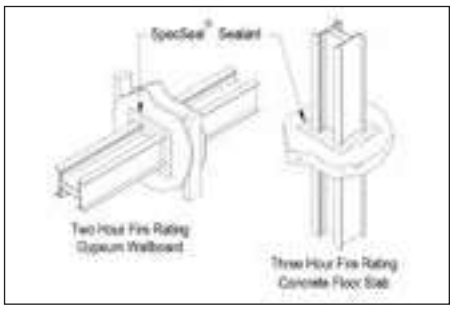

Measuring

Critical to the success of any busway installation is the layout and the accurate measuring of the busway. First and foremost:

Select a route for your busway that will require the fewest fittings and the maximum number of 10' (3.05m) sections. It is important that the busway system be designed to meet the requirements of the National Electric Code for Busway. There are a number of techniques that may be used to ensure an accurate measurement before purchasing and installing the busway. The following tools will be required during layout and masuring:

- 100' (30.48m) tape measure
- Measuring Stick
- Chalkline
- Plumb Bob
- Marker

(A laser distance measuring device may be used to speed up the measuring process).

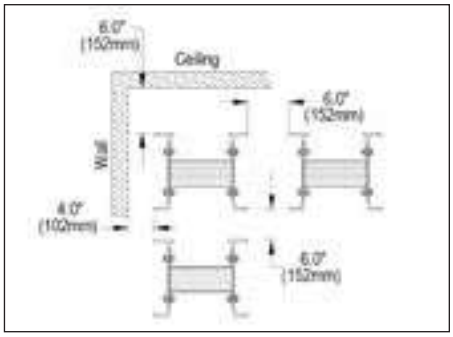

Minimal Clearances

Minimum clearances for installing feeder busway are shown. Additional clearance may be required for plug-in devices larger than 100A fusible and 250A circuit breaker.

SIEMENS

Busway Order Entry Checklist
Complete one checklist for each busway run.

Date Submitted: _____

Purchase Order #: _____
Project Name: _____
Sales Suport: _____
Sales Engineer: _____

Drawing requirements
Approval drawings ☐ # copies ☐
Recorder drawings ☐ # copies ☐
Ship Complete ____ Partial Shipments ____ YES
Ship not before: _____
Shipping Instructions

Release ☐ Hold For Release ☐ YES

Run Designation _____
Busway Catalog # _____
Service, _____ _____ Amps
Bus material ☐ CU ☐ AL ☐ "M" Rated ☐ "L" Rated
Neutral ☐ None ☐ 100 % ☐ 200 %
Ground ☐ Case ☐ Internal ☐ Isolated
IP rating ☐ IP 40 Indoor
☐ IP 55 Splash Proof
☐ NEMA 3R Outdoor

TIP, You can make additioanl copies of this sheet by right clicking on the tab and creating a duplicate.
Use one sheet for each Busway run.

*NOTE: For OUTDOOR BUSWAY, contact the factory before quoting outdoor busway runs over 50 ft.

Busway mounting position in reference to floor

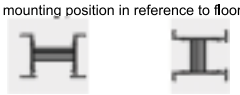

A) **Engineering Information**
☐ Field sketches or factory approval drawings attached?
☐ Dimensions from walls, column lines, ect.
☐ Wall, floor and roof thickness and pitch.
Floor Elevation's
☐ Floor to floor
☐ Floor to ceiling
☐ Wall locations
☐ Equipment pads Height _____
☐ Existing Busway to be extended cat # _____
☐ Phasing
☐ Nameplate Information
☐ Match to competitor, Contact the plant.
☐ Special SWBD connection, provide details
☐ Phase Transpositions: Provide phasing on drawings
☐ Riser Bus
☐ Load side of bus plug (top or bottom)
☐ Required distance from floor to top of panels/plugs
☐ Meter bank (center line of tap stack)
☐ Barriers and/or floor supports
☐ Transformer Connections
☐ Standard XFMR Service head
☐ Single phase
☐ Three single phase
☐ Special drawing required
☐ Dimensions between phases
☐ LV spade detail, including drilling and thickness
☐ Dimensions of LV spade from tank wall
☐ Throat opening and bolt pattern, if any
☐ Utility Vault Connection Utility type _____
☐ Required drawing attached?
☐ End Cable Tap Box
☐ Horizontal ☐ Vertical
☐ Standard Lugs
☐ Special lugs, specify below,
☐ Intermediate Hangers ☐ Qty. *Note: Intermediate Hangers are for floor to ceiling height greater than 16ft. Consult factory if greater than 32 ft.
☐ Expansion Sections ☐ Qty.
*Note: Expansion Section is required for every 200ft of continuous Busway run length and for each building expansion joint. The Busway run must be positioned accordingly to accommodate the Expansion Section(s).

B) **Specifications** (check or fill appropriate blanks)
☐ Standard busway meet specifications
☐ Exceptions to specifications, note comments below
Short-circuit bracing 100KAIC Amps symmetrical
Voltage drop requirement _____
Temperature-rise requirement _____
Current density requirement _____
Special paint, provide paint chip. _____
Special Comments

Recommended Measurement Steps

1. Using systems requirements for amperage, voltage, and conductors, determine the physical size of the busway. This is important when setting minimum clearances from walls, columns, ceilings and other obstructions. See page 33 for minimal clearances.
2. Prior to any layout, review the complete area to determine the best location for the run. Special attention needs to be given to existing equipment such as plumbing, HVAC, steel columns, beams and permanent structures.
3. Measure all dimensions from fixed points such as columns, walls, floors and ceilings.
4. Make a preliminary sketch showing proposed busway routing, elevations and obstructions. Be sure to show all floor and wall locations including thickness.
5. Where plug-in devices are being used, be sure to allow for proper operation clearances. See dimensional requirements shown in the bus plug section of this publication.

Reference the following documents online at www.usa.siemens.com/busway.

- Sentron Quick Reference
- Busway Order Entry Checklist
- Sentron Busway Installation and Instruction Guide

Maintenance

In order to maintain system performance, it is necessary to perform regular maintenance on your busway system. Siemens Storage, Installation and Maintenance Instructions, and NEMA Publication BU1.1 should be used as a guide to proper maintenance procedures. Routine maintenance of your busway system will increase its life and performance.

Custom Product

With a 60 year history in designing and manufacturing Busway Systems, Siemens can develop custom solutions to meet specific job requirements. Siemens specializes in custom engineered busway sections, connections, and bus plugs. Consult your local Siemens sales office for details on custom pricing and ordering

Connecting to Existing Equipment

Do you have existing power distribution equipment (non-Sentron) that you would like to run Sentron Busway to or from? Siemens can engineer special connection pieces that allow you to connect Sentron Busway quickly and efficiently.

Transformer Connections

Siemens can connect Sentron Busway to almost any transformer. All you need to do is provide complete drawings of transformer secondary connections with detailed drilling pattern and phasing information to your local Siemens sales engineer and they can order you a custom designed connection piece.

Paint

Sentron Busway products have a protective finish of ANSI 61 gray (standard) polyester urethane powder paint. The paint is electrostatically applied to all housing surfaces. Colors other than ANSI 61 gray may be special ordered.

Low Current Density Busway Sentron Busway may be ordered as 1000 A/in^2 Copper or 750 A/in^2 Aluminum.

Conversion is as follows:

Required M or L Rating	
AL	**L-Rated**
225	—
400	—
600	—
800	400
1000	600
1200	800
1350	1000
1600	1200
2000	1350,1600
2500	2000
3000	2500
3200	2000
4000	3000,3200

Required M or L Rating	
AL	**L-Rated**
225	—
400	—
600	—
800	400
1000	—
1200	600
1350	800
1600	1000
2000	1200, 1350
—	1600
2500	2000
3000	—
3200	—
4000	2500, 3000
5000	4000

"L" Rating = 750 A/in^2 Aluminum
"M" Rating = 1000 A/in^2 Copper
1600 "M" rated is dedicated offering.

Applications – 200% Neutral Option

Power system harmonics are created by numerous types of non-linear loads which are often very high in harmonic content. The harmonics generated create problems in electrical systems and equipment. The presence of nonlinear loads can result in overheated neutrals and lead to deterioration of equipment performance and a reduced equipment life cycle. In order to prevent such problems from occurring, the Computer and Business Equipment Manufacturers Association (CBEMA) recommends that the neutral be oversized to at least 173% of the ampacity of the phase conductors to prevent problems. Sentron Busway offers two fully rated bus bars, therefore providing twice the current carrying surface as the phase bars. Each neutral bar is plated with the same tin plating and insulated with the same electrostatically applied epoxy insulation as the phase bars. This 200% neutral capacity helps prevent overheating caused by non-linear loads.

Isolated Ground

Sentron Busway is available with an optional isolated ground. This isolated ground provides a clean ground path for high frequency signals coming through the ground. This option is very useful in applications where there are computers or diagnostic equipment. The isolated ground option is often used in hospitals and higher technology industry applications.

Services – Power II Fit Final Connection Program

A "Final Connection" section is a length of busway inserted into a run of busway after the major portion of the busway run has been installed. This allows the release of the majority of the busway run long before the final dimensions are known.

Final Connection pieces must be identified at the time of the original order release with approximate date of Final Connection order. The Final Connection order form should be emailed to Busway Customer Service. For program details visit our website: www.usa.siemens.com/busway or contact your local Siemens sales office.



Measuring and Layout

For large jobs, Siemens Busway Systems offer assistance with measuring and layout of the busway. This service is negotiated on a job by job basis.

Technical Support

The Customer Interaction Center (CIC) provides 24/7 bilingual support for our customers.

The CIC provides both telephone and online support. You can send in your request via email or by giving the CIC a call.

Email us: cic.ca@siemens.com
Toll-Free Support: 1-888-303-3353

Power II Fit Program

What is the Power II Fit Program?

Siemens Power II Fit (PIIF) Program compensates for dimensional deviations that may result in busway layouts. With the PIIF Program, specific dimensions on straight sections and/or elbows may be left out of factory released drawings. After the busway run has been installed (minus PIIF pieces), final measurements are taken and sent to the factory. The PIIF Program guarantees shipment of straight sections and/or 90 degree angle elbows within 5 business days for IP40 (indoor) and 8 business days for NEMA 3R (outdoor), upon receipt of the PIIF Order Form. The PIIF Program may be used with SENTRON.

Why use the Power II Fit Program?

The PIIF Program can save you both time and money by eliminating uncertainty in busway measurements. When you take advantage of the PIIF Program, your busway runs fit exactly the first time, eliminating incorrect pieces and costly reordering time.

When should the Power II Fit Program be used?

The PIIF Program will benefit you when you are uncertain of exact dimensions on long busway runs and when difficult contour situations require special attention.

Program Details

- Product Line: SENTRON.
- Pricing: Included with original order entry.
- Quantity: A maximum of 5 pieces per order. (Straight feeder sections and/or 90 degree elbows.)
- Shipment: 5 business days for IP40 (indoor) and 8 business days for NEMA 3R (outdoor), after receipt of PIIF Order Form. All orders ship via standard carrier originating from Spartanburg, SC. Optional air freight shipments available when the customer bears the shipping cost.

Ordering Details

- Identify Siemens Busway PIIF Pieces at time of original order. Busway Customer Service approves PIIF Pieces.
- Send PIIF Order Form to Busway Customer Service when exact measurements are known.
- Busway Customer Service acknowledges PIIF Order and PIIF pieces ship within 5 business days for IP40 (indoor) and 8 business days for NEMA 3R (outdoor).

What is the Power II Measure service?

Siemens Power II Measure (PIIM) service provides professional busway routing and measurement by a factory representative. The Siemens representative will meet with the designated site contact to review project details and discuss routing options. Using a laser measuring device, all pertinent site measurements will be recorded and then transferred to CAD approval drawing(s). The PIIM service guarantees correct alignment and routing of the busway. If there are any errors in the busway routing that resulted from Siemens, replacement busway items will be provided at no charge.

Why use the Power II Measure service?

The PIIM service can save you both time and money by:

- Ensuring the most cost effective busway routing
- Ensuring accurate measurements
- Reducing order engineering lead-time

When should the Power II Measure service be used?

The PIIM service can be beneficial for all projects (new or existing, large or small). The PIIM service is especially beneficial for large and/or complex projects.

Program details

- Product Line: Sentron, XJL, XLU, BD
- Pricing: Fixed daily rate includes travel expenses, site review, measurement service and approval drawings
- Deliverable: An electronic CAD approval package will be submitted within 3 weeks of the site visit. The drawing package will include isometric busway routing with gear orientation, and any special application notes/details.

Ordering details

- The PIIM service should be ordered at the same time as the busway
- The PIIM service may be ordered for project cost estimation
- Allow 2 weeks notice to schedule the PIIM service

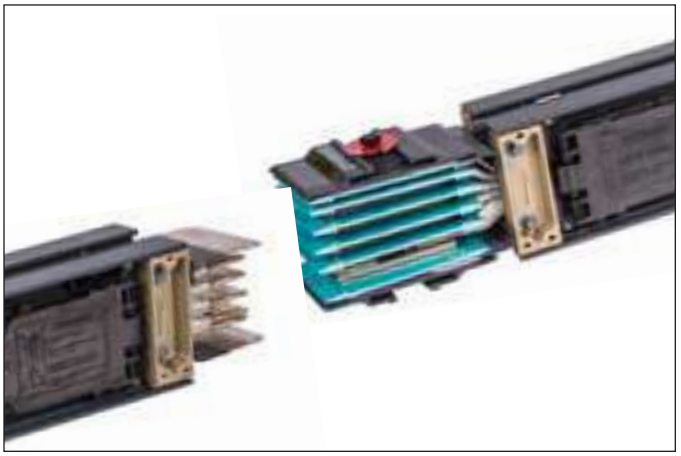

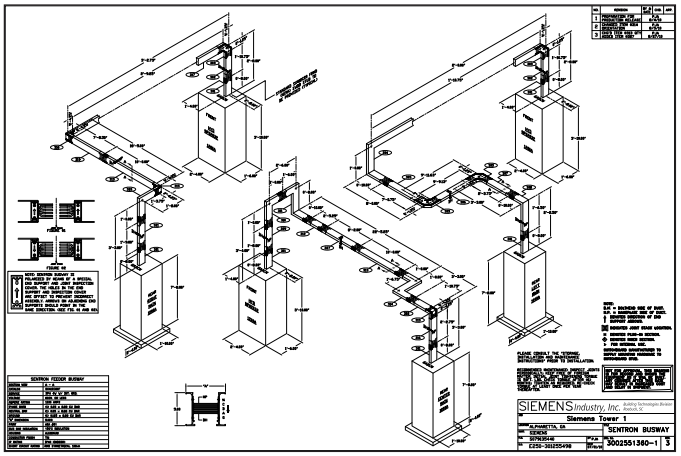

Siemens Sentron Busway Quick Reference

Critical Dimensions:

Busway that passes through a wall, ceiling or floor:

- Centerline of a joint to the wall, ceiling or floor = 7 in. min.
- Centerline of a joint (***above a floor support***) to a floor = 16 in. min.
- Joints cannot be positioned inside a wall, ceiling or floor (***joints must be accessible for maintenance***)

Feeder Busway clearances:

- From the top of the busway to a ceiling/floor/wall or other busway = 6 in. min.
- From the side of the busway to a ceiling/floor/wall or other busway = 4 in. min

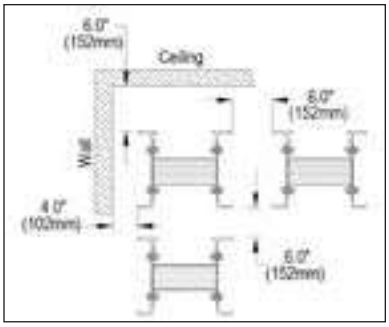

Feeder Busway minimal clearances

Plug-in Busway clearances:

- Plug-In busway clearances depend on the configuration of bus plugs *(see bus plug clearance charts in the Sentron Selection and Application Guide)*
- Otherwise, clearances for feeder busway apply
- Note orientation of the operating handle and provide clearance for access & operation

Feeder Busway length:

- Minimum length = 14.38 in.
- Maximum length = 10 ft.

Plug-In & Riser length:

- Available only in 4, 6, 8 and 10 ft. lengths

Flat Elbow section:

- Maximum leg length = 4 ft.
- Minimum leg length: Varies according to amperage and bus bar material

Edge Elbow section:

- Maximum length = 4 ft.
- Minimum leg length = 10 in.

Combination and Offset Elbows:

- Maximum leg lengths = 4 ft.
- Minimum leg lengths: varies according to amperage and bus bar material

Elbow - Stub Combinations:

- Maximum leg length = 4 ft.
- Minimum leg length = 2.50 in. + (case size x .5)

Critical Details:

- Busway DRAWINGs must include all relevant dimensions
- CENTERLINE dimensions are expected (***please note any dimensions that are not center line dimensions***)
- WALLs and FLOORs must be located (***wall & floor thickness must be included***)
- Locate the **FRONT of all switchboards** and provide the phasing of any existing boards (***advise if any PADs are located under boards***)
- When using ONE-SIDED plug-in busway please note the desired direction of the load side of bus plugs (***G,A,B,C,N from left to right will position the load side to the bottom and "UP is On" handle operation***)
- TRANSFORMER THROAT connections require complete details.
- Horizontal plug-in busway must be oriented with the A phase on top (***bolt head on top***).
- In-Line Disconnect CUBICLEs are engineered to order. The **FRONT** of the cubicle and **Breaker** information must be specified.
- Panels - panel type and size / if a certain panel or breaker height is required (those dimensions)
- Curb height

Intermediate Hangers

- Add qty (1) Intermediate Hanger for floor to ceiling height greater than 16ft. Consult factory if greater than 32 ft.

Expansion Sections:

- Qty (1) Expansion Section should be used for every 200ft of continuous Busway run length, at every transition to a vertical run, and at each building expansion joint.

Outdoor Busway:

- Route busway to minimize outdoor busway run length
- Call factory before quoting outdoor busway runs over 50 ft.
- Avoid installing busway near exhaust pipes that may generate steam or caustic vapors

Sentron Bus Plugs

Table of Contents



Non-Metered Sentron 3/6 Bus Plug



Sentron SLVB Bus Plug

Contents

Sentron Busway Systems

Sentron Bus Plug Overview	13-43
Sentron Bus Plugs – Circuit Breaker (Installed) – Catalogue Numbering System	13-44
Sentron Circuit Breaker Bus Plugs	13-45
Bus Plugs with Standard Circuit Breakers	13-46
Bus Plugs with Current Limiting Circuit Breakers	13-47
Sentron Circuit Breaker Bus Plugs Dimensions and Weights	13-48
Wall Clearance and Circuit Breaker Bus Plug Dimensions	13-49
Sentron Bus Plugs – SLVB Fusible - Catalogue Numbering System	13-50
Sentron SLVB Fusible Bus Plugs	13-51 –13-52
Sentron Fusible Bus Plugs Dimensions and Weights	13-53 –13-54
Wall Clearance and Fusible Bus Plug Dimensions	13-55
Sentron SPD Bus Plugs	13-56
Sentron SPD Bus Plugs – Catalogue Numbering System	13-57
Sentron SPD Bus Plugs Dimensions and Weights	13-58
Sentron 3/6 Bus Plugs	13-59
Sentron 3/6 Bus Plugs – Circuit Breaker (Installed) – Catalogue Numbering System	13-60
Sentron 3/6 Bus Plugs – Product Configurations	13-61
Sentron 3/6 Bus Plugs Dimensions and Weights	13-62 –13-63

Sentron Bus Plug Overview

Overview

SENTRON Bus Plugs are engineered with the installer and end user in mind. The installer will benefit from the numerous features, such as factory installed circuit breakers, compact footprint, generous wirebend space, and dual interlocks. The end user will appreciate the visible position indicator, as well as the spring loaded pad lockable latch which prevents access to unauthorized personel.

SENTRON Bus Plugs are designed with an interlock device to prevent the door from being opened when the disconnect is on. This also prevents the disconnect from being turned on while the door is open. The interlock ensures that the protective device is "OFF" prior to installation or removal of the bus plug. Once the bus plug is properly installed, a spring - loaded, padlock latch provides additional security by preventing unauthorized access to the unit.

Alignment and interlock stabs are features of the Sentron Bus Plugs engineered to prevent improper installation of the unit. Guide stabs prevent installing the bus plug 180 degrees out of rotation. In addition, the stabs provide vertical support for vertical applications. The bus plug ground stabs are designed to ensure positive contact with both the integral and optional internal busway grounds before the bus plug fingers contact the phase and neutral bars. Sentron Bus Plugs also feature bolt-on mounting to the busway housing for secure attachment.

Sentron Bus Plugs can be configured for horizontal or vertical applications. The following Bus Plugs can be mounted (side by side) five (5) per busway side channel (Total 10 per 10' Section).

- 30-600 SLVBH Fusible (Horizontal)①
- 30-200 SLVBR Fusible (Riser)①
- 30-400 Circuit Breaker①
- 10-100A 3/6 Bus Plug (Horizontal)②

Sentron SLVB Fusible Bus Plugs feature a direct drive mechanism. The operating handle mounts directly to the switch mechanism for fewer moving parts.

Enclosure Ratings:

- IP40
- IP55

Conductors:

- 3-phase, 3-wire
- 3-phase, 4-wire
- 3-phase, 4-wire 200% neutral (400A and below)

Grounding:

- Integral (Housing)
- Internal
- Isolated

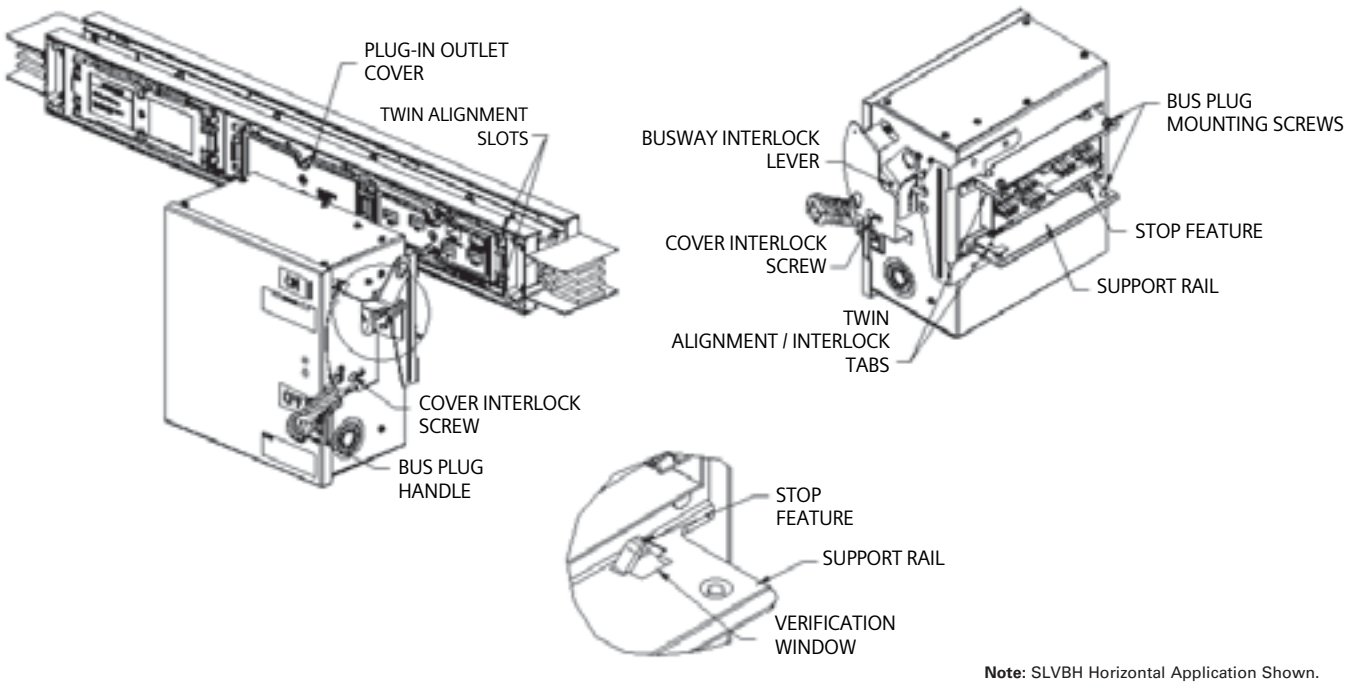

Note: SLVBH Horizontal Application Shown.

① Contact Siemens for 200% Neutral Applications.
② IP55 enclosure not available.

Sentron Bus Plugs—Circuit Breaker (Installed)

S	L	E	C	S ①	3	2	0	1	5	0	G ②	E	D	2

Plug Type
SL = Sentron II

Circuit Breaker Frame
E =15–125A
F =70–250A
J =200–400A
L =250–600A
M =500–800A

Enclosure Type
C = Circuit Breaker Enclosure
L = Current Limiting Enclosure

Cradle Designation
S = 3Ø3W, 3Ø4W>400A 200%N>200A only

Configuration
3 = 3Ø, 3W
4 = 3Ø, 4W
5 = 3Ø, 4W 200% neutral③④

Breaker Voltage
2 = 240V⑤
4 = 480V⑥
6 = 600V

Ampere Trip Rating

IP Rating
0 = IP40
4 = IP55

Ground Designation
G = Internal Ground
IG = Isolated Ground

Circuit Breaker Frame Identification



① The S digit is only used on 3- and 4-wire (100%N) plugs that are greater than 400A and 200%N plugs greater than 200A. Lower amperage plugs do not require this digit. (Ex. SLID3610, SLEC32060ED2)
② The G and IG digits are used to specify internal and isolated ground respectively. Integral (housing) ground plugs do not require this digit. (Ex. SLID3610, SLEC360150ED6)
③ Available through 250A only.
④ Available with E and F Frame breakers only.
⑤ Available with ED2 breakers only.
⑥ Available with ED4 and HHED6 breakers only.

Sentron® Bus Plugs

Circuit Breaker Bus Plugs

Overview

Standard Circuit Breakers, Bus Plug Ratings①

Plug-In Units Series	Circuit Breaker Max. Rating	Frame Size	Max. Short Circuit Current Rating
SLEC	125A, 600V	E Frame	100kA, 240V, 3 ph 65kA, 480V, 3 ph① 25kA, 600V, 3 ph
SLFC	250A, 600V	F Frame	200kA, 240V, 3 ph 100kA, 480V, 3 ph 25kA, 600V, 3 ph
SLJC	400A, 600V	J Frame	200kA, 240V, 3 ph 100kA, 480V, 3 ph 50kA, 600V, 3 ph
SLLCS	600A, 600V	L Frame	200kA, 240V, 3 ph 100kA, 480V, 3 ph 50kA, 600V, 3 ph
SLMCS	800A, 600V	M Frame	200kA, 240V, 3 ph 100kA, 480V, 3 ph 65kA, 600V, 3 ph

Current Limiting Circuit Breakers, Bus Plug Ratings①

Plug-In Units Series	Circuit Breaker Max. Rating	Frame Size	Max. Short Circuit Current Rating
SLEL	125A, 600V	CED Frame	200KA, 240V, 3 ph 200KA, 480V, 3 ph 100KA, 600V, 3 ph
SLFL	250A, 600V	CFD Frame	200KA, 240V, 3 ph 200KA, 480V, 3 ph 100KA, 600V, 3 ph
SLJL	400A, 600V	CJD Frame	200KA, 240V, 3 ph 150KA, 480V, 3 ph 100KA, 600V, 3 ph
SLLLS	600A, 600V	CLD Frame	200KA, 240V, 3 ph 150KA, 480V, 3 ph 100KA, 600V, 3 ph
SLMLS	800A, 600V	CMD Frame	200KA, 240V, 3 ph 100KA, 480V, 3 ph 65KA, 600V, 3 ph

Sentron Circuit Breaker Bus Plugs feature an easy to read "position indicator" label, designed to be visible from the floor, that clearly marks whether the bus plug is in the "Off," "On," or "Tripped" position. Circuit breaker bus plugs are available in frame sizes from 125 amps to 800 amps with interrupting ratings of standard, high or current limiting.

Circuit breaker bus plugs will be shipped complete with factory installed circuit breakers. The following Siemens molded case circuit breaker frames may be ordered with Sentron Circuit Breaker Bus Plugs: ED2, ED4, ED6, HED4, HHED6, CED6, FXD6, FD6, HFD6, CFD6 JXD6, JD6, HJD6, CJD6, LXD6, HLD6, CLD6, MXD6, HMD6, CMD6.

Refer to the diagram on page <?> for easy ordering instructions.

Sentron circuit breaker bus plugs can be custom configured to meet application specific requirements.

Consult your local Siemens sales office for details on custom pricing and ordering.

① Available in IP40 or IP55 variant.

Sentron® Bus Plugs

Bus Plugs with Standard Circuit Breakers①②③④

E Frame 3-Pole, 240 Volt, ED2 Breaker

Ampere Rating	Catalogue Number
15-60A	SLEC32***0ED2 SLEC32***0GED2 SLEC32***0IGED2
70-100A	SLEC32***0ED2 SLEC32***0GED2 SLEC32***0IGED2

E Frame 3-Pole, 480 Volt, ED4 Breaker

Ampere Rating	Catalogue Number
15-60A	SLEC34***0ED4 SLEC34***0GED4 SLEC34***0IGED4
70-100A	SLEC34***0ED4 SLEC34***0GED4 SLEC34***0IGED4
110-125A	SLEC34***0ED4 SLEC34***0GED4 SLEC34***0IGED4

E Frame 3-Pole, 600 Volt, ED6 Breaker

Ampere Rating	Catalogue Number
15-60A	SLEC36***0ED6 SLEC36***0GED6 SLEC36***0IGED6
70-100A	SLEC36***0ED6 SLEC36***0GED6 SLEC36***0IGED6
110-125A	SLEC36***0ED6 SLEC36***0GED6 SLEC36***0IGED6

F Frame 3-Pole, 600 Volt, FXD6 Breaker

Ampere Rating	Catalogue Number
70-225A	SLFC36***0FXD6 SLFC36***0GFXD6 SLFC36***0IGFXD6
250A	SLFC362500FXD6 SLFC362500GFXD6 SLFC362500IGFXD6

J Frame 3-Pole, 600 Volt, JXD6 Breaker

Ampere Rating	Catalogue Number
200-400A④	SLJC36***0JXD6 SLJC36***0GJXD6 SLJC36***0IGJXD6

L Frame 3-Pole, 600 Volt, LXD6 Breaker

Ampere Rating	Catalogue Number
450-600A④	SLLCS36***0LXD6 SLLCS36***0GLXD6 SLLCS36***0IGLXD6

M Frame 3-Pole, 600 Volt, MXD6 Breaker

Ampere Rating	Catalogue Number
500-800A④	SLMCS36***0MXD6 SLMCS36***0GMXD6 SLMCS36***0IGMXD6

E Frame 4-Pole, 240 Volt, ED2 Breaker

Ampere Rating	Catalogue Number
15-60A	SLEC42***0ED2 SLEC42***0GED2 SLEC42***0IGED2
70-100A	SLEC42***0ED2 SLEC42***0GED2 SLEC42***0IGED2

E Frame 200% Neutral

Ampere Rating	Catalogue Number
15-60A	SLEC52***0ED2 SLEC52***0GED2 SLEC52***0IGED2
70-100A	SLEC52***0ED2 SLEC52***0GED2 SLEC52***0IGED2

E Frame 4-Pole, 480 Volt, ED4 Breaker

Ampere Rating	Catalogue Number
15-60A	SLEC44***0ED4 SLEC44***0GED4 SLEC44***0IGED4
70-100A	SLEC44***0ED4 SLEC44***0GED4 SLEC44***0IGED4
110-125A	SLEC44***0ED4 SLEC44***0GED4 SLEC44***0IGED4

E Frame 200% Neutral

Ampere Rating	Catalogue Number
15-60A	SLEC54***0ED4 SLEC54***0GED4 SLEC54***0IGED4
70-100A	SLEC54***0ED4 SLEC54***0GED4 SLEC54***0IGED4
110-125A	SLEC54***0ED4 SLEC54***0GED4 SLEC54***0IGED4

E Frame 4-Pole, 600 Volt, ED6 Breaker

Ampere Rating	Catalogue Number
15-60A	SLEC46***0ED6 SLEC46***0GED6 SLEC46***0IGED6
70-100A	SLEC46***0ED6 SLEC46***0GED6 SLEC46***0IGED6
110-125A	SLEC46***0ED6 SLEC46***0GED6 SLEC46***0IGED6

E Frame 200% Neutral

Ampere Rating	Catalogue Number
15-60A	SLEC56***0ED6 SLEC56***0GED6 SLEC56***0IGED6
70-100A	SLEC56***0ED6 SLEC56***0GED6 SLEC56***0IGED6
110-125A	SLEC56***0ED6 SLEC56***0GED6 SLEC56***0IGED6

F Frame 4-Pole, 600 Volt, FXD6 Breaker

Ampere Rating	Catalogue Number
70-225A	SLFC46***0FXD6 SLFC46***0GFXD6 SLFC46***0IGFXD6
250A	SLFC462500FXD6 SLFC462500GFXD6 SLFC462500IGFXD6

F Frame 200% Neutral

Ampere Rating	Catalogue Number
70-200A	SLFC56***0FXD6 SLFC56***0GFXD6 SLFC56***0IGFXD6
225-250A	SLFC56***0FXD6 SLFC56***0GFXD6 SLFC56***0IGFXD6

J Frame 4-Pole, 600 Volt, JXD6 Breaker

Ampere Rating	Catalogue Number
200-400A④	SLJC46***0JXD6 SLJC46***0GJXD6 SLJC46***0IGJXD6

L Frame 4-Pole, 600 Volt, LXD6 Breaker

Ampere Rating	Catalogue Number
450-600A④	SLLCS46***0LXD6 SLLCS46***0GLXD6 SLLCS46***0IGLXD6

M Frame 4-Pole, 600 Volt, MXD6 Breaker

Ampere Rating	Catalogue Number
500-800A④	SLMCS46***0MXD6 SLMCS46***0GMXD6 SLMCS46***0IGMXD6

Description	Catalogue Number
Spring Kit	SXSK

NOTE: Used on 400A and larger bus plugs that require auxiliary support and that are mounted on vertical/ riser busway. Kit contains two springs (part number 32-9909-04). One kit required per bus plug. Spring kits are automatically included when 400A and larger bus plug is selected.

① Replace "***" with breaker trip rating.
Example: SLEC36**060**ED6, for 60A trip.

② All plugs shown have an IP40 rating, if IP54/55 is desired substitute "4" for "0" in position 10 (or 11 for cradle plugs):
E Frame: Ex. SLEC360604ED6
F Frame: Ex. SLFC360704FXD6
J Frame: Ex. SLJC36100**JXD6**
L Frame: Ex. SLLCS365004LXD6
M Frame: Ex. SLMCS368004MXD6

③ For the following breaker substitutions, change the catalogue number suffix:
15-60A: HHED6 Ex. SLEC36***0**HHED6**
70-100A: HHED6 Ex. SLEC36***0**HHED6**
110-125A: HHED6 Ex. SLEC36***0**HHED6**
F Frame: FD6 Ex. SLFC36***0**FD6**
F Frame: HFD6 Ex. SLFC36***0**HFD6**
J Frame: JD6 Ex. SLJC36***0**JD6**
J Frame: HJD6 Ex. SLJC36***0**HJD6**
L Frame: LD6 Ex. SLLCS36***0**LD6**
L Frame: HLD6 Ex. SLLCS36***0**HLD6**
M Frame: MD6 Ex. SLMCS36***0**MD6**
M Frame: HMD6 Ex. SLMCS36***0**HMD6**

④ 400A and larger bus plugs that require auxiliary support. See also SXSK Spring Kit.

Sentron® Bus Plugs

Bus Plugs with Current Limiting Circuit Breakers①②

Selection

E Frame 3-Pole, 600 Volt, CED6 Breaker

Ampere Rating	Catalogue Number
15-60A	SLEL36***0CED6 SLEL36***0GCED6 SLEL36***0IGCED6
70-100A	SLEL36***0CED6 SLEL36***0GCED6 SLEL36***0IGCED6
110-125A	SLEL36***0CED6 SLEL36***0GCED6 SLEL36***0IGCED6

E Frame 4-Pole, 600 Volt, CED6 Breaker

Ampere Rating	Catalogue Number
15-60A	SLEL46***0CED6 SLEL46***0GCED6 SLEL46***0IGCED6
70-100A	SLEL46***0CED6 SLEL46***0GCED6 SLEL46***0IGCED6
110-125A	SLEL46***0CED6 SLEL46***0GCED6 SLEL46***0IGCED6

E Frame 200% Neutral

Ampere Rating	Catalogue Number
15-60A	SLEL56***0CED6 SLEL56***0GCED6 SLEL56***0IGCED6
70-100A	SLEL56***0CED6 SLEL56***0GCED6 SLEL56***0IGCED6
110-125A	SLEL56***0CED6 SLEL56***0GCED6 SLEL56***0IGCED6

F Frame 3-Pole, 600 Volt, CFD6 Breaker

100-225A	SLFL36***0CFD6 SLFL36***0GCFD6 SLFL36***0IGCFD6
250A	SLFL362500CFD6 SLFL362500CGFD6 SLFL362500ICGFD6

F Frame 4-Pole, 600 Volt, CFD6 Breaker

100-225A	SLFL46***0CFD6 SLFL46***0GCFD6 SLFL46***0IGCFD6
250A	SLFL462500CFD6 SLFL462500GCFD6 SLFL462500IGCFD6

F Frame 200% Neutral

70-200A	SLFL56***0CFD6 SLFL56***0GCFD6 SLFL56***0IGCFD6
225-250A	SLFL56***0CFD6 SLFL56***0GCFD6 SLFL56***0IGCFD6

J Frame 3-Pole, 600 Volt, CJD6 Breaker

200-400A③	SLJL36***0CJD6 SLJL36***0CGJD6 SLJL36***0ICGJD6

J Frame 4-Pole, 600 Volt, CJD6 Breaker

200-400A③	SLJL46***0CJD6 — SLJL46***0GCJD6 — SLJL46***0IGCJD6 —

J Frame 200% Neutral

200A③	SLJL562000CJD6 SLJL562000GCJD6 SLJL562000IGCJD6
225-400A③	SLJLS56***0CJD6 SLJLS56***0GCJD6 SLJLS56***0IGCJD6

L Frame 3-Pole, 600 Volt, CLD6 Breaker

450-600A③	SLLLS36***0CLD6 SLLLS36***0GCLD6 SLLLS36***0IGCLD6

L Frame 4-Pole, 600 Volt, CLD6 Breaker

450-600A③	SLLLS46***0CLD6 SLLLS46***0GCLD6 SLLLS46***0IGCLD6

M Frame 3-Pole, 600 Volt, CMD6 Breaker

500-800A③	SLLLS36***0CMD6 SLLLS36***0GCMD6 SLLLS36***0IGCMD6

M Frame 4-Pole, 600 Volt, CMD6 Breaker

500-800A③	SLLLS46***0CMD6 SLLLS46***0GCMD6 SLLLS46***0IGCMD6

① Replace "***" with breaker trip rating.
Example: SLEC36**060**ED6, for 60A trip.

② All plugs shown have an IP40 rating, if IP54/55 is desired, substitute "4" for "0" in position 10 (or 11 for cradle plugs):
E Frame: Ex. SLEC360604ED6
F Frame: Ex. SLFC360704FXD6
J Frame: Ex. SLJC361004JXD6
L Frame: Ex. SLLCS365004LXD6
M Frame: Ex. SLMCS368004MXD6

③ 400A and larger bus plugs that require auxiliary support. See also SXSK Spring Kit.

Circuit Breaker Bus Plugs Dimensions and Weights

Circuit Breaker Bus Plugs, Dimensions and Weights (Enclosure only)

Ampere Rating	Dimensions Inches (mm) "A"①	"B"	"C"	"D" max.	"E"	"F"	"J"	"K"	Weight lbs (kg)
125	15.13 (384)	10.18 (259)	9.75 (248)	1.60 (41)	2.50 (64)	2.50 (64)	3.50 (89)	2.25 (57)	35 (15.87)
250	20.25 (514)	10.18 (259)	9.75 (248)	1.60 (41)	2.50 (64)	2.50 (64)	3.25 (83)	3.25 (83)	50 (22.68)
400	21.75 (552)	16.75 (425)	11.75 (298)	1.60 (41)	5.75 (146)	5.75 (146)	4.00 (102)	3.25 (83)	83 (37.64)
600	41.50 (1054)	19.75 (502)	15.75 (400)	2.31 (59)	7.00 (178)	7.75 (197)	—	—	130 (58.97)
800	41.50 (1054)	19.75 (502)	15.75 (400)	2.31 (59)	7.00 (178)	7.75 (197)	—	—	177 (80.29)

125 – 400A Bus Plugs

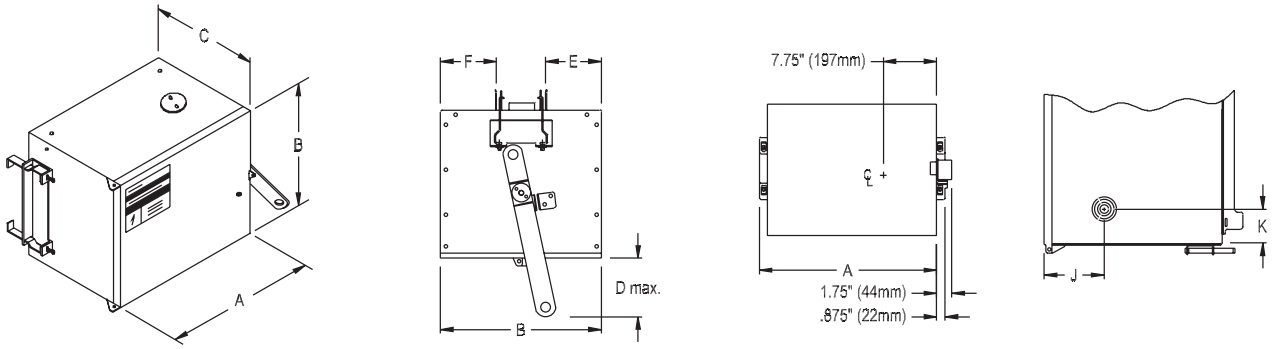

600 – 800A Bus Plugs

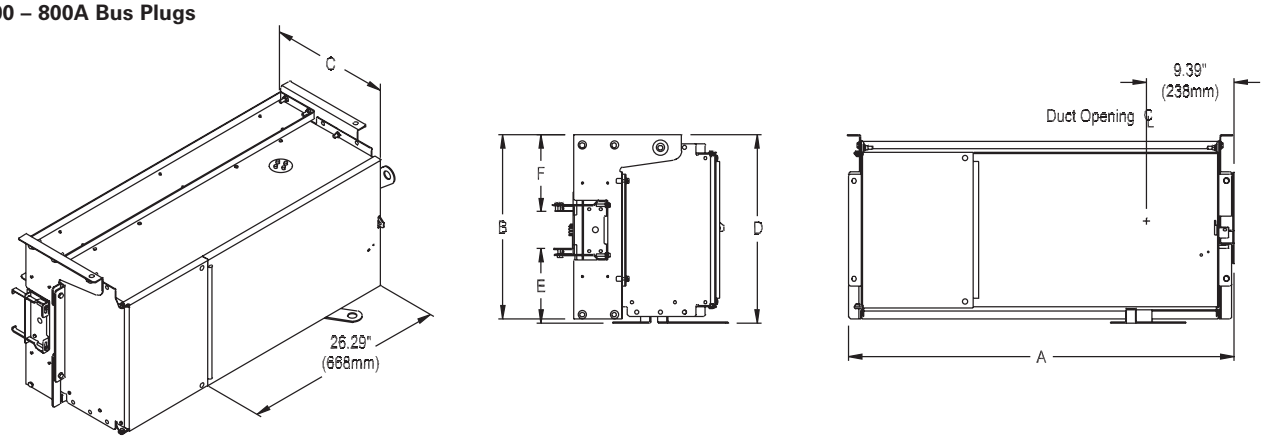

Circuit Breaker Bus Plugs, Load Lugs and Knockouts

Frame Size	Ground Lug Cu/Al	Neutral Lug Cu/Al	Phase Lug Cu/Al	Knockout Sizes In. (mm)
E Frame	#14-2	#14-2	#14-1/0	7/8 (22)
F Frame	#14-2	#6-350 kcmil	#6-350 kcmil	7/8 (22)
J Frame	#14-2	(2) #4-500 kcmil	(2) 3/0-500 kcmil	7/8 (22)
L Frame	#6-350 kcmil	(2) 3/0-500 kcmil	(2) 3/0-500 kcmil	No Knockouts
J Frame	(2) #4-500 kcmil	(3) #1-500 kcmil	(3) #1-500 kcmil	No Knockouts

① Current limiting breakers add 5-7 inches to dimension A, depending upon breaker amperage.

600A and 800A Cradle Mounted

30A – 400A

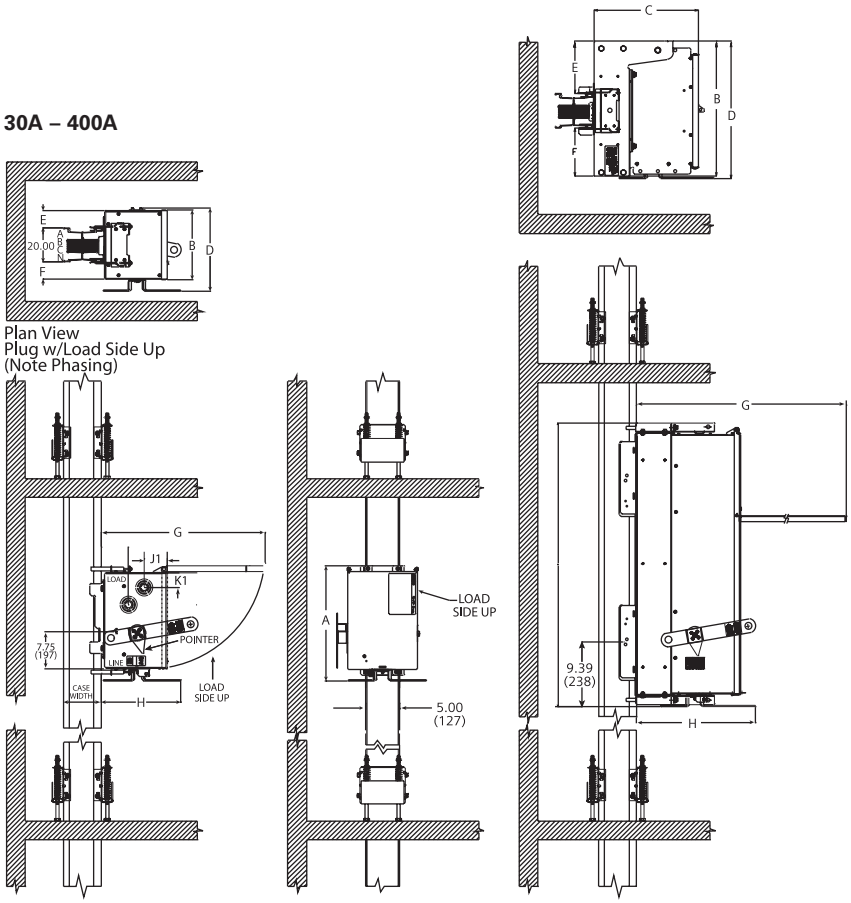

Dim. Legend	Circuit Breaker Plugs No Cradle						Circuit Breaker Plugs w/Cradle			
	E Frame Current		F Frame① Current		J Frame① Current		L Frame Current		M Frame Current	
	Standard	Limiting	Standard	Limiting	Standard	Limiting	Standard	Limiting	Standard	Limiting
A	17.00 (432)	22.00 (559)	22.00 (559)	27.00 (686)	23.50 (597)	30.50 (775)	41.50 (1054)	41.50 (1054)	41.50 (1054)	41.50 (1054)
B	10.25 (260)	10.25 (260)	10.25 (260)	10.25 (260)	16.75 (425)	16.75 (425)	19.75 (502)	19.75 (502)	19.75 (502)	19.75 (502)
C	9.75 (248)	9.75 (248)	9.75 (248)	9.75 (248)	11.75 (298)	11.75 (298)	15.75 (400)	15.75 (400)	15.75 (400)	15.75 (400)
D	12.25 (311)	12.25 (311)	12.25 (311)	12.25 (311)	18.75 (476)	18.75 (476)	20.25 (514)	20.25 (514)	20.25 (514)	20.25 (514)
E	2.50 (64)	2.50 (64)	2.50 (64)	2.50 (64)	5.75 (146)	5.75 (146)	7.75 (197)①	7.75 (197)	7.75 (197)	7.75 (197)
F	2.50 (64)	2.50 (64)	2.50 (64)	2.50 (64)	5.75 (146)	5.75 (146)	7.00 (178)	7.00 (178)	7.00 (178)	7.00 (178)
G	24.00 (610)	29.00 (737)	29.00 (737)	29.00 (737)	32.50 (826)	39.50 (1003)	41.50 (1054)	41.50 (1054)	41.50 (1054)	41.50 (1054)
H	11.25 (286)	11.25 (286)	11.25 (286)	11.25 (286)	13.50 (343)	13.50 (343)	18.00 (457)	18.00 (457)	18.00 (457)	18.00 (457)
J1	3.50 (89)	3.50 (89)	3.25 (83)	3.25 (83)	4.00 (102)	4.00 (102)	—	—	—	—
K1	2.25 (57)	2.25(57)	3.25 (83)	3.25 (83)	3.25 (83)	3.25 (83)	—	—	—	—

Legend:
A = Length of enclosure including handle
B = Height of enclosure
C = Depth of enclosure
D = Height of enclosure including optional handle location
E = Extension of plug above top of busway
F = Extension of plug below bottom of busway
G = Cover (depth) clearance for enclosure
H = Depth of enclosure from handle to edge of busway
J = Knockout/ pilot hole location (horizontal)
K = Knockout/ pilot hole location (vertical)

① 200%N Applications
- for F-Frame Rated <200A use L-Frame Dims.
- for J-Frame Rated <400A use L-Frame Dims.
- for 400A Fusible switch use 600A Switch Dims.

Catalogue Numbering System

Sentron SLVB Bus Plugs—Fusible

S	L	V	B	R	3	2	1	0	G ①

Plug Type
SL = Sentron II

Heavy Duty Fusible Switch
VB

Orientation
R = Vertical
H = Horizontal

Configuration (Poles/Wires)
3 = 3Ø3W
4 = 3Ø4W
5 = 3Ø4W 200% Neutral②

Voltage
2 = 240V
6 = 600V

Max Ampere Rating
1 = 30A
2 = 60A
3 = 100A
4 = 200A
5 = 400A
6 = 600A

IP Rating
0 = IP40
4 = IP55

Ground Designation
G = Internal Ground
IG = Isolated Ground



① The G and IG digits are used to specify internal and isolated ground respectively. Integral (housing) ground plugs do not require this digit. (Ex. SLID3610, SLEC360150ED6)
② Available through 400A only.

Fusible Bus Plugs

The Sentron SLVB Bus Plug meets all UL and CSA standards to assure reliable performance in all environments. The installer and end user will appreciate new features like Highly Visible Position Indicator, Dual Stab Busway Interlocks, Dual Cover Interlocks, and Bolt-on Mounting.

Sentron SLVB Fusible Bus Plugs are available in 30, 60, 100, 200, 400 and 600 amp ratings (compatible with H, R, T, K and J fuses).



Standard Fusible, Bus Plug Ratings

Plug-In Units Series	Max. Rating Fused Switch	Fuse Class	Fuse Kits		Max. Short Circuit Current Rating
			R Fuse Kits	T Fuse Kits	
SLVB_21	30A, 240V	H, K, R	SLR2030	—	200kA, 240V, 3ph
SLVB_61	30A, 600V	H, K, R, J	SLR6030	—	200kA, 600V, 3ph
SLVB_22	60A, 240V	H, K, R	SLR2060	—	200kA, 240V, 3ph
SLVB_62	60A, 600V	H, K, R, J	SLR6060	—	200kA, 600V, 3ph
SLVB_23	100A, 240V	H, K, R, J, T	SLR2100	SLT2100	200kA, 240V, 3ph
SLVB_63	100A, 600V	H, K, R, J, T	SLR6100	SLT6100	200kA, 600V, 3ph
SLVB_24	200A, 240V	H, K, R, J, T	SLR2200	SLT2200	200kA, 240V, 3ph
SLVB_64	200A, 600V	H, K, R, J, T	SLR6200	SLT6200	200kA, 600V, 3ph
SLVB_25	400A, 240V	H, K, R, J, T	SLR2400	SLT2400	200kA, 240V, 3ph
SLVB_65	400A, 600V	H, K, R, J, T	SLR6400	SLT6400	200kA, 600V, 3ph
SLVB_26	600A, 240V	H, K, R, J, T	SLR2600	SLT2600	200kA, 240V, 3ph
SLVB_66	600A, 600V	H, K, R, J, T	SLR6600	SLT6600	200kA, 600V, 3ph

Standard Fusible, Bus Plug Horsepower Ratings

Plug-In Units Series	Fused Switch Max. Rating	240V, 1 ph		240V, 3 ph		480V, 3 ph		600V, 3 ph	
		Std.	Max.	Std.	Max.	Std.	Max.	Std.	Max.
SLVB_21	30A, 240V	1.5	3.0	3.0	7.5	—	—	—	—
SLVB_61	30A, 600V	—	—	—	—	5.0	15.0	7.5	20.0
SLVB_22	60A, 240V	3.0	10.0	7.5	15.0	—	—	—	—
SLVB_62	60A, 600V	—	—	—	—	15.0	30.0	15.0	50.0
SLVB_23	100A, 240V	7.5	15.0	15.0	30.0	—	—	—	—
SLVB_63	100A, 600V	—	—	—	—	25.0	60.0	30.0	75.0
SLVB_24	200A, 240V	15.0	—	25.0	60.0	—	—	—	—
SLVB_64	200A, 600V	—	—	—	—	50.0	125.0	60.0	150.0
SLVB_25	400A, 240V	15.0	—	50.0	125.0	—	—	—	—
SLVB_65	400A, 600V	—	—	—	—	100.0	250.0	125.0	350.0
SLVB_26	600A, 240V	15.0	—	75.0	200.0	—	—	—	—
SLVB_66	600A, 600V	—	—	—	—	150.0	400.0	200.0	500.0

Sentron® SLVB Bus Plugs

Bus Plugs / Fusible Plugs

Ampere Rating	Catalogue Number
3-Pole, 250 Volt①	
30A	SLVB*3210 SLVB*3210G SLVB*3210IG
60A	SLVB*3220 SLVB*3220G SLVB*3220IG
100A	SLVB*3230 SLVB*3230G SLVB*3230IG
200A	SLVB*3240 SLVB*3240G SLVB*3240IG
400A②	SLVB*3250 SLVB*3250G SLVB*3250IG
600A②	SLVB*3260 SLVB*3260G SLVB*3260IG

Ampere Rating	Catalogue Number	Catalogue Number
4-Pole, 250 Volt,①		**200% Neutral①**
30A	SLVB*4210 SLVB*4210G SLVB*4210IG	SLVB*5210 SLVB*5210G SLVB*5210IG
60A	SLVB*4220 SLVB*4220G SLVB*4220IG	SLVB*5220 SLVB*5220G SLVB*5220IG
100A	SLVB*4230 SLVB*4230G SLVB*4230IG	SLVB*5230 SLVB*5230G SLVB*5230IG
200A	SLVB*4240 SLVB*4240G SLVB*4240IG	SLVB*5240 SLVB*5240G SLVB*5240IG
400A②	SLVB*4250 SLVB*4250G SLVB*4250IG	SLVB*5250 SLVB*5250G SLVB*5250IG
600A②	SLVB*4260 SLVB*4260G SLVB*4260IG	

Ampere Rating	Catalogue Number
3-Pole, 600 Volt①	
30A	SLVB*3610 SLVB*3610G SLVB*3610IG
60A	SLVB*3620 SLVB*3620G SLVB*3620IG
100A	SLVB*3630 SLVB*3630G SLVB*3630IG
200A	SLVB*3640 SLVB*3640G SLVB*3640IG
400A②	SLVB*3650 SLVB*3650G SLVB*3650IG
600A②	SLVB*3660 SLVB*3660G SLVB*3660IG

Ampere Rating	Catalogue Number	Catalogue Number
4-Pole, 600 Volt①		**200% Neutral①**
30A	SLVB*4610 SLVB*4610G SLVB*4610IG	SLVB*5610 SLVB*5610G SLVB*5610IG
60A	SLVB*4620 SLVB*4620G SLVB*4620IG	SLVB*5620 SLVB*5620G SLVB*5620IG
100A	SLVB*4630 SLVB*4630G SLVB*4630IG	SLVB*5630 SLVB*5630G SLVB*5630IG
200A	SLVB*4640 SLVB*4640G SLVB*4640IG	SLVB*5640 SLVB*5640G SLVB*5640IG
400A②	SLVB*4650 SLVB*4650G SLVB*4650IG	SLVB*5650 SLVB*5650G SLVB*5650IG
600A②	SLVB*4660 SLVB*4660G SLVB*4660IG	

Note: Replace * in catalog number with "H" for horizontal applications and "R" for riser applications.

Ground Detector And Potentializer Plug

Description	Catalogue Number
For 2 or 3-pole 240 and 480 volt service.	SLPGR3140G

Note: Available in IP40 construction only.

Description	Catalogue Number
Spring Kit	SXSK

Note: Used on 400A and larger bus plugs that require auxiliary support and that are mounted on vertical/riser busway. Kit contains two springs (part number 32-9909-04). One kit required per bus plug. Spring kits are automatically included when 400A and larger bus plug is selected.

Fuse Adapter Kits

Switch Rating	Std Fuse Class	Class R Catalogue Number	Class T Catalogue Number	Class J Catalogue Number
250V				
30A③	H, K	SLR2030		
60A③	H, K	SLR2060		
100A③	H, K	SLR2100	SLT2100	
200A③	H, K	SLR2200	SLT2200	
400A②	H, K, J	SLR2400	SLT2400	
600A②	H, K, J	SLR2600	SLT2600	SLJ2600
600V				
30A③	H, K, J	SLR6030		
60A③	H, K, J	SLR6060		
100A③	H, K, J	SLR6100	SLT6100	
200A③	H, K, J	SLR6200	SLT6200	
400A②	H, K, J	SLR6400	SLT6400	
600A②	H, K, J	SLR6600	SLT6600	SLJ6600

① All plugs shown are rated IP40; if IP55 rating is desired, substitute a "4" for "0" in position 8.

② 400A and larger bus plugs require auxiliary support. See also SXSK Spring Kit.

③ Fuse kits per page 3-21, General and Heavy Duty Safety Switch Accessories.

Horizontal Fusible Bus Plug Dimensions and Weighs (Enclosure Only)

Ampere Rating	Dimensions Inches (mm)												Weight lbs (kg)
	"A"	"B"	"C"	"D max."	"E"	"F"	"J"	"K"	"L"	"M"	"N"	"P"	
30	13.13 (333)	13.86 (352)	7.96 (202)	2.60 (66)	6.18 (156)	2.66 (67)	2.65 (67)	2.06 (52)	9.81 (249)	6.22 (157)	5.30 (134)	8.63 (219)	23.5 (10.66)
60	13.13 (333)	14.86 (377)	7.96 (202)	2.60 (66)	7.18 (182)	2.66 (67)	2.65 (67)	2.06 (52)	9.81 (249)	6.22 (157)	5.30 (134)	9.63 (244)	25.5 (11.56)
100	13.13 (333)	15.86 (402)	7.96 (202)	2.60 (66)	8.18 (207)	2.66 (67)	2.65 (67)	2.06 (52)	9.81 (249)	6.22 (157)	5.30 (134)	10.53 (267)	28.0 (12.70)
200	14.88 (377)	22.86 (580)	10.58 (268)	2.60 (66)	15.88 (403)	2.66 (67)	3.40 (86)	3.06 (78)	9.81 (249)	7.95 (201)	5.27 (134)	17.59 (447)	49.0 (22.22)
400	18.63 (473)	25.48 (647)	15.67 (398)	5.50 (140)	12.67 (322)	7.67 (195)	12.15 (309)	3.06 (78)	11.80 (299)	9.43 (239)	11.91 (303)	15.14 (385)	100.0 (254)
600	18.63 (473)	25.48 (647)	15.67 (398)	5.50 (140)	12.67 (322)	7.67 (195)	12.15 (309)	3.06 (78)	11.80 (299)	9.43 (239)	11.91 (303)	15.14 (385)	100.0 (254)

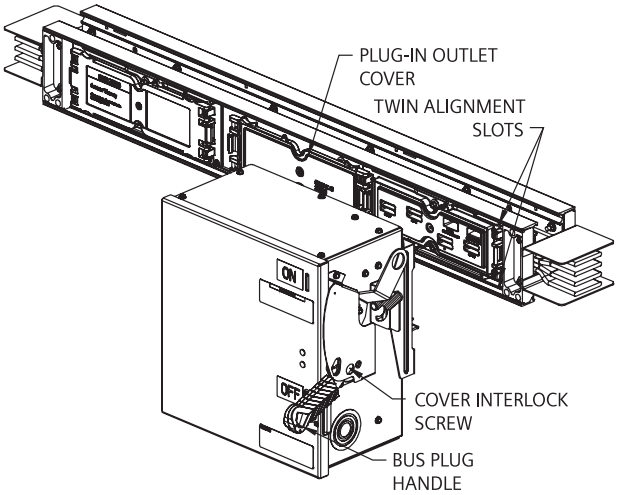

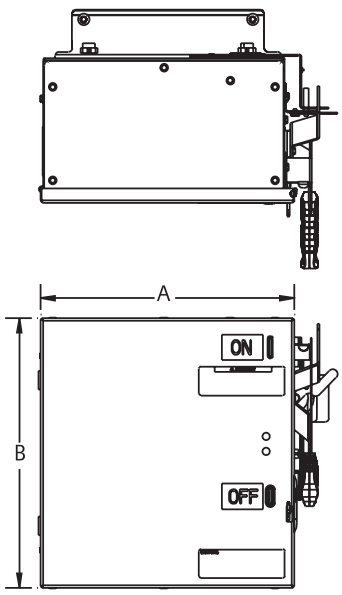

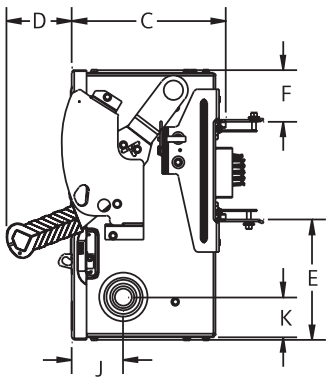

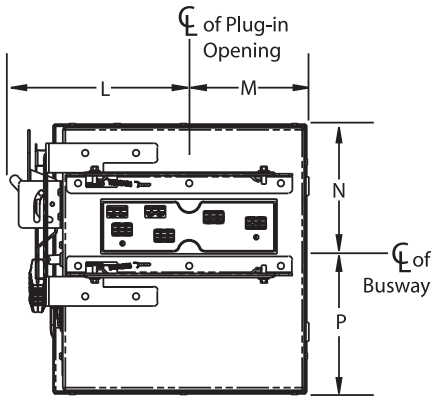

Fusible Bus Plugs Dimensions and Weights

Riser Fusible Bus Plug Dimensions and Weighs (Enclosure Only)

Ampere Rating	Dimensions Inches (mm)												Weight lbs (kg)
	"A"	"B"	"C"	"D max."	"E"	"F"	"J"	"K"	"L"	"M"	"N"	"P"	
30	10.13 (257)	13.86 (352)	7.96 (202)	5.25 (133)	2.74 (69)	2.36 (59)	2.65 (67)	2.06 (52)	8.06 (204)	5.08 (129)	7.8 (198)	6.06 (154)	23.5 (10.66)
60	10.13 (257)	14.86 (377)	7.96 (202)	5.25 (133)	2.74 (69)	2.36 (59)	2.65 (67)	2.06 (52)	8.06 (204)	2.08 (52)	7.8 (198)	7.06 (179)	25.5 (11.56)
100	11.13 (282)	15.86 (402)	7.96 (202)	5.25 (133)	7.74 (196)	3.36 (85)	2.65 (67)	2.06 (52)	8.06 (204)	6.08 (154)	7.8 (198)	8.06 (205)	28.0 (12.70)
200	14.88 (377)	22.86 (580)	10.58 (268)	5.90 (149)	5.11 (129)	4.74 (120)	3.40 (86)	3.06 (78)	10.42 (264)	7.35 (186)	9.05 (230)	13.81 (351)	49.0 (22.22)
400	18.63 (473)	25.48 (647)	15.67 (398)	5.50 (140)	6.60 (167)	7.10 (180)	12.15 (309)	3.06 (78)	11.97 (304)	9.25 (234)	13.56 (344)	13.49 (342)	100.0 (2540)
600	18.63 (473)	25.48 (647)	15.67 (398)	5.50 (140)	6.60 (167)	7.10 (180)	12.15 (309)	3.06 (78)	11.97 (304)	9.25 (234)	13.56 (344)	13.49 (342)	100.0 (2540)

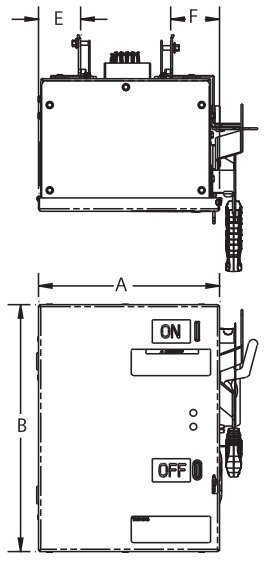

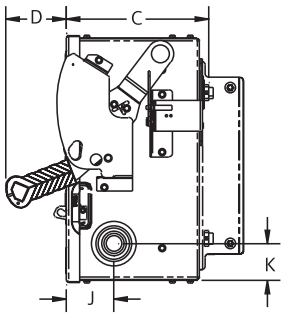

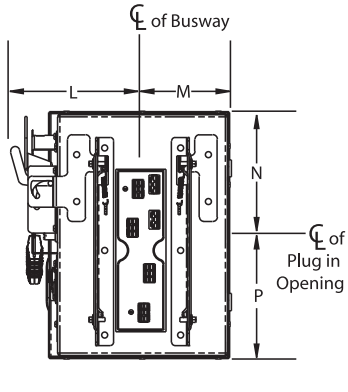

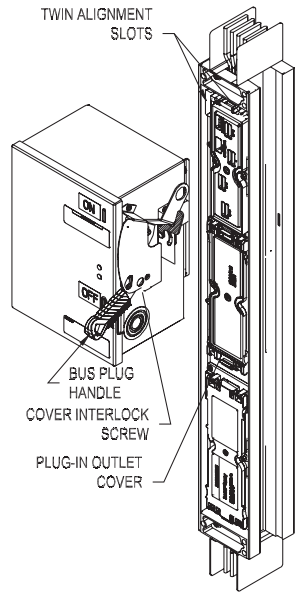

Fusible Switch Plug, Load Lugs, and Knockouts

Ampere Rating	Ground Lug Cu/Al	Neutral Lug Cu/Al	Phase Lug Cu/Al	Knockout Sizes Inches (mm)
30	#14-1/0	#14-2	#14-2	7/8 (22)
60	#14-1/0	#14-1/0	#14-2	7/8 (22)
100	#14-1/0	#14-1/0	#14-1/0	7/8 (22)
200	#14-1/0	#6-300MCM	#6-300MCM	7/8 (22)
400	(2)#6-350MCM	(2) 1/0-250MCM or (1) 1/0-750MCM	(2) 1/0-250MCM or (1) 1/0-750MCM	7/8 (22)
600	(2)#6-350MCM	(4) 1/0-250MCM or (2) 1/0-750MCM	(4) 1/0-250MCM or (2) 1/0-750MCM	7/8 (22)

Wall Clearance and Bus Plug Dimensions Horizontal (Inches/mm)

Dim.	No Cradle					
	30	60	100	200	400	600
A	13.13 (333)	13.13 (333)	13.13 (333)	14.88 (377)	18.63 (473)	18.63 (473)
B	13.86 (352)	14.86 (377)	15.86 (402)	22.86 (580)	27.00 (686)	27.00 (686)
C	7.96 (202)	7.96 (202)	7.96 (202)	10.58 (268)	15.67 (398)	15.67 (398)
D	15.89 (403)	16.68 (423)	17.68 (449)	24.66 (626)	20.00 (508)	20.00 (508)
E	6.19 (157)	7.19 (182)	8.19 (208)	15.19 (385)	12.67 (322)	12.67 (322)
F	2.67 (67)	2.67 (67)	2.67 (67)	2.67 (67)	7.67 (195)	7.67 (195)
G	20.39 (517)	20.39 (517)	20.39 (517)	24.76 (628)	33.75 (857)	33.75 (857)
H	13.09 (332)	13.09 (332)	13.09 (332)	16.55 (420)	21.17 (538)	21.17 (538)
J	2.65 (67)	2.65 (67)	2.65 (67)	3.40 (86)	12.15 (309)	12.15 (309)
K	2.06 (52)	2.06 (52)	2.06 (52)	3.06 (78)	3.06 (78)	3.06 (78)
L	2.65 (67)	2.65 (67)	2.65 (67)	2.65 (67)	2.65 (67)	2.65 (67)
M	15.07 (382)	15.07 (382)	15.07 (382)	16.82 (427)	21.00 (533)	21.00 (533)

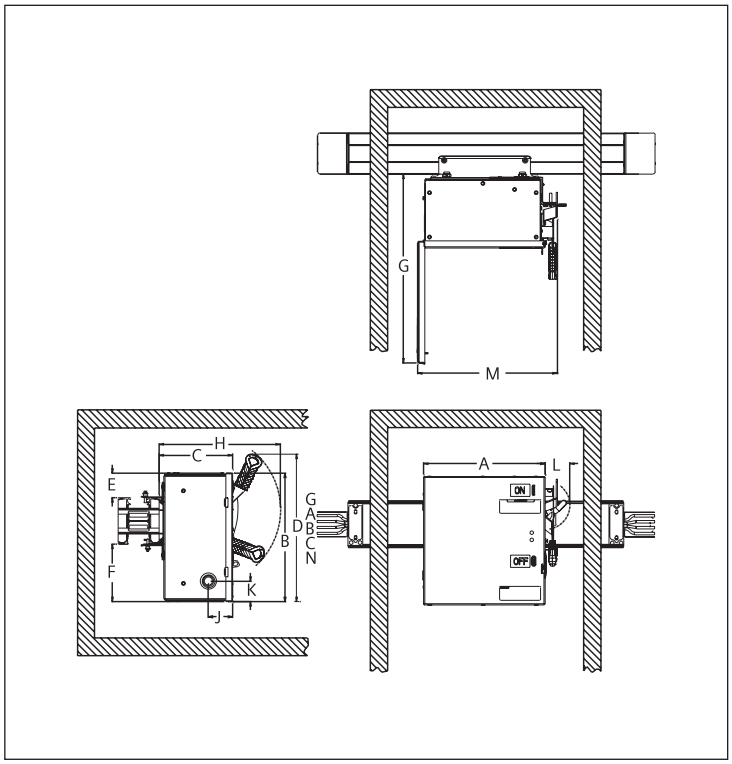

Wall Clearance and Bus Plug Dimensions Riser (Inches/mm)

Dim.	No Cradle					
	30	60	100	200	400	600
A	10.13 (237)	10.13 (257)	11.13 (282)	14.68 (372)	18.63 (473)	18.63 (473)
B	13.86 (352)	14.86 (377)	15.86 (402)	22.86 (580)	27.00 (686)	27.00 (686)
C	7.96 (202)	7.96 (202)	7.96 (202)	10.58 (268)	15.67 (398)	15.67 (398)
D	15.89 (403)	16.68 (423)	17.68 (449)	24.66 (626)	20.00 (508)	20.00 (508)
E	2.74 (69)	2.74 (69)	7.74 (196)	5.11 (129)	6.60 (167)	6.60 (167)
F	2.36 (59)	2.36 (59)	3.36 (85)	4.74 (120)	7.10 (180)	7.10 (180)
G	17.39 (441)	17.39 (441)	18.39 (467)	24.76 (628)	33.75 (857)	33.75 (857)
H	13.09 (332)	13.09 (332)	13.09 (332)	16.55 (420)	21.17 (538)	21.17 (538)
J	2.65 (67)	2.65 (67)	2.65 (67)	3.40 (86)	12.15 (309)	12.15 (309)
K	2.06 (52)	2.06 (52)	2.06 (52)	3.06 (78)	3.06 (78)	3.06 (78)
L	3.55 (90)	3.55 (90)	3.55 (90)	3.55 (90)	2.65 (67)	2.65 (67)
M	12.07 (306)	12.07 (306)	13.07 (331)	16.82 (427)	21.00 (533)	21.00 (533)

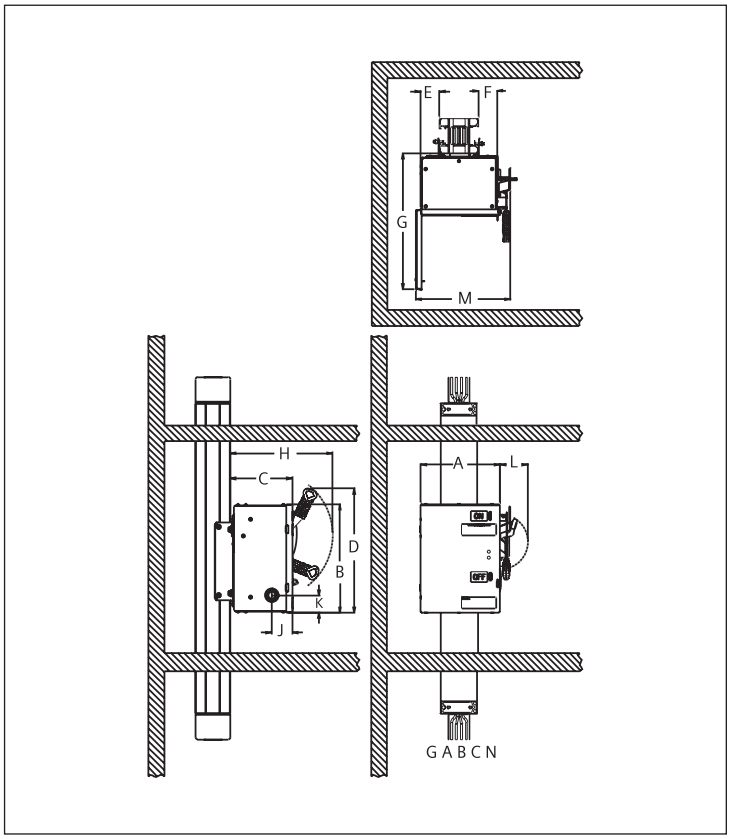

The Siemens advantage...

Siemens history of innovation and safety continues with our line of UL 1449 4th Edition SPD's. The TPS Series utilizes thermally protected MOV's specifically designed for safe operation in high fault current or sustained overvoltage conditions that can cause other SPD's to fail in an unsafe manner and damage other equipment in the distribution system. Every MOV, including N-G, is monitored. Indicator lights for each phase provide indication of loss of protection and phase loss protection. The direct bus, integral design reduces circuit impedance resulting in the lowest possible let-through voltages providing maximum protection to facility equipment and systems.

All TPS Series SPD's:

- UL 1449 4th Edition Listed, CUL, CE Mark
- Designed, tested, manufactured to ANSI/IEEE C62.42.1 – 2002, C62.41.2 – 2002, C62.45 – 2002
- Provide indication of loss of protection on each phase and phase loss
- Include all UL-required over current protection and safety coordination inside
- Prevent internally generated surges from propagating throughout a facility and externally generated surges from reaching sensitive loads

Low Exposure Applications - TPS9

- 100kA per phase
- 200kA SCCR
- 20kA nominal discharge current
- Indicator lights standard
- Individually fused, thermally protected MOV's
- Dry contacts and audible alarm optional

Medium Exposure Applications - TPS1

- 100kA – 300kA per phase
- 200kA SCCR
- 20kA nominal discharge current
- Indicator lights, audible alarm and dry contacts standard
- Individually fused, thermally protected MOV's
- EMI/RFI filtering
- Surge counter optional

High Exposure Applications - TPS6

- 400kA – 500kA per phase
- 200kA SCCR
- 20kA nominal discharge current
- Indicator lights, audible alarm and dry contacts standard
- Individually fused, thermally protected MOV's
- EMI/RFI filtering
- Surge counter optional





Sentron® SLVB Bus Plugs

Sentron SPD Bus Plugs

Catalog Number Logic

Sentron SPD Bus Plug Numbering System

S	T	P	H	4	4	G	E	0	6	2	4		

Plug Type
STP = Sentron SPD VBII

Orientation
H = Horizontal
R = Riser

Configuration (Poles/Wires)
3 = 3Ø 3W
4 = 3Ø 4W

IP Rating
4 = IP55

Ground Designation
G = Internal Ground

Voltage Code
A = 120/240V 1Ø 3W
B = 240/120V 3Ø 4W
D = 240V 3Ø 3W
E = 480Y/277V 3Ø 4W
F = 480V 3Ø 3W
G = 600V 3Ø 3W
L = 600Y/347V 3Ø 4W

TPS Model Number
01 = TPS3 01③
1L = TPS3 L1 (10 Mode)①③
06 = TPS3 06③
6L = TPS3 L6 (10 Mode)①③
09 = TPS3 09②

Surge Current (kA)

10 = 100kA per Phase	TPS3 01, TPS3 09
15 = 150kA per Phase	TPS3 L1
20 = 200kA per Phase	TPS3 01
25 = 250KA per phase	TPS3 01
30 = 300kA per Phase	TPS3 01, TPS3 L1
40 = 400kA per Phase	TPS3 06
45 = 450kA per Phase	TPS3 L6
50 = 500kA per Phase	TPS3 06

Options
TPS3 01 and TPS3 06:
R = Remote Monitor
X = Surge Counter
TPS 9:
D = Dry Contact & Audible Alarm

Notes:
① The 10 mode devices provide additional circuit protection for Line to Neutral and Neutral to Ground. The 10 modes of protection are: L1-G, L2-G, L3-G, L1-L2, L2-L3, L1-L3, L1-N, L2-N, L3-N, N-G.
② Standard features: indicator lights.
③ Standard features: indicator lights, dry contacts, audible alarm with silence switch, test button.

Horizontal SPD bus plugs dimensions and weights

Plug type	Dimensions inches (mm)						Weight lbs. (kgs)
	"A"	"B"	"C"	"D" max.	"E"	"F"	
TPS 9	13.25 (336)	13.86 (352)	7.96 (202)	2.60 (66)	6.18 (156)	2.66 (67)	30 (13.63)
TPS 1	13.25 (336)	15.86 (402)	7.96 (202)	2.60 (66)	8.18 (207)	2.66 (67)	35 (15.90)
TPS 6	13.25 (336)	19.86 (504)	7.96 (202)	2.60 (66)	12.18 (372)	2.66 (67)	38 (17.27)

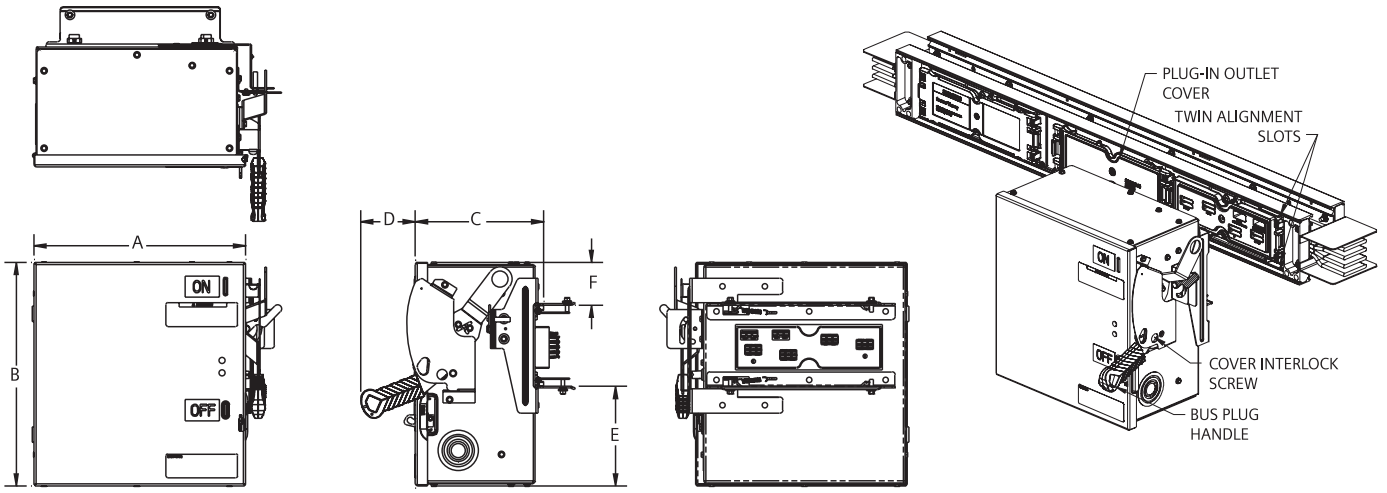

Riser SPD bus plugs dimensions and weights

Plug type	Dimensions inches (mm)						Weight lbs. (kgs)
	"A"	"B"	"C"	"D" max.	"E"	"F"	
TPS 9	10.25 (260)	13.86 (352)	7.96 (202)	5.25 (133)	2.74 (69)	2.36 (59)	25 (11.36)
TPS 1	11.25 (286)	19.36 (492)	7.96 (202)	5.25 (133)	7.74 (196)	3.36 (85)	35 (15.90)
TPS 6	15.00 (381)	22.86 (580)	10.58 (268)	5.25 (133)	5.11 (129)	4.74 (120)	45 (20.45)

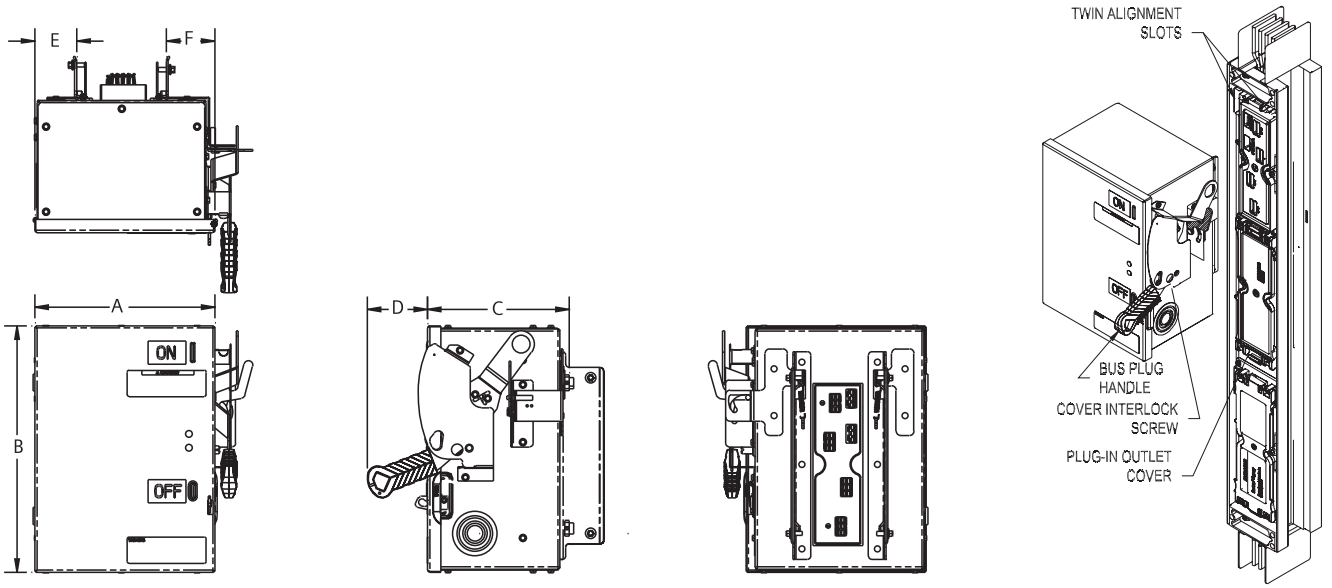

Product Overview

The Sentron 3/6 bus plug is designed for light industrial, commercial, and data center applications. Factory installed receptacles range from 10 to 100A per pole, and the bus plug allows for anywhere between 1 and 6 poles of distribution (i.e. two 3Ø receptacles per plug). This product combines plug-and-play capabilities, minimizing installation time and cost, with the option for preconfigured embedded branch circuit metering utilizing SEM3™.

Product Application

Building your metered network of Sentron 3/6 bus plugs is easy. There are two variations of metered bus plugs, simple meter plugs (child) and controller plugs (parent). Each SEM3™ controller can monitor 42 bus plug poles. Depending on the number of metered poles per bus plug in the network, one parent controller plug can monitor between 6 to 41 bus plugs. An example showing a network of seven 6-pole bus plugs is shown below (in this case there is one controller and six metered plugs). Upstream of the controller, outputs from multiple controller plugs may be consolidated at an Ethernet switch (shown below) or integrated directly into a building or site management system.

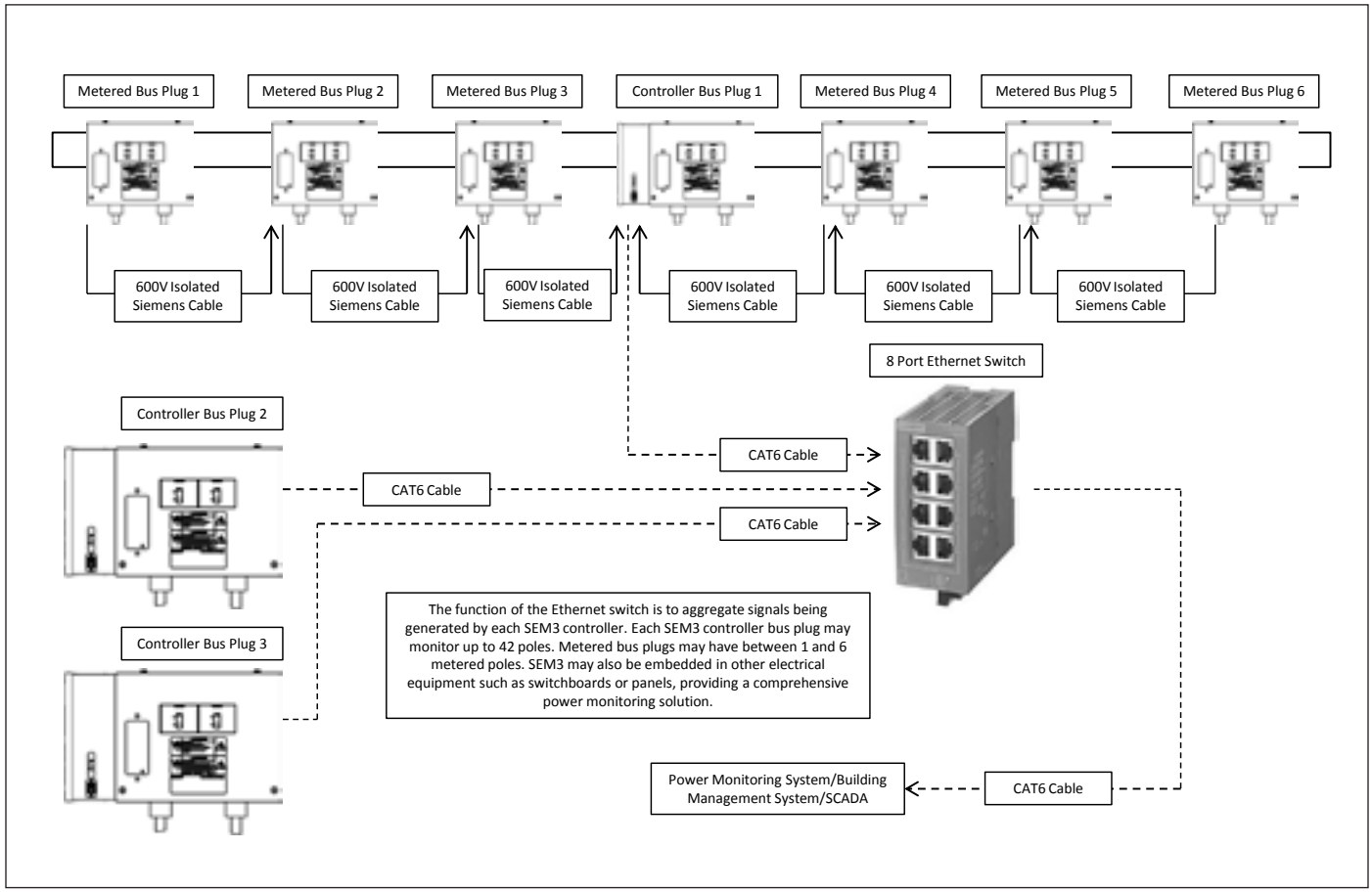

Sentron 3/6 Bus Plugs—Circuit Breaker (Installed)



Prefix
BP = Bus Plug

Type
S = Sentron

Enclosure
A =13 x 10in (60A max branch, corded receptacle)
C = 13 x 14in (60A max branch, flush mount receptacle)
D = 13 x 14in (100A max branch, any receptacle)

System Configuration
1 = 3Ø
2 = 3Ø + Internal Grd
3 = 3Ø + Isolated Grd
5 = 3Ø + Neutral
6 = 3Ø + Neutral + Internal Grd
7 = 3Ø + Neutral + Isolated Grd
9 = 3Ø + 200% Neutral
0 = 3Ø + 200% Neutral + Internal Grd
Z = 3Ø + 200%

Color
A = Graphite
G = ANSI 61
X = Other

Connection Type
0 = Enclosure Only
1 = Breaker Only
2 = Flush Mount Receptacle
3 = 3ft Corded Connector
4 = 5ft Corded Connector
5 = 7ft Corded Connector
6 = 10ft Corded Connector
7 = Custom

Number of Circuits and Phasing
A1-D4

Breaker Frame
A = BL
B = BLH
C = HBL
D = BQD
E = NGB

Device Amps
00 = No Breaker

9A = 10A	**9H** = 45A
9B = 15A	**9J** = 50A
9C = 20A	**9K** = 60A
9D = 25A	**9L** = 70A
9E = 30A	**9M** = 80A
9F = 35A	**9N** = 90A
9G = 40A	**9P** = 100A

Metering System
N = None
C = SEM3 Controller
M = SEM3 Meter Only

Meter Type
N = None
G = 3 Meter Rack, Low Accuracy Meters
H = 3 Meter Rack, High Accuracy Meters
X = 6 Meter Rack, Low Accuracy Meters
Y = 6 Meter Rack, High Accuracy Meters

Product Configurations

Field Wire-able Bus Plug

- Enclosure height of 14.20"
- Customer supplied receptacle or corded connector
- Stocking program for specific variants

Non-Metered Bus Plug

- Standard enclosure height of 10.18" at 60A (per pole) and below
- Enclosure height of 14.20" for all surface mounted receptacle variants
- Factory installed corded or surface mount receptacles/connectors

Metered Bus Plug

- Standard enclosure height of 10.18" at 60A (per pole) and below
- Enclosure height of 14.20" for all surface mounted receptacle variants
- Factory installed corded or surface mount receptacles/connectors
- Preconfigured SEM3 meter rack (slave)

Controller Bus Plug

- Standard enclosure height of 10.18" at 60A (per pole) and below
- Enclosure height of 14.20" for all surface mounted receptacle variants
- Factory installed corded or surface mount receptacles/connectors
- Preconfigured SEM3 meter rack and controller (master)

Product Configurations

Circuit	**• 1-6 poles of distribution • 10-100A per pole • 100 and 200% neutral options**
Siemens Breaker Frames	BL, BLH, HBL, BQD, NGB
Load Connection	• Field wired (with KO's), no receptacles • Surface or flush mount receptacles • Corded Connector(s) or receptacle(s) at 3, 5, 7, or 10 ft
Branch Circuit Metering (SEM3™)	• Meter only lug or meter and controller plug • 3 and 6 meter racks available • Low (1%) and high (.2%) accuracy meters available



Field Wire-able Bus Plug

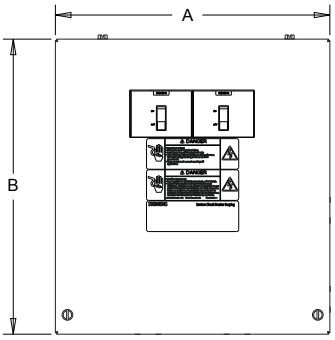

Non-Metered Bus Plug

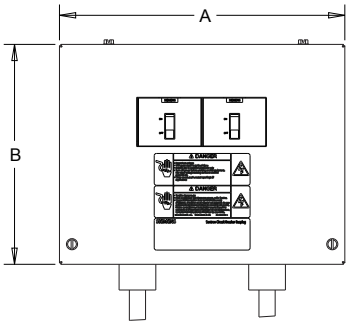

Metered Bus Plug

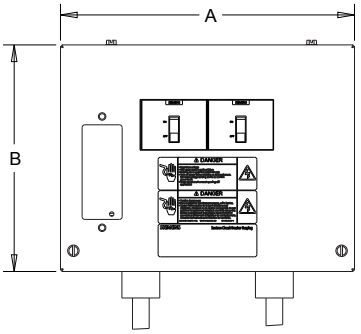

Controller Bus Plug

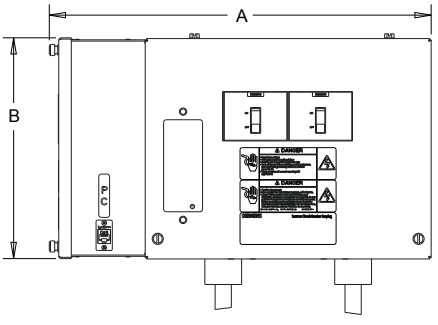

Corded Bus Plug (Non-Metered and Metered) Dimensions and Weights

Ampere Rating	Dimensions inches (mm)									
	"A"	"B"	"C"	"D".	"E"	"F"	"G"	"H"	"I"	Weight lbs. (kgs)*
10-60A	13.21 (336)	10.18 (259)	7.64 (194)	4.12 (105)	1.03 (26)	6.93 (176)	6.29 (160)	3.55 (90)	6.64 (169)	21 (9.52)
70-100A	13.21 (336)	14.20 (361)	7.64 (194)	8.12 (206)	1.03 (26)	6.93 (176)	6.29 (160)	3.55 (90)	10.64 (270)	23 (10.43)

*Approximate weight without cord of heaviest plug in amperage range.

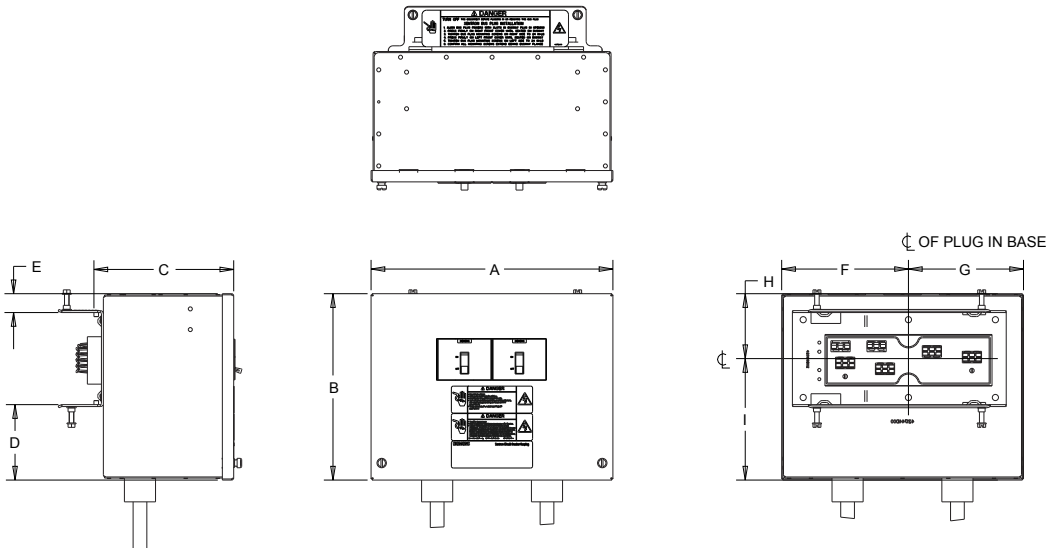

Corded Bus Plug (Controller) Dimensions and Weights

Ampere Rating	Dimensions inches (mm)									
	"A"	"B"	"C"	"D".	"E"	"F"	"G"	"H"	"I"	Weight lbs. (kgs)*
10-60A	17.64 (448)	10.20 (259)	7.64 (194)	4.12 (105)	1.03 (26)	6.93 (176)	10.71 (272)	3.55 (90)	6.64 (169)	29 (13.15)
70-100A	17.64 (448)	14.20 (361)	7.64 (194)	8.12 (206)	1.03 (26)	6.93 (176)	10.71 (272)	3.55 (90)	10.64 (270)	31 (14.06)

*Approximate weight without cord of heaviest plug in amperage range.

Surface Mount Receptacle Bus Plug (Non-Metered and Metered) Dimensions and Weights

Ampere Rating	Dimensions inches (mm)									Weight lbs. (kgs)*
	"A"	"B"	"C"	"D".	"E"	"F"	"G"	"H"	"I"	
10-100A	13.21 (336)	14.20 (361)	7.64 (194)	8.12 (206)	1.03 (26)	6.93 (176)	6.29 (160)	3.55 (90)	10.64 (270)	23 (10.43)

*Approximate weight without cord of heaviest plug in amperage range.

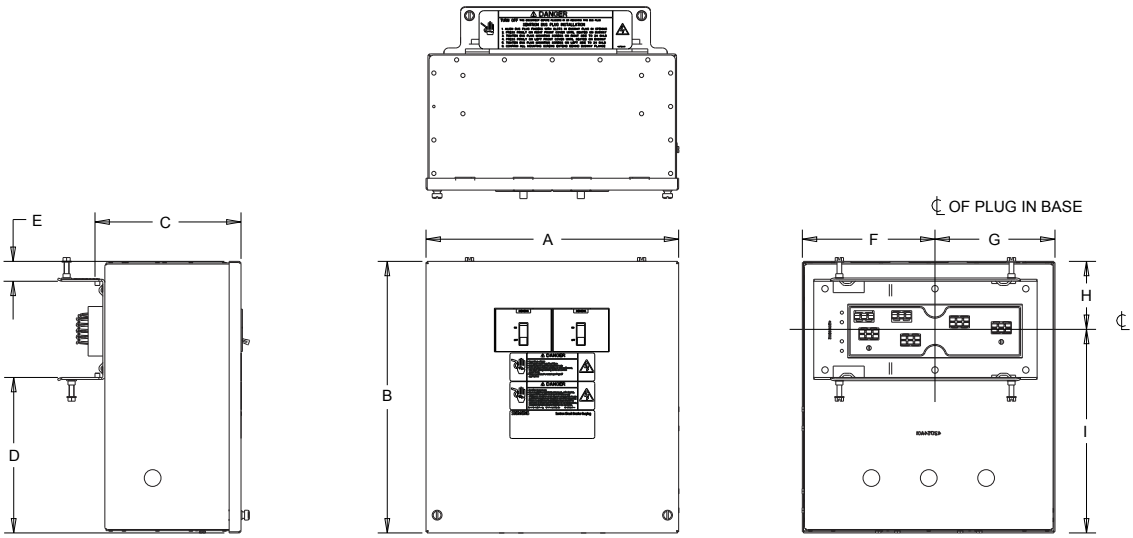

Surface Mount Receptacle Bus Plug (Controller) Dimensions and Weights

Ampere Rating	Dimensions inches (mm)									Weight lbs. (kgs)*
	"A"	"B"	"C"	"D".	"E"	"F"	"G"	"H"	"I"	
10-100A	17.64 (448)	14.20 (361)	7.64 (194)	8.12 (206)	1.03 (26)	6.93 (176)	10.71 (272)	3.55 (90)	10.64 (270)	33 (14.97)

*Approximate weight without cord of heaviest plug in amperage range.

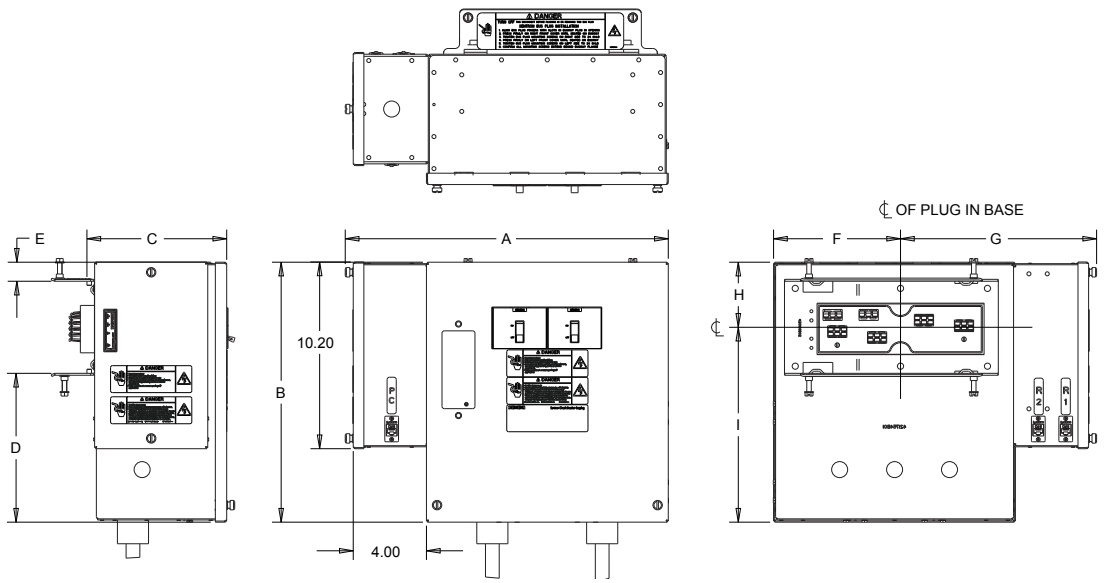

XJ-L™ HD Busway System

XJ-L HD Busway Introduction

Competitive Advantages

XJ-L HD Busway is available up to 400A. XJ-L Busway is the leading power distribution solution for demanding applications that require reliable, high quality power. XJ-L HD Busway is the optimal choice for both contractors and users concerned with designing superior electrical systems that require a high plug density and optimal space utilization.

Competitive advantages:

- Compact size – small cross section for applications where busway routing is constrained
- Joint Connection – dual spring clamp assemblies ensure reliable, maintenance-free joints
- Safety – plug-in outlets are IP2X finger safe
- Reliability – fundamental design has a 60 year history of reliability
- Service – simple snap together installation, maintenance free joints, factory stock of critical components and large distribution inventory of bus plugs ensure quick and easy serviceability
- Fittings – elbow, tee, crosses, flanged end, and tap boxes are offered in standard and custom configurations
- Compatibility – the full range of XJ-L HD bus plugs are interchangeable between 100A, 225A and 400A busway





Key features:

- Up to twelve 100A bus plugs can be installed per 10' of plug-in busway. Plug-in busway can be configured with six plug-in openings per side (standard) or twelve on one side (high density).
- Bus plugs are readily installed on energized busway and are fully interchangeable between 100, 225 and 400A configurations.
- Bus plugs are available with fusible or circuit breaker disconnects, configured with a wide variety of optional receptacles, branch circuit breakers, drop cords, etc.
- Bus bars are solid copper (98% conductivity) and tin plated for superior electrical performance and corrosion resistance (optional silver plating is also available). The solid bus bar design provides superior short circuit strength (up to 35 kA) compared to channel style conductors and cable.
- Totally enclosed steel housing is robust, guarding against incidental contact and contamination of live parts. Enclosed box design will not twist or distort during bus plug installation.
- Installation is fast and easy. Joint connections simply snap together without special tools, housing couplers, or bus connectors.
- Suitable for horizontal and vertical mounting and under-the floor applications.

XJ-L™ HD Busway System

XJ-L HD Busway

Overview

XJ-L HD Busway

XJ-L HD Busway is well known for its outstanding performance, providing convenient, cost-effective power distribution for high-tech environments, data centers, laboratories, and other applications requiring consistent, quality power distribution. Key XJ-L HD design features include optional isolated ground or 200% neutral across the entire product range.

As a result, XJ-L HD Busway is an intelligent choice for contractors and users concerned with designing superior electrical distribution systems. The compact design is ideal for limited working areas in critical power, manufacturing, laboratory test facilities, schools, hospitals, and machine shops.

With XJ-L HD Busway, you get an exclusive, optional isolated ground design that ensures clean power. Unlike bonded ground designs that may convey surges from one electrical device to another, the XJ-L HD optional isolated ground system is well suited for critical power environments. The ground bar is the same size as the phase bars, with the same ampere rating. Installation is easy, joining one XJ-L HD Busway section to another is as simple as matching ends and snapping them together. Bus bars are held securely in place by spring pressure clips located in the joint insulator. The joint is secured when the external housing plate is attached with captive screws. Thanks to built-in flexibility and a low initial cost, you also benefit from future savings when you need new equipment.

Time to add on busway for new or expanded facilities? The XJ-L Busway you installed years ago matches the XJ-L HD Busway you specify today and years from now the new busway sections, components or system-compatible bus plugs will still fit.

Dependability

With over one million feet in service, XJ-L HD Busway has a proven track record. The busway joints are easy to install and maintenance free. Solid copper bus bars and totally enclosed steel housings are designed for decades of dependable service.

Flexibility

Siemens XJ-L HD Busway is available in a wide variety of straight lengths, elbows, tees, crosses, and tap boxes that can be installed and then readily expanded or reconfigured to meet changing requirements. Custom fittings and straight lengths can be engineered to tailor the busway system to application-specific customer requirements. Bus Plugs can be installed, then relocated as required without de-energizing the busway. All XJ-L HD Bus Plugs are fully interchangeable with all XJ-L HD Busway configurations.

Cost

Siemens XJ-L HD Busway offers a lower cost solution, compared to cable and conduit, sandwich style busway or even light duty track busway. Snap together installation requires no special tools and is fast, easy and maintenance free. Solid, highly conductive bus bars minimize electrical losses and ensure long-term energy savings.

Equipment protection

Critical equipment is protected via fuse or circuit breaker plugs. Due to their proximity, the plugs provide a localized method of protection and isolated disconnection.

Space

Space in critical power/data center facilities is at a premium. XJ-L HD Busway requires less space than conventional power distribution methods such as cable and conduit.

Availability

XJ-L HD plugs are stocked to meet your quick-ship requirements. Once you factor in all the advantages, XJ-L HD is clearly the best choice for reliable, flexible, and economical power distribution for data centers, light industrial, and high tech applications.



XJ-L™ HD Busway System

XJ-L HD Busway

Specifications

XJ-L HD Busway is available in 100A, 225A and 400A ratings making it the right choice for light industrial and commercial applications where low initial startup and maintenance costs are prerequisites. XJ-L HD Busway is the most logical choice for high tech, data intensive environments, especially when isolated ground is required.

Housing

XJ-L HD Busway features a totally enclosed, non-ventilated, steel housing. The housing is covered with an electrostatically applied polyester urethane powder paint. Choice of colors: ASA#61 Gray or Graphite Gray. The paint is scratch resistant and has a 500 hour salt spray rating.

Conductors

The conductors are fabricated from 98% conductivity copper. The bars are "spaced-in-air" and held securely in the housing by the plug-in outlets and joints.

Neutral

100% neutral is available for standard 4 wire applications. A second neutral bar can be added for 200% neutral capacity.

Note: The 200% neutral bar can be utilized as Isolated Ground.

The internal ground bus is 100% rated for 100A, 60% rated for 225A, and 50% for 400A busway. Isolated ground is rated at 100% for both amperages.

Plating

The entire length of the bus bar is tin plated to ensure good electrical contact at all joint and plug tap-off points. The plating also serves to protect the bars from corrosion. Optional silver plating is available.

Plug-in base

XJ-L HD Busway features multiple plug-in locatons. The plastic, non-tracking outlets are located on 20 or 9.75 inch centers and support the bus bars providing bracing during short circuit conditions. The plug-in outlets are IP2X (finger safe).

Joint connection

Busway sections are connected via a maintenance-free, spring pressure joint. The busway ends are easily aligned and bus bar ends are held securely in place by spring pressure clips located in the joint insulator. The housings are connected via external housing plates and captive screws.

Bus plugs

There are twleve plug-in outlets on each 10 foot (3.048 m) section, six openings on 5 foot (1.524 m) sections and two outlets on 2 foot (.616 m) sections. Bus plugs are available with amperages ranging from 15A to 200A. Bus plugs feature circuit breakers or fusible switch disconnects.

Testing

Each piece of XJ-L HD Busway is factory tested prior to shipment. A dielectric test is performed to ensure product integrity. XJ-L HD Busway is manufactured and inspected in accordance to an ISO 9001 registered Quality Management System.

Standards

XJ-L HD Busway products meet the following standards:
UL 857
NEMA BU1
CSA C22.2

Ratings

Amperage:	100A, 225A and 400A
Voltage:	600 VAC max①
Short circuit:	100A – 10kAIC
	225A – 22kAIC
	400A – 35kAIC





R,X,Z and voltage drop

Ampere rating	Bus bar width x .125 in. (3.2 mm) thick	Ohm x 10^{-3} per 100 ft. Line to neutral			Voltage drop – concentrated loads, line-to-line per 100 ft. at 100% rated load, 35°C ambient power factor							
		R	X	Z	0.3	0.4	0.5	0.6	0.7	0.8	0.9	1.0
100	0.50 (13.0)	1.67	8.71	1.88	2.30	2.54	2.75	2.94	3.10	3.21	3.25	2.89
225	1.00 (25.4)	8.20	4.08	9.16	2.48	2.74	2.98	3.19	3.37	3.51	3.57	3.20
400	2.13 (54.1)	4.27	3.01	5.23	2.88	3.10	3.29	3.44	3.56	3.62	3.57	2.96

① 225A three phase four or five wire has 277/480V max

XJ-L™ HD Busway System

Straight Sections

Plug-in section

												Plug-in Busway Only	
Prefix	Type	Fitting Type				Amp	Configuration	Color	Plug-In Location	Plug-In Spacing
BW	**J**	**P**	**1**	**2**	**0**	**1**	**6**	**G**	**L**	**2**
		Length: **024** = 24 inches **060** = 60 inches **120** = 120 inches				**1** = 100 **2** = 225 **4** = 400	**1** = 3Ø **2** = 3Ø + Internal Grd **3** = 3Ø + Isolated Grd **4** = 3Ø + Internal Grd + Isolated Grd **5** = 3Ø + Neutral **6** = 3Ø + Neutral + Internal Grd **7** = 3Ø + Neutral + Isolated Grd **8** = 3Ø + Neutral + Internal Grd + Isolated Grd **9** = 3Ø + 200% Neutral **0** = 3Ø + 200% Neutral + Internal Ground	**A** = Graphite **G** = ANSI 61 **X** = Other	**L** = Left Side Only **R** = Right Side Only **S** = Dual Side	**1** = 20″ Dual Side① **2** = 9.75″ Single Side②

XJ-L HD

Plug-in

Notes:
① Use for Plug-in Length = "S"
② Use for Plug-in Length = "L" or "R"

Plug-in sections

Available in 10 foot (3.048 m), 5 foot (1.524 m) or 2 foot (.616 m) standard plug-in lengths, XJ-L HD Busway offers layout flexibility to meet custom requirements. Plug-in busway can be configured with six plug-in openings per side or twelve on one side.

Feeder Section

Prefix	Type	Fitting Type				Amp	Configuration	Color
BW	**J**	**F**	**1**	**2**	**0**	**1**	**6**	**G**
		Length in inches, Ex. 2′ 3″ = **024** Feeder lengths available from 16″ (**016**) up to 10′ 0″ (**120**)				**1** = 100 **2** = 225 **4** = 400	**1** = 3Ø **2** = 3Ø + Internal Grd **3** = 3Ø + Isolated Grd **4** = 3Ø + Internal Grd + Isolated Grd **5** = 3Ø + Neutral **6** = 3Ø + Neutral + Internal Grd **7** = 3Ø + Neutral + Isolated Grd **8** = 3Ø + Neutral + Internal Grd + Isolated Grd **9** = 3Ø + 200% Neutral **0** = 3Ø + 200% Neutral + Internal Ground	**A** = Graphite **G** = ANSI 61 **X** = Other

XJ-L HD

Feeder

Feeder Sections

Feeder busway carries the current of the busway system from the supply source. Feeder busway does not have plug-in outlets. Feeder busway is available in custom lengths from 16.00 in (406mm) to 120.00 in (3048mm). Feeder sections are available as Indoor.

XJ-L HD Busway also features an exclusive rotating cover plate to facilitate inspection of the joints. The light weight design of the busway and plugs makes the installation of XJ-L HD Busway quick and trouble-free.

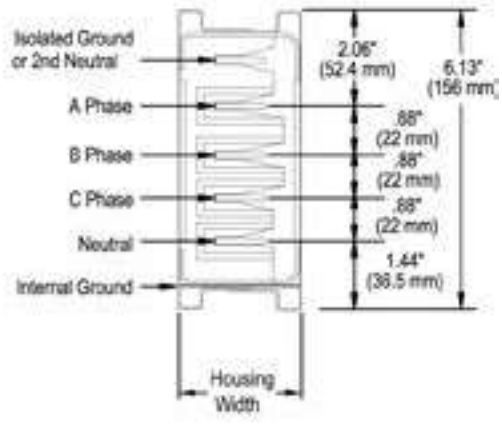



XJ-L™ HD Busway System

Straight Sections

Plug-in Section (Dual Side)

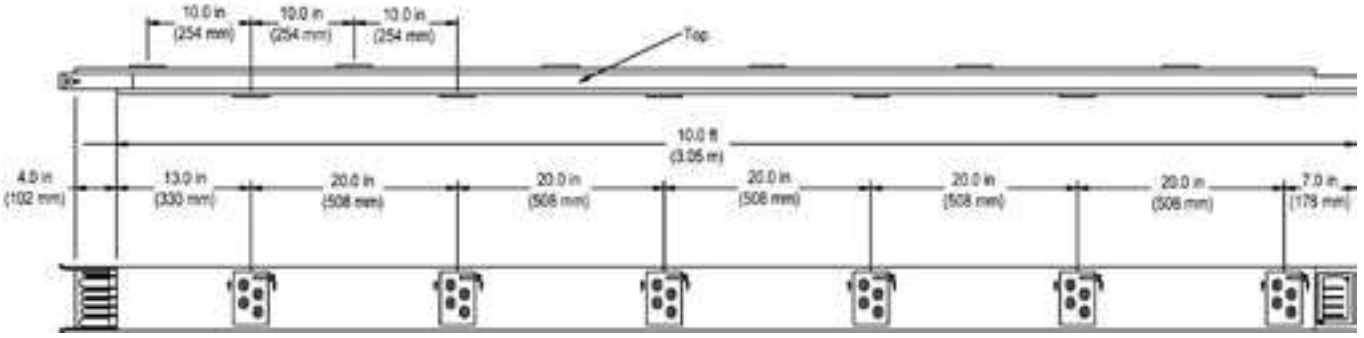

Plug-in Section (Single Side–Right hand configuration shown)

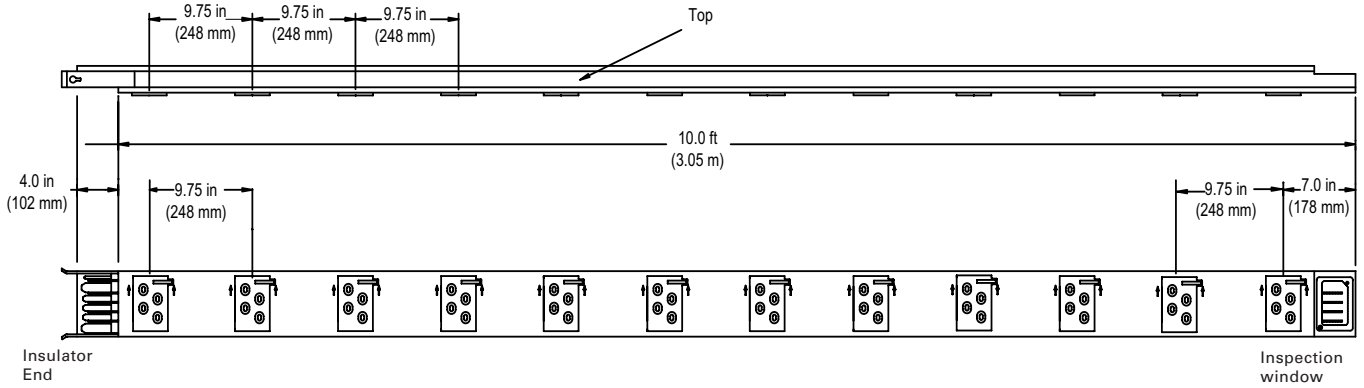

Plug-in Section

Ampere Rating	Bus Bar Material	Bar Thickness	Bar Width	Housing Width	Housing Height	Max Voltage	Short Circuit Rating	Length Ft (M)	3 Pole		4 Pole	
									Model Number①	Wgt. (lb)	Model Number①	Wgt. (lb)
100	Copper	.125 (3.2)	.5 (13)	2.0 (51)	6.13 (156)	600V	10kA	10.0 (3.05)	**BWJP12011GS1**	42	**BWJP12015GS1**	45
100	Copper	.125 (3.2)	.5 (13)	2.0 (51)	6.13 (156)	600V	10kA	5.0 (1.52)	**BWJP06011GS1**	21	**BWJP06015GS1**	23
100	Copper	.125 (3.2)	.5 (13)	2.0 (51)	6.13 (156)	600V	10kA	2.0 (.61)	**BWJP02411GS1**	8	**BWJP02415GS1**	9
225	Copper	.125 (3.2)	1.0 (25)	2.5 (64)	6.13 (156)	600V	22kA	10.0 (3.05)	**BWJP12021GS1**	56	**BWJP12025GS1**	62
225	Copper	.125 (3.2)	1.0 (25)	2.5 (64)	6.13 (156)	600V	22kA	5.0 (1.52)	**BWJP06021GS1**	28	**BWJP06025GS1**	30
225	Copper	.125 (3.2)	1.0 (25)	2.5 (64)	6.13 (156)	600V	22kA	2.0 (.61)	**BWJP02421GS1**	10	**BWJP02425GS1**	12
400	Copper	.125 (3.2)	2.12 (54)	3.6 (92)	6.13 (156)	600V	35kA	10.0 (3.05)	**BWJP12041GS1**	69	**BWJP12045GS1**	79
400	Copper	.125 (3.2)	2.12 (54)	3.6 (92)	6.13 (156)	600V	35kA	5.0 (1.52)	**BWJP06041GS1**	35	**BWJP06045GS1**	40
400	Copper	.125 (3.2)	2.12 (54)	3.6 (92)	6.13 (156)	600V	35kA	2.0 (.61)	**BWJP02441GS1**	15	**BWJP02445GS1**	17

① Model Numbers Effective Aug 2011

Feeder Section

Ampere Rating	Bus Bar Material	Bar Thickness	Bar Width	Housing Width	Housing Height	Max Voltage	Short Circuit Rating	Length In. (mm)	3 Pole		4 Pole	
									10' Model Number①	Wgt. (lb/ft)	10' Model Number①	Wgt. (lb/ft)
100	Copper	.125 (3.2)	.5 (13)	2.0 (51)	6.13 (156)	600V	10kA	16.0-120.0 (406 - 3048)	**BWJF12011GS1**	4.2	**BWJP12015GS1**	4.5
225	Copper	.125 (3.2)	1.0 (26)	2.5 (64)	6.13 (156)	600V	22kA		**BWJF12021GS1**	5.6	**BWJP12025GS1**	6.2
400	Copper	.125 (3.2)	2.12 (54)	3.6 (92)	6.13 (156)	600V	35kA		**BWJF12041GS1**	6.9	**BWJP12045GS1**	7.9

XJ-L™ HD Busway System

Elbows

Fittings

Prefix	Type	Fitting Type				Amp	Configuration	Color
BW	J	E	L	E	L	1	7	A
	XJ-L HD	E	L	E = Edge	L = Left	1 = 100 2 = 225 4 = 400	1 = 3Ø 2 = 3Ø + Internal Grd 3 = 3Ø + Isolated Grd 4 = 3Ø + Internal Grd + Isolated Grd 5 = 3Ø + Neutral 6 = 3Ø + Neutral + Internal Grd 7 = 3Ø + Neutral + Isolated Grd 8 = 3Ø + Neutral + Internal Grd + Isolated Grd 9 = 3Ø + 200% Neutral 0 = 3Ø + 200% Neutral + Internal Ground	A = Graphite G = ANSI 61 X = Other
	Elbow			F = Flat	R = Right			

Flat elbows

Right hand or left hand XJ-L HD Busway system 90 degree flat elbows are available. When specifying be sure to use the proper catalog number suffix to identify the required fitting.

Edge elbows

Right hand or left hand XJ-L HD Busway system 90 degree edge elbows are available. When specifying, be sure to use the proper catalog number suffix to identify the required fitting.

Flat Elbow

Ampere Rating	Poles	Model Number Right	Model Number Left
100	3	**BWJELFR11G**	**BWJELFL11G**
100	4	**BWJELFR15G**	**BWJELFL15G**
225	3	**BWJELFR21G**	**BWJELFL21G**
225	4	**BWJELFR25G**	**BWJELFL25G**
400	3	**BWJELFR41G**	**BWJELFL41G**
400	4	**BWJELFR45G**	**BWJELFL45G**

Edge Elbow

Ampere Rating	Poles	Model Number Right	Model Number Left
100	3	**BWJELER11G**	**BWJELEL11G**
100	4	**BWJELER15G**	**BWJELEL15G**
225	3	**BWJELER21G**	**BWJELEL21G**
225	4	**BWJELER25G**	**BWJELEL25G**
400	3	**BWJELER41G**	**BWJELEL41G**
400	4	**BWJELER45G**	**BWJELEL45G**

Flat right elbow shown

Insulator end



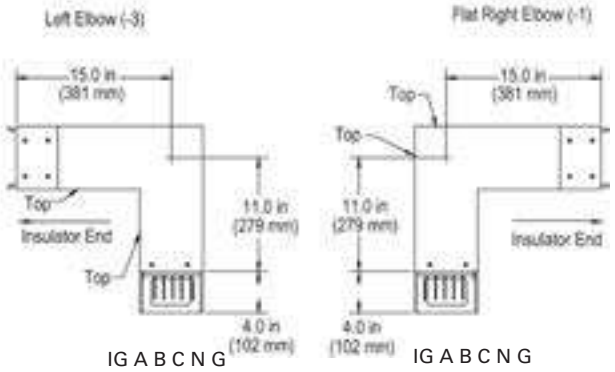

Edge right elbow shown

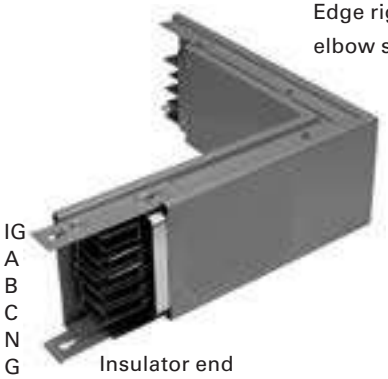

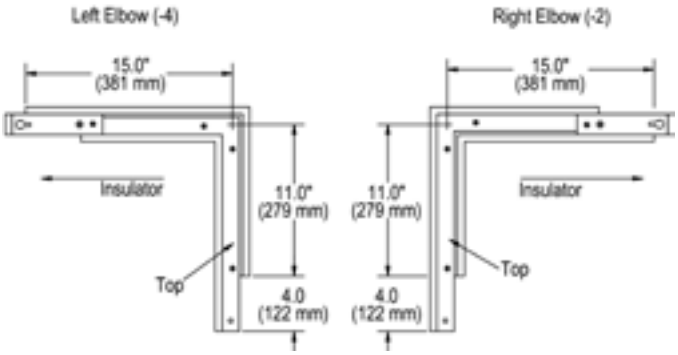

XJ-L™ HD Busway System

Tees and Crosses

Fittings

Prefix	Type	Fitting Type				Amp	Configuration	Color
BW	J	C	R	E	2	1	7	A
XJ-L HD		C	R	E = Edge	2	1 = 100 2 = 225 4 = 400	1 = 3Ø 2 = 3Ø + Internal Grd 3 = 3Ø + Isolated Grd 4 = 3Ø + Internal Grd + Isolated Grd 5 = 3Ø + Neutral 6 = 3Ø + Neutral + Internal Grd 7 = 3Ø + Neutral + Isolated Grd 8 = 3Ø + Neutral + Internal Grd + Isolated Grd … Neutral … Neutral + Internal Ground	A = Graphite G = ANSI 61 X = Other
Cross								

Cross

Crosses are fittings used to interconnect two busway runs which are located at right angle to each other.

Cross

Ampere Rating	Poles	Model Number
100	3	BWJCRE211G
100	4	BWJCRE215G
225	3	BWJCRE221G
225	4	BWJCRE225G
400	3	BWJCRE241G
400	4	BWJCRE245G

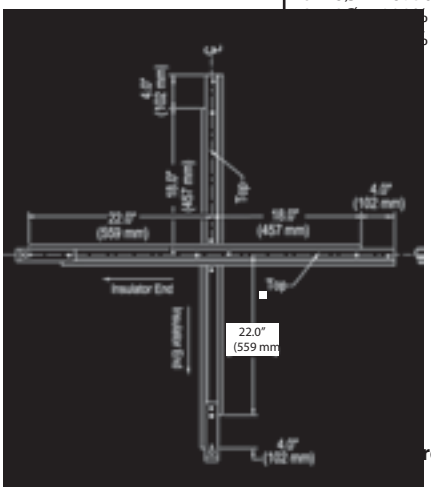

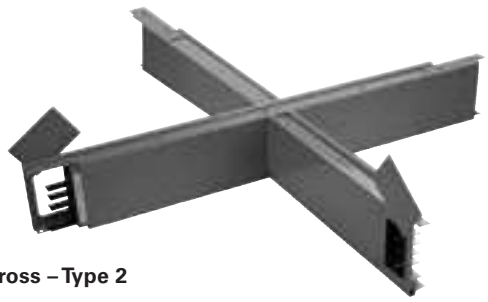

…ross – Type 2

Fittings

Prefix	Type	Fitting Type				Amp	Configuration	Color
BW	J	T	E	E	2	1	7	A
XJ-L HD		T	E	E = Edge	2,4	1 = 100 2 = 225 4 = 400	1 = 3Ø 2 = 3Ø + Internal Grd 3 = 3Ø + Isolated Grd 4 = 3Ø + Internal Grd + Isolated Grd 5 = 3Ø + Neutral 6 = 3Ø + Neutral + Internal Grd 7 = 3Ø + Neutral + Isolated Grd 8 = 3Ø + Neutral + Internal Grd + Isolated Grd 9 = 3Ø + 200% Neutral 0 = 3Ø + 200% Neutral + Internal Ground	A = Graphite G = ANSI 61 X = Other
Tee								

Tee

Tees permit a second run of busway to extend at right angles to a straight busway run.

Tees

Ampere Rating	Poles	Model Number	Model Number
100	3	BWJTEE211G	BWJTEE411G
100	4	BWJTEE215G	BWJTEE415G
225	3	BWJTEE221G	BWJTEE421G
225	4	BWJTEE225G	BWJTEE425G
400	3	BWJTEE241G	BWJTEE441G
400	4	BWJTEE245G	BWJTEE445G

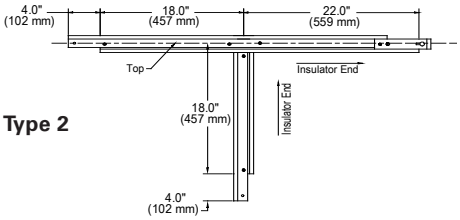

Tee – Type 2

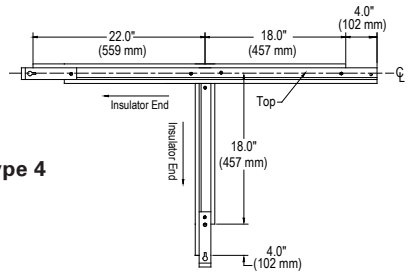

Tee – Type 4



Right Hand Shown

13-70 Siemens Canada Limited Power Product Catalogue

XJ-L™ HD Busway System

Tap Boxes

Center Tap Boxes

									Tap Box Only②			
Prefix	Type	Fitting Type				Amp	Config.	Color	Tap Box Steel	Lug opt.	Meter	Meter Surface
BW	J	C	T	L	N	2	4	A	S	A	1	N
				L = Left (rear) **R** = Right (front)		**1** = 100 **2** = 225 **4** = 400		**A** = Graphite **G** = ANSI 61 **X** = Other	**S** = Standard **X** = Custom / Other		**N** = None **1** = PAC3200 **2** = PAC3100 **X** = Other	**N** = None / NA **L** = Left **R** = Right (Inspection Cover Side) **X** = Other

XJ-L HD → **C** **T** **N**

Center Tap Box

1 = 3Ø
2 = 3Ø + Internal Grd
3 = 3Ø + Isolated Grd
4 = 3Ø + Internal Grd + Isolated Grd
5 = 3Ø + Neutral
6 = 3Ø + Neutral + Internal Grd
7 = 3Ø + Neutral + Isolated Grd
8 = 3Ø + Neutral + Internal Grd + Isolated Grd
9 = 3Ø + 200% Neutral
0 = 3Ø + 200% Neutral + Internal Ground

A = Std Mech Lug
B = 1.75 Dual Hole (No Lug)
X = Custom / Other①
D = Extended Box with 500MCM Mechanical

Notes:
① Use X for Tap Box Steel
② Not required for Flanged End. Leave fields blank

Center Cable Tap Box

Center tap boxes are non-fusible devices utilized to feed to or take off power from the busway run. When loads served by the busway run do not require over-current protection, center tap boxes may be used. If the application requires additional wiring bending space, extended center tap boxes are available. Center tap boxes are an actual part of the busway run and require a space of 32 in. (810 mm) for installation.



Right Hand Shown

Figure 1
Right

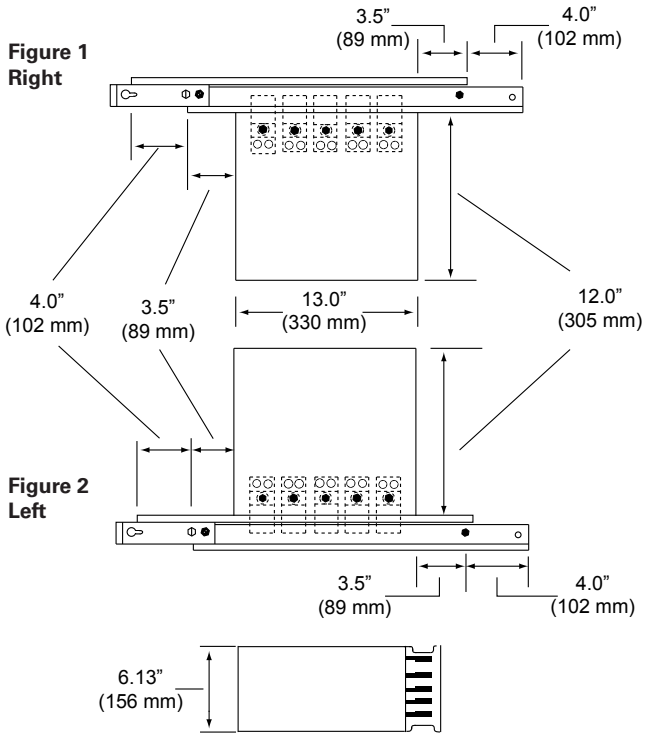

Figure 2
Left

Center Tap Box

Ampere Rating	Poles	Model Number Right Connected Fig 1	Model Number Left Connected Fig 2	Teminals Provided Qty/Pole and Size Cu/Al wire
225	3	**BWJCTRN21GSANN**	**BWJCTLN21GSANN**	(1) 350MCM - #6
225	4	**BWJCTRN25GSANN**	**BWJCTLN25GSANN**	(1) 350MCM - #6
400	3	**BWJCTRN41GSANN**	**BWJCTLN41GSANN**	(2) 350MCM - #6
400	4	**BWJCTRN45GSANN**	**BWJCTLN45GSANN**	(2) 350MCM - #6

XJ-L™ HD Busway System

Tap Boxes

End Tap Boxes

									Tap Box Only②			
Prefix	Type	Fitting Type				Amp	Config.	Color	Tap Box Steel	Lug opt.	Meter	Meter Surface
BW	**J**	**E**	**T**	**B**	**R**	**2**	**4**	**A**	**S**	**A**	**1**	**R**
	XJ-L HD	**E**	**T**	**B**	**L** = Left **R** = Right	**1** = 100 **2** = 225 **4** = 400		**A** = Graphite **G** = ANSI 61 **X** = Other	**S** = Standard **X** = Custom / Other		**N** = None **1** = PAC3200 **2** = PAC3100 **X** = Other	**N** = None / NA **L** = Left **R** = Right (Inspection Cover Side) **X** = Other
	End Tap Box											

1 = 3Ø
2 = 3Ø + Internal Grd
3 = 3Ø + Isolated Grd
4 = 3Ø + Internal Grd + Isolated Grd
5 = 3Ø + Neutral
6 = 3Ø + Neutral + Internal Grd
7 = 3Ø + Neutral + Isolated Grd
8 = 3Ø + Neutral + Internal Grd + Isolated Grd
9 = 3Ø + 200% Neutral
0 = 3Ø + 200% Neutral + Internal Ground

A = Std Mech Lug
B = 1.75 Dual Hole (No Lug)
X = Custom / Other①
D = Extended Box with 500MCM Mechanical

Notes:
① Use X for Tap Box Steel
② Not required for Flanged End. Leave fields blank

End Tap Box

End tap boxes are devices used to connect cable and conduit to the end of a busway run or where busway runs connect without the need for over-current protection. End tap boxes may be installed at the end or beginning of a run.

Tap boxes can be configured with surge protection and current monitoring devices.





Right Hand Shown

End Tap Box

Ampere Rating	Poles	Model Number	Teminals Provided Qty/Pole and Size Cu/Al wire
100	3	**BWJETBR11GS**	(1) 1/0 - #14
100	4	**BWJETBR15GS**	(1) 1/0 - #14
225	3	**BWJETBR21GS**	(1) 350MCM - #6
225	4	**BWJETBR25GS**	(1) 350MCM - #6
400	3	**BWJETBR41GS**	(2) 350MCM - #6
400	4	**BWJETBR45GS**	(2) 350MCM - #6

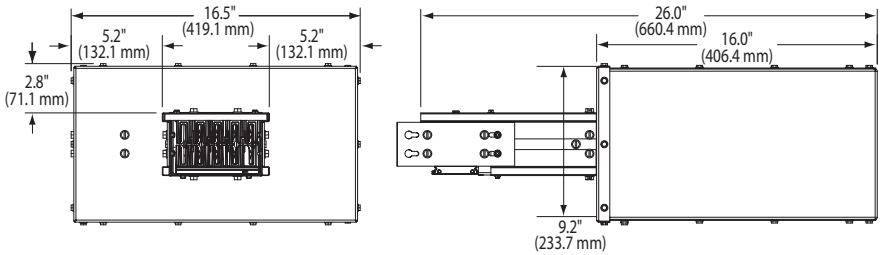

XJ-L™ HD Busway System

Flanged Ends

Flanged End

Prefix	Type	Fitting Type				Amp	Config.	Color
BW	J	F	R	N	N	2	4	A

XJ-L HD

Flanged End

F

E = Std.
R = Nema
X = Other

N N

1 = 100
2 = 225
4 = 400

1 = 3Ø
2 = 3Ø + Internal Grd
3 = 3Ø + Isolated Grd
4 = 3Ø + Internal Grd + Isolated Grd
5 = 3Ø + Neutral
6 = 3Ø + Neutral + Internal Grd
7 = 3Ø + Neutral + Isolated Grd
8 = 3Ø + Neutral + Internal Grd + Isolated Grd
9 = 3Ø + 200% Neutral
0 = 3Ø + 200% Neutral + Internal Ground

A = Graphite
G = ANSI 61
X = Other

Flanged end

Flanged ends are used to connect busway to switchboards. Flanged ends come complete with bus bar extensions to facilitate the making of electrical connections.

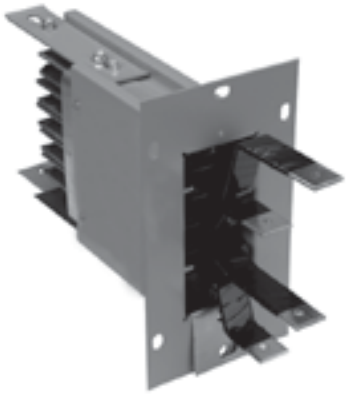

Flanged end

Ampere Rating	Poles	Model Number
100	3	**BWJFENN11GS**
100	4	**BWJFENN15GS**
225	3	**BWJFENN21GS**
225	4	**BWJFENN25GS**
400	3	**BWJFENN41GS**
400	4	**BWJFENN45GS**

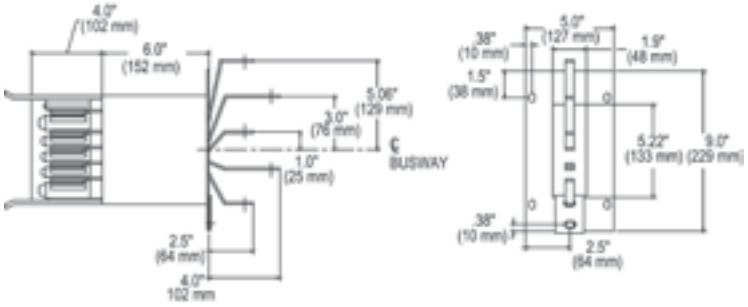

Busway hanger

XH2 and XH3 hangers are used to support XJ-L HD Busway and can be used with customer supplied rods up to 3/8 inch in diameter. Hangers are adaptable for wall mounting or ceiling suspension arrangements, either edge or flat. Custom mounting solutions available upon request.

Busway Hanger

Ampere Rating	Model Number	Dimn A in. (mm)
100	**BWJH0011G**	2.25 (57)
225	**BWJH0012G**	2.75 (69)
400	**BWJH0014G**	4 (101)

Tip: Bus plug access may be restricted by hangers or drop rods. This should be considered in the system layout.

Hangers

Prefix	Type	Fitting Type				Amp	Color
BW	**J**	**H**	**0**	**0**	**1**	**1**	**G**

XJ-L HD

Hanger → **H**

001 = Singe Drop Rod (XH style)
002 = Side Mount for strut channel①
003 = Saddle Mount for strut channel①
004 = Pole Mount①
005 = Dual Drop Rod Saddle①
006 = Dual/Single Drop Rod Frame
XXX = Other①

1 = 100
2 = 225
4 = 400

A = Graphite
G = ANSI 61
X = Other

Notes:
① MTO-E Custom Product

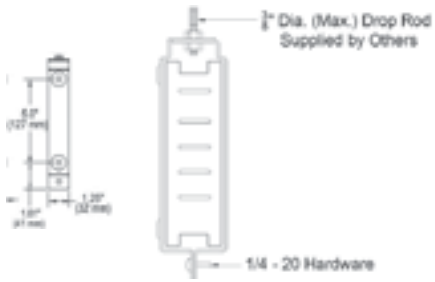

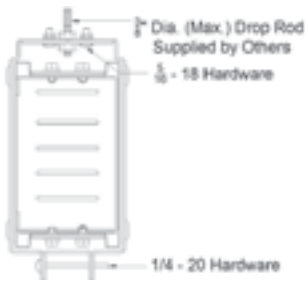

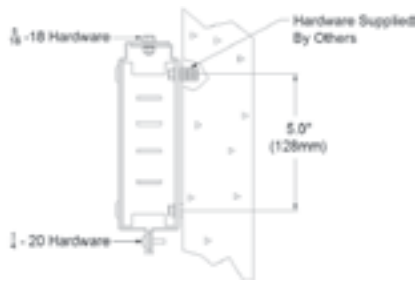



End closer

An end closer is used to terminate busway runs. To extend the run, simply remove the end closer and add new sections as needed.



End Closer

Ampere Rating	Model Number	Dimn. A in (mm)	Dimn. B in (mm)
100	**BWJXENN1G**	2.06 (52)	0.94 (24)
225	**BWJXENN2G**	2.31 (59)	1.44 (37)
400	**BWJXENN4G**	3.44 (87)	2.5 (64)

Tip: Utilization of the busway plug-in opening adjacent to the End Closer may be limited to XQ45 bus plugs. This applies only if the End Closer is located to the Right-hand of the bus plug.

End Closer

Prefix	Type	Fitting Type				Amp	Color
BW	**J**	**X**	**E**	**N**	**N**	**1**	**G**

XJ-L HD

End Closer → **X** **E** **N** **N**

1 = 100
2 = 225
4 = 400

A = Graphite
G = ANSI 61
X = Other

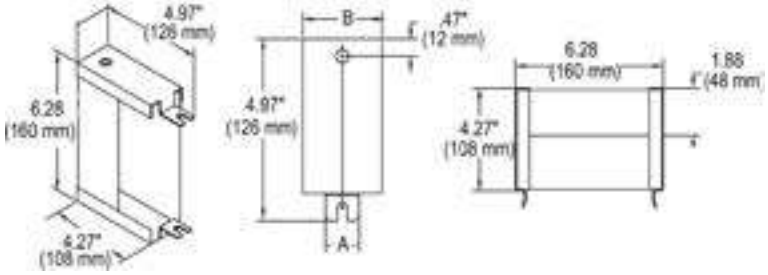

XOC outlet covers

Replacement outlet covers are available for closing off the plug-in outlets when desired.

Outlet Cover

Ampere Rating	Model Number①
100	**BWJXOCN1G**
225	**BWJXOCN2G**
400	**BWJXOCN4G**



Outlet Cover

Prefix	Type	Fitting Type				Amp	Color
BW	**J**	**X**	**O**	**C**	**N**	**1**	**G**

XJ-L HD

Plug-in Cover → **X** **O** **C** **N**

1 = 100
2 = 225
4 = 400

A = Graphite
G = ANSI 61
X = Other

XJ-L™ HD Busway System

Bus Plugs

Bus plugs for XJ-L Busway are available from 15A to 100A, with molded case circuit breakers or Vacu-Break fusible switches. All XJ-L bus plugs are fully interchangeable with all XJ-L Busway configurations.

Lightweight and portable, plugs can be installed or relocated as required **without de-energizing the busway**. Pre-engineered plug-in opening locations ensure no interference for **greater density** and maximum flexibility. This is especially important in high tech areas requiring frequent movement of equipment.

XJ-L HD Bus Plugs are available with 3 or 6 branch circuit protection in both single and 3-phase configurations, ranging from 15A – 100A for maximum power density and flexibility.

A wide variety of NEMA and IEC receptacles or cord connections are available for the XJ-L Bus Plugs.





Selection Guide

Enclosure Type	Plug-in Spacing	Breaker Type	Application
A = 3 Circuit - XQ Series	20.00 & 9.75	BQ, BQH, HBQ	XQ style - No receptacle
B = 3 Circuit - XQR Series	20.00 & 9.75⑩		XQR style — with duplex receptacle provision. May be used for custom receptacles or when additional wiring space is required
C = 3 Circuit HD XPM	20.00 & 9.75		Use for applications that require factory installed breakers and receptacles
D = 3-6 Circuit HD XPM	20.00 & 9.75	BL, BLH, HBL, BQD, NGB	
G = XLEC	20.00 & 9.75⑩	ED2,ED4,ED6, HED4	Cover operable handle. Uses heavy duty E-Frame Breakers
H = XEC	20.00 & 9.75⑩		Uses heavy duty E-Frame breakers
J = Plug-in Tap Box	20.00	na	Plug-in tap off device - lugs only
K = XLVB Fusible	20.00 & 9.75⑩	na	Cover operable Vacu-Break Switch

Siemens XJ-L™ HD Bus Plugs and Power Modules

Use For Breaker Group = A, B, X⑨

Prefix	Type	Enclosure	System Config.	Color	Breaker Group	Ampere Rating or Breaker/Receptacle Arrangement⑤⑥⑦⑧	Custom Features
BP	J	H	6	A	A	E D 4 6 0	N N
Bus Plug		**A** = 3 Circuit XQ Series **B** = 3 Circuit – XQ Series Receptacle Provision **C** = 3 Circuit HD XPM **D** = 3-6 Circuit HD XPM **G** = XLEC②⑥⑩⑪ **H** = XEC③⑥⑩ **J** = Plug-in Tap Box②④⑧⑪ **K** = XLVB Fusible②④⑦⑩	**1** = 3Ø **2** = 3Ø + Internal Grd **3** = 3Ø + Isolated Grd **4** = 3Ø + Internal Grd + Isolated Grd **5** = 3Ø + Neutral **6** = 3Ø + Neutral + Internal Grd **7** = 3Ø + Neutral + Isolated Grd **8** = 3Ø + Neutral + Internal Grd + Isolated Grd **9** = 3Ø + 200% Neutral **0** = 3Ø + 200% Neutral + Internal Ground	**A** = Graphite **G** = ANSI 61 **X** = Other	**A** = Non-Mixed Factory Installed Breakers① **E** = Enclosure Only (no Breaker)①⑨ **X** = Other / Fusible④	See Notes below for information	**NN** = None / NA
XJ-L HD							

Notes:
① Use "A" or "E" for XLEC and XEC
② Available in System Configs: 1,2,5,6
③ Available in System Configs: 1,2,3,4,5,6,7,8,9
④ For non-breaker style plug use "X" for Breaker Grouping field. (Fusible & Plug-in Tap Box)
⑤ For Enclosure = C,E,F see Breaker / Receptacle Arrangement Schedule for Details
⑥ For XEC and XLEC Ampere Rating field use ED2xx, ED4xx,ED6xx where xx = 15 to 00 trip rating (100A max).
⑦ For XLVB Ampere Rating field use 02xxx for 240V & 06xxx for 600V where xxx = 030, 060, 100 ampere
⑧ For Plug-in Tap Box Ampere Rating field use PBxxx where xxx = 100, 200 ampere
⑨ Ampere Rating and Customer Features fields not required for Breaker Group = "E". Leave fields blank.
⑩ Requires two plug-in openings for 9.75 spacing.
⑪ 200A Tap Box installs on 20.0 dual side plug-in spacing only. Requires two plug-in openings.

XJ-L™ HD Busway System

Bus Plugs

XQ and XQR Series

XQ and XQR bus plugs accept BQ (bolt-on) circuit breakers.
The plugs feature knockouts to facilitate quick installation.
The XQR has added wiring space to allow receptacle installation.

XQ Series Bus plug (60A max)

Breaker Type	Volts	No. of Spaces	Model Number	Model Number
BQ, BQH and HBQ	120/240	3	**BPJA1GE**	**BPJA5GE**

Enclosure Only





XQR Series Bus plug (60A max)

Breaker Type	Volts	No. of Spaces	Model Number	Model Number
BQ, BQH and HBQ	120/240	3	**BPJB1GE**	**BPJB5GE**

Enclosure Only





Accessories for XQ and XQR Series

XEQH	Floor Operating Handle (not for 1 pole or 2 pole breakers)
W62890	Bonded Ground Kit
W68101	Isolated Ground Kit



XEQH



W62890



W68101

Bus Plugs

XPM Series

Use for applications that require factory installed breakers and receptacles.

XPM Series HD Bus plug 3/6

Breaker Type	Interrupt Rating (RMS kA)	Config.	No. of Spaces	Model Number
BL	10	1-pole 120V	6	BPJE...
BLH	10	1-pole 120V		
	22	1-pole 120V		
	22	3-pole 240V		
	10	2-pole 120/240V		
	10	3-pole 120/240V		
	22	2-pole 120/240V		
	22	3-pole 120/240V		
HBL	10	1-pole 120V		
	22	1-pole 120V		
	65	1-pole 120V		
	22	3-pole 240V		
	65	3-pole 240V		
	10	2-pole 120/240V		
	10	3-pole 120/240V		
	22	2-pole 120/240V		
	22	3-pole 120/240V		
	65	2-pole 120/240V		
	65	3-pole 120/240V		
BQD	10	1-pole 120V		
	22	1-pole 120V		
	65	1-pole 120V		
	10	2-pole 240V		
	10	3-pole 240V		
	22	2-pole 240V		
	22	3-pole 240V		
	65	2-pole 240V		
	65	3-pole 240V		
	10	2-pole 120/240V		
	10	3-pole 120/240V		
	22	2-pole 120/240V		
	22	3-pole 120/240V		
	65	2-pole 120/240V		
	65	3-pole 120/240V		
	14	1-pole 227V		
	14	2-pole 227/480V		
	14	3-pole 227/480V		
NGB	10	1-pole 120V		
	22	1-pole 120V		
	65	1-pole 120V		
	10	2-pole 240V		
	10	3-pole 240V		
	22	2-pole 240V		
	22	3-pole 240V		
	65	2-pole 240V		
	65	3-pole 240V		
	10	2-pole 120/240V		
	10	3-pole 120/240V		
	22	2-pole 120/240V		
	22	3-pole 120/240V		
	65	2-pole 120/240V		
	65	3-pole 120/240V		
	14	1-pole 227V		
	25	1-pole 227V		
	14	2-pole 227/480V		
	14	3-pole 227/480V		
	25	2-pole 227/480V		
	25	3-pole 227/480V		
	14	1-pole 347V		
	14	2-pole 347/600V		
	14	3-pole 347/600V		

XPM Series HD Bus plug 3 Circuit

Breaker Type	Interrupt Rating (RMS kA)	Config.	No. of Spaces	Model Number
BQ	10	1-pole 120V	6	BPJC...
	10	2-pole 240 V		
	10	3-pole 240 V		
	10	2-pole 120/240 V		
	10	3-pole 120/240 V		
BQH	10	1-pole 120V		
	22	1-pole 120V		
	22	3-pole 240 V		
	10	2-pole 120/240 V		
	10	3-pole 120/240 V		
	22	2-pole 120/240 V		
	22	3-pole 120/240 V		
HBQ	10	1-pole 120V		
	22	1-pole 120V		
	65	1-pole 120V		
	22	3-pole 240 V		
	65	3-pole 240 V		
	10	2-pole 120/240 V		
	10	3-pole 120/240 V		
	22	2-pole 120/240 V		
	22	3-pole 120/240 V		
	65	2-pole 120/240 V		
	65	3-pole 120/240 V		

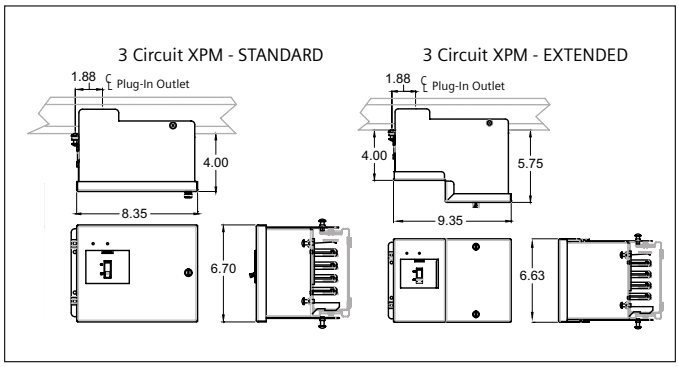

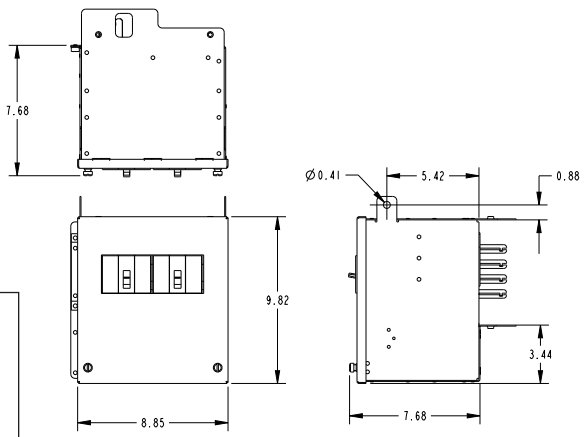



3-6 Circuit XPM



3 Circuit XPM

XJ-L™ HD Busway System

Bus Plugs

XEC Series

(Cover operable, 100A max)
XEC bus plugs accept ED2, ED4, ED6 and HED6 circuit breakers. The plugs feature a spacious chassis which allows room for wire bending and knockout provisions. Isolated ground plugs are available from the factory.

XEC Series bus plug

Breaker Type	Volts	Ampere Rating	Model Number	Model Number
ED2	240	100	**BPJH1GAED200NN**	**BPJH5GAED200NN**
ED4	480	30	**BPJH1GAED430NN**	**BPJH5GAED430NN**
ED6	600	60	**BPJH1GAED660NN**	**BPJH5GAED660NN**
Enclosure Only	600 Max	15-100	**BPJH1GE**	**BPJH5GE**



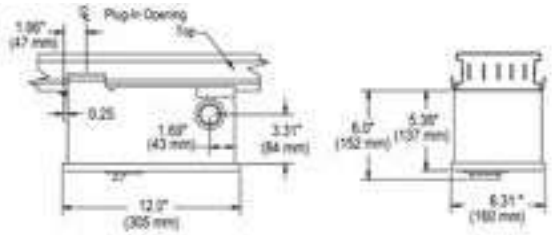



W62890
bonded
ground kit

XLEC Series

(Floor operable, 100A max)
XLEC bus plugs accept ED2, ED4, ED6 and HED4 circuit breakers. The plugs feature a spacious chassis which allows room for wire bending and knockout provisions. These plugs may be operated from the floor with a pull chain or hookstick.

XLEC Series bus plug

Breaker Type	Volts	Ampere Rating	Model Number	Model Number
ED2	240	100	**BPJG1GAED200NN**	**BPJG5GAED200NN**
ED4	480	30	**BPJG1GAED430NN**	**BPJG5GAED430NN**
ED6	600	60	**BPJG1GAED660NN**	**BPJG5GAED660NN**
Enclosure Only	600 Max	15-100	**BPJG1GE**	**BPJG5GE**

Additional add-on features, such as shunt trips, alarm switches, and auxillary contacts are also available for XEC and XLEC bus plugs.



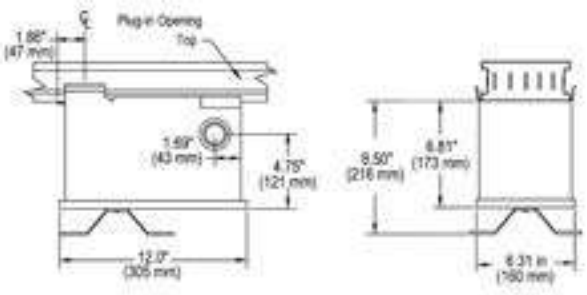

XJ-L™ HD Busway System

Bus Plugs

XLVB Series

(Floor operable, 100A max)
XLVB fusible bus plugs utilize the Vacu-Break switching principle, which minimizes arcing and reduces maintenance costs. The Vacu-Break bus plugs are quick-make and quick-break, cover interlocked, horsepower rated, and may be operated from the floor with a pull chain or hookstick.



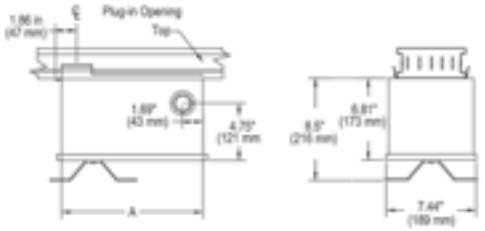

XLVB Series bus plug

Volts	Ampere Rating	Model Number	Model Number
240	30	**BPJK1GX02030NN**	**BPJK5GX02030NN**
240	60	**BPJK1GX02060NN**	**BPJK5GX02060NN**
240	100	**BPJK1GX02100NN**	**BPJK5GX02100NN**
600	30	**BPJK1GX06030NN**	**BPJK5GX06030NN**
600	60	**BPJK1GX06060NN**	**BPJK5GX06060NN**
600	100	**BPJK1GX06100NN**	**BPJK5GX06100NN**

W47185
ON/OFF labels



100A Plug-in tap box

Plug-in cable tap boxes are non-fusible devices used for end or center feed. The 100A tap boxes can be attached at any plug-in opening.

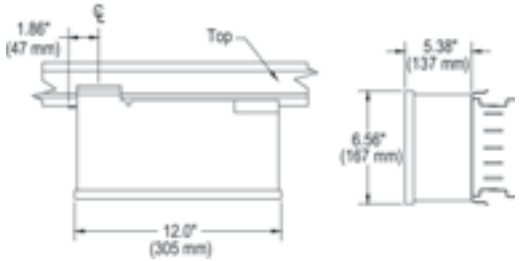



100A Plug-in Tap Box

Ampere Rating	Poles	Model Number
100	3	**BWJJ1GXPB100NN**
100	4	**BWJJ5GXPB100NN**

Note: Add suffix letter "G" to catalog number for ground bus.

200A Plug-in tap box

Plug-in cable tap boxes are non-fusible devices used for end or center feed. The 200A tap box requires two adjacent openings on 20" centers. 200A plug-in tap boxes are not suitable for use with XJ-L HD Busway.

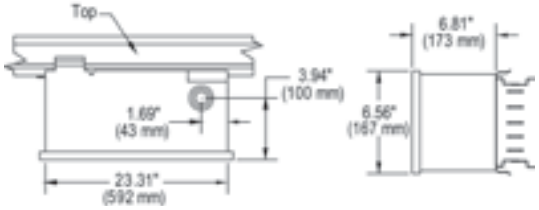

200A Plug-in Tap Box

Ampere Rating	Poles	Model Number
200	3	**BWJJ1GXPB200NN**
200	4	**BWJJ5GXPB200NN**

Note: Add suffix letter "G" to catalog number for ground bus.



W62892
Grd Finger Kit

Busway Power Distribution

BD® Plug-In (225 — 1600 Ampere) Copper

Selection

Ampere Rating	Plug In 10'–0" Straight Length Catalog Number	Case Dimensions (inches)	Shipping Weight Lb./Ft.	90° Elbow Prefix ③④ Catalog Number	Switch-Board Connection⑤ Prefix	Building Expansion Fitting Catalog Number	Cable Tap Box End⑥ Catalog Number	Cable Tap Box Center⑦ Catalog Number	End Closure Catalog Number	Hangers⑧ Catalog Number
3-Phase, 3-Wire										**600V or Less**
225	**BDP302**	4⅛ x 8⅜	9	**LDP302**	**FEP302**	**EJP302**	**ETB302**	**CTB302**	**ECP6**	**BDH10**
400	**BDP304**	4⅛ x 8⅜	12½	**LDP304**	**FEP304**	**EJP304**	**ETB304**	**CTB304**	**ECP6**	
600	**BDP306**	4⅛ x 8⅜	13½	**LDP306**	**FEP306**	**EJP306**	**ETB306**	**CTB306**	**ECP6**	
800	**BDP308**	6⅛ x 8⅜	18½	**LDP308**	**FEP308**	**EJP308**	**ETB308**	**CTB308**	**ECP10**	
1000	**BDP310**	6⅛ x 8⅜	22	**LDP310**	**FEP310**	**EJP310**	**ETB310**	**CTB310**	**ECP10**	
1350	**BDP313**	12⅛ x 8⅜	28	**LDP313**	**FEP313**	**EJP313**	**ETB313**	**CTB313**	**ECA10**	**BDH12**
1600	**BDP316**	12⅛ x 8⅜	29	**LDP316**	**FEP316**	**EJP316**	**ETB316**	**CTB316**	**ECA10**	
3-Phase, 4-Wire — Full Capacity Neutral										**480V or Less**
225	**BDP4024**	4⅛ x 8⅜	12	**LDP4024**	**FEP4024**	**EJP4024**	**ETB4024**	**CTB4024**	**ECP6**	**BDH10**
400	**BDP4044**	4⅛ x 8⅜	14½	**LDP4044**	**FEP4044**	**EJP4044**	**ETB4044**	**CTB4044**	**ECP6**	
600	**BDP4064**	4⅛ x 8⅜	15½	**LDP4064**	**FEP4064**	**EJP4064**	**ETB4064**	**CTB4064**	**ECP6**	
800	**BDP4084**	8⅛ x 8⅜	28	**LDP4084**	**FEP4084**	**EJP4084**	**ETB4084**	**CTB4084**	**ECA8**	**BDH12**
1000	**BDP4104**	8⅛ x 8⅜	32	**LDP4104**	**FEP4104**	**EJP4104**	**ETB4101**	**CTB4101**	**ECA8**	
Rod-Hanger Adapter (optional)			**UJ100**							

Aluminum to Copper Cross Reference

Aluminum BD Busway is no longer available. Please use the cross reference below to identify compatible copper equivalent.

Aluminum

3-Phase, 3-Wire

Ampere Rating	Plug In 10'–0" Straight Length Catalog Number	Case Dimensions (inches)
225	**ABD302**	4⅛ x 8⅜
400	**ABD304**	4⅛ x 8⅜
600	**ABD306**	6⅛ x 8⅜
800	**ABD308**	6⅛ x 8⅜
1000	**ABD310**	12⅛ x 8⅜
1200	**ABD312**	12⅛ x 8⅜

3-Phase, 4-Wire — Full Capacity Neutral

225	**ABD4024**	4⅛ x 8⅜
400	**ABD4044**	4⅛ x 8⅜
600	**ABD4064**	6⅛ x 8⅜
800	**ABD4084**	8⅛ x 8⅜
1000	**ABD4104**	12⅛ x 8⅜
1200	**ABD4124**	12⅛ x 8⅜

Copper

3-Phase, 3-Wire

Ampere Rating	Plug In 10'–0" Straight Length Catalog Number	Case Dimensions (inches)
225	**BDP302**	4⅛ x 8⅜
400	**BDP304**	4⅛ x 8⅜
600	**BDP306**	4⅛ x 8⅜
800	**BDP308**	6⅛ x 8⅜
1000	**BDP310**	6⅛ x 8⅜
1350	**BDP313**	12⅛ x 8⅜
1600	**BDP316**	12⅛ x 8⅜

3-Phase, 4-Wire — Full Capacity Neutral

225	**BDP4024**	4⅛ x 8⅜
400	**BDP4044**	4⅛ x 8⅜
600	**BDP4064**	4⅛ x 8⅜
800	**BDP4084**	8⅛ x 8⅜
1000	**BDP4104**	8⅛ x 8⅜

"M" Rating / Standard Rating Conversion Table

1000/A Square Inch "M" Rating	Standard Rating Equivalent
225	—
400	600
600	800
800	800
1000	1000
1200	—
1350	1350
1600	1600
2000	—
2500	—
3000	—
4000	—

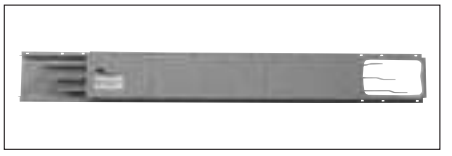

For inches / millimeters conversion, see Application Data Section.

For higher short circuit ratings add an "H" after the "D" or "P" (ABDH302 or BDPH302). Consult sales office for ratings. "GK" suffix is an internal ground bus. For any other ground configuration, consult local sales office. Please use following footage for fittings:

Elbow - 3'
SWB - 1'
End Cable Tap Box - 1'
Center Cable Tap Box - 10'
Building Expansion - 10'

③

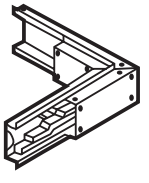

Right Edgewise Elbow (-2)

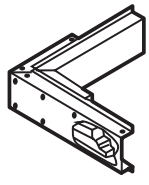

Left Edgewise Elbow (-4)

Suffix	Description
-1	Right Flatwise
-2	Right Edgewise
-3	Left Flatwise
-4	Left Edgewise

Appropriate suffix must be added to Elbow Catalog Number to order.

Switchboard stub bus bars to cover cutout in switchboard. Connecting hardware supplied by switchboard manufacturer.
Includes busware stub. Total length added to run is 2" for 225A and 400A aluminum or 225A–600A copper, 6" for all others. Box is designed to connect to offset bus-bar ends. When it is to be connected to straight bus-bar ends, adapter will be furnished upon request.
Must be factory-assembled to busway. Complete device includes 10' busway.
Two hangers included free of charge with each busway section, elbow, tee and cross.

Busway Power Distribution

XL-U® Aluminum (225–5000 Ampere)

Selection

225–5000 Amperes / 600 Volts or Less
Non-Ventilated 225–600 Amperes

Busway Catalogue Number				Wall Flange Catalogue Number	Floor Support Catalogue Number	End Closure Catalogue Number	Hangers② Catalog Number
Ampere Rating	Basic Catalogue Number	Case Dimensions (inches)	Shipping Weight Lb./Ft.				
3-Pole							
225	**UH302AB**	4½ x 10	8	**UF145**	**UFS145**	**UE145**	**UH145**
400	**UH304AB**	4½ x 10	9	**UF145**	**UFS145**	**UE145**	**UH145**
600	**UH306AB**	5½ x 10	10	**UF145**	**UFS145**	**UE155**	**UH155**
4-Pole Full Neutral							
225	**UH502AB**	4½ x 10	8	**UF145**	**UFS145**	**UE145**	**UH145**
400	**UH504AB**	4½ x 10	9	**UF145**	**UFS145**	**UE145**	**UH145**
600	**UH506AB**	5½ x 10	10	**UF145**	**UFS145**	**UE155**	**UH155**

Ventilated 800–5000 Amperes With Ground Bus

Busway Sections Complete					Wall Flange Catalogue Number	Floor Support Catalogue Number	End Closure Catalogue Number	Hangers② Catalogue Number
Ampere Rating①								
Edge-wise ‖	Flat-wise ═	Basic Catalogue Number	Case Dimensions (inches)	Shipping Weight Lb./Ft.				
3-Pole								
800	800	**UH308AV**	4½ x 10	10	**UF145**	**UFS145**	**UE145**	**UH145**
1000	800	**UH310AV**	4½ x 10	11	**UF145**	**UFS145**	**UE145**	**UH145**
1200	1000	**UH312AV**	5½ x 10	12	**UF155**	**UFS145**	**UE155**	**UH155**
1350	1200	**UH313AV**	5½ x 10	13	**UF155**	**UFS145**	**UE155**	**UH155**
1600	1350	**UH316AV**	7½ x 10	16	**UF175**	**UFS179**	**UE175**	**UH175**
2000	1600	**UH320AV**	7½ x 10	19	**UF175**	**UFS179**	**UE175**	**UH175**
2500	2000	**UH325AV**	9½ x 10	23	**UF195**	**UFS179**	**UE175**	**UH195**
3000	3000	**UH330AV**	7½ x 20⅝	32	**UF275**	**UFS279**	**UE275**	**UH275**
4000	3500	**UH340AV**	9½ x 20⅝	41	**UF295**	**UFS279**	**UE295**	**UH295**
5000	4000	**UH350AV**	9½ x 20⅝	45	**UF295**	**UFS279**	**UE295**	**UH295**
4-Pole Full Neutral								
800	800	**UH508AV**	4½ x 10	11	**UF145**	**UFS145**	**UE145**	**UH145**
1000	800	**UH510AV**	4½ x 10	12	**UF145**	**UFS145**	**UE145**	**UH145**
1200	1000	**UH512AV**	5½ x 10	14	**UF155**	**UFS145**	**UE155**	**UH155**
1350	1200	**UH513AV**	5½ x 10	15	**UF155**	**UFS145**	**UE155**	**UH155**
1600	1350	**UH516AV**	7½ x 10	18	**UF175**	**UFS179**	**UE175**	**UH175**
2000	1600	**UH520AV**	7½ x 10	21	**UF175**	**UFS179**	**UE175**	**UH175**
2500	2000	**UH525AV**	9½ x 10	26	**UF195**	**UFS179**	**UE195**	**UH195**
3000	3000	**UH530AV**	7½ x 20⅝	35	**UF275**	**UFS279**	**UE275**	**UH275**
4000	3500	**UH540AV**	9½ x 20⅝	47	**UF295**	**UFS279**	**UE295**	**UH295**
5000	4000	**UH550AV**	9½ x 20⅝	52	**UF295**	**UFS279**	**UE295**	**UH295**

XLU Suffix Table

Description	Suffix
Feeder	F
Plug-in	P
Elbow	L
Tee	T
Cross	X
Switchboard Connection	S
Expansion Section	J
Center Tap Box	M
End Tap Box	B
XFMR Throat	—
XFMR Tap 1-3 Phase	—
XFMR Tap 3-1 Phase	—
Roof Flange	—
Fused Reducer	—
Non Fused Reducer	—

① Ventilated XL-U busway has two ratings; see above for edgewise or flatwise mounting.
② For rod-hanger adapter UJ100 see page 13-80.

GENERAL NOTES:
1) For inches / millimeters conversion, see Technical Section.
2) To form complete catalog number, use basic catalog number and substitute suffix of required item. Example: Basic busway Catalog Number U316AV— accessory switchboard stub with ground bus U316AVSG.
3) Totally Enclosed offering is available up to 3000A Al. Replace "V" with "E" in catalog number.
4) The following feeder busway footages apply:
XL-U Elbow 2′ XLU-EXP Section 4′
XL-U Tee 3′ XL-U SWBD Stub 1′
XL-U Cross 4′ XL-U Reducer 4′
5) For higher short circuit rating add an "HH" after the "U" (UHH302ABP)
6) Floor and ceiling flanges are ordered by description.
7) Internal ground bar provided as standard.
8) For elbows other than 90°, accessory charge is doubled.
9) Switchboard stub includes flange to cover cutout in top of indoor switchboard and 8" of bus inside switchboard. Connecting hardware supplied by switchboard manufacturer.
10) Transformer throat connection includes gasketed box sized to match throat plus flexible straps and bolts. No Busway footage is included. For connection to transformers not manufactured by Siemens, consult factory

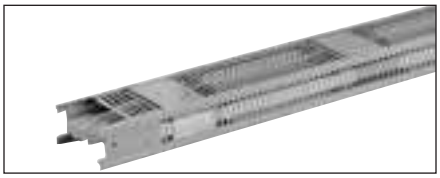

Busway Power Distribution

XL-U® Copper (225–6500 Amperes)

225–6500 Amperes / 600 Volts or Less
Non-Ventilated 225–600 Amperes

Busway Catalogue Number				Wall Flange Catalogue Number	Floor Support Catalogue Number	End Closure Catalogue Number	Hangers② Catalogue Number
Ampere Rating	Basic Catalogue Number	Case Dimensions (inches)	Shipping Weight Lb./Ft.				
3-Pole							
225	**UH302CB**	4½ x 10	8	**UF145**	**UFS145**	**UE145**	**UH145**
400	**UH304CB**		12	**UF145**	**UFS145**	**UE145**	**UH145**
600	**UH306CB**		13	**UF145**	**UFS145**	**UE145**	**UH145**
4-Pole Full Neutral							
225	**UH502CB**	4½ x 10	9	**UF145**	**UFS145**	**UE145**	**UH145**
400	**UH504CB**		13	**UF145**	**UFS145**	**UE145**	**UH145**
600	**UH506CB**		15	**UF145**	**UFS145**	**UE145**	**UH145**

Ventilated 800–5000 Amperes With Ground Bus

Busway Sections Complete					Wall Flange Catalogue Number	Floor Support Catalogue Number	End Closure Catalogue Number	Hangers② Catalogue Number
Ampere Rating①								
Edge-wise ‖	Flat-wise ═	Basic Catalogue Number	Case Dimensions (inches)	Shipping Weight Lb./Ft.				
3-Pole								
	800	**UH308CV**	4½ x 10	12	**UF145**	**UFS145**	**UE145**	**UH145**
1000	1000	**UH310CV**	4½ x 10	15	**UF145**	**UFS145**	**UE145**	**UH145**
1200	1000	**UH312CV**	4½ x 10	16	**UF145**	**UFS145**	**UE145**	**UH145**
1350	1200	**UH313CV**	4½ x 10	19	**UF145**	**UFS145**	**UE145**	**UH145**
1600	1350	**UH316CV**	5½ x 10	23	**UF155**	**UFS145**	**UE155**	**UH155**
2000	1600	**UH320CV**	5½ x 10	26	**UF155**	**UFS145**	**UE155**	**UH155**
2500	2000	**UH325CV**	7½ x 10	34	**UF175**	**UFS179**	**UE175**	**UH175**
3000	2500	**UH330CV**	9½ x 10	41	**UF195**	**UFS179**	**UE195**	**UH195**
4000	4000	**UH340CV**	7½ x 20⅝	57	**UF275**	**UFS279**	**UE275**	**UH275**
5000	4500	**UH350CV**	7½ x 20⅝	70	**UF275**	**UFS275**	**UE275**	**UH275**
6000	5000	**UH360CV**	9½ x 20⅝	85	**UF295**	**UFS279**	**UE295**	**UH295**
6500	5500	**UH365CV**	9½ x 20⅝	98	**UF295**	**UFS279**	**UE295**	**UH295**
4-Pole Full Neutral								
800	800	**UH508CV**	4½ x 10	14	**UF145**	**UFS145**	**UE145**	**UH145**
1000	1000	**UH510CV**	4½ x 10	18	**UF145**	**UFS145**	**UE145**	**UH145**
1200	1000	**UH512CV**	4½ x 10	19	**UF145**	**UFS145**	**UE145**	**UH145**
1350	1200	**UH513CV**	4½ x 10	23	**UF145**	**UFS145**	**UE145**	**UH145**
1600	1350	**UH516CV**	5½ x 10	28	**UF155**	**UFS145**	**UE155**	**UH155**
2000	1600	**UH520CV**	5½ x 10	30	**UF155**	**UFS145**	**UE155**	**UH155**
2500	2000	**UH525CV**	7½ x 10	42	**UF175**	**UFS179**	**UE175**	**UH175**
3000	2500	**UH530CV**	7½ x 10	61	**UF195**	**UFS179**	**UE195**	**UH195**
4000	4000	**UH540CV**	7½ x 20⅝	70	**UF275**	**UFS279**	**UE275**	**UH275**
5000	4500	**UH550CV**	7½ x 20⅝	86	**UF275**	**UFS279**	**UE275**	**UH275**
6000	5000	**UH560CV**	9½ x 20⅝	105	**UF295**	**UFS279**	**UE295**	**UH295**
6500	5500	**UH565CV**	9½ x 20⅝	122	**UF295**	**UFS279**	**UE295**	**UH295**

XLU Suffix Table

Description	Suffix
Feeder	F
Plug-in	P
Elbow	L
Tee	T
Cross	X
Switchboard Connection	S
Expansion Section	J
Center Tap Box	M
End Tap Box	B
XFMR Throat	—
XFMR Tap 1-3 Phase	—
XFMR Tap 3-1 Phase	—
Roof Flange	—
Fused Reducer	—
Non Fused Reducer	—

"M" Rating / Standard Rating Conversion Table

1000/A Square Inch "M" Rating	Standard Rating Equivalent
225	—
400	—
600	800
800	1200
1000	1350
1200	1600
1350	2000
1600	2500
2000	2500
2500	3000
3000	4000
4000	5000

① Ventilated XL-U busway has two ratings; see above for edgewise or flatwise mounting.
② For rod-hanger adapter UJ100 see page 13-80.

GENERAL NOTES:
1) For inches / millimeters conversion, see Technical Section.
2) To form complete catalog number, use basic catalog number and substitute suffix of required item. Example: Basic busway Catalog Number U316CV— accessory switchboard stub with ground bus U316CVSG.
3) Totally Enclosed offering is available up to 4000A Cu. Replace "V" with "E" in catalog number.
4) The following feeder busway footages apply:
   XL-U Elbow 2′ XLU-EXP Section 4′
   XL-U Tee 3′ XL-U SWBD Stub 1′
   XL-U Cross 4′ XL-U Reducer 4′
5) For higher short circuit rating add an "HH" after the "U" (UHH302CBP)
6) Floor and ceiling flanges are ordered by description.
7) Internal ground bar provided as standard.

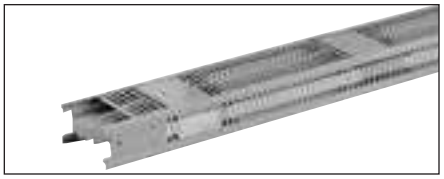

8) For elbows other than 90°, accessory charge is doubled.
9) Switchboard stub includes flange to cover cutout in top of indoor switchboard and 8" of bus inside switchboard. Connecting hardware supplied by switchboard manufacturer.
10) Transformer throat connection includes gasketed box sized to match throat plus flexible straps and bolts. No Busway footage is included. For connection to transformers not manufactured by Siemens, consult factory

Circuit Breaker Plugs

As of June 2014, Siemens no longer supplies a complete solution for Legacy bus plug offerings.

Floor Operable

Breaker Type	AC Volts	Ampere Rating	3-Phase, 3-Wire Enclosure Only② Catalog Number② XL-X	3-Phase, 3-Wire Enclosure Only② Catalog Number② XL-U	3-Phase, 3-Wire Enclosure Only② Catalog Number BD Plug-In①②	3-Phase, 4-Wire Enclosure Only② Catalog Number② XL-X	3-Phase, 4-Wire Enclosure Only② Catalog Number② XL-U	3-Phase, 4-Wire Enclosure Only② Catalog Number BD Plug-In①②③
ED2	240	15–60 70–100	REC3100G	UEC3100G	BEC3100	REC4100G	UEC4100G	BEC4100
ED4	480	15–60 70–100						
ED6	600	15–60 70–100						
FD6, FXD		70–250	RFC3250G	UFC3250G	BFC3250	RFC4250G	UFC4250G	BFC4250

I-T-E Fusible Vacu-Break® Switch Plugs Floor-Operable with Line Terminal Protection

Volts	Ampere Rating	3-Phase, 3-Wire Horsepower Ratings Standard (NEC)	Horsepower Ratings Maximum (Time Delay)	Catalog Number XL-X	XL-U	BD③ Plug-In①	3-Phase, 4-Wire Horsepower Ratings, AC Standard (NEC)	Maximum (Time Delay)	Catalog Number XL-X	XL-U	BD③ Plug-In①
250 AC or 250 DC	30	3	7½	RV321G	UV321G	BOS14321	3	7½	RV421G	UV421G	BOS16421
	60	7½	15	RV322G	UV322G	BOS14322	7½	15	RV422G	UV422G	BOS16422
	100	15	30	RV323G	UV323G	BOS14323	15	30	RV423G	UV423G	BOS16423
	200	25	60	RV324G	UV324G	BOS14324	25	60	RV424G	UV424G	BOS16424
600 AC	30	7½	20	RV361G	UV361G	BOS14351	5	15	RV461G	UV461G	BOS16451
	60	15	50	RV362G	UV362G	BOS14352	15	30	RV462G	UV462G	BOS16452
	100	30	75	RV363G	UV363G	BOS14353	25	60	RV463G	UV463G	BOS16453
	200	60	150	RV364G	UV364G	BOS14354	50	125	RV464G	UV464G	BOS16454

Fuse Adapter Kits — RV and UV⑥

Amperage	Class "J" Catalogue Number	Class "T" Catalogue Number	Class "R" Catalogue Number
240V AC/250V DC			
30	④	④	W56626
60	④	④	W56628
100	④	TFAK32	W55365
200	④	TFAK42	W55366
600V			
30	④	④	W56627
60	④	④	W56629
100	④	TFAK35	W55365
200	④	TFAK45	W55366

Field Addable Ground Kits for BD Bus Plugs Fusible

Ampere Rating	Catalogue Number
30–60	W63231
100	W63232
200	W63233

Note: These are for use on busway with internal ground bus manufactured after March, 1986. For ground kits prior to this date, consult local sales office.

Fuse Adapter Kits — BOS⑥

Amperage	Class "J" Catalogue Number	Class "T" Catalogue Number	Class "R" Catalogue Number
240V AC/250V DC			
30	④	④	W56626
60	④	④	W56628
100	W49827	TFAK32	W55365
200	W49819	TFAK42	W55366
600V			
30	W49832	④	W56627
60	W49830	④	W56629
100	W49828	TFAK35	W55365
200	W49818	TFAK45	W55366

① Grounding Finger — See table.
② Enclosures available from stock. When ordering circuit breaker bus plugs complete with breaker, factory-installed, allow time for assembly and **SPECIFY** enclosure frame size, phase and ampere rating. Example: One UEC3100—ED4—3P—70A–factory assembled

③ When BD busway capacity exceeds 400A for aluminum or 600A for copper, capacity must be specified to obtain proper number and arrangement of neutral fingers.
④ Not required.
⑤ Replace "_" with "1" or "2" .
See Table: BD Bus Plug Catalog Number Ref. shown on Page 13-80.

⑥ Class R and Class J Fuse Kits are single unit part numbers. Order (2) kits for dual units. Class T Fuse Kits are single pole part numbers. Order (3) kits for a 3-pole unit.

XL-X®, XL-U® and BD® Plug-In Units and Cubicles

Shipping Weights — Pounds

For Circuit Breaker Bus Plugs Only

Breaker Type	Ampere Rating	3-Phase, 3-Wire				3-Phase, 4-Wire			
		Enclosure Only		Complete Assembly		Enclosure Only		Complete Assembly	
		XL-U XL-X	BD, LO-X	XL-U XL-X	BD, LO-X	XL-U XL-X	BD, LO-X	XL-U XL-X	BD, LO-X
ED2, ED4, ED6	15–100	12	14	13	15	13	15	14	10
FD6, FXD	70–250	1	27	51	37	45	28	55	38

Shipping Weights — Pounds

For Fusible Switch Bus Plugs Only

Switch Ampere Rating	3-Phase, 3-Wire		3-Phase, 4-Wire	
	XL-X XL-U	BD, LO-X	XL-X XL-U	BD, LO-X
	Prefix RV UV	Prefix BOS	Prefix RV UV	Prefix BOS
30,60	17	15	19	12
100	17	18	19	18
200	36	34	38	36

Fusible and Molded Case Circuit Breaker Cubicles

See page 13-34 for typical configurations.

BD Bus Plug Catalog Number Reference

Catalog Number	ABD4 Busway						BDP4 Busway						
	225 ABD402	400 ABD404	600 ABD406	800 ABD408	1000 ABD410	1200 ABD412	225 BDP402	400 BDP404	600 BDP406	800 BDP408	1000 BDP410	1350 BDP413	1600 BDP416
BOS16451	—	—	√	—	√	√	—	—	—	—	—	√	√
BOS16452	—	√	—	√	—	—	—	√	√	√	√	—	—

As of June 2014, Siemens no longer supplies a complete solution for Legacy bus plug offerings.



tiastar Motor Control Centre



Solid State Starter Class 14



Sirius Contactor 3RT

Contents

tiastar™ Motor Control Centre
- Overview 14-2
- Construction Details 14-3 – 14-4

Technical
- Dimensions and Weights 14-5
- Wiring Classifications 14-6
- Incoming Cable Space, Wiring Troughs, Wiring Terminations 14-7

Components Overview
- SIRIUS Contactors 14-8
- Overload Relays 14-9
- SIRIUS Soft Starters 14-10
- Variable Frequency Drives 14-11
- G120 Modular Converter 14-12
- Power Monitoring 14-15
- Surge Protective Devices 14-16
- Product History 14-22

Tiastar Type 2 Arc Resistance 14-24 – 14-26

Tiastar Dynamic Arc Sentry 14-27 – 14-29

Specification Checklist 14-30 – 14-34

tiastar™ Motor Control Centres

Overview of tiastar

Product Overview

Motor Control Centres at Siemens

Motor control centres (MCC) have come a long way since they were introduced in 1937 as a way to save floor space by placing several starters in a single cabinet. Modern processes and facilities now dictate that motor control centres should display a high level of intelligence as well. They must deliver vital operating information; plus provide automation features, optimal control, and critically fast communications to meet even the most demanding applications. Ideally, the best-of the-best must also save installation time and money. Siemens MCCs are designed as self-contained modular units. They come with rear-mounted, self-aligning copper stabs that firmly grasp onto the bus. Brackets also guide the placement of units, further assuring positive engagement with the bus.

tiastar MCC

Siemens tiastar MCC is based on the Furnas System/89™ MCC introduced in 1980 and represent the state-of-the-art motor control technology, with a modular, open architecture design. High performance and quality expectations have been researched at the planning stage and throughout the construction stage. The Siemens tiastar MCC has many features and options to meet your specific needs. Requirements such as the standard isolated vertical bus to fully insulated and isolated vertical bus and standard 22mm to 30mm pilot devices.



Heavy gauge steel is used for framing and side panel; sections are separated by 14 gauge steel barriers that are formed to provide rigidity and durability. The modular units implement all the motor protection and control functions, determine operational, diagnostic and statistical data, and organize communications data between the automation system and the motor feeder.

tiastar SMART MCC

Siemens tiastar Smart MCC with PROFIBUS-DP Communications combines heavy-duty construction and user friendly features. These intelligent units deliver detailed diagnostics by communicating with starter units, variable frequency drives, reduced voltage soft-start units, circuit breakers, or power meters via PLC/DCS. This means overload relays, linked to the PLCs, can now deliver detailed motor management data at speeds previously unheard of. PROFIBUS-DP, the backbone of the system, greatly simplifies I/O wiring. Also, custom communication options such as PROFINET and Modbus RTU are available.

Domestic Design Standards

The following are the principal domestic standards which apply to motor control centre design, testing, construction and application. The tiastar motor control centre complies fully with the latest version of all these standards.

NEMA

- AB-1 Molded Case Circuit Breakers
- ICS 1 General Standards for Industrial Control
- ICS 2.3 Industrial Control Systems: Instructions for the Handling, Installation, Operation, and Maintenance of Motor Control Centres
- ICS 18 Standard for motor control centres

UL

- 845 Motor Control Centres
- 508 Industrial Control Equipment
- 891 Switchboard Design
- 94 Test for Flammability of Plastic Materials for Parts, Devices, and Appliances
- 489 Molded Case Circuit Breakers and Circuit Breaker Enclosures
- 991 Tests for Safety-related Controls Employing Solid-state Devices

CSA 254 Motor Control Centres

NFPA – National Fire Protection Association

- 70 National Electrical Code

Low Voltage Seismic Compliance

Today, strict seismic requirements are not limited to areas prone to earthquakes. Engineers in all locations must be aware of, and comply with, earthquake protection regulations. In addition to construction materials and techniques, these regulations cover non-structural building systems, including electrical components. In critical applications, such as healthcare facilities, these components must be designed to go beyond surviving an earthquake, to remain in operation after the event is over.

At Siemens, we are committed to making it easier for you to comply with all building requirements, including seismic ratings.

Please contact your Siemens representative for complete details on seismic rating compliance for specific products and configurations.

The purpose of this compliance assessment is to document the seismic compliance of tiastar motor control centre to the following building codes:

Building code	Edition
Uniform Building Code (UBC)	1997
BOCA National Building Code (BOCA)	1999
Standard Building Code (SBC)	1999
California Building Code (CBC)	2013
International Building Code (IBC)	2012

Earthquake loading compliance tests (shake tests) were performed at Clarke Dynamic Test Laboratories in accordance with ICC-ES-AC 156 and ASCE 7-10.

Notes:
1. tiastar motor control centres are certified to the stringent seismic requirements of California OSHPD (Office of Statewide Health Planning and Development). Approval # OSP-0074-10. For details, refer to: http://www.oshpd.ca.gov/FDD/Pre-Approval/.
2. The codes and standards referenced in this document are published by independent organizations, institutes, or agencies. All copyrights and trademarks related to such codes and publications and the use thereof belong to the entities owning rights to the same.
3. These test results indicate third-party analysis of the Siemens product for compliance to the referenced codes and editions. Nothing in this publication should be taken as endorsements, official approvals, or official test results provided by the publishers of the referenced codes or any code enforcement authorities.

tiastar™ Motor Control Centres

Construction Details

Product Overview

Quality Features Exceed Standards

Siemens tiastar motor control centres are composed of a number of vertical sections bolted together. That allows for future addition of MCC vertical units so the equipment can expand with customer needs. The standards structure is 90 in. (2286 mm) high, plus a 1.125 in. (29 mm) high channel sill. Front-only structures can be either 15 in. (381 mm) or 20 in. (508 mm) deep. Double deep mounted structures are 30 in. (762 mm) or 40 in. (1016 mm) deep, and consist of two horizontal and vertical buses. This allows for correct bus phasing on the front or rear. Siemens provides a 21 in. back-to-back design, consisting of a common horizontal and vertical bus structure, for applications where available footprint is limited.

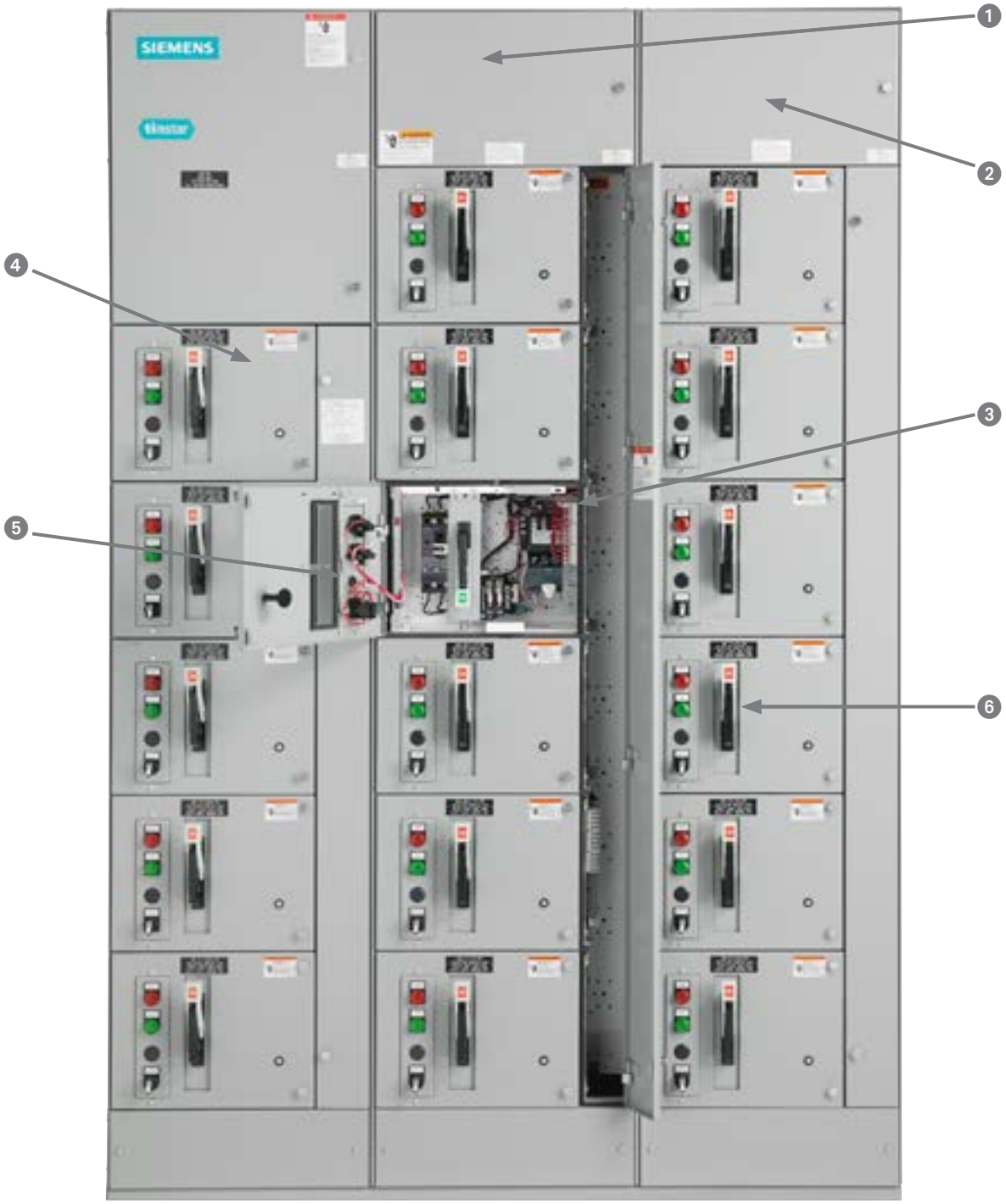

Features



1 Entire horizontal bus assembly is in top 12" of the vertical section

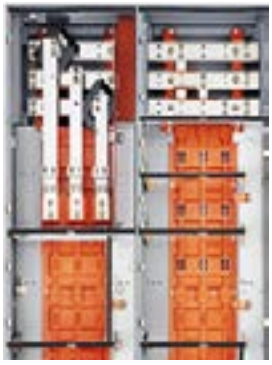

4 Isolated and insulated vertical bus assembly (Optional)



2 Clear Lexan® horizontal wireway barrier

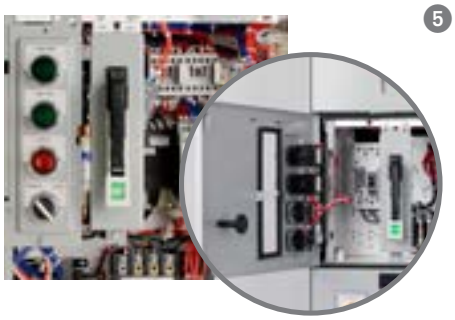

5 Dual location pilot device panel



3 Plug-in units with integrated racking handles



6 Industry's best unit operating handle

Important Additional Features:

- All wiring and components meet or exceed the requirements of UL, CSA, NEMA, EEMAC, NEC and CEC
- Pre-wired components are professionally harnessed to industrial terminal blocks
- Full depth wire tie rods are standard in each vertical wireway
- White interior increases visibility for easy wiring, maintenance and inspection
- Modular units are fully interchangeable
- Each tiastar MCC is designed to satisfy your most exacting specifications
- White on black base operating handle is easy to identify

Dimensions

Structure		
Height	91.125 in.	(2315 mm)
Front Mounted Only Structure (FO)		
Width	20 in. 24 in. 30 in. 40 in. 50 in. 60 in.	(508 mm) (610 mm) (762 mm) (1016 mm) (1270 mm) (1524 mm)
Depth	15 in. 20 in.	(381 mm) (508 mm)
Back to Back Structure (BTB)		
Width	20 in. 30 in.	(508 mm) (762 mm)
Depth	21 in.	(533 mm)
Double Deep MCC		
Depth	31 in.	(787 mm)
	41 in.	(1441 mm)
Vertical Wireway		
Height	72 in.	(1829 mm)
Width Optional width	4 in. 8 in.	(102 mm) (203.2 mm)
Depth	10 in.	(254 mm)
Cross Section With Opt width	38.25 sq. in. 76.50 sq. in.	(972 sq. mm) (1943 sq. mm)
Top Horizontal Wireway		
Height	12 in.	(305 mm)
Depth	7 in.	(178 mm)
Bottom Horizontal Wireway		
Height	6 in.	(152 mm)
Depth * BTB	15 in. 20 in. 30 in.* 40 in.*	(381 mm) (508 mm) (762 mm)* (1016 mm)*
Enclosure Types		
NEMA 1		Indoor
NEMA 1A	Gasketed	Indoor
NEMA 2	Drip proof	Indoor
NEMA 12	Dust tight	Indoor
NEMA 3R	Rainproof	Outdoor (Non walk-in)
Pull Box (Top Hat)		
Height	12 in. 18 in. 24 in.	
Width	20 in. 30 in.	
Depth	15 in. 20 in.	

Structural Gauge Chart

Structural Parts	
Divider Sheets	14 ga.
Side Sheets	14 ga.
Centre Bottom Cross Ties	12 ga.
Rear Channel (FO)	13 ga.
Channel Sills	7 ga.
Centre-Top Channel	13 ga.
Vertical Bus Mounting Angles	14 ga.
Lifting Angles	7 ga.
Rear Covers	16 ga.
Top Plates	13 ga.
End Covers	16 ga.
Separator Angles	12 ga.
Shelf Brackets	10 ga.
Unit Parts	
Top and Bottom Unit Barriers	14 ga.
Back Pan	13 ga. 14 ga.
Side Barrier Plate	18 ga.
Angles	14 ga.
Doors	13 ga. 14 ga.
Finish (Ext.)	
ANSI 61 Light Gray	
Electrostatically applied TGIC-free polyester powder in standard.	

Bus

Horizontal Bus (A)	600A 800A 1200A 1600A 2000A 2500A* 600A 800A 1200	Cu Cu Cu Cu Cu Cu *NEMA 1 only Al Al Al
Vertical Bus (A)	300A 600A 800A	Cu Cu Cu
Neutral Bus (Bottom Mounted) (A)	600A 800A 1200A 1600A	Cu Cu Cu Cu
Options	Full Neutral Cu Neutral Landing Pad	
Bus Bracing (KA Sym)	42KA 65KA 100KA*	 * Cu Only
Barriers		
Isolation Barrier	Grounded sheet steel with stab openings	
Insulated & Isolated Barrier	Glass filled polyester sandwich that isolates and insulates each phase from the others and the bus from the front and rear compartments	
Removable covers	Inserts to cover unused openings in V-bus barrier	
Automatic shutter mechanism	Option available for the stab in location of each plug-in unit and requested future space. Standard in Arc Resistant MCCs.	
Ground Bus		
Horizontal (Bottom Mounted) (A) Required for UL labeling	300A 600A 600A	Cu Cu Al
Vertical (A)*	300A	Cu
* Available with motor ground terminations		

Plating
All power bus, tin plated is Standard
Silver plating available by request (Cu only)
Incoming Line Terminations
Incoming line arrangements are available in many configurations from 600A to 2000A

Weight Table

Dimensions Inches (mm)				Shipping weight for NEMA 1, 2, and 12	Weights per Section in lbs (Kg) for NEMA 3R
H	**W**	**D**	**Type**		
91.125 (2315)	20 (508)	15 (381)	FO	550 (250)	650 (295)
	20 (508)	20 (508)	FO	650 (295)	700 (318)
	30 (762)	15 (381)	FO	700 (318)	800 (363)
	30 (762)	20 (508)	FO	850 (386)	900 (409)
	20 (508)	21 (533)	BTB	670 (304)	N/A
	30 (762)	21 (533)	BTB	880 (400)	N/A

Wiring Specifications

Control on Units	16 ga. copper	
	105°C	
	600V	
Interconnection control wiring between Units	14 ga. copper	
	105°C	
	600V	
Power wiring– Sized to suit maximum HP rating of unit	14 ga. to 2 ga. copper	105°C
		600V
	1 ga. to 500 kcmil copper	105°C
		600V

Siemens MCC's are available as either Class I or Class II assemblies utilizing either Type A, Type B, or Type C wiring as defined in NEMA ICS18-2001. Below are the NEMA class and type definitions:

Class I — Independent Units

Class I motor control centres shall consist of mechanical groupings of combination motor control units, feeder tap units, other units, and electrical devices arranged in a convenient assembly. The manufacturer shall furnish drawings that include:

a. Overall dimensions of the motor control centre, identification of units and their location in the motor control centre, locations of incoming line terminals, mounting dimensions, available conduit entrance areas, and the location of the master terminal board if required (Type C wiring only).

b. Manufacturer's standard diagrams for individual units and master terminal boards (Type C wiring only) consist of one or more drawing(s) that:

1. Identify electrical devices.
2. Indicate electrical connections.
3. Indicate terminal numbering designations.

Note: When a combination schematic and / or wiring diagram for a unit is supplied showing optional devices, the manufacturer shall provide information to indicate which devices are actually furnished.

Class II — Interconnected Units

Class II motor control centres shall be the same as Class I motor control centres with the addition of manufacturer furnished electrical interlocking and wiring between units as specified in overall control system diagrams supplied by the purchaser. In addition to the drawings furnished for Class I motor control centres, the manufacturer shall furnish drawings that indicate factory interconnections within the motor control centre.

Class I-S and II-S — Motor Control Centres With Custom Drawing Requirements

Class I-S and II-S motor control centres shall be the same as Class I and II except custom drawings shall be provided in lieu of standard drawings as specified by the user. Examples of custom drawings are:

- Special identifications for electrical devices
- Special terminal numbering designations
- Special sizes of drawings

The drawings supplied by the manufacturer shall convey the same information as drawings provided with Class I and II motor control centres, additionally modified as specified by the user.

Types of Wiring

Type A

User field wiring shall connect directly to device terminals internal to the unit and shall be provided only on Class I motor control centres.

Type B

a. Type B user field load wiring for combination motor control units size 3 or smaller shall be designated as B-D or B-T, according to the following:

- B-D connects directly to the device terminals, which are located immediately adjacent and readily accessible to the vertical wireway.
- B-T connects directly to a **load** terminal block in, or adjacent to, the unit.

b. Type B user field load wiring for combination motor control units larger than size 3, and for feeder tap units, shall connect directly to unit device terminals.

c. Type B user field **control** wiring shall connect directly to unit terminal block(s) located in, or adjacent to, each combination motor control unit.

Type C

User field control wiring shall connect directly to master terminal blocks mounted at the top or bottom of those vertical sections that contain combination motor control units or control assemblies which shall be factory wired to their master terminal blocks. User field load wiring for combination motor control units, size 3 or smaller, shall connect directly to master terminal blocks mounted at the top or bottom of vertical sections. Motor control unit load wiring shall be factory wired to the master terminal blocks. User field load wiring for combination motor control units larger than size 3, and for feeder tap units, shall connect directly to unit device terminals.

Type A

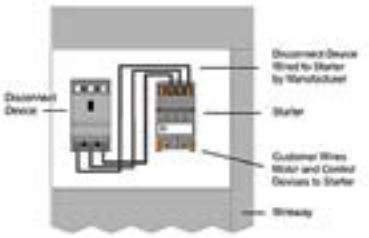

Figure 1. Class I, Type A Wiring

Type B

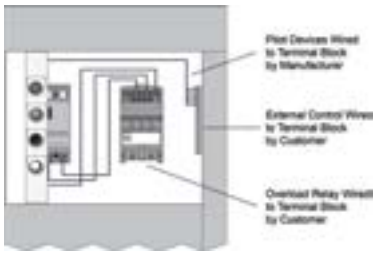

Figure 2. Class I, Type B-d Wiring

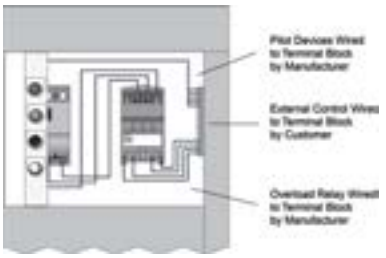

Figure 3. Class I, Type B-t Wiring

Type C

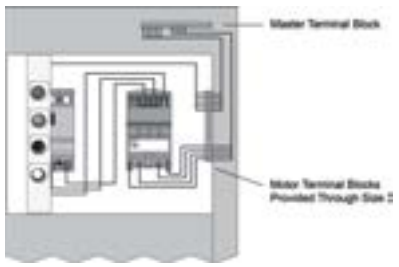

Figure 4. Class I, Type C Wiring

CSA 22.2 No 254-05 and

CSA22.2 No.0.12-M1985 (R2003)

Wiring Space and Wire Bending Space in

Enclosure of Equipment Rated 750V or Less

The National Electrical Code establishes very specific guidelines for minimum cable bending space within motor control centres. Figures 1 through 5 below describe the most common arrangements for terminating main incoming power cables in the MCC. Consult Siemens for incoming line compartment braced for 100,000 amperes symmetrical, short circuit.

Incoming Cable Space

Description of Incoming Service	Top or Bottom Incoming Section	Cable Entry Top or Bottom	Space Requirements in Inches (mm)	Notes
≤350 kcmil Two per Phase	Top — Directly on Main Bus	Either	None	See Figure 3
≤600 kcmil One or Two per Phase	Top	Either	Top Wireway plus 12.0 (305) or 18.0 (457)	See Figure 1
≤600 kcmil Three or Four per Phase	Top	Top	Top Wireway plus 18.0 (457)	See Figure 1
≤750 kcmil One or Two per Phase	Top	Top	Top Wireway plus 24.0 (607)	—
≤350 kcmil One or Two per Phase	Bottom	Bottom	Bottom Wireway plus 18.0 (457)	600 A Maximum See Figure 2
≤600 kcmil One or Two per Phase	Bottom	Bottom	Bottom Wireway plus 24.0 (610)	600 A Maximum See Figure 2
≤750 kcmil, up to eight per phase	Top or Bottom	Either	Full Structure	Consult Siemens
≤500 kcmil One or Two per Phase ≤750 kcmil One per Phase to Main Breaker	Top	Bottom	See Breaker / Disconnect	See Figure 4
≤500 kcmil One to Four per Phase ≤750 kcmil One per Phase to Main Breaker	Top	Top	See Breaker / Disconnect	See Figure 5
Busway or Cable Feed to Line Reactor	Top or Bottom	Either	Consult Siemens	Consult Siemens

Siemens MCC's are equipped with a 12 in. (305 mm) high, full-width horizontal wireway in the top and 6 in. (152 mm) in the bottom of each structure. A separate vertical wireway connects the top and bottom wiring areas in each vertical section. This wireway is 4 in. (102 mm) wide by 10 in. (254 mm) deep.

Note: All standard Siemens termination schemes shown herein do comply with applicable cable bending requirements of UL and the NEC.

Figure 1

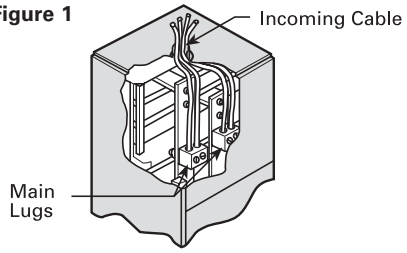

Main Lugs at Top with Top Cable Entry

Can accommodate up to two 600 kcmil cables per phase when using Siemens standard mechanical lugs. A total height of 24 in. (610 mm). This includes 12 in. (305 mm) for the top wireway plus 12 in. (305mm) of unit space. Compression lugs require extra vertical space or the addition of a top hat.

Figure 2

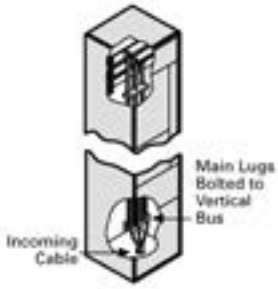

Main Lugs at Bottom with Bottom Cable Entry

Lugs are bolted directly to the bottom of the vertical bus. Can accommodate up to two 350 kcmil per phase in 24 in. (610 mm) high compartment. This includes 6 in. (152 mm) for the bottom wireway plus 18 in. (457 mm) of unit space. Can accommodate up to two 600 kcmil per phase in 30 in. (762 mm) high compartment. This includes 6 in. (152 mm) for the bottom wireway plus 24 in. (610 mm) of unit space.

Figure 3

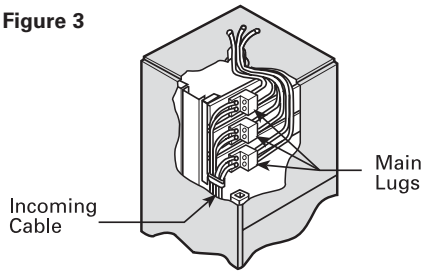

Main Lugs at Top with Top or Bottom Cable Entry

In this arrangement the lugs mount directly on the horizontal bus, eliminating the need to use unit mounting space. The limitation here is 350 kcmil cable per phase.

Figure 4

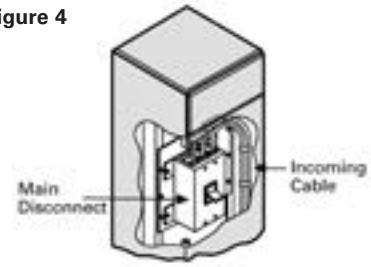

Main Disconnect with Bottom Cable Entry

Figure 5

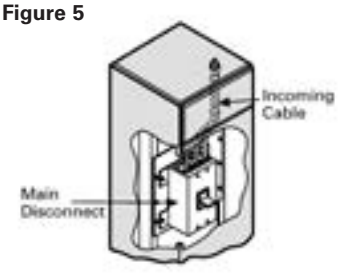

Main Disconnect with Top Cable Entry

If bottom entry is used, cables must be properly laced and supported based upon the available short circuit current. See dimensional requirements for molded case breakers and fused switches, consult local sales office.

Heavy Duty Starters

Size 00–4 magnetic starters include the following standard features:

- Rugged Industrial Design
- Half Sizes for Cost and Space Savings
- Dual Voltage, Dual Frequency Coils
- Solid State or Ambient Compensated Bimetal Overload Protection
- Wide Range of Accessories
- Easy Coil Access
- Overload Test Feature
- Straight Thru Wiring
- Gravity Dropout
- Large Silver Cadmium Contacts
- UL listed file #E14900 (class 14, 22, 30, 40 & 43)
- CSA certified file #LR 6535 (class 14, 22, 30, 40 & 43)



Solid State Starter Class 14

Application

Heavy Duty starters are designed for across the line starting of single phase and polyphase motors.

These controls are available in NEMA Sizes 00 through 8. In addition to the usual NEMA Starter Sizes, Siemens offers three exclusive Half Sizes; 1¾, 2½ and 3½. These integral sizes offer the same rugged, industrial construction as our NEMA Sizes and ensure efficient operating performance. Half Sizes provide a real cost savings by cutting down on over capacity when NEMA Sizes exceed the motor ratings. All Siemens Heavy Duty controls, including our popular Half Sizes comply with applicable NEMA and UL tests.

SIRIUS INNOVATION



Sirius Contactor 3RT

SIRIUS Contactors

SIRIUS high-performance NEMA contactors offer a high degree of protection whileoffering reduced mounting space.

- CSA certified file #165071

All starters are supplied with a NO holding interlock that in conjunction with an appropriate pilot device will provide low voltage protection or release.

NEMA starters are ideal for applications requiring dependability and durability. Typical applications include use with machine tools, air conditioning equipment, material handling equipment, compressors, hoists and various production and industrial e quipment as well as in demanding automotive applications.

Overload Relays

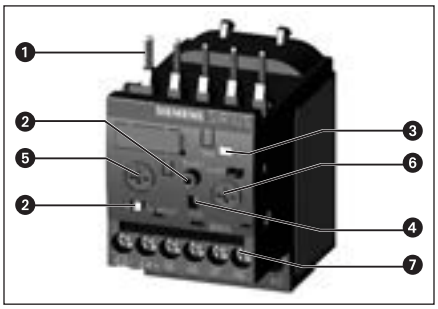

1. **Connection for mounting onto contactors**:
   Optimally adapted in electrical, mechanical and design terms to the contactors. The overload relay can be connected directly to these contactor using these pins. Stand-alone installation is possible as an alternative (in conjunction with a terminal bracket for stand-alone installation).
2. **Selector switch for manual/automatic RESET and RESET button:**
   With this switch you can choose between manual and automatic RESET. A device set to manual RESET can be reset locally by pressing the RESET button. On the 3RB21 a solid-state remote is inte grated into the unit.
3. **Switch position indicator and TEST function of the wiring:**
   Indicates a trip and enables the wiring test.
4. **Solid state test:**
   Enables a test of all important device components and functions.
5. **Motor current setting:**
   Setting the device to the rated motor current is easy with the large rotary knob.
6. **Trip class setting/internal ground-fault detection (3RB21 only):**
   Using the rotary switch you can set the required trip class and activate the internal ground-fault detection dependent on the starting conditions.
7. **Connecting terminals (removable terminal block for auxiliary circuits):**
   The generously sized terminals permit connection of two conductors auxiliary circuit can be connected with screw-type terminals or with spring-loaded terminals.

The 3RB and 3RB solid-state overload relays up to 630 A with internal power supply have been designed for inverse-time delayed protection of loads with normal and heavy starting (see Function) against excessive temperature rise due to overload, phase unbalance or phase failure. An overload, phase un- balance or phase failure result in an increase of the motor current beyond the set motor rated current. This current rise is detected by the current transformers integrated into the devices and evaluated by corresponding solid-state circuits which then output a pulse to the auxiliary contacts. The auxiliary contacts then switch off the load by means of the contactors control circuit. The break time depends on the ratio between the tripping current and set current Ie and is stored in the form of a long-term stable tripping characteristic (see Characteristic Curves).

In addition to inverse-time delayed protection of loads against excessive temperature rise due to overload, phase unbalance and phase failure, the 3RB21/31 solid-state overload relays also allow internal ground-fault detection (not possible in conjunction with wye-delta assemblies). This provides protection of loads against high- resistance short-circuits due to damage to the insulation material, moisture, condensed water etc.

The "tripped" status is signaled by means of a switch position indicator (see Function). Resetting takes place either manually or automatically after the recovery time has elapsed (see Function).



ESP200 Solid State Overload

ESP200 Solid State Overloads

Designed for a wide variety of applications. The field selectable Trip Class 5, 10, 20 or 30 can easily be set by 2 DIP switches. This eliminates the guess factor of an application requirements and provides reduced inventory for multiple applications. The inherent benefits of the ESP200 ultimately results in cost savings for the user.

ESP200 has a 4:1 current adjustment range with a fine adjustment dial labeled in full load amps. The heaterless overload minimizes the heat trapped in the enclosures, reduces cost for ventilation or cooling. Easily accessible Reset button, provides visible and audible indications to ensure the tripped overload is ready to re-start.

Designed to replace thermal, or ESP100 overload relays for any application. It has the same dimensions and footprint of the ESP100 overload relays. It can be directly coupled to the contactors or remotely mounted. In addition to the NEMA contactor applications, it also can be used with other types of controllers for applications requiring DP or IEC contactors. As a retrofit for other brands, it is used with a plate available for retrofitting competitive products.

SIMOCODE pro

SIMOCODE pro is the latest generation of Motor Management System ("Smart Overload") bringing a new level of flexibility and functionality within the Siemens smart motor control centre. By means of a PROFIBUS DP interface, it can easily be linked to higher-level automation systems. SIMOCODE pro implements all motor protection and control functions, determines operational, diagnostic and statistical data and organizes the communication between the automation system and MCC bucket.

The SIMOCODE pro consists of two device series with different levels of functionality:

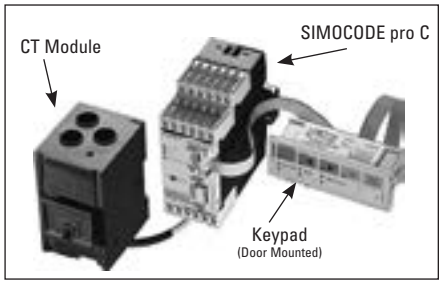

SIMOCODE pro C (Compact)

The compact motor management system can be used for Full Voltage Non-reversing (FVNR) starters, Full Voltage Reversing (FVR) starters, and base overload functionality.

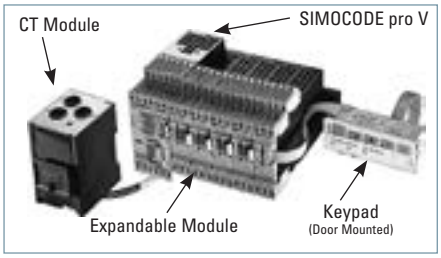

SIMOCODE pro V (Variable)

The variable motor management system has an even greater range of functions, including voltage and power monitoring and expandable modules for additional I/O, as well as temperature and ground fault protection.

Note: For detailed information on the SIMODE pro please contact the local Siemens Sales Office.

SIRIUS Soft Starters

Overview

The advantages of the SIRIUS soft starters at a glance:

- Soft starting and soft stop
- Stepless starting
- Reduction of current peaks
- Avoidance of mains voltage fluctuations during starting
- Reduced load on the power supply network
- Reduction of the mechanical load in the operating mechanism
- Considerable space savings and reduced wiring compared with mechanical reduced voltage starters
- Maintenance-free switching
- Fits perfectly in the SIRIUS modular system

SIRIUS 3RW40

SIRIUS 3RW40 soft starters include soft start and soft stop, and internal bypass. At the same time they come with additional functions, i.e. selectable solid-state motor overload, intrinsic device protection and adjustable current limiting, as well as a new patented two-phase control method (Polarity Balancing) that is unique in this rating range.

SIRIUS 3RW40 soft starters are part of the SIRIUS modular system. This results in advantages such as identical sizes and a uniform connection system. Thanks to their particularly compact design, SIRIUS 3RW40 soft starters are only half as big as comparable wye-delta starters. Hence they can be mounted in compact space requirements in the control cabinet. Configuring and installation are carried out quickly and easily thanks to the 3-wire connection.

SIRIUS 3RW40 for three-phase motors Soft starters rated up to 300 Hp (at 460 V) for standard applications in three-phase power systems. Extremely small sizes, low power losses and simple commissioning are just three of the many advantages of the SIRIUS 3RW40 soft starters.

Applicable standards

- IEC 60947-2
- UL/CSA #E143112



Application areas

- Fans
- Pumps
- Building/construction machines
- Presses
- Escalators
- Transport systems
- Air conditioning systems
- Ventilators
- Assembly lines
- Operating mechanisms

SIRIUS 3RW44

In addition to soft starting and soft stopping, the solid-state SIRIUS 3RW44 soft starters provide numerous functions for higher-level requirements. They cover a rating range up to 800Hp at 460 V in the inline circuit.

The SIRIUS 3RW44 soft starters are characterized by a compact design for space-saving and clearly arranged control cabinet layouts. For optimized motor starting and stopping, the innovative SIRIUS 3RW44 soft starters are an attractive alternative with considerable savings potential compared to applications with a frequency converter. The new torque control and adjustable current limiting enable these high feature soft starters to be used in nearly every conceivable task. They reliably mitigate the sudden torque applications and current peaks during motor starting and stopping. This creates savings potential when calculating the size of the control-gear and when servicing the machinery installed. Be it for inline circuits or inside-delta circuits – the SIRIUS 3RW44 soft starter offers savings especially in terms of size and equipment costs.

Combinations of various starting, operating and ramp-down possibilities ensure an optimum adaptation to the application specific requirements. Operating and commissioning can be performed by means of the user-friendly keypad and a menu prompted, multi-line graphic display with background lighting. The optimized motor ramp-up and ramp-down can be effected by means of just a few settings with a previously selected language. Four-key operation and plain-text displays for each menu point guarantee full clarity at every moment of the parameterization and operation.

Applicable standards

- IEC 60947-4-2
- UL/CSA #E143112

Application areas, e.g.

- Pumps
- Mills
- Ventilators
- Saws
- Compressors
- Crushers
- Water transport
- Mixers
- Conveying systems and lifts
- Centrifuges
- Hydraulics
- Industrial cooling and refrigerating systems



MICROMASTER family of products

MICROMASTER 440

Application

The MICROMASTER 440 inverter is suitable for a variety of variable-speed drive applications. Its flexibility provides for a wide spectrum of applications. These also include cranes and hoisting gear, high-bay warehouses, production machines for food, beverages and tobacco, packaging machines etc.; i.e. applications which require the frequency inverter to have a higher functionality and dynamic response than usual. The inverter is especially characterized by its customer-oriented performance and ease of use. Its large mains voltage range enables it to be used all over the world.

Design

The MICROMASTER 440 inverter has a modular design. The operator panels and modules can be easily exchanged.

International standards

- The MICROMASTER 440 inverter complies with the requirements of the EU low voltage guideline
- The MICROMASTER 440 inverter has the CE marking
- acc. to UL and cUL certified
- c-tick

Main characteristics

- Easy, guided start-up
- Modular construction allows maximum configuration flexibility
- Six programmable isolated digital inputs
- Two scaleable analog inputs (0 V to 10 V, 0 mA to 20 mA) can also be used as a 7th/8th digital input
- Two programmable analog outputs (0 mA to 20 mA)
- Three programmable relay outputs (30 V DC/5 A resistive load; 250 V AC/2A inductive load)
- Low-noise motor operation thanks to high pulse frequencies, adjustable (observe derating if necessary)
- Complete protection for motor and inverter.

Options (overview)

- EMC filter, Class A/B
- LC filter and sinusoidal filter
- Line commutating chokes
- Output chokes
- Gland plates
- Basic Operator Panel (BOP) for parameterizing the inverter
- Plain text Advanced Operator Panel (AOP) with multi-language display
- Communication modules
  - PROFIBUS
  - DeviceNet
  - CANopen
- Pulse encoder evaluation module
- PC connection kits
- Mounting kits for installing the operator panels in the control cabinet doors
- PC start-up tools executable under Windows 98 and NT/2000/ME/XP Professional
- TIA integration with Drive ES

SINAMICS G120C (480V)①

SINAMICS G120C has been especially designed for an economic, space-saving and easy-to-operate frequency converter providing a multitude of functions. This device combines in particular compactness with superior power density and is characterized by fast installation and commissioning.

Smallest size

- Compact design (integrated braking chopper)
- Fast mechanical installation (i.e. pluggable terminals)

Easy to use

- Simple, optimized commissioning with the STARTER tool
- Effective, adequate parameter set (simple storing and cloning functions using IOP, BOP-2 or SD card)
- Usable with IOP or BOP-2 operator panels

Leading edge technology

- Energy-efficient, encoder-less vector control - automatic flow reduction with V/F ECO
- Safety Integrated (Safe Torque Off)
- Communication PROFIBUS DP, PROFINET, CAN and USS/ Modbus RTU

Application

For industrial and commercial applications (secondary drive in production machines or generally for water/ waste water, automotive). Application examples include mixers, extruders, simple pumps, fans, compressors, vibrator motors, simple wire drawing machines.



Design

SINAMICS G120C is a compact inverter where the Control Unit (CU) and Power Module (PM) function units are combined in one device. SINAMICS G120C can be integrated into the widest range of applications, either using the integrated digital and analog inputs or via the integrated fieldbus interface (available in the USS/ Modbus RTU, PROFINET, PROFIBUS DP, CANopen versions). Especially the product versions with integrated PROFIBUS DP or Profinet interface make full integration into the Siemens TIA family possible, therefore allowing the advantages of the seamless TIA product family to be fully utilized. SINAMICS G120C devices are preset in the factory so that they can be immediately connected to PROFIBUS DP or Profinet fieldbuses and used without parameterization.

① For other Voltage ratings, consult Siemens.

SINAMICS G120 (480V)①

SINAMICS G120 is a modular drive inverter system that comprises various function units. These are essentially: Control Unit (CU) and Power Module (PM). The CU controls and monitors the PM and the connected motor in several operating modes that can be selected. It supports communication with a local or central controller and monitoring devices.

- **With many innovative functions**
  Safety Integrated for safety-relevant machines and systems, capable of regenerative feedback into the line supply for energy saving
- **Fast commissioning**
  STARTER tool and data backup using the BOP-2, IOP or MMC/SD card
- **Efficient and consistent solutions**
  via Totally Integrated Automation (TIA), consistency from SINAMICS through to the automation level



Application

Machines and plants in industrial and commercial applications (machinery construction, automotive, textiles, chemical industry, printing, steel). Application examples include: Pumps and fans, Compressors, Centrifuges, Conveyor systems.

Design

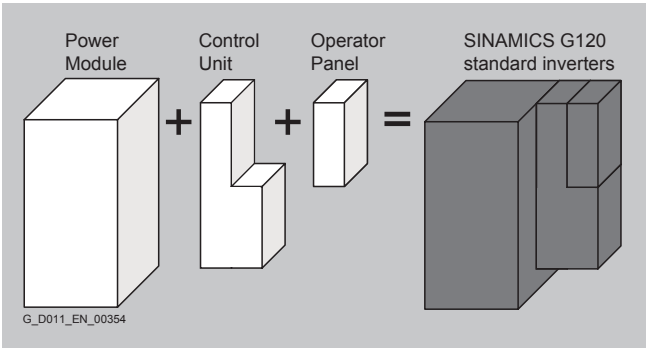

Application-oriented design of SINAMICS G120

SINAMICS G120 standard inverters are modular inverters for standard drives. Selection of the SINAMICS G120 is reduced to two or three steps thanks to the modular system used.

Selecting the Power Module

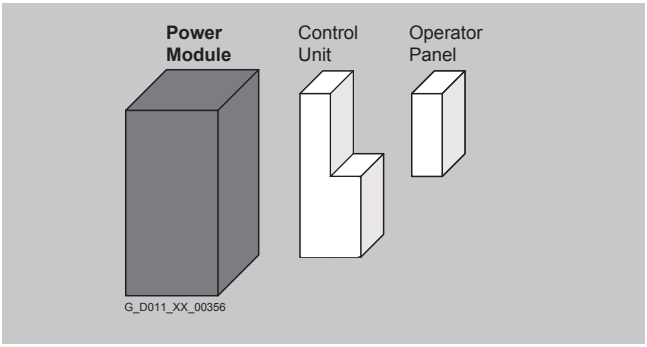

PM240 Power Modules

PM240 Power Modules are suitable for many applications. The PM240 has an integrated braking chopper in frame sizes FSA up to FSF and has the possibility of connecting a braking resistor. For frame size FSGX, an optional pluggable braking module can be ordered.

PM250 Power Modules

PM250 power modules are suitable for the same applications as the PM240, but they are specialized to address conveyor-related applications - where the braking energy is directly fed back into the line supply using the unique technology of Efficient Infeed Technology. This feature provides the ability to feed energy back into the supply system in the generator mode (electronic braking) so that the energy in not wasted in a braking resistor.

① For other Voltage ratings, consult Siemens.

SINAMICS G120 (cont.)

Selecting the Control Unit

The optimum Control Unit is selected, based on the number of I/Os and any additional functions required such as Safety Integrated or HVAC. The communication options are already integrated and do not have to be additionally ordered or plugged in. Three product series are available corresponding to the particular application.

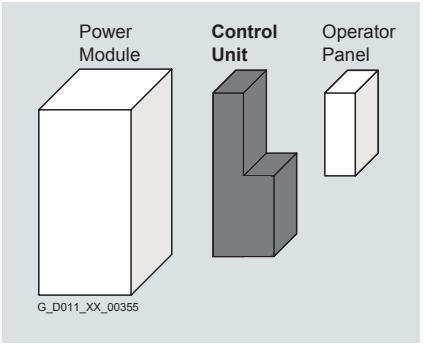

CU230 Control Units

The CU230 Control Units have been specifically designed for pump, fan and compressor applications.

CU240 Control Units

The CU240 Control Units are suitable for a wide range of applications in a general machine construction, such as conveyor belts, mixers and extruders.

CU250 Control Units

The CU250 Control Unit is particularly suited for drives with high requirements in speed and torque accuracy.

Selecting Optional System Components

Intelligent Operator Panel IOP

Graphic display with bar-type diagrams, e.g. for status values such as pressure or flow rate.

Basic Operator Panel BOP-2

Menu navigation and 2-line display permit fast and user-friendly commissioning of the inverter. Simple basic commissioning by simultaneously displaying parameter value, as well as the option of filtering parameters.

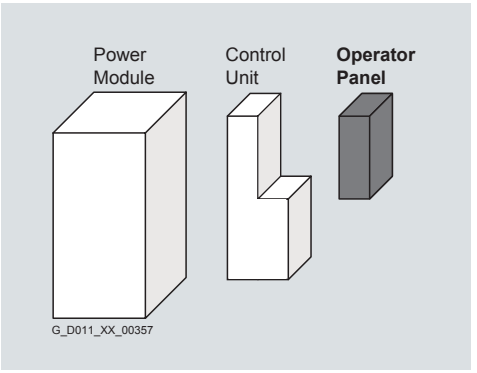



Power Monitoring

Siemens line of power meters provides market leading technology for power quality measurement. These products continually change to meet growing needs for power quality and energy monitoring. Siemens tiastar MCCs are fully capable of installing any of Siemens power meters for your needs.



PAC3200



PAC4200

PAC3100

The **SENTRON PAC3100** is a powerful compact power monitoring device that is suitable for use in industrial, government and commercial applications, where basic metering and energy monitoring is required. The meter may be used as a stand alone device monitoring over 25 parameters or as part of an industrial control, building automation or global power monitoring system. Metering and monitoring applications range from simple analog volt and amp meter replacements to stand-alone sub-billing or cost allocation installations.

The PAC3100 has many features not usually found in this price class of meters. A large graphical display supports multiple languages and easy to use menus that can be used to set up the meter. The meter also has built in Modbus RTU communications via a RS485 interface. The meter comes standard with two digital inputs and outputs. One output is suitable for pulse output for export/import real and reactive energy. The other output is controllable from an outside source by way of a Modbus register.

PAC3200

The **SENTRON PAC3200** is a powerful compact power monitoring device that is suitable for use in industrial, government and commercial applications where basic metering and energy monitoring is required. The meter may be used as a stand alone device monitoring over 50 parameters or as part of an industrial control, building automation or global power monitoring system. Metering and monitoring applications range from simple analog volt and amp meter replacements to stand-alone sub billing or cost allocation installations with multiple tariffs.

The SENTRON PAC3200 provides open communications using Modbus RTU/TCP, PROFIBUS-DP, and PROFINET protocols for easy integration into any local or remote monitoring system. Simple configuration of the meter can be done from the front display.

PAC4200

The **SENTRON PAC4200** is a feature packed power monitoring device that is suitable for use in industrial, government and commercial applications where basic to advanced metering, logging, and I/O is required. The meter may be used as a stand alone device monitoring over 200 parameters or as part of an industrial control, building automation or global enterprise wide monitoring system.

Advanced power quality monitoring and logging applications range from single low voltage breaker / building metering to sub-station main feeder monitoring, sub-billing or cost allocation installations with multiple tariffs. Whether your goal is to reduce operation cost, reduce your carbon footprint or to maintain your power assets, the PAC 4200 meter should be an important part of your power monitoring system.

The SENTRON PAC4200 provides open communication using the standard built-in Ethernet Modbus TCP and has the capability of communicating through Optional Modbus RTU, PROFIBUS-DP, and PROFINET protocol modules simultaneously. This allows for easy integration into any local or remote monitoring system. The gateway functionality of this device reduces installation cost by replacing other gateway devices and simplifying wiring.

tiastar™ Motor Control Centres

TPS3 Family of Hardwired Surge Protective Devices

Product Overview

TPS3 Integral or Internally Mounted SPDs for MCCs

Siemens Integral TPS3s are UL 1449 4th Edition, factory installed SPDs within our MCCs, utilizing optimal electrical system connections to minimize impedance losses. This results in the some of the industry's best "installed" Voltage Protection Ratings. This SPD has the following features:

TPS3 01 Features

- UL 1449 4th Edition and UL 1283
- UL 1449-4 Type 2 SPD, UL 1283 Listed, CSA 22.2 No. 269.2, Optional UL 1449 4th Edition Recognized Type 1, CSA 22.2
- 20 kA I_n (most models)
- 200 kA SCCR (most models)
- UL96A Lightening Protection Master Label Compliant
- 100 –300 kA surge current capacity per phase
- EMI/RFI filtering or Sine Wave tracking
- Standard Monitoring –LEDs, audible alarm, dry contacts, surge counter, and ground references monitoring (GRM) diagnostics.
- 10 year product warranty



TPS3 01 Module



TPS3 01 MCC Installation

Ordering Information

Catalogue # TPS3 ☐ 01 ☐☐ X 0 M

Voltage Code
- **A** = 120/240 V, 1Ø, 3W
- **B** = 120/240 V, 3Ø, 4W
- **C** = 120/208 V, 3Ø, 4W
- **D** = 240 V, 3Ø, 3W
- **E** = 277/480 V, 3Ø, 4W
- **F** = 480 V, 3Ø, 3W
- **G** = 600 V, 3Ø, 3W (100kA & 150kA Only)
- **K** = 380/220 V, 3Ø, 4W
- **L** = 600/347 V, 3Ø, 4W
- **S** = 400/230 V, 3Ø, 4W

Please consult the factory for applications requiring SPDs with larger per phase surge current capacities and/or 10-mode style configurations.

Surge Current (kA)
- **10** = 100 kA per phase
- **15** = 150 kA per phase
- **20** = 200 kA per phase
- **25** = 250 kA per phase
- **30** = 300 kA per phase

- **2** = Type 2 SPD (Default) Includes UL 1283 EMI/RFI Filters
- **0** = Type 1 SPD (Consult Factory Prior to Ordering)
- **M** = MCC Application
- **X** = Surge Counter

- Example: **TPS3C0120X0M** = Type 4 SPD intended for use in Type 1 applications, for a 208/120 V MCC with a surge current capacity of 200 kA per phase and a surge counter option
- When an option is not selected, include a **zero (0)** in the field

- Available Accessory: Ordered Separately
  RMSIE = Remote monitor

MCC Starter Ratings and Dimensions

NEMA Size	Maximum Horsepower Rating 208V	230V	400V	460V	480V	600V	Circuit Breaker Type (For Maximum HP at 460V) MCP Frame Size (Amp)	Dimensions in inches (mm) Unit Height① W= Width, D= Depth	kA Interrupting Rating at 480V②③	Fusible Type (For Maximum HP at 460V) Standard Disconnect Sw/Fuse Clip Sizes	Dimensions in inches (mm) Unit Height① W= Width, D= Depth	kA Interrupting Rating at 480V②③

Full Voltage Non-Reversing (FVNR) and Full Voltage Reversing (FVR)

								FVNR	FVR	IR Std/Opt		FVNR	FVR	IR
1	7.5	7.5	10	10	10	10		12 (305)	18 (457)		30/30	12 (305)	18 (457)	
2	10	15	25	25	25	25	125	12 (305)	24 (610)		60/60	12 (305)	24 (610)	
3	25	30	50	50	50	50		18 (457)	30 (762)		100/100	24 (610)	36 (914)	
4	40	50	75	100	100	100	125/250	24 (610)	36 (914)	42③	200/200	42 (1067)	48 (1219)	
5	75	100	150	200	200	200	250/400	36 (914)	48 (1219)		JD6 MCS/ 400	60 (1524)	60 (1524)	100
6④	150	200	300	400	400	400	400/600/ 800	48 (1219)	72 (1829) 30W(762W)		MD6 MCS/800	72 (1829)	72 (1829) 30W (762W)	
7④	—	—	—	600	600	600	1200	72 (1829) 20W x 20D (508W x 508D)	N/A	42③	ND6 MCS/1200	72 (1829) 40W x 20D (1016W x 508D)	N/A	

Full Voltage Contactor (FVC)

1	10.8	11.9	18.7	—	23.8	31		12 (305)		30/30	12 (305)	
2	16.2	17.9	31.2	—	35.8	46.7	125	12 (305)		60/60	12 (305)	
3	32	35	62	—	71	93		18 (457)		100/100	24 (610)	
4	48	54	94	—	107	140	125/250	24 (610)	42③	200/200	42 (1067)	100
5	108	119	206	—	238	311	250/400	36 (914)		JXD6 MCS/400	60 (1524)	
6④	198	218	346	—	437	570	600/800	48 (1219) 72 (1829)		LXD6 MCS/800	72 (1829) 30W (762W)	

Two Speed, Constant or Variable Torque

								2S2W	2S1W	IR Std/Opt		2S2W	2S1W	IR
1	7.5	7.5	10	—	10	10		24 (610)	24 (610)		30/30	24 (610)	24 (610)	
2	10	15	25	—	25	25	125	24 (610)	24 (610)		60/60	24 (610)	24 (610)	
3	25	30	50	—	50	50		36 (914)	48 (1219)		100/100	30 (762)	36 (914)	
4	40	50	75	—	100	100	125/250	48 (1219)	60 (1524)	42③	200/200	36 (914)	48 (1219)	100
5④	75	100	150	—	200	200	250/400	72 (1829) 30W (762W)	72 (1829) 30W (762W)		JD6 MCS/400	72 (1829) 30W (762W)	72 (1829) 30W (762W)	
6④	150	200	300	—	400	400	600/800	72 (1829) 30W (672W)	Consult Siemens		MD6 MCS/800	72 (1829) 40W (1016W)	Consult Siemens	

Two Speed, Constant Horsepower

								2S2W-CH	2S1W-CH	IR Std/Opt		2S2W-CH	2S1W-CH	IR
1	5	5	7.5	—	7.5	7.5		24 (610)	24 (610)		30/30	24 (610)	24 (610)	
2	7.5	10	20	—	20	20	125	24 (610)	24 (610)		60/60	24 (610)	24 (610)	
3	20	25	40	—	40	40		30 (762)	36 (914)		100/100	36 (914)	48 (1219)	
4④	30	40	50	—	75	75	125/250	36 (914)	48 (1219)	42③	200/200	48 (1219)	60 (1524)	100
5④	60	75	100	—	150	150	250/400	72 (1829) 30W (762W)	72 (1829) 30W (762W)		JD6 MCS/ 400	72 (1829) 30W (672W)	72 (1829) 30W (672W)	
6④	100	150	200	—	300	300	400/600	72 (1829) 30W (762W)	Consult Siemens		MD6 MCS/800	72 (1829) 40W (1016W)	Consult Siemens	

① The addition of oversized CPTs (above 50VA), relays, timers, etc. may increase unit height.
② For other available voltage ratings, consult Siemens.
③ For other Interrupting kA ratings, consult Siemens.
④ Fixed mounted units (not plug-in).

Note: For half size starters, contact Siemens.

MCC Starter Ratings and Dimensions (cont.)

NEMA Size	Maximum Horsepower Rating 208V	230V	400V	460V	480V	600V	Circuit Breaker Type (For Maximum HP at 460V) Standard Breaker Type	Dimensions in inches (mm) Unit Height① W= Width, D= Depth	kA Interrupting Rating at 480V②③	Fusible Type (For Maximum HP at 460V) Standard Disconnect Sw/Fuse Clip Sizes	Dimensions in inches (mm) Unit Height① W= Width, D= Depth	kA Interrupting Rating at 480V②③

Reduced Voltage Autotransformer (RVAT) Non-Reversing, Closed Transition

								RVAT	IR Std/Opt		RVAT	IR
2④	10	15	25	—	25	25	MCP	42 (1067)		100/100	48 (1219)	
3④	25	30	50	—	50	50		48 (1219)		200/200	60 (1524)	
4④	40	50	75	—	100	100		72 (1829) 30W (762W)		JD6MCS/ 400	72 (1829) 30W (762W)	
5④	75	100	150	—	200	200		72 (1829) 30W (762W)		MD6MCS/ 800	72 (1829) 30W (762W)	

Reduced Voltage Wye Delta, Open and Closed Transition

								YDO	YDC	IR Std/Opt		YDO	YDC	IR
2	20	25	25	—	40	40	MCP	30 (762)	42 (1067)	42③	100/100	36 (914)	48 (1219)	100
3	25	30	50	—	75	75		36 (914)	48 (1219)		200/200	48 (1219)	60 (1524)	
4	60	60	75	—	150	150		36 (914)	48 (1219)		JD6MCS/ 400	72 (1829)	72 (1829)	
5④	150	150	150	—	300	300		72 (1829) 30W (672W)	72 (1829) 30W (672W)		LD6MCS/ 600	72 (1829) 30W (672W)	72 (1829) 30W (672W)	

NEMA Size	Maximum Horsepower Rating 208V	230V	400V	460V	480V	600V	Circuit Breaker Type MCP Frame Size	Dimensions in inches (mm) Unit Height①	kA Interrupting Rating at 480V②

Dual Full Voltage Non-Reversing (DFVNR) Unit with Circuit Breaker

1	7.5	7.5	10	—	10	10	125	18 (457)	42③

Compact Units Available – High Density FVNR

1	7.5	7.5	—	—	10	—	125	6 (152)	42③
2	10	15	—	—	25	—			
3	25	30	—	—	50	—		12 (305)	
4	40	50	—	—	100	—	125/250	18 (457)	

① The addition of oversized CPTs (above 50VA), relays, timers, etc. may increase unit height.
② For other available voltage ratings, consult Siemens.
③ For other Interrupting kA ratings, consult Siemens.
④ Fixed mounted units (not plug-in).
⑤ The addition of relays, timers, etc. will increase unit height.

SINAMICS G120C- Technical Data (480V)③

Frame Size	Output Ratings				Dimensions - in. (mm)①		IR
	LO-OL	LO-OL	HI-OL	HI-OL	Mounting Height	Structure W x D	
	A	hp	A	hp			
A	1.4	0.5	1.1	0.5	18 (457)	20 x 15 (508 x 381)	65ka
A	1.9	0.75	1.4	0.5			
A	2.6	1	1.9	0.75			
A	3.5	2	2.6	1			
A	4.8	2	3.5	2			
A	6.2	3	4.8	2			
A	7.5	3	6.2	3			
B	10.6	5	7.5	3	24 (610)		
B	14.0	10	10.6	5			
C	21.3	15	14.0	10	30 (762)		
C	26.4	15	21.3	15			
C	31.5	20	26.4	15			

① Circuit Breaker, Reactor (Line or Load) and Drive Included.

SINAMICS G120 Technical Data (480V)③

	Frame Size	Output Ratings				Dimensions - in. (mm)①		IR
		LO-OL	LO-OL	HI-OL	HI-OL	Mounting Height	Structure W x D	
		A	hp	A	hp			
PM240	A	1.2	0.5	1.3	0.5	18 (457)	20 x 15 (508 x 381)	65ka
	A	1.6	0.5	1.7	0.75			
	A	2.0	0.75	2.2	1			
	A	2.9	1	3.1	1.5			
	A	3.8	2	4.1	2			
	B	5.5	3	5.9	3	24 (610)		
	B	7.2	3	7.7	5			
	B	9.5	5	10.2	5			
	C	16.7	10	13.2	7.5	36 (914)		
	C	23.3	15	19	10			
	C	29.8	20	26	15			
	D	35.3	25	32	20	48 (1219)	20 x 15② (508 x 381)	
	D	41.9	30	38	25			
	D	55.8	40	45	30			
	E	69.8	50	60	40	60 (1624)		
	E	83.7	60	75	50			
	F	102.3	75	90	60	72 (1829)	20 x 20② (508 x 508)	
	F	134.9	100	110	75			
	F	165.5	125	145	100			
	F	190.7	150	178	125			
	F	240.0	150	200	150			
	Gx	264.3	200	250	200		40 x 20② (1016 x 508)	
	Gx	323.8	250	302	250			
	Gx	417.4	350	370	300			
PM250	D	35.3	25	32	20	48 (1219)	20 x 15② (508 x 381)	
	D	41.9	30	38	25			
	D	55.8	40	45	30			
	E	69.8	50	60	40	60 (1624)		
	E	83.7	60	75	50			
	F	102.3	75	90	60	72 (1829)	20 x 20② (508 x 508)	
	F	134.9	100	110	75			
	F	165.5	125	145	100			

① Circuit Breaker, Reactor (Line or Load) and Drive Included.
② Fixed Mounted
③ For other Voltage ratings, consult Siemens.

600V① Solid State Reduced Voltage — NEMA 1 MCC Enclosures②

Rating HP③	RVSS Type⑦		Rated Amperes	Dimensions - In. (mm)④⑥ Mounting Height	Structure WxD	IR
7.5	3RW40		9	18 (457)	20 x 15 (508 x 381)	25③
15	3RW40		19			
20	3RW40		24			
25	3RW40		28			
30	3RW40		34			
40	3RW40		42			
50	3RW40		58	24 (610)		
60	3RW40		70			
75	3RW40		117	36 (914)		
125	3RW40		132			
150	3RW40		185	48 (1219)⑦		
200	3RW40		205			
20		3RW44	26	36 (914)		
25		3RW44	32			
40		3RW44	42			
50		3RW44	52			
60		3RW44	66			
75		3RW44	80			
100		3RW44	113			
125		3RW44	134	48 (1219)⑦		
150		3RW44	180			
250		3RW44	243			
300		3RW44	318	72 (1829)⑦	30 x 15 (762 x 381)	
500		3RW44	489	Consult Siemens		
600		3RW44	562			
700		3RW44	685			
800		3RW44	880			

① For other available voltage ratings, consult Siemens.
②For other enclosure types, consult Siemens.
③ Ratings are based on CLASS 20 overloads and 6 starts per Hour. For other KA Interrupting ratings, consult Siemens.
④ Dimensions shown are for circuit breaker or fusible disconnects.
⑤ RVSS with bypass and / or isolation contactors require extra mounting space. Consult Siemens for further information.
⑥ 3RW40 Units include line side isolation contactor
⑦ Fixed mounted units (not plug-in).

480V① Variable Frequency Drives — NEMA 1A MCC Enclosures②

Rating HP③	Drive Type	Rated Amperes	Dimensions - In. (mm)④⑤ Mounting Height	Structure W x D	IR
2	MM440	4	18 (457)	20 x 15 (508 x 381)	100
5		10.2	24 (610)		
7.5		16			
10		18.4	36 (914)		
15		26			
20		32			
25		38	48 (1219)⑦		
30		45			
40		62	48 (1219)⑤⑦		
50		76	60 (1524)⑦		
60		90			
75		110	72 (1829)⑦	20 x 15 (508 x 381)	
100		145			
125		178			
150		205		30 x 15 (762 x 381)	
200		250			

① For other available voltage ratings, consult Siemens.
② For other enclosure types, consult Siemens.
③ Ratings are for Variable Torque applications. Consult Siemens for other applications.
④ Dimensions shown are for circuit breaker or fusible disconnects except as noted.
⑤ Fusible disconnect unit is larger, consult Siemens.
⑥ Drives with bypass and / or isolation contactors require extra mounting space. Consult Siemens for further information.
⑦ Fixed mounted units (not plug-in).

600V① Variable Frequency Drives — NEMA 1A MCC Enclosures②

Rating HP③	Drive Type	Rated Amperes	Dimensions - In. (mm)④⑤ Mounting Height	Structure W x D	IR
2	MM440	2.7	24 (610)	20 x 15 (508 x 381)	100
5		6.1			
7.5		9			
10		11			
15		17			
20		22			
25		27	48 (1219)⑦		
30		32			
40		41			
50		52	60 (1624)⑦		
60		62			
75		77	72 (1829)⑦	20 x 15⑤	
100		99			
125		125			

① For other available voltage ratings, consult Siemens.
② For other enclosure types, consult Siemens.
③ Ratings are for Variable Torque applications. Consult Siemens for other applications.
④ Dimensions shown are for circuit breaker or fusible disconnects except as noted.
⑤ Fusible disconnect unit is larger, consult Siemens.
⑥ Drives with bypass and / or isolation contactors require extra mounting space. Consult Siemens for further information.
⑦ Fixed mounted units (not plug-in).

Lighting Panelboards Applied in MCCs

Amp Rating	Number of Circuits	Height in Inches (mm) 1%, 3W 240/120	Height in Inches (mm) 3%, 4W 208Y/120
Main Lug Only			
125/250	18	30 (762)	30 (762)
	30	36 (914)	36 (914)
	42	42 (1067)	42 (1067)
Main Circuit Breaker			
125/250	18	30 (762)	30 (762)
	30	36 (914)	36 (914)
	42	42 (1067)	42 (1067)

Distribution Transformers

KVA Rating	Phase	Unit Height in Inches (mm)
1	1	12 (305)①
1.5		
2		
3		
5		
7.5		18 (457)②
10		
15		
25		24 (610)②③
30		
37.5		36 (914)②③
45		
9	3③	18 (457)
15		
25		
30		
37.5		24 (610)
45		

① Plate mounted.
② Transformer mounted on brackets 6 in. (152 mm) off sills.
③ Requires 20 in. (508 mm) deep structure.

tiastar™ Motor Control Centres

Product History

Siemens has an installed base of motor control centres dating back to 1964 due to acquisitions of Allis-Chalmers in 1978, ITE Gould in 1983 and Furnas Electric in 1996. This has resulted in eleven MCC models installed across the United States. Replacement units for these models as well as the current tiastar™ MCC offerings are built in the Siemens West Chicago plant. Siemens developed this tool to help people gain a better understanding of the wide variety of this installed base of MCCs. This should enable people to order aftermarket buckets or new MCCs much easier. In this program brochure, all the tools necessary for identifying existing MCCs to ordering forms are included. All items listed as follows: timeline, product overview, identification guide, product descriptions, work sheets and ordering check sheet. The intent of this guide is to provide a tool for Siemens customers so they can make a more educated purchasing decision. If you have any questions, please contact your local Siemens representative.

MCC Timeline

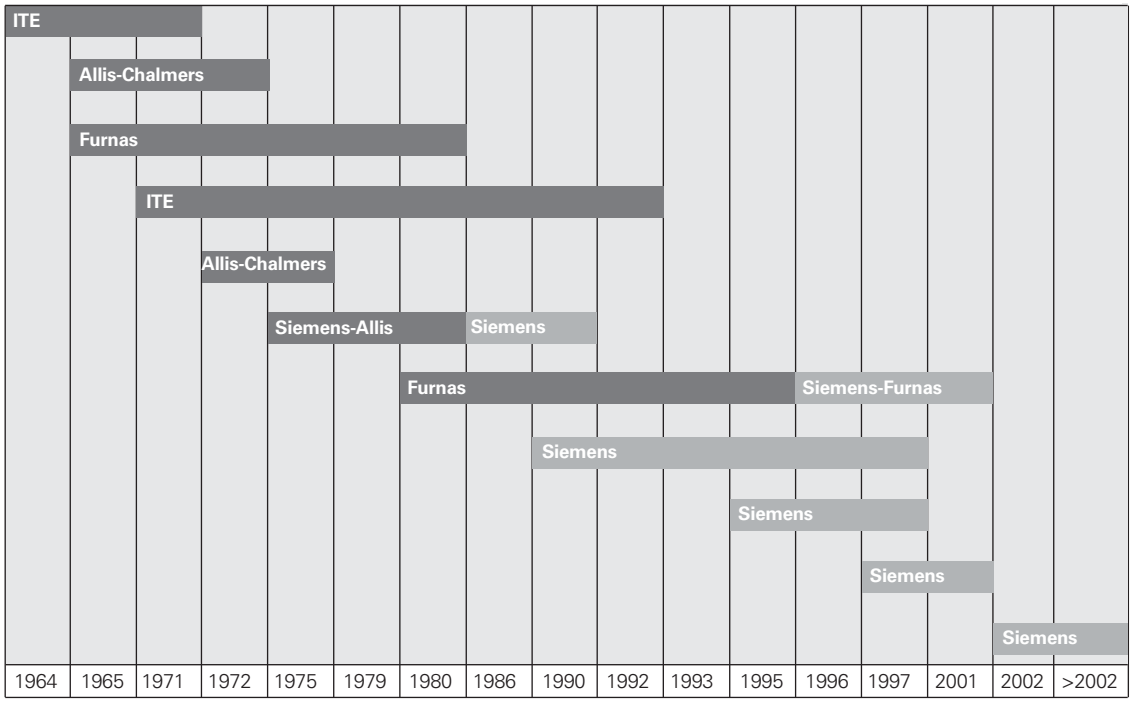

Year

Note: Timeline represents approximate values

tiastar™ Motor Control Centres

Product History

Aftermarket

This overview is a clear and concise snap shot of Siemens entire MCC product offering. For your convenience, typical MCC part numbers are shown for continued identification possibilities.

Furthermore, the overview covers the standard options for the product offering.

Original manufacturer	Model	Production dates①	Bucket w/ door & handle②	Factory retrofit③	Typical MCC number④	X=Letter # = Number
Siemens	tiastar	2002 – Current	X	—	Same as System89	
Siemens/Furnas	System89	1980 – 2001	X	—	89BFXX### ### 89BSXX### ### 89BBXX### ### WX### (ex. WU760)	
Siemens	Model 95 +	1997 – 2001	X	—	95BFXX### ### 95BSXX### ### 95BBXX### ### XX### (ex. WU760)	
Siemens Siemens Siemens Allis Allis-Chalmers Allis-Chalmers	Model 95 Model 90 Marq 21 Mark 2 Mark 1	1995 – 1997 1990 – 1997 1975 – 1990 1972 – 1975 1965 – 1972	X X X X X	— — — — —	09-001-XXXX-XXXXX-XXX 30-001-XXXX-XXXXX 01-14XX-XXXXX-XX ##### (ex. 15375)	
ITE ITE	Gould 5600 Gould 9600	1971 – 1992 1964 – 1971	— —	X X	84-XXXXX-XX 85-XXXXX-XX 86-XXXXX-XX	
Furnas	Class89	1965 – 1979	—	X	89FVXXXX XXX 89SVXXXX XXX 89BVXXXX XXX V#### (ex. V2176)	

① Dates represent approximate values only.
② Buckets exceeding 250 amps are fix mounted.
③ Contact West Chicago Aftermarket Dept. for Retrofit Program at (800) 683-6200.
④ In some instances, a generic 5 alphanumeric number is designed as the MCC sales order number. In most cases a 5 alphanumeric number within the MCC number is the sales order number. MCC numbers can be found inside the MCC bucket.

Starters 208V, 230V, 400V, 480V, 600V	NEMA size
FVNR	1-6
FVR	1-6
DFVNR	1
2S1W-CT	1-6
2S1W-VT	1-6
2S2W-CT	1-6
2S2W-VT	1-6
RVAT	2-5
RVSS	Consult factory
VFD	Consult factory
YDC/YDO	2-5

Standard options	
Amp meter + CT	Surge suppression
CT	Under voltage CB
Voltage monitor	Shunt trip
Vac. contactor	Ground stab
Transducer	High density bucket
Fuse puller	Special paint
Bypass	Timer
ASI®	4P relay
Ground fault	Extra unit space
Elapse time meter	



tiastar™ Motor Control Centres Arc Resistant

Innovative protection for your most valuable asset: your personnel.

The Siemens tiastar™ arc resistant Motor Control Centre (MCC) is the industry's first MCC tested to the ANSI/IEEE C37.20.7 testing guide, with representatives of Underwriters Laboratories, Inc. (UL) present to observe the testing procedures. The tiastar Motor Control Centre has been designed with more advanced features to control arc flash exposure. Thus users experience superior arc resistance that meets a high standard in protecting people, capital investments and operations.

tiastar Motor Control Centres

Arc Resistant

Managing Hazards and Reducing Risk are Top Priorities

Manufacturers in all segments of industry are constantly seeking methods to improve the safety of their workforce. One area of focus is the reduction of hazards associated with arc flash events. Siemens arc resistant tiastar Motor Control Centre significantly reduces risk for workers entering areas with arc flash potential by containing and directing the arc flash incident energy away from personnel and maintaining the units physical integrity.

The arc resistant tiastar was developed to meet applicable safety codes and standards, while NFPA 70E and IEEE C37.20.7 provided the guidance to design and manufacture features that are capable of ensuring Type 2 accessibility of the motor control centre.

The ability to provide Type 2 accessibility, as defined by IEEE C37.20.7, helps shield personnel on the front, rear and sides of the equipment from the damaging effects of arc flash incidents. Robust structural and bus designs, isolated horizontal and insulated vertical bus designs are critical to withstand the mechanical forces released during an arc flash event.

The Benefits of a Superior Arc Resistant Design

A HIGHER STANDARD	With UL observing and validating the testing of our arc resistant design, the design innovations of the Siemens tiastar Motor Control Centre have set a new industry benchmark.
INCREASED PROTECTION FOR PERSONNEL	Your people are, and always will be, your most valuable asset. Improve workplace safety and protect your work force by lowering the risk of electrical shock and harmful exposure to arc flash incident energy.
PRESERVED ASSETS	Arc flash events endanger equipment and operations. Enhanced arc resistance reduces damage to nearby assets, which in turn cuts repair and replacement costs.
SMARTER, PASSIVE DESIGN	Passive designs do not rely on secondary devices to mitigate arc flash energies. Siemens arc resistant tiastar™ Motor Control Centres are manufactured to contain the energy created during an arcing event for 50ms.
IMPROVED SPECIFICATIONS	The lack of formal arc flash resistance standards for MCCs poses a challenge for engineers wanting to specify safer solutions. By meeting ANSI/IEEE C37.20.7 testing guides for Metal Enclosed Switchgear, Siemens has raised the bar for MCC designs and created a specifiable standard.

ANSI/IEEE Standard C37.20.7-2007

ANSI/IEEE C37.20.7, IEEE Guide for Testing Metal-Enclosed Switchgear Rated Up to 38kV for Internal Arcing Faults, provides guidelines to test the resistance to the effects of arcing due to an internal fault in metal enclosed equipment; equipment that successfully meets this standard demonstrates greater protection against arc flash hazards, as long as all safety protocols are followed. Note that use of Siemens arc resistance features do not substitute for proper safety procedures in compliance with OSHA and other government safety regulations. They do mean more advanced safety features that can keep your people and facility better protected against electrical dangers and hazards of arc flashes.

Additional Safety Options Available

Dynamic Arc Flash Sentry allows the setting of dual parameters for the circuit protective device. These dual parameters, normal and lower arc flash settings, are designed to enhance the safety of personnel who may work on or near energized equipment.

A normal setting optimizes the WL circuit breaker to provide the most efficient selective trip coordination.

Lower Arc Flash Energy setting enables a reduced operating time, allowing the instantaneous trip function via remote switches, key lock or other inputs.

Smart MCC Technology utilizes built-in networks and pre-configurations to control, monitor and troubleshoot the equipment remotely to minimize the need for personnel to enter the arc flash boundary.

tiastar Motor Control Centres

Arc Resistant

Key Innovations in Arc Resistance

CONTAIN AND CHANNEL THE ARC FLASH INCIDENT ENERGY:

By meeting ANSI/IEEE C37.20.7 Type 2 Arc Resistance, the new tiastar™ arc resistant design protects personnel at the front, back and sides of the equipment by directing the energy through the top.



MODIFIED PULL-BOX WITH PRESSURE FLAPS FOR PRESSURE RELIEF IN CASE OF AN ARC FLASH EVENT



REINFORCED ENCLOSURE AND FRONT DOORS
Extra hinges, stronger latching systems and reinforced cabinet ensure the equipment can withstand and contain pressure from internal arcing faults.

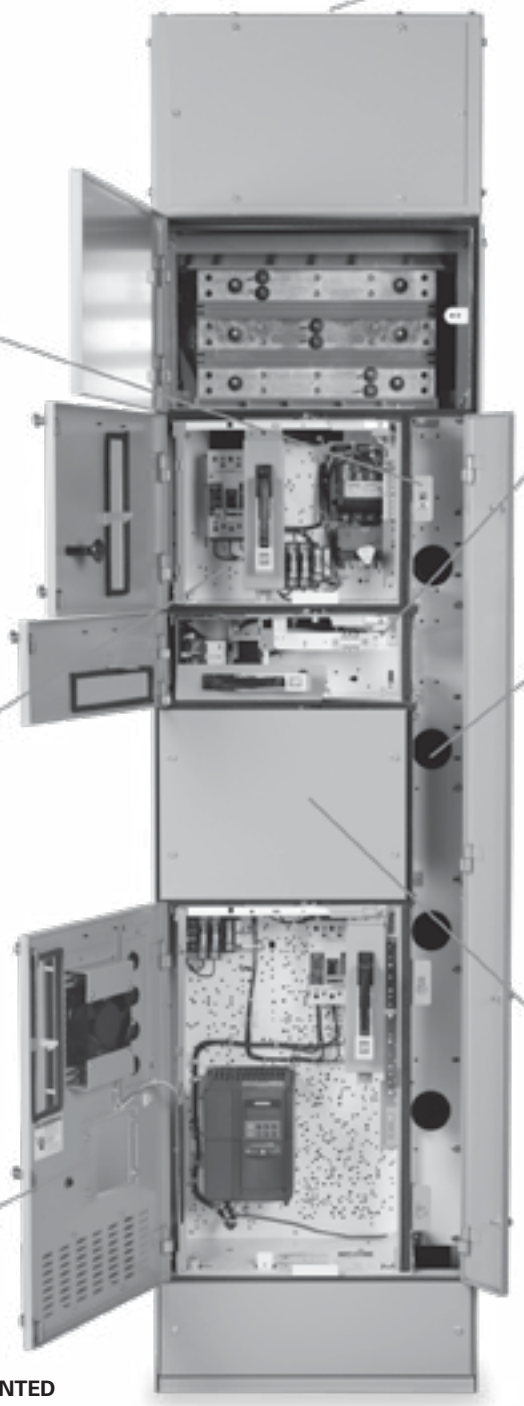

6" UNITS AVAILABLE IN SIEMENS tiastar ARC RESISTANT MCC



INTERNAL VENTING SYSTEM
The vertical wireway is perforated with holes that channel the gasses to the back and out the top of the MCC.

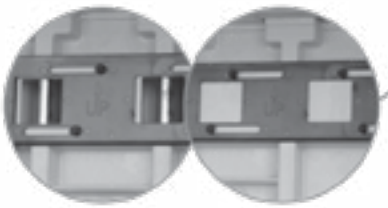

AUTOMATIC SHUTTERS IN PLUG-IN UNIT COMPARTMENTS

The barrier automatically opens and closes to allow insertion or removal of units.

Isolates the vertical bus to prevent inadvertent contact lowering the risk to personnel.

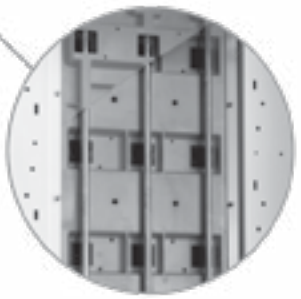

INSULATED BUS BAR SYSTEM
Isolate energized components and prevent accidental contact and arcing faults from propagating.



NEW PROTECTION PLATE FOR VENTED DOORS ALLOWS THE INCLUSION OF ELECTRONIC STARTERS IN THE ARC RESISTANT MCC.

New technology for reducing arc flash hazards in motor control centers

Dynamic Arc Flash Sentry is now available in tiastar™ motor control centers from Siemens.

Here's how the innovation reduces arc flash hazards and optimizes efficiency:

- Unique dual trip setting technology reduces the energy available in an arc flash event.
- Remote switching enables you to automate trip function settings.



tiastar™ Motor Control Centre

Dynamic Arc Flash Sentry

Arc Flash: A Growing Concern

The risk of arc flashes is a growing concern in the industry. Current research shows that up to 80% of reported electrical injuries are caused by an electrical arc. This fact has spawned new requirements and standards, including NFPA 70E and NEC, designed to protect personnel on and around energized electrical equipment.

To fulfill these enhanced standards, Siemens has developed new technologies to address the critical issue of arc flash. Our unique Dynamic Arc Flash Sentry (DAS) system is now available in tiastar Motor Control Centres. The DAS anchors a suite of standard and optional features, specifically designed to enhance arc flash protection. DAS is also currently available in Siemens low voltage switchgear.



What is Dynamic Arc Flash Sentry?

Siemens strongly recommends that all systems be de-energized when personnel are working on electrical equipment. However, in some circumstances, qualified professionals may need to access and work near energized equipment.

Under these conditions, the Dynamic Arc Flash Sentry provides additional arc flash protection without sacrificing operational efficiency. DAS is based on the electronic trip unit (ETU776), available with the Siemens WL circuit breaker. Using the WL as the main breaker a tiastar motor control centre enables the system to provide two trip level settings. In normal operation mode, trip coordination is optimized for efficiency and reduced nuisance tripping. The second setting is designed to lower arc flash energy using the WL breaker's instantaneous trip function.

The dual protective settings, combined with the ability to toggle between normal and lower arc flash parameters, are designed to enhance the safety of personnel who must work on or near energized equipment. With a range of options, from fully automated switching to manual key operation, Siemens DAS technology combines enhanced arc flash protection with maximum operational flexibility.



Dual protective settings

The dual protection setting capability of ETU776 electronic trip units form the basis of the Dynamic Arc Flash Sentry technology. The ETU776 is placed within a WL Low Voltage Power Circuit Breaker and allows two separate control parameters to be set.

A normal operation parameter (A) optimizes the WL breaker to provide the most efficient selective trip coordination. The second parameter (B) optimizes the system for lower arc flash energy. Since arc flash energy is most affected by the available fault current and operating time of the WL, the instantaneous trip function is a key to the reduction in arc flash energy provided by parameter B.

Remote switching

Siemens Dynamic Arc Flash Sentry can be controlled through a dry contact input. This ability to toggle between trip unit settings allows for remote communications.

Key lock protection

A simple, yet effective way to control trip unit parameter switching from a remote location is by placing a key lock on the entry door of the energized equipment room. Unlocking the door triggers the WL to switch to Parameter B, ensuring this setting is employed when anyone is present in the room.

With Siemens Dynamic Arc Flash Sentry, your facility can have the best of both worlds: reduced arc flash energy and maximum operational efficiency. For more information on DAS, contact your Siemens representative.

tiastar Motor Control Centres

Dynamic Arc Flash Sentry

Benefits of Siemens Dynamic Arc Flash Sentry Technology

By reducing the potential arc flash energy that can accompany an electrical fault, the Dynamic Arc Flash Sentry offers:

- Creates an improved work environment. By decreasing the amount of energy available in an arc flash, Dynamic Arc Flash Sentry makes the area surrounding the motor control centre less susceptible to arc flash damage.
- Promotes operational efficiency. Trip coordination is optimized when personnel are not near energized equipment and arc flash energy is reduced when they are.
- Provides a clear competitive advantage. Unlike other "arc flash" circuit breakers, the DAS allows modification of the parameters in the trip unit, instead of utilizing potentially compromising trip coordination at all times.
- Offers enhanced flexibility. The DAS has the features required to allow remote communication to alter trip parameters or to fully automate the system.

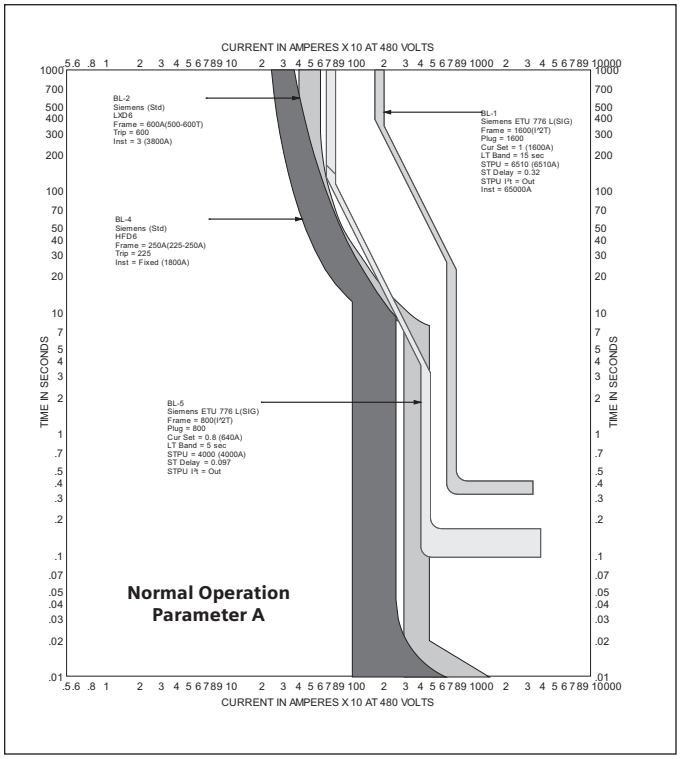

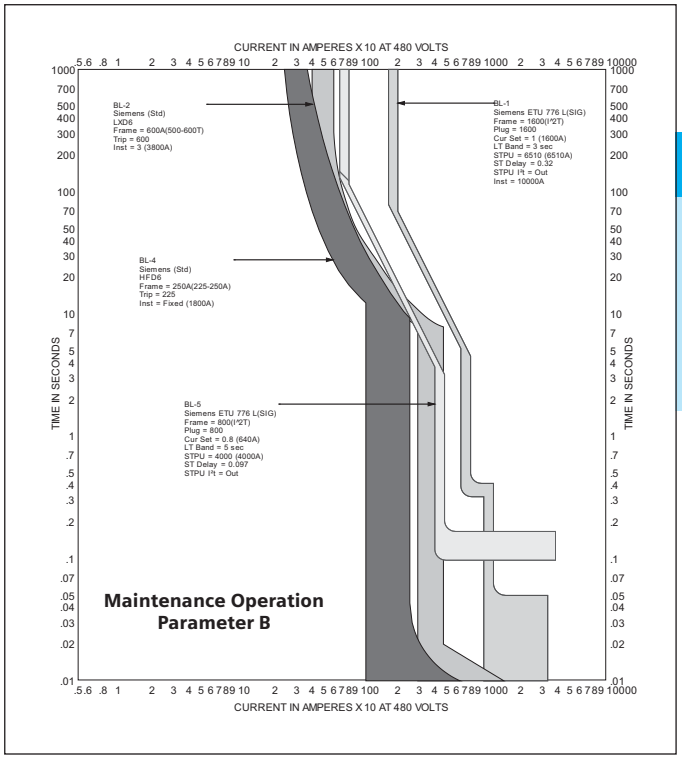

Siemens Arc Sentry tiastar Motor Control Centre

Required features:

- Dynamic Arc Flash Sentry
- Automatic Shutters
- Isolated and insulated vertical bus
- Assembly open bus covers
- Vertical ground bus

Optional features:

- High resistance ground
- Phase isolated horizontal bus
- Voltage indicator
- Infrared inspection ports
- Smart MCC Technology featuring Profibus DP
- Blown fuse indicators



Voltage indicator



Automatic shutters



Isolated/insulated vertical bus assembly

Motor Control Centres

Specification Checklist

Customer:	Prepared By:

Check boxes and fill in blanks as required.

STANDARDS

☐ CSA ☐ NEMA ☐ Service Entrance
☐ Hydro Utility Company _____

INCOMING POWER

* System Voltage:	☐ 208/120V 3p4w	☐ 380V 3p3w ☐ 380V 3p4w	☐ 480V 3p3w ☐ 480/277V 3p4w	☐ 600V 3p3w ☐ 600/347V 3p4w
* Power System Configuration:	☐ Wye	☐ Delta	☐ High Resistance Ground	☐ Other _____
* Available Fault Current:	☐ 18 000A ☐ 22 000A	☐ 25 000A ☐ 35 000A	☐ 42 000A ☐ 65 000A	☐ 85 000A ☐ 100 000A

STRUCTURE

* Enclosure:	☐ Type 1 - Indoor (Std.) ☐ Type 1A - Indoor, Gasketed ☐ Type 12 - Indoor, Industrial		☐ Type 2/1 - Indoor, Drip Proof ☐ Type 2/1A - Indoor, Drip Proof/Gasketed ☐ Type 2/12 - Indoor, Drip Proof/Industrial	
* Depth:	☐ 15" Deep, Front Only	☐ 20" Deep, Front Only	☐ 21" Deep, Back to Back	
Pullbox:	☐ 12" ☐ Incoming Section Only	☐ 18" ☐ All Sections	☐ 24"	
Options:	150 W Space Heater:	☐ None Power Source:	☐ 120V ☐ External	☐ 240V ☐ Internal
	Modifications:	☐ Thermostat Every Shipping Split ☐ 2 Piece Backplate (20W) ☐ Automatic Shutters		☐ Removable Bottom Plates ☐ Seismic Zone 4 (UBC)
	Paint:	☐ Gray ANSI 61 (Std)		☐ Custom Color - describe _____

BUS

* Power Bus Bracing (amperes rms symmetrical):		☐ 45 kA STD	☐ 65 kA	☐ 100 kA
* Horizontal Bus:	65°C Copper: Rating:	☐ 600A STD	☐ 800A STD	☐ 1200A STD _____
	50°C Copper:	☐ 600A	☐ 600A	☐ 600A ☐ 1200A ☐ 1600A STD ☐ 2000A STD
Vertical Bus:	Main Vertical Bus:	☐ 300A F.O.B. STD	☐ 600A B.T.B. STD	☐ Option F.O.B. 600A
		☐ Insulated Barriers c/w Fish-Tape Barrier(s)		
* Ground Bus:	Horizontal Ground Bus:	☐ 300A 1/4 x 1	☐ 600A 1/4 x2	
	Ground Bus Location:	☐ Top Mounted	☐ Bottom Mounted	
	Note: 3 phase 3 wire (3p3w) - standard ground bus location bottom			
	Ground Bus Plating:	☐ Bare Copper STD	☐ Tin Plated Copper	☐ Silver Plated Copper- describe
	Vertical Ground Bus:	☐ Not required	☐ Required w/ Motor Terms	

Motor Control Centres

Specification Checklist

BUS - *continued*

Neutral Bus:

Rating: ☐ Full Rated: ☐ 600A ☐ 800A ☐ 1200A ☐ 1600A
☐ Half Rated: ☐ 600A ☐ 800A ☐ 1200A

Location: ☐ Incoming Section Only ☐ All Sections

INCOMING LINE TERMINATION

* INCOMING

Located in Section No. _____ ☐ Top ☐ Bottom

☐ 600A Inc. 2 x 350 MCM inside wireway "no loss of space"

Main Lug (MLO):

No. of cables per phase: _____ Cable Size:_____ ☐ Copper ☐ Alum

☐ Mechanical Lugs (Please check Tiastar MCC Instruction Guide for lugs detail)

☐ Compression Lugs (Provision for NEMA 2 holes pattern)

☐ Notes: _____

Main Circuit Breaker (MCB):

Located in Section No._____ ☐ Top ☐ Bottom

Breaker Rating, Frame:_____ Breaker Rating, Trip:_____

No. of cables per phase: _____ Cable Size:_____ ☐ Copper ☐ Alum

☐ Mechanical Lugs (Please check Tiastar MCC Instruction Guide for lugs detail)

☐ Notes: _____

Breaker Option: ☐ Alarm Contact ☐ Internal Ground Fault ☐ Shunt Trip
☐ Internal Aux. Switch ☐ Kirk Key ☐ Undervoltage Release

Main Fusible Disconnect (MFD):

Located in Section No. _____ ☐ Top ☐ Bottom

No. of cables per phase: _____ Cable Size:_____ ☐ Copper ☐ Alum

Ampere Rating: _____ ☐ Factory Supplied and Installed

☐ Supplied & Installed by Others

Fuse Clip:

☐ Class J Current limiting, time delay

Fuse Rating: _____

☐ Class L "for 800A and 1200A only"

☐ Mechanical Lugs

☐ Notes: _____

Modification Option:

☐ Door Padlock Hasp ☐ Lighting Arrester ☐ Surge Capacitor
☐ Ground Detection Lights ☐ Phase Monitor

* Metering Options

☐ PAC3100 Power Meter, 3p4w, 2000A (3CT, 3PT)
☐ PAC3200 Power Meter, 3p4w, 2000A (3CT, 3PT)
☐ PAC4200 Power Meter, 3p4w, 2000A (3CT, 3PT)
☐ CT for Metering, 2000:X
☐ PT for Metering, Including fuses, 575V, 60Hz
☐ Phase Selector Switch for Ammeter or Voltmeter
☐ Extra Fuses (with Switch \-or\-Shorting Terminal Block)

Motor Control Centres

Specification Checklist

INCOMING LINE TERMINATION - *continued*

Surge Protection Device

Surge Current: ☐ None ☐ 100 kA ☐ 150 kA ☐ 200 kA ☐ 250 kA ☐ 300 kA

*Disconnect: ☐ Circuit Breaker Disconnect ☐ Fusible Disconnect ☐ Direct Connection (12")

Options: ☐ Surge Counter ☐ Remote Monitor (External to MCC) (RMSIE)

FEEDER UNITS

Fused Switch:

☐ Class J Clips for "Current Limiting Time Delay" Fuse

☐ Single Mounted (30a, 60A) ☐ Dual Mounted (30A, 60A)

☐ Quantity _____ ☐ 100 ☐ 200 ☐ 400 ☐ 600

Fuse Rating: _____

Other Options: _____

Circuit Breaker (Thermal Magnetic):

Interrupting Rating: _____

☐ Dual Mounted ☐ ED, 125A Frame Max 18 kA

☐ Dual Mounted ☐ CED, 125A Frame Max 100 kA

☐ Quantity _____ ☐ 250A F frame ☐ 400A J frame ☐ 600A L frame ☐ 800A M frame ☐ 1200A N frame

Other Options: _____

Breaker Option: ☐ Internal Aux. Switch ☐ Alarm Contact ☐ Shunt Trip ☐ Undervoltage Release ☐ Other Options: _____

External Option: ☐ Ground Fault Indication ☐ Ground Fault Trip

COMBINATION CONTACTOR/STARTER UNITS

* Wiring:

NEMA Wiring Class: ☐ I ☐ IS ☐ II ☐ IIS

NEMA Wiring Type:

☐ BD - Unit Terminal Block

☐ BT - Unit Terminal Block Load connected thru size 3

☐ C - Mater Terminal Block:

☐ Top 12" Wireway ☐ Bottom 6" Wireway ☐ Master Control Section

☐ Pull-apart Control Terminal STD

☐ Stationary Control Terminal

Contactor/Starter Types: ☐ FVC ☐ FVNR ☐ FVR ☐ 2S1W ☐ 2S2W

☐ Other: _____

Disconnecting Means - Fusible: ☐ Class J Clips for "Current Limiting Time Delay" Fuse

Fuses: ☐ Factory Supplied and Installed ☐ Supplied and Installed by Others

Disconnecting Means - Circuit Breaker: ☐ Motor Circuit Protector (magnetic/instantaneous only) ☐ Circuit Breaker (thermal-magnetic)

Accessories: _____

* = Required Field

COMBINATION CONTACTOR/STARTER UNITS - *continued*

* Overload Relays:

☐ 3RB20 STD ☐ Option Electronic 3RB21 c/w ground fault
☐ Simocode Pro V **Note:** Max 30 Simocodes per network segment

Secondary Voltage: ☐ 120 VAC (std) ☐ Other: _____

☐ Factory wired with Profibus

Options: _____

☐ CT Module ☐ PT/CT Module in place of CT Module

☐ No Operator Control Panel/Door push button (label) Reset

☐ Operator Control Panel w/o LCD ☐ Operator Control Panel with LCD

Simocode Expansion Modules

☐ 4I/2O 110-240VAC Monostable Module
☐ 1I/1O Analog Module
☐ Temperature Module
☐ Decoupling Module use with PT/CT module
☐ Earth Fault Module
☐ Summation Current Transfomer
☐ 4I/2O 110-240VAC Bistable Module

Options: _____

* Unit Nameplate:

☐ None ☐ Self Adhesive STD ☐ Screw ☐ 1200A N frame

Colours ☐ Black letters on white ☐ White letters on black ☐ Other: _____

* Control Power:

STD ☐ Individual Control Transformer (CPT)

Secondary Voltage: ☐ 120 VAC (std) ☐ Other: _____

☐ Standard Capacity ☐ 100 VA extra

Option: ☐ No Interlock on Handle
☐ Interlock on Handle 1 NO, 1 NC
☐ Interlock Auxiliary Switch 1 NO, 1 NC

Option: ☐ Mater Control Transformer

Secondary Voltage: ☐ 120 VAC (std) ☐ Other: _____

☐ Factory Wiring ☐ Control Fuses Inside Starter

Standard: ☐ Interlock on Handle 1 NO, 1 NC

Option: ☐ Internal Auxiliary Switch 1 NO, 1 NC

Option: ☐ Separate Source (remote to MCC)

Secondary Voltage: ☐ 120 VAC (std) ☐ Other: _____

☐ Control Fuses Inside Starter

Standard: ☐ Interlock on Handle 1 NO, 1 NC

Option: ☐ Internal Auxiliary Switch 1 NO, 1 NC

* Starter Options:

☐ Starter Auxiliary Option - Qty._____N.O. Qty._____N.C.

☐ Pilot Devices ☐ Pushbuttons, Describe Function (such as start/stop): _____

_____

☐ Selector Switches, Describe Function (such as off-on, hand-off-auto): _____

_____

☐ Pilot Lights ☐ 22 mm ☐ STD Bulb Qty. _____ Colour(s): _____

☐ 30 mm ☐ LED Qty. _____ Colour(s): _____

☐ Push-to-test

☐ Relays or Timers, Describe: _____

☐ Others, Describe: _____

Specification Checklist

OTHER UNIT/APPARATUS

Voltage: _____ Phase: _____ Wire: _____

IC Rating: _____

☐ Panelboard: ☐ Main Lug ☐ Main Breaker

Quantity and Pole Configuration: _____

☐ Soft Starters: ☐ Keypad ☐ Communication ☐ External Bypas ☐ Input Isolation ☐ Reset

Describe: _____

☐ Drives ☐ MM440 ☐ 6SE70 ☐ Keypad ☐ Communication

Contactors and Reactors:

Contactor Type: ☐ Input Isolation ☐ Output Isolation ☐ Bypass

Reactor Type: ☐ Line ☐ Load

Filter Type: ☐ DV/DT Filter ☐ RFI Filter

☐ Extra Space for Future Units: Describe: _____

☐ Additional Notes/Comments: _____

Contents

Selection	15/2
Full Voltage Non-Reversing	
Full Voltage Metallic	15/4
Non - Combination	15/5
Circuit Breaker Combination	15/6
Fusible Switch Combination and Non-Fusible Starter	15/7
Full Voltage Reversing	
General	15/8
Non - Combination	15/9
Circuit Breaker Combination	15/10
Fusible Switch Combination and Non-Fusible Starter	15/11
Two Speed Starters	
General	15/12
Two Windings, Constant or Variable Torque Non - Combination	15/13
Circuit Breaker Combination	15/14
Fusible Switch Combination and Non-Fusible Starter	15/15
Single Winding, Constant or Variable Torque Non - Combination	15/16
Circuit Breaker Combination	15/17
Fusible Switch Combination and Non-Fusible Starter	15/18
Overload Relay Chart	15/19
Factory Modifications	
Selection	15/20
Dimensions	15/25
3RE41 Motor Starter Packages	15/26
Catalogue Numbering System	15/27
Selection & Ordering Information	15/28
Overload Relays	15/30
Field Modifications & Accessories	15/31
Dimensions	15/33
Wiring Diagrams	15/34



Siemens SIRIUS IEC Starters

The SIRIUS IEC Starter is the new generation of IEC HP rated magnetic starters, designed to meet and exceed today's market requirements for HP rated starters.

The new SIRIUS Starters take advantage of the reliability of the SIRIUS line of contactors and overload relays in addition to the new line of SIRIUS ACT 3SU 22mm pilot devices as the standard control device.

As evident in the design and size, all efforts were put in place to offer a new line of starters that exceeds the performance of the previous generation.

The SIRIUS IEC Starters line also offers more price flexibility in the very competitive starters market.

SIRIUS Starters Features:

- CSA approved
- 100HP, 600V max
- Auxiliary contacts available
- Ambient 60°C on contactors
- Fast and simple 3-prong overload contactor connection: no coil extension required
- Standard primary and secondary fusing on control transformers
- Standard 22mm SIRIUS ACT Control Devices



SIRIUS HP Rated Magnetic Starters

Selection

Catalogue Number Selection Guide

Starter Series	Disconnect Type	Starter Type	Enclosure Type	Contactor Ref. Number	Coil Voltage	Overload Relay Setting Range
		page 15/5 - 15/18				page 15/19
V SIRIUS IEC HP rated Starter N SIRIUS IEC NEMA rated Starter	1 Non-combination 2 Circuit breaker combination 3 Non-fusible type 4 Fusible combination	A FVNR B FVR N 2S1W constant or variable torque R 2S1W constant horsepower U 2S2W constant horsepower W 2S2W constant or variable torque	B CSA type 1 EEMAC type 1 general purpose C CSA type 5 EEMAC type 12 dust tight industrial use D CSA type 4 EEMAC type 4 watertight F CSA type 4x EEMAC type 4x watertight corrosion resistant	15 3RT2015 16 3RT2016 17 3RT2017 18 3RT2018 25 3RT2025 26 3RT2026 27 3RT2027 35 3RT2035 36 3RT2036 37 3RT2037 38 3RT2038 45 3RT2045 46 3RT2046 47 3RT2047	C 24V/60Hz 24V/50Hz K 120V/60 Hz 110V/50Hz M 208V/60Hz P 240V/60Hz 220V/50Hz V 460V/60Hz 380V/50Hz T 600V/60Hz Z Others Specify	0A to 4M Standard Class 10 bimetal overload relay 2R to 2U Optional Class 20 electronic overload relay (for 3ph only) 00 Provision for field mounting of overload relay



Catalogue Number Selection Guide

Power Line Voltage	Control Circuit	Additional Auxiliary Contacts	Pilot Devices				
			Operators		Indicators		
			Operators Type	Legend Plate(s)	Indicator type	Functions	Colour Choice
page 15/20		page 15/21	pages 15/21 - 15/22		page 15/22	page 15/23	
6 600V Max. Distributor Stock 1 120V/1Ph/60Hz 2 208V/3PH/60Hz 3 230V/3PH/60Hz 4 460V/3Ph/60Hz 5 575V/3Ph/60Hz 7 230V/1Ph/60Hz 9 Other Specify	0 Separate control circuit, unfused N Separate control circuit, fused max 250V P Common control with one control fuse (for 120V 1ph only) R Standard control transformer c/w 2 prim. & 1 sec. 120V fuse U Extra 50VA capacity Control Transformer W Extra 100VA capacity Control Transformer 9 Other Specify	0 None E 4 N.O. F 1 N.O. + 1 N.C. J 3 N.O. + 1 N.C. K 2 N.C. L 2 N.O. M 2 N.O. + 2 N.C. 9 Other Specify	0 none 1 or 2 1 push button extended head red 3 or 4 1 twist lock mushroom red 5 or 6 2 push buttons 1-red, 1-green 7 or 8 3 push buttons 1-red, 2-black A or B 2 pos. selector switch C or D 2 pos. selector switch spring return E or F 2 pos. selector switch key operated G or H 3 pos. selector switch J or K 3 pos. selector switch spring return L or M 3 pos. selector switch key operated N or P 3 pos. selector switch spring return key operated T or U 3 pos. selector switch and 2 push buttons START STOP for hand operation 9 Other Specify	0 none A EMERGENCY STOP B STOP C START STOP D ON OFF E to J 3 legend plates for 3 push button K to T 1 legend plate for 2 pos. selector switch 1 to 8 1 legend plate for 3 pos. selector switch X 3 legend plates for 3 pos. selector switch and START STOP push button 9 Other Specify	0 none 5 or 6 Full Voltage 120V LED c/w legend plate(s) 7 or 8 Full Voltage 24V LED c/w legend plate(s)	0 none 1 to 5 1 indicator for 1 function 6 to E 2 indicators for 2 functions F to R 3 indicators for 3 functions	0 none C to F Colour choice for 1 indicator 1 to 6 Colour choice for 2 indicators K to P Colour choice for 3 indicators

General

Description

Siemens full voltage non-reversing type starters are designed for full voltage across-the-line starting of single or 3-phase squirrel cage motors. They also can be used as the primary control of wound rotor motors.

Combined with short circuit protection, FVNR starters are also offered as combination starters.

- Fusible disconnect type complete with Form I, Class J fuse clips.
- Circuit breaker type or as Non-Fusible Controller.

FVNR starters are available up to 100HP, 600V AC, EEMAC type 1, 12, 4 or 4X sheet metal enclosed. They are an assembly of the proven 3RT contactors and the exclusive 3RU bimetal overload relays.



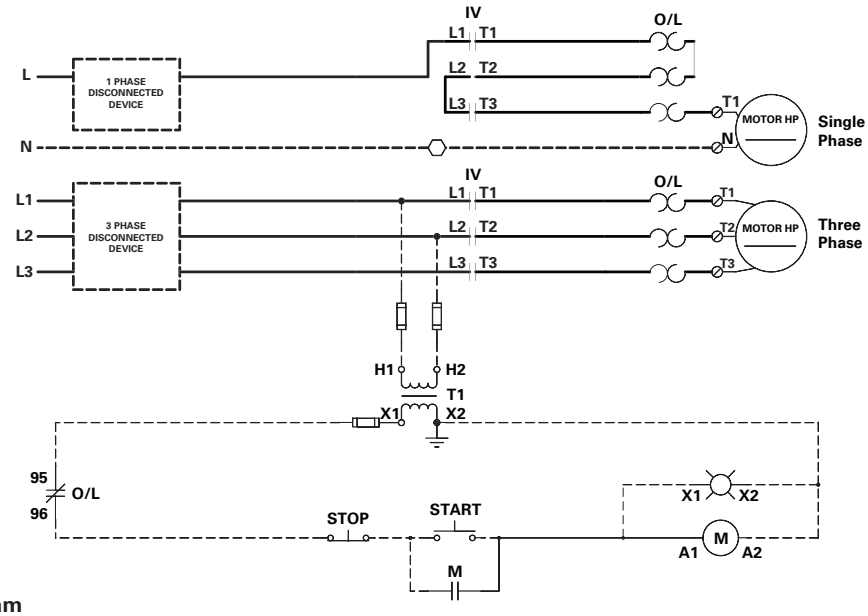

FVNR Typical Wiring Diagram

Catalogue Number:

V 1 A B 1 5 K . . . . Z . .

- HP Rated Starter
- Disconnect Type
- Starter Type
- Enclosure Type
- Contactor Ref.
- Coil Voltage
- Overload Relay
- Power Line Volt. and Control Circuit
- Additional Aux. Contacts
- Pilot Devices Operators
- Pilot Devices Indicators
- Other options (fuse clips, control & timing relays, metering & protective devices, etc)

Full Voltage Non-Reversing

Non-Combination

Selection

Standard Features	Ordering Information Required	Coil Voltage Codes		
		ACV 60 Hz	ACV 50 Hz	Coil Suffix
▪ 1 NO auxiliary contact on all 20A enclosed, with options to add extra contacts ▪ 3 NO + 3 NC auxiliary contacts on all other sizes ▪ Class 10 bimetal overload relays including: - Manual or Automatic reset - Phase Loss Protection - Separate Trip and Alarm contact ▪ All enclosures are designed to accept a standard sized control transformer ▪ All enclosures have provisions for up to 4 pilot devices	▪ Select basic type nr. from table below. ▪ Add suffix for overload relay setting range from page 15/19 ▪ Add suffix for factory modification from page 15/20 - 15/24	24 120 208 240 460 600	20 110 – 220 380 –	C K M P V T
		other voltages and frequencies are available upon request		

The type numbers in the selection table specify a 120V 60 Hz coil. If a different coil voltage is required, change the "K" (7 digit) as per Coil Suffix Table above.

Non-Combination HP Rated

Enclosed Amps	CSA MAXIMUM HP RATING						Contactor reference number	Aux①, Contacts supplied as standard per contactor		Enclosure Sheet Metal			
	1 phase		3 phase							CSA / EEMAC Type 1 General Purpose Enclosure		CSA Type 5 / EEMAC Type 12 Industrial Use	
	115V	230V	208V	230V	460V	575V		NO	NC	Catalogue Number	Encl. Fig.	Catalogue Number	Encl. Fig.
20	1/4	3/4	1 1/2	2	3	**5**	15	1	–	**V1AB15K..**	V0	**V1AC15K..**	S
	1/3	1	2	3	5	**7 1/2**	16	1	–	**V1AB16K..**		**V1AC16K..**	
	1/2	2	3	3	7 1/2	**10**	17	1	–	**V1AB17K..**		**V1AC17K..**	
	1	2	3	5	10	**10**	18	1	–	**V1AB18K..**		**V1AC18K..**	
35	1	3	5	5	10	**15**	25	3	3	**V1AB25K..**	V1	**V1AC25K..**	S
	2	3	5	7 1/2	15	**20**	26	3	3	**V1AB26K..**		**V1AC26K..**	
42	2	5	10	10	20	**25**	27	3	3	**V1AB27K..**	V1	**V1AC27K..**	S
	3	5	10	10	25	**25**	28	3	3	**V1AB28K..**		**V1AC28K..**	
55	3	7 1/2	10	15	30	**40**	35	3	3	**V1AB35K..**	V2	**V1AC35K..**	H2
60	3	10	15	15	40	**50**	36	3	3	**V1AB36K..**	V2	**V1AC36K..**	H2
80	5	10	20	20	50	**50**	37	3	3	**V1AB37K..**	V2	**V1AC37K..**	H2
90	5	15	20	25	50	**60**	38	3	3	**V1AB38K..**	V2	**V1AC38K..**	H2
105	7 1/2	15	25	30	60	**60**	45	3	3	**V1AB45K..**	V4	**V1AC45K..**	H5
115	10	–	30	30	75	**75**	46	3	3	**V1AB46K..**	V4	**V1AC46K..**	H5
125	10	–	30	40	75	**100**	47	3	3	**V1AB47K..**	V4	**V1AC47K..**	H5

NEMA rated available - contact your Siemens representative

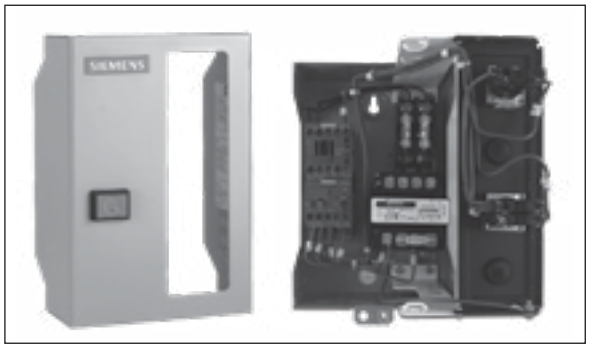

① Some Aux contacts may be used for control options, where necessary.

Full Voltage Non-Reversing

Circuit Breaker Combination

Selection

Standard Features	Ordering Information Required	Coil Voltage Codes		
		ACV 60 Hz	ACV 50 Hz	Coil Suffix
▪ 1 NO auxiliary contact on all 20A enclosed, with options to add extra contacts ▪ 3 NO + 3NC auxiliary contacts on all other sizes ▪ Class 10 bimetal overload relays including: - Manual or Automatic reset - Phase Loss Protection - Separate Trip and Alarm contact ▪ All enclosures are designed to accept a standard sized control transformer ▪ All enclosures have provisions for up to 4 pilot devices	▪ Select basic type nr. from table below ▪ Add suffix for overload relay setting range from page 15/19 ▪ Add suffix for factory modification from page 15/20 - 15/24	24 120 208 240 460 600	20 110 – 220 380 –	C K M P V T
		other voltages and frequencies are available upon request		

The type numbers in the selection table specify a 120V 60 Hz coil. If a different coil voltage is required, change the "K" (7 digit) as per Coil Suffix Table above.

Circuit Breaker Combination[a] HP Rated

Enclosed Amps	CSA MAXIMUM HP RATING						Contactor reference number	Aux, Contacts[2] supplied as standard per contactor		Enclosure Sheet Metal			
	1 phase		3 phase							CSA / EEMAC Type 1 General Purpose Enclosure		CSA Type 5 / EEMAC Type 12 Industrial Use	
	115V	230V	208V	230V	460V	575V		NO	NC	Catalogue Number	Encl. Fig.	Catalogue Number	Encl. Fig.
	1/4	3/4	$1^{1/2}$	2	3	**5**	15	1	–	**V2AB15K..**		**V2AC15K..**	
20	1/3	1	2	3	5	**$7^{1/2}$**	16	1	–	**V2AB16K..**	V2	**V2AC16K..**	H2
	1/2	2	3	3	7 1/2	**10**	17	1	–	**V2AB17K..**		**V2AC17K..**	
	1	2	3	5	10	**10**	18	1	–	**V2AB18K..**		**V2AC18K..**	
35	1	3	5	5	10	**15**	25	3	3	**V2AB25K..**	V2	**V2AC25K..**	H2
	2	3	5	$7^{1/2}$	15	**20**	26	3	3	**V2AB26K..**		**V2AC26K..**	
42	2	5	10	10	20	**25**	27	3	3	**V2AB27K..**	V2	**V2AC27K..**	H2
	3	5	10	10	25	**25**	28	3	3	**V2AB28K..**		**V2AC28K..**	
55	3	$7^{1/2}$	10	15	30	**40**	35	3	3	**V2AB35K..**	V2	**V2AC35K..**	H2
60	3	10	15	15	40	**50**	36	3	3	**V2AB36K..**	V2	**V2AC36K..**	H2
80	5	10	20	20	50	**50**	37	3	3	**V2AB37K..**	V2	**V2AC37K..**	H2
90	5	15	20	25	50	**60**	38	3	3	**V2AB38K..**	V2	**V2AC38K..**	H2
105	$7^{1/2}$	15	25	30	60	**60**	45	3	3	**V2AB45K..**	V4	**V2AC45K..**	H5
115	10	–	30	30	75	**75**	46	3	3	**V2AB46K..**	V4	**V2AC46K..**	H5
125	10	–	30	40	75	**100**	47	3	3	**V2AB47K..**	V4	**V2AC47K..**	H5

NEMA rated available - contact your Siemens representative

① Factory will automatically select the circuit breaker based on standard or given motor full-load current and the following:
- Continuous-current rating of a minimum 115% of motor full-load current.
- Trip-setting position is 11 times motor full load current.

② Some aux contacts may be used for control options, where necessary.

Full Voltage Non-Reversing

Fusible Switch Combination and Non-Fusible Starter

Selection

Standard Features	Ordering Information Required	Coil Voltage Codes		
		ACV 60 Hz	ACV 50 Hz	Coil Suffix
▪ 1 NO auxiliary contact on all 20A enclosed, with options to add extra contacts ▪ 3 NO + 3NC auxiliary contacts on all other sizes ▪ Class 10 bimetal overload relays including: - Manual or Automatic reset - Phase Loss Protection - Separate Trip and Alarm contact ▪ All enclosures are designed to accept a standard sized control transformer ▪ All enclosures have provisions for up to 4 pilot devices	▪ Select basic type nr. from table below ▪ Add suffix for overload relay setting range from page 15/19 ▪ Add suffix for factory modification from page 15/20 - 15/24	24 120 208 240 460 600	20 110 – 220 380 –	C K M P V T
		other voltages and frequencies are available upon request		

The type numbers in the selection table specify a 120V 60 Hz coil. If a different coil voltage is required, change the "K" (7 digit) as per Coil Suffix Table above.

Fusible Switch Combinations and Non-Fusible Starters HP Rated

Enclosed Amps	CSA MAXIMUM HP RATING						FUSE CLIPS Type IJ Amps	Contactor reference number	Aux. Contacts① supplied as standard per contactor		Enclosure Sheet Metal			
	1 phase		3 phase								CSA / EEMAC Type 1 General Purpose Enclosure		CSA Type 5 / EEMAC Type 12 Industrial Use	
	115V	230V	208V	230V	460V	575V			NO	NC	Catalogue Number	Encl. Fig.	Catalogue Number	Encl. Fig.
20	1/4	3/4	1 1/2	2	3	**5**	NONE 30	15	1	–	**V3AB15K..** **V4AB15K..**	V2	**V3AC15K..** **V4AC15K..**	H2
	1/3	1	2	3	5	**7 1/2**	NONE 30	16	1	–	**V3AB16K..** **V4AB16K..**		**V3AC16K..** **V4AC16K..**	
	1/2	2	3	3	7 1/2	**10**	NONE 30	17	1	–	**V3AB17K..** **V4AB17K..**		**V3AC17K..** **V4AC17K..**	
35	1	2	3	5	10	**10**	NONE 30	18	1	–	**V3AB18K..** **V4AB18K..**		**V3AC18K..** **V4AC18K..**	
	1	3	5	5	10	**15**	NONE 30 60	25	3	3	**V3AB25K..** **V4AB25K..** **V4AB25K..**		**V3AC25K..** **V4AC25K..** **V4AC25K..**	
	2	3	5	7 1/2	15	**20**	NONE 30 60	26	3	3	**V3AB26K..** **V4AB26K..** **V4AB26K..**		**V3AC26K..** **V4AC26K..** **V4AC26K..**	
42	2	5	10	10	20	**25**	NONE 30 60	27	3	3	**V3AB27K..** **V4AB27K..** **V4AB27K..**		**V3AC27K..** **V4AC27K..** **V4AC27K..**	
	3	5	10	10	25	**25**	NONE 30 60	28	3	3	**V3AB28K..** **V4AB28K..** **V4AB28K..**		**V3AC28K..** **V4AC28K..** **V4AC28K..**	
55	3	7 1/2	10	15	30	**40**	NONE 30 60	35	3	3	**V3AB35K..** **V4AB35K..** **V4AB35K..**	V2	**V3AC35K..** **V4AC35K..** **V4AC35K..**	H2
60	3	10	15	15	40	**50**	NONE 30 60 100	36	3	3	**V3AB36K..** **V4AB36K..** **V4AB36K..** **V4AB36K..**	V2	**V3AC36K..** **V4AC36K..** **V4AC36K..** **V4AC36K..**	H2
80	5	10	20	20	50	**50**	NONE 30 60 100	37	3	3	**V3AB37K..** **V4AB37K..** **V4AB37K..** **V4AB37K..**	V2	**V3AC37K..** **V4AC37K..** **V4AC37K..** **V4AC37K..**	H2
90	5	15	20	25	50	**60**	NONE 30 60 100	38	3	3	**V3AB38K..** **V4AB38K..** **V4AB38K..** **V4AB38K..**	V2	**V3AC38K..** **V4AC38K..** **V4AC38K..** **V4AC38K..**	H2
105	–	–	–	–	–	**60**	NONE 60 100	45	3	3	**V3AB45K..** **V4AB45K..** **V4AB45K..**	V4	**V3AC45K..** **V4AC45K..** **V4AC45K..**	H5

NEMA rated available - contact your Siemens representative

General

Description
Siemens full voltage reversing type starters are designed for full voltage across-the-line starting and reversing of single or 3-phase squirrel cage motors. They also can be used as the primary control of wound rotor motors.

Combined with short circuit protection, FVR starters are also offered as combination starters:

- Fusible disconnect type complete with Form I, Class J fuse clips.
- Circuit breaker type or as Non-Fusible Controller.

FVR - starters are available up to 100HP, 600V AC in EEMAC Type 1, 12, 4 or 4X sheet metal enclosures. FVR - starters are an assembly of the 3RA Reversing Contactor including electrical and mechanical interlock and a 3RU bimetallic overload relay.



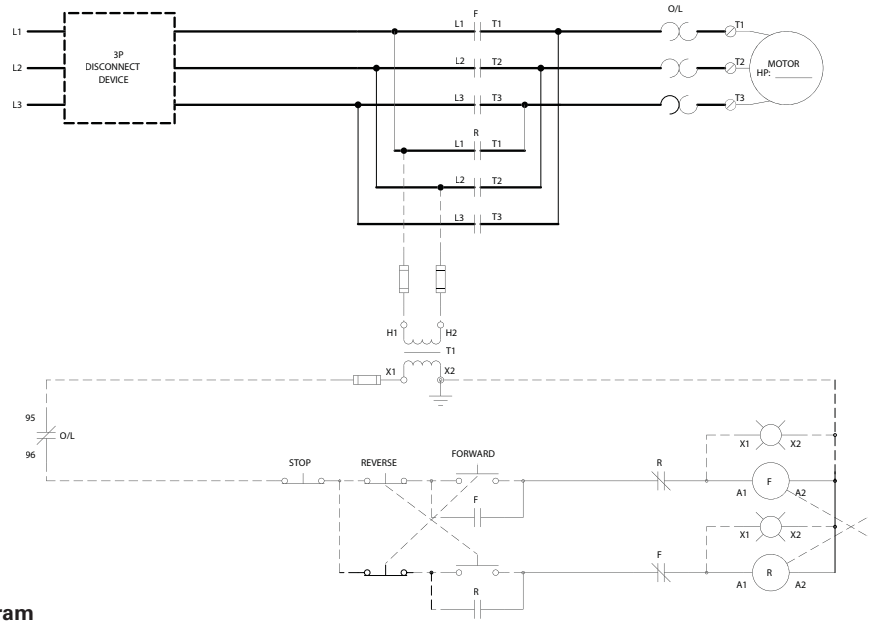

FVNR Typical Wiring Diagram

Catalogue No.:

V1	B	B	15	K	..	..	.	..	...	.

- HP Rated Starter
- Disconnect Type
- Starter Type
- Enclosure Type
- Contactor Ref.
- Coil Voltage
- Overload Relay
- Power Line Volt. and Control Circuit
- Additional Aux. Contacts
- Pilot Devices Operators
- Pilot Devices Indicators
- Other options
  (fuse clips, control & timing relays, metering & protective devices, etc)

Full Voltage Reversing

Non-Combination

Selection

Standard Features	Ordering Information Required	Coil Voltage Codes		
		ACV 60 Hz	ACV 50 Hz	Coil Suffix
▪ Mechanical and electrical interlock ▪ 2 NO + 2 NC contact block supplied per contactor ▪ Class 10 bimetal overload relays including: - Manual or Automatic reset - Phase Loss Protection - Separate Trip and Alarm contact ▪ All enclosures are designed to accept a standard sized control transformer ▪ All enclosures have provisions for up to 4 pilot devices	▪ Select basic type nr. from table below ▪ Add suffix for overload relay setting range from page 15/19 ▪ Add suffix for factory modification from page 15/20 - 15/24	24 120 208 240 460 600	20 110 – 220 380 –	C K M P V T
		other voltages and frequencies are available upon request		

The type numbers in the selection table specify a 120V 60 Hz coil. If a different coil voltage is required, change the "K" (7 digit) as per Coil Suffix Table above.

Non-Combination HP Rated

Enclosed Amps	CSA MAXIMUM HP RATING						Contactor reference number	Aux, Contacts① supplied as standard per contactor		Enclosure Sheet Metal			
	1 phase		3 phase							CSA / EEMAC Type 1 General Purpose Enclosure		CSA Type 5 / EEMAC Type 12 Industrial Use	
	115V	230V	208V	230V	460V	575V		NO	NC	Catalogue Number	Encl. Fig.	Catalogue Number	Encl. Fig.
	1/4	3/4	1 1/2	2	3	**5**	15	2	3	**V1BB15K..**		**V1BC15K..**	
20	1/3	1	2	3	5	**7 1/2**	16	2	3	**V1BB16K..**	V1	**V1BC16K..**	S
	1/2	2	3	3	7 1/2	**10**	17	2	3	**V1BB17K..**		**V1BC17K..**	
	1	2	3	5	10	**10**	18	2	3	**V1BB18K..**		**V1BC18K..**	
35	1	3	5	5	10	**15**	25	3	3	**V1BB25K..**	V1	**V1BC25K..**	S
	2	3	5	7 1/2	15	**20**	26	3	3	**V1BB26K..**		**V1BC26K..**	
42	2	5	10	10	20	**25**	27	3	3	**V1BB27K..**	V1	**V1BC27K..**	S
	3	5	10	10	25	**25**	28	3	3	**V1BB28K..**		**V1BC28K..**	
55	3	7 1/2	10	15	30	**40**	35	3	3	**V1BB35K..**	V2	**V1BC35K..**	H2
60	3	10	15	15	40	**50**	36	3	3	**V1BB36K..**	V2	**V1BC36K..**	H2
80	5	10	20	20	50	**50**	37	3	3	**V1BB37K..**	V2	**V1BC37K..**	H2
90	5	15	20	25	50	**60**	38	3	3	**V1BB38K..**	V2	**V1BC38K..**	H2
105	7 1/2	15	25	30	60	**60**	45	3	3	**V1BB45K..**	V4	**V1BC45K..**	H5
115	10	–	30	30	75	**75**	46	3	3	**V1BB46K..**	V4	**V1BC46K..**	H5
125	10	–	30	40	75	**100**	47	3	3	**V1BB47K..**	V4	**V1BC47K..**	H5

NEMA rated available - contact your Siemens representative

① Some aux contacts may be used for control options and electrical interlock, where necessary.

Full Voltage Reversing

Circuit Breaker Combination

Selection

Standard Features	Ordering Information Required	Coil Voltage Codes		
		ACV 60 Hz	ACV 50 Hz	Coil Suffix
▪ Mechanical and electrical interlock ▪ 2 NO + 2 NC contact block supplied per contactor ▪ Class 10 bimetal overload relays including: - Manual or Automatic reset - Phase Loss Protection - Separate Trip and Alarm contact ▪ All enclosures are designed to accept a standard sized control transformer ▪ All enclosures have provisions for up to 4 pilot devices	▪ Select basic type nr. from table below ▪ Add suffix for overload relay setting range from page 15/19 ▪ Add suffix for factory modification from page 15/20 - 15/24	24 120 208 240 460 600	20 110 – 220 380 –	C K M P V T
		other voltages and frequencies are available upon request		

The type numbers in the selection table specify a 120V 60 Hz coil. If a different coil voltage is required, change the "K" (7 digit) as per Coil Suffix Table above.

Circuit Breaker Combination HP Rated

Enclosed Amps	CSA MAXIMUM HP RATING						Contactor reference number	Aux. Contacts① supplied as standard per contactor		Enclosure Sheet Metal			
	1 phase		3 phase							CSA / EEMAC Type 1 General Purpose Enclosure		CSA Type 5 / EEMAC Type 12 Industrial Use	
	115V	230V	208V	230V	460V	575V		NO	NC	Catalogue Number	Encl. Fig.	Catalogue Number	Encl. Fig.
	1/4	3/4	1 1/2	2	3	**5**	15	2	3	**V2BB15K..**		**V2BC15K..**	
20	1/3	1	2	3	5	**7 1/2**	16	2	3	**V2BB16K..**	V3	**V2BC16K..**	H3
	1/2	2	3	3	7 1/2	**10**	17	2	3	**V2BB17K..**		**V2BC17K..**	
	1	2	3	5	10	**10**	18	2	3	**V2BB18K..**		**V2BC18K..**	
35	1	3	5	5	10	**15**	25	3	3	**V2BB25K..**	V3	**V2BC25K..**	H3
	2	3	5	7 1/2	15	**20**	26	3	3	**V2BB26K..**		**V2BC26K..**	
42	2	5	10	10	20	**25**	27	3	3	**V2BB27K..**	V3	**V2BC27K..**	H3
	3	5	10	10	25	**25**	28	3	3	**V2BB28K..**		**V2BC28K..**	
55	3	7 1/2	10	15	30	**40**	35	3	3	**V2BB35K..**	V3	**V2BC35K..**	H3
60	3	10	15	15	40	**50**	36	3	3	**V2BB36K..**	V3	**V2BC36K..**	H3
80	5	10	20	20	50	**50**	37	3	3	**V2BB37K..**	V3	**V2BC37K..**	H3
90	5	15	20	25	50	**60**	38	3	3	**V2BB38K..**	V3	**V2BC38K..**	H3
105	7 1/2	15	25	30	60	**60**	45	3	3	**V2BB45K..**	V4	**V2BC45K..**	H5
115	10	–	30	30	75	**75**	46	3	3	**V2BB46K..**	V4	**V2BC46K..**	H5
125	10	–	30	40	75	**100**	47	3	3	**V2BB47K..**	V4	**V2BC47K..**	H5

NEMA rated available - contact your Siemens representative

① Some aux contacts may be used for control options and electrical interlock, where necessary.

Full Voltage Reversing

Fusible Switch Combination and Non-Fusible Starterr

Selection

Standard Features	Ordering Information Required	Coil Voltage Codes		
		ACV 60 Hz	ACV 50 Hz	Coil Suffix
▪ Mechanical and electrical interlock ▪ 2 NO + 2 NC contact block supplied per contactor ▪ Class 10 bimetallic overload relays including: - Manual or Automatic reset - Phase Loss Protection - Separate Trip and Alarm contact ▪ All enclosures are designed to accept a standard sized control transformer ▪ All enclosures have provisions for up to 4 pilot devices	▪ Select basic type nr. from table below ▪ Add suffix for overload relay setting range from page 15/19 ▪ Add suffix for factory modification from page 15/20 - 15/24	24 120 208 240 460 600	20 110 – 220 380 –	C K M P V T
		other voltages and frequencies are available upon request		

The type numbers in the selection table specify a 120V 60 Hz coil. If a different coil voltage is required, change the "K" (7 digit) as per Coil Suffix Table above.

Fusible Switch Combinations and Non-Fusible Starters HP Rated

Enclosed Amps	CSA MAXIMUM HP RATING						FUSE CLIPS Type IJ Amps	Contactor reference number	Aux. Contacts① supplied as standard per contactor		Enclosure Sheet Metal			
	1 phase		3 phase								CSA / EEMAC Type 1 General Purpose Enclosure		CSA Type 5 / EEMAC Type 12 Industrial Use	
	115V	230V	208V	230V	460V	575V			NO	NC	Catalogue Number	Encl. Fig.	Catalogue Number	Encl. Fig.
20	1/4	3/4	1 1/2	2	3	**5**	NONE 30	15	2	3	**V3BB15K..** **V4BB15K..**	V3	**V3BC15K..** **V4BC15K..**	H2
	1/3	1	2	3	5	**7 1/2**	NONE 30	16	2	3	**V3BB16K..** **V4BB16K..**		**V3BC16K..** **V4BC16K..**	
	1/2	2	3	3	7 1/2	**10**	NONE 30	17	2	3	**V3BB17K..** **V4BB17K..**		**V3BC17K..** **V4BC17K..**	
	1	2	3	5	10	**10**	NONE 30	18	2	3	**V3BB18K..** **V4BB18K..**		**V3BC18K..** **V4BC18K..**	
35	1	3	5	5	10	**15**	NONE 30 60	25	3	3	**V3BB25K..** **V4BB25K..** **V4BB25K..**	V3	**V3BC25K..** **V4BC25K..** **V4BC25K..**	H2
	2	3	5	7 1/2	15	**20**	NONE 30 60	26	3	3	**V3BB26K..** **V4BB26K..** **V4BB26K..**		**V3BC26K..** **V4BC26K..** **V4BC26K..**	
42	2	5	10	10	20	**25**	NONE 30 60	27	3	3	**V3BB27K..** **V4BB27K..** **V4BB27K..**	V3	**V3BC27K..** **V4BC27K..** **V4BC27K..**	H2
	3	5	10	10	25	**25**	NONE 30 60	28	3	3	**V3BB28K..** **V4BB28K..** **V4BB28K..**		**V3BC28K..** **V4BC28K..** **V4BC28K..**	H2
55	3	7 1/2	10	15	30	**40**	NONE 30 60	35	3	3	**V3BB35K..** **V4BB35K..** **V4BB35K..**	V3	**V3BC35K..** **V4BC35K..** **V4BC35K..**	H2
60	3	10	15	15	40	**50**	NONE 30 60 100	36	3	3	**V3BB36K..** **V4BB36K..** **V4BB36K..** **V4BB36K..**	V3	**V3BC36K..** **V4BC36K..** **V4BC36K..** **V4BC36K..**	H2
80	5	10	20	20	50	**50**	NONE 30 60 100	37	3	3	**V3BB37K..** **V4BB37K..** **V4BB37K..** **V4BB37K..**	V3	**V3BC37K..** **V4BC37K..** **V4BC37K..** **V4BC37K..**	H2
90	5	15	20	25	50	**60**	NONE 30 60 100	38	3	3	**V3BB38K..** **V4BB38K..** **V4BB38K..** **V4BB38K..**	V3	**V3BC38K..** **V4BC38K..** **V4BC38K..** **V4BC38K..**	H2
105	–	–	–	–	–	**60**	NONE 60 100	45	3	3	**V3BB45K..** **V4BB45K..** **V4BB45K..**	V4	**V3BC45K..** **V4BC45K..** **V4BC45K..**	H5

NEMA rated available - contact your Siemens representative

① Some aux contacts may be used for control options and electrical interlock, where necessary.

Description

Full-voltage ac magnetic two speed controllers are designed to control reconnectable squirrel-cage induction motors for operation at two different constant speeds depending on the construction of the motor. These controllers are available in combination and non-combination types. The speed of an induction motor is a function of the supply frequency and the number of poles of the motor winding. To obtain different speeds with a fixed supply frequency, the number of magnetic poles of the motor must be changed. Characteristics at any speed are similar to those of a single-speed motor. There are two basic methods of providing multiple-pole combinations:

Separate-Winding Motors have a separate winding for each speed. This motor construction is slightly more expensive, but the controller is relatively simple, and a wide variety of speeds can be selected. Separate winding motors with delta connected motor windings require one corner to be opened on each unused winding.

Consequent-Pole Motors have a single winding for two speeds. Extra winding taps are brought out for reconnection for different number of stator poles. While the motor costs less, the controller is more complicated, and speed range is limited to a 2-to-1 ratio.

Torque Characteristics

Multi-speed motors are divided into three application groups:

Constant Torque - HP output varies directly with speed, while torque remains constant. A constant-torque motor rated 100 HP at 1200 rpm delivers 50 HP at 600 rpm. This type is applicable to conveyors, mills, dough mixers, reciprocating pumps, and other similar loads.

Variable Torque - HP varies as a square of speed, while torque varies directly with speed. A variable-torque motor rated 100 HP at 1200 rpm delivers 25 HP at 600 rpm. This type is applicable to systems having fan or centrifugal pump characteristics.

Constant Horsepower - Motor delivers rated HP at all full-load speeds, while torque varies inversely to speed. This type is applicable to cutting tools, lathes, spindles, etc.

Selection and Ordering

Starter ratings are based on the maximum HP at the highest speed. Electrical interlocking is furnished on all multi-speed starters to preclude connecting more than one speed winding at the same time. Both mechanical and electrical interlocking is provided wherever there is a possibility of short circuiting of the line.

Standard wiring permits starting the motor on any speed. To change a running motor to a higher speed, operator presses the desired speed button. To change to a lower speed, operator must press "stop" button before selecting the lower speed; allowing time for the motor to slow down, this reduces shock on driven machinery and surges on the power system.

When control at various speeds is by means of two-wire control devices, such as limit, pressure or float switches,deceleration relays should be used,unless both the motor manufacturer and the machine manufacturer have been consulted.

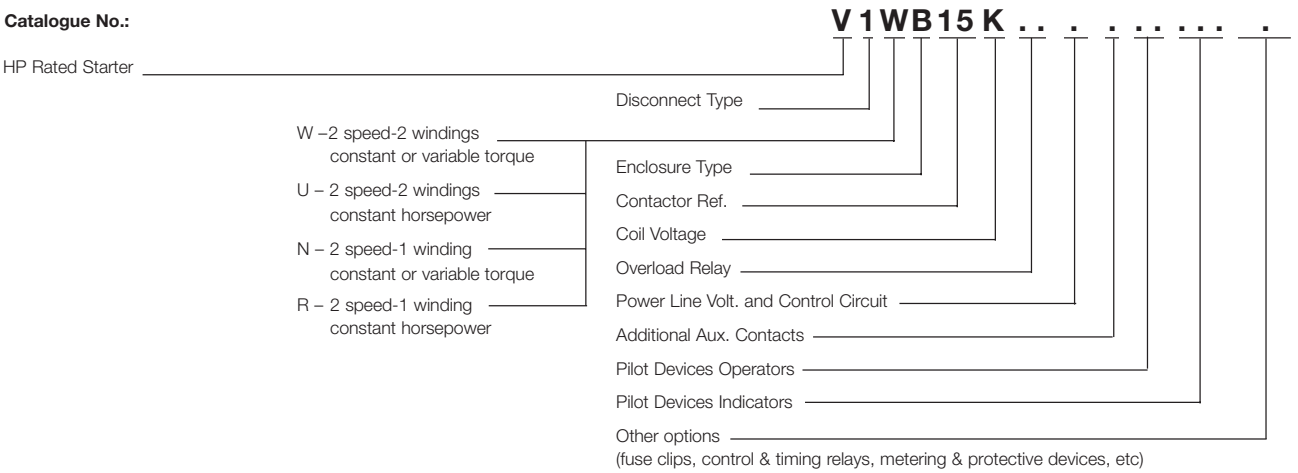

Two Speed Two Winding Starters

Non-Combination, Constant or Variable Torque

Selection

Standard Features	Ordering Information Required	Coil Voltage Codes		
		ACV 60 Hz	ACV 50 Hz	Coil Suffix
▪ 2 NO + 2 NC contact block supplied per contactor ▪ Class 10 bimetallic overload relays including: - Manual or Automatic reset - Phase Loss Protection - Separate Trip and Alarm contact ▪ All enclosures are designed to accept a standard sized control transformer ▪ All enclosures have provisions for up to 4 pilot devices	▪ Select basic type nr. from table below ▪ Add suffix for both overload relay setting range from page 15/19 ▪ Add suffix for factory modification from page 15/20 - 15/24	24 120 208 240 460 600	20 110 – 220 380 –	C K M P V T
		other voltages and frequencies are available upon request		

The type numbers in the selection table below specify 120V 60 Hz coils. If a different coil voltage is required, change the "K" (7 digit) as per Coil Suffix Table above.

Non-Combination HP Rated										For Constant Horsepower, 'W' is replaced with 'U'			
Enclosed Amps	CSA MAXIMUM HP RATING						Contactor reference number	Aux. Contacts① supplied as standard per contactor		Enclosure Sheet Metal			
	1 phase		3 phase							CSA / EEMAC Type 1 General Purpose Enclosure		CSA Type 5 / EEMAC Type 12 Industrial Use	
	115V	230V	208V	230V	460V	575V		NO	NC	Catalogue Number	Encl. Fig.	Catalogue Number	Encl. Fig.
20	1/4	3/4	1 1/2	2	3	**5**	15	3	2	**V1WB15K..**	V1	**V1WC15K..**	S
	1/3	1	2	3	5	**7 1/2**	16	3	2	**V1WB16K..**		**V1WC16K..**	
	1/2	2	3	3	7 1/2	**10**	17	3	2	**V1WB17K..**		**V1WC17K..**	
35	1	2	3	5	10	**10**	18	3	3	**V1WB18K..**	V2	**V1WC18K..**	H2
	1	3	5	5	10	**15**	25	3	3	**V1WB25K..**		**V1WC25K..**	
	2	3	5	7 1/2	15	**20**	26	3	3	**V1WB26K..**		**V1WC26K..**	
42	2	5	10	10	20	**25**	27	3	3	**V1WB27K..**		**V1WC27K..**	
	3	5	10	10	25	**25**	28	3	3	**V1WB28K..**		**V1WC28K..**	
55	3	7 1/2	10	15	30	**40**	35	3	3	**V1WB35K..**	V2	**V1WC35K..**	H2
60	3	10	15	15	40	**50**	36	3	3	**V1WB36K..**	V2	**V1WC36K..**	H2
80	5	10	20	20	50	**50**	37	3	3	**V1WB37K..**	V2	**V1WC37K..**	H2
90	5	15	20	25	50	**60**	38	3	3	**V1WB38K..**	V2	**V1WC38K..**	H2
105	7 1/2	15	25	30	60	**60**	45	3	3	**V1WB45K..**	V4	**V1WC45K..**	H5
115	10	–	30	30	75	**75**	46	3	3	**V1WB46K..**	V4	**V1WC46K..**	H5
125	10	–	30	40	75	**100**	47	3	3	**V1WB47K..**	V4	**V1WC47K..**	H5

NEMA rated available - contact your Siemens representative

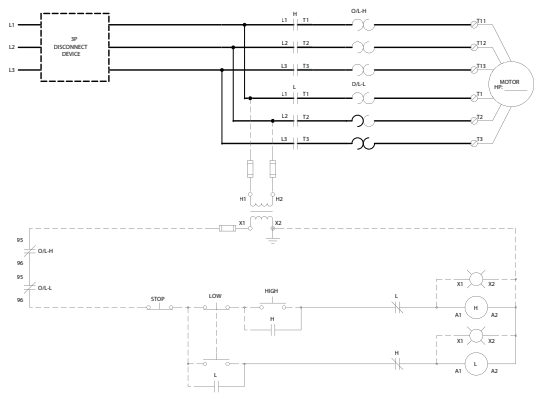

2S2W Typical Wiring Diagram

① Some aux contacts may be used for control options and electrical interlock, where necessary.

Two Speed Two Winding Starters

Circuit Breaker Combination, Constant or Variable Torque

Selection

Standard Features	Ordering Information Required	Coil Voltage Codes		
		ACV 60 Hz	ACV 50 Hz	Coil Suffix
▪ 2 NO + 2 NC contact block supplied per contactor ▪ Class 10 bimetallic overload relays including: - Manual or Automatic reset - Phase Loss Protection - Separate Trip and Alarm contact ▪ All enclosures are designed to accept a standard sized control transformer ▪ All enclosures have provisions for up to 4 pilot devices	▪ Select basic type nr. from table below ▪ Add suffix for both overload relay setting range from page 15/19 ▪ Add suffix for factory modification from page 15/20 - 15/24	24 120 208 240 460 600	20 110 – 220 380 –	C K M P V T
		other voltages and frequencies are available upon request		

The type numbers in the selection table below specify 120V 60 Hz coils. If a different coil voltage is required, change the "K" (7 digit) as per Coil Suffix Table above.

Circuit Breaker Combination[a] HP Rated									For Constant Horsepower, 'W' is replaced with 'U'			
Enclosed Amps	CSA MAXIMUM HP RATING						Contactor reference number	Aux. Contacts② supplied as standard per contactor		Enclosure Sheet Metal			
	1 phase		3 phase							CSA / EEMAC Type 1 General Purpose Enclosure		CSA Type 5 / EEMAC Type 12 Industrial Use	
	115V	230V	208V	230V	460V	575V		NO	NC	Catalogue Number	Encl. Fig.	Catalogue Number	Encl. Fig.
20	1/4	3/4	1 1/2	2	3	**5**	15	3	2	**V2WB15K..**	V3	**V2WC15K..**	H3
	1/3	1	2	3	5	**7 1/2**	16	3	2	**V2WB16K..**		**V2WC16K..**	
	1/2	2	3	3	7 1/2	**10**	17	3	2	**V2WB17K..**		**V2WC17K..**	
35	1	2	3	5	10	**10**	18	3	3	**V2WB18K..**		**V2WC18K..**	
	1	3	5	5	10	**15**	25	3	3	**V2WB25K..**	V3	**V2WC25K..**	H3
	2	3	5	7 1/2	15	**20**	26	3	3	**V2WB26K..**		**V2WC26K..**	
42	2	5	10	10	20	**25**	27	3	3	**V2WB27K..**	V3	**V2WC27K..**	H3
	3	5	10	10	25	**25**	28	3	3	**V2WB28K..**		**V2WC28K..**	
55	3	7 1/2	10	15	30	**40**	35	3	3	**V2WB35K..**	V3	**V2WC35K..**	H3
60	3	10	15	15	40	**50**	36	3	3	**V2WB36K..**	V3	**V2WC36K..**	H3
80	5	10	20	20	50	**50**	37	3	3	**V2WB37K..**	V3	**V2WC37K..**	H3
90	5	15	20	25	50	**60**	38	3	3	**V2WB38K..**	V3	**V2WC38K..**	H3
105	7 1/2	15	25	30	60	**60**	45	3	3	**V2WB45K..**	V4	**V2WC45K..**	H5
115	10	–	30	30	75	**75**	46	3	3	**V2WB46K..**	V4	**V2WC46K..**	H5
125	10	–	30	40	75	**100**	47	3	3	**V2WB47K..**	V4	**V2WC47K..**	H5

NEMA rated available - contact your Siemens representative

① Factory will automatically select the circuit breaker based on standard or given motor full-load current and the following:
- Continuous-current rating of a minimum 115% of motor full-load current.
- Trip-setting position is 11 times motor full load current.

② Some aux contacts may be used for control options and electrical interlock, where necessary.

Two Speed Two Winding Starters

Fusible Switch Combination & Non-Fusible Starter, Constant or Variable Torque *Selection*

Standard Features	Ordering Information Required	Coil Voltage Codes		
		ACV 60 Hz	ACV 50 Hz	Coil Suffix
▪ 2 NO + 2 NC contact block supplied per contactor. ▪ Class 10 bimetallic overload relays including: - Manual or Automatic reset - Phase Loss Protection - Separate Trip and Alarm contact ▪ All enclosures are designed to accept a standard sized control transformer ▪ All enclosures have provisions for up to 4 pilot devices	▪ Select basic type nr. from table below ▪ Add suffix for both overload relay setting range from page 15/19 ▪ Add suffix for factory modification from page 15/20 - 15/24	24 120 208 240 460 600	20 110 – 220 380 –	C K M P V T
		other voltages and frequencies are available upon request		

The type numbers in the selection table below specify 120V 60 Hz coils. If a different coil voltage is required, change the "K" (7 digit) as per Coil Suffix Table above.

Fusible Switch Combinations and Non-Fusible Starters HP Rated											For Constant Horsepower, 'W' is replaced with 'U'			
Enclosed Amps	CSA MAXIMUM HP RATING						FUSE CLIPS Type IJ Amps	Contactor reference number	Aux, Contacts① supplied as standard per contactor		Enclosure Sheet Metal			
	1 phase		3 phase								CSA / EEMAC Type 1 General Purpose Enclosure		CSA Type 5 / EEMAC Type 12 Industrial Use	
	115V	230V	208V	230V	460V	575V			NO	NC	Catalogue Number	Encl. Fig.	Catalogue Number	Encl. Fig.
20	1/4	3/4	1 1/2	2	3	**5**	NONE 30	15	3	2	**V3WB15K..** **V4WB15K..**	V3	**V3WC15K..** **V4WC15K..**	H3
	1/3	1	2	3	5	**7 1/2**	NONE 30	16	3	2	**V3WB16K..** **V4WB16K..**		**V3WC16K..** **V4WC16K..**	
	1/2	2	3	3	7 1/2	**10**	NONE 30	17	3	2	**V3WB17K..** **V4WB17K..**		**V3WC17K..** **V4WC17K..**	
	1	2	3	5	10	**10**	NONE 30	18	2	2	**V3WB18K..** **V4WB18K..**		**V3WC18K..** **V4WC18K..**	
35	1	3	5	5	10	**15**	NONE 30 60	25	2	2	**V3WB25K..** **V4WB25K..** **V4WB25K..**	V3	**V3WC25K..** **V4WC25K..** **V4WC25K..**	H3
	2	3	5	7 1/2	15	**20**	NONE 30 60	26	2	2	**V3WB26K..** **V4WB26K..** **V4WB26K..**		**V3WC26K..** **V4WC26K..** **V4WC26K..**	
42	2	5	10	10	20	**25**	NONE 30 60	27	2	2	**V3WB27K..** **V4WB27K..** **V4WB27K..**	V3	**V3WC27K..** **V4WC27K..** **V4WC27K..**	H3
	3	5	10	10	25	**25**	NONE 30 60	28	2	2	**V3WB28K..** **V4WB28K..** **V4WB28K..**		**V3WC28K..** **V4WC28K..** **V4WC28K..**	
55	3	7 1/2	10	15	30	**40**	NONE 30 60	35	2	2	**V3WB35K..** **V4BWB35K..** **V4WB35K..**	V3	**V3WC35K..** **V4WC35K..** **V4WC35K..**	H3
60	3	10	15	15	40	**50**	NONE 30 60 100	36	2	2	**V3WB36K..** **V4WB36K..** **V4WB36K..** **V4WB36K..**	V3	**V3WC36K..** **V4WC36K..** **V4WC36K..** **V4WC36K..**	H3
80	5	10	20	20	50	**50**	NONE 30 60 100	37	2	2	**V3WB37K..** **V4WB37K..** **V4WB37K..** **V4WB37K..**	V3	**V3WC37K..** **V4WC37K..** **V4WC37K..** **V4WC37K..**	H3
90	5	15	20	25	50	**60**	NONE 30 60 100	38	2	2	**V3WB38K..** **V4WB38K..** **V4WB38K..** **V4WB38K..**	V3	**V3WC38K..** **V4WC38K..** **V4WC38K..** **V4WC38K..**	H3
105	–	–	–	–	–	**60**	NONE 60 100	45	2	2	**V3AB45K..** **V4AB45K..** **V4AB45K..**	V4	**V3AC45K..** **V4AC45K..** **V4AC45K..**	H5

NEMA rated available - contact your Siemens representative

① Some aux contacts may be used for control options and electrical interlock, where necessary.

Two Speed Single Winding Starters

Non-Combination, Constant or Variable Torque

Selection

Standard Features	Ordering Information Required	Coil Voltage Codes		
		ACV 60 Hz	ACV 50 Hz	Coil Suffix
▪ Mechanical and electrical interlock ▪ 2 NO + 2 NC contact block supplied per contactor ▪ Class 10 bimetal overload relays including: - Manual or Automatic reset - Phase Loss Protection - Separate Trip and Alarm contact ▪ All enclosures are designed to accept a standard sized control transformer ▪ All enclosures have provisions for up to 4 pilot devices	▪ Select basic type nr. from table below ▪ Add suffix for both overload relay setting range from page 15/19 ▪ Add suffix for factory modification from page 15/20 - 15/24	24 120 208 240 460 600	20 110 – 220 380 –	C K M P V T
		other voltages and frequencies are available upon request		

The type numbers in the selection table below specify 120V 60 Hz coils. If a different coil voltage is required, change the "K" (7 digit) as per Coil Suffix Table above.

Non-Combination HP Rated								For Constant Horsepower, 'N' is replaced with 'R'			
								Enclosure Sheet Metal			
								CSA / EEMAC Type 1 General Purpose Enclosure		CSA Type 5 / EEMAC Type 12 Industrial Use	
Enclosed Amps	3 phase				Contactor reference number	Aux. Contacts① supplied as standard per contactor					
	208V	230V	460V	575V		NO	NC	Catalogue Number	Encl. Fig.	Catalogue Number	Encl. Fig.
20	$1^{1/2}$	2	3	**5**	15	2	3	**V1NB15K..**	V2	**V1NC15K..**	H2
	2	3	5	**$7^{1/2}$**	16	2	3	**V1NB16K..**		**V1NC16K..**	
	3	3	$7^{1/2}$	**10**	17	2	3	**V1NB17K..**		**V1NC17K..**	
35	3	5	10	**10**	18	2	3	**V1NB18K..**	V2	**V1NC18K..**	H2
	5	5	10	**15**	25	3	3	**V1NB25K..**		**V1NC25K..**	
	5	$7^{1/2}$	15	**20**	26	3	3	**V1NB26K..**		**V1NC26K..**	
42	10	10	20	**25**	27	3	3	**V1NB27K..**	V2	**V1NC27K..**	H2
	10	10	25	**25**	28	3	3	**V1NB28K..**		**V1NC28K..**	
55	10	15	30	**40**	35	3	3	**V1NB35K..**	V3	**V1NC35K..**	H3
60	15	15	40	**50**	36	3	3	**V1NB36K..**	V3	**V1NC36K..**	H3
80	20	20	50	**50**	37	3	3	**V1NB37K..**	V3	**V1NC37K..**	H3
90	20	25	50	**60**	38	3	3	**V1NB38K..**	V3	**V1NC38K..**	H3
105	25	30	60	**60**	45	3	3	**V1NB45K..**	V4	**V1NC45K..**	H5
115	30	30	75	**75**	46	3	3	**V1NB46K..**	V4	**V1NC46K..**	H5
125	30	–	75	**100**	47	3	3	**V1NB47K..**	V4	**V1NC47K..**	H5

NEMA rated available - contact your Siemens representative

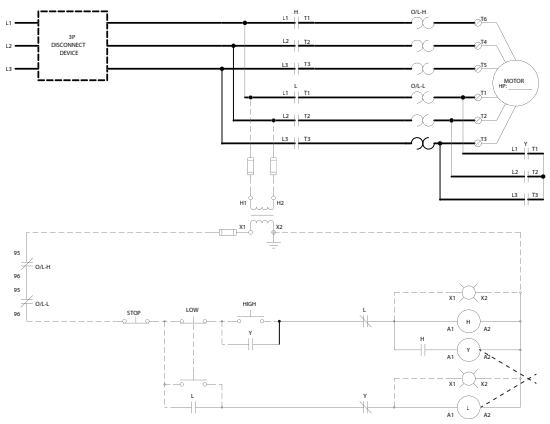

2S1W Constant or Variable Torque Typical Wiring Diagram

① Some aux contacts may be used for control options and electrical interlock, where necessary.

Two Speed Single Winding Starters

Circuit Breaker Combination, Constant or Variable Torque

Selection

Standard Features	Ordering Information Required	Coil Voltage Codes		
		ACV 60 Hz	ACV 50 Hz	Coil Suffix
▪ Mechanical and electrical interlock ▪ 2 NO + 2 NC contact block supplied per contactor ▪ Class 10 bimetallic overload relays including: - Manual or Automatic reset - Phase Loss Protection - Separate Trip and Alarm contact ▪ All enclosures are designed to accept a standard sized control transformer ▪ All enclosures have provisions for up to 4 pilot devices	▪ Select basic type nr. from table below ▪ Add suffix for both overload relay setting range from page 15/19 ▪ Add suffix for factory modification from page 15/20 - 15/24	24 120 208 240 460 600	20 110 – 220 380 –	C K M P V T
		other voltages and frequencies are available upon request		

The type numbers in the selection table below specify 120V 60 Hz coils. If a different coil voltage is required, change the "K" (7 digit) as per Coil Suffix Table above.

Circuit Breaker Combination[a] HP Rated

Enclosed Amps	3 phase				Contactor reference number	Aux. Contacts[2] supplied as standard per contactor		Enclosure Sheet Metal			
								CSA / EEMAC Type 1 General Purpose Enclosure		CSA Type 5 / EEMAC Type 12 Industrial Use	
	208V	230V	460V	575V		NO	NC	Catalogue Number	Encl. Fig.	Catalogue Number	Encl. Fig.
20	1 1/2	2	3	**5**	15	2	3	**V2NB15K..**	V3	**V2NC15K..**	H3
	2	3	5	**7 1/2**	16	2	3	**V2NB16K..**		**V2NC16K..**	
35	3	3	7 1/2	**10**	17	2	3	**V2NB17K..**		**V2NC17K..**	
	3	5	10	**10**	18	2	3	**V2NB18K..**		**V2NC18K..**	
	5	5	10	**15**	25	3	3	**V2NB25K..**		**V2NC25K..**	
42	5	7 1/2	15	**20**	26	3	3	**V2NB26K..**		**V2NC26K..**	
	10	10	20	**25**	27	3	3	**V2NB27K..**		**V2NC27K..**	
55	10	10	25	**25**	28	3	3	**V2NB28K..**		**V2NC28K..**	
60	10	15	30	**40**	35	3	3	**V2NB35K..**	V3	**V2NC35K..**	H3
80	15	15	40	**50**	36	3	3	**V2NB36K..**	V3	**V2NC36K..**	H3
90	20	20	50	**50**	37	3	3	**V2NB37K..**	V3	**V2NC37K..**	H3
105	20	25	50	**60**	38	3	3	**V2NB38K..**	V3	**V2NC38K..**	H3
115	25	30	60	**60**	45	3	3	**V2NB45K..**	V4	**V2NC45K..**	H5
125	30	30	75	**75**	46	3	3	**V2NB46K..**	V4	**V2NC46K..**	H5
	30	–	75	**100**	47	3	3	**V2NB47K..**	V4	**V2NC47K..**	H5

NEMA rated available - contact your Siemens representative

① Factory will automatically select the circuit breaker based on standard or given motor full-load current and the following:
- Continuous-current rating of a minimum 115% of motor full-load current.
- Trip-setting position is 11 times motor full load current.

② Some aux contacts may be used for control options and electrical interlock, where necessary.

Two Speed Single Winding Starters

Fusible Switch Combination & Non-Fusible Starters, Constant or Variable Torque *Selection*

Standard Features	Ordering Information Required	Coil Voltage Codes		
		ACV 60 Hz	ACV 50 Hz	Coil Suffix
▪ Mechanical and electrical interlock ▪ 2 NO + 2 NC contact block supplied per contactor ▪ Class 10 bimetallic overload relays including: - Manual or Automatic reset - Phase Loss Protection - Separate Trip and Alarm contact ▪ All enclosures are designed to accept a standard sized control transformer ▪ All enclosures have provisions for up to 4 pilot devices	▪ Select basic type nr. from table below ▪ Add suffix for both overload relay setting range from page 15/19 ▪ Add suffix for factory modification from page 15/20 - 15/24	24 120 208 240 460 600	20 110 – 220 380 –	C K M P V T
		other voltages and frequencies are available upon request		

The type numbers in the selection table below specify 120V 60 Hz coils. If a different coil voltage is required, change the "K" (7 digit) as per Coil Suffix Table above.

Fusible Switch Combinations and Non-Fusible Starters HP Rated

Enclosed Amps	3 phase				FUSE CLIPS Type IJ Amps	Contactor reference number	Aux, Contacts① supplied as standard per contactor		Enclosure Sheet Metal			
									CSA / EEMAC Type 1 General Purpose Enclosure		CSA Type 5 / EEMAC Type 12 Industrial Use	
	200V	230V	460V	575V			NO	NC	Catalogue Number	Encl. Fig.	Catalogue Number	Encl. Fig.
20	$1^{1/2}$	2	3	**5**	NONE 30	15	2	3	**V3NB15K..** **V4NB15K..**	V3	**V3NC15K..** **V4NC15K..**	H3
	2	3	5	**$7^{1/2}$**	NONE 30	16	2	3	**V3NB16K..** **V4NB16K..**		**V3NC16K..** **V4NC16K..**	
	3	3	$7^{1/2}$	**10**	NONE 30	17	2	3	**V3NB17K..** **V4NB17K..**		**V3NC17K..** **V4NC17K..**	
	3	5	10	**10**	NONE 30	18	2	3	**V3NB18K..** **V4NB18K..**		**V3NC18K..** **V4NC18K..**	
35	5	5	10	**15**	NONE 30 60	25	2	2	**V3NB25K..** **V4NB25K..** **V4NB25K..**		**V3NC25K..** **V4NC25K..** **V4NC25K..**	
	5	$7^{1/2}$	15	**20**	NONE 30 60	26	2	2	**V3NB26K..** **V4NB26K..** **V4NB26K..**		**V3NC26K..** **V4NC26K..** **V4NC26K..**	
42	10	10	20	**25**	NONE 30 60	27	2	2	**V3NB27K..** **V4NB27K..** **V4NB27K..**		**V3NC27K..** **V4NC27K..** **V4NC27K..**	
	10	10	25	**25**	NONE 30 60	28	2	2	**V3NB28K..** **V4NB28K..** **V4NB28K..**		**V3NC28K..** **V4NC28K..** **V4NC28K..**	
55	10	15	30	**40**	NONE 30 60	35	2	2	**V3NB35K..** **V4NB35K..** **V4NB35K..**		**V3NC35K..** **V4NC35K..** **V4NC35K..**	
60	15	15	40	**50**	NONE 30 60 100	36	2	2	**V3NB36K..** **V4NB36K..** **V4NB36K..** **V4NB36K..**		**V3NC36K..** **V4NC36K..** **V4NC36K..** **V4NC36K..**	
80	20	20	50	**50**	NONE 30 60 100	37	2	2	**V3NB37K..** **V4NB37K..** **V4NB37K..** **V4NB37K..**		**V3NC37K..** **V4NC37K..** **V4NC37K..** **V4NC37K..**	
90	20	25	50	**60**	NONE 30 60 100	38	2	2	**V3NB38K..** **V4NB38K..** **V4NB38K..** **V4NB38K..**		**V3NC38K..** **V4NC38K..** **V4NC38K..** **V4NC38K..**	

NEMA rated available - contact your Siemens representative

① Some aux contacts may be used for control options and electrical interlock, where neccessary

Overload Relay Chart

Append to Catalogue Number V4AB15K _ _		The overload relay calibration is based on a motor service factor (S.F.) of 1.15. If the service factor is 1.0, multiply motor F.L.C. by 0.92 before making selection.					
Adjustment Range Amps	Contactor Reference in Type No. (5. and 6. digit)							
	15 / 16 / 17/ 18		25 / 26 / 27		35 / 36 / 37 / 38		45 / 46 / 47	
	Overload Type	Overload Suffix	Overload Type	Overload Suffix	Overload Type	Overload Suffix	Overload Type	Overload Suffix
0.11 - 0.16 0.14 - 0.2 0.18 - 0.25	3RU2116 3RU2116 3RU2116	0A 0B 0C						
0.22 - 0.32 0.28 - 0.4 0.35 - 0.5	3RU2116 3RU2116 3RU2116	0D 0E 0F						
0.45 - 0.63 0.55 - 0.8 0.7 - 1.0	3RU2116 3RU2116 3RU2116	0G 0H 0J						
0.9 - 1.25 1.1 - 1.6 1.4 - 2	3RU2116 3RU2116 3RU2116	0K 1A 1B						
1.8 - 2.5 2.2 - 3.2 2.8 - 4	3RU2116 3RU2116 3RU2116	1C 1D 1E	3RU2126 3RU2126 3RU2126	1C 1D 1E				
3.5 - 5 4.5 - 6.3 5.5 - 8	3RU2116 3RU2116 3RU2116	1F 1G 1H	3RU2126 3RU2126 3RU2126	1F 1G 1H	3RU2136	1H		
7 - 10 9 - 12.5	3RU2116 3RU2116	1J 1K	3RU2126 3RU2126	1J 1K	3RU2136 3RU2136	1J 1K		
11 - 16 14 - 20 17 - 22	3RU2116	4A	3RU2126 3RU2126 3RU2126	4A 4B 4C	3RU2136 3RU2136 3RU2136	4A 4B —		
18 - 25 20 - 25 23 - 28 22 - 32			3RU2126 3RU2126 3RU2126 3RU2126	— 4D 4N —	3RU2136 3RU2136 3RU2136 3RU2136	4D — — 4E		
27 - 32 28 - 40 30 - 36 34 - 40			3RU2126 3RU2126 3RU2126 3RU2126	4E — 4P 4F	3RU2136 3RU2136 3RU2136 3RU2136	— 4F — —	3RU2146 3RU2146 3RU2146 3RU2146	— 4F — —
36 - 45 36 - 50 40 - 50					3RU2136 3RU2136 3RU2136	4G — 4H	3RU2146 3RU2146 3RU2146	— 4H —
47 - 57 45 - 63 54 - 65					3RU2136 3RU2136 3RU2136	4Q — 4J	3RU2146 3RU2146 3RU2146	— 4J —
57 - 75 62 - 73 70 - 80					3RU2136 3RU2136 3RU2136	— 4K 4R	3RU2146 3RU2146 3RU2146	4K — —
70 - 90 80 - 100							3RU2146 3RU2146	4L 4M

Other Options	Suffix
Provision only for field amounting of overload relay	00
Substitute bimetal overload relay with solid state type 3RB2, Class 20	□□①

① Contact your Siemens representative for quote. Designators will be added based on requested configuration.

Factory Modifications

Power Line Voltage and Control Circuit Options

Selection

Power Line Voltage Selection		Append to Catalogue Number i.e.: V4AB15K1E_ _						
		120V	208V	230V	460V	575V	600V Max.	Other
Single Phase, 60HZ (L1, N)	Suffix	1	–	–	–	–	–	–
Single Phase, 60Hz (L1, L2)		–	–	7	–	–	–	–
Three Phases, 60Hz (L1, L2, L3)		–	2	3	4	5	–	–
Three Phases, 600V Max, 60Hz(L1, L2, L3)		–	–	–	–	–	6	–
Specify voltage, frequency, No. of phase & neutral if required		–	–	–	–	–	–	3

Note: Power line voltage is an important data to be known in order to provide a starter properly connected for single phase or three phase load.

Control Circuit Selection

Power Line Voltage Selection	Append to Catalogue Number i.e.: V4AB15K1E_ _	
	Contactor Reference No.	Suffix
Separate Control Circuit, Unfused		0
Separate Control Circuit, Fused, 1 fuse max. 250V		N
Common Control with 1 Control Fuse, max. 250V (for 120V control only)		P
Control Circuit Transformer: Standard Capacity		R
Control Circuit Transformer: Extra Capacity		
May require larger enclosure	additional 50VA	U
Consult Siemens	100VA	W
Special transformer voltages Specify		9

Additional Auxiliary Contacts

Append to Catalogue Number ie: V4AB15K1E5R_			
		Suffix	
Std. auxiliary contacts as per starter selection table		0	Options available for FVNR type starters with contactor ref numbers: 15 / 16 / 17 / 18 Other configurations will come with additional 2 N.O. + 2 N.C. aux block as standard
Addition of:	2 N.O.	L	
	2 N.C.	F	
	4 N.O.	K	
	3 N.O. + 1 N.C.	E	
	2 N.O. + 2 N.C.	J	
		M	

Pilot Devices – Operators

Legend Plates are supplied as standard with Operators

Append to Catalogue Number i.e.: V4AB30K1E5R0_ _							
Operator Description			**First Suffix**[1]	**EEMAC Enclosure Type**	**English Legend**	**Second Suffix**	**French Legend**
None			0	1/12 4	–	–	–
Pushbutton							
1 pushbutton momentary	extended head red	1 N.C.	1 (2)	1/12 4	STOP	B	ARRET
twist lock maintained	mushroom red	1 N.C.	3 (4)	1/12 4	EMERGENCY STOP	A	ARRET D'URGENCE
2 pushbuttons momentary	1 - red 1 - green	1 N.C. 1 N.O.	5 (6)	1/12 4	START STOP ON OFF	C D	MARCHE ARRET EN HORS
3 pushbuttons momentary	1 - red 2 - black each	1 N.C. 1 N.O.	7 (8)	1/12 4	FORWARD REVERSE STOP HIGH LOW STOP UP DOWN STOP FAST SLOW STOP OPEN CLOSE STOP	E F G H J	AVANT ARRIERE ARRET HAUTE BASSE ARRET EN HAUT EN BAS ARRET VITE LENTEMENT ARRET OUVRIR FERMER ARRET

[1] When ordering French legend plates use the "first suffix" in brackets.

Pilot Devices – Operators (continued)

Legend Plates are supplied as standard with Operators

Append to Catalogue Number i.e.: V4AB30K1E5R0_ _					
Operator Description	**First Suffix①**	**EEMAC Enclosure Type**	**English Legend**	**Second Suffix**	**French Legend**
2-position selector switch					
2 position selector switch maintained	A (B)	1/12 4	STOP START	K	ARRET MARCHE
			OFF ON	L	HORS EN
			HAND AUTO	M	MAN AUTO
2 position selector switch spring return	C (D)	1/12 4	FOR REV	N	AVANT ARRIERE
			HIGH LOW	P	HAUTE BASSE
			UP DOWN	Q	HAUT BAS
2 position selector switch key operated maintained	E (F)	1/12 4	FAST SLOW	R	VITE LENT
			OPEN CLOSE	S	OUVRIR FERMER
			LOCAL REMOTE	T	LOCAL A DIST.
3-position selector switch					
3 position selector switch maintained	G (H)	1/12 4			
3 position selector switch 1 spring return from both sides	J (K)	1/12 4	HAND OFF AUTO	1	MAN ARRET AUTO
			FOR OFF REV	2	AVANT ARRET ARRIERE
			HIGH OFF LOW	3	HAUTE ARRET BASSE
			UP OFF DOWN	4	HAUT ARRET BAS
3 position selector switch key operated maintained	L (M)	1/12 4	FAST OFF SLOW	5	VITE ARRET LENT
			OPEN OFF CLOSE	6	OUVRIR ARRET FERMER
			LOCAL OFF REMOTE	7	LOCAL HORS A DIST.
			TEST OFF AUTO	8	ESSAI ARRET AUTO
3 position selector switch key operated spring return from both sides	N (P)	1/12 4			
2 pushbuttons & 3-position selector switch					
3 position selector switch maintained c/w START STOP pushbuttons momentary green	T (U)	1/12 4	HAND OFF AUTO for selector switch and START STOP for pushbutton	X	MAN ARRET AUTO for selector switch and MARCHE ARRET for pushbuttons

Pilot Devices – Indicators

Append to Catalogue Number i.e.: V4AB15K1E5R05C _ _ _		
Pilot Lights Description	**First Suffix①**	**Enclosure Type**
No Pilot Lights	0	1/4/12
LED c/w legend plate(s) 120V extended lfie	5 (6)	1/12 4
LED c/w legend plate(s) 24V extended life	7 (8)	1/12 4
LED without legend plate(s) 120V extended life	C	1/12 4
LED without legend plate(s) 24V extended life	D	1/12 4

① When ordering French legend plates use the "first suffix" in brackets.

Pilot Lights
Legend Plates and Lens Colours

Table A - One Pilot Light

LEGEND PLATES			LEGEND COLOURS						
English	French		Red	Yellow	Green	Blue			Other Specify
RUN	MARCHE	Suffix	1C	1D	1E	–			19
ON	EN CIRCUIT		2C	2D	2E	–			29
OFF	ARRÊT		3C	3D	3E	–			39
O/L TRIPPED	SURCHARGE		4C	4D	–	–			49
READY	PRÊT		5C	5D	5E	5F			59
Other Legend Plates Specify			9C	9D	9E	9F			99

Table B - Two Pilot Lights

LEGEND PLATES			LEGEND COLOURS						
English	French		Red Red	Green Green	Red Yellow	Red Green	Green Red	Green Yellow	Other Specify
RUN ▪ OFF	MARCHE ▪ ARRÊT	Suffix	–	–	–	64	65	–	69
ON ▪ OFF	EN CIRCUIT ▪ ARRÊT		–	–	–	74	75	–	79
RUN ▪ O/L TRIPPED	MARCHE ▪ SURCHARGE		–	–	83	–	85	86	89
ON ▪ O/L TRIPPED	EN CIRCUIT ▪ SURCHARGE		–	–	A3	–	A5	A6	A9
FORWARD ▪ REVERSE	AVANT ▪ ARRIERE		B1	B2	–	B4	B5	–	B9
FAST ▪ SLOW	VITE ▪ LENTEMENT		C1	C2	–	C4	C5	–	C9
UP ▪ DOWN	EN HAUT ▪ EN BAS		D1	D2	–	D4	D5	–	D9
HIGH ▪ LOW	HAUT ▪ BAS		E1	E2	–	E4	E5	–	E9
Other Legend Plates Specify			91	92	93	94	95	96	99

Table B - Three Pilot Lights

LEGEND PLATES			LEGEND COLOURS						
English	French		Red Red Green	Green Green Red	Red Red Yellow	Green Green Yellow	Red Green Yellow	Green Red Yellow	Other Specify
RUN ▪ OFF ▪ O/L TRIPPED	MARCHE ▪ ARRÊT ▪ SURCHARGE	Suffix	–	–	–	–	FN	FP	F9
ON ▪ OFF ▪ O/L TRIPPED	EN CIRCUIT ▪ ARRÊT ▪ SURCHARGE		–	–	–	–	GN	GP	G9
FORWARD ▪ REVERSE ▪ OFF	AVANT ▪ ARRIERE ▪ ARRÊT		HK	HJ	–	–	–	–	H9
FAST ▪ SLOW ▪ OFF	VITE ▪ LENTEMENT ▪ ARRÊT		JK	JJ	–	–	–	–	J9
UP ▪ DOWN ▪ OFF	EN HAUT ▪ EN BAS ▪ ARRÊT		KK	KJ	–	–	–	–	K9
HIGH ▪ LOW ▪ OFF	HAUT ▪ BAS ▪ ARRÊT		LK	LJ	–	–	–	–	L9
FORWARD ▪ REVERSE ▪ O/L TRIPPED	AVANT ▪ ARRIERE ▪ SURCHARGE		–	MJ	ML	MM	MN	MP	M9
FAST ▪ SLOW ▪ O/L TRIPPED	VITE ▪ LENTEMENT ▪ SURCHARGE		–	NJ	NL	NM	NN	NP	N9
UP ▪ DOWN ▪ O/L TRIPPED	EN HAUT ▪ EN BAS ▪ SURCHARGE		–	PJ	PL	PM	PN	PP	P9
HIGH ▪ LOW ▪ O/L TRIPPED	HAUT ▪ BAS ▪ SURCHARGE		–	RJ	RL	RM	RN	RP	R9
Other Legend Plates Specify			9K	9J	9L	9M	9N	9P	99

Miscellaneous Options:

Specify by suffix and description as required.

Append to Catalogue No i.e.: V4AB15K1E5R05C165-Z _ _ _ _ _ _

Description		Suffix
Disconnect Devices		
Auxiliary Contacts, not wired		
Fusible or Non-Fusible	1 N.O. & 1 N.C.	AX
Disconnect Switch	2 N.O. & 2 N.C.	AY
Circuit Breaker	1 SPDT	AW
	2 SPDT	AX
	1 SPDT & 1 Alarm SPDT	AY
Metering[1]		
Installed & wired, EEMAC Type 1 & 12		
Ammeter, 3-1/2" Panel Type[2]		
c/w one 5A sec. CT		
One extra CT		MA
Two extra CT's		M0
		MT
Voltmeter, 3-1/2" Panel Type[b]		
c/w One 0-750V Pt fused		MV
3-Phase Selector Switch		MS
Elapsed Time Meter ME		ME
Phase Failure and Phase Sequence		
Monitoring Relay		MD
Control Relays and Timers[1]		
4 Pole Relay, A600		
2 N.O. & 2 N.C.	not wired	K2
	wired	K5
3 N.O. & 1 N.C.	not wired	K3
	wired	K6
4 N.O.	not wired	K4
	wired	K7
Time Delay Relays[1]		
1-SPDT, B300, max 240V AC coil		
ON-Delay adj. up to 100s	not wired	S1
	wired	S2
OFF - Delay adj. up to 100s	not wired	S3
	wired	S4
Thermistor Tripping Unit[1]		
max. 240V AC coil,	Auto Reset	HA
installed and wired	Manual Reset	HM
Surge Suppressors		
for Contactors and Control Relays		SX
Wire Markers		WM

Description		Suffix
Drip Shield		
available for hinged cover enclosures only (V2, V3, V4)		DS
Identification Name Plate		
Lamacoid	1-25 characters	N1
	25-50 characters	N2

Fuse Clips:

All Fusible Disconnect Combination Starters are supplied with Form I, Class J fuse clips as standard.

Fuse Clip Size	Form IJ
	Suffix
30A	PD (time-delay)
60A	PJ (fast-acting)
100A	

Terminal Blocks

Description	Suffix
Wired 1 point terminal	T1
Wired 2 point terminal	T2
Wired 3 point terminal	T3
Wired 4 point terminal	T4
Wired 5 point terminal	T5
Wired 6 point terminal	T6
Wired 7 point terminal	T7
Wired 8 point terminal	T8
Wired 9 point terminal	T9
Wired 10 point terminal	T0
Unwired 1 point terminal	A
Unwired 2 point terminal	B
Unwired 3 point terminal	C
Unwired 4 point terminal	D
Unwired 5 point terminal	E
Unwired 6 point terminal	F
Unwired 7 point terminal	G
Unwired 8 point terminal	H
Unwired 9 point terminal	J
Unwired 10 point terminal	K

[1] Option may require larger enclosure. Consult Siemens.

[2] All requests must be accompanied by complete meter specifications. Availability may be limited.

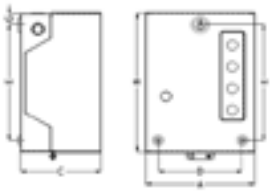

Figure 1

Non-Combination Starter EEMAC Type 1 (Lift-Off Cover)

Figure 1		Width A	Height B	Depth C	Mfg.-Holes D	E	F	G	H	No. of Holes
V0	MM	161.70	244.7	146	110.3	174	–	25.7	–	3
	INCH	6.37	9.64	5.75	4.34	6.85	–	1.01	–	
V1	MM	241.5	320.9	178.3	187.3	268.1	–	24	–	3
	INCH	9.51	12.64	7.02	7.38	10.55	–	0.95	–	

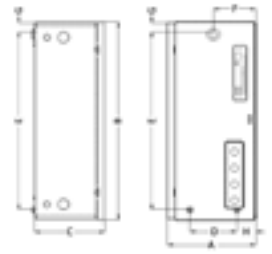

Figure 2

Non-Combination/Combination Starter EEMAC Type 1

V2	MM	264	610	210	140	548	127	28	57	3
	INCH	10.39	24	8.25	5.5	21.58	5	1.1	2.25	
V3	MM	410	640	209.6	280	578	–	28	60	4
	INCH	16.14	25.2	8.25	11	22.76	–	1.1	2.36	
V4	MM	510	900	279.6	380	838	–	28	60	4
	INCH	20.08	35.43	11.01	14.96	32.99	–	1.1	2.36	

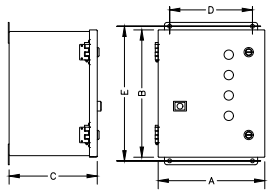

Figure 3

Non-Combination Starter EEMAC Type 12

S	MM	262	312	216	203.2	330	–	–	–	4
	INCH	10.3	12.3	8.5	8	13	–	–	–	



Figure 4

Non-Combination/Combination Starter EEMAC Type 12

H2	MM	254	610	209.6	165	648	127	12	44.5	3
	INCH	10	24	8.25	6.5	25.51	5	0.47	1.75	
H3	MM	400	640	209.6	311	678	200	12	44.5	3
	INCH	15.75	25.2	8.25	12.24	26.69	7.87	0.47	1.75	
H5	MM	500	900	280	411	955.35	–	25	44.5	4
	INCH	19.69	35.43	11.02	16.18	37.61	–	0.98	1.75	

Note: All dimensions shown for reference purpose only.
Not to be used for construction purposes.

3RE41 Enclosed IEC Motor Starter Packages

Product overview

3RE41 Enclosed IEC motor starters are well suited for both industrial and commercial applications. They are durable and dependable, particularly when it comes to motor protection. Protecting the performance of motors is a critical priority and the 3RE41 enclosed starters are offered with either thermal or solid-state overload relays (ordered separately) to maximize your motor protection.

Packages include a SIRIUS 3RT2 series contactor inside a NEMA 1 enclosure. They are available with or without control transformers, HAND-OFF-AUTO selector switches, ON-OFF push buttons and pilot lights. Overload relays can be purchased separately and installed in the field.



Motor Starter Features

General
- From fractional up to 25 Hp at 575 V
- Non-combination type
- Non-reversing
- Single phase and 3-phase loads
- Thermal and solid-state overload relays (sold separately)
- Type 1 enclosures
- RoHS compliant
- Certifications: cULus

Contactor
- Horsepower rated
- High contact reliability
- Auxiliary contact(s) included as standard
- Screw type terminal connections

Overload Relay Features

Thermal overload relays
- Trip Class 10
- Phase failure sensitivity
- For single and three phase loads
- Includes NC trip contact and NO alarm contact
- Manual and automatic RESET (selectable)
- Switch position indicator
- TEST function
- STOP button
- Sealable cover (optional)
- Screw-type terminals

Solid-state overload relays
- Selectable Trip Class 5, 10, 20 and 30
- Overload, phase failure and unbalance protection
- Internal ground fault detection (selectable)
- Internal power supply
- Includes NC trip contact and NO alarm contact
- Manual and automatic RESET (selectable)
- Electrical remote RESET integrated
- Switch position indicator
- TEST function and self-monitoring
- Sealable cover (optional)
- Screw-type terminals

Available Factory Mods, Field Kits, Accessories

Factory modifications
- Push buttons
- Selector switches
- Pilot lights
- Control power transformers

Field kits and accessories
- Push buttons
- Selector switches
- Pilot lights
- Auxiliary contacts
- Control power transformers
- etc.

Catalogue Numbering System

3RE4 Nomenclature
Non-Combination Motor Starters

3RE4	1	6	2	–	5	A	A	3	0	–	0	Y	Y	0

Controller Type

16 = Non-combination non-reversing

Frame Size: UL60947-4-1 Hp Rating

15 = S00: 1-Ph Hp (0.25@115V, 0.5@208V, 0.75@230V), 3-Ph Hp (1.5@208V, 2@230V, 3@460V, 5@575V)
17 = S00: 1-Ph Hp (0.5@115V, 1.5@208V, 2@230V), 3Ph Hp (3@208V, 3@230V, 7.5@460V, 10@575V)
25 = S0: 1-Ph Hp (1@115V, 2@208V, 3@230V), 3-Ph Hp (5@208V, 5@230V, 10@460V, 15@575V)
28 = S0: 1-Ph Hp (3@115V, 5@208V, 5@230V), 3-Ph Hp (10@208V, 10@230V, 25@460V, 25@575V)

Enclosure Type and Size

A = NEMA Type 1 - standard size (Select large size enclosure if control transformer or other devices are to be installed on the base of the enclosure)
B = NEMA Type 1 - large size

Disconnect Type

A = None

Nominal Coil Voltage

3 = 115/120 V AC 50/60Hz

Overload Relay Type

0 = (none)

Overload Relay Amp Range

0Y = No overload relay

Special

Y0 = (none)
B1 = Start-Stop Push Buttons, Red On Pilot Light
B4 = Start-Stop Push Buttons, CPT Std Capacity 208:120V, Red On Pilot Light
C1 = Start-Stop Push Buttons, CPT Std Capacity 240:120V, Red On Pilot Light
C7 = Start-Stop Push Buttons, CPT Std Capacity 480:120V, Red On Pilot Light
P0 = Start-Stop Push Buttons,CPT Std Capacity 600:120V,Red On Pilot Light
F7 = Hand-Off-Auto Selector Switch, Red On Pilot Light
G1 = Hand-Off-Auto Selector Switch, CPT Std Capacity 208:120V, Red On Pilot Light
G7 = Hand-Off-Auto Selector Switch, CPT Std Capacity 240:120V, Red On Pilot Light
H4 = Hand-Off-Auto Selector Switch, CPT Std Capacity 480:120V, Red On Pilot Light
P1 = Hand-Off-Auto Selector Switch,CPT Std Capacity 600:120V,Red On Pilot Light

Note:
This catalogue numbering system is presented here merely for information purposes and for better understanding of logic behind article numbers. For your orders, please use the article numbers listed in the Selection section.

Enclosed Modular IEC Motor Starter Packages

3RE41 Non-Reversing Starter, 3-Pole (both 1-Ph and 3-Ph) , Standard NEMA 1 Enclosure *Selection*



Ordering Information

- Can be converted to a motor starter by installing an overload relay (see page 15/30).
- NEMA 1 Enclosure.
- 115/120 VAC 50/60 Hz coils.
- For accessories, see page 15/31 - 15/32.
- Only overload relays, pilot devices, pilot lights and fuse blocks can be added to Standard size enclosures - for other accessories, please select controllers in large NEMA 1 enclosures.
- For replacement parts, see page 15/32.
- For dimensions, see page 15/33.
- For wiring diagrams, see page 15/34 - 15/35.

Non-Reversing Starter, 3-Pole (for both 1-Phase and 3-Phase), Standard Enclosure

Catalogue Number	Control Transformer①	Operator Devices	Unused Aux Contacts		Contactor Ref Number	Frame Size	Maximum HP Rating						
							1-Phase			3-Phase			
			NO	NC			115V	208V	230V	208V	230V	460V	575V
3RE4161-5AA30-0YB1	None	Start-Stop push buttons, red On pilot light	0	0	15	S00	0.25	0.5	0.75	1.5	2	3	5
3RE4161-5AA30-0YF7	None	HOA Selector Switch, red On pilot light	1	0	15	S00	0.25	0.5	0.75	1.5	2	3	5
3RE4161-7AA30-0YY0	None	None	1	0	17	S00	0.5	1.5	2	3	3	7.5	10
3RE4162-5AA30-0YB1	None	Start-Stop push buttons, red On pilot light	0	1	25	S0	1	2	3	5	5	10	15
3RE4162-5AA30-0YF7	None	HOA Selector Switch, red On pilot light	1	1	25	S0	1	2	3	5	5	10	15
3RE4162-8AA30-0YY0	None	None	1	1	28	S0	3	5	5	10	10	25	25

① NEMA 1 standard size enclosures don't offer enough space for factory or field installed control transformers. If control transformers are required, please select starter in a NEMA 1 large size enclosure (see page 15/29).

Enclosed Modular IEC Motor Starter Packages

3RE41 Non-Reversing Starter, 3-Pole (both 1-Ph and 3-Ph) , Standard NEMA 1 Enclosure *Selection*



Ordering Information

- Can be converted to a motor starter by installing an overload relay (see page 15/30).
- NEMA 1 Enclosure.
- 115/120 VAC 50/60 Hz coils.
- For accessories, see page 15/31 - 15/32.
- For replacement parts, see page 15/32.
- For dimensions, see page 15/33.
- For wiring diagrams, see page 15/34 - 15/35.

Non-Reversing Starter, 3-Pole (for both 1-Phase and 3-Phase), Large Enclosure

Catalogue Number	Control Transformer	Operator Devices	Unused Aux Contacts		Contactor Ref Number	Frame Size	Maximum HP Rating						
							1-Phase			3-Phase			
			NO	NC			115V	208V	230V	208V	230V	460V	575V
3RE4161-5BA30-0YP0	600/120V, 45VA	Start-Stop push buttons, red On pilot light	0	0	15	S00	—	—	—	–	—	—	5
3RE4161-5BA30-0YB4	208/120V, 45VA	Start-Stop push buttons, red On pilot light	0	0	15	S00	—	0.5	—	1.5	—	—	—
3RE4161-5BA30-0YC1	240/120V, 45VA	Start-Stop push buttons, red On pilot light	0	0	15	S00	—	—	0.75	—	2	—	—
3RE4161-5BA30-0YC7	480/120V, 45VA	Start-Stop push buttons, red On pilot light	0	0	15	S00	—	—	—	—	—	3	—
3RE4161-5BA30-0YP1	600/120V, 45VA	HOA Selector Switch, red On pilot light	1	0	15	S00	—	—	—	—	—	—	5
3RE4161-5BA30-0YG1	208/120V, 45VA	HOA Selector Switch, red On pilot light	1	0	15	S00	—	0.5	—	1.5	—	—	—
3RE4161-5BA30-0YG7	240/120V, 45VA	HOA Selector Switch, red On pilot light	1	0	15	S00	—	—	0.75	—	2	—	—
3RE4161-5BA30-0YH4	480/120V, 45VA	HOA Selector Switch, red On pilot light	1	0	15	S00	—	—	—	—	—	3	—
3RE4161-5BA30-0YY0	None	None	1	0	15	S00	0.25	0.5	0.75	1.5	2	3	5
3RE4161-7BA30-0YP0	600/120V, 45VA	Start-Stop push buttons, red On pilot light	0	0	17	S00	—	—	—	—	—	—	10
3RE4161-7BA30-0YB4	208/120V, 45VA	Start-Stop push buttons, red On pilot light	0	0	17	S00	—	1.5	—	3	—	—	—
3RE4161-7BA30-0YC1	240/120V, 45VA	Start-Stop push buttons, red On pilot light	0	0	17	S00	—	—	2	—	3	—	—
3RE4161-7BA30-0YC7	480/120V, 45VA	Start-Stop push buttons, red On pilot light	0	0	17	S00	—	—	—	—	—	7.5	—
3RE4161-7BA30-0YP1	600/120V, 45VA	HOA Selector Switch, red On pilot light	1	0	17	S00	—	—	—	—	—	—	10
3RE4161-7BA30-0YG1	208/120V, 45VA	HOA Selector Switch, red On pilot light	1	0	17	S00	—	1.5	—	3	—	—	—
3RE4161-7BA30-0YG7	240/120V, 45VA	HOA Selector Switch, red On pilot light	1	0	17	S00	—	—	2	—	3	—	—
3RE4161-7BA30-0YH4	480/120V, 45VA	HOA Selector Switch, red On pilot light	1	0	17	S00	—	—	—	—	—	7.5	—
3RE4161-7BA30-0YY0	None	None	1	0	17	S00	0.5	1.5	2	3	3	7.5	10
3RE4162-5BA30-0YP0	600/120V, 75VA	Start-Stop push buttons, red On pilot light	0	1	25	S0	—	—	—	—	—	—	15
3RE4162-5BA30-0YP1	600/120V, 75VA	HOA Selector Switch, red On pilot light	1	1	25	S0	—	—	—	—	—	—	15
3RE4162-8BA30-0YP0	600/120V, 75VA	Start-Stop push buttons, red On pilot light	0	1	28	S0	—	—	—	—	—	—	25
3RE4162-8BA30-0YB4	208/120V, 75VA	Start-Stop push buttons, red On pilot light	0	1	28	S0	—	5	—	10	—	—	—
3RE4162-8BA30-0YC1	240/120V, 75VA	Start-Stop push buttons, red On pilot light	0	1	28	S0	—	—	5	—	10	—	—
3RE4162-8BA30-0YC7	480/120V, 75VA	Start-Stop push buttons, red On pilot light	0	1	28	S0	—	—	—	—	—	25	—
3RE4162-8BA30-0YP1	600/120V, 75VA	HOA Selector Switch, red On pilot light	1	1	28	S0	—	—	—	—	—	—	25
3RE4162-8BA30-0YG1	208/120V, 75VA	HOA Selector Switch, red On pilot light	1	1	28	S0	—	5	—	10	—	—	—
3RE4162-8BA30-0YG7	240/120V, 75VA	HOA Selector Switch, red On pilot light	1	1	28	S0	—	—	5	—	10	—	—
3RE4162-8BA30-0YH4	480/120V, 75VA	HOA Selector Switch, red On pilot light	1	1	28	S0	—	—	—	—	—	25	—
3RE4162-8BA30-0YY0	None	None	1	1	28	S0	3	5	5	10	10	25	25

Selection Tables for 3RE41 Overload Relays



Thermal Overload Relay



Solid-State Overload Relay

Thermal Overload Relays, Trip Class 10, Single and Three Phase

Features and technical characteristics:

- Phase failure sensitivity
- Includes NC trip contact and NO alarm contact
- Manual and automatic RESET (selectable)
- Switch position indicator
- TEST function
- STOP button
- Sealable cover (optional)
- Screw-type terminals

Current Adjustment Range (Amp)	Thermal Overload Relay (reference only)
Frame Size S00	
0.7 - 1	**3RU2116-0JB0**
0.9 - 1.25	**3RU2116-0KB0**
1.1 - 1.6	**3RU2116-1AB0**
1.4 - 2	**3RU2116-1BB0**
1.8 - 2.5	**3RU2116-1CB0**
2.2 - 3.2	**3RU2116-1DB0**
2.8 - 4	**3RU2116-1EB0**
3.5 - 5	**3RU2116-1FB0**
4.5 - 6.3	**3RU2116-1GB0**
5.5 - 8	**3RU2116-1HB0**
7 - 10	**3RU2116-1JB0**
9 - 12.5	**3RU2116-1KB0**
11 - 16	**3RU2116-4AB0**

Current Adjustment Range (Amp)	Thermal Overload Relay (reference only)
Frame Size S0	
1.8 - 2.5	**3RU2126-1CB0**
2.2 - 3.2	**3RU2126-1DB0**
2.8 - 4	**3RU2126-1EB0**
3.5 - 5	**3RU2126-1FB0**
4.5 - 6.3	**3RU2126-1GB0**
5.5 - 8	**3RU2126-1HB0**
7 - 10	**3RU2126-1JB0**
9 - 12.5	**3RU2126-1KB0**
11 - 16	**3RU2126-4AB0**
14 - 20	**3RU2126-4BB0**
17 - 22	**3RU2126-4CB0**
20 - 25	**3RU2126-4DB0**
23 - 28	**3RU2126-4NB0**
27 - 32	**3RU2126-4EB0**
30 - 36	**3RU2126-4PB0**
34 - 40	**3RU2126-4FB0**

Solid-State Overload Relays, Selectable Trip Class 5, 10, 20 and 30, Three Phase Only

Features and technical characteristics:

- Overload, phase failure and unbalance protection
- Internal ground fault detection (selectable)
- Internal power supply
- Includes NC trip contact and NO alarm contact
- Manual and automatic RESET (selectable)
- Electrical remote RESET integrated
- Switch position indicator
- TEST function and self-monitoring
- Sealable cover (optional)
- Screw-type terminals

Current Adjustment Range (Amp)	Solid-State Overload Relay (reference only)
Frame Size S00	
0.32 - 1.25	**3RB3113-4NB0**
1 - 4	**3RB3113-4PB0**
3 - 12	**3RB3113-4SB0**
4 - 16	**3RB3113-4TB0**

Current Adjustment Range (Amp)	Solid-State Overload Relay (reference only)
Frame Size S0	
0.32 - 1.25	**3RB3123-4NB0**
1 - 4	**3RB3123-4PB0**
3 - 12	**3RB3123-4SB0**
6 - 25	**3RB3123-4QB0**
10 - 40	**3RB3123-4VB0**

Pilot Devices

	Device①	Enclosure NEMA Type	Catalogue Number
 49SDSBJ  49SDSB4	Start-Stop Push Buttons, momentary②	1	**49SDPB5**
 Start Push Button  Stop Push Button	Hand-Off-Auto Selector Switch	1	**49SDSBJ**
 2-Position Selector Switch  3-Position Selector Switch	On-Off Selector Switch	1	**49SDSB4**

Pilot Lights

	Device①	Enclosure NEMA Type	Voltage	Catalogue Number
	Light module and lens color: RED, GREEN, and AMBER. Legends include: ON, RUN, OFF③, OLR TRIPPED④	1	24 to 240 V AC/DC	**49SDLBU**

Auxiliary Contacts

	Device	Frame Size	Catalogue Number
	1 NO & 1 NC laterally mounted, screw terminals	S00	**3RH2911-1DA11**
		S0 and S2	**3RH2921-1DA11**
	2 NO laterally mounted, screw terminals	S00	**NA**
		S0 and S2	**3RH2921-1DA20**
	2 NC laterally mounted, screw terminals	S00	**3RH2911-1DA02**
		S0 and S2	**3RH2921-1DA02**

① 3SU 22 mm devices. Pilot lights include LED bulbs.
② Each contactor must have a normally open (NO) auxiliary contact available for seal-in circuit. Order separately as needed.
③ To use as an OFF indicator, the contactor must have a normally closed (NC) auxiliary contact available for the circuit. Order separately as needed.
④ To use as an overload relay (OLR) trip indicator, the OLR must have a normally open (NO) auxiliary contact available for the circuit.

Control Power Transformers①



Device	Frame Size	Catalogue Number	Transformer Table		
			Primary Volts	Secondary Volts	Code
45 VA, 1-secondary fuse	S00	**KT*050**	—	—	—
75 VA, 2-primary and 1-secondary fuses	S0	**KT*075**	—	—	—
			208	120	H
			240/480	120	8
			600	120	9

- ► Replace * with code from Transformer Table.
- ► 45VA CPT does not require primary fuses per NEC.

Control Relays and Timers①②



Relay **Timer**

Device	Catalogue Number
Control relay, 4 NO / 0 NC, 115/120 VAC	**3RH2140-1AK60**
Control relay, 3 NO / 1 NC, 115/120 VAC	**3RH2131-1AK60**
Control relay, 2 NO / 2 NC, 115/120 VAC	**3RH2122-1AK60**
ON-delay timer, 0.05 sec. – 100 hr., 24 – 240V AC/DC	**3RP2525-1BW30**
OFF-delay timer, 0.05 sec. – 100 hr., 24 – 240V AC/DC	**3RP2535-1AW30**

- ► Relays and timers include screw terminals.

Miscellaneous



75D28182001



MTR5

Device	Catalogue Number
Ground Lug, 3 Conductor, 2-14 AWG AL/CU Wire	**75D28182001**
DIN rail kit, 35mm x 5 in, for mounting optional accessories①	**MTR5**
Sealable cover for rotary dial on 3RU2 thermal overload relay (10 per package)	**3RV29 08-0P**

Replacement Parts



Device	Catalogue Number
Contactor parts (Obtain Cat. No. from device and refer to Industrial Control Catalogue).	—
Overload relay (Obtain Cat. No. from device and refer to Industrial Control Catalogue).	—
Overload Relay Reset Operator for all NEMA Type enclosures	**49MBRS**

① The accessory in a NEMA type 1 enclosure requires a large size enclosure.
② Requires DIN rail kit or equivalent.

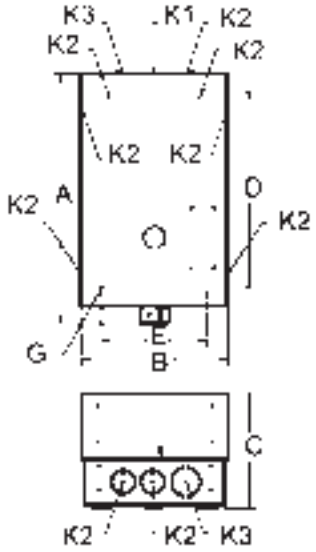

Figure 1

3RE41 Enclosure dimensions

Enclosure Type	Contactor Rating	Fig.	Outline Dimensions			Mounting		Conduit Size		
			A	B	C	D	E	K1	K2	K3
1 (standard size)	S00 NR, S0 NR	1	10.97	6.41	5.03	8.22	4.62	0.5	0.50-0.75	0.75–1
1 (large size)	S00 NR, S0 NR	1	13.53	7.97	6.38	10.25	6.00	0.50-0.75	0.75-1	1-1.25

Sxx = Frame size; NR = Non-reversing

Mounting screw G is 0.25″.
Dimensions are in inches.

Non-combination non-reversing starter, 1-phase, 2-pole

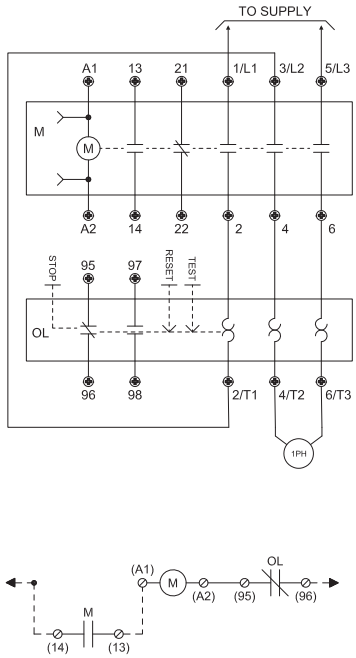

Non-combination non-reversing starter, 3-phase, 3-pole

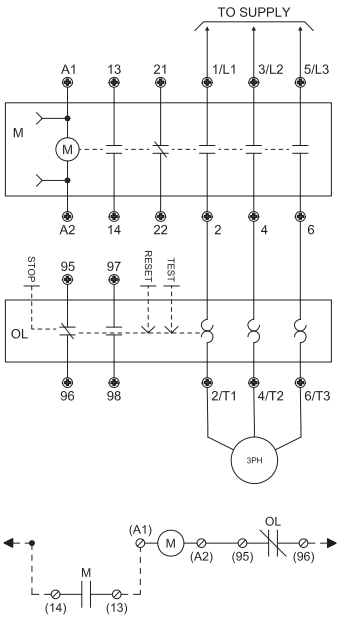

Non-combination non-reversing contactor, 3-phase, 3-pole

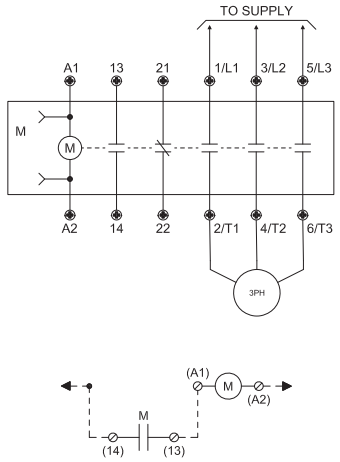

Non-combination non-reversing contactor, 1-phase, 2-pole

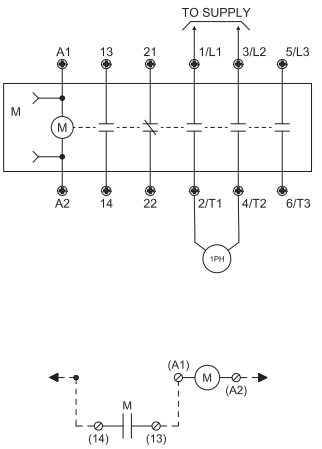

Control options for non-reversing starters

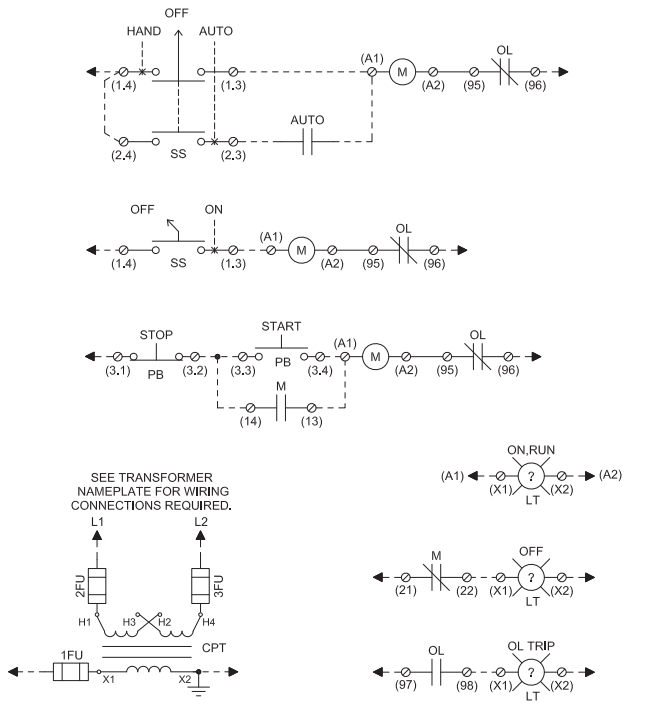

Control optIons for non-reversIng contactors

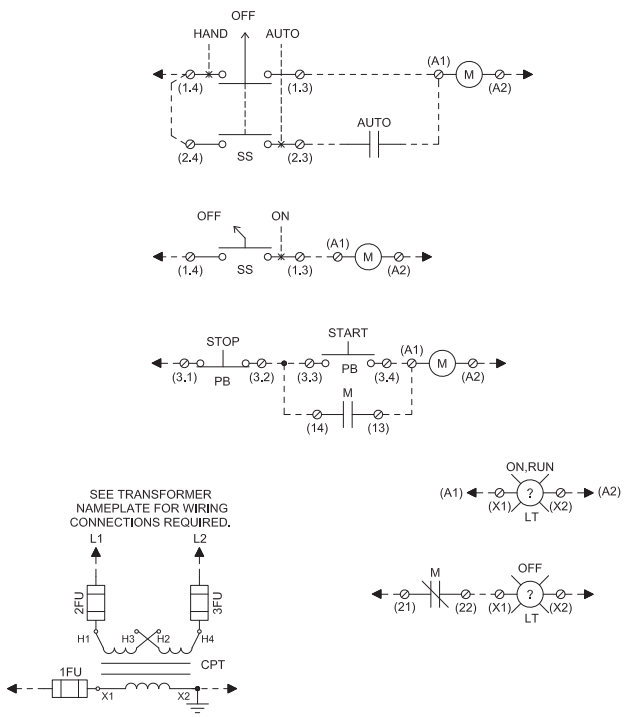

Notes



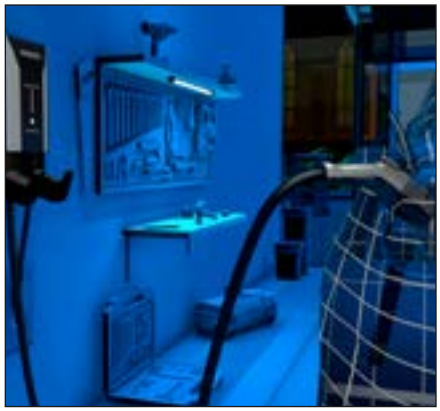



Contents

VersiCharge™ AC Chargers (Generation 3)	16-2
Sicharge UC DC chargers	16-8
Siemens Level 3 DC Fast chargers	16-9
Siemens cloud services	16-15
eMobility solutions and more	16-17

Electric Vehicle Charging Solutions

Integrated electric vehicle solutions for every application

Whether it's a single-family home, multifamily dwelling, parking garage, mall, or city transit project, Siemens has the experience, products, and personnel to help make your EV project a success.

The team at Siemens is ready to help design, layout, and support your EV infrastructure project. Contact your local Siemens sales representative for more details on these cutting-edge products and services.

Commercial VersiCharge™ AC chargers "Level 2" (L2)



- Primarily car market
- Residential, workplace, longer-term stop areas
- 9.6 kW and 11.5kW (240/208 V)
- Multiple hours to charge
- OCPP and Modbus Communications
- Cellular Parent / Child networking

DC heavy-duty MDHD plug-in – SiCharge UC™



- Offers 150kW per cabinet, up to 600 kW total
- Supports four dispensers
- Up to 1,000V
- OCPP compliant

Managed Services



- IoT cloud management of EV assets
- Monitoring
- Billing services
- Reporting
- Demand/maximum - load control
- On-site start-up
- Project design

SiCharge UC™ inverted pantograph



- Pantograph
- Overhead – top down
- On-route and depot ceiling charging solutions
- 300 kW - 600 kW
- Minutes to charge

Make-ready electrical infrastructure



- Low, medium, and high voltage electrical equipment

Electric Vehicle Charging Solutions

AC vs DC chargers:

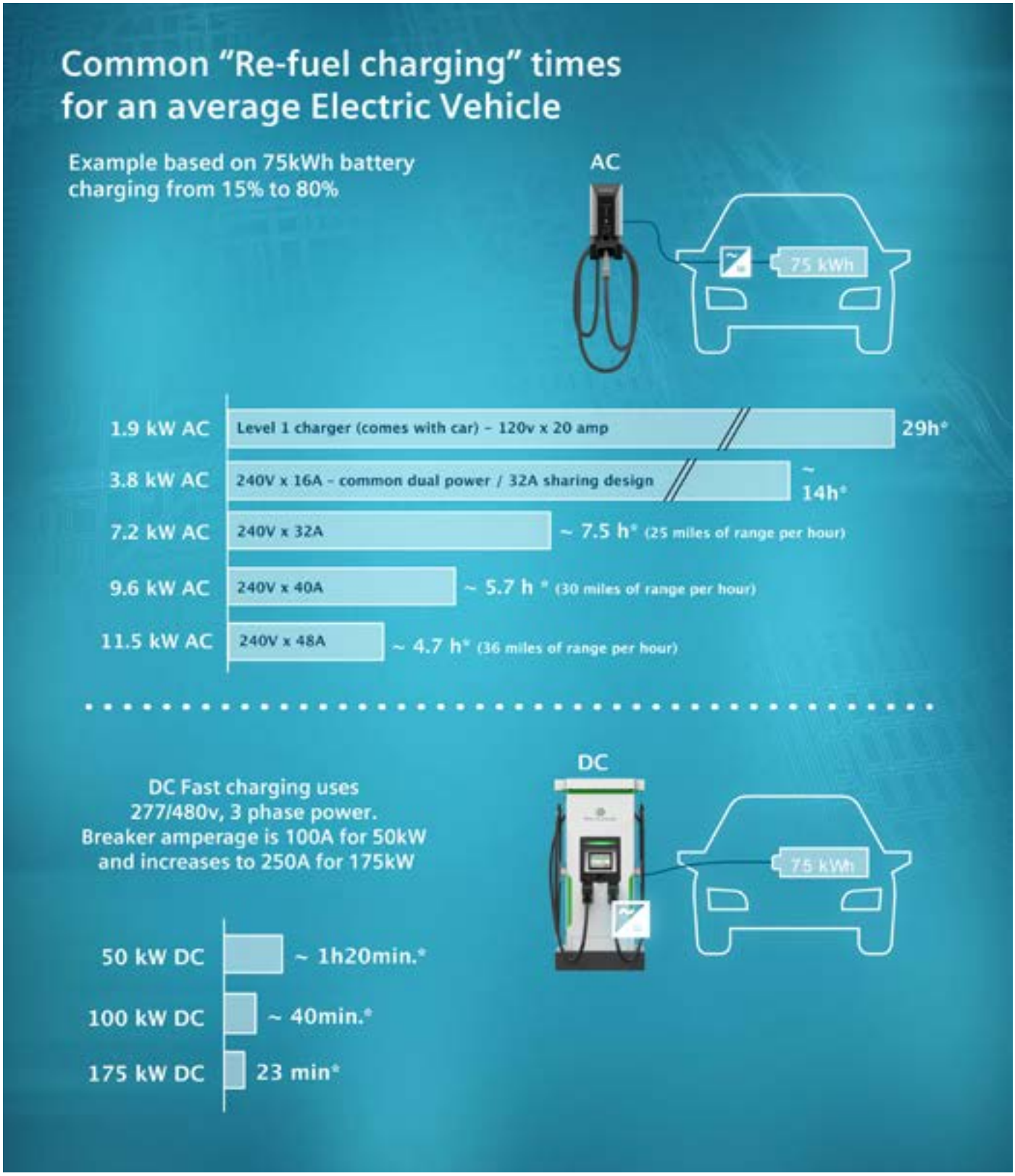

VersiCharge™ AC Chargers

Siemens VersiCharge chargers have stood for superior quality, ruggedness, and proven technology for more than a decade and have reliably provided millions of charges to EV (electric vehicle) drivers worldwide. The new third generation VersiCharge AC charger is continuing this tradition with numerous groundbreaking enhancements, a fresh and appealing design, and up to 11.5 kW of AC (alternating current) charging power. Providing various communication options, including the option to establish a parent-child configuration.

The VersiCharge AC charger can be connected to the customer's preferred back-end system making it scalable and cost-efficient. It also offers revenue-accurate metering and can interact with building management systems, such as Siemens Desigo for dynamic load management that smartly adjusts as building energy demand changes. The rugged and slender VersiCharge AC charger is suitable for both indoor and outdoor (residential or commercial) use and can either be mounted on a wall or supplementary post.



siemens.ca/versicharge

Key features

Compatibility with all common electric vehicles and applicable charging standards plus easy to use, comfort functions such as delayed and planned charging ensure a high degree of customer convenience.

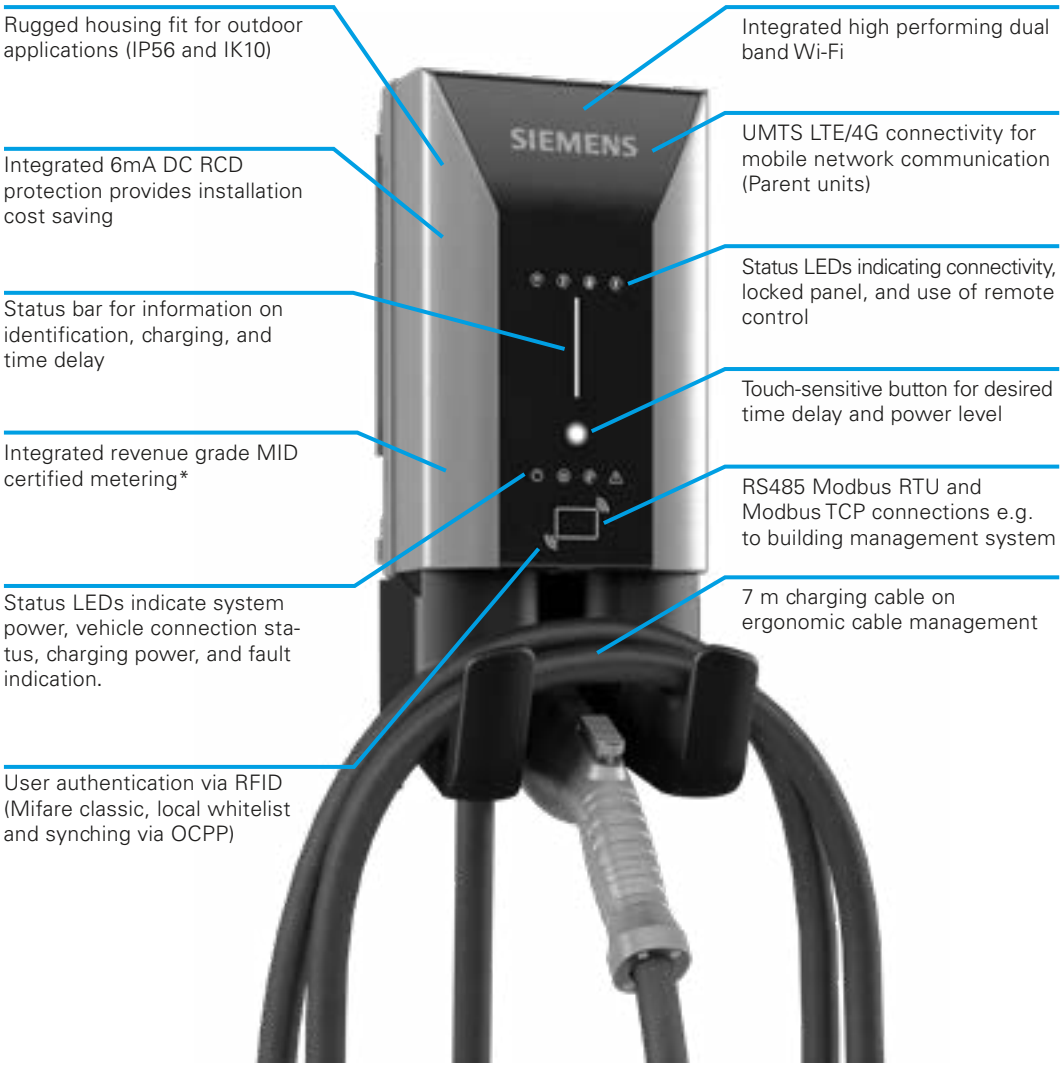

Flexibility for the future

Smart building integration

VersiCharge AC chargers provide numerous communication interfaces and can be connected to various backend systems.

Thanks to its Modbus interface, VersiCharge AC chargers can directly interact with building management systems such as Siemens Desigo for dynamic load management.

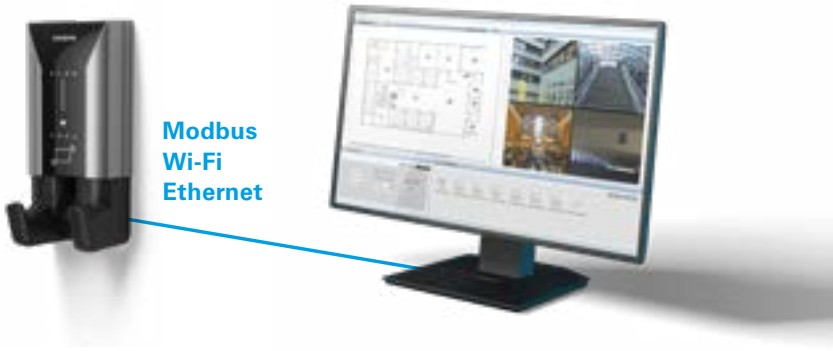



Modular system configuration

Through its parent-child configuration the chargers are scalable, while at the same time reduce the investment and operational cost.

Flexible and elegant posts



Standard Versicharge post with Cable Retraction System



Standard Versicharge Post

- PV fade-resistant and rust-resistant
- Multiple wiring options
- Single and dual post options
- Cable retraction system, 20 ft. cable

Versicharge post catalog numbers

Description	Catalog number
Post for Single or Dual Chargers	**US2:VCPOSTGRY2**
Single Post with Cable Management	**US2:VCPOSTCR1S**
Dual Post for Cable Management	**US2:VCPOSTCR2S**
Cable management unit	**US2:VCCMSSP**

Easy cloud integration

Wi-Fi, Ethernet, 4G, and UMTS

easy to use mobile app

Simple ID card identification

VersiCharge AC Series – Technical data

Features and functions	
Charging mode	Level 2
Vehicle connection	J1772 plug with 20-foot cable, 40 A / 48 A / integrated cable management
AC power output	Single phase up to 9.6 kW (40 A) - requires a 50 A breaker, or 11.5 kW (48 A) - requires a 60 A breaker
Mounting options	Wall and post mounting, see accessories
Touch button	Return to maximum power level, reset ground fault
Charging status LEDs	Power, charging state, reduced power level, authentication, cold start
Communication status LEDs	Connected / not connected during operation, signal strength during commissioning
Network Sharing	Connects to one non-cellular charger by Wi-Fi within 20 feet line of sight
Load management	Via OCPP
Communication	
Interfaces	Wi-Fi, Ethernet, RS485 (Modbus RTU) and LTE, WCDMA with optional cellular plan
User authentication	RFID (local Whitelist, MIFARE)
Configuration	Via Siemens mobile app or the PC Configuration Tool
Back-end protocol	OCPP 1.6, upgradeable to OCPP 2.0.1
Software upgrade	Over-the-air (OTA)
Electrical design	
Power supply voltage	Single phase: 208 V / 240 V AC, 60 Hz
Rated current settings (A)	12, 16, 24, 32, 40, 48
Wire size	8 AWG / 6 AWG (90 °C rated wire)
Network type	Single Split phase
Energy metering	Embedded metering
Ground fault protection	20 mA
Over voltage protection	267 V (maximum 275 V)
Over current protection	Current +10% above configured threshold, minimum +2A, 5 seconds
Operating altitude	9,840 ft
General design	
Environmental rating	Indoor and outdoor, NEMA 4, IK 8
Dimensions (H x W x D)	16.10 in x 7.09 in x 3.78 in
Weight	17 lbs
Ambient conditions	Operating temperature: -31 °F to +122 °F, storage temperature: -40 °F to +140 °F, 98% non-condensing
Colors	Silver metallic (Pantone 10077), black holster
Certificates and standards	
cUL listed	"According to UL 1998, UL 991, UL2594/CSA C22.2 No.280/NMX-J-677-ANCE, UL 2231-1/CSA C22.2 No.281.1/ NMX-J-668-1, UL 2231-2/CSA C22.2 No.281.2/NMX-J-668/2-ANCE, UL 2251/CSA C22.2 No.282/NMX-J-678-ANCE"
EMC	FCC Part 15 Class A (commercial variants); FCC Part 15 Class B (residential variants)
Consumption	Energy Star 1.2 certified
Warranty	3-year warranty for standard VersiCharge 48. 5-year warranty for VersiCharge Blue

	Maximum current	Model number	Wi-Fi and Ethernet	RFID identification	Embedded metering	LTE WCDMA	Installed SIM card
Residential version	**40 A**	**8EM1312-4CF18-0FA3***	✓	–	✓	–	✓
	48 A	**8EM1312-5CF18-0FA3**					
Commercial version	**48 A**	**8EM1310-5CF14-1GA2**	✓	✓	✓	✓	✓
Buy American Commercial version BLUE	**48 A**	**8EM13155CG141GA2**	✓	✓	✓	✓	✓

Back-end protocol: OCPP 1.6, upgradeable to OCPP 2.0.1
* 40 amp residential comes with wall plug

Data plans for chargers: Siemens offers chargers with data plans for customer convenience. A cellular plan is required for cell activation. See table below for data plans.

Description	Catalogue Number
Multi-carrier pooled data plan: 1-year data plan, 1 GB capped monthly bandwidth (supports one cellular unit and one non-cellular unit). This is an annual fee.	**US2:DATA1YRMULTI**
Extended warranty per Level 2 charger: 1 additional year, no in / out services	**US2:VCEXWAR1YR**
Extended warranty per Level 2 charger: 2 additional years, no in / out services	**US2:VCEWAR2YR**

Configuring the mobile app

Sifinity Go App is used to configure and monitor VersiCharge chargers remotely. The Sifinity Go app is available for Android and iOS.



On the Sifinity Go app login page, tap *Create One* to create a new account



Select your country and tap on *Continue* to view the End User License Agreement applicable to your region.



Read the End User License Agreement and tap *Accept*. The Accept button is not enabled, until you scroll to the end of the text.



Enter your first name, last name, email, password, and tap *Create*.

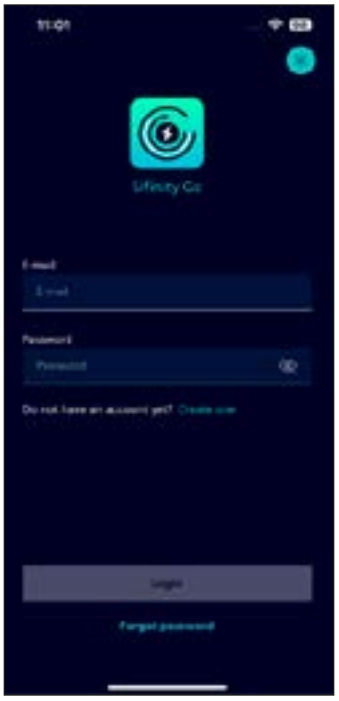

Once you have created your account, login using your credentials.

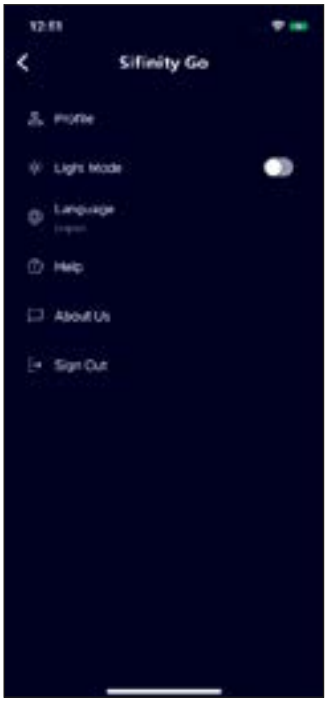

Sifinity Go app supports multiple languages. After you install or update the app, you can choose the preferred language in the initial welcome screen.

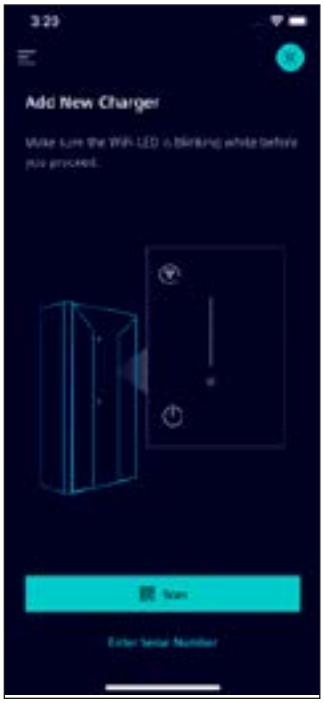

Add a new charger from the Settings screen. You can add and manage up to ten chargers with your account.

SICHARGE UC Heavy-duty chargers

SICHARGE UC offers 150 kW of flexible charging solutions for buses, trucks, and heavy-duty vehicles, whether charging at a depot or en route.



Features & benefits

- Fast, secure charging
- Design flexibility
- Sleek, compact dispenser size
- Easy to add additional dispensers in the field
- Low installation costs with a 600 VAC direct input
- Compatible with the Combined Charging System (CCS) charging standard and OCPP compliant.
- Interoperability





Electric Vehicle Charging Solutions

Tellus Power 30 kW DC Fast Charger

Features
▪ Up to 100A with 1000VDC ▪ 4G / Wi-Fi / Ethernet connectivity ▪ 7" Touch screen display ▪ OCPP 1.6J ▪ CCS1 ▪ Connector ▪ Wall Mount / Pedestal (Optional) Installation ▪ Easy Installation (Indoor / Outdoor) ▪ Cord Management (Optional)



Tellus Power Green DC fast charger provided by Siemens.

30 kW Wall Mount DC Fast Charging Station

Product Number	US2:TP5304801
Input Voltage	480VAC (3P+N+PE), 60Hz
FLA || Breaker Rating	40A || 50A
Output Voltage	150 to 1000VDC
Output Current	Upto 100A
Connector(s)	CCS1
Efficiency	≥94% at nominal output power
Power Factor	> 0.98
Operating Temperature	22°F to 131°F (-30°C to 55°C)
Working || Storage humidity	≤ 95% RH || ≤ 99% RH (Non-condensing)
Altitude	< 6600ft (2000m)
Display	7" touch screen
RFID system	ISO || IEC 14443A/B
Dimensions (l x d x h)	21" x 12" x 27"
Protective Class	NEMA 3S, IK 10
Cooling System	Air cooled
Weight	176 lbs (80kg)
Charging Protocol	Mode 4, IEC-61851, ISO-15118, DIN SPEC 70121
Length of charging cable	16ft (5m)
Communication || Protocol	Ethernet / 4G Wi-Fi || OCPP 1.6J
Electrical Safety: GFCI	RCD 20 mA Type A
Electrical Safety: Surge Protection	20 kA
Electrical Safety General	Over Voltage, Under Voltage, Over Current, Missing Ground
Electrical Safety: Output Short	Output power disabled when output is short circuited
Electrical Safety Temperature	Temperature Sensors @ Charge Coupler and Power Electronics
Emergency Stop	Emergency Stop Button Disables Output Power
Regulatory Compliance	UL-2202 || CSA C22.2#107.1:2016 || EMC: EN 61000-6-1:2007, EN 61000-6-3:2007/A1:2011/AC:2012

Electric Vehicle Charging Solutions

Tellus Power 60 kW DC fast charger

Overview

Features

- Powerful Compact All-In-One DC Charger
- Simple Air-Cooled Power Modules
- Easy to Maintain
- Parallel Charging Feature
- Output Voltage of 1000VDC
- OCPP 1.6J
- Credit Card Reader
- Cord Management





Tellus Power Green DC fast charger provided by Siemens.

60 kW DC Fast Charging Station

Product Number	US2:TP5604802
Input	480VAC (3P+N+PE) || 60Hz
Output Voltage	200 - 1000VDC
Output current	Upto 150A
FLA || Breaker Rating	80A || 100A
Connectors	Dual CCS1
Cyclic Charge Mode	60 kW
Parallel Charge Mode	30 kW per Port
Efficiency	≥94% at nominal output power
Power factor	> 0.98
Display	10" touch screen
Access Control	RFID : ISO/IEC 14443A/B | Credit Card Reader (Optional)
Metering	DC kWh meter per each connector
Operating temperature	-22°F to 131°F (-30°C to 55°C)
Altitude	6500' (2000m)
Working || Storage Humidity	≤ 95% RH || ≤ 99% RH (Non-condensing)
Dimensions (L x D x H)	29" x 19" x 72"
Protective Class	NEMA 3S (IP54), IK10
Cooling system	Air cooling fans
Weight	617 lbs (280kgs)
DC Charge System	Mode 4 - IEC-61851, ISO-15118, DIN 70121 Mode 4 - CHAdeMO 0.9, 1.0
Charging cable	16ft (5m), Cable Retractor Included
Communication || Protocol	Ethernet, 4G/WiFi || OCPP 1.6J
Electrical Safety: GFCI	RCD 20 mA Type A
Electrical Safety: Surge Protection	20 kA
Electrical Safety General	Over Voltage, Under Voltage, Over Current, Missing Ground
Electrical Safety: Output Short	Output power disabled when output is short circuited
Electrical Safety Temperature	Temperature Sensors @ Charge Coupler and Power Electronics
Emergency Stop	Emergency Stop Button Disables Output Power
Regulatory Compliance	UL-2202 || CSA C22.2#107.1:2016 || EMC: EN 61000-6- 1:2007, EN 61000-6-3:2007/A1:2011/AC:2012

Electric Vehicle Charging Solutions

Tellus Power 120 kW DC fast charger

Features

- Powerful Compact All-In-One DC Charger
- Simple Air-Cooled Power Modules
- Easy to Maintain
- Parallel Charging Feature
- Output Voltage of l000VDC
- OCPP l.6J
- Credit Card Reader
- Cord Management



120 kW DC Fast Charging Station

Product Number	US2:TP51204802
Input	480VAC (3P+N+PE), 60Hz
Output Voltage	150-l000VDC
Output Current	0 to 200A
Cycle Mode	1 x 120 kW
Parallel Mode	2 x 60 kW
FLA II Breaker Rating	160A II 200A
Connectors	CCSI and CCSI
Efficiency	≥94% at nominal output power
Power factor	≥0.98
Operating Temperature	-22°F to 131°F (-30°C to 55°C)
Altitude	< 6600' (2000m)
Working II Storage Humidity	≤ 5 95% RH II ≤ 5 99% RH (Non-condensing)
Weight	793 lbs (360kg)
Display	10" touch screen
Access Control	RFID: ISO/IEC 14443A/B I Credit Card Reader (Optional)
Dimensions (L x D x H)	29" X 26.5" X 72"
Protective Class	NEMA 3S (IP54).IKI0
Power Electronics Cooling	Air Cooling
Charing Protocol Standards	Mode 4 - IEC-61851, ISO-15118, DIN 70721 Mode 4 - CHAdeMO 0.9, 7.0
Metering	DC kWh meter per each connector
Charging cable	16ft (5m). Cable Retractor Included
Communication II Protocol	Ethernet, 4G/WiFi II OCPP I.6J
Insulation (input-output)	>2.5 kV
Electrical Safety: GFCI	RCD 20 mA Type A
Electrical Safety: Surge Protection	20 kA
Electrical Safety General	Over Voltage, Under Voltage, Over Current, Missing Ground
Electrical Safety: Output Short	Output power disabled when output is short circuited
Electrical Safety Temperature	Temperature Sensors @ Charge Coupler and Power Electronics
Emergency Stop	Emergency Stop Button Disables Output Power
Regulatory Compliance	UL-2202 II EMC: EN 61000-6-7:2007, EN 61000-6-3:2007/AI:2077/AC:2072



Tellus Power Green DC fast charger provided by Siemens.

Intertek

Electric Vehicle Charging Solutions

Tellus Power 160 kW DC fast charger

Overview

Features
▪ DCFC and HPC System with 1000VDC ▪ Powerful Compact All-In-One Charger ▪ Simple Air-Cooled Power Modules ▪ Easy to Maintain ▪ Parallel Charging Feature ▪ OCPP 1.6 ▪ Credit Card Reader ▪ Cord Management

160 kW DC Fast Charging Station

Product Number	**US2:TP51604802 (Dual CCS1)**
Product Number	**US2:TP51604801 (CCS1 and CHAdeMO)**
Input Voltage	480V (3P + N + PE), 60Hz
Output Voltage	150–1000 VDC
Max Output Current	0 to 200A
FLA || Breaker Rating	215A || 300A
Power Factor	>0.98
Efficiency	>94% at nominal output power
Connector Options	Dual CCS1 or CHAdeMO and CCS1 combo
CCS Cable	200A
Charging Protocol Standards	Mode 4, IEC-61851, ISO-15118, DIN 70121 || Mode 4
Cycle Mode	1 x 160 kW
Parallel Mode	2 x 80 kW
Connector cable length	CCS – 16ft (5m)
Cable Management	Included
Weight	880 lbs (400 kg)
Dimensions (L x D x H)	29.5'' x 26.5" x 73"
Insulation (input – output)	>2.5 kV
Ingress Protection	NEMA 3S (IP54), IK10
Operating Temperature	-22°F to 131°F (-30°C to 55°C)
Altitude	< 6600ft (2000m)
Working || Storage Humidity	≤ 95% RH || ≤ 99% RH (Non-condensing)
Display	10" touch screen
Communication || Protocol	Ethernet, 4G/WiFi || OCPP 1.6J
Access Control	RFID : ISO/IEC 14443A/B | Credit Card Reader (Optional)
Metering	DC kWh meter per each connector
Power Electronics Cooling	Air Cooled
Electrical Safety: GFCI	RCD 20 mA Type A
Electrical Safety: Surge Protection	20 kA
Electrical Safety General	Over Voltage, Under Voltage, Over Current, Missing Ground
Electrical Safety: Output Short	Output power disabled when output is short circuited
Electrical Safety Temperature	Temperature Sensors @ Charge Coupler and Power Electronics
Emergency Stop	Disables output power with emergency stop button
Regulatory Compliance	UL-2202 || CSA C22.2#107.1:2016 || EMC: EN 61000-6- 1:2007, EN 61000-6-3:2007/A1:2011/AC:2012





Tellus Power Green DC fast charger provided by Siemens.

Intertek

Electric Vehicle Charging Solutions

Tellus Power 300 kW DC fast charger

Overview

Features
▪ HPC System with 1000VDC ▪ Powerful Compact All-In-One Charger ▪ Simple Air-Cooled Power Modules ▪ Easy to Maintain ▪ Parallel Charging Feature ▪ Liquid Cooled Cables ▪ OCPP 1.6 ▪ Credit Card Reader ▪ Cord Management

300 kW DC Fast Charging Station

Product Number	US2:HPC3004802
Maximum Power	300 kW
Output Voltage	150 – 1000 VDC
Max Output Current	Up to 500A
Input Voltage || Frequency	480V (3P + N + PE) || 60 Hz
Input Current || Breaker Rating	400A || 500A
Power Factor	>0.98
Efficiency	>94% at nominal output power
Connector Options	Dual CCS1
CCS Cable	500A Liquid Cooled
Cycle Mode	1 x 300 kW (Max: 500A)
Parallel Mode	2 x 150 kW (Max: 350A)
Charging Protocol Standards	Mode 4,IEC-61851,ISO-15118,DIN 70121 || Mode 4
Connector cable length	CCS - 13 ft (4 m)
Cable Management	Included
Weight	1765 lbs (800 kg)
Dimensions (L x D x H)	41'' x 37.4" x 90"
Insulation (input – output)	>2.5 kV
Ingress Protection	NEMA 3S (IP54), IK10
Altitude	<6,600ft (2,000m)
Operating temperature	-30°C to 55°C (-22°F to 131°F)
Working || Storage Humidity	≤ 95% RH || ≤ 99% RH (Non-condensing)
Display	10" touch screen
Communication || Protocol	Ethernet, 4G/WiFi || OCPP 1.6J
Access Control	RFID:ISO/IEC 14443A/B | Credit Card Reader (Optional)
Metering	DC kWh meter per each connector
Power Electronics Cooling	Air Cooled
Electrical Safety: GFCI	RCD 20 mA Type A
Electrical Safety: Surge Protection	20 kA
Electrical Safety General	Over Voltage, Under Voltage, Over Current, Missing Ground
Electrical Safety: Output Short	Output power disabled when output is short circuited
Electrical Safety Temperature	Temperature Sensors @ Charge Coupler and Power Electronics
Emergency Stop	Disables output power with emergency stop button
Regulatory Compliance	UL-2202 || CSA C22.2#107.1:2016 || EMC: EN 61000-6- 1:2007, EN 61000-6-3:2007/A1:2011/AC:2012





Tellus Power Green DC fast charger provided by Siemens.

Intertek

Electric Vehicle Charging Solutions

Tellus Power 360 kW DC fast charger

Overview

Features
▪ HPC System with l000VDC ▪ Powerful Compact All-In-One Charger ▪ Simple Air-Cooled Power Modules ▪ Easy to Maintain ▪ Parallel Charging Feature ▪ Liquid Cooled Cables ▪ OCPP l.6 ▪ Credit Card Reader ▪ Cord Management

360 kW DC Fast Charging Station

Product Number	US2:HPC3604802
Maximum Power	360 kW
Output Voltage	150-1000 VDC
Max Output Current	Up to 500A
Input	480V (3P + N + PE) 11 60 Hz
Input Current II Breaker Rating	480A II 600A
Power Factor	>0.98
Efficiency	> 94% at nominal output power
Connector Options	CCSI and CCSI
CCS Cable	500A Liquid Cooled
Cycle Mode	1 x 360kW (Max: 500A)
Parallel Mode	2 x 180kW (Max: 400A)
Charging Protocol Standards	Mode 4,IEC-61851,ISO-15118,DIN 70121 II Mode 4, CHAdeMO 0.9,1.0
Connector Cable Length	CCS - 13 ft (4 m) Cable Retractor Included
Weight	1873 lbs (850 kg)
Dimensions (L x D x H)	41" X 37.4" X 90"
Insulation (input-output)	>2.5 kV
Ingress Protection	NEMA 3S (IP54). IKI0
Altitude	<6,600ft (2,000m)
Operating temperature	-30°C to 55°C (-22°F to 131°F)
Working II Storage Humidity	≤ 95% RH II ≤ 99% RH (Non-condensing)
Display	10" touch screen
Communication II Protocol	Ethernet, 4G/WiFi 11 OCPP l.6J
Access Control	RFID : ISO/IEC 14443A/B I Credit Card Reader (Optional)
Metering	DC kWh meter per each connector
Power Electronics Cooling	Air Cooled
Regulatory Compliance	UL-2202 II EMC: EN 61000-6-1:2007, EN 61000-6 3:2007/AI:2011/AC:2012-
Electrical Safety: GFCI	RCD 20 mA Type A
Electrical Safety: Surge Protection	20 kA
Electrical Safety General	Over Voltage, Under Voltage, Over Current, Missing Ground
Electrical Safety: Output Short	Output power disabled when output is short circuited
Electrical Safety Temperature	Temperature Sensors @ Charge Coupler and Power Electronics
Emergency Stop	Disables output power with emergency stop button





Tellus Power Green DC fast charger provided by Siemens.

Intertek

Electric Vehicle Charging Solutions

Siemens cloud-based services

Managing your depot and eFleet

Siemens offers a variety of cloud-based service packages designed to effectively manage your depot and eFleet. Our solutions combined with our ecosystem of partners allows you to easily manage your charging infrastructure from remote diagnostics to detailed reporting and operational planning and scheduling with one, simple user interface. Choose which connect, charge, or control option works best fits your device connectivity management, reporting functions, smart charging, route and power optimization and data analytic needs.





Care package

Included with all the Siemens EV chargers, the Care package provides technical support, device updates, driver onboarding, setup configuration, and a mobile app for monitoring and basic control. This package provides your charger is up to date and provides piece of mind that support is at your fingertips!

Get more from your chargers with our Connect, Charge, and Control options



Connect package

The Connect package maintains all the functionality of the Care package and enables users and owners to get a holistic view of the chargers they control along with an aggregated view of data gathered by those chargers. They also gain access to the Location Manager that shows where and how the chargers are being used, a Driver App, RFID setup for groups of chargers, and advanced remote diagnostics to give the charger owner more detailed information to manage the charging infrastructure.

Electric Vehicle Charging Solutions

Siemens cloud-based services

Overview

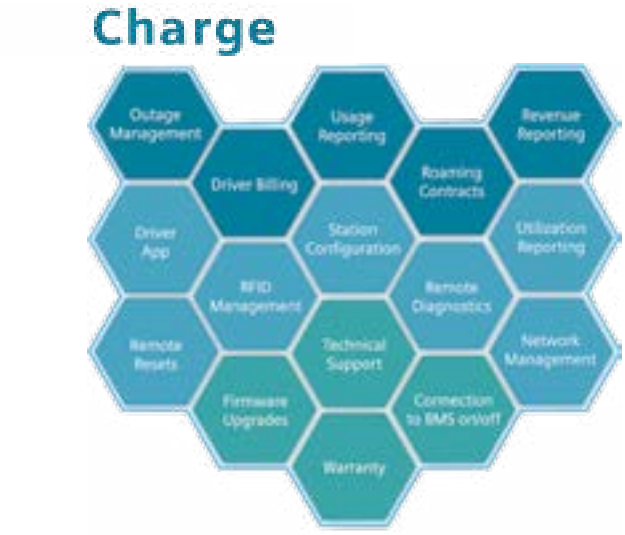

Charge package

The Charge package includes all functions of the Connect package, offers comprehensive financial and consumption reporting, billing and payment management for owners. This package is perfect for collecting revenue from charging stations within general public areas, or at a workplace environment where fleet and employee charging times and rates are different. The Charge package also enables charging stations to be seen and accessed within other charging networks. This allows public charging stations to be seen from other networks, when they are part of the Siemens Charge package solution, increasing visibility and usage.



Control package

The Control package continues capability expansion by supplying all of the same functions as the Charge package, and adds on cloud smart charging capabilities. The smart charging feature provides dynamic load management and maximum load control for situations where limited power is available for chargers or maximum demand constraints where tariffs are in place. This package allows piece of mind that power sharing chargers are not exceeding equipment load, or that the facility's peak demand levels are not exceeded.

Feature	Care	Connect	Charge	Control
Technical Support	x	x	x	x
Remote Firmware Upgrades	x	x	x	x
Charger Setup	x	x	x	x
Remote Resets		x	x	x
Remote Diagnostics		x	x	x
RFID Management		x	x	x
Aggregated Charger Reporting		x	x	x
Driver App		x	x	x
Driver Billing			x	x
Charger Network Visibility			x	x
Dynamic Load Control				x
Max Load Management				x

Electric Vehicle Charging Solutions

eMobility solutions and more

Overview

Managing your network of L2/L3 public chargers

Siemens offers a variety of cloud-based service packages designed to simplify management and control of EV chargers. The flexibility of our services combined with our ecosystem of partners allows for varying levels of control in parking garages, hotels, hospitals, universities, industrial buildings, malls, retail / convenience stores, multi-family dwellings, and more. Integration into common building management systems and partner EV-solution provider networks expand the offerings to create a seamless, easy-to-use system with a simple user interface.



Choose your level of advanced management with Connect, Charge, or Control

- **Connect package –** The Connect package offers all the services in the Care package along with monitoring, reporting, and smart charging. Group chargers together and apply constraint algorithms to limit power consumption while still meeting charging needs with an easy-to-use PC interface. Requires a one time connection set up fee (part number US2:ACSETUP).
- **Charge package –** The Charge package features all the services in Connect, as well as route planning, depot scheduling and bus and route energy profiling. Requires a one time connection set up fee (part number US2:ACSETUP).
- **Control package –** The Control package includes all the services in Connect and Charge, and also includes Smart Charging with Virtual Power Plant (VPP) software that will interface with other IT systems permitting excess energy selling and buying, thus, offering hands-on energy cost management. Control also provides bus and route scheduling opportunities based on energy, route and seasonal variations. Requires a one time connection set up fee (part number US2:ACSETUP).

Feature	Care	Connect	Charge	Control
Technical Support	x	x	x	x
Marketing Outreach	x	x	x	x
Configuration Tool	x	x	x	x
Remote Device Upgrade	x	x	x	x
GSM Connectivity	x	x	x	x
Remote Charger Monitoring Dashboard		x	x	x
Automated Notifications		x	x	x
Statistics Reporting		x	x	x
Charger Grouping		x	x	x
Smart Charging		x	x	x
Route Charging Optimization			x	x
Bus Schedule Charging Optimization			x	x
Optimization based on power constraints			x	x
Charging Optimization by Price			x	x
Standardized API interfaces to connect to IT systems				x
Data Analytics				x
Profiling for EV energy and route				x
Optimization based on seasonal variations				x
Premium NOC		Option	Option	Option

Service packages catalog numbers

Description	Catalog number
EVSP cloud service on-boarding fee *Required for all packages	**US2:ACSETUP**
Connect package	**US2:ACCONNECT1**
Charge package	**US2:ACCHARGE1**
Control package	**US2:ACCONTROL1**

These packages set the stage for the depot/fleet of the future where distributed generation and local microgrids are integrated into one common smart energy ecosystem. All of this provides you with the ultimate in functionality, both now and wherever the electric road will lead you There is a one time set up service required for connect, charge, and control packages.

Notes

Contents

General 17-2

Types of Power Distribution Systems 17-3

System Analysis 17-6

Current Limiting Circuit Breaker Technology 17-7

Overcurrent Protection and Coordination 17-8

Ground Fault Protection 17-9

Series-Connected Combination Ratings 17-15

Harmonics / K-factor Ratings 17-16

Table 1A:
Motor Full-Load Currents of Three Phase AC Induction Type Motors 17-18

Table 1B:
Motor Full-Load Currents in Amperes, Single Phase AC 17-18

Table 1C:
Motor Full-Load Currents in Amperes, DC 17-18

Table 2:
Electrical Formulas for Finding Amperes, Horsepower Kilowatts, and kVA 17-18

Conversion Tables 17-19

General

In the application of fusible switches and circuit breakers, consideration should be given to the following factors:

1. Voltage of circuit.
2. Ampacity of circuit.
3. Frequency of power source.
4. Operating conditions.
5. Fault current available.

Voltage of Circuit — The system voltage should not exceed the listed voltage rating of the circuit breaker, fuse or switch.

Ampacity of Circuit — The listed continuous current rating of the fuse or circuit breaker should not exceed the allowable ampacity of the conductors. Where the allowable ampacity of the conductor does not correspond to listed current ratings for fuses or circuit breakers, the next larger rating of fuse or circuit breaker is permitted providing it does not exceed the conductor ampacity by more than 25%. An exception to this rule is permitted for motor circuits or other circuits where high inrush currents may persist for an appreciable time.

Frequency of Power Source — Circuit breakers and fusible switches are calibrated for use on direct current or 48–68-Hertz alternating current. For frequencies above 62-Hertz, some fuses, switches and circuit breakers must be derated. The derating varies with each type and size of protective device. Consult your local representative for specific information.

Operating Conditions — Molded case circuit breakers and fuses are calibrated without any enclosure as specified by the UL and CSA. Sound engineering practice dictates that continuous loads should not exceed 80% of the breaker or fuse current rating for most types of enclosures.

Electrical Connections — Molded Case Circuit Breakers are to be connected with 60 or 75°C wire for breakers having a rated ampacity of 125 amperes or less. For circuit breakers having a rated ampacity greater 125 amperes, only 75°C cable shall be used unless otherwise indicated on the circuit breaker label.
Note: Exceptions to this rule are outlined in the Canadian Electric Code.
Conductors should be derated in accordance with the Canadian Electrical Code for both ambient temperature and continuous loading. Conductors which are loaded continuously should be derated to 80% of their allowable current- carrying capacity except when supplied by an assembly including its overcurrent device that is listed for continuous operation at 100% of its rating.

When the type of load is unusual, intermittent, or one which involves momentary peak currents such as motor loads, consideration should be given to the heating effect on the protective device over a period of time. The duty cycle of a motor which is started and stopped frequently may require a circuit breaker or fuses with a higher rating than an infrequently started motor.

The presence of excessive dust, moisture, corrosive fumes, or explosive atmosphere requires the use of enclosures suitable for such atmospheres. For applications in regions where fungus growth may occur, some circuit breakers should be treated with a fungus and moisture resistant material.

Fault Current Available — The interrupting rating of the circuit breaker or fused switch should be greater than the available short circuit current at the point of application. The short circuit current from some power sources, such as engine driven generators, is limited, and the protective device characteristics should be selected to clear such faults without delay.
Some systems require a study of protective device characteristics to assure proper protection and coordination for any possible value of fault current. Your representative is available to assist in making coordination studies.

Note: Please consult with local regulations.

Types of Power Distribution Systems

There are several basic considerations which must be included by the system design engineer to select and design the best power distribution system which will supply power to both present and future loads most economically. Among these are:

- Safety
- Reliability
- Maintenance
- Flexibility
- Voltage Regulation
- Initial Investment
- Simplicity of Operation

The characteristics of electrical service available at the building site, the types of loads, the quality of service required, and the size and configuration of building are also important factors that will influence system design and circuit arrangement.

Four basic circuit arrangements are used for the distribution of electric power. They are the radial, primary selective, secondary selective, and secondary network circuit arrangements. The following discussion of these circuit arrangements covers both the high-voltage and low-voltage circuits. The reader should recognize that the high-voltage circuits and substations may be owned by either the utility company or the building owner, depending upon the electric rates, the practice, and requirements of the particular electric utility serving the specific building site.

Radial System

If power is brought into a building at utilization voltage, the simplest and the lowest cost means of distributing the power is to use a radial circuit arrangement. The radial system is the simplest that can be used, and has the lowest system investment. It is suitable for smaller installations where continuity of service is not critical.

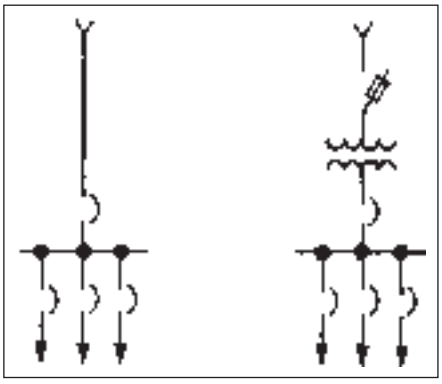

Figure 1. Radial Systems

The low voltage service entrance circuit comes into the building through service entrance equipment and terminates at a main switchgear assembly, switchboard or panelboard. Feeder circuits are provided to the loads or to other subswitchboards, distribution cabinets, or panelboards. Figure 1 shows the two forms of radial circuit arrangements most frequently used. Under normal operating conditions, the entire load is served through the single incoming supply circuit, and in the case of high voltage service, through the transformer. A fault in the supply circuit, the transformer, or the main bus will cause an interruption of service to all loads. A fault on one of the feeder or branch circuits should be isolated from the rest of the system by the circuit protective device on that circuit. Under this condition, continuity of service is maintained for all loads except those served from the faulted circuit.

The need for continuity of service often requires multiple paths of power supply as opposed to the single path of power supply in the radial system.

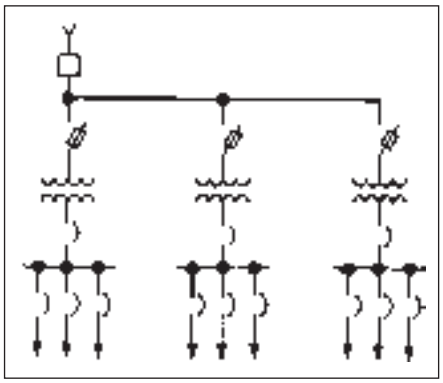

Figure 2. Expanded Radial System—Single Primary Feeder

A fault in a primary feeder in the arrangement shown in Figure 2 will cause the main protective device to operate and interrupt service to all loads. If the fault were in a transformer, service could be restored to all loads except those served from that transformer. If the fault were in a primary feeder, service could not be restored to any loads until the source of trouble had been eliminated. Since it is to be expected that more faults will occur on the feeders than in the transformers, it becomes logical to consider providing individual circuit protection on the primary feeders as shown in Figure 3. This arrangement has the advantage of

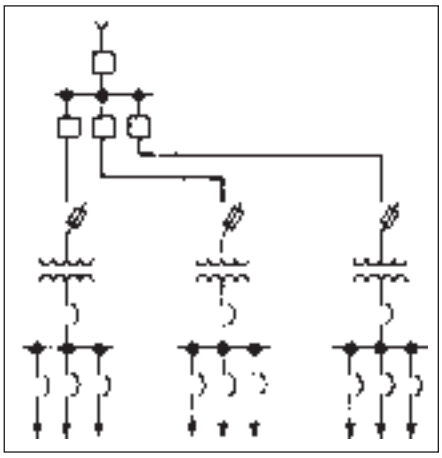

Figure 3. Expanded Radial Systems individual Primary Feeder Protection

making it possible to limit outages due to a feeder or transformer fault to the loads associated with the faulted equipment. If circuit breakers are used for primary feeder protection, the cost of this system will be high. Even if fused switches are used, the cost of the arrangement of Figure 3 will exceed the cost of the arrangement of Figure 2.

Primary Selective System

The circuit arrangement of Figure 4 provides means of reducing both the extent and duration of an outage caused by a primary feeder fault. This operating feature is provided through the use of duplicate primary feeder circuits and load interrupter switches that permit connection of each secondary substation transformer to either of the two primary feeder circuits. Each primary feeder circuit must have sufficient capacity to carry the total load in the building.

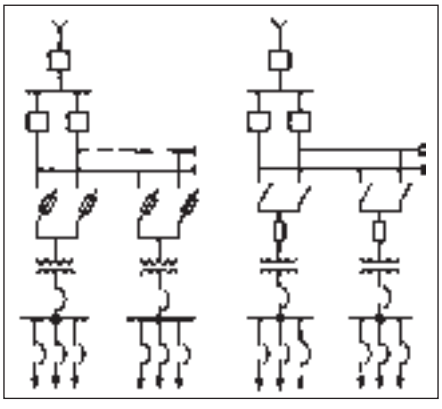

Figure 4. Primary Selective Systems

Note: Please consult with local regulations.

Under normal operating conditions, the appropriate switches are closed in an attempt to divide the load equally between the two primary feeder circuits. Then, should a primary feeder fault occur, there is an interruption of service to only half of the load. Service can be restored to all loads by switching the deenergized transformers to the other primary feeder circuit. The primary selective switches are usually manually operated and outage time for half the load is determined by the time it takes to accomplish the necessary switching. An automatic throwover switching arrangement could be used to avoid the interruption of service to half the load. However, the additional cost of the automatic feature may not be justified in many applications. If a fault occurs in a secondary substation transformer, service can be restored to all loads except those served from the faulted transformer.

The higher degree of service continuity afforded by the primary selective arrangement is realized at a cost somewhat higher than a simple radial system due to the extra primary cables and switchgear.

Secondary Selective System

Under normal conditions, the secondary selective arrangement of Figure 5 is operated as two separate radial systems. The secondary tie circuit breaker in each secondary substation is normally open.

The load served from a secondary selective substation should be divided equally between the two bus sections. If a fault occurs on a primary feeder or in a transformer, service is interrupted to all loads associated with the faulted feeder or transformer. Service may be restored to all secondary buses by first opening the main secondary switch or circuit breaker associated with the faulted transformer and primary feeder, and then closing the tie breaker. The two transformer secondary circuit breakers in each substation should be interlocked with the secondary tie breaker in such a manner that all three cannot be in the closed position simultaneously. This prevents parallel operation of the two transformers and thereby minimizes the interrupting duty imposed on the secondary switching devices. It also eliminates the possibility of interrupting service to all loads on the bus when a fault occurs in either a primary feeder or a transformer.

The cost of the secondary selective system will depend upon the spare capacity in the transformers and primary feeders. The minimum transformer and primary feeder capacity will be determined by essential loads that must be served under emergency operating conditions. If service is to be provided for all loads under emergency conditions, then each primary feeder should have sufficient capacity to carry the total load, and each transformer should be capable of carrying the total load in each substation.

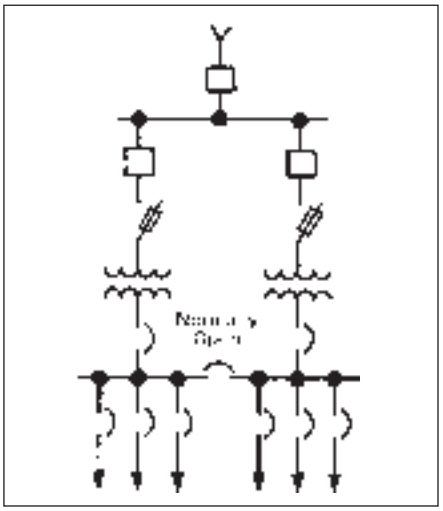

Figure 5. Secondary Selective System Using Close-Coupled Double-Ended Substation

This type of system will be more expensive than either the radial or primary selective system, but it makes restoration of service to all essential loads possible in the event of either a primary feeder or transformer fault. The higher cost results from the duplication of transformer capacity in each secondary substation. This cost may be reduced by shedding nonessential loads.

A modification of the secondary selective circuit arrangement is shown in Figure 6. In this arrangement there is only one transformer in each secondary substation, but adjacent substations are interconnected in pairs by a normally open low voltage tie circuit. When the primary feeder or transformer supplying one secondary substation bus is out of service, the essential loads on that substation bus can be supplied over the tie circuit. The operating aspects of this system are somewhat complicated if the two substations are separated by distance. The best arrangement is to use close-coupled, double-ended substations.

Secondary Network System

Many buildings with radial distribution systems are served at utilization voltage from utility secondary network systems. The network supply system assures a relatively high degree of service reliability. The utility network may take the form of a distributed network or a spot network. If the building demand is in the order of 750 kVA or higher, a spot network will often be established to serve the building. In buildings where a high degree of service reliability is required, and where spot network supply may not be available, the distributed secondary network system is often used. This is particularly true of institutional buildings such as hospitals. The network may take the form of several secondary substations interconnected by low voltage circuits. However, the most common practice is to use some form of the spot network circuit arrangement.

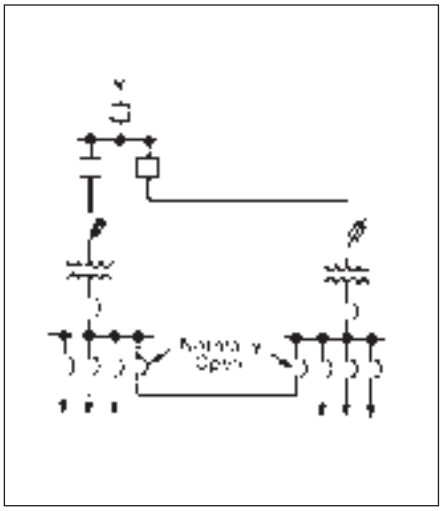

Figure 6. Secondary Selective System Using Two Single-Ended Substations With Cable or Bus Tie

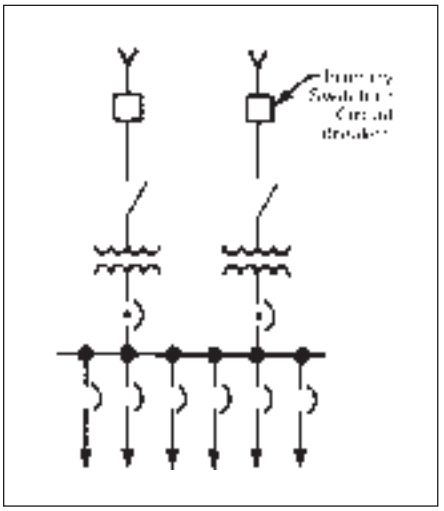

Figure 7. Simple Spot Network System

A simple spot network, such as shown in Figure 7, consists of two or more identical transformers supplied over separate primary feeder circuits. The transformers are connected to a common low voltage

Note: Please consult with local regulations.

bus through network protectors and are operated in parallel. A network protector is an electrically operated power circuit breaker controlled by network relays in such a way that the circuit breaker automatically opens when power flows from the low voltage bus toward the transformer. When voltages in the system are such that power would flow toward the low voltage bus from the transformer, it will close automatically.

Network protectors are normally equipped with relays which operate for faults in the network transformer or high voltage feeder only. The network is often operated on the assumption that network failure will "burn" open.

Network protectors without supplementary protection do not meet the requirements of the NEC for overcurrent, ground fault, or short circuit protection. Protection of the network or collector bus may be added by providing sensing devices, including ground fault detection, with tripping of the network protectors. The most common use of the network protector, however, has been by utilities in vaults where failure of the network devices could cause damage limited to the vault. High integrity design involving wide phase separation and the use of "catastrophe" fusing minimize the danger and extent of a network failure. A conventional circuit breaker with time overcurrent and instantaneous trip devices plus network relays can meet the NEC requirements. However, the full reliability of the network may be compromised since selectivity between these devices is difficult to obtain.

Under normal operating conditions, the total load connected to the bus is shared equally by the transformers. Should a fault occur in a transformer or on a primary feeder, the network protector associated with the faulted transformer or feeder will open on reverse power flow to isolate the fault from the low voltage bus. The remaining transformer or transformers in the substation will continue to carry the load and there will be no interruption of service to the loads, except for a voltage dip during the time that it takes for the protective equipment to operate.

If only two transformers are used in a spot network substation, each transformer must be capable of carrying the total load served from the low voltage bus. The amount of spare transformer capacity in the substation can be reduced by using a primary selective switching arrangement with each transformer, or by using three or more transformers. If the primary selective switching arrangement is used, the total load can be about 160 percent of the nameplate rating of one of the transformers. This produces an overload on one transformer until such time as the remaining transformer can be switched to the other feeder in the case of a primary feeder fault.

The interrupting duty imposed on the low voltage protective devices in a spot network substation is higher than in radial, primary selective, or secondary selective substations having the same load capability because of the spare transformer capacity required in the spot network substation and because the transformers are operated in parallel.

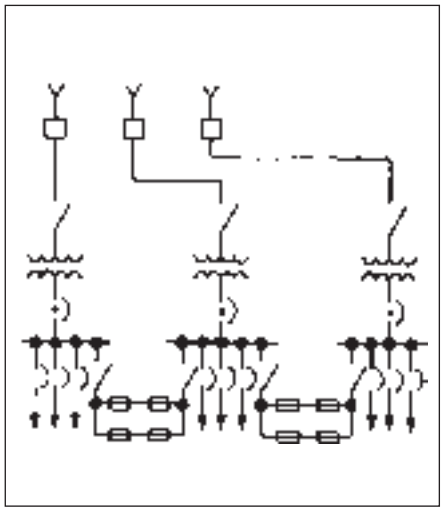

Figure 8. Secondary Network System

The spare transformer capacity, the network protectors, and the higher interrupting duty will make the secondary network arrangement much more expensive than the other arrangements. At the same time, these elements make the reliability of the network system greater than for the other system configurations.

The secondary network may also take the form shown in Figure 8. In this arrangement there is only one transformer in each secondary substation, and the substations are interconnected by normally closed low voltage tie circuits. The tie circuits permit interchange of power between substations to accommodate unequal loading on the substations and to provide

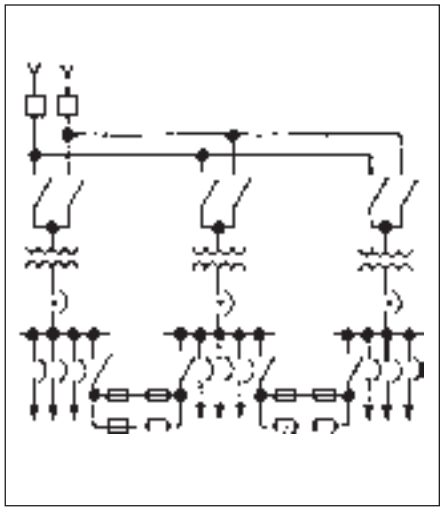

Figure 9. Primary Selective Secondary Network System

multiple paths of power flow to the various load buses. In normal operation, the substations are about equally loaded and the current flowing in the tie circuits is relatively small. However, if a network protector opens to isolate a transformer on a primary feeder fault, the load on the associated bus is then carried by the adjacent network units and is supplied over the tie circuits. This arrangement provides for continuous power supply to all low voltage load buses, even though a primary feeder circuit or a transformer is taken out of service.

In the network arrangement in Figure 9, if there were three incoming primary feeder circuits and three transformers, the combined capacity of two of the transformers should be sufficient to carry the entire load on the three substations on the basis that only one feeder is out of service at one time. Generally, these transformers would all have the same ratings. With this arrangement, as with the spot network arrangement, a reduction in spare transformer capacity can be achieved, if a primary selective switching arrangement is used at each substation transformer. However, if three or more primary feeder circuits are available, the reduction in transformer capacity achieved through the use of a primary selective arrangement may be small.

Cable ties or busway ties, as shown in Figures 8 and 9, will require careful consideration of load distribution during contingencies and of the safety aspects with regard to backfeeds. Key or other mechanical interlocking of switches or circuit breakers may be essential.

Note: Please consult with local regulations.

General

Proper system design requires that the system be coordinated so the interrupting capacity and / or short circuit withstand capabilities of the various components in the system are not exceeded for any operating situation. Good practice also requires that the system be selective, that is, that the minimum portion of the system be interrupted on occurrence of a fault. The need for selectivity must always be balanced against the requirements of economics and coordination with the overall process needs.

At the conceptual phase of a project, several distribution system alternatives should be considered, and examined both technically and economically. This study should include sufficient detail for a thorough understanding of the system alternatives. The conceptual study should determine the optimal distribution system configuration for the project, on which definitive design can proceed.

At all stages of design, the principal objectives of personnel safety, equipment protection, process continuity, fault clearing, and service continuity should be considered.

In designing a new or modified distribution system, the following types of system studies may be needed:

1. **Short Circuit Studies:** three phase, line-to-line, and line-to-ground faults can be calculated for both close-and-latch and interrupting conditions, necessary for checking interrupting device and related equipment ratings, and setting protective devices.
2. **Circuit Breaker Application Studies:** consider the AC and DC decrements in the fault current, and the speed of the various medium voltage circuit breakers, to determine close-and-latch and interrupting duties.
3. **Protective Device Coordination Studies:** determine characteristics and settings of protective devices, e.g., relays, trip devices, fuses, etc. The coordination study should provide a balance between protection of system equipment and continuity of service.
4. **Load Flow Studies:** calculate voltages, phase angles, real and reactive power, line and transformer loadings under simulated conditions to aid in determining the performance of a new or revamped system during the planning stage.
5. **Motor Starting Studies:** determine severity of voltage dips and adequacy of load accelerating torque when starting large motors on a weak system.

Today, most studies are performed using computers. Some specialized studies require large computing resources, but many studies can now be performed on personal computers. A wide variety of software packages are available. In addition, many specialty firms exist which provide engineering service to perform such studies.

Short Circuit Calculations

The single-line diagram serves as the starting point for the system study and selection of equipment ratings. The single-line must be modified to show all power sources and capacities, and system impedances. Sources of short circuit current include utility connections, local generation, and all rotating machines connected to the system at the instant the fault occurs. The system study should consider various fault types (line-to-line and line-to-ground) and fault locations.

The value of normal load current in a circuit depends on the load connected, and is essentially independent of the capacity of the power system. On the other hand, the short circuit current depends almost entirely on the capacity of the power system, not the size of the load.

The total fault current consists of a symmetrical AC component, superimposed on a DC (offset) component. Hence, the total fault current is asymmetric with respect to the current axis. The value of the DC component depends on the point of the voltage wave at which the fault was initiated. For system studies, it is assumed that the fault is initiated at the worst point, to produce a "fully offset" fault current. This is illustrated in Figure 10.

Short circuit currents are determined by the system impedance, including both reactance and resistance. The effect of the reactance is to cause the initial fault current to be high, with the fault current declining as time proceeds. This is represented as the summation of a DC component which decays relatively rapidly over time, and an AC component, which decays at a slower rate. The rate of decay of the components depends on the system X / R ratio.

Since the reactance of rotating machines varies with the time from fault initiation, the short circuit calculations must use the appropriate machine reactance values. Subtransient reactance (X''_d) governs current flow for approximately the first 6 cycles of a fault. Then, transient reactance (X'_d) determines current flow up to around 30-120 cycles, depending on the machine. After this, synchronous reactance (X_d) applies, but studies seldom use this value as faults are not usually allowed to persist for this length of time.

For transformers, the actual tested value of the transformer impedance is used. If this is not available, use design impedance adjusted to the minimum value allowed by manufacturing tolerance of $\pm$ 7.5%. For example, a 5.75% design unit has a tolerance range of 5.32-6.18%, and 5.32% would be used in a system study prior to manufacture.

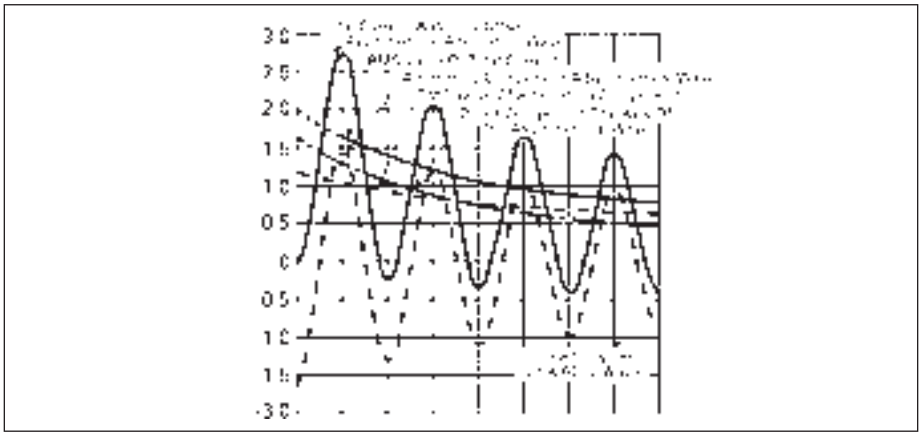

Figure 10. Structure of Asymmetrical Current Wave (Fully Offset)

Note: Please consult with local regulations.

Current Limiting Circuit Breaker Technology

Fuseless Current Limiting Circuit Breakers

The technology of Siemens Sentron® fuseless current limiting circuit breakers was developed to meet the demands of modern distribution systems. It is not uncommon for today's systems to have prospective short circuit currents approaching 200,000 amperes. Users demanded the protection and flexibility afforded by circuit breakers, without the nuisance and expense of fuse replacement.

A fuseless current limiting circuit breaker as one that "does not employ a fusible element, and that when operating within its current-limiting range, limits the let-through I^2t to a value less than the I^2t of a half-cycle wave of the symmetrical prospective current."

I^2t is an expression which allows comparison of the energy available as a result of fault current flow. As used in current limiting discussions, I^2t refers to the energy released between the initiation of the fault current and the clearing of the circuit.

Figure 11 relates the "prospective I^2t" to the energy allowed by a Sentron current limiting circuit breaker, or "let-through I^2t". The upper curve represents the maximum I^2 the circuit can produce, unaltered by the presence of any protective device. The lower curve illustrates the reduction in energy allowed when Sentron current limiting circuit breakers are used.

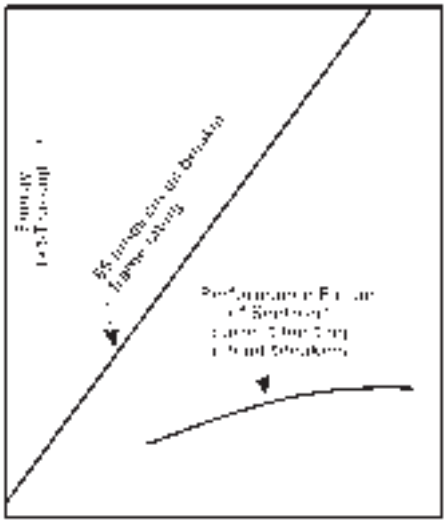

Figure 11. Reduction of I^2t Let-Through with Current-Limiting Technology

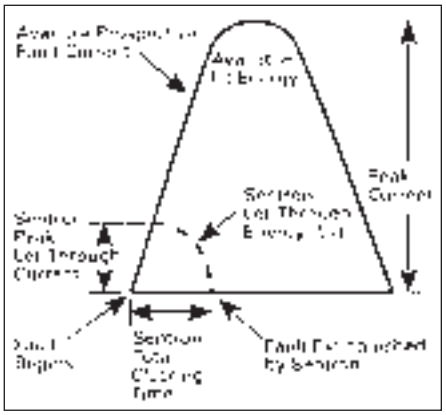

Figure 12. Current Limitation

Figure 12 illustrates how the Sentron circuit breaker limits the energy under fault conditions. The upper curve illustrates the first half-cycle wave of prospective fault current. To qualify as truly current limiting, the circuit breaker must prevent the current value from reaching the maximum value that it would reach if the circuit breaker were not connected in the circuit.

The Sentron circuit breakers use the "blow-apart" contact principle to accomplish current limitation. This principle is based on the electro-magnetic repulsion of adjacent conductors which carry current in opposite directions.

The contact arms are arranged to create opposing magnetic fields. As fault current rises, magnetic repulsion forces the contacts to separate completely. The higher the fault current, the faster this "blow-apart" action occurs.

As figure 12 illustrates, the energy let-through with the current limiting Sentron circuit breaker is decreased significantly. This provides better protection for downstream equipment, and reduces damage.

Applications and Ratings

Sentron current limiting circuit breakers are designed for use in loadcentres, power panelboards, distribution switchboards, secondary unit substations, and all types of individual enclosures where the available fault currents exceed the interrupting ratings of heavy duty and extra-heavy duty molded case circuit breakers.

Sentron circuit breakers have ratings of 15 through 1600 amperes, 240 through 600 volts AC, with up to 200,000 symmetrical amperes interrupting rating.

Note: Please consult with local regulations.

Overcurrent Protection and Coordination

Coordination of a power distribution system requires that circuit protective devices be selected and set so that electrical disturbances, such as over-loads or short circuits, will be cleared promptly by isolating the faulted equipment with minimum service disruption of the distribution system. Time / Current Characteristic Curves are available for circuit protective devices, such as circuit breakers and fuses, which show how quickly they will operate at various values of overload and short circuit current. Coordination can be obtained by comparing these curves for each device in series in the system.

In developing the system, it will be noted that many compromises must be made between the various objectives:

1. System reliability.
2. Continuity of service.
3. Equipment and system protection.
4. Coordination of protective devices.
5. System cost.

Preliminary steps in Coordination study:

A) One-line diagram: used as a base on which to record pertinent data and information regarding relays, circuit breakers, fuses, current transformers, and operating equipment while at the same time, providing a convenient representation of the relationship of circuit protective devices with one another.

B) Short-circuit study: record all applicable impedances and ratings; using these values, a short-circuit study is made to determine currents available at any particular point in the system.

C) Determine maximum load currents which will exist under normal operating conditions in each of the power-system circuits, the transformer magnetizing inrush currents, and times, and the starting currents, and accelerating times of large motors. These values will determine the maximum currents which circuit protective devices must carry without operating. The upper boundary of current sensitivity will be determined by the smallest values resulting from the following considerations:

1) Maximum available short-circuit current obtained by calculation.

2) Requirements of applicable codes and standards for the protection of equipment such as cable, motors, and transformers.

3) Thermal and mechanical limitations of equipment.

D) Time / current characteristic curves of all the protective devices to be coordinated must be obtained. These should be plotted on standard log-log coordination paper to facilitate the coordination study.

Mechanics Of Achieving Coordination:

The process of achieving coordination among protective devices in series is essentially one of selecting individual units to match particular circuit or equipment protection requirements, and of plotting the time/current characteristic curves of these devices on a single overlay sheet of log-log coordination paper.

The achievement of coordination is a trial-and-error routine in which the various time / current characteristic curves of the series array of devices are matched one against another on the graph plot.

When selecting protective devices one must recognize ANSI and CEC requirements and adhere to the limiting factors of coordination such as load current, short-circuit current, and motor starting. The protective devices selected must operate within these boundaries while providing selective coordination where possible. Selective coordination is usually obtained in low voltage systems when the log-log plot of time / current characteristics displays a clear space between the characteristics of the protective devices operating in series, that is, no overlap should exist between any two time/current characteristics if full selective coordination is to be obtained. Allowance must be made for relay overtravel and for relay and fuse curve accuracy. Quite often the coordination study will stop at a point short of complete selective coordination because a compromise must be made between the competing objectives of maximum protection and maximum service continuity.

Computer Aided Coordination:

The philosophy discussed above applies to the "classical" practice of performing coordination studies manually. Today, however, there are numerous personal computer software programs available for performing coordination studies.

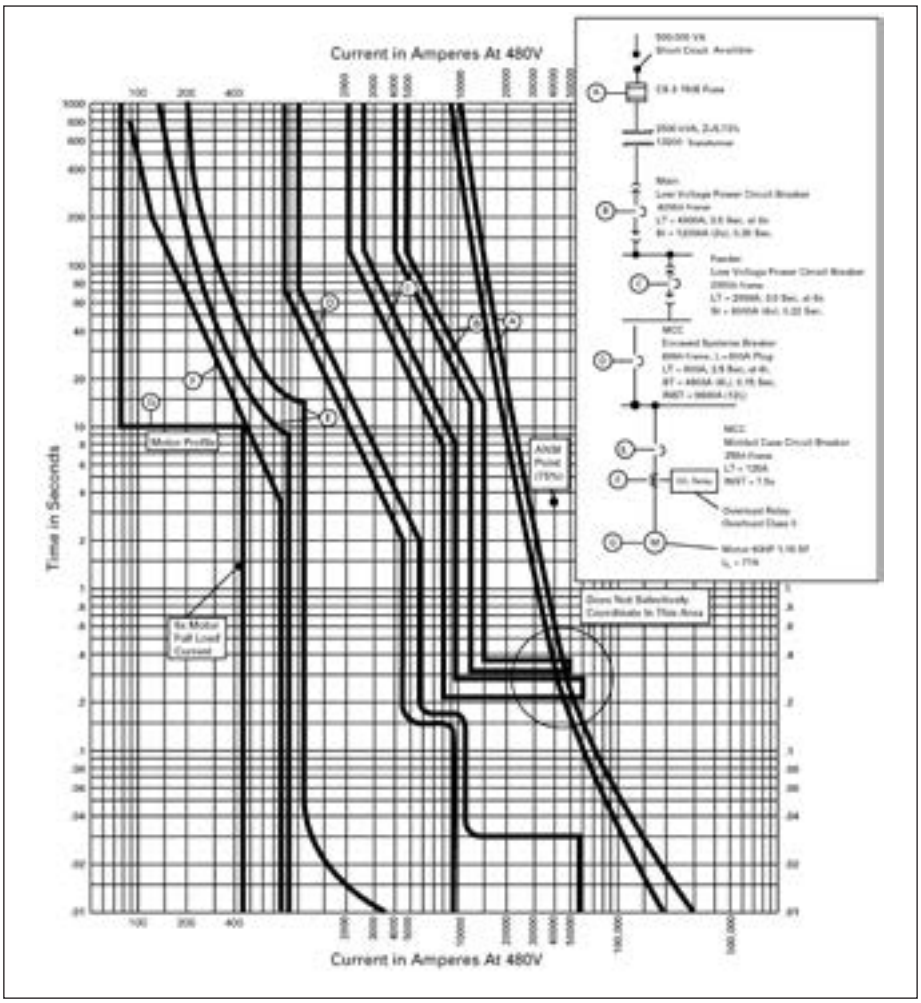

Figure 13. Coordination of Example System

Note: Please consult with local regulations.

Ground Fault Protection

The term "low magnitude" arcing ground fault is a deceptive description of this type fault. What is meant by this is that the fault current magnitude is low compared to that of a bolted fault. Even so, the arc energy released at the point of the fault can cause much damage and may result in a fire. A ground fault is an insulation failure between an energized conductor and ground. A phase-to-ground arcing fault, unlike a phase-to-phase bolted fault, is a high-impedance type fault. The factors that contribute to this high impedance are the resistance of the arc and the impedance of the return path. This return path is usually metal conduit, raceway, busway housing or switchboard frames. Another contributing factor is the spasmodic nature of the arc. The circuit breaker or fuse protecting the circuit detects the fault current, but the actual ground fault current magnitude is ever changing due to arc elongating blowout effects, self-clearing attempts and arc reignition.

These current limiting effects make the circuit breaker or fuse incapable of detecting the actual damage that is occurring. This is not to imply that these devices are inadequate. The problem is one of system protection because the circuit breaker must be adjusted (or fuse size selected) so as to hold without tripping under momentary overload conditions, such as motor starting current or transformer inrush current. Therefore, the circuit breaker or fuse cannot open quickly enough under relatively low magnitude faults to limit the arcing damage.

Figure 14 illustrates the basic problem. Shown is a typical distribution system with a 1600 ampere main service entrance unit with a circuit breaker (single line "a") or fused service protector (single line "b"). A ground fault of 1500 amperes on the bus would affect but would not open either device. A 4000 ampere ground fault would be cleared in approximately 35 seconds by the circuit breaker and in 230 seconds by the fuse. To allow a fault of this magnitude to persist for this length of time would create more than 92,000 kW seconds of arc energy. As a result of tests made, it has been determined that an arc with a value of 1050 kW seconds of energy would vaporize about 1.0 cubic in. of copper or 2.5 cubic in. of aluminum. Obviously a fault of the magnitude shown in Figure 14 could cause a considerable amount of damage.

The nature of low-level arcing ground faults makes impractical their detection

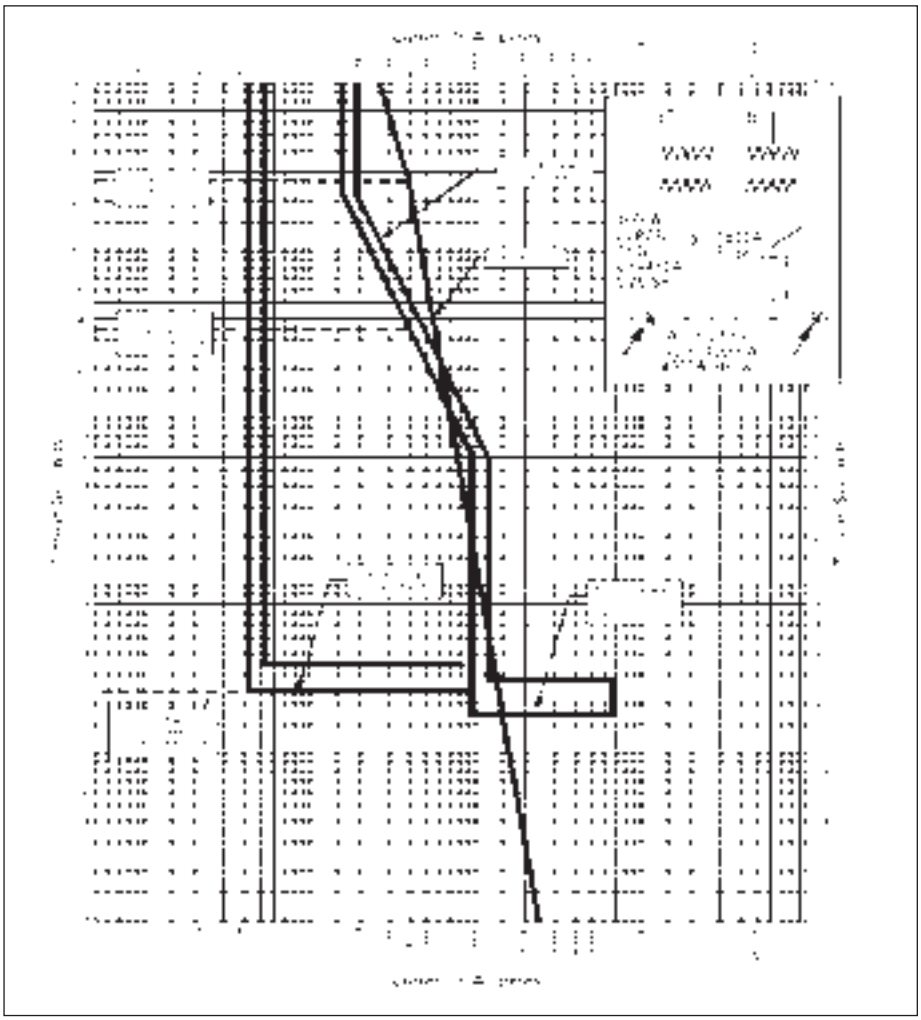

Figure 14. Ground Fault Protection

by a traditional overcurrent devices. To complete total protection of the system against all possible types of faults, other means are utilized to detect ground fault currents, including:

- **Zero sequence method**
- **Source ground current (or ground return) method**
- **Residual connection method**

Zero Sequence Method

This is commonly used when ground fault protection is provided for equipment employing electromechanical trip devices. The scheme uses a core balance type current transformer (ground sensor) which encircles all phase conductors (and neutral on four wire system) to detect ground faults.

The operation of this system is such that under normal operating conditions (eg., no ground fault on the system) there is no output from the ground sensor to the tripping relay because the vector sum of all the currents through the sensor window is zero.

$$(I_a + I_b + I_c + I_n = 0)$$

If a ground fault occurs on the system, there is now an additional current (I_g) seen by ground sensor which returns to the source by a path other than through the sensor window. The sensor now sees an unbalance caused by I_g and operates the ground relay which trips the circuit protector.

$$(I_a + I_b + I_c + I_n = I_g)$$

The ground sensor is located downstream from the point at which the system is grounded and can be mounted either on the line side or load side of the main disconnect device. This method can be used on incoming main disconnect or on feeders.

Note: Please consult with local regulations.

Source Ground Current (or Ground Return) Method

This method of detecting the ground fault current I_g locates the ground sensor on the neutral connection to ground at the service entrance. This means that the ground sensor only detects ground fault current. This type of detection has some limitations because it is detecting the ground fault return current. On multiple source systems with multiple connections to ground, this ground fault current can return by more than one path, therefore, some sensitivity in detecting these faults would be lost.

Residual Connection Method

Current sensors, one on each of the phase conductors and on the neutral conductors, are connected in common. This common (or residual connection) measures the vector summation of the phase currents and the neutral current. Under normal conditions, this vector summation will be zero, and no current will be applied to the ground relay.

If a fault involving ground occurs, the current summation is not equal to zero. Current flows into common connection which is applied to the relay. This method of detecting ground fault current is used in circuit breakers with electronic trip device.

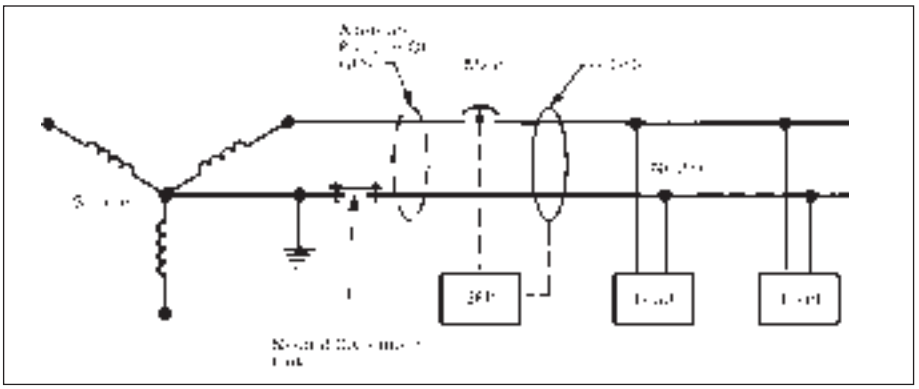

Figure 15. Schematic for Zero Sequence

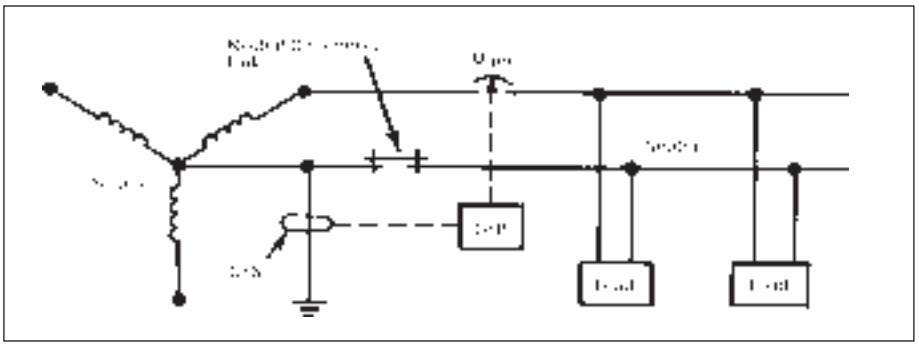

Figure 16. Schematic for Source Ground Current

GFS = Ground Fault Sensor
GFP = Ground Fault Protection (Relay or Trip Unit)

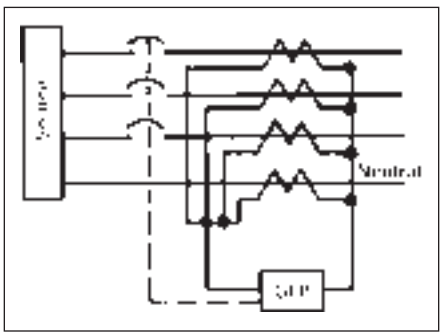

Figure 17. Schematic for Residual Method

Residual Ground Current Sensing

3-Wire System

This system is used with electronic trip units, and always includes three current sensors mounted on the circuit breaker. A trip element is connected in series with each sensor to provide phase overcurrent protection. By adding a ground trip element in the residual (neutral) circuit of the three current sensors, it will sense ground fault current only, and not load current. This permits more sensitive settings to protect against low magnitude ground faults. This scheme is shown in Figure 18.

Under normal conditions, the vector sum of the current in all of the phases equals zero. No current would flow in the GND element, which is also true under the condition of a phase-to-phase fault.

A phase-to-ground fault would cause a current to flow in the GND trip element. If the magnitude of this current exceeds the pickup setting for the required time, the trip unit will operate to trip the breaker.

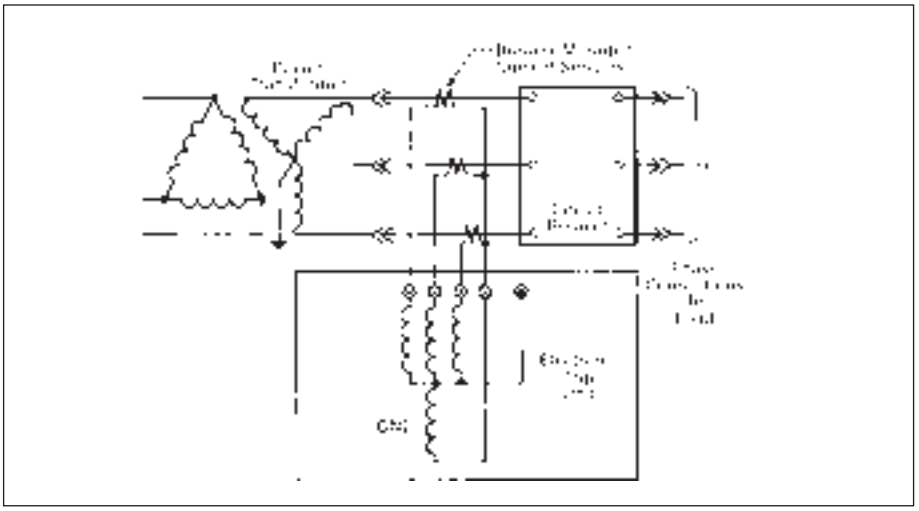

Figure 18. Schematic for Ground Protection on 3-Wire Systems, Residual Sensing

Note: Please consult with local regulations.

4-Wire System

To avoid false tripping, a fourth current sensor is connected in the neutral conductor to sense normal neutral current. This fourth sensor is connected so that it cancels the normal neutral current which is developed in the residual circuit as shown in Figure 19.

Under normal conditions, the vector sum of the current in all phases equals the neutral current. Disregarding the effects of the neutral sensor connection, the neutral current would flow through the GND element. Since this is normal neutral current, pickup of the GND element is not desired. Therefore, the neutral sensor is added to sense the same neutral current as the GND sensor — but opposite in polarity. The result is a circulating current between the phase sensing current sensors and the neutral sensor, with no current flowing through the GND sensor. This is similar to a differential relay circuit. When a phase-to-ground fault occurs, the vector sum of the phase currents will no longer equal the neutral current because the ground fault current returns via the ground bus and bypasses the neutral. If the magnitude of the phase-to-ground current exceeds the pickup setting of the GND element for the required time, the trip unit will operate to open the breaker.

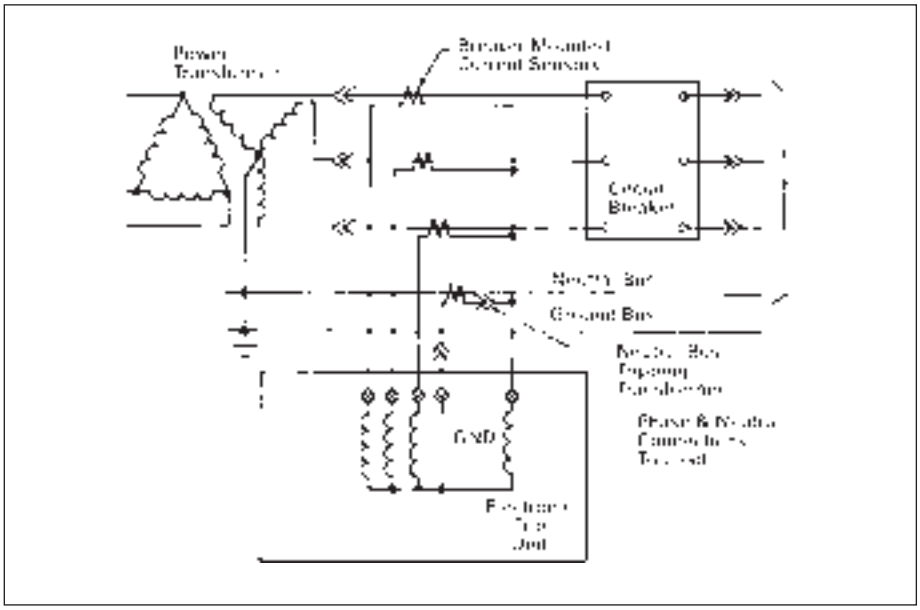

Figure 19. Schematic for Ground Protection on 4-Wire Systems, Residual Sensing

Types Of Coordinated Ground Fault Tripping Systems

There are two types of Coordinated Ground Fault Systems:

- **Time / Current Selective**
- **Zone Selective (Zone Interlock)**

Time / Current Selective

In this system the time / current characteristics of the Ground Fault Protection (GFP) devices used with each disconnect are coordinated so that the nearest disconnect supplying the ground fault location will open. Any upstream disconnects remain closed and continue to supply the remaining load current. Each set of GFP devices should have a specified time-current operating characteristic. When disconnects are connected in series, each downstream device should use a time-current setting that will cause it to open and clear the circuit before any upstream disconnect tripping mechanism is actuated. The time-current bands of disconnects in series must not overlap and must be separated from each other sufficiently to allow for the clearing time of each disconnecting means used. The time / current selective system is recommended for applications where damage levels associated with the time / current settings used are tolerable. This type of system does not require interlocking wiring between the GFP devices associated with main feeder and branch disconnecting devices.

Figure 20, on the next page, illustrates time / current selective coordination in a system involving a 4000 ampere main circuit breaker and a 1600 ampere feeder circuit breaker in an incoming service switchboard. These feed a distribution switchboard with a 600 ampere sub-feeder to a 100 ampere branch breaker. The system is coordinated so that only the circuit breaker nearest the location of the ground fault trips.

Zone Selective (Zone Interlock)

In this system each disconnecting means should open as quickly as possible when a ground fault occurs in the zone where this disconnect is the nearest supply source.

The GFP device for an upstream disconnecting means should have at least two modes of operation. If a ground fault occurs between it and the nearest downstream disconnect, it should operate in its fast tripping mode.

When a ground fault occurs beyond the downstream disconnect, the downstream GFP device should open in its fast tripping mode and simultaneously send a restraining signal to the upstream device and transfer that device to a time-delay tripping mode. The upstream time-delay tripping characteristic selected should be such that the downstream disconnect will open and clear the circuit before the upstream disconnect tripping mechanism is actuated. The time-current characteristic of the upstream device should be such as to offer backup protection in the event of malfunction of the downstream equipment.

Alternatively, a restraining signal from a downstream device may be used to prevent the tripping of an upstream disconnect on ground fault instead of causing it to operate in the time-delay tripping mode. This may be done where backup protection is less important than continuity of service to critical loads supplied by the upstream unit. There are very few instances in which this is justified, and a careful study of the entire system should be made before using this type of interlocking.

For a zone selective system, the time-current bands of disconnects in series, although used only for backup protection, should not overlap and should be separate from each other sufficiently to allow for the opening time of each disconnecting means used.

Note: Please consult with local regulations.

Time/Current Selective Ground Coordination

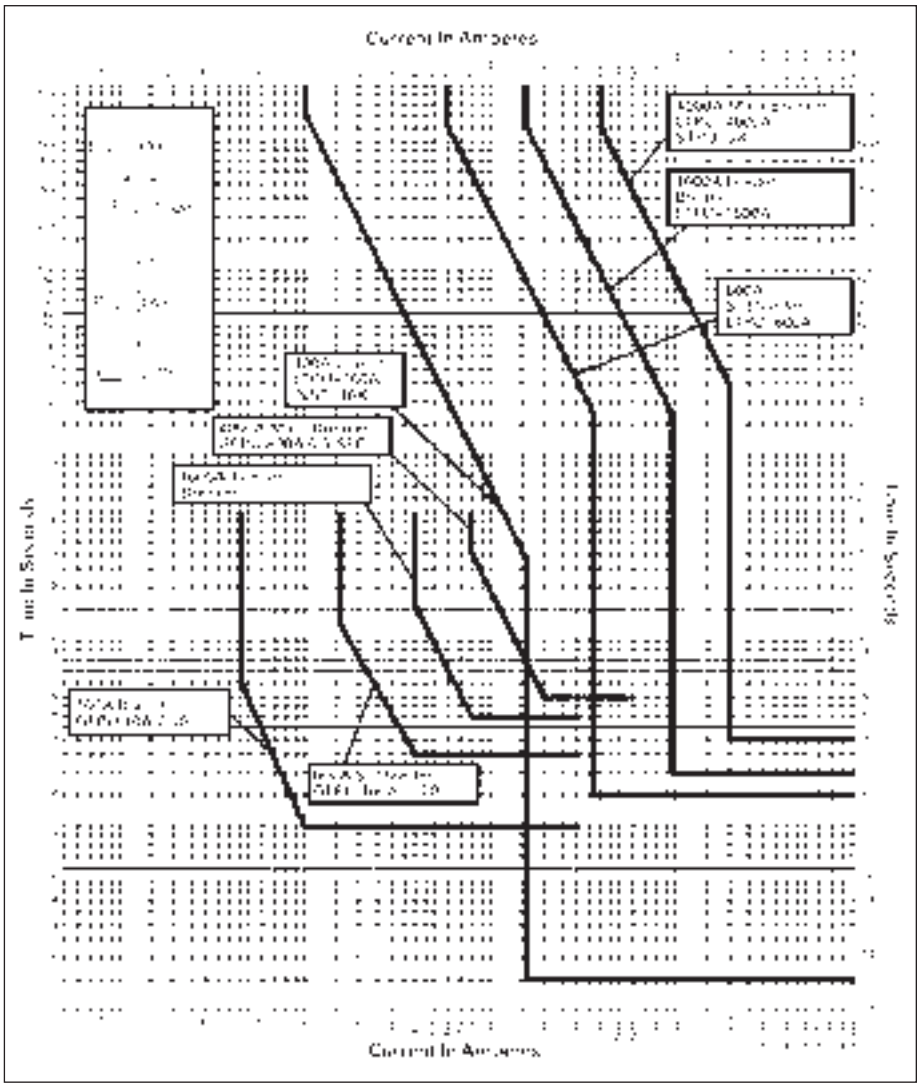

Figure 20. Fully Coordinated Multizone GFP System

The zone selective or zone interlock system provides fast tripping of the nearest disconnect upstream of the ground fault. The damage level is the lowest that is possible because the ground fault is cleared as quickly as the protective equipment can respond and the disconnect can open. Additional interlocking wiring and circuity for sending and receiving the restraining signals are required.

The zone selective or zone interlock scheme is for those few special applications where exceptionally fast tripping is necessary for all feeders throughout the entire system to reduce damage. Note that although the relay time can be reduced appreciably, the circuit breaker mechanism and arcing time (plus safety margin) will still be present.

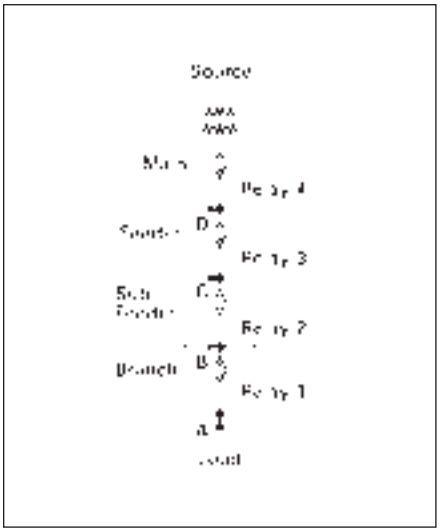

Figure 21. Zone Interlocking Scheme

Zone Selective Operation (Figure 21):

a) **Relay-1** will sense a ground fault at **A** when it exceeds 10 amperes. It will instantly initiate tripping of the **Branch** breaker and send restraining signals (transfer from instantaneous operation to time-delayed operation) to **Relay-2** and **Relay-3** (Relay-2 and Relay-3 will then back up Relay-1 on a time coordinated basis). **Relay-4** will be restrained by **Relay-2** if ground fault exceeds 100 amperes.

b) **Relay-2** will sense a ground fault at **B** when it exceeds 100 amperes. It will instantly initiate tripping of the **Sub-Feeder** breaker and send restraining signals to **Relay-3** and **Relay-4**.

c) **Relay-3** will sense a ground fault at **C** when it exceeds 400 amperes. It will instantly initiate tripping of the **Feeder** breaker and send a restraining signal to **Relay-4**.

d) **Relay-4** will sense a ground fault at **D** when it exceeds 800 amperes. It will instantly initiate tripping of the **Main** breaker.

Table A.1

Typical Ampere Setting	Restrained Time Delay
800	0.4 SEC.
400	0.3 SEC.
100	0.2 SEC.
10	0.1 SEC.

Note: Please consult with local regulations.

Typical Application Diagrams

Figures 22 through 27 on this and the facing page show the basic methods of applying ground fault protection (GFP). Other types of distribution systems will require variations of these methods to satisfy other system conditions.

These diagrams show circuit breakers as the disconnects. Any disconnecting means can be utilized, providing it is suitable for use with a ground fault protection system as indicated in the scope of this application guide. The examples do not show protection against a ground fault on the supply side of the main disconnect.

Sensing device and disconnect locations define zones of protection. Source side and ground return sensors provide protection only on the load side of associated disconnects. If a vector summation method is used and its sensors are located on load side of a disconnect, the zone between a source and actual sensor location becomes the responsibility of the next upstream protective device.

Table A.2 Recommendations for Figures 22-27

Ground Fault Protection	Figure	Sensing Method	Additional Ground Points	Recommended Use	Selectivity
On Main Disconnect Only	22	Vector Summation	Must not be downstream. May be upstream	Minimum protection only per Section 230-95 for the National Electric Code	Limited selectivity depends on location of fault and rating of overcurrent devices on the upstream side of fault.
	23	Ground Return	None		
On Main and Feeder Disconnects	24	Main and Feeders– Vector Summation	Must not be downstream of main ground fault sensor. May be upstream.	Improved service continuity is required	Main will allow feeder to trip for faults downstream of feeder sensors, but main will trip if feeder fails to operate.
	25	Main – Ground Return Feeders – Vector Summation	None		
On Main, Feeder, and Selected Branch Disconnects with Zone Selective Interlocking	26	Main and feeders 1-3 – Vector Summation MCC branch feeder A – Zero Sequence	Must not be downstream of main ground fault sensor. May be upstream.	Improved service continuity and minimum arcing fault damage are required and protection is needed on branch circuits.	Main and feeder 1-3 will provide delayed backup protection if fault is downstream of MCC branch feeder A. Main will provide delayed backup protection if fault is downstream of sensors for feeders 1-3. Main will trip on fastest curve if fault is upstream of sensors for feeders 1-3.
Double-Ended System with Protection on Main and on Tie and Feeder Disconnects	27	Main and Tie – Ground Return Feeders – Vector Summation	None	Double-ended systems with ground fault protection on tie disconnect where maximum continuity of service is essential.	When operating with tie disconnect open, main will provide delayed backup protection if fault is downstream from feeder sensors. When operating with the tie disconnect closed, the tie will trip before the main, thus sectionalizing the bus.

Ground Fault Protection on Main Disconnects Only

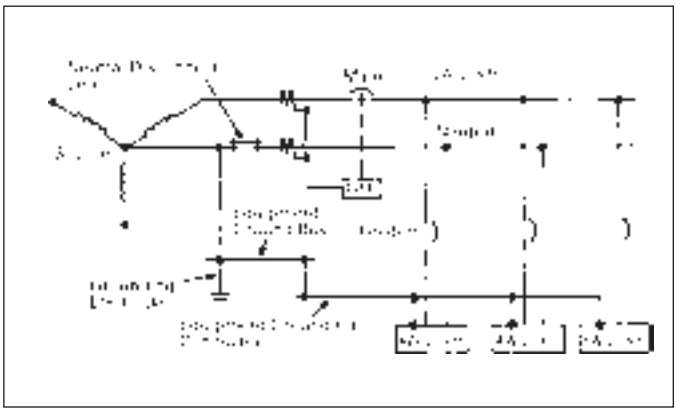

Figure 22

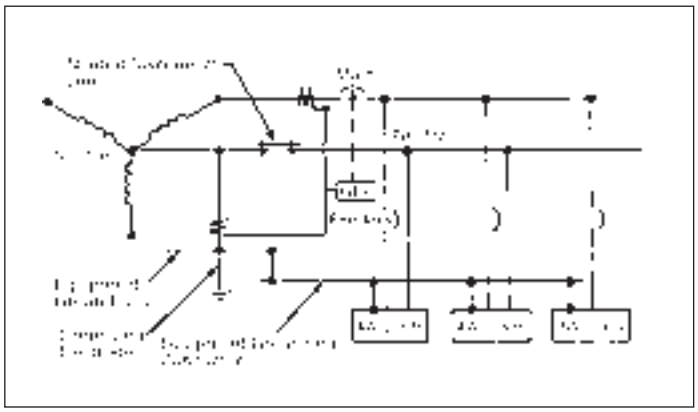

Figure 23

Note: Please consult with local regulations.

Ground Fault Protection on Main and Feeder Disconnects

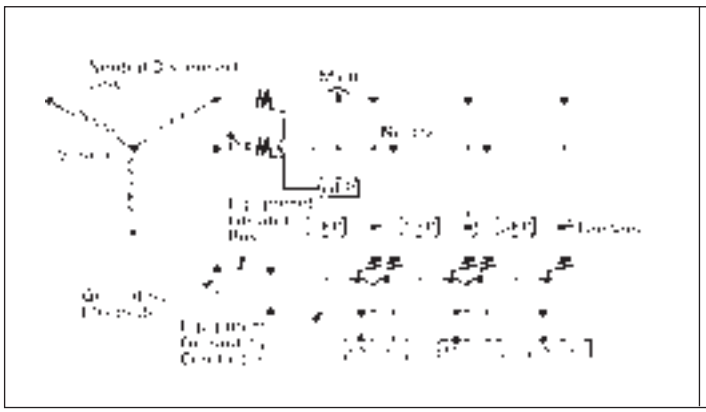

Figure 24

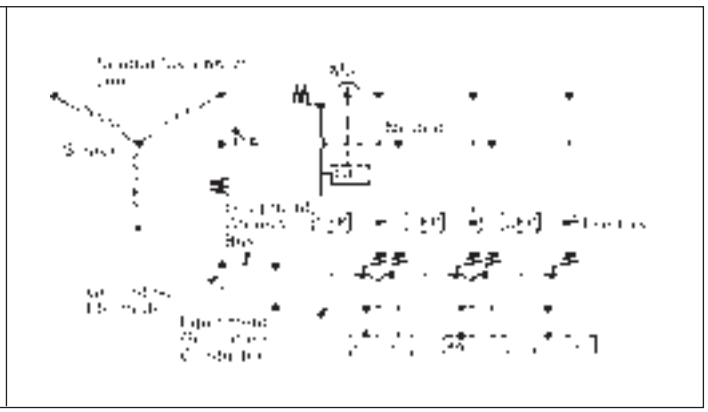

Figure 25

Ground Fault Protection on Main, Feeder and Selected Branch Disconnects with Zone Selective Interlocking

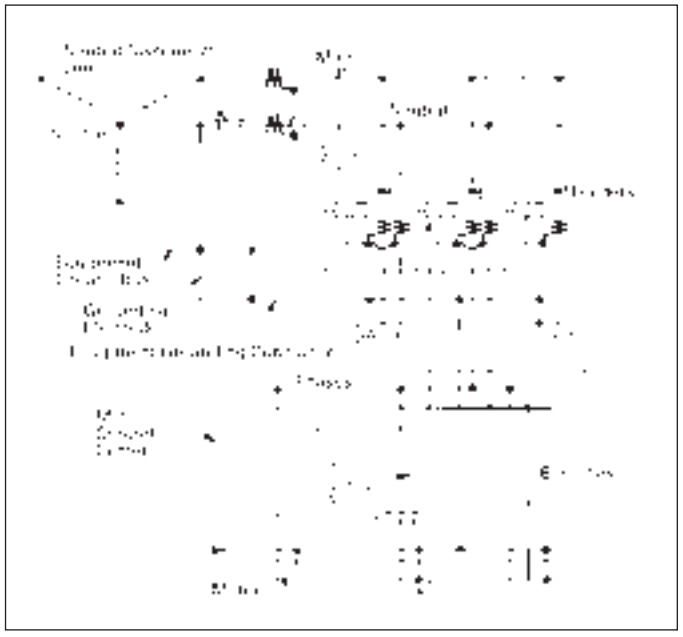

Figure 26

Double-Ended System with Ground Fault Protection on Main and on Tie and Feeder Disconnects

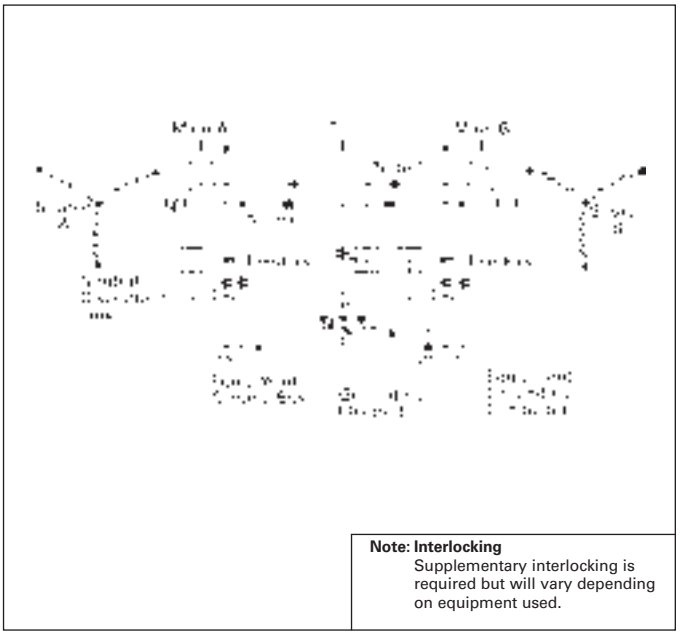

Note: Interlocking
Supplementary interlocking is required but will vary depending on equipment used.

Figure 27

Note: Please consult with local regulations.

Series-Connected Combination Ratings

Series-Connected Rating

A series-connected rating can be assigned to a combination of components — typically circuit breakers — which has been tested in combination to a higher interrupting rating than that of the lowest rated protective device of the combination. These ratings must be substantiated by extensive CSA testing.

General

"Equipment intended to interrupt current at fault levels shall have an interrupting rating not less than the nominal circuit voltage and the current that is available at the line terminals of the equipment. Equipment intended to interrupt current at other than fault levels shall have an interrupting rating at nominal circuit voltage not less than the current that must be interrupted."

The difference between the phrases "at fault levels" and "at other than fault levels" is the part of the Code which makes series-connected systems possible. For example, the traditional method of satisfying the Code was to select each breaker in the series with an interrupting rating equal to or greater than the prospective fault current. The interrupting rating of a circuit breaker — stated in RMS symmetrical amperes — is the amount of short circuit current the device can safely interrupt and continue to function as a circuit breaker.

Thus, if the prospective fault current at the line terminals of a panelboard is 100,000A RMS symmetrical, this traditional method would require that all the circuit breakers within the panelboard be rated at 100,000A RMS symmetrical or greater interrupting capacity. This is illustrated in Figure 28. In the traditional system, both the main and the feeder breaker are subjected to several short circuit peaks. In a series-connected system, however, the individual components (or circuit breakers) *have already been tested in series and the combination has been given an interrupting rating equal to or greater than various prospective fault currents which are available.* The combination, therefore, acts as a *single entity*, and performs the same protective function as individual circuit breakers in the traditional method. The difference is that combinations in series-connected systems contain devices with lower interrupting ratings.

Siemens circuit breakers used in series combinations which have passed extensive tests required by CSA.

Using the previous example, if the prospective fault current at the line terminals of the panelboard is 100,000 amperes RMS symmetrical, the series-connected method would involve selecting a specific *combination* with a rating of 100,000 amperes RMS symmetrical or greater interrupting capacity. That combination might include individual components which have lower individual interrupting ratings than 100,000 amperes RMS symmetrical.

However, all the components in the combination have been tested together and form an entity that will safety interrupt the prospective fault current of the particular situation being examined as long as the interrupting rating listed matches the prospective fault current.

With the advent of fuseless current limiting circuit breakers such as Sentron, another important development in series-connected combinations has emerged. Because of the fuseless current limiting circuit breaker's extremely fast interrupting capability, this device provides more control over high prospective fault currents than traditional series-connected systems.

The concept behind using fuseless current limiting circuit breakers as a component in a series-connected system is twofold: (1) higher interrupting ratings, and (2) increased control over peak current (i_p) and energy let-through (I^2t).

For example, a current limiting circuit breaker is placed at the side closest to the source of power and rated according to the prospective fault current available at the line-side terminals. In effect, doing this places a "shroud of protection" over the downstream components. Because of the inherent high interrupting capability of the current limiting circuit breaker, the breaker itself meets or exceeds the prospective short circuit current. Because of its current limiting action the prospective I^2t never reaches downstream components. This is illustrated in Figure 29.

It is important to recognize that the current limiting circuit breaker be an individual component in a CSA tested combination, and that it is the combination itself — current limiting circuit breaker *plus* other circuit breakers — that forms entity specified in day-to-day applications.

For specific series-connected combinations that have met CSA requirements please refer to the breaker section of this catalogue or contact your local Siemens Sales Office.

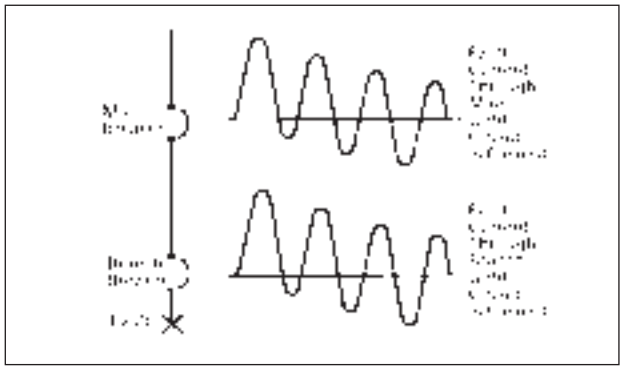

Figure 28 — Without Current Limiting

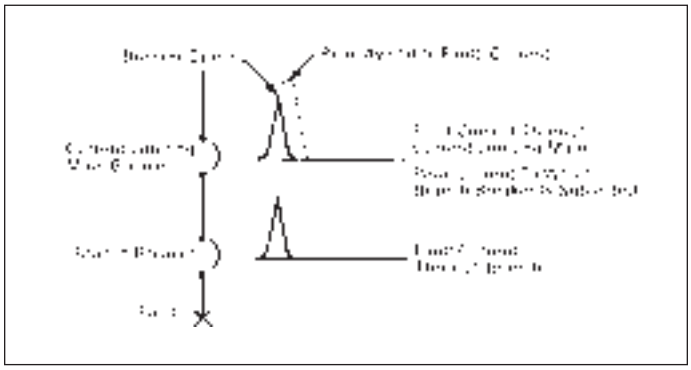

Figure 29 — Series-Connected Protective Scheme With Current Limiting Main Circuit Breaker

Note: Please consult with local regulations.

Non-Linear Loads

When a sinusoidal voltage is applied to a linear load, the resultant current waveform takes on the shape of a sine wave as well. Typical linear loads are resistive heating and induction motors.

In contrast, a non-linear load either:

- Draws current during only part of the cycle and acts as an open circuit for the balance of the cycle,

  or

- Changes the impedance during the cycle, hence the resultant waveform is distorted and no longer conforms to a pure sine wave shape

In recent years, the use of electronic equipment has mushroomed in both offices and industrial plants. These electronic devices are powered by switching power supplies or some type of rectifier circuit. Examples of these devices used in offices are: computers, fax machines, copiers, printers, cash registers, UPS systems, and solid-state ballasts. In industrial plants, one will find other electronic devices such as variable speed drives, HID lighting, solid-state starters and solid-state instruments. They all contribute to the distortion of the current waveform and the generation of harmonics. As the use of electronic equipment increases and it makes up a larger portion of the electrical load, many concerns are raised about its impact on the electrical power supply system.

Harmonics

As defined by ANSI / IEEE Std. 519-1992, harmonic components are represented by a periodic wave or quantity having a frequency that is an integral multiple of the fundamental frequency. Harmonics are voltages or currents at frequencies that are integer multiples of the fundamental (60 Hz) frequency: 120 Hz, 180 Hz, 240 Hz, 300 Hz, etc. Harmonics are designated by their harmonic number, or multiple of the fundamental frequency. Thus, a harmonic with a frequency of 180 Hz (three times the 60 Hz fundamental frequency) is called the 3rd harmonic.

Harmonics superimpose themselves on the fundamental waveform, distorting it and changing its magnitude. For instance, when a sine wave voltage source is applied to a non-linear load connected from a phase-leg to neutral on a 3-phase, 4-wire branch circuit, the load itself will draw a current wave made up of the 60 Hz fundamental frequency of the voltage source, plus 3rd and higher order odd harmonic (multiples of the 60 Hz fundamental frequency), which are all generated by the non-linear load. Total Harmonic Distortion (THD) is calculated as the square root of the sum of the squares of all harmonics divided by the normal 60 Hz value.

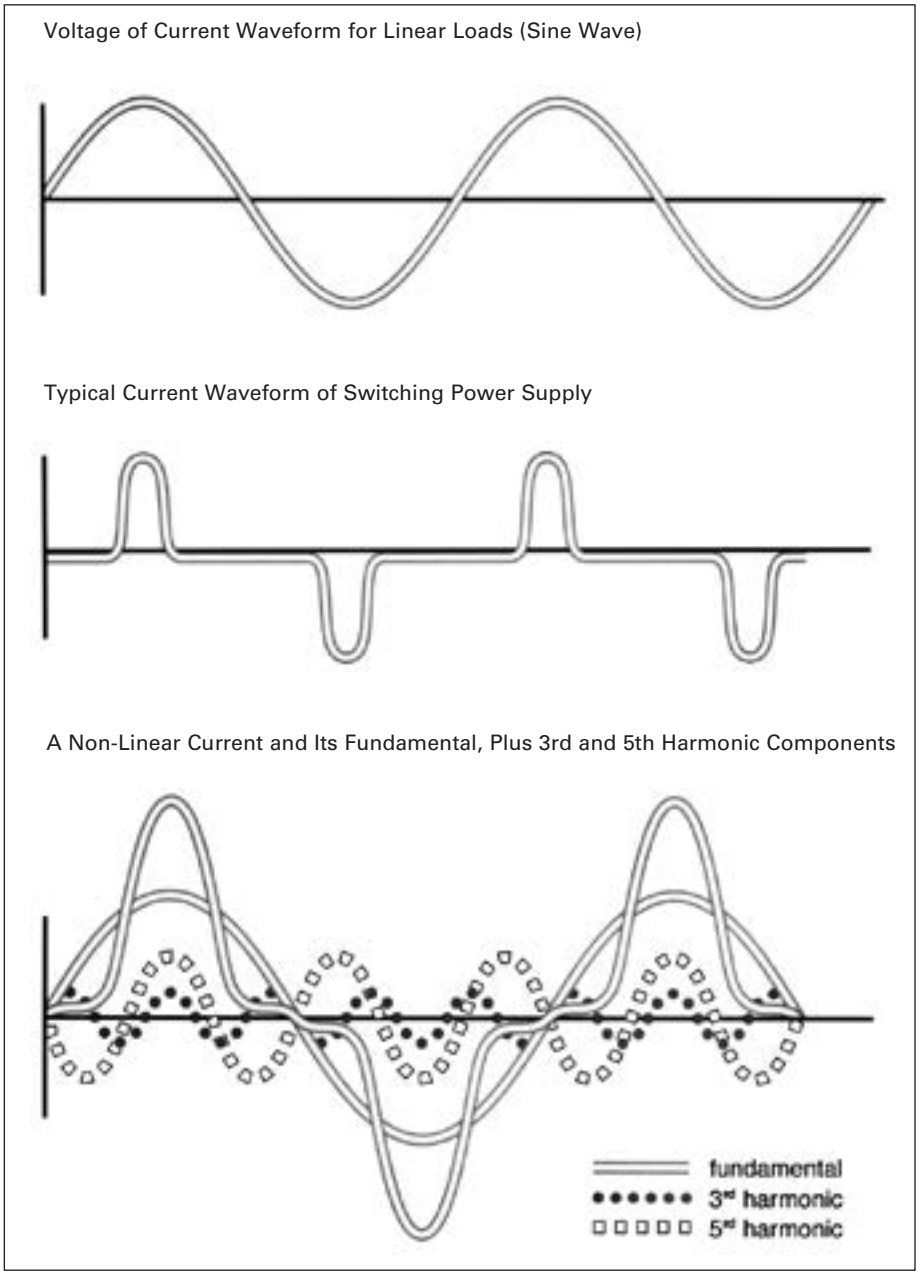

Figure 30 — Effect of Harmonics on Current Waveform

$$THD = \sqrt{\frac{\left(\frac{I_{RMS}}{60\ Hz}\right)^2 \left(\frac{I_{RMS}}{180\ Hz}\right)^2 \left(\frac{I_{RMS}}{N}\right)^2}{\left(\frac{I_{RMS}}{60\ Hz}\right)^2}}$$

This yields an RMS value of distortion as a percentage of the fundamental 60 Hz waveform.

Therefore, it is the percentage amount of odd harmonics (3rd, 5th, 7th ,..., 25th,...) present in the load which can affect the transformer, and this condition is called a "Non-Linear Load" or "Non-Sinusoidal Load". To determine what amount of harmonic content is present, a K-Factor calculation is made instead of using the THD formula. The total amount of harmonics will determine the percentage of non-linear load, which can be specified with the appropriate K-Factor rating.

Note: Please consult with local regulations.

Typical Symptoms of Harmonic Problems

- Distribution / lighting transformers overheating even when measured load current is within transformer rating
- Neutral cable / bus overheating even with balanced load
- Fuses blowing and circuit breakers tripping at currents within rating

Effect Of Harmonics On Transformers

Non-sinusoidal current generates extra losses and heating of transformer coils thus reducing efficiency and shortening the life expectancy of the transformer. Coil losses increase with the higher harmonic frequencies due to higher eddy current loss in the conductors.

Furthermore, on a balanced linear power system, the phase currents are 120 degrees out of phase and offset one another in the neutral conductor. But with the "Triplen" harmonics (multiple of 3) the phase currents are in phase and they are additive in this neutral conductor. This may cause installations with non-linear loads to double either the size or number of neutral conductors.

Measurement of Harmonics

Table A.3 K-Factor Ratings

Type	Linear Load	Non-Linear Load	Total K-Factor Load Valve
K4	100%	50%	4.0
K13	100%	100%	13.0
K20	100%	125%	20.0
K30	100%	150%	30.0

For existing installations, the extent of the harmonics can be measured with appropriate instruments commonly referred to as "Power Harmonic Analyzers". This service is offered by many consulting service organizations. For new construction, such information may not be obtainable. For such situations, it is best to assume the worse case condition based on experience with the type and mix of loads.

Sizing Transformers for Non-Linear Loads

ANSI / IEEE C57.110-2008 has a procedure for de-rating standard distribution transformers for non-linear loading. However this is not the only approach. A transformer with the appropriate K-Factor specifically designed for non-linear loads can be specified.

K-Factors

K-Factor is a ratio between the additional losses due to harmonics and the eddy losses at 60 Hz. It is used to specify transformers for non-linear loads. Note that K-Factor transformers do not eliminate harmonic distortion; they withstand the non-linear load condition without overheating.

Calculating K-Factor Loads

1. List the kVA value for each load category to be supplied. Next, assign a K-factor designation that corresponds to the relative level of harmonics drawn by each type of load. Refer to Table A.4.
2. Multiply the kVA of each load or load category times the Index of Load K-rating (I_{LK}) that corresponds to the assigned K-factor rating. This result is an indexed kVA-I_{LK} value. KVA x I_{LK} = kVA-I_{LK}.
3. Tabulate the total connected load kVA for all load categories to be supplied.
4. Next, add-up the kVA-I_{LK} values for all loads or load categories to be supplied by the transformer.
5. Divide the grand total kVA-I_{LK} value by the total kVA load to be supplied. This will give an average I_{LK} for that combination of loads. Total kVA-I_{LK}/ Total kVA = average I_{LK}.
6. From Table A.4 find the K-factor rating whose I_{LK} is equal to or greater than the calculated I_{LK}.

Table A.4 Estimating K-Factor Loads①

Description	K-Factor	I_{LK}
Incandescent Lighting Electric Resistance Heating Motors (without solid state drives) Control Transformers / Electromagnetic Control Devices Motor-Generators (without solid state drives) Standard Distribution Transformers	K1	0.00
Electric Discharge Lighting (HID) UPS with Optional Input Filter Welders Induction Heating Equipment PLCs and Solid State Controls	K4	25.82
Telecommunications Equipment (PBX) UPS without Input Filtering Multiwire Receptacle Circuits in General Care Areas of Health Care Facilities, Schools, etc. Multiwire Receptacle Circuits Supplying Testing Equipment on an Assembly Line	K13	57.74
Main-Frame Computer Loads Solid State Motor Drives (variable speed drives) Multiwire Receptacle Circuits in Critical Care Areas in Hospitals	K20	80.94
Multiwire Receptacle Circuits in Industrial, Medical and Educational Laboratories Multiwire Receptacle Circuits in Commercial Office Spaces Small Main-Frames (mini and micro)	K30	123.54

① Typical loads and K-Factor values for estimating purposes only.

Note: Please consult with local regulations.

Table 1A

Motor Full-Load Currents of Three Phase AC Induction Type Motors①

Motor Rating Horsepower	Current in Amperes			
	208 V	230 V	460V	575V
1/4	1.11	0.96	0.48	0.38
1/3	1.34	1.18	0.59	0.47
1/2	2.4	2.2	1.1	0.9
3/4	3.5	3.2	1.6	1.3
1	4.6	4.2	2.1	1.7
1 1/2	6.6	6	3	2.4
2	7.5	6.8	3.4	2.7
3	10.6	9.6	4.8	3.9
5	16.7	15.2	7.6	6.1
7 1/2	24.2	22.0	11.0	9.0
10	30.8	28.0	14.0	11.0
15	46.2	42.0	21.0	17.0
20	59.4	54	27	22
25	74.8	68	34	27
30	88	80	40	32
40	114	104	52	41
50	143	130	65	52
60	169	154	77	62
75	211	192	96	77
100	273	248	124	99
125	343	312	156	125
150	396	360	180	144
200	528	480	240	192
250	—	—	302	242
300	—	—	361	289
350	—	—	414	336
400	—	—	477	382
450	—	—	515	412
500	—	—	590	472

E = Volts I = Amperes
% EFF = Per Cent Efficiency
pf = Power Factor

①Values may vary depending on manufacturer, type of motor and NEMA design.
For full load currents of 200 volt motors, increase the corresponding 230 volt motor full-load current by 15 percent.

Table 1B

Motor Full-Load Currents In Amperes, Single-Phase, AC

Horsepower	115V	230V
1/6	4.4	2.2
1/4	5.8	2.9
1/3	7.2	3.6
1/2	9.8	4.9
1/3	13.8	6.9
1	16	8
1 1/2	20	10
2	24	12
3	34	17
5	56	28
71/2	80	40
10	100	50

Table 1C

Motor Full-Load Currents In Amperes, DC

Horsepower	120V	240V
1/4	3.1	1.6
1/3	4.1	2.0
1/2	5.4	2.7
3/4	7.6	3.8
1	9.5	4.7
1 1/2	13.2	6.6
2	17	8.5
3	25	12.2
5	40	20
7 1/2	58	29
10	76	38

Table 2

Electrical Formulas for Finding Amperes, Horsepower, Kilowatts and kVA

To Find	Single-Phase	Alternating Current Two-Phase①, Four-Wire	Three-Phase	Direct Current
Kilowatts	$\frac{I \times E \times pf}{1000}$	$\frac{I \times E \times 2 \times pf}{1000}$	$\frac{I \times E \times 1.73 \times pf}{1000}$	$\frac{I \times E}{1000}$
kVA	$\frac{I \times E}{1000}$	$\frac{I \times E \times 2}{1000}$	$\frac{I \times E \times 1.73}{1000}$	—
Horsepower (Output)	$\frac{I \times E \times \% EFF \times pf}{746}$	$\frac{I \times E \times 2 \times \% EFF \times pf}{746}$	$\frac{I \times E \times 1.73 \times \% EFF \times pf}{746}$	$\frac{I \times E \times \% EFF}{746}$
Amperes when Horsepower is Known	$\frac{HP \times 746}{E \times \% EFF \times pf}$	$\frac{HP \times 746}{2 \times E \times \% EFF \times pf}$	$\frac{HP \times 746}{1.73 \times E \times \% EFF \times pf}$	$\frac{HP \times 746}{E \times \% EFF}$
Amperes when Kilowatts is Known	$\frac{KW \times 1000}{E \times pf}$	$\frac{KW \times 1000}{2 \times E \times pf}$	$\frac{KW \times 1000}{1.73 \times E \times pf}$	$\frac{KW \times 1000}{E}$
Amperes when kVA is Known	$\frac{kVA \times 1000}{E}$	$\frac{kVA \times 1000}{2 \times E}$	$\frac{kVA \times 1000}{1.73 \times E}$	—

Average Efficiency and Power Factor Values of Motors

When the actual efficiencies and power factors of the motors to be controlled are not known, the following approximations may be used.

Efficiencies:

DC motors, 35 horsepower and less	80% to 85%
DC motors, above 35 horsepower	85% to 90%
Synchronous motors (at 100% power factor)	92% to 95%

"Apparent" Efficiencies (= Efficiency x Power Factor);

Three-phase induction motors, 25 horsepower and less	85%
Three-phase induction motors above 25 horsepower	90%

These figures may be decreased slightly for single-phase and two-phase induction motors.

Fault-Current Calculation on Low-Voltage AC Systems

In order to determine the maximum interrupting ratings of the circuit breakers in a distribution system it is necessary to calculate the current which could flow under a three-phase bolted short circuit condition. For a three-phase system the maximum available fault current at the secondary side of the transformer can be obtained by use of the formula:

$$I_{SC} = \frac{kVA \times 100}{KV \times \sqrt{3} \times \% Z}$$

where:

I_{SC} = Symmetrical RMS amperes of fault current.
kVA = Kilovolt-ampere rating of transformers.
KV = Secondary voltage in kilovolts.
% Z = Percent impedance of primary line and transformer.

Table 5 on page 15-4 has been prepared to list the symmetrical RMS fault current which is available at the secondary terminals of the transformer.

Note: Please consult with local regulations.

Fraction, Decimal and Millimeter Equivalents

Fractions to Decimals to Millimeters

Fractions	Decimals	Millimeters
1/64	0.015625	0.397
1/32	0.03125	0.794
3/64	0.046875	1.191
1/16	0.0625	1.588
5/64	0.078125	1.984
3/32	0.09375	2.381
7/64	0.109375	2.778
1/8	0.1250	3.175
9/64	0.140625	3.572
5/32	0.15625	3.969
11/64	0.171875	4.366
3/16	0.1875	4.763
13/64	0.203125	5.159
7/32	0.21875	5.556
15/64	0.234375	5.953
1/4	0.2500	6.350
17/64	0.265625	6.747
9/32	0.28125	7.144
19/64	0.296875	7.541
5/16	0.3125	7.938
21/64	0.328125	8.334
11/32	0.34375	8.731
23/64	0.359375	9.128
3/8	0.3750	9.525
25/64	0.390625	9.922
13/32	0.40625	10.319
27/64	0.421875	10.716
7/16	0.4375	11.113
29/64	0.453125	11.509
15/32	0.46875	11.906
31/64	0.484375	12.303
1/2	0.500	12.700
33/64	0.515625	13.097
17/32	0.53125	13.494
35/64	0.546875	13.891
9/16	0.5625	14.288
37/64	0.578125	14.684
19/32	0.59375	15.081
39/64	0.609375	15.478
5/8	0.6250	15.875
41/64	0.640625	16.272
21/32	0.65625	16.669
43/64	0.671875	17.066
11/16	0.6875	17.463
45/64	0.703125	17.859
23/32	0.71875	18.256
47/64	0.734375	18.653
3/4	0.7500	19.050
49/64	0.765625	19.447
25/32	0.78125	19.844
51/64	0.796875	20.241
13/16	0.8125	20.638
53/64	0.828125	21.034
27/32	0.84375	21.431
55/64	0.859375	21.828
7/8	0.8750	22.225
57/64	0.890625	22.622
29/32	0.90625	23.019
59/64	0.921875	23.416
15/16	0.9375	23.813
61/64	0.953125	24.209
31/32	0.96875	24.606
63/64	0.984375	25.003
1	1.000	25.400

Millimeters to Inches①

Millimeters	Inches	Millimeters	Inches
0.1	0.0039	46	1.8110
0.2	0.0079	47	1.8504
0.3	0.0118	48	1.8898
0.4	0.0157	49	1.9291
0.5	0.0197	50	1.9685
0.6	0.0236	51	2.0079
0.7	0.0276	52	2.0472
0.8	0.0315	53	2.0866
0.9	0.0354	54	2.1260
		55	2.1654
1	0.0394	56	2.2047
2	0.0787	57	2.2441
3	0.1181	58	2.2835
4	0.1575	59	2.3228
5	0.1969	60	2.3622
6	0.2362	61	2.4016
7	0.2756	62	2.4409
8	0.3150	63	2.4803
9	0.3543	64	2.5197
10	0.3937	65	2.5591
11	0.4331	66	2.5984
12	0.4724	67	2.6378
13	0.5118	68	2.6772
14	0.5512	69	2.7165
15	0.5906	70	2.7559
16	0.6299	71	2.7953
17	0.6693	72	2.8346
18	0.7087	73	2.8740
19	0.7480	74	2.9134
20	0.7874	75	2.9528
21	0.8268	76	2.9921
22	0.8661	77	3.0315
23	0.9055	78	3.0709
24	0.9449	79	3.1102
25	0.9843	80	3.1496
26	1.0236	81	3.1890
27	1.0630	82	3.2283
28	1.1024	83	3.2677
29	1.1417	84	3.3071
30	1.1811	85	3.3465
31	1.2205	86	3.3858
32	1.2598	87	3.4252
33	1.2992	88	3.4646
34	1.3386	89	3.5039
35	1.3780	90	3.5433
36	1.4173	91	3.5827
37	1.4567	92	3.6220
38	1.4961	93	3.6614
39	1.5354	94	3.7008
40	1.5748	95	3.7402
41	1.6142	96	3.7795
42	1.6535	97	3.8189
43	1.6929	98	3.8583
44	1.7323	99	3.8976
45	1.7717	100	3.9370

①0.001″ = 0.0254 mm
1 mm = 0.03937″

Note: Please consult with local regulations.

Notes

Siemens Canada Limited
Electrical Products
1577 North Service Road East
Oakville, ON L6H 0H6

Customer Interaction Centre
(888) 303-3353
cic.ca@siemens.com

All product designations may be trademarks or product names of Siemens AG or supplier companies whose use by third parties for their own purposes could violate the rights of the owners.

Subject to change without prior notice.

Printed in Canada.
©2024 Siemens Canada Limited
Order No.: SI-EP-LP-2576

https://sie.ag/7VX6L6